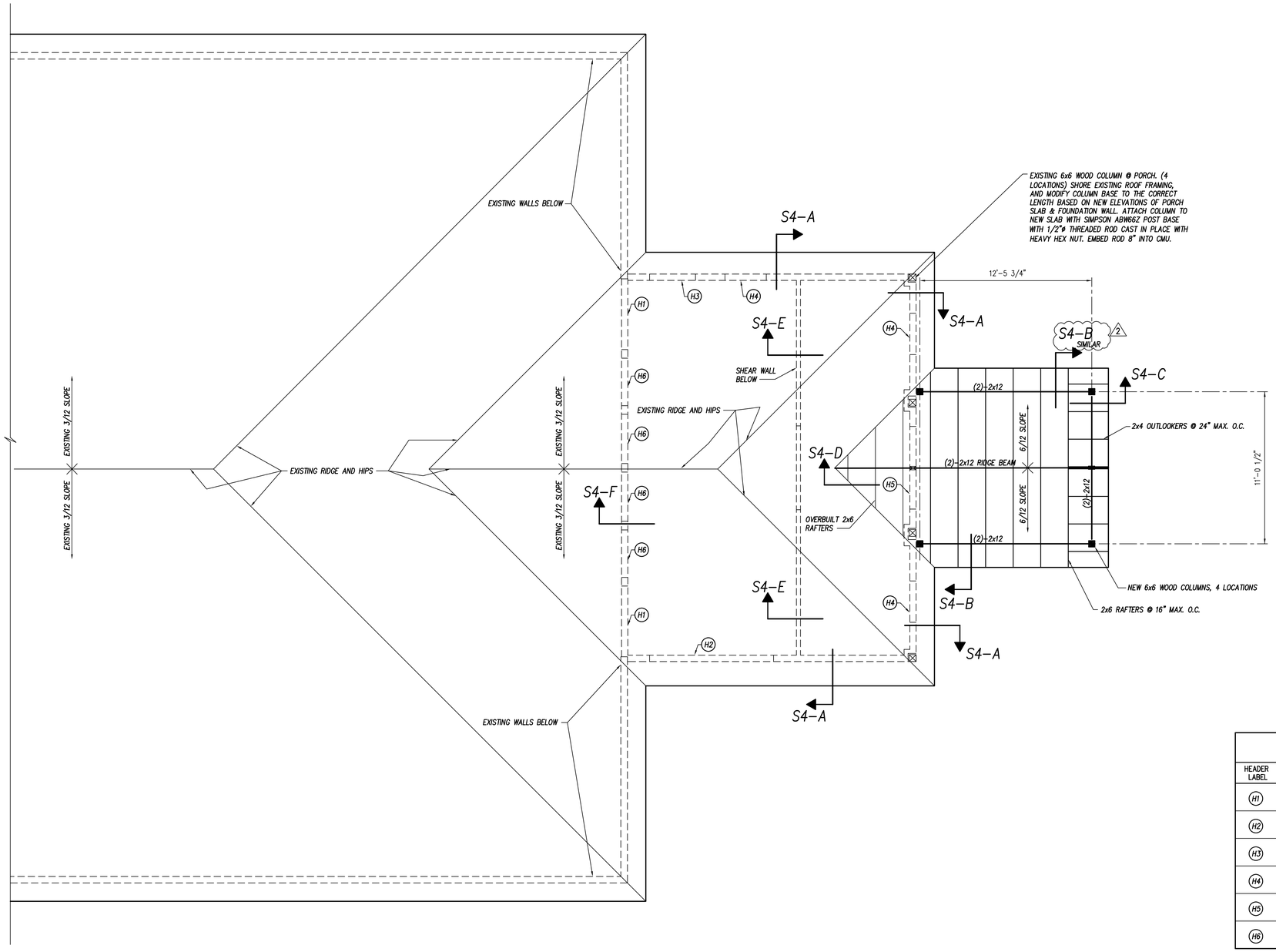

FOUNDATION AND FLOOR SLAB PLAN

SCALE: 1/4" = 1'-0"

HEADER SCHEDULE

HEADER LABEL	OPENING SIZE	HEADER SIZE	# OF END BEARING STUDS[1, 2]	# ADJACENT-FULL HEIGHT STUDS
H1	5'-2" MAX.	(2)-2x8	(1)-2x6 EA. SIDE	(1)-2x6'S EA. SIDE
H2	9'-0"	3 1/2"x9 1/2" MICROLLAM LVL	(2)-2x6 EA. SIDE	(2)-2x6'S EA. SIDE
H3	3'-4"	(2)-2x6	(1)-2x6 EA. SIDE	(1)-2x6'S EA. SIDE
H4	3'-0"	(2)-2x6	(1)-2x6 EA. SIDE	(1)-2x6'S EA. SIDE
H5	6'-0"	(2)-2x10	(2)-2x6 EA. SIDE	(2)-2x6'S EA. SIDE
H6	3'-7" MAX.	(2)-2x6	(1)-2x6 EA. SIDE	(1)-2x6'S EA. SIDE

1. BEARING STUDS ARE ALSO REFERED TO AS 'TRIMMERS' OR 'JACK STUDS'.
2. CONNECT EACH SET OF BUILT-UP BEARING STUDS TO HEADER WITH 2-SIMPSON LCE CONNECTORS, TYPICAL.
3. HEADER SIZES ARE FOR UNIFORM LOADS ONLY. IF ANY CONCENTRATED LOAD OR UNUSUAL CONDITION EXISTS, CONTACT PROJECT ARCHITECT IMMEDIATELY.

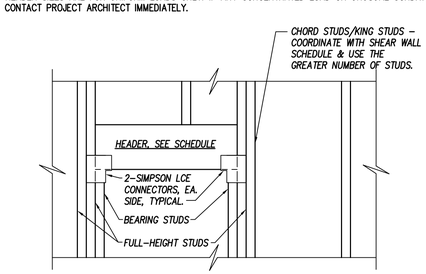

HEADER LINE DIAGRAM

NO SCALE

609 Cherry Street, Macon, GA 31201
478.742.1208 / www.btbbinc.com

© COPYRIGHT 2020 BTBB inc.
NOT FOR REPRODUCTION

GEORGIA REGISTERED STRUCTURAL ENGINEER No. SE0000652 MATTHEW N. ELLIS

7.12.21
Pi-Tech, Inc. COA#PEF003000
COA Expiration: 6.30.2022

The delivery of this drawing should not be construed to provide any express warranty or guarantee to anyone that all dimensions, details, etc are exact or to indicate that the use of this drawing implies any review and approval of the design professional for any future use. Any use of the information on this drawing is at the sole risk and liability of the user.

Peach County Health Department Improvements

503 Bluebird Blvd. Fort Valley, Georgia 31030

Drawing Issue Schedule	
7/12/2021	Permit Set
8/5/2021	R2 - Addendum 2
Project No:	2020-27

Roof Framing Plan

S2

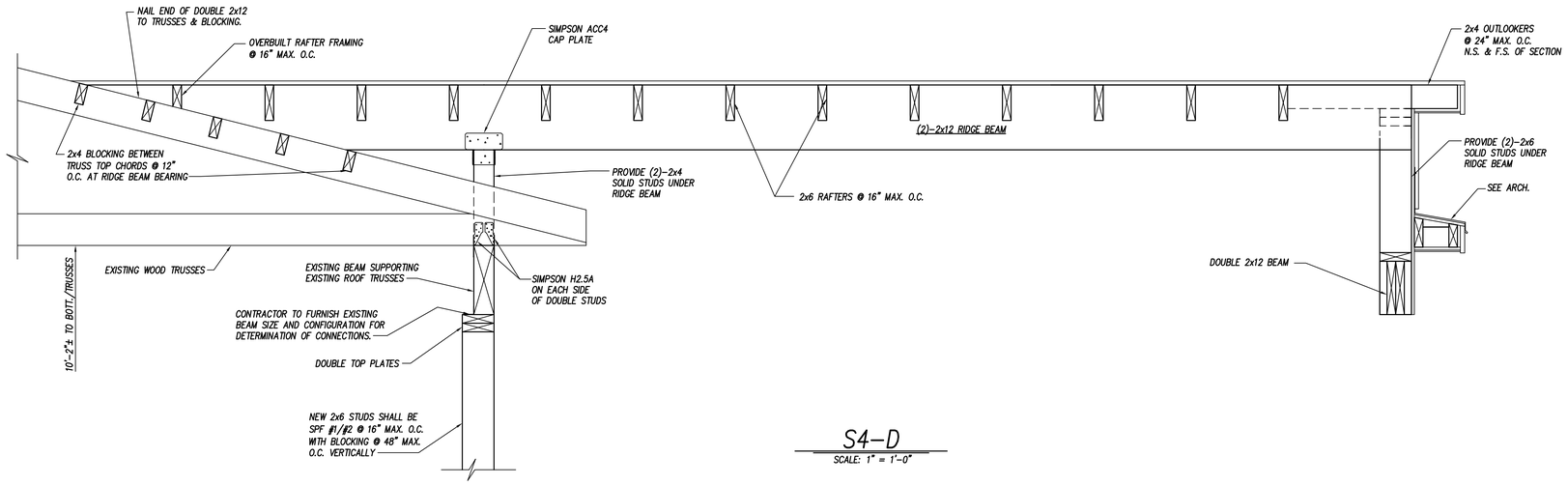

S4-D
SCALE: 1" = 1'-0"

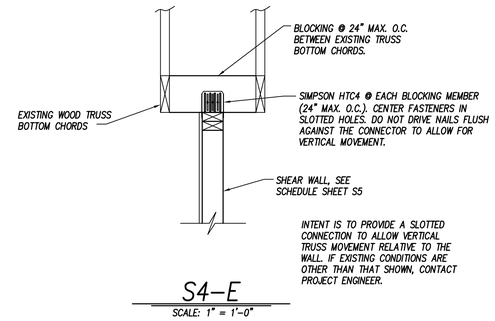

S4-E
SCALE: 1" = 1'-0"

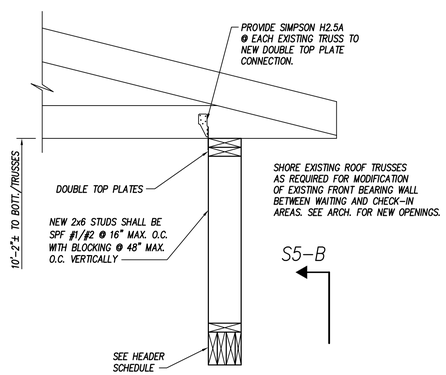

S4-F
SCALE: 1" = 1'-0"

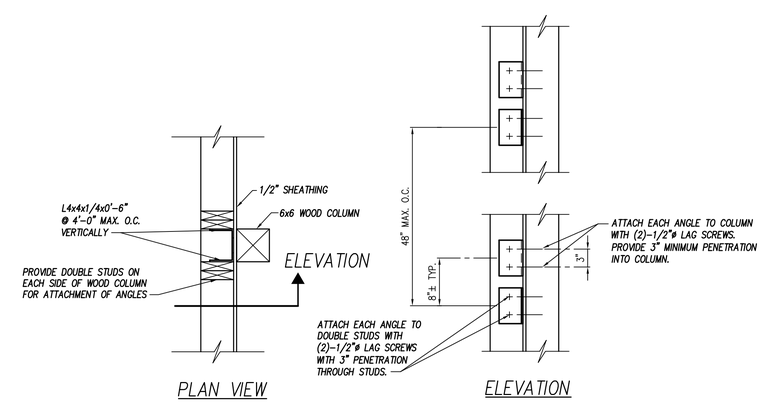

S4-G
SCALE: 1" = 1'-0"

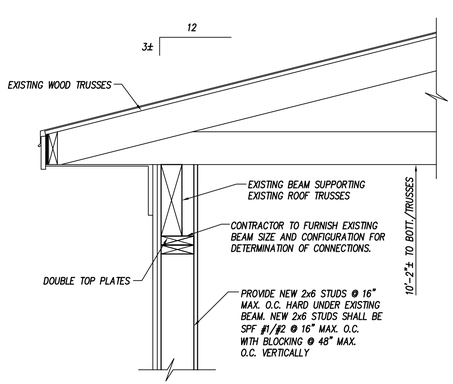

S4-A
SCALE: 1" = 1'-0"

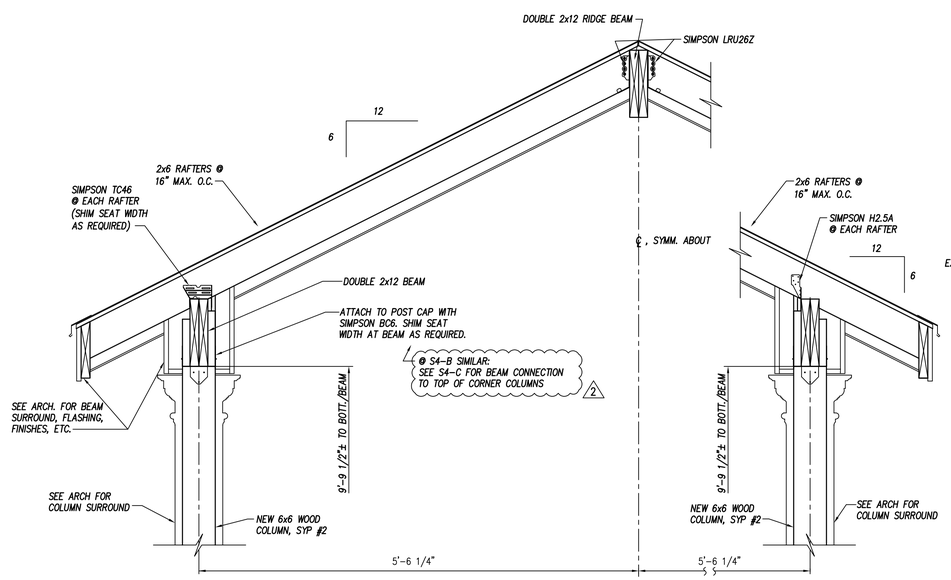

S4-B
SCALE: 1" = 1'-0"

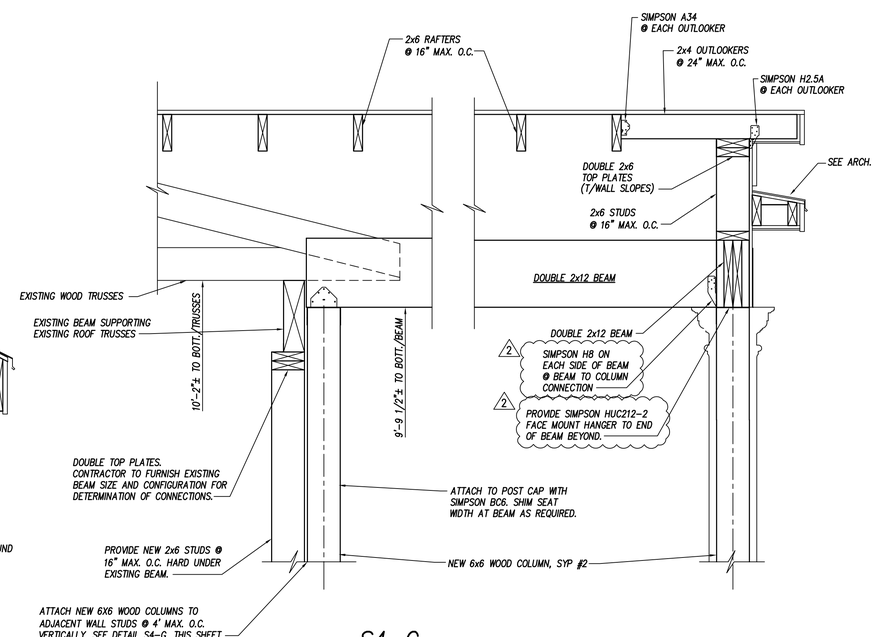

S4-C
SCALE: 1" = 1'-0"

609 Cherry Street, Macon, GA 31201
478.742.1208 / www.btbbinc.com

© COPYRIGHT 2020 BTBB inc.
NOT FOR REPRODUCTION

GEORGIA REGISTERED No. 32000062 STRUCTURAL ENGINEER MATTHEW N. ELLIS

7.12.21
Pi-Tech, Inc. COA#PEF003000
COA Expiration: 6.30.2022

The delivery of this drawing should not be construed to provide any express warranty or guarantee to anyone that all dimensions, details, etc are exact or to indicate that the use of this drawing implies any review and approval of the design professional for any future use. Any use of the information on this drawing is at the sole risk and liability of the user.

Peach County Health Department Improvements

503 Bluebird Blvd. Fort Valley, Georgia 31030

Drawing Issue Schedule	
7/12/2021	Permit Set
8/5/2021	R2 - Addendum 2
Project No:	2020-27

Roof Framing Sections & Details

S4