CITY OF ALAMOGORDO

CONSTRUCTION PLANS

FOR

GRIGGS FIELD DETENTION BASIN

MARCH 2020

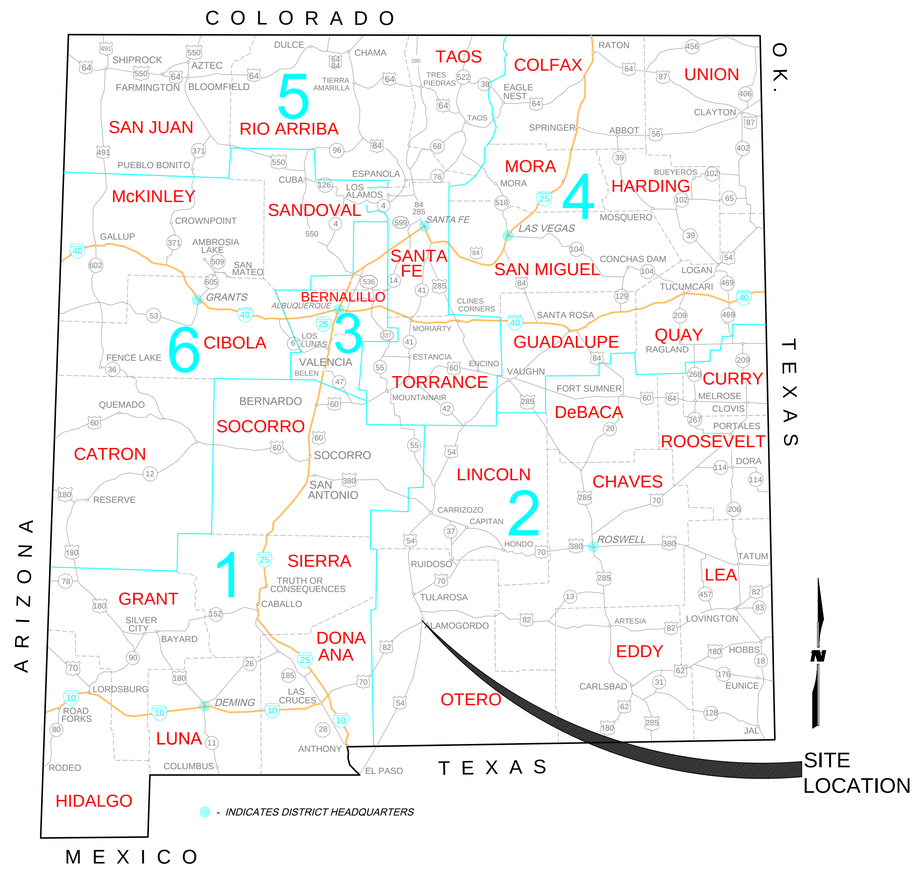

AS-BUILT INFORMATION

CONTRACTOR

WORK STAKED BY

INSPECTOR'S ACCEPTANCE BY

FIELD VERIFICATION BY

DRAWINGS CORRECTED BY

DATE

BENCH MARKS

SURVEY INFORMATION

FIELD NOTES

NO.	BY	DATE

ENGINEER'S SEAL

NO.	DATE	REMARKS	BY
		REVISIONS	

WILSON & COMPANY, ENGINEERS & ARCHITECTS

DESIGNED BY - - - - DATE - - - -

DRAWN BY - - - - DATE - - - -

CHECKED BY - - - - DATE - - - -

CITY OF ALAMOGORDO

COVER SHEET

CITY OF ALAMOGORDO	Engineer Approval	Last Design Update	Mo./Day/Yr.	Mo./Day/Yr.

Project No.	Zone Map No.	Sheet
2020-002		1 OF 49

WILSON & COMPANY

M:\MSD\19-600-032-00\2_DISCIPLINES_SHEETS\2_SHEETS - CIVIL\196032_COVER & INDEX.DWG 3/4/2020

SHEET INDEX

DESCRIPTION	SHEET NO.
COVER SHEET	1
INDEX OF SHEETS	2
GENERAL NOTES	3
SUMMARY OF QUANTITIES	4
MISCELLANEOUS QUANTITIES	5
HORIZONTAL CONTROL	6
PROPERTY OWNERSHIP MAP	7
DEMOLITION PLAN	8
TYPICAL SECTIONS	9
GRADING PLAN	10
GRADING HEAT MAP	11
SPILLWAY GRADING PLAN	12
SPILLWAY ISOMETRIC DRAWING	13
SPILLWAY SECTION VIEWS AND DETAILS	14
SPILLWAY SECTION VIEWS	15
SPILLWAY SECTION VIEWS	15A
FENCING PLAN	16
EROSION CONTROL PLAN	17
DRY CANYON ARROYO REALIGNMENT PLAN AND PROFILE	18
DRY CANYON ARROYO REALIGNMENT PLAN AND PROFILE	19
CHANNEL REALIGNMENT PLAN & PROFILE	20
CHANNEL REALIGNMENT PLAN & PROFILE	21
POND CROSS SECTIONS	22
CHANNEL CROSS SECTIONS	23
CHANNEL CROSS SECTIONS	24
DRY CANYON ARROYO CROSS SECTIONS	25
DRY CANYON ARROYO CROSS SECTIONS	26
TRAFFIC CONTROL PLAN	27
DRY WELL DETAILS	28
CHANNEL & FENCE DETAILS	29
EROSION CONTROL DETAILS	30
ALAMOGORDO STANDARD DETAILS	31
NMDOT STANDARD DRAWING 206-03-1/1	32
NMDOT STANDARD DRAWING 206-04-1/3	33
NMDOT STANDARD DRAWING 206-04-2/3	34
NMDOT STANDARD DRAWING 206-04-3/3	35
NMDOT STANDARD DRAWING 206-07-1/1	36
NMDOT STANDARD DRAWING 511-13-1/3	37
NMDOT STANDARD DRAWING 511-13-2/3	38
NMDOT STANDARD DRAWING 511-13-3/3	39
NMDOT STANDARD DRAWING 511-14-1/4	40
NMDOT STANDARD DRAWING 511-14-2/4	41
NMDOT STANDARD DRAWING 511-14-3/4	42
NMDOT STANDARD DRAWING 511-14-4/4	43
NMDOT STANDARD DRAWING 511-16-1/1	44
NMDOT STANDARD DRAWING 511-80-1/3	45
NMDOT STANDARD DRAWING 511-80-2/3	46
NMDOT STANDARD DRAWING 511-80-3/3	47
NMDOT STANDARD DRAWING 602-01-1/1	48
NMDOT STANDARD DRAWING 602-02-1/1	49

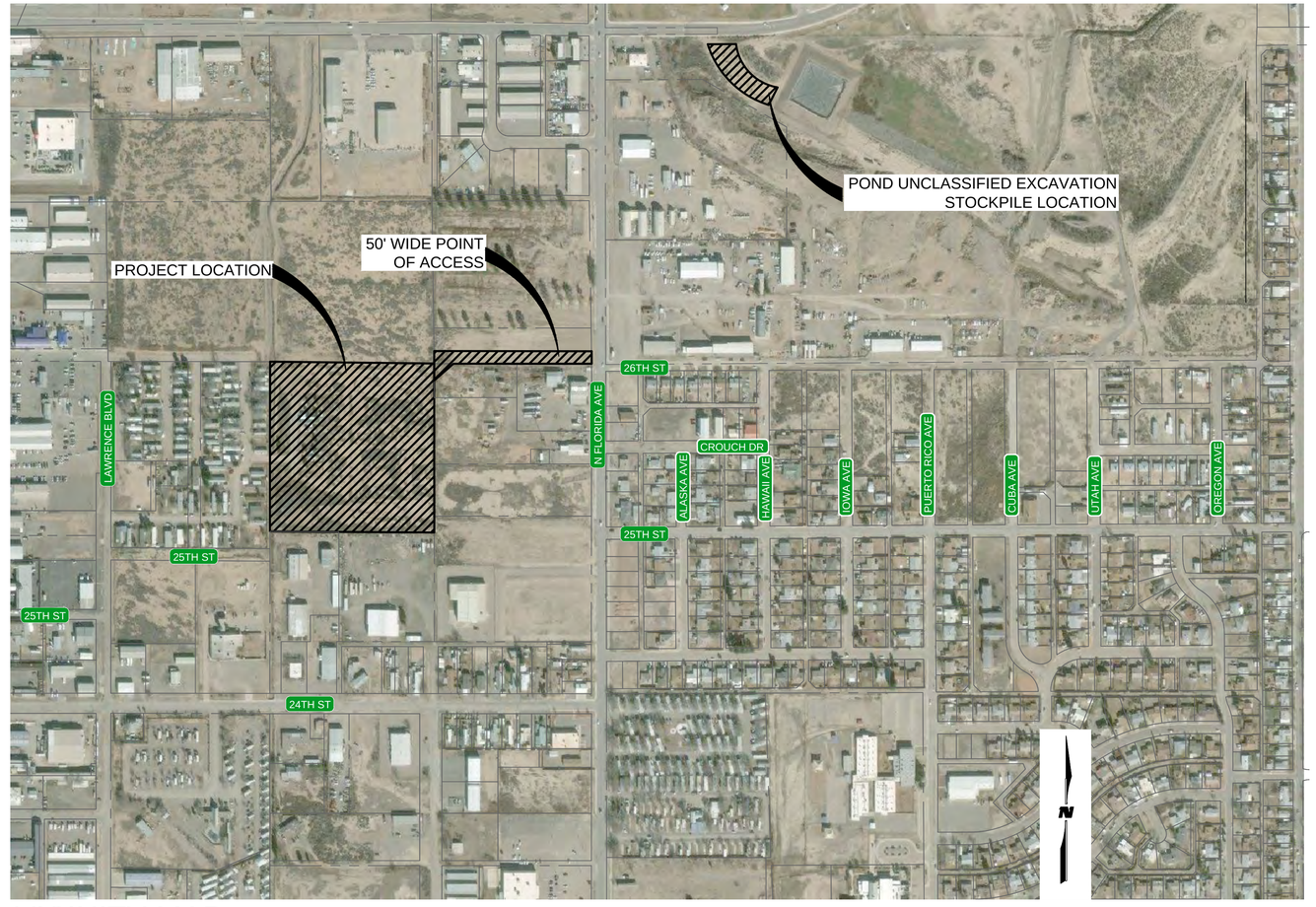

VICINITY MAP

SCALE: NTS

AS-BUILT INFORMATION

CONTRACTOR
WORK STARTED BY — DATE
WORK COMPLETED BY — DATE
ACCEPTANCE BY — DATE
FIELD VERIFICATION BY — DATE
DRAWINGS CORRECTED BY — DATE

BENCH MARKS

SURVEY INFORMATION

FIELD NOTES

NO.	BY	DATE

ENGINEER'S SEAL

NO.	DATE	REMARKS	BY
		REVISIONS	

WILSON & COMPANY, ENGINEERS & ARCHITECTS

DESIGNED BY - - - - DATE - - - -
DRAWN BY - - - - DATE - - - -
CHECKED BY - - - - DATE - - - -

CITY OF ALAMOGORDO

INDEX OF SHEETS

CITY OF ALAMOGORDO | Engineer Approval | Last Design Update | Mo./Day/Yr. | Mo./Day/Yr.

Project No. 2020-002 | Zone Map No. | Sheet 2 OF 49

WILSON & COMPANY

GENERAL NOTES:

1. SPECIFICATIONS: THE CITY OF ALAMOGORDO SPECIAL PROVISION AND SUPPLEMENT SPECIFICATIONS, AND THE NMDOT STANDARD SPECIFICATION FOR HIGHWAY AND BRIDGE CONSTRUCTION 2019 EDITION, SHALL GOVERN CONSTRUCTION OF THIS PROJECT. SEE BID DOCUMENT MANUAL FOR SPECIAL PROVISION AND SUPPLEMENT SPECIFICATIONS

2. GENERAL NOTES: GENERAL NOTES SHALL APPLY TO ALL SHEETS, EXCEPT WHERE MORE SPECIFIC INFORMATION IS PROVIDED. SEE INDIVIDUAL DRAWINGS FOR ADDITIONAL ABBREVIATIONS, SYMBOLS, LEGENDS, NOTES, DETAILS, AND OTHER REQUIREMENTS. IN ALL CASES, THE INFORMATION SHOWN ON INDIVIDUAL DRAWINGS SHALL GOVERN OVER ANY GENERAL INFORMATION. NOT ALL SPECIFIED ITEMS AND/OR STANDARD DETAILS SHOWN MAY BE APPLICABLE TO THIS PROJECT.

3. MEANS, METHODS OR TECHNIQUES: THE OWNER AND ENGINEER ARE NOT RESPONSIBLE FOR THE CONSTRUCTION MEANS, METHODS OR TECHNIQUES, NOR FOR THE EXECUTION OF THE WORK AS SHOWN ON THESE DRAWINGS. THE OWNER AND ENGINEER SHALL NOT BE RESPONSIBLE FOR THE ACTS OR OMISSIONS OF THE CONTRACTOR, SUBCONTRACTORS, OR OTHER PERSONS PERFORMING ANY OF THE WORK, OR FOR THE FAILURE OF ANY OF THE CONTRACTORS OR SUBCONTRACTORS TO CARRY OUT THE WORK IN ACCORDANCE WITH THE CONTRACT DOCUMENTS.

4. SAFETY REQUIREMENTS: THE CONTRACTOR IS RESPONSIBLE FOR MAINTAINING ALL WORK AREAS IN SAFE CONDITION FOR THE PUBLIC. THE CONTRACTOR SHALL BE RESPONSIBLE FOR COMPLIANCE FOR ALL CONTRACTOR PERSONNEL AND SUBCONTRACTOR PERSONNEL WITH APPLICABLE CURRENT FEDERAL, OSHA, STATE, COUNTY, AND CITY LAWS, ORDINANCES, RULES AND REGULATIONS CONCERNING SAFETY AND HEALTH. THE CONTRACTOR SHALL COMPLY WITH ALL OSHA TRENCH SAFETY RULES AND REGULATIONS APPLICABLE TO THIS PROJECT. THE CONTRACTOR SHALL INSTALL, AT A MINIMUM, SAFETY FENCING 48-INCHES IN HEIGHT AROUND THE PERIMETER OF OPEN TRENCHES AND REMOVAL AREAS. THIS WORK SHALL BE CONSIDERED INCIDENTAL TO THE COMPLETION OF THE PROJECT AND NO SEPARATE MEASUREMENT OR PAYMENT WILL BE MADE THEREFOR.

5. CONTRACTOR RESPONSIBILITY: THE CONTRACTOR SHALL ASSUME SOLE AND COMPLETE RESPONSIBILITY FOR THE JOB SITE CONDITIONS DURING THE COURSE OF CONSTRUCTION OF THIS PROJECT INCLUDING SAFETY OF ALL PERSONS AND PROPERTY. THESE REQUIREMENTS SHALL APPLY CONTINUOUSLY AND SHALL NOT BE LIMITED TO NORMAL WORKING HOURS. THE CONTRACTOR SHALL DEFEND, INDEMNIFY AND HOLD THE OWNER AND ENGINEER HARMLESS FROM ANY AND ALL LIABILITY, REAL OR ALLEGED, IN CONNECTION WITH THE CONTRACTORS PERFORMANCE OF WORK ON THIS PROJECT.

6. PROJECT DEVIATIONS: ANY PROPOSED DEVIATIONS FROM THE CONTRACT DOCUMENTS BY THE CONTRACTOR MUST BE ACCEPTED BY THE ENGINEER, IN WRITING, PRIOR TO THE WORK BEING DONE. ANY DEVIATIONS PERFORMED WITHOUT THE ENGINEER'S APPROVAL WILL NOT BE PAID FOR AND MAY BE REQUIRED TO BE RECONSTRUCTED OR REMOVED AT NO ADDITIONAL COST TO THE OWNER.

7. PUBLIC ACCESS TO LOCAL BUSINESSES & RESIDENCES: THE CONTRACTOR SHALL PROVIDE INGRESS AND EGRESS TO LOCAL BUSINESSES AND RESIDENCES FOR THE DURATION OF THE PROJECT. THE CONTRACTOR SHALL ADVISE PROPERTY OWNERS AND THE ENGINEER OF ANY ACCESS MODIFICATIONS, AT LEAST 24 HOURS IN ADVANCE. THIS WORK SHALL BE CONSIDERED INCIDENTAL TO THE COMPLETION OF THE PROJECT AND NO SEPARATE MEASUREMENT OR PAYMENT WILL BE MADE THEREFOR.

8. PERMITTING: IT SHALL BE THE CONTRACTOR'S RESPONSIBILITY TO REQUEST AND OBTAIN ALL PERMITS NECESSARY FOR THIS PROJECT PRIOR TO COMMENCING CONSTRUCTION. CONTRACTOR SHALL COMPLY WITH ALL APPLICABLE CURRENT FEDERAL, OSHA, STATE, COUNTY, AND CITY LAWS, ORDINANCES, RULES AND REGULATIONS.

9. MAINTENANCE OF AS-BUILT PLANS: THE CONTRACTOR SHALL MAINTAIN AN UP TO DATE SET OF AS-BUILT PLANS FOR THE PROJECT. THESE PLANS SHALL BE KEPT CURRENT, WITHIN ONE-WEEK, AT ALL TIMES AND SHALL BE SUBJECT TO REVIEW BY THE ENGINEER THROUGHOUT THE PROJECT AND WILL BE REVIEWED BY THE ENGINEER FOR ACCURACY AND COMPLETENESS AT LEAST ONCE EVERY 7-DAYS. THE FINAL CERTIFIED AS-BUILT PLANS SHALL BE DELIVERED IN CLEAN HARD COPY 22"X34" PAPER MEDIA AND ACAD R2010 OR BETTER. THE CONTRACTOR CERTIFICATION ALONG WITH SURVEYOR CERTIFICATION SHALL BE CLEARLY STATED ON THE COVER SHEET. SURVEYOR SHALL BE LICENSED IN NEW MEXICO AND IN GOOD STANDING. THIS WORK SHALL BE CONSIDERED INCIDENTAL TO THE PROJECT AND NO SEPARATE MEASUREMENT OR PAYMENT WILL BE MADE THEREFOR. AS-BUILTS SHALL BE SUBMITTED WITH SUBSTANTIAL COMPLETION PAY APPLICATION. NO PAYMENT WILL BE MADE WITHOUT AS-BUILT SUBMITTAL. THIS INCLUDES FINAL TOPOGRAPHIC SURVEY OF SITE TO DETERMINE FINAL EARTHWORK QUANTITIES.

10. WATER FOR CONSTRUCTION: THE CONTRACTOR WILL BE RESPONSIBLE FOR PURCHASING ALL OF THE RECLAIMED WATER NEEDED FOR CONSTRUCTION FROM THE CITY OF ALAMOGORDO. THE COST WILL BE DETERMINED IN ACCORDANCE WITH THE CURRENT RECLAIMED WATER RATES. IT SHALL BE THE CONTRACTOR'S RESPONSIBILITY TO TRANSPORT AND APPLY THE RECLAIMED WATER AS SPECIFIED OR AS ORDERED BY THE ENGINEER. THE CONTRACTOR SHALL COORDINATE WITH THE ENGINEER FOR LOCATION OF SOURCES. THIS COST SHALL BE CONSIDERED INCIDENTAL TO THE PROJECT AND NO SEPARATE MEASUREMENT OF PAYMENT WILL BE MADE THEREFOR.

11. INTERRUPTION OF SERVICE: CONTRACTOR MUST MAINTAIN WATER SERVICE AT ALL TIMES AS DIRECTED BY THE ENGINEER. IF AN INTERRUPTION OF SERVICE IS UNAVOIDABLE, THE CONTRACTOR SHALL NOTIFY ALL AFFECTED RESIDENTS ON A DOOR-TO-DOOR BASIS OR AS AGREED WITH THE ENGINEER. CONTRACTOR SHALL COORDINATE WITH THE ENGINEER FOR ALL WATER SHUT-OFFS.

12. EARTHWORK HAUL: THE EARTHWORK HAUL ON THIS PROJECT WILL BE CONSIDERED AS INCLUDED IN THE CONTRACT PRICE FOR ITEMS " UNCLASSIFIED EXCAVATION " , AND " BORROW " , AS APPLICABLE, AND NO SEPARATE MEASUREMENT OR PAYMENT WILL BE MADE FOR TRANSPORTING IMPORT OR EXPORT OF FILL.

13. PAVEMENT DROP-OFF POLICY: IF A PAVEMENT DROP-OFF IS CREATED DURING CONSTRUCTION, THE CONTRACTOR SHALL INITIATE PROTECTIVE ACTION IN ACCORDANCE WITH THE NMDOT'S CURRENT POLICY ". THE POLICY IS AVAILABLE FROM THE ENGINEER. THIS WORK SHALL BE CONSIDERED INCIDENTAL TO THE COMPLETION OF THE PROJECT AND NO SEPARATE MEASUREMENT OR PAYMENT WILL BE MADE THEREFOR.

14. WARPING OF SLOPES: THE CONTRACTOR SHALL WARP SLOPES WHERE NECESSARY TO STAY WITHIN THE RIGHT OF WAY OR CONSTRUCTION EASEMENT LIMITS.

15. CONSTRUCTION EQUIPMENT + MATERIAL STORAGE: THE CONTRACTOR SHALL NOT STORE EQUIPMENT OR MATERIAL WITHIN 25 FEET FROM THE EDGE OF TRAVEL LANES UNLESS THE EQUIPMENT OR MATERIAL IS PROPERLY SHIELDED UTILIZING CURRENT SAFETY DESIGN PLUS INSTALLATION METHODS. ALL EQUIPMENT AND MATERIAL STORED IN STAGING YARD SHALL BE PROPERLY SHIELDED UTILIZING CURRENT SAFETY DESIGN AND INSTALLATION METHODS. IN NO CASE SHALL THE CONTRACTOR STORE EQUIPMENT OR MATERIAL IN THE DRIVING LANE. THE SAFETY DESIGN FOR SHIELDING SHALL BE PROVIDED BY THE CONTRACTOR AND MUST BE APPROVED BY THE ENGINEER BEFORE IMPLEMENTING. THIS WORK, INCLUDING DESIGN, INSTALLATION AND REMOVAL OF THE SHIELDING, SHALL BE CONSIDERED INCIDENTAL TO THE COMPLETION OF THE PROJECT AND NO SEPARATE MEASUREMENT OR PAYMENT WILL BE MADE THEREFOR.

16. PROTECTION OF SURVEY MONUMENTS: THE CONTRACTOR SHALL TAKE PRECAUTIONS TO PROTECT HORIZONTAL AND VERTICAL CONTROL SURVEY MONUMENTS (MARK) FROM DAMAGE PRIOR TO INITIATING CONSTRUCTION. AN INVENTORY OF THE EXISTING MONUMENTS WILL BE TAKEN BY THE ENGINEER AND THE CONTRACTOR WITH ACKNOWLEDGEMENTS PRIOR TO START OF CONSTRUCTION. IF DURING THE COURSE OF CONSTRUCTION OPERATIONS, THE CONTRACTOR DISTURBS OR DESTROYS A MARK, THE CONTRACTOR SHALL ESTABLISH A NEW MARK IN COMPLIANCE WITH THE STANDARDS AND PROCEDURES SET FORTH IN THE GEODETIC MARK PRESERVATION GUIDEBOOK. NATIONAL GEODETIC SURVEY, MARCH 1990, CONTACT: NGS MARK PRESERVATION CENTER-NOAA, TELEPHONE (505) 768-3606.

17. REMOVALS: THE CONTRACTOR SHALL BE RESPONSIBLE FOR ALL REMOVALS REQUIRED TO COMPLETE THE PROJECT. REMOVALS NOT SHOWN ON THE PLANS WILL BE DESIGNATED BY THE ENGINEER. THIS WORK WILL BE CONSIDERED AS INCLUDED IN THE CONTRACT PRICE FOR ITEM "PROJECT REMOVALS" AND THE CONTRACTOR WILL NOT RECEIVE ADDITIONAL COMPENSATION FOR UNLISTED REMOVALS. REMOVALS SHALL BE LIMITED TO A MAXIMUM OF 7-DAYS LEAD TIME FOR REPLACEMENT OF ITEMS REMOVED.

18. SAW CUTTING: CONTRACTOR SHALL SAW CUT PAVEMENT, CONCRETE SIDEWALK, CONCRETE DRIVE WAYS AND CURB AND GUTTER AT TIE-INS AS REQUIRED FOR A SMOOTH TRANSITION. THIS WORK WILL BE CONSIDERED INCIDENTAL TO THE COMPLETION OF THE PROJECT AND NO SEPARATE MEASUREMENT OR PAYMENT WILL BE MADE THEREFOR.

19. SALVAGEABLE MATERIALS: SALVAGEABLE MATERIALS FROM THIS PROJECT ARE TO BE HAULED AND STOCK PILED AT THE CITY YARD LOCATED AT 2600 N. FLORIDA AVENUE. HAUL OF SUCH MATERIAL SHALL BE PERFORMED DURING NORMAL WORKING HOURS AS DIRECTED BY THE ENGINEER. PAYMENT FOR THIS WORK SHALL BE INCLUDED IN THE CONTRACT PRICE FOR ITEM 18 REMOVAL OF STRUCTURES AND OBSTRUCTIONS.

20. WASTE MATERIALS: WASTE MATERIAL MUST BE DISPOSED OF AT A STATE APPROVED SITE.

21. PROTECTION OF EXISTING UTILITIES: THE CONTRACTOR IS RESPONSIBLE FOR LOCATING AND PROTECTING ALL UNDERGROUND AND OVERHEAD UTILITIES AND SHALL COORDINATE ALL WORK WITH UTILITY OWNERS. ALL IMPROVEMENTS WHICH ARE DAMAGED BY THE CONTRACTOR'S OPERATIONS SHALL BE REPAIRED, RECONSTRUCTED OR REPLACED WITHIN 24 HOURS TO THE ENGINEER'S SATISFACTION AT NO ADDITIONAL COST TO THE OWNER.

22. VERIFY ELEVATIONS: THE CONTRACTOR SHALL EMPLOY A LICENSED NEW MEXICO SURVEYOR AND SHALL FIELD VERIFY ALL ELEVATIONS, DIMENSIONS, AND RIGHT-OF-WAY PRIOR TO THE BEGINNING OF CONSTRUCTION. THE ELEVATIONS WERE BASED ON AS-BUILT AND FIELD SURVEY DATA. THE CONTRACTOR SHALL LIMIT ALL WORK ON THIS PROJECT TO WITHIN THE EXISTING RIGHT-OF-WAY AND EASEMENTS. THIS WORK WILL BE CONSIDERED INCIDENTAL TO CONSTRUCTION STAKING BID ITEM. THIS WORK WILL BE CONSIDERED INCIDENTAL TO THE COMPLETION OF THE PROJECT AND NO SEPARATE MEASUREMENT OR PAYMENT WILL BE MADE THEREFOR.

23. CONTRACTOR COORDINATION WITH UTILITIES: THE CONTRACTOR IS HEREBY ADVISED THAT UTILITY RELOCATION WORK BY THE UTILITY OWNERS MAY BE PERFORMED CONCURRENT WITH CONSTRUCTION. THE CONTRACTOR SHALL PROVIDE FOR UTILITY WORK IN CONJUNCTION WITH CONSTRUCTION OPERATIONS AND SHALL BE REQUIRED TO COORDINATE THE SCHEDULING OF WORK WITH THE RESPECTIVE UTILITY OWNERS. ANY CLAIMS FOR DELAY SHALL BE CONTROLLED BY THE TERMS AND CONDITIONS OF THE NMDOT STANDARD SPECIFICATIONS FOR HIGHWAY AND BRIDGE CONSTRUCTION LATEST EDITION.

24. UTILITY DISCLAIMER: UTILITY LOCATIONS SHOWN HEREON ARE BASED ON THE BEST AVAILABLE EVIDENCE INCLUDING PHYSICAL FEATURES SUCH AS VALVES, PEDESTALS, WARNING MARKERS AND SPOTS BY UTILITY LOCATING SERVICES. THERE IS NO GUARANTEE AS TO THE COMPLETENESS OR ACCURACY OF THE UTILITY DATA SHOWN ON THE PLANS. THE CONTRACTOR SHALL CONTACT ALL UTILITY OWNERS TO VERIFY THE HORIZONTAL AND VERTICAL LOCATIONS OF ALL UTILITIES. SHOULD A CONFLICT EXIST, THE CONTRACTOR SHALL NOTIFY THE ENGINEER OF THE CONFLICT WITH MINIMUM DELAY.

25. UTILITY ALLOWANCE: CONTRACTOR SHALL INCLUDE A UTILITY ALLOWANCE OF $5,000.00 PROVIDED IN BID ITEM NO.15. UTILITY ALLOWANCE IS INTENDED TO COVER THAT WORK WHICH IS NOT KNOWN DUE TO COVERED AND UNFORESEEN UNDERGROUND UTILITY CONFLICTS. CONTRACTOR SHALL BE REQUIRED TO PROVIDE A DETAILED SCOPE OF WORK AND COST FOR REVIEW BY OWNERS REPRESENTATIVE PRIOR TO PROCEEDING. PROVISIONS OF ALLOWANCE DOES NOT GUARANTEE FULL AMOUNT TO CONTRACTOR. ONLY THAT PORTION OF MONEY USED FOR INTENDED PURPOSES WILL BE EXPENDED.

26. TRAFFIC CONTROL: THE CONTRACTOR SHALL MAINTAIN AND CONTROL TRAFFIC AS OUTLINED IN THE "MUTCD, LATEST EDITION' DURING CONSTRUCTION. ANY NECESSARY DEVIATION FROM THE "MUTCD, LATEST EDITION" SHALL HAVE PRIOR APPROVAL OF THE ENGINEER. THE CONTRACTOR SHALL SUBMIT A COPY OF TRAFFIC CONTROL PLAN TO THE ENGINEER FOR APPROVAL, PRIOR TO START OF CONSTRUCTION.

27. TRUCK WEIGHT: MAXIMUM WEIGHT OF TRUCKS SHALL CONFORM TO NMDOT STANDARDS. CONTRACTOR TO REPLACE ANY DAMAGED STREETS USED DURING CONSTRUCTION HAULING. REPLACEMENT OF DAMAGED STREETS SHALL BE CONSIDERED INCIDENTAL TO THE COMPLETION OF THE PROJECT AND NO SEPARATE MEASUREMENT OR PAYMENT WILL BE MADE THEREFOR.

28. WORK CONFINEMENT: THE CONTRACTOR SHALL BE REQUIRED TO CONFINE HIS WORK WITHIN THE CONSTRUCTION LIMITS OR RIGHT-OF-WAY. PARKING OF EMPLOYEE'S PRIVATE VEHICLES SHALL NOT BE ALLOWED ALONG CONSTRUCTION AREAS THROUGHOUT CONSTRUCTION LIMITS. IT SHALL BE THE CONTRACTOR'S RESPONSIBILITY TO PROHIBIT ASPHALT VEHICLES AND EQUIPMENT, ROLLERS, CRANES, ETC., FROM DRIVING UPON, ACROSS, OR TURNING ON PRIVATE PROPERTY ADJACENT TO PROJECT WORK AREAS.

29. SURFACE FEATURES: CONTRACTOR SHALL REPAIR OR REPLACE FENCES, BLOCK WALLS, OR SURFACE FEATURES, DAMAGED BY CONTRACTOR'S OR SUBCONTRACTOR'S OPERATIONS, TO EXISTING OR BETTER CONDITION. REPAIR OR REPLACEMENT OF FENCES, BLOCK WALLS, OR SURFACE FEATURES SHALL BE CONSIDERED INCIDENTAL TO THE COMPLETION OF THE PROJECT AND NO SEPARATE MEASUREMENT OR PAYMENT WILL BE MADE THEREFOR.

30. PROJECT VIDEO: PRIOR TO INITIALING CONSTRUCTION OPERATIONS, CONTRACTOR SHALL PERFORM DIGITAL VIDEO _ RECORDING OF THE ENTIRE PROJECT, ITS FULL LENGTH AND WIDTH. THE CONTRACTOR SHALL ALSO INCLUDE OR ADD AS NECESSARY, ANY AREAS TO BE DISTURBED FOR MATERIAL STORAGE, EMPLOYEE PARKING AND EQUIPMENT STORAGE.

A. THE VIDEO DOCUMENTATION SHALL BE COMPLETED IN DIGITAL FORMAT; IT SHALL BE A MINIMUM RESOLUTION OF 1920 X 1080 PIXELS, AT 60 FPS (FRAME PER SECOND) AND IN COLOR. THE VIDEO DOCUMENTATION SHALL BE PERFORMED BETWEEN 10:00 A.M. AND 2:00 P.M. DURING PERIODS OF FULL SUN EXPOSURE. THE ACTUAL DATE OF RECORDING SHALL BE DATE-STAMPED WITHIN EACH FRAME OF THE VIDEO. APPROVAL OF THE VIDEO MUST BE OBTAINED FROM THE ENGINEER PRIOR TO THE COMMENCEMENT OF ANY CLEARING AND GRUBBING OPERATIONS.

B. A DVD COPY OF THE VIDEO RECORDING SHALL BE SUBMITTED TO THE ENGINEER, IN THE FORMAT COMPATIBLE WITH STANDARD DVD PLAYERS.

C. ALL COST ASSOCIATED WITH THE VIDEO RECORDING SPECIFIED IN THIS ARTICLE SHALL BE CONSIDERED INCIDENTAL TO OTHER RELATED ITEMS OF WORK AND NO SEPARATE PAYMENT WILL BE MADE UNLESS SPECIFICALLY INDICATED ELSEWHERE IN THE SPECIAL PROVISIONS.

31. SITE CLEAN UP: CLEAN AND ORDERLY MANNER TO THE SATISFACTION OF THE ENGINEER. THIS WORK SHALL BE CONSIDERED INCIDENTAL TO THE COMPLETION OF THE PROJECT AND NO SEPARATE MEASUREMENT OR PAYMENT WILL BE MADE THEREFOR.

32. TRENCH BACKFILL: NATIVE SOIL SHALL NOT BE USED TO BACKFILL TRENCHES WHERE PAVEMENT WILL BE CONSTRUCTED. ALL TRENCHES UNDER THE PAVEMENT BOX SHALL BE BACKFILLED WITH IMPORT MATERIAL THAT CONFORMS TO THE TECHNICAL SPECIFICATIONS AND PLANS FOR THE PROJECT.

33. SCHEDULE: THE CONTRACTOR SHALL PREPARE AND SUBMIT A CRITICAL PATH METHOD (CPM) SCHEDULE PRIOR TO COMMENCEMENT OF PROJECT CONSTRUCTION. THE CPM SCHEDULE SHALL CLEARLY IDENTIFY A WORK BREAKDOWN STRUCTURE THAT DETERMINES THE TOTAL PROJECT DURATION. EARLY ACTIVITY START AND FINISH, LATE ACTIVITY START AND FINISH, EARLY AND LATE EVENT OCCURRENCE TIME, SHALL ALL BE IDENTIFIED IN THE CPM SCHEDULE. CPM SCHEDULE SHALL BE UPDATED WEEKLY AND DISTRIBUTED IN HARD COPY TO OWNER AND PROJECT ENGINEER. OWNER RETAINS OWNERSHIP OF TOTAL FLOAT AND FREE FLOAT WHEN NOT USED BY CONTRACTOR AND NO ADDITIONAL PAYMENTS WILL BE MADE.

34. THIS CONTRACT ALLOWS THE OWNER TO MAKE PAYMENT WITHIN 45 DAYS AFTER SUBMISSION OF UNDISPUTED REQUEST FOR PAYMENT.

35. CONTRACTOR WILL BE REQUIRED TO MAINTAIN/REPAIR ANY DAMAGE TO N. FLORIDA AND 26TH THAT MIGHT RESULT FROM HAULING.

UTILITY COMPANY CONTACTS:

CITY OF ALAMOGORDO:

WATER/SEWER:	DAVE NUNNELLEY	575.437.5591 ext. 4349
FACILITY/FIBER OPTIC:	PAUL BENNETT	575.439.4390 or 575.439.4391
PARK SUPERVISOR:	ERIK MARION	575.439.4139

ELECTRIC: PNM ELECTRIC
(OFFICE) 575.443.6610
LORNE WOFFORD 575.430.8380

NEW MEXICO GAS COMPANY: NATURAL GAS
(OFFICE) 575-443-6412
MARIO ESTRADA 575.430.8381

TELEPHONE: CENTURY LINK
JAMIE LIMON (O) 575.525.5021 (C) 575.649.0259

CABLE TV: TDS CABLE
(OFFICE) 575.439.3534
JOHNNY RODRIGUEZ 575.442.0259

TULAROSA COMMUNICATIONS:
RICHARD SUGGS 575.551.6873

AS-BUILT INFORMATION
CONTRACTOR
WORK STAKED BY — DATE
INSPECTORS ACCEPTANCE BY — DATE
FIELD VERIFICATION BY — DATE
VERIFICATION BY DRAWINGS — DATE
CORRECTED BY

BENCH MARKS

SURVEY INFORMATION
FIELD NOTES

NO.	BY	DATE

ENGINEER'S SEAL

NO.	DATE	REMARKS	BY

REVISIONS

WILSON & COMPANY, ENGINEERS & ARCHITECTS
DESIGNED BY ---- DATE ----
DRAWN BY ---- DATE ----
CHECKED BY ---- DATE ----

CITY OF ALAMOGORDO

GENERAL NOTES

CITY OF ALAMOGORDO	Engineer Approval	Last Design Update	Mo./Day/Yr.	Mo./Day/Yr.

Project No. 2020-002 | Zone Map No. | Sheet 3 OF 49

WILSON & COMPANY

SUMMARY OF QUANTITIES

ITEM NO.	*DESCRIPTION*	*BID UNIT*	*ESTIMATED QTY.*	*FINAL*
1	CLEARING AND GRUBBING	LS	1	
2	UNCLASSIFIED EXCAVATION	CY	37,500	
3	REINFORCED CONCRETE FOR SPILLWAY; INCL. CONCRETE, REINFORCEMENT, SUBGRADE PREP.	CY	46	
4	CONCRETE SLOPE BLANKET FOR 60" CMP PIPE; INCL. CONCRETE, REINFORCEMENT, SAFETY GRATE; MITER TO 4:1 SLOPE; SUBGRADE PREP.	EACH	1	
5	CONCRETE FOR CUTOFF WALLS (3000 P.S.I.)	CY	15	
6	24" SMOOTH INTERIOR CULVERT PIPE; INCL. 2 - TEE FITTINGS	LF	120	
7	TEMPORARY EROSION AND SEDIMENT CONTROL	LS	1	
8	WIRE ENCLOSED RIPRAP CLASS A; INCL. SUBGRADE PREP	CY	370	
9	TRAFFIC CONTROL MANAGEMENT	LS	1	
10	MOBILIZATION	LS	1	
11	CONSTRUCTION STAKING BY THE CONTRACTOR	LS	1	
12	POST CONSTRUCTION PLANS	LS	1	
13	DRY WELL	LS	1	
14	STORM DRAIN MANHOLE/CLEANOUT MODIFIED; COMPLETE, INCL. 23 3/4" LID AND 24 1/8" RING	EACH	2	
15	UTILITY ALLOWANCE	ALLOW	1	
16	PROTECTION OF PROJECT FROM WATER DURING CONSTRUCTION	LS	1	
17	REMOVAL OF STRUCTURES AND OBSTRUCTIONS	LS	1	
A - 1	POST AND CHAIN BARRIER	EACH	2	
A - 2	8' CHAINLINK FENCE WITH BARBED WIRE	LF	1,080	
A - 3	10' CHAINLINK DOUBLE GATE WITH BARBED WIRE	EACH	1	

AS-BUILT INFORMATION
CONTRACTOR
WORK STAKED BY — DATE
INSPECTORS ACCEPTANCE BY — DATE
FIELD VERIFICATION BY — DATE
DRAWINGS CORRECTED BY — DATE

BENCH MARKS

SURVEY INFORMATION
FIELD NOTES
NO. | BY | DATE

ENGINEER'S SEAL

NO. | DATE | REMARKS | BY
REVISIONS

WILSON & COMPANY, ENGINEERS & ARCHITECTS
DESIGNED BY ---- DATE ----
DRAWN BY ---- DATE ----
CHECKED BY ---- DATE ----

CITY OF ALAMOGORDO

SUMMARY OF QUANTITIES

CITY OF ALAMOGORDO | Engineer Approval | Last Design Update | Mo./Day/Yr. | Mo./Day/Yr.

Project No. 2020-002 | Zone Map No. | Sheet 4 OF 49

WILSON & COMPANY

UNCLASSIFIED EXCAVATION

LOCATION	VOLUME (CU. YD.)	
GRIGGS FIELD DETENTION BASIN		
POND, CHANNEL, ARROYO, SPILLWAY, SWALE	37394.32	
	PROJECT TOTAL	37,394.32
	PROJECT USE	37,500

REINFORCED CONCRETE FOR SPILLWAY

LOCATION	AREA (SF)	DEPTH (LF)	VOLUME (CY)
ACCESS ROAD NORTH	127.68	0.50	2.36
ACCESS ROAD SOUTH	151.20	0.50	2.80
CONCRETE SLOPE BLANKET IN (INCLUDING SAFETY GRATE)	138.17	0.50	2.56
CONCRETE SLOPE BLANKET OUT (INCLUDING SAFETY GRATE)	138.97	0.50	2.57
SPILLWAY	405.80	VARIES	8.73
APRON	182.00	0.50	3.37
MISC CONCRETE	130.11	0.33	1.59
CONCRETE CAP	329.56	VARIES	2.65
CUTOFF WALL 1	16.38	2.50	1.52
CUTOFF WALL 2	16.38	2.50	1.52
CUTOFF WALL 3	7.00	2.00	0.52
WALL (NE)	28.39	0.50	1.23
WALL (NW)	123.88	0.50	3.42
WALL (SE)	29.03	0.50	1.25
WALL (SW)	111.12	0.50	9.00
WALL (CENTER SPILLWAY)	24.83	0.50	0.46
		PROJECT TOTAL	45.08
		PROJECT USE	46

** SUBGRADE PREPARATION IS INCIDENTAL TO THIS ITEM.*

CONCRETE FOR CUTOFF WALLS (3000 P.S.I.)

ID	LOCATION	LENGTH (FT)	THICKNESS (FT)	VOLUME (CY)
CW1	DRY CANYON ARROYO	31.49	1	3.44
CW2	DRY CANYON ARROYO	31.49	1	3.44
CW3	DRY CANYON ARROYO	31.49	1	3.44
			PROJECT TOTAL	10.33
			PROJECT USE	15

**SUBGRADE PREPARATION IS INCIDENTAL TO THIS ITEM.*

CONCRETE SLOPE BLANKET FOR 60" PIPE INCL. CONCRETE, REINFORCMENT, AND SAFETY GRATE

LOCATION	VOLUME (CY)	COMMENTS
60" EXISTING OUTFALL	9.60	SEE NMDOT STD DRAWING 511-13-1/3 FOR QTY.
		PROJECT TOTAL 9.60
		PROJECT USE 10

**SUBGRADE PREPARATION IS INCIDENTAL TO THIS ITEM.*

ESTIMATED STRUCTURE QUANTITIES (FOR STORM DRAIN)

DRAINAGE STRUCTURE #	24" SMOOTH INTERIOR CULVERT PIPE (LF)
PIPE -1 - 24" SMOOTH INTERIOR CULVERT PIPE	52
PIPE -2 - 24" SMOOTH INTERIOR CULVERT PIPE	60
	112.00
	120.00

WIRE ENCLOSED RIPRAP CLASS A

RIPRAP ID	LOCATION	C.Y.	REMARKS
RR - 1	NORTH END OF DRY CANYON ARROYO	63	SEE EROSION CONTROL PLAN; SHEET 17
RR - 2	SOUTH END OF DRY CANYON ARROYO	28	SEE EROSION CONTROL PLAN; SHEET 17
RR - 3	BOTTOM OF SOUTH END OF DRY CANYON ARROYO	15	SEE EROSION CONTROL PLAN; SHEET 17
RR - 4	BOTTOM OF SOUTH END OF CHANNEL	71	SEE EROSION CONTROL PLAN; SHEET 17
RR - 5	RIPRAP RUNDOWN SWALE TO CHANNEL	39	SEE EROSION CONTROL PLAN; SHEET 17
RR - 6	GRIGGS OUTFALL NE CORNER OF PROPERTY	112	SEE EROSION CONTROL PLAN; SHEET 17
RR - 7	DRY WELL; BOTTOM OF POND	6	SEE EROSION CONTROL PLAN; SHEET 17
RR - 8	SOUTH END OF DRY CANYON ARROYO SOUTH OF SPILLWAY	35	SEE EROSION CONTROL PLAN; SHEET 17
	PROJECT TOTAL	369	
	PROJECT USE	370	

**SUBGRADE PREPARATION IS INCIDENTAL TO THIS ITEM.*

STORM DRAIN MH CLEANOUT - MODIFIED

DESCRIPTION	LOCATION	QTY	L.F.	REMARKS
24" DIAMETER CMP (TEE'S)	SPILLWAY		2.00	WITHIN SPILLWAY ABOVE 24" SMOOTH INTERIOR CULVERT PIPE, INCLUDED IN PAYMENT FOR 24" SMOOTH INTERIOR CULVERT PIPE, NO ADDITIONAL PAYMENT SHALL BE MADE.
MANHOLE LID	SPILLWAY	2.00		WITHIN SPILLWAY ABOVE 24" SMOOTH INTERIOR CULVERT PIPE
MANHOLE RING	SPILLWAY	2.00		WITHIN SPILLWAY ABOVE 24" SMOOTH INTERIOR CULVERT PIPE

CONSTRUCTION ENGINEERING & LUMP SUM ITEMS

ITEM NUMBER	DESCRIPTION	UNITS	QUANTITY
1	CLEARING AND GRUBBING	L.S.	1
8	TEMPORARY EROSION AND SEDIMENT CONTROL	L.S.	1
10	TRAFFIC CONTROL MANAGEMENT	L.S.	1
11	MOBILIZATION	L.S.	1
12	CONSTRUCTION STAKING BY THE CONTRACTOR	L.S.	1
13	POST CONSTRUCTION PLANS	L.S.	1
14	DRY WELL	L.S.	1
16	UTILITY ALLOWANCE	ALLOW	1
17	PROTECTION OF PROJECT FROM WATER DURING CONSTRUCTION	L.S.	1
18	REMOVAL OF STRUCTURES AND OBSTRUCTIONS	L.S.	1

8' CHAIN LINK FENCE WITH BARBED WIRE

FENCE ID	LOCATION	LIN. FT.	REMARKS
FENCE 1	EAST POND	308.33	VIEW FENCING PLAN; SHEET 16 FOR LOCATION
FENCE 2	NORTH POND	358.66	VIEW FENCING PLAN; SHEET 16 FOR LOCATION
FENCE 3	NORTH POND	108.91	VIEW FENCING PLAN; SHEET 16 FOR LOCATION
FENCE 4	WEST POND	303.08	VIEW FENCING PLAN; SHEET 16 FOR LOCATION
	PROJECT TOTAL	1078.99	
	PROJECT USE	1,080	

10' CHAINLINK DOUBLE GATE WITH BARBED WIRE

GATE ID	LOCATION	EACH	REMARKS
GATE 1	NE CORNER	1	VIEW FENCING PLAN; SHEET 16 FOR LOCATION
	PROJECT TOTAL	1	
	PROJECT USE	1	

POST & CHAIN BARRIER

BARRIED ID	LOCATION	C.Y.	QUANTITY	LF	REMARKS
BARRIER 1	SHEET 16 - NW CORNER OF POND				72' SPAN ACRROSS CHANNEL
	CONCRETE FOOTING	2.71			
	POST		6		
	CHAIN			82	
BARRIER 2	SHEET 16 - NORTH OF POND	2.71			81' SPAN ACROSS CHANNEL
	CONCRETE FOOTING		6		
	POST				
	CHAIN			85	
	PROJECT TOTAL	5.43	12	167	
	PROJECT USE	6	12	170	

** FOR CONTRACTS INFORMATION ONLY*

REMOVALS OF STRUCTURES AND OBSTRUCTIONS

ITEM	LOCATION	L.F.	LUMP SUM	REMARKS
GRIGGS FIELD DETENTION BASIN				
CONTRACTOR REMOVAL				
RIPRAP (81 CY)	SEE DEMOLITION SHEET 8 FOR LOCATION		1	REMOVE AND SALVAGE OF ROCK AND STEEL POSTS; REMOVE AND DISPOSE WIRE.
ABANDONED COMMUNICATION LINE	SEE DEMOLITION SHEET 8 FOR LOCATION	119		REMOVE AND DISPOSE OF COMMUNICATION LINE.

AS-BUILT INFORMATION
CONTRACTOR
WORK STAKED BY DATE
INSPECTORS ACCEPTANCE BY DATE
FIELD VERIFICATION BY DATE
DRAWINGS CORRECTED BY DATE

BENCH MARKS

SURVEY INFORMATION
FIELD NOTES
NO. BY DATE

ENGINEER'S SEAL
STATE OF NEW MEXICO
STEVEN S. HAMILTON
PROFESSIONAL ENGINEER

NO.	DATE	REMARKS	BY

REVISIONS

WILSON & COMPANY, ENGINEERS & ARCHITECTS
DESIGNED BY ---- DATE ----
DRAWN BY ---- DATE ----
CHECKED BY ---- DATE ----

CITY OF ALAMOGORDO

MISCELLANEOUS QUANTITIES

CITY OF ALAMOGORDO | Engineer Approval | Last Design Update | Mo./Day/Yr. | Mo./Day/Yr.

Project No. 2020-002 | Zone Map No. | Sheet 5 OF 49

WILSON & COMPANY

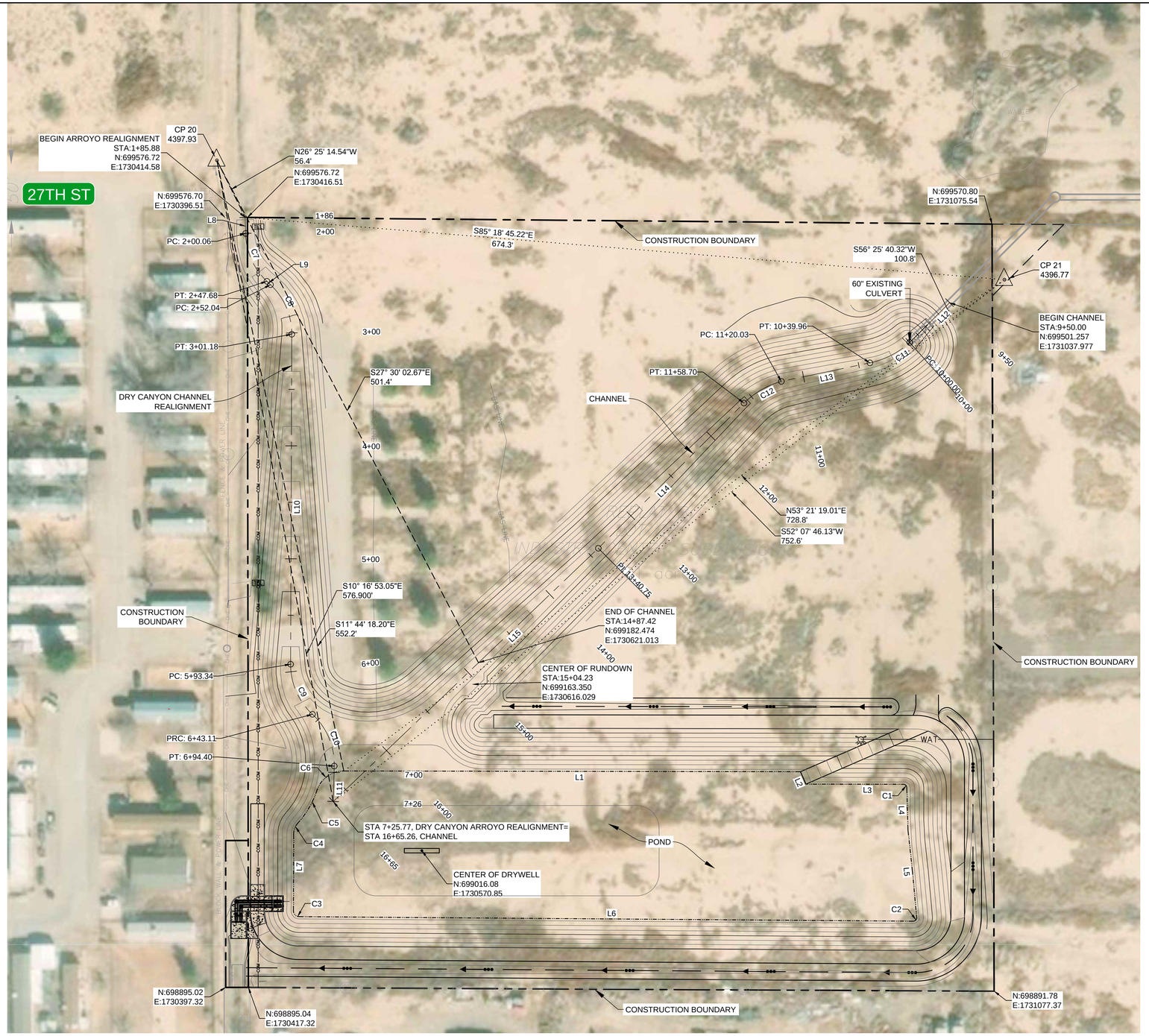

1 HORIZONTAL CONTROL

SCALE: 1" = 50'

SCALE: 1" = 50'

0 25' 50'

SURVEY NOTES

1. CONTROL POINTS ARE STATE PLANE GRID BEARINGS; NAD83, NEW MEXICO CENTRAL ZONE (U.S. FT.)

CONTROL POINTS

*NOT SHOWN IN PLAN VIEW

CP-20
LOCAL CONTROL
N: 699627.2320'
E: 1730389.4790'
ELEV: 4397.93'

*CP-3
BRASS CAP
N: 700,224.4400'
E: 1,733,310.9700'
ELEV: 4440.917'

CP-21
LOCAL CONTROL
N: 699,521.6190'
E: 1,731,086.5720'
ELEV: 4396.77'

*CP-102
REBAR
N: 700,970.4700'
E: 1,730,634.3630'
ELEV: 4418.730'

SEGMENT TABLES

POND BOTTOM LINE & CURVE TABLE

Line #/Curve #	Length	Direction/Delta (Deg)	Radius
L1	404.2'	N89° 54' 38.0"W	
L2	12.0'	N23° 29' 25.7"W	
L3	86.3'	N89° 54' 43.0"W	
C1	4.6'	88.31	3.0'
L4	37.9'	N01° 35' 59.7"W	
L5	36.8'	N06° 14' 50.4"W	
C2	4.9'	92.96	3.0'
L6	543.6'	S89° 34' 38.9"E	
C3	7.8'	89.72	5.0'
L7	68.3'	S00° 08' 34.4"W	
C4	10.3'	42.15	14.0'
C5	33.9'	24.01	81.0'
C6	31.3'	71.80	25.0'

DRY CANYON CHANNEL LINE & CURVE TABLE

Line #/ Curve #	Length	Direction/Delta (Deg)	Radius
L8	14.2'	S1° 14' 59"E	
C7	47.6'	45.47	60.0'
L9	4.4'	S46° 43' 23"E	
C8	49.1'	46.93	60.0'
L10	292.2'	S0° 12' 20"W	
C9	49.8'	47.52	60.0'
C10	51.3'	48.98	60.0'
L11	31.4'	S1° 39' 39"W	

DRY CANYON CHANNEL LINE & CURVE TABLE

Line #/ Curve #	Length	Direction/Delta (Deg)	Radius
L12	50.0'	S45° 00' 00"W	
C11	40.0'	30.03	76.2'
L13	80.1'	S78° 09' 01"W	
C12	38.7'	29.54	75.0'
L14	182.1'	S45° 05' 47"W	
L15	324.5'	S46° 17' 45"W	

LEGEND

- MINOR CONTOUR (PROPOSED)
- MAJOR CONTOUR (PROPOSED)
- PROPERTY LINE
- BOTTOM OF POND
- EXISTING EASEMENTS
- EXISTING FENCE
- EXISTING FENCE
- CONTROL POINT

AS-BUILT INFORMATION

CONTRACTOR | DATE
WORK STAKED BY | DATE
INSPECTORS ACCEPTANCE BY | DATE
FIELD VERIFICATION BY | DATE
DRAWINGS CORRECTED BY | DATE

BENCH MARKS

SURVEY INFORMATION
FIELD NOTES

NO.	BY	DATE

ENGINEER'S SEAL

STATE OF NEW MEXICO
STEVEN L. HAMILTON
PROFESSIONAL ENGINEER

NO.	DATE	REMARKS	BY

REVISIONS

WILSON & COMPANY, ENGINEERS & ARCHITECTS

DESIGNED BY ---- DATE ----
DRAWN BY ---- DATE ----
CHECKED BY ---- DATE ----

CITY OF ALAMOGORDO

HORIZONTAL CONTROL

CITY OF ALAMOGORDO | Engineer Approval | Last Design Update | Mo./Day/Yr. | Mo./Day/Yr.

Project No. 2020-002 | Zone Map No. | Sheet 6 OF 49

WILSON & COMPANY

M:\MSD\19-600-032-00\2_DISCIPLINES_SHEETS\2_SHEETS - CIVIL\196032_HORZ CNTRL.DWG 3/2/2020

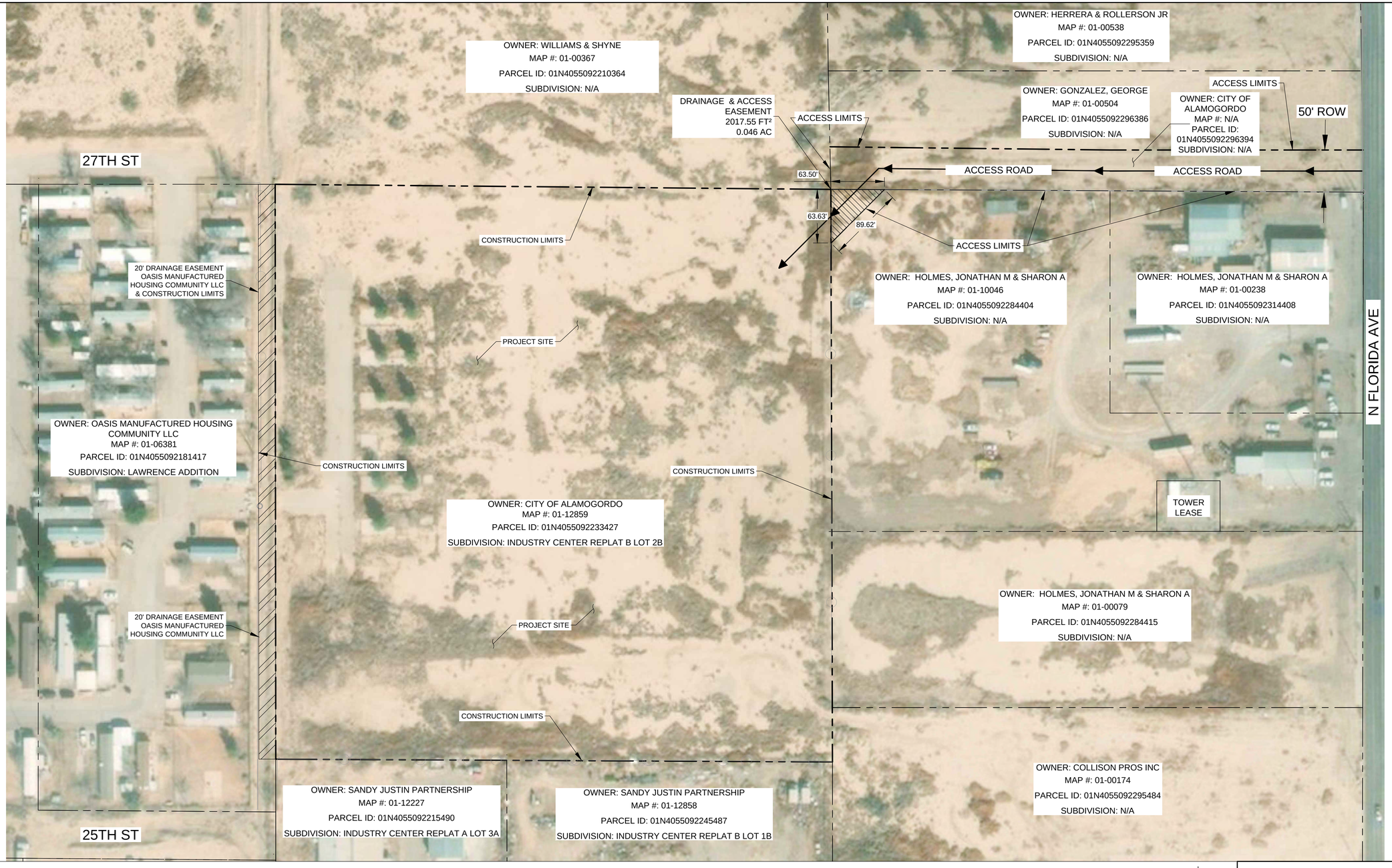

LEGEND

- EXISTING DRAINAGE EASEMENT
- EXISTING DRAINAGE & ACCESS EASEMENT
- GIS PARCEL BOUNDARY
- CITY OWNED PARCEL BOUNDARY
- ACCESS ROAD

GENERAL NOTES

1. ALL CONSTRUCTION ACTIVITIES, INCLUDING BUT NOT LIMITED TO; STORAGE OF MATERIALS, CONSTRUCTION STAGING, EQUIPMENT, PERSONNEL, AND SUBCONTRACTORS SHALL BE WITHIN THE CONSTRUCTION LIMITS. THIS PROJECT DOES NOT PERMIT ANY ACTIVITY OUTSIDE THE DESIGNATED CONSTRUCTION LIMITS.
2. PROJECT SITE ACCESS SHALL FOLLOW THE DESIGNATED ACCESS ROAD FROM N. FLORIDA AVENUE. ACCESS IS ONLY PERMITTED ON CITY OWNED PARCEL ID NO. 01N4055092296394 AND THE EXISTING DRAINAGE AND ACCESS EASEMENT.
3. THE CONTRACTOR WILL BE HELD LEGALLY RESPONSIBLE FOR ANY AND ALL ACTIVITIES OUTSIDE THE CONSTRUCTION AND ACCESS LIMITS.

N

0 30' 60'
SCALE: 1" = 60'

AS-BUILT INFORMATION
CONTRACTOR
WORK STAKED BY DATE
INSPECTORS ACCEPTANCE BY DATE
FIELD VERIFICATION BY DATE
DRAWINGS CORRECTED BY DATE

BENCH MARKS

SURVEY INFORMATION
FIELD NOTES

NO.	BY	DATE

ENGINEER'S SEAL

NO.	DATE	REMARKS	BY
		REVISIONS	

WILSON & COMPANY, ENGINEERS & ARCHITECTS
DESIGNED BY ---- DATE ----
DRAWN BY ---- DATE ----
CHECKED BY ---- DATE ----

CITY OF ALAMOGORDO

PROPERTY OWNERSHIP MAP

CITY OF ALAMOGORDO	Engineer Approval	Last Design Update	Mo./Day/Yr.	Mo./Day/Yr.

Project No. 2020-002 | Zone Map No. | Sheet 7 OF 49

M:\MSD\19-600-032-00\2_DISCIPLINES_SHEETS\2_SHEETS - CIVIL\196032_PROP OWNER.DWG 3/2/2020

WILSON & COMPANY

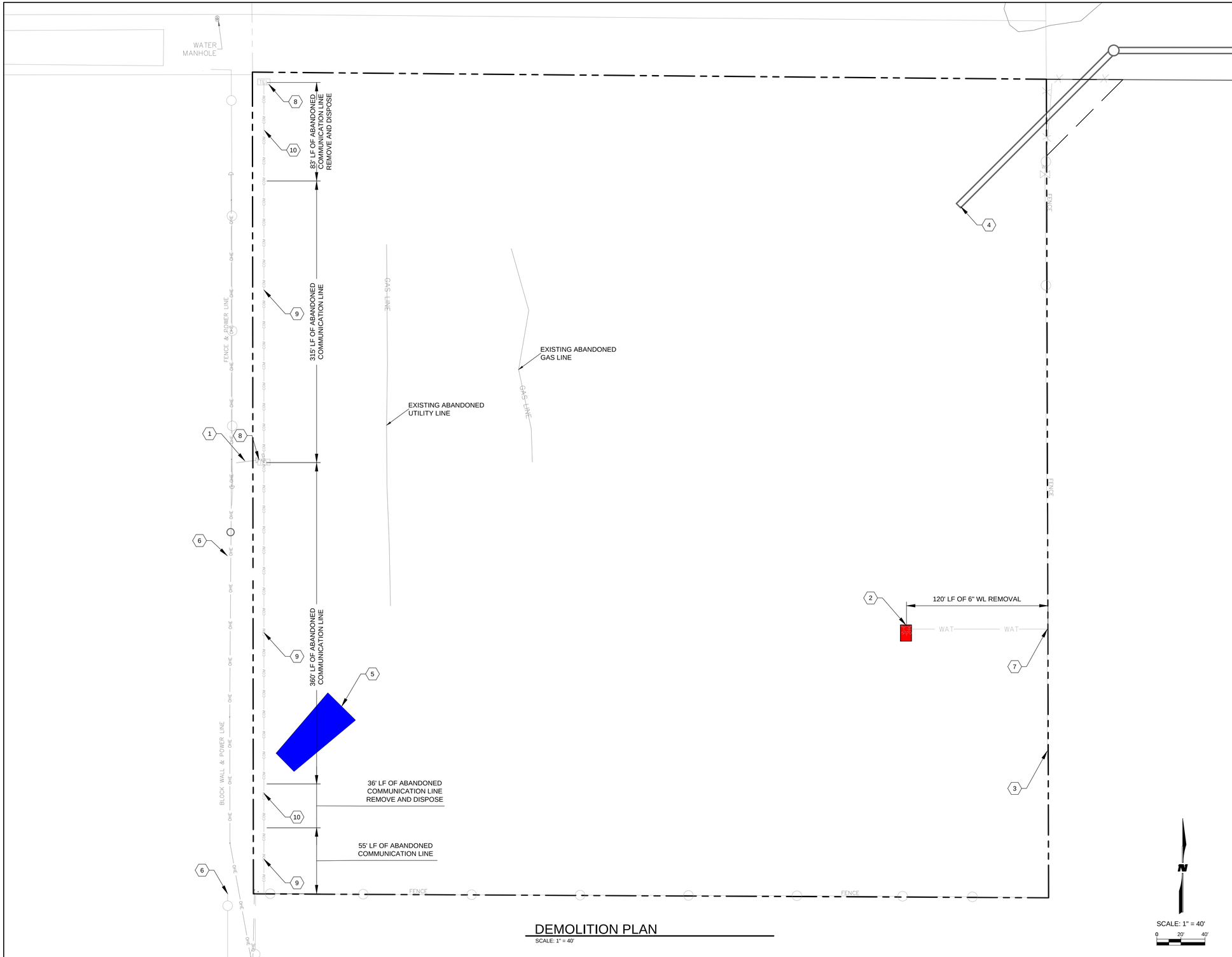

DEMOLITION PLAN
SCALE: 1" = 40'

GENERAL NOTES

1. CONTRACTOR SHALL FIELD VERIFY ALL EXISTING UTILITIES ON-SITE ARE NOT LIVE. CONTRACTOR SHALL REMOVE AND DISPOSE ALL UTILITIES THAT WILL NOT BE USED WITHIN THE PROJECT AREA.
2. CONTRACTOR IS RESPONSIBLE FOR PROTECTING EXISTING BLOCK WALL IN PLACE FOR THE LIFE OF THE PROJECT. ANY DAMAGE RESULTING FROM CONTRACTORS ACTIVITIES SHALL BE REPAIRED IN KIND BY THE CONTRACTOR AT NO ADDITIONAL COST TO THE OWNER.
3. CONTRACTOR SHALL PROTECT IN PLACE ALL POWER POLES.

(X) KEYNOTES

1. CONTRACTOR TO PROTECT POWER POLE & ANCHOR, WILL REMAIN IN PLACE.
2. FIRE HYDRANT AND UNDERGROUND PIPING SHALL BE REMOVED BY OTHERS PRIOR TO ISSUANCES OF A NOTICE TO PROCEED.
3. PROTECT IN PLACE EXISTING BARBED WIRE FENCE.
4. PROTECT IN PLACE EXISTING 60" CMP END OF PIPE.
5. CONTRACTOR TO REMOVE AND SALVAGE 81 CY OF WIRE ENCLOSED RIPRAP. CONTRACTOR TO REMOVE AND SALVAGE STEEL POSTS. COORDINATE WITH OWNER FOR STORAGE.
6. CONTRACTOR TO PROTECT EXISTING BLOCK WALL; WILL REMAIN IN PLACE.
7. EXISTING 6" PVC WATERLINE CAP AND ABANDON UB PLACE.
8. CONTRACTOR TO REMOVE AND DISPOSE OF EXISTING COMMUNICATION PEDESTAL.
9. ABANDONED COMMUNICATION CONDUIT SHALL REMAIN IN PLACE
10. REMOVE AND DISPOSE EXISTING ABANDONED COMMUNICATION CONDUIT.

LEGEND

- PROPERTY LINE
- EXISTING EASEMENT
- EXISTING FENCE
- EXISTING FENCE
- COM — EXISTING COMMUNICATION LINE
- WAT — EXISTING 6" WATERLINE
- EXISTING FIRE HYDRANT
- TEL — EXISTING TV PEDESTAL
- EXISTING WIRE TIED RIPRAP
- REMOVAL - CONTRACTOR TO REMOVE
- REMOVAL - CITY OF ALAMOGORDO

AS-BUILT INFORMATION

CONTRACTOR		DATE
WORK STAKED BY		DATE
INSPECTORS ACCEPTANCE BY		DATE
AS-BUILTS VERIFICATION BY		DATE
AS-BUILTS CORRECTED BY		DATE

BENCH MARKS

SURVEY INFORMATION

NO.	BY	DATE

FIELD NOTES

ENGINEER'S SEAL

NO.	DATE	REMARKS	BY

REVISIONS

WILSON & COMPANY, ENGINEERS & ARCHITECTS

DESIGNED BY	----	DATE	----	DATE
DRAWN BY	----	DATE	----	DATE
CHECKED BY	----	DATE	----	DATE

CITY OF ALAMOGORDO

DEMOLITION PLAN

CITY OF ALAMOGORDO	Engineer Approval	Last Design Update	Mo./Day/Yr.	Mo./Day/Yr.

Project No. 2020-002 | Zone Map No. | Sheet 8 OF 49

M:\MSD\19-600-032-00\2_DISCIPLINES_SHEETS\2_SHEETS - CIVIL\196032_DEMO PLAN.DWG 3/2/2020

WILSON & COMPANY

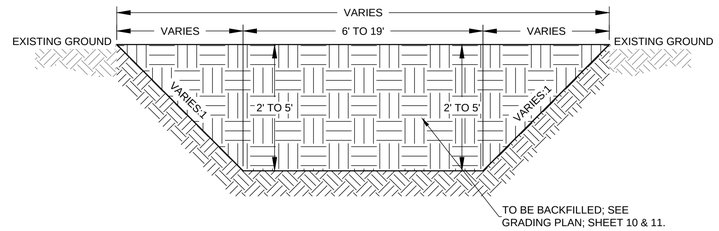

EXISTING TYPICAL SECTION - DRY CANYON ARROYO STA. 1+85.88 TO STA. 7+25.77

SCALE: 1" = 3'

*NOTE: SEE SHEETS 18 AND 19.

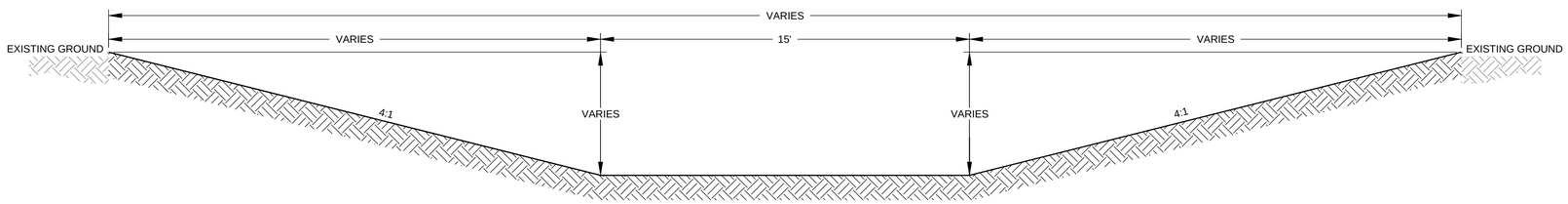

PROPOSED TYPICAL SECTION - DRY CANYON ARROYO STA. 1+85.88 TO STA. 5+77.71

SCALE: 1" = 3'

*NOTE: SIDE SLOPE VARIES FROM 2:1 TO 4:1 FROM STA. 1+85.88 TO 2+85.35. SEE SHEETS 18 AND 19.

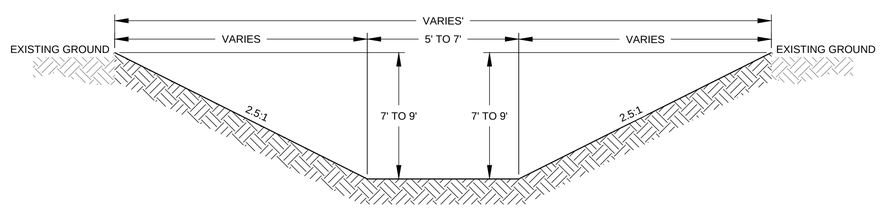

EXISTING TYPICAL SECTION - CHANNEL STA. 10+00 TO 15+50

SCALE: 1" = 3'

*NOTE: SEE SHEETS 20 AND 21.

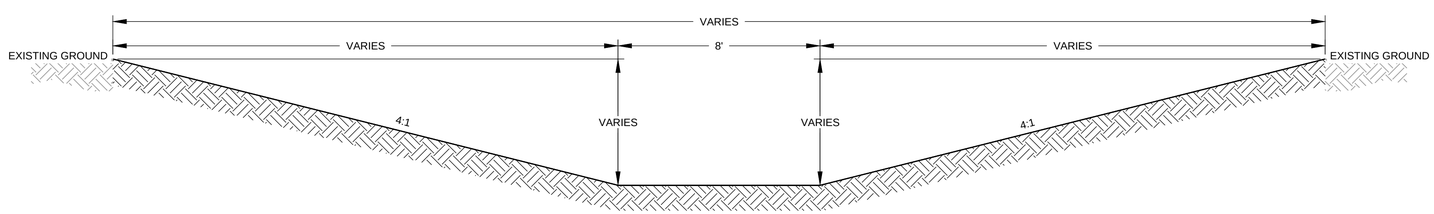

PROPOSED TYPICAL SECTION - CHANNEL STA. 10+00 TO 15+50

SCALE: 1" = 3'

*NOTE: SEE SHEETS 20 AND 21.

AS-BUILT INFORMATION

CONTRACTOR	
WORK STAKED BY	DATE
INSPECTORS ACCEPTANCE BY	DATE
FIELD VERIFICATION BY	DATE
DRAWINGS CORRECTED BY	DATE

BENCH MARKS

SURVEY INFORMATION

FIELD NOTES

NO.	BY	DATE

ENGINEER'S SEAL

NO.	DATE	REMARKS	BY
		REVISIONS	

WILSON & COMPANY, ENGINEERS & ARCHITECTS

DESIGNED BY	- - - -	DATE	- - - -
DRAWN BY	- - - -	DATE	- - - -
CHECKED BY	- - - -	DATE	- - - -

CITY OF ALAMOGORDO

TYPICAL SECTIONS

CITY OF ALAMOGORDO	Engineer Approval	Last Design Update	Mo./Day/Yr.	Mo./Day/Yr.

Project No.	Zone Map No.	Sheet
2020-002		9 OF 49

WILSON & COMPANY

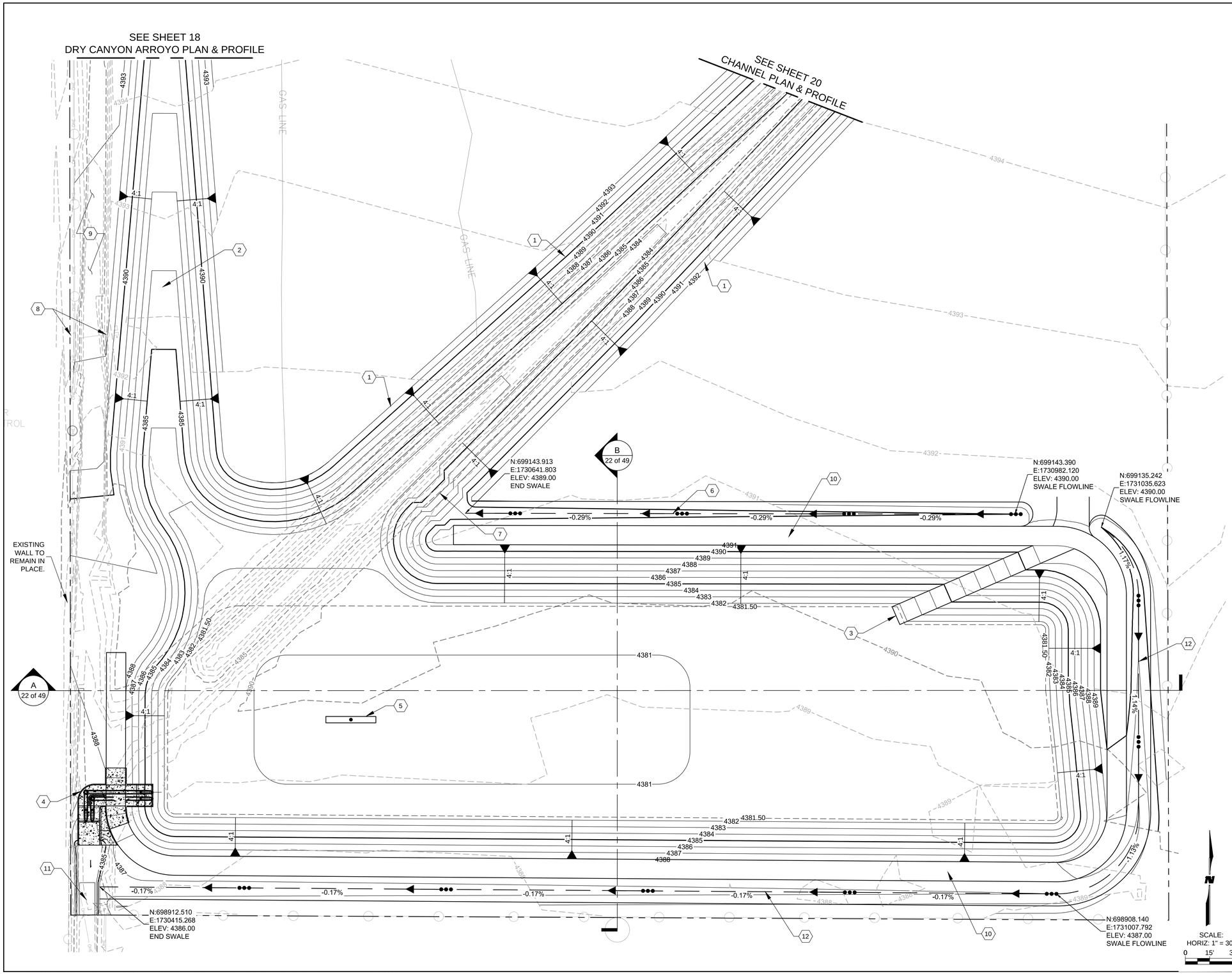

GENERAL NOTES

1. SEE SHEET 3 FOR ALL GENERAL NOTES
2. EXISTING GRADE SHOWN AT 1' MINOR AND 5' MAJOR CONTOURS
3. FINISHED GRADE SHOWN AT 1' MINOR AND 5' MAJOR CONTOURS
4. CONTRACTOR IS RESPONSIBLE FOR PROTECTING EXISTING BLOCK WALL IN PLACE FOR THE LIFE OF THE PROJECT. ANY DAMAGE RESULTING FROM CONTRACTORS ACTIVITIES SHALL BE REPAIRED IN KIND BY THE CONTRACTOR AT NO ADDITIONAL COST TO THE OWNER.
5. CONTRACTOR SHALL PROTECT IN PLACE ALL POWER POLES.

KEY NOTES

1. BUILD CHANNEL PER TYPICAL SECTION SHEET 9, PLAN & PROFILE SHEET 20 & 21, AND CHANNEL CROSS SECTIONS SHEETS 23 & 24.
2. BUILD DRY CANYON ARROYO PER TYPICAL SECTION SHEET 9, PLAN & PROFILE SHEETS 18 & 19, AND CROSS SECTIONS SHEET 25 & 26.
3. BUILD 12' WIDE, 10:1 SLOPE ACCESS RAMP.
4. PROPOSED CONCRETE SPILLWAY, SEE SHEET 12, 13, 14, & 15 FOR GRADING PLAN.
5. BUILD DRY WELL SEE SHEET 28 FOR DETAILS.
6. BUILD 15' WIDE V-DITCH SWALE PER SHEET 30, DETAIL A5, SWALE 1.
7. BUILD SWALE RUN DOWN SEE SHEET 30.
8. EXISTING POWER POLE AND GUY WIRE. CONTRACTOR TO PROTECT IN PLACE.
9. BACKFILL EXISTING DRY CANYON ARROYO AFTER POND AND SPILLWAY ARE CONSTRUCTED.
10. PROPOSED 12' WIDE POND PERIMETER ROAD.
11. BUILD DRY CANYON ARROYO PER SHEETS 12 AND 30.
12. BUILD 15' WIDE V-DITCH SWALE PER SHEET 30, DETAIL A5, SWALE 2.

LEGEND

- MINOR CONTOUR (EXISTING)
- MAJOR CONTOUR (EXISTING)
- MINOR CONTOUR (PROPOSED)
- MAJOR CONTOUR (PROPOSED)
- PROPERTY LINE
- EXISTING EASEMENT
- EXISTING FENCE
- EXISTING FENCE
- SWALE FLOW LINE

AS-BUILT INFORMATION

CONTRACTOR	DATE
WORK STAKED BY	DATE
INSPECTORS ACCEPTANCE BY	DATE
FIELD VERIFICATION BY	DATE
DRAWINGS CORRECTED BY	DATE

BENCH MARKS

SURVEY INFORMATION
FIELD NOTES

NO.	BY	DATE

ENGINEER'S SEAL

NO.	DATE	REMARKS	BY
		REVISIONS	

WILSON & COMPANY, ENGINEERS & ARCHITECTS

DESIGNED BY	----	DATE	----
DRAWN BY	----	DATE	----
CHECKED BY	----	DATE	----

CITY OF ALAMOGORDO

GRADING PLAN

CITY OF ALAMOGORDO	Engineer Approval	Last Design Update	Mo./Day/Yr.	Mo./Day/Yr.

Project No.	Zone Map No.	Sheet
2020-002		10 OF 49

WILSON & COMPANY

M:\MSD\19-600-032-00\2_DISCIPLINES_SHEETS\2_SHEETS - CIVIL\OVERALL GRADING PLAN.DWG 3/2/2020

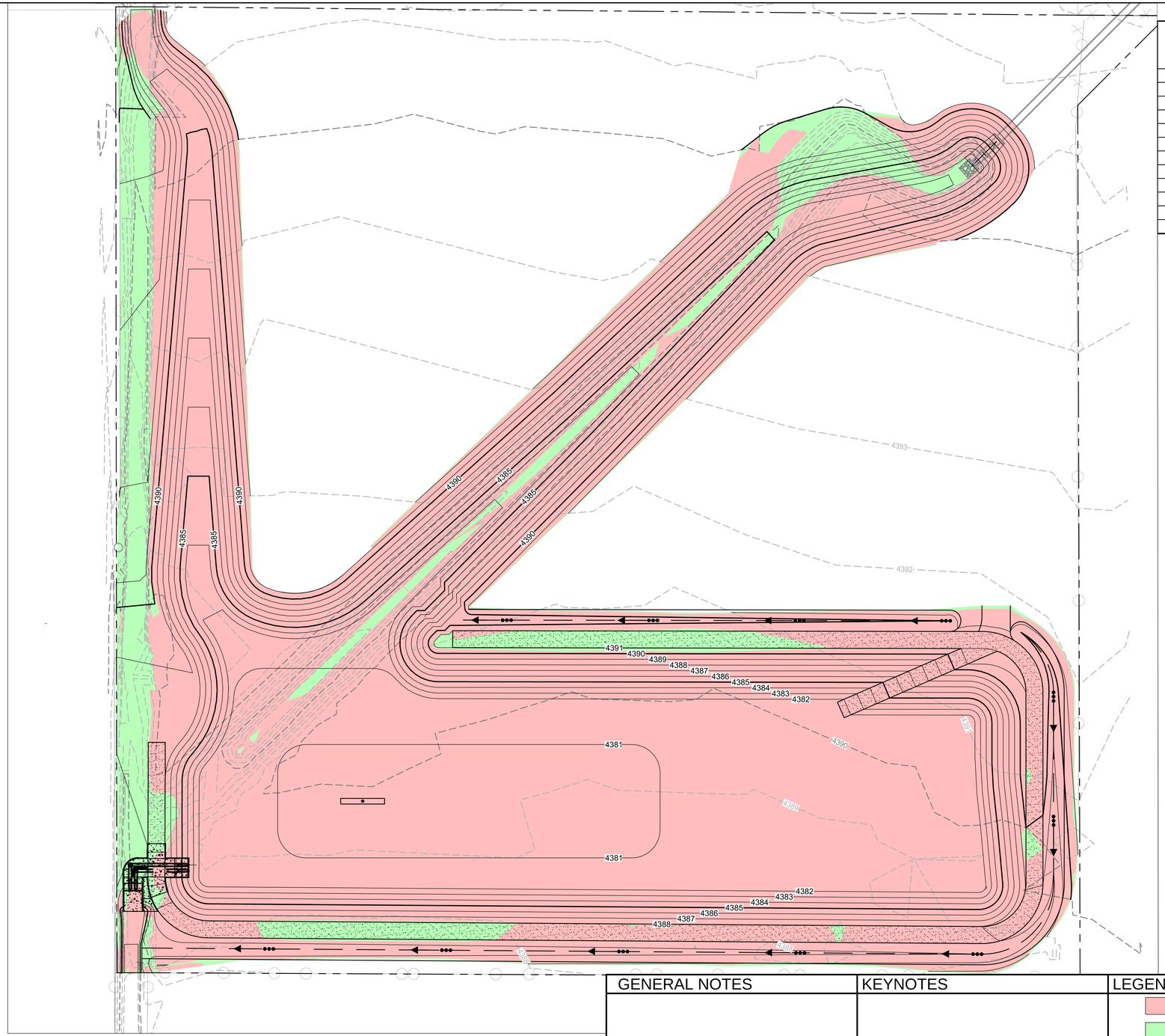

STAGE STORAGE GRIGGS FIELD DETENTION BASIN

Contour Elevation	Contour Area (sq. ft)	Depth (ft)	Incremental Volume Avg. End (cu. Ft)	Cumulative Volume Avg. End (cu. Ft)	Cumulative Volume Avg. End (Ac. Ft)
4,380.50	400.00	N/A	N/A	0.00	**N/A**
4,381.00	21,255.81	0.50	4095.28	4095.25	**0.09**
4,381.50	69,481.46	0.50	21,527.92	25,623.20	**0.59**
4,382.00	74,672.33	0.50	36,030.66	61,653.86	**1.42**
4,383.00	84,778.26	1.00	79,671.87	141,325.73	**3.24**
4,383.75	92,051.39	0.75	66,292.41	207,618.14	**4.77**
4,384.00	94,306.60	0.25	23,294.18	230,912.32	**5.30**
4,385.00	105,172.13	1.00	99,690.01	330,602.33	**7.59**
4,386.00	117,505.41	1.00	111,281.80	441,884.13	**10.14**
4,386.25	120,514.93	0.25	29,751.75	471,635.88	**10.83**
4,387.00	130,288.67	0.75	94,027.54	565,663.41	**12.99**
4,388.00	149,517.95	1.00	139,793.05	705,456.47	**16.20**

CUT/FILL TABLE

AREA (SQ.FT)	CUT (CU.YD.)	FILL (CU. YD)	NET (CU. YD)	
252,743.50	37,394.32	1,796.79	35,597.53	(CUT)

NOTE:

1. COMPACT ALL BACKFILL MATERIAL NOT TO EXCEED 8" THICK LOOSE LIFTS TO AT LEAST 95% OF MAXIMUM DENSITY AND (+ - 2%) OF OPTIMUM MOISTURE PER ASTM -1557. TYP.

AS-BUILT INFORMATION
CONTRACTOR | DATE
WORK STAKED BY | DATE
INSPECTORS ACCEPTANCE BY | DATE
FIELD VERIFICATION BY | DATE
RECORDS CORRECTED BY | DATE

BENCH MARKS

SURVEY INFORMATION
FIELD NOTES

NO.	BY	DATE

ENGINEER'S SEAL

NO.	DATE	REMARKS	BY

REVISIONS

WILSON & COMPANY, ENGINEERS & ARCHITECTS

DESIGNED BY	----	DATE	----
DRAWN BY	----	DATE	----
CHECKED BY	----	DATE	----

SCALE:
HORIZ: 1" =40'
0 20' 40'

N

GENERAL NOTES

KEYNOTES

LEGEND

- CUT
- FILL
- PROPOSED MAJOR CONTOUR
- PROPOSED MINOR CONTOUR
- EXISTING MAJOR CONTOUR
- EXISTING MINOR CONTOUR
- PROPERTY LINE

CITY OF ALAMOGORDO

GRADING HEAT MAP

CITY OF ALAMOGORDO | Engineer Approval | Last Design Update | Mo./Day/Yr. | Mo./Day/Yr.

Project No. 2020-002 | Zone Map No. | Sheet 11 OF 49

WILSON & COMPANY

M:\MSD\19-600-032-00\2_DISCIPLINES_SHEETS\2_SHEETS - CIVIL\GRADING HEAT MAP.DWG 3/2/2020

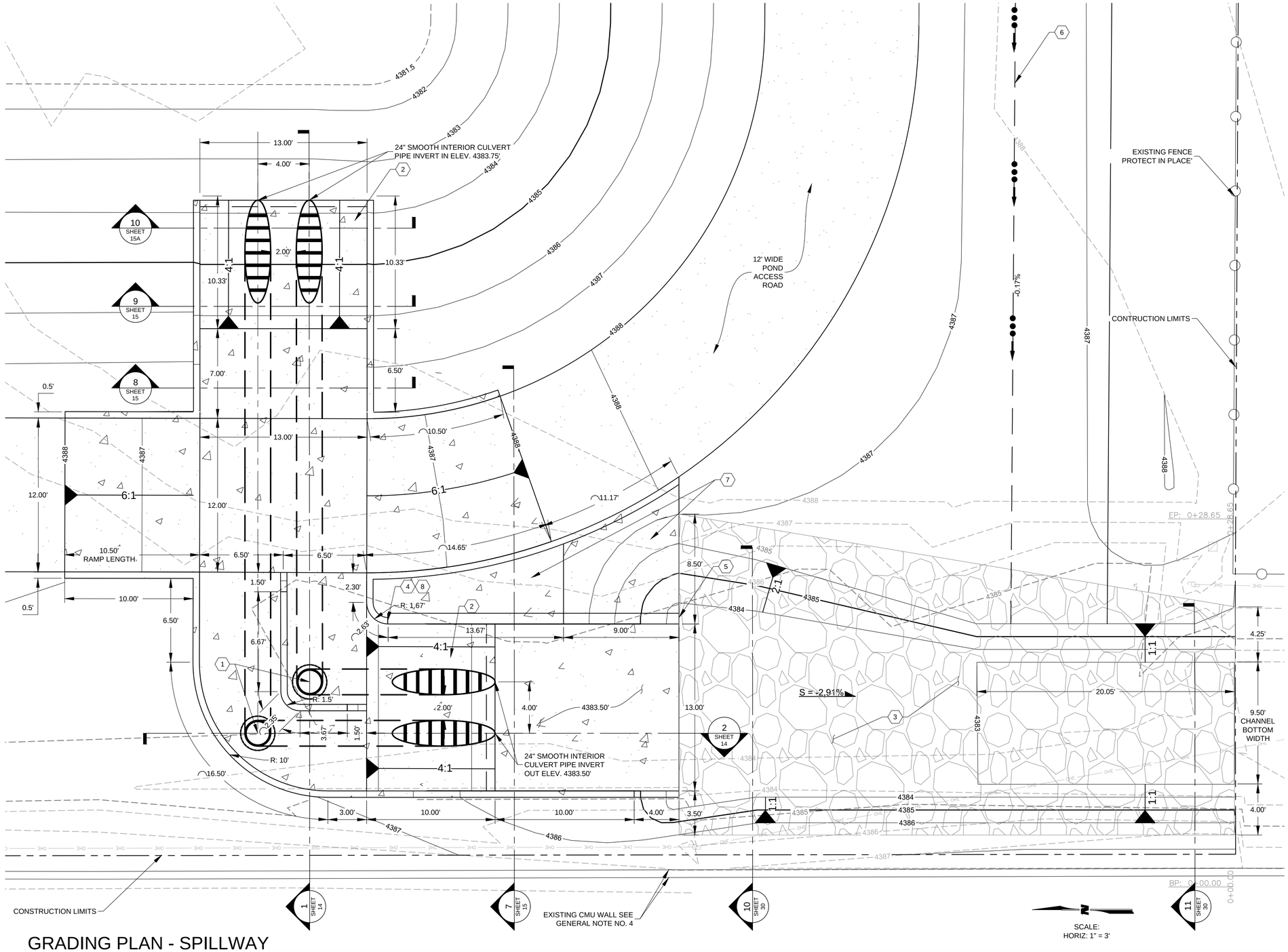

GRADING PLAN - SPILLWAY

SCALE: 1" = 5'

GENERAL NOTES

1. SEE SHEET 3 FOR ALL GENERAL NOTES
2. EXISTING GRADE SHOWN AT 1' MINOR AND 5' MAJOR CONTOURS
3. FINISHED GRADE SHOWN AT 1' MINOR AND 5' MAJOR CONTOURS
4. CONTRACTOR IS RESPONSIBLE FOR PROTECTING EXISTING BLOCK WALL IN PLACE FOR THE LIFE OF THE PROJECT. ANY DAMAGE RESULTING FROM CONTRACTORS ACTIVITIES SHALL BE REPAIRED IN KIND BY THE CONTRACTOR AT NO ADDITIONAL COST TO THE OWNER.
5. SEE SHEETS 12, 13, 14, AND 15 FOR SPILLWAY PLAN AND DETAILS.
6. CONTRACTOR SHALL PROTECT IN PLACE ALL POWER POLES.

KEYNOTES

1. MANHOLE CLEAN OUT LID AND RING, SEE SHEET 14 FOR DETAIL
2. BUILD METAL PIPE CONCRETE BLANKET WITH SAFETY GRATE PER DETAIL 10, 11, AND 12 SHEET 15A .
3. INSTALL WIRE ENCLOSED RIPRAP PER NMDOT STANDARD DETAIL 602-01-1, SHEET 48 AND EROSION CONTROL PLAN SHEET 17.
4. BEGIN 5' TALL RETAINING WALL AND FOOTER. SEE DETAIL 7; SHEET 15
5. END RETAINING WALL AND FOOTER; SEE DETAIL 7; SHEET 15.
6. BUILD SWALE; SEE SHEET 10.
7. BUILD 6" SLOPE PAVING CONCRETE; SEE DETAIL 7 SHEET 15.
8. $\frac{1}{2}$" SEALED EXPANSION JOINT.

LEGEND

- MINOR CONTOUR (EXISTING)
- MAJOR CONTOUR (EXISTING)
- MINOR CONTOUR (PROPOSED)
- MAJOR CONTOUR (PROPOSED)
- PROPERTY LINE
- EXISTING EASEMENT
- EXISTING FENCE
- EXISTING FENCE
- PROPOSED CONCRETE
- PROPOSED RIPRAP
- SWALE FLOW LINE
- SLOPE DIRECTION

AS-BUILT INFORMATION

CONTRACTOR	DATE
WORK STAKED BY	DATE
INSPECTORS ACCEPTANCE BY	DATE
AS-BUILTS REVIEWED BY	DATE
VERIFICATION BY FIELD CREW	DATE
CORRECTED BY	DATE

BENCH MARKS

SURVEY INFORMATION
FIELD NOTES

NO.	BY	DATE

ENGINEER'S SEAL

NO.	DATE	REMARKS	BY
		REVISIONS	

WILSON & COMPANY, ENGINEERS & ARCHITECTS

DESIGNED BY	----	DATE	----
DRAWN BY	----	DATE	----
CHECKED BY	----	DATE	----

CITY OF ALAMOGORDO

SPILLWAY GRADING PLAN

CITY OF ALAMOGORDO	Engineer Approval	Last Design Update	Mo./Day/Yr.	Mo./Day/Yr.

Project No.	Zone Map No.	Sheet
2020-002		12 OF 49

M:\MSD\19-600-032-00\2_DISCIPLINES_SHEETS\2_SHEETS - CIVIL\OVERALL GRADING PLAN.DWG 3/2/2020

WILSON & COMPANY

SOUTHWEST ISOMETRIC VIEW

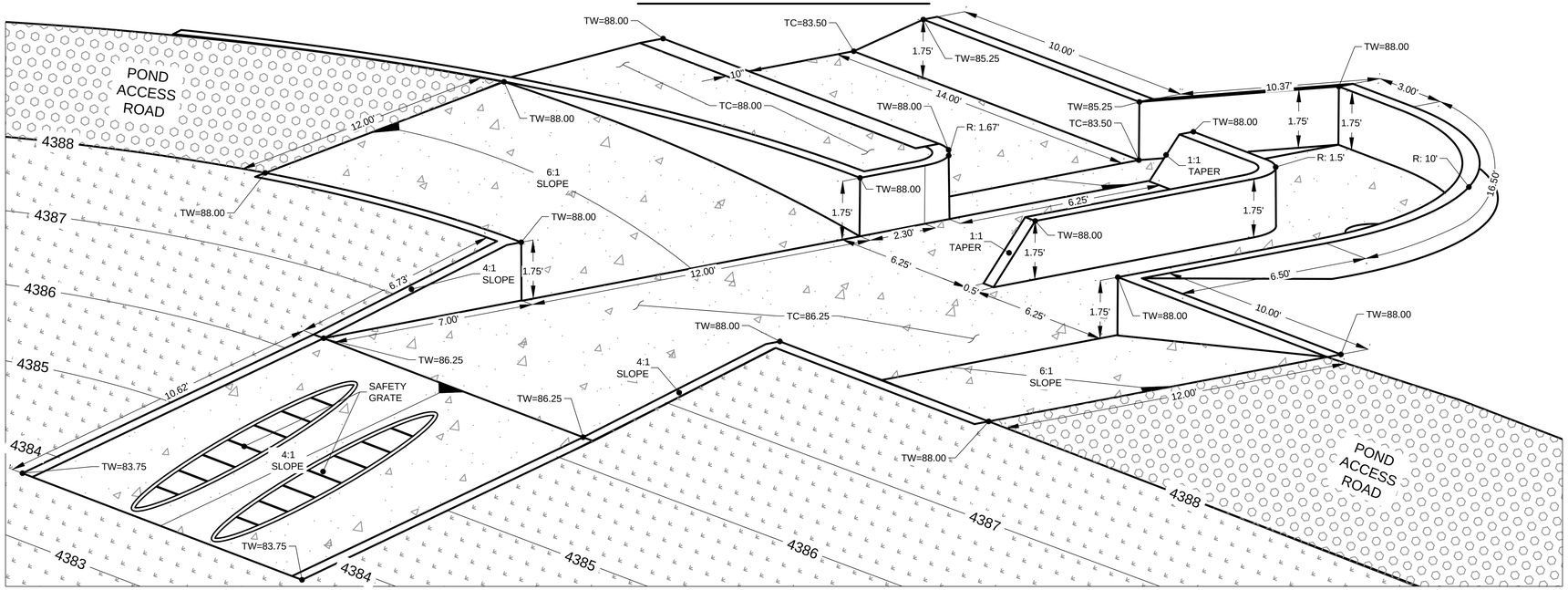

NORTH ISOMETRIC VIEW

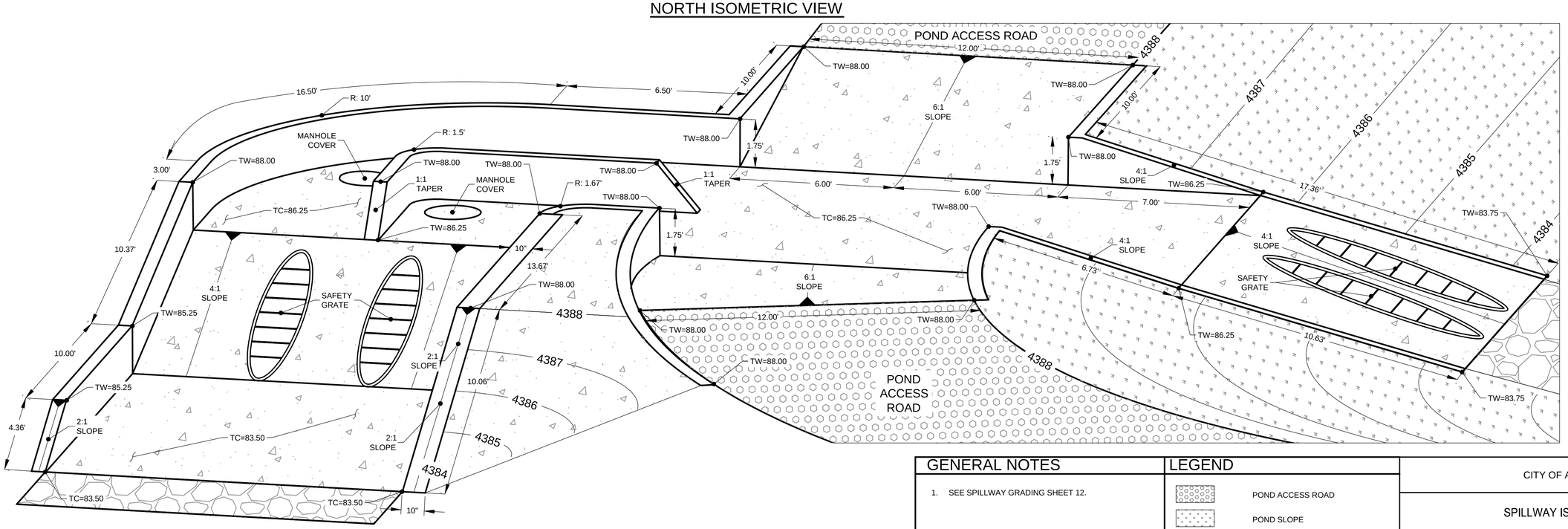

GENERAL NOTES

1. SEE SPILLWAY GRADING SHEET 12.

LEGEND

	POND ACCESS ROAD
	POND SLOPE
	CONCRETE
	RIP RAP
TW	TOP OF WALL ELEVATIONS
TC	TOP OF CONCRETE ELEVATIONS

AS-BUILT INFORMATION

CONTRACTOR | DATE
WORK STAKED BY | DATE
INSPECTORS ACCEPTANCE BY | DATE
FIELD VERIFICATION BY | DATE
DRAWINGS CORRECTED BY | DATE

BENCH MARKS

SURVEY INFORMATION
FIELD NOTES

NO.	BY	DATE

ENGINEER'S SEAL

STATE OF NEW MEXICO
S. HAMILTON
PROFESSIONAL ENGINEER

NO.	DATE	REMARKS	BY
		REVISIONS	

WILSON & COMPANY, ENGINEERS & ARCHITECTS

DESIGNED BY	----	DATE	----
DRAWN BY	----	DATE	----
CHECKED BY	----	DATE	----

CITY OF ALAMOGORDO

SPILLWAY ISOMETRIC VIEWS

CITY OF ALAMOGORDO	Engineer Approval	Last Design Update	Mo./Day/Yr.	Mo./Day/Yr.

Project No.	Zone Map No.	Sheet
2020-002		13 OF 49

M:\MSD\19-600-032-00\2_DISCIPLINES_SHEETS\2_SHEETS - CIVIL\196032_ISOMETRIC.DWG 3/2/2020

WILSON & COMPANY

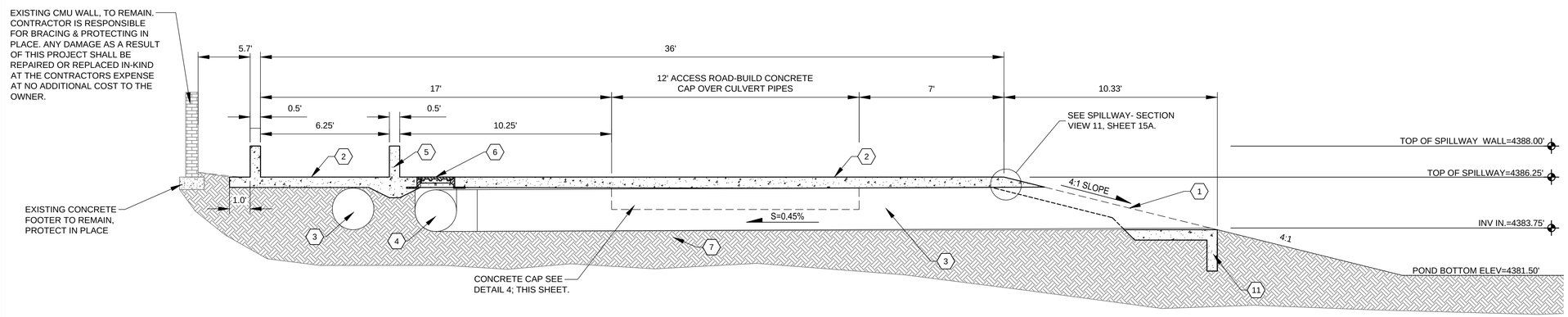

1 SPILLWAY - SECTION VIEW
NTS

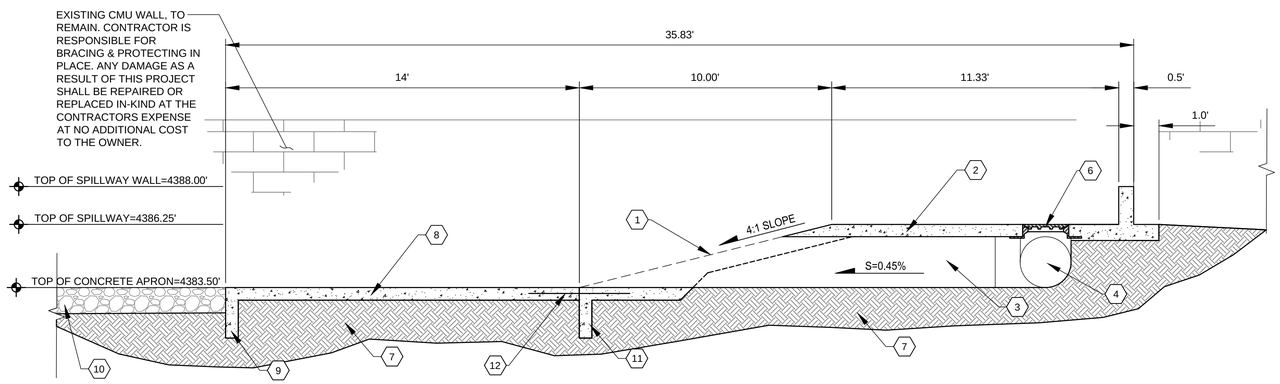

2 SPILLWAY - SECTION VIEW
NTS

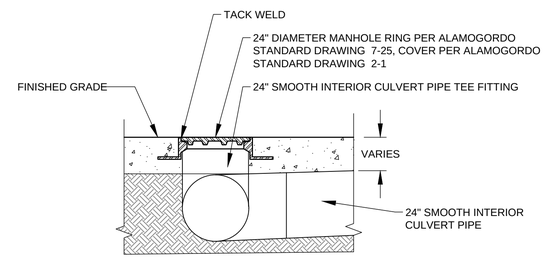

3 MANHOLE CLEAN OUT RING & LID
SCALE: NTS

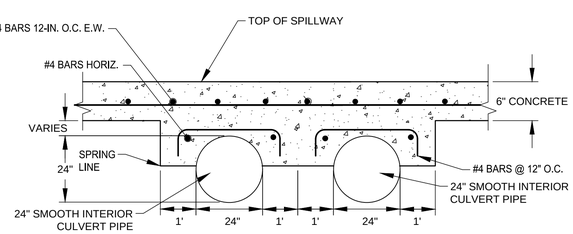

NOTE: TO BE INSTALLED WITHIN THE FULL 12" WIDTH OF THE POND ACCESS ROAD ONLY.

4 CONCRETE CAP DETAIL
SCALE: NTS

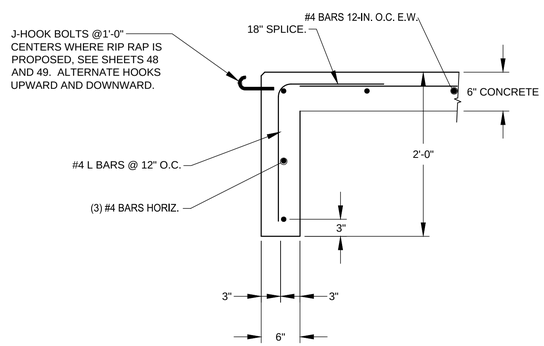

5 TYPICAL CUT-OFF WALL
NTS

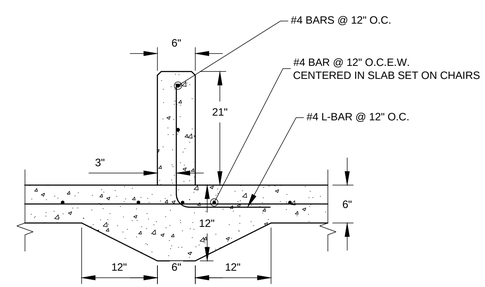

6 DIVERSION WALL & THICKENED SLAB
SCALE: NTS

GENERAL NOTES

1. CONTRACTOR SHALL PROVIDE PROJECT MANAGER A JOINT LAYOUT PLAN FOR REVIEW & APPROVAL 1 WEEK IN ADVANCE OF CONCRETE PLACEMENT. THIS WORK IS CONSIDERED INCIDENTAL TO REINFORCED CONCRETE BID ITEM.
2. CONTRACTOR SHALL PROVIDE PROJECT MANAGER A JOINT LAYOUT PLAN FOR REVIEW & APPROVAL. THE SPILLWAY WITH THE EXCEPTION OF THE RETAINING WALL SHALL BE PLACED MONOLITHICALLY.
3. ALL CONCRETE SHALL HAVE A 3000 PSI COMPRESSIVE STRENGTH @ 28 DAYS.
4. ALL STEEL REINFORCEMENT SHALL BE GRADE 60. ALL BARS SHALL HAVE A 18" MINIMUM SPLICE LENGTH UNLESS OTHERWISE NOTED.
5. CHAMFER ALL EXPOSED EDGES $\frac{3}{4}$".

(X) KEY NOTES

1. BUILD METAL PIPE CONCRETE BLANKET WITH SAFETY GRATE AS PER DETAIL 11, SHEET 15A.
2. CONCRETE SPILLWAY,STEEL REINFORCEMENT NOT SHOWN, SEE SHEET 15 DETAILS.
3. 24" CULVERT METAL PIPE, SMOOTH INTERIOR.
4. 24" CULVERT METAL PIPE TEE FITTING.
5. DIVERSION WALL & THICKENED SLAB. SEE DETAIL 6 THIS SHEET AND SHEETS 13 & 15.
6. MANHOLE RING & LID, SEE DETAIL 3 THIS SHEET.
7. COMPACT BACKFILL & SUBGRADE NOT TO EXCEED 8" THICK LOOSE LIFTS TO AT LEAST 95 % OF MAXIMUM DENSITY AND (± 2%) OF OPTIMUM MOISTURE PER ASTM D-1557, TYP.
8. CONCRETE APRON, STEEL REINFORCEMENT NOT SHOWN, SEE SHEET 15 DETAILS.
9. CONCRETE CUT OFF WALL, SEE DETAIL 5 THIS SHEET.
10. WIRE ENCLOSED RIP RAP, SEE SHEET 48 AND 49.
11. BUILD CUT OFF WALL PER DETAIL 11, SHEET 15A.
12. #4 DOWEL BARS, 3 FT. LONG @ 1 FT ON CENTER.

AS-BUILT INFORMATION
CONTRACTOR | DATE
WORK STAKED BY | DATE
INSPECTORS ACCEPTANCE BY | DATE
FIELD VERIFICATION BY | DATE
REDLINES CORRECTED BY | DATE

BENCH MARKS

SURVEY INFORMATION
FIELD NOTES

NO.	BY	DATE

ENGINEER'S SEAL

NO.	DATE	REMARKS	BY
		REVISIONS	

WILSON & COMPANY, ENGINEERS & ARCHITECTS
DESIGNED BY ---- DATE ----
DRAWN BY ---- DATE ----
CHECKED BY ---- DATE ----

CITY OF ALAMOGORDO

SPILLWAY SECTION VIEWS & DETAILS

CITY OF ALAMOGORDO	Engineer Approval	Last Design Update	Mo./Day/Yr.	Mo./Day/Yr.
Project No. 2020-002	Zone Map No.	Sheet 14 OF 49		

WILSON & COMPANY

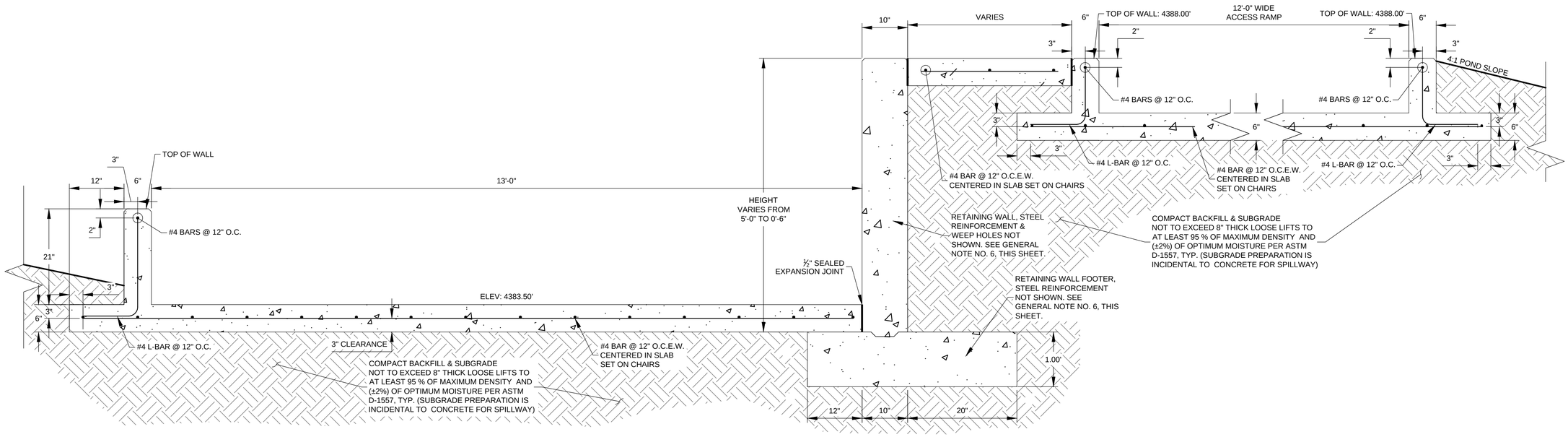

7 SPILLWAY - SECTION VIEW

SCALE: 1" = 1'

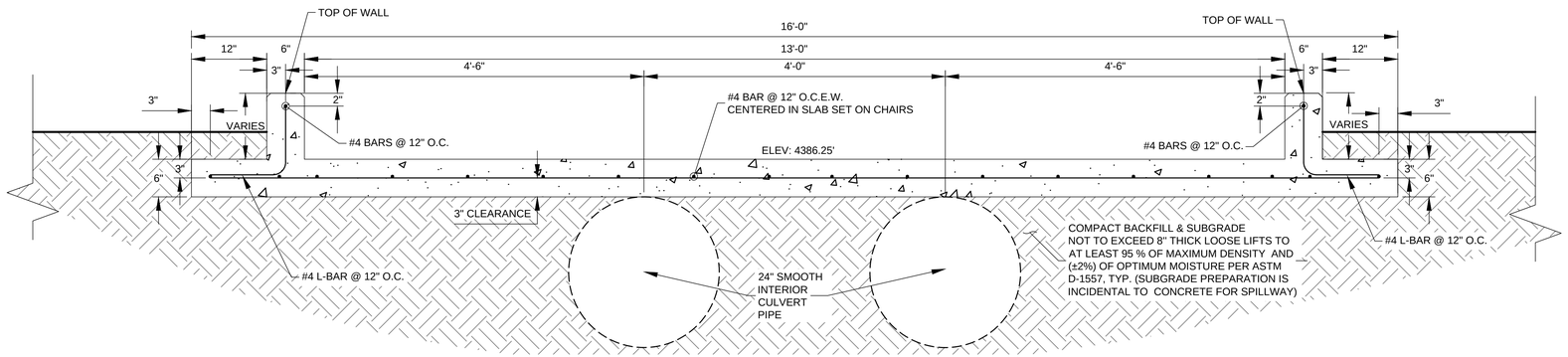

8 SPILLWAY - SECTION VIEW

SCALE: 1" = 1'

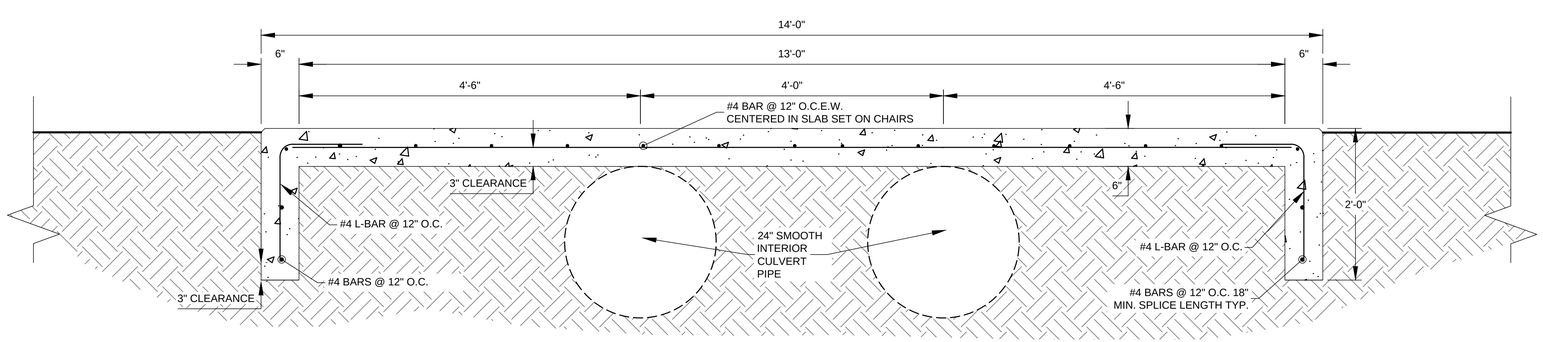

9 SPILLWAY - SECTION VIEW

SCALE: 1" = 1'

GENERAL NOTES

1. CONTRACTOR SHALL PROVIDE PROJECT MANAGER A JOINT LAYOUT PLAN FOR REVIEW & APPROVAL 1 WEEK IN ADVANCE OF CONCRETE PLACEMENT. THIS WORK IS CONSIDERED INCIDENTAL TO REINFORCED CONCRETE BID ITEM.
2. THE SPILLWAY WITH THE EXCEPTION OF THE RETAINING WALL SHALL BE PLACED MONOLITHICALLY.
3. ALL CONCRETE SHALL HAVE A 3000 PSI COMPRESSIVE STRENGTH @ 28 DAYS.
4. ALL STEEL REINFORCEMENT SHALL BE GRADE 60. ALL BARS SHALL HAVE A 18" MINIMUM SPLICE LENGTH UNLESS OTHERWISE NOTED.
5. CHAMFER ALL EXPOSED EDGES $\frac{3}{4}$".
6. BUILD RETAINING WALL AND FOOTER PER NMDOT STANDARD DRAWING NO. 511-80-1 THROUGH 3. SEE SHEETS 45, 46 & 47.

AS-BUILT INFORMATION

CONTRACTOR — DATE
WORK STAKED BY — DATE
INSPECTORS ACCEPTANCE BY — DATE
FIELD VERIFICATION BY — DATE
DRAWINGS CORRECTED BY — DATE

BENCH MARKS

SURVEY INFORMATION
FIELD NOTES

NO.	BY	DATE

ENGINEER'S SEAL

STEVEN HAMILTON
NEW MEXICO
LICENSED
PROFESSIONAL ENGINEER

NO.	DATE	REMARKS	BY

REVISIONS

WILSON & COMPANY, ENGINEERS & ARCHITECTS

DESIGNED BY	----	DATE	----
DRAWN BY	----	DATE	----
CHECKED BY	----	DATE	----

CITY OF ALAMOGORDO

SPILLWAY SECTION VIEWS

CITY OF ALAMOGORDO	Engineer Approval	Last Design Update	Mo./Day/Yr.	Mo./Day/Yr.

Project No. 2020-002 | Zone Map No. | Sheet 15 OF 49

WILSON & COMPANY

M:\MSD\19-600-032-00\2_DISCIPLINES_SHEETS\2_SHEETS - CIVIL\SPILLWAY DETAILS-1.DWG 3/2/2020

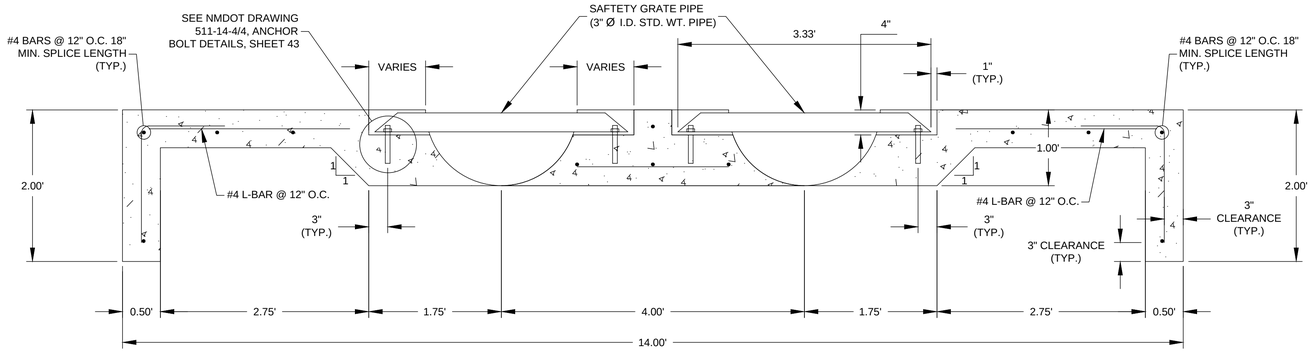

10 SPILLWAY - SECTION VIEW (MODIFIED CONCRETE BLANKET W/ SAFETY GRATE

SCALE: 1" = 1'

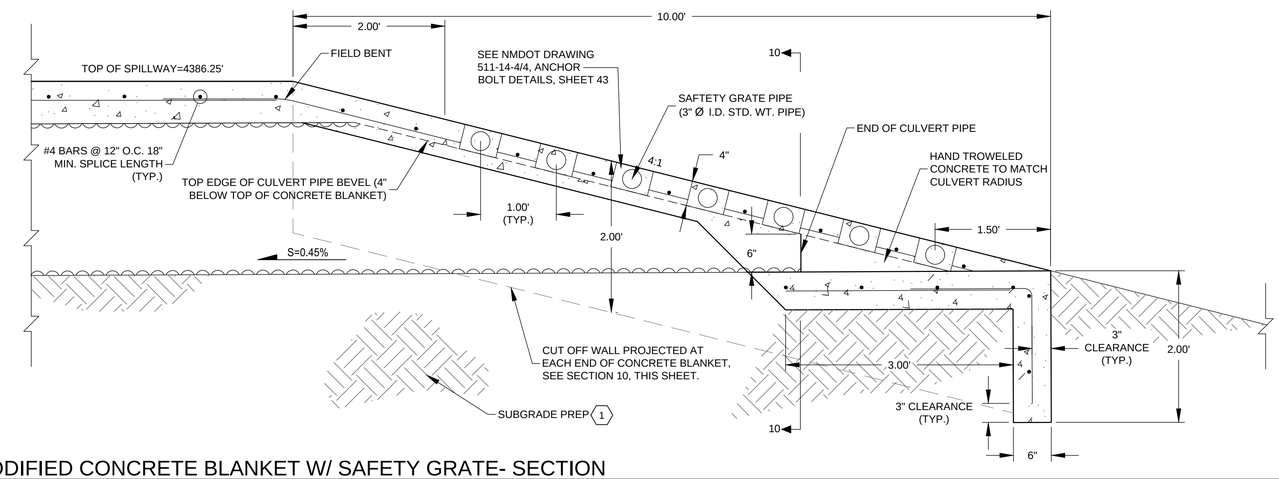

11 MODIFIED CONCRETE BLANKET W/ SAFETY GRATE- SECTION

SCALE: 1" = 1'

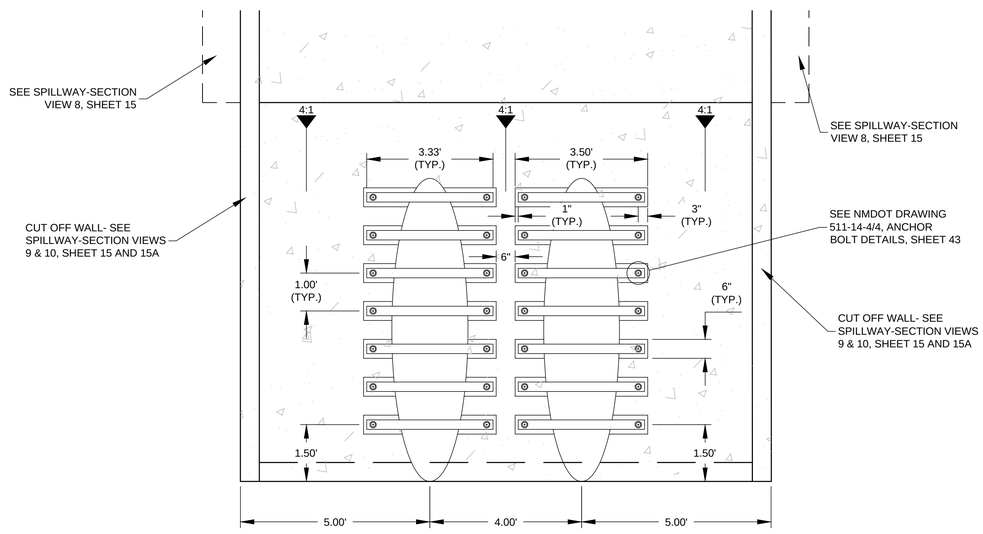

12 MODIFIED CONCRETE BLANKET W/ SAFETY GRATE- PLAN

SCALE: 1" = 2'

GENERAL NOTES

1. CONTRACTOR SHALL PROVIDE PROJECT MANAGER A JOINT LAYOUT PLAN FOR REVIEW & APPROVAL 1 WEEK IN ADVANCE OF CONCRETE PLACEMENT. THIS WORK IS CONSIDERED INCIDENTAL TO REINFORCED CONCRETE BID ITEM.
2. CONTRACTOR SHALL PROVIDE PROJECT MANAGER A JOINT LAYOUT PLAN FOR REVIEW & APPROVAL. THE SPILLWAY WITH THE EXCEPTION OF THE RETAINING WALL SHALL BE PLACED MONOLITHICALLY.
3. ALL CONCRETE SHALL HAVE A 3000 PSI COMPRESSIVE STRENGTH @ 28 DAYS.
4. ALL STEEL REINFORCED SHALL BE GRADE 60.
5. CHAMFER ALL EXPOSED EDGES $\frac{3}{4}$".

(X) KEY NOTES

1. COMPACT BACKFILL & SUBGRADE NOT TO EXCEED 8" THICK LOOSE LIFTS TO AT LEAST 95% OF MAXIMUM DENSITY AND (± 2%) OF OPTIMUM MOISTURE PER ASTM D-1557, TYP.

AS-BUILT INFORMATION

CONTRACTOR	DATE
WORK STAKED BY	
INSPECTORS ACCEPTANCE BY	DATE
FIELD VERIFICATION BY	DATE
AS-BUILTS CORRECTED BY	DATE

BENCH MARKS

SURVEY INFORMATION

FIELD NOTES

NO.	BY	DATE

ENGINEER'S SEAL

NO.	DATE	REMARKS	BY
		REVISIONS	

WILSON & COMPANY, ENGINEERS & ARCHITECTS

DESIGNED BY	----	DATE	----
DRAWN BY	----	DATE	----
CHECKED BY	----	DATE	----

CITY OF ALAMOGORDO

SPILLWAY SECTION VIEWS

CITY OF ALAMOGORDO	Engineer Approval	Last Design Update	Mo./Day/Yr.	Mo./Day/Yr.

Project No.	Zone Map No.	Sheet
2020-002		15A OF 49

M:\MSD\19-600-032-00\2_DISCIPLINES_SHEETS\2_SHEETS - CIVIL\SPILLWAY DETAILS.DWG 3/2/2020

WILSON & COMPANY

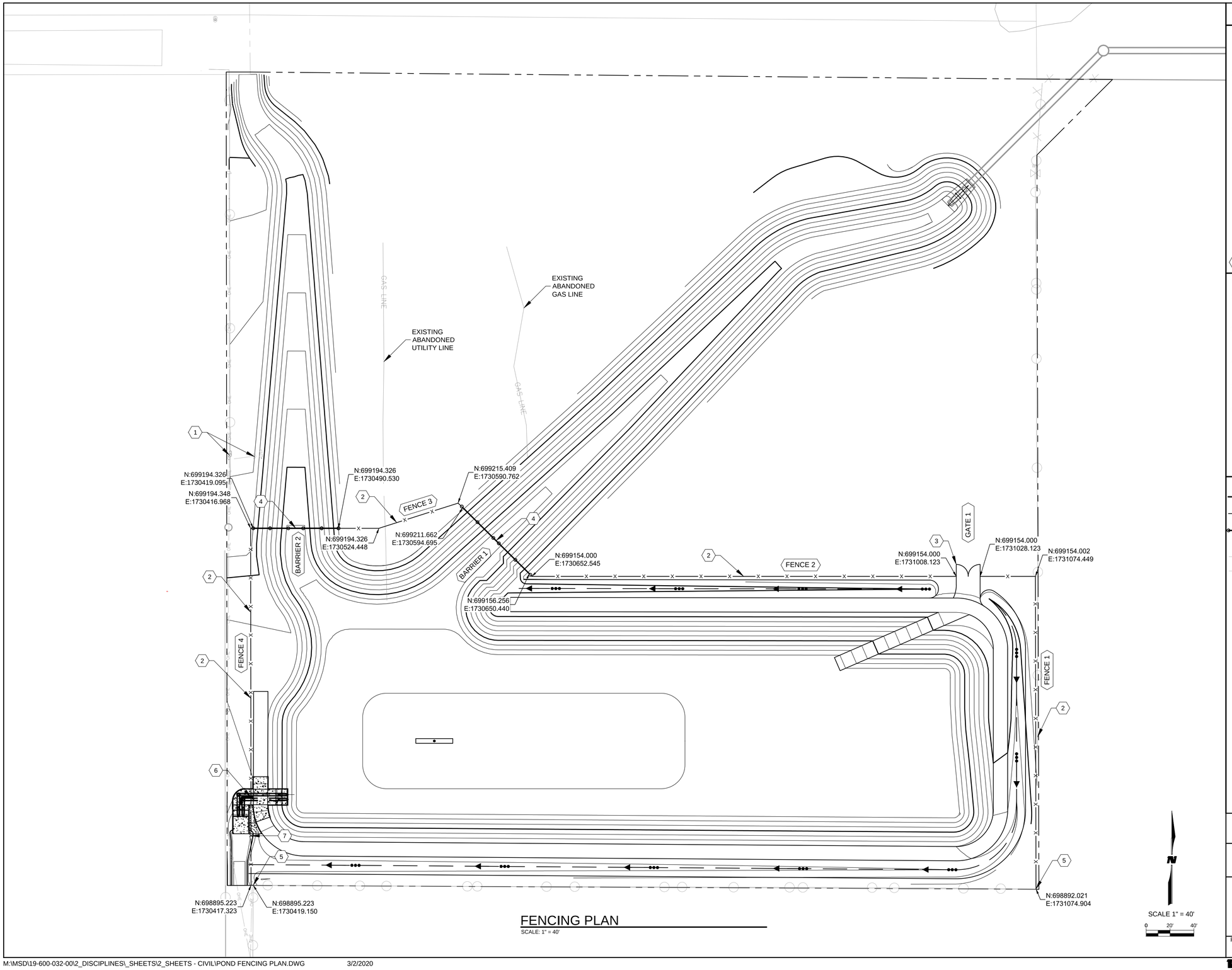

FENCING PLAN

SCALE: 1" = 40'

GENERAL NOTES

1. CONTRACTOR SHALL FIELD VERIFY ALL EXISTING UTILITIES ON-SITE ARE NOT LIVE. CONTRACTOR SHALL REMOVE AND DISPOSE ALL UTILITIES THAT WILL NOT BE USED WITHIN THE PROJECT AREA.
2. CONTRACTOR IS RESPONSIBLE FOR PROTECTING EXISTING BLOCK WALL IN PLACE FOR THE LIFE OF THE PROJECT. ANY DAMAGE RESULTING FROM CONTRACTORS ACTIVITIES SHALL BE REPAIRED IN KIND BY THE CONTRACTOR AT NO ADDITIONAL COST TO THE OWNER.
3. CONTRACTOR SHALL PROTECT IN PLACE ALL POWER POLES.

(X) KEYNOTES

1. CONTRACTOR TO PROTECT POWER POLE & ANCHOR.
2. CONTRACTOR TO CONSTRUCT 8' CHAIN-LINK FENCE WITH BARBED WIRE PER ALAMOGORDO STANDARD DRAWINGS 4-2 & 4-4. SEE SHEETS 29 AND 31
3. CONTRACTOR TO INSTALL DOUBLE GATES PER ALAMOGORDO STANDARD DRAWINGS 4-2 & 4-4. SEE SHEET 31.
4. CONTRACTOR TO CONSTRUCT FENCE ACROSS CHANNEL PER DETAILS A AND B; SHEET 29.
5. CONTRACTOR TO CONNECT PROPOSED FENCE TO EXISTING FENCE.
6. CONTRACTOR TO CONSTRUCT FENCE ACROSS SPILLWAY PER DETAIL C; SHEET 29.
7. CONTRACTOR TO WARP FENCE TO STAY ON TOP OF SLOPE OF PROPOSED CHANNEL.

LEGEND

- PROPERTY LINE
- PROPOSED FENCE (CHAINLINK)
- PROPOSED FENCE (POST AND CHAIN BARRIER)
- EXISTING FENCE
- EXISTING FENCE
- FENCE X — FENCE ID
- BARRIER X — POST AND BARRIED ID
- GATE X — GATE ID
- FLOW ARROWS

AS-BUILT INFORMATION

CONTRACTOR		DATE
WORK STAKED BY		DATE
INSPECTORS ACCEPTANCE BY		DATE
FIELD VERIFICATION BY		DATE
AS-BUILTS CORRECTED BY		DATE

BENCH MARKS

SURVEY INFORMATION

FIELD NOTES

NO.	BY	DATE

ENGINEER'S SEAL

STATE OF NEW MEXICO
S. THAI MILTON OWEN
14584
PROFESSIONAL ENGINEER

NO.	DATE	REMARKS	BY

REVISIONS

WILSON & COMPANY, ENGINEERS & ARCHITECTS

DESIGNED BY	----	DATE ----
DRAWN BY	----	DATE ----
CHECKED BY	----	DATE ----

CITY OF ALAMOGORDO

FENCING PLAN

CITY OF ALAMOGORDO	Engineer Approval	Last Design Update	Mo./Day/Yr.	Mo./Day/Yr.

Project No. 2020-002 | Zone Map No. | Sheet 16 OF 49

WILSON & COMPANY

M:\MSD\19-600-032-00\2_DISCIPLINES_SHEETS\2_SHEETS - CIVIL\POND FENCING PLAN.DWG 3/2/2020

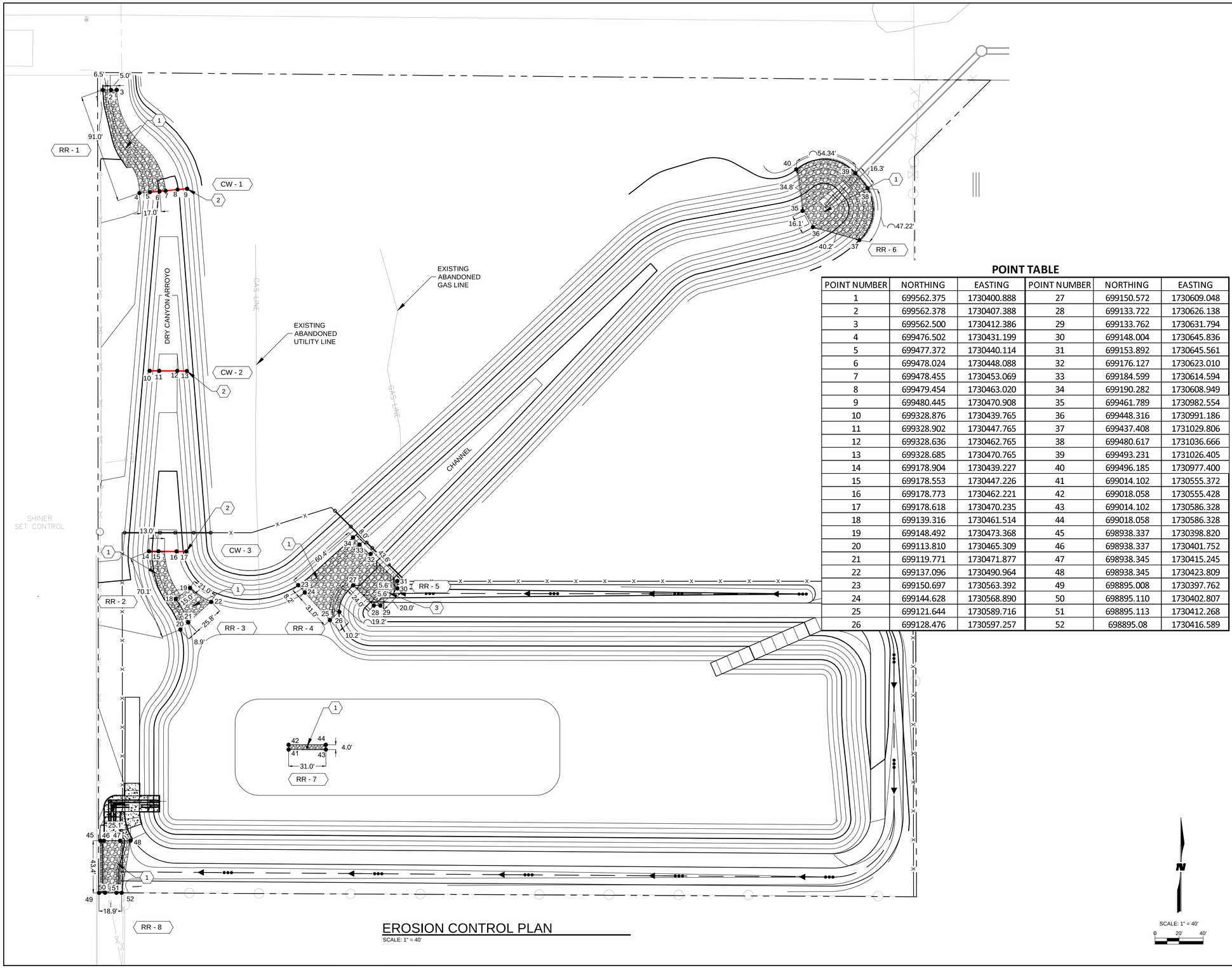

POINT TABLE

POINT NUMBER	NORTHING	EASTING	POINT NUMBER	NORTHING	EASTING
1	699562.375	1730400.888	27	699150.572	1730609.048
2	699562.378	1730407.388	28	699133.722	1730626.138
3	699562.500	1730412.386	29	699133.762	1730631.794
4	699476.502	1730431.199	30	699148.004	1730645.836
5	699477.372	1730440.114	31	699153.892	1730645.561
6	699478.024	1730448.088	32	699176.127	1730623.010
7	699478.455	1730453.069	33	699184.599	1730614.594
8	699479.454	1730463.020	34	699190.282	1730608.949
9	699480.445	1730470.908	35	699461.789	1730982.554
10	699328.876	1730439.765	36	699448.316	1730991.186
11	699328.902	1730447.765	37	699437.408	1731029.806
12	699328.636	1730462.765	38	699480.617	1731036.666
13	699328.685	1730470.765	39	699493.231	1731026.405
14	699178.904	1730439.227	40	699496.185	1730977.400
15	699178.553	1730447.226	41	699014.102	1730555.372
16	699178.773	1730462.221	42	699018.058	1730555.428
17	699178.618	1730470.235	43	699014.102	1730586.328
18	699139.316	1730461.514	44	699018.058	1730586.328
19	699148.492	1730473.368	45	698938.337	1730398.820
20	699113.810	1730465.309	46	698938.337	1730401.752
21	699119.771	1730471.877	47	698938.345	1730415.245
22	699137.096	1730490.964	48	698938.345	1730423.809
23	699150.697	1730563.392	49	698895.008	1730397.762
24	699144.628	1730568.890	50	698895.110	1730402.807
25	699121.644	1730589.716	51	698895.113	1730412.268
26	699128.476	1730597.257	52	698895.08	1730416.589

GENERAL NOTES

1. CONTRACTOR SHALL FIELD VERIFY ALL EXISTING UTILITIES ON-SITE ARE NOT LIVE. CONTRACTOR SHALL REMOVE AND DISPOSE ALL UTILITIES THAT WILL NOT BE USED WITHIN THE PROJECT AREA.
2. CONTRACTOR IS RESPONSIBLE FOR PROTECTING EXISTING BLOCK WALL IN PLACE FOR THE LIFE OF THE PROJECT. ANY DAMAGE RESULTING FROM CONTRACTORS ACTIVITIES SHALL BE REPAIRED IN KIND BY THE CONTRACTOR AT NO ADDITIONAL COST TO THE OWNER.
3. CONTRACTOR SHALL PROTECT IN PLACE ALL POWER POLES.

(X) KEYNOTES

1. INSTALL WIRE ENCLOSED RIPRAP CLASS A PER NMDOT STANDARD DETAILS 602-01-1/1 AND 602-02-1/1; SHEETS 48 AND 49;.
2. BUILD 1' WIDE CUTOFF WALL; SEE DETAILS A1 AND A2; SHEET 30
3. BUILD RIPRAP RUNDOWN PER DEATIL A3 AND A4; SHEET 30. INSTALL WIRE ENCLOSED RIPRAP CLASS A PER NMDOT STANDARD DETAILS 602-1-1/1 AND 602-02-1/1.

LEGEND

- PROPERTY LINE
- PROPOSED FENCE
- PROPOSED FENCE
- EXISTING FENCE
- EXISTING FENCE
- PROPOSED WIRE TIED RIPRAP
- 1' THICK CUTOFF WALL
- RR - X — RIPRAP ID
- CW - X — CUT OFF WALL ID
- FLOW ARROWS

AS-BUILT INFORMATION
CONTRACTOR | DATE
WORK STAKED BY | DATE
INSPECTORS ACCEPTANCE BY | DATE
FIELD VERIFICATION BY | DATE
DRAWINGS CORRECTED BY | DATE

BENCH MARKS

SURVEY INFORMATION
FIELD NOTES

NO.	BY	DATE

ENGINEER'S SEAL

NO.	DATE	REMARKS	BY
		REVISIONS	

WILSON & COMPANY, ENGINEERS & ARCHITECTS
DESIGNED BY ---- DATE ----
DRAWN BY ---- DATE ----
CHECKED BY ---- DATE ----

CITY OF ALAMOGORDO

EROSION CONTROL PLAN

CITY OF ALAMOGORDO | Engineer Approval | Last Design Update | Mo./Day/Yr. | Mo./Day/Yr.

Project No. 2020-002 | Zone Map No. | Sheet 17 OF 49

SCALE: 1" = 40'
0 20' 40'

EROSION CONTROL PLAN
SCALE: 1" = 40'

M:\MSD\19-600-032-00\2_DISCIPLINES_SHEETS\2_SHEETS - CIVIL\EROSION CONTROL DETAILS.DWG 3/2/2020

WILSON & COMPANY

DRY CANYON ARROYO REALIGNMENT STA:1+86 TO 5+50 - PLAN VIEW

HORIZONTAL SCALE: 1" = 20'

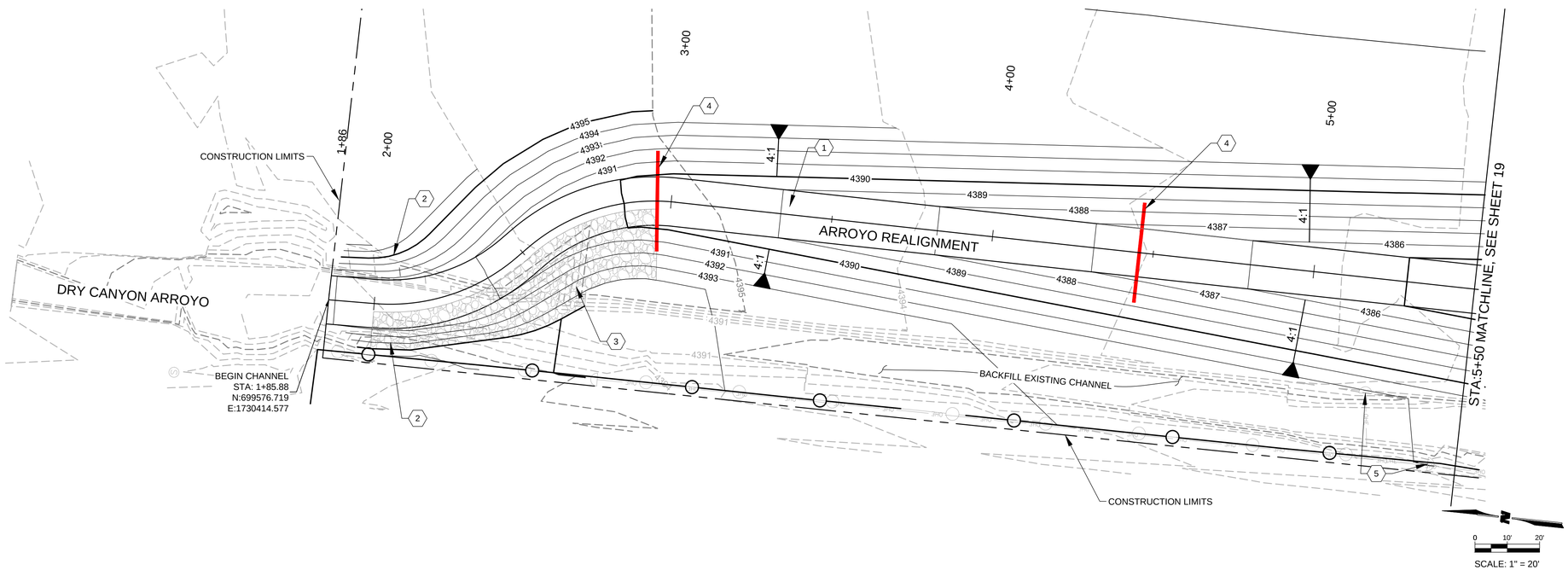

DRY CANYON ARROYO REALIGNMENT STA:1+86 TO 5+50 - PROFILE VIEW

VERTICAL SCALE: 1" = 5'

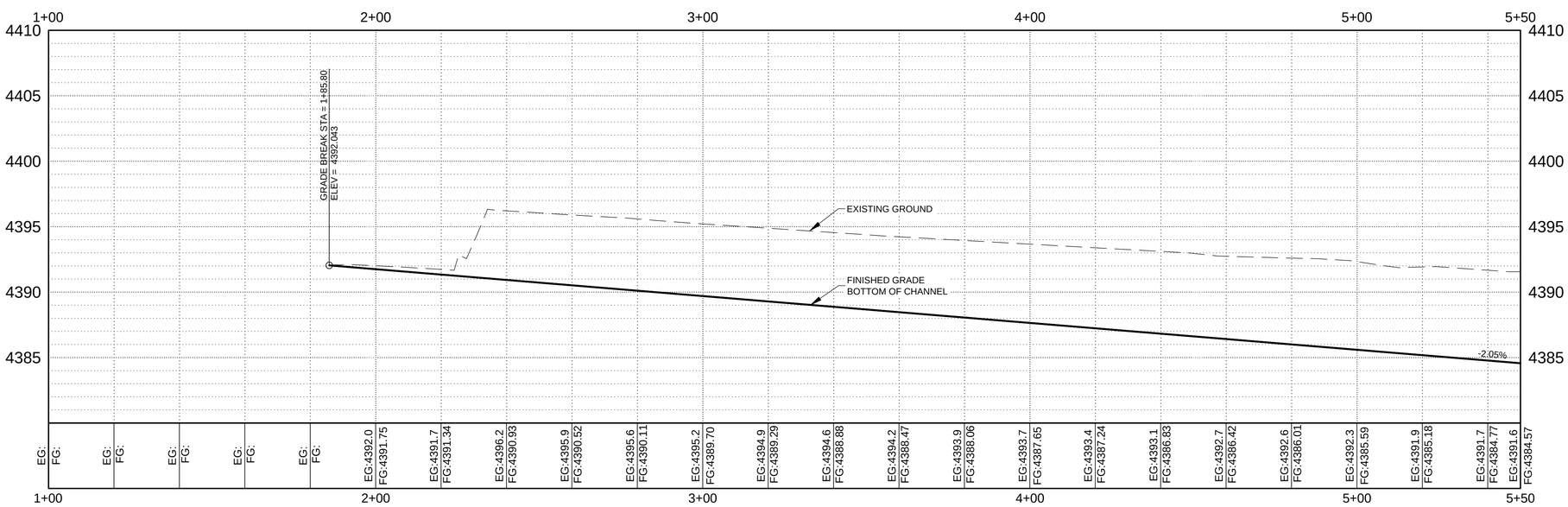

GENERAL NOTES

1. SEE SHEET 3 FOR ALL GENERAL NOTES
2. EXISTING GRADE SHOWN AT 1' MINOR AND 5' MAJOR CONTOURS
3. FINISHED GRADE SHOWN AT 1' MINOR AND 5' MAJOR CONTOURS
4. CONTRACTOR IS RESPONSIBLE FOR PROTECTING EXISTING BLOCK WALL IN PLACE FOR THE LIFE OF THE PROJECT. ANY DAMAGE RESULTING FROM CONTRACTORS ACTIVITIES SHALL BE REPAIRED IN KIND BY THE CONTRACTOR AT NO ADDITIONAL COST TO THE OWNER.
5. CONTRACTOR SHALL PROTECT IN PLACE ALL POWER POLES.

KEY NOTES

1. BUILD DRY CANYON ARROYO PER TYPICAL SECTION SHEET 9, AND CROSS SECTIONS SHEET 25 & 26.
2. BUILD SLOPE TRANSITION FROM 2:1 SLOPE TO 4:1 SLOPE.
3. INSTALL WIRE ENCLOSED RIP RAP CLASS A PER STD NMDOT STANDARD DETAILS 602-01-1/1 AND 602-02-1/1; SHEETS 48 AND 49. SEE EROSION CONTROL PLAN FOR LIMITS; SHEET 17
4. BUILD 1' THICK CUTOFF WALL; SEE DETAILS A1 AND A2; SHEET 30. SEE EROSION CONTROL PLAN FOR LIMITS; SHEET 17.
5. GUY WIRE; PROTECT IN PLACE.

LEGEND

- MINOR CONTOUR (EXISTING)
- MAJOR CONTOUR (EXISTING)
- MINOR CONTOUR (PROPOSED)
- MAJOR CONTOUR (PROPOSED)
- PROPERTY LINE
- EXISTING EASEMENT
- EXISTING FENCE
- EXISTING FENCE
- EXISTING OVERHEAD ELECTRIC
- EXISTING POWER POLE
- EXISTING TELEPHONE PEDESTAL
- WIRE ENCLOSED RIP RAP CLASS "A"
- 1' CUTOFF WALL

AS-BUILT INFORMATION

CONTRACTOR	DATE
WORK STAKED BY	DATE
INSPECTORS ACCEPTANCE BY	DATE
FIELD VERIFICATION BY	DATE
DRAWINGS CORRECTED BY	DATE

BENCH MARKS

SURVEY INFORMATION

FIELD NOTES NO.	BY	DATE

ENGINEER'S SEAL

NO.	DATE	REMARKS	BY

REVISIONS

WILSON & COMPANY, ENGINEERS & ARCHITECTS

DESIGNED BY	----	DATE	----
DRAWN BY	----	DATE	----
CHECKED BY	----	DATE	----

CITY OF ALAMOGORDO

DRY CANYON ARROYO REALIGNMENT PLAN AND PROFILE

CITY OF ALAMOGORDO	Engineer Approval	Last Design Update	Mo./Day/Yr.	Mo./Day/Yr.

Project No.	Zone Map No.	Sheet
2020-002		18 OF 49

WILSON & COMPANY

DRY CANYON ARROYO REALIGNMENT STA:5+50 TO 7+26 - PLAN VIEW

HORIZONTAL SCALE: 1" = 20'

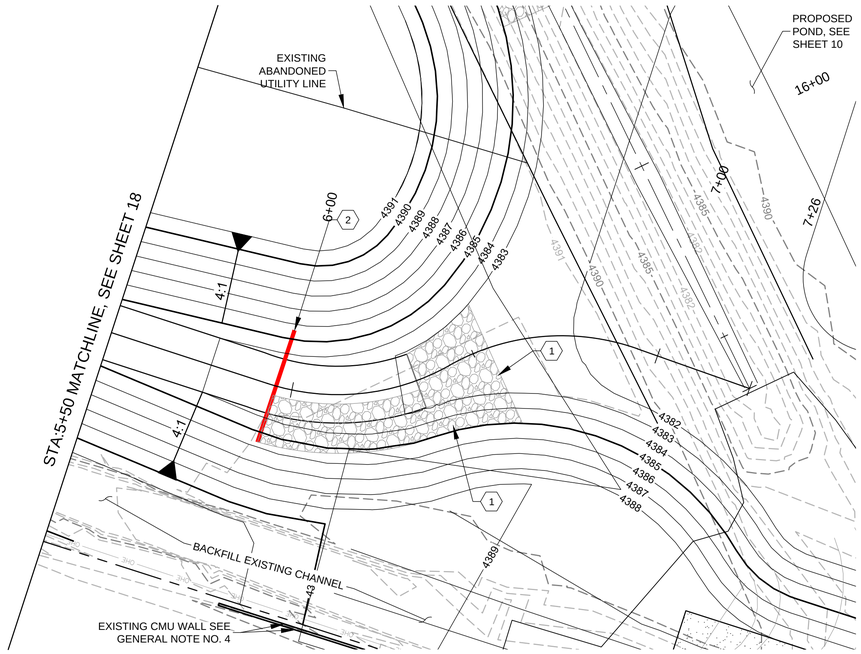

0 10' 20'

SCALE: 1" = 20'

DRY CANYON ARROYO REALIGNMENT STA:5+50 TO 7+26 - PROFILE VIEW

VERTICAL SCALE: 1" = 5'

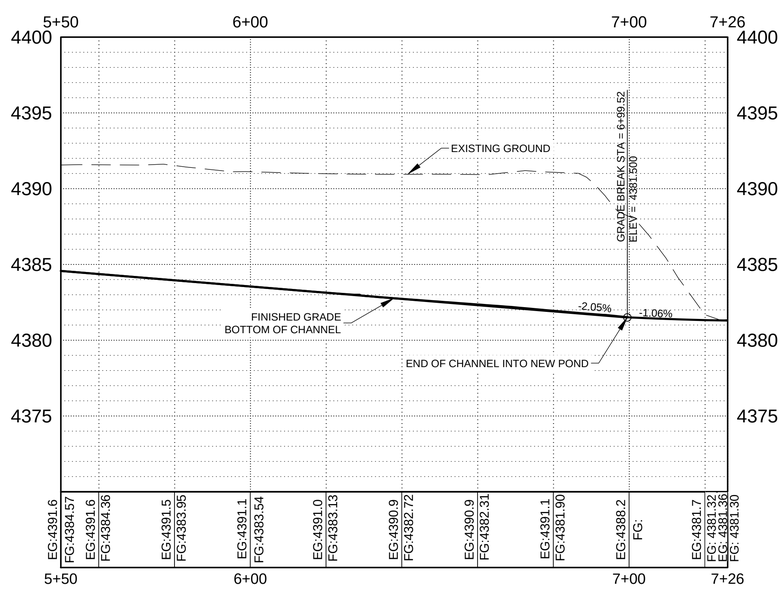

GENERAL NOTES

1. SEE SHEET 3 FOR ALL GENERAL NOTES
2. EXISTING GRADE SHOWN AT 1' MINOR AND 5' MAJOR CONTOURS
3. FINISHED GRADE SHOWN AT 1' MINOR AND 5' MAJOR CONTOURS
4. CONTRACTOR IS RESPONSIBLE FOR PROTECTING EXISTING BLOCK WALL IN PLACE FOR THE LIFE OF THE PROJECT. ANY DAMAGE RESULTING FROM CONTRACTORS ACTIVITIES SHALL BE REPAIRED IN KIND BY THE CONTRACTOR AT NO ADDITIONAL COST TO THE OWNER.
5. CONTRACTOR SHALL PROTECT IN PLACE ALL POWER POLES.

KEYNOTES

1. INSTALL WIRE ENCLOSED RIP RAP CLASS A PER NMDOT STANDARD DETAILS 602-01-1/1 AND 602-02-1/1; SHEETS 48 AND 49. SEE EROSION CONTROL PLAN FOR LIMITS; SHEET 17.
2. BUILD 1' THICK CUTOFF WALL; SEE DETAILS A1 AND A2; SHEET 30. SEE EROSION CONTROL PLAN FOR LIMITS; SHEET 17.

LEGEND

- MINOR CONTOUR (EXISTING)
- MAJOR CONTOUR (EXISTING)
- MINOR CONTOUR (PROPOSED)
- MAJOR CONTOUR (PROPOSED)
- PROPERTY LINE
- EXISTING EASEMENT
- EXISTING FENCE
- EXISTING FENCE
- OHE — EXISTING OVERHEAD ELECTRIC
- EXISTING POWER POLE
- TEL — EXISTING TELEPHONE PEDESTAL
- WIRE ENCLOSED RIP RAP CLASS "A"
- 1' CUTOFF WALL

AS-BUILT INFORMATION

CONTRACTOR		
WORK STAKED BY		DATE
INSPECTORS ACCEPTANCE BY		DATE
FIELD VERIFICATION BY		DATE
REDLINES RECEIVED		DATE
CORRECTED BY		DATE

BENCH MARKS

SURVEY INFORMATION

FIELD NOTES

NO.	BY	DATE

ENGINEER'S SEAL

NO.	DATE	REMARKS	BY
		REVISIONS	

WILSON & COMPANY, ENGINEERS & ARCHITECTS

DESIGNED BY	----	DATE ----
DRAWN BY	----	DATE ----
CHECKED BY	----	DATE ----

CITY OF ALAMOGORDO

DRY CANYON ARROYO REALIGNMENT PLAN AND PROFILE

CITY OF ALAMOGORDO | Engineer Approval | Last Design Update | Mo./Day/Yr. | Mo./Day/Yr.

Project No. 2020-002 | Zone Map No. | Sheet 19 OF 49

WILSON & COMPANY

CHANNEL STA: 9+50 TO 14+00- PLAN VIEW

HORIZONTAL SCALE: 1" = 20'

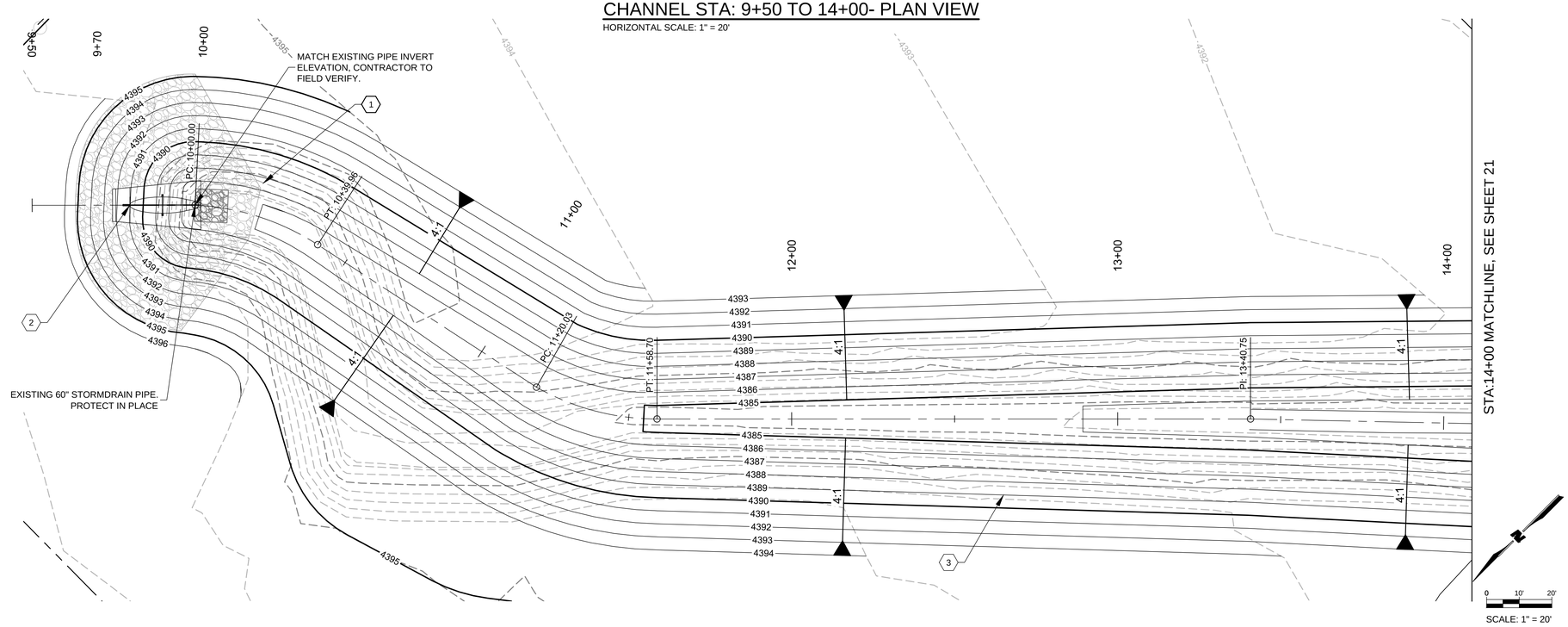

CHANNEL STA: 9+50 TO 14+00 - PROFILE VIEW

VERTICAL SCALE: 1" = 5'

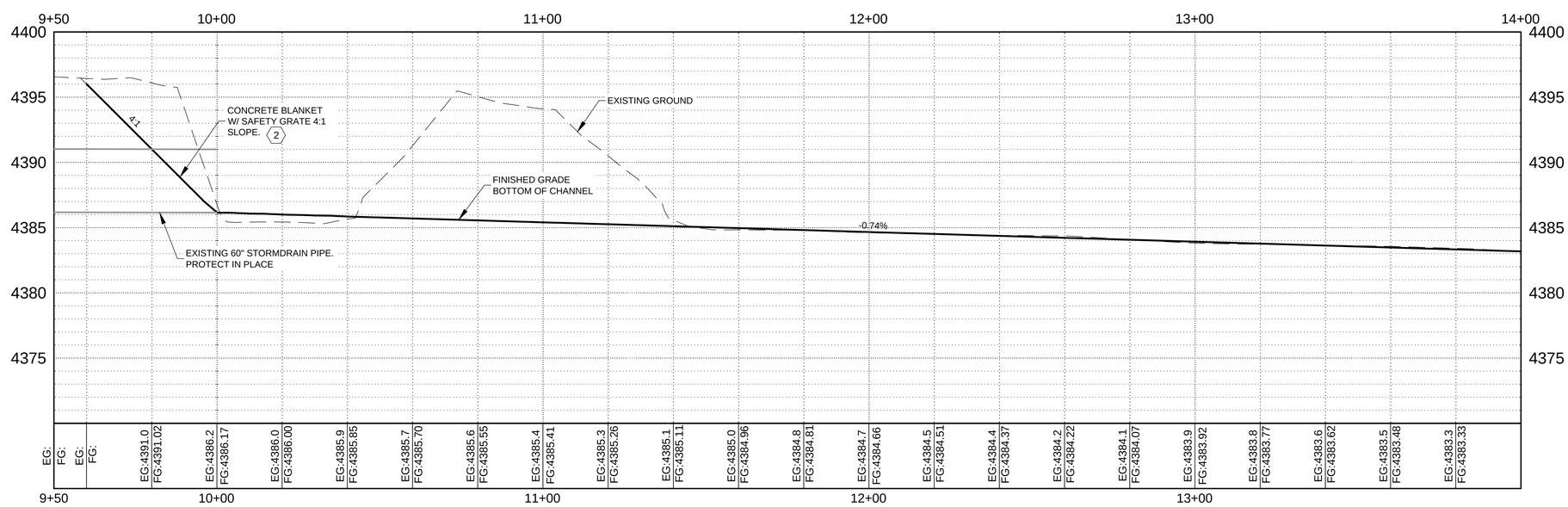

GENERAL NOTES

1. SEE SHEET 3 FOR ALL GENERAL NOTES
2. EXISTING GRADE SHOWN AT 1' MINOR AND 5' MAJOR CONTOURS
3. FINISHED GRADE SHOWN AT 1' MINOR AND 5' MAJOR CONTOURS
4. CONTRACTOR IS RESPONSIBLE FOR PROTECTING EXISTING BLOCK WALL IN PLACE FOR THE LIFE OF THE PROJECT. ANY DAMAGE RESULTING FROM CONTRACTORS ACTIVITIES SHALL BE REPAIRED IN KIND BY THE CONTRACTOR AT NO ADDITIONAL COST TO THE OWNER.
5. CONTRACTOR SHALL PROTECT IN PLACE ALL POWER POLES.

KEY NOTES

1. INSTALL WIRE ENCLOSED RIP RAP CLASS A PER STD NMDOT STANDARD DETAILS 602-01-1/1 AND 602-02-1/1; SHEETS 48 AND 49. SEE EROSION CONTROL PLAN FOR LIMITS; SHEET 17
2. BUILD CONCRETE BLANKET WITH SAFETY GRATE FOR 60" CMP PER NMDOT STD DETAILS 511-13-1/3, - 511-13-3/3, & 511-16-1/1, SHEETS 37 - 39 & 44.
3. BUILD CHANNEL PER TYPICAL SECTION SHEET 9, AND CHANNEL CROSS SECTIONS SHEETS 23 & 24.

LEGEND

- MINOR CONTOUR (EXISTING)
- MAJOR CONTOUR (EXISTING)
- MINOR CONTOUR (PROPOSED)
- MAJOR CONTOUR (PROPOSED)
- PROPERTY LINE
- EXISTING EASEMENT
- EXISTING FENCE
- EXISTING FENCE
- OHE — EXISTING OVERHEAD ELECTRIC
- WIRE ENCLOSED RIP RAP CLASS "A"

AS-BUILT INFORMATION

CONTRACTOR		
WORK STAKED BY		DATE
INSPECTORS ACCEPTANCE BY		DATE
FIELD VERIFICATION BY		DATE
REDLINES CORRECTED BY		DATE

BENCH MARKS

SURVEY INFORMATION

FIELD NOTES

NO.	BY	DATE

ENGINEER'S SEAL

NO.	DATE	REMARKS	BY
		REVISIONS	

WILSON & COMPANY, ENGINEERS & ARCHITECTS

DESIGNED BY	----	DATE ----
DRAWN BY	----	DATE ----
CHECKED BY	----	DATE ----

CITY OF ALAMOGORDO

CHANNEL PLAN AND PROFILE

CITY OF ALAMOGORDO | Engineer Approval | Last Design Update | Mo./Day/Yr. | Mo./Day/Yr.

Project No. 2020-002 | Zone Map No. | Sheet 20 OF 49

WILSON & COMPANY

CHANNEL REALIGNMENT STA:14+00 TO 16+00 - PLAN VIEW

HORIZONTAL SCALE: 1" = 20'

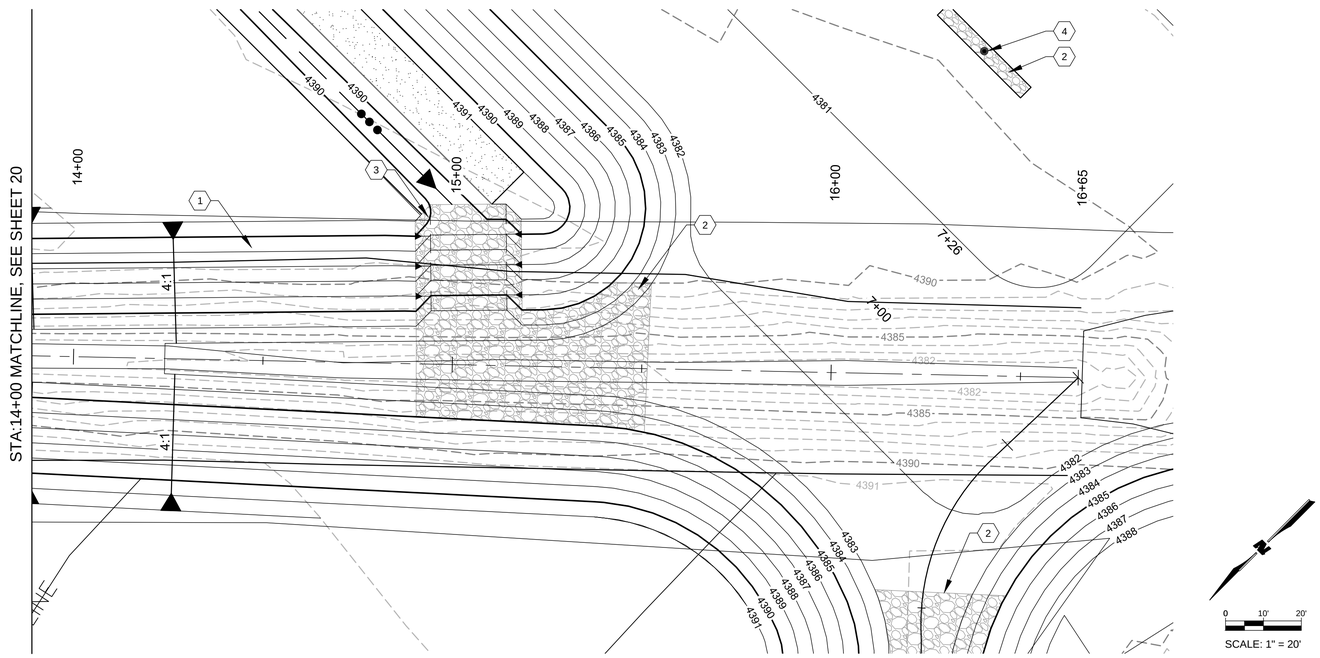

CHANNEL REALIGNMENT STA:14+00TO 16+00 - PROFILE VIEW

VERTICAL SCALE: 1" = 5'

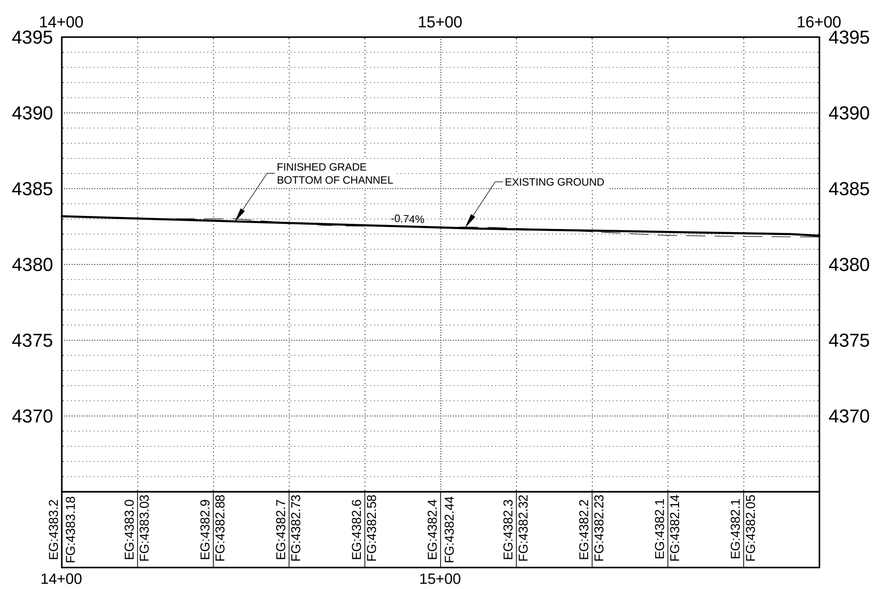

GENERAL NOTES

1. SEE SHEET 3 FOR ALL GENERAL NOTES
2. EXISTING GRADE SHOWN AT 1' MINOR AND 5' MAJOR CONTOURS
3. FINISHED GRADE SHOWN AT 1' MINOR AND 5' MAJOR CONTOURS
4. CONTRACTOR IS RESPONSIBLE FOR PROTECTING EXISTING BLOCK WALL IN PLACE FOR THE LIFE OF THE PROJECT. ANY DAMAGE RESULTING FROM CONTRACTORS ACTIVITIES SHALL BE REPAIRED IN KIND BY THE CONTRACTOR AT NO ADDITIONAL COST TO THE OWNER.
5. CONTRACTOR SHALL PROTECT IN PLACE ALL POWER POLES.

KEY NOTES

1. BUILD CHANNEL PER TYPICAL SECTION SHEET 9, AND CHANNEL CROSS SECTIONS SHEETS 23 & 24.
2. INSTALL WIRE ENCLOSED RIP RAP CLASS A PER STD NMDOT STANDARD DETAILS 602-01-1/1 AND 602-02-1/1; SHEETS 48 AND 49. SEE EROSION CONTROL PLAN FOR LIMITS; SHEET 17
3. BUILD RIPRAP RUNDOWN PER DETAILS A3 AND A4; SHEET 30.
4. BUILD DRY WELL PER DETAIL; SHEET 28.

LEGEND

- MINOR CONTOUR (EXISTING)
- MAJOR CONTOUR (EXISTING)
- MINOR CONTOUR (PROPOSED)
- MAJOR CONTOUR (PROPOSED)
- PROPERTY LINE
- EXISTING EASEMENT
- EXISTING FENCE
- EXISTING FENCE
- OHE — EXISTING OVERHEAD ELECTRIC
- WIRE ENCLOSED RIP RAP CLASS "A"

AS-BUILT INFORMATION

CONTRACTOR	DATE
WORK STAKED BY	DATE
INSPECTORS ACCEPTANCE BY	DATE
FIELD VERIFICATION BY	DATE
AS-BUILTS CORRECTED BY	DATE

BENCH MARKS

SURVEY INFORMATION

FIELD NOTES NO.	BY	DATE

ENGINEER'S SEAL

NO.	DATE	REMARKS	BY
		REVISIONS	

WILSON & COMPANY, ENGINEERS & ARCHITECTS

DESIGNED BY	----	DATE	----
DRAWN BY	----	DATE	----
CHECKED BY	----	DATE	----

CITY OF ALAMOGORDO

CHANNEL PLAN AND PROFILE

CITY OF ALAMOGORDO

Engineer Approval

Last Design Update — Mo./Day/Yr. — Mo./Day/Yr.

Project No. 2020-002

Zone Map No.

Sheet 21 OF 49

WILSON & COMPANY

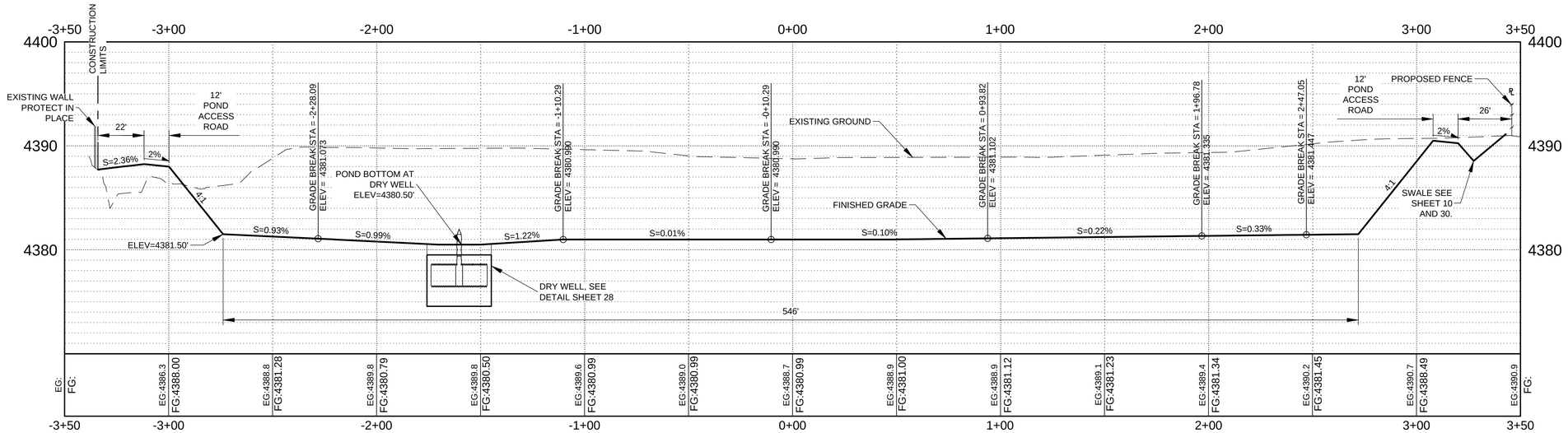

A SECTION 1

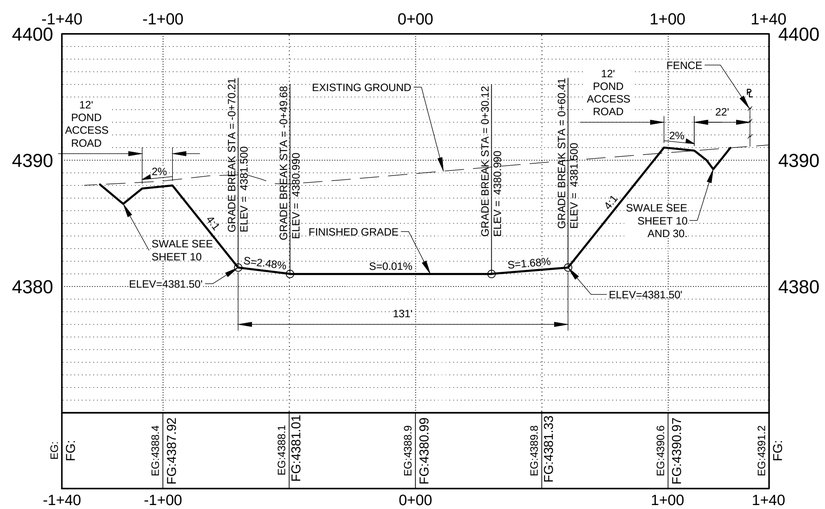

B SECTION 2

POND CROSS SECTIONS

SCALE: 1" = 30'

SCALE:
HORIZ: 1" =30'
VERT.: 1" = 5'

0 15' 30'

AS-BUILT INFORMATION

CONTRACTOR | DATE
WORK STAKED BY | DATE
INSPECTORS ACCEPTANCE BY | DATE
FIELD VERIFICATION BY | DATE
REDLINES RETURNED BY | DATE

BENCH MARKS

SURVEY INFORMATION
FIELD NOTES

NO.	BY	DATE

ENGINEER'S SEAL

STATE OF NEW MEXICO
S. HAMILTON
PROFESSIONAL ENGINEER

NO.	DATE	REMARKS	BY

REVISIONS

WILSON & COMPANY, ENGINEERS & ARCHITECTS

DESIGNED BY ---- DATE ----
DRAWN BY ---- DATE ----
CHECKED BY ---- DATE ----

CITY OF ALAMOGORDO

POND CROSS SECTIONS

CITY OF ALAMOGORDO	Engineer Approval	Last Design Update	Mo./Day/Yr.	Mo./Day/Yr.

Project No. 2020-002 | Zone Map No. | Sheet 22 OF 49

WILSON & COMPANY

M:\MSD\19-600-032-00\2_DISCIPLINES_SHEETS\2_SHEETS - CIVIL\OVERALL GRADING PLAN.DWG 3/2/2020

*NOTE: FOR CHANNEL PLAN AND PROFILE;
SEE SHEETS 20 AND 21 .

10+20.00

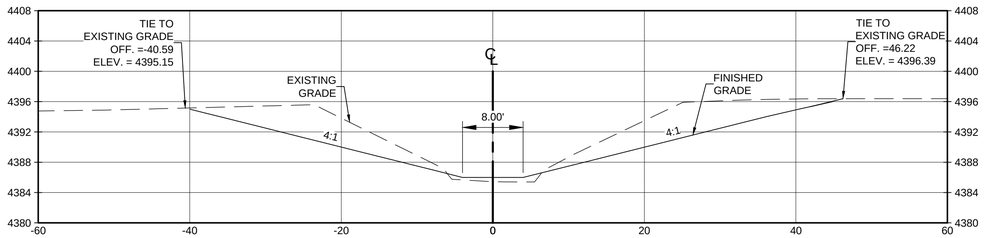

11+00.00

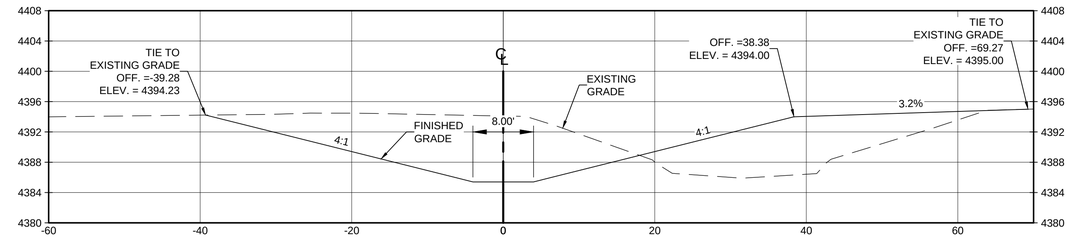

12+00.00

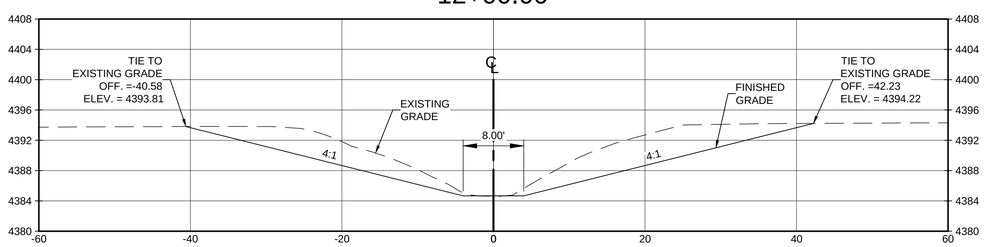

13+00.00

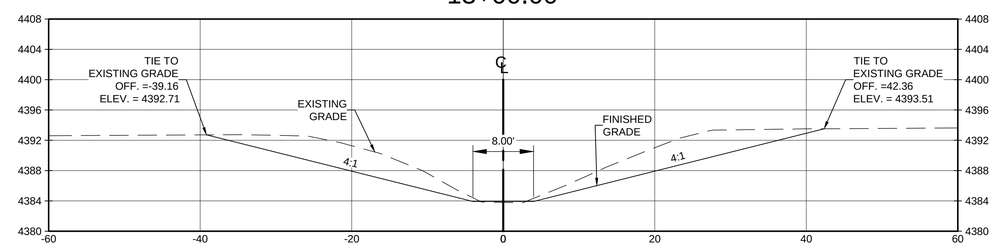

CROSS SECTION SCALE: 1" = 10'

AS-BUILT INFORMATION

CONTRACTOR
WORK STAKED BY — DATE
INSPECTORS ACCEPTANCE BY — DATE
FIELD VERIFICATION BY — DATE
DRAWINGS CORRECTED BY — DATE

BENCH MARKS

SURVEY INFORMATION
FIELD NOTES

NO.	BY	DATE

ENGINEER'S SEAL

NO.	DATE	REMARKS	BY
		REVISIONS	

WILSON & COMPANY, ENGINEERS & ARCHITECTS

DESIGNED BY	----	DATE	----
DRAWN BY	----	DATE	----
CHECKED BY	----	DATE	----

CITY OF ALAMOGORDO

CHANNEL CROSS SECTION

CITY OF ALAMOGORDO

Engineer Approval

Last Design Update — Mo./Day/Yr. — Mo./Day/Yr.

Project No. 2020-002

Zone Map No.

Sheet 23 OF 49

WILSON & COMPANY

*NOTE: FOR CHANNEL PLAN AND PROFILE;
SEE SHEETS 20 AND 21 .

14+00.00

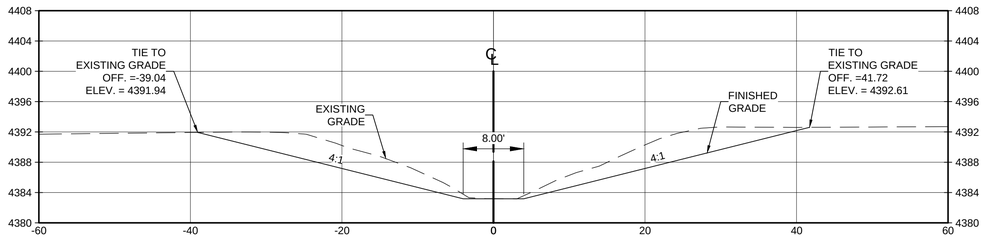

15+00.00

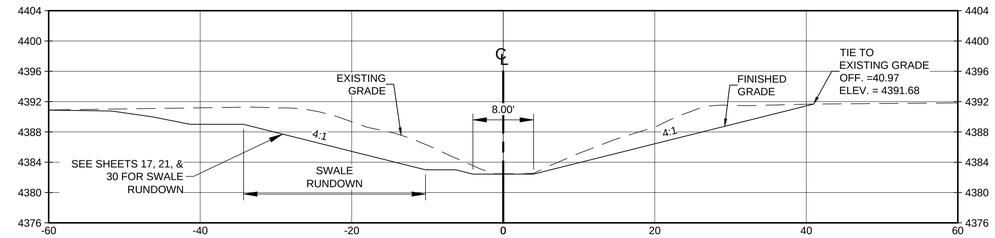

CROSS SECTION SCALE: 1" = 10'

AS-BUILT INFORMATION

CONTRACTOR
WORK STAKED BY — DATE
INSPECTORS ACCEPTANCE BY — DATE
FIELD VERIFICATION BY — DATE
DRAWINGS CORRECTED BY — DATE

BENCH MARKS

SURVEY INFORMATION
FIELD NOTES

NO.	BY	DATE

ENGINEER'S SEAL

NO.	DATE	REMARKS	BY
		REVISIONS	

WILSON & COMPANY, ENGINEERS & ARCHITECTS

DESIGNED BY	- - - -	DATE	- - - -
DRAWN BY	- - - -	DATE	- - - -
CHECKED BY	- - - -	DATE	- - - -

CITY OF ALAMOGORDO

CHANNEL CROSS SECTION

CITY OF ALAMOGORDO

Engineer Approval

Last Design Update — Mo./Day/Yr. — Mo./Day/Yr.

Project No. 2020-002

Zone Map No.

Sheet 24 OF 49

WILSON & COMPANY

*NOTE: FOR DRY CANYON ARROYO PLAN AND PROFILE; SEE SHEETS 18 AND 19 .

2+00.00

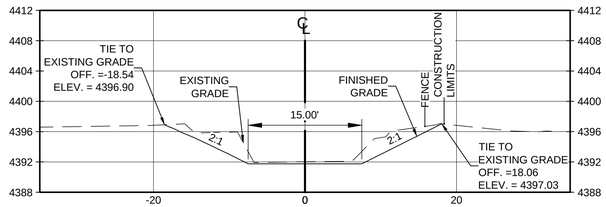

3+00.00

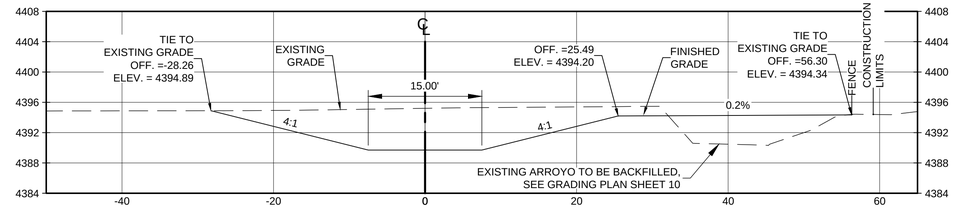

4+00.00

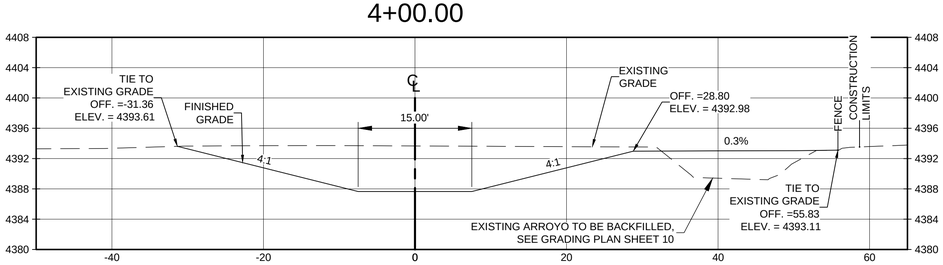

5+00.00

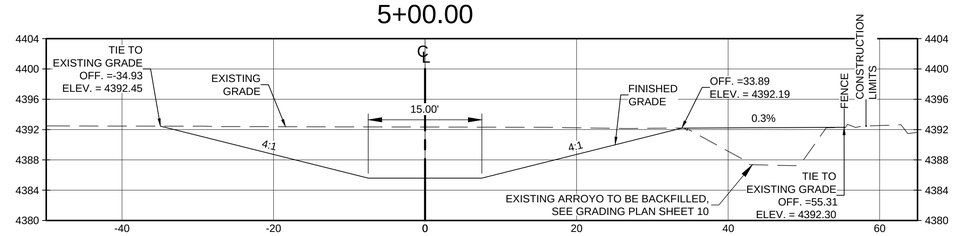

CROSS SECTION SCALE: 1" = 10'

AS-BUILT INFORMATION

CONTRACTOR
WORK STAKED BY
DATE
INSPECTORS ACCEPTANCE BY
DATE
FIELD VERIFICATION BY
DATE
REDLINES CORRECTED BY
DATE

BENCH MARKS

SURVEY INFORMATION
FIELD NOTES

NO.	BY	DATE

ENGINEER'S SEAL

NO.	DATE	REMARKS	BY

REVISIONS

WILSON & COMPANY, ENGINEERS & ARCHITECTS

DESIGNED BY	----	DATE	----
DRAWN BY	----	DATE	----
CHECKED BY	----	DATE	----

CITY OF ALAMOGORDO

DRY CANYON ARROYO CROSS SECTION

CITY OF ALAMOGORDO

Engineer Approval

Last Design Update

Mo./Day/Yr. | Mo./Day/Yr.

Project No. 2020-002

Zone Map No.

Sheet 25 OF 49

WILSON & COMPANY

*NOTE: FOR DRY CANYON ARROYO PLAN AND PROFILE; SEE SHEETS 18 AND 19 .

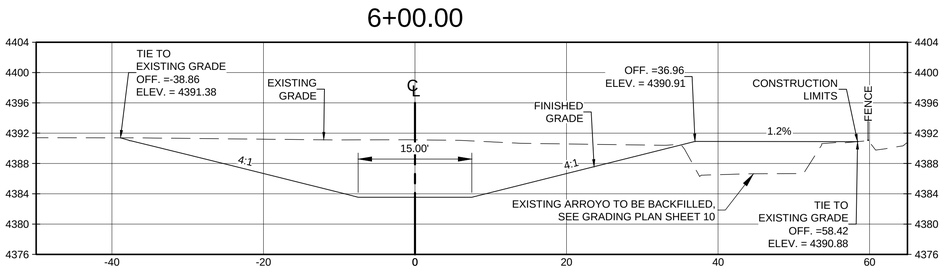

CROSS SECTION SCALE: 1" = 10'

AS-BUILT INFORMATION

CONTRACTOR
WORK STAKED BY DATE
INSPECTOR'S ACCEPTANCE BY DATE
FIELD VERIFICATION BY DATE
DRAWINGS CORRECTED BY DATE

BENCH MARKS

SURVEY INFORMATION
FIELD NOTES

NO.	BY	DATE

ENGINEER'S SEAL

NO.	DATE	REMARKS	BY
		REVISIONS	

WILSON & COMPANY, ENGINEERS & ARCHITECTS

DESIGNED BY	- - - -	DATE	- - - -
DRAWN BY	- - - -	DATE	- - - -
CHECKED BY	- - - -	DATE	- - - -

CITY OF ALAMOGORDO

DRY CANYON ARROYO CROSS SECTION

CITY OF ALAMOGORDO

Engineer Approval

Last Design Update

Mo./Day/Yr.	Mo./Day/Yr.

Project No. 2020-002

Zone Map No.

Sheet 26 OF 49

WILSON & COMPANY

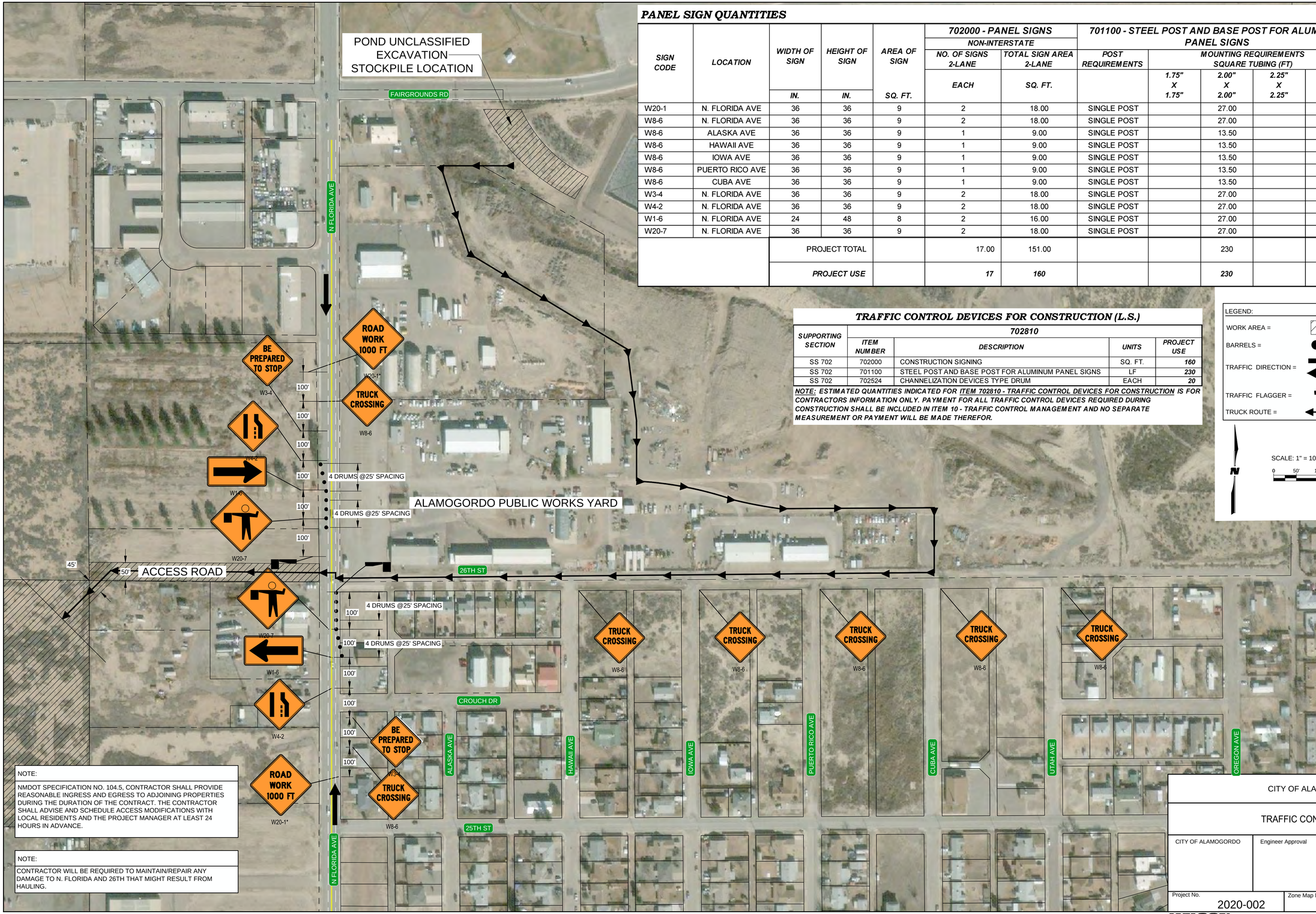

PANEL SIGN QUANTITIES

SIGN CODE	LOCATION	WIDTH OF SIGN	HEIGHT OF SIGN	AREA OF SIGN	702000 - PANEL SIGNS NON-INTERSTATE NO. OF SIGNS 2-LANE	702000 - PANEL SIGNS NON-INTERSTATE TOTAL SIGN AREA 2-LANE	701100 - STEEL POST AND BASE POST FOR ALUMINUM PANEL SIGNS POST REQUIREMENTS	MOUNTING REQUIREMENTS SQUARE TUBING (FT) 1.75" X 1.75"	2.00" X 2.00"	2.25" X 2.25"	2.50" X 2.50"
		IN.	IN.	SQ. FT.	EACH	SQ. FT.					
W20-1	N. FLORIDA AVE	36	36	9	2	18.00	SINGLE POST		27.00		
W8-6	N. FLORIDA AVE	36	36	9	2	18.00	SINGLE POST		27.00		
W8-6	ALASKA AVE	36	36	9	1	9.00	SINGLE POST		13.50		
W8-6	HAWAII AVE	36	36	9	1	9.00	SINGLE POST		13.50		
W8-6	IOWA AVE	36	36	9	1	9.00	SINGLE POST		13.50		
W8-6	PUERTO RICO AVE	36	36	9	1	9.00	SINGLE POST		13.50		
W8-6	CUBA AVE	36	36	9	1	9.00	SINGLE POST		13.50		
W3-4	N. FLORIDA AVE	36	36	9	2	18.00	SINGLE POST		27.00		
W4-2	N. FLORIDA AVE	36	36	9	2	18.00	SINGLE POST		27.00		
W1-6	N. FLORIDA AVE	24	48	8	2	16.00	SINGLE POST		27.00		
W20-7	N. FLORIDA AVE	36	36	9	2	18.00	SINGLE POST		27.00		
	PROJECT TOTAL				17.00	151.00			230		
	PROJECT USE				17	160			230		

TRAFFIC CONTROL DEVICES FOR CONSTRUCTION (L.S.)

SUPPORTING SECTION	702810 ITEM NUMBER	DESCRIPTION	UNITS	PROJECT USE
SS 702	702000	CONSTRUCTION SIGNING	SQ. FT.	160
SS 702	701100	STEEL POST AND BASE POST FOR ALUMINUM PANEL SIGNS	LF	230
SS 702	702524	CHANNELIZATION DEVICES TYPE DRUM	EACH	20

NOTE: ESTIMATED QUANTITIES INDICATED FOR ITEM 702810 - TRAFFIC CONTROL DEVICES FOR CONSTRUCTION IS FOR CONTRACTORS INFORMATION ONLY. PAYMENT FOR ALL TRAFFIC CONTROL DEVICES REQUIRED DURING CONSTRUCTION SHALL BE INCLUDED IN ITEM 10 - TRAFFIC CONTROL MANAGEMENT AND NO SEPARATE MEASUREMENT OR PAYMENT WILL BE MADE THEREFOR.

NOTE:

NMDOT SPECIFICATION NO. 104.5, CONTRACTOR SHALL PROVIDE REASONABLE INGRESS AND EGRESS TO ADJOINING PROPERTIES DURING THE DURATION OF THE CONTRACT. THE CONTRACTOR SHALL ADVISE AND SCHEDULE ACCESS MODIFICATIONS WITH LOCAL RESIDENTS AND THE PROJECT MANAGER AT LEAST 24 HOURS IN ADVANCE.

NOTE:

CONTRACTOR WILL BE REQUIRED TO MAINTAIN/REPAIR ANY DAMAGE TO N. FLORIDA AND 26TH THAT MIGHT RESULT FROM HAULING.

AS-BUILT INFORMATION
CONTRACTOR
WORK STAKED BY DATE
INSPECTORS ACCEPTANCE BY DATE
FIELD VERIFICATION BY DATE
AS-BUILTS CORRECTED BY DATE

BENCH MARKS

SURVEY INFORMATION
FIELD NOTES
NO. BY DATE

ENGINEER'S SEAL
STATE OF NEW MEXICO
LEONARD S. HAMILTON
NEW MEXICO PROFESSIONAL ENGINEER

NO.	DATE	REMARKS	BY
		REVISIONS	

WILSON & COMPANY, ENGINEERS & ARCHITECTS
DESIGNED BY ---- DATE ----
DRAWN BY ---- DATE ----
CHECKED BY ---- DATE ----

CITY OF ALAMOGORDO

TRAFFIC CONTROL PLAN

CITY OF ALAMOGORDO | Engineer Approval | Last Design Update | Mo./Day/Yr. | Mo./Day/Yr.

Project No. 2020-002 | Zone Map No. | Sheet 27 OF 49

WILSON & COMPANY

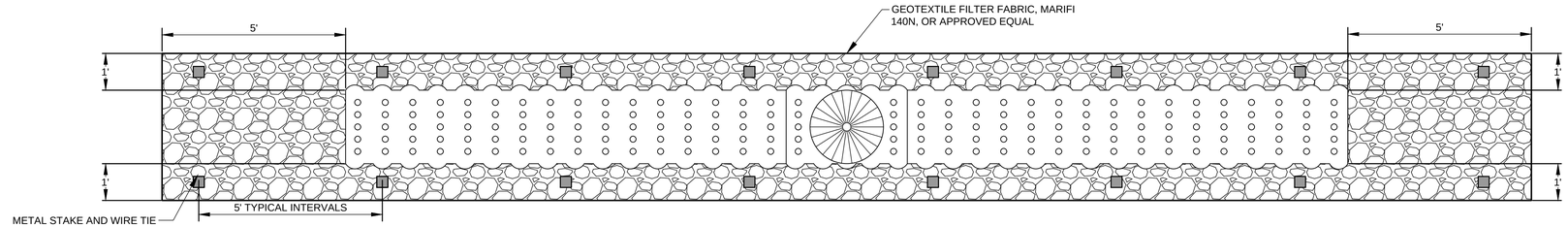

A DRYWELL PLAN VIEW

SCALE: 1" = 2'

NOTE: WORK INCLUDED IN PAYMENT FOR BID ITEM - DRYWELL; SHALL INCLUDE ALL MATERIAL, LABOR, AND EQUIPMENT TO COMPLETE THIS ITEM IN PLACE: UNCLASSIFIED EXCAVATION, PERFORATED CMP, TEE FITTING, TRASH RACK, METAL PLATE, GEOTEXTILE, AND 2" ANGULAR WASHED ROCK. WIRE ENCLOSED RIPRAP WILL BE MEASURED AND PAID FOR UNDER BID ITEM - WIRE ENCLOSED RIPRAP.

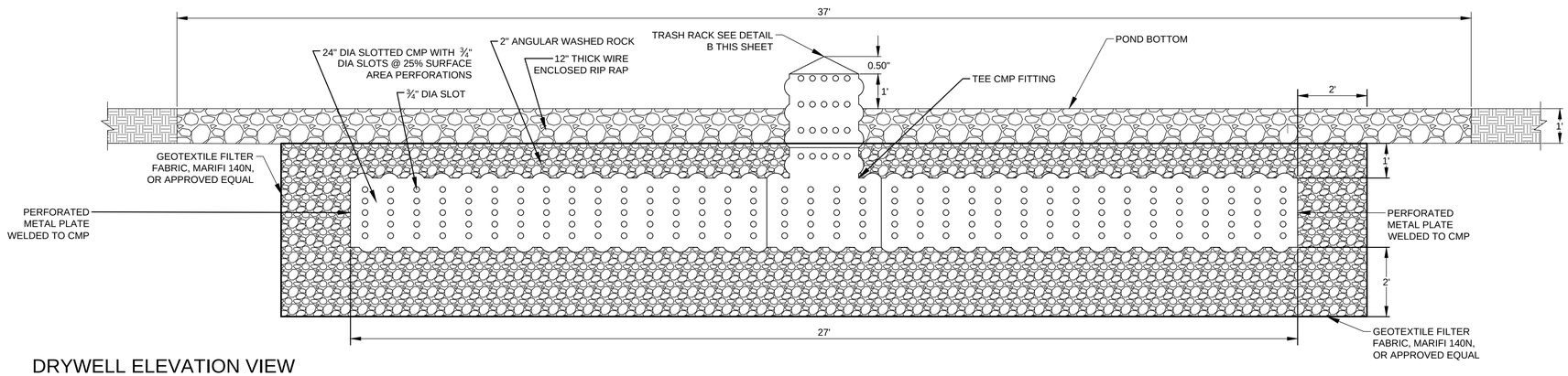

DRYWELL ELEVATION VIEW

SCALE: 1" = 2'

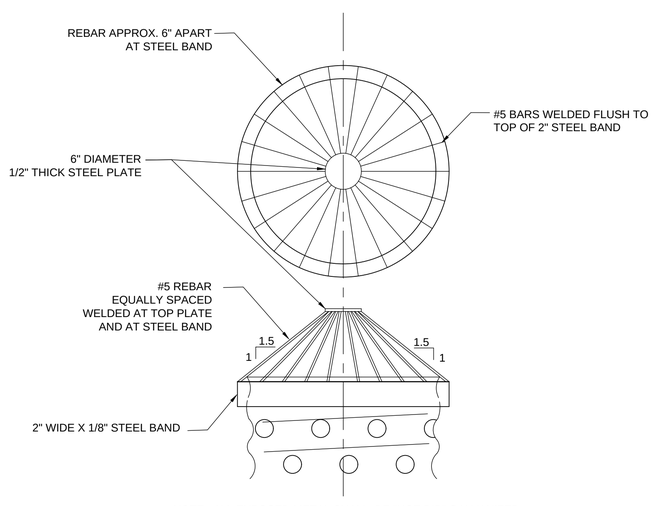

NOTE: ALL EXPOSED METAL SHALL BE "HOT DIP" GALVANIZED

B DRYWELL TRASH RACK

SCALE: NTS

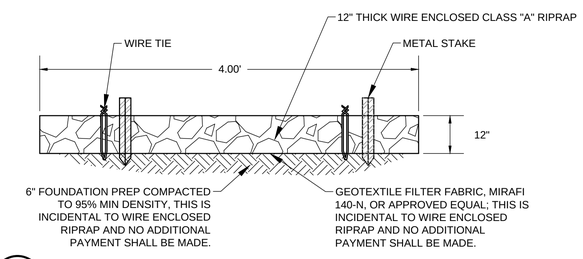

C DRYWELL RIPRAP APRON SECTION

SCALE: NTS

AS-BUILT INFORMATION

CONTRACTOR | DATE
WORK STAKED BY | DATE
INSPECTORS ACCEPTANCE BY | DATE
REDLINES RECEIVED | DATE
VERIFICATION BY FIELD CREW | DATE
CORRECTED BY | DATE

BENCH MARKS

SURVEY INFORMATION
FIELD NOTES

NO.	BY	DATE

ENGINEER'S SEAL

NO.	DATE	REMARKS	BY

REVISIONS

WILSON & COMPANY, ENGINEERS & ARCHITECTS

DESIGNED BY	----	DATE	----
DRAWN BY	----	DATE	----
CHECKED BY	----	DATE	----

CITY OF ALAMOGORDO

DRY WELL DETAILS

CITY OF ALAMOGORDO	Engineer Approval	Last Design Update	Mo./Day/Yr.	Mo./Day/Yr.

Project No. 2020-002 | Zone Map No. | Sheet 28 OF 49

WILSON & COMPANY

M:\MSD\19-600-032-00\2_DISCIPLINES_SHEETS\2_SHEETS - CIVIL\DRY WELL DETAILS.DWG 3/2/2020

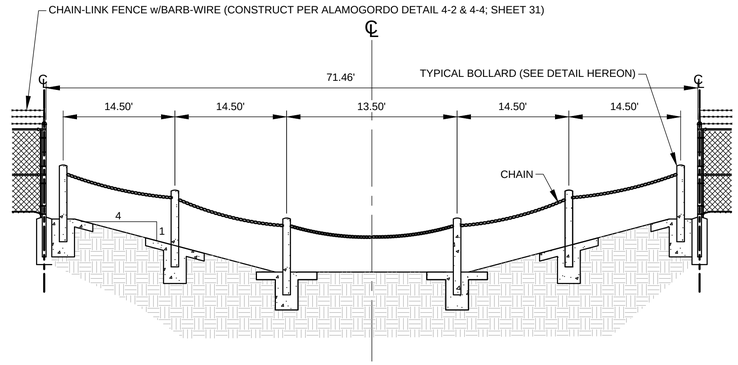

A FENCE ACROSS CHANNEL (±72'); BARRIER 2

SCALE: NTS

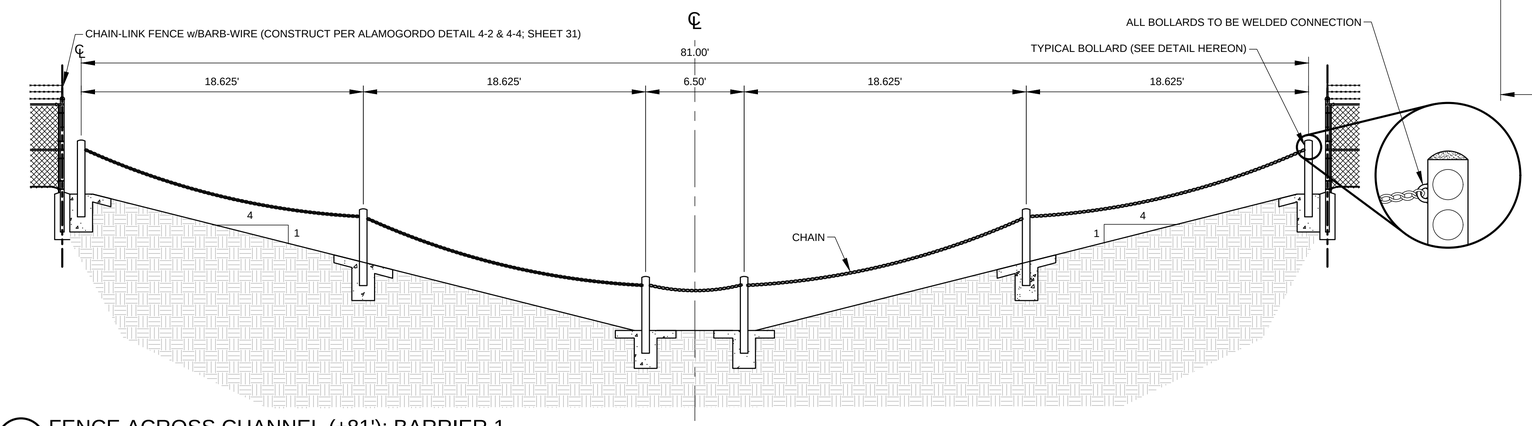

B FENCE ACROSS CHANNEL (±81'); BARRIER 1

SCALE: NTS

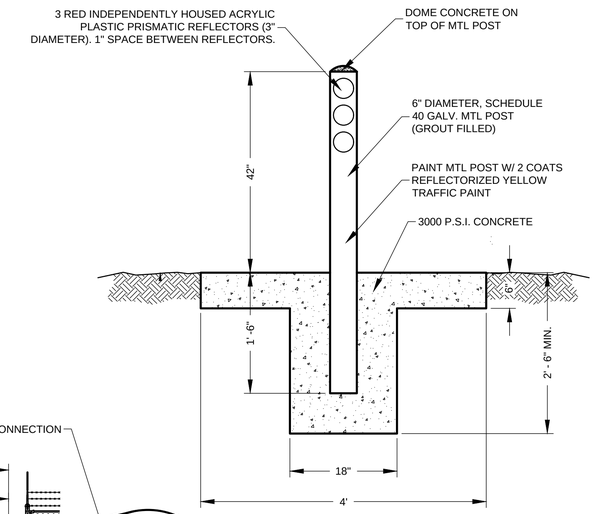

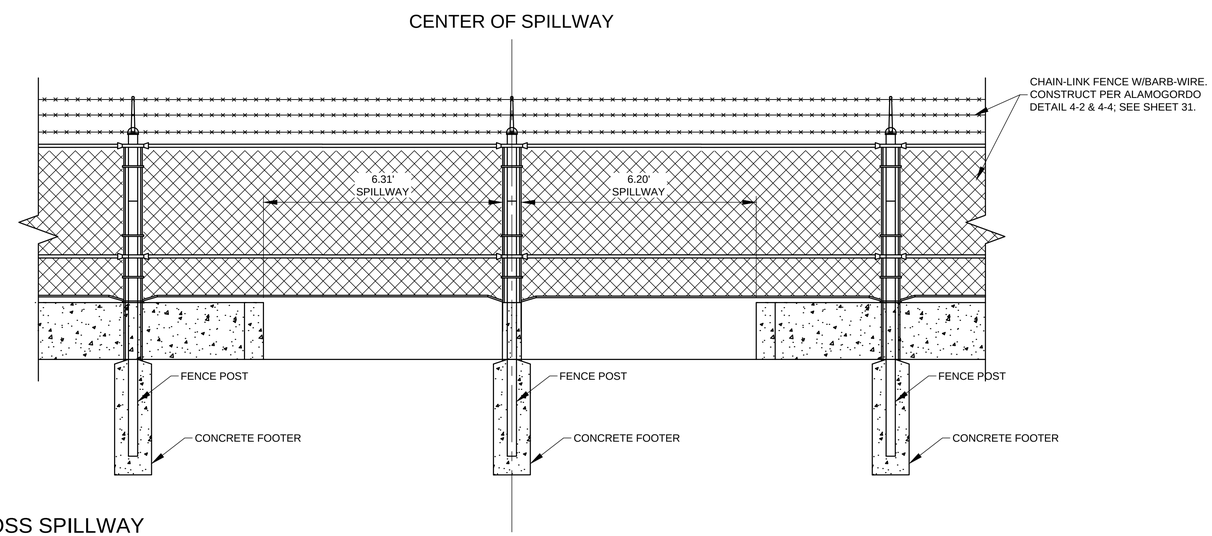

C FENCE ACROSS SPILLWAY

SCALE: 1" = 2'

AS-BUILT INFORMATION

CONTRACTOR | DATE
WORK STAKED BY | DATE
INSPECTORS ACCEPTANCE BY | DATE
FIELD VERIFICATION BY | DATE
REDLINES CORRECTED BY | DATE

BENCH MARKS

SURVEY INFORMATION
FIELD NOTES

NO.	BY	DATE

ENGINEER'S SEAL

NO.	DATE	REMARKS	BY

REVISIONS

WILSON & COMPANY, ENGINEERS & ARCHITECTS

DESIGNED BY	----	DATE	----
DRAWN BY	----	DATE	----
CHECKED BY	----	DATE	----

CITY OF ALAMOGORDO

CHANNEL & FENCE DETAILS

CITY OF ALAMOGORDO	Engineer Approval	Last Design Update	Mo./Day/Yr.	Mo./Day/Yr.

Project No. 2020-002 | Zone Map No. | Sheet 29 OF 49

WILSON & COMPANY

M:\MSD\19-600-032-00\2_DISCIPLINES_SHEETS\2_SHEETS - CIVIL\CHANNEL & FENCE DETAILS.DWG 3/2/2020

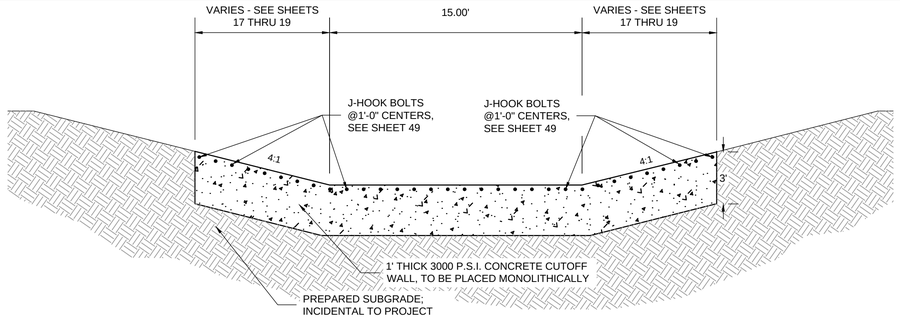

A1 1' CUTOFF WALL DETAIL

SCALE: NTS

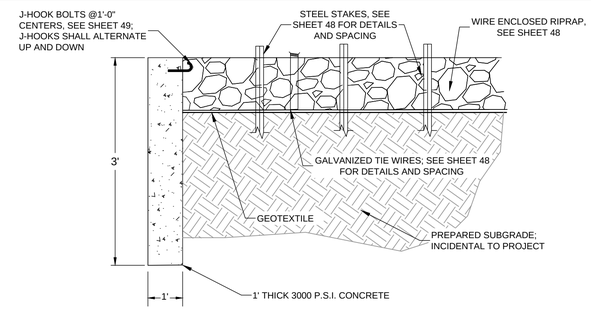

A2 1' CUTOFF WALL SECTION

SCALE: NTS

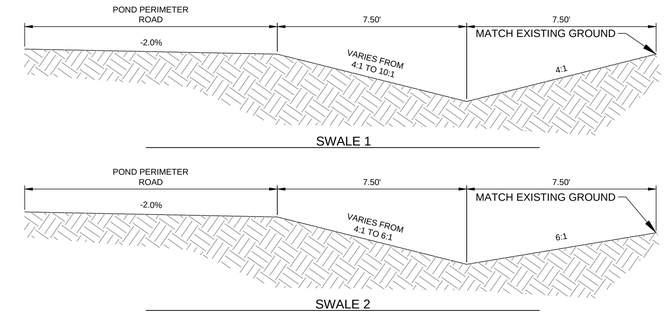

A5 V-DITCH SWALE

SCALE: NTS

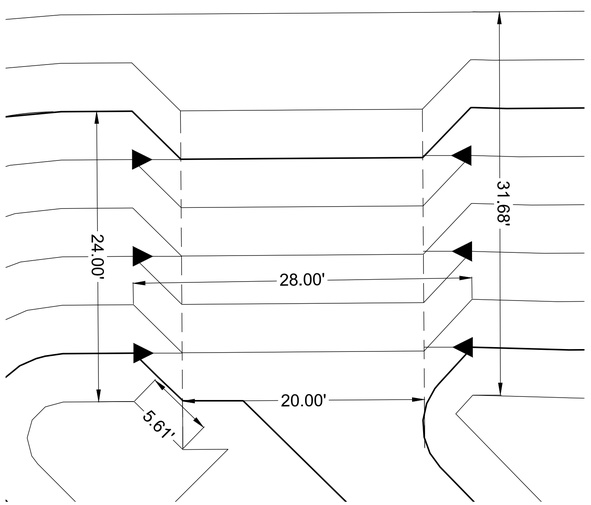

A3 RIPRAP RUNDOWN DETAIL

SCALE: NTS

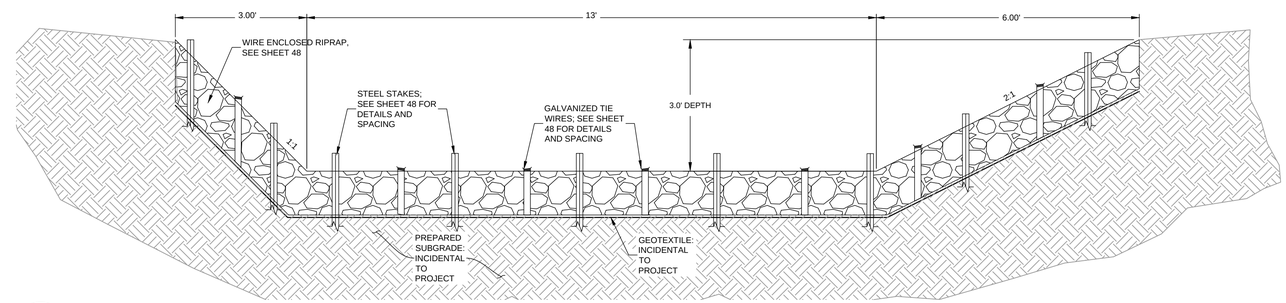

10 DRY CANYON ARROYO SECTION 10

SCALE: NTS

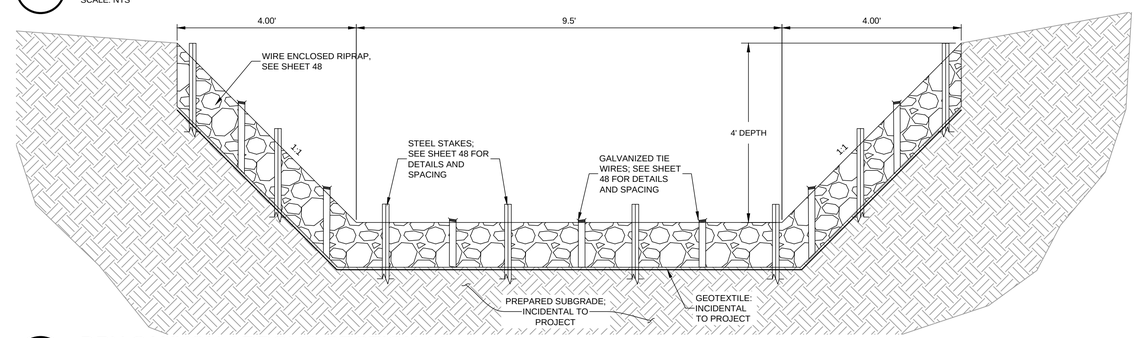

11 DRY CANYON ARROYO SECTION 11

SCALE: NTS

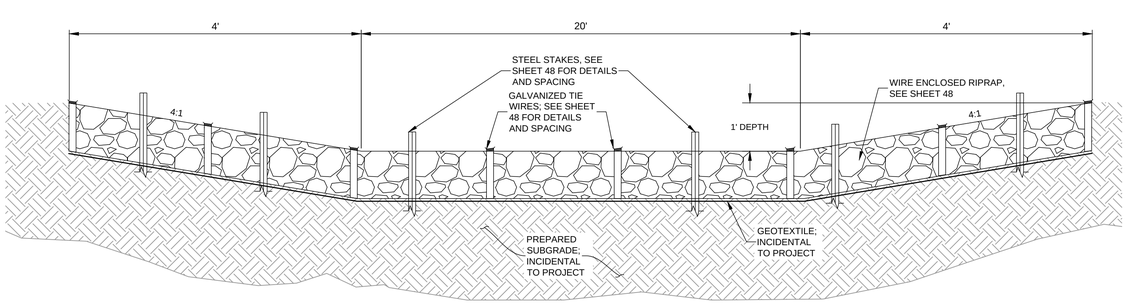

A4 RIPRAP RUNDOWN SECTION 1' THICK

SCALE: NTS

AS-BUILT INFORMATION

CONTRACTOR | DATE
WORK STAKED BY | DATE
INSPECTORS ACCEPTANCE BY | DATE
FIELD VERIFICATION BY | DATE
DRAWINGS CORRECTED BY | DATE

BENCH MARKS

SURVEY INFORMATION
FIELD NOTES

NO.	BY	DATE

ENGINEER'S SEAL

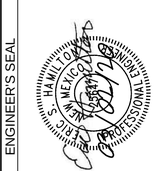

NO.	DATE	REMARKS	BY

REVISIONS

WILSON & COMPANY, ENGINEERS & ARCHITECTS

DESIGNED BY	----	DATE	----
DRAWN BY	----	DATE	----
CHECKED BY	----	DATE	----

CITY OF ALAMOGORDO

EROSION CONTROL DETAILS

CITY OF ALAMOGORDO	Engineer Approval	Last Design Update	Mo./Day/Yr.	Mo./Day/Yr.

Project No.	Zone Map No.	Sheet
2020-002		30 OF 49

WILSON & COMPANY

M:\MSD\19-600-032-00\2_DISCIPLINES_SHEETS\2_SHEETS - CIVIL\EROSION CONTROL DETAILS.DWG 3/2/2020

TECHNICAL STANDARDS DETAIL DRAWINGS

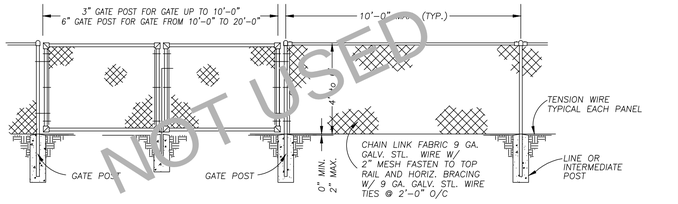

GATE ELEVATION

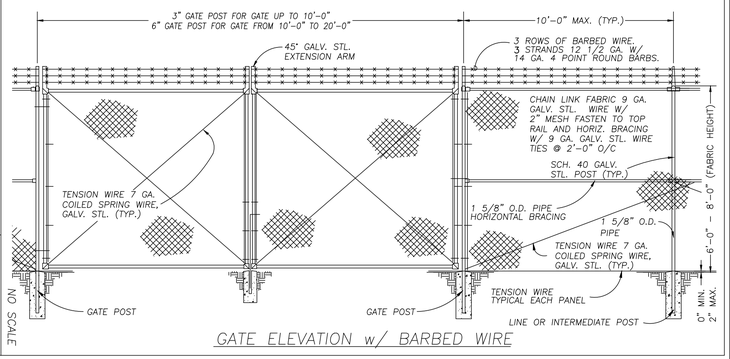

GATE ELEVATION w/ BARBED WIRE

NO SCALE

CHAINLINK DOUBLE GATE DETAILS 4-4

Drawn by: CLM Date: 04/04

TECHNICAL STANDARDS DETAIL DRAWINGS

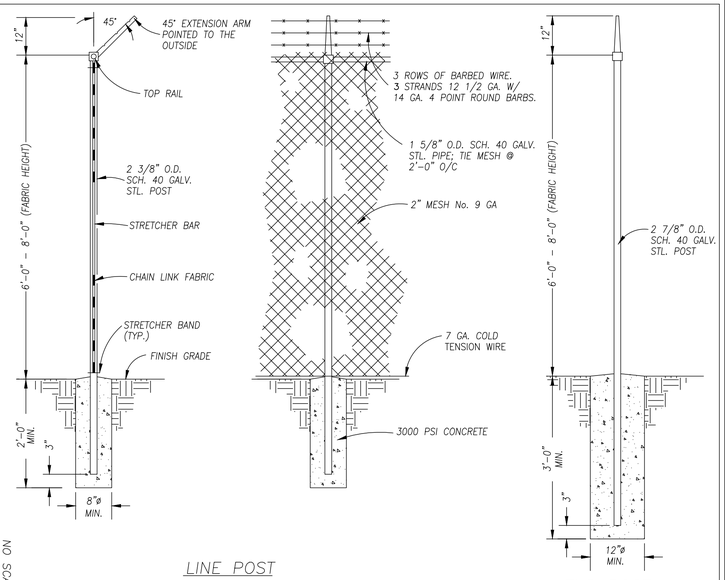

LINE POST

END POST

NO SCALE

CHAINLINK FENCE w/ BARBED WIRE 4-2

Drawn by: CLM Date: 04/04

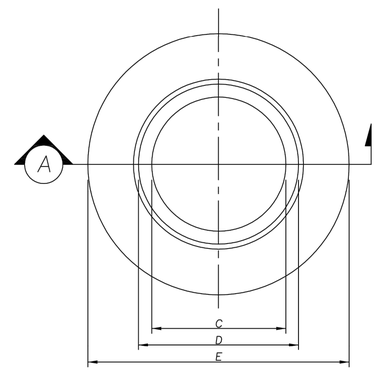

TOP VIEW

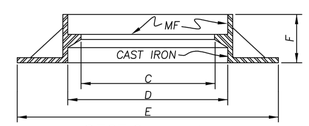

SECTION – A

MANHOLE RING	48" MANHOLE	60" MANHOLE	72" MANHOLE
C	21 3/4"	23"	29 7/8"
D	24 1/8"	27"	32 1/2"
E	31 3/4"	41"	39 1/4"
F	7 1/4"	5"	6"

NOTE:

1. MATCHING SURFACES MARKED "MF" TO BE MACHINE FINISHED OF ANY IRREGULARITIES THAT WOULD PREVENT A SNUG FIT.
2. CASTING TO BE SMOOTH AND VOID OF AIR HOLES.

NO SCALE

TECHNICAL STANDARDS DETAIL DRAWINGS

MANHOLE RING 7-25

Drawn by: CLM Date: 04/04

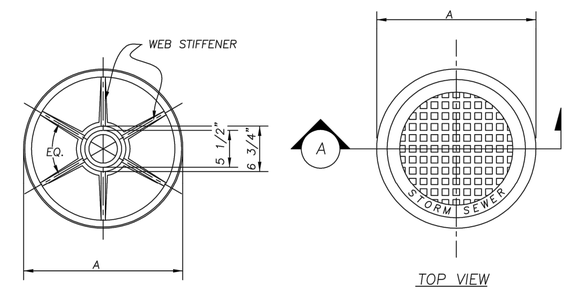

BOTTOM VIEW

TOP VIEW

NOTE:

1. MATCHING SURFACES MARKED "MF" TO BE MACHINE FINISHED OF ANY IRREGULARITIES THAT WOULD PREVENT A SNUG FIT.
2. CASTING TO BE SMOOTH AND VOID OF AIR HOLES.

MANHOLE RING	48" MANHOLE	60" MANHOLE	72" MANHOLE
MIN. WEIGHT RING/COVER	300 lbs	390lbs	390 lbs
A	23 3/4"	25 1/2"	31 5/8"
B	2"	2"	1 3/4"

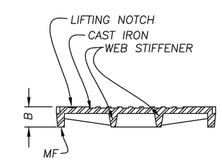

SECTION – A

NO SCALE

TECHNICAL STANDARDS DETAIL DRAWINGS

MANHOLE COVER 2-1

Drawn by: CLM Date: 04/04

AS-BUILT INFORMATION

CONTRACTOR
WORK STAKED BY — DATE
INSPECTORS ACCEPTANCE BY — DATE
FIELD VERIFICATION BY — DATE
DRAWINGS CORRECTED BY — DATE

BENCH MARKS

SURVEY INFORMATION
FIELD NOTES

NO.	BY	DATE

ENGINEER'S SEAL

NO.	DATE	REMARKS	BY
		REVISIONS	

WILSON & COMPANY, ENGINEERS & ARCHITECTS

DESIGNED BY ---- DATE ----
DRAWN BY ---- DATE ----
CHECKED BY ---- DATE ----

CITY OF ALAMOGORDO

ALAMOGORDO STANDARD DETAILS

CITY OF ALAMOGORDO | Engineer Approval | Last Design Update | Mo./Day/Yr. | Mo./Day/Yr.

Project No. 2020-002 | Zone Map No. | Sheet 31 OF 48

WILSON & COMPANY

M:\MSD\19-600-032-00\2_DISCIPLINES_SHEETS\2_SHEETS - CIVIL\ALAMOGORDO STANDARD DETAILS.DWG 3/2/2020

TABLE 1-R

HELICAL CORRUGATED STEEL PIPE-2 2/3" X 1/2" CORRUGATION

DIAMETER OF PIPE (INCHES)	MAX. DEPTH OF COVER ABOVE TOP OF PIPE (FEET)						MIN. CVR (INCHES)
	15	16-20	21-25	26-30	31-35	36-40	
	SPECIFIED WALL THICKNESS (INCH)						
12	0.064	0.064	0.064	0.064	0.064	0.064	12
18	0.064	0.064	0.064	0.064	0.064	0.064	12
24	0.064	0.064	0.064	0.064	0.064	0.064	12
30	0.064	0.064	0.064	0.064	0.064	0.064	12
36	0.064	0.064	0.064	0.064	0.064	0.064	12
42	0.064	0.064	0.064	0.064	0.064	0.064	12
48	0.064	0.064	0.064	0.064	0.064	0.064	12
54	0.079	0.079	0.079	0.079	0.079	0.079	12
60	0.109	0.109	0.109	0.109	0.109	0.109	12
66	0.138	0.138	0.138	0.138	0.138	0.138	12
72	0.138	0.138	0.138	0.138	0.138	0.138	12
78	0.168	0.168	0.168	0.168	0.168	0.168	12
84	0.168	0.168	0.168	0.168	0.168	0.168	12

TABLE 2-R

HELICAL CORRUGATED STEEL PIPE - 3" X 1" CORRUGATION

DIAMETER OF PIPE (INCHES)	MAX. DEPTH OF COVER ABOVE TOP OF PIPE (FEET)						MIN. CVR (INCHES)
	15	16-20	21-25	26-30	31-35	36-40	
	SPECIFIED WALL THICKNESS (INCH)						
54	0.064	0.064	0.064	0.064	0.064	0.064	12
60	0.064	0.064	0.064	0.064	0.064	0.064	12
66	0.064	0.064	0.064	0.064	0.064	0.064	12
72	0.064	0.064	0.064	0.064	0.064	0.079	12
78	0.064	0.064	0.064	0.064	0.064	0.079	12
84	0.064	0.064	0.064	0.064	0.079	0.079	12
90	0.064	0.064	0.064	0.064	0.079	0.109	12
96	0.079	0.079	0.079	0.079	0.079	0.109	12
102	0.079	0.079	0.079	0.079	0.109	0.109	18
108	0.109	0.109	0.109	0.109	0.109	0.109	18
114	0.109	0.109	0.109	0.109	0.109	0.109	18
120	0.109	0.109	0.109	0.109	0.109	0.109	18
126	0.138	0.138	0.138	0.138	0.138	0.138	18
132	0.138	0.138	0.138	0.138	0.138	0.138	18
138	0.138	0.138	0.138	0.138	0.138	0.138	18
144	0.168	0.168	0.168	0.168	0.168	0.168	18

TABLE 3-R

HELICAL CORRUGATED STEEL PIPE - 5" X 1" CORRUGATION

DIAMETER OF PIPE (INCHES)	MAX. DEPTH OF COVER ABOVE TOP OF PIPE (FEET)						MIN. CVR (INCHES)
	15	16-20	21-25	26-30	31-35	36-40	
	SPECIFIED WALL THICKNESS (INCH)						
54	0.064	0.064	0.064	0.064	0.064	0.064	12
60	0.064	0.064	0.064	0.064	0.064	0.064	12
66	0.064	0.064	0.064	0.064	0.064	0.079	12
72	0.064	0.064	0.064	0.064	0.064	0.079	12
78	0.064	0.064	0.064	0.064	0.079	0.079	12
84	0.064	0.064	0.064	0.079	0.079	0.109	12
90	0.064	0.064	0.064	0.079	0.079	0.109	12
96	0.079	0.079	0.079	0.079	0.109	0.109	12
102	0.079	0.079	0.079	0.079	0.109	0.109	18
108	0.109	0.109	0.109	0.109	0.109	0.109	18
114	0.109	0.109	0.109	0.109	0.109	0.138	18
120	0.109	0.109	0.109	0.109	0.109	0.138	18
126	0.138	0.138	0.138	0.138	0.138	0.138	18
132	0.138	0.138	0.138	0.138	0.138	0.138	18
138	0.138	0.138	0.138	0.138	0.138	0.138	18
144	0.168	0.168	0.168	0.168	0.168	0.168	18

NOTES: 1. BACKFILL AROUND PIPE MUST BE COMPACTED TO SPECIFIED AASHTO T-99 DENSITY OF 100%.
2. USE REASONABLE CARE IN HANDLING AND INSTALLATION.

TABLE 4-R

STEEL SPIRAL RIB PIPE - 3/4" X 3/4" X 7 1/2"

DIAMETER OF PIPE (INCHES)	MAX. DEPTH OF COVER ABOVE TOP OF PIPE (FEET)				MIN. CVR (INCHES)
	3/4" X 3/4" X 7 1/2" CORRUGATION				
	0.064	0.079	0.109	0.138	
24	67	95	158		12
30	54	75	126		12
36	45	63	105		12
42	38	54	90		12
48	*33	47	78	114	12
54	29	41	70	101	15
60		37	63	91	15
66		*34	57	83	18
72			52	76	18
78			48	70	21
84			*44	65	21
90				60	24
96				*56	24
102				*50	27

TABLE 5-R

STEEL SPIRAL RIB PIPE - 3/4" X 1" X 11 1/2"

DIAMETER OF PIPE (INCHES)	MAX. DEPTH OF COVER ABOVE TOP OF PIPE (FEET)			MIN. CVR (INCHES)
	3/4" X 1" X 11 1/2" CORRUGATION			
	0.064	0.079	0.109	
24	40	40	40	12
30	39	40	40	12
36	32	40	40	12
42	28	39	40	12
48	24	34	40	12
54	21	30	40	18
60		27	40	18
66		25	40	18
72		*22	38	18
78			35	24
84			33	24
90			*31	24

NOTES: 1. FOR TABLES 4-R AND 5-R, COVER LIMITS INDICATED WITH * ARE FOR TRENCH INSTALLATION ONLY. FOR EMBANKMENT CONDITIONS, USE NEXT HEAVIER GAGE IF AVAILABLE.

2. SEE "INSTALLATION AND BACKFILL OF SPIRAL RIB PIPE" SECTION OF "HANDBOOK OF STEEL DRAINAGE & HIGHWAY CONSTRUCTION PRODUCTS" BY AISI OF 1994 EDITION FOR MORE DETAILS ON INSTALLATION.

GAUGE	THICKNESS (INCHES)
1	0.280
3	0.249
5	0.218
7	0.188
8	0.168
10	0.138
12	0.109
14	0.079
16	0.064
18	0.052

NOTE:
GAUGES SHOWN ARE "US STANDARD GAUGE" FOR UNCOATED STEEL SHEETS AND PLATES. THICKNESS SHOWN IN INCHES INCLUDE GALVANIZED COATING.

R = ROUND PIPE

DESIGN DATA:

SPECIFICATIONS: AASHTO LRFD BRIDGE DESIGN SPECIFICATIONS SECTION 12, 2007 EDITION, WITH 2008 INTERIM REVISIONS.

DEAD LOAD: 120 POUNDS PER CUBIC FOOT EARTH.

LIVE LOAD: HL-93

SAFETY FACTORS: APPROXIMATELY, 3.0 FOR LONGITUDINAL SEAM STRENGTH 2.0, FOR PIPE WALL BUCKLING.

BACKFILL: SOIL STIFFNESS COEFFICIENT (k) = 0.22.

◐ DENOTES THAT THE FURNISHED TABLE IS STILL BASED ON DESIGN SPECIFICATION OF LFD, NOT LRFD YET.

◐ TABLE 6-R

STRUCTURAL PLATE PIPE - 6" X 2" CORRUGATION

DIAMETER OF PIPE (FEET)	MAX. DEPTH OF COVER ABOVE TOP OF PIPE (FEET)						MIN. CVR (INCHES)
	15	16-20	21-25	26-30	31-35	36-40	
	SPECIFIED WALL THICKNESS (INCH)						
5.0	0.111	0.111	0.111	0.111	0.111	0.111	12
5.5	0.111	0.111	0.111	0.111	0.111	0.111	12
6.0	0.111	0.111	0.111	0.111	0.111	0.111	12
6.5	0.111	0.111	0.111	0.111	0.111	0.111	12
7.0	0.111	0.111	0.111	0.111	0.111	0.111	12
7.5	0.111	0.111	0.111	0.111	0.111	0.111	12
8.0	0.111	0.111	0.111	0.111	0.111	0.111	12
8.5	0.111	0.111	0.111	0.111	0.111	0.111	18
9.0	0.111	0.111	0.111	0.111	0.111	0.111	18
9.5	0.111	0.111	0.111	0.111	0.111	0.111	18
10.0	0.111	0.111	0.111	0.111	0.111	0.111	18
10.5	0.111	0.111	0.111	0.111	0.111	0.140	18
11.0	0.111	0.111	0.111	0.111	0.111	0.140	18
11.5	0.111	0.111	0.111	0.111	0.111	0.140	18
12.0	0.111	0.111	0.111	0.111	0.111	0.140	18
12.5	0.111	0.111	0.111	0.111	0.111	0.140	24
13.0	0.111	0.111	0.111	0.111	0.111	0.140	24
13.5	0.111	0.111	0.111	0.111	0.140	0.140	24
14.0	0.111	0.111	0.111	0.111	0.140	0.140	24
14.5	0.111	0.111	0.111	0.111	0.140	0.140	24
15.0	0.111	0.111	0.111	0.140	0.140	0.140	24
15.5	0.111	0.111	0.111	0.140	0.140	0.170	24
16.0	0.111	0.111	0.111	0.140	0.140	0.170	24
16.5	0.140	0.140	0.140	0.140	0.140	0.170	30
17.0	0.140	0.140	0.140	0.140	0.140	0.170	30
17.5	0.140	0.140	0.140	0.140	0.140	0.170	30
18.0	0.140	0.140	0.140	0.140	0.140	0.170	30
18.5	0.170	0.170	0.170	0.170	0.170	0.170	30
19.0	0.170	0.170	0.170	0.170	0.170	0.188	30
19.5	0.170	0.170	0.170	0.170	0.170	0.188	30
20.0	0.170	0.170	0.170	0.170	0.170	0.188	30
20.5	0.188	0.188	0.188	0.188	0.188	0.218	36
21.0	0.188	0.188	0.188	0.188	0.188	0.218	36
21.5	0.218	0.218	0.218	0.218	0.218	0.218	36
22.0	0.218	0.218	0.218	0.218	0.218	0.249	36
22.5	0.218	0.218	0.218	0.218	0.218	0.249	36
23.0	0.218	0.218	0.218	0.218	0.218	0.249	36
23.5	0.249	0.249	0.249	0.249	0.249	0.249	36
24.0	0.249	0.249	0.249	0.249	0.249	0.280	42
24.5	0.249	0.249	0.249	0.249	0.249	0.280	42
25.0	0.280	0.280	0.280	0.280	0.280	0.280	42
25.5	0.280	0.280	0.280	0.280	0.280	0.280	42
26.0	0.280	0.280	0.280	0.280	0.280	0.280	42

NOTES: 1. BACKFILL AROUND PIPE MUST BE COMPACTED TO SPECIFIED AASHTO T-99 DENSITY OF 100%.
2. USE REASONABLE CARE IN HANDLING AND INSTALLATION.

GENERAL NOTES:

1. WHERE ABRASIVE OR CORROSIVE CONDITIONS EXIST, A HEAVIER WALL THICKNESS OR A PROTECTIVE COATING MAY BE REQUIRED. SEE SECTION 570 OF SPECIFICATIONS FOR CORROSION RESISTANCE NUMBER.
2. THE CONTRACTOR MAY FURNISH A HEAVIER WALL THICKNESS THAN THE MINIMUM SHOWN IN THE TABLES AT NO ADDITIONAL COST TO THE DEPARTMENT.
3. ALL PIPES SHALL BE PROTECTED BY A COVER OF AT LEAST 4 FEET BEFORE PERMITTING HEAVY CONSTRUCTION EQUIPMENT TO PASS OVER THEM DURING CONSTRUCTION.
4. MINIMUM COVERS SHOWN IN THE TABLES SHALL BE MEASURED FROM THE TOP OF THE PIPE TO THE BOTTOM OF THE THE FLEXIBLE PAVEMENT OR TO THE TOP OF THE RIGID PAVEMENT. FOR MINIMUM COVERS, A MINIMUM 6" CUSHION OF BACKFILL MATERIAL SHALL BE PROVIDED BETWEEN THE BOTTOM OF THE RIGID PAVEMENT AND THE TOP OF THE PIPE.
5. ALL STEEL CORRUGATED METAL AND AND STRUCTURAL PLATE SHALL CONFORM TO AASHTO SPECIFICATION M-36 AND M-167.
8. ALL PIPES ARE TO BE CAMBERED TO ACCOMMODATE SOIL SETTLEMENT AND CONSOLIDATION. THE AMOUNT OF CAMBER WILL DEPEND ON SOIL CHARACTERISTICS, COVER, LENGTH OF CULVERT, SLOPE, AND OTHER FACTORS AND SHALL BE APPROVED BY THE PROJECT MANAGER.
9. SEE 206-07-1/1 - CORRUGATED METAL CULVERT AND PIPE ARCHES BEDDING AND BACKFILL DETAILS FOR INSTALLATION.
10. SEE SECTION 570 PIPE CULVERT SPECIFICATIONS AND SECTION 571 STRUCTURAL PLATE STRUCTURES SPECIFICATIONS.
6. FOR PIPE SIZES NOT SHOWN, THE GAUGE WILL BE THAT REQUIRED BY THE MINIMUM AND MAXIMUM COVERS FOR THE NEXT LARGER TABULATED PIPE SIZE.
7. COVER HEIGHTS OVER 40 FEET SHALL BE USED ONLY AFTER A THOROUGH INVESTIGATION OF THE FOUNDATION MATERIALS.

TIMOTHY A. MARRS
NEW MEXICO
14072
REGISTERED PROFESSIONAL ENGINEER
4-10-12

	DATE	BY	DESCRIPTION

REVISIONS (OR CHANGE NOTICES)

NEW MEXICO DEPARTMENT OF TRANSPORTATION STANDARD DRAWING

MAXIMUM AND MINIMUM COVER
STEEL-ROUND PIPES
HELICAL CORRUGATED METAL
AND
STRUCTURAL PLATES

DESIGNED BY: DRAWN BY: SKL. CHECKED BY: YML/TM

206-03-1/1 1 of 1

TABLE 7-A

HELICAL CORRUGATED STEEL PIPE, PIPE-ARCH
2 2/3" x 1/2" CORRUGATION

EQUIV. DIAMETER (INCHES)	SPAN (INCHES)	RISE (INCHES)	MINIMUM THICKNESS REQUIRED (INCH)	MAXIMUM DEPTH OF COVER (FT.) OVER PIPE-ARCH FOR SOIL BEARING CAPACITIES IN 2 TONS/SQ. FT.	MINIMUM COVER (INCHES)
15	17	13	0.064	13	12
18	21	15	0.064	12	12
21	24	18	0.064	13	12
24	28	20	0.064	12	12
30	35	24	0.064	12	12
36	42	29	0.064	12	12
42	49	33	0.079	12	12
48	57	38	0.109	12	12
54	64	43	0.109	12	12
60	71	47	0.138	12	12
66	77	52	0.168	12	12
72	83	57	0.168	12	12

TABLE 8-A

HELICAL CORRUGATED STEEL PIPE, PIPE-ARCH
3" x 1" CORRUGATION

EQUIV. DIAMETER (INCHES)	SIZE (INCHES)	SPAN (INCHES)	RISE (INCHES)	MINIMUM THICKNESS REQUIRED (INCH)	MAXIMUM DEPTH OF COVER (FT.) OVER PIPE-ARCH FOR SOIL BEARING CAPACITIES IN 2 TONS/SQ. FT.	MINIMUM COVER (INCHES)
54	60 x 46	58 1/2	48 1/2	0.079	20	15
60	66 x 51	65	54	0.079	20	15
66	73 x 55	72 1/2	58 1/4	0.079	20	18
72	81 x 59	79	62 1/2	0.079	17	18
78	87 x 63	86 1/2	67 1/4	0.079	16	18
84	95 x 67	93 1/2	71 3/4	0.079	16	18
90	103 x 71	101 1/2	76	0.109	16	18
96	112 x 75	108 1/2	80 1/2	0.109	16	21
102	117 x 79	116 1/2	84 3/4	0.109	16	21
108	128 x 83	123 1/2	89 1/4	0.138	16	24
114	137 x 87	131	93 3/4	0.138	16	24
120	142 x 91	138 1/2	98	0.168	16	27

TABLE 9-A

HELICAL CORRUGATED STEEL PIPE, PIPE-ARCH
5" x 1" CORRUGATION

EQUIV. DIAMETER (INCHES)	SIZE (INCHES)	SPAN (INCHES)	RISE (INCHES)	MINIMUM THICKNESS REQUIRED (INCH)	MAXIMUM DEPTH OF COVER (FT.) OVER PIPE-ARCH FOR SOIL BEARING CAPACITIES IN 2 TONS/SQ. FT.	MINIMUM COVER (INCHES)
72	81 x 59	79	62 1/2	0.109	17	18
78	87 x 63	86 1/2	67 1/4	0.109	16	18
84	95 x 67	93 1/2	71 3/4	0.109	16	18
90	103 x 71	101 1/2	76	0.109	16	18
96	112 x 75	108 1/2	80 1/2	0.109	16	21
102	117 x 79	116 1/2	84 3/4	0.109	16	21
108	128 x 83	123 1/2	89 1/4	0.138	16	24
114	137 x 87	131	93 3/4	0.138	16	24
120	142 x 91	138 1/2	98	0.168	16	27

NOTE:
1. BACKFILL AROUND PIPE MUST BE COMPACTED ACCORDING TO DETAIL 206-07-1/1.
2. SOIL BEARING CAPACITY REFERS TO SOIL IN THE REGION OF THE PIPE CORNERS.
3. USE REASONABLE CARE IN HANDLING AND INSTALLATION.

TABLE 10-A

STEEL SPIRAL RIB, PIPE-ARCH
3/4" x 3/4" x 7 1/2" CORRUGATION

SPAN & RISE (INCHES)	MINIMUM SPECIFIED THICKNESS REQUIRED (INCHES)	MAXIMUM COVER (FT.) OVER PIPE ARCH FOR A SOIL CORNER BEARING CAPACITY OF 2 TONS/SQ. FT.	MINIMUM COVER (INCHES)
20 X 16	0.064	16	12
23 X 19	0.064	15	12
27 X 21	0.064	13	12
33 X 26	0.064	13	12
40 X 31	0.064	14	12
46 X 36	0.109	13	12
53 X 41	0.109	13	15
60 X 46	0.109	20	15
66 X 51	0.109	20	18

TABLE 11-A

STEEL SPIRAL RIB, PIPE-ARCH
3/4" x 1" x 11 1/2" CORRUGATION

SPAN & RISE (INCHES)	MINIMUM SPECIFIED THICKNESS REQUIRED (INCHES)	MAXIMUM COVER (FT.) OVER PIPE ARCH FOR A SOIL CORNER BEARING CAPACITY OF 2 TONS/SQ. FT.	MINIMUM COVER (INCHES)
20 X 16	0.064	16	12
23 X 19	0.064	15	12
27 X 21	0.064	13	12
33 X 26	0.064	13	12
40 X 31	0.064	14	12
46 X 36	0.064	13	12
53 X 41	0.064	13	18
60 X 46	0.079	20	18
66 X 51	0.079	20	18
73 X 55	0.109	20	24
81 X 59	0.109	16	24
87 X 63	0.109	16	24
95 X 67	0.109	*16	24

NOTES:
1. FOR TABLES 11-R, COVER LIMITS INDICATED WITH * ARE FOR TRENCH INSTALLATION ONLY.
2. BACKFILL AND BEDDING MATERIAL SHALL CONFORM TO SECTION 206.
3. SEE "INSTALLATION AND BACKFILL OF SPIRAL RIB PIPE" SECTION OF "HANDBOOK OF STEEL DRAINAGE & HIGHWAY CONSTRUCTION PRODUCTS" BY AISI OF 1994 EDITION FOR MORE DETAILS ON INSTALLATION.

DESIGN DATA:

SPECIFICATIONS: AASHTO LRFD BRIDGE DESIGN SPECIFICATIONS SECTION 12, 2007 EDITION, WITH 2008 INTERIM REVISIONS.

DEAD LOAD: 120 POUNDS PER CUBIC FOOT EARTH.

LIVE LOAD: HL-93

SAFETY FACTORS: APPROXIMATELY, 3.0 FOR LONGITUDINAL SEAM STRENGTH 2.0, FOR PIPE WALL BUCKLING.

BACKFILL: SOIL STIFFNESS COEFFICIENT (k) = 0.22.

GENERAL NOTES:

1. WHERE ABRASIVE OR CORROSIVE CONDITIONS EXIST, A HEAVIER WALL THICKNESS OR A PROTECTIVE COATING MAY BE REQUIRED. SEE SECTION 570 OF SPECIFICATIONS FOR CORROSION RESISTANCE NUMBER.
2. THE CONTRACTOR MAY FURNISH A HEAVIER WALL THICKNESS THAN THE MINIMUM SHOWN IN THE TABLES AT NO ADDITIONAL COST TO THE DEPARTMENT.
3. ALL PIPES SHALL BE PROTECTED BY A COVER OF AT LEAST 4 FEET BEFORE PERMITTING HEAVY CONSTRUCTION EQUIPMENT TO PASS OVER THEM DURING CONSTRUCTION.
4. MINIMUM COVERS SHOWN IN THE TABLES SHALL BE MEASURED FROM THE TOP OF THE PIPE TO THE BOTTOM OF THE FLEXIBLE PAVEMENT OR TO THE TOP OF THE RIGID PAVEMENT. FOR MINIMUM COVERS, A MINIMUM 6" CUSHION OF BACKFILL MATERIAL SHALL BE PROVIDED BETWEEN THE BOTTOM OF THE RIGID PAVEMENT AND THE TOP OF THE PIPE.
5. ALL STEEL CORRUGATED METAL AND AND STRUCTURAL PLATE SHALL CONFORM TO AASHTO SPECIFICATION M-36 AND M-167.
6. FOR PIPE SIZES NOT SHOWN, THE GAUGE WILL BE THAT REQUIRED BY THE MINIMUM AND MAXIMUM COVERS FOR THE NEXT LARGER TABULATED PIPE SIZE.
7. PIPE ARCHES IN TABLE 7-A, 49" x 33" AND LARGER SHALL BE DOUBLE RIVETED OR HELICAL. ALL 3" x 1" PIPE ARCHES SHALL BE DOUBLE RIVETED IN THE VALLEYS. ALL 5" x 1" SHALL BE DOUBLE RIVETED IN BOTH THE VALLEYS AND THE CRESTS.
8. ALL PIPE ARCHES ARE TO BE CAMBERED TO ACCOMMODATE SOIL SETTLEMENT AND CONSOLIDATION. THE AMOUNT OF CAMBER WILL DEPEND ON THE SOIL CHARACTERISTICS, COVER, LENGTH OF CULVERT, SLOPE, AND OTHER FACTORS AND SHALL BE APPROVED BY THE PROJECT MANAGER.
9. CORRUGATED METAL AND STRUCTURAL PLATE PIPE ARCHES WHICH HAVE SLIGHTLY DIFFERENT SPAN AND RISE DIMENSIONS THAN THOSE CALLED FOR ON THE PLANS MAY BE SUBSTITUTED FOR THE SIZES SPECIFIED PROVIDED:
   a) THEY MEET THE MINIMUM AND MAXIMUM FILL HEIGHT REQUIREMENT WITHOUT CHANGING THE INVERT ELEVATIONS.
   b) ARE FORMED FROM THE SAME SIZE ROUND PIPE AS THE PIPE SPECIFIED ON THE PLANS.
   c) THAT STRUCTURAL PLATE PIPE ARCHES PROVIDE THE SAME OR LARGER OPENING AREA AS THE PIPE ARCH SPECIFIED ON THE PLANS.
10. SEE 206-07-1/1 - CORRUGATED METAL CULVERT AND PIPE ARCHES BEDDING AND BACKFILL DETAILS FOR INSTALLATION.
11. SEE SECTION 570 PIPE CULVERT SPECIFICATIONS AND SECTION 571 STRUCTURAL PLATE STRUCTURES SPECIFICATIONS.
12. THE CONTRACTOR MAY USE EITHER 2 2/3" X 1/2" CORRUGATION OR 5" X 1" AND 3' X 1" CORRUGATION IF ADEQUATE COVER IS MET.

GAUGE	THICKNESS (INCHES)
1	0.280
3	0.249
5	0.218
7	0.188
8	0.168
10	0.138
12	0.109
14	0.079
16	0.064
18	0.052

NOTE: GAUGES SHOWN ARE "US STANDARD GAUGE" FOR UNCOATED STEEL SHEETS AND PLATES. THICKNESS SHOWN IN INCHES INCLUDE GALVANIZED COATING.

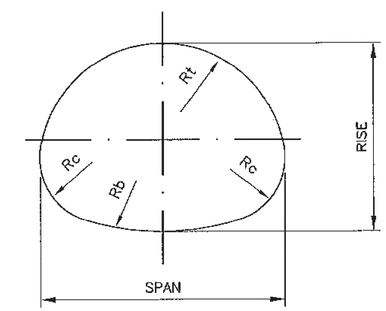

A = ARCH PIPE

TIMOTHY A. MARRS
NEW MEXICO
14072
REGISTERED PROFESSIONAL ENGINEER
4-10-12

	DATE	BY	DESCRIPTION

REVISIONS (OR CHANGE NOTICES)

NEW MEXICO
DEPARTMENT OF TRANSPORTATION
STANDARD DRAWING

MAXIMUM AND MINIMUM COVER
STEEL PIPE ARCHES
HELICAL CORRUGATED METAL
AND
STRUCTURAL PLATES

DESIGNED BY: DRAWN BY: SKL CHECKED BY: TM/YML

206-04-1/3

⊕ TABLE 12-A

STRUCTURAL PLATE PIPE, 6" X 2" CORRUGATIONS
BOLTED 18" Rc CORNER RADIUS

DIMENSIONS		MINIMUM REQUIRED THICKNESS (INCHES)	SOIL BEARING CAPACITY, TONS/SQ. FT.			
			2		3	
SPAN FEET-INCHES	RISE FEET-INCHES		H20 MIN. COVER (INCHES)	MAXIMUM COVER (FEET)	MAXIMUM COVER (FEET)	MINIMUM COVER (INCHES) H20 AND H25
6-1	4-7	0.111	12	19		12
6-4	4-9	0.111	12	18		12
6-9	4-11	0.111	12	17		12
7-0	5-1	0.111	12	16		12
7-3	5-3	0.111	12	16		12
7-8	5-5	0.111	12	15		12
7-11	5-7	0.111	12	14		12
8-2	5-9	0.111	18	14		18
8-7	5-11	0.111	18	13		18
8-10	6-1	0.111	18	13		18
9-4	6-3	0.111	18	12		18
9-6	6-5	0.111	18	12		18
9-9	6-7	0.111	18	12		18
10-3	6-9	0.111	18	10		18
10-8	6-11	0.111	18	8		18
10-11	7-1	0.111	18	8		18
11-5	7-3	0.111	18	8	15	18
11-7	7-5	0.111	18	8	15	18
11-10	7-7	0.111	18	7	14	18
12-4	7-9	0.111	24	6	12	24
12-6	7-11	0.111	24	6	12	24
12-8	8-1	0.111	24	6	11	24
12-10	8-4	0.111	24	6	11	24

NOTES:
1. SOIL BEARING CAPACITY REFERS TO SOIL IN THE REGION OF THE PIPE CORNERS. THE REMAINING BACKFILL AROUND THE PIPE-ARCH MUST BE COMPACTED ACCORDING TO DETAIL 206-07-1/1.
2. USE REASONABLE CARE IN HANDLING AND INSTALLATION.

⊕ DENOTES THAT THE FURNISHED TABLE IS STILL BASED ON DESIGN SPECIFICATION OF LFD, NOT LRFD YET.

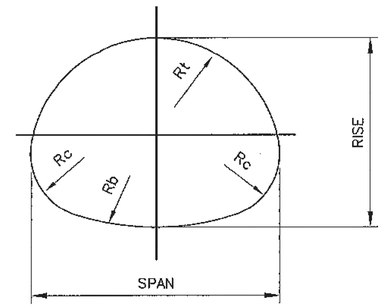

A = ARCH PIPE

GAUGE	THICKNESS (INCHES)
1	0.280
3	0.249
5	0.218
7	0.188
8	0.168
10	0.138

NOTE: GAUGES SHOWN ARE "US STANDARD GAUGE" FOR UNCOATED STEEL SHEETS AND PLATES. THICKNESS SHOWN IN INCHES INCLUDE GALVANIZED COATING.

GENERAL NOTES:

1. WHERE ABRASIVE OR CORROSIVE CONDITIONS EXIST, A HEAVIER WALL THICKNESS OR A PROTECTIVE COATING MAY BE REQUIRED. SEE SECTION 570 FOR CORROSION RESISTANCE NUMBER.
2. THE CONTRACTOR MAY FURNISH A HEAVIER WALL THICKNESS THAN THE MINIMUM SHOWN IN THE TABLES AT NO ADDITIONAL COST TO THE DEPARTMENT.
3. ALL PIPES SHALL BE PROTECTED BY A COVER OF AT LEAST 4 FEET BEFORE PERMITTING HEAVY CONSTRUCTION EQUIPMENT TO PASS OVER THEM DURING CONSTRUCTION.
4. MINIMUM COVERS SHOWN IN THE TABLES SHALL BE MEASURED FROM THE TOP OF THE PIPE TO THE BOTTOM OF THE FLEXIBLE PAVEMENT OR TO THE TOP OF THE RIGID PAVEMENT. FOR MINIMUM COVERS, A MINIMUM 6" CUSHION OF BACKFILL MATERIAL SHALL BE PROVIDED BETWEEN THE BOTTOM OF THE RIGID PAVEMENT AND THE TOP OF THE PIPE.
5. ALL STEEL CORRUGATED METAL AND STRUCTURAL PLATE SHALL CONFORM TO AASHTO SPECIFICATION M-36 AND M-167.
6. FOR PIPE SIZES NOT SHOWN, THE GAUGE WILL BE THAT REQUIRED BY THE MINIMUM AND MAXIMUM COVERS FOR THE NEXT LARGER TABULATED PIPE SIZE.
7. ALL PIPE ARCHES ARE TO BE CAMBERED TO ACCOMMODATE SOIL SETTLEMENT AND CONSOLIDATION. THE AMOUNT OF CAMBER WILL DEPEND ON THE SOIL CHARACTERISTICS, COVER, LENGTH OF CULVERT, SLOPE, AND OTHER FACTORS AND SHALL BE APPROVED BY THE PROJECT MANAGER.
8. CORRUGATED METAL AND STRUCTURAL PLATE PIPE ARCHES WHICH HAVE SLIGHTLY DIFFERENT SPAN AND RISE DIMENSIONS THAN THOSE CALLED FOR ON THE PLANS MAY BE SUBSTITUTED FOR THE SIZES SPECIFIED PROVIDED:
   a) THEY MEET THE MINIMUN AND MAXIMUM FILL HEIGHT REQUIREMENTS WITHOUT CHANGING THE INVERT ELEVATIONS,
   b) ARE FORMED FROM THE SAME SIZE ROUND PIPE AS THE PIPE SPECIFIED ON ON THE PLANS.
   c) THAT STRUCTURAL PLATE PIPE ARCHES PROVIDE THE SAME OR LARGER OPENING AREA AS THE PIPE ARCH SPECIFIED ON THE PLANS.
9. FOR INSTALLATION, SEE 206-07-1/1 - CORRUGATED METAL CULVET AND PIPE ARCHES BEDDING AND BACKFILL DETAILS FOR INSTALLATION.
10. ALL TABLES ARE DERIVED FROM "THE HANDBOOK OF STEEL DRAINAGE & HIGHWAY CONSTRUCTION PRODUCTS" BY THE AMERICAN IRON AND STEEL INSTITUTE, 1994 EDITION, AND ARE SUBJECT TO MANUFACTURING TOLERANCES.
11. SEE SECTION 570 PIPE CULVERTS SPECIFICATIONS AND SECTION 571 STRUCTURAL PLATE STRUCTURES SPECIFICATIONS.

DESIGN DATA:

SPECIFICATIONS: AASHTO STANDARD SPECIFICATIONS FOR HIGHWAY AND BRIDGES, CURRENT EDITION.

DEAD LOAD: 120 POUNDS PER CUBIC FOOT

LIVE LOAD: H-20 AND H-25.

SAFETY FACTORS: 3.0 FOR LONGITUDINAL SEAM STRENGTH 2.0 FOR PIPE WALL BUCKLING. SEE AASHTO SPECIFICATION FOR FLEXIBILITY FACTORS AND SEAM STRENGTH.

BACKFILL: SOIL STIFFNESS COEFFICIENT (k) = 0.22

TIMOTHY A. MARRS
NEW MEXICO
14072
REGISTERED PROFESSIONAL ENGINEER
11-18-12

	DATE	BY	DESCRIPTION

REVISIONS (OR CHANGE NOTICES)

NEW MEXICO
DEPARTMENT OF TRANSPORTATION
STANDARD DRAWING

MAXIMUM AND MINIMUM COVER
STEEL-ROUND PIPES
CORRUGATED METAL
AND
STRUCTURAL PLATES

DESIGNED BY: DRAWN BY: SKL CHECKED BY: YML/TM

206-04-2/3 2 of 3

⊕ TABLE 13-A

STRUCTURAL PLATE PIPE, 6" X 2" CORRUGATIONS
BOLTED 18" Rc CORNER RADIUS

DIMENSIONS		MINIMUM REQUIRED THICKNESS (INCHES)	SOIL BEARING CAPACITY, TONS/SQ. FT.			
			2		3	
SPAN FEET-INCHES	RISE FEET-INCHES		H20 MIN. COVER (INCHES)	MAXIMUM COVER (FEET)	MAXIMUM COVER (FEET)	MINIMUM COVER (INCHES) H20 AND H25
6-1	4-7	0.111	12	19		12
6-4	4-9	0.111	12	18		12
6-9	4-11	0.111	12	17		12
7-0	5-1	0.111	12	16		12
7-3	5-3	0.111	12	16		12
7-8	5-5	0.111	12	15		12
7-11	5-7	0.111	12	14		12
8-2	5-9	0.111	18	14		18
8-7	5-11	0.111	18	13		18
8-10	6-1	0.111	18	13		18
9-4	6-3	0.111	18	12		18
9-6	6-5	0.111	18	12		18
9-9	6-7	0.111	18	12		18
10-3	6-9	0.111	18	10		18
10-8	6-11	0.111	18	8		18
10-11	7-1	0.111	18	8		18
11-5	7-3	0.111	18	8	15	18
11-7	7-5	0.111	18	8	15	18
11-10	7-7	0.111	18	7	14	18
12-4	7-9	0.111	24	6	12	24
12-6	7-11	0.111	24	6	12	24
12-8	8-1	0.111	24	6	11	24
12-10	8-4	0.111	24	6	11	24

NOTES:
1. SOIL BEARING CAPACITY REFERS TO SOIL IN THE REGION OF THE PIPE CORNERS. THE REMAINING BACKFILL AROUND THE PIPE-ARCH MUST BE COMPACTED ACCORDING TO DETAIL 206-07-1/1.
2. USE REASONABLE CARE IN HANDLING AND INSTALLATION.

⊕ DENOTES THAT THE FURNISHED TABLE IS STILL BASED ON DESIGN SPECIFICATION OF LFD, NOT LRFD YET.

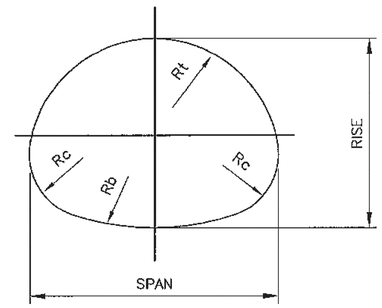

A = ARCH PIPE

GAUGE	THICKNESS (INCHES)
1	0.280
3	0.249
5	0.218
7	0.188
8	0.168
10	0.138

NOTE: GAUGES SHOWN ARE "US STANDARD GAUGE" FOR UNCOATED STEEL SHEETS AND PLATES. THICKNESS SHOWN IN INCHES INCLUDE GALVANIZED COATING.

GENERAL NOTES:

1. WHERE ABRASIVE OR CORROSIVE CONDITIONS EXIST, A HEAVIER WALL THICKNESS OR A PROTECTIVE COATING MAY BE REQUIRED. SEE SECTION 570 FOR CORROSION RESISTANCE NUMBER.
2. THE CONTRACTOR MAY FURNISH A HEAVIER WALL THICKNESS THAN THE MINIMUM SHOWN IN THE TABLES AT NO ADDITIONAL COST TO THE DEPARTMENT.
3. ALL PIPES SHALL BE PROTECTED BY A COVER OF AT LEAST 4 FEET BEFORE PERMITTING HEAVY CONSTRUCTION EQUIPMENT TO PASS OVER THEM DURING CONSTRUCTION.
4. MINIMUM COVERS SHOWN IN THE TABLES SHALL BE MEASURED FROM THE TOP OF THE PIPE TO THE BOTTOM OF THE FLEXIBLE PAVEMENT OR TO THE TOP OF THE RIGID PAVEMENT. FOR MINIMUM COVERS, A MINIMUM 6" CUSHION OF BACKFILL MATERIAL SHALL BE PROVIDED BETWEEN THE BOTTOM OF THE RIGID PAVEMENT AND THE TOP OF THE PIPE.
5. ALL STEEL CORRUGATED METAL AND STRUCTURAL PLATE SHALL CONFORM TO AASHTO SPECIFICATION M-36 AND M-167.
6. FOR PIPE SIZES NOT SHOWN, THE GAUGE WILL BE THAT REQUIRED BY THE MINIMUM AND MAXIMUM COVERS FOR THE NEXT LARGER TABULATED PIPE SIZE.
7. ALL PIPE ARCHES ARE TO BE CAMBERED TO ACCOMMODATE SOIL SETTLEMENT AND CONSOLIDATION. THE AMOUNT OF CAMBER WILL DEPEND ON THE SOIL CHARACTERISTICS, COVER, LENGTH OF CULVERT, SLOPE, AND OTHER FACTORS AND SHALL BE APPROVED BY THE PROJECT MANAGER.
8. CORRUGATED METAL AND STRUCTURAL PLATE PIPE ARCHES WHICH HAVE SLIGHTLY DIFFERENT SPAN AND RISE DIMENSIONS THAN THOSE CALLED FOR ON THE PLANS MAY BE SUBSTITUTED FOR THE SIZES SPECIFIED PROVIDED:
   a) THEY MEET THE MINIMUN AND MAXIMUM FILL HEIGHT REQUIREMENTS WITHOUT CHANGING THE INVERT ELEVATIONS,
   b) ARE FORMED FROM THE SAME SIZE ROUND PIPE AS THE PIPE SPECIFIED ON ON THE PLANS.
   c) THAT STRUCTURAL PLATE PIPE ARCHES PROVIDE THE SAME OR LARGER OPENING AREA AS THE PIPE ARCH SPECIFIED ON THE PLANS.
9. FOR INSTALLATION, SEE 206-07-1/1 – CORRUGATED METAL CULVET AND PIPE ARCHES BEDDING AND BACKFILL DETAILS FOR INSTALLATION.
10. ALL TABLES ARE DERIVED FROM "THE HANDBOOK OF STEEL DRAINAGE & HIGHWAY CONSTRUCTION PRODUCTS" BY THE AMERICAN IRON AND STEEL INSTITUTE, 1994 EDITION, AND ARE SUBJECT TO MANUFACTURING TOLERANCES.
11. SEE SECTION 570 PIPE CULVERTS SPECIFICATIONS AND SECTION 571 STRUCTURAL PLATE STRUCTURES SPECIFICATIONS.

DESIGN DATA:

SPECIFICATIONS: AASHTO STANDARD SPECIFICATIONS FOR HIGHWAY AND BRIDGES, CURRENT EDITION.

DEAD LOAD: 120 POUNDS PER CUBIC FOOT

LIVE LOAD: H-20 AND H-25.

SAFETY FACTORS: 3.0 FOR LONGITUDINAL SEAM STRENGTH 2.0 FOR PIPE WALL BUCKLING. SEE AASHTO SPECIFICATION FOR FLEXIBILITY FACTORS AND SEAM STRENGTH.

BACKFILL: SOIL STIFFNESS COEFFICIENT (k) = 0.22

TIMOTHY A. HARRIS
NEW MEXICO
14072
REGISTERED PROFESSIONAL ENGINEER
4-10-12

	DATE	BY	DESCRIPTION

REVISIONS (OR CHANGE NOTICES)

NEW MEXICO
DEPARTMENT OF TRANSPORTATION
STANDARD DRAWING

MAXIMUM AND MINIMUM COVER
STEEL-ROUND PIPES
CORRUGATED METAL
AND
STRUCTURAL PLATES

DESIGNED BY: DRAWN BY: SKL CHECKED BY: YML/TM

206-04-3/3 3 of 3

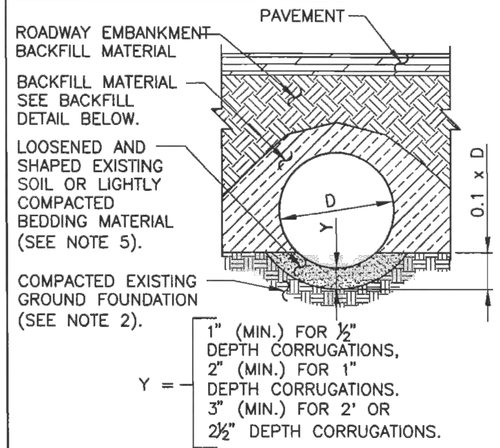

SUITABLE EXISTING GROUND FOUNDATION

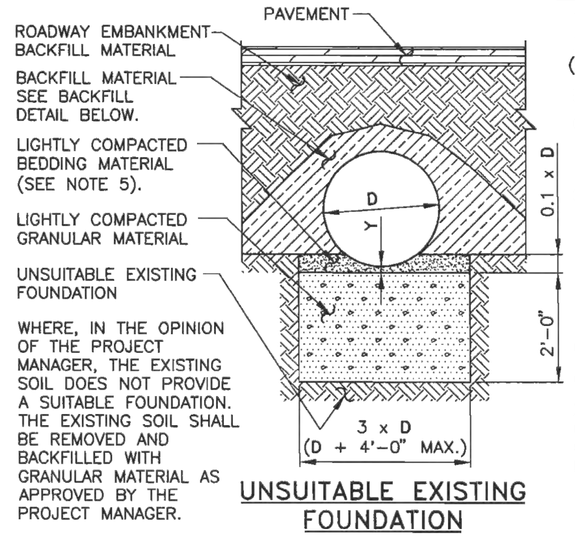

UNSUITABLE EXISTING FOUNDATION

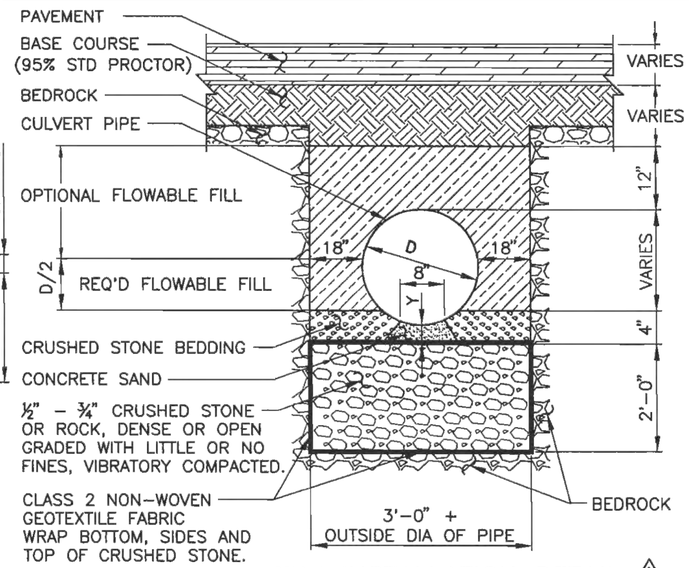

PIPE INSTALLATION DETAIL ⚠1 (FOR BEDROCK EXCAVATION ONLY)

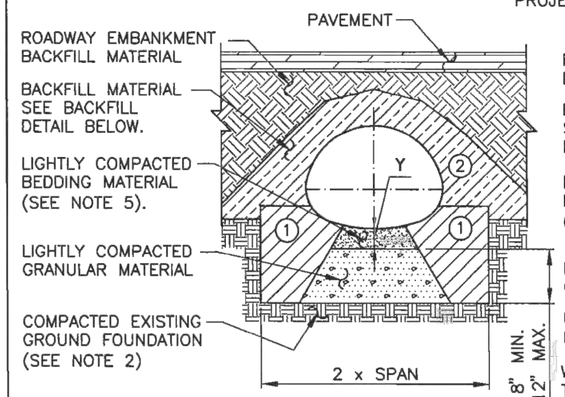

SUITABLE EXISTING GROUND FOUNDATION

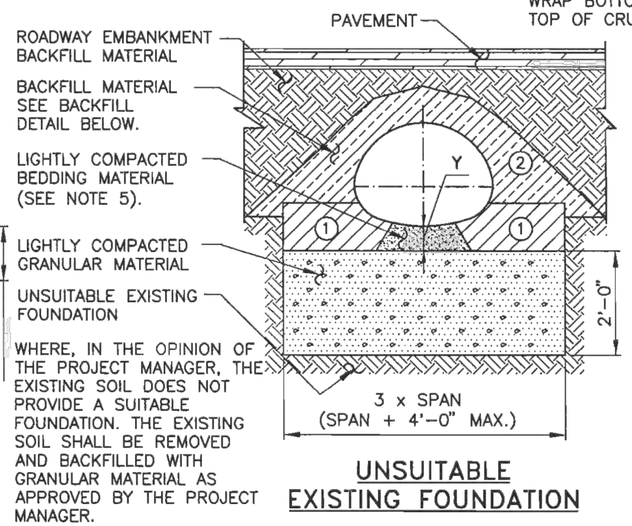

UNSUITABLE EXISTING FOUNDATION

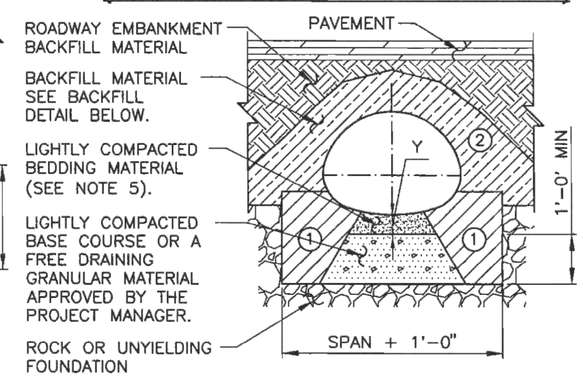

ROCK OR UNYIELDING FOUNDATION

GENERAL NOTES:

1. RIVETED OR WELDED METAL PIPE AND ARCHES SHALL BE PLACED WITH THE INSIDE CIRCUMFERENTIAL LAPS POINTING DOWNSTREAM AND WITH LONGITUDINAL LAPS AT THE SIDE ON QUARTER POINTS, NOT TOP OR BOTTOM. STRUCTURAL PLATE AND PIPE ARCH CULVERTS SHALL BE ERECTED AS SHOWN ON THE ERECTION DIAGRAMS FURNISHED BY THE SUPPLIER.
2. THE EXISTING GROUND FOUNDATION MATERIAL UNDER PIPES SHALL BE BROKEN UP AND COMPACTED TO A MINIMUM DEPTH OF 6". COMPACTION SHALL BE 95% OF MAXIMUM DENSITY BY AASHTO SPECIFICATION T-99.
3. WHERE AN UNSUITABLE MATERIAL (PEAT, MUCK, ETC.) IS ENCOUNTERED AT OR BELOW THE INVERT ELEVATION. THE NECESSARY SUBSURFACE EXPLORATION AND ANALYSIS SHALL BE MADE AND CORRECTIVE TREATMENT SHALL BE AS DIRECTED BY THE PROJECT MANAGER.
4. IMPERVIOUS MATERIAL SHALL BE PLACED LONGITUDINALLY ALONG THE PIPE TO THE ELEVATIONS AND LIMITS SHOWN ON THE "CROSS SECTION OF ROADWAY EMBANKMENT," AND TRANSVERSELY AROUND THE PIPE TO THE DENSITY AND SLOPES SHOWN FOR BACKFILL MATERIAL ON THE "BACKFILL DETAIL." UNLESS OTHERWISE DESIGNATED ON THE PLANS OR DIRECTED BY THE PROJECT MANAGER IMPERVIOUS MATERIAL SHALL CONFORM TO AASHTO SPECIFICATION A-6 OR A-7 SOILS.
5. BEDDING MATERIAL SHALL BE ROUGHLY SHAPED TO FIT BOTTOM OF PIPES AND THEN LIGHTLY COMPACTED. MATERIAL SHALL CONFORM TO SECTION 206 OF THE NEW MEXICO DEPARTMENT OF TRANSPORTATION STANDARD SPECIFICATIONS. FOR PIPE ARCH, THE WIDTH OF THE BEDDING SHALL NOT EXCEED THE WIDTH OF THE BOTTOM ARC.
6. WHERE MULTIPLE LINES OF PIPE OR PIPE ARCHES GREATER THAN 4'-0" IN DIAMETER OR SPAN ARE USED, THEY SHALL BE SPACED SO THAT ADJACENT SIDES OF THE PIPE SHALL BE AT LEAST ONE-HALF DIAMETER OR 3'-0" APART, WHICHEVER IS LESS, TO PERMIT ADEQUATE COMPACTION OF BACKFILL MATERIAL. FOR DIAMETERS 4'-0" AND LESS, THE MINIMUM SPACING SHALL BE NOT LESS THAN 2'-0". SEE 570-02-1/2 OR 570-02-2/2 FOR FLARED END SECTIONS.
7. A CONTINUOUS CONCRETE CRADLE SHALL BE USED ONLY WHEN CALLED FOR ON THE PLANS.
8. BACKFILL MATERIAL SHALL CONFORM TO SECTION 206 OF THE NEW MEXICO DEPARTMENT OF TRANSPORTATION STANDARD SPECIFICATIONS. SPECIAL CARE SHALL BE TAKEN WHEN COMPACTING BACKFILL AT THE HUNCHES AND SIDES OF PIPES.
9. REFER TO 206-03-1/1 THRU 206-06-1/1 FOR TABLE OF MINIMUM AND MAXIMUM COVER AND CORRESPONDING GAUGE.

KEY	SYMBOL	DESCRIPTION
1		100% COMPACTION
2		90% COMPACTION

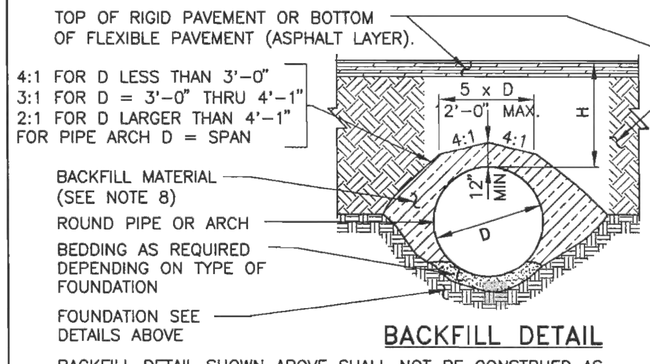

BACKFILL DETAIL

BACKFILL DETAIL SHOWN ABOVE SHALL NOT BE CONSTRUED AS RELIEVING THE CONTRACTOR OF HIS OBLIGATIONS REGARDING DAMAGE TO THE CULVERT PIPE. H = MINIMUM OR MAXIMUM COVER.

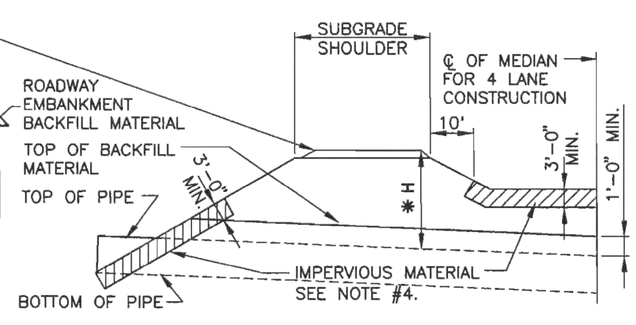

CROSS SECTION OF ROADWAY EMBANKMENT

✱ LOCATION OF MAXIMUM OR MINIMUM COVER DEPENDS ON PIPE SLOPE AND ROADWAY X-SECTION.

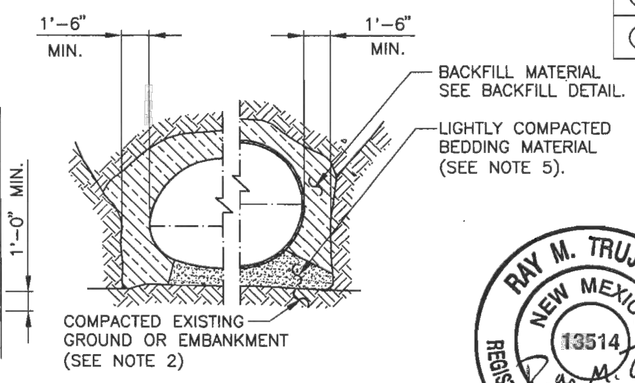

PIPE ARCHES ROUND PIPE

TRENCH CONDITION

RAY M. TRUJILLO
NEW MEXICO
13514
REGISTERED PROFESSIONAL ENGINEER
8/29/08

NO.	DATE	REV.BY	DESCRIPTION
⚠1	2/14/07	YML	REVISIONS TO DEDROCK DETAIL

REVISIONS (OR CHANGE NOTICES)

NEW MEXICO
DEPARTMENT OF TRANSPORTATION
STANDARD DRAWING

CORRUGATED METAL CULVERT AND PIPE ARCHES BEDDING AND BACKFILL DETAILS

DESIGNED BY ____ DRAWN BY SKL CHECKED BY TM/YML

206-07-1/1 36 OF 49 1 OF 1

GENERAL NOTES

1. WORKMANSHIP AND MATERIALS SHALL CONFORM TO THE NEW MEXICO DEPARTMENT OF TRANSPORTATION'S STANDARD SPECIFICATIONS FOR HIGHWAY AND BRIDGE CONSTRUCTION CURRENT EDITION.
2. SAFETY GRATES WILL NOT BE REQUIRED FOR OPENINGS EQUAL TO OR LESS THAN 30 INCHES IN THE DIRECTION OF TRAVEL. FOR BLANKETS WITHOUT SAFETY GRATES, SEE STANDARD DRAWING 511-11-1/2 THROUGH 511-11-2/2.
3. CONCRETE SHALL CONFORM TO SECTION 511 - CONCRETE STRUCTURES. CONCRETE SHALL BE CLASS A. APPLY PENETRATING WATER REPELLENT PER SECTION 532.
4. REINFORCING STEEL (REBAR) SHALL CONFORM TO SECTION 540 - STEEL REINFORCEMENT. REINFORCE CONCRETE BLANKETS WITH ONE (1) LAYER OF WELDED WIRE FABRIC. PLACE FABRIC IN THE CENTER OF THE CONCRETE BLANKET AND EXTEND INTO CUT-OFF WALL FULL DEPTH. FOR TYPICAL CONCRETE BLANKETS, REINFORCING BARS, WELDED WIRE MESH, AND ANCHORS SHALL BE CONSIDERED INCIDENTAL TO THE CONCRETE BID ITEM.
5. INSTALL SWELLABLE HYDROPHILIC WATERSTOP AT THE PIPE TO BLANKET INTERFACE IN ACCORDANCE WITH SECTION 511.
6. NO JOINT SHALL BE ALLOWED IN THE BEVELED SECTION OF PIPE.
7. FOR A, B, C, AND SL DIMENSIONS AND STEEL QUANTITY TABULATIONS SEE TABLES ON STANDARD DRAWINGS 511-16-1/1 THROUGH 511-19-1/1 - CONCRETE BLANKET SAFETY GRATE DETAILS.
8. FOR D, ES, AND Φ SEE ROADWAY DRAWINGS. WHEN EMBANKMENT SLOPE (ES) AT A STRUCTURE DIFFERS FROM THE ORDINARY ROADWAY EMBANKMENT SLOPE, THE CONTRACTOR WILL BE REQUIRED TO TRANSITION SLOPE AS SHOWN ON STANDARD DRAWING 511-13-3/3.

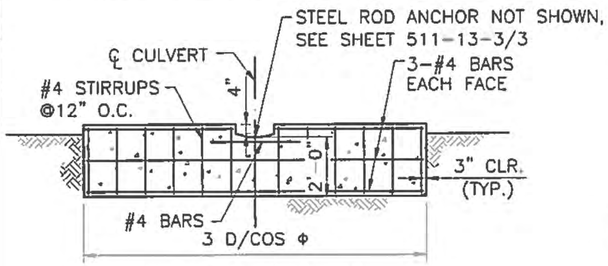

SECTION C-C

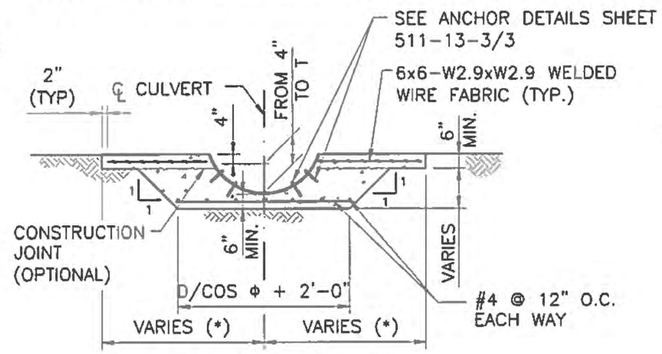

SECTION D-D

(*) SEE PLAN VIEW ON SHEET NO. 511-13-2/3 FOR NORMAL INSTALLATIONS AND SKEWED INSTALLATIONS

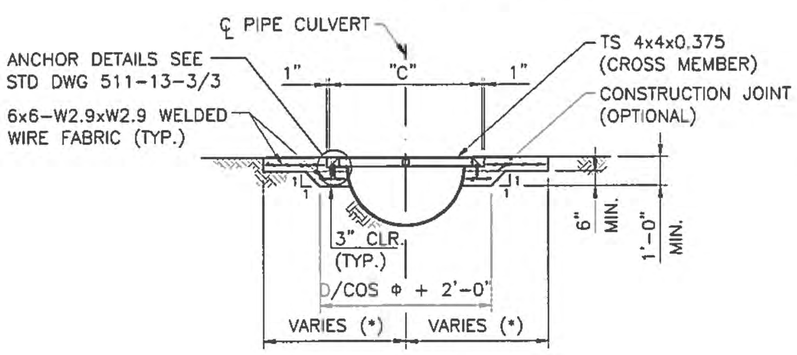

SECTION E-E

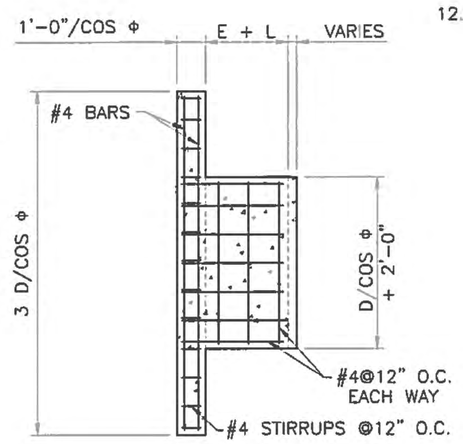

SECTION F-F

9. FOR T, L, AND E DIMENSIONS SEE TABLES BELOW:

D (IN.)	T (IN.)	L 0°	5°	10°	15°	20°	25°	30°	35°
30	6	1'-0"	1'-2"	1'-4"	1'-6"	1'-6"	1'-9"	1'-11"	2'-2"
36	6	1'-0"	1'-2"	1'-4"	1'-6"	1'-6"	1'-9"	1'-11"	2'-2"
42	6	1'-0"	1'-2"	1'-4"	1'-6"	1'-6"	1'-9"	1'-11"	2'-2"
48	8	1'-0"	1'-2"	1'-4"	1'-6"	1'-8"	1'-11"	2'-4"	2'-5"
54	8	1'-0"	1'-2"	1'-4"	1'-6"	1'-8"	1'-11"	2'-4"	2'-5"
60	8	1'-0"	1'-2"	1'-4"	1'-6"	1'-8"	1'-11"	2'-4"	2'-5"

Φ (°)	E T = 6" ES=4:1	E T = 6" ES=6:1	E T = 8" ES=4:1	E T = 8" ES=6:1	Φ (°)	E T = 6" ES=4:1	E T = 6" ES=6:1	E T = 8" ES=4:1	E T = 8" ES=6:1
0	1'-6"	2'-6"	2'-2"	3'-6"	20	1'-8"	2'-9"	2'-5"	3'-10"
5	1'-7"	2'-7"	2'-3"	3'-7"	25	1'-9"	2'-10"	2'-6"	3'-11"
10	1'-7"	2'-7"	2'-3"	3'-7"	30	1'-10"	3'-0"	2'-7"	4'-2"
15	1'-7"	2'-8"	2'-4"	3'-8"	35	2'-0"	3'-2"	2'-10"	4'-5"

10. FOR VOLUME OF CONCRETE FOR SINGLE PIPE CONCRETE BLANKETS WITH SAFETY GRATE, SEE TABLE BELOW:

CONCRETE QUANTITIES (CU.YDS.)																
D	0° ES:1		5° ES:1		10° ES:1		15° ES:1		20° ES:1		25° ES:1		30° ES:1		35° ES:1	
(IN.)	4	6	4	6	4	6	4	6	4	6	4	6	4	6	4	6
30	2.8	3.7	2.9	3.8	3.0	3.9	3.1	4.1	3.4	4.3	3.7	4.7	4.1	5.2	4.6	5.9
36	3.4	4.5	3.5	4.6	3.6	4.7	3.8	5.0	4.1	5.3	4.5	5.8	5.0	6.5	5.7	7.4
42	4.0	5.3	4.1	5.4	4.3	5.6	4.6	5.9	4.9	6.4	5.4	7.0	6.1	7.8	6.9	8.9
48	5.1	6.7	5.2	6.8	5.4	7.1	5.8	7.5	6.2	8.1	6.9	8.9	7.7	10.0	8.8	11.5
54	5.8	7.6	5.9	7.8	6.2	8.1	6.6	8.6	7.2	9.3	7.9	10.3	8.9	11.6	10.3	13.3
60	6.5	8.6	6.7	8.8	7.0	9.2	7.5	9.7	8.1	10.6	9.0	11.7	10.2	13.2	11.8	15.3

11. FOR VOLUME OF CONCRETE FOR DOUBLE PIPE CONCRETE BLANKETS WITH SAFETY GRATE, SEE TABLE BELOW:

CONCRETE QUANTITIES (CU.YDS.)																
D	0° ES:1		5° ES:1		10° ES:1		15° ES:1		20° ES:1		25° ES:1		30° ES:1		35° ES:1	
(IN.)	4	6	4	6	4	6	4	6	4	6	4	6	4	6	4	6
30	5.2	6.8	5.3	6.9	5.5	7.1	5.8	7.5	6.2	8.0	6.8	8.8	7.5	9.8	8.5	11.1
36	6.0	7.8	6.1	8.0	6.3	8.3	6.7	8.7	7.2	9.4	7.9	10.3	8.9	11.5	10.1	13.2
42	6.7	8.8	6.9	9.0	7.2	9.3	7.6	9.9	8.3	10.7	9.1	11.8	10.3	13.3	11.8	15.3
48	8.1	10.7	8.3	10.9	8.7	11.4	9.2	12.1	10.0	13.1	11.1	14.5	12.5	16.3	14.5	18.9
54	8.9	11.7	9.1	12.0	9.6	12.5	10.2	13.3	11.2	14.5	12.4	16.1	14.1	18.3	16.4	21.3
60	9.6	12.7	9.9	13.0	10.4	13.6	11.2	14.5	12.3	15.9	13.7	17.8	15.7	20.3	18.3	23.8

12. TO DETERMINE THE VOLUME OF CONCRETE (CU.YDS.) FOR INSTALLATION OF 3 OR MORE PIPES, USE THE FOLLOWING FORMULA:

$$VOL._{(>2)} = V_2 + (V_2 - V_1) \times (N - 2)$$

WHERE:

V_1 = VOL. CONCRETE SINGLE PIPE INSTALLATION (CU.YDS.)
V_2 = VOL. CONCRETE DOUBLE PIPE INSTALLATION (CU.YDS.)

(SEE STANDARD DRAWING 511-13-2/3 FOR DIMENSIONS)
N = NUMBER OF PIPES WHICH MUST BE GREATER THAN 2

THIS STANDARD DRAWING IS FOR USE ON NMDOT PROJECTS. OTHERS WHO USE THE NMDOT STANDARD DRAWINGS DO SO AT THEIR OWN RISK. STANDARD DRAWINGS THAT ARE APPLICABLE TO A SPECIFIC PROJECT WILL BE IDENTIFIED ON THE PROJECT PLANS BUT WILL NOT BE PHYSICALLY INCLUDED IN THOSE PLANS. THE DESIGNER WHO SPECIFIES A STANDARD DRAWING ACCEPTS THE RESPONSIBILITY OF DETERMINING THEIR APPLICABILITY.

NO.	DATE	BY	DESCRIPTION

REVISIONS (OR CHANGE NOTICES)

KATHY CROWELL NEW MEXICO 22934 PROFESSIONAL ENGINEER

NEW MEXICO
DEPARTMENT OF TRANSPORTATION
STANDARD DRAWING

SINGLE METAL PIPE
CONCRETE BLANKET
WITH SAFETY GRATE
(NORMAL & 5° - 35° SKEW)

511-13-1/3 1 of 3

DESIGNED BY: FDO DRAWN BY: SKL/BEE CHECKED BY: KHC

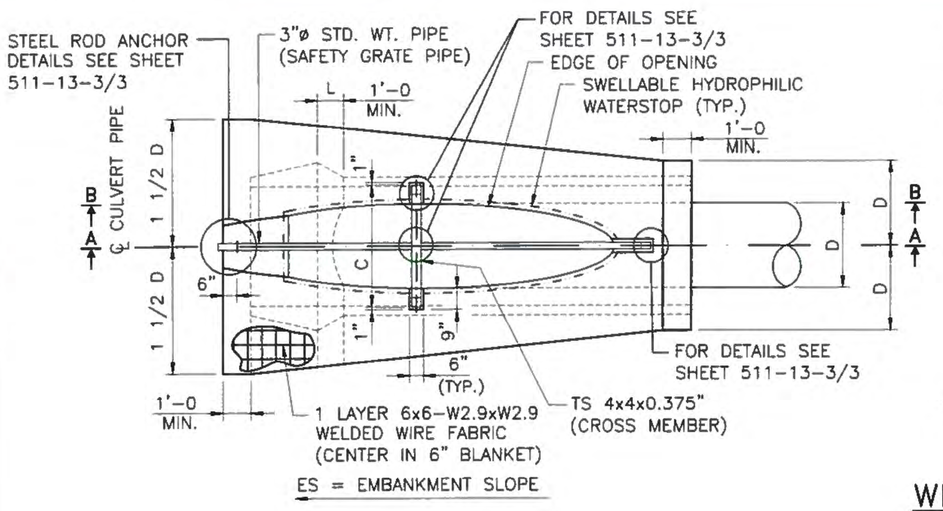

PLAN AT SINGLE PIPE (NORMAL INSTALLATIONS)

(**) X = ES (IN FEET), SO AS TO PRODUCE A 1'-0" MIN. COVER OVER THE CULVERT.

(***) LOCATE POINT H BY MEASURING THE DISTANCE OF THE SPAN LENGTH (SL) PLUS DIMENSION B + 1" FROM THE LOWER WORK POINT (WP).

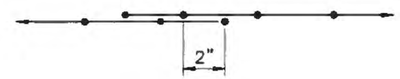

WELDED WIRE FABRIC LAP SPLICE DETAIL

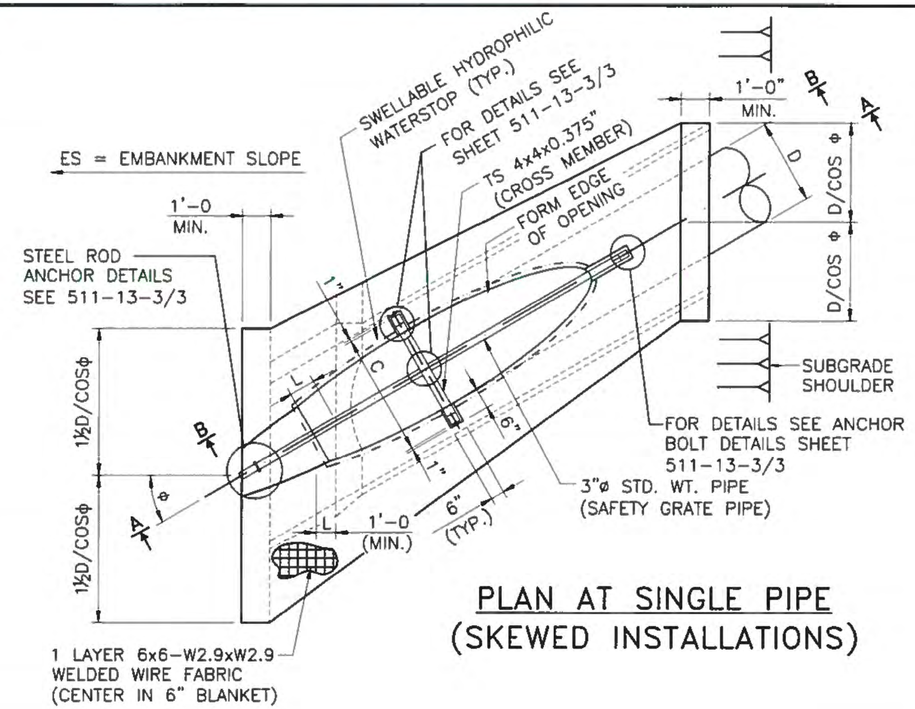

PLAN AT SINGLE PIPE (SKEWED INSTALLATIONS)

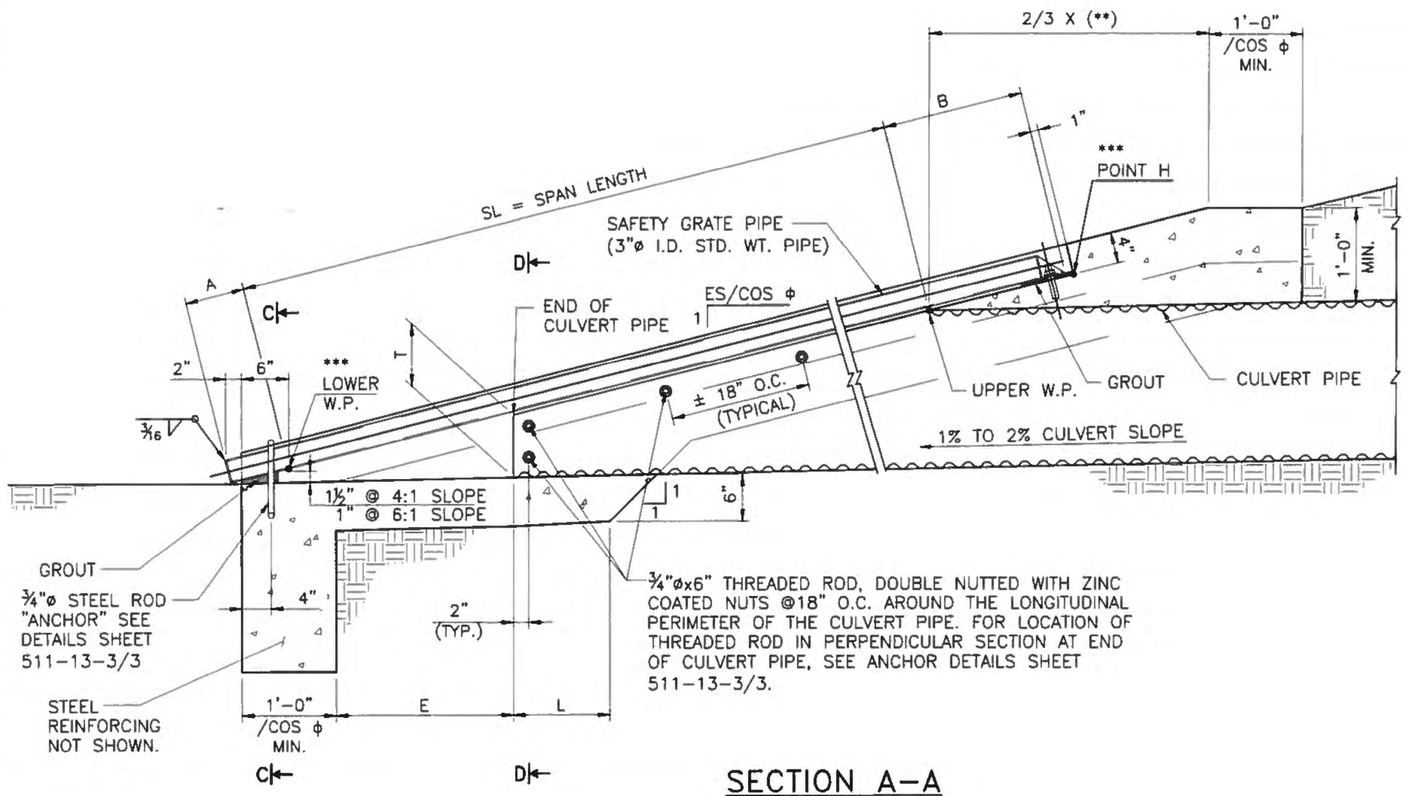

SECTION A-A

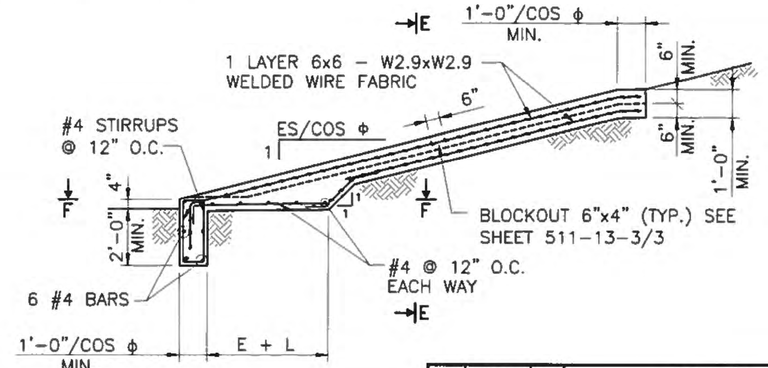

SECTION B-B

THIS STANDARD DRAWING IS FOR USE ON NMDOT PROJECTS. OTHERS WHO USE THE NMDOT STANDARD DRAWINGS DO SO AT THEIR OWN RISK. STANDARD DRAWINGS THAT ARE APPLICABLE TO A SPECIFIC PROJECT WILL BE IDENTIFIED ON THE PROJECT PLANS BUT WILL NOT BE PHYSICALLY INCLUDED IN THOSE PLANS. THE DESIGNER WHO SPECIFIES A STANDARD DRAWING ACCEPTS THE RESPONSIBILITY OF DETERMINING THEIR APPLICABILITY.

KATHY CROWELL NEW MEXICO 22934 PROFESSIONAL ENGINEER

NO.	DATE	BY	DESCRIPTION

REVISIONS (OR CHANGE NOTICES)

NEW MEXICO
DEPARTMENT OF TRANSPORTATION
STANDARD DRAWING

SINGLE METAL PIPE
CONCRETE BLANKET
WITH SAFETY GRATE
(NORMAL & 5° - 35° SKEW)

511-13-2/3

2 of 3

DESIGNED BY: FDQ DRAWN BY: SKL/BEE CHECKED BY: KHC

ANCHOR NOTES:

1. ALL RODS, NUTS, AND BOLTS SHALL BE ZINC COATED.
2. THE CORRUGATED METAL PIPE (CMP) SHALL BE ANCHORED TO THE BLANKET WITH DOUBLE-NUTTED THREADED ROD. FOR SPACING AND LOCATION OF THESE ANCHORS, SEE "ANCHOR LOCATION TABLE."
3. ALL THREAD ROD ANCHORS AT THE SAFETY GRATE ELEMENTS SHALL BE PER SECTION 523 – CEMENTITIOUS-GROUTED DOWELS AND ANCHORS.
4. THE STEEL ROD ANCHORS SHALL BE PER SECTION 541 – STEEL STRUCTURES AND SHALL BE EMBEDDED IN THE CONCRETE AT THE TIME OF PLACEMENT.
5. AFTER INSTALLATION OF SAFETY PIPE THROUGH STEEL ANCHOR ROD LOOP, PLACE GROUT TO PROVIDE BEARING SURFACE FOR SAFETY PIPE. GROUT TO BE PER SECTION 521.
6. TOP OF CONCRETE BLANKET AND TOP OF SAFETY GRATE MUST LIE IN THE SAME PLANE WITHIN ±½".
7. FURNISH AND INSTALL ALL ANCHORS SHALL BE INCIDENTAL TO THE CONCRETE PAY ITEM, NO ADDITIONAL PAYMENT WILL BE MADE.

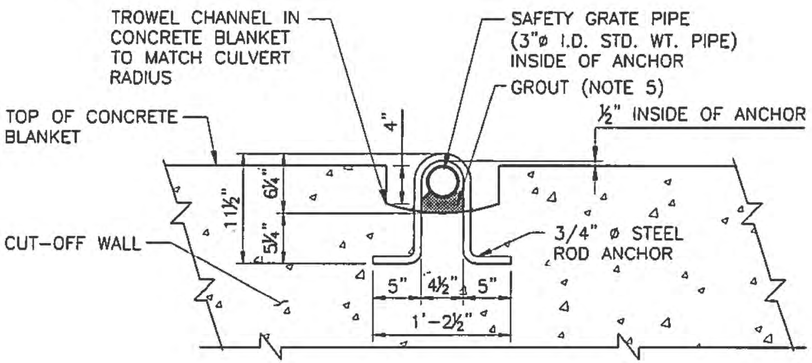

SECTION C-C
(STEEL ROD ANCHOR DETAILS AT OUTLET)

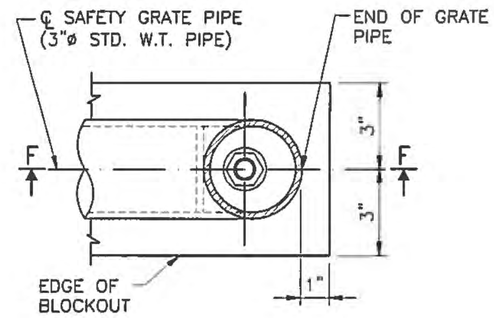

ANCHOR BOLT DETAIL @ SAFETY GRATE PIPE PLAN

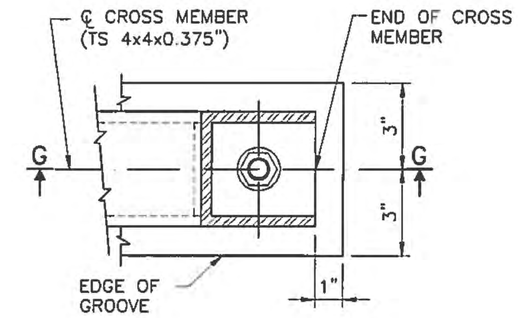

ANCHOR BOLT DETAIL @ CROSS MEMBER PLAN

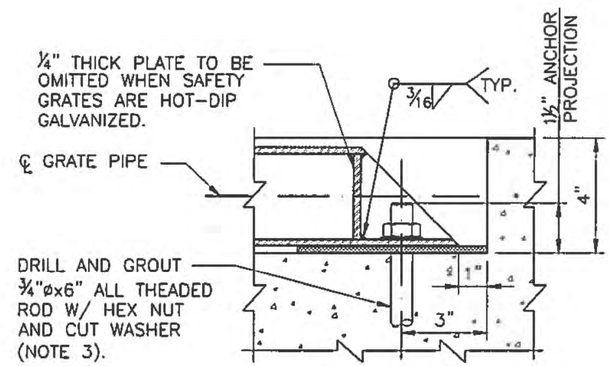

SECTION F-F

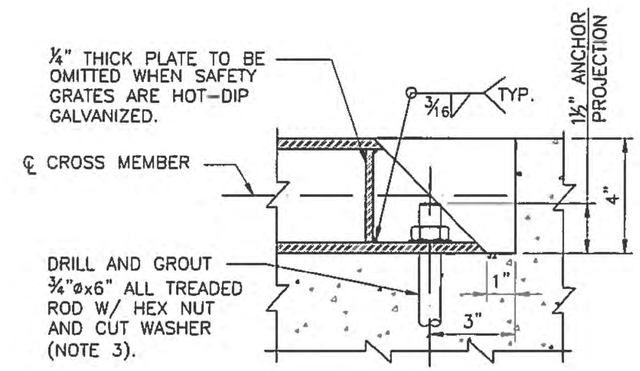

SECTION G-G

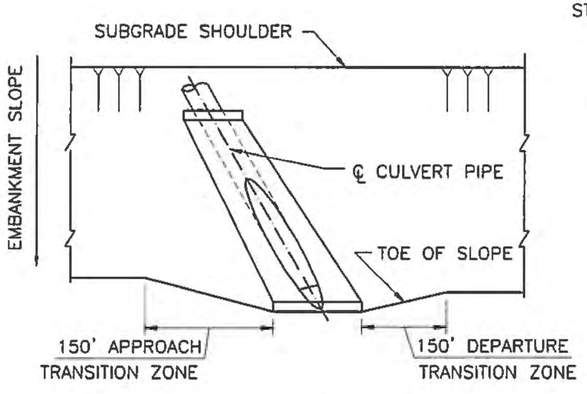

SLOPE TRANSITION DETAIL

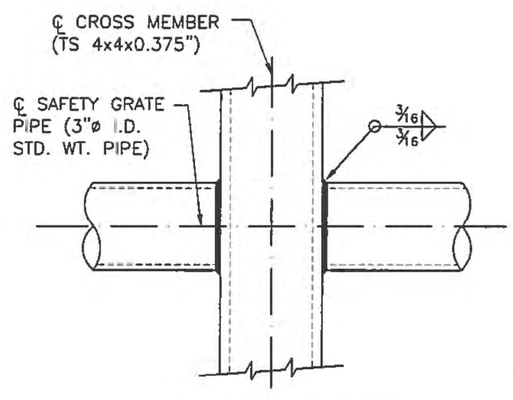

SAFETY GRATE PIPE AND CROSS MEMBER CONNECTION

LOCATION OF ANCHORS NEAR END OF CULVERT PIPE		
D (IN.)	a (IN.)	b (IN.)
24	2	3
30-42	3	8
48-60	4	12

CMP ANCHOR LOCATION TABLE
(D IS THE DIAMETER OF CULVERT PIPE)

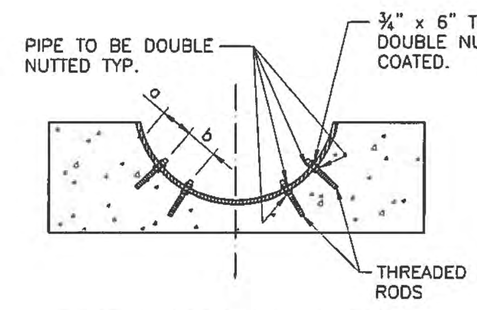

CMP ANCHOR DETAIL

KATHY CROWELL
NEW MEXICO
22934
PROFESSIONAL ENGINEER
6/1/18

THIS STANDARD DRAWING IS FOR USE ON NMDOT PROJECTS. OTHERS WHO USE THE NMDOT STANDARD DRAWINGS DO SO AT THEIR OWN RISK. STANDARD DRAWINGS THAT ARE APPLICABLE TO A SPECIFIC PROJECT WILL BE IDENTIFIED ON THE PROJECT PLANS BUT WILL NOT BE PHYSICALLY INCLUDED IN THOSE PLANS. THE DESIGNER WHO SPECIFIES A STANDARD DRAWING ACCEPTS THE RESPONSIBILITY OF DETERMINING THEIR APPLICABILITY.

NO.	DATE	BY	DESCRIPTION

REVISIONS (OR CHANGE NOTICES)

NEW MEXICO
DEPARTMENT OF TRANSPORTATION
STANDARD DRAWING

TYPICAL
CONCRETE BLANKET
DETAILS

511-13-3/3 3 of 3

DESIGNED BY: FDQ DRAWN BY: SKL/BEECHECKED BY: KHC

GENERAL NOTES:

1. WORKMANSHIP AND MATERIALS SHALL CONFORM TO THE NEW MEXICO DEPARTMENT OF TRANSPORTATION'S STANDARD SPECIFICATIONS FOR HIGHWAY AND BRIDGE CONSTRUCTION CURRENT EDITION.

2. SAFETY GRATES WILL NOT BE REQUIRED FOR OPENINGS EQUAL TO OR LESS THAN 30 INCHES IN THE DIRECTION OF TRAVEL. FOR BLANKETS WITHOUT SAFETY GRATES, SEE STANDARD DRAWING 511-12A-1/2 THROUGH 511-12A-2/2.

3. CONCRETE SHALL CONFORM TO SECTION 511 – CONCRETE STRUCTURES. CONCRETE SHALL BE CLASS A. APPLY PENETRATING WATER REPELLENT PER SECTION 532.

4. REINFORCING STEEL (REBAR) SHALL CONFORM TO SECTION 540 – STEEL REINFORCEMENT. REINFORCE CONCRETE BLANKETS WITH ONE (1) LAYER OF WELDED WIRE FABRIC. PLACE FABRIC IN THE CENTER OF THE CONCRETE BLANKET AND EXTEND INTO CUT-OFF WALL FULL DEPTH. FOR TYPICAL CONCRETE BLANKETS, REINFORCING BARS, WELDED WIRE MESH, AND ANCHORS SHALL BE CONSIDERED INCIDENTAL TO THE CONCRETE BID ITEM.

5. INSTALL SWELLABLE HYDROPHILIC WATERSTOP AT THE PIPE TO BLANKET INTERFACE IN ACCORDANCE WITH SECTION 511.

6. PIPE SPACING FOR NEW NORMAL INSTALLATIONS, USE D + 3'-0". FOR EXTENSIONS OR MODIFICATIONS TO EXISTING CULVERT INSTALLATIONS MATCH EXISTING CULVERT PIPE SPACING.

7. PIPE SPACING FOR NEW SKEWED CULVERT INSTALLATIONS USE (D + 3'-0")/COS Φ. FOR EXTENSIONS OR MODIFICATIONS TO EXISTING CULVERT INSTALLATIONS, MATCH EXISTING CULVERT PIPE SPACING.

8. NO JOINT SHALL BE ALLOWED IN THE BEVELED SECTION OF PIPE.

9. FOR A, B, C, AND SL DIMENSIONS AND STEEL QUANTITY TABULATIONS SEE TABLES ON STANDARD DRAWINGS 511-16-1/1 THROUGH 511-19-1/1 – CONCRETE BLANKET SAFETY GRATE DETAILS.

10. FOR D, ES, AND Φ SEE ROADWAY DRAWINGS. WHEN EMBANKMENT SLOPE (ES) AT A STRUCTURE DIFFERS FROM THE ORDINARY ROADWAY EMBANKMENT SLOPE, THE CONTRACTOR WILL BE REQUIRED TO TRANSITION SLOPE AS SHOWN ON STANDARD DRAWING 511-14-4/4.

11. FOR T, L, AND E DIMENSIONS SEE TABLES BELOW:

D (IN.)	T (IN.)	L 0°	L 5°	L 10°	L 15°	L 20°	L 25°	L 30°	L 35°
30	6	1'-0"	1'-2"	1'-4"	1'-6"	1'-6"	1'-9"	1'-11"	2'-2"
36	6	1'-0"	1'-2"	1'-4"	1'-6"	1'-6"	1'-9"	1'-11"	2'-2"
42	6	1'-0"	1'-2"	1'-4"	1'-6"	1'-6"	1'-9"	1'-11"	2'-2"
48	8	1'-0"	1'-2"	1'-4"	1'-6"	1'-8"	1'-11"	2'-4"	2'-5"
54	8	1'-0"	1'-2"	1'-4"	1'-6"	1'-8"	1'-11"	2'-4"	2'-5"
60	8	1'-0"	1'-2"	1'-4"	1'-6"	1'-8"	1'-11"	2'-4"	2'-5"

Φ (°)	E T = 6" ES=4:1	E T = 6" ES=6:1	E T = 8" ES=4:1	E T = 8" ES=6:1
0	1'-6"	2'-6"	2'-2"	3'-6"
5	1'-7"	2'-7"	2'-3"	3'-7"
10	1'-7"	2'-7"	2'-3"	3'-7"
15	1'-7"	2'-8"	2'-4"	3'-8"

Φ (°)	E T = 6" ES=4:1	E T = 6" ES=6:1	E T = 8" ES=4:1	E T = 8" ES=6:1
20	1'-8"	2'-9"	2'-5"	3'-10"
25	1'-9"	2'-10"	2'-6"	3'-11"
30	1'-10"	3'-0"	2'-7"	4'-2"
35	2'-0"	3'-2"	2'-10"	4'-5"

12. FOR VOLUME OF CONCRETE FOR SINGLE PIPE CONCRETE BLANKETS WITH SAFETY GRATE, SEE TABLE BELOW:

D (IN.)	CONCRETE QUANTITIES (CU.YDS.) 0° ES:1 4	0° ES:1 6	5° ES:1 4	5° ES:1 6	10° ES:1 4	10° ES:1 6	15° ES:1 4	15° ES:1 6	20° ES:1 4	20° ES:1 6	25° ES:1 4	25° ES:1 6	30° ES:1 4	30° ES:1 6	35° ES:1 4	35° ES:1 6
30	2.8	3.7	2.9	3.8	3.0	3.9	3.1	4.1	3.4	4.3	3.7	4.7	4.1	5.2	4.6	5.9
36	3.4	4.5	3.5	4.6	3.6	4.7	3.8	5.0	4.1	5.3	4.5	5.8	5.0	6.5	5.7	7.4
42	4.0	5.3	4.1	5.4	4.3	5.6	4.6	5.9	4.9	6.4	5.4	7.0	6.1	7.8	6.9	8.9
48	5.1	6.7	5.2	6.8	5.4	7.1	5.8	7.5	6.2	8.1	6.9	8.9	7.7	10.0	8.8	11.5
54	5.8	7.6	5.9	7.8	6.2	8.1	6.6	8.6	7.2	9.3	7.9	10.3	8.9	11.6	10.3	13.3
60	6.5	8.6	6.7	8.8	7.0	9.2	7.5	9.7	8.1	10.6	9.0	11.7	10.2	13.2	11.8	15.3

13. FOR VOLUME OF CONCRETE FOR DOUBLE PIPE CONCRETE BLANKETS WITH SAFETY GRATE, SEE TABLE BELOW:

D (IN.)	CONCRETE QUANTITIES (CU.YDS.) 0° ES:1 4	0° ES:1 6	5° ES:1 4	5° ES:1 6	10° ES:1 4	10° ES:1 6	15° ES:1 4	15° ES:1 6	20° ES:1 4	20° ES:1 6	25° ES:1 4	25° ES:1 6	30° ES:1 4	30° ES:1 6	35° ES:1 4	35° ES:1 6
30	5.2	6.8	5.3	6.9	5.5	7.1	5.8	7.5	6.2	8.0	6.8	8.8	7.5	9.8	8.5	11.1
36	6.0	7.8	6.1	8.0	6.3	8.3	6.7	8.7	7.2	9.4	7.9	10.3	8.9	11.5	10.1	13.2
42	6.7	8.8	6.9	9.0	7.2	9.3	7.6	9.9	8.3	10.7	9.1	11.8	10.3	13.3	11.8	15.3
48	8.1	10.7	8.3	10.9	8.7	11.4	9.2	12.1	10.0	13.1	11.1	14.5	12.5	16.3	14.5	18.9
54	8.9	11.7	9.1	12.0	9.6	12.5	10.2	13.3	11.2	14.5	12.4	16.1	14.1	18.3	16.4	21.3
60	9.6	12.7	9.9	13.0	10.4	13.6	11.2	14.5	12.3	15.9	13.7	17.8	15.7	20.3	18.3	23.8

14. TO DETERMINE THE VOLUME OF CONCRETE (CU.YDS.) FOR INSTALLATION OF 3 OR MORE PIPES, USE THE FOLLOWING FORMULA:

$$\text{VOL.}_{(>2)} = V_2 + (V_2 - V_1) \times (N - 2)$$

WHERE:

V_1 = VOL. CONCRETE SINGLE PIPE INSTALLATION (CU.YDS.)
V_2 = VOL. CONCRETE DOUBLE PIPE INSTALLATION (CU.YDS.)

(SEE STANDARD DRAWING 511-14-3/4 FOR DIMENSIONS)
N = NUMBER OF PIPES WHICH MUST BE GREATER THAN 2

THIS STANDARD DRAWING IS FOR USE ON NMDOT PROJECTS. OTHERS WHO USE THE NMDOT STANDARD DRAWINGS DO SO AT THEIR OWN RISK. STANDARD DRAWINGS THAT ARE APPLICABLE TO A SPECIFIC PROJECT WILL BE IDENTIFIED ON THE PROJECT PLANS BUT WILL NOT BE PHYSICALLY INCLUDED IN THOSE PLANS. THE DESIGNER WHO SPECIFIES A STANDARD DRAWING ACCEPTS THE RESPONSIBILITY OF DETERMINING THEIR APPLICABILITY.

NO.	DATE	BY	DESCRIPTION

REVISIONS (OR CHANGE NOTICES)

KATHY CROWELL NEW MEXICO 22934 PROFESSIONAL ENGINEER

NEW MEXICO
DEPARTMENT OF TRANSPORTATION
STANDARD DRAWING

MULTIPLE METAL PIPE
CONCRETE BLANKET
WITH SAFETY GRATE
(NORMAL & 5° TO 35°)

DESIGNED BY: FDQ DRAWN BY: SKL/BEE CHECKED BY: KHC

511-14-1/4 40 OF 49 1 of 4

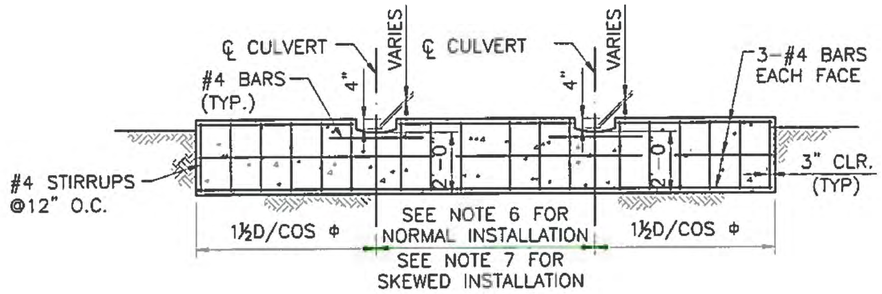

SECTION C-C

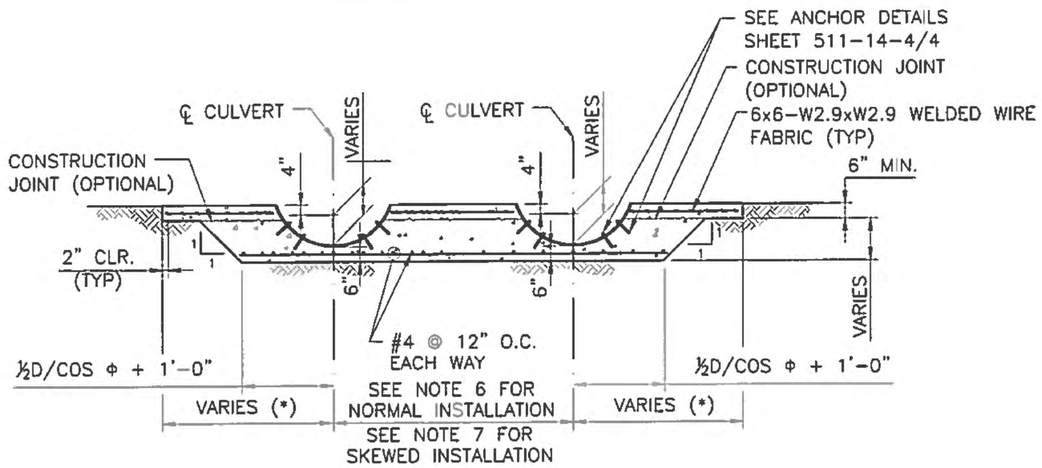

SECTION D-D

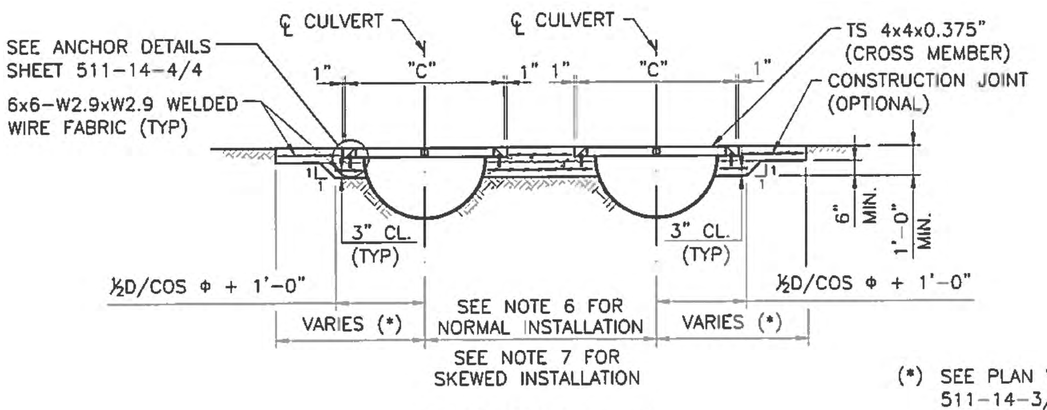

SECTION E-E

(*) SEE PLAN VIEW ON SHEET 511-14-3/4 FOR NORMAL AND SKEWED INSTALLATIONS

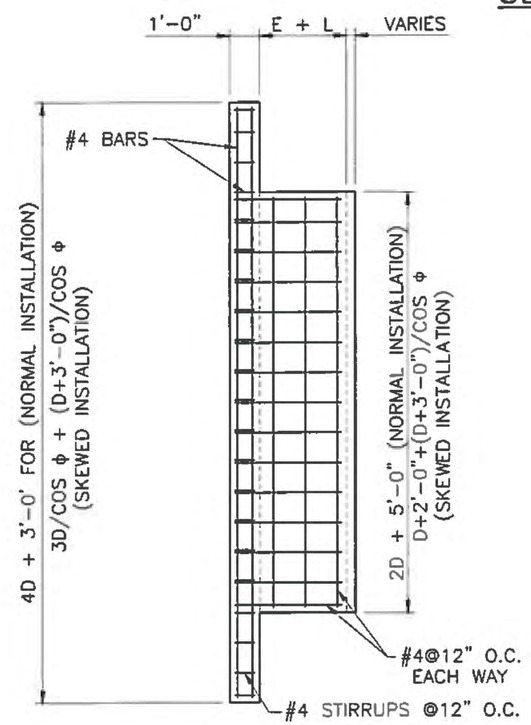

SECTION F-F

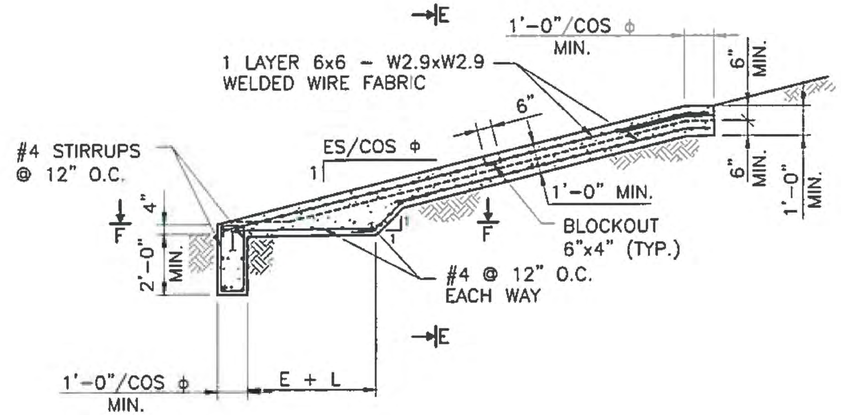

SECTION B-B

THIS STANDARD DRAWING IS FOR USE ON NMDOT PROJECTS. OTHERS WHO USE THE NMDOT STANDARD DRAWINGS DO SO AT THEIR OWN RISK. STANDARD DRAWINGS THAT ARE APPLICABLE TO A SPECIFIC PROJECT WILL BE IDENTIFIED ON THE PROJECT PLANS BUT WILL NOT BE PHYSICALLY INCLUDED IN THOSE PLANS. THE DESIGNER WHO SPECIFIES A STANDARD DRAWING ACCEPTS THE RESPONSIBILITY OF DETERMINING THEIR APPLICABILITY.

NO.	DATE	BY	DESCRIPTION

REVISIONS (OR CHANGE NOTICES)

NEW MEXICO
DEPARTMENT OF TRANSPORTATION
STANDARD DRAWING

MULTIPLE METAL PIPE
CONCRETE BLANKET
WITH SAFETY GRATE
(NORMAL & 5° TO 35°)

KATHY CROWELL
NEW MEXICO
22934
6/14/18
PROFESSIONAL ENGINEER

511-14-2/4 41 OF 49 2 of 4

DESIGNED BY: FDO DRAWN BY: SKL/BEE CHECKED BY: KHC

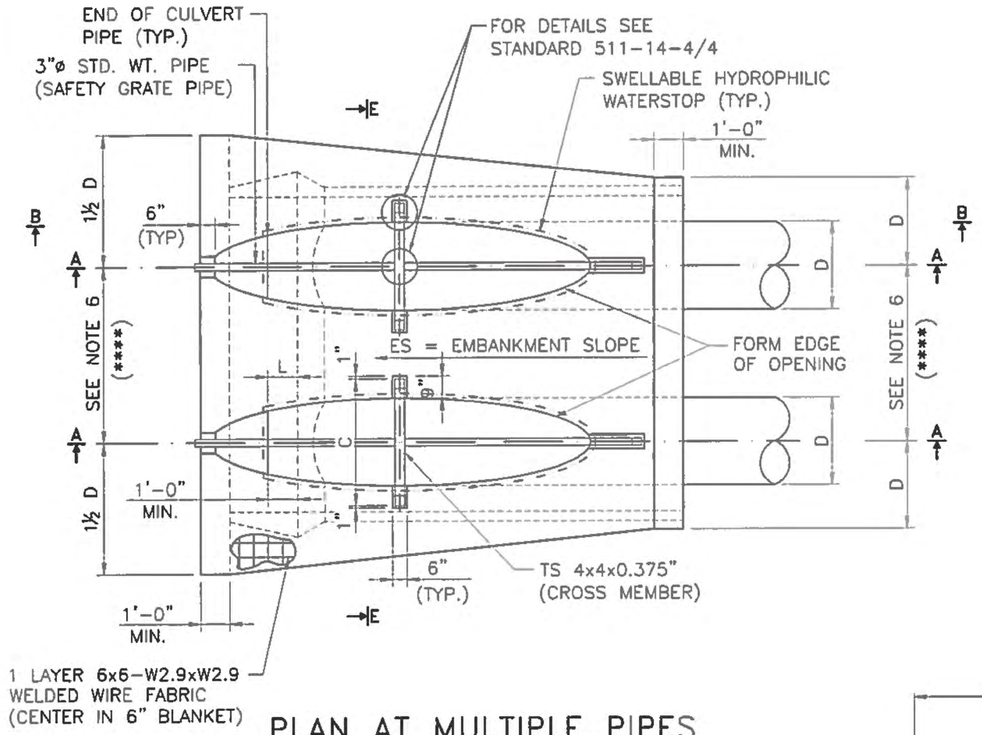

PLAN AT MULTIPLE PIPES
(NORMAL INSTALLATIONS)

WELDED WIRE FABRIC LAP SPLICE DETAIL

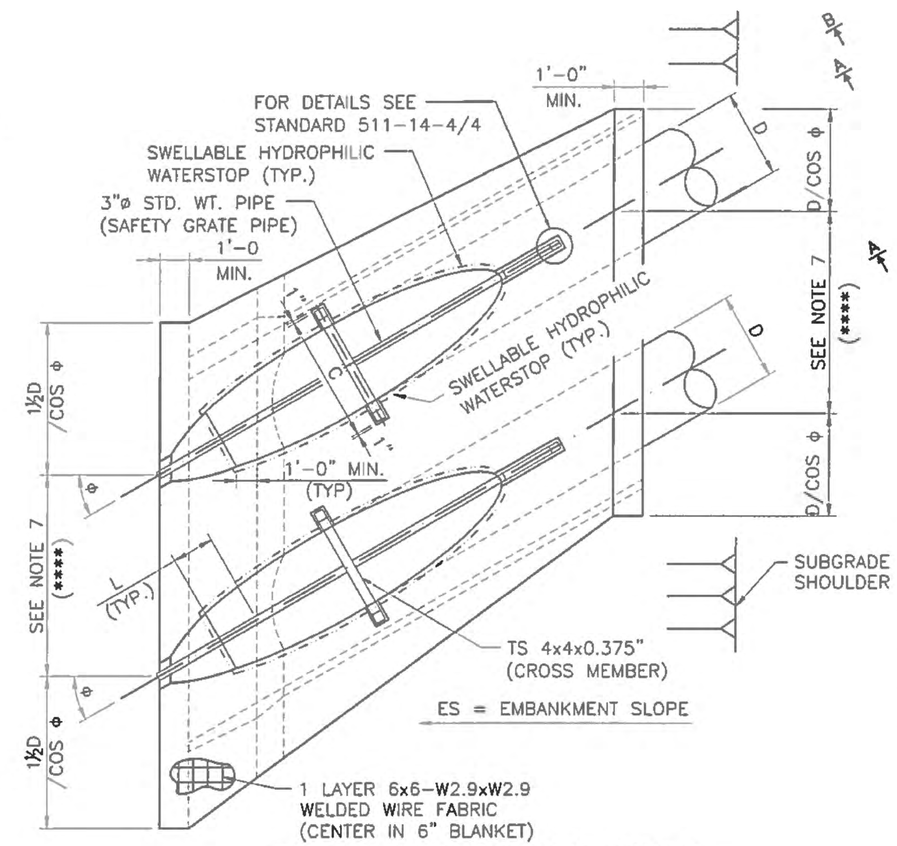

PLAN AT MULTIPLE PIPES
(SKEWED INSTALLATIONS)

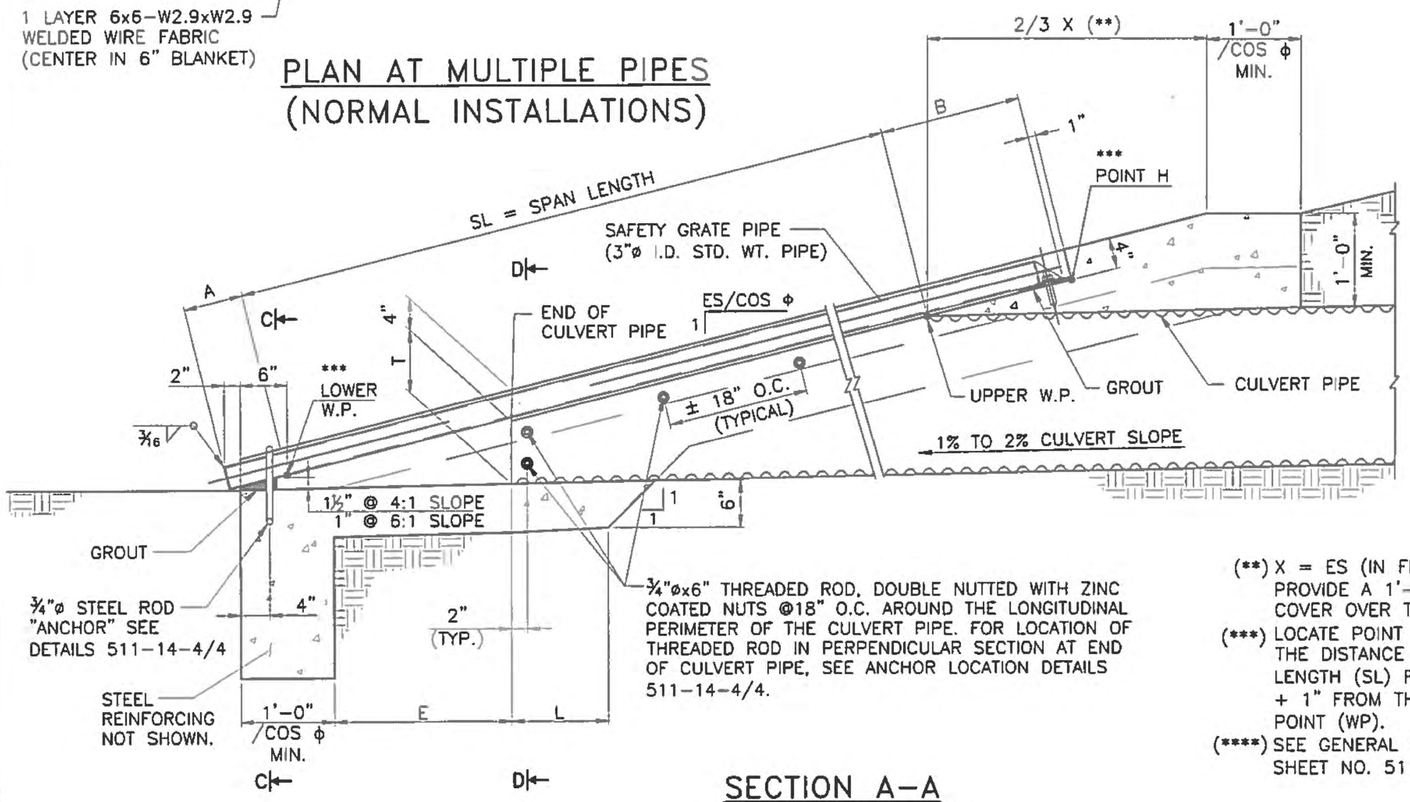

SECTION A-A

(**) X = ES (IN FEET) SO AS TO PROVIDE A 1'-0" MINIMUM COVER OVER THE CULVERT

(***) LOCATE POINT H BY MEASURING THE DISTANCE OF THE SPAN LENGTH (SL) PLUS DIMENSION B + 1" FROM THE LOWER WORK POINT (WP).

(****) SEE GENERAL NOTES 6 AND 7 ON SHEET NO. 511-14-1/4

THIS STANDARD DRAWING IS FOR USE ON NMDOT PROJECTS. OTHERS WHO USE THE NMDOT STANDARD DRAWINGS DO SO AT THEIR OWN RISK. STANDARD DRAWINGS THAT ARE APPLICABLE TO A SPECIFIC PROJECT WILL BE IDENTIFIED ON THE PROJECT PLANS BUT WILL NOT BE PHYSICALLY INCLUDED IN THOSE PLANS. THE DESIGNER WHO SPECIFIES A STANDARD DRAWING ACCEPTS THE RESPONSIBILITY OF DETERMINING THEIR APPLICABILITY.

NO.	DATE	BY	DESCRIPTION

REVISIONS (OR CHANGE NOTICES)

KATHY CROWELL NEW MEXICO 22934 PROFESSIONAL ENGINEER

NEW MEXICO
DEPARTMENT OF TRANSPORTATION
STANDARD DRAWING

MULTIPLE METAL PIPE
CONCRETE BLANKET
WITH SAFETY GRATE
(NORMAL & 5° TO 35°)

511-14-3/4 3 of 4

DESIGNED BY: FDO DRAWN BY: SKL/BEE CHECKED BY: KHC

ANCHOR NOTES:

1. ALL RODS, NUTS, AND BOLTS SHALL BE ZINC COATED.
2. THE CORRUGATED METAL PIPE (CMP) SHALL BE ANCHORED TO THE BLANKET WITH DOUBLE-NUTTED THREADED ROD. FOR SPACING AND LOCATION OF THESE ANCHORS, SEE "ANCHOR LOCATION TABLE."
3. ALL THREAD ROD ANCHORS AT THE SAFETY GRATE ELEMENTS SHALL BE PER SECTION 523 – CEMENTITIOUS-GROUTED DOWELS AND ANCHORS.
4. THE STEEL ROD ANCHORS SHALL BE PER SECTION 541 – STEEL STRUCTURES AND SHALL BE EMBEDDED IN THE CONCRETE AT THE TIME OF PLACEMENT.
5. AFTER INSTALLATION OF SAFETY PIPE THROUGH STEEL ANCHOR ROD LOOP, PLACE GROUT TO PROVIDE BEARING SURFACE FOR SAFETY PIPE. GROUT TO BE PER SECTION 521.
6. TOP OF CONCRETE BLANKET AND TOP OF SAFETY GRATE MUST LIE IN THE SAME PLANE WITHIN ±½".
7. FURNISH AND INSTALL ALL ANCHORS SHALL BE INCIDENTAL TO THE CONCRETE PAY ITEM, NO ADDITIONAL PAYMENT WILL BE MADE.

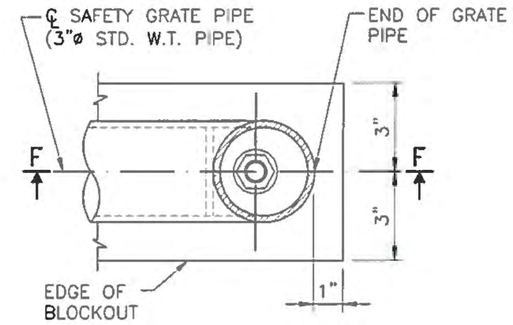

ANCHOR BOLT DETAIL @ SAFETY GRATE PIPE PLAN

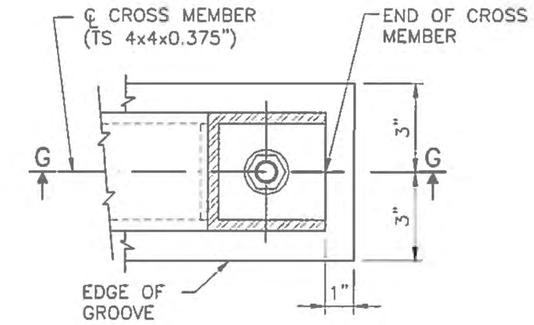

ANCHOR BOLT DETAIL @ CROSS MEMBER PLAN

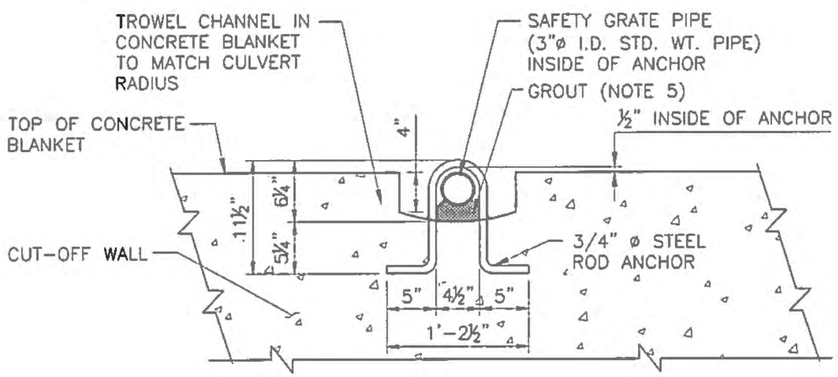

SECTION C-C

(STEEL ROD ANCHOR DETAILS AT OUTLET)

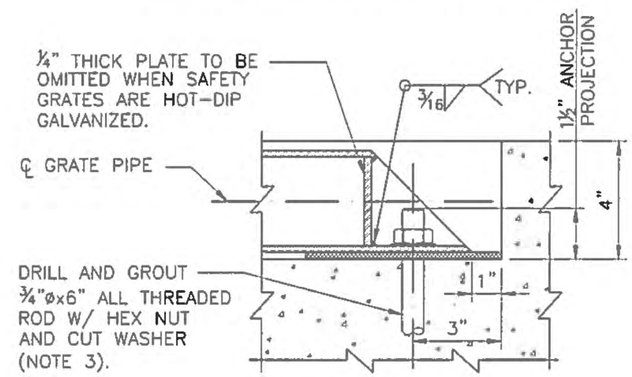

SECTION F-F

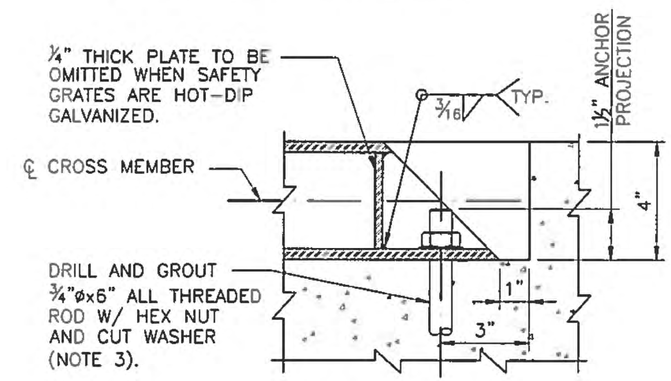

SECTION G-G

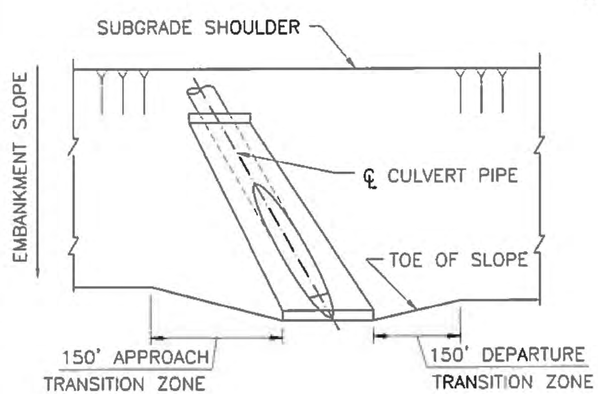

SLOPE TRANSITION DETAIL

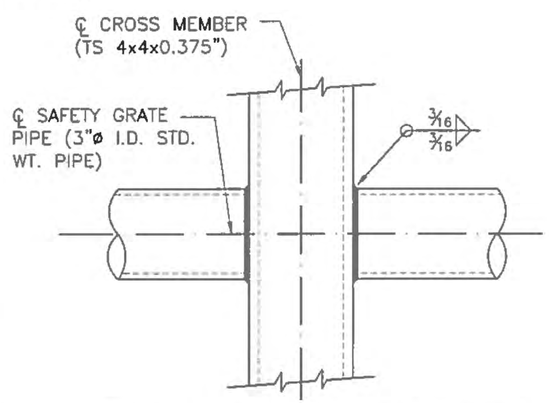

SAFETY GRATE PIPE AND CROSS MEMBER CONNECTION

LOCATION OF ANCHORS NEAR END OF CULVERT PIPE		
D (IN.)	a (IN.)	b (IN.)
24	2	3
30-42	3	8
48-60	4	12

CMP ANCHOR LOCATION TABLE

(D IS THE DIAMETER OF CULVERT PIPE)

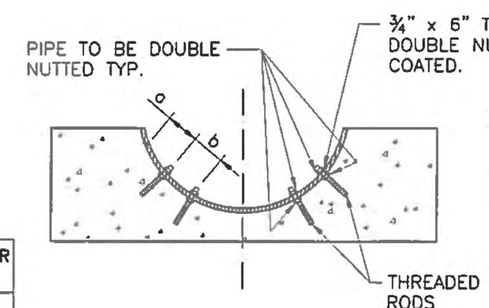

CMP ANCHOR DETAIL

THIS STANDARD DRAWING IS FOR USE ON NMDOT PROJECTS. OTHERS WHO USE THE NMDOT STANDARD DRAWINGS DO SO AT THEIR OWN RISK. STANDARD DRAWINGS THAT ARE APPLICABLE TO A SPECIFIC PROJECT WILL BE IDENTIFIED ON THE PROJECT PLANS BUT WILL NOT BE PHYSICALLY INCLUDED IN THOSE PLANS. THE DESIGNER WHO SPECIFIES A STANDARD DRAWING ACCEPTS THE RESPONSIBILITY OF DETERMINING THEIR APPLICABILITY.

NO.	DATE	BY	DESCRIPTION

REVISIONS (OR CHANGE NOTICES)

NEW MEXICO
DEPARTMENT OF TRANSPORTATION
STANDARD DRAWING

TYPICAL
CONCRETE BLANKET
DETAILS

DESIGNED BY: FDO DRAWN BY: SKL/BEE CHECKED BY: KHC

511-14-4/4

NORMAL INSTALLATION

EMBANKMENT SLOPE = 4:1 CULVERT SLOPE = 1%

DIA. D (in.)	GRATE TYP.	SPAN LENGTH SL	A	B	TOTAL LENGTH LP	C	TOTAL WEIGHT (lbs.)
INLET							
30	---	---	---	---	---	---	---
36	I	11'-5"	9"	2'-0"	14'-2"	---	112.3
42	II	13'-4	9"	2'-0"	16'-1"	4'-10"	205.5
48	II	15'-4"	9"	2'-0"	18'-1"	5'-4"	229.3
54	II	17'-4"	9"	2'-0"	20'-1"	5'-10"	253.1
60	II	19'-4"	9"	2'-0"	22'-1"	6'-4"	276.9
OUTLET							
30	---	---	---	---	---	---	---
36	II	12'-5"	9"	2'-2"	15'-4"	4'-4"	191.2
42	II	14'-6"	9"	2'-2"	17'-5"	4'-10"	215.6
48	II	16'-8"	9"	2'-2"	19'-7"	5'-4"	240.7
54	II	18'-10"	9"	2'-2"	21'-9"	5'-10"	265.7
60	II	21'-0"	9"	2'-2"	23'-11"	6'-4"	290.8

NORMAL INSTALLATION

EMBANKMENT SLOPE = 6:1 CULVERT SLOPE = 1%

DIA. D (in.)	GRATE TYP.	SPAN LENGTH SL	A	B	TOTAL LENGTH LP	C	TOTAL WEIGHT (lbs.)
INLET							
30	---	---	---	---	---	---	---
36	II	16'-9"	9"	2'-10"	20'-4"	4'-4"	229.1
42	II	19'-7"	9"	2'-10"	23'-2"	4'-10"	259.2
48	II	22'-5	9"	2'-10"	26'-0"	5'-4"	289.3
54	III	25'-5"	9"	2'-10"	28'-11"	5'-10"	416.0
60	III	28'-2"	9"	2'-10"	31'-9"	6'-4"	454.7
OUTLET							
30	---	---	---	---	---	---	---
36	II	18'-11"	9"	3'-3"	22'-11"	4'-4"	248.7
42	II	22'-2"	9"	3'-3"	26'-2"	4'-10"	282.0
48	III	25'-5"	9"	3'-3"	29'-5"	5'-4"	402.5
54	III	28'-8"	9"	3'-3"	32'-8"	5'-10"	444.4
60	III	31'-10"	9"	3'-3"	35'-10"	6'-4"	485.7

5° SKEW

EMBANKMENT SLOPE = 4:1 CULVERT SLOPE = 1%

DIA. D (in.)	GRATE TYP.	SPAN LENGTH SL	A	B	TOTAL LENGTH LP	C	TOTAL WEIGHT (lbs.)
INLET							
30	---	---	---	---	---	---	---
36	II	11'-6"	9"	2'-0"	14'-3"	4'-4"	183.0
42	II	13'-5"	9"	2'-0"	16'-2"	4'-10"	206.2
48	II	15'-5"	9"	2'-0"	18'-2"	5'-4"	229.9
54	II	17'-5"	9"	2'-0"	20'-2"	5'-10"	253.7
60	IV	19'-5"	9"	2'-0"	22'-2"	6'-4"	448.0
OUTLET							
30	---	---	---	---	---	---	---
36	II	12'-6"	9"	2'-2"	15'-5"	4'-4"	191.8
42	II	14'-7"	9"	2'-2"	17'-6"	4'-10"	216.3
48	II	16'-9"	9"	2'-2"	19'-8"	5'-4"	241.3
54	II	18'-11"	9"	2'-2"	21'-10"	5'-10"	266.4
60	IV	21'-1"	9"	2'-2"	24'-0"	6'-4"	475.8

5° SKEW

EMBANKMENT SLOPE = 6:1 CULVERT SLOPE = 1%

DIA. D (in.)	GRATE TYP.	SPAN LENGTH SL	A	B	TOTAL LENGTH LP	C	TOTAL WEIGHT (lbs.)
INLET							
30	---	---	---	---	---	---	---
36	II	16'-10"	9"	2'-10"	20'-5"	4'-4"	229.7
42	II	19'-8"	9"	2'-10"	23'-3"	4'-10"	259.8
48	II	22'-6"	9"	2'-10"	26'-1"	5'-4"	290.0
54	III	25'-5"	9"	2'-10"	29'-0"	5'-10"	216.6
60	IV	28'-3"	9"	2'-10"	31'-10"	6'-4"	416.6
OUTLET							
30	---	---	---	---	---	---	---
36	II	19'-0"	9"	3'-3"	23'-0"	4'-4"	249.3
42	II	22'-3"	9"	3'-3"	26'-3"	4'-10"	282.6
48	III	25'-6"	9"	3'-3"	29'-6"	5'-4"	403.1
54	III	28'-9"	9"	3'-3"	32'-9"	5'-10"	445.1
60	V	32'-0"	9"	3'-3"	36'-0"	6'-4"	759.7

NORMAL INSTALLATION

EMBANKMENT SLOPE = 4:1 CULVERT SLOPE = 2%

DIA. D (in.)	GRATE TYP.	SPAN LENGTH SL	A	B	TOTAL LENGTH LP	C	TOTAL WEIGHT (lbs.)
INLET							
30	---	---	---	---	---	---	---
36	I	10'-11"	9"	1'-11"	13'-7"	---	107.9
42	II	12'-10"	9"	1'-11"	15'-6"	4'-10"	201.1
48	II	14'-9"	9"	1'-11"	17'-5"	5'-4"	224.3
54	II	16'-8"	9"	1'-11"	19'-4"	5'-10"	247.4
60	II	18'-7"	9"	1'-11"	21'-3"	6'-4"	270.6
OUTLET							
30	---	---	---	---	---	---	---
36	II	12'-11"	9"	2'-3"	15'-11"	4'-4"	195.6
42	II	15'-2"	9"	2'-3"	18'-2"	4'-10"	221.3
48	II	17'-5"	9"	2'-3"	20'-5"	5'-4"	247.0
54	II	19'-8"	9"	2'-3"	22'-8"	5'-10"	272.7
60	II	21'-11"	9"	2'-3"	24'-11"	6'-4"	298.4

NORMAL INSTALLATION

EMBANKMENT SLOPE = 6:1 CULVERT SLOPE = 2%

DIA. D (in.)	GRATE TYP.	SPAN LENGTH SL	A	B	TOTAL LENGTH LP	C	TOTAL WEIGHT (lbs.)
INLET							
30	---	---	---	---	---	---	---
36	II	15'-9"	9"	2'-9"	19'-3"	4'-4"	220.9
42	II	18'-6"	9"	2'-9"	22'-0"	4'-10"	250.4
48	II	21'-3"	9"	2'-9"	24'-9"	5'-4"	279.9
54	III	23'-11"	9"	2'-9"	27'-5"	5'-10"	404.6
60	III	26'-8"	9"	2'-9"	30'-2"	6'-4"	442.7
OUTLET							
30	---	---	---	---	---	---	---
36	II	20'-3"	9"	3'-6"	24'-6"	4'-4"	260.7
42	II	23'-8"	9"	3'-6"	27'-11"	4'-10"	373.9
48	III	27'-2"	9"	3'-6"	31'-5"	5'-4"	417.7
54	III	30'-7"	9"	3'-6"	34'-10	5'-10"	460.8
60	III	34'-1"	9"	3'-6"	38'-4"	6'-4"	504.6

5° SKEW

EMBANKMENT SLOPE = 4:1 CULVERT SLOPE = 2%

DIA. D (in.)	GRATE TYP.	SPAN LENGTH SL	A	B	TOTAL LENGTH LP	C	TOTAL WEIGHT (lbs.)
INLET							
30	---	---	---	---	---	---	---
36	I	11'-0"	9"	1'-11"	13'-8"	---	108.5
42	II	12'-11"	9"	1'-11"	15'-7"	4'-10"	201.7
48	II	14'-10"	9"	1'-11"	17'-6"	5'-4"	224.9
54	II	16'-9"	9"	1'-11"	19'-5"	5'-10"	248.1
60	IV	18'-8"	9"	1'-11"	21'-4"	6'-4"	435.3
OUTLET							
30	---	---	---	---	---	---	---
36	II	13'-0"	9"	2'-3"	16'-0"	4'-4"	196.3
42	II	15'-3"	9"	2'-3"	18'-3"	4'-10"	221.9
48	II	17'-6"	9"	2'-3"	20'-6"	5'-4"	247.6
54	II	19'-9"	9"	2'-3"	22'-9"	5'-10"	273.3
60	IV	22'-0"	9"	2'-3"	25'-0"	6'-4"	490.9

5° SKEW

EMBANKMENT SLOPE = 6:1 CULVERT SLOPE = 2%

DIA. D (in.)	GRATE TYP.	SPAN LENGTH SL	A	B	TOTAL LENGTH LP	C	TOTAL WEIGHT (lbs.)
INLET							
30	---	---	---	---	---	---	---
36	II	15'10"	9"	2'-9"	19'-4"	4'-4"	221.5
42	II	18'-7"	9"	2'-9"	22'-1"	4'-10"	251.0
48	II	21'-4"	9"	2'-9"	24'-10"	5'-4"	280.5
54	III	24'-0"	9"	2'-9"	27'-6"	5'-10"	405.3
60	V	26'-9"	9"	2'-9"	30'-3"	6'-4"	672.6
OUTLET							
30	---	---	---	---	---	---	---
36	II	20'-4"	9"	3'-6"	24'-7"	4'-4"	261.3
42	III	23'-9"	9"	3'-6"	28'-0"	4'-10"	374.5
48	III	27'-3"	9"	3'-6"	31'-6"	5'-4"	418.3
54	III	30'-9"	9"	3'-6"	35'-0"	5'-10"	462.1
60	V	34'-3"	9"	3'-6"	38'-6"	6'-4"	797.6

THIS STANDARD DRAWING IS FOR USE ON NMDOT PROJECTS. OTHERS WHO USE THE NMDOT STANDARD DRAWINGS DO SO AT THEIR OWN RISK. STANDARD DRAWINGS THAT ARE APPLICABLE TO A SPECIFIC PROJECT WILL BE IDENTIFIED ON THE PROJECT PLANS BUT WILL NOT BE PHYSICALLY INCLUDED IN THOSE PLANS. THE DESIGNER WHO SPECIFIES A STANDARD DRAWING ACCEPTS THE RESPONSIBILITY OF DETERMINING THEIR APPLICABILITY.

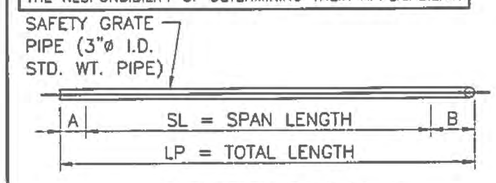

GRATE TYPE I

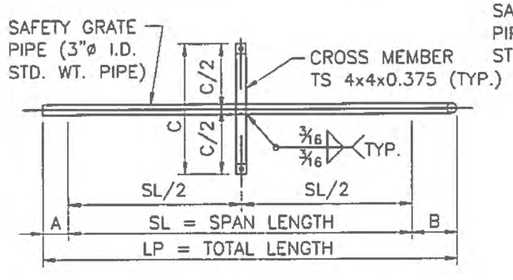

GRATE TYPE II

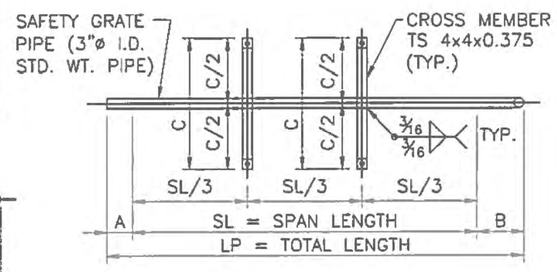

GRATE TYPE III

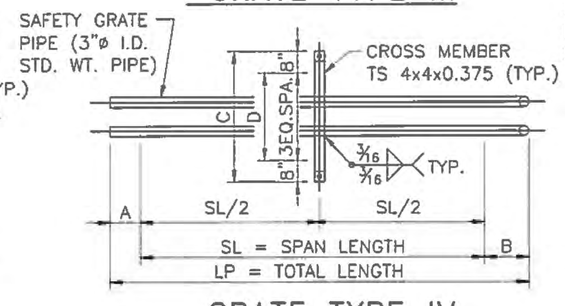

GRATE TYPE IV

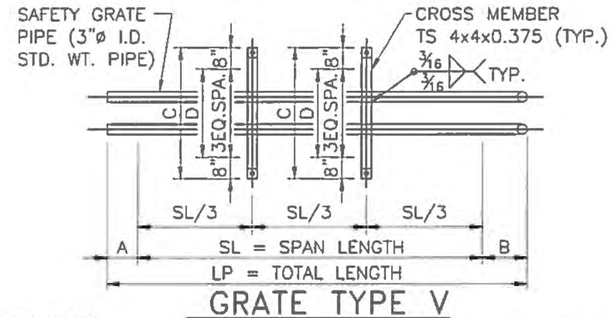

GRATE TYPE V

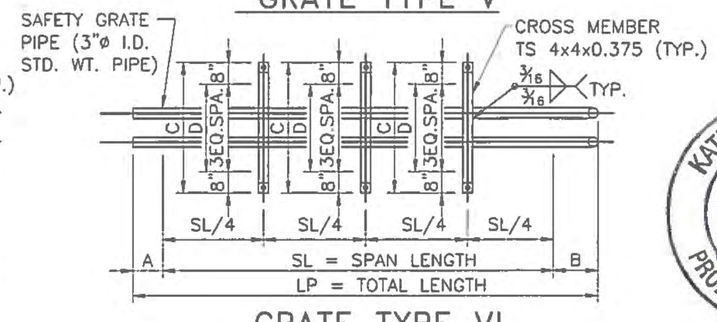

GRATE TYPE VI

NOTES:

1. THIS STANDARD DRAWING MUST ALWAYS BE USED IN CONJUNCTION WITH STANDARD DRAWINGS 511-13, 511-13A, 511-14 OR 511-14A - METAL PIPE CONCRETE BLANKET WITH SAFETY GRATE.
2. FOR CULVERT SLOPES BETWEEN 1% AND 2%, LENGTH DIMENSIONS SHALL BE INTERPOLATED. USE CULVERT SLOPE OF 1% FOR ALL ACTUAL CULVERT SLOPES LESS THAN 1%.
3. ALL STRUCTURAL STEEL SHALL CONFORM TO SECTION 541 - STEEL STRUCTURES.
4. ALL STEEL COMPONENTS SHALL CONFORM TO SECTION 545 - PROTECTIVE COATING OF MISCELLANEOUS STRUCTURAL STEEL.

NO.	DATE	BY	DESCRIPTION

REVISIONS (OR CHANGE NOTICES)

NEW MEXICO
DEPARTMENT OF TRANSPORTATION
STANDARD DRAWING

CONCRETE BLANKET
SAFETY GRATE DETAILS
FOR
CIRCULAR PIPES
(NORMAL & 5° SKEW)

DESIGNED BY: FDQ DRAWN BY: SKL/BEE CHECKED BY: KHC

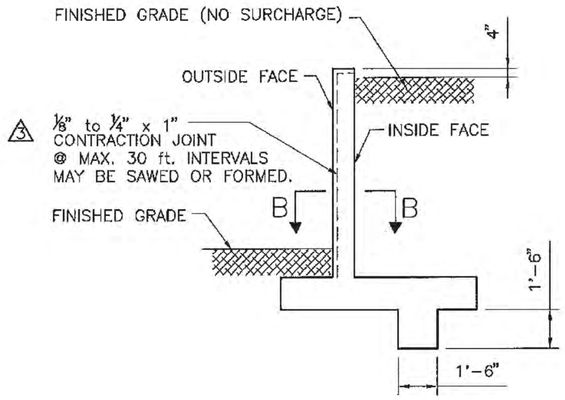

TYPICAL SECTION
(FOR H = 4' TO 12')

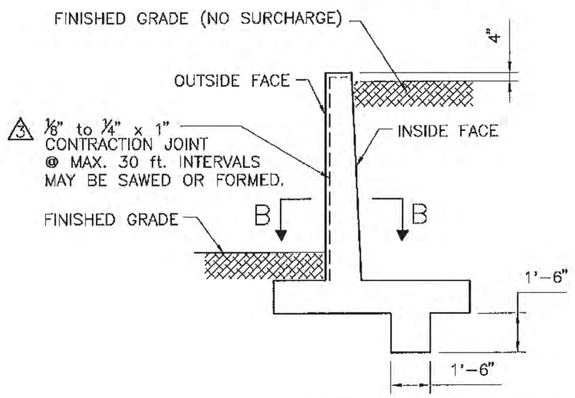

TYPICAL SECTION
(FOR H = 13' TO 16')

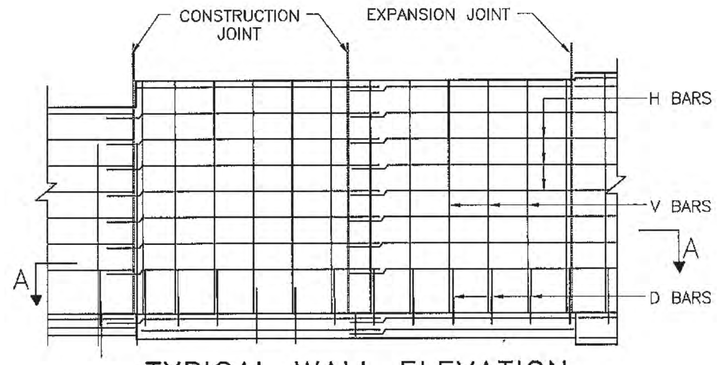

TYPICAL WALL ELEVATION
(OUTSIDE FACE ELEVATION)

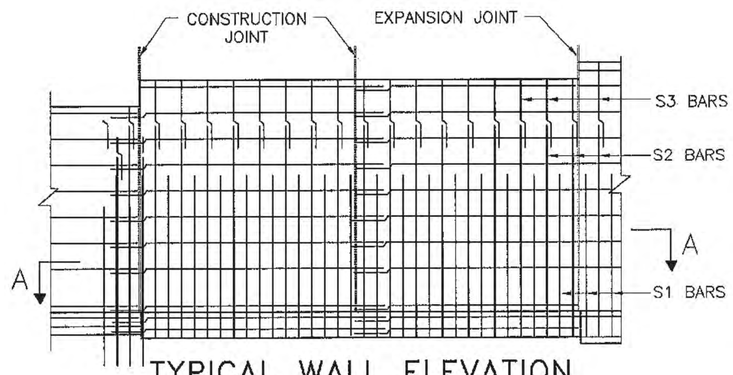

TYPICAL WALL ELEVATION
(INSIDE FACE ELEVATION)

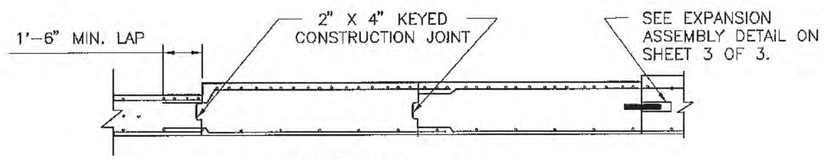

SECTION A-A

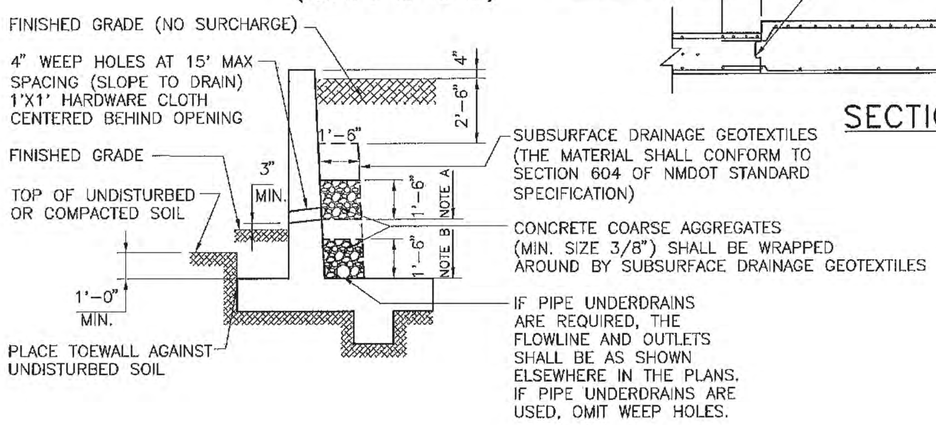

DRAINAGE DETAILS AND EXCAVATION DIAGRAM

NOTE A: STOP COURSE AGGREGATE AT THIS LEVEL WHEN WEEP HOLES ARE USED.
NOTE B: USE COURSE AGGREGATE TO HERE WITH SUBSURFACE DRAINAGE GEOTEXTILES ABOVE WHEN PIPE UNDERDRAIN IS USED.

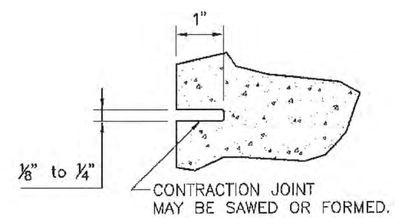

3 SECTION B-B

GENERAL NOTES:

1. ALL MATERIALS AND WORKMANSHIP SHALL CONFORM TO NMDOT STANDARD SPECIFICATIONS AND SPECIAL PROVISIONS, CURRENT EDITION.
2. ALL CONCRETE SHALL BE CLASS "A." CHAMFER ALL EXPOSED EDGES 3/4", UNLESS OTHERWISE NOTED.
3. ALL REINFORCING BARS SHALL CONFORM TO AASHTO STANDARD SPECIFICATIONS M 31 GRADE 60 UNLESS OTHERWISE NOTED. DIMENSIONS REFER TO CENTER LINE OF BAR.
4. ALL REINFORCING BARS SHALL HAVE 2" CLEAR COVER UNLESS NOTED OTHERWISE.
5. DIMENSIONS SHALL NOT BE SCALED FROM DRAWINGS.
6. 1 ALL RETAINING WALLS SHALL HAVE CONTRACTION JOINTS SPACED AT NO MORE THAN 30'-0" APART OR AS SHOWN. REINFORCING BARS SHALL PROJECT THROUGH THE JOINT.
7. ALL RETAINING WALLS SHALL HAVE EXPANSION JOINTS PROVIDED AT INTERVALS NOT EXCEEDING 90'-0".
8. FOOTINGS MAY BE CONTINUOUS WITH NO JOINT.
9. SPECIAL DESIGN IS REQUIRED WHEN "H" DIMENSION IS ABOVE 16 FEET.
10. COHESIVE SOILS OF SILT, CLAY, ETC. SHALL NOT BE USED FOR BACKFILL. THE BACKFILL SHALL BE FREE-DRAINING.
11. APPROPRIATE DRAINAGE PROVISIONS SHALL BE PROVIDED AS SHOWN ON THE LAYOUT DRAWINGS.
12. ALL EARTH WORK INCLUDING BACKFILL MATERIAL AND COMPACTION SHALL CONFORM TO SECTION 210 OF NMDOT STANDARD SPECIFICATIONS, CURRENT EDITION.
13. FOR H GREATER THAN 8 FEET, FOUNDATION EXPLORATION WILL BE REQUIRED TO VERIFY ADEQUATE FOUNDATION CONDITIONS.
14. 2 THE LOCATIONS OF NEEDED CONSTRUCTION JOINTS ARE EITHER SHOWN ON THE PLANS OR TO BE DIRECTED OR APPROVED BY THE PROJECT MANAGER.

4 DESIGN DATA

DESIGN ACCORDING TO AASHTO LRFD BRIDGE DESIGN SPECIFICATIONS, THIRD EDITION, 2004.

DESIGN STRESS:

CLASS "A" CONCRETE: fc'=3000 psi
GRADE 60 REINFORCING STEEL: fy=60000 psi
HORIZONTAL EARTH PRESSURE = 36 LBS./CU. FT. EQUIVALENT FLUID PRESSURE.
WEIGHT OF BACKFILL = 120 LBS./CU. FT.
WEIGHT OF CONCRETE = 145 LBS./CU. FT.
ANGLE OF INTERNAL FRICTION OF EXISTING GROUND = 29°
FACTORED BEARING CAPACITY qr = 2.0 TONS/SQ. FT. IS USED FOR THE DESIGN ON THESE DRAWINGS.

	DATE	BY	DESCRIPTION
4	10/13/11	YML	EDITED DESIGN DATA.
3	5/16/08	YML	ADDED THE DETAIL OF CONTRACTION JOINT.
2	5/16/08	YML	ADD GENERAL NOTE NO. 14.
1	5/16/08	YML	REVISED "CONSTRUCTION" TO "CONTRACTION"

REVISIONS (OR CHANGE NOTICES)

NEW MEXICO DEPARTMENT OF TRANSPORTATION STANDARD DRAWING

CANTILEVER RETAINING WALL (CASE I – LEVEL FILL) GENERAL NOTES, SECTIONS & ELEVATIONS

TIMOTHY A. MARRS NEW MEXICO 14072 REGISTERED PROFESSIONAL ENGINEER
4-16-12

DESIGNED BY: YML DRAWN BY: ALT CHECKED BY: YML/TM

511-80-1/3 1 of 3

CASE I – LEVEL FILL

WALL DIMENSIONS / REINFORCING BAR LIST

* DENOTES THE TOTAL NUMBERS OF BARS IN CROSS SECTION.

H	W	B	C	F	E	X	S1 BAR SIZE	S1 SPACING	S1 LENGTH	S2 BAR SIZE	S2 SPACING	S2 LENGTH	S3 BAR SIZE	S3 SPACING	S3 LENGTH	#4H NUM.*	#4V LENGTH	#4D LENGTH	#4U LENGTH	Y BAR SIZE	Y SPACING	Y LENGTH	#4F1 NUM.*	T BAR SIZE	T SPACING	T LENGTH	#4F2 NUM.*	#4F3 NUM.*	MAX. TOE PRESSURE TONS/SQ.FT.	ESTIMATED QUANTITY (PER LIN. FT. OF WALL) CONCRETE CU.YD.	REBAR LBS.
4'	3'–0"	1'–0"	10"	10"	1'–4"	8"	#5	12"	5'–8"							6	3'–11"	2'–0"	2B+(2'–6")	#5	12"	2'–6"	3	#5	12"	2'–9"	3	2	0.58	0.32	26.6
5'	3'–6"	1'–0"	1'–0"	10"	1'–8"	9"	#5	12"	6'–8"							8	4'–11"	2'–0"	2B+(2'–6")	#5	12"	3'–0"	3	#5	12"	3'–3"	3	2	0.66	0.37	30.2
6'	4'–3"	1'–0"	1'–0"	10"	2'–5"	10"	#5	12"	7'–8"							10	5'–11"	2'–0"	2B+(2'–6")	#5	12"	3'–9"	3	#5	12"	4'–0"	3	2	0.75	0.43	34.6
7'	4'–9"	1'–0"	1'–0"	10"	2'–11"	11"	#5	12"	8'–8"							10	6'–11"	2'–0"	2B+(2'–6")	#5	12"	4'–0"	4	#5	12"	4'–6"	4	2	0.89	0.48	38.1
8'	5'–6"	1'–0"	1'–2"	10"	3'–6"	1'–0"	#5	12"	9'–8"							12	7'–11"	2'–0"	2B+(2'–6")	#5	12"	4'–9"	4	#5	12"	5'–3"	4	2	0.95	0.53	42.6
9'	6'–0"	1'–0"	1'–3"	11"	3'–10"	1'–2"	#5	12"	10'–8"							14	8'–11"	2'–0"	2B+(2'–6")	#5	12"	5'–0"	4	#5	12"	5'–9"	5	2	1.08	0.61	46.9
10'	6'–9"	1'–2"	1'–4"	1'–0"	4'–5"	1'–3"	#6	12"	11'–10"							14	9'–11"	2'–0"	2B+(2'–6")	#5	12"	5'–9"	5	#5	12"	6'–6"	5	2	1.22	0.75	56.4
11'	7'–6"	1'–2"	1'–5"	1'–0"	5'–1"	1'–4"	#6	12"	12'–10"							16	10'–11"	2'–0"	2B+(2'–6")	#5	12"	6'–6"	5	#6	12"	7'–3"	6	2	1.31	0.82	65.2
12'	8'–3"	1'–2"	1'–6"	1'–0"	5'–9"	1'–5"	#7	12"	14'–0"							18	11'–11"	2'–0"	2B+(2'–6")	#5	12"	7'–0"	6	#7	12"	8'–0"	6	2	1.40	0.88	82.9
13'	8'–9"	1'–3"	1'–7"	1'–2"	6'–0"	1'–6"	#7	12"	8'–8"				#5	12"	8'–3"	18	12'–11"	2'–0"	2B+(2'–6")	#5	12"	7'–6"	6	#7	12"	8'–6"	7	2	1.56	1.01	83.5
14'	9'–6"	1'–3"	1'–8"	1'–2"	6'–8"	1'–7"	#8	12"	9'–4"				#5	12"	8'–9"	20	13'–11"	2'–0"	2B+(2'–6")	#5	12"	8'–3"	6	#8	12"	9'–3"	7	2	1.64	1.09	101.1
15'	10'–0"	1'–5"	2'–1"	1'–3"	6'–8"	1'–8"	#7	12"	9'–10"	#5	12"	10'–9"	#5	12"	9'–3"	22	14'–11"	2'–0"	2B+(2'–6")	#6	12"	8'–6"	7	#8	12"	9'–9"	8	2	1.71	1.23	115.8
16'	11'–0"	1'–5"	2'–2"	1'–3"	7'–7"	1'–9"	#7	12"	10'–4"	#5	12"	11'–3"	#5	12"	9'–9"	22	15'–11"	2'–0"	2B+(2'–6")	#6	12"	9'–6"	7	#9	12"	10'–9"	8	2	1.96	1.33	130.5

(FOR ALL #4 BARS, THE REQUIRED MIN. SPLICE LENGTH SHALL BE 1'–6".)

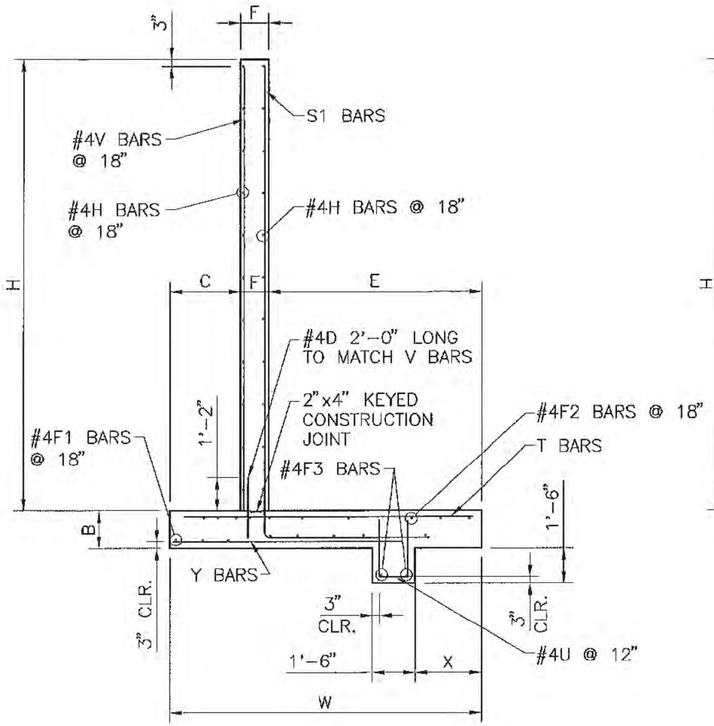

TYPICAL WALL CROSS SECTION
(FOR H = 4' TO 12')

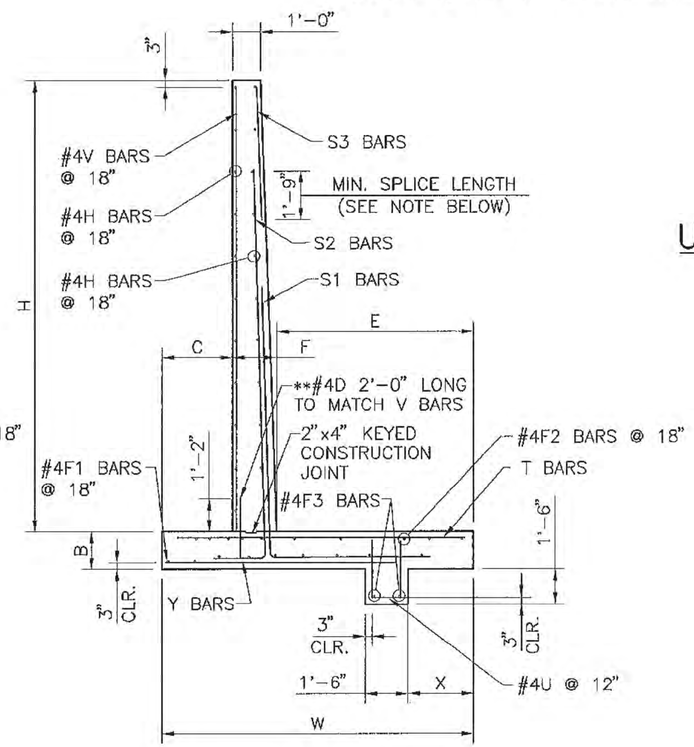

TYPICAL WALL CROSS SECTION
(FOR H = 13' TO 16')

NOTE:
S3 BARS SHALL SPLICE WITH S1 BARS WHEREVER THERE IS NO S2 BARS SHOWN IN THE TABLE ABOVE FOR H FROM 13' TO 16'.

H (FT)	a
4–12	0.0000 (0)
13	0.1538(5/32)
14	0.1429(5/32)
15	0.2000(7/32)
16	0.1875(3/16)

USE FOR S1 & S2 BARS

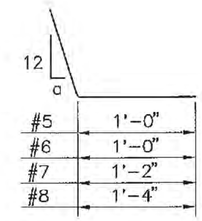

S1 BARS

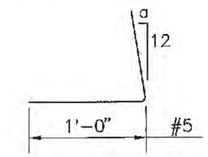

S2 BARS

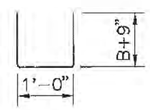

#4U BARS

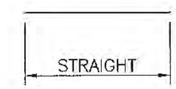

S3,H,V,Y,F1,T,F2,F3,D BARS

REINFORCING BAR DETAIL

TIMOTHY A. MARRS
NEW MEXICO
14072
REGISTERED PROFESSIONAL ENGINEER
4-10-12

DATE	BY	DESCRIPTION

REVISIONS (OR CHANGE NOTICES)

NEW MEXICO
DEPARTMENT OF TRANSPORTATION
STANDARD DRAWING

CANTILEVER RETAINING WALL
(CASE I – LEVEL FILL)
AND
REINFORCING BAR DETAILS

DESIGNED BY: YML DRAWN BY: SKL CHECKED BY: YML/TM

511-80-2/3 2 of 3

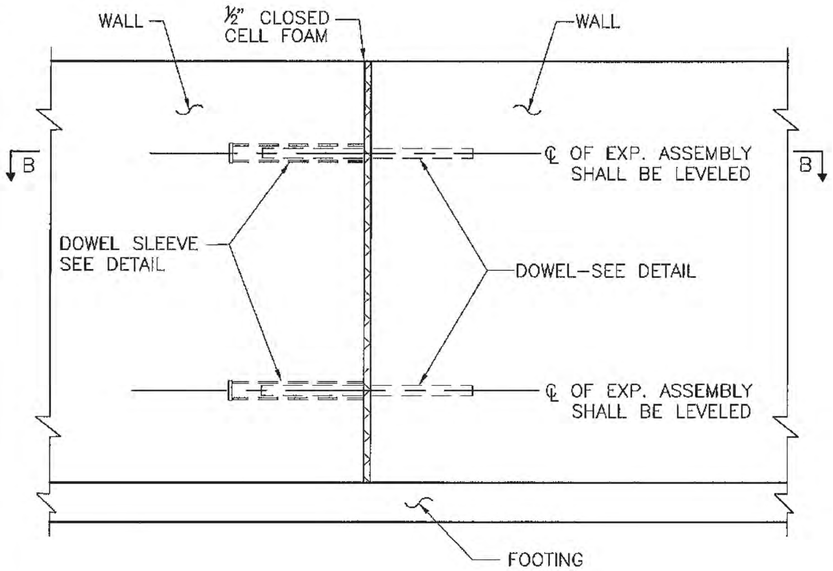

ELEVATION VIEW

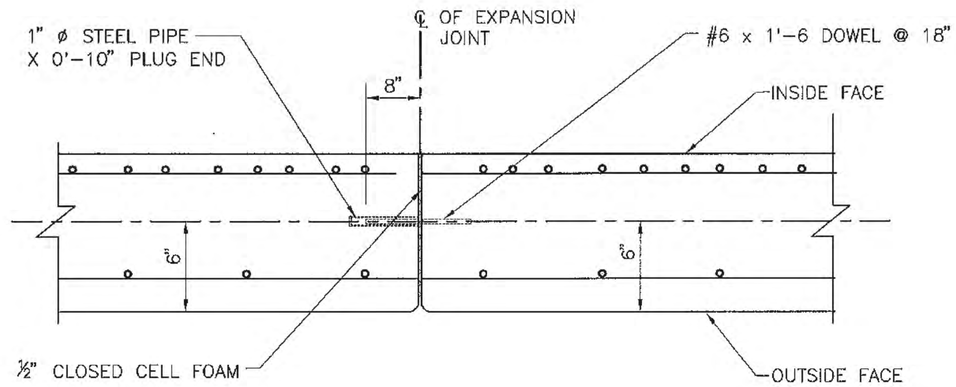

SECTION B–B

EXPANSION ASSEMBLY DETAIL

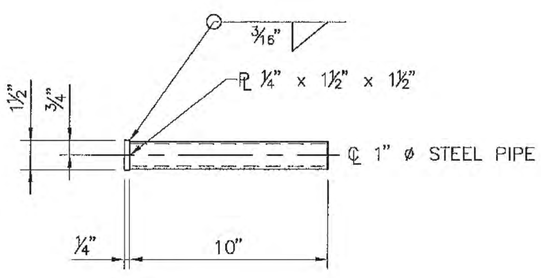

DOWEL SLEEVE DETAIL

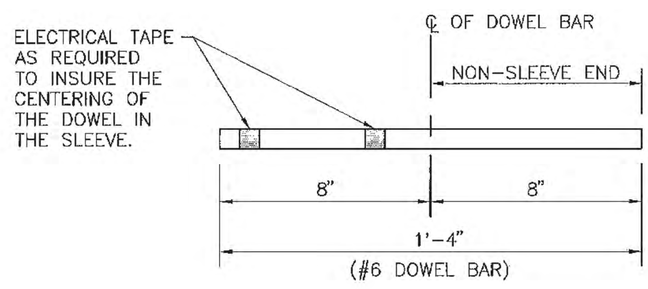

DOWEL DETAIL

GENERAL NOTES:

1. STRUCTURAL STEEL SHALL CONFORM TO ASTM A 36 UNLESS OTHERWISE NOTED ON THE DETAILS, AND SHALL BE HOT–DIPPED GALVANIZED IN ACCORDANCE WITH AASHTO M 111.
2. BEFORE AND AFTER THE CONCRETE OF THE WALL IS PLACED, THE CONTRACTOR SHALL ENSURE THAT THE CENTER LINES OF ALL EXPOSED ASSEMBLIES ARE ALWAYS KEPT LEVELED AND 6" AWAY FROM THE OUTSIDE FACE OF THE WALL, AS SHOWN ON THIS DRAWING.
3. THE MATERIAL AND INSTALLATION COST OF 1/2" CLOSED CELL FOAM AND EXPANSION ASSEMBLIES SHALL BE CONSIDERED INCIDENTAL TO THE COST OF RETAINING WALL CONSTRUCTION AND NO DIRECT PAYMENT WILL BE MADE THEREFOR.

	DATE	BY	DESCRIPTION

REVISIONS (OR CHANGE NOTICES)

NEW MEXICO DEPARTMENT OF TRANSPORTATION STANDARD DRAWING

CANTILEVER RETAINING WALL (CASE I – LEVEL FILL) EXPANSION ASSEMBLY DETAIL

DESIGNED BY: YML DRAWN BY: SKL CHECKED BY: YML/TM

511–80–3/3 3 of 3

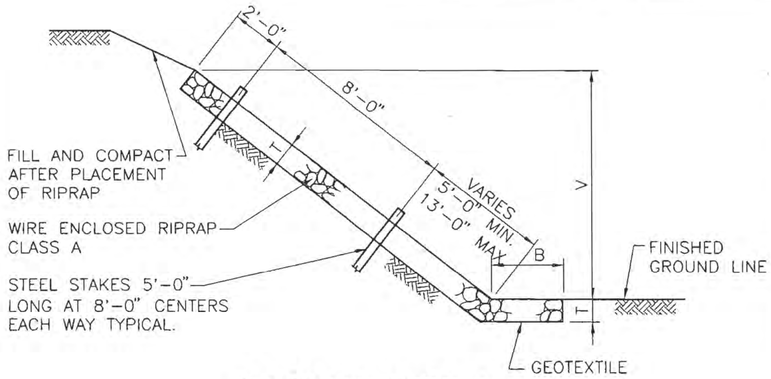

SECTION TYPE I

QUANTITIES PER LINEAR FOOT	
SLOPE	RIPRAP (CU. YDS.)
1.5 : 1	$\frac{T}{27}(B + 1.803\ V + 0.303\ T)$
1.75 : 1	$\frac{T}{27}(B + 2.016\ V + 0.266\ T)$
2 : 1	$\frac{T}{27}(B + 2.236\ V + 0.236\ T)$
3 : 1	$\frac{T}{27}(B + 3.162\ V + 0.162\ T)$
4 : 1	$\frac{T}{27}(B + 4.123\ V + 0.123\ T)$

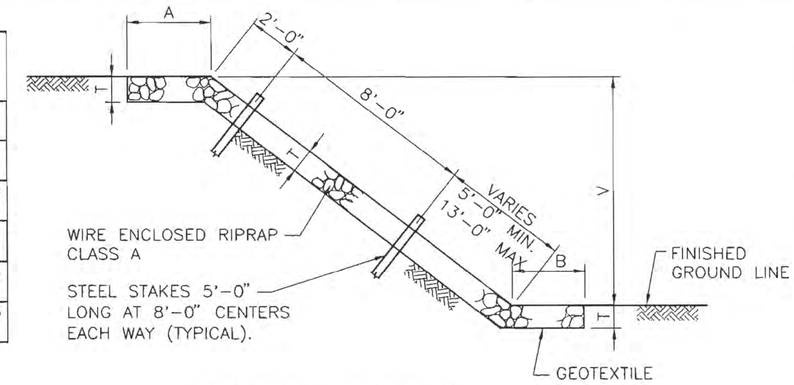

SECTION TYPE II

QUANTITIES PER LINEAR FOOT	
SLOPE	RIPRAP (CU. YDS.)
1 : 1	$\frac{T}{27}(A + B + 1.414V)$
1.5 : 1	$\frac{T}{27}(A + B + 1.803V)$
1.75 : 1	$\frac{T}{27}(A + B + 2.016V)$
2 : 1	$\frac{T}{27}(A + B + 2.236V)$
3 : 1	$\frac{T}{27}(A + B + 3.162V)$
4 : 1	$\frac{T}{27}(A + B + 4.123V)$

GENERAL NOTES

1. WIRE FABRIC FOR RIP RAP SHALL BE "W" OR HEXAGONAL MESH AND MEET THE REQUIREMENTS LISTED IN SECTION 602 OF THE NMDOT STANDARD SPECIFICATIONS FOR HIGHWAY AND BRIDGE CONSTRUCTON, CURRENT EDITION.
2. STEEL STAKES MAY BE RAILROAD RAILS WEIGHING NOT LESS THAN 30 LBS. PER YARD, 4" NOMINAL DIAMETER STANDARD STRENGTH GALVANIZED STEEL PIPE, OR L 4" x 4"x 3/8" STEEL ANGLES. STEEL STAKES SHALL PROJECT 6" ABOVE TOP OF RIPRAP. STEEL STAKES ARE CONSIDERED INCIDENTAL TO THE COMPLETION OF THE WORK AND NO DIRECT MEASUREMENT OR PAYMENT WILL BE MADE THEREFORE.
3. IF LENGTH OF SLOPE IS 15 FEET OR LESS, ONLY ONE ROW OF STEEL STAKES 2 FEET FROM THE TOP EDGE OF RIPRAP WILL BE REQUIRED UNLESS OTHERWISE NOTED ON PLANS.
4. FOR DIMENSIONS A, B, V, & T. SEE BRIDGE OR ROADWAY PLANS.
5. T=12" UNLESS OTHERWISE SHOWN ON PLANS; T=18" AT BRIDGES.
6. FASTENERS FOR SPLICES AND/OR SELVEDGE END CONNECTORS MAY BE WIRE TIES, INTERLOCKING WIRE CLIPS, HOG RINGS, OR LACING WIRE. ONLY FASTENERS WHICH APPEAR ON THE DEPARTMENT'S "APPROVED PRODUCTS LIST" MAY BE USED.
7. LACING SHALL BE CONTINUOUS AS FAR AS IS PRACTICAL AND SHALL PASS THROUGH EACH MESH OPENING.
8. WHERE SPLICING IS NECESSARY, AN OVERLAP OF LACING OF AT LEAST 1 FOOT SHALL BE PROVIDED.

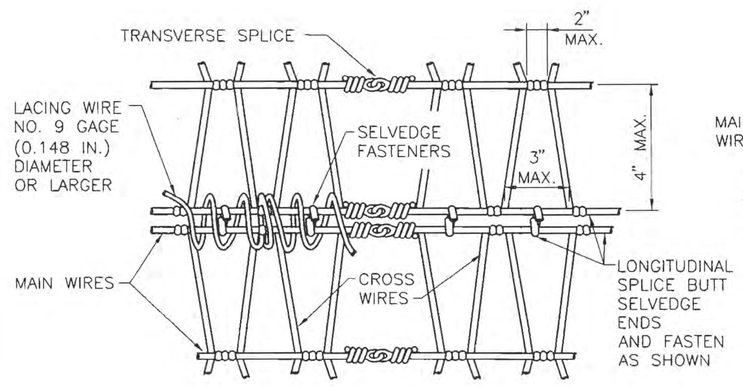

NORMAL INTERSECTION SPLICES

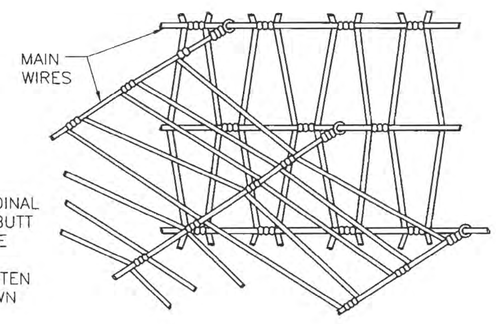

SKEWED INTERSECTION SPLICE

"W" MESH

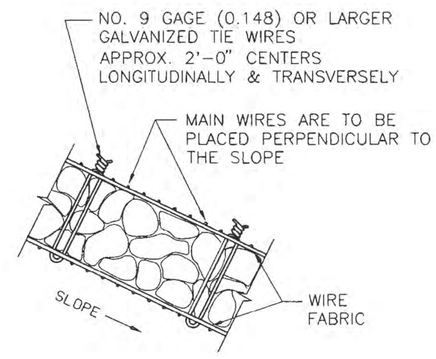

TYPICAL SECTION

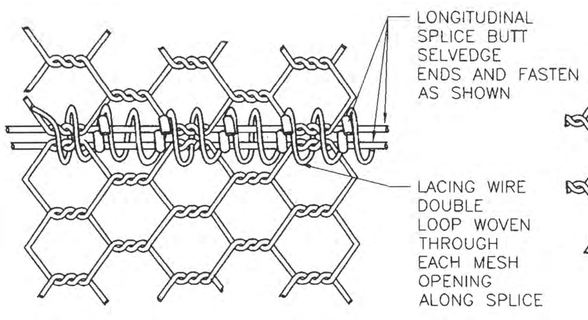

NORMAL INTERSECTION SPLICE

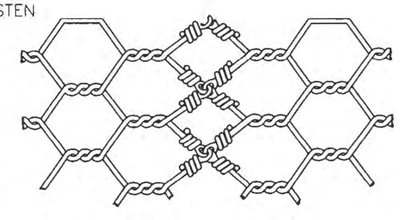

TRANSVERSE SPLICE

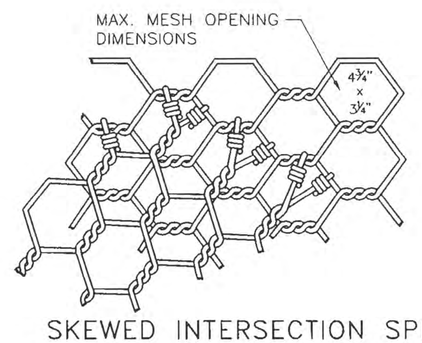

SKEWED INTERSECTION SPLICE

HEXAGONAL MESH

NO.	DATE	REV.BY	DESCRIPTION

REVISIONS (OR CHANGE NOTICES)

NEW MEXICO
DEPARTMENT OF TRANSPORTATION
STANDARD DRAWING

WIRE ENCLOSE RIPRAP
CLASS "A"

DESIGNED BY_____ DRAWN BY SKL CHECKED BY YML

602-01-1/1 1 of 1

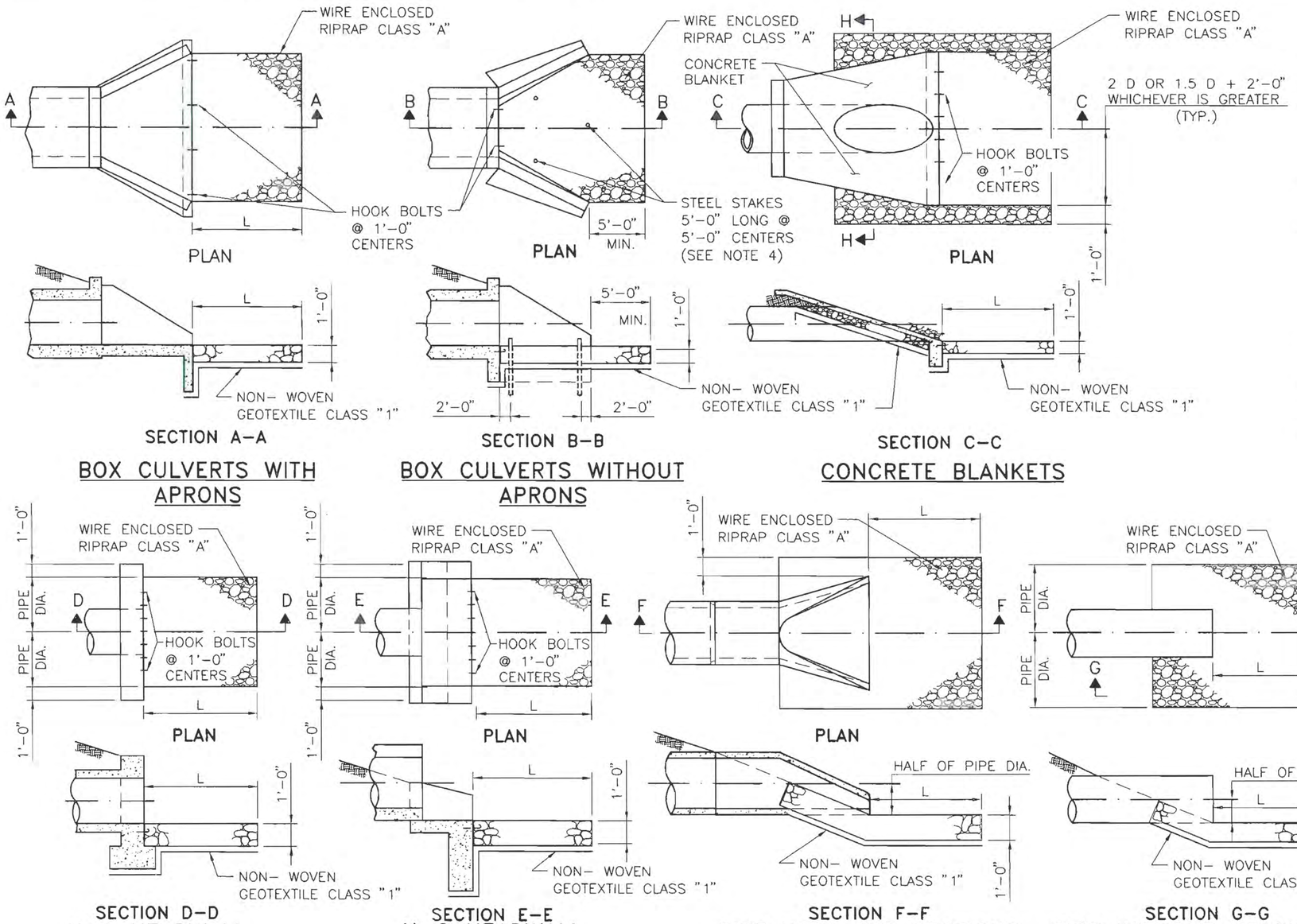

GENERAL NOTES

1. ALL RIPRAP SHALL BE CLASS "A" UNLESS SPECIFIED OTHERWISE IN THE PLANS. DIMENSIONS OF RIPRAP CLASS "A" SHALL BE VERIFIED IN FIELD.
2. RIPRAP ON THIS STANDARD IS SHOWN FOR SINGLE PIPES AND CULVERTS ONLY. FOR MULTIPLE PIPE AND CULVERT INSTALLATIONS, EXTEND RIPRAP BEYOND OUTLET OPENING AS SHOWN IN PLAN DETAILS AND PLACE RIPRAP BETWEEN OUTLET OPENINGS AS SHOWN IN ELEVATION DETAILS.
3. SERIAL 602-02-1/1 MAY BE REFERENCED FOR DESCRIPTIONS OF WIRE MESH AND ALTERNATE PATTERNS.
4. STEEL STAKES MAY BE RAILROAD RAILS WEIGHING NOT LESS THAN 30 LBS. PER YARD, 4" NOMINAL DIAMETER STANDARD STRENGTH GALVANIZED STEEL PIPE, OR L 4" X 4"X 3/8" STEEL ANGLES. STEEL STAKES SHALL PROJECT 6" ABOVE TOP OF RIPRAP. STEEL STAKES ARE CONSIDERED INCIDENTAL TO THE COMPLETION OF THE WORK AND NO DIRECT MEASUREMENT OR PAYMENT WILL BE MADE THEREFORE.
5. CONTRACTOR MAY SUBSTITUTE CONCRETE CHEMICAL ANCHORS WITH HOOK GEOMETRY SHOWN, WHICH MEET REQUIREMENTS OF SECTION 522.
6. TOE-IN OR PLACE EROSION CONTROL GEOTEXTILE UNDER FOOTINGS OR CUT-OFF WALL.
7. L (MIN.) = 10'-0" OR 1.5 x DIAMETER OR RISE, WHICHEVER IS GREATER.

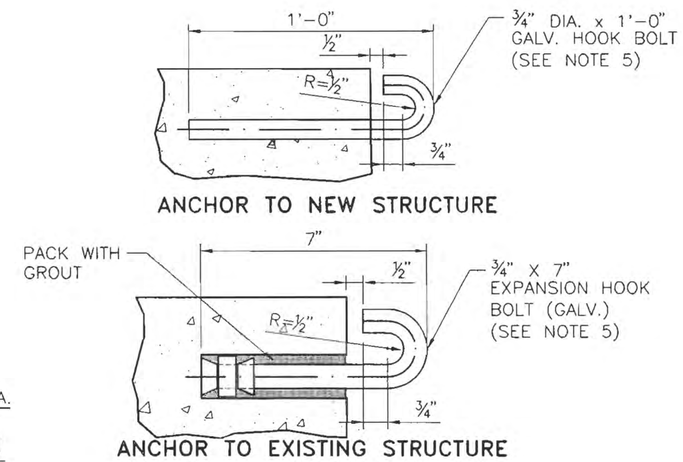

HOOK BOLT DETAILS

COST OF HOOK BOLT IN PLACE TO BE INCLUDED IN UNIT BID PRICE FOR RIPRAP.

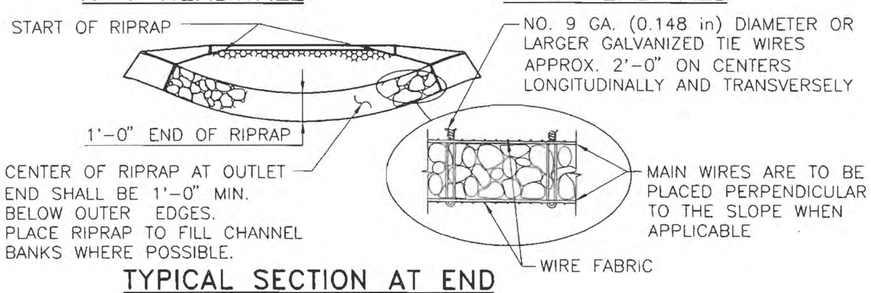

TYPICAL SECTION AT END OF RIPRAP

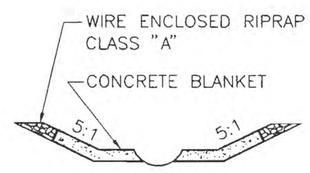

SECTION H-H

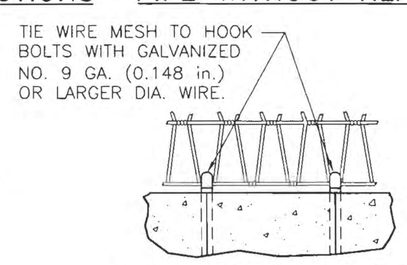

WIRE MESH ANCHOR

NOTE: SEE SHEET 602-01-1/1 FOR WIRE MESH SPLICE DETAILS.

RAY M. TRUJILLO NEW MEXICO 18513 REGISTERED PROFESSIONAL ENGINEER 11/16/09

NO.	DATE	REV.BY	DESCRIPTION
1	8/09/09	YML	GENERAL REVISIONS

REVISIONS (OR CHANGE NOTICES)

NEW MEXICO DEPARTMENT OF TRANSPORTATION STANDARD DRAWING

EROSION CONTROL AT CULVERT OUTLETS

DESIGNED BY TM DRAWN BY SKL CHECKED BY YML

602-02-1/1

1 of 1