PALMETTO BAY VILLAGE HALL

Palmetto Bay, Florida

Project Team & Information

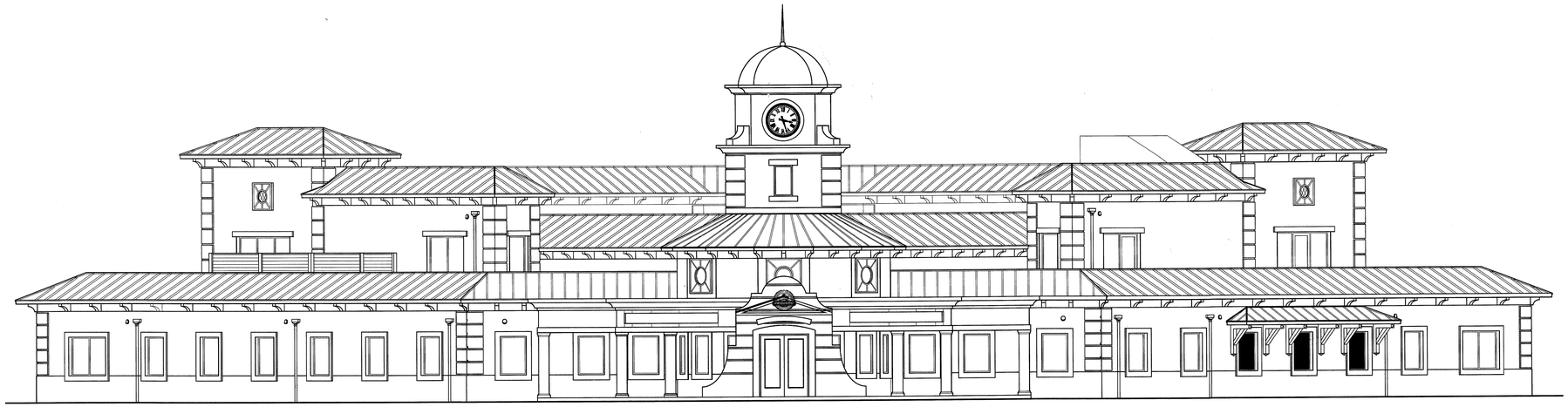

Contractor:	MASTER BUILDERS OF SOUTH FLORIDA, INC. 1400 E. Oakland Park Blvd., Suite 210 Oakland Park, FL 33334 Telephone: 954-563-8953 Fax: 954-563-8043 CURRENT BUILDERS 2251 Blount Road Pompano Beach, FL 33069 Telephone: 954-977-4211 Fax: 954-978-4658
Architect:	JMWA ARCHITECTS 949 Clint Moore Road Boca Raton, Florida 33487 Telephone: 561-997-9997 Fax: 561-997-1610 Web: www.jmwa.net
Structural:	O'DONNELL, NACCARATO, MIGNOGNA & JACKSON, INC. 321 15th Street, Suite 200 West Palm Beach, FL 33401 Telephone: 561-835-9994 Fax: 561-835-8255 Web: www.onmj.net
Electrical Plumbing Mechanical Engineer:	TLC ENGINEERING FOR ARCHITECTURE 800 Fairway Drive, Suite 250 Deerfield Beach, FL 33441 Telephone: 954-418-9096 Fax: 954-418-9296 Web: www.tlc-engineers.com
Civil Engineer:	CAMERO & ASSOCIATES, INC. 7400 S.W. 50th Terrace, Suite 204 Miami, FL 33155 Telephone: 305-665-7602 Fax: 305-665-8488 Web: www.cameroengineers.com

PROJECT INFORMATION

1. PROPOSED PROJECT:
   24,405 SQUARE FOOT 2 STORY VILLAGE HALL BUILDING CONSTRUCTED OF CONCRETE FLOOR AND ROOF DECKS AND MASONRY WALLS WITH STEEL COLUMNS.

2. GOVERNING CODE:
   FLORIDA BUILDING CODE, 2007 EDITION WITH 2009 AMENDMENTS
   FLORIDA FIRE PREVENTION CODE, 2007 EDITION

3. TYPE OF CONSTRUCTION:
   TYPE V-B "FULLY SPRINKLERED"

4. OCCUPANCY DESCRIPTION:
   MIXED OCCUPANCY WITH NONSEPARATED OCCUPANCIES PER FBC SECTION 508.3.2 INCLUDING BUSINESS OCCUPANCY AND ASSEMBLY OCCUPANCY WITH ASSEMBLY BEING MOST RESTRICTIVE.

PROPERTY INFORMATION

Location Address:
9705 E. Hibiscus Street
Palmetto Bay, FL 33157 (1)

Folio Number:
33-5032-004-3120

Official Records Book:

Municipality:
Palmetto Bay

Subdivision:

LEGAL DESCRIPTION

32 55 40 PERRINE SUB PB B-79 LOTS 1 THRU 7 BLK 41

LOT SIZE 113100 SQUARE FEET OR 19755-0471 0601 1 F/A/U 30-5032-044-3120

PROJECT LOCATION

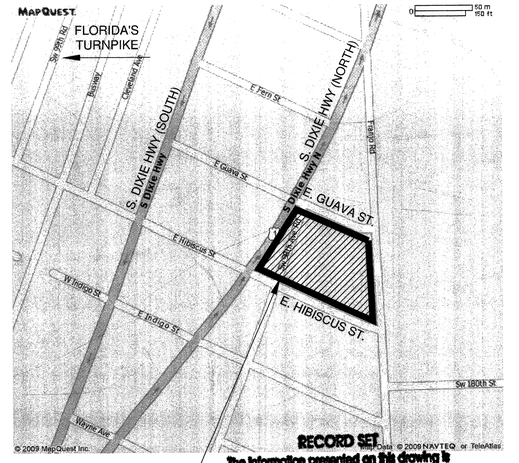

SITE LOCATION

The information presented on this drawing is diagrammatic and is presented for general information purposes and should not be relied on for accuracy of dimensions, details and locations. Actual and exact conditions if required should be determined in the field.

NORTH

JMWA ARCHITECTS

STEVEN E. MYOTT AIA
JAMES R. WILLIAMS AIA
RODOLFO ACEVEDO AIA

949 CLINT MOORE ROAD
BOCA RATON, FLORIDA 33487
TEL 561 997 9997
FAX 561 997 1610

WWW.JMWA.NET

PALMETTO BAY VILLAGE HALL
9705 E. Hibiscus St., Palmetto Bay, Florida

Master Builders of South Florida, Inc.
1400 E. Oakland Park Blvd. Suite 210
Oakland Park, FL 33334

FLORIDA LICENSURE

AAC002193 IB0001142

PROJECT NO.	8714.00
DESIGNED BY:	RA
DRAWN BY:	DW / FK / JS
CHECKED BY:	JW

SUBMITTALS:
BUILDING PERMIT 03.05.2010

REVISIONS:
(1) PERMIT COMMENTS 04.02.10

COVERSHEET - PROJECT TEAM AND INFORMATION

A001

© 2009 JMWA ARCHITECTS, INCORPORATED ALL RIGHTS RESERVED. NO PART OF THESE IDEAS, PLANS OR DESIGNS MAY BE REPRODUCED, COPIED OR UTILIZED GRAPHICALLY IN ANY FORM WHATSOEVER WITHOUT THE EXPRESSED WRITTEN CONSENT OF JMWA ARCHITECTS INCORPORATED AND ITS BOARD OF DIRECTORS.

S:\Projects\8700\8714\8714_Drawings\8714_Current\8714_A001_Coversheet and Project Information.dwg 4/9/2010 9:14:28 AM ekutterer

PALMETTO BAY VILLAGE HALL

Palmetto Bay, Florida

Drawing Index

DRAWING INDEX

SHEET #		DRAWING NAME	PERMIT SET 03.05.2010	PERMIT COM. 04.02.2010	ASI 2 06.22.2010	OWNER REV. 07.07.2010	OWNER REV. 07.27.2010	DESIGN CHG 08.11.2010	OWNER REV. 07.27.2010
ARCHITECTURAL									
1	A001	COVERSHEET - PROJECT TEAM AND INFORMATION	X	X					
2	A002	DRAWING INDEX	X	X		X	X		X
3	A003	ABBREVIATIONS AND SYMBOLS	X						
4	A004	ACCESSIBILITY DETAILS	X	X					
5	A101	ARCHITECTURAL SITE PLAN	X	X					
6	A102	SITE DETAILS	X	X					
7	A121	LIFE SAFETY PLAN - FIRST FLOOR	X	X		X	X		
8	A122	LIFE SAFETY PLAN - SECOND FLOOR	X	X		X			
9	A201	FIRST FLOOR PLAN	X	X		X	X		
10	A202	SECOND FLOOR PLAN	X	X		X	X		X
11	A221	FIRST FLOOR REFLECTED CEILING PLAN	X			X	X		X
12	A222	SECOND FLOOR REFLECTED CEILING PLAN	X			X			X
13	A301	ROOF PLAN AND NOTES	X	X					
14	A302	ROOF DETAILS	X						
15	A303	ROOF DETAILS, CONT'D	X	X					
16	A401	ENLARGED FLOOR PLANS - RESTROOMS	X	X	X				
17	A401a	ENLARGED FLOOR PLANS - RESTROOMS				X			
18	A501	EXTERIOR ELEVATIONS	X				X		
19	A502	EXTERIOR ELEVATIONS	X				X		
20	A503	EXTERIOR ELEVATIONS	X				X		
21	A601	BUILDING SECTIONS	X			X			
22	A611	WALL SECTIONS	X						
23	A612	WALL SECTIONS	X						
24	A613	WALL SECTIONS	X						
25	A701	ENLARGED STAIR AND ELEVATOR PLANS	X	X					
26	A702	STAIR AND ELEVATOR SECTIONS	X	X					
27	A703	STAIR AND ELEVATOR DETAILS	X	X					
28	A801	DOOR SCHEDULE AND NOTES	X	X		X	X		X
29	A802	WINDOW SCHEDULE AND NOTES	X			X	X		
30	A803	DOOR AND WINDOW DETAILS	X						
31	A804	CEILING AND WALL ASSEMBLY DETAILS	X				X		
32	A805	ELEVATION DETAILS	X						
33	A806	FIRE RATED ASSEMBLY DETAILS	X						
34	A807	FIRE RATED ASSEMBLY DETAILS	X						
35	A901	ROOM FINISH SCHEDULE	X			X	X		
36	A902	FINISH SPECIFICATIONS	X			X	X		
37	A903	FIRST FLOOR FINISH PLAN	X			X	X		
38	A904	SECOND FLOOR FINISH PLAN	X			X	X		
39	A905	INTERIOR ELEVATIONS	X			X			
40	A906	INTERIOR ELEVATIONS	X	X		X			
41	A907	INTERIOR ELEVATIONS	X			X	X		
42	A908	MILLWORK DETAILS	X			X			

DRAWING INDEX, CONT'D

SHEET #		DRAWING NAME	PERMIT SET 03.05.2010	PERMIT COM. 04.02.2010	ASI 2 06.22.2010	OWNER REV. 07.07.2010	OWNER REV. 07.27.2010	DESIGN CHG 08.11.2010	OWNER REV. 07.27.2010
STRUCTURAL									
1	S-1	FOUNDATION PLAN	X	X					
2	S-1D	DIMENSION PLAN	X						
3	S-2	SECOND FLOOR FRAMING PLAN	X	X					
4	S-3	ROOF FRAMING PLAN	X	X					
5	S-4.1	NOTES & SCHEDULES	X						
6	S-4.2	TYPICAL DETAILS	X						
7	S-4.3	WIND LOADS	X						
8	S-5.1	SECTIONS	X	X					
9	S-5.2	SECTIONS	X	X					
10	S-5.3	SECTIONS	X						
MECHANICAL									
1	M0.1	HVAC LEGEND AND GENERAL NOTES	X						X
2	M0.2	HVAC SCHEDULES	X	X					
3	M0.3	HVAC CALCULATIONS	X						X
4	M0.4	HVAC CALCULATIONS							X
5	M2.1	HVAC FIRST FLOOR PLAN	X	X					X
6	M2.2	HVAC SECOND FLOOR PLAN	X						X
7	M2.3	HVAC ROOF PLAN	X						X
8	M2.4	HVAC PIPING FIRST FLOOR PLAN							X
9	M2.5	HVAC PIPING SECOND FLOOR PLAN							X
10	M5.1	HVAC DETAILS	X						X
11	M5.2	HVAC DETAILS	X						X
12	M5.3	HVAC DETAILS	X						X
13	M6.1	HVAC CONTROLS	X						X
14	M6.2	HVAC CONTROLS	X						X
ELECTRICAL									
1	E0.1	ELECTRICAL LEGEND	X						
2	E0.2	ELECTRICAL GENERAL NOTES	X						
3	E1.1	ELECTRICAL SITE PLAN	X	X					
4	E2.1	ELECTRICAL FIRST FLOOR LIGHTING PLAN	X	X					X
5	E2.2	ELECTRICAL SECOND FLOOR LIGHTING PLAN	X						X
6	E3.1	ELECTRICAL FIRST FLOOR POWER PLAN	X	X					X
7	E3.2	ELECTRICAL SECOND FLOOR POWER PLAN	X						X
8	E3.3	ELECTRICAL ENLARGED PLANS	X	X					X
9	E4.1	ELECTRICAL FIRST FLOOR FIRE ALARM PLAN	X	X					X
10	E4.2	ELECTRICAL SECOND FLOOR FIRE ALARM PLAN	X						X
11	E5.1	ELECTRICAL ROOF PLAN	X						X
12	E6.1	ELECTRICAL RISER DIAGRAM	X	X					X
13	E6.2	SYSTEMS RISER DIAGRAMS	X	X					
14	E6.3	SYSTEMS RISER DIAGRAMS	X						
15	E7.1	ELECTRICAL DETAILS	X						
16	E7.2	ELECTRICAL DETAILS	X						
17	E7.3	ELECTRICAL DETAILS	X						
18	E7.4	ELECTRICAL DETAILS	X						
19	E7.5	ELECTRICAL DETAILS	X						
20	E7.6	ELECTRICAL DETAILS	X						

DRAWING INDEX, CONT'D

SHEET #		DRAWING NAME	PERMIT SET 03.05.2010	PERMIT COM. 04.02.2010	ASI 2 06.22.2010	OWNER REV. 07.07.2010	OWNER REV. 07.27.2010	DESIGN CHG 08.11.2010	OWNER REV. 07.27.2010
ELECTRICAL, CONT'D									
21	E8.1	ELECTRICAL SCHEDULES	X	X					X
22	E8.2	ELECTRICAL PANEL SCHEDULES	X	X					X
23	E8.3	ELECTRICAL PANEL SCHEDULES	X						X
PLUMBING									
1	P0.1	PLUMBING LEGEND, NOTES AND SYMBOLS	X	X					
2	P0.2	PLUMBING SCHEDULES	X						X
3	P1.1	PLUMBING SITE PLAN	X						X
4	P1.2	PLUMBING FOUNDATION PLAN	X	X					
5	P2.1	PLUMBING FIRST FLOOR PLAN - SANITARY	X	X					
6	P2.2	PLUMBING FIRST FLOOR PLAN - WATER	X	X					X
7	P2.3	PLUMBING SECOND FLOOR PLAN - SANITARY	X						
8	P2.4	PLUMBING SECOND FLOOR PLAN - WATER	X						X
9	P2.5	PLUMBING ROOF PLAN	X						
10	P3.1	PLUMBING WATER RISER DIAGRAM		X					
11	P3.2	PLUMBING SANITARY RISER DIAGRAM		X					
12	P3.3	PLUMBING STORM RISER DIAGRAM		X					
13	P3.4	NON-POTABLE WATER RISER							X
14	P5.1	PLUMBING DETAILS	X						
15	P5.2	PLUMBING DETAILS	X						X
16	P5.3	PLUMBING DETAILS	X						X
17	P5.4	PLUMBING DETAILS	X						
FIRE PROTECTION									
1	FP0.1	FIRE PROTECTION LEGEND, NOTES AND SYMBOLS	X						X
2	FP1.1	FIRE PROTECTION SITE PLAN	X						
3	FP2.1	FIRE PROTECTION FIRST FLOOR PLAN	X						X
4	FP2.2	FIRE PROTECTION SECOND FLOOR PLAN	X						X
5	FP3.1	FIRE PROTECTION DETAILS	X						
6	FP3.2	FIRE PROTECTION DETAILS	X						X

DRAWING INDEX, CONT'D

SHEET #		DRAWING NAME	PERMIT SET 03.05.2010	PERMIT COM. 04.02.2010	ASI 2 06.22.2010	OWNER REV. 07.07.2010	OWNER REV. 07.27.2010	DESIGN CHG 08.11.2010	OWNER REV. 07.27.2010
TECHNOLOGY									
1	T0.1	TECHNOLOGY LEGEND	X						
2	T1.1	TECHNOLOGY SITE PLAN	X						
3	T2.1	VOICE / DATA FIRST FLOOR PLAN	X						X
4	T2.2	VOICE / DATA SECOND FLOOR PLAN	X						X
5	T2.3	VOICE / DATA ROOF PLAN	X						
6	T3.1	AUDIO / VIDEO & SECURITY FIRST FLOOR PLAN	X						X
7	T3.2	AUDIO / VIDEO & SECURITY SECOND FLOOR PLAN	X						X
8	T4.1	TECHNOLOGY ENLARGED PLANS	X						
9	T5.1	TECHNOLOGY RACK ELEVATIONS	X						
10	T5.2	TECHNOLOGY RACK ELEVATIONS	X						
11	T6.1	TECHNOLOGY RISER DIAGRAMS	X						
12	T6.2	TECHNOLOGY RISER DIAGRAMS	X						
13	T6.3	TECHNOLOGY RISER DIAGRAMS	X						
14	T6.4	TECHNOLOGY RISER DIAGRAMS	X						
15	T6.5	TECHNOLOGY RISER DIAGRAMS	X						
16	T7.1	TECHNOLOGY DETAILS	X						
17	T7.2	TECHNOLOGY DETAILS	X						
18	T7.3	TECHNOLOGY DETAILS	X						
19	T7.4	TECHNOLOGY DETAILS	X						
20	T7.5	TECHNOLOGY DETAILS	X						
21	T7.6	TECHNOLOGY DETAILS	X						
22	T7.7	TECHNOLOGY DETAILS	X						
23	T7.8	TECHNOLOGY DETAILS	X						
24	T7.9	TECHNOLOGY DETAILS	X						
25	T7.10	TECHNOLOGY DETAILS	X						
26	T7.11	TECHNOLOGY DETAILS	X						
27	T7.12	TECHNOLOGY DETAILS	X						
CIVIL									
1	C-1	PAVING AND DRAINAGE PLAN	X						
2	C-1A	EROSION AND SEDIMENTATION PLAN	X						
3	C-1B	DETAILS	X						
4	C-1C	STORM WATER POLLUTION PREVENTION PLAN	X						
5	C-1D	PAVEMENT MARKING AND SIGNING PLAN	X						
6	C-2	PAVEMENT MARKING AND SIGNING PLAN	X						
7	C-3	DETAILS	X						
8	C-4	WATER AND SEWER PLAN	X						
9	C-5	NOTES	X						
SURVEY									
1	-	SURVEY	X						

Cistern Landscape

RECORD SET

The information presented on this drawing is diagrammatic and is presented for general information purposes and should not be relied on for accuracy of dimensions, details and locations. Actual and exact conditions if required should be determined in the field.

JMWA ARCHITECTS

STEVEN E. MYOTT AIA
JAMES R. WILLIAMS AIA
RODOLFO ACEVEDO AIA

949 CLINT MOORE ROAD
BOCA RATON, FLORIDA 33487
TEL 561 997 9997
FAX 561 997 1610

WWW.JMWA.NET

PALMETTO BAY VILLAGE HALL
9705 E. Hibiscus St., Palmetto Bay, Florida

Master Builders of South Florida, Inc.
1400 E. Oakland Park Blvd. Suite 210
Oakland Park, FL 33334

FLORIDA LICENSURE

AAC002193 IB0001142

PROJECT NO. 8714.00
DESIGNED BY: RA
DRAWN BY: DW / EK / JS
CHECKED BY: JW

SUBMITTALS:
BUILDING PERMIT 03.05.2010

REVISIONS:
1 PERMIT COMMENTS 04.02.10
2 OWNER REVISIONS 06.22.10
3 OWNER REVISIONS 07.07.10
4 DESIGN CHANGES 08.11.10
5 OWNER REVISIONS 07.27.10

DRAWING INDEX

A002

© 2009 JMWA ARCHITECTS, INCORPORATED ALL RIGHTS RESERVED. NO PART OF THESE IDEAS, PLANS OR DESIGNS MAY BE REPRODUCED, COPIED OR UTILIZED GRAPHICALLY IN ANY FORM WHATSOEVER WITHOUT THE EXPRESSED WRITTEN CONSENT OF JMWA ARCHITECTS INCORPORATED AND ITS BOARD OF DIRECTORS.

S:\Projects\8700\8714\8714_Drawings\8714_Current\8714_A002_Drawing Index.dwg
8/12/2010 2:08:22 PM ekutterer

ARCHITECTURAL SYMBOLS

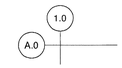

BUILDING GRID LINES

BUILDING SECTION LINE

WALL SECTION

DETAIL REFERENCE

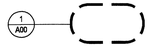

DETAIL REFERENCE

INTERIOR ELEVATION REFERENCE

EXTERIOR ELEVATION REFERENCE

DRAWING REFERENCE NUMBER
DRAWING NAME & SCALE

FIRE EXTINGUISHER CABINET

NORTH ARROW

DOOR REFERENCE NUMBER

ROOM NAME AND NUMBER

ASSEMBLY REFERENCE
(INT. WALL ASSEMBLY; REF. A804)

ELEVATION TARGET

WINDOW TYPE

KEYED NOTE

EMERGENCY LIGHT FIXTURES

MATERIAL SYMBOLS

EARTH

SAND

GRAVEL

CONCRETE

CONCRETE MASONRY

BRICK

STEEL

PLYWOOD

FRAMING LUMBER

FINISHED LUMBER / MDF

BATT INSULATION

RIGID INSULATION

EXT. INSUL. FINISH SYSTEM

GYPSUM WALL BOARD/
TILE BACKER BOARD

GYPSUM SHEATHING

ABBREVIATIONS

AB	ANCHOR BOLT AIR
A/C	CONDITIONING
ACT	ACOUSTICAL TILE
AD	AREA DRAIN
ADD	ADDENDUM
ADH	ADHESIVE ABOVE
AFL	FLOOR LINE
AGG	AGGREGATE
ALT	ALTERNATE
ALUM	ALUMINUM
ANOD	ANODIZED ACCESS
AP	PANEL
ARCH	ARCHITECT(URAL)
AUTO	AUTOMATIC
B.	
BATT	BOTTOM OF
BD	BATT INSULATION
BIT	BOARD
BLDG	BITUMINOUS
BM	BUILDING
BOT	BENCH MARK, BEAM
BP	BOTTOM
BRZ	BUILDING PAPER
BS	BRONZE
	BOTH SIDES
CB	CATCH BASIN
CC	COLORED CONCRETE
CCTV	CLOSED CIRCUIT TV
CEM	CEMENT
CF	CUBIC FOOT
CFCI	CONTRACTOR FURNISHED, CONTRACTOR INSTALLED
CG	CORNER GUARD
CH	CEILING HEIGHT
CI	CAST IRON
CJ	CONTROL JOINT
CLG	CEILING
CLR	CLEAR(ANCE)
CMU	CONCRETE MASONRY UNIT
COL	COLUMN
CONC	CONCRETE
CONST	CONSTRUCTION
CONT	CONTINUOUS OR CONTINUE
CONTR	CONTRACT(OR)
COORD	COORDINATE
CRS	COURSE(S)
CS	CONCRETE SEALED
CSMT	CASEMENT
CT	CERAMIC TILE
CTR	CENTER
CX	CONNECTION
CY	CUBIC YARD
DA	DOUBLE ACTING
DEM	DEMOLISH, DEMOLITION
DEP	DEPRESSED
DF	DRINKING FOUNTAIN
DIA	DIAMETER
DIAG	DIAGONAL
DIM	DIMENSION
DISP	DISPENSER
DIV	DIVISION
DL	DEAD LOAD
DMT	DEMOUNTABLE
DN	DOWN
DP	DAMPPROOFING
DP	DIMENSION POINT
DR	DOOR
DS	DOWNSPOUT
DT	DRAIN TILE
DTL	DETAIL
DWG	DRAWING(S)
DWR	DRAWER
E	EAST
EA	EACH
EB	EXPANSION BOLT
EJ	EXPANSION JOINT
EL	ELEVATION
ELEC	ELECTRIC(AL)
EM	EMERGENCY
ER	ENCLOSE(URE)
ENCL	ELECTRICAL PANEL BOARD
EP	ETHYLENE PROPYLENE
EPDM	DIENE MONOMER
EPS	EXPANCED POLYSTYRENC BOARD
EQ	EQUAL
EQUIP	EQUIPMENT
EST	ESTIMATE
EX.	EXISTING
EXH	EXHAUST
EXP	EXPANSION
EXP	EXPOSED
EXT	EXTERIOR
FA	FIRE ALARM FLUID APPLIED
FAF	FLOORING FLOOR DRAIN,
FD	FIRE DAMPER FIRE
FE	EXTINGUISHER FIRE
FEC	EXTINGUISHER CABINET
FF	FINISH FLOOR
FGL	FIBERGLASS FIRE HOSE
FHC	CABINET
FHMS	FLATHEAD MACHINE SCREW
FHWS	FLATHEAD WOOD SCREW
FIN	FINISH(ED)
FLASH'G	FLASHING
FLCO	FLOOR CLEANOUT
FLR	FLOOR(ING)
FLUOR	FLUORESCENT
FND	FOUNDATION
FOC	FACE OF CONCRETE
FOS	FACE OF STEEL
FOW	FACE OF WALL
FP	FIREPROOFING
FR	FRAME(D), (ING)
FRT	FIRE RETARDENT TREATED
FS	FULL SIZE, FLAME SPREAD
FTG	FOOTING
GA	GAGE, GAUGE
GALV	GALVANIZED
GB	GRAB BAR
GB GI	GYPSUM BOARD
	GALVANIZED IRON
GL	GLASS, GLAZING
GP	GALVANIZED PIPE
GSS	GALVANIZED STEEL SHEET
GYP	GYPSUM
GYP BD	GYPSUM BOARD
HB	HOSE BIB
HBD	HARDBOARD
HC	HOLLOW CORE
HD	HEAVY DUTY
HDR	HEADER
HDW	HARDWAR
HM	HOLLOW METAL
HOR	HORIZONTAL
HORIZ	HORIZONTAL
HR	HOUR
HT	HEIGHT
HTG	HEATING
HVAC	HEATING, VENTILATING, AIR CONDITIONING
HWD	HARDWOOD HOT
HWH	WATER HEATER
ID	INTERIOR DESIGN
INCL	INCLUDE(D), (ING)
INSUL	INSULATE(D), (ION)
INT	INTERIOR
JAN	JANITOR
JC	JANITOR'S CLOSET
JT	JOINT
LAM	LAMINATE(D)
LAV	LAVATORY
LH	LEFT HAND
LW	LIGHTWEIGHT
MANF.	MANUFACTURE(R)
MAX	MAXIMUM
MB	MACHINE BOLT
MDF	MEDIUM DENSITY FIBERBOARD
MECH	MECHANIC(AL)
M.EX.	MATCH EXISTING
MEZZ	MEZZANINE
MGR MH	MANAGER MANHOLE
MIN	MINIMUM
MISC	MISCELLANEOUS
ML	MATCH LINE
MO	MASONRY OPENING
MOD	MODULAR METAL PANEL
MP MR	MOISTURE RESISTANT
MRGWB	MOISTURE RESISTANT GYPSUM WALL BOARD
MTL	METAL
MULL	MULLION
MWP	MEMBRANE WATERPROOFING
N	NORTH
NAT	NATURAL
NIC	NOT IN CONTRACT
NOM	NOMINAL
NTS	NOT TO SCALE
OA	OVERALL
OBS	OBSCURE
OC	ON CENTER(S)
OD	OUTSIDE DIAMETER
OFCI	OWNER FURNISHED CONTRACTOR INSTALLED
OH	OVERHEAD
OHMS	OVALHEAD MACHINE SCREW
OHWS	OVALHEAD WOOD SCREW
OPG	OPENING
OPP	OPPOSITE
P LAM	PLASTIC LAMINATE
PAR	PARAPET
PC	PORTLAND CEMENT/ PRECAST CONCRETE
PERF	PERFORATE(D)
PL	PLATE, PROPERTY LINE
PLAT	PLATFORM
PNL	PANEL
PNT	PAINT(ED)
POB	POINT OF BEGINNING
PP	PREPAINTED
PROP	PROPOSED
PSF	POUNDS PER SQUARE FOOT
PSI	POUNDS PER SQUARE INCH
PT	PRESSURE TREATED
PTN	PARTITION POLYVINYL
PVC	CHLORIDE
PWD	PLYWOOD
QT	QUARRY TILE
R	RISER
RA	RETURN AIR
RAD	RADIUS
RD	ROOF DRAIN
REF	REFERENCE
REFR	REFRIGERATOR
REINF.	REINFORCED (ING)
REQ	REQUIRED
REQ'D	REQUIRED
REV	REVISION(S), REVISED
RH	RIGHT HAND ROOM
RM	ROUND ROUGH
RND RO	OPENING
S	SOUTH
SC	SOLID CORE
SCHED	SCHEDULE
SEC	SECTION
SIM	SIMILAR
SL	SLEEVE
SOH	SIMILAR OPPOSIT HAND
SP	SOLID POLYMER SURFACE
SPEC	SPECIFICATION(S)
SQ	SQUARE
SS	STAINLESS STEEL
STD	STANDARD
STL	STEEL
STR	STRUCTURAL
SUSP	SUSPENDED
SUPP	SUPPLEMENT, SUPPLY
SV	SHEET VINYL
T.	TOP OF
T	TREAD,
T&G	TONGUE AND GROOVE
TB	TOWEL BAR
TEL	TELEPHONE
TEMP	TEMPERED
TKBD	TACKBOARD
TOC	TOP OF CURB
T.O.P.	TOP OF PLATE
TS	TUBE SECTION
TV	TELEVISION
TW	TOP OF WALL
TYP	TYPICAL
U.N.O.	UNLESS NOTED OTHERWISE
VB	VAPOR BARRIER
VCT	VINYL COMPOSITION TILE
VERT	VERTICAL
VG	VERTICAL GRAIN
VS	VINYL STRINGER
VT	VINYL TREAD
W	WEST
W	WIDTH, WIDE
W/	WITH
WC	WALL COVERING
WD	WOOD
W/O	WITHOUT
WP	WATERPROOF(ING)
W.PANEL	WOOD PANELING
WS	WATERSTOP
WWF	WELDED WIRE FABRIC
&	AND
@	AT
℄	CENTER LINE
⊥	PERPENDICULAR
ℙ	PLATE, PROPERTY LINE
%	PERCENT
∠	ANGLE
Ø	DIAMETER,ROUND
□	SQUARE
°	DEGREE
#	POUND, NUMBER

GENERAL CONDITIONS

A. TRADE NAMES ARE SPECIFIED TO ESTABLISH A MINIMUM STANDARD OF QUALITY. EQUIVALENT PRODUCTS MAY BE ACCEPTED SUBJECT TO ARCHITECT'S APPROVAL.

B. IF THERE IS A DISCREPANCY BETWEEN ARCHITECTURAL AND ENGINEERING SPECIFICATIONS OR DRAWINGS, THEN ENGINEERING SHALL BE FOLLOWED UNLESS ARCHITECTURAL DESIGN IS AFFECTED, THEN CONTACT THE ARCHITECT.

C. TOLERANCES SHALL BE PER PUBLISHED INDUSTRY STANDARDS.

TEMPORARY FACILITIES:

A. TEMPORARY ELECTRICAL FACILITIES SHALL BE PROVIDED BY THE ELECTRICAL SUBCONTRACTOR WITHIN 10 DAYS OF COMMENCEMENT.

B. TEMPORARY WATER FACILITIES SHALL BE PROVIDED BY THE PLUMBING SUBCONTRACTOR WITHIN 10 DAYS OF COMMENCEMENT.

C. TEMPORARY TOILET FACILITIES SHALL BE PROVIDED BY GENERAL CONTRACTORS.

D. ALL TEMPORARY FACILITIES SHALL BE COORDINATED W/ OWNER'S REQUIREMENTS.

SAFETY AND FIRST AID:

A. EACH SUBCONTRACTOR SHALL BE RESPONSIBLE FOR THE SAFETY AND WELL BEING OF HIS EMPLOYEES, AND HIS WORK SHALL BE KEPT SAFE TO VISITORS AND OTHER JOB SITE WORKERS. HE SHALL INITIATE AND MAINTAIN ALL SAFETY PROGRAMS, INCLUDING THAT AS GOVERNED BY O.S.H.A.

CLEANUP AND TRASH REMOVAL:

A. ALL CONTRACTORS SHALL BE RESPONSIBLE FOR KEEPING A SAFE CLEAN WORKING ENVIRONMENT.

B. ALL CONSTRUCTION DEBRIS AND TRASH SHALL BE STORED IN APPROVED CONTAINERS AND REMOVED FROM THE SITE ON A REGULAR BASIS.

C. CONSTRUCTION DEBRIS SHALL BE HANDLED IN ACCORDANCE W/ LEED REQUIREMENTS.

PERMITS:

A. ALL BUILDING PERMITS, OTHER PERMITS, AND FEES SHALL BE OBTAINED BY THE G.C. G.C. MAY ELECT TO EMPLOY A PERMIT EXPEDITER TO OBTAIN PERMITS.

CODES:

A. ALL WORK SHALL COMPLY WITH THE 2007 FLORIDA BUILDING CODE AND ALL APPLICABLE LOCAL ZONING CODES AND ORDINANCES.

GENERAL NOTES

1. ALL WORK BY ALL TRADES TO BE COMPLETED IN ACCORDANCE WITH ALL APPLICABLE CODES, ORDINANCES, STANDARDS, OR RESTRICTIONS, WHETHER INDICATED ON THE PLANS OR NOT.

2. CONTRACTOR TO VERIFY THAT ALL REQUIRED APPROVALS PERTAINING TO THE PROJECT HAVE BEEN SATISFIED PRIOR TO COMMENCEMENT OF CONSTRUCTION.

3. VERIFY ALL DIMENSIONS IN THE FIELD PRIOR TO BEGINNING CONSTRUCTION. USE FIGURED DIMENSIONS ONLY, DO NOT SCALE THE DRAWINGS. (NOTIFY ARCHITECT IMMEDIATELY OF ANY VARIATIONS ON THE CONSTRUCTION DOCUMENTS AND OR SPECIFICATIONS).

4. APPLY AND/OR INSTALL ALL PRODUCTS AND MATERIALS ACCORDING TO MANUFACTURER'S PUBLISHED INSTRUCTIONS OR, IF NO INSTRUCTIONS EXIST, INSTALL PER STANDARD INDUSTRY PRACTICE.

5. DIMENSIONS ARE TO FACE OF DRYWALL AND CONCRETE PANEL OR TO CENTERLINE OF COLUMNS AND OPENINGS U.N.O.

6. ALL WINDOW AND DOOR SIZES ARE NOMINAL. VERIFY MANUFACTURER'S ACTUAL AND ROUGH OPENING DIMENSIONS.

7. ALL WINDOWS AND EXTERIOR DOORS SHALL BE WEATHER STRIPPED. WINDOW UNITS SHALL DISPLAY LABELS SHOWING COMPLIANCE WITH THE APPLICABLE CODES.

8. CONTRACTOR'S SCOPE OF WORK INCLUDES ALL CONSTRUCTION NECESSARY TO ACCOMPLISH THE INTENDED RESULT. IT IS NOT THE INTENT OF THESE PLANS TO SHOW EVERY DETAIL OF CONSTRUCTION.

9. NO CHANGES OR SUBSTITUTIONS SHALL BE MADE WITHOUT WRITTEN APPROVAL FROM THE ARCHITECT.

10. SHOULD THE SCOPE OF WORK FOR ANY REASON NOT BE FULLY INDICATED ON THE CONTRACT DOCUMENTS THE ARCHITECT SHOULD BE CONTACTED IMMEDIATELY.

11. THE CONTRACTOR SHALL BE RESPONSIBLE FOR OBTAINING AND DISTRIBUTING ALL CURRENT DRAWINGS TO ALL SUBCONTRACTORS AND VENDORS DURING THE DURATION OF THE PROJECT. THE CONTRACTOR SHALL MAINTAIN ON SITE IN A CONVENIENT LOCATION, A COMPLETE SET OF THE SIGNED AND SEALED PERMIT DOCUMENTS, INCLUDING ALL THE LATEST REVISIONS, ADDENDA, SHOP DRAWINGS ,AND SUPPLEMENTAL INFORMATION AS MAY BE REQUIRED FOR PROPER EXECUTION OF THE PROJECT. DRAWINGS SHALL BE LOCKED IN A SECURE LOCATION WHEN NOT IN USE. RECORDS OF ADDITIONAL COPIES OF PORTIONS OR ENTIRE DRAWING SETS SHALL BE MAINTAINED. ALL ADDITIONAL SETS SHALL BE RETURNED TO THE GENERAL CONTRACTOR AND KEPT OUT OF PUBLIC CIRCULATION.

12. THE CONTRACTOR SHALL SCHEDULE AND COORDINATE ALL WORK WITH SUBCONTRACTORS ,SUPPLIERS, VENDORS AND SPECIALTY CONTRACTORS.

13. UPON COMPLETION OF THE PROJECT THE CONTRACTOR SHALL PROVIDE THE ARCHITECT WITH A SET OF AS BUILT PLANS.

14. ALL WOOD IN CONTACT WITH MASONRY TO BE P.T.

15. ALL EXPOSED CONCRETE FLOORS TO BE GROUND DOWN. CAULK ALL JOINTS AND SEAL.

16. PIPES AND WIRE PASSING THROUGH FIRE RATED ASSEMBLIES ARE TO BE PROTECTED AS PER FLORIDA BUILDING CODE.

17. FLAMMABLE AND COMBUSTIBLE MATERIALS, IF USED DURING CONSTRUCTION, SHALL BE HANDLED AND STORED IN ACCORDANCE WITH NFPA 30.

18. BEFORE COMMENCEMENT OF WORK, CONTRACTOR TO COORDINATE ALL BUILDING SYSTEMS WITH EACH OTHER AND WITH EXISTING CONDITIONS AND NOTIFY ARCHITECT OF ANY FORESEEN CONFLICTS.

JMWA
ARCHITECTS
STEVEN E. MYOTT AIA
JAMES R. WILLIAMS AIA
RODOLFO ACEVEDO AIA
949 CLINT MOORE ROAD
BOCA RATON, FLORIDA 33487
TEL 561 997 9997
FAX 561 997 1610
WWW.JMWA.NET

PALMETTO BAY VILLAGE HALL

Palmetto Bay, Florida

Master Builders of South Florida, Inc.
1400 E. Oakland Park Blvd. Suite 210
Oakland Park, FL 33334

FLORIDA LICENSURE

AAC002193 IB0001142

PROJECT NO. 8714.00
DESIGNED BY: RA
DRAWN BY: DW / EK / JS
CHECKED BY: JW

SUBMITTALS:
BUILDING PERMIT 03.05.2010

REVISIONS:

ABBREVIATIONS AND SYMBOLS

A003

© 2009 JMWA ARCHITECTS, INCORPORATED ALL RIGHTS RESERVED. NO PART OF THESE IDEAS, PLANS OR DESIGNS MAY BE REPRODUCED, COPIED OR UTILIZED GRAPHICALLY IN ANY FORM WHATSOEVER WITHOUT THE EXPRESSED WRITTEN CONSENT OF JMWA ARCHITECTS INCORPORATED AND ITS BOARD OF DIRECTORS.

S:\Projects\8700\8714\8714_Drawings\8714_Current\8714_A003_Abbreviations and Symbols.dwg
1/5/2010 3:36:56 PM joses

11-4.1 MINIMUM REQUIREMENTS.

11-4.1.1 APPLICATION.

11-4.1.1(1) GENERAL. THIS CODE ESTABLISHES THE MINIMUM STANDARDS FOR THE ACCESSIBILITY OF BUILDINGS AND FACILITIES BUILT OR ALTERED WITHIN THE STATE.

11-4.1.1(1)(A) ALL AREAS OF NEWLY DESIGNED OR NEWLY CONSTRUCTED BUILDINGS AND FACILITIES REQUIRED TO BE ACCESSIBLE BY §11-4.1.2 AND §11-4.1.3 AND ALTERED PORTIONS OF EXISTING BUILDINGS AND FACILITIES REQUIRED TO BE ACCESSIBLE BY §11-4.1.6 SHALL COMPLY WITH THIS CODE, §11-4.1 THROUGH §11-4.35, UNLESS OTHERWISE PROVIDED IN THIS SECTION OR AS MODIFIED IN A SPECIAL APPLICATION SECTION.

11-4.1.1(1)(B) REMOVAL OF ARCHITECTURAL BARRIERS FROM BUILDINGS, STRUCTURES, OR FACILITIES SHALL COMPLY WITH §11-4.1.8 OF THIS CODE UNLESS COMPLIANCE WOULD RENDER THE REMOVAL NOT READILY ACHIEVABLE. IN NO INSTANCE SHALL THE REMOVAL OF AN ARCHITECTURAL BARRIER CREATE A SIGNIFICANT RISK TO THE HEALTH OR SAFETY OF AN INDIVIDUAL WITH A DISABILITY OR OTHERS.

11-4.1.1(1)(C) NEW SINGLE-FAMILY HOUSES, DUPLEXES, TRIPLEXES, CONDOMINIUMS, AND TOWNHOUSES SHALL COMPLY WITH §11-11 OF THIS CODE.

11-4.1.1(2) APPLICATION BASED ON BUILDING USE. SPECIAL APPLICATION §11-5 THROUGH §11-12 PROVIDE ADDITIONAL REQUIREMENTS FOR RESTAURANTS AND CAFETERIAS, MEDICAL CARE FACILITIES, BUSINESS AND MERCANTILE, LIBRARIES, ACCESSIBLE TRANSIENT LODGING, TRANSPORTATION FACILITIES, RESIDENTIAL BUILDINGS AND THEME PARK ENTERTAINMENT COMPLEXES. WHEN A BUILDING OR FACILITY CONTAINS MORE THAN ONE USE COVERED BY A SPECIAL APPLICATION SECTION, EACH PORTION SHALL COMPLY WITH THE REQUIREMENTS FOR THAT USE.

11-4.1.1(3) AREAS USED ONLY BY EMPLOYEES AS WORK AREAS. AREAS THAT ARE USED ONLY AS WORK AREAS SHALL BE DESIGNED AND CONSTRUCTED SO THAT INDIVIDUALS WITH DISABILITIES CAN APPROACH, ENTER, AND EXIT THE AREAS. THIS CODE DOES NOT REQUIRE THAT ANY AREAS USED ONLY AS WORK AREAS BE CONSTRUCTED TO PERMIT MANEUVERING WITHIN THE WORK AREA OR BE CONSTRUCTED OR EQUIPPED (I.E., WITH RACKS OR SHELVES) TO BE ACCESSIBLE.

11-4.1.1(4) TEMPORARY STRUCTURES. THIS CODE COVERS TEMPORARY BUILDINGS OR FACILITIES AS WELL AS PERMANENT FACILITIES. TEMPORARY BUILDINGS AND FACILITIES ARE NOT OF PERMANENT CONSTRUCTION BUT ARE EXTENSIVELY USED OR ARE ESSENTIAL FOR PUBLIC USE FOR A PERIOD OF TIME. EXAMPLES OF TEMPORARY BUILDINGS OR FACILITIES COVERED BY THIS CODE INCLUDES, BUT ARE NOT LIMITED TO: REVIEWING STANDS, TEMPORARY CLASSROOMS, BLEACHER AREAS, EXHIBIT AREAS, TEMPORARY BANKING FACILITIES, TEMPORARY HEALTH SCREENING SERVICES, OR TEMPORARY SAFE PEDESTRIAN PASSAGEWAYS AROUND A CONSTRUCTION SITE. STRUCTURES, SITES AND EQUIPMENT DIRECTLY ASSOCIATED WITH THE ACTUAL PROCESSES OF CONSTRUCTION, SUCH AS SCAFFOLDING, BRIDGING, MATERIALS HOISTS, OR CONSTRUCTION TRAILERS ARE NOT INCLUDED.

11-4.1.1(5) GENERAL EXCEPTIONS.

11-4.1.1(5)(A) IN NEW CONSTRUCTION, A PERSON OR ENTITY IS NOT REQUIRED TO MEET FULLY THE REQUIREMENTS OF THIS CODE WHERE THAT PERSON OR ENTITY CAN DEMONSTRATE THAT IT IS STRUCTURALLY IMPRACTICABLE TO DO SO. FULL COMPLIANCE WILL BE CONSIDERED STRUCTURALLY IMPRACTICABLE ONLY IN THOSE RARE CIRCUMSTANCES WHEN THE UNIQUE CHARACTERISTICS OF TERRAIN PREVENT THE INCORPORATION OF ACCESSIBILITY FEATURES. IF FULL COMPLIANCE WITH THE REQUIREMENTS OF THIS CODE IS STRUCTURALLY IMPRACTICABLE, A PERSON OR ENTITY SHALL COMPLY WITH THE REQUIREMENTS TO THE EXTENT IT IS NOT STRUCTURALLY IMPRACTICABLE. ANY PORTION OF THE BUILDING OR FACILITY WHICH CAN BE MADE ACCESSIBLE SHALL COMPLY TO THE EXTENT THAT IT IS NOT STRUCTURALLY IMPRACTICABLE.

IF PROVIDING ACCESSIBILITY IN CONFORMANCE WITH THIS SECTION TO INDIVIDUALS WITH CERTAIN DISABILITIES (E.G., THOSE WHO USE WHEELCHAIRS) WOULD BE STRUCTURALLY IMPRACTICABLE, ACCESSIBILITY SHALL NONETHELESS BE ENSURED TO PERSONS WITH OTHER TYPES OF DISABILITIES (E.G., THOSE WHO USE CRUTCHES OR WHO HAVE SIGHT, HEARING, OR MENTAL IMPAIRMENTS) IN ACCORDANCE WITH THIS SECTION.

11-4.1.1(5)(B) ACCESSIBILITY IS NOT REQUIRED IN NON-OCCUPIABLE SPACES ACCESSED ONLY BY LADDERS, CATWALKS, CRAWL SPACES, VERY NARROW PASSAGEWAYS, OR FREIGHT (NON-PASSENGER) ELEVATORS, AND FREQUENTED ONLY BY SERVICE PERSONNEL FOR REPAIR PURPOSES; SUCH SPACES INCLUDE, BUT ARE NOT LIMITED TO, ELEVATOR PITS, ELEVATOR PENTHOUSES, PIPING OR EQUIPMENT CATWALKS.

11-4.1.1(5)(C) THIS EDITION OF THE CODE DOES NOT APPLY TO BUILDINGS, STRUCTURES OR FACILITIES WHICH WERE EITHER UNDER CONSTRUCTION OR UNDER CONTRACT FOR CONSTRUCTION ON OR BEFORE OCTOBER 1, 1997.

11-4.1.2 ACCESSIBLE SITE AND EXTERIOR FACILITIES: NEW CONSTRUCTION.

THIS EDITION OF THE CODE DOES NOT APPLY TO BUILDINGS, STRUCTURES, OR FACILITIES WHICH WERE EITHER UNDER CONSTRUCTION OR UNDER CONTRACT FOR CONSTRUCTION ON OCTOBER 1,1997.

NOTHING IN THIS CODE SHALL BE CONSTRUED TO RELIEVE THE OWNER OF ANY BUILDING, STRUCTURE OR FACILITY FROM THE DUTY TO PROVIDE VERTICAL ACCESSIBILITY TO ALL LEVELS ABOVE AND BELOW THE OCCUPIABLE GRADE LEVEL, REGARDLESS OF WHETHER THE CODE REQUIRES AN ELEVATOR TO BE INSTALLED IN SUCH BUILDING, STRUCTURE OR FACILITY, EXCEPT (1) ELEVATOR PITS, ELEVATOR PENTHOUSES, MECHANICAL ROOMS, PIPING OR EQUIPMENT CATWALKS, AND AUTOMOBILE LUBRICATION AND MAINTENANCE PITS AND PLATFORMS; (2) UNOCCUPIABLE SPACES, SUCH AS ROOMS, ENCLOSED SPACES, AND STORAGE SPACES THAT ARE NOT DESIGNED FOR HUMAN OCCUPANCY, FOR PUBLIC ACCOMMODATIONS, OR FOR WORK AREAS; AND (3) OCCUPIABLE SPACES AND ROOMS THAT ARE NOT OPEN TO THE PUBLIC AND THAT HOUSE NO MORE THAN FIVE PERSONS INCLUDING, BUT NOT LIMITED TO, EQUIPMENT CONTROL ROOMS AND PROJECTION BOOTHS. HOWEVER AS PROVIDED IN SECTION 553.509, FLORIDA STATUTES, BUILDINGS, STRUCTURES, AND FACILITIES MUST, AT A MINIMUM, COMPLY WITH THE REQUIREMENTS OF THE AMERICANS WITH DISABILITIES ACT (ADA) ACCESSIBILITY GUIDELINES. THEREFORE, FACILITIES SUBJECT TO THE ADA MAY BE REQUIRED TO PROVIDE VERTICAL ACCESS TO AREAS OTHERWISE EXEMPT UNDER §11-4.1.3(5)(3) OF THIS CODE.

11-4.1.3(12) STORAGE, SHELVING AND DISPLAY UNITS:

11-4.1.3(12)(A) IF FIXED OR BUILT-IN STORAGE FACILITIES SUCH AS CABINETS, SHELVES, CLOSETS, AND DRAWERS ARE PROVIDED IN ACCESSIBLE SPACES, AT LEAST ONE OF EACH TYPE PROVIDED SHALL CONTAIN STORAGE SPACE COMPLYING WITH §11-4.25. ADDITIONAL STORAGE MAY BE PROVIDED OUTSIDE OF THE DIMENSIONS REQUIRED BY §11-4.25.

11-4.1.3(12)(B) SHELVES OR DISPLAY UNITS ALLOWING SELF-SERVICE BY CUSTOMERS IN MERCANTILE OCCUPANCIES SHALL BE LOCATED ON AN ACCESSIBLE ROUTE COMPLYING WITH §11-4.3. REQUIREMENTS FOR ACCESSIBLE REACH RANGE DO NOT APPLY.

11-4.1.3(13) CONTROLS AND OPERATING MECHANISMS IN ACCESSIBLE SPACES, ALONG ACCESSIBLE ROUTES, OR AS PARTS OF ACCESSIBLE ELEMENTS (FOR EXAMPLE, LIGHT SWITCHES AND DISPENSER CONTROLS) SHALL COMPLY WITH §11-4.27.

11-4.1.3(14) IF EMERGENCY WARNING SYSTEMS ARE PROVIDED, THEN THEY SHALL INCLUDE BOTH AUDIBLE ALARMS AND VISUAL ALARMS COMPLYING WITH §11-4.28. SLEEPING ACCOMMODATIONS REQUIRED TO COMPLY WITH §11-9.3 SHALL HAVE AN ALARM SYSTEM COMPLYING WITH §11-4.28. EMERGENCY WARNING SYSTEMS IN MEDICAL CARE FACILITIES MAY BE MODIFIED TO SUIT STANDARD HEALTH CARE ALARM DESIGN PRACTICE.

11-4.1.3(15) DETECTABLE WARNINGS SHALL BE PROVIDED AT LOCATIONS AS SPECIFIED IN §11-4.29.

11-4.1.3(16) BUILDING SIGNAGE:

11-4.1.3(16)(A) SIGNS WHICH DESIGNATE PERMANENT ROOMS AND SPACES SHALL COMPLY WITH §11-4.30.1, §11-4.30.4, §11-4.30.5 AND §11-4.30.6.

11-4.1.3(16)(B) OTHER SIGNS WHICH PROVIDE DIRECTION TO OR INFORMATION ABOUT FUNCTIONAL SPACES OF THE BUILDING SHALL COMPLY WITH §11-4.30.1, §11-4.30.2, §11-4.30.3, AND §11-4.30.5.

EXCEPTION: BUILDING DIRECTORIES, MENUS, AND ALL OTHER SIGNS WHICH ARE TEMPORARY ARE NOT REQUIRED TO COMPLY.

11-4.1.5 ACCESSIBLE BUILDINGS: ADDITIONS. EACH ADDITION TO AN EXISTING BUILDING OR FACILITY SHALL BE REGARDED AS AN ALTERATION. EACH SPACE OR ELEMENT ADDED TO THE EXISTING BUILDING OR FACILITY SHALL COMPLY WITH THE APPLICABLE PROVISIONS OF §11-4.1.1 TO §11-4.1.3, MINIMUM REQUIREMENTS (FOR NEW CONSTRUCTION) AND THE APPLICABLE TECHNICAL SPECIFICATIONS OF

11-4.2 THROUGH §11-4.35 AND §11-5 THROUGH §11-10. EACH ADDITION THAT AFFECTS OR COULD AFFECT THE USABILITY OF AN AREA CONTAINING A PRIMARY FUNCTION SHALL COMPLY WITH §11-4.1.6(2).

11-4.1.6 ACCESSIBLE BUILDINGS: ALTERATIONS.

THIS EDITION OF THE CODE DOES NOT APPLY TO BUILDINGS, STRUCTURES OR FACILITIES WHICH WERE IN EXISTENCE ON OCTOBER 1,1997, UNLESS:

(I) THE BUILDING, STRUCTURE OR FACILITY IS BEING CONVERTED FROM RESIDENTIAL TO NONRESIDENTIAL OR MIXED USE, AS DEFINED BY LOCAL LAW.
(II) THE PROPOSED ALTERATION OR RENOVATION OF THE BUILDING, STRUCTURE OR FACILITY WILL AFFECT USABILITY OR ACCESSIBILITY TO A DEGREE WHICH INVOKES THE REQUIREMENTS OF §303(A) OF THE AMERICANS WITH DISABILITIES ACT OF 1990, OR
(III) THE ORIGINAL CONSTRUCTION OR ANY FORMER ALTERATION OR RENOVATION OF THE BUILDING, STRUCTURE OR FACILITY WAS CARRIED OUT IN VIOLATION OF APPLICABLE PERMITTING LAW.

11-4.1.6(1) GENERAL. ALTERATIONS TO EXISTING BUILDINGS AND FACILITIES SHALL COMPLY WITH THE FOLLOWING:

11-4.1.6(1)(A) NO ALTERATION SHALL BE UNDERTAKEN WHICH DECREASES OR HAS THE EFFECT OF DECREASING ACCESSIBILITY OR USABILITY OF A BUILDING OR FACILITY BELOW THE REQUIREMENTS FOR NEW CONSTRUCTION AT THE TIME OF ALTERATION.

11-4.1.6(1)(B) IF EXISTING ELEMENTS, SPACES, OR COMMON AREAS ARE ALTERED, THEN EACH SUCH ALTERED ELEMENT, SPACE, FEATURE, OR AREA SHALL COMPLY WITH THE APPLICABLE PROVISIONS OF §11-4.1.1 TO §11-4.1.3 MINIMUM REQUIREMENTS FOR NEW CONSTRUCTION. IF THE APPLICABLE PROVISION FOR NEW CONSTRUCTION REQUIRES THAT AN ELEMENT, SPACE, OR COMMON AREA BE ON AN ACCESSIBLE ROUTE, THE ALTERED ELEMENT, SPACE, OR COMMON AREA IS NOT REQUIRED TO BE ON AN ACCESSIBLE ROUTE EXCEPT AS PROVIDED IN §11-4.1.6(2) (ALTERATIONS TO AN AREA CONTAINING A PRIMARY FUNCTION).

11-4.1.6(1)(C) IF ALTERATIONS OF SINGLE ELEMENTS, WHEN CONSIDERED TOGETHER, AMOUNT TO AN ALTERATION OF A ROOM OR SPACE IN A BUILDING OR FACILITY, THE ENTIRE SPACE SHALL BE MADE ACCESSIBLE.

11-4.1.6(1)(D) NO ALTERATION OF AN EXISTING ELEMENT, SPACE, OR AREA OF A BUILDING OR FACILITY SHALL IMPOSE A REQUIREMENT FOR GREATER ACCESSIBILITY THAN THAT WHICH WOULD BE REQUIRED FOR NEW CONSTRUCTION. FOR EXAMPLE, IF THE ELEVATORS AND STAIRS IN A BUILDING ARE BEING ALTERED AND THE ELEVATORS ARE, IN TURN, BEING MADE ACCESSIBLE, THEN NO ACCESSIBILITY MODIFICATIONS ARE REQUIRED TO THE STAIRS CONNECTING LEVELS CONNECTED BY THE ELEVATOR. IF STAIR MODIFICATIONS TO CORRECT UNSAFE CONDITIONS ARE REQUIRED BY OTHER CODES, THE MODIFICATIONS SHALL BE DONE IN COMPLIANCE WITH THESE GUIDELINES UNLESS TECHNICALLY UNFEASIBLE.

11-4.1.6(1)(E) AT LEAST ONE INTERIOR PUBLIC TEXT TELEPHONE COMPLYING WITH §11-4.31.9 SHALL BE PROVIDED IF:
(I) ALTERATIONS TO EXISTING BUILDINGS OR FACILITIES WITH LESS THAN FOUR EXTERIOR OR INTERIOR PUBLIC PAY TELEPHONES WOULD INCREASE THE TOTAL NUMBER TO FOUR OR MORE TELEPHONES WITH AT LEAST ONE IN AN INTERIOR LOCATION; OR
(II) ALTERATIONS TO ONE OR MORE EXTERIOR OR INTERIOR PUBLIC PAY TELEPHONES OCCUR IN AN EXISTING BUILDING OR FACILITY WITH FOUR OR MORE PUBLIC TELEPHONES WITH AT LEAST ONE IN AN INTERIOR LOCATION.

11-4.1.6(1)(F) IF AN ESCALATOR OR STAIR IS PLANNED OR INSTALLED WHERE NONE EXISTED PREVIOUSLY AND MAJOR STRUCTURAL MODIFICATION ROOM DIMENSIONS ARE NECESSARY FOR SUCH INSTALLATION, THEN A MEANS OF VERTICAL ACCESS SHALL BE PROVIDED THAT COMPLIES WITH THE APPLICABLE PROVISIONS OF §11-4.7, §11-4.8, §11-4.10, OR §11-4.11.

NOTHING IN THIS SECTION SHALL BE CONSTRUED TO RELIEVE THE OWNER OF ANY BUILDING, STRUCTURE OR FACILITY FROM THE DUTY TO PROVIDE VERTICAL ACCESSIBILITY TO ALL LEVELS ABOVE AND BELOW OCCUPIABLE GRADE LEVEL, REGARDLESS OF WHETHER THE CODE REQUIRES AN ELEVATOR TO BE INSTALLED IN SUCH BUILDING, STRUCTURE, OR FACILITY, EXCEPT FOR: (1) ELEVATOR PITS, ELEVATOR PENTHOUSES, MECHANICAL ROOMS, PIPING OR EQUIPMENT CATWALKS, AND AUTOMOBILE LUBRICATION AND MAINTENANCE PITS AND PLATFORMS; (2) UNOCCUPIABLE SPACES, SUCH AS ROOMS, ENCLOSED SPACES, AND STORAGE SPACES THAT ARE NOT DESIGNED FOR HUMAN OCCUPANCY, FOR PUBLIC ACCOMMODATIONS, OR FOR WORK AREAS; AND (3) OCCUPIABLE SPACES AND ROOMS THAT ARE NOT OPEN TO THE PUBLIC AND THAT HOUSE NO MORE THAN FIVE PERSONS INCLUDING, BUT NOT LIMITED TO, EQUIPMENT CONTROL ROOMS AND PROJECTION BOOTHS. HOWEVER, AS PROVIDED IN §553.509, FLORIDA STATUTES, BUILDINGS, STRUCTURES, AND FACILITIES MUST, AT A MINIMUM, COMPLY WITH THE REQUIREMENTS OF THE AMERICANS WITH DISABILITIES ACT (ADA) ACCESSIBILITY GUIDELINES. THEREFORE, FACILITIES SUBJECT TO THE ADA MAY BE REQUIRED TO PROVIDE VERTICAL ACCESS TO AREAS OTHERWISE EXEMPT UNDER §11-4.1.3(5)(3), OF THIS CODE."

11-4.1.6(1)(G) IN ALTERATIONS, THE REQUIREMENTS OF §11-4.1.3(9), §11-4.3.10 AND §11-4.3.11 DO NOT APPLY.

11-4.1.6(1)(H) ENTRANCES: IF A PLANNED ALTERATION ENTAILS ALTERATIONS TO AN ENTRANCE, AND THE BUILDING HAS AN ACCESSIBLE ENTRANCE, THE ENTRANCE BEING ALTERED IS NOT REQUIRED TO COMPLY WITH §11-4.1.3(8), EXCEPT TO THE EXTENT REQUIRED BY §11-4.1.6(2). IF A PARTICULAR ENTRANCE IS NOT MADE ACCESSIBLE, APPROPRIATE ACCESSIBLE SIGNAGE INDICATING THE LOCATION OF THE NEAREST ACCESSIBLE ENTRANCE(S) SHALL BE INSTALLED AT OR NEAR THE INACCESSIBLE ENTRANCE, SUCH THAT A PERSON WITH DISABILITIES WILL NOT BE REQUIRED TO RETRACE THE APPROACH ROUTE FROM THE INACCESSIBLE ENTRANCE.

11-4.1.6(1)(I) IF THE ALTERATION WORK IS LIMITED SOLELY TO THE ELECTRICAL, MECHANICAL, OR PLUMBING SYSTEM, OR TO HAZARDOUS MATERIAL ABATEMENT, OR AUTOMATIC SPRINKLER RETROFITTING, AND DOES NOT INVOLVE THE ALTERATION OF ANY ELEMENTS OR SPACES REQUIRED TO BE ACCESSIBLE UNDER THESE GUIDELINES, THEN §11-4.1.6(2) DOES NOT APPLY.

11-4.1.6(1)(J) EXCEPTION: IN ALTERATION WORK, IF COMPLIANCE WITH §11-4.1.6 IS TECHNICALLY UNFEASIBLE, THE ALTERATION SHALL PROVIDE ACCESSIBILITY TO THE MAXIMUM EXTENT FEASIBLE. ANY ELEMENTS OR FEATURES OF THE BUILDING OR FACILITY THAT ARE BEING ALTERED AND CAN BE MADE ACCESSIBLE SHALL BE MADE ACCESSIBLE WITHIN THE SCOPE OF THE ALTERATION.

TECHNICALLY UNFEASIBLE MEANS, WITH RESPECT TO AN ALTERATION OF A BUILDING OR A FACILITY, THAT IT HAS LITTLE LIKELIHOOD OF BEING ACCOMPLISHED BECAUSE EXISTING STRUCTURAL CONDITIONS WOULD REQUIRE REMOVING OR ALTERING A LOAD-BEARING MEMBER WHICH IS AN ESSENTIAL PART OF THE STRUCTURAL FRAME; OR BECAUSE OTHER EXISTING PHYSICAL OR SITE CONSTRAINTS PROHIBIT MODIFICATION OR ADDITION OF ELEMENTS, SPACES, OR FEATURES WHICH ARE IN FULL AND STRICT COMPLIANCE WITH THE MINIMUM REQUIREMENTS FOR NEW CONSTRUCTION AND WHICH ARE NECESSARY TO PROVIDE ACCESSIBILITY.

11-4.1.6(1)(K) EXCEPTION:

(I) THIS CODE DOES NOT REQUIRE THE INSTALLATION OF AN ELEVATOR IN AN ALTERED FACILITY THAT IS LESS THAN THREE STORIES OR HAS LESS THAN 3,000 SQUARE FEET PER STORY UNLESS THE BUILDING IS A SHOPPING CENTER, A SHOPPING MALL, THE PROFESSIONAL OFFICE OF A HEALTH CARE PROVIDER, OR ANOTHER TYPE OF FACILITY AS DETERMINED BY THE U. S. ATTORNEY GENERAL.

(II) THE EXEMPTION PROVIDED IN PARAGRAPH (I) DOES NOT OBVIATE OR LIMIT IN ANY WAY THE OBLIGATION TO COMPLY WITH THE OTHER ACCESSIBILITY REQUIREMENTS ESTABLISHED IN THIS CODE. FOR EXAMPLE, ALTERATIONS TO FLOORS ABOVE OR BELOW THE GROUND FLOOR MUST BE ACCESSIBLE REGARDLESS OF WHETHER THE ALTERED FACILITY HAS AN ELEVATOR. IF A FACILITY SUBJECT TO THE ELEVATOR EXEMPTION SET FORTH IN PARAGRAPH (I) NONETHELESS HAS A FULL PASSENGER ELEVATOR, THAT ELEVATOR SHALL MEET, TO THE MAXIMUM EXTENT FEASIBLE, THE ACCESSIBILITY REQUIREMENTS OF THIS CODE.
(III) NOTHING IN THIS SECTION SHALL BE CONSTRUED TO RELIEVE THE OWNER OF ANY BUILDING, STRUCTURE OR FACILITY FROM THE DUTY TO PROVIDE VERTICAL ACCESSIBILITY TO ALL LEVELS ABOVE AND BELOW OCCUPIABLE GRADE LEVEL, REGARDLESS OF WHETHER THE CODE REQUIRES AND ELEVATOR TO BE INSTALLED IN SUCH BUILDING, STRUCTURE, OR FACILITY, EXCEPT FOR: (1) ELEVATOR PITS, ELEVATOR PENTHOUSES, MECHANICAL ROOMS, PIPING OR EQUIPMENT CATWALKS, AND AUTOMOBILE LUBRICATION AND MAINTENANCE PITS AND PLATFORMS; (2) UNOCCUPIABLE SPACES, SUCH AS ROOMS, ENCLOSED SPACES, AND STORAGE SPACES THAT ARE NOT DESIGNED FOR HUMAN OCCUPANCY, FOR PUBLIC ACCOMMODATIONS, OR FOR WORK AREAS; AND (3) OCCUPIABLE SPACES AND ROOMS THAT ARE NOT OPEN TO THE PUBLIC AND THAT HOUSE NO MORE THAN FIVE PERSONS INCLUDING, BUT NOT LIMITED TO, EQUIPMENT CONTROL ROOMS AND PROJECTION BOOTHS. HOWEVER, AS PROVIDED IN §553.509, FLORIDA STATUTES, BUILDINGS, STRUCTURES, AND FACILITIES MUST, AT A MINIMUM, COMPLY WITH THE REQUIREMENTS OF THE AMERICANS WITH DISABILITIES ACT (ADA) ACCESSIBILITY GUIDELINES. THEREFORE, FACILITIES SUBJECT TO THE ADA MAY BE REQUIRED TO PROVIDE VERTICAL ACCESS TO AREAS OTHERWISE EXEMPT UNDER §11-4.1.3(5)(3) OF THIS CODE.

11-4.1.6(1)(1) A FACILITY THAT IS MAKING ALTERATIONS MUST COMPLY WITH THIS SECTION TO THE MAXIMUM EXTENT FEASIBLE. IF COMPLIANCE WITH PARKING LOCATION REQUIREMENTS IS NOT FEASIBLE, THE FACILITY MAY PROVIDE PARKING SPACES AT ALTERNATIVE LOCATIONS FOR PERSONS WHO HAVE DISABILITIES AND PROVIDE APPROPRIATE SIGNAGE DIRECTING PERSONS WHO HAVE A DISABILITY TO ALTERNATIVE PARKING. THE FACILITY MAY NOT REDUCE THE REQUIRED NUMBER OR DIMENSIONS OF THOSE SPACES, NOR MAY IT UNNECESSARILY INCREASE THE LENGTH OF THE ACCESSIBLE ROUTE FROM A PARKING SPACE TO THE FACILITY. THE ALTERATION MUST NOT CREATE A SIGNIFICANT RISK TO THE HEALTH OR SAFETY OF A PERSON WHO HAS A DISABILITY OR TO THAT OF OTHERS.

11-4.1.6(2) ALTERATIONS TO AN AREA CONTAINING A PRIMARY FUNCTION: IN ADDITION TO THE REQUIREMENTS OF §11-4.1.6(1), AN ALTERATION THAT AFFECTS OR COULD AFFECT THE USABILITY OF OR ACCESS TO AN AREA CONTAINING A PRIMARY FUNCTION SHALL BE MADE SO AS TO ENSURE THAT, TO THE MAXIMUM EXTENT FEASIBLE, THE PATH OF TRAVEL TO THE ALTERED AREA AND THE RESTROOMS, TELEPHONES, AND DRINKING FOUNTAINS SERVING THE ALTERED AREA, ARE READILY ACCESSIBLE TO AND USABLE BY INDIVIDUALS WITH DISABILITIES, UNLESS SUCH ALTERATIONS ARE DISPROPORTIONATE TO THE OVERALL ALTERATIONS TIN TERMS OF COST AND SCOPE.

ALTERATIONS MADE TO PROVIDE AN ACCESSIBLE PATH OF TRAVEL TO ALTERED AREAS SHALL BE DEEMED DISPROPORTIONATE TO THE OVERALL ALTERATION WHEN THE COST EXCEEDS 20 PERCENT OF THE COST OF THE ALTERATION TO THE PRIMARY FUNCTION AREA.

DUTY TO PROVIDE ACCESSIBLE FEATURES IN THE EVENT OF DISPROPORTIONALITY.

(1) WHEN THE COST OF ALTERATIONS NECESSARY TO MAKE THE PATH OF TRAVEL TO THE ALTERED AREA FULLY ACCESSIBLE IS DISPROPORTIONATE TO THE COST OF THE OVERALL ALTERATION, THE PATH OF TRAVEL SHALL BE MADE ACCESSIBLE TO THE EXTENT THAT IT CAN BE MADE ACCESSIBLE WITHOUT INCURRING DISPROPORTIONATE COSTS.

(2)(A) IN CHOOSING WHICH ACCESSIBLE ELEMENTS TO PROVIDE, PRIORITY SHOULD BE GIVEN TO THOSE ELEMENTS THAT WILL PROVIDE THE GREATEST ACCESS, IN THE FOLLOWING ORDER:

(I) AN ACCESSIBLE ENTRANCE;
(II) AN ACCESSIBLE ROUTE TO THE ALTERED AREA:
(III) AT LEAST ONE ACCESSIBLE RESTROOM FOR EACH SEX OR A SINGLE UNISEX RESTROOM:
(IV) ACCESSIBLE TELEPHONES;
(V) ACCESSIBLE DRINKING FOUNTAINS; AND
(VI) WHEN POSSIBLE, ADDITIONAL ACCESSIBLE ELEMENTS SUCH AS PARKING, STORAGE, AND ALARMS.
(B) SERIES OF SMALLER ALTERATIONS:

(I) THE OBLIGATION TO PROVIDE AN ACCESSIBLE PATH OF TRAVEL MAY NOT BE EVADED BY PERFORMING A SERIES OF SMALL ALTERATIONS TO THE AREA SERVED BY A SINGLE PATH OF TRAVEL IF THOSE ALTERATIONS COULD HAVE BEEN PERFORMED AS A SINGLE UNDERTAKING.
(II) IF AN AREA CONTAINING A PRIMARY FUNCTION HAS BEEN ALTERED WITHOUT PROVIDING AN ACCESSIBLE PATH OF TRAVEL TO THAT AREA, AND SUBSEQUENT ALTERATIONS OF THAT AREA, OR A DIFFERENT AREA ON THE SAME PATH OF TRAVEL, ARE UNDERTAKEN WITHIN THREE YEARS OF THE ORIGINAL ALTERATION, THE TOTAL COST OF ALTERATIONS TO THE PRIMARY FUNCTION AREAS ON THAT PATH OF TRAVEL DURING THE PRECEDING THREE YEAR PERIOD SHALL BE CONSIDERED IN DETERMINING WHETHER THE COST OF MAKING THAT PATH OF TRAVEL ACCESSIBLE IS DISPROPORTIONATE.
(III) ONLY ALTERATIONS UNDERTAKEN AFTER JANUARY 26, 1992, SHALL BE CONSIDERED IN DETERMINING IF THE COST OF PROVIDING AN ACCESSIBLE PATH OF TRAVEL IS DISPROPORTIONATE TO THE OVERALL COST OF THE ALTERATIONS.

(3) SPECIAL TECHNICAL PROVISIONS FOR ALTERATIONS TO EXISTING BUILDINGS AND FACILITIES:

(A) RAMPS: CURB RAMPS AND INTERIOR OR EXTERIOR RAMPS TO BE CONSTRUCTED ON SITES OR IN EXISTING BUILDINGS OR FACILITIES WHERE SPACE LIMITATIONS PROHIBIT THE USE OF A 1:12 SLOPE OR LESS MAY HAVE SLOPES AND RISES AS FOLLOWS:

(I) A SLOPE BETWEEN 1:10 AND 1:12 IS ALLOWED FOR A MAXIMUM RISE OF 6 INCHES.
(II) A SLOPE BETWEEN 1:8 AND 1:10 IS ALLOWED FOR A MAXIMUM RISE OF 3 INCHES. A SLOPE STEEPER THAN 1:8 IS NOT ALLOWED.

(B) STAIRS: FULL EXTENSION OF HANDRAILS AT STAIRS SHALL NOT BE REQUIRED IN ALTERATIONS WHERE SUCH EXTENSIONS WOULD BE HAZARDOUS OR IMPOSSIBLE DUE TO PLAN CONFIGURATION.

(C) ELEVATORS:

(I) IF SAFETY DOOR EDGES ARE PROVIDED IN EXISTING AUTOMATIC ELEVATORS, AUTOMATIC DOOR REOPENING DEVICES MAY BE OMITTED (SEE §11-4.10.6).
(II) WHERE EXISTING SHAFT CONFIGURATION OR TECHNICALITY PROHIBITS STRICT COMPLIANCE WITH §11-4.10.9, THE MINIMUM CAR PLAN DIMENSIONS MAY BE REDUCED BY THE MINIMUM AMOUNT NECESSARY, BUT IN NO CASE SHALL THE INSIDE CAR AREA BE SMALLER THAN 48 IN BY 48 IN.

(III) EQUIVALENT FACILITATION MAY BE PROVIDED WITH AN ELEVATOR CAR OF DIFFERENT DIMENSIONS WHEN USABILITY CAN BE DEMONSTRATED AND WHEN ALL OTHER ELEMENTS REQUIRED TO BE ACCESSIBLE COMPLY WITH THE APPLICABLE PROVISIONS OF §11-4.10. FOR EXAMPLE, AN ELEVATOR OF 47 IN BY 69 IN (1195 MM BY 1755 MM) WITH A DOOR OPENING ON THE NARROW DIMENSION, COULD ACCOMMODATE THE STANDARD WHEELCHAIR CLEARANCES SHOWN IN FIGURE 11-4.

(D) DOORS:

(I) WHERE IT IS TECHNICALLY INFEASIBLE TO COMPLY WITH CLEAR OPENING WIDTH REQUIREMENTS OF §11-4.13.5, A PROJECTION OF 5/8 IN MAXIMUM WILL BE PERMITTED FOR THE LATCH SIDE STOP.
(II) IF EXISTING THRESHOLDS ARE 3/4 IN HIGH OR LESS, AND HAVE (OR ARE MODIFIED TO HAVE) A BEVELED EDGE ON EACH SIDE, THEY MAY REMAIN.

TO FULFILL THIS REQUIREMENT.

(E) TOILET ROOMS:

(I) WHERE IT IS TECHNICALLY INFEASIBLE TO COMPLY WITH §11-4.22 OR §11-4.23, THE INSTALLATION OF AT LEAST ONE UNISEX TOILET/BATHROOM PER FLOOR, LOCATED IN THE SAME AREA AS EXISTING TOILET FACILITIES, WILL BE PERMITTED IN LIEU OF MODIFYING EXISTING TOILET FACILITIES TO BE ACCESSIBLE. EACH UNISEX TOILET ROOM SHALL CONTAIN ONE WATER CLOSET COMPLYING WITH §11-4.16 AND ONE LAVATORY COMPLYING WITH §11-4.19, AND THE DOOR SHALL HAVE A PRIVACY LATCH.

(II) WHERE IT IS TECHNICALLY INFEASIBLE TO INSTALL A REQUIRED STANDARD STALL (FIGURE 11-30(A)), OR WHERE OTHER CODES PROHIBIT REDUCTION OF THE FIXTURE COUNT (I.E., REMOVAL OF A WATER CLOSET IN ORDER TO CREATE A DOUBLE-WIDE STALL), EITHER ALTERNATE STALL (FIGURE 11-30(B)) MAY BE PROVIDED IN LIEU OF THE STANDARD STALL.

(III) WHEN EXISTING TOILET OR BATHING FACILITIES ARE BEING ALTERED AND ARE NOT MADE ACCESSIBLE, SIGNAGE COMPLYING WITH 11-4.30.1, 11-4.30.2, 11-4.30.3, 11-4.30.5, AND 11-4.30.7 SHALL BE PROVIDED INDICATING THE LOCATION OF THE

NEAREST ACCESSIBLE TOILET OR BATHING FACILITY WITHIN THE FACILITY.

(F) ASSEMBLY AREAS:

(I) WHERE IT IS TECHNICALLY INFEASIBLE TO DISPERSE ACCESSIBLE SEATING THROUGHOUT AN ALTERED ASSEMBLY AREA, ACCESSIBLE SEATING AREAS MAY BE CLUSTERED. EACH ACCESSIBLE SEATING AREA SHALL HAVE PROVISIONS FOR COMPANION SEATING AND SHALL BE LOCATED ON AN ACCESSIBLE ROUTE THAT ALSO SERVES AS A MEANS OF EMERGENCY EGRESS.

(II) WHERE IT IS TECHNICALLY INFEASIBLE TO ALTER ALL PERFORMING AREAS TO BE ON AN ACCESSIBLE ROUTE, AT LEAST ONE OF EACH TYPE OF PERFORMING AREA SHALL BE MADE ACCESSIBLE.

(G) PLATFORM LIFTS (WHEELCHAIR LIFTS): IN ALTERATIONS, PLATFORM LIFTS (WHEELCHAIR LIFTS) COMPLYING WITH 11-4.11 AND APPLICABLE TO THIS CODE SHALL BE USED AS PART OF AN ACCESSIBLE ROUTE. THE USE OF LIFTS IS NOT LIMITED TO THE FOUR CONDITIONS IN EXCEPTION 4 OF §11-4.1.3(5).

(H) DRESSING ROOMS: IN ALTERATIONS WHERE TECHNICAL INFEASIBILITY CAN BE DEMONSTRATED, ONE DRESSING ROOM FOR EACH SEX ON EACH LEVEL SHALL BE MADE ACCESSIBLE. WHERE ONLY UNISEX DRESSING ROOMS ARE PROVIDED, ACCESSIBLE UNISEX DRESSING ROOMS MAY BE USED TO FULFILL THIS REQUIREMENT.
11-4.1.8 ACCESSIBLE BUILDINGS, STRUCTURES AND FACILITIES:
ARCHITECTURAL BARRIER REMOVAL

11-4.1.8(1) REMOVAL OF ARCHITECTURAL BARRIERS, PURSUANT TO 28 C.F.R. SUBPART C S. 36.304, FROM BUILDINGS, STRUCTURES OR FACILITIES TO WHICH THIS CODE APPLIES SHALL COMPLY WITH §11-4.1 TO §11-4.35 UNLESS COMPLIANCE WOULD RENDER THE REMOVAL NOT READILY ACHIEVABLE. IN NO INSTANCE SHALL THE REMOVAL OF AN ARCHITECTURAL BARRIER CREATE A SIGNIFICANT RISK TO THE HEALTH OR SAFETY OF AN INDIVIDUAL WITH DISABILITIES OR OTHERS.

11-4.1.8(2) BARRIERS AT COMMON OR EMERGENCY ENTRANCES AND EXITS OF BUSINESS ESTABLISHMENTS CONDUCTING BUSINESS WITH THE GENERAL PUBLIC THAT ARE EXISTING, UNDER CONSTRUCTION, OR UNDER CONTRACT FOR CONSTRUCTION WHICH WOULD PREVENT A PERSON FROM USING SUCH ENTRANCES OR EXITS SHALL BE REMOVED.

11-4.1.8(3) THE REMOVAL OF ARCHITECTURAL BARRIERS FROM A PARKING FACILITY IN ACCORDANCE WITH 28 C.F.R. §36.304 OR WITH §553.508 FLORIDA STATUTES MUST COMPLY WITH THIS SECTION UNLESS COMPLIANCE WOULD CAUSE THE BARRIER REMOVAL NOT TO BE READILY ACHIEVABLE. IF COMPLIANCE WOULD CAUSE THE BARRIER REMOVAL NOT TO BE READILY ACHIEVABLE, A FACILITY MAY PROVIDE PARKING SPACES AT ALTERNATIVE LOCATIONS FOR PERSONS WHO HAVE DISABILITIES AND PROVIDE APPROPRIATE SIGNAGE DIRECTING PERSONS WHO HAVE DISABILITIES TO THE ALTERNATIVE PARKING IF READILY ACHIEVABLE. THE FACILITY MAY NOT REDUCE THE REQUIRED NUMBER OR DIMENSIONS OF THOSE SPACES, NOR MAY IT UNREASONABLY INCREASE THE LENGTH OF THE ACCESSIBLE ROUTE FROM A PARKING SPACE TO THE FACILITY. THE REMOVAL OF AN ARCHITECTURAL BARRIER MUST NOT CREATE A SIGNIFICANT F.R. §36.304, FROM BUILDINGS, STRUCTURES OR FACILITIES TO WHICH THIS CODE APPLIES SHALL COMPLY WITH §11-4.1 TO §11-4.35 UNLESS COMPLIANCE WOULD RENDER THE REMOVAL NOT READILY ACHIEVABLE. IN NO INSTANCE SHALL THE REMOVAL OF AN ARCHITECTURAL BARRIER CREATE A SIGNIFICANT RISK TO THE HEALTH OR SAFETY OF AN INDIVIDUAL WITH DISABILITIES OR OTHERS.
SECTION 11-7
BUSINESS AND MERCANTILE

§11-7.1 GENERAL. IN ADDITION TO THE REQUIREMENTS OF §11-4.1 TO §11-4.35, THE DESIGN OF ALL AREAS USED FOR BUSINESS TRANSACTIONS WITH THE PUBLIC SHALL COMPLY WITH §11-7.
§11-7.2 SALES AND SERVICE COUNTERS, TELLER WINDOWS, INFORMATION COUNTERS.
§11-7.2(1) IN DEPARTMENT STORES AND MISCELLANEOUS RETAIL STORES WHERE COUNTERS HAVE CASH REGISTERS AND ARE PROVIDED FOR SALES OR DISTRIBUTION OF GOODS OR SERVICES TO THE PUBLIC, AT LEAST ONE OF EACH TYPE SHALL HAVE A PORTION OF THE COUNTER WHICH IS AT LEAST 36 IN. (915 MM) IN LENGTH WITH A MAXIMUM HEIGHT OF 36 IN. (915 MM) ABOVE THE FINISH FLOOR. IT SHALL BE ON AN ACCESSIBLE ROUTE COMPLYING WITH §11-4.3. THE ACCESSIBLE COUNTERS MUST BE DISPERSED THROUGHOUT THE BUILDING OR FACILITY. IN ALTERATIONS WHERE IT IS TECHNICALLY INFEASIBLE TO PROVIDE AN ACCESSIBLE COUNTER, AN AUXILIARY COUNTER MEETING THESE REQUIREMENTS MAY BE PROVIDED.

§11-7.2(2) AT TICKETING COUNTERS, TELLER STATIONS IN A BANK, REGISTRATION COUNTERS IN HOTELS AND MOTELS, BOX OFFICE TICKET COUNTERS, AND OTHER COUNTERS THAT MAY NOT HAVE A CASH REGISTER BUT AT WHICH GOODS OR SERVICES ARE SOLD OR DISTRIBUTED, EITHER:

(I) A PORTION OF THE MAIN COUNTER WHICH IS A MINIMUM OF 36 IN. (915 MM) IN LENGTH SHALL BE PROVIDED WITH A MAXIMUM HEIGHT OF 36 IN. (915 MM); OR
(II) AN AUXILIARY COUNTER WITH A MAXIMUM HEIGHT OF 36 IN (915 MM) IN CLOSE PROXIMITY TO THE MAIN COUNTER SHALL BE PROVIDED; OR
(III) EQUIVALENT FACILITATION SHALL BE PROVIDED (E.G., AT A HOTEL REGISTRATION COUNTER, EQUIVALENT FACILITATION MIGHT CONSIST OF:
(1) PROVISION OF A FOLDING SHELF ATTACHED TO THE MAIN COUNTER ON WHICH AN INDIVIDUAL WITH DISABILITIES CAN WRITE, AND
(2) USE OF THE SPACE ON THE SIDE OF THE COUNTER OR AT THE CONCIERGE DESK, FOR HANDING MATERIALS BACK AND FORTH).

ALL ACCESSIBLE SALES AND SERVICE COUNTERS SHALL BE ON AN ACCESSIBLE ROUTE COMPLYING WITH §11-4.3.

§11-7.2(3) ASSISTIVE LISTENING DEVICES. (RESERVED).

§11-7.3 CHECK-OUT AISLES.

§11-7.3(1) IN NEW CONSTRUCTION, ACCESSIBLE CHECK-OUT AISLES SHALL BE PROVIDED IN CONFORMANCE WITH THE TABLE BELOW:

TOTAL CHECK-OUT AISLES OF EACH DESIGN	MINIMUM NUMBER OF ACCESSIBLE CHECK-OUT AISLES OF EACH DESIGN
1 - 4	1
5 - 8	2
8 - 15	3
OVER 15	3, PLUS 20% OF ADDITIONAL AISLES

EXCEPTION: IN NEW CONSTRUCTION, WHERE THE SELLING SPACE IS UNDER 5000 SQUARE FEET, ONLY ONE CHECK-OUT AISLE IS REQUIRED TO BE ACCESSIBLE.

EXCEPTION: IN ALTERATIONS, AT LEAST ONE CHECK-OUT AISLE SHALL BE ACCESSIBLE IN FACILITIES UNDER 5000 SQUARE FEET OF SELLING SPACE. IN FACILITIES OF 5000 OR MORE SQUARE FEET OF SELLING SPACE, AT LEAST ONE OF EACH DESIGN OF CHECK-OUT AISLE SHALL BE MADE ACCESSIBLE WHEN ALTERED UNTIL THE NUMBER OF ACCESSIBLE CHECK-OUT AISLES OF EACH DESIGN EQUALS THE NUMBER REQUIRED IN NEW CONSTRUCTION.

EXAMPLES OF CHECK-OUT AISLES OF DIFFERENT "DESIGN" INCLUDE THOSE WHICH ARE SPECIFICALLY DESIGNED TO SERVE DIFFERENT FUNCTIONS. DIFFERENT "DESIGN" INCLUDES BUT IS NOT LIMITED TO THE FOLLOWING FEATURES - LENGTH OF BELT OR NO BELT; OR PERMANENT SIGNAGE DESIGNATING THE AISLE AS AN EXPRESS LANE.

§11-7.3(2) CLEAR AISLE WIDTH FOR ACCESSIBLE CHECK-OUT AISLES SHALL COMPLY WITH §11-4.2.1 AND MAXIMUM ADJOINING COUNTER HEIGHT SHALL NOT EXCEED 38 IN. (965 MM) ABOVE THE FINISH FLOOR. THE TOP OF THE LIP SHALL NOT EXCEED 40 IN. (1015 MM) ABOVE THE FINISH FLOOR.
§11-7.3(3) SIGNAGE IDENTIFYING ACCESSIBLE CHECK-OUT AISLES SHALL COMPLY WITH §11-4.30.7 AND SHALL BE MOUNTED ABOVE THE CHECK-OUT AISLE IN THE SAME LOCATION WHERE THE CHECK-OUT NUMBER OR TYPE OF CHECK-OUT IS DISPLAYED.
§11-7.3(4) ALL CUSTOMER CHECKOUT AISLES NOT REQUIRED BY THIS CODE TO BE ACCESSIBLE SHALL HAVE AT LEAST 32 INCHES OF CLEAR PASSAGE.

§11-7.4 SECURITY BOLLARDS.

ANY DEVICE USED TO PREVENT THE REMOVAL OF SHOPPING CARTS FROM STORE PREMISES SHALL NOT PREVENT ACCESS OR EGRESS TO PEOPLE IN WHEELCHAIRS. AN ALTERNATE ENTRY THAT IS EQUALLY CONVENIENT TO THAT PROVIDED FOR THE AMBULATORY POPULATION IS ACCEPTABLE.

(1) BOBRICK B-4288 OR EQUAL SURFACE MOUNTED MULTI-ROLL TOILET TISSUE DISPENSER @ 28" A.F.F.
(1A) BOBRICK B-4354 (B-270 FOR SURFACE MOUNT) OR EQUAL SANITARY NAPKIN DISPOSAL @ 28" A.F.F. (WOMEN'S ROOM ONLY)
(2) BOBRICK B-6806x36 OR EQUAL 1-½" Ø 36" L STAINLESS STEEL GRAB BARS W/ CONCEALED MOUNTINGS.
(2A) BOBRICK B-6806x42 OR EQUAL 1-½" Ø 42" L STAINLESS STEEL GRAB BARS W/ CONCEALED MOUNTINGS.
(3) BOBRICK B-4112 OR EQUAL SURFACE MOUNTED SOAP DISPENSER.
(4) BOBRICK B-293-1830 OR EQUAL ADA TILT MIRROR 40" TO BOTTOM OF GLASS.
(5) BOBRICK B-3942 OR EQUAL SEMI RECESSED PAPER TOWEL DISPENSER AND WASTE RECEPTACLE.
(6) H.C. WATER CLOSET. FLUSH CONTROLS SHALL BE HAND OPERATED OR AUTOMATIC AND SHALL COMPLY WITH FBC SECTION 11-4.27.4. CONTROLS FOR FLUSH VALVES SHALL BE MOUNTED ON THE WIDE SIDE OF TOILET AREAS NO MORE THAN 44 INCHES (1120 MM) ABOVE THE FLOOR
(7) H.C. LAVATORY AND FAUCET
NOTE: ACCESSIBLE KNEE SPACE PER FBC 11-4.24.6 HOT WATER AND DRAIN PIPES EXPOSED UNDER THE SINKS SHALL BE INSULATED OR OTHERWISE CONFIGURED AS TO PROTECT AGAINST CONTACT. THERE SHALL BE NO SHARP OR ABRASIVE SURFACES UNDER SINKS.

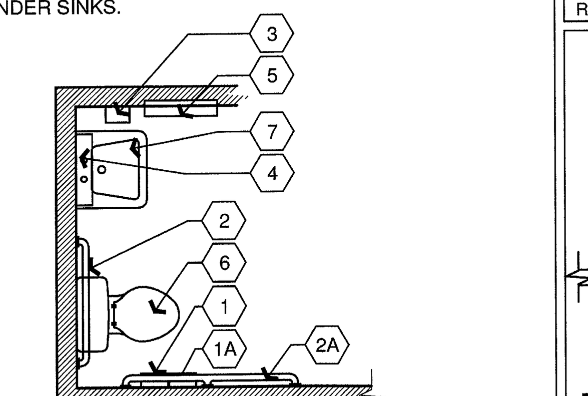

TYPICAL ADA RESTROOM

ADA MOUNTED FIXTURES- MAY NOT REFLECT ACTUAL ORIENTATION/SIZE OF RESTROOM. SEE CONSTRUCTION PLANS.

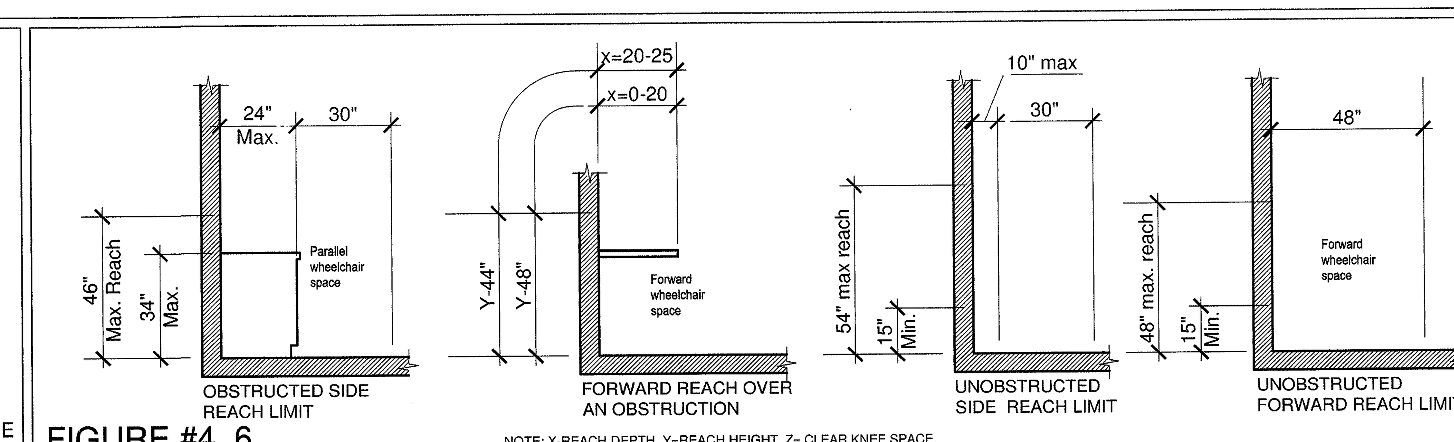

FIGURE #4, 6

REACH LIMITS FOR WHEELCHAIR USERS.

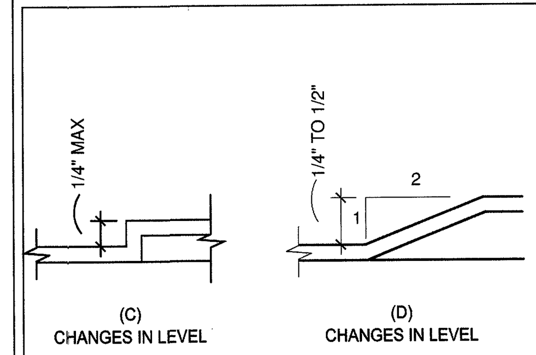

FIGURE #7

ACCESSIBLE ROUTE - CHANGES IN LEVEL

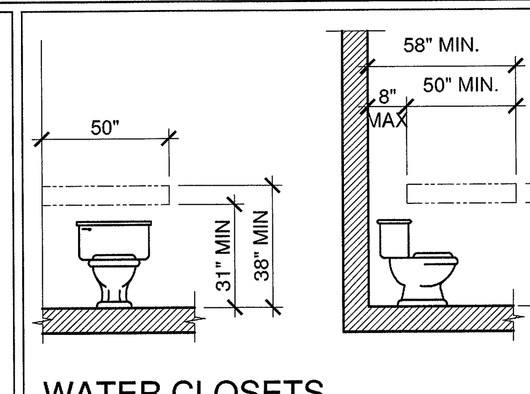

WATER CLOSETS

LOCATION OF GRAB BAR REINFORCEMENTS

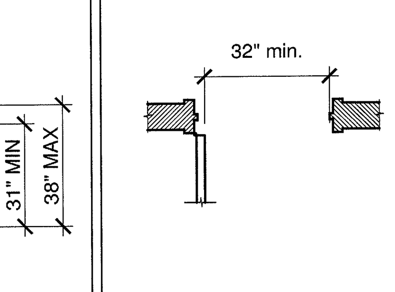

FIGURE #24

CLEAR DOORWAY WIDTH & DEPTH

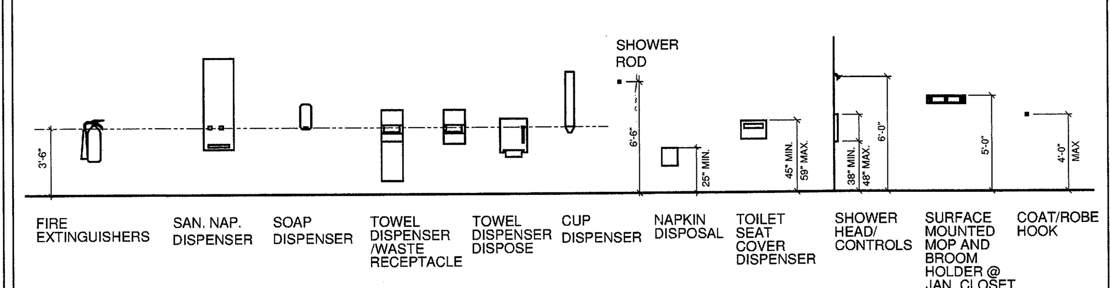

TYPICAL MOUNTING HEIGHTS

NOT ALL DIAGRAMS APPLY

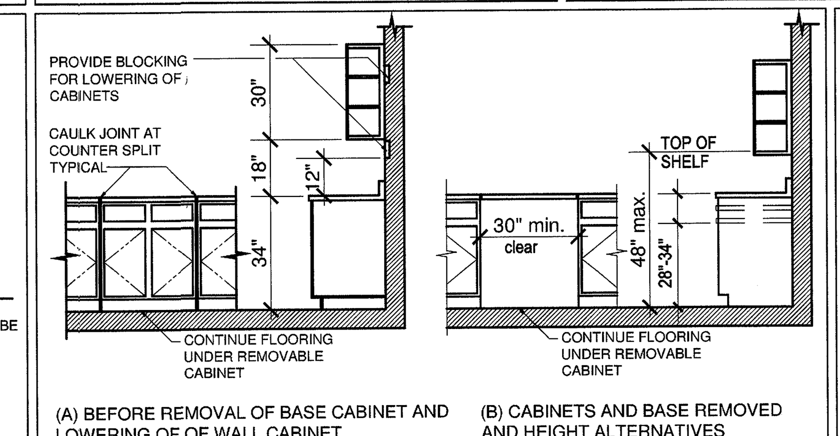

WORK SPACE

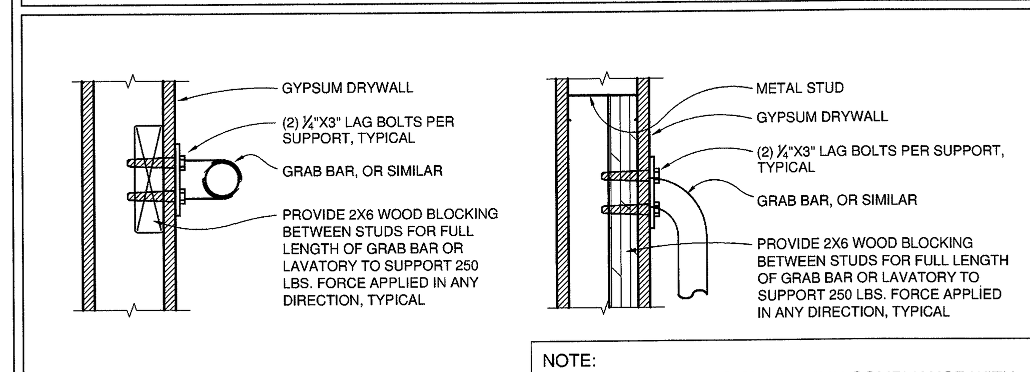

TYPICAL BLOCKING DETAIL

NOTE:
GRAB BAR MOUNTING SHALL BE IN COMPLIANCE WITH STRUCTURAL STRENGTH REQUIREMENTS OF FBC 11-4.26.3

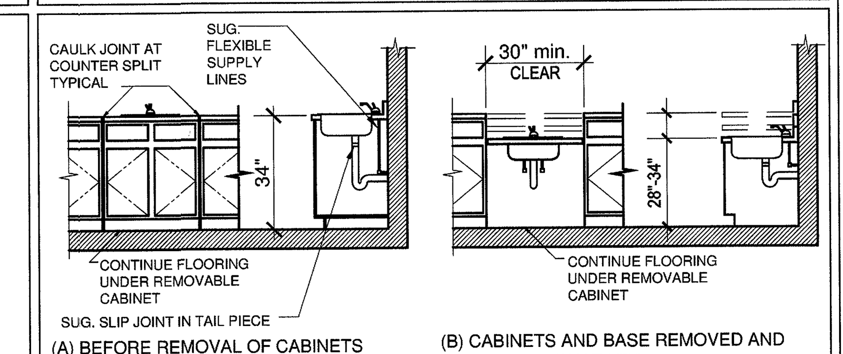

SINK

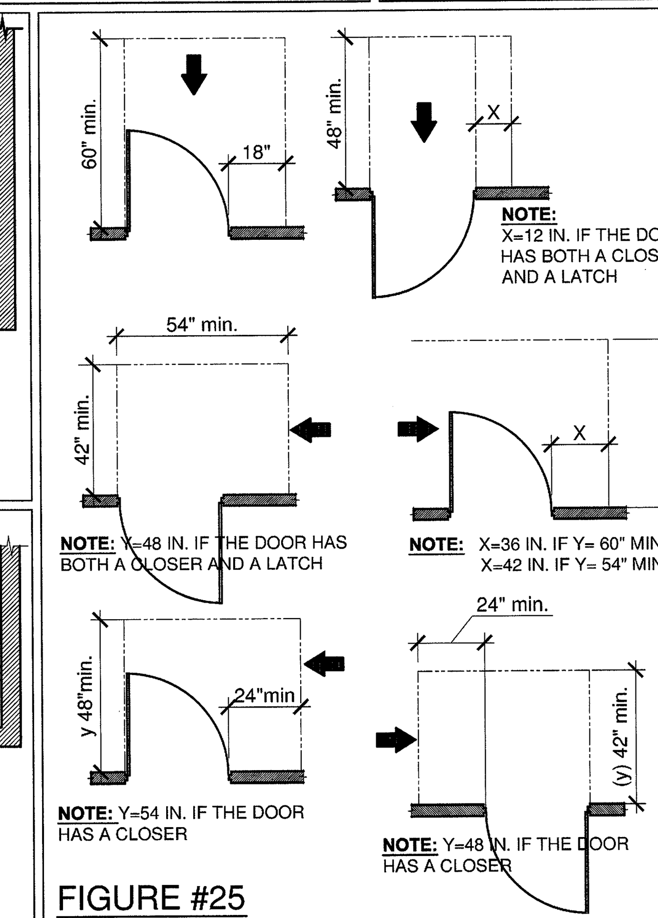

FIGURE #25

MANEUVERING CLEARANCES AT DOORS

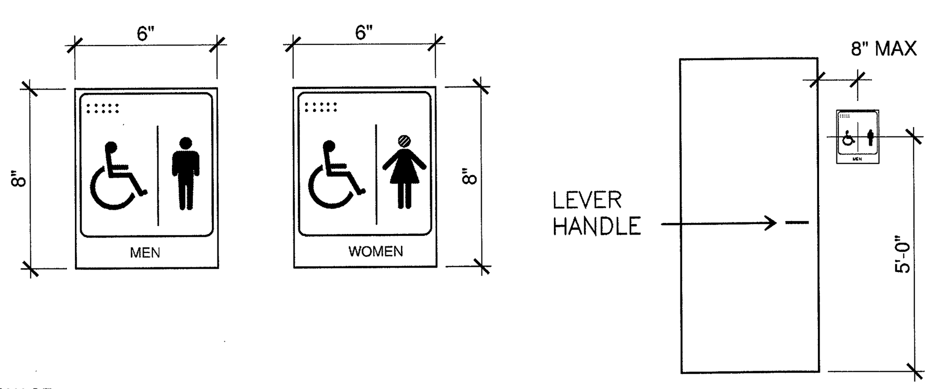

SIGNAGE
CHARACTER PROPORTION. LETTERS AND NUMBERS ON SIGNS SHALL HAVE A WIDTH-TO HEIGHT RATIO BETWEEN 3:5 AND 1:1 AND A STROKE-WIDTH-TO-HEIGHT RATIO BETWEEN 1:5 AND 1:10.

RAISED AND BRAILLE CHARACTERS AND PICTORIAL SYMBOL SIGNS. (PICTOGRAMS). LETTERS AND NUMERALS SHALL BE RAISED 1/32 IN., UPPER CASE, SONS SERIF OR SIMPLE SERIF TYPE AND SHALL BE ACCOMPANIED WITH GRADE BRAILLE. RAISED CHARACTERS SHALL BE AT LEAST 5/8 IN. (16 MM) HIGH, BUT NO HIGHER THAN 2 IN. (50 MM). PICTOGRAMS SHALL BE ACCOMPANIED BY THE EQUIVALENT VERBAL DESCRIPTION PLACED DIRECTLY BELOW THE PICTOGRAM. THE BORDER DIMENSION OF THE PICTOGRAM SHALL BE 6 IN. (152 MM) MINIMUM OF HEIGHT.

FINISH AND CONTRAST. THE CHARACTERS AND BACKGROUND OF SIGNS SHALL BE EGGSHELL, MATTE, OR OTHER NON-GLARE FINISH. CHARACTERS AND SYMBOLS SHALL CONTRAST WITH THEIR BACKGROUND EITHER LIGHT CHARACTERS ON A DARK BACKGROUND OR DARK CHARACTERS ON A LIGHT BACKGROUND.

MOUNTING LOCATION AND HEIGHT. WHERE PERMANENT IDENTIFICATION IS PROVIDED FOR ROOMS AND SPACES, SIGNS SHALL BE INSTALLED ON THE WALL ADJACENT TO THE LATCH SIDE OF THE DOOR. WHERE THERE IS NO ALL SPACE TO THE LATCH SIDE OF THE DOOR, INCLUDING AT DOUBLE LEAF DOORS, SIGNS SHALL BE PLACED ON THE NEAREST ADJACENT WALL. MOUNTING HEIGHT SHALL BE 60 IN. (1525 MM) ABOVE THE FINISH FLOOR TO THE CENTERLINE OF THE SIGN. MOUNTING LOCATION FOR SUCH SIGNAGE SHALL BE SO THAT A PERSON MAY APPROACH WITHIN 3 IN. (76 MM) OF SIGNAGE WITHOUT ENCOUNTERING PROTRUDING OBJECTS OR STANDING WITHIN THE WING DOOR. SYMBOLS OF ACCESSIBILITY. FACILITIES AND ELEMENTS REQUIRED TO BE IDENTIFIED AS ACCESSIBLE BY SECTION 4.1 OF THE ADAAG, SHALL USE THE INTERNATIONAL SYMBOL OF ACCESSIBILITY.

TYPICAL HANDICAP SIGNAGE (1)

SIGNAGE SHALL COMPLY WITH FBC 11-4.30

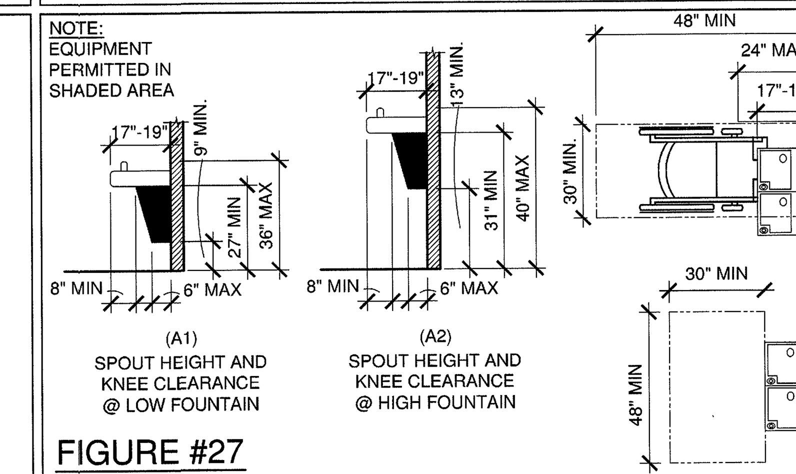

FIGURE #27

DRINKING FOUNTAINS AND WATER COOLERS

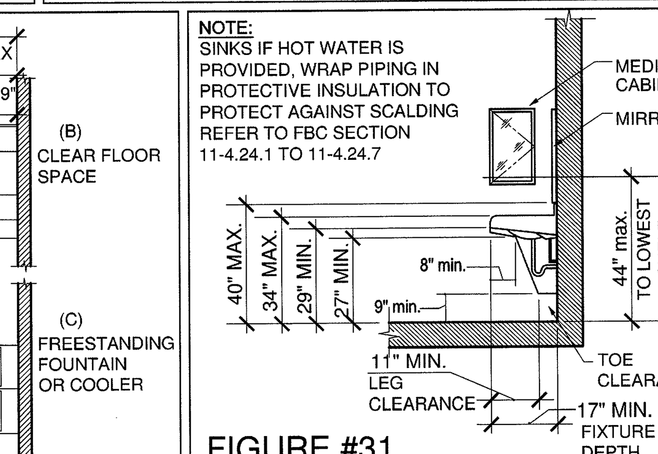

FIGURE #31

LAVATORY CLEARANCE

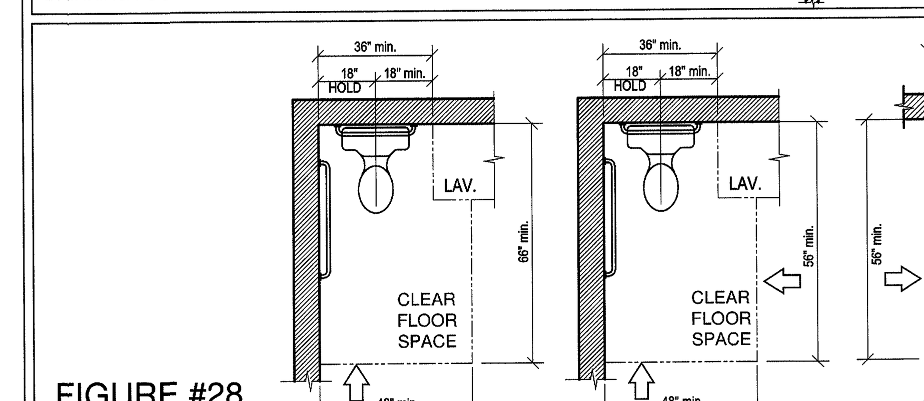

FIGURE #28

WATER CLOSET CLEAR FLOOR SPACE.

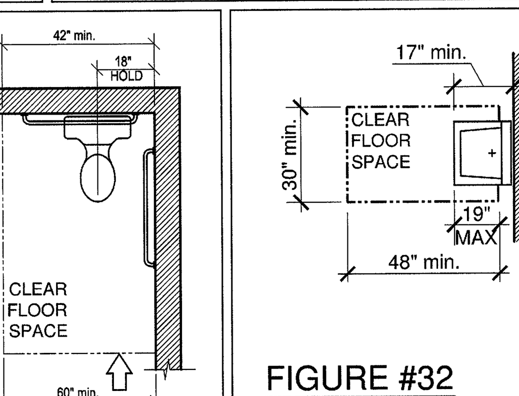

FIGURE #32

CLEAR SPACE AT LAVATORIES

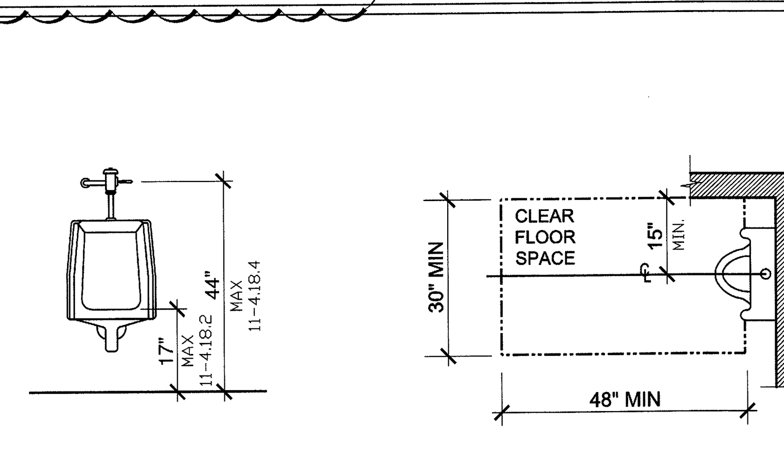

URINALS
SECTION 11-4.18

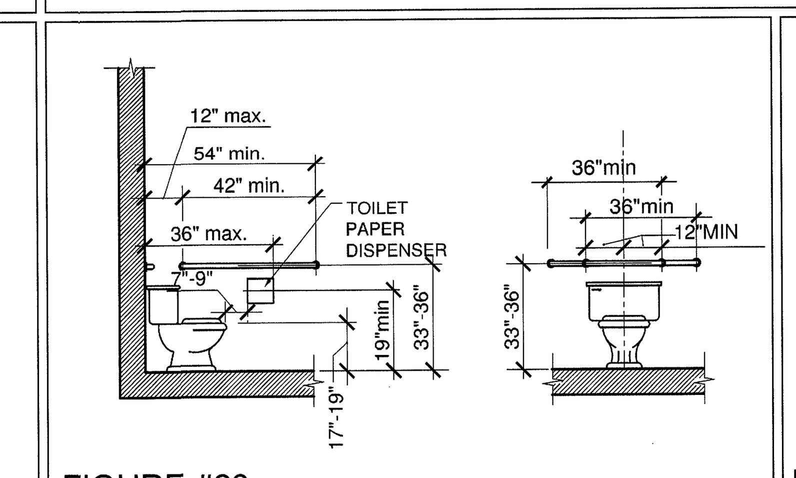

FIGURE #29

LOCATION OF GRAB BARS FOR USABLE WATER CLOSETS
BLOCKING TO BE IN COMPLIANCE WITH FBC 11-4.26

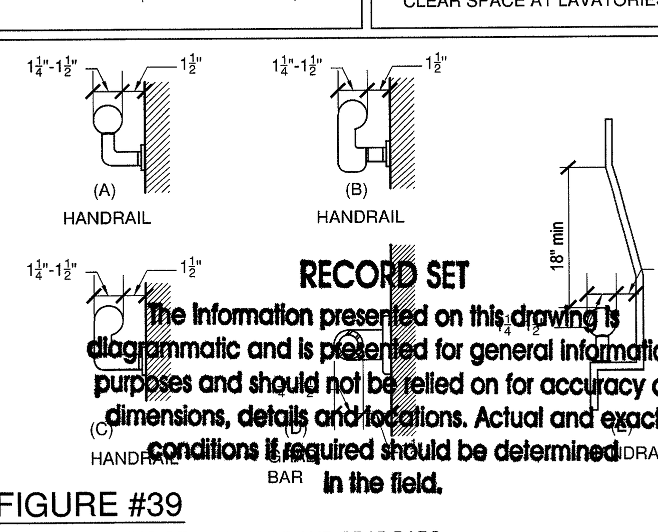

RECORD SET
The information presented on this drawing is diagrammatic and is presented for general information purposes and should not be relied on for accuracy of dimensions, details and locations. Actual and exact conditions if required should be determined in the field.

FIGURE #39

SIZE AND SPACING OF HANDRAILS AND GRAB BARS

NOTE:
THE DELINEATED MOUNTING HEIGHTS ARE TYPICAL, ONLY DETAILS MAY SHOW VARIATIONS FOR SPECIFIC CONDITIONS.

LL58/87/A.D.A. ACCESSIBILITY STANDARDS AND MINIMUM CLEARANCES ARE INCLUSIVE OF, BUT NOT LIMITED TO FIGURES SHOWN. GENERAL CONTRACTOR AND ALL SUBCONTRACTORS SHALL REFER TO APPLICABLE LITERATURE (FEDERAL REGISTER, ETC.) FOR ADDITIONAL LL58/87/A.D.A. STANDARDS.

JMWA
ARCHITECTS
STEVEN E. MYOTT AIA
JAMES R. WILLIAMS AIA
RODOLFO ACEVEDO AIA

949 CLINT MOORE ROAD
BOCA RATON, FLORIDA 33487
TEL 561 997 9997
FAX 561 997 1610

WWW.JMWA.NET

PALMETTO BAY VILLAGE HALL
9705 E. Hibiscus St., Palmetto Bay, Florida

Master Builders of South Florida, Inc.
1400 E. Oakland Park Blvd. Suite 210
Oakland Park, FL 33334

FLORIDA LICENSURE

AAC002193 IB0001142

PROJECT NO. 8714.00
DESIGNED BY: RA
DRAWN BY: DW / EK / JS
CHECKED BY: JW

SUBMITTALS:
BUILDING PERMIT 03.05.2010

REVISIONS:
(1) PERMIT COMMENTS 04.02.10

ACCESSIBILITY DETAILS

A004

S:\Projects\8700\8714\8714_Drawings\8714_Current\8714_A004_Accessibility Details.dwg ekutterer 4/5/2010 3:28:09 PM

© 2009 JMWA ARCHITECTS, INCORPORATED ALL RIGHTS RESERVED. NO PART OF THESE IDEAS, PLANS OR DESIGNS MAY BE REPRODUCED, COPIED OR UTILIZED GRAPHICALLY IN ANY FORM WHATSOVER WITHOUT THE EXPRESSED WRITTEN CONSENT OF JMWA ARCHITECTS INCORPORATED AND ITS BOARD OF DIRECTORS.

LEGEND

DENOTES ACCESSIBLE ROUTE FROM BUILDING EXIT TO PUBLIC WAY (1)

TABULAR DATA

CURRENT USE OF PROPERTY:	COMMERCIAL
ZONING DISTRICT:	MM (MIXED-USE MAIN STREET)
PROPERTY:	3.05 ACRES (132,773 SQ.FT.)
BUILDING AREA:	.56 ACRES (24,405 SQ.FT.)
HEIGHT OF STRUCTURE PROVIDED:	26'-0" TO TOP OF HIGHEST FLAT ROOF
LENGTH OF STRUCTURE PROVIDED:	135'-4" x 105'-4"
NUMBER OF STORIES :	2
CONSTRUCTION TYPE:	TYPE V-B (FULLY SPRINKLERED)
OCCUPANCY TYPE:	MIXED (PER FBC 508.3)
	BUSINESS (PER FBC 302.1)
	ASSEMBLY (A-3 PER FBC 302.1)
GROUND FLOOR FINISH SLAB ELEVATION:	13' NGVD
WATER/WASTE WATER SERVICE PROVIDER:	MIAMI-DADE COUNTY

LAND USE CALCULATIONS

	SQ.FT	ACRES	% OF SITE	% REQUIRED
LOT COVERAGE (BUILDING FOOTPRINT)	18,322	.42	14%	91% MAX.
OPEN SPACE (COLONNADE)	33,451	.77	25%	10% MIN.
PERVIOUS AREA	44,349	1.02	33%	10% MIN.
IMPERVIOUS AREA (PARKING, BLDG FOOTPRINT, WALKS AND PLAZA AREA)	63,360	1.45	48%	10% MIN.
TOTAL SITE (PHASE I)	107,709	2.47	81%	PHASE I
FLOOR AREA RATIO: 24,405 SF / 107,709 SF = .18 F.A.R.	(132,773	3.05	100%)	TOTAL SITE

PARKING CALCULATIONS

	REQUIRED	PROVIDED
PARKING SPACES	1/300 G.F.A. = 82	86
HANDICAP SPACES	PER FBC 11-4.1.2(5a) 76 - 100 = 4	4
STROLLER PARKING (MIAMI DADE 33-122.2)	< 100 = 0	0
FUEL EFFICIENT VEHICLE PARKING	86 X .05 = 4.3	5

(PP) INDICATES PREFERRED PARKING (LOW EMITTING / FUEL EFFICIENT VEHICLES)

NOTE:
GENERATOR NOT PART OF SCOPE OF WORK.
GENERATOR WILL BE PART OF FUTURE PERMIT. (1)

FUTURE TRANSFER SWITCH (1)
FUTURE GENERATOR
STAIR & PLATFORM
TRANSFORMER

EAST GUAVA STREET

FUTURE GENERATOR (1)

PROPERTY LINE

CENTERLINE OF FORMER HOLCOMB AVENUE (SW 98 AVENUE ROAD)

53'-0"

55'-0"

MINOR STREET SETBACK (10'-0" MIN.)

15' BLDG. WALL FOR FUTURE GENERATOR

10'-0"

PROPERTY LINE

13 A102

32'-0 1/2"

MAIN STREET SETBACK (6'-0" MIN.)

US 1 (N. DIXIE HWY)

EXIST. 5' SIDEWALK

EXIST. LIFT STATION

12A A102

12B A102

3A A102

1 A102

2 A102

10 A102

119'-8"

MINOR STREET SETBACK (10'-0" MIN.)

EXISTING FIRE HYDRANT TO REMAIN

FIRE DEPARTMENT ACCESS

EMERGENCY VEHICLE TURNING RADIUS (TYPICAL) (1)

26'-0"

24'-0" (1)

230'-1 1/2"

MAIN STREET SETBACK (6'-0" MIN.)

9 A102

11 A102

PHASE LINE

SW 97TH AVENUE (FRANJO ROAD)

15 A102

12B A102

5 A102

24'-3 1/2" (1)

25'-5 1/2" (1)

24'-0" (1)

24'-0" (1)

24'-0" (1)

24'-0" (1)

24'-0" (1)

PHASE LINE

PHASE II
UNDER SEPARATE PERMIT

See L2.00

FIRE DEPARTMENT CONNECTION

NEW FIRE HYDRANT

EXISTING FIRE HYDRANT TO REMAIN

EAST HIBISCUS STREET
40' TOTAL RIGHT-OF-WAY

EAST HIBISCUS STREET
40' TOTAL RIGHT-OF-WAY

FIRE DEPARTMENT ACCESS (1)

RECORD SET
The information presented on this drawing is diagrammatic and is presented for general information purposes and should not be relied on for accuracy of dimensions, details and locations. Actual and exact conditions if required should be determined in the field.

NORTH

1 ARCHITECTURAL SITE PLAN
SCALE: 1" = 20'-0"

JMWA
ARCHITECTS
STEVEN E. MYOTT AIA
JAMES R. WILLIAMS AIA
RODOLFO ACEVEDO AIA

949 CLINT MOORE ROAD
BOCA RATON, FLORIDA 33487
TEL 561 997 9997
FAX 561 997 1610

WWW.JMWA.NET

PALMETTO BAY VILLAGE HALL

9705 E. Hibiscus St., Palmetto Bay, Florida

Master Builders of South Florida, Inc.
1400 E. Oakland Park Blvd. Suite 210
Oakland Park, FL 33334

FLORIDA LICENSURE

AAC002193 IB0001142

PROJECT NO.	8714.00
DESIGNED BY:	RA
DRAWN BY:	DW / EK / JS
CHECKED BY:	JW
SUBMITTALS:	
BUILDING PERMIT	03.05.2010

REVISIONS:
(1) PERMIT COMMENTS 04.02.10

ARCHITECTURAL SITE PLAN

A101

© 2009 JMWA ARCHITECTS, INCORPORATED ALL RIGHTS RESERVED. NO PART OF THESE IDEAS, PLANS OR DESIGNS MAY BE REPRODUCED, COPIED OR UTILIZED GRAPHICALLY IN ANY FORM WHATSOEVER WITHOUT THE EXPRESSED WRITTEN CONSENT OF JMWA ARCHITECTS INCORPORATED AND ITS BOARD OF DIRECTORS.

4/9/2010 9:10:07 AM ekutterer S:\Projects\8700\8714\8714_Drawings\8714_Current\8714_A101_Architectural Site Plan.dwg

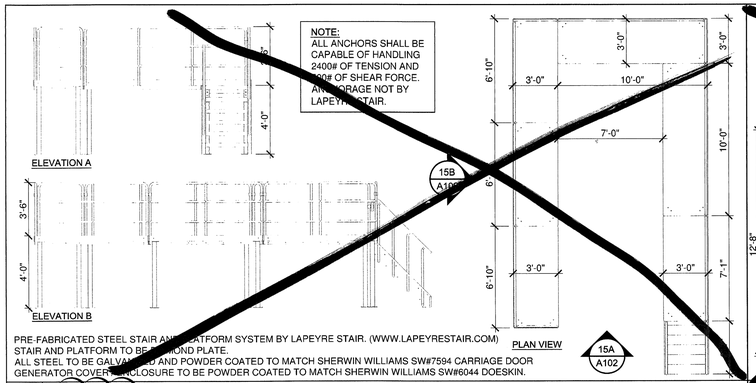

PRE-FABRICATED STEEL STAIR AND PLATFORM SYSTEM BY LAPEYRE STAIR. (WWW.LAPEYRESTAIR.COM)
STAIR AND PLATFORM TO BE 1/2" SOND PLATE.
ALL STEEL TO BE GALVANIZED AND POWDER COATED TO MATCH SHERWIN WILLIAMS SW#7594 CARRIAGE DOOR
GENERATOR COVER ENCLOSURE TO BE POWDER COATED TO MATCH SHERWIN WILLIAMS SW#6044 DOESKIN.

15 FUTURE GENERATOR STAIR AND PLATFORM DETAIL
SCALE: N.T.S.

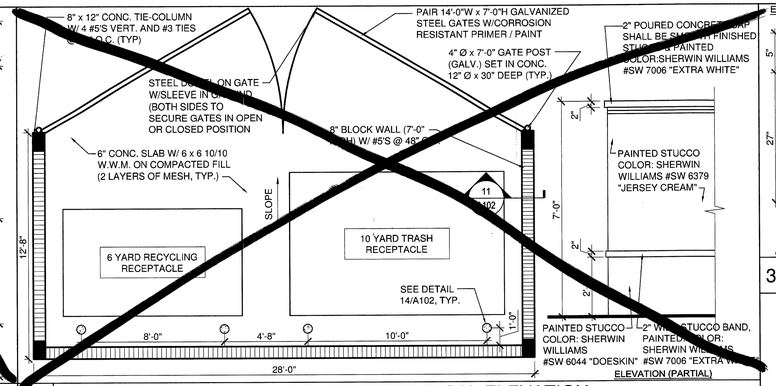

9 DUMPSTER ENCLOSURE PLAN AND TYPICAL ELEVATION
SCALE: 1/4" = 1'-0"

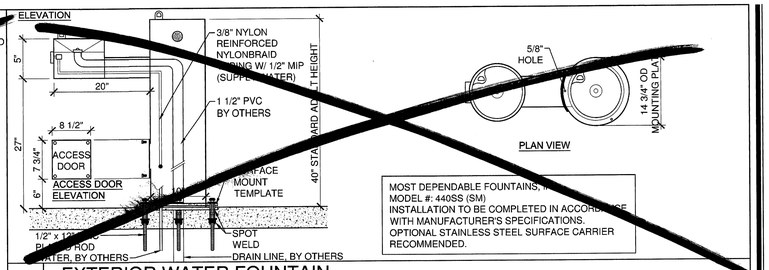

MOST DEPENDABLE FOUNTAINS, INC.
MODEL #: 440SS (SM)
INSTALLATION TO BE COMPLETED IN ACCORDANCE WITH MANUFACTURER'S SPECIFICATIONS.
OPTIONAL STAINLESS STEEL SURFACE CARRIER RECOMMENDED.

3A EXTERIOR WATER FOUNTAIN
SCALE: N.T.S.

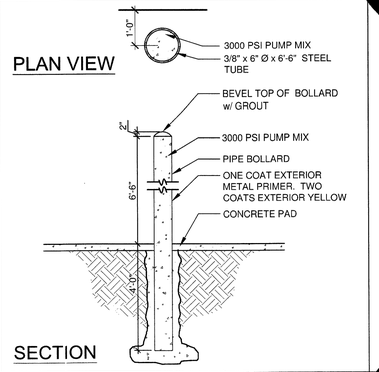

14 TYPICAL BOLLARD DETAIL
SCALE: N.T.S.

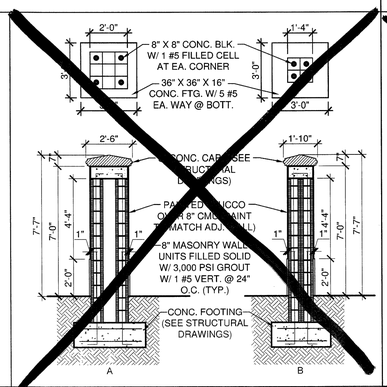

12 ENCLOSURE PIER DETAILS
SCALE: N.T.S.

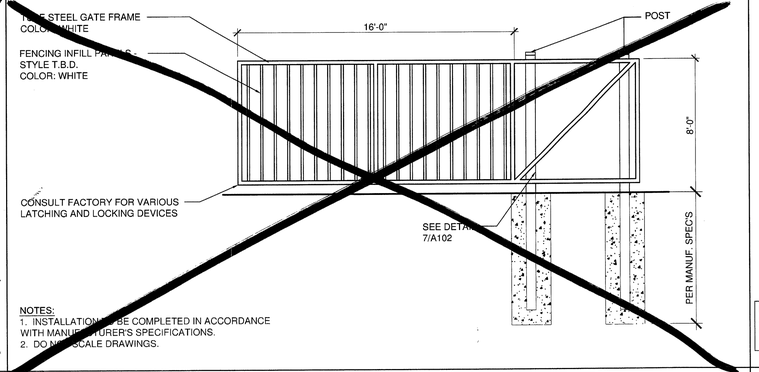

NOTES:
1. INSTALLATION TO BE COMPLETED IN ACCORDANCE WITH MANUFACTURER'S SPECIFICATIONS.
2. DO NOT SCALE DRAWINGS.

8 CANTILEVER SECURITY GATE DETAIL
SCALE: N.T.S.

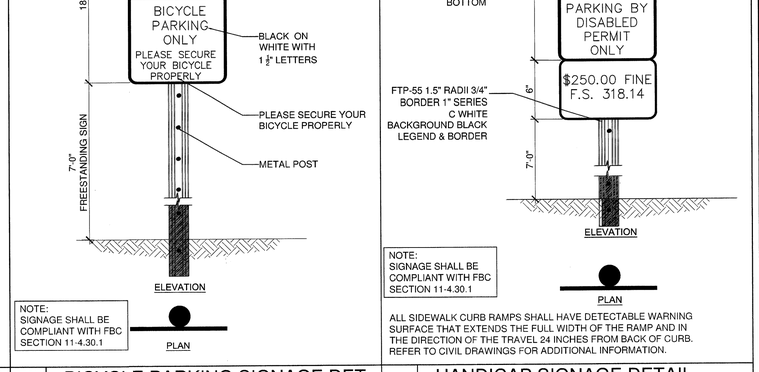

NOTE:
SIGNAGE SHALL BE COMPLIANT WITH FBC SECTION 11-4.30.1

3 BICYCLE PARKING SIGNAGE DET.
SCALE: N.T.S.

NOTE:
SIGNAGE SHALL BE COMPLIANT WITH FBC SECTION 11-4.30.1

ALL SIDEWALK CURB RAMPS SHALL HAVE DETECTABLE WARNING SURFACE THAT EXTENDS THE FULL WIDTH OF THE RAMP AND IN THE DIRECTION OF THE TRAVEL 24 INCHES FROM BACK OF CURB. REFER TO CIVIL DRAWINGS FOR ADDITIONAL INFORMATION.

2 HANDICAP SIGNAGE DETAIL
SCALE: N.T.S.

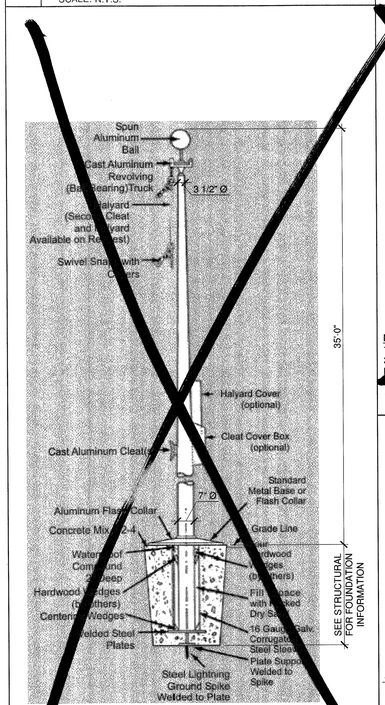

AMERICAN FLAG TO BE 6'-0" (H) x 10'-0" (W)

13 FLAG POLE DETAIL
SCALE: 3/4" = 1'-0"

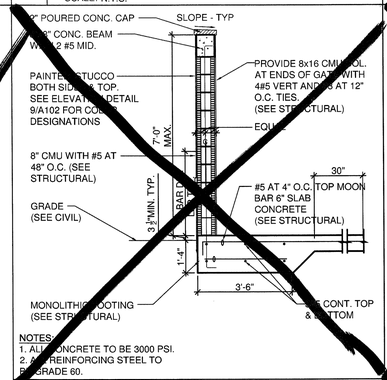

NOTES:
1. ALL CONCRETE TO BE 3000 PSI.
2. ALL REINFORCING STEEL TO BE GRADE 60.

11 DUMPSTER WALL DETAIL
SCALE: 3/8" = 1'-0"

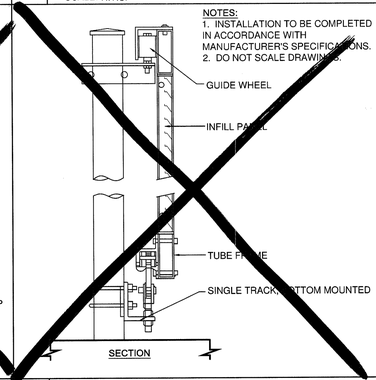

7 CANTILEVER GATE TRACK DET.
SCALE: 3/8" = 1'-0"

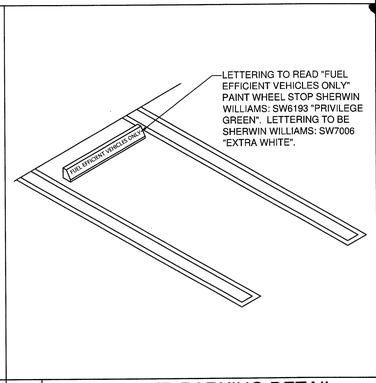

5 PREFERRED PARKING DETAIL
SCALE: N.T.S.

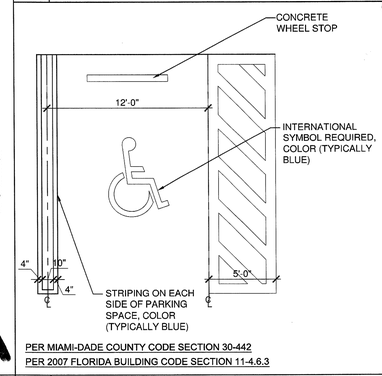

PER MIAMI-DADE COUNTY CODE SECTION 30-442
PER 2007 FLORIDA BUILDING CODE SECTION 11-4.6.3

10 HANDICAP PARKING
SCALE: 1/4" = 1'-0"

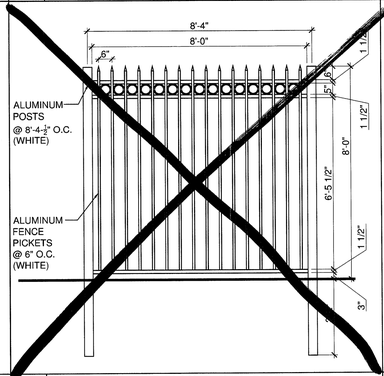

6 TYPICAL FENCE DETAIL
SCALE: 3/4" = 1'-0"

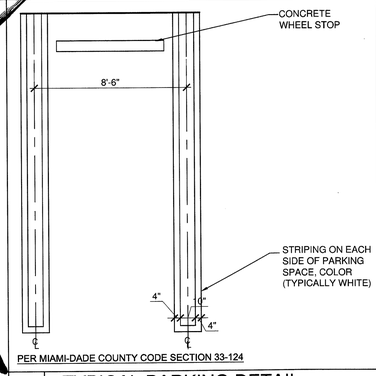

PER MIAMI-DADE COUNTY CODE SECTION 33-124

4 TYPICAL PARKING DETAIL
SCALE: 1/4" = 1'-0"

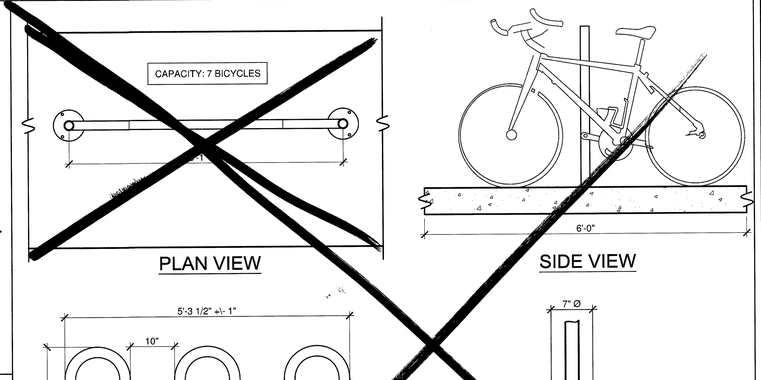

NOTES:
1. INSTALL BIKE RACKS ACCORDING TO MANUFACTURER'S SPECIFICATIONS.
2. ARCHITECT TO SELECT COLOR, SEE MANUFACTURER'S SPECIFICATIONS.
3. SEE SITE PLAN FOR LOCATION.
4. SPECIFICATIONS ARE SUBJECT TO CHANGE WITHOUT NOTICE.

MANUFAX PRODUCT #HW238-7-IG(SF) QUANTITY: 2
DESCRIPTION: HEAVY DUTY WINDER SURFACE FLANGE MOUNT 7 BIKE RACK

RECORD SET

The information presented on this drawing is diagrammatic and is presented for general information purposes and should not be relied on for accuracy of dimensions, details and locations. Actual and exact conditions if required should be determined in the field.

1 BICYCLE RACK DETAILS
SCALE: 3/4" = 1'-0"

JMWA
ARCHITECTS
STEVEN E. MYOTT AIA
JAMES R. WILLIAMS AIA
RODOLFO ACEVEDO AIA
949 CLINT MOORE ROAD
BOCA RATON, FLORIDA 33487
TEL 561 997 9997
FAX 561 997 1610
WWW.JMWA.NET

PALMETTO BAY VILLAGE HALL
9705 E. Hibiscus St., Palmetto Bay, Florida

Master Builders of South Florida, Inc.
1400 E. Oakland Park Blvd. Suite 210
Oakland Park, FL 33334

FLORIDA LICENSURE
AAC002193 IB0001142

PROJECT NO.	8714.00
DESIGNED BY:	RA
DRAWN BY:	DW / EK / JS
CHECKED BY:	JW
SUBMITTALS:	
BUILDING PERMIT	03.05.2010
REVISIONS:	
1 PERMIT COMMENTS	04.02.10

SITE DETAILS

A102

THESE DRAWINGS AND SPECIFICATIONS, AS AN INSTRUMENT OF SERVICE, ARE AND SHALL REMAIN THE PROPERTY OF JMWA ARCHITECTS INCORPORATED AND ITS BOARD OF DIRECTORS. THEY ARE NOT TO BE USED IN WHOLE OR IN PART FOR ANY OTHER PROJECT WITHOUT THE EXPRESSED WRITTEN CONSENT OF JMWA ARCHITECTS INCORPORATED AND ITS BOARD OF DIRECTORS. THE ARCHITECT'S DRAWINGS AND SPECIFICATIONS MAY NOT BE ALTERED IN ANY FORM WHATSOEVER WITHOUT THE EXPRESSED WRITTEN CONSENT OF JMWA ARCHITECTS INCORPORATED AND ITS BOARD OF DIRECTORS. NO PART OF THESE IDEAS, PLANS OR DESIGNS MAY BE REPRODUCED, COPIED OR UTILIZED GRAPHICALLY IN ANY FORM WHATSOEVER WITHOUT THE EXPRESSED WRITTEN CONSENT OF JMWA ARCHITECTS INCORPORATED AND ITS BOARD OF DIRECTORS.
© 2009 JMWA ARCHITECTS, INCORPORATED ALL RIGHTS RESERVED.

4/9/2010 9:19:59 AM ekutterer S:\Projects\8700\8714\8714_Drawings\8714_Current\8714_A102_Site Details.dwg

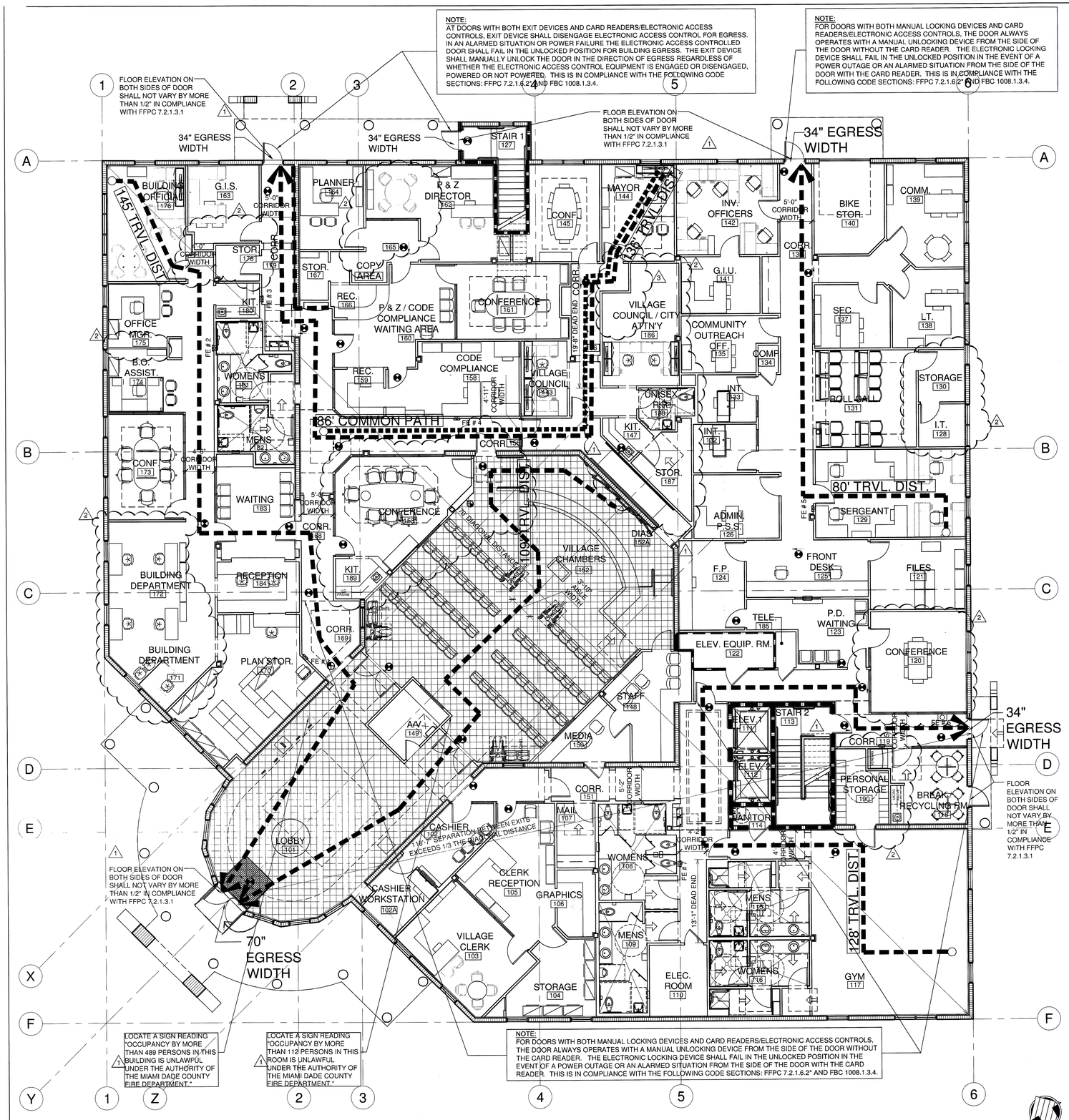

1 FIRST FLOOR LIFE SAFETY AND FURNITURE PLAN
SCALE: 1/8" = 1'-0"

ROOM OCCUPANT LOADS
BASED ON FUNCTION OF SPACE PER FFPC TABLE 7.3.1.2

ROOM #	ROOM NAME	FUNCTION OF SPACE	SF PER OCCUP. OR # OF SEATS	ROOM AREA IN SF	ROOM OCCUPANT #
101	LOBBY	ASSEM	7	925	132.14
102	CASHIER	ASSEM	2 SEATS	123	2
102A	CASHIER WORKSTATION	BUSIN	100	64	0.64
103	VILLAGE CLERK	BUSIN	100	227	2.27
104	STORAGE	STOR	300	158	0.53
105	CLERK RECEPTION	BUSIN	100	233	2.33
106	GRAPHICS	BUSIN	100	61	0.61
107	MAIL ROOM	BUSIN	100	61	0.61
108	WOMEN'S RESTROOM	CIRCU	0	182	-
109	MEN'S RESTROOM	CIRCU	0	153	-
110	ELECTRICAL ROOM	STOR	300	101	0.34
111	ELEVATOR 1	CIRCU	0	-	-
112	ELEVATOR 2	CIRCU	0	-	-
113	STAIR 2	CIRCU	0	-	-
114	JANITOR CLOSET	STOR	300	18	0.06
115	MEN'S RESTROOM	CIRCU	0	149	-
116	WOMEN'S RESTROOM	CIRCU	0	149	-
117	GYM	EX RM	50	706	14.12
118	BREAK / RECYCLING ROOM	ASSEM	15	130	8.67
119	CORRIDOR	CIRCU	0	-	-
120	OFFICE	BUSIN	100	220	2.20
121	FILES	STOR	300	179	0.60
122	ELEVATOR EQUIP. ROOM	STOR	300	72	0.24
123	POLICE DEPT. WAITING	ASSEM	5 SEATS	154	5
124	FINGERPRINTING	BUSIN	100	147	1.47
125	FRONT DESK	BUSIN	100	177	1.77
126	ADMIN. P.S.S.	BUSIN	100	119	1.19
127	STAIR 1	CIRCU	0	-	-
128	I.T.	BUSIN	100	26	0.26
129	SERGEANT	BUSIN	100	321	3.21
130	STORAGE	STOR	300	131	0.44
131	ROLL CALL	BUSIN	100	203	2.03
132	INTERROGATION	BUSIN	100	93	0.93
133	INTERROGATION	BUSIN	100	85	0.85
134	COMPUTER ROOM	BUSIN	100	14	0.14
135	COMMUNITY OUTREACH OFF.	BUSIN	100	117	1.17
136	CORRIDOR	CIRCU	0	-	-
137	SECRETARY	BUSIN	100	118	1.18
138	LIEUTENANT	BUSIN	100	139	1.39
139	COMMANDER	BUSIN	100	189	1.89
140	BIKE STORAGE	STOR	300	151	0.50
141	G.I.U.	BUSIN	100	108	1.08
142	INVESTIGATIVE OFFICERS	BUSIN	100	222	2.22
143	VILLAGE COUNCIL	BUSIN	100	101	1.01
144	MAYOR	BUSIN	100	170	1.70
145	CONFERENCE	ASSEM	15	176	11.73
146	NOT USED			-	-
147	KITCHEN	KITCH	100	19	0.19
148	STAFF	BUSIN	100	154	1.54
149	AUDIO / VISUAL	BUSIN	100	96	0.96
150	MEDIA	BUSIN	100	95	0.95
151	CORRIDOR	CIRCU	0	-	-
152	VILLAGE CHAMBERS	ASSEM	95 SEATS	1285	96
152A	DIAS	ASSEM	15	241	16.07
153	CONFERENCE	ASSEM	15	221	14.73
154	VESTIBULE	CIRCU	0	48	-
155	CORRIDOR	CIRCU	0	-	-
156	CORRIDOR	CIRCU	0	-	-
157	NOT USED			-	-
158	CODE COMPLIANCE	BUSIN	100	214	2.14
159	RECEPTIONIST	BUSIN	100	57	0.57
160	PLANNING & ZONING WAITING	ASSEM	4 SEATS	214	4
161	CONFERENCE	ASSEM	15	200	13.33
162	PLANNING & ZONING DIR.	BUSIN	100	191	1.91
163	GRAPHIC INFO. SYSTEMS	BUSIN	100	82	0.82
164	PLANNER	BUSIN	100	117	1.17
165	COPY AREA	BUSIN	100	74	0.74
166	RECEPTIONIST	BUSIN	100	21	0.21
167	STORAGE	STOR	300	34	0.11
168	CORRIDOR	CIRCU	0	-	-
169	CORRIDOR	CIRCU	0	-	-
170	PLAN STORAGE	BUSIN	100	349	3.49
171	BUILDING DEPARTMENT	BUSIN	100	118	1.18
172	BUILDING DEPARTMENT	BUSIN	100	218	2.18
173	CONFERENCE	ASSEM	15	190	12.67
174	BUILDING OFFICIAL ASSIST.	BUSIN	100	119	1.19
175	OFFICE MANAGER	BUSIN	100	119	1.19
176	BUILDING OFFICIAL	BUSIN	100	219	2.19
177	CAPITAL IMPROVEMENT	BUSIN	100	134	1.34
178	STORAGE	STOR	300	39	0.39
179	CORRIDOR	CIRCU	0	-	-
180	KITCHEN	KITCH	100	38	0.38
181	WOMEN'S RESTROOM	CIRCU	0	-	-
182	MEN'S RESTROOM	CIRCU	0	-	-
183	WAITING ROOM	ASSEM	8 SEATS	163	8
184	RECEPTIONIST	BUSIN	100	103	1.03
185	TELEPHONE	BUSIN	100	18	0.18
186	VILLAGE COUNCIL/CITY ATTY.	BUSIN	100	210	2.10
187	STORAGE	STOR	300	83	0.28
188	UNISEX RESTROOM	CIRCU	0	-	-
189	KITCHEN	KITCH	100	34	0.34

MIXED OCCUPANCY AREA & OCCUPANT CALCS.

	FUNCTION OF SPACE	SF PER OCCUP. OR OCCUP. PER SEAT PER TABLE 1004.1.1	NUMBER OF SQUARE FEET	% TOTL GROSS AREA	OCCUPANT LOAD
BUSINESS	1ST FLOOR (1SF FL. AREA - ASSEM. AREA)	100 GROSS SF	15,667 SF	58.4 %	157
	2ND FLOOR INCL. FUTURE ROOF TERRACE	100 GROSS SF	8,617 SF	32.1 %	87
	TOTAL BUSINESS OCCUPANTS		25,100 SF		244
A-3 ASSEMBLY (ALL ON 1ST FL.)	FIXED SEATS (COUNCIL CHAMB.)	1 PER SEAT	1285SF 96 SEATS INCL. HC SPCS	4.8%	96
	UNCONC. TBLS. & CHRS. (DIAS)	15 SF NET	241 SF	0.9%	16
	CONCENTRATED (LOBBY)	7 SF NET	985 SF	3.7%	133
	TOTAL ASSEMBLY OCCUPANTS		1,705 SF		245
	TOTALS		26,805 SF	100%	489

ALLOWABLE AREA, HEIGHT & EGRESS REQMTS.

	ALLOWED	PROVIDED
ALLOWABLE BUILDING AREA		
ALLOWABLE BUILDING AREA IS PER F.B.C. CHAPTER 5, TABLE 503 GROUP A-3 (MOST RESTRICITVE OCCUPANCY OF MIXED OCCUPANCY) AS MODIFIED BY FBC SECTION 506	32,874 SF/FLOOR	18,188 SF/1ST FL 8,617 SF/2ND FL
ALLOWABLE BUILDING HEIGHT	ALLOWED	PROVIDED
ALLOWABLE BUILDING HEIGHT IS PER F.B.C. CHAPTER 5, TABLE 503 GROUP A-3 (MOST RESTRICITVE OCCUPANCY OF MIXED OCCUPANCY) ALLOWABLE HEIGHT FOR TYPE V-B MIXED OCCUPANCY INCLUDES A 1-STORY AUTOMATIC FIRE SPRINKLER INCREASE.	2 STORIES	2 STORIES
NUMBER OF EXITS (AS REQUIRED PER FBC SECION 1019.1)	REQUIRED	PROVIDED
1ST FLOOR	2	4
2ND FLOOR	2	2
EGRESS WIDTH	REQUIRED	PROVIDED
EGRESS WIDTH .PER FBC TABLE 1005.1 IS .2" PER OCCUPANT 489 OCCUPANTS X .2"/OCCUPANT = 97.8" REQ'D EGRESS WIDTH	97.8"	206.0"
STAIR WIDTH	REQUIRED	PROVIDED
STAIR WIDTH .PER FBC TABLE 1005.1 IS .3" PER OCCUPANT 87OCCUPANTS X .3"/OCCUPANT = 26.1" REQ'D EGRESS WIDTH	26.1"	96.0"
EXIT ACCESS TRAVEL DISTANCE	MAXIMUM	PROVIDED
MAX.TRVL. DISTANCE PER TABLE 1016.1 FOR SPRNKLERED B OCCUPANCY	300'	145'
MINIMUM CORRIDOR WIDTH	MINIMUM	PROVIDED
MINIMUM CORRIDOR WIDTH PER TABLE 1017.2	44"	MIN 48 "
MINIMUM CORRIDOR FIRE RATING	MINIMUM	PROVIDED
MINIMUM CORRIDOR FIRE RATING PER TABLE 1017.2 AND FOOTNOTE C	0 HOURS	0 HOURS
MAXIMUM DEAD END CORRIDOR	MAXIMUM	PROVIDED
MAXIMUM DEAD END CORRIDOR PER SECTION 1017.3 B OCCUPANCY	50'	21'-3"
MAXIMUM COMMON PATH OF TRAVEL LENGTH	MAXIMUM	PROVIDED
MAX. COMMON PATH OF EGRESS TRAVEL PER SEC.1014.3 FOR B OCCUPANCY	100'	86'

GENERAL NOTES

1. OCCUPANCY CLASSIFICATION IS MIXED OCCUPANCY WITH UNSEPARATED OCCUPANCIES
2. CLASSIFICATION OF HAZARD IS ORDINARY HAZARD IN ACCORDANCE WITH NFPA 101 - 6.2.2.3
3. BUILDING TO BE FULLY AUTOMATIC SPRINKLERED. SEE FIRE PROTECTION PERMIT DRAWINGS BY OTHERS.
4. SPRINKLER SYSTEM SHALL BE INSTALLED BY AN APPROVED AUTOMATIC FIRE SPRINKLER CONTRACTOR WHO MUST SUBMIT COMPLETE ENGINEERED SPRINKLER PLANS AND HYDRAULIC CALCULATIONS SIGNED AND SEALED BY A REGISTERED PROFESSIONAL FLORIDA ENGINEER. THE SYSTEM SHALL COMPLY WITH N.F.P.A. SECTIONS 13, 14, 20 AND ALL APPLICABLE SECTIONS OF THE FLORIDA BUILDING CODE, 2007 EDITION.
5. ALL SPRINKLER HEADS IN FINISHED AREAS SHALL BE CHROME PLATED, SEMI RECESSED.
6. THE CONTRACTOR SHALL PROVIDE AND INSTALL (1) 10 LB. ABC TYPE U.L. LISTED FIRE EXTINGUISHER 1 PER 75'-0" OR 2500 S.F. LOCATION SHALL BE APPROVED BY FIRE MARSHALL PRIOR TO INSTALLATION.
7. FURNITURE SHOWN FOR EGRESS INFORMATION ONLY
8. ALL FIRE AND/OR SMOKE SEPARATION WALLS MUST BE IDENTIFIED ABOVE DECORATIVE CEILING AND IN CONCEALED SPACES BY STENCILED SIGN READING: "FIRE AND SMOKE BARRIER PROTECT ALL OPENINGS"
9. HEADROOM IN ALL MEANS OF EGRESS SHALL BE MINIUM 7'-6" WITH PROJECTIONS NOT LESS THAN 6'-8"
10. ABRUPT CHANGES IN ELEVATION OF WALKING SURFACES SHALL NOT EXCEED 1/4". CHANGES IN ELEVATION BETWEEN 1/4" AND 1/2" SHALL BE LEVELED 1 TO 2.

INTERIOR WALL & CEILING FINISH INFORMATION

BUSINESS OCCUPANCY		ASSEMBLY OCCUPANCY	
EXIT OR EXIT ACCCES CORRIDORS	ALL OTHER AREAS	CORRIDORS OR LOBBIES	COUNCIL CHAMBER ASSEMBLY AREA
CLASS A OR B	CLASS A, B, OR C	CLASS A OR B	CLASS A, B, OR C

INTERIOR FLOOR FINISH INFO

NOTE: FOR ADDITIONAL FINISH REQUIREMENTS, SEE NOTES ON SHEET A903 AND A904.

BUSINESS OCCUPANCY EXIT ENCLOSURES SHALL BE CLASS I OR II	ASSEMBLY OCCUPANCY EXIT ENCLOSURES AND EXIT ACCESS CORRIDORS AND IS SPACES NOT SEPARATED FROM THEM BY WALLS SHALL BE NOT LESS THAN CLASS II

LEGEND

RECORD SET

XX' TRAVEL DISTANCE — DENOTES EGRESS AND TRAVEL DISTANCE

XX' COMMON PATH — DENOTES COMMON PATH OF EGRESS TRAVEL DISTANCE

2 HOUR FIRE RATED WALL

1 HOUR FIRE RATED WALL

HATCHED AREA INDICATES ASSEMBLY OCCUPANCY

The information presented on this drawing is diagrammatic and is presented for general information purposes and should not be relied on for accuracy of dimensions, details and locations. Actual and exact conditions required should be determined in the field.

JMWA ARCHITECTS
STEVEN E. MYOTT AIA
JAMES R. WILLIAMS AIA
RODOLFO ACEVEDO AIA
949 CLINT MOORE ROAD
BOCA RATON, FLORIDA 33487
TEL 561 997 9997
FAX 561 997 1610
WWW.JMWA.NET

PALMETTO BAY VILLAGE HALL
9705 E. Hibiscus St., Palmetto Bay, Florida
Master Builders of South Florida, Inc.
1400 E. Oakland Park Blvd. Suite 210
Oakland Park, FL 33334

FLORIDA LICENSURE

AAC002193 IB0001142

PROJECT NO. 8714.00
DESIGNED BY: RA
DRAWN BY: DW / EK / JS
CHECKED BY: JW

SUBMITTALS:
BUILDING PERMIT 03.05.2010

REVISIONS:
1 PERMIT COMMENTS 04.02.10
2 OWNER REVISIONS 06.22.10
3 OWNER REVISIONS 07.07.10

FIRST FLOOR LIFE SAFETY & FURNITURE PLAN

A121

© 2009 JMWA ARCHITECTS, INCORPORATED ALL RIGHTS RESERVED. NO PART OF THESE DESIGNS MAY BE REPRODUCED, COPIED OR UTILIZED GRAPHICALLY IN ANY FORM WHATSOEVER, WITHOUT THE EXPRESSED WRITTEN CONSENT OF JMWA ARCHITECTS INCORPORATED AND ITS BOARD OF DIRECTORS.

8/12/2010 2:54:27 PM ekutterer S:\Projects\8700\8714\8714_Drawings\8714_Current\8714_A121_First Floor Life Safety and Furniture Plan.dwg

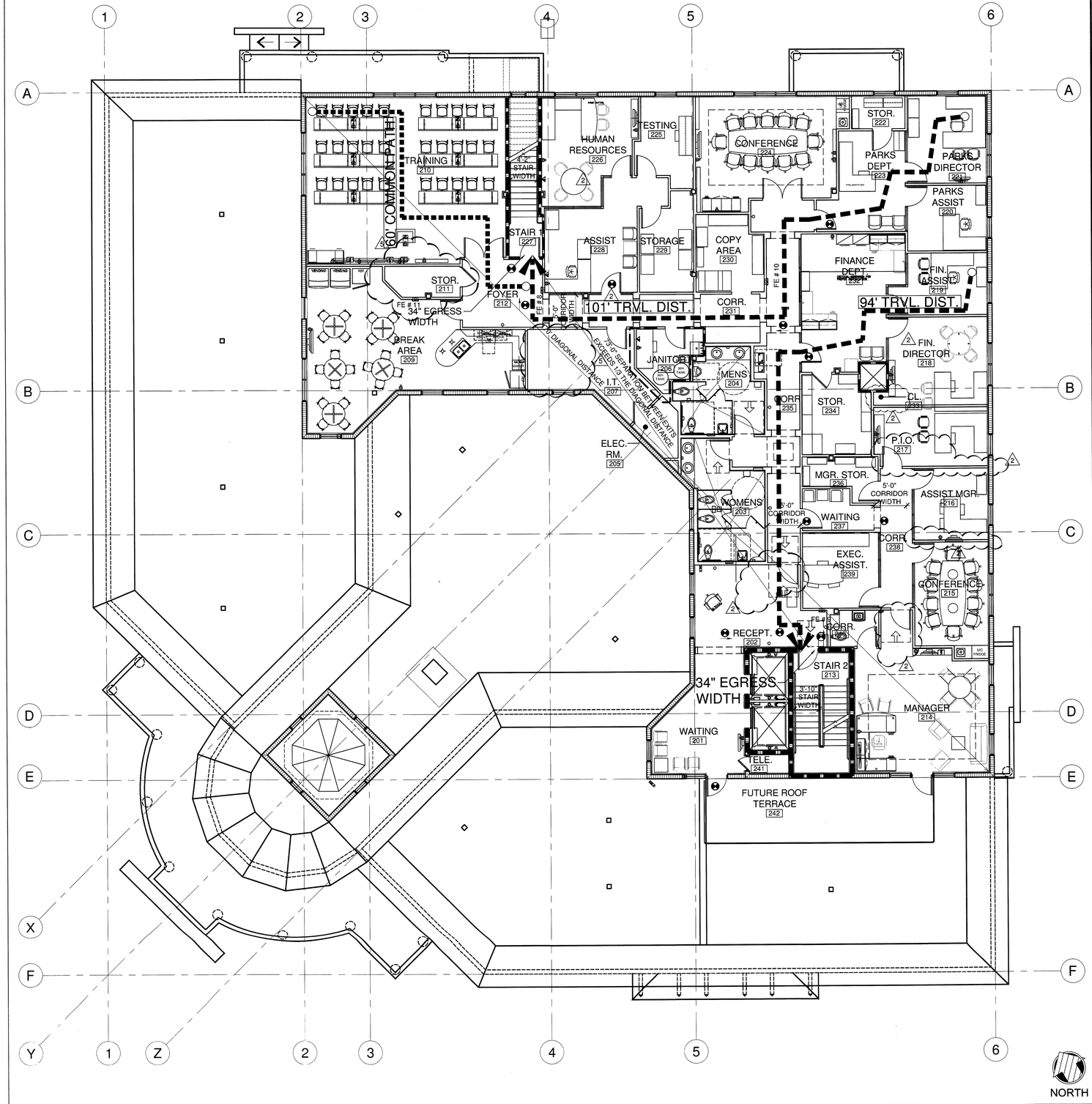

ROOM OCCUPANT LOADS ⚠1

ROOM NUMBER	ROOM NAME	FUNCTION OF SPACE	SF PER OCCUPANT OR # OF SEATS	ROOM AREA IN SF	ROOM OCCUPANT #
201	WAITING	ASSEM	6 SEATS	202	6
202	RECEPTIONIST	BUSIN	100	161	1.61
203	WOMEN'S RESTROOM	CIRCU	0	186	-
204	MEN'S RESTROOM	CIRCU	0	152	-
205	ELECTRICAL ROOM	STOR	300	41	0.14
206	JANITOR	STOR	300	85	0.28
207	I.T.	BUSIN	100	91	0.91
208	I.T. OFFICE	BUSIN	100	73	0.73
209	BREAK ROOM	ASSEM	15	557	37.13
210	TRAINING	CLASRM	20	741	37.05
211	STORAGE	STOR	300	66	0.22
212	FOYER	CIRCU	0	-	-
213	STAIR 2	CIRCU	0	-	-
214	MANAGER	BUSIN	100	374	3.74
215	CONFERENCE	ASSEM	15	192	12.8
216	ASSISTANT MANAGER	BUSIN	100	108	1.08
217	P.I.O.	BUSIN	100	173	1.73
218	FINANCE DIRECTOR	BUSIN	100	210	2.1
219	FINANCE ASSISTANT	BUSIN	100	135	1.35
220	PARKS ASSISTANT	BUSIN	100	120	1.20
221	PARKS DIRECTOR	BUSIN	100	160	1.60
222	STORAGE	STOR	300	41	0.14
223	PARKS DEPT.	BUSIN	100	173	1.73
224	CONFERENCE	ASSEM	15	332	22.13
225	TESTING	BUSIN	100	108	1.08
226	HUMAN RESOURCES	BUSIN	100	208	2.08
227	STAIR 1	CIRCU	0	-	-
228	ASSISTANT	BUSIN	100	226	2.26
229	STORAGE	STOR	300	101	0.34
230	COPY AREA	BUSIN	100	133	1.33
231	CORRIDOR	CIRCU	0	-	-
232	FINANCE DEPT.	BUSIN	100	291	2.91
233	CLOSET	STOR	300	6	0.02
234	STORAGE	STOR	300	125	0.42
235	CORRIDOR	CIRCU	0	-	-
236	MANAGER'S STORAGE	STOR	300	54	0.18
237	WAITING	ASSEM	2 SEATS	56	2
238	CORRIDOR	CIRCU	0	-	-
239	EXECUTIVE ASSISTANT	BUSIN	100	135	1.35
240	CORRIDOR	CIRCU	0	-	-
241	TELE	STOR	300	17	0.06
242	FUTURE ROOF TERRACE	ASSEM	7	343	49

RECORD SET

The information presented on this drawing is diagrammatic and is presented for general information purposes and should not be relied on for accuracy of dimensions, details and locations. Actual and exact conditions if required should be determined in the field.

1 SECOND FLOOR LIFE SAFETY AND FURNITURE PLAN
SCALE: 1/8" = 1'-0"

JMWA ARCHITECTS

STEVEN E. MYOTT AIA
JAMES R. WILLIAMS AIA
RODOLFO ACEVEDO AIA

949 CLINT MOORE ROAD
BOCA RATON, FLORIDA 33487
TEL 561 997 9997
FAX 561 997 1610

WWW.JMWA.NET

PALMETTO BAY VILLAGE HALL

9705 E. Hibiscus St., Palmetto Bay, Florida

Master Builders of South Florida, Inc.
1400 E. Oakland Park Blvd. Suite 210
Oakland Park, FL 33334

FLORIDA LICENSURE

AAC002193 IB0001142

PROJECT NO. 8714.00
DESIGNED BY: RA
DRAWN BY: DW / EK / JS
CHECKED BY: JW

SUBMITTALS:
BUILDING PERMIT 03.05.2010

REVISIONS:
⚠1 PERMIT COMMENTS 03.31.10
⚠2 OWNER REVISIONS 06.22.10
⚠5 OWNER REVISIONS 07.27.10

SECOND FLOOR LIFE SAFETY AND FURNITURE PLAN

A122

© 2009 JMWA ARCHITECTS, INCORPORATED ALL RIGHTS RESERVED. NO PART OF THESE IDEAS, PLANS OR DESIGNS MAY BE REPRODUCED, COPIED OR UTILIZED GRAPHICALLY IN ANY FORM WHATSOEVER WITHOUT THE EXPRESSED WRITTEN CONSENT OF JMWA ARCHITECTS INCORPORATED AND ITS BOARD OF DIRECTORS.

8/12/2010 2:07:47 PM ekutterer S:\Projects\8700\8714\8714_Drawings\8714_Current\8714_A122_Second Floor Life Safety and Furniture Plan.dwg

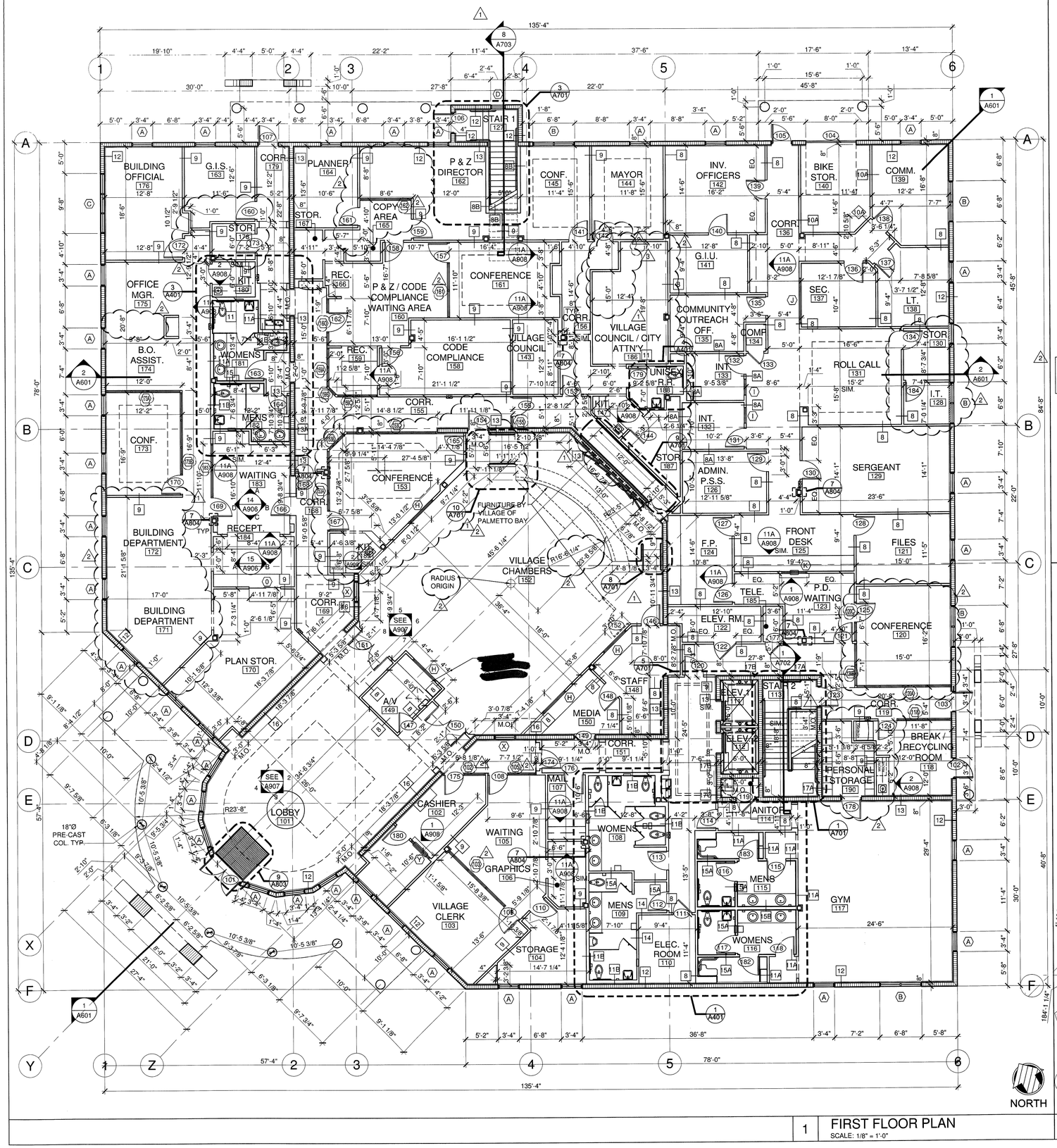

1 FIRST FLOOR PLAN
SCALE: 1/8" = 1'-0"

NOTE:
GENERALLY THROUGHOUT THE FLOOR PLAN, INTERIOR WINDOWS WERE CONVERTED INTO INTERIOR STOREFRONTS.

FLOOR PLAN GENERAL NOTES

1. DIMENSIONS ARE TO FACE OF FRAMING AND CONCRETE OR TO CENTERLINE OF COLUMNS AND OPENINGS U.N.O.
2. REFER TO SHEET A801 FOR DOOR SCHEDULE AND DOOR INFORMATION.
3. REFER TO SHEET A802 FOR WINDOW SCHEDULE AND INFORMATION.
4. REFER TO SHEET A804 FOR WALL ASSEMBLY INFORMATION.
5. PROVIDE BACKING FOR ALL WALL MOUNTED ACCESSORIES, FURNISHINGS AND EQUIPMENT. VERIFY WEIGHTS AND LOCATIONS.
6. PROVIDE SOUND ATTENUATION INSULATION AT TOILET ROOM WALLS.
7. REFER TO A9 SERIES FOR FLOOR FINISH MATERIAL AND LAYOUT.
8. REFER TO A9 SERIES FOR LOCATION AND EXTENT OF MIRRORS.
9. PROVIDE MOISTURE RESISTANT GYPSUM BOARD ON ALL WALLS RECEIVING TILE FROM TOP OF TILE BACKER BOARD TO ADJACENT CEILING.
10. ALL WALLS ARE 0°, 45°, 90°, 135° OR RADIUSED U.N.O.
11. ALL FIRE AND/OR SMOKE SEPARATION WALLS MUST BE IDENTIFIED ABOVE DECORATIVE CEILING (WHERE OCCURS) AND IN CONCEALED SPACES BY STENCILED SIGN READING "FIRE AND SMOKE BARRIER. PROTECT ALL OPENINGS".
12. MOUNT FIRE EXTINGUISHER CABINETS @ 42" A.F.F. TO CENTERLINE OF FEC DOOR PULL. REFER TO LIFE SAFETY PLAN SHEETS A121 AND A122 FOR FIRE EXTINGUISHER INFORMATION.
13. PRE-TREAT SOIL AGAINST SUBTERRANEAN TERMITES PER SECTION 1816 OF THE FLORIDA BUILDING CODE AND THE FLORIDA DEPARTMENT OF AGRICULTURE AND CONSUMER SERVICES. TERMITE PROTECTION SHALL BE PROVIDED BY REGISTERED TERMICIDES, INCLUDING SOIL APPLIED PESTICIDES, BAITING SYSTEMS, AND PESTICIDES APPLIED TO WOOD OR OTHER APPROVED METHODS OF TERMITE PROTECTION LABELED FOR USE AS A PRESERVATIVE TREATMENT TO NEW CONSTRUCTION. UPON COMPLETION OF THE APPLICATION OF THE TERMITE PROTECTIVE TREATMENT, A CERTIFICATE OF COMPLIANCE SHALL BE ISSUED TO THE BUILDING DEPARTMENT BY THE LICENSED PEST CONTROL COMPANY THAT CONTAINS THE FOLLOWING STATEMENT: "THE BUILDING HAS RECEIVED A COMPLETE TREATMENT FOR THE PREVENTION OF SUBTERRANEAN TERMITES. TREATMENT IS IN ACCORDANCE WITH THE RULES AND LAWS ESTABLISHED BY THE FLORIDA DEPARTMENT OF AGRICULTURE AND CONSUMER SERVICES".

X — ASSEMBLY REFERENCE (INT. WALL ASSEMBLY; REFER TO A804)

PLUMBING FIXTURE CALCULATIONS

BASED ON 123 MALES & 123 FEMALES = 245 ASSEMBLY OCCUPANTS AND 244 BUSINESS OCCUPANTS

		REQUIRED		PROVIDED		
		MALE	FEMALE	MALE	FEMALE	UNISEX
WATER CLOSETS	ASSEMBLY	1/125 x 123 = .98 ≈ 1	1/65 x 123 = 1.89 ≈ 2			
	BUSINESS	1/25 FIRST 50 = 2 1/50 REMAIND. = 194/50 = 3.8 ≈ 4				
	TOTAL	9		6 WC 3 UR	10	1
LAVS	ASSEMBLY	1/200 x 245 = 1.2 ≈ 2				
	BUSINESS	1/40 FIRST 80 = 2 1/80 REMAIND. = 164/80 = 2.1 ≈ 3				
	TOTAL	7			25	
DRINK FOUNT.	ASSEMBLY	1/500 x 245 = 0.5 ≈ 1				
	BUSINESS	1/100 x 244 = 2.4 ≈ 3				
	TOTAL	4			6	
SERVICE SINKS		1			2	

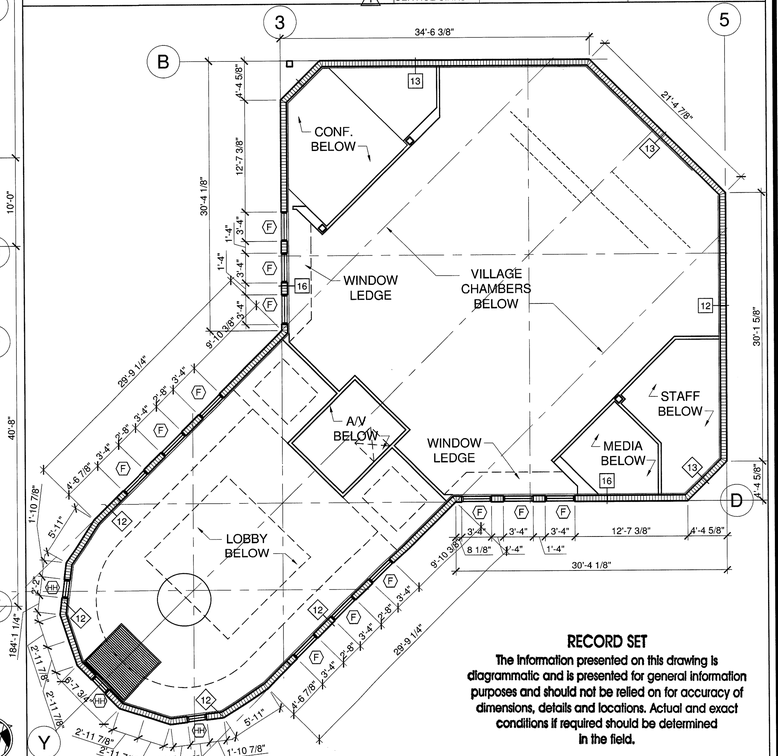

2 UPPER FLOOR PLAN AT VILLAGE CHAMBERS / LOBBY
SCALE: 1/8" = 1'-0"

RECORD SET

The information presented on this drawing is diagrammatic and is presented for general information purposes and should not be relied on for accuracy of dimensions, details and locations. Actual and exact conditions if required should be determined in the field.

JMWA ARCHITECTS

STEVEN E. MYOTT AIA
JAMES R. WILLIAMS AIA
RODOLFO ACEVEDO AIA

949 CLINT MOORE ROAD
BOCA RATON, FLORIDA 33487
TEL 561 997 9997
FAX 561 997 1610

WWW.JMWA.NET

PALMETTO BAY VILLAGE HALL

9705 E. Hibiscus St., Palmetto Bay, Florida

Master Builders of South Florida, Inc.
1400 E. Oakland Park Blvd. Suite 210
Oakland Park, FL 33334

FLORIDA LICENSURE

AAC002193 IB0001142

PROJECT NO.	8714.00
DESIGNED BY:	RA
DRAWN BY:	DW / EK / JS
CHECKED BY:	JW

SUBMITTALS:
BUILDING PERMIT 03.05.2010

REVISIONS:
1 PERMIT COMMENTS 04.02.10
2 OWNER REVISIONS 06.22.10
3 OWNER REVISIONS 07.07.10

FIRST FLOOR PLAN

A201

© 2009 JMWA ARCHITECTS, INCORPORATED ALL RIGHTS RESERVED. NO PART OF THESE IDEAS, PLANS OR DESIGNS MAY BE REPRODUCED, COPIED OR UTILIZED GRAPHICALLY IN ANY FORM WHATSOEVER WITHOUT THE EXPRESSED WRITTEN CONSENT OF JMWA ARCHITECTS INCORPORATED AND ITS BOARD OF DIRECTORS.

8/12/2010 2:54:59 PM ekutterer S:\Projects\8700\8714\8714_Drawings\8714_Current\8714_A201_First Floor Plan.dwg

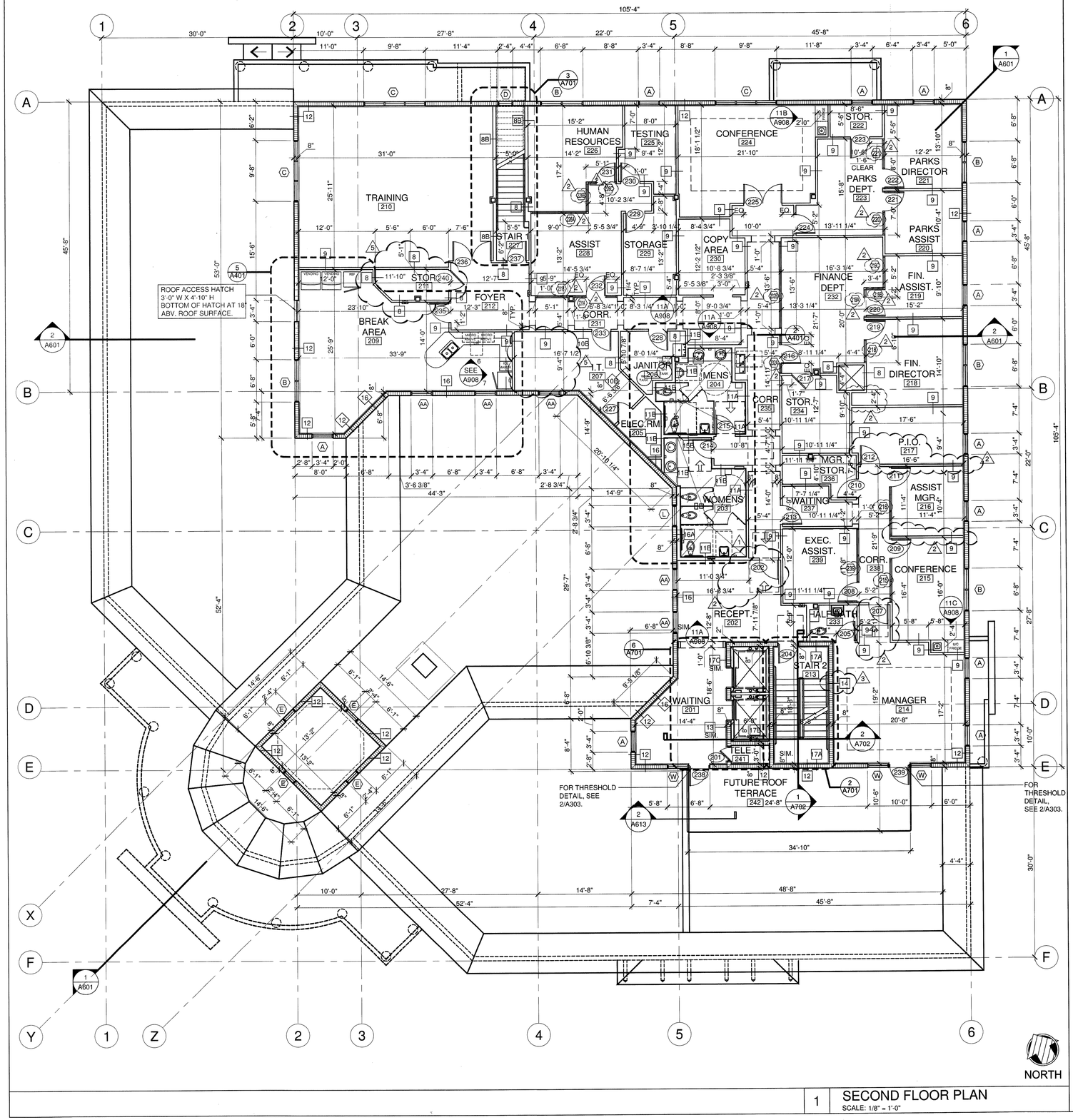

1 SECOND FLOOR PLAN
SCALE: 1/8" = 1'-0"

FLOOR PLAN GENERAL NOTES

1. DIMENSIONS ARE TO FACE OF FRAMING AND CONCRETE OR TO CENTERLINE OF COLUMNS AND OPENINGS U.N.O.
2. REFER TO SHEET A801 FOR DOOR SCHEDULE AND DOOR INFORMATION.
3. REFER TO SHEET A802 FOR WINDOW SCHEDULE AND INFORMATION.
4. REFER TO SHEET A804 FOR WALL ASSEMBLY INFORMATION.
5. PROVIDE BACKING FOR ALL WALL MOUNTED ACCESSORIES, FURNISHINGS AND EQUIPMENT. VERIFY WEIGHTS AND LOCATIONS.
6. PROVIDE SOUND ATTENUATION INSULATION AT TOILET ROOM WALLS.
7. REFER TO A9 SERIES FOR FLOOR FINISH MATERIAL AND LAYOUT.
8. REFER TO A9 SERIES FOR LOCATION AND EXTENT OF MIRRORS.
9. PROVIDE MOISTURE RESISTANT GYPSUM BOARD ON ALL WALLS RECEIVING TILE FROM TOP OF TILE BACKER BOARD TO ADJACENT CEILING.
10. ALL WALLS ARE 0°, 45°, 90°, 135° OR RADIUSED U.N.O.
11. ALL FIRE AND/OR SMOKE SEPARATION WALLS MUST BE IDENTIFIED ABOVE DECORATIVE CEILING (WHERE OCCURS) AND IN CONCEALED SPACES BY STENCILED SIGN READING "FIRE AND SMOKE BARRIER. PROTECT ALL OPENINGS".
12. MOUNT FIRE EXTINGUISHER CABINETS @ 42" A.F.F. TO CENTERLINE OF FEC DOOR PULL. REFER TO LIFE SAFETY PLAN SHEETS A121 AND A122 FOR FIRE EXTINGUISHER INFORMATION.
13. PRE-TREAT SOIL AGAINST SUBTERRANEAN TERMITES PER SECTION 1816 OF THE FLORIDA BUILDING CODE AND THE FLORIDA DEPARTMENT OF AGRICULTURE AND CONSUMER SERVICES. TERMITE PROTECTION SHALL BE PROVIDED BY REGISTERED TERMICIDES, INCLUDING SOIL APPLIED PESTICIDES, BAITING SYSTEMS, AND PESTICIDES APPLIED TO WOOD OR OTHER APPROVED METHODS OF TERMITE PROTECTION LABELED FOR USE AS A PRESERVATIVE TREATMENT TO NEW CONSTRUCTION. UPON COMPLETION OF THE APPLICATION OF THE TERMITE PROTECTIVE TREATMENT, A CERTIFICATE OF COMPLIANCE SHALL BE ISSUED TO THE BUILDING DEPARTMENT BY THE LICENSED PEST CONTROL COMPANY THAT CONTAINS THE FOLLOWING STATEMENT: "THE BUILDING HAS RECEIVED A COMPLETE TREATMENT FOR THE PREVENTION OF SUBTERRANEAN TERMITES. TREATMENT IS IN ACCORDANCE WITH THE RULES AND LAWS ESTABLISHED BY THE FLORIDA DEPARTMENT OF AGRICULTURE AND CONSUMER SERVICES".

X — ASSEMBLY REFERENCE (INT. WALL ASSEMBLY; REFER TO A804)

RECORD SET

The Information presented on this drawing is diagrammatic and is presented for general information purposes and should not be relied on for accuracy of dimensions, details and locations. Actual and exact conditions if required should be determined in the field.

JMWA ARCHITECTS

STEVEN E. MYOTT AIA
JAMES R. WILLIAMS AIA
RODOLFO ACEVEDO AIA

949 CLINT MOORE ROAD
BOCA RATON, FLORIDA 33487
TEL 561 997 9997
FAX 561 997 1610

WWW.JMWA.NET

PALMETTO BAY VILLAGE HALL

9705 E. Hibiscus St., Palmetto Bay, Florida

Master Builders of South Florida, Inc.
1400 E. Oakland Park Blvd. Suite 210
Oakland Park, FL 33334

FLORIDA LICENSURE

AAC002193 IB0001142

PROJECT NO.	8714.00
DESIGNED BY:	RA
DRAWN BY:	DW / EK / JS
CHECKED BY:	JW

SUBMITTALS:
BUILDING PERMIT 03.05.2010

REVISIONS:
1 PERMIT COMMENTS 04.02.10
2 OWNER REVISIONS 06.22.10
3 OWNER REVISIONS 07.07.10
5 OWNER REVISIONS 07.27.10

SECOND FLOOR PLAN

A202

© 2009 JMWA ARCHITECTS, INCORPORATED ALL RIGHTS RESERVED. NO PART OF THESE IDEAS, PLANS OR DESIGNS MAY BE REPRODUCED, COPIED OR UTILIZED GRAPHICALLY IN ANY FORM WHATSOEVER WITHOUT THE EXPRESSED WRITTEN CONSENT OF JMWA ARCHITECTS INCORPORATED AND ITS BOARD OF DIRECTORS.

8/12/2010 2:07:29 PM ekutterer S:\Projects\8700\8714\8714_Drawings\8714_Current\8714_A202_Second Floor Plan.dwg

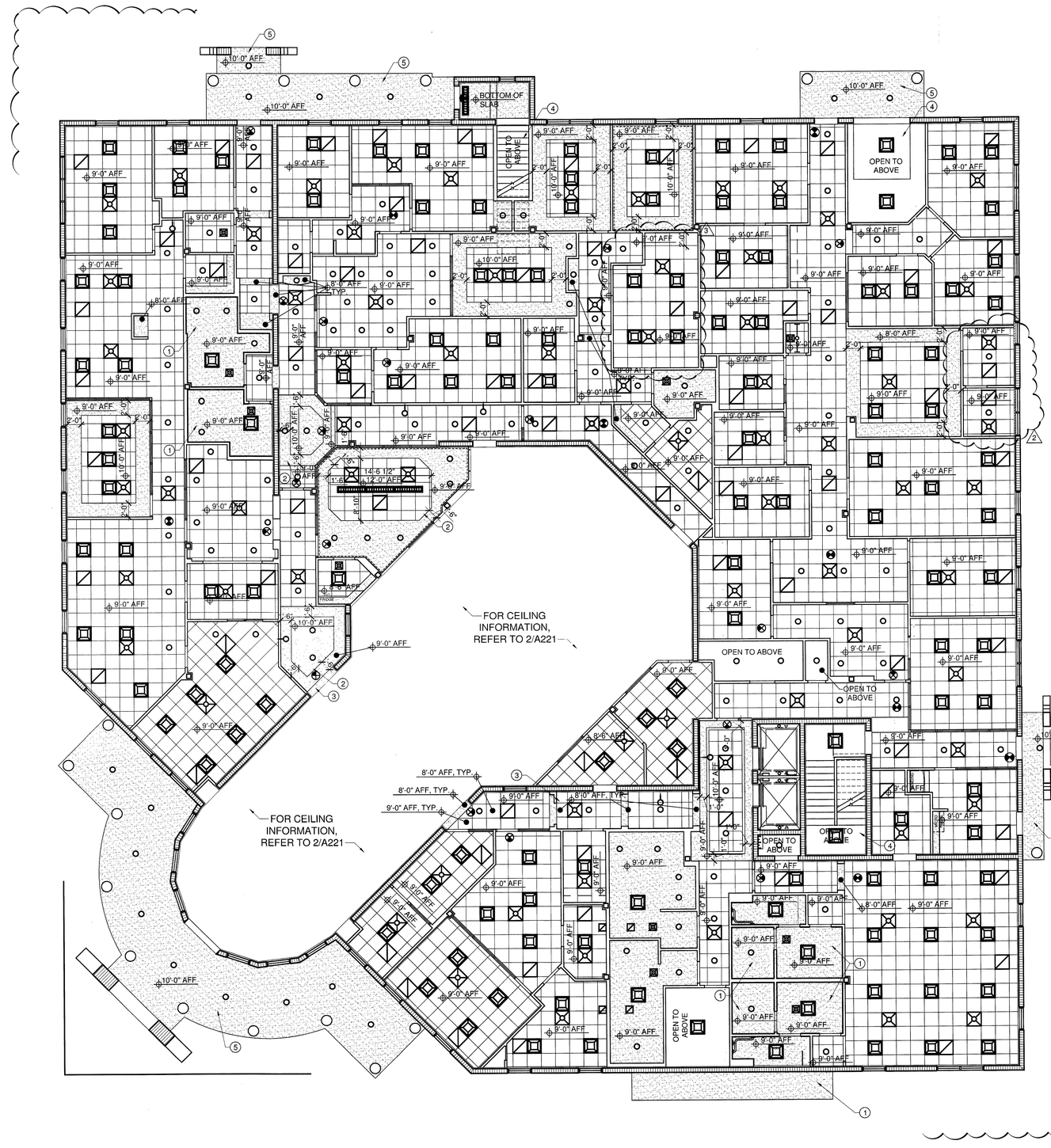

1 FIRST FLOOR REFLECTED CEILING PLAN
SCALE: 1/8" = 1'-0"

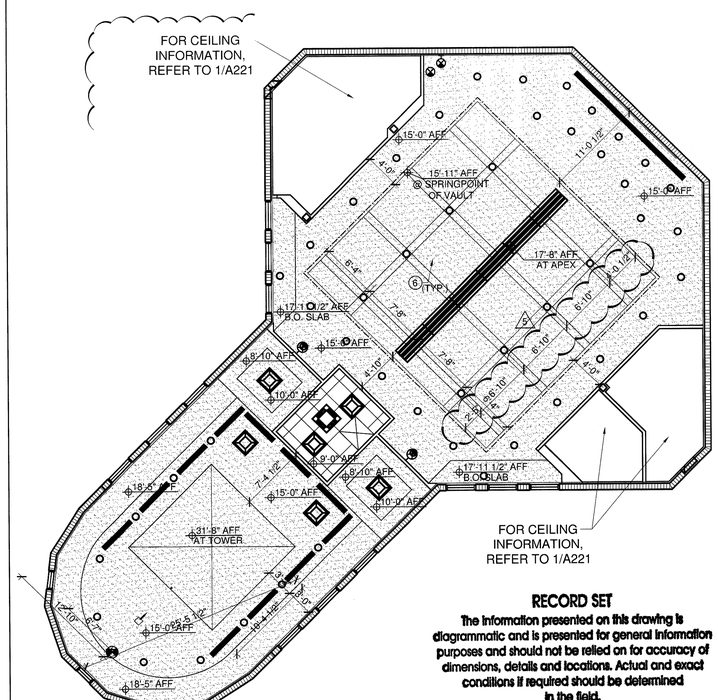

RECORD SET

The information presented on this drawing is diagrammatic and is presented for general information purposes and should not be relied on for accuracy of dimensions, details and locations. Actual and exact conditions if required should be determined in the field.

2 UPPER REFLECTED CEILING PLAN AT VILLAGE CHAMBERS / LOBBY
SCALE: 1/8" = 1'-0"

CEILING PLAN LEGEND

- KEY NOTE. SEE DESIGNATED # FOR MORE INFORMATION.
- BUILDING STANDARD CEILING GRID AND TILE ACT-1: 2x2 SUSPENDED CEILING SYSTEM, U.N.O.
  ARMSTRONG PRELUDE XL 15/16" EXPOSED TEE GRID AND ARMSTRONG ULTIMA TEGULAR FINE FISSURED #1911HRC SQUARE LAY-IN, 24" x 24" x 3/4", WHITE AT 9'-0" A.F.F. U.N.O. REFER TO ELECTRICAL DRAWINGS FOR SWITCHING, CIRCUITING AND EMERGENCY DEVICES.
- TYPICAL PROFILE SECTION AT CEILING TILE/GRID
- 2'x4' LIGHT FIXTURE (SHOWN FOR LOCATION ONLY). SEE ELECTRICAL DRAWINGS FOR MORE INFORMATION.
- GYPBOARD CEILING.
- LINEAR PENDANT LIGHT FIXTURE (SHOWN FOR LOCATION ONLY). SEE ELECTRICAL DRAWINGS FOR MORE INFORMATION.
- 1'x4' LIGHT FIXTURE (SHOWN FOR LOCATION ONLY). SEE ELECTRICAL DRAWINGS FOR MORE INFORMATION.
- 9"x _ " RECESSED LIGHT FIXTURE (SHOWN FOR LOCATION ONLY). SEE ELECTRICAL DRAWINGS FOR MORE INFORMATION.
- RECESSED LIGHT FIXTURE (SHOWN FOR LOCATION ONLY). SEE ELECTRICAL DRAWINGS FOR MORE INFORMATION.
- PENDANT LIGHT FIXTURE (SHOWN FOR LOCATION ONLY). SEE ELECTRICAL DRAWINGS FOR MORE INFORMATION.
- 4' FLUORESCENT LIGHT FIXTURE (SHOWN FOR LOCATION ONLY). SEE ELECTRICAL DRAWINGS FOR MORE INFORMATION.
- 1'X4' WALL MOUNTED LIGHT FIXTURE. (SHOWN FOR LOCATION ONLY, SEE ELECTRICAL DRAWINGS FOR MORE INFO)
- WALL MOUNTED SCONCE LIGHT FIXTURE (SHOWN FOR LOCATION ONLY). SEE ELECTRICAL DRAWINGS FOR MORE INFORMATION.
- WALL MOUNTED UP-LIGHT FIXTURE (SHOWN FOR LOCATION ONLY). SEE ELECTRICAL DRAWINGS FOR MORE INFORMATION.
- DIRECTIONAL ART LIGHTING. SEE ELECTRICAL DRAWINGS FOR MORE INFORMATION
- COVE LIGHTING. SEE ELECTRICAL DRAWINGS FOR MORE INFORMATION
- TELEVISION LOCATION. TELEVISION TO BE MOUNTED WHERE BOTTOM IS AT 7'-10" A.F.F. SEE ELECTRICAL DRAWINGS FOR MORE INFORMATION.
- CROWN MOLDING. SEE DETAIL 14/A908.
- RETURN
- SUPPLY

CEILING PLAN GENERAL NOTES

1. ACOUSTICAL CEILING TILE AND GRID TO BE INSTALLED AS SHOWN.
2. REFER TO ENGINEER'S DRAWINGS FOR SWITCHING, POWER, MECHANICAL, AND EXIT SIGNAGE INFORMATION.
3. COORDINATE LIGHT LOCATIONS WITH HVAC EQUIPMENT.
4. ACOUSTICAL CEILING SUSPENSION T-GRID SHALL BE INDEPENDENTLY LOCATED (ROOM BY ROOM) SO AS TO "CENTER" LIGHT FIXTURE GROUPINGS WITHIN CORRIDORS AND ROOMS. ALL LIGHT FIXTURES TO BE CENTERED IN TILE U.N.O. SEE PLAN.
5. CEILING GRID, TILE AND LIGHT FIXTURES AT 9'-0" U.N.O. SEE CEILING PLAN LEGEND FOR TILE AND GRID SPECIFICATIONS. REFER TO ELECTRICAL DRAWINGS FOR SWITCHING AND CIRCUITING. SEE DETAIL 1A/A804.

CEILING PLAN KEY NOTES (X)

1. 5/8" MOISTURE RESISTANT GYPSUM BOARD OVER 3-5/8" METAL FRAMING AT 24" O.C. SEE DETAIL 1B/A804.
2. 1/2" GYPSUM BOARD OVER 3-5/8" METAL FRAMING AT 24" O.C. SEE DETAIL 1B/A804.
3. GYPSUM BOARD HEADER AT 8'-0" A.F.F. SEE DESIGNATED DETAIL 6/A804 FOR ADDITIONAL INFORMATION.
4. EXPOSED STRUCTURE @ STAIR. PROVIDE FINISHED CONCRETE SURFACE.
5. STUCCO. SEE DETAIL 5/A804.
6. 3/4" REVEAL.

JMWA ARCHITECTS

STEVEN E. MYOTT AIA
JAMES R. WILLIAMS AIA
RODOLFO ACEVEDO AIA

949 CLINT MOORE ROAD
BOCA RATON, FLORIDA 33487
TEL 561 997 9997
FAX 561 997 1610

WWW.JMWA.NET

PALMETTO BAY VILLAGE HALL

9705 E. Hibiscus St., Palmetto Bay, Florida

Master Builders of South Florida, Inc.
1400 E. Oakland Park Blvd. Suite 210
Oakland Park, FL 33334

FLORIDA LICENSURE

AAC002193 IB0001142

PROJECT NO.	8714.00
DESIGNED BY:	RA
DRAWN BY:	DW / EK / JS
CHECKED BY:	JW
SUBMITTALS:	
BUILDING PERMIT	03.05.2010

REVISIONS:

2 OWNER REVISIONS 06.22.10
3 OWNER REVISIONS 07.07.10
5 OWNER REVISIONS 07.27.10

FIRST FLOOR REFLECTED CEILING PLAN

A221

© 2009 JMWA ARCHITECTS, INCORPORATED ALL RIGHTS RESERVED. NO PART OF THESE IDEAS, PLANS OR DESIGNS MAY BE REPRODUCED, COPIED OR UTILIZED GRAPHICALLY IN ANY FORM WHATSOEVER WITHOUT THE EXPRESSED WRITTEN CONSENT OF JMWA ARCHITECTS INCORPORATED AND ITS BOARD OF DIRECTORS.

8/12/2010 2:55:26 PM ekutterer S:\Projects\8700\8714\8714_Drawings\8714_Current\8714_A221_First Floor Reflected Ceiling Plan.dwg

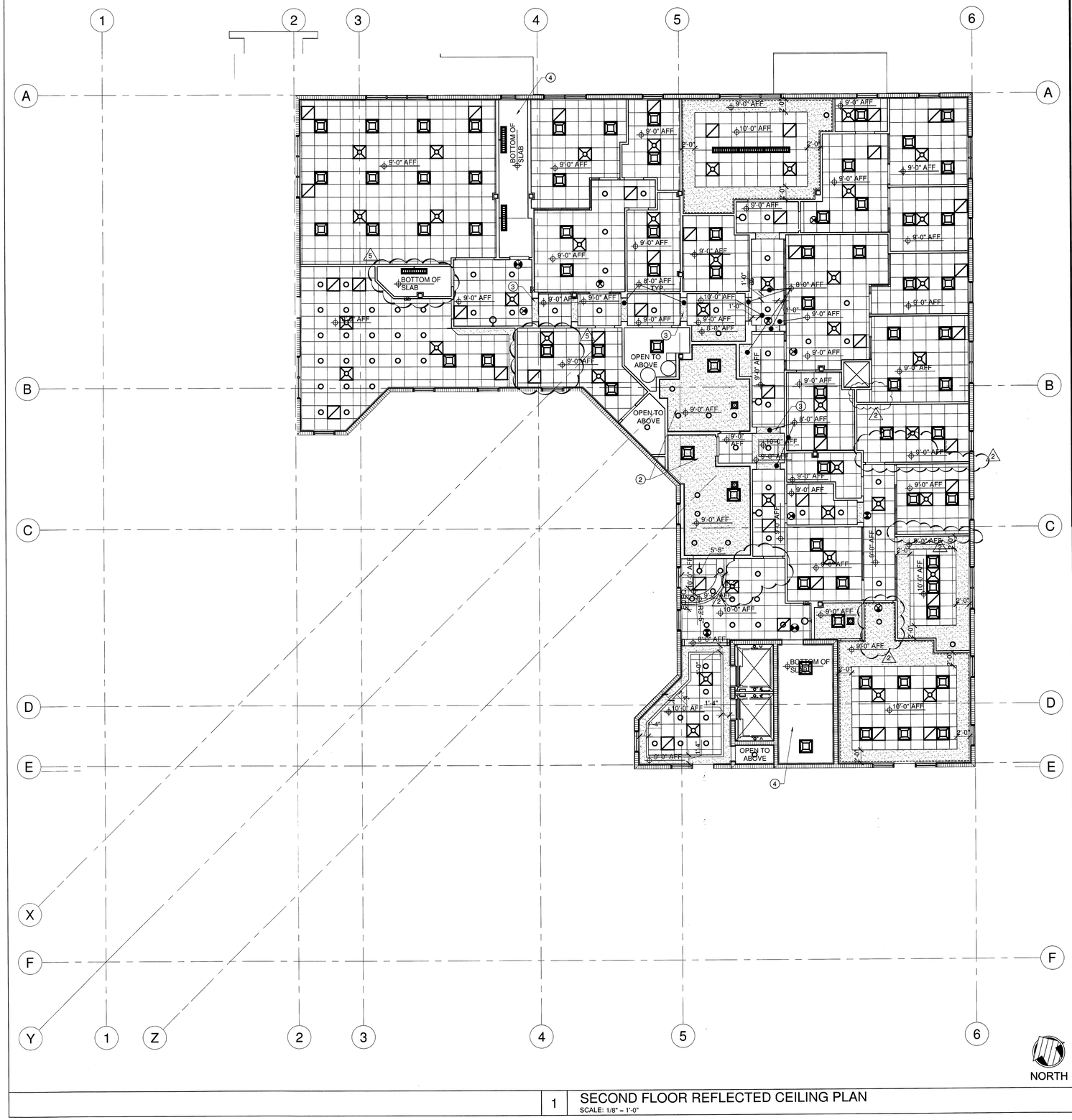

1 SECOND FLOOR REFLECTED CEILING PLAN
SCALE: 1/8" = 1'-0"

CEILING PLAN LEGEND

- KEY NOTE. SEE DESIGNATED # FOR MORE INFORMATION.
- BUILDING STANDARD CEILING GRID AND TILE ACT-1: 2x2 SUSPENDED CEILING SYSTEM, U.N.O.
  ARMSTRONG PRELUDE XL 15/16" EXPOSED TEE GRID AND ARMSTRONG ULTIMA TEGULAR FINE FISSURED #1911HRC SQUARE LAY-IN, 24" x 24" x 3/4", WHITE AT 9'-0" A.F.F. U.N.O. REFER TO ELECTRICAL DRAWINGS FOR SWITCHING, CIRCUITING AND EMERGENCY DEVICES.
- TYPICAL PROFILE SECTION AT CEILING TILE/GRID
- 2'x4' LIGHT FIXTURE (SHOWN FOR LOCATION ONLY). SEE ELECTRICAL DRAWINGS FOR MORE INFORMATION.
- GYPBOARD CEILING.
- LINEAR PENDANT LIGHT FIXTURE (SHOWN FOR LOCATION ONLY). SEE ELECTRICAL DRAWINGS FOR MORE INFORMATION.
- 1'x4' LIGHT FIXTURE (SHOWN FOR LOCATION ONLY). SEE ELECTRICAL DRAWINGS FOR MORE INFORMATION.
- 9"x__' RECESSED LIGHT FIXTURE (SHOWN FOR LOCATION ONLY). SEE ELECTRICAL DRAWINGS FOR MORE INFORMATION.
- RECESSED LIGHT FIXTURE (SHOWN FOR LOCATION ONLY). SEE ELECTRICAL DRAWINGS FOR MORE INFORMATION.
- PENDANT LIGHT FIXTURE (SHOWN FOR LOCATION ONLY). SEE ELECTRICAL DRAWINGS FOR MORE INFORMATION.
- 4' FLUORESCENT LIGHT FIXTURE (SHOWN FOR LOCATION ONLY). SEE ELECTRICAL DRAWINGS FOR MORE INFORMATION.
- 1'X4' WALL MOUNTED LIGHT FIXTURE. (SHOWN FOR LOCATION ONLY, SEE ELECTRICAL DRAWINGS FOR MORE INFO)
- WALL MOUNTED SCONCE LIGHT FIXTURE (SHOWN FOR LOCATION ONLY). SEE ELECTRICAL DRAWINGS FOR MORE INFORMATION.
- WALL MOUNTED UP-LIGHT FIXTURE (SHOWN FOR LOCATION ONLY). SEE ELECTRICAL DRAWINGS FOR MORE INFORMATION.
- DIRECTIONAL ART LIGHTING. SEE ELECTRICAL DRAWINGS FOR MORE INFORMATION
- COVE LIGHTING. SEE ELECTRICAL DRAWINGS FOR MORE INFORMATION
- TELEVISION LOCATION. TELEVISION TO BE MOUNTED WHERE BOTTOM IS AT 7'-10" A.F.F. SEE ELECTRICAL DRAWINGS FOR MORE INFORMATION.
- CROWN MOLDING. SEE DETAIL 14/A908.
- RETURN
- SUPPLY

CEILING PLAN GENERAL NOTES

1. ACOUSTICAL CEILING TILE AND GRID TO BE INSTALLED AS SHOWN.
2. REFER TO ENGINEER'S DRAWINGS FOR SWITCHING, POWER, MECHANICAL, AND EXIT SIGNAGE INFORMATION.
3. COORDINATE LIGHT LOCATIONS WITH HVAC EQUIPMENT.
4. ACOUSTICAL CEILING SUSPENSION T-GRID SHALL BE INDEPENDENTLY LOCATED (ROOM BY ROOM) SO AS TO "CENTER" LIGHT FIXTURE GROUPINGS WITHIN CORRIDORS AND ROOMS. ALL LIGHT FIXTURES TO BE CENTERED IN TILE U.N.O. SEE PLAN.
5. CEILING GRID, TILE AND LIGHT FIXTURES AT 9'-0" U.N.O. SEE CEILING PLAN LEGEND FOR TILE AND GRID SPECIFICATIONS. REFER TO ELECTRICAL DRAWINGS FOR SWITCHING AND CIRCUITING. SEE DETAIL 1A/A804.

CEILING PLAN KEY NOTES (X)

1. 5/8" MOISTURE RESISTANT GYPSUM BOARD OVER 3-5/8" METAL FRAMING AT 24" O.C. SEE DETAIL 1B/A804.
2. 1/2" GYPSUM BOARD OVER 3-5/8" METAL FRAMING AT 24" O.C. SEE DETAIL 1B/A804.
3. GYPSUM BOARD HEADER AT 8'-0" A.F.F. SEE DESIGNATED DETAIL 6/A804 FOR ADDITIONAL INFORMATION.
4. EXPOSED STRUCTURE @ STAIR. PROVIDE FINISHED CONCRETE SURFACE.
5. STUCCO. SEE DETAIL 5/A804.
6. 3/4" REVEAL.

RECORD SET
The information presented on this drawing is diagrammatic and is presented for general information purposes and should not be relied on for accuracy of dimensions, details and locations. Actual and exact conditions if required should be determined in the field.

JMWA
ARCHITECTS
STEVEN E. MYOTT AIA
JAMES R. WILLIAMS AIA
RODOLFO ACEVEDO AIA
949 CLINT MOORE ROAD
BOCA RATON, FLORIDA 33487
TEL 561 997 9997
FAX 561 997 1610
WWW.JMWA.NET

PALMETTO BAY VILLAGE HALL

9705 E. Hibiscus St., Palmetto Bay, Florida

Master Builders of South Florida, Inc.
1400 E. Oakland Park Blvd. Suite 210
Oakland Park, FL 33334

FLORIDA LICENSURE

AAC002193 IB0001142

PROJECT NO.	8714.00
DESIGNED BY:	RA
DRAWN BY:	DW / EK / JS
CHECKED BY:	JW

SUBMITTALS:
BUILDING PERMIT 03.05.2010

REVISIONS:
2 OWNER REVISIONS 06.22.10
5 OWNER REVISIONS 07.27.10

SECOND FLOOR REFLECTED CEILING PLAN

A222

© 2009 JMWA ARCHITECTS. INCORPORATED ALL RIGHTS RESERVED. NO PART OF THESE IDEAS, PLANS OR DESIGNS MAY BE REPRODUCED, COPIED OR UTILIZED GRAPHICALLY IN ANY FORM WHATSOEVER WITHOUT THE EXPRESSED WRITTEN CONSENT OF JMWA ARCHITECTS INCORPORATED AND ITS BOARD OF DIRECTORS.

S:\Projects\8700\8714\8714_Drawings\8714_Current\8714_A222_Second Floor Reflected Ceiling Plan.dwg
8/12/2010 2:07:05 PM ekutterer

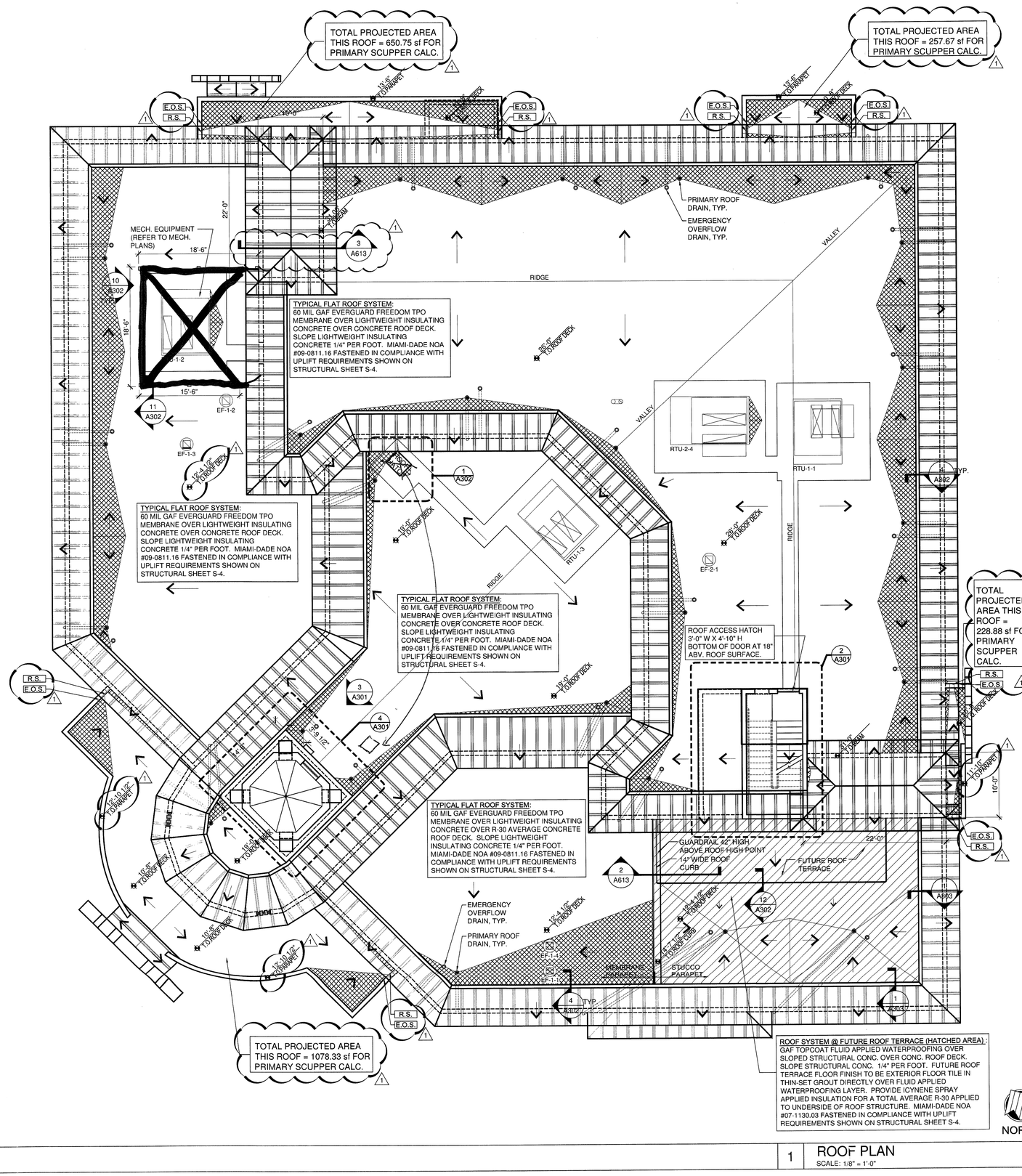

ROOF PLAN GENERAL NOTES

1. TOP OF SHEATHING / PARAPET HEIGHTS SHOWN ARE FROM FINISH FLOOR SLAB.
2. CONTRACTOR TO CONFIRM THAT ALL AREAS ARE PROVIDED WITH POSITIVE DRAINAGE PRIOR TO FRAMING AND SHEATHING ROOF.
3. ALL ROOF EQUIPMENT LOCATED PER MECHANICAL DRAWINGS.
4. ALL ROOF ELEVATIONS SHOWN ARE FROM FINISH FLOOR.
5. SEE MECHANICAL AND ELECTRICAL DRAWINGS FOR ADDITIONAL NOTES AND DETAILS.
6. VERIFY LOCATIONS OF ALL ROOF PENETRATIONS WITH STRUCTURAL, PLUMBING, MECHANICAL AND ARCHITECTURAL DRAWINGS.
7. ALL EQUIPMENT ON ROOF TO BE MOUNTED ON CURBS.
8. ALL VENT LOCATIONS TO BE COORDINATED WITH PLUMBING AND MECHANICAL DRAWINGS.
9. MECHANICAL SUB-CONTRACTOR TO COORDINATE INSTALLATION AND ACCEPTANCE OF PREFABRICATED CURBS AND PENETRATIONS WITH ROOF-MEMBRANE SUB-CONTRACTOR. GENERAL CONTRACTOR TO PROVIDE ALL NECESSARY BLOCKING, NAILING, ETC. AS NECESSARY FOR A WATERTIGHT AND WATERPROOF BUILDING.
10. IT IS THE GENERAL CONTRACTOR'S RESPONSIBILITY TO VERIFY, COORDINATE AND/OR INSTALL ALL ADJACENT AND/OR RELATED FLASHING, BLOCKING, NAILERS, CRICKETS, ETC. NECESSARY FOR THE COMPLETE INSTALLATION OF THE ROOF MEMBRANE WHICH ARE REQUIRED FOR A COMPLETE, WARRANTED, WATERTIGHT, WATERPROOF INSTALLATION.
11. ALL ROOF SLOPES ARE TO HAVE A MINIMUM OF ¼" FALL WHERE CRICKET VALLEYS OCCUR, CRICKETS ARE TO BE PROVIDED WITH SUFFICIENT DEPTH AND SLOPE TO ACCOMMODATE A MINIMUM ¼" PER FOOT AT THE VALLEY.
12. SEE PLUMBING DRAWINGS FOR MAIN ROOF DRAINAGE CALCULATIONS.
13. PROVIDE CRICKETS IN EACH LOCATEION WHERE ROOF SLOPES DOWN TOWARD A VERTICAL SURFACE TO DIVERT WATER TOWARD DRAINAGE.
14. ALL ROOF DRAINAGE SPILLS TO GRADE

LEGEND

- INDICATES GENERAL DIRECTION OF WATER FLOW
- RTU-X-X — INDICATES HVAC UNIT - SEE MECHANICAL DRAWINGS
- INDICATES EXHAUST FAN, SEE MECHANICAL PLANS
- INDICATES ROOF DRAIN & OVERFLOW, SEE PLUMBING PLANS
- R.S. — INDICATES PRIMARY ROOF SCUPPER SEE DETAILS 5/A303, 6/A303 AND 3/A303
- E.O.S. — INDICATES EMERGENCY OVERFLOW ROOF SCUPPER SEE DETAIL 4/A303, 6/A303 AND 3/A303
- HATCH INDICATES PORTION OF ROOF WITH FLULID APPLIED WATERPROOFING IN LIEU OF TYPICAL ROOFING MEMBRANE SYSTEM
- HATCH INDICATED CRICKET LOCATION. SLOPE CRICKETS MINIMUM 1/4" PER FOOT TO DIVERT WATER TOWARD ROOF DRAIN OR SCUPPER LOCATION

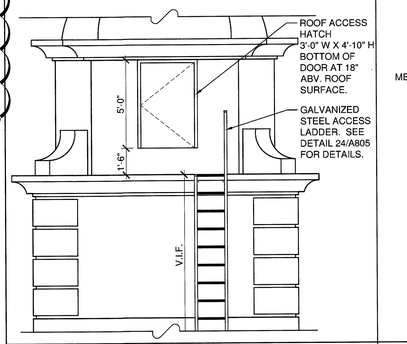

3 PARTIAL ELEV. @ TOWER ACCESS
SCALE: 1/8" = 1'-0"

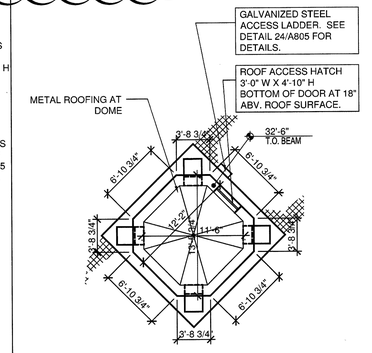

4 UPPER ROOF PLAN AT DOME
SCALE: 1/8" = 1'-0"

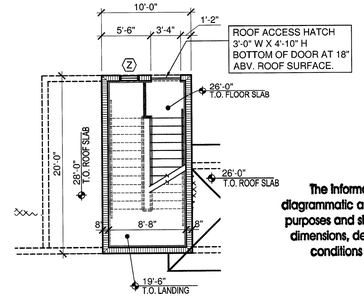

RECORD SET

The information presented on this drawing is diagrammatic and is presented for general information purposes and should not be relied on for accuracy of dimensions, details and locations. Actual and exact conditions if required should be determined in the field.

1 ROOF PLAN
SCALE: 1/8" = 1'-0"

2 FLOOR PLAN AT 2ND LEVEL ROOF (STAIRS AND ELEVATORS)
SCALE: 1/8" = 1'-0"

JMWA ARCHITECTS
STEVEN E. MYOTT AIA
JAMES R. WILLIAMS AIA
RODOLFO ACEVEDO AIA
989 CLINT MOORE ROAD
BOCA RATON, FLORIDA 33487
TEL 561 997 9997
FAX 561 997 1610
WWW.JMWA.NET

PALMETTO BAY VILLAGE HALL
9705 E. Hibiscus St., Palmetto Bay, Florida

Master Builders of South Florida, Inc.
1400 E. Oakland Park Blvd. Suite 210
Oakland Park, FL 33334

FLORIDA LICENSURE

AAC002193 IB0001142

PROJECT NO.	8714.00
DESIGNED BY:	RA
DRAWN BY:	DW / EK / JS
CHECKED BY:	JW

SUBMITTALS:
BUILDING PERMIT 03.05.2010

REVISIONS:
1 PERMIT COMMENTS 04.02.10

ROOF PLAN AND NOTES

A301

© 2009 JMWA ARCHITECTS, INCORPORATED ALL RIGHTS RESERVED. NO PART OF THESE IDEAS, PLANS OR DESIGNS MAY BE REPRODUCED, COPIED OR UTILIZED GRAPHICALLY IN ANY FORM WHATSOEVER WITHOUT THE EXPRESSED WRITTEN CONSENT OF JMWA ARCHITECTS INCORPORATED AND ITS BOARD OF DIRECTORS.

4/9/2010 9:26:09 AM ekutterer S:\Projects\8700\8714\8714_Drawings\8714_Current\8714_A301_Roof Plan and Notes.dwg

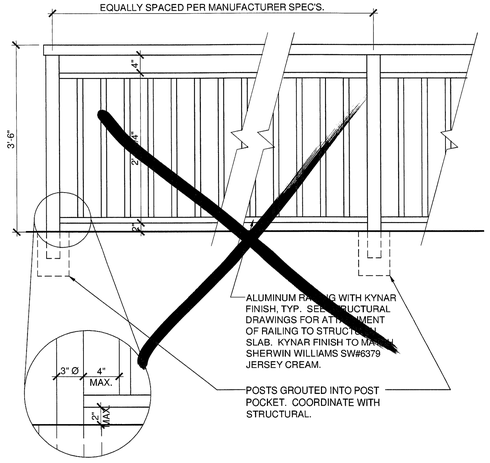

12 ROOF TERRACE GUARDRAIL DETAIL
SCALE: N.T.S.

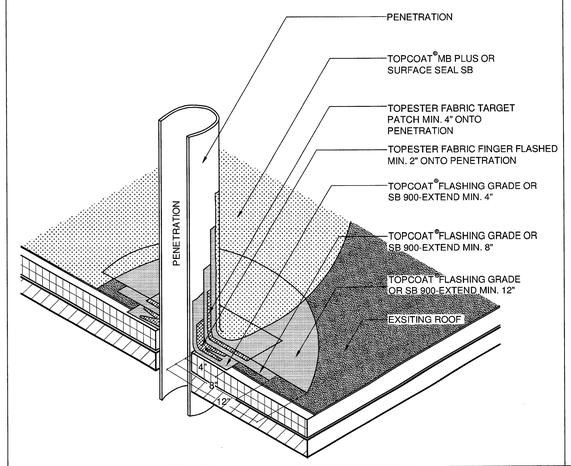

9 PENETRATION FLASH. DET. @ FUTURE ROOF TERR.
SCALE: N.T.S. GAF DETAIL: TC 502

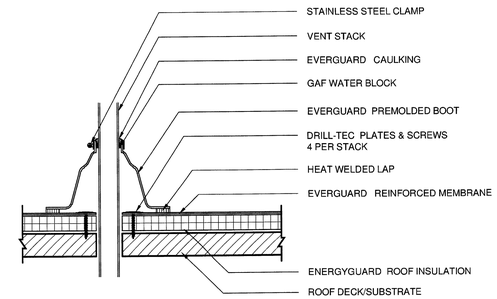

NOTE:
1. DO NOT CUT PREMOLDED BOOT. IT MUST BE PULLED OVER VENT PIPE.
2. TPO SELF-ADHERED PIPE BOOTS AND PRIMER MAY BE USED WITH TPO SYSTEMS FOR UP TO A 15 YEAR GUARANTEE.
3. IF THE PLATES AND FASTENERS INTRUDE INTO BOOT FLANGE AREA, THEN A TARGET MUST FIRST BE INSTALLED OVER PLATES AND FASTENERS BEFORE BOOT INSTALLATION.
4. APPLY EVERGUARD® TPO AND PVC CUT EDGE SEALANT TO ALL CUT REINFORCED TPO AND PVC EDGES (REFER TO DETAIL MA/FA/BA 115).

6 ROOF PENETRATION FLASH. DET. @MEMBRANE ROOF
SCALE: N.T.S. GAF DETAIL: MA/FA/BA 506A

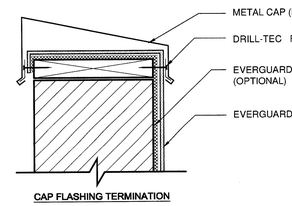

3 ROOF FLASHING TERMINATION DETAIL
SCALE: N.T.S. GAF DETAIL: MA/FA/BA 318B

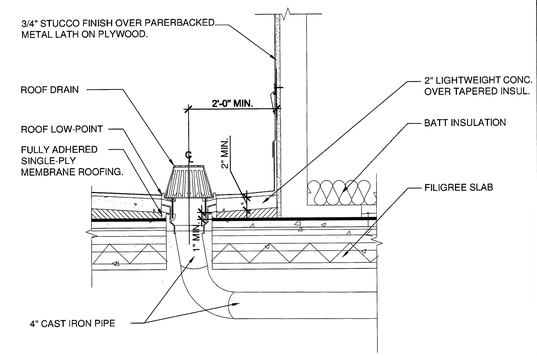

2 ROOF DRAIN & FLASHING DETAIL
SCALE: N.T.S.

11 MECHANICAL SCREEN DETAIL
SCALE: 3/4" = 1'-0"

NOTE:
1. FIELD CUT ZEE CLOSURE TO FIT BETWEEN PANEL SEAMS.

2. SOLID SHEATHING (BY OTHERS) TO BE MINIMUM 1/2" PLYWOOD OR EQUIVALENT IN STRENGTH FOR HOLDING POWER OF FASTENERS.

3. ALL FELT UNDERLAYMENT, CAULKING, AND FASTENERS, ARE ITEMS TO BE FURNISHED AND INSTALLED BY THE ROOFING INSTALLER AT THE DISCRETION OF THE ARCHITECT.

8 HIP / RIDGE DETAIL
SCALE: 3" = 1'-0" BERRIDGE CEE-LOCK PANEL DETAIL CL-20

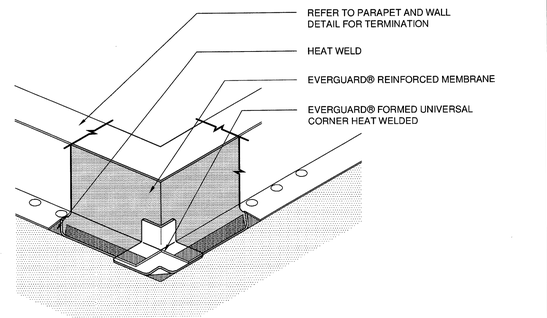

NOTES:
1. OUTSIDE CORNERS MAY ALSO BE FIELD FABRICATED USING UNREINFORCED MEMBRANE.
2. BEGIN INSTALLATION OF FASTENING PLATES APPROXIMATELY 6" (150 mm) FROM CORNER.
3. FLASHINGS MAY BE ADHERED OR INSTALLED DRY. SEE SPEC FOR DIMENSIONS.
4. APPLY EVERGUARD® TPO CUT EDGE SEALANT TO ALL CUT REINFORCED TPO EDGES (REFER TO DETAIL MA/FA/BA 115).
5. FOR ALTERNATE: KEEP FASTENERS BACK FROM CORNER 6" MAX.

5 WALL CORNER AND CURB FLASHING DETAIL
SCALE: N.T.S. GAF DETAIL: MA/FA/BA 315C

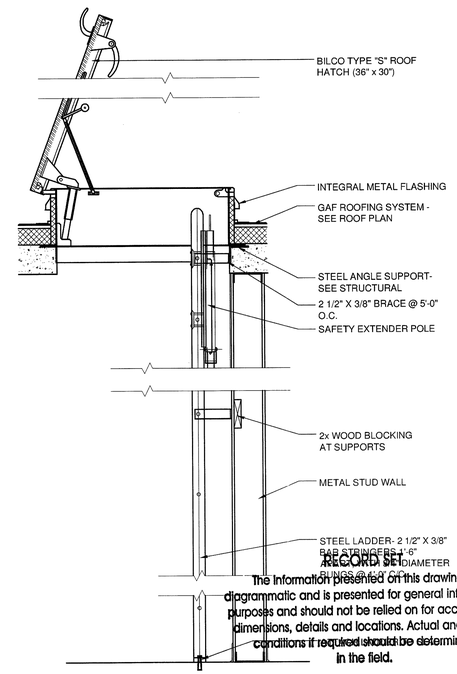

1 ROOF HATCH DETAIL
SCALE: N.T.S.

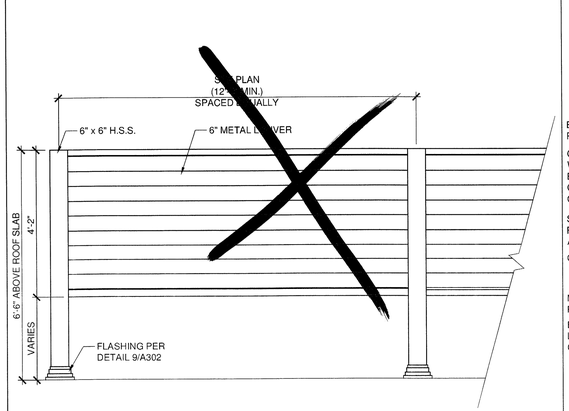

10 MECHANICAL SCREEN DETAIL
SCALE: 1/2" = 1'-0"

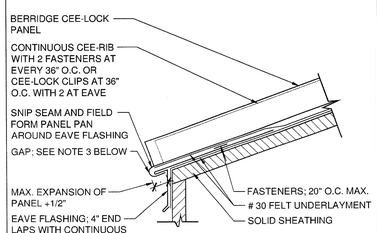

NOTE:
1. THIS DETAIL IS RECOMMENDED FOR AREAS WITH HEAVY SNOW LOADS OR WHERE EXPANSION AND CONTRACTION OF PANELS IS A DESIGN FACTOR.

2. THE GAP BETWEEN EAVE FLASHING AND PANEL (SEE DETAIL ABOVE) CAN BE INCREASED TO ALLOW FOR LINEAR EXPANSION AND CONTRACTION OF PANELS. NOTE 1/2" OF PANEL PAN MUST BE ENGAGED WITH EAVE FLASHING WHEN PANEL HAS EXPANDED TO ITS MAXIMUM LENGTH. REFER TO LINEAR EXPANSION CHART, PAGE CI-7.

3. GAP BETWEEN EAVE FLASHING AND PANEL MUST BE ADJUSTED TO SUIT TEMPERATURE DURING INSTALLATION.

4. SEE ALSO EXPANSION JOINT DETAIL CL-4.

5. SOLID SHEATHING (BY OTHERS) TO BE 1/2" PLYWOOD OR EQUIVALENT IN STRENGTH FOR HOLDING POWER OF FASTENERS.

6. ALL FELT UNDERLAYMENT, CAULKING, AND FASTENERS, ARE ITEMS TO BE FURNISHED AND INSTALLED BY THE ROOFING INSTALLER AT THE DISCRETION OF THE ARCHITECT.

7 PANEL EDGE DETAIL
SCALE: 3" = 1'-0" BERRIDGE CEE-LOCK PANEL DETAIL CL-10

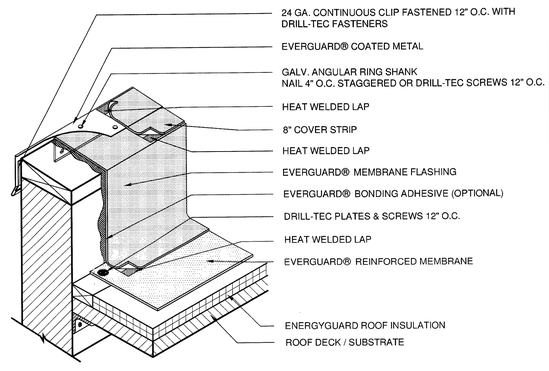

NOTES:
1. PLATES AND SCREWS 6" O.C. REQ'D FOR BA SYSTEMS.
2. FOR INSULATION THICKNESS GREATER THAN 8", CONTACT GAFMC CONTRACTOR SERVICES FOR ALTERNATE MEMBRANE ATTACHMENT REQUIREMENTS.
3. APPLY EVERGUARD® TPO CUT EDGE SEALANT TO ALL CUT REINFORCED TPO EDGES (REFER TO DETAIL MA/FA/BA 115).

4 WALL FLASHING DETAIL
SCALE: N.T.S. GAF DETAIL: MA/FA/BA 304

JMWA ARCHITECTS
STEVEN E. MYOTT AIA
JAMES R. WILLIAMS AIA
RODOLFO ACEVEDO AIA
949 CLINT MOORE ROAD
BOCA RATON, FLORIDA 33487
TEL 561 997 9997
FAX 561 997 1610
WWW.JMWA.NET

PALMETTO BAY VILLAGE HALL
Palmetto Bay, Florida

Master Builders of South Florida, Inc.
1400 E. Oakland Park Blvd. Suite 210
Oakland Park, FL 33334

FLORIDA LICENSURE

AAC002193 IB0001142

PROJECT NO. 8714.00
DESIGNED BY: RA
DRAWN BY: DW / EK / JS
CHECKED BY: JW

SUBMITTALS:
BUILDING PERMIT 03.05.2010

REVISIONS:

ROOF DETAILS

RECORD SET

The information presented on this drawing is diagrammatic and is presented for general information purposes and should not be relied on for accuracy of dimensions, details and locations. Actual and exact conditions if required should be determined in the field.

A302

© 2009 JMWA ARCHITECTS, INCORPORATED ALL RIGHTS RESERVED. NO PART OF THESE IDEAS, PLANS OR DESIGNS MAY BE REPRODUCED, COPIED OR UTILIZED GRAPHICALLY IN ANY FORM WHATSOEVER WITHOUT THE EXPRESSED WRITTEN CONSENT OF JMWA ARCHITECTS INCORPORATED AND ITS BOARD OF DIRECTORS.

S:\Projects\8700\8714\8714_Drawings\8714_Current\8714_A302_Roof Details.dwg
3/3/2010 4:46:02 PM joses

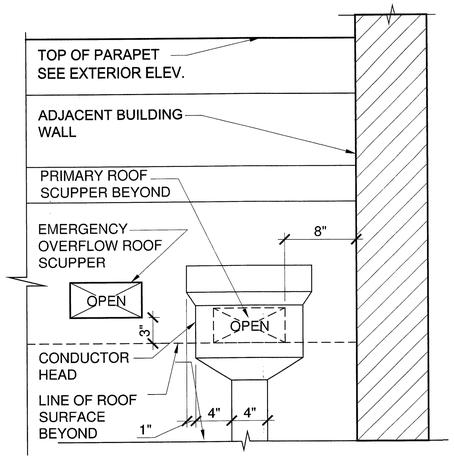

6 SCUPPER PAIR ELEVATION
SCALE: N.T.S.

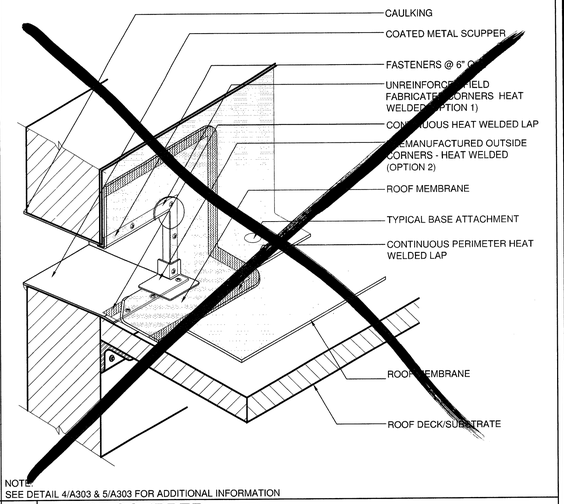

NOTE:
SEE DETAIL 4/A303 & 5/A303 FOR ADDITIONAL INFORMATION

3 ROOF SCUPPER
SCALE: N.T.S.
GAF DETAIL: FD 311

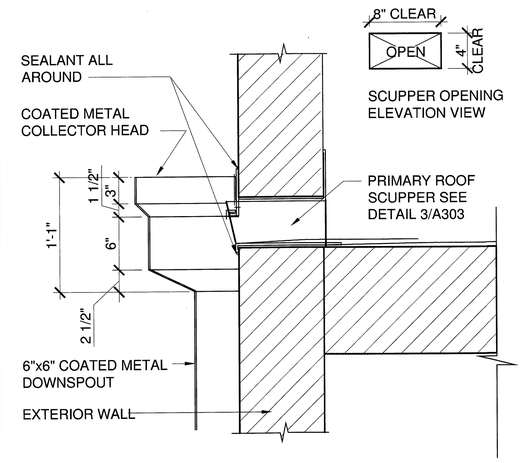

NOTE:
SEE DETAIL 6/A303 FOR FRONT ELEVATION

4 PRIMARY ROOF SCUPPER
SCALE: N.T.S.

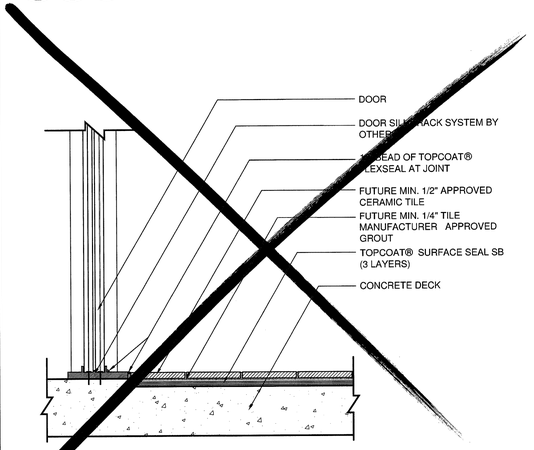

NOTE:
APPLICABLE AT DOORS #238 AND #239.

2 THRESHOLD DETAIL @ ROOF TERRACE
SCALE: N.T.S.
GAF DETAIL: TC 104

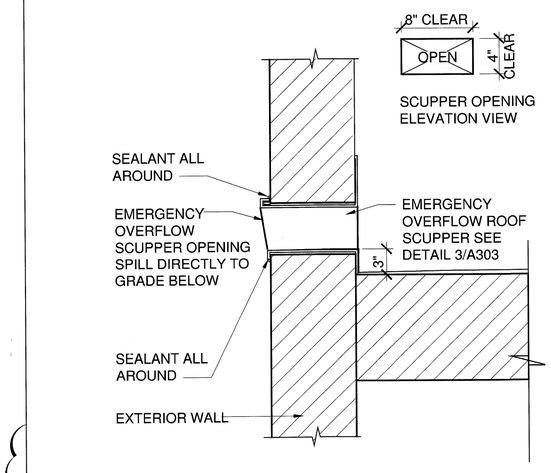

NOTE:
SEE DETAIL 6/A303 FOR FRONT ELEVATION

4 EMERGENCY OVERFLOW ROOF SCUPPER
SCALE: N.T.S.

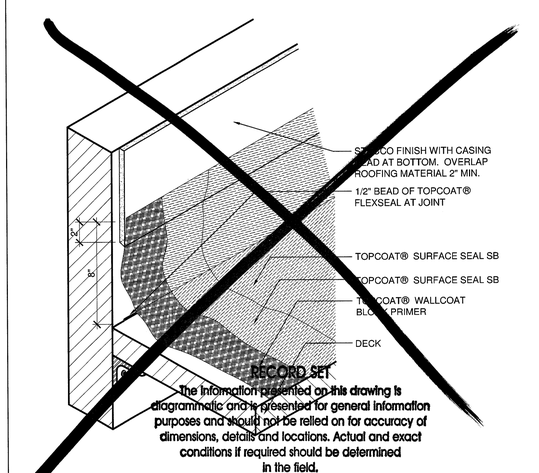

RECORD SET
The information presented on this drawing is diagrammatic and is presented for general information purposes and should not be relied on for accuracy of dimensions, details and locations. Actual and exact conditions if required should be determined in the field.

1 WALL FLASHING DETAIL @ ROOF TERRACE
SCALE: N.T.S.
GAF DETAIL: TC 101 ALT. 1

JMWA
ARCHITECTS
STEVEN E. MYOTT AIA
JAMES R. WILLIAMS AIA
RODOLFO ACEVEDO AIA
909 CLINT MOORE ROAD
BOCA RATON, FLORIDA 33487
TEL 561 997 9997
FAX 561 997 1610
WWW.JMWA.NET

PALMETTO BAY VILLAGE HALL
9705 E. Hibiscus St., Palmetto Bay, Florida

Master Builders of South Florida, Inc.
1400 E. Oakland Park Blvd. Suite 210
Oakland Park, FL 33334

FLORIDA LICENSURE

AAC002193 IB0001142

PROJECT NO.	8714.00
DESIGNED BY:	RA
DRAWN BY:	DW / EK / JS
CHECKED BY:	JW

SUBMITTALS:
BUILDING PERMIT 03.05.2010

REVISIONS:
1 PERMIT COMMENTS 04.02.10

ROOF DETAILS, CONT'D

A303

© 2009 JMWA ARCHITECTS, INCORPORATED ALL RIGHTS RESERVED. NO PART OF THESE IDEAS, PLANS OR DESIGNS MAY BE REPRODUCED, COPIED OR UTILIZED GRAPHICALLY IN ANY FORM WHATSOEVER WITHOUT THE EXPRESSED WRITTEN CONSENT OF JMWA ARCHITECTS INCORPORATED AND ITS BOARD OF DIRECTORS.

4/6/2010 4:47:52 PM ekutterer S:\Projects\8700\8714\8714_Drawings\8714_Current\8714_A303_Roof Details.dwg

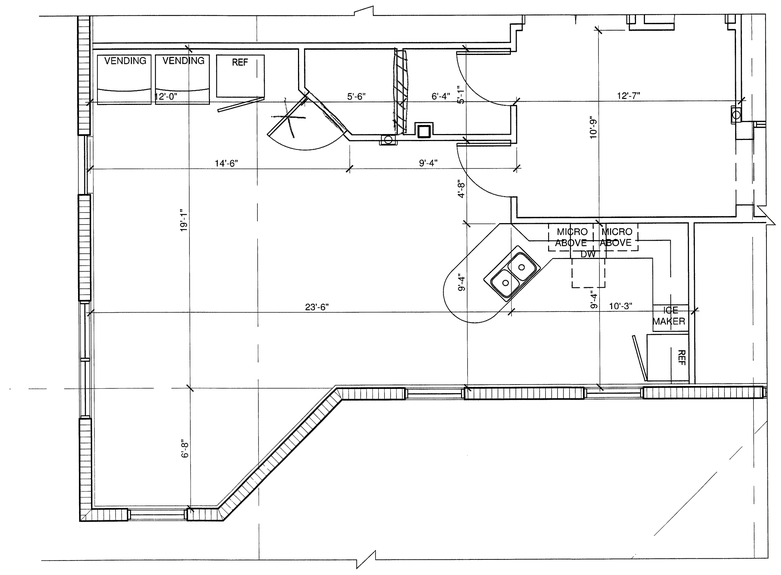

5 ENLARGED 2ND FLOOR BREAK AREA
SCALE: 1/4" = 1'-0"

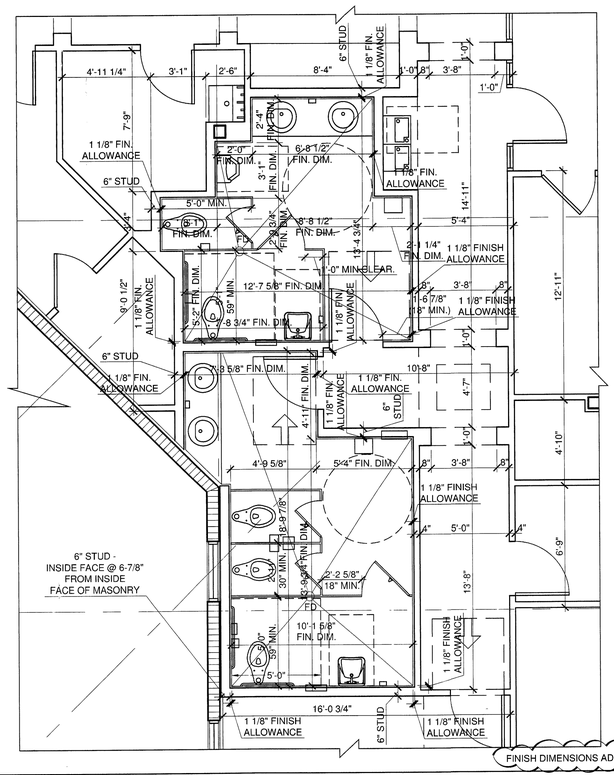

2 ENLARGED 2ND FLOOR RESTROOMS
SCALE: 1/4" = 1'-0"
FIXTURE CLEARANCE DIMS. ADDED 1

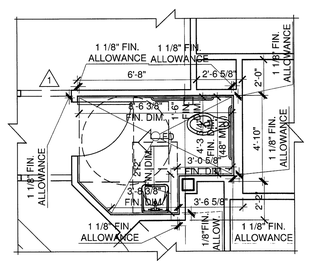

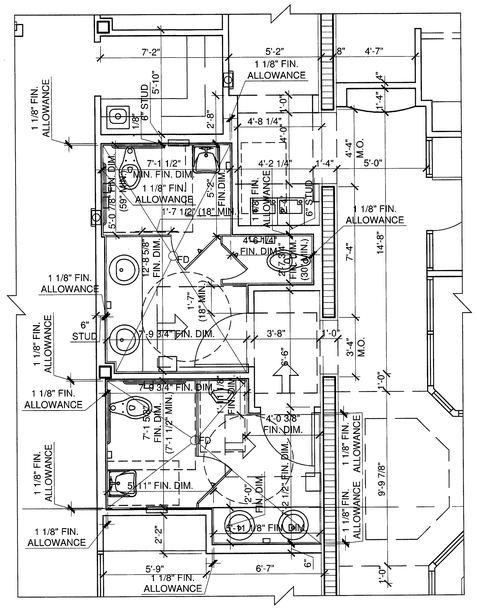

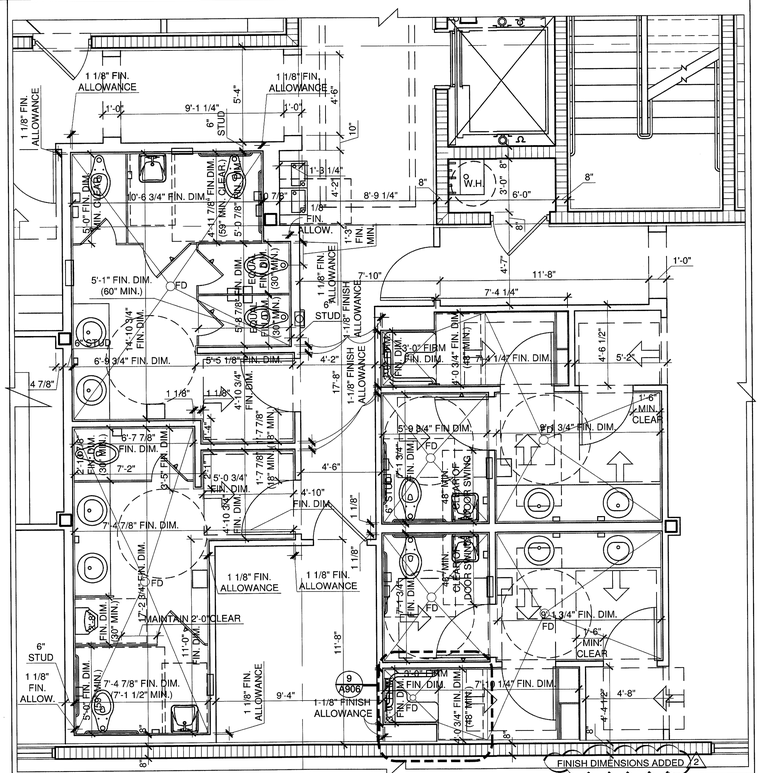

1 ENLARGED 1ST FLOOR RESTROOMS
SCALE: 1/4" = 1'-0"
FIXTURE CLEARANCE DIMS. ADDED 1

4 ENLARGED 1ST FLOOR UNISEX RESTROOM
SCALE: 1/4" = 1'-0"
FIXTURE CLEARANCE DIMS. ADDED 1

3 ENLARGED 1ST FLOOR RESTROOMS
SCALE: 1/4" = 1'-0"
FIXTURE CLEARANCE DIMS. ADDED 1

36" LONG x 1-1/2" Ø GRAB BAR. PROVIDE BACKING PER SHEET A004

42" LONG x 1-1/2" Ø GRAB BAR. PROVIDE BACKING PER SHEET A004.

LAVATORY. FOR ADDITIONAL INFORMATION, SEE PLUMBING.

FLOOR MOUNTED TOILET. FOR ADDITIONAL INFORMATION, SEE PLUMBING.

FLOOR MOUNTED HANDICAP TOILET. FOR ADDITIONAL INFORMATION, SEE PLUMBING.

WALL MOUNTED URINAL. FOR ADDITIONAL INFORMATION, SEE PLUMBING.

JANITORS SINK. FOR ADDITIONAL INFORMATION, SEE PLUMBING.

UTILITY SHELF WITH MOP / BROOM HOLDERS AND RAG HOOK.
BOBRICK B-239.

MIRROR - SEE A9 SERIES DRAWINGS.

TILT MIRROR (HANDICAP ACCESSIBLE RESTROOMS ONLY).
BOBRICK B-293.

FLOOR-MOUNTED HEADRAIL BRACED TOILET PARTITION BY SCRANTON PRODUCTS. COLOR: PARCHMENT. SEE A9 SERIES DRAWINGS.

WALL-MOUNTED URINAL SCREEN BY SCRANTON PRODUCTS.
COLOR: PARCHMENT. SEE A9 SERIES DRAWINGS.

COUNTER - SEE A9 SERIES DRAWINGS.

RECESSED PAPER TOWEL DISPENSER / WASTE RECEPTACLE
BOBRICK B-4369.

COIN OPERATED SANITARY NAPKIN DISPENSER.
BOBRICK B-43500 25.

SURFACE MOUNTED MULTI-ROLL TOILET TISSUE DISPENSER.
BOBRICK B-4288.

SANITARY NAPKIN DISPOSAL.
BOBRICK B-4354 (FOR PARTITION MOUNTED).
BOBRICK B-270 (FOR SURFACE MOUNTED).

SURFACE MOUNTED CLOTHES HOOK.
BOBRICK B-6707.

SURFACE MOUNTED SOAP DISPENSER.
BOBRICK B-4112.

SUSPENDED WATER HEATER. FOR ADDITIONAL INFORMATION, SEE PLUMBING.

XLERATOR HAND DRYER. FOR ADDITIONAL INFORMATION, SEE ELECTRICAL. MOUNTING HEIGHT TO BOTTOM OF HAND DRYER: MEN (45"), WOMEN (43")

LOCKERS.

HIGH / LOW ELECTRIC WATER COOLER. SEE SHEET A004.

60" Ø UNOBSTRUCTED WHEELCHAIR TURNING SPACE IN COMPLIANCE WITH FBC SECTION 11-4.2.3. 1

REFRIGERATOR.

STAINLESS STEEL SINGLE BOWL SINK, TYPICAL.

STAINLESS STEEL DOUBLE BOWL SINK, TYPICAL.

DISHWASHER.

VENDING MACHINE.

SHOWER GRAB BAR.
BOBRICK B-6861.

FOR CLARIFICAITON, 1-1/8" OF FINISH THICKNESS HAS BEEN ADDED TO THE FACE OF STUD LINES IN THE RESTROOMS TO ALLOW FOR GYP. BOARD AND WALL TILE. DIMENSIONS HAVE BEEN MODIFIED TO FACE OF FINISH AS INDICATED TO ASSIST LAYOUT AND MAINTAIN REQUIRED CLEARANCES. 2

RECORD SET

The information presented on this drawing is diagrammatic and is presented for general information purposes and should not be relied on for accuracy of dimensions, details and locations. Actual and exact conditions if required should be determined in the field.

JMWA
ARCHITECTS
STEVEN E. MYOTT AIA
JAMES R. WILLIAMS AIA
RODOLFO ACEVEDO AIA
949 CLINT MOORE ROAD
BOCA RATON, FLORIDA 33487
TEL 561 997 9997
FAX 561 997 1610
WWW.JMWA.NET

PALMETTO BAY VILLAGE HALL
9705 E. Hibiscus St., Palmetto Bay, Florida

Master Builders of South Florida, Inc.
1400 E. Oakland Park Blvd. Suite 210
Oakland Park, FL 33334

FLORIDA LICENSURE

AAC002193 IB0001142

PROJECT NO.	8714.00
DESIGNED BY:	RA
DRAWN BY:	DW / EK / JS
CHECKED BY:	JW

SUBMITTALS:
BUILDING PERMIT 03.05.2010

REVISIONS:
1 PERMIT COMMENTS 04.02.10
2 ASI 002 DIM. CLARIF. 06.20.10

ENLARGED FLOOR PLANS RESTROOMS

A401

© 2009 JMWA ARCHITECTS, INCORPORATED ALL RIGHTS RESERVED. NO PART OF THESE IDEAS, PLANS OR DESIGNS MAY BE REPRODUCED, COPIED OR UTILIZED GRAPHICALLY IN ANY FORM WHATSOEVER WITHOUT THE EXPRESSED WRITTEN CONSENT OF JMWA ARCHITECTS INCORPORATED AND ITS BOARD OF DIRECTORS.

S:\Projects\8700\8714\8714_Drawings\8714_Current\8714_A401_Enlarged Floor Plan_Restroom.dwg
8/12/2010 2:05:32 PM ekutterer

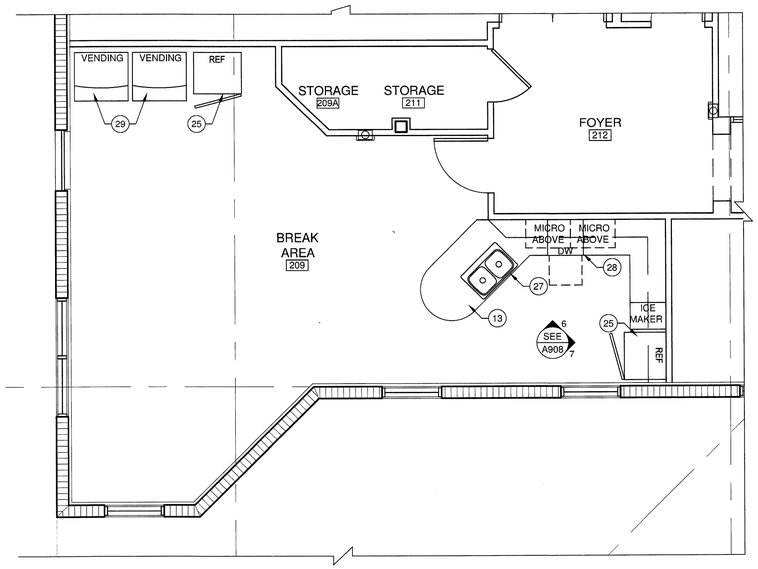

5 ENLARGED 2ND FLOOR BREAK AREA
SCALE: 1/4" = 1'-0"

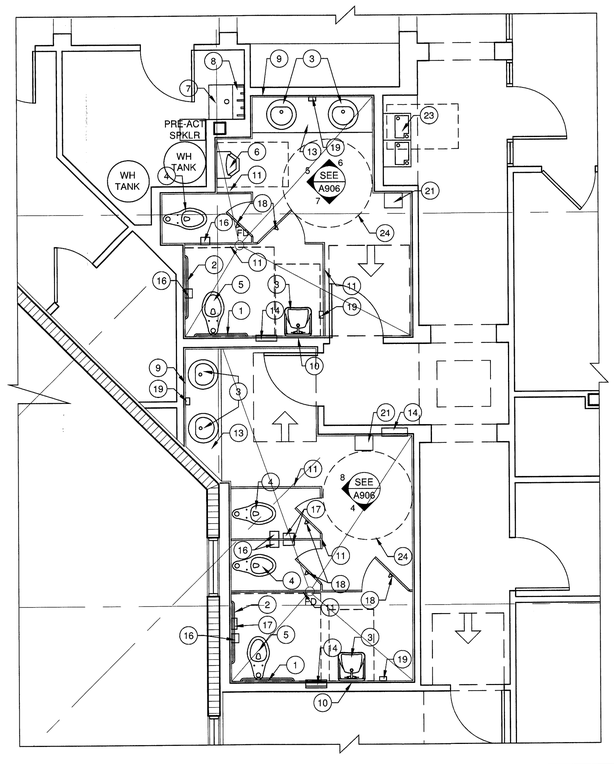

2 ENLARGED 2ND FLOOR RESTROOMS
SCALE: 1/4" = 1'-0"
FIXTURE CLEARANCE DIMS. ADDED 1

ENLARGED FLOOR PLAN KEY NOTES

1. 36" LONG x 1-1/2" Ø GRAB BAR. PROVIDE BACKING PER SHEET A004
2. 42" LONG x 1-1/2" Ø GRAB BAR. PROVIDE BACKING PER SHEET A004.
3. LAVATORY. FOR ADDITIONAL INFORMATION, SEE PLUMBING.
4. FLOOR MOUNTED TOILET. FOR ADDITIONAL INFORMATION, SEE PLUMBING.
5. FLOOR MOUNTED HANDICAP TOILET. FOR ADDITIONAL INFORMATION, SEE PLUMBING.
6. WALL MOUNTED URINAL. FOR ADDITIONAL INFORMATION, SEE PLUMBING.
7. JANITORS SINK. FOR ADDITIONAL INFORMATION, SEE PLUMBING.
8. UTILITY SHELF WITH MOP / BROOM HOLDERS AND RAG HOOK. BOBRICK B-239.
9. MIRROR - SEE A9 SERIES DRAWINGS.
10. TILT MIRROR (HANDICAP ACCESSIBLE RESTROOMS ONLY). BOBRICK B-293.
11. FLOOR-MOUNTED HEADRAIL BRACED TOILET PARTITION BY SCRANTON PRODUCTS. COLOR: PARCHMENT. SEE A9 SERIES DRAWINGS.
12. WALL-MOUNTED URINAL SCREEN BY SCRANTON PRODUCTS. COLOR: PARCHMENT. SEE A9 SERIES DRAWINGS.
13. COUNTER - SEE A9 SERIES DRAWINGS.
14. RECESSED PAPER TOWEL DISPENSER / WASTE RECEPTACLE BOBRICK B-4369.
15. COIN OPERATED SANITARY NAPKIN DISPENSER. BOBRICK B-43500 25.
16. SURFACE MOUNTED MULTI-ROLL TOILET TISSUE DISPENSER. BOBRICK B-4288.
17. SANITARY NAPKIN DISPOSAL. BOBRICK B-4354 (FOR PARTITION MOUNTED). BOBRICK B-270 (FOR SURFACE MOUNTED).
18. SURFACE MOUNTED CLOTHES HOOK. BOBRICK B-6707.
19. SURFACE MOUNTED SOAP DISPENSER. BOBRICK B-4112.
20. SUSPENDED WATER HEATER. FOR ADDITIONAL INFORMATION, SEE PLUMBING.
21. XLERATOR HAND DRYER. FOR ADDITIONAL INFORMATION, SEE ELECTRICAL. MOUNTING HEIGHT TO BOTTOM OF HAND DRYER: MEN (45"), WOMEN (43")
22. LOCKERS.
23. HIGH / LOW ELECTRIC WATER COOLER. SEE SHEET A004.
24. 60" Ø UNOBSTRUCTED WHEELCHAIR TURNING SPACE IN COMPLIANCE WITH FBC SECTION 11-4.2.3. 1
25. REFRIGERATOR.
26. STAINLESS STEEL SINGLE BOWL SINK, TYPICAL.
27. STAINLESS STEEL DOUBLE BOWL SINK, TYPICAL.
28. DISHWASHER.
29. VENDING MACHINE.
30. SHOWER GRAB BAR. BOBRICK B-6861.

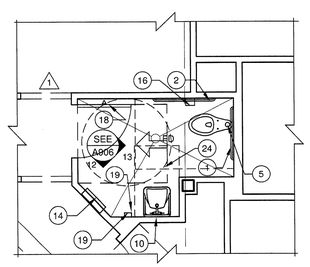

4 ENLARGED 1ST FLOOR UNISEX RESTROOM
SCALE: 1/4" = 1'-0"
FIXTURE CLEARANCE DIMS. ADDED 1

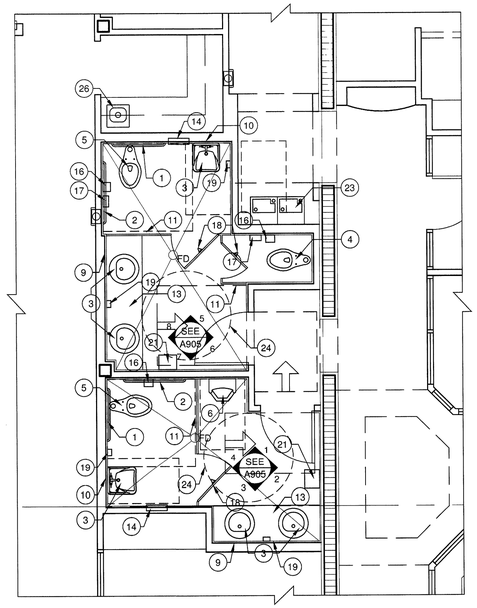

3 ENLARGED 1ST FLOOR RESTROOMS
SCALE: 1/4" = 1'-0"
FIXTURE CLEARANCE DIMS. ADDED 1

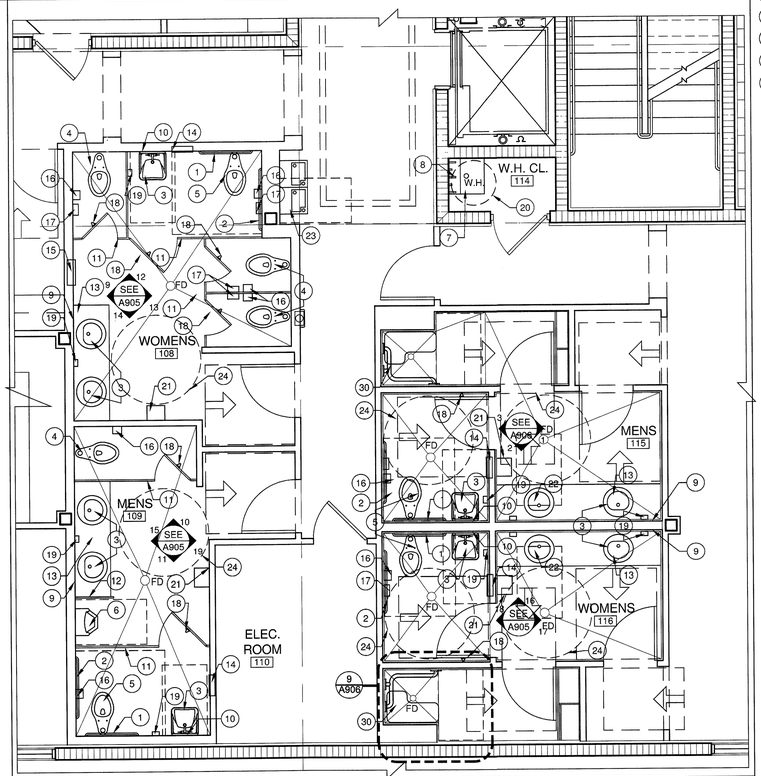

1 ENLARGED 1ST FLOOR RESTROOMS
SCALE: 1/4" = 1'-0"
FIXTURE CLEARANCE DIMS. ADDED 1

RECORD SET

The information presented on this drawing is diagrammatic and is presented for general information purposes and should not be relied on for accuracy of dimensions, details and locations. Actual and exact conditions if required should be determined in the field.

JMWA
ARCHITECTS
STEVEN E. MYOTT AIA
JAMES R. WILLIAMS AIA
RODOLFO ACEVEDO AIA
949 CLINT MOORE ROAD
BOCA RATON, FLORIDA 33487
TEL 561 997 9997
FAX 561 997 1610
WWW.JMWA.NET

PALMETTO BAY VILLAGE HALL

9705 E. Hibiscus St., Palmetto Bay, Florida

Master Builders of South Florida, Inc.
1400 E. Oakland Park Blvd. Suite 210
Oakland Park, FL 33334

FLORIDA LICENSURE

AAC002193 IB0001142

PROJECT NO.	8714.00
DESIGNED BY:	RA
DRAWN BY:	DW / EK / JS
CHECKED BY:	JW

SUBMITTALS:
BUILDING PERMIT 03.05.2010

REVISIONS:
1 PERMIT COMMENTS 04.02.10
2 OWNER REVISIONS 06.22.10

ENLARGED FLOOR PLANS RESTROOMS

A401a

©2010 JMWA ARCHITECTS, INCORPORATED ALL RIGHTS RESERVED. NO PART OF THESE IDEAS, PLANS OR DESIGNS MAY BE REPRODUCED, COPIED OR UTILIZED GRAPHICALLY IN ANY FORM WHATSOEVER WITHOUT THE EXPRESSED WRITTEN CONSENT OF JMWA ARCHITECTS INCORPORATED AND ITS BOARD OF DIRECTORS.

8/12/2010 2:08:42 PM ekutterer S:\Projects\8700\8714\8714_Drawings\8714_Current\8714_A401a_Enlarged Floor Plan_Restroom.dwg

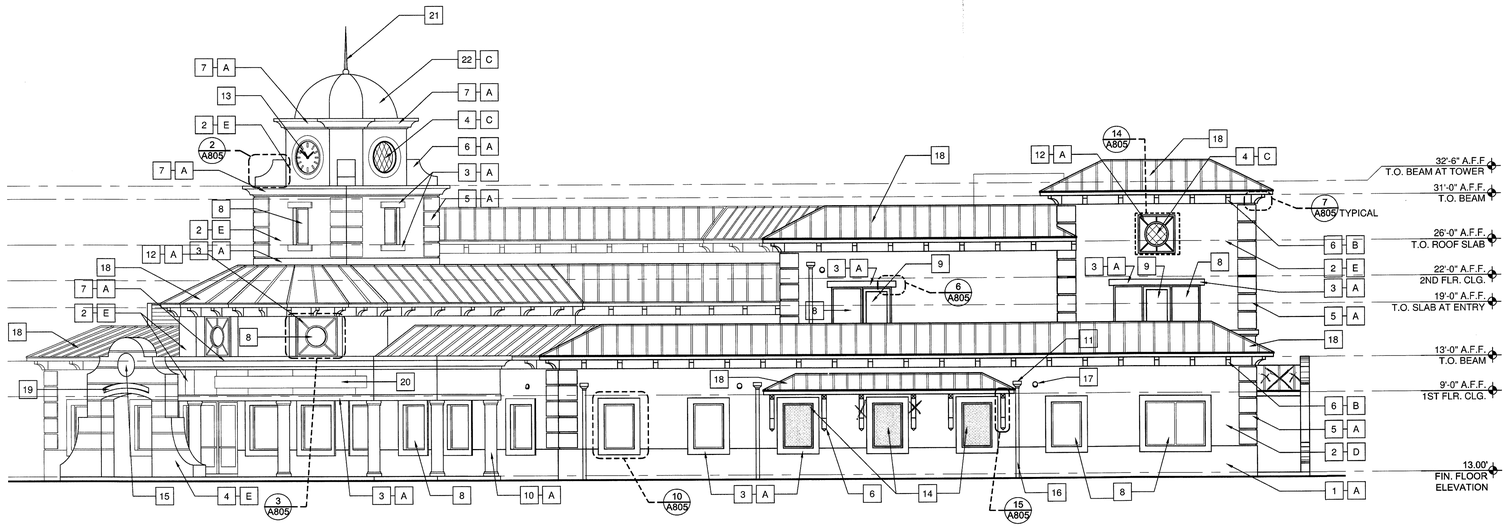

2 SOUTH ELEVATION - HIBISCUS ST.
SCALE: 1/8" = 1'-0"

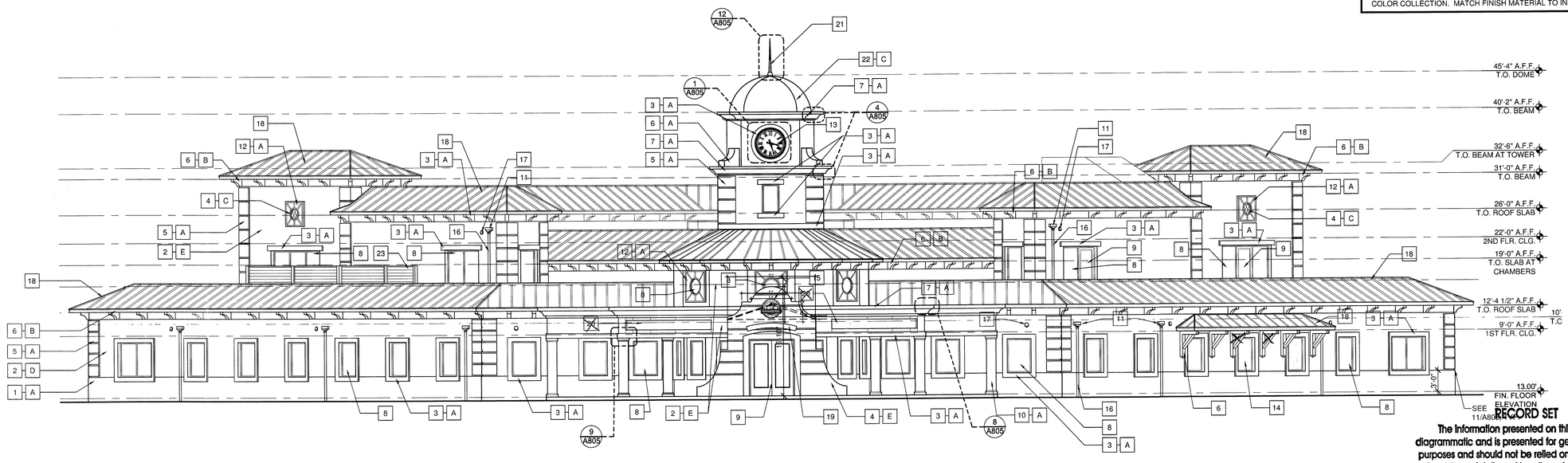

1 SOUTH EAST ELEVATION - MAIN ENTRY
SCALE: 1/8" = 1'-0"

ELEVATION KEY NOTES

MARK	DESCRIPTION
1	STUCCO COATING - MEDIUM TEXTURE
2	STUCCO COATING - SMOOTH TEXTURE
3	SMOOTH STUCCO BAND - SEE PROFILE ELEVATION DETAILS 6/A805
4	SCORED STUCCO - HEAVY TEXTURE - SEE ELEVATION DETAILS 11/A805
5	STUCCO QUOINS - SEE ELEVATION DETAILS 2/A805, 7/A805, AND 11/A805
6	DECORATIVE BRACKET - SEE ELEVATION DETAILS
7	DECORATIVE FOAM BAND WITH SMOOTH STUCCO FINISH - SEE PROFILE DETAILS 4/A805 AND 8/A805
8	WINDOW - SEE WINDOW SCHEDULE, SHEET A802, AND ELEVATION DETAIL 10/A805
9	DOOR - SEE DOOR SCHEDULE, SHEET A801
10	18" FINISHED CAST IN PLACE COLUMN W/ FOAM CAP AND CAST BASE
11	ARCHITECTURAL METAL COVERING - SEE ELEVATION DETAIL 21/A805
12	DECORATIVE FOAM MEDALLION - REFER TO ELEVATION DETAILS 14/A805 AND 3/A805
13	CLOCK - SEE ELEVATION DETAIL 1/A805
14	DISPLAY CASE RATED FOR EXTERIOR USE
15	PALMETTO BAY LOGO
16	SCUPPER ATTACHED TO ALUMINUM GUTTER. PAINT GUTTER TO MATCH WALL BEHIND. SEE ELEVATION DETAIL 20/A805.
17	6" DIA. EMERGENCY OVERFLOW SCUPPER. SEE ELEVATION DETAILS 22/A805 AND 23/A805
18	STANDING SEAM METAL ROOF BY BERRIDGE. COLOR: TERRA COTTA. OTHER AS APPROVED BY ARCHITECT.
19	ENTRY SIGNAGE - TEXT TO BE DETERMINED
X	CARVED LETTERING - TEXT TO BE DETERMINED
21	DOME SPIRE. SEE DETAIL 12/A805.
22	STANDING SEAM METAL ROOF BY BERRIDGE. COLOR: BRISTOL BLUE. OTHER AS APPROVED BY ARCHITECT.
23	MECHANICAL SCREEN. SEE DETAILS 10/A302 AND 11/A302.

X/AXX DENOTES PROFILE NUMBER AND SHEET LOCATION OF BANDING DETAIL

COLOR LEGEND

MARK	DESCRIPTION
A	#SW7006 EXTRA WHITE
B	#SW7594 CARRIAGE DOOR
C	#SW7607 SANTORINI BLUE
D	#SW6087 TRUSTY TAN
E	#SW6365 CACHET CREAM

NOTE: COLOR NUMBERS AND NAMES ARE FROM SHERWIN WILLIAMS COLOR COLLECTION. MATCH FINISH MATERIAL TO INDICATED COLOR.

RECORD SET

The information presented on this drawing is diagrammatic and is presented for general information purposes and should not be relied on for accuracy of dimensions, details and locations. Actual and exact conditions if required should be determined in the field.

JMWA ARCHITECTS

STEVEN E. MYOTT AIA
JAMES R. WILLIAMS AIA
RODOLFO ACEVEDO AIA

949 CLINT MOORE ROAD
BOCA RATON, FLORIDA 33487
TEL 561 997 9997
FAX 561 997 1610

WWW.JMWA.NET

PALMETTO BAY VILLAGE HALL

9705 E. Hibiscus St., Palmetto Bay, Florida

Master Builders of South Florida, Inc.
1400 E. Oakland Park Blvd. Suite 210
Oakland Park, FL 33334

FLORIDA LICENSURE

AAC002193 IB0001142

PROJECT NO.	8714.00
DESIGNED BY:	RA
DRAWN BY:	DW / EK / JS
CHECKED BY:	JW

SUBMITTALS:
BUILDING PERMIT 03.05.2010

REVISIONS:
3 OWNER REVISIONS 07.07.10

EXTERIOR ELEVATIONS

A501

© 2009 JMWA ARCHITECTS, INCORPORATED ALL RIGHTS RESERVED. NO PART OF THESE IDEAS, PLANS OR DESIGNS MAY BE REPRODUCED, COPIED OR UTILIZED GRAPHICALLY IN ANY FORM WHATSOEVER WITHOUT THE EXPRESSED WRITTEN CONSENT OF JMWA ARCHITECTS INCORPORATED AND ITS BOARD OF DIRECTORS.

8/12/2010 2:13:48 PM ekutterer S:\Projects\8700\8714\8714_Drawings\8714_Current\8714_A501_Exterior Elevations.dwg

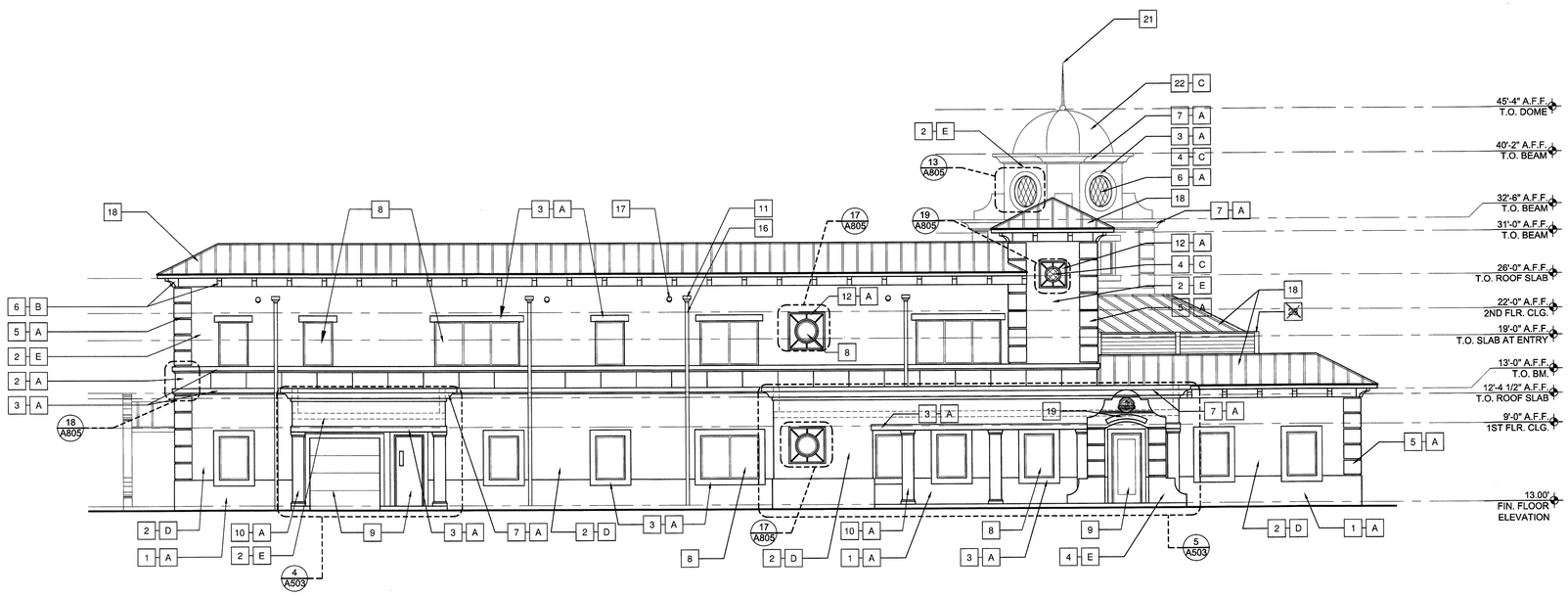

2 NORTH ELEVATION - GUAVA ST.
SCALE: 1/8" = 1'-0"

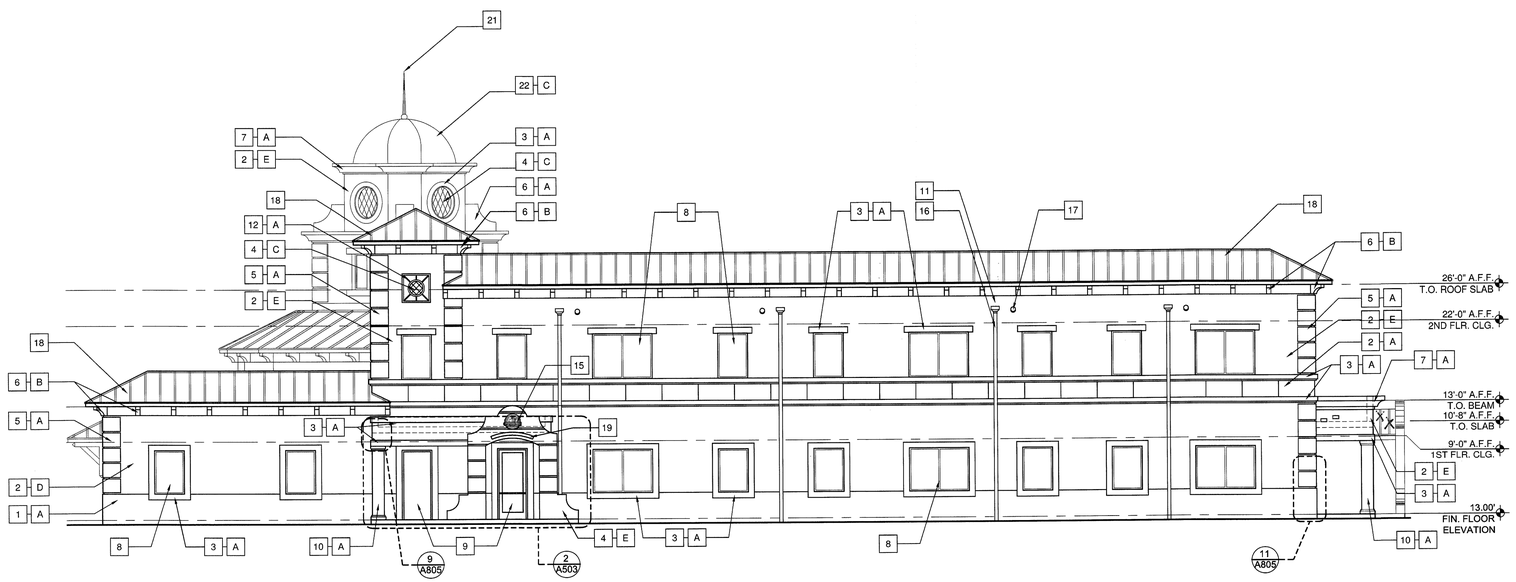

1 EAST ELEVATION - FRANJO ROAD
SCALE: 1/8" = 1'-0"

ELEVATION KEY NOTES

MARK	DESCRIPTION
1	STUCCO COATING - MEDIUM TEXTURE
2	STUCCO COATING - SMOOTH TEXTURE
3	SMOOTH STUCCO BAND - SEE PROFILE ELEVATION DETAILS 6/A805
4	SCORED STUCCO - HEAVY TEXTURE - SEE ELEVATION DETAILS 11/A805
5	STUCCO QUOINS - SEE ELEVATION DETAILS 2/A805, 7/A805, AND 11/A805
6	DECORATIVE BRACKET - SEE ELEVATION DETAILS
7	DECORATIVE FOAM BAND WITH SMOOTH STUCCO FINISH - SEE PROFILE DETAILS 4/A805 AND 8/A805
8	WINDOW - SEE WINDOW SCHEDULE, SHEET A802, AND ELEVATION DETAIL 10/A805
9	DOOR - SEE DOOR SCHEDULE, SHEET A801
10	18" FINISHED CAST IN PLACE COLUMN W/ FOAM CAP AND CAST BASE
11	ARCHITECTURAL METAL COVERING - SEE ELEVATION DETAIL 21/A805
12	DECORATIVE FOAM MEDALLION - REFER TO ELEVATION DETAILS 14/A805 AND 3/A805
13	CLOCK - SEE ELEVATION DETAIL 1/A805
14	DISPLAY CASE RATED FOR EXTERIOR USE
15	PALMETTO BAY LOGO
16	SCUPPER ATTACHED TO ALUMINUM GUTTER. PAINT GUTTER TO MATCH WALL BEHIND. SEE ELEVATION DETAIL 20/A805.
17	6" DIA. EMERGENCY OVERFLOW SCUPPER. SEE ELEVATION DETAILS 22/A805 AND 23/A805
18	STANDING SEAM METAL ROOF BY BERRIDGE. COLOR: TERRA COTTA. OTHER AS APPROVED BY ARCHITECT.
19	ENTRY SIGNAGE - TEXT TO BE DETERMINED
20	CARVED LETTERING - TEXT TO BE DETERMINED
21	DOME SPIRE. SEE DETAIL 12/A805.
22	STANDING SEAM METAL ROOF BY BERRIDGE. COLOR: BRISTOL BLUE. OTHER AS APPROVED BY ARCHITECT.
XX	MECHANICAL SCREEN. SEE DETAILS 10/A302 AND 11/A302.

X / AXX — DENOTES PROFILE NUMBER AND SHEET LOCATION OF BANDING DETAIL

COLOR LEGEND

MARK	DESCRIPTION
A	#SW7006 EXTRA WHITE
B	#SW7594 CARRIAGE DOOR
C	#SW7607 SANTORINI BLUE
D	#SW6087 TRUSTY TAN
E	#SW6365 CACHET CREAM

NOTE: COLOR NUMBERS AND NAMES ARE FROM SHERWIN WILLIAMS COLOR COLLECTION. MATCH FINISH MATERIAL TO INDICATED COLOR.

RECORD SET

The information presented on this drawing is diagrammatic and is presented for general information purposes and should not be relied on for accuracy of dimensions, details and locations. Actual and exact conditions if required should be determined in the field.

JMWA ARCHITECTS

STEVEN E. MYOTT AIA
JAMES R. WILLIAMS AIA
RODOLFO ACEVEDO AIA

949 CLINT MOORE ROAD
BOCA RATON, FLORIDA 33487
TEL 561 997 9997
FAX 561 997 1610

WWW.JMWA.NET

PALMETTO BAY VILLAGE HALL

9705 E. Hibiscus St., Palmetto Bay, Florida

Master Builders of South Florida, Inc.
1400 E. Oakland Park Blvd. Suite 210
Oakland Park, FL 33334

FLORIDA LICENSURE

AAC002193 IB0001142

PROJECT NO. 8714.00
DESIGNED BY: RA
DRAWN BY: DW / EK / JS
CHECKED BY: JW

SUBMITTALS:
BUILDING PERMIT 03.05.2010

REVISIONS:
3 OWNER REVISIONS 07.07.10

EXTERIOR ELEVATIONS

A502

© 2009 JMWA ARCHITECTS, INCORPORATED ALL RIGHTS RESERVED. NO PART OF THESE IDEAS, PLANS OR DESIGNS MAY BE REPRODUCED, COPIED OR UTILIZED GRAPHICALLY IN ANY FORM WHATSOEVER WITHOUT THE EXPRESSED WRITTEN CONSENT OF JMWA ARCHITECTS INCORPORATED AND ITS BOARD OF DIRECTORS.

8/12/2010 2:13:38 PM ekutterer S:\Projects\8700\8714\8714_Drawings\8714_Current\8714_A502_Exterior Elevations.dwg

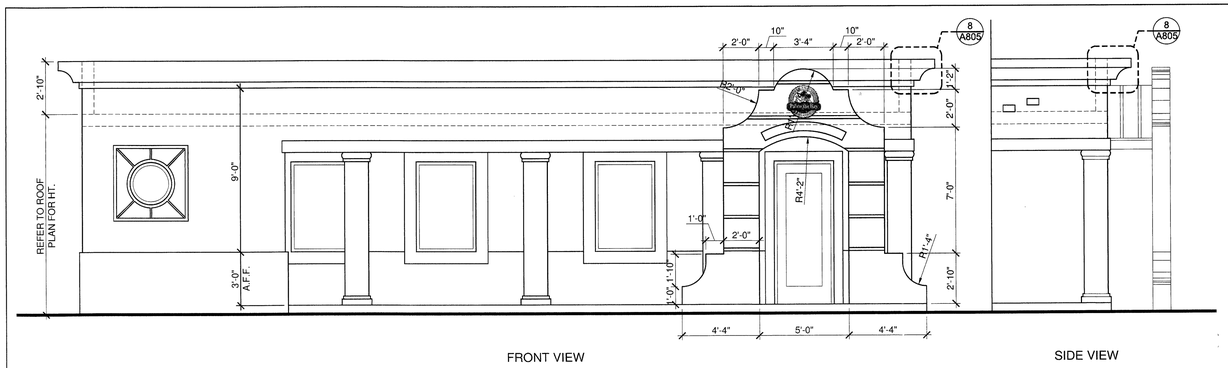

FRONT VIEW

SIDE VIEW

5 ENLARGED ELEVATION
SCALE: 1/4" = 1'-0"

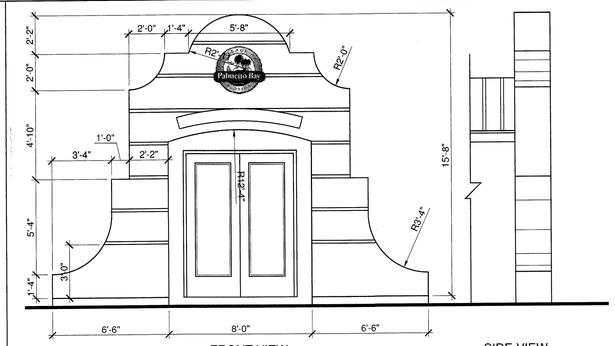

FRONT VIEW

SIDE VIEW

3 ENLARGED ELEVATION
SCALE: 1/4" = 1'-0"

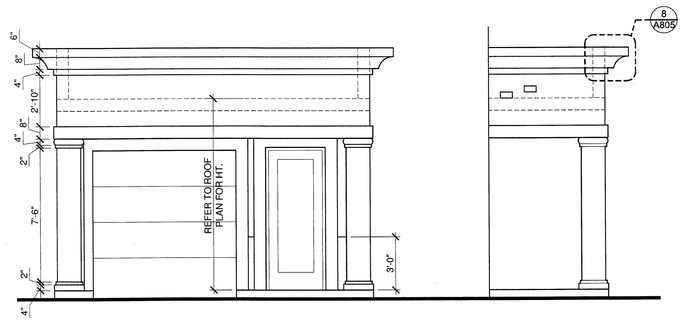

FRONT VIEW

SIDE VIEW

4 ENLARGED ELEVATION
SCALE: 1/4" = 1'-0"

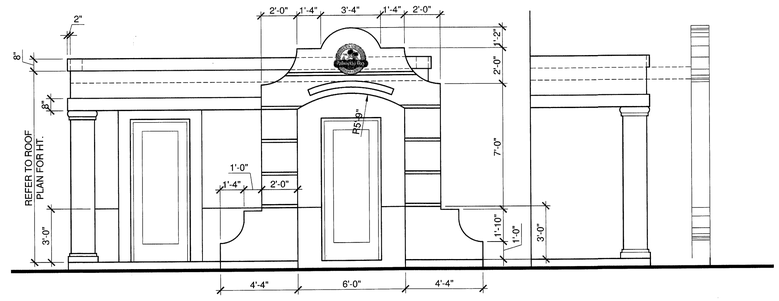

FRONT VIEW

SIDE VIEW

2 ENLARGED ELEVATION
SCALE: 1/4" = 1'-0"

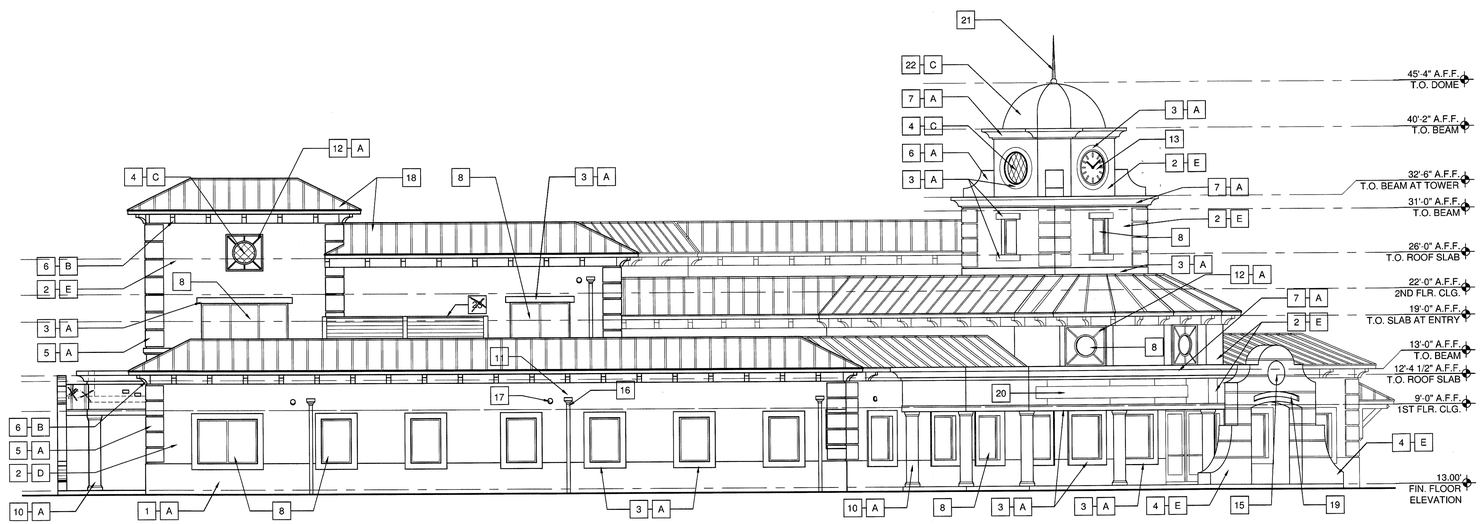

1 WEST ELEVATION - US-1 - N. DIXIE HWY
SCALE: 1/8" = 1'-0"

ELEVATION KEY NOTES

MARK	DESCRIPTION
1	STUCCO COATING - MEDIUM TEXTURE
2	STUCCO COATING - SMOOTH TEXTURE
3	SMOOTH STUCCO BAND - SEE PROFILE ELEVATION DETAILS 6/A805
4	SCORED STUCCO - HEAVY TEXTURE - SEE ELEVATION DETAILS 11/A805
5	STUCCO QUOINS - SEE ELEVATION DETAILS 2/A805, 7/A805, AND 11/A805
6	DECORATIVE BRACKET - SEE ELEVATION DETAILS
7	DECORATIVE FOAM BAND WITH SMOOTH STUCCO FINISH - SEE PROFILE DETAILS 4/A805 AND 8/A805
8	WINDOW - SEE WINDOW SCHEDULE, SHEET A802, AND ELEVATION DETAIL 10/A805
9	DOOR - SEE DOOR SCHEDULE, SHEET A801
10	18" FINISHED CAST IN PLACE COLUMN W/ FOAM CAP AND CAST BASE
11	ARCHITECTURAL METAL COVERING - SEE ELEVATION DETAIL 21/A805
12	DECORATIVE FOAM MEDALLION - REFER TO ELEVATION DETAILS 14/A805 AND 3/A805
13	CLOCK - SEE ELEVATION DETAIL 1/A805
14	DISPLAY CASE RATED FOR EXTERIOR USE
15	PALMETTO BAY LOGO
16	SCUPPER ATTACHED TO ALUMINUM GUTTER. PAINT GUTTER TO MATCH WALL BEHIND. SEE ELEVATION DETAIL 20/A805.
17	6" DIA. EMERGENCY OVERFLOW SCUPPER. SEE ELEVATION DETAILS 22/A805 AND 23/A805
18	STANDING SEAM METAL ROOF BY BERRIDGE. COLOR: TERRA COTTA. OTHER AS APPROVED BY ARCHITECT.
19	ENTRY SIGNAGE - TEXT TO BE DETERMINED
20	CARVED LETTERING - TEXT TO BE DETERMINED
21	DOME SPIRE. SEE DETAIL 12/A805.
22	STANDING SEAM METAL ROOF BY BERRIDGE. COLOR: BRISTOL BLUE. OTHER AS APPROVED BY ARCHITECT.
23	MECHANICAL SCREEN. SEE DETAILS 10/A302 AND 11/A302.

X / AXX — DENOTES PROFILE NUMBER AND SHEET LOCATION OF BANDING DETAIL

COLOR LEGEND

MARK	DESCRIPTION
A	#SW7006 EXTRA WHITE
B	#SW7594 CARRIAGE DOOR
C	#SW7607 SANTORINI BLUE
D	#SW6087 TRUSTY TAN
E	#SW6365 CACHET CREAM

NOTE: COLOR NUMBERS AND NAMES ARE FROM SHERWIN WILLIAMS COLOR COLLECTION. MATCH FINISH MATERIAL TO INDICATED COLOR.

RECORD SET

The information presented on this drawing is diagrammatic and is presented for general information purposes and should not be relied on for accuracy of dimensions, details and locations. Actual and exact conditions if required should be determined in the field.

JMWA ARCHITECTS

STEVEN E. MYOTT AIA
JAMES R. WILLIAMS AIA
RODOLFO ACEVEDO AIA

949 CLINT MOORE ROAD
BOCA RATON, FLORIDA 33487
TEL 561 997 9997
FAX 561 997 1610

WWW.JMWA.NET

PALMETTO BAY VILLAGE HALL

9705 E. Hibiscus St., Palmetto Bay, Florida

Master Builders of South Florida, Inc.
1400 E. Oakland Park Blvd. Suite 210
Oakland Park, FL 33334

FLORIDA LICENSURE

AAC002193 IB0001142

PROJECT NO.	8714.00
DESIGNED BY:	RA
DRAWN BY:	DW / EK / JS
CHECKED BY:	JW

SUBMITTALS:
BUILDING PERMIT 03.05.2010

REVISIONS:
3 OWNER REVISIONS 07.07.10

EXTERIOR ELEVATIONS

A503

© 2009 JMWA ARCHITECTS, INCORPORATED ALL RIGHTS RESERVED. NO PART OF THESE IDEAS, PLANS OR DESIGNS MAY BE REPRODUCED, COPIED OR UTILIZED GRAPHICALLY IN ANY FORM WHATSOEVER WITHOUT THE EXPRESSED WRITTEN CONSENT OF JMWA ARCHITECTS INCORPORATED AND ITS BOARD OF DIRECTORS.

8/12/2010 2:13:27 PM ekutterer S:\Projects\8700\8714\8714_Drawings\8714_Current\8714_A503_Exterior Elevations.dwg

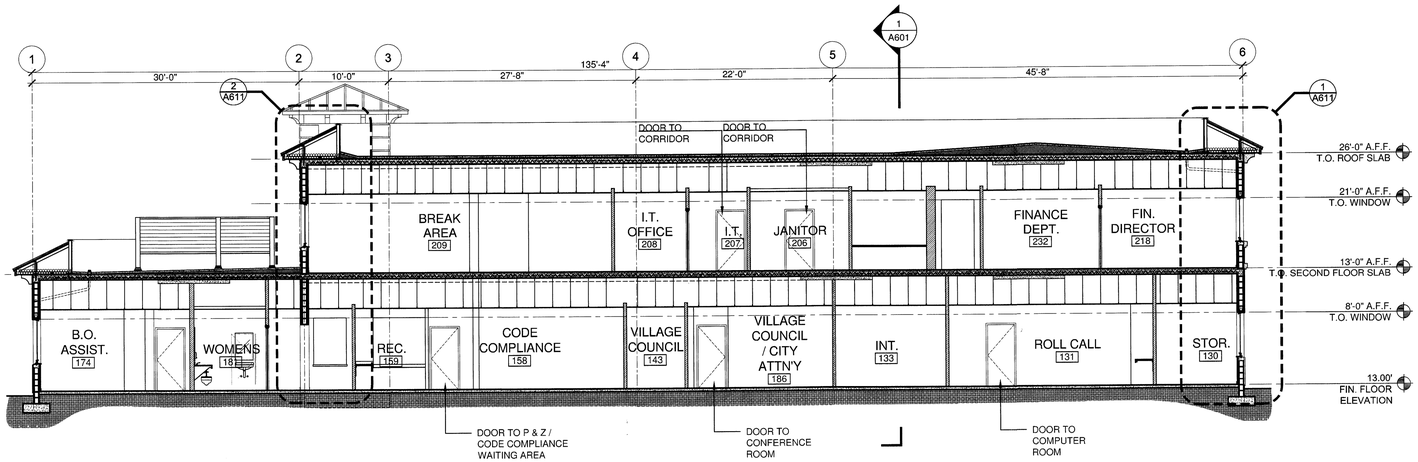

2 BUILDING SECTION
SCALE: 1/8" = 1'-0"

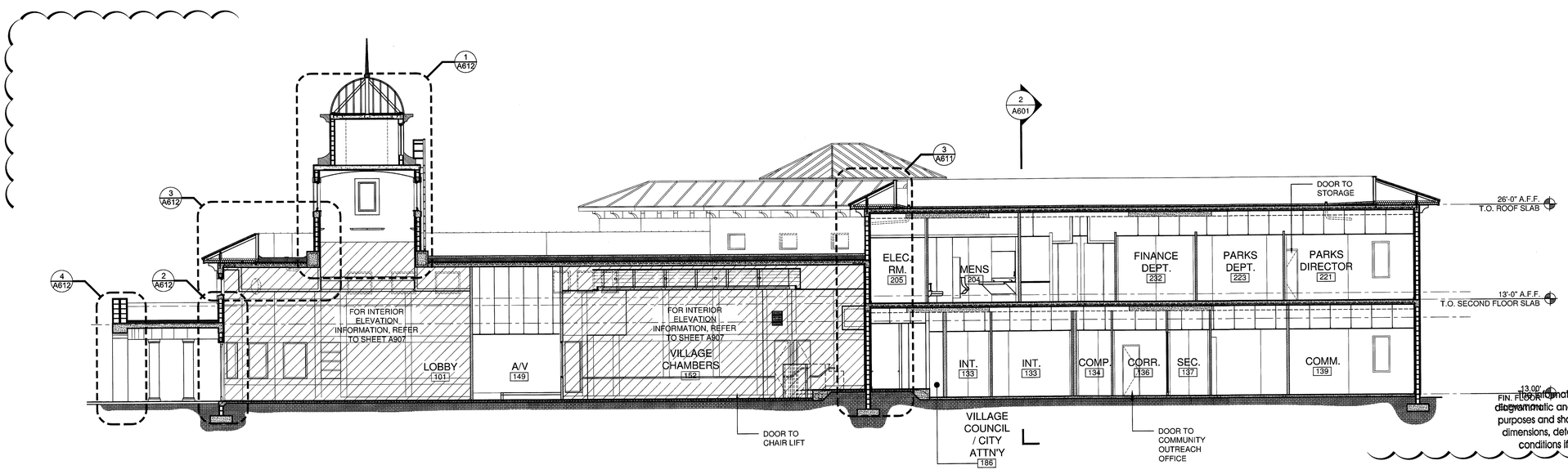

1 BUILDING SECTION
SCALE: 1/8" = 1'-0"

RECORD SET

The information presented on this drawing is diagrammatic and is presented for general information purposes and should not be relied on for accuracy of dimensions, details and locations. Actual and exact conditions if required should be determined in the field.

JMWA ARCHITECTS

STEVEN E. MYOTT AIA
JAMES R. WILLIAMS AIA
RODOLFO ACEVEDO AIA

949 CLINT MOORE ROAD
BOCA RATON, FLORIDA 33487
TEL 561 997 9997
FAX 561 997 1610

WWW.JMWA.NET

PALMETTO BAY VILLAGE HALL

9705 E. Hibiscus St., Palmetto Bay, Florida

Master Builders of South Florida, Inc.
1400 E. Oakland Park Blvd. Suite 210
Oakland Park, FL 33334

FLORIDA LICENSURE

AAC002193 IB0001142

PROJECT NO.	8714.00
DESIGNED BY:	RA
DRAWN BY:	DW / EK / JS
CHECKED BY:	JW

SUBMITTALS:
BUILDING PERMIT 03.05.2010

REVISIONS:
2 OWNER REVISIONS 06.22.10

BUILDING SECTIONS

A601

© 2009 JMWA ARCHITECTS, INCORPORATED ALL RIGHTS RESERVED. NO PART OF THESE IDEAS, PLANS OR DESIGNS MAY BE REPRODUCED, COPIED OR UTILIZED GRAPHICALLY IN ANY FORM WHATSOEVER WITHOUT THE EXPRESSED WRITTEN CONSENT OF JMWA ARCHITECTS INCORPORATED AND ITS BOARD OF DIRECTORS.

8/12/2010 2:13:07 PM ekutterer S:\Projects\8700\8714\8714_Drawings\8714_Current\8714_A601_Building Sections.dwg

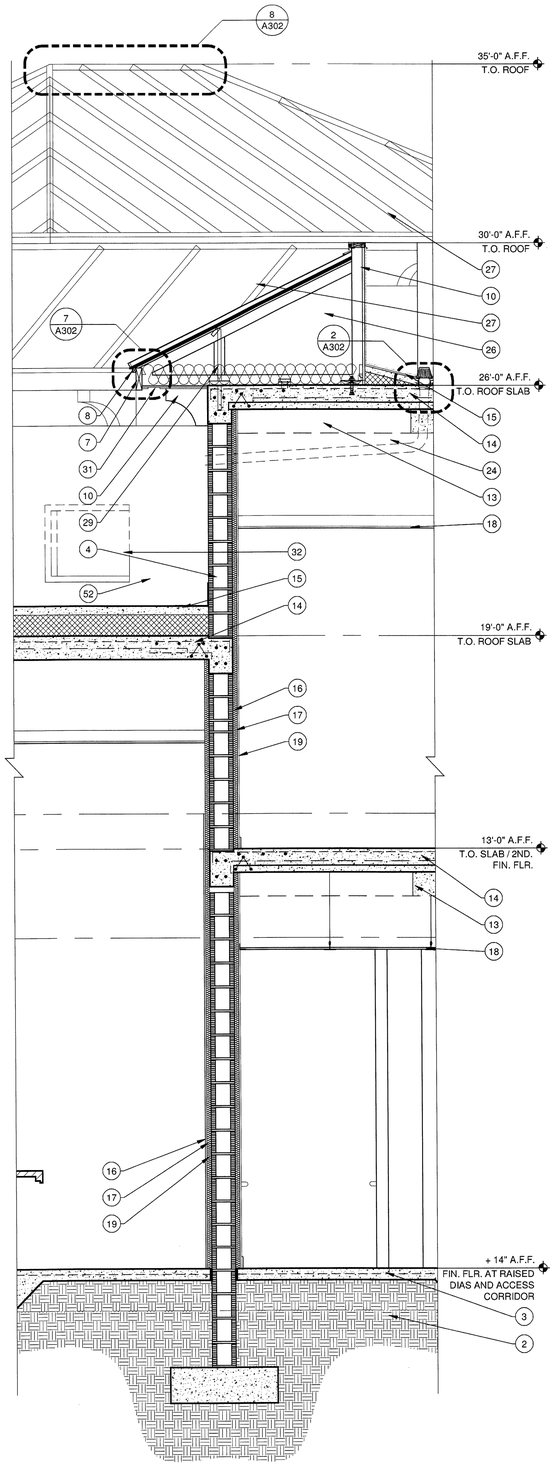

3 WALL SECTION
SCALE: 1/2" = 1'-0"

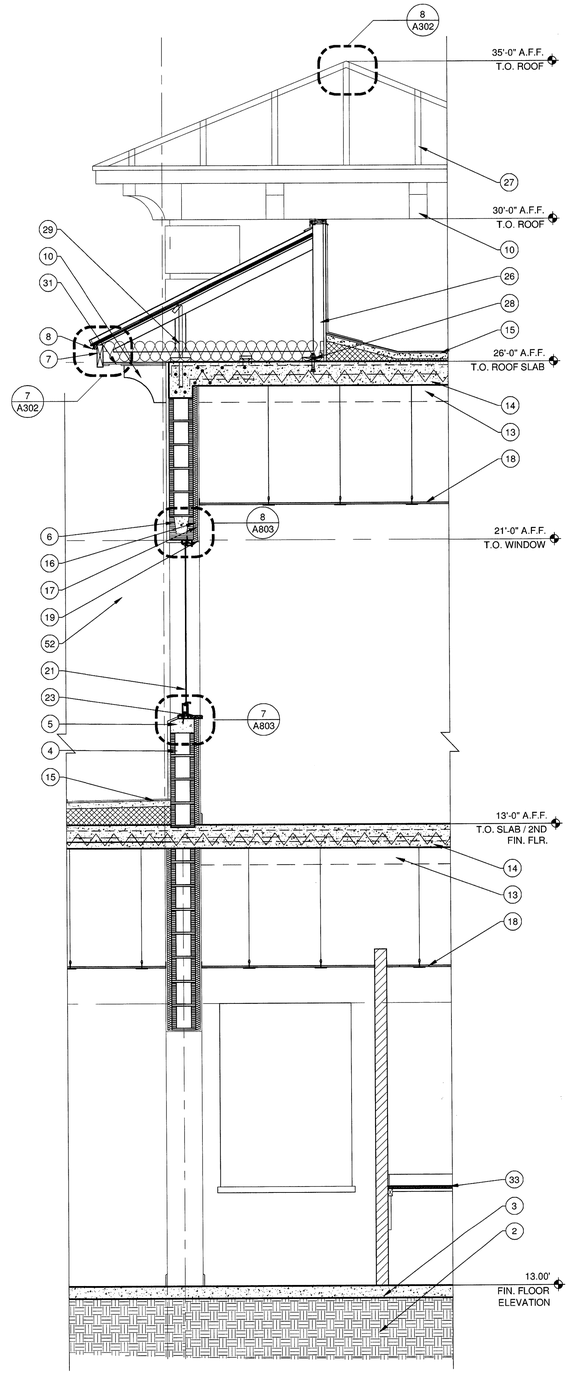

2 WALL SECTION
SCALE: 1/2" = 1'-0"

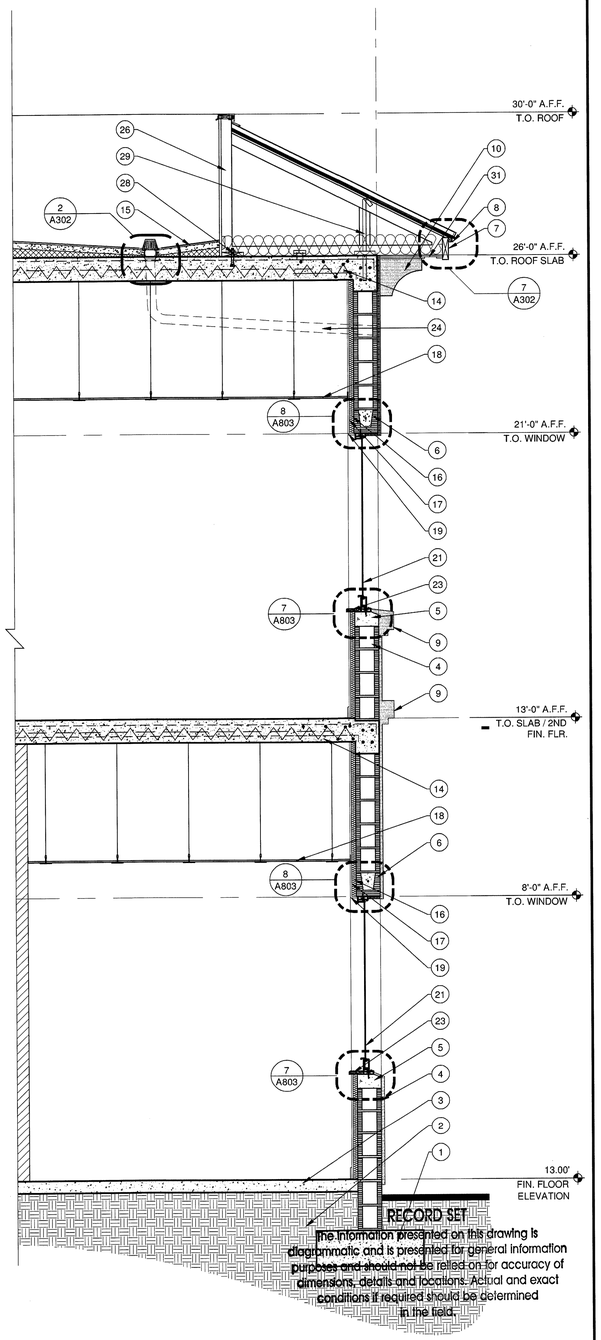

1 WALL SECTION
SCALE: 1/2" = 1'-0"

RECORD SET
The information presented on this drawing is diagrammatic and is presented for general information purposes and should not be relied on for accuracy of dimensions, details and locations. Actual and exact conditions if required should be determined in the field.

SECTION KEY NOTES (X)

1. CONCRETE FOOTING. SEE STRUCTURAL DRAWINGS FOR MORE INFORMATION.
2. COMPACTED SOIL. TERMITE TREATED.
3. CONCRETE SLAB OVER VAPOR BARRIER. SEE STRUCTURAL DRAWINGS FOR MORE INFORMATION.
4. 8" CMU WALL W/ 3/4" STUCCO FINISH.
5. PRECAST SILL. SEE STRUCTURAL DRAWINGS FOR MORE INFORMATION.
6. PRECAST LINTEL. SEE STRUCTURAL DRAWINGS FOR MORE INFORMATION.
7. 2x8 PAINTED CEDAR FASCIA BOARD.
8. 26GA - 2x3 GALVANIZED METAL DRIP ON 1x3 P.T. WOOD SPACERS
9. DECORATIVE FOAM BANDING BANDING. SEE ELEVATIONS FOR MORE INFORMATION.
10. DECORATIVE FOAM BRACKET. SEE ELEVATIONS FOR MORE INFORMATION.
11. SPIRE.
12. METAL FRAMING. SEE STRUCTURAL DRAWINGS FOR MORE INFORMATION.
13. FILIGREE BEAM. SEE STRUC. DRAWINGS FOR MORE INFORMATION.
14. FILIGREE CONCRETE SLAB. SEE STRUCTURAL DRAWINGS FOR MORE INFORMATION.
15. SINGLE PLY ROOF SYSTEM W/LIGHTWEIGHT INSULATING CONCRETE (AVERAGE OF R-30). FOR FULL ROOF SPECIFICATION, SEE ROOF PLAN.
16. FI-FOIL VR PLUS R-5 REFLECTIVE INSULATION INSTALLED OVER 7/8" 25 GA. METAL "V" CHANNEL. INSULATION SHALL CONTINUE OVER ENTIRE WALL SURFACE FROM FLOOR TO ROOF DECK.
17. 7/8" 25 GA. METAL "V" CHANNEL AT 24" O.C. INSTALLED OVER 1" RIGID BOARD INSULATION ANCHORED THROUGH TO MASONRY WALL. FURRING CHANNEL AND RIGID BOARD INSULATION SHALL CONTINUE FROM FLOOR TO ROOF DECK.
18. SCHEDULED CEILING. SEE REFLECTED CEILING PLAN FOR MORE INFORMATION.
19. 1/2" GYPSUM BOARD (AT MASONRY WALL ASSEMBLIES). GYPSUM BOARD SHALL CONTINUE FOR ENTIRE WALL SURFACE FROM FLOOR TO ROOF DECK.
20. R30 BATT INSULATION (AT MANSARD ROOF)
21. ALUMINUM WINDOW SYSTEM. IMPACT RESISTANT GLAZING. INSTALED PER NOA INSTALLATION INSTRUCTIONS. SEE WINDOW SCHEDULE.
22. DOOR. SEE DOOR SCHEDULE.
23. GYPSUM WINDOW SILL. SEE DETAIL 7/A803.
24. PIPING. REFER TO PLUMBING DRAWINGS FOR MORE INFORMATION.
25. BERRIDGE STANDING SEAM METAL ROOF OVER 5/8" DENSGLASS SHEATHING. SEE STRUCTURAL DRAWINGS FOR SHEATHING ATTACHMENT INFORMATION.
26. PRE-FABRICATED ROOF TRUSS, TYPICAL.
27. STANDING SEAM METAL ROOF. FOR FULL ROOF SPECIFICATION, SEE ROOF PLAN.
28. SEE STRUCTURAL DRAWINGS FOR ATTACHMENT INFORMATION.
29. HURRICANE STRAPPING. SEE STRUCTURAL DRAWINGS FOR MORE INFORMATION.
30. ¼" SLAB RECESS FOR PEDITRED MAT.
31. PERFORATED CONTINUOUS PVC SOFFIT VENT.
32. WINDOW (BEYOND). SEE FLOOR PLAN FOR MORE INFORMATION.
33. MILLWORK. SEE A9 SERIES FOR MORE INFORMATION.
34. DECORATIVE COLUMN WRAP. SEE ELEVATIONS FOR MORE INFORMATION.
35. SCORED, STAINED CONCRETE. SEE ARCHITECTURAL SITE PLAN FOR MORE INFORMATION.
36. TOP GUIDE RAIL BRACKET TO BE INSTALLED AS REQ. IN OVERHEAD. GENERAL CONTRACTOR TO SUPPLY SUPPORT.
37. ELEVATOR SHAFT - 2HR RATED (REFER TO STRUCTURAL).
38. STEEL SAFETY BEAM REQUIRED OSHA 1926.502. PROVISIONS FOR A MIN. LIVE LOAD OF 5000 LBS. MII
39. 4"x4"x3/8" STEEL ANGLE SILL SUPPORT.
40. 18"X18" (VERIFY SIZE WITH ELEVATOR MANUFACTURER) SUMP PIT FOR FUTURE SUMP PUMP IF REQUIRED. HYDRAULIC ACTUATOR SHOWN FOR REFERENCE ONLY.
41. SILL (PER ELEVATOR MANUFACTURER).
42. ELEVATOR SHAFT FOOTING.
43. ROOF DRAIN.
44. SLOPED STRUCTURAL CONCRETE OVER CONCRETE ROOF DECK.
45. SPRAY APPLIED INSULATION.
46. 14" WIDE CONCRETE CURB. SEE STRUCTURAL DRAWINGS FOR ADDITIONAL INFORMATION.
47. ALUMINUM GUARDRAIL, 42" ABV. ROOF TERRACE FLOOR. KYNAR FINISH AT GUARDRAIL TO MATCH SHERWIN WILLIAMS SW6379 JERSEY CREAM. SEE STRUCT. DWGS. FOR ATTACHMENT INFO.
48. FLASHING.
49. GAF TOPCOAT FLUID APPLIED WATERPROOFING.
50. DOWNSPOUT.
51. ELEVATOR PIT ACCESS LADDER BY OTHERS.
52. MECHANICAL SCREEN. SEE DETAILS 10/A302 AND 11/A302.
53. ROOF ACCESS HATCH SEE 3/A301
54. ACCESS LADDER SEE 24/A805

JMWA
ARCHITECTS
STEVEN E. MYOTT AIA
JAMES R. WILLIAMS AIA
RODOLFO ACEVEDO AIA
949 CLINT MOORE ROAD
BOCA RATON, FLORIDA 33487
TEL 561 997 9997
FAX 561 997 1610
WWW.JMWA.NET

PALMETTO BAY VILLAGE HALL

Palmetto Bay, Florida

Master Builders of South Florida, Inc.
1400 E. Oakland Park Blvd. Suite 210
Oakland Park, FL 33334

FLORIDA LICENSURE

AAC002193 IB0001142

PROJECT NO.	8714.00
DESIGNED BY:	RA
DRAWN BY:	DW / EK / JS
CHECKED BY:	JW

SUBMITTALS:
BUILDING PERMIT 03.05.2010

REVISIONS:

WALL SECTIONS

A611

© 2009 JMWA ARCHITECTS, INCORPORATED ALL RIGHTS RESERVED. NO PART OF THESE IDEAS, PLANS OR DESIGNS MAY BE REPRODUCED, COPIED OR UTILIZED GRAPHICALLY IN ANY FORM WHATSOEVER WITHOUT THE EXPRESSED WRITTEN CONSENT OF JMWA ARCHITECTS INCORPORATED AND ITS BOARD OF DIRECTORS

3/3/2010 11:46:11 AM joses S:\Projects\8700\8714\8714_Drawings\8714_Current\8714_A611_Wall Sections.dwg

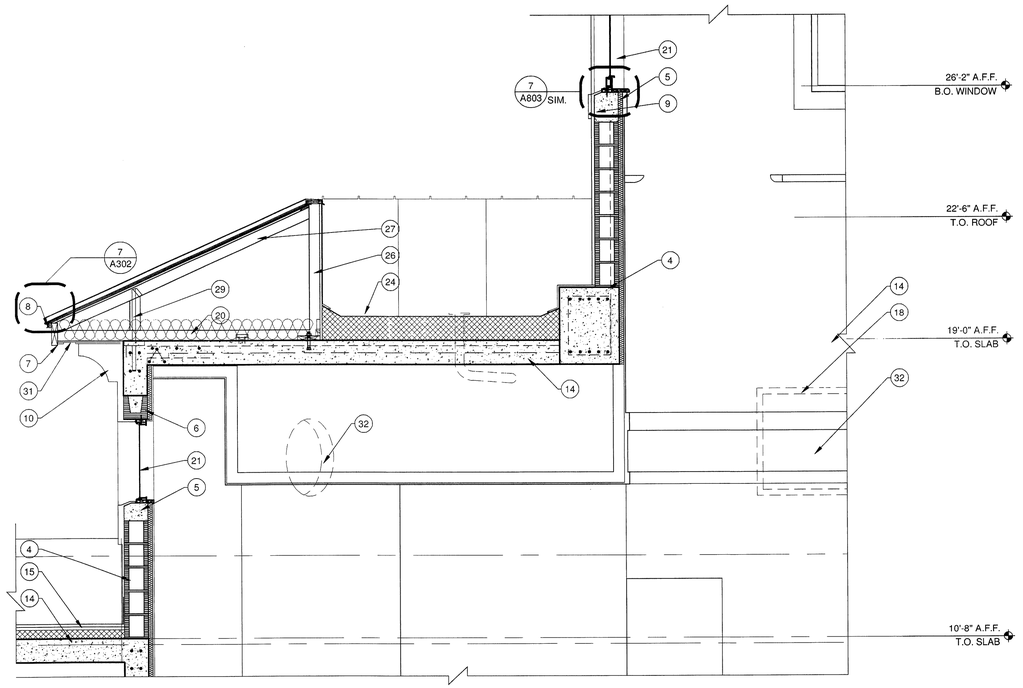

3 SECTION THRU MANSARD ROOF AT LOBBY
SCALE: 1/2" = 1'-0"

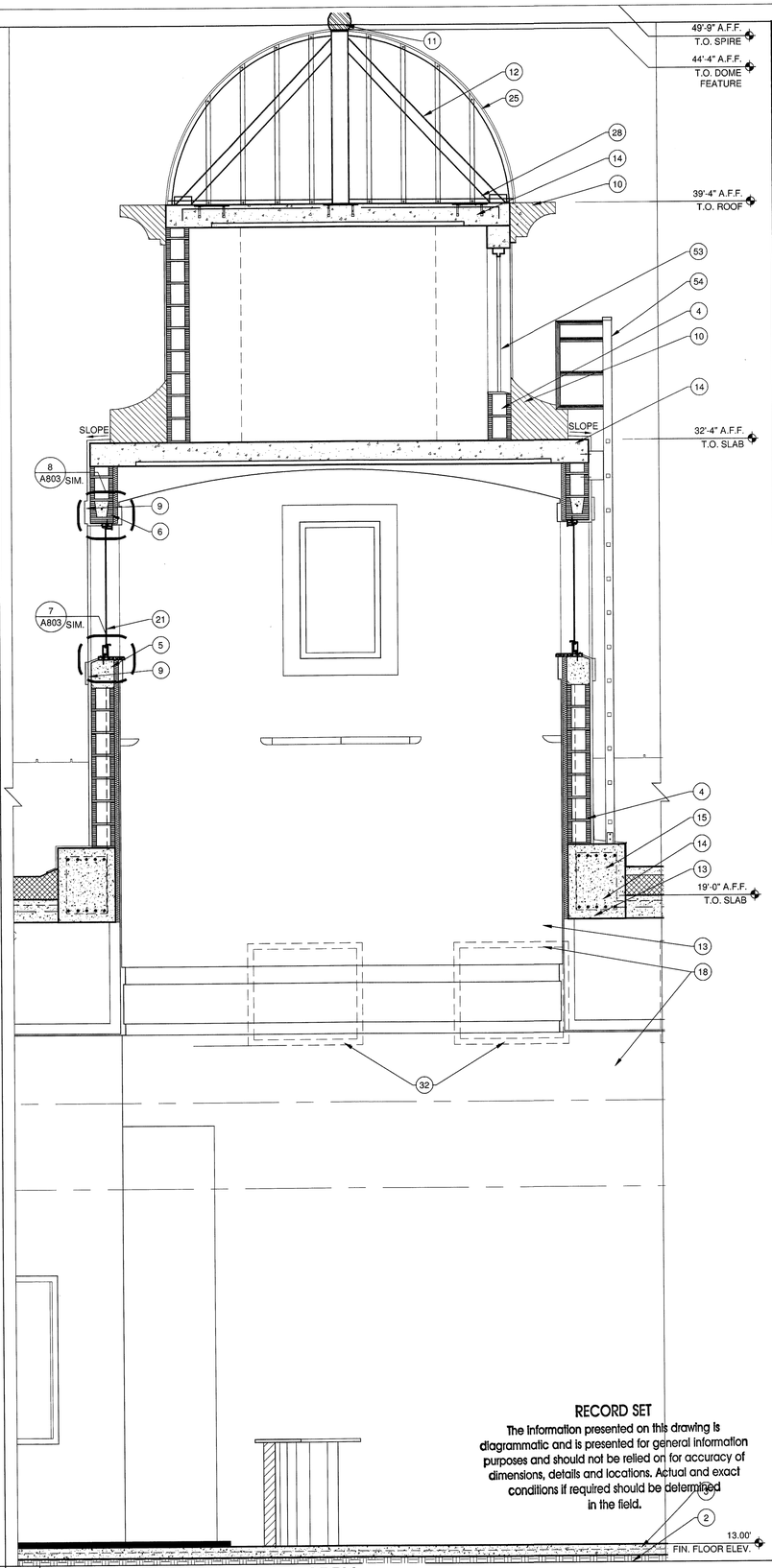

1 SECTION THRU TOWER AT LOBBY
SCALE: 1/2" = 1'-0"

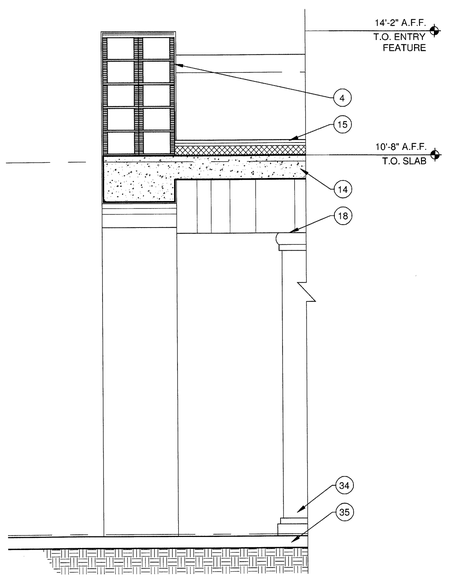

4 SECTION THRU COVERED ENTRY
SCALE: 1/2" = 1'-0"

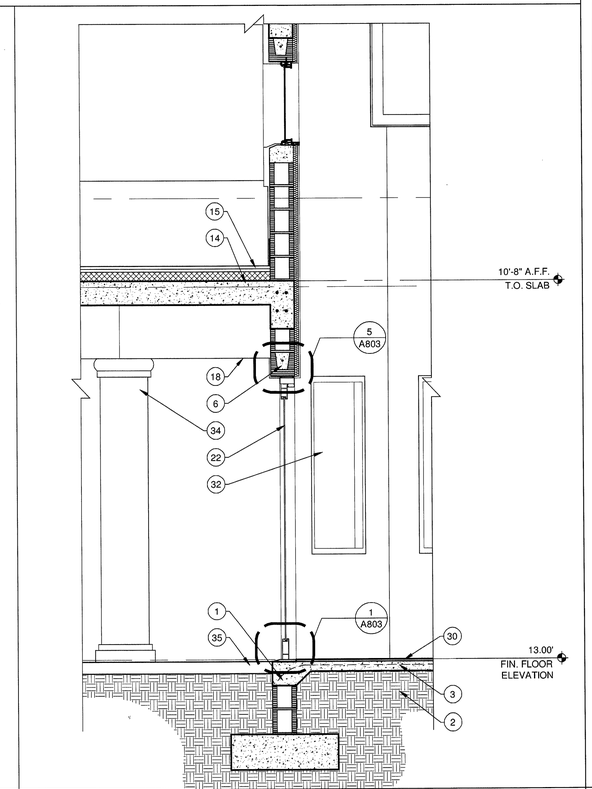

2 SECTION THRU ENTRANCE AT LOBBY
SCALE: 1/2" = 1'-0"

SECTION KEY NOTES (X)

1. CONCRETE FOOTING. SEE STRUCTURAL DRAWINGS FOR MORE INFORMATION.
2. COMPACTED SOIL. TERMITE TREATED.
3. CONCRETE SLAB OVER VAPOR BARRIER. SEE STRUCTURAL DRAWINGS FOR MORE INFORMATION.
4. 8" CMU WALL W/ 3/4" STUCCO FINISH.
5. PRECAST SILL. SEE STRUCTURAL DRAWINGS FOR MORE INFORMATION.
6. PRECAST LINTEL. SEE STRUCTURAL DRAWINGS FOR MORE INFORMATION.
7. 2x8 PAINTED CEDAR FASCIA BOARD.
8. 26GA - 2x3 GALVANIZED METAL DRIP ON 1x3 P.T. WOOD SPACERS
9. DECORATIVE FOAM BANDING BANDING. SEE ELEVATIONS FOR MORE INFORMATION.
10. DECORATIVE FOAM BRACKET. SEE ELEVATIONS FOR MORE INFORMATION.
11. SPIRE.
12. METAL FRAMING. SEE STRUCTURAL DRAWINGS FOR MORE INFORMATION.
13. FILIGREE BEAM. SEE STRUC. DRAWINGS FOR MORE INFORMATION.
14. FILIGREE CONCRETE SLAB. SEE STRUCTURAL DRAWINGS FOR MORE INFORMATION.
15. SINGLE PLY ROOF SYSTEM W/LIGHTWEIGHT INSULATING CONCRETE (AVERAGE OF R-30). FOR FULL ROOF SPECIFICATION, SEE ROOF PLAN.
16. FI-FOIL VR PLUS R-5 REFLECTIVE INSULATION INSTALLED OVER 7/8" 25 GA. METAL "V" CHANNEL. INSULATION SHALL CONTINUE OVER ENTIRE WALL SURFACE FROM FLOOR TO ROOF DECK.
17. 7/8" 25 GA. METAL "V" CHANNEL AT 24" O.C. INSTALLED OVER 1" RIGID BOARD INSULATION ANCHORED THROUGH TO MASONRY WALL. FURRING CHANNEL AND RIGID BOARD INSULATION SHALL CONTINUE FROM FLOOR TO ROOF DECK.
18. SCHEDULED CEILING. SEE REFLECTED CEILING PLAN FOR MORE INFORMATION.
19. 1/2" GYPSUM BOARD (AT MASONRY WALL ASSEMBLIES). GYPSUM BOARD SHALL CONTINUE FOR ENTIRE WALL SURFACE FROM FLOOR TO ROOF DECK.
20. R30 BATT INSULATION (AT MANSARD ROOF)
21. ALUMINUM WINDOW SYSTEM. IMPACT RESISTANT GLAZING. INSTALED PER NOA INSTALLATION INSTRUCTIONS. SEE WINDOW SCHEDULE.
22. DOOR. SEE DOOR SCHEDULE.
23. GYPSUM WINDOW SILL. SEE DETAIL 7/A803.
24. PIPING. REFER TO PLUMBING DRAWINGS FOR MORE INFORMATION.
25. BERRIDGE STANDING SEAM METAL ROOF OVER 5/8" DENSGLASS SHEATHING. SEE STRUCTURAL DRAWINGS FOR SHEATHING ATTACHMENT INFORMATION.
26. PRE-FABRICATED ROOF TRUSS, TYPICAL.
27. STANDING SEAM METAL ROOF. FOR FULL ROOF SPECIFICATION, SEE ROOF PLAN.
28. SEE STRUCTURAL DRAWINGS FOR ATTACHMENT INFORMATION.
29. HURRICANE STRAPPING. SEE STRUCTURAL DRAWINGS FOR MORE INFORMATION.
30. 1½" SLAB RECESS FOR PEDITRED MAT.
31. PERFORATED CONTINUOUS PVC SOFFIT VENT.
32. WINDOW (BEYOND). SEE FLOOR PLAN FOR MORE INFORMATION.
33. MILLWORK. SEE A9 SERIES FOR MORE INFORMATION.
34. DECORATIVE COLUMN WRAP. SEE ELEVATIONS FOR MORE INFORMATION.
35. SCORED, STAINED CONCRETE. SEE ARCHITECTURAL SITE PLAN FOR MORE INFORMATION.
36. TOP GUIDE RAIL BRACKET TO BE INSTALLED AS REQ. IN OVERHEAD. GENERAL CONTRACTOR TO SUPPLY SUPPORT.
37. ELEVATOR SHAFT - 2HR RATED (REFER TO STRUCTURAL).
38. STEEL SAFETY BEAM REQUIRED OSHA 1926.502. PROVISIONS FOR A MIN. LIVE LOAD OF 5000 LBS. MII
39. 4"x4"x3/8" STEEL ANGLE SILL SUPPORT.
40. 18"X18" (VERIFY SIZE WITH ELEVATOR MANUFACTURER) SUMP PIT FOR FUTURE SUMP PUMP IF REQUIRED. HYDRAULIC ACTUATOR SHOWN FOR REFERENCE ONLY.
41. SILL (PER ELEVATOR MANUFACTURER).
42. ELEVATOR SHAFT FOOTING.
43. ROOF DRAIN.
44. SLOPED STRUCTURAL CONCRETE OVER CONCRETE ROOF DECK.
45. SPRAY APPLIED INSULATION.
46. 14" WIDE CONCRETE CURB. SEE STRUCTURAL DRAWINGS FOR ADDITIONAL INFORMATION.
47. ALUMINUM GUARDRAIL, 42" ABV. ROOF TERRACE FLOOR. KYNAR FINISH AT GUARDRAIL TO MATCH SHERWIN WILLIAMS SW#6379 JERSEY CREAM. SEE STRUCT. DWGS. FOR ATTACHMENT INFO.
48. FLASHING.
49. GAF TOPCOAT FLUID APPLIED WATERPROOFING.
50. DOWNSPOUT.
51. ELEVATOR PIT ACCESS LADDER BY OTHERS.
52. MECHANICAL SCREEN. SEE DETAILS 10/A302 AND 11/A302.
53. ROOF ACCESS HATCH SEE 3/A301
54. ACCESS LADDER SEE 24/A805

RECORD SET

The information presented on this drawing is diagrammatic and is presented for general information purposes and should not be relied on for accuracy of dimensions, details and locations. Actual and exact conditions if required should be determined in the field.

JMWA
ARCHITECTS
STEVEN E. MYOTT AIA
JAMES R. WILLIAMS AIA
RODOLFO ACEVEDO AIA
949 CLINT MOORE ROAD
BOCA RATON, FLORIDA 33487
TEL 561 997 9997
FAX 561 997 1610
WWW.JMWA.NET

PALMETTO BAY VILLAGE HALL

Palmetto Bay, Florida

Master Builders of South Florida, Inc.
1400 E. Oakland Park Blvd. Suite 210
Oakland Park, FL 33334

FLORIDA LICENSURE

AAC002193 IB0001142

PROJECT NO.	8714.00
DESIGNED BY:	RA
DRAWN BY:	DW / EK / JS
CHECKED BY:	JW

SUBMITTALS:
BUILDING PERMIT 03.05.2010

REVISIONS:

WALL SECTIONS

A612

© 2009 JMWA ARCHITECTS, INCORPORATED ALL RIGHTS RESERVED. NO PART OF THESE IDEAS, PLANS OR DESIGNS MAY BE REPRODUCED, COPIED OR UTILIZED GRAPHICALLY IN ANY FORM WHATSOEVER WITHOUT THE EXPRESSED WRITTEN CONSENT OF JMWA ARCHITECTS INCORPORATED AND ITS BOARD OF DIRECTORS.

3/5/2010 8:26:48 AM joses S:\Projects\8700\8714\8714_Drawings\8714_Current\8714_A612_Wall Sections.dwg

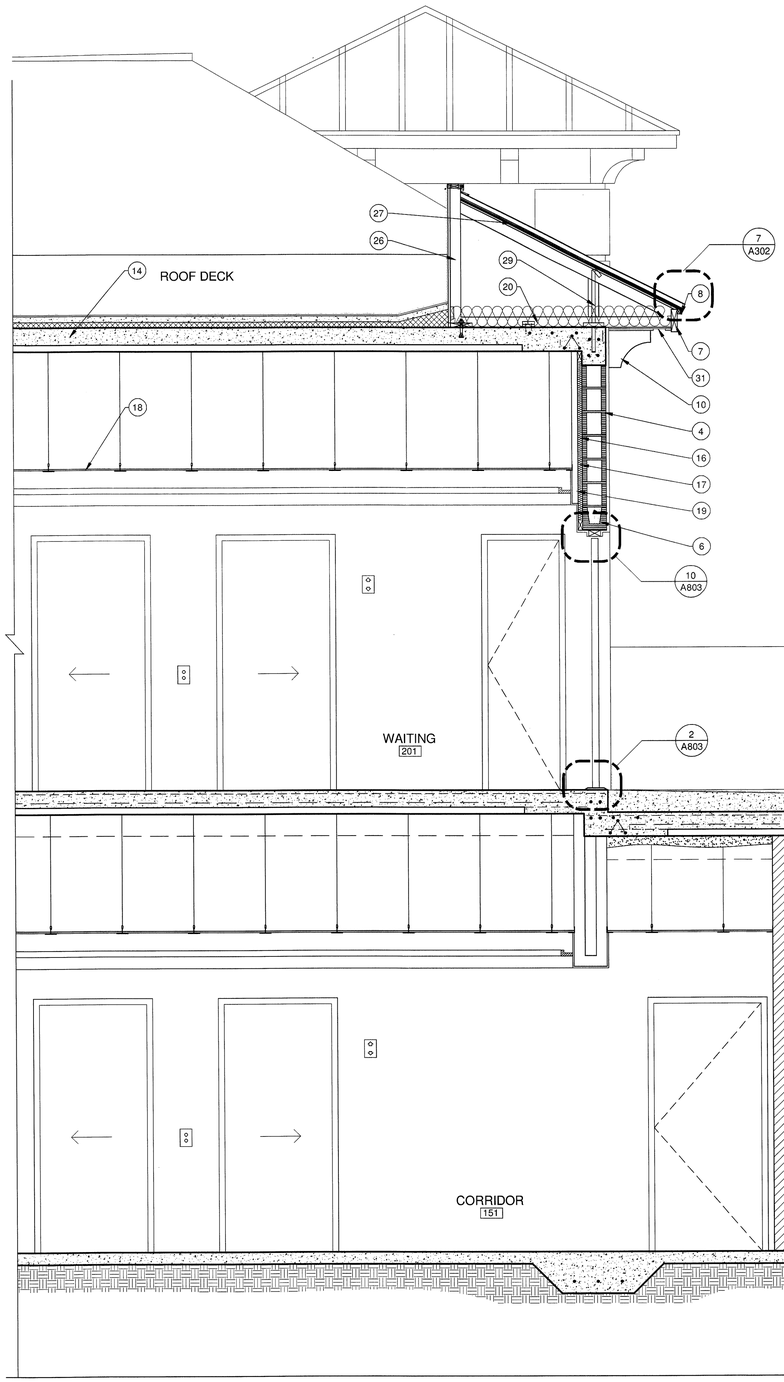

1 SECTION THRU ROOF TERRACE
SCALE: 1/2" = 1'-0"

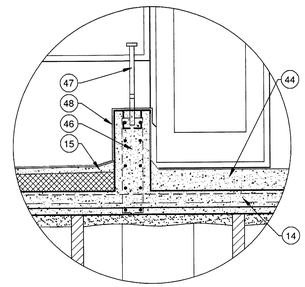

2 SECTION THRU ROOF CURB AT TERRACE
SCALE: 1/2" = 1'-0"

SECTION KEY NOTES (X)

1. CONCRETE FOOTING. SEE STRUCTURAL DRAWINGS FOR MORE INFORMATION.
2. COMPACTED SOIL. TERMITE TREATED.
3. CONCRETE SLAB OVER VAPOR BARRIER. SEE STRUCTURAL DRAWINGS FOR MORE INFORMATION.
4. 8" CMU WALL W/ 3/4" STUCCO FINISH.
5. PRECAST SILL. SEE STRUCTURAL DRAWINGS FOR MORE INFORMATION.
6. PRECAST LINTEL. SEE STRUCTURAL DRAWINGS FOR MORE INFORMATION.
7. 2x8 PAINTED CEDAR FASCIA BOARD.
8. 26GA - 2x3 GALVANIZED METAL DRIP ON 1x3 P.T. WOOD SPACERS
9. DECORATIVE FOAM BANDING BANDING. SEE ELEVATIONS FOR MORE INFORMATION.
10. DECORATIVE FOAM BRACKET. SEE ELEVATIONS FOR MORE INFORMATION.
11. SPIRE.
12. METAL FRAMING. SEE STRUCTURAL DRAWINGS FOR MORE INFORMATION.
13. FILIGREE BEAM. SEE STRUC. DRAWINGS FOR MORE INFORMATION.
14. FILIGREE CONCRETE SLAB. SEE STRUCTURAL DRAWINGS FOR MORE INFORMATION.
15. SINGLE PLY ROOF SYSTEM W/LIGHTWEIGHT INSULATING CONCRETE (AVERAGE OF R-30). FOR FULL ROOF SPECIFICATION, SEE ROOF PLAN.
16. FI-FOIL VR PLUS R-5 REFLECTIVE INSULATION INSTALLED OVER 7/8" 25 GA. METAL "V" CHANNEL. INSULATION SHALL CONTINUE OVER ENTIRE WALL SURFACE FROM FLOOR TO ROOF DECK.
17. 7/8" 25 GA. METAL "V" CHANNEL AT 24" O.C. INSTALLED OVER 1" RIGID BOARD INSULATION ANCHORED THROUGH TO MASONRY WALL. FURRING CHANNEL AND RIGID BOARD INSULATION SHALL CONTINUE FROM FLOOR TO ROOF DECK.
18. SCHEDULED CEILING. SEE REFLECTED CEILING PLAN FOR MORE INFORMATION.
19. 1/2" GYPSUM BOARD (AT MASONRY WALL ASSEMBLIES). GYPSUM BOARD SHALL CONTINUE FOR ENTIRE WALL SURFACE FROM FLOOR TO ROOF DECK.
20. R30 BATT INSULATION (AT MANSARD ROOF)
21. ALUMINUM WINDOW SYSTEM. IMPACT RESISTANT GLAZING. INSTALED PER NOA INSTALLATION INSTRUCTIONS. SEE WINDOW SCHEDULE.
22. DOOR. SEE DOOR SCHEDULE.
23. GYPSUM WINDOW SILL. SEE DETAIL 7/A803.
24. PIPING. REFER TO PLUMBING DRAWINGS FOR MORE INFORMATION.
25. BERRIDGE STANDING SEAM METAL ROOF OVER 5/8" DENSGLASS SHEATHING. SEE STRUCTURAL DRAWINGS FOR SHEATHING ATTACHMENT INFORMATION.
26. PRE-FABRICATED ROOF TRUSS, TYPICAL.
27. STANDING SEAM METAL ROOF. FOR FULL ROOF SPECIFICATION, SEE ROOF PLAN.
28. SEE STRUCTURAL DRAWINGS FOR ATTACHMENT INFORMATION.
29. HURRICANE STRAPPING. SEE STRUCTURAL DRAWINGS FOR MORE INFORMATION.
30. 1/2" SLAB RECESS FOR PEDITRED MAT.
31. PERFORATED CONTINUOUS PVC SOFFIT VENT.
32. WINDOW (BEYOND). SEE FLOOR PLAN FOR MORE INFORMATION.
33. MILLWORK. SEE A9 SERIES FOR MORE INFORMATION.
34. DECORATIVE COLUMN WRAP. SEE ELEVATIONS FOR MORE INFORMATION.
35. SCORED, STAINED CONCRETE. SEE ARCHITECTURAL SITE PLAN FOR MORE INFORMATION.
36. TOP GUIDE RAIL BRACKET TO BE INSTALLED AS REQ. IN OVERHEAD. GENERAL CONTRACTOR TO SUPPLY SUPPORT.
37. ELEVATOR SHAFT - 2HR RATED (REFER TO STRUCTURAL).
38. STEEL SAFETY BEAM REQUIRED OSHA 1926.502. PROVISIONS FOR A MIN. LIVE LOAD OF 5000 LBS. MII
39. 4"x4"x3/8" STEEL ANGLE SILL SUPPORT.
40. 18"X18" (VERIFY SIZE WITH ELEVATOR MANUFACTURER) SUMP PIT FOR FUTURE SUMP PUMP IF REQUIRED. HYDRAULIC ACTUATOR SHOWN FOR REFERENCE ONLY.
41. SILL (PER ELEVATOR MANUFACTURER).
42. ELEVATOR SHAFT FOOTING.
43. ROOF DRAIN.
44. SLOPED STRUCTURAL CONCRETE OVER CONCRETE ROOF DECK.
45. SPRAY APPLIED INSULATION.
46. 14" WIDE CONCRETE CURB. SEE STRUCTURAL DRAWINGS FOR ADDITIONAL INFORMATION.
47. ALUMINUM GUARDRAIL, 42" ABV. ROOF TERRACE FLOOR. KYNAR FINISH AT GUARDRAIL TO MATCH SHERWIN WILLIAMS SW#6379 JERSEY CREAM. SEE STRUCT. DWGS. FOR ATTACHMENT INFO.
48. FLASHING.
49. GAF TOPCOAT FLUID APPLIED WATERPROOFING.
50. DOWNSPOUT.
51. ELEVATOR PIT ACCESS LADDER BY OTHERS.
52. MECHANICAL SCREEN. SEE DETAILS 10/A302 AND 11/A302.
53. ROOF ACCESS HATCH SEE 3/A301
54. ACCESS LADDER SEE 24/A805

JMWA
ARCHITECTS
STEVEN E. MYOTT AIA
JAMES R. WILLIAMS AIA
RODOLFO ACEVEDO AIA
949 CLINT MOORE ROAD
BOCA RATON, FLORIDA 33487
TEL 561 997 9997
FAX 561 997 1610
WWW.JMWA.NET

PALMETTO BAY VILLAGE HALL

Palmetto Bay, Florida

Master Builders of South Florida, Inc.
1400 E. Oakland Park Blvd. Suite 210
Oakland Park, FL 33334

FLORIDA LICENSURE

AAC002193 IB0001142

PROJECT NO.	8714.00
DESIGNED BY:	RA
DRAWN BY:	DW / EK / JS
CHECKED BY:	JW

SUBMITTALS:
BUILDING PERMIT 03.05.2010

REVISIONS:

WALL SECTIONS

A613

© 2009 JMWA ARCHITECTS, INCORPORATED ALL RIGHTS RESERVED. NO PART OF THESE IDEAS, PLANS OR DESIGNS MAY BE REPRODUCED, COPIED OR UTILIZED GRAPHICALLY IN ANY FORM WHATSOEVER WITHOUT THE EXPRESSED WRITTEN CONSENT OF JMWA ARCHITECTS INCORPORATED AND ITS BOARD OF DIRECTORS.

S:\Projects\8700\8714\8714_Drawings\8714_Current\8714_A613_Wall Sections.dwg
3/3/2010 11:51:19 AM joses

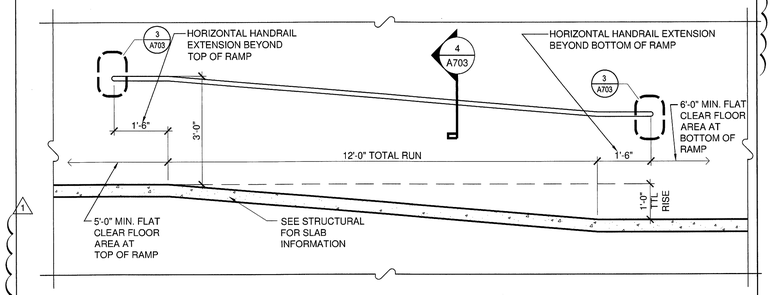

11 SECTION AT RAMP
SCALE: 1/2" = 1'-0"

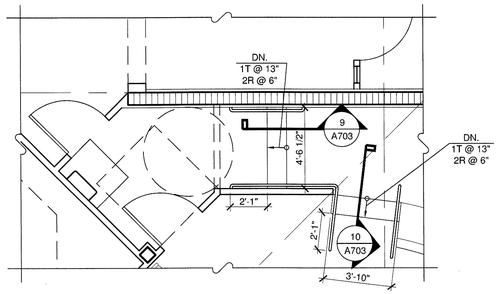

10 ENLARGED PLATFORM STAIR PLAN
SCALE: 1/4" = 1'-0"

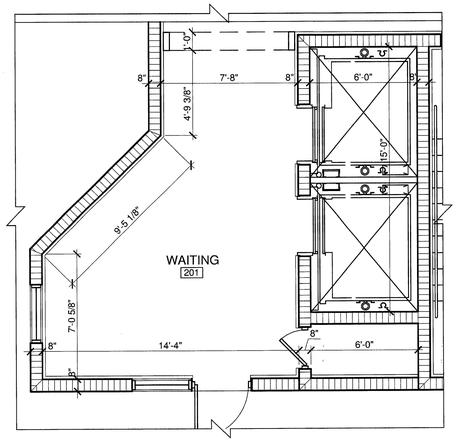

6 ENLARGED 2ND FLOOR PLAN @ ELEVATORS
SCALE: 1/4" = 1'-0"

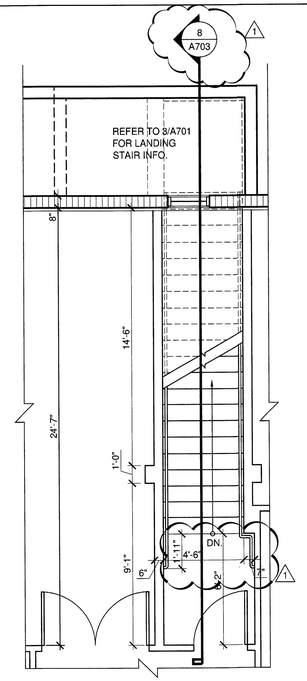

4 ENLARGED 2ND FLOOR PLAN @ NORTH STAIRS
SCALE: 1/4" = 1'-0"

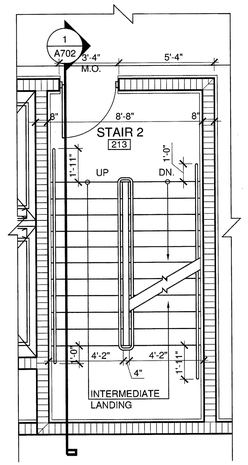

2 ENLARGED 2ND FLOOR PLAN @ SOUTH STAIRS
SCALE: 1/4" = 1'-0"

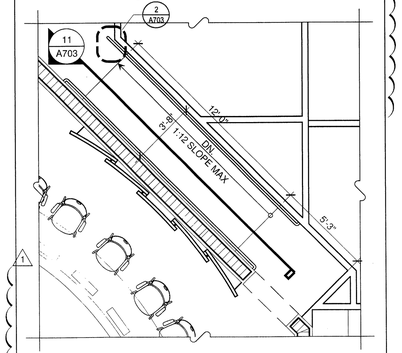

9 ENLG. PLATFORM RAMP PLAN
SCALE: 1/4" = 1'-0"

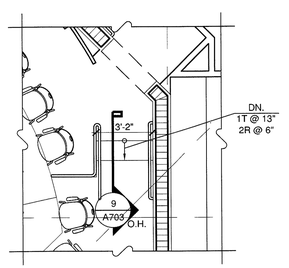

8 ENLG. PLATFORM STAIR PLAN
SCALE: 1/4" = 1'-0"

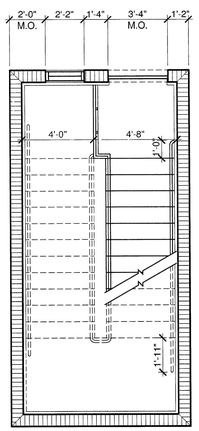

7 ENLARGED ROOF PLAN STAIRS
SCALE: 1/4" = 1'-0"

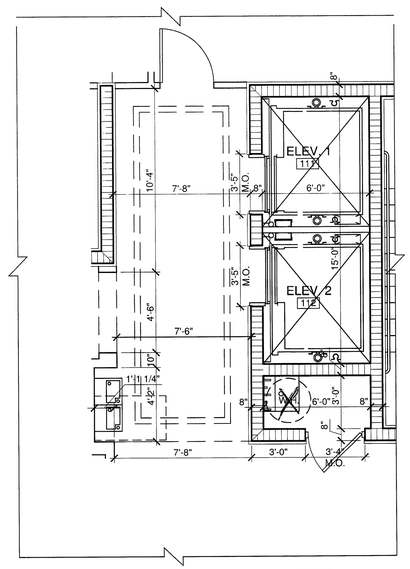

NOTE: CONFIRM MASONRY OPENING AND SHAFT SIZE W/ELEVATOR MANUFACTURER PRIOR TO CONSTRUCTION.

5 ENLARGED 1ST FLOOR PLAN @ ELEVATORS
SCALE: 1/4" = 1'-0"

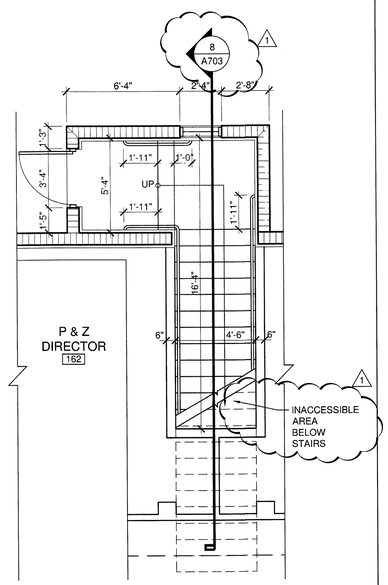

3 ENLARGED 1ST FLOOR PLAN @ NORTH STAIRS
SCALE: 1/4" = 1'-0"

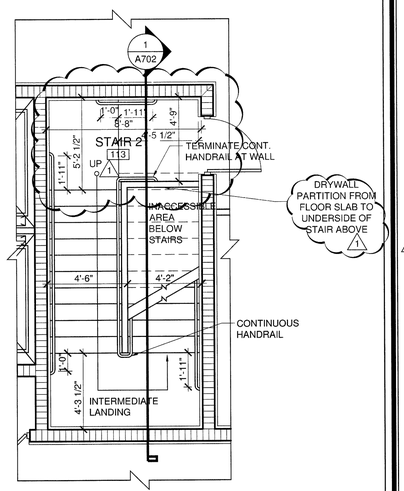

RECORD SET

The information presented on this drawing is diagrammatic and is presented for general information purposes and should not be relied on for accuracy of dimensions, details and locations. Actual and exact conditions if required should be determined in the field.

1 ENLARGED 1ST FLOOR PLAN @ SOUTH STAIRS
SCALE: 1/4" = 1'-0"

JMWA
ARCHITECTS
STEVEN E. MYOTT AIA
JAMES R. WILLIAMS AIA
RODOLFO ACEVEDO AIA
949 CLINT MOORE ROAD
BOCA RATON, FLORIDA 33487
TEL 561 997 9997
FAX 561 997 1610
WWW.JMWA.NET

PALMETTO BAY VILLAGE HALL

9705 E. Hibiscus St., Palmetto Bay, Florida

Master Builders of South Florida, Inc.
1400 E. Oakland Park Blvd. Suite 210
Oakland Park, FL 33334

FLORIDA LICENSURE

AAC002193 IB0001142

PROJECT NO.	8714.00
DESIGNED BY:	RA
DRAWN BY:	DW / EK / JS
CHECKED BY:	JW

SUBMITTALS:
BUILDING PERMIT 03.05.2010

REVISIONS:
1 PERMIT COMMENTS 04.02.10

ENLARGED STAIR AND ELEVATOR PLANS

A701

© 2009 JMWA ARCHITECTS, INCORPORATED ALL RIGHTS RESERVED. NO PART OF THESE IDEAS, PLANS OR DESIGNS MAY BE REPRODUCED, COPIED OR UTILIZED GRAPHICALLY IN ANY FORM WHATSOEVER WITHOUT THE EXPRESSED WRITTEN CONSENT OF JMWA ARCHITECTS INCORPORATED AND ITS BOARD OF DIRECTORS.

4/9/2010 10:06:36 AM ekutterer S:\Projects\8700\8714\8714_Drawings\8714_Current\8714_A701_Enlarged Stair and Elevator Plans.dwg

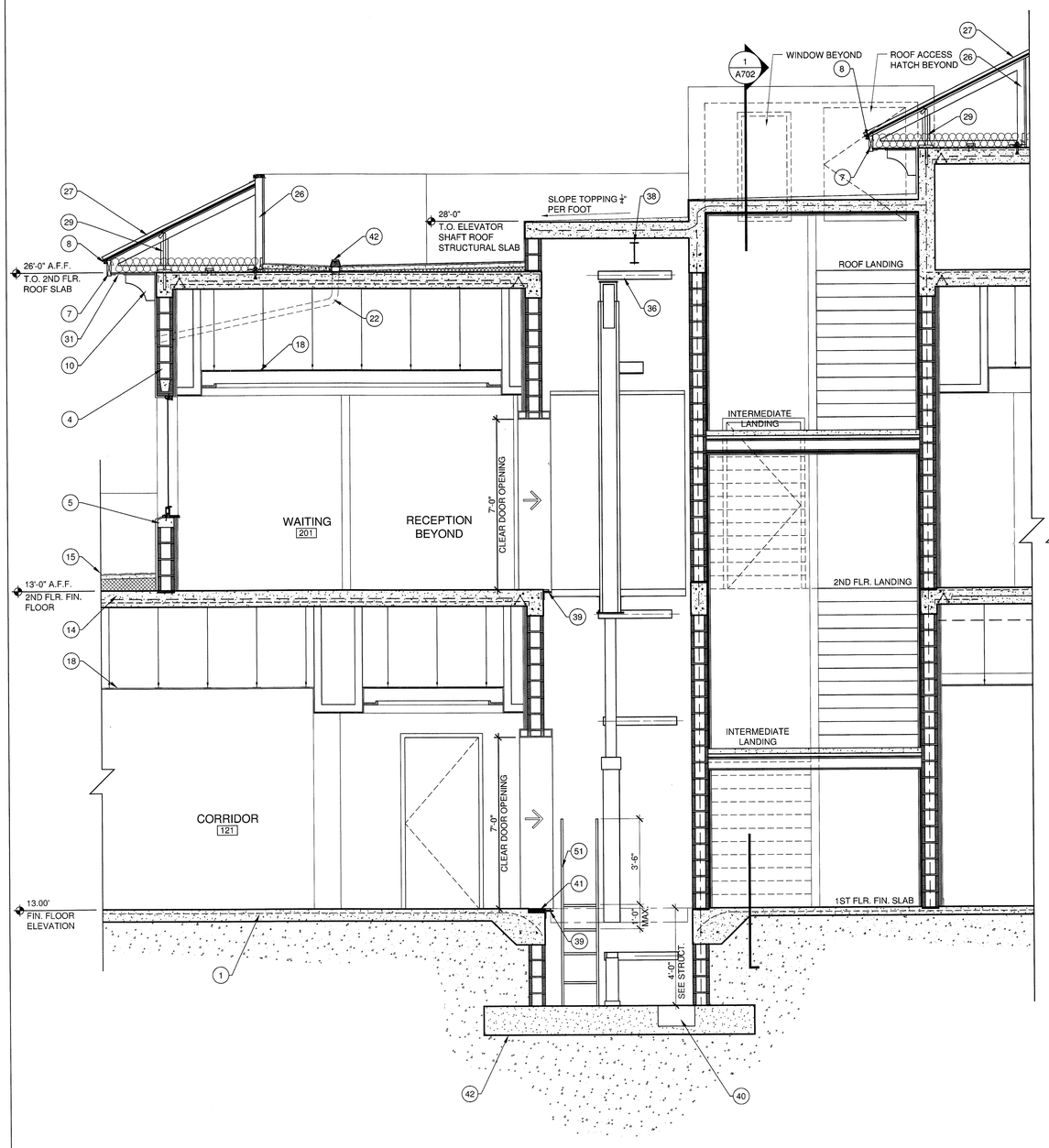

2 WALL SECTION AT ELEVATORS
SCALE: 3/8" = 1'-0"

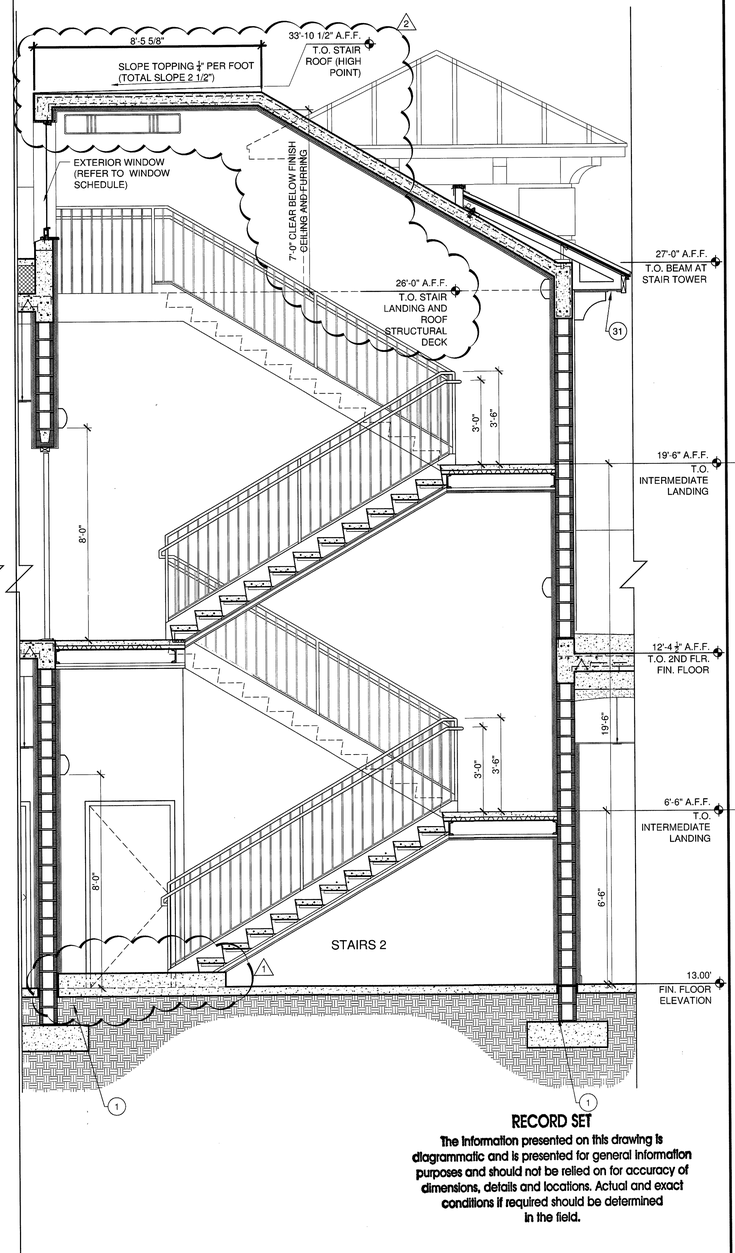

1 WALL SECTION AT STAIRS
SCALE: 3/8" = 1'-0"

RECORD SET

The information presented on this drawing is diagrammatic and is presented for general information purposes and should not be relied on for accuracy of dimensions, details and locations. Actual and exact conditions if required should be determined in the field.

SECTION KEY NOTES (X)

1. CONCRETE FOOTING. SEE STRUCTURAL DRAWINGS FOR MORE INFORMATION.
2. COMPACTED SOIL. TERMITE TREATED.
3. CONCRETE SLAB OVER VAPOR BARRIER. SEE STRUCTURAL DRAWINGS FOR MORE INFORMATION.
4. 8" CMU WALL W/ 3/4" STUCCO FINISH.
5. PRECAST SILL. SEE STRUCTURAL DRAWINGS FOR MORE INFORMATION.
6. PRECAST LINTEL. SEE STRUCTURAL DRAWINGS FOR MORE INFORMATION.
7. 2x8 PAINTED CEDAR FASCIA BOARD.
8. 26GA - 2x3 GALVANIZED METAL DRIP ON 1x3 P.T. WOOD SPACERS
9. DECORATIVE FOAM BANDING BANDING. SEE ELEVATIONS FOR MORE INFORMATION.
10. DECORATIVE FOAM BRACKET. SEE ELEVATIONS FOR MORE INFORMATION.
11. SPIRE.
12. METAL FRAMING. SEE STRUCTURAL DRAWINGS FOR MORE INFORMATION.
13. FILIGREE BEAM. SEE STRUC. DRAWINGS FOR MORE INFORMATION.
14. FILIGREE CONCRETE SLAB. SEE STRUCTURAL DRAWINGS FOR MORE INFORMATION.
15. SINGLE PLY ROOF SYSTEM W/LIGHTWEIGHT INSULATING CONCRETE (AVERAGE OF R-30). FOR FULL ROOF SPECIFICATION, SEE ROOF PLAN.
16. FI-FOIL VR PLUS R-5 REFLECTIVE INSULATION INSTALLED OVER 7/8" 25 GA. METAL "V" CHANNEL. INSULATION SHALL CONTINUE OVER ENTIRE WALL SURFACE FROM FLOOR TO ROOF DECK.
17. 7/8" 25 GA. METAL "V" CHANNEL AT 24" O.C. INSTALLED OVER 1" RIGID BOARD INSULATION ANCHORED THROUGH TO MASONRY WALL. FURRING CHANNEL AND RIGID BOARD INSULATION SHALL CONTINUE FROM FLOOR TO ROOF DECK.
18. SCHEDULED CEILING. SEE REFLECTED CEILING PLAN FOR MORE INFORMATION.
19. 1/2" GYPSUM BOARD (AT MASONRY WALL ASSEMBLIES). GYPSUM BOARD SHALL CONTINUE FOR ENTIRE WALL SURFACE FROM FLOOR TO ROOF DECK.
20. ~~R30 BATT~~ INSULATION (AT MANSARD ROOF)
21. ALUMINUM WINDOW SYSTEM. IMPACT RESISTANT GLAZING. INSTALED PER NOA INSTALLATION INSTRUCTIONS. SEE WINDOW SCHEDULE.
22. DOOR. SEE DOOR SCHEDULE.
23. GYPSUM WINDOW SILL. SEE DETAIL 7/A803.
24. PIPING. REFER TO PLUMBING DRAWINGS FOR MORE INFORMATION.
25. ~~X~~ BERRIDGE STANDING SEAM METAL ROOF OVER 5/8" DENSGLASS SHEATHING. SEE STRUCTURAL DRAWINGS FOR SHEATHING ATTACHMENT INFORMATION.
26. PRE-FABRICATED ROOF TRUSS, TYPICAL.
27. STANDING SEAM METAL ROOF. FOR FULL ROOF SPECIFICATION, SEE ROOF PLAN.
28. SEE STRUCTURAL DRAWINGS FOR ATTACHMENT INFORMATION.
29. HURRICANE STRAPPING. SEE STRUCTURAL DRAWINGS FOR MORE INFORMATION.
30. ⅛" SLAB RECESS FOR PEDITRED MAT.
31. PERFORATED CONTINUOUS PVC SOFFIT VENT.
32. WINDOW (BEYOND). SEE FLOOR PLAN FOR MORE INFORMATION.
33. MILLWORK. SEE A9 SERIES FOR MORE INFORMATION.
34. ~~X~~ DECORATIVE COLUMN WRAP. SEE ELEVATIONS FOR MORE INFORMATION.
35. ~~X~~ SCORED, STAINED CONCRETE. SEE ARCHITECTURAL SITE PLAN FOR MORE INFORMATION.
36. TOP GUIDE RAIL BRACKET TO BE INSTALLED AS REQ. IN OVERHEAD. GENERAL CONTRACTOR TO SUPPLY SUPPORT.
37. ELEVATOR SHAFT - 2HR RATED (REFER TO STRUCTURAL).
38. STEEL SAFETY BEAM REQUIRED OSHA 1926.502. PROVISIONS FOR A MIN. LIVE LOAD OF 5000 LBS. MII
39. 4"x4"x3/8" STEEL ANGLE SILL SUPPORT.
40. 18"X18" (VERIFY SIZE W/TH ELEVATOR MANUFACTURER) SUMP PIT FOR FUTURE SUMP PUMP IF REQUIRED. HYDRAULIC ACTUATOR SHOWN FOR REFERENCE ONLY.
41. SILL (PER ELEVATOR MANUFACTURER).
42. ELEVATOR SHAFT FOOTING.
43. ROOF DRAIN.
44. SLOPED STRUCTURAL CONCRETE OVER CONCRETE ROOF DECK.
45. SPRAY APPLIED INSULATION.
46. 14" WIDE CONCRETE CURB. SEE STRUCTURAL DRAWINGS FOR ADDITIONAL INFORMATION.
47. ALUMINUM GUARDRAIL, 42" ABV. ROOF TERRACE FLOOR. KYNAR FINISH AT GUARDRAIL TO MATCH SHERWIN WILLIAMS SW#6379 JERSEY CREAM. SEE STRUCT. DWGS. FOR ATTACHMENT INFO.
48. FLASHING.
49. GAF TOPCOAT FLUID APPLIED WATERPROOFING.
50. DOWNSPOUT.
51. ELEVATOR PIT ACCESS LADDER BY OTHERS.
52. ~~X~~ MECHANICAL SCREEN. SEE DETAILS 10/A302 AND 11/A302.
53. ROOF ACCESS HATCH SEE 3/A301
54. ACCESS LADDER SEE 24/A805

JMWA ARCHITECTS

STEVEN E. MYOTT AIA
JAMES R. WILLIAMS AIA
RODOLFO ACEVEDO AIA

949 CLINT MOORE ROAD
BOCA RATON, FLORIDA 33487
TEL 561 997 9997
FAX 561 997 1610

WWW.JMWA.NET

PALMETTO BAY VILLAGE HALL

9705 E. Hibiscus St., Palmetto Bay, Florida

Master Builders of South Florida, Inc.
1400 E. Oakland Park Blvd. Suite 210
Oakland Park, FL 33334

FLORIDA LICENSURE

AAC002193 IB0001142

PROJECT NO.	8714.00
DESIGNED BY:	RA
DRAWN BY:	DW / EK / JS
CHECKED BY:	JW

SUBMITTALS:
BUILDING PERMIT 03.05.2010

REVISIONS:
1 PERMIT COMMENTS 04.02.10
2 FIELD COORD. 04.29.10

STAIR AND ELEVATOR SECTIONS

A702

© 2009 JMWA ARCHITECTS, INCORPORATED ALL RIGHTS RESERVED. NO PART OF THESE IDEAS, PLANS OR DESIGNS MAY BE REPRODUCED, COPIED OR UTILIZED GRAPHICALLY IN ANY FORM WHATSOEVER WITHOUT THE EXPRESSED WRITTEN CONSENT OF JMWA ARCHITECTS INCORPORATED AND ITS BOARD OF DIRECTORS.

S:\Projects\8700\8714\8714_Drawings\8714_Current\8714_A702_Stair and Elevator Sections.dwg 8/12/2010 2:56:14 PM ekutterer

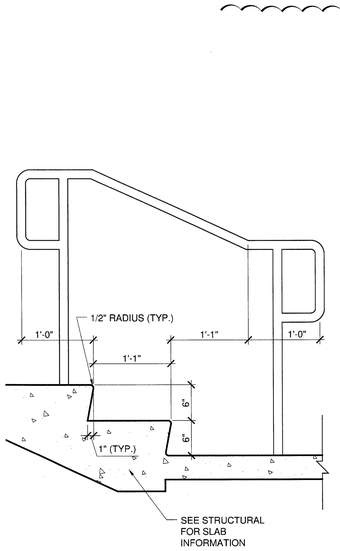

10 STAIR DETAIL AT PLATFORM
SCALE: 1" = 1'-0"

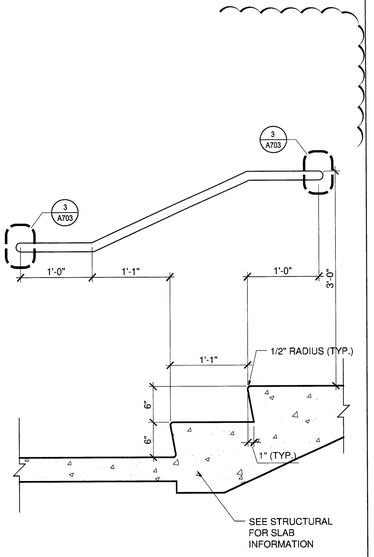

9 STAIR DETAIL AT PLATFORM
SCALE: 1" = 1'-0"

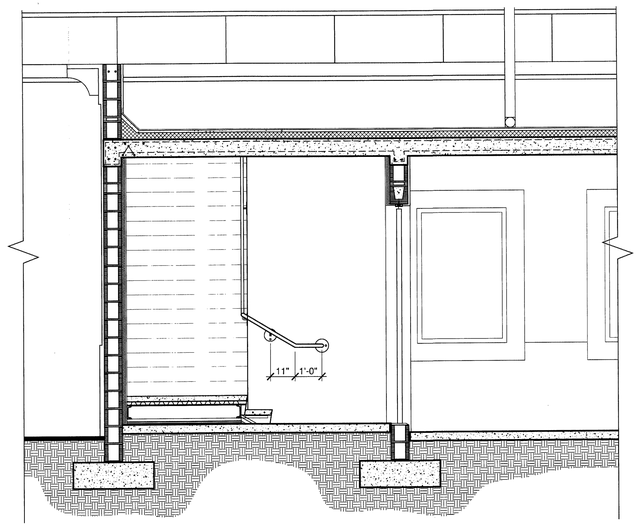

7 STAIR SECTION
SCALE: 3/8" = 1'-0"

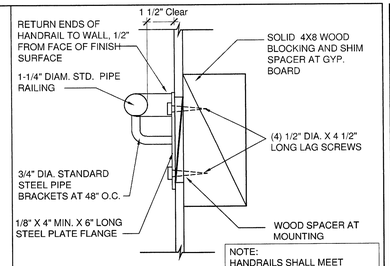

4 HANDRAIL DETAIL
SCALE: N.T.S.

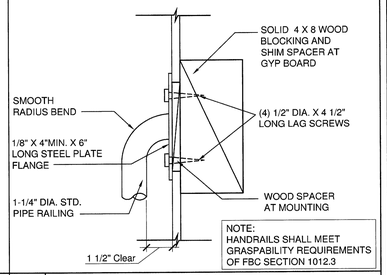

3 HANDRAIL DETAIL
SCALE: N.T.S.

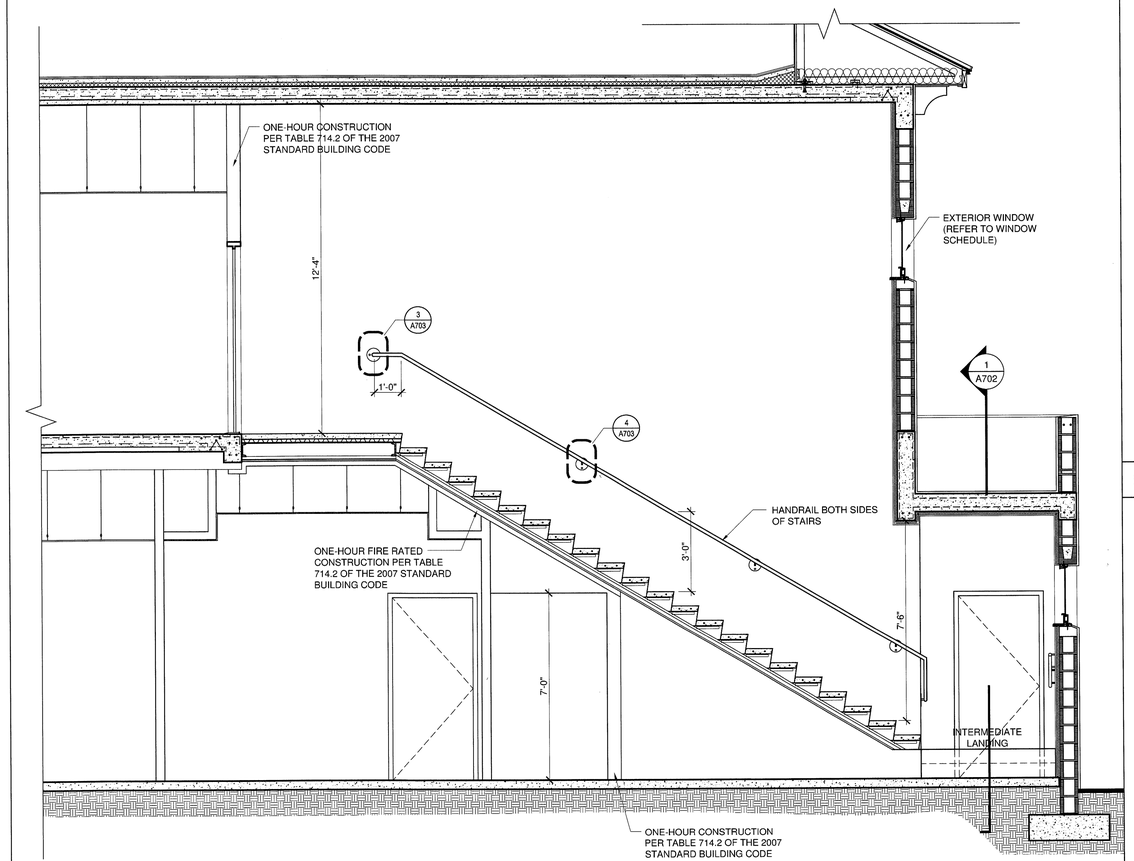

8 STAIR SECTION
SCALE: N.T.S.

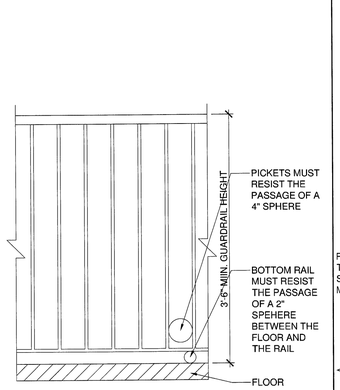

9 GUARDRAIL DETAIL
SCALE: N.T.S.

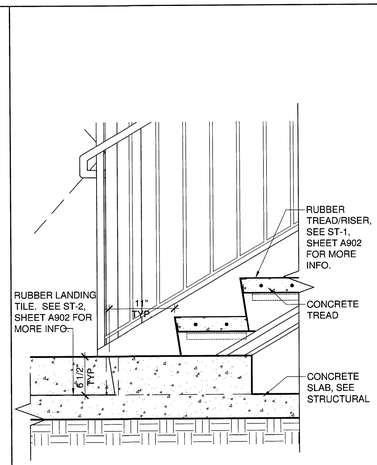

6 ENLARGED STAIR DETAIL
SCALE: N.T.S.

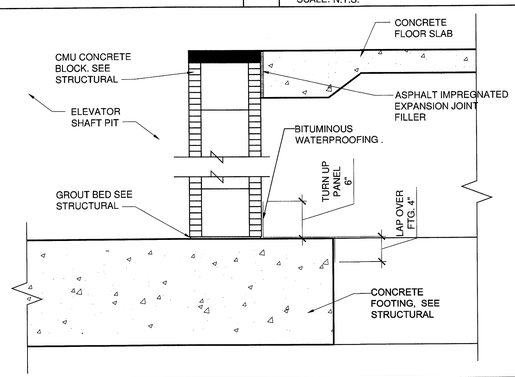

5 ELEVATOR SLAB DETAIL
SCALE: N.T.S.

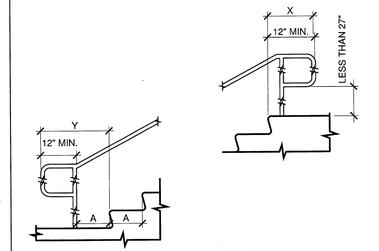

NOTE:
A = TREAD DEPTH
X = 12" MIN. HANDRAIL EXTENSION REQUIRED AT EACH TOP RISER.
Y = MIN. HANDRAIL EXTENSION OF 12" PLUS THE WIDTH OF ONE TREAD THAT IS REQUIRED AT THE BOTTOM RISER.

2 HANDRAIL EXTENSION DETAIL
SCALE: N.T.S.

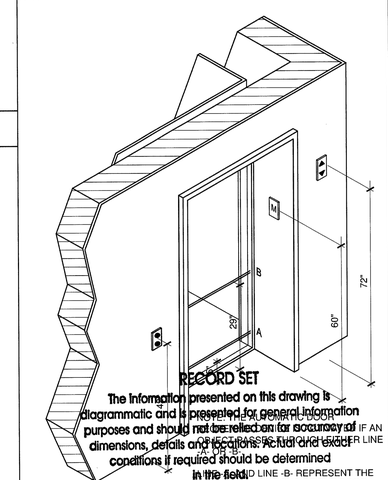

RECORD SET
The information presented on this drawing is diagrammatic and is presented for general information purposes and should not be relied on for accuracy of dimensions, details or conditions. Actual site conditions if required should be determined in the field.

NOTE: THE AUTOMATIC DOOR OPERATOR SHALL BE SET SO THAT IF AN OBSTRUCTION ACROSS THE DOOR OPENING EXTENDS BELOW THE HORIZONTAL LINE -B- REPRESENT THE VERTICAL LOCATIONS OF THE DOOR REOPENING DEVICE NOT REQUIRING CONTACT.

1 ELEVATOR ENTRANCE DETAIL
SCALE: N.T.S.

JMWA
ARCHITECTS
STEVEN E. MYOTT AIA
JAMES R. WILLIAMS AIA
RODOLFO ACEVEDO AIA
949 CLINT MOORE ROAD
BOCA RATON, FLORIDA 33487
TEL 561 997 9997
FAX 561 997 1610
WWW.JMWA.NET

PALMETTO BAY VILLAGE HALL
9705 E. Hibiscus St., Palmetto Bay, Florida

Master Builders of South Florida, Inc.
1400 E. Oakland Park Blvd. Suite 210
Oakland Park, FL 33334

FLORIDA LICENSURE

AAC002193 IB0001142

PROJECT NO.	8714.00
DESIGNED BY:	RA
DRAWN BY:	DW / EK / JS
CHECKED BY:	JW

SUBMITTALS:
BUILDING PERMIT 03.05.2010

REVISIONS:
1 PERMIT COMMENTS 04.02.10

STAIR AND ELEVATOR DETAILS

A703

© 2009 JMWA ARCHITECTS, INCORPORATED ALL RIGHTS RESERVED. NO PART OF THESE IDEAS, PLANS OR DESIGNS MAY BE REPRODUCED, COPIED OR UTILIZED GRAPHICALLY IN ANY FORM WHATSOEVER WITHOUT THE EXPRESSED WRITTEN CONSENT OF JMWA ARCHITECTS INCORPORATED AND ITS BOARD OF DIRECTORS.

4/9/2010 8:31:25 AM ekutterer S:\Projects\8700\8714\8714_Drawings\8714_Current\8714_A703_Stair and Elevator Details.dwg

DOOR SCHEDULE

1st FLOOR
* - FROSTED GLASS
** - EXTERIOR PRODUCT APPROVAL REQUIRED

DOOR NUMBER	DOOR SIZE	DOOR TYPE	FRAME TYPE	DOOR MATERIAL: GLASS / ALUM. STOREFRONT	STEEL	S.C. WOOD	S.C. WOOD W/ GLASS INSERT	ROLLING STEEL (OH)	FRAME MATERIAL: ALUM. STOREFRONT	HOLLOW METAL	WOOD	STEEL	POCKET HARDWARE	HARDWARE: CLOSER	EXIT DEVICE	THRESHOLD	CARD READER / ELEC. STRIKE	LABEL	SIDELITE SEE A802	REMARKS
101	(2) 3'-0" x 8'-0" x 1-3/4"	D1	F1**	●					●					●	●	●				SEE NOTE 21. 1
102	3'-0" x 8'-0" x 1-3/4"	D6	F2**		●					●				●		●				SEE NOTE 21. 1
1 103	3'-0" x 8'-0" x 1-3/4"	D2	F2**	●					●					●	●	●				SEE NOTE 20, 21.
104	8'-0" x 8'-0" x 1-3/4"	D11	-**					●				●								OVERHEAD DOOR W/INTEGRATED SEAL
105	3'-0" x 8'-0" x 1-3/4"	D12	F2**		●					●				●		●				PROVIDE 5"x20" VISION PANEL. SEE NOTE 20.
106	3'-0" x 8'-0" x 1-3/4"	D12	F2**		●					●				●	●	●		1HR		1 PROVIDE 5"x20" WIRE GLASS VIS. PNL. SEE NOTE 19, 21.
2 107	3'-0" x 8'-0" x 1-3/4"	D2	F2**	●					●					●	●	●				SEE NOTE 19, 21. 1
108	3'-0" x 7'-0" x 1-3/4"	D3	F4				●		●											
109	3'-0" x 7'-0" x 1-3/4"	D7	F4			●			●											
110	3'-0" x 7'-0" x 1-3/4"	D7	F4			●				●										
111	3'-0" x 7'-0" x 1-3/4"	D7	F4			●				●				●	●			3/4HR		SEE NOTE 21. 1
112	3'-0" x 7'-0" x 1-3/4"	D7	F4			●				●				●						
113	3'-0" x 7'-0" x 1-3/4"	D7	F4			●				●				●						
114	3'-0" x 7'-0" x 1-3/4"	D3	F4				●*			●				●						
115	3'-0" x 7'-0" x 1-3/4"	D7	F4			●				●				●						
116	3'-0" x 7'-0" x 1-3/4"	D7	F4			●				●										
117	3'-0" x 7'-0" x 1-3/4"	D7	F4			●				●										
118	3' 0" x 7'-0" x 1-3/4"	D7	F4			●				●				●						
1 119	3' 0" x 7'-0" x 1-3/4"	D7	F4			●				●				●				3/4HR		
1 120	3' 0" x 7'-0" x 1-3/4"	D3	F4				●*			●				●	●					SEE NOTE 20, 21.
121	3'-0" x 7'-0" x 1-3/4"	D3	F4				●			●				●						
1 122	3'-6" x 7'-0" x 1-3/4"	D7	F4		●					●				●				1HR		
1 2 123	3'-0" x 7'-0" x 1-3/4"	D8	F4		●					●				●	●			1HR		PROVIDE 5"x20" WIRE GLASS VIS. PNL. SEE NOTE 21.
124	3'-0" x 7'-0" x 1-3/4"	D7	F4			●			●											
125	3'-0" x 7'-0" x 1-3/4"	D3	F4	●					●											
126	3'-0" x 7'-0" x 1-3/4"	D8	F4				●			●				●						
127	3'-0" x 7'-0" x 1-3/4"	D8	F4				●			●				●						
128	3'-0" x 7'-0" x 1-3/4"	D7	F4			●				●										
129	3'-0" x 7'-0" x 1-3/4"	D7	F4			●				●										
130	3'-0" x 7'-0" x 1-3/4"	D7	F4			●				●										
131	3'-0" x 7'-0" x 1-3/4"	D7	F4			●				●										
132	3'-0" x 7'-0" x 1-3/4"	D7	F4			●				●										
133	2'-6" x 7'-0" x 1-3/4"	D7	F4			●				●										
134	3'-0" x 7'-0" x 1-3/4"	D7	F4			●				●										
135	3'-0" x 7'-0" x 1-3/4"	D7	F4			●				●										
136	3'-0" x 7'-0" x 1-3/4"	D7	F4			●				●										
137	3'-0" x 7'-0" x 1-3/4"	D7	F4			●				●										
138	3'-0" x 7'-0" x 1-3/4"	D7	F4			●				●										
139	3'-0" x 7'-0" x 1-3/4"	D7	F4			●				●										
140	3'-0" x 7'-0" x 1-3/4"	D7	F4			●				●										
2 141	3'-0" x 7'-0" x 1-3/4"	D3	F4				●*			●										
3 142	3'-0" x 7'-0" x 1-3/4"	D3	F4				●*			●										
3 143	NOT USED																			
144	3'-0" x 7'-0" x 1-3/4"	D7	F4			●				●										
145	3'-0" x 7'-0" x 1-3/4"	D7	F4			●				●										
146	3'-0" x 8'-0" x 1-3/4"	D6	F2			●				●					●					
147	NOT USED																			
148	3'-0" x 7'-0" x 1-3/4"	D7	F4			●				●										
149	3'-0" x 7'-0" x 1-3/4"	D7	F4			●				●										
150	(2) 3'-0" x 8'-0" x 1-3/4"	D5	F1			●				●					●	●				SEE NOTE 21. 1
151	(2) 3'-0" x 8'-0" x 1-3/4"	D5	F1			●				●					●	●				SEE NOTE 21. 1 1
2 152	BY FURNITURE VENDOR																			
153	3'-0" x 7'-0" x 1-3/4"	D3	F4				●			●										
154	3'-0" x 7'-0" x 1-3/4"	D7	F4			●				●					●	●				SEE NOTE 21. 1
2 155	3'-0" x 7'-0" x 1-3/4"	D3	F4	●					●											
156	3'-0" x 7'-0" x 1-3/4"	D7	F4			●			●											
157	3'-0" x 7'-0" x 1-3/4"	D3	F4				●		●											
158	3'-0" x 7'-0" x 1-3/4"	D7	F4			●				●										
159	3'-0" x 7'-0" x 1-3/4"	D7	F4			●				●										
160	3'-0" x 7'-0" x 1-3/4"	D7	F4			●				●										
161	3'-0" x 7'-0" x 1-3/4"	D7	F4			●				●										
2 162	3'-0" x 7'-0" x 1-3/4"	D3	F4				●		●											
163	3'-0" x 7'-0" x 1-3/4"	D7	F4			●				●					●					
164	3'-0" x 7'-0" x 1-3/4"	D7	F4			●				●					●					
165	3'-0" x 7'-0" x 1-3/4"	D3	F4				●			●										
166	3'-0" x 7'-0" x 1-3/4"	D3	F4				●			●										
2 167	3'-0" x 7'-0" x 1-3/4"	D3	F4				●		●											
1 168	3'-0" x 7'-0" x 1-3/4"	D3	F4				●*			●					●					SEE NOTE 20,21.
2 169	3'-0" x 7'-0" x 1-3/4"	D7	F4			●			●											
170	3'-0" x 7'-0" x 1-3/4"	D3	F4				●*		●											
171	NOT USED																			
172	3'-0" x 7'-0" x 1-3/4"	D7	F4			●				●										
173	3'-0" x 7'-0" x 1-3/4"	D7	F4			●				●										
2 174	3'-0" x 7'-0" x 1-3/4"	D3	F4				●*			●										
175	3'-0" x 7'-0" x 1-3/4"	D3	F4				●		●											
176	3'-0" x 7'-0" x 1-3/4"	D7	F4			●				●										
177	3'-0" x 2'-6" x 1-3/4"	D7	F4			●				●										
178	3'-0" x 7'-0" x 1-3/4"	D8	F4				●			●										
179	3'-0" x 7'-0" x 1-3/4"	D7	F4			●				●										
180	3'-0" x 7'-0" x 1-3/4"	D7	F4			●				●										
181	3'-0" x 7'-0" x 1-3/4"	D7	F4			●				●										
2 182	3'-0" x 7'-0" x 1-3/4"	D3	F4				●*			●										
183	3'-0" x 7'-0" x 1-3/4"	D3	F4				●*			●										
184	3'-0" x 7'-0" x 1-3/4"	D7	F4			●				●										

DOOR SCHEDULE

2nd FLOOR & ROOF LEVEL
* - FROSTED GLASS
** - EXTERIOR PRODUCT APPROVAL REQUIRED

DOOR NUMBER	DOOR SIZE	DOOR TYPE	FRAME TYPE	DOOR MATERIAL: GLASS / ALUM. STOREFRONT	STEEL	S.C. WOOD	S.C. WOOD W/ GLASS INSERT	ROLLING STEEL (OH)	FRAME MATERIAL: ALUM. STOREFRONT	HOLLOW METAL	WOOD	STEEL	POCKET HARDWARE	HARDWARE: CLOSER	EXIT DEVICE	THRESHOLD	CARD READER / ELEC. STRIKE	LABEL	SIDELITE SEE A802	REMARKS
1 201	2'-0" x 7'-0" x 1-3/4"	D7	F4			●				●										
1 202	3'-0" x 7'-0" x 1-3/4"	D3	F4				●*			●				●	●					SEE NOTE 21.
2 203	NOT USED																			
204	3'-0" x 7'-0" x 1-3/4"	D8	F4		●					●				●	●			1HR		PROVIDE 5"x20" WIRE GLASS VIS. PNL. SEE NOTE 21.
2 205	3'-0" x 7'-0" x 1-3/4"	D7	F4			●				●										
206	NOT USED																			
207	3'-0" x 7'-0" x 1-3/4"	D3	F4				●*			●										
2 208	3'-0" x 7'-0" x 1-3/4"	D7	F4			●			●											
209	3'-0" x 7'-0" x 1-3/4"	D3	F4				●*		●											
210	3'-0" x 7'-0" x 1-3/4"	D3	F4			●				●			●							
2 211	3'-0" x 7'-0" x 1-3/4"	D7	F4			●			●											
212	3'-0" x 7'-0" x 1-3/4"	D7	F4			●				●										
213	3'-0" x 7'-0" x 1-3/4"	D3	F4				●			●										
214	3'-0" x 7'-0" x 1-3/4"	D7	F4			●				●					●					
215	3'-0" x 7'-0" x 1-3/4"	D7	F4			●				●					●					
2 216	3'-0" x 7'-0" x 1-3/4"	D3	F4				●		●											
2 217	3'-0" x 7'-0" x 1-3/4"	D7	F4			●				●										
218	NOT USED																			
219	3'-0" x 7'-0" x 1-3/4"	D7	F4			●			●											
220	3'-0" x 7'-0" x 1-3/4"	D7	F4			●			●											
221	3'-0" x 7'-0" x 1-3/4"	D7	F4			●			●											
222	3'-0" x 7'-0" x 1-3/4"	D7	F4			●			●											
223	3'-0" x 7'-0" x 1-3/4"	D7	F4			●				●				●						
224	3'-0" x 7'-0" x 1-3/4"	D3	F4				●			●										
2 225	(2) 3'-0" x 7'-0" x 1-3/4"	D4	F3				●*			●										
226	NOT USED																			
227	3'-0" x 7'-0" x 1-3/4"	D7	F4			●				●										
228	3'-0" x 7'-0" x 1-3/4"	D7	F4			●				●										
229	3'-0" x 7'-0" x 1-3/4"	D7	F4			●				●										
230	3'-0" x 7'-0" x 1-3/4"	D7	F4			●				●										
2 231	3'-0" x 7'-0" x 1-3/4"	D7	F4			●			●											
232	3'-0" x 7'-0" x 1-3/4"	D3	F4				●		●											
5 233	3'-0" x 7'-0" x 1-3/4"	D7	F4			●				●										
234	NOT USED																			
235	3'-0" x 7'-0" x 1-3/4"	D8	F4				●			●										
236	(2) 3'-0" x 7'-0" x 1-3/4"	D9	F3				●			●										
1 237	3'-0" x 7'-0" x 1-3/4"	D8	F4				●			●						●		1HR		PROVIDE 5"x20" WIRE GLASS VIS. PNL. SEE NOTE 21.
2 238	3'-0" x 7'-0" x 1-3/4"	D2	F2	●						●					●		●			
239	3'-0" x 7'-0" x 1-3/4"	D2	F2	●						●					●		●			
5 240	3'-0" x 7'-0" x 1-3/4"	D7	F4			●				●										
241	NOT USED																			

DOOR HARDWARE SCHEDULE

DOOR GENERAL NOTES

1. DOOR HARDWARE SHALL BE OF THE LEVER TYPE, MOUNTED 30 INCHES TO 40 INCHES ABOVE THE FLOOR. THE MAXIMUM EFFORT TO OPERATE SHALL BE 8.5 POUNDS OF FORCE FOR EXTERIOR DOORS AND 5 POUNDS FORCE FOR INTERIOR DOORS. THE LOWER 12 INCHES OF THE DOOR SHALL HAVE A SMOOTH PANEL ON THE PUSH SIDE OF THE DOOR WHICH WILL ALLOW THE DOOR TO BE OPENED BY A WHEELCHAIR FOOTREST WITHOUT CREATING A TRIP HAZARD (TITLE 24, CCR, SECTION 1133B.2.4.3)
2. PROVIDE ASTRAGALS AT ACTIVE EXTERIOR DOOR LEAFS.
3. PROVIDE WEATHER-STRIPPING AT EXTERIOR DOORS (HEAD, JAMB AND SILL).
4. ALARM LOCKS AND PANIC HARDWARE SHALL BE APPROVED BY THE FIRE INSPECTOR OR FIRE MARSHALL.
5. "EXIT" SIGNS TO HAVE A MINIMUM OF 6" HIGH LETTERS.
6. PROVIDE POSITIVE KEY-LOCKING CYLINDERS.
7. PROVIDE CYLINDER GUARDS ON ON ALL MORTISE OR RIM TYPE CYLINDER FACE OF DOOR OR IS OTHERWISE ACCESSIBLE TO GRIPPING TOOLS.
8. ALL PIN TYPE HINGES WHICH ARE ACCESSIBLE FROM THE OUTSIDE WHEN THE DOOR IS CLOSED SHALL HAVE NON-REMOVABLE HINGE PINS. IN ADDITION, THEY SHALL HAVE A MINIMUM OF 1/4" DIAMETER STEEL JAMB STUD WITH 1/4" MINIMUM PROJECTIONS UNLESS HINGES ARE PROVIDED TO PREVENT REMOVAL OF THE DOOR IF THE HINGE PINS ARE REMOVED.
9. PROVIDE LEVER TYPE HARDWARE, PANIC BARS, PUSH-PULL ACTIVATING BARS, OR OTHER HARDWARE DESIGNED TO PROVIDE PASSAGE WITHOUT REQUIRING THE ABILITY TO GRASP THE OPENING HARDWARE.
5. EXIT DOORS SHALL SWING IN THE DIRECTION OF EXIT TRAVEL WHEN SERVING ANY HAZARDOUS AREA OR WHEN SERVING AN OCCUPANT LOAD OF 50 OR MORE.
6. EXIT DOORS SHALL BE OPERABLE FROM THE INSIDE WITHOUT THE USE OF A KEY, SPECIAL KNOWLEDGE, OR EFFORT. ALL EXIT DOORS EXCEPT AT MAIN ENTRY TO BUILDING EXTERIOR SHALL BE PROVIDED WITH PANIC HARDWARE AND CLOSER AND ALARM.
12. HARDWARE SCHEDULE SHALL BE PREPARED AND SUBMITTED FOR REVIEW AND APPROVAL.
13. WIDTH AND HEIGHT OF REQUIRED EXIT DOORWAYS TO COMPLY WITH THE 2007 FLORIDA BUILDING CODE.
14. PROVIDE APPROVED PANIC HARDWARE ON REQUIRED EXIT DOORS TO COMPLY WITH THE 2007 FLORIDA BUILDING CODE.
15. PROVIDE TYPE II SAFETY GLAZING AT ALL DOORS WITH GLAZING
16. ALL SECURITY-LOCKING ARRANGEMENTS ON DOORS USED FOR EGRESS SHALL COMPLY WITH REQUIREMENTS OF NFPA101.
17. DOORS INDICATED AS "EGRESS ONLY" SHALL HAVE NO EXTERIOR HARDWARE AND SHALL BE OPERABLE IN THE DIRECTION OF EGRESS.
18. ALL EXTERIOR DOORS SHALL BE MIAMI-DADE COUNTY PRODUCT APPROVED FOR HURRICANE RESISTANCE (N.O.A.)
19. AT DOORS WITH BOTH EXIT DEVICES AND CARD READERS/ELECTRONIC ACCESS CONTROLS, EXIT DEVICE SHALL DISENGAGE ELECTRONIC ACCESS CONTROL FOR EGRESS. IN AN ALARMED SITUATION OR POWER FAILURE THE ELECTRONIC ACCESS CONTROLLED DOOR SHALL FAIL IN THE UNLOCKED POSITION FOR BUILDING EGRESS. THE EXIT DEVICE SHALL MANUALLY UNLOCK THE DOOR IN THE DIRECTION OF EGRESS REGARDLESS OF WHETHER THE ELECTRONIC ACCESS CONTROL EQUIPMENT IS ENGAGED OR DISENGAGED, POWERED OR NOT POWERED. THIS IS IN COMPLIANCE WITH THE FOLLOWING CODE SECTIONS: FFPC 7.2.1.6.2* AND FBC 1008.1.3.4.
20. FOR DOORS WITH BOTH MANUAL LOCKING DEVICES AND CARD READERS/ELECTRONIC ACCESS CONTROLS, THE DOOR ALWAYS OPERATES WITH A MANUAL UNLOCKING DEVICE FROM THE SIDE OF THE DOOR WITHOUT THE CARD READER. THE ELECTRONIC LOCKING DEVICE SHALL FAIL IN THE UNLOCKED POSITION IN THE EVENT OF A POWER OUTAGE OR AN ALARMED SITUATION FROM THE SIDE OF THE DOOR WITH THE CARD READER. THIS IS IN COMPLIANCE WITH THE FOLLOWING CODE SECTIONS: FFPC 7.2.1.6.2* AND FBC 1008.1.3.4.

1 21. EXIT DEVICES SHALL BE VON DUPRIN SERIES 88/89 OR APPROVED EQUAL.

DOOR AND FRAME TYPES

DOOR TYPE

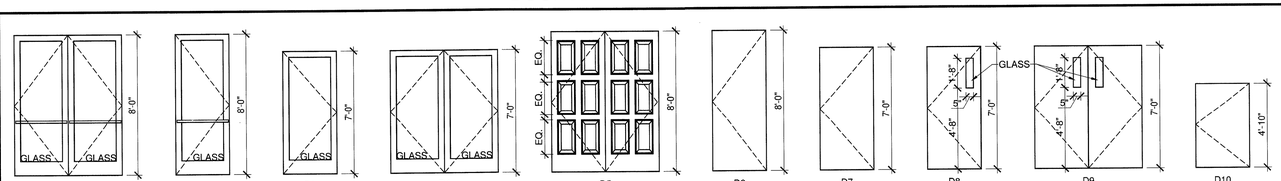

FRAME TYPE

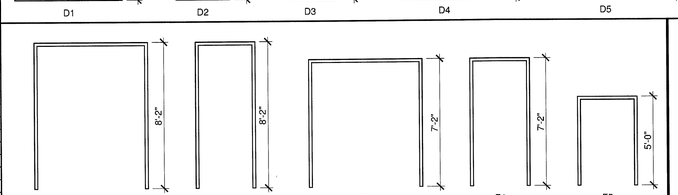

NOTES:
FOR DOOR MATERIAL, REFER TO DOOR SCHEDULE.
FOR DOOR WIDTH, REFER TO DOOR SCHEDULE
FOR FRAME MATERIAL, REFER TO DOOR SCHEDULE
ALL DOOR FRAMES ARE 2", TYPICAL.
GLASS AT RATED DOORS TO BE WIRE GLASS.
DOOR FRAMES TO BE PAINTED TO MATCH ADJACENT SURFACE.

RECORD SET
The information presented on this drawing is diagrammatic and is presented for general information purposes and should not be relied on for accuracy of dimensions, details and locations. Actual and exact conditions if required should be determined in the field.

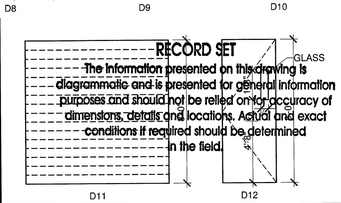

JMWA ARCHITECTS
STEVEN E. MYOTT AIA
JAMES R. WILLIAMS AIA
RODOLFO ACEVEDO AIA
949 CLINT MOORE ROAD
BOCA RATON, FLORIDA 33487
TEL 561 997 9997
FAX 561 997 1610
WWW.JMWA.NET

PALMETTO BAY VILLAGE HALL
9705 E. Hibiscus St., Palmetto Bay, Florida

Master Builders of South Florida, Inc.
1400 E. Oakland Park Blvd. Suite 210
Oakland Park, FL 33334

FLORIDA LICENSURE

AAC002193 IB0001142

PROJECT NO. 8714.00
DESIGNED BY: RA
DRAWN BY: DW / EK / JS
CHECKED BY: JW

SUBMITTALS:
BUILDING PERMIT 03.05.2010

REVISIONS:
1 PERMIT COMMENTS 04.02.10
2 OWNER REVISIONS 06.22.10
3 OWNER REVISIONS 07.07.10
5 OWNER REVISIONS 07.27.10

DOOR SCHEDULE AND NOTES

A801

© 2009 JMWA ARCHITECTS, INCORPORATED ALL RIGHTS RESERVED. NO PART OF THESE IDEAS, PLANS OR DESIGNS MAY BE REPRODUCED, COPIED OR UTILIZED GRAPHICALLY IN ANY FORM WHATSOEVER WITHOUT THE EXPRESSED WRITTEN CONSENT OF JMWA ARCHITECTS INCORPORATED AND ITS BOARD OF DIRECTORS.

S:\Projects\8700\8714\8714_Drawings\8714_Current\8714_A801_Door Schedule and Notes.dwg ekutterer 8/12/2010 2:12:03 PM

WINDOW SCHEDULE

WINDOW SYMBOL	WINDOW SIZE WIDTH X HEIGHT	TYPE: FIXED	TYPE: SLIDING	GLAZING: TEMPERED	GLAZING: IMPACT RESISTANT	GLAZING: 1-WAY GLASS	GLAZING: FROSTED GLASS	FRAME: ALUMINUM	FRAME: WOOD	MISC: TOP AT 7'-2" A.F.F.	MISC: TOP AT 8'-0" A.F.F.	MISC: TOP AT 8'-2" A.F.F.	MISC: TOP AT 8'-8" A.F.F.	MISC: TOP AT 9'-8" A.F.F.	MISC: TOP AT 16'-10" A.F.F.	MISC: TOP AT 17'-8" A.F.F.	MISC: TOP AT 30'-0" A.F.F.	MISC: TOP AT 6'-6" ABV. 2ND. FLR. ROOF STRUCT. SLAB	REMARKS Ⓐ
A	3'-4" x 5'-0"	●			●			●			●								EXTERIOR WINDOW
B	6'-8" x 5'-0"	●			●			●			●								EXTERIOR WINDOW
C	9'-8" x 5'-0"	●			●			●			●								EXTERIOR WINDOW
D	2'-4" x 2'-4"	●			●			●			●								EXTERIOR WINDOW ROUND AT UPPER LOBBY
E	2'-4" x 4'-2"	●			●			●									●		EXTERIOR WINDOW AT TOWER
F	3'-4" x 3'-0"	●			●			●									●		EXTERIOR WINDOW AT MID-LEVEL CHAMBERS
2 G	NOT USED																		
H	5'-0" x 5'-0"	●		●		●			●			●							INT. WIN. AT VILL. CHMBRS. ONE-WAY GLASS AT MEDIA & STAFF ONLY.
I	2'-6" x 4'-2"	●			●	●			●	●									INTERIOR WINDOW AT INTERROGATION, ONE WAY GLASS
J	7'-0" x 4'-2"	●		●					●	●									INTERIOR WINDOW AT P.D. SEC.
K	6'-0" x 4'-2"	●		●					●	●									INTERIOR TRANSACTION WINDOW, SEE TRAY DTL. 11/A803
L	3'-4" x 1'-2"	●			●			●					●						EXTERIOR CLERESTORY 2ND LEVEL WOMEN'S
2 M	NOT USED																		
2 N	NOT USED																		
2 O	5'-0" x 4'-2"		●	●			●		●	●									INTERIOR WINDOW AT BUILDING DEPT. RECEPTION
2 P	NOT USED																		
2 Q	NOT USED																		
2 R	NOT USED																		
2 S	NOT USED																		
2 T	NOT USED																		
2 U	NOT USED																		
2 V	NOT USED																		
2 W	NOT USED																		
X	3'-4"x 7'-0"	●		●			●		●		●								INTERIOR WINDOW AT VILLAGE HALLW/ FROSTED WINDOW FILM APPLIQUE
Y	2'-6" x 3'-0"	●		●					●										INTERIOR WINDOW AT CASHIER, SEE TRAY DETAIL 11/A803
Z	2'-2" x 4'-6"	●			●			●										●	EXTERIOR WINDOW AT TOP OF STAIR 2
AA	3'-4" x 2'-2"	●			●			●						●					EXTERIOR CLERESTORY AT BREAK RM.
2 BB	NOT USED																		
2 CC	NOT USED																		
2 DD	NOT USED																		
2 EE	NOT USED																		
2 FF	NOT USED																		
2 GG	NOT USED																		
HH	2'-2" x 2'-2"	●			●										●				EXTERIOR WINDOW AT STAIR 1
###	REFER TO PLAN	NUMERIC WINDOW SYMBOLS INDICATE INTERIOR STOREFRONT. REFER TO WINDOW ELEVATIONS FOR HEIGHT																	

1. ALL ALUMINUM EXTERIOR STOREFRONT FRAMES TO BE DESIGNED FOR STRUCTURAL ADEQUACY WITH WIND LOADS AS REQUIRED BY FLORIDA PRODUCT APPROVAL CODE REQUIREMENTS.
2. GLAZING SUBCONTRACTORS RESPONSIBLE FOR PROVIDING SHOP DRAWINGS AND NECESSARY CALCULATIONS TO CONFIRM DESIGN ADEQUACY.
3. ALL DIMENSIONS INDICATED ON WINDOW TYPES REQUIRE FIELD MEASUREMENT TO CONFIRM EXACT FINISH OPENING WHICH MAY VARY UPON PLATE THICKNESS AND/OR GYPSUM BOARD THICKNESS.
4. EXTERIOR SECTIONS & DETAILS SUPERSEDE STANDARD DETAILS.
5. ALL WINDOW DIMENSIONS SIGNIFY ROUGH OPENINGS. VERIFY ROUGH OPENING WITH STRUCTURAL DRAWINGS.

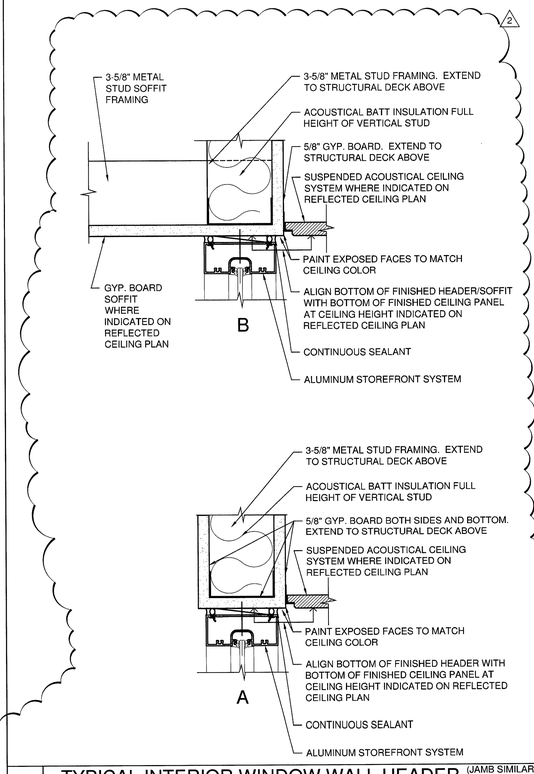

1 TYPICAL INTERIOR WINDOW WALL HEADER (JAMB SIMILAR)
SCALE: 3" = 1'-0"

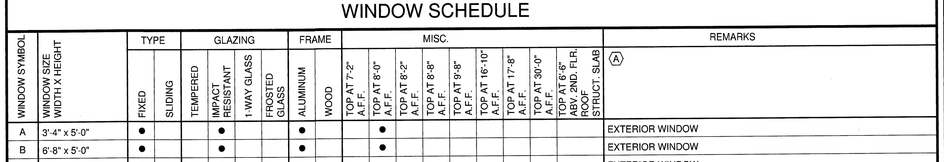

STOREFRONT ELEVATION DETAILS:

REFER TO PLAN FOR APPLICATION AND SPECIFIC WIDTHS.
ORIENTATION MAY VARY, REFER TO PLAN FOR MORE INFORMATION.
NUMBER OF EQUAL PANES IN STOREFRONT VARIES. REFER TO PLAN FOR NUMBER OF EQUAL PANES.

SHADING INDICATES FROSTED WINDOW FILM APPLIQUE. CONFIRM OPACITY AND METHOD WITH OWNER PRIOR TO ORDERING GLASS.

3 STOREFRONT #144 NOT USED.

STORE-FRONT TYPE A

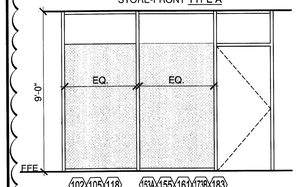

STORE-FRONT TYPE B

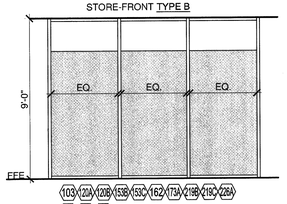

STORE-FRONT TYPE C

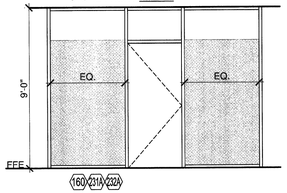

STORE-FRONT TYPE D

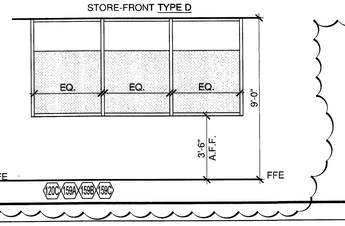

RECORD SET

The information presented on this drawing is diagrammatic and is presented for general information purposes and should not be relied on for accuracy of dimensions, details and locations. Actual and exact conditions if required should be determined in the field.

JMWA ARCHITECTS

STEVEN E. MYOTT AIA
JAMES R. WILLIAMS AIA
RODOLFO ACEVEDO AIA

949 CLINT MOORE ROAD
BOCA RATON, FLORIDA 33487
TEL 561 997 9997
FAX 561 997 1610

WWW.JMWA.NET

PALMETTO BAY VILLAGE HALL

9705 E. Hibiscus St., Palmetto Bay, Florida

Master Builders of South Florida, Inc.
1400 E. Oakland Park Blvd. Suite 210
Oakland Park, FL 33334

FLORIDA LICENSURE

AAC002193 IB0001142

PROJECT NO.	8714.00
DESIGNED BY:	RA
DRAWN BY:	DW / EK / JS
CHECKED BY:	JW

SUBMITTALS:
BUILDING PERMIT 03.05.2010

REVISIONS:
2 OWNER REVISIONS 06.22.10
3 OWNER REVISIONS 07.07.10

WINDOW SCHEDULE AND NOTES

A802

© 2009 JMWA ARCHITECTS, INCORPORATED ALL RIGHTS RESERVED. NO PART OF THESE IDEAS, PLANS OR DESIGNS MAY BE REPRODUCED, COPIED OR UTILIZED GRAPHICALLY IN ANY FORM WHATSOEVER WITHOUT THE EXPRESSED WRITTEN CONSENT OF JMWA ARCHITECTS INCORPORATED AND ITS BOARD OF DIRECTORS.

8/12/2010 2:11:55 PM ekutterer S:\Projects\8700\8714\8714_Drawings\8714_Current\8714_A802_Window Schedule and Notes.dwg

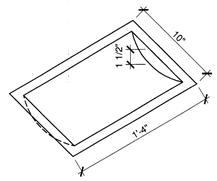

STAINLESS STEEL RECESSED DEAL TRAY
16"W x 10"L x 1-1/2"D

11 TYPICAL DEAL TRAY DETAIL
SCALE: N.T.S.

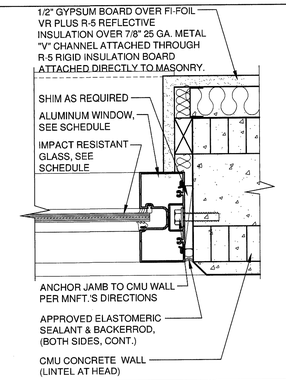

8 TYP. WINDOW JAMB / HEAD DET.
SCALE: 3" = 1'-0"

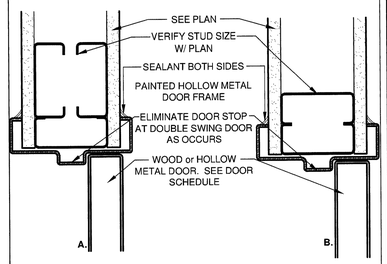

4 H.M DOOR JAMB AND HEAD DET.
SCALE: 3" = 1'-0"

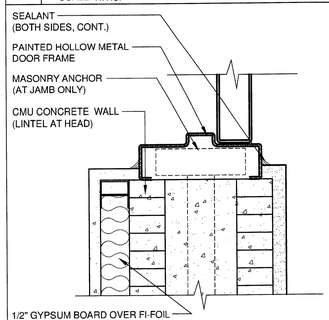

10 TYPICAL HM EXT. HEAD DTL.
SCALE: 3" = 1'-0"

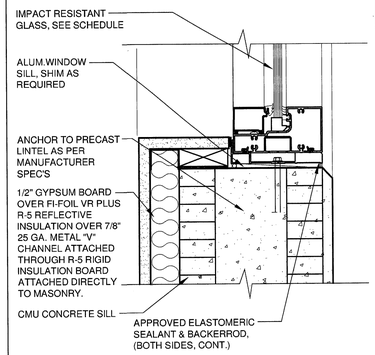

7 TYPICAL WINDOW SILL DETAIL
SCALE: 3" = 1'-0"

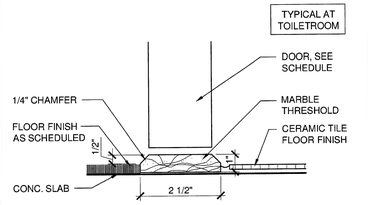

3 MARBLE THRESHOLD DETAIL
SCALE: 3" = 1'-0"

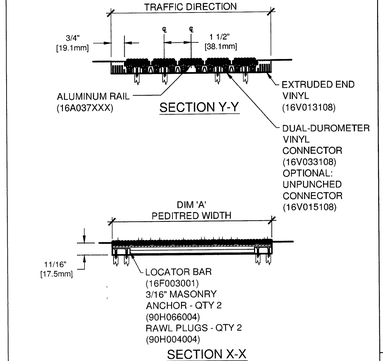

PEDITRED (NO FRAME) BY CONSTRUCTION SPECIALTIES (TO SUPPORT A 1K LB ROLLING LOAD. INSERT TO BE HEAVY DUTY CARPET: GRAPHITE (9325)

9 MAIN ENTRY PEDITRED DETAILS
SCALE: 1/2" = 1'-0"

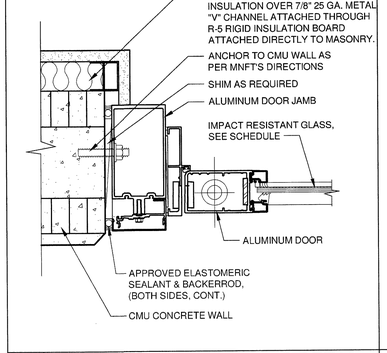

6 MAIN ENTRY DOOR JAMB DETAIL
SCALE: 3" = 1'-0"

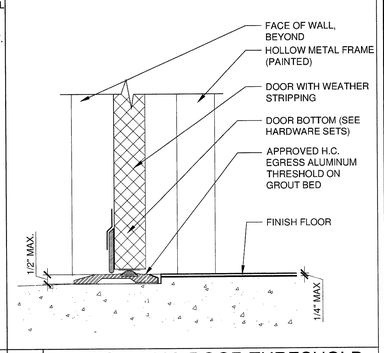

2 TYPICAL H.M. DOOR THRESHOLD
SCALE: 3" = 1'-0"

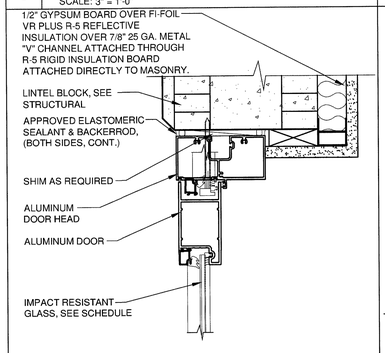

5 MAIN ENTRY DOOR HEAD DETAIL
SCALE: 3" = 1'-0"

RECORD SET

The information presented on this drawing is diagrammatic and is presented for general information purposes and should not be relied on for accuracy of dimensions, details and locations. Actual and exact conditions if required should be determined in the field.

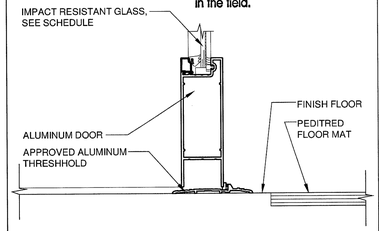

1 MAIN ENTRY THRESHOLD DETAIL
SCALE: 3" = 1'-0"

JMWA
ARCHITECTS
STEVEN E. MYOTT AIA
JAMES R. WILLIAMS AIA
RODOLFO ACEVEDO AIA
949 CLINT MOORE ROAD
BOCA RATON, FLORIDA 33487
TEL 561 997 9997
FAX 561 997 1610
WWW.JMWA.NET

PALMETTO BAY VILLAGE HALL
Palmetto Bay, Florida

Master Builders of South Florida, Inc.
1400 E. Oakland Park Blvd. Suite 210
Oakland Park, FL 33334

FLORIDA LICENSURE

AAC002193 IB0001142

PROJECT NO.	8714.00
DESIGNED BY:	RA
DRAWN BY:	DW / EK / JS
CHECKED BY:	JW

SUBMITTALS:
BUILDING PERMIT 03.05.2010

REVISIONS:

DOOR AND WINDOW DETAILS

A803

© 2009 JMWA ARCHITECTS, INCORPORATED ALL RIGHTS RESERVED. NO PART OF THESE IDEAS, PLANS OR DESIGNS MAY BE REPRODUCED, COPIED OR UTILIZED GRAPHICALLY IN ANY FORM WHATSOEVER WITHOUT THE EXPRESSED WRITTEN CONSENT OF JMWA ARCHITECTS INCORPORATED AND ITS BOARD OF DIRECTORS.

1/18/2010 12:01:03 PM joses S:\Projects\8700\8714\8714_Drawings\8714_Current\8714_A803_Door and Window Details.dwg

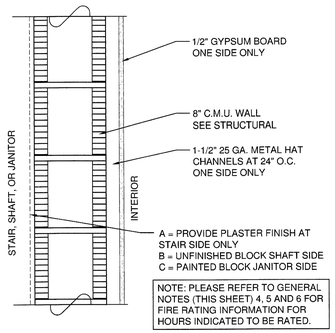

17 INTERIOR CMU WALL DETAIL
SCALE: 1-1/2" = 1'-0"

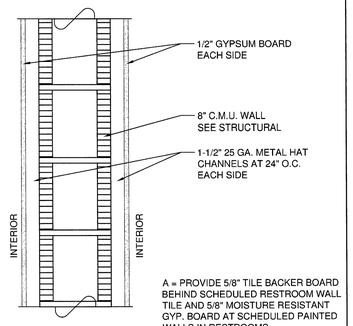

13 TYPICAL INTERIOR CMU WALL DTL
SCALE: 1-1/2" = 1'-0"

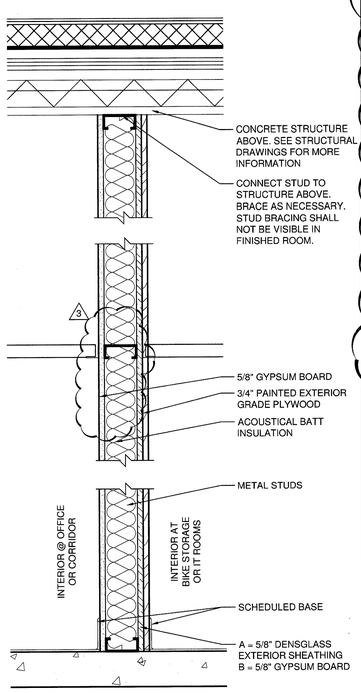

10 TYPICAL REINFORCED WALL DET.
SCALE: 1-1/2" = 1'-0"

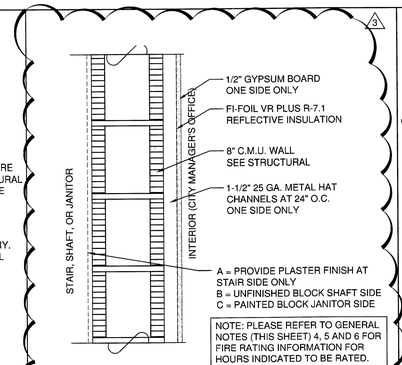

14 INT. CMU WALL DETAIL AT MGR.
SCALE: 1-1/2" = 1'-0"

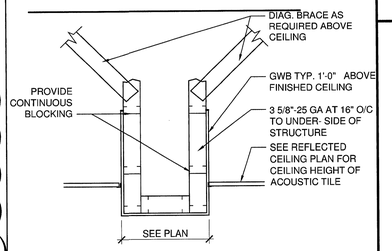

6 TYPICAL BRACING DETAIL
SCALE: N.T.S.

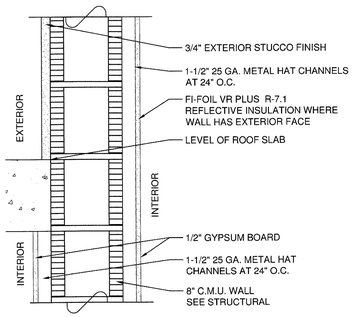

16 CMU WALL DETAIL
SCALE: 1-1/2" = 1'-0"

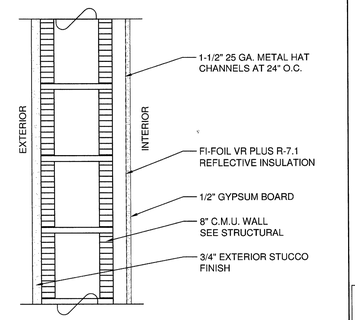

12 TYPICAL EXT. CMU WALL DETAIL
SCALE: 1-1/2" = 1'-0"

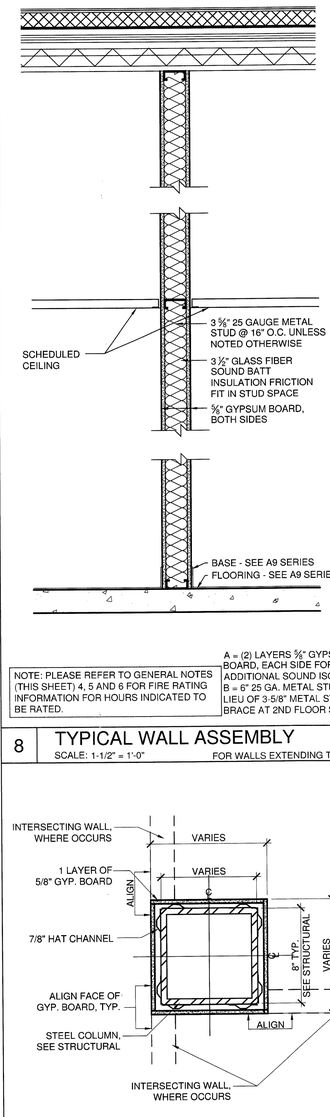

8 TYPICAL WALL ASSEMBLY
SCALE: 1-1/2" = 1'-0"
FOR WALLS EXTENDING TO DECK

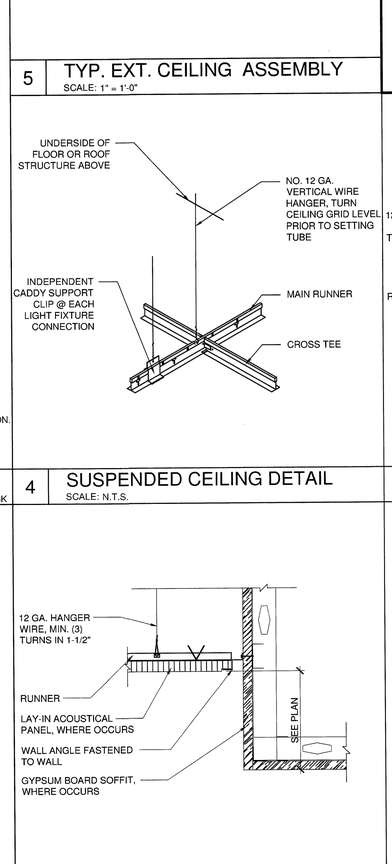

5 TYP. EXT. CEILING ASSEMBLY
SCALE: 1" = 1'-0"

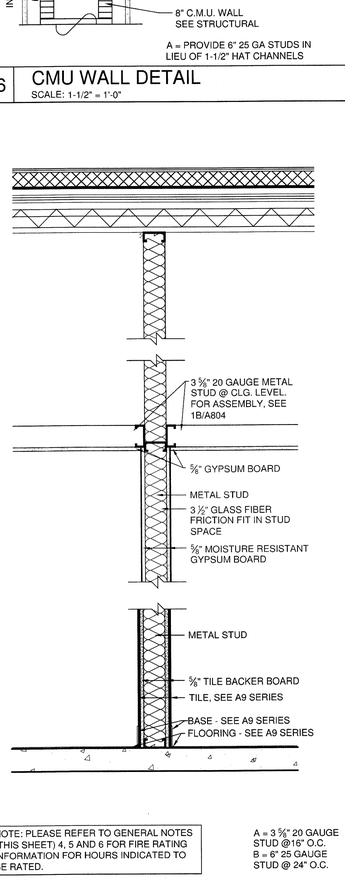

15 TYPICAL WALL ASSEMBLY
SCALE: 1-1/2" = 1'-0"

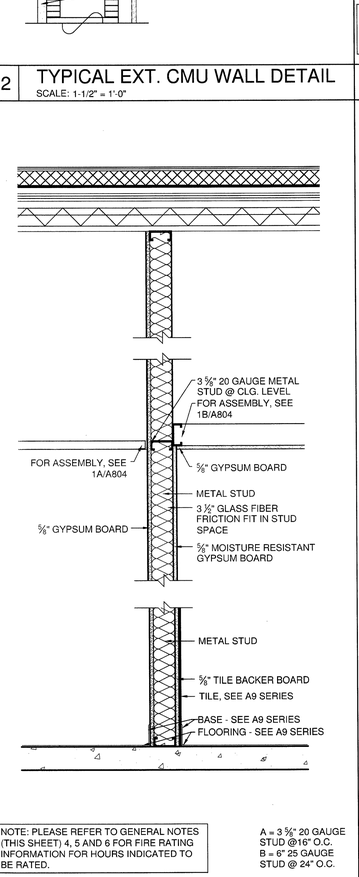

11 TYPICAL WALL ASSEMBLY
SCALE: 1-1/2" = 1'-0"

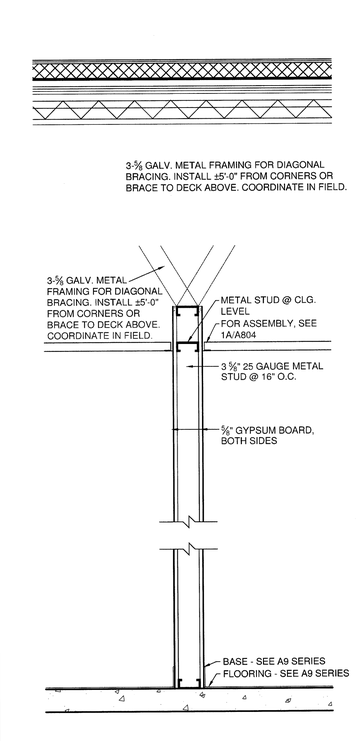

9 TYPICAL WALL ASSEMBLY
SCALE: 1-1/2" = 1'-0"

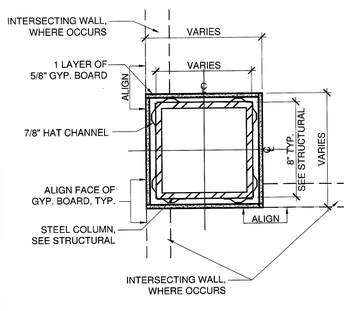

7 TYPICAL COLUMN DETAIL
SCALE: 1" = 1'-0"

3 TYPICAL CONNECTION DETAIL
SCALE: 1" = 1'-0"

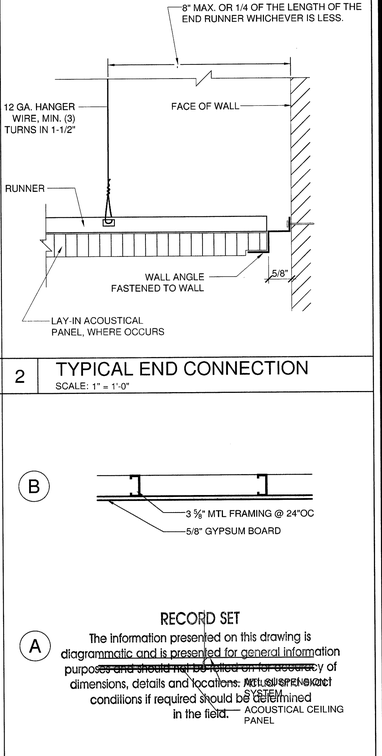

2 TYPICAL END CONNECTION
SCALE: 1" = 1'-0"

4 SUSPENDED CEILING DETAIL
SCALE: N.T.S.

1 TYP. INT. CEILING ASSEMBLY
SCALE: 1" = 1'-0"

GENERAL NOTES

1. FIRE RATED RESISTANT ASSEMBLY REFERENCES:
   UL = UNDERWRITERS LABORATORY, FIRE-RESISTANACE DIRECTORY.
   GA = GYPSUM ASSOCIATION, FIRE RESISTANCE DESIGN MANUAL, 17TH EDITION.
   FBC = FLORIDA BUILDING CODE, 2007 EDITION.
2. RATED ASSEMBLIES SHALL BE CONSTRUCTED PER LISTED DESIGNS. THE ASSEMBLY COMPONENTS SHOWN HERE REFLECT THE MAJOR CONSTRUCTION MATERIALS. ADDIONAL AND ALTERNATE MATERIALS AN/OR CONSTRUCTION METHODS MAY BE INDICATED IN PUBLISHED ASSEMBLIES.
3. SUBSTITUTION OF EQUAL OR BETTER ASSEMBLIES ARE PERMITTED AS APPROVED BY THE ARCHITECT AND LOCAL JURISDICTION.
4. SEE SHEETS A806 AND A807 FOR FIRE RATED ASSEMBLY DETAILS.
5. SEE SHEETS A121 AND A122 FOR LOCATIONS AND HOUR RATING O FREQUIRED FIR RATED WALLS.
6. ALL FIRE RATED WALLS SHALL BE EFFECTIVELY AND PERMANENTLY IDENTIFIED W/TH SIGNS OR STENCILING IN A MANNER ACCEPTABLE TO THE AUTHORITY HAVING JURISDICTION. SUCH IDENTIFICATION SHOULD BE ABOVE ANY DECORATIVE CEILING AND IN CONCEALED SPACES. IDENTIFICATINO SHALL READ "FIRE AND SMOKE BARRIER - PROTECT ALL OPENINGS."
7. VERIFY FLOOR ASSEMBLY WITH STRUCTURAL DRAWINGS.
8. STRUCTURAL DRAWINGS TAKE PRECEDENCE OVER ARCHITECTURAL.
9. REFER TO SPECIFICATION FOR R-VALUE OF INSULATION AT ROOFING SYSTEM.
10. WALL ASSEMBLIES THAT EXTEND TO UNDERSIDE OF DECK FASTENED W/18 GAUGE STEEL RUNNER W/S12 PAN-HEAD @ 16" O.C.
11. SEE DETAIL 8/A908 FOR BLOCKING REQUIREMENTS TO SUPPORT WALL HUNG PLUMBING FIXTURES OR WALL CABINETS.
12. ALL GYPSUM BOARD CALLED OUT AT 5/8" SHALL BE 5/8" TYPE "X" AT FIRE RATED ASSEMBLIES.

JMWA ARCHITECTS
STEVEN E. MYOTT AIA
JAMES R. WILLIAMS AIA
RODOLFO ACEVEDO AIA
949 CLINT MOORE ROAD
BOCA RATON, FLORIDA 33487
TEL 561 997 9997
FAX 561 997 1610
WWW.JMWA.NET

PALMETTO BAY VILLAGE HALL
9705 E. Hibiscus St., Palmetto Bay, Florida

Master Builders of South Florida, Inc.
1400 E. Oakland Park Blvd. Suite 210
Oakland Park, FL 33334

FLORIDA LICENSURE

AAC002193 IB0001142

PROJECT NO.	8714.00
DESIGNED BY:	RA
DRAWN BY:	DW / EK / JS
CHECKED BY:	JW
SUBMITTALS:	
BUILDING PERMIT	03.05.2010

REVISIONS:
3 OWNER REVISIONS 07.07.10

CEILING AND WALL ASSEMBLY DETAILS

A804

© 2009 JMWA ARCHITECTS, INCORPORATED ALL RIGHTS RESERVED. NO PART OF THESE IDEAS, PLANS OR DESIGNS MAY BE REPRODUCED, COPIED OR UTILIZED GRAPHICALLY IN ANY FORM WHATSOEVER WITHOUT THE EXPRESSED WRITTEN CONSENT OF JMWA ARCHITECTS INCORPORATED AND ITS BOARD OF DIRECTORS.

8/12/2010 2:56:52 PM ekutterer S:\Projects\8700\8714\8714_Drawings\8714_Current\8714_A804_Ceiling and Wall Assembly Details.dwg

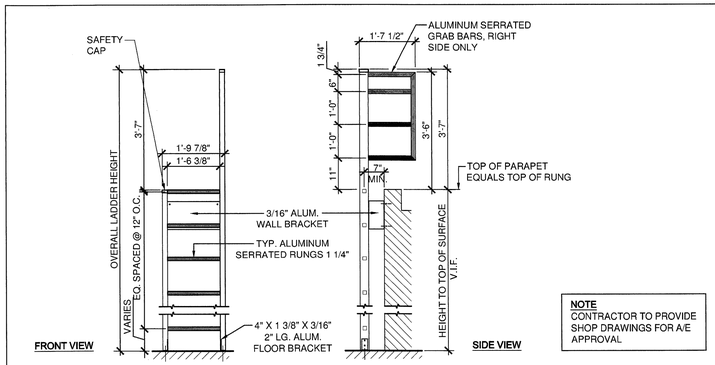

NOTE
CONTRACTOR TO PROVIDE SHOP DRAWINGS FOR A/E APPROVAL

24 EXTERIOR ACCESS LADDER DETAILS (GALVANIZED STEEL)
SCALE: N.T.S.

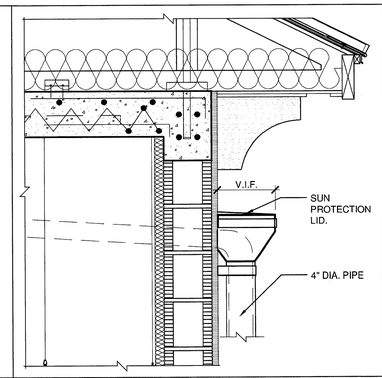

20 MAIN DRAIN SCUPPER
SCALE: 1" = 1'-0"

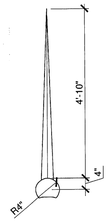

12 DOME SPIRE DETAIL
SCALE: 1/2" = 1'-0"

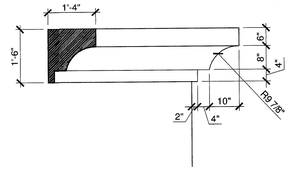

SECTION

8 ARCHITECTURAL FOAM DETAIL
SCALE: 1/2" = 1'-0"

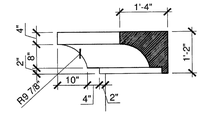

SECTION

4 ARCHITECTURAL FOAM DETAIL
SCALE: 1/2" = 1'-0"

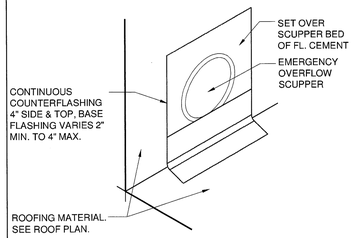

23 OVERFLOW SCUPPER AXON VIEW
SCALE: 1-1/2" = 1'-0"

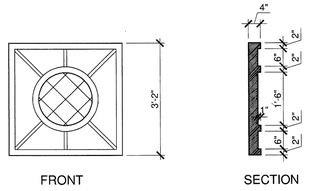

19 MEDALLION W/SCORE LINES DTL.
SCALE: 1/2" = 1'-0"

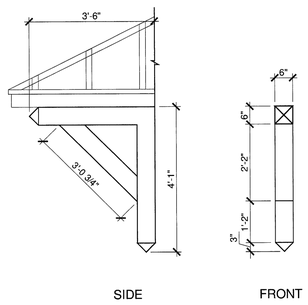

15 WOOD BRACKET DETAIL
SCALE: 1/2" = 1'-0"

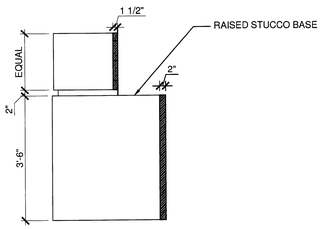

11 TYPICAL QUOIN AND BASE DETAIL
SCALE: 1/2" = 1'-0"

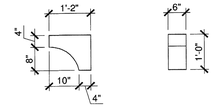

7 ARCH. FOAM BRACKET DETAIL
SCALE: 1/2" = 1'-0"

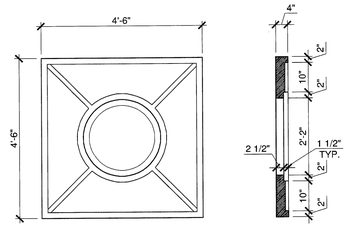

3 MEDALLION AT WINDOW DETAIL
SCALE: 1/2" = 1'-0"

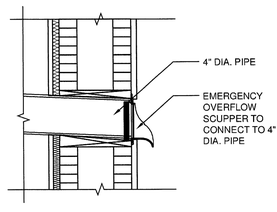

22 OVERFLOW SCUPPER SECTION
SCALE: 1-1/2" = 1'-0"

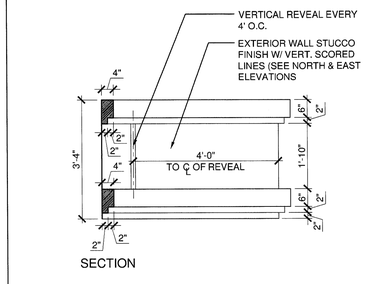

18 ARCH. FOAM BANDING DTL.
SCALE: 1/2" = 1'-0"

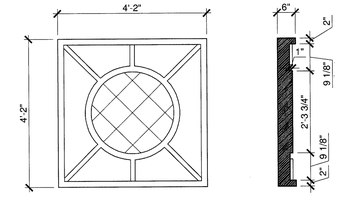

14 MEDALLION W/SCORE LINES DTL.
SCALE: 1/2" = 1'-0"

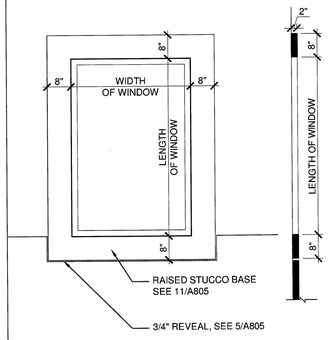

10 RAISED STUCCO BANDING DTL.
SCALE: 1/2" = 1'-0"

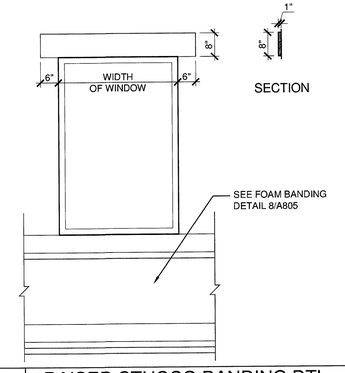

6 RAISED STUCCO BANDING DTL.
SCALE: 1/2" = 1'-0"

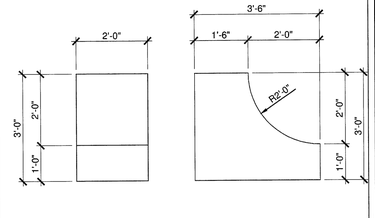

2 TOWER BRACKET DETAIL
SCALE: 1/2" = 1'-0"

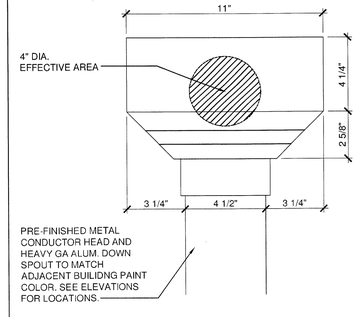

21 GUTTER ELEVATION
SCALE: 3" = 1'-0"

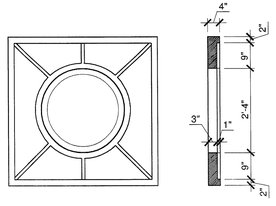

17 MEDALLION AT WINDOW DTL.
SCALE: 1/2" = 1'-0"

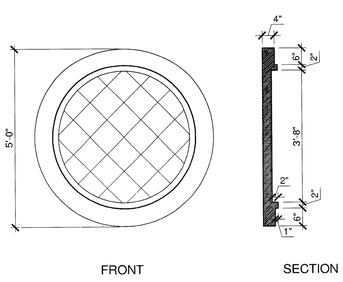

13 MEDALLION W/SCORE LINES DTL.
SCALE: 1/2" = 1'-0"

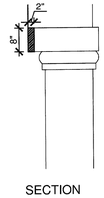

9 TYPICAL FOAM BANDING DETAIL
SCALE: 1/2" = 1'-0"

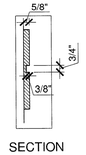

5 TYPICAL REVEAL DETAIL
SCALE: 1/2" = 1'-0"

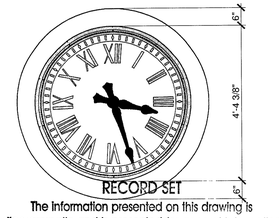

NOTE: MANUFACTURER TO VERIFY STYLE: 24-01

The information presented on this drawing is diagrammatic and is presented for general information purposes and should not be relied on for accuracy of dimensions, details and locations. Actual and exact conditions if required should be determined in the field.

1 CLOCK DETAIL
SCALE: 1/2" = 1'-0"

JMWA ARCHITECTS
STEVEN E. MYOTT AIA
JAMES R. WILLIAMS AIA
RODOLFO ACEVEDO AIA

949 CLINT MOORE ROAD
BOCA RATON, FLORIDA 33487
TEL 561 997 9997
FAX 561 997 1610

WWW.JMWA.NET

PALMETTO BAY VILLAGE HALL
Palmetto Bay, Florida

Master Builders of South Florida, Inc.
1400 E. Oakland Park Blvd. Suite 210
Oakland Park, FL 33334

FLORIDA LICENSURE

AAC002193 IB0001142

PROJECT NO.	8714.00
DESIGNED BY:	RA
DRAWN BY:	DW / EK / JS
CHECKED BY:	JW

SUBMITTALS:
BUILDING PERMIT 03.05.2010

REVISIONS:

ELEVATION DETAILS

A805

© 2009 JMWA ARCHITECTS. INCORPORATED ALL RIGHTS RESERVED. NO PART OF THESE IDEAS, PLANS OR DESIGNS MAY BE REPRODUCED, COPIED OR UTILIZED GRAPHICALLY IN ANY FORM WHATSOEVER WITHOUT THE EXPRESSED WRITTEN CONSENT OF JMWA ARCHITECTS INCORPORATED AND ITS BOARD OF DIRECTORS.

3/3/2010 10:16:47 AM joses S:\Projects\8700\8714\8714_Drawings\8714_Current\8714_A805_Details.dwg

System No. W-L-1089

June 23, 2000
F Ratings -- 1 and 2 Hr (See Item 1)
T Rating -- 0 Hr

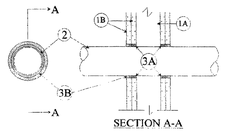

1. Wall Assembly -- The fire-rated gypsum wallboard/stud wall assembly shall be constructed of the materials and in the manner described in the individual U300 or U400 Series Wall or Partition Design in the UL Fire Resistance Directory and shall include the following construction features:

A. Studs -- Wall framing may consist of either wood studs or steel channel studs. Wood studs to consist of nom 2 by 4 in. lumber spaced 16 in. OC. Steel studs to be min 2-1/2 in. wide and spaced max 24 in. OC. When steel studs are used and the diam of opening exceeds the width of stud cavity, the opening shall be framed on all sides using lengths of steel stud installed between the vertical studs and screw-attached to the steel studs at each end. The framed opening in the wall shall be 4 to 6 in. wider and 4 to 6 in. higher than the diam of the penetrating item such that, when the penetrating item is installed in the opening, a 2 to 3 in. clearance is present between the penetrating item and the framing in all four sides.

B. Gypsum Board* -- 5/8 in. thick, 4 ft wide with square or tapered edges. The gypsum wallboard type, thickness, number of layers, fastener type and sheet orientation shall be as specified in the individual U300 or U400 Series Design in the UL Fire Resistance Directory. Max diam of opening is 24-5/8 in. for steel stud walls. Max diam of opening is 14-1/2 in. for wood stud walls.
The hourly F Rating of the firestop system is equal to the hourly fire rating of the wall assembly in which it is installed.

2. Through Penetrant -- One metallic pipe, conduit or tubing to be installed either concentrically or eccentrically within the firestop system. The annular space between pipe, conduit or tubing and the periphery of opening shall be min 1/8 in. to max 1/2 in. Pipe, conduit or tubing to be rigidly supported on both sides of wall assembly. The following types and sizes of metallic pipes, conduits or tubing may be used:

A. Steel Pipe -- Nom 24 in diam (or smaller) Schedule 10 (or heavier) steel pipe.
B. Iron Pipe -- Nom 24 in. diam (or smaller) cast or ductile iron pipe.
C. Conduit -- Nom 4 in. diam (or smaller) steel electrical metallic tubing or 6 in. diam steel conduit.
D. Copper Tubing -- Nom 6 in. diam (or smaller) Type L (or heavier) copper tubing.
E. Copper Pipe -- Nom 6 in. diam (or smaller) Regular (or heavier) copper pipe.

3. Firestop System -- The firestop system shall consist of the following:

A. Packing Material -- In 2 hr fire-rated assemblies, min 2 in. thickness of min 4 pcf mineral wool batt insulation firmly packed into opening as a permanent form on both sides of wall. Packing material to be recessed from both surfaces of the wall as required to accommodate the required thickness of fill material. In 1 hr fire-rated assemblies, min 3-3/4 in. thickness of min 4 pcf mineral wool batt insulation firmly packed into opening as a permanent form. Packing material to be flush with both surfaces of the wall.

B. Fill, Void or Cavity Material* -- Sealant -- In 2 hr fire-rated assemblies, 1/4 in. thickness of fill material applied within the annulus on both surfaces of wall. Additional fill material to be installed such that a min 1-1/4 in. thick crown is formed around the penetrating item and lapping a min 1/4 in. beyond the periphery of the opening. In 1 hr fire-rated assemblies, a min 1/2 in. thick crown is formed around the penetrating item and lapping a min 1/2 in. beyond the periphery of the opening on both surfaces of wall.
W R GRACE & CO - CONN -- FS 1900 Sealant

***Bearing the UL Classification Mark**

5 FIRE RATED ASSEMBLY
SCALE: N.T.S.

System No. C-AJ-1069

February 04, 1994
(Formerly System No. 410)
F Rating -- 1 Hr
T Rating -- 0 Hr

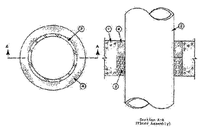

1. Floor or Wall Assembly -- Min 5 in. thick reinforced normal weight (100-150 pcf) concrete. Wall may also be constructed of any UL Classified Concrete Blocks*. Max diam of opening is 6 in.
See Concrete Blocks (CAZT) category in the Fire Resistance Directory for names of manufacturers.

2. Through Penetrants -- One metallic pipe or conduit to be centered within the firestop system. A nom annular space of 3/4 in. is required within the firestop system. Pipe or conduit to be rigidly supported on both sides of floor or wall assembly. The following types and sizes of metallic pipes or conduits may be used:

A. Steel Pipe -- Nom 4 in. diam (or smaller) Schedule 5 (or heavier) steel pipe.
B. Conduit -- Nom 4 in. diam (or smaller) steel electrical metallic tubing or steel conduit.

3. Packing Material -- Min 3 in. thickness of min 4.4 mineral wool batt insulation firmly packed into opening as permanent form. Packing material to be recessed from top surface of floor as required to accommodate required thickness of fill material. Packing material to be centered in walls mid-depth and recessed to allow for installation of fill material.

4. Fill, Void or Cavity Material* -- Sealant -- Min 1/2 in. thickness of fill material applied within the annulus, flush with top surface of floor. In walls, fill material to be applied on each side of packing material.
PRC-DESOTO INTERNATIONAL INC -- Type PR-805 Sealant

***Bearing the UL Classification Mark**

4 FIRE RATED ASSEMBLY
SCALE: N.T.S.

Fire Resistance Ratings - ANSI/UL 263

Design No. U419
April 17, 2007
Nonbearing Wall Ratings -- 1, 2, 3 or 4 Hr (See Items 3 & 4)

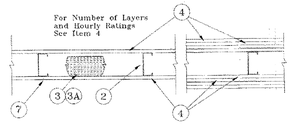

1. Floor and Ceiling Runners -- (Not shown) -- For use with Item 2 - Channel shaped, fabricated from min 25 MSG corrosion-protected steel, min width to accommodate stud size, with min 1 in. long legs, attached to floor and ceiling with fasteners 24 in. OC max.
1A. Floor and Ceiling Runners* -- Not shown - In lieu of Item 1 -- For use with Item 2A, proprietary channel shaped, min. 3-5/8 in. wide with 1 in. long legs, fabricated from min. 0.0150 in. (0.0146 in., min bare metal thickness) galvanized steel, attached to floor and ceiling with fasteners 24 in. OC max.
DIETRICH INDUSTRIES INC -- UltraSTEEL®.
1B. Floor and Ceiling Runners -- (Not shown - In lieu of Item 1) -- For use with Item 2A, proprietary channel shaped, min. 2-9/16 in. wide with 1-3/16 in. wide flanges, fabricated from min. 0.0150 in. galvanized steel, attached to floor and ceiling fasteners 24 in. OC. max.
DIETRICH INDUSTRIES INC -- UltraSTEEL®.

2. Steel Studs -- Channel shaped, fabricated from min 25 MSG corrosion-protected steel, min width as indicated under Item 4, min 1-1/4 in. flanges and 1/4 in. return, spaced a max of 24 in. OC. Studs to be cut 3/8 to 3/4 in. less than assembly height.
2A. Steel Studs* -- In lieu of Item 2 - Proprietary channel shaped studs, min. width as indicated under Item 4, min. 1-1/4 in. long legs and 1/4 in. long folded back return flange legs, fabricated from min. 0.0155 in. (0.0149 in., min bare metal thickness) galvanized steel, spaced a max of 24 in. OC. Studs to be cut 3/8 to 3/4 in. less than assembly height. Allowable use of studs is shown in the table below. For direct attachment of gypsum board only.
DIETRICH INDUSTRIES INC -- UltraSTEEL®.
2B. Steel Studs -- (As an alternate to Item 2, For use with Item 4B) Channel shaped, fabricated from min 20 MSG (0.0327 in. thick) corrosion-protected or galv steel, 3-1/2 in. min width, min 1-1/2 in. flanges and 1/4 in. return, spaced a max of 16 in. OC. Studs friction-fit into floor and ceiling runners. Studs to be cut 5/8 to 3/4 in. less than assembly height.

3. Batts and Blankets* -- (Required as indicated under Item 4) -- Mineral wool batts, friction fitted between studs and runners. Min nom thickness as indicated under Item 4. See Batts and Blankets (BKNV or BZJZ) Categories for names of Classified companies.
3A. Batts and Blankets* -- (Optional) -- Placed in stud cavities, any glass fiber or mineral wool insulation bearing the UL Classification Marking as to Surface Burning Characteristics and/or Fire Resistance. See Batts and Blankets (BKNV or BZJZ) Categories for names of Classified companies.

4. Gypsum Board* -- Gypsum panels with beveled, square or tapered edges, applied vertically or horizontally. Vertical joints centered over studs and staggered one stud cavity on opposite sides of studs. Vertical joints in adjacent layers (multilayer systems) staggered one stud cavity. Horizontal joints need not be backed by steel framing. Horizontal edge joints and horizontal butt joints on opposite sides of studs need not be staggered. Horizontal edge joints and horizontal butt joints in adjacent layers (multilayer systems) staggered a min of 12 in. The thickness and number of layers for the 1 hr, 2 hr, 3 hr and 4 hr ratings are as follows:

Wallboard Protection on Each Side of Wall

Rating	Min Stud Depth, Item 2	Min Stud Depth, Item 2A	No. of Layers & Thkns of Panel	Min Tkhns of Insulation (Item 3)
1	3-1/2	3-5/8	1 layer, 5/8 in. thick	Optional
1	1-5/8	3-5/8	1 layer, 3/4 in. thick	Optional
2	1-5/8	2-1/2	2 layers, 5/8 in. thick	Optional
3	1-5/8	2-1/2	3 layers, 1/2 in. thick	Optional
3	1-5/8	2-1/2	3 layers, 5/8 in. thick	Optional
4	1-5/8	2-1/2	4 layers, 1/2 in. thick	Optional

Wallboard Protection on Each Side of Wal l

Rating	Min Stud Depth, Item 2	Min Stud Depth, Item 2A	No. of Layers & Thkns of Panel	Min Tkhns of Insulation (Item 3)
1	2-1/2	3-5/8	1 layer, 1/2 in. thick	1-1/2 in.
2	1-5/8	2-1/2	2 layers, ½ in.thick	Optional
2	3-1/2	3-5/8	layer, 3/4 in. thick	3 in.
3	1-5/8	2-1/2	2 layers, 3/4 in. thick	Optional
4	1-5/8	2-1/2	4 layers, 5/8 in. thick	Optional
4	2-1/2	2-1/2	2 layers, 3/4 in. thick	2 in.

CANADIAN GYPSUM COMPANY -- 1/2 in. thick Type C, IP-X2 or IPC-AR; WRC, 5/8 in. thick Type AR, C, IP-AR, IP-X1, IP-X2, IPC-AR, SCX, SHX, WRX or WRC; 3/4 in. thick Types IP-X3 or ULTRACODE
UNITED STATES GYPSUM CO -- 1/2 in. thick Type C, IP-X2, IPC-AR or WRC; 5/8 in. thick Type SCX, SHX, WRX, IP-X1, AR, C, WRC, FRX-G, IP-AR, IP-X2, IPC-AR ; 3/4 in. thick Types IP-X3 or ULTRACODE
USG MEXICO S A DE C V - 1/2 in. thick Type C, IP-X2, IPC-AR or WRC; 5/8 in. thick Type AR, C, IP-AR, IP-X1, IP-X2, IPC-AR, SCX, SHX, WRX, WRC or; 3/4 in. thick Types IP-X3 or ULTRACODE

When Item 6B, Steel Framing Members*, is used, Nonbearing Wall Rating is limited to 1 Hr. Min. stud depth is 3-1/2 in., min. thickness of insulation (Item 3) is 3 in., and two layers of gypsum board panels (1/2 in. or 5/8 in. thick) shall be attached to furring channels as described in Item 5. One layer of gypsum board panels (1/2 in. or 5/8 in. thick) attached to opposite side of stud without furring channels as described in Item 5.
4A. Gypsum Board* -- (As an alternate to Item 4) -- 5/8 in. thick, 24 to 54 in. wide, applied horizontally as the outer layer to one side of the assembly. Secured as described in Item 5.
CANADIAN GYPSUM COMPANY -- Type SHX.
UNITED STATES GYPSUM CO -- Type FRX-G, SHX.
USG MEXICO S A DE C V -- Type SHX.
4B. Gypsum Board* -- (As an alternate to Item 4 when used as the base layer on one or both sides of wall, For direct attachment only) - Nom 5/8 in. thick lead backed gypsum panels with beveled, square or tapered edges, applied vertically. Vertical joints centered over studs and staggered min 1 stud cavity on opposite sides of studs. Wallboard secured to studs with 1-1/4 in. long Type S-12 steel screws spaced 8 in. OC at perimeter and 12 in. OC in the field.
RAY-BAR ENGINEERING CORP -- Type RB-LBG

5. Fasteners -- (Not shown) -- For use with Item 2 - Type S or S-12 steel screws used to attach panels to studs (Item 2) or furring channels (Item 6). Single layer systems: 1 in. long for 1/2 and 5/8 in. thick panels or 1-1/4 in. long for 3/4 in. thick panels, spaced 8 in. OC when panels are applied horizontally, or 8 in. OC along vertical and bottom edges and 12 in. OC in the field when panels are applied vertically. Two layer systems: First layer- 1 in. long for 1/2 and 5/8 in. thick panels or 1-1/4 in. long for 3/4 in. thick panels, spaced 16 in. OC. Second layer- 1-5/8 in. long for 1/2 in., 5/8 in. thick panels or 2-1/4 in. long for 3/4 in. thick panels, spaced 16 in. OC with screws offset 8 in. from first layer. Three-layer systems: First layer- 1 in. long for 1/2 in., 5/8 in. thick panels, spaced 24 in. OC. Second layer- 1-5/8 in. long for 1/2 in., 5/8 in. thick panels, spaced 24 in. OC. Third layer- 2-1/4 in. long for 1/2 in., 5/8 in. thick panels or 2-5/8 in. long for 5/8 in. thick panels, spaced 12 in. OC. Screws offset min 6 in. from layer below. Four-layer systems: First layer- 1 in. long for 1/2 in., 5/8 in. thick panels, spaced 24 in. OC. Second layer- 1-5/8 in. long for 1/2 in., 5/8 in. thick panels, spaced 24 in. OC. Third layer- 2-1/4 in. long for 1/2 in. thick panels or 2-5/8 in. long for 5/8 in. thick panels, spaced 24 in. OC. Fourth layer- 2-5/8 in. long for 1/2 in. thick panels or 3 in. long for 5/8 in. thick panels, spaced 12 in. OC. Screws offset min 6 in. from layer below.
5A. Fasteners -- (Not shown) --For use with Item 2A - Type S or S-12 steel screws used to attach panels to studs (Item 2). Single layer systems: 1 in. long for 1/2 and 5/8 in. thick panels or 1-1/4 in. long for 3/4 in. thick panels, spaced 8-1/2 in. OC with additional screws 1 in. and 2-1/2 in. from edges of the board when panels are horizontally, or 8 in. OC along vertical and bottom edges and 12 in. OC in the field when panels are applied vertically. Two layer systems applied vertically: First layer- 1 in. long for 1/2 and 5/8 in. thick panels or 1-1/4 in. long for 3/4 in. thick panels, spaced 16 in. OC. Second layer- 1-5/8 in. long for 1/2 in., 5/8 in. thick panels or 2-1/4 in. long for 3/4 in. thick panels, spaced 16 in. OC with screws offset 8 in. from first layer. Two layer systems applied horizontally: First layer- 1 in. long for 1/2 and 5/8 in. thick panels or 1-1/4 in. long for 3/4 in. thick panels, spaced 16 in. OC starting 8 in. from each edge of the board with an additional screw placed 1-1/4 in. from each edge of the board. Second layer- 1-5/8 in. long for 1/2 in., 5/8 in. thick panels or 2-1/4 in. long for 3/4 in. thick panels, spaced 16 in. OC starting 8 in. from each edge of the board with an additional screw placed 1-1/4 in. from each edge of the board with screws offset 8 in. from first layer. Three-layer systems: First layer- 1 in. long for 1/2 in., 5/8 in. thick panels, spaced 24 in. OC. Second layer- 1-5/8 in. long for 1/2 in., 5/8 in. thick panels, spaced 24 in. OC. Third layer- 2-1/4 in. long for 1/2 in., 5/8 in. thick panels or 2-5/8 in. long for 5/8 in. thick panels, spaced 12 in. OC. Screws offset min 6 in. from layer below. For all layers, an additional screw shall be placed 1-1/4 in. from each edge of the board. Four-layer systems: First layer- 1 in. long for 1/2 in., 5/8 in. thick panels, spaced 24 in. OC. Second layer- 1-5/8 in. long for 1/2 in., 5/8 in. thick panels, spaced 24 in. OC. Third layer- 2-1/4 in. long for 1/2 in. thick panels or 2-5/8 in. long for 5/8 in. thick panels, spaced 24 in. OC. Fourth layer- 2-5/8 in. long for 1/2 in. thick panels or 3 in. long for 5/8 in. thick panels, spaced 12 in. OC. Screws offset min 6 in. from layer below. For all layers, an additional screw shall be placed 1-1/4 in. from each edge of the board.

6. Furring Channels -- (Optional, not shown, for single or double layer systems) -- Resilient furring channels fabricated from min 25 MSG corrosion-protected steel, spaced vertically a max of 24 in. OC. Flange portion attached to each intersecting stud with 1/2 in. long Type S-12 steel screws. Not for use with Item 4A.
6A. Steel Framing Members (Not Shown)* -- (Optional on one or both sides, not shown, for single or double layer systems) -- As an alternate to Item 6, furring channels and Steel Framing Members as described below:
a. Furring Channels -- Formed of No. 25 MSG galv steel. 2-3/8 in. wide by 7/8 in. deep, spaced max. 24 in. OC perpendicular to studs. Channels secured to studs as described in Item b. Gypsum board attached to furring channels as described in Item 5. Not for use with Item 4A.
b. Steel Framing Members* -- Used to attach furring channels (Item 6Aa) to studs (Item 2). Clips spaced max. 48 in. OC. RSIC-1 clips secured to studs with No. 8 x 1-1/2 in. minimum self-drilling, S-12 steel screw through the center grommet. RSIC-V clips secured to studs with No. 8 x 9/16 in. minimum self-drilling, S-12 steel screw through the center hole. Furring channels are friction fitted into clips.
PAC INTERNATIONAL INC -- Types RSIC-1, RSIC-V.
6B. Steel Framing Members (Optional, Not Shown)* -- As an alternate to Item 6, furring channels and Steel Framing Members on only one side of studs as described below:
a. Furring Channels -- Formed of No. 25 MSG galv steel, spaced 24 in. OC perpendicular to studs. Channels secured to studs as described in Item b. Batts and Blankets placed in stud cavity as described in Item 4. Two layers of gypsum board attached to furring channels as described in Item 4. Not for use with Item 4A.
b. Steel Framing Members* -- Used to attach furring channels (Item 6Ba) to one side of studs (Item 2) only. Clips spaced 48 in. OC., and secured to studs with two No. 8 x 2-1/2 in. coarse drywall screws, one through the hole at each end of the clip. Furring channels are friction fitted into clips.
KINETICS NOISE CONTROL INC -- Type Isomax

7. Joint Tape and Compound -- Vinyl or casein, dry or premixed joint compound applied in two coats to joints and screw heads of outer layers. Paper tape, nom 2 in. wide, embedded in first layer of compound over all joints of outer layer panels. Paper tape and joint compound may be omitted when gypsum panels are supplied with a square edge.

8. Siding, Brick or Stucco -- (Optional, not shown) -- Aluminum, vinyl or steel siding, brick veneer or stucco, meeting the requirements of local code agencies, installed over gypsum panels. Brick veneer attached to studs with corrugated metal wall ties attached to each stud with steel screws, not more than each sixth course of brick.

9. Caulking and Sealants* -- (Optional, not shown) -- A bead of acoustical sealant applied around the partition perimeter for sound control.
UNITED STATES GYPSUM CO -- Type AS

10. Lead Batten Strips -- (Not Shown, For Use With Item 4B) - Lead batten strips, 2 in. wide, max 10 ft long with a max thickness of 0.125 in. Strips placed on the interior face of studs and attached from the exterior face of the stud with two 1 in. long Type S-12 pan head steel screws, one at the top of the strip and one at the bottom of the strip. Lead batten strips to have a purity of 99.9% meeting the Federal specification QQ-L-2011, Grade "C". Lead batten strips required behind vertical joints of lead backed gypsum wallboard (Item 4B) and optional at remaining stud locations. Required behind vertical joints.

11. Lead Discs or Tabs -- (Not Shown, For Use With Item 4B) - Used in lieu of or in addition to the lead batten strips (Item 10) or optional at other locations - Max 3/4 in. diam by max 0.125 in. thick lead discs compression fitted or adhered over steel screw heads or max 1/2 in. by 1-1/4 in. by max 0.125 in. thick lead tabs placed on gypsum boards (Item 4B) underneath screw locations prior to the installation of the screws. Lead discs or tabs to have a purity of 99.9% meeting the Federal specification QQ-L-2011, Grade "C".
***Bearing the UL Classification Mark**

3 FIRE RATED ASSEMBLY
SCALE: N.T.S.

Fire Resistance Ratings - ANSI/UL 263

Design No. U442
November 14, 2006
Nonbearing Wall Rating -- 1 HR.

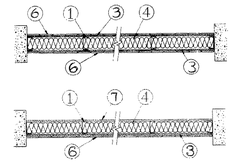

1. Studs -- Channel shaped, 2-1/2 in. wide by 1-1/4 in. deep with 3/16 in. folded back return flange legs. Fabricated from No. 20 MSG (0.0329 in., min. bare metal thickness) galv steel. Max stud spacing 16 in. OC. Studs to be cut 3/8 to 3/4 in. less than assembly height.

2. Floor and Ceiling Runners -- (Not Shown) -- Channel shaped runners, 2-1/2 in. wide by 1-1/4 in. deep, fabricated from No. 20 MSG (0.0329 in., min. bare metal thickness) galv steel. Attached to floor and ceiling with fasteners, 24 in. OC max.

3. Cementitious Backer Units* -- 1/2 or 5/8 in. thick, applied vertically or horizontally with vertical joints centered over studs and staggered one stud cavity on opposit sides of studs. Horizontal joints need not be backed by framing. Fastened to studs and bottom runners with the uppermost screws paloced 1/2 in. to 2 in. below the bott edge of the leg of the top runner with corrosion resistant 1-1/4 in. long chamfered, ribbed wafer head screws with a minimum head diameter of .400 inch, spaced 8 in. OC. Joints covered with glass fiber mesh tape and latex modified portland cement mortar or Type I organic adhesive.
UNITED STATES GYPSUM CO -- DUROCK Exterior Cement Board or DUROCK Brand Cement Board.

4. Batts and Blankets* -- Min 2-1/2 in. thick mineral wool insulation batts, friction-fitted between studs.
THERMAFIBER INC -- Type SAFB.

5. Bond Coat for Setting Tile -- Latex modified portland cement mortar or .1 Type I organic adhesive applied with a notched trowel.

6. Ceramic Tile -- 1/4 in. thick, joints filled with grout.

7. Gypsum Board* -- 5/8 in. thick with square or tapered edges, applied vertically with vertical joints centered over studs and staggered one stud cavity on opposite si of studs. Fastened with 1 in. long, Type S-12 screws spaced 8 in. OC along the vertical edges and 12 in. OC in the field, and fastened to runners with screws spaced 8 OC.
AMERICAN GYPSUM CO -- Type AGX-1 or AG-C.
BEIJING NEW BUILDING MATERIALS PUBLIC LTD CO -- Type DBX-1.
BPB AMERICA INC -- Types EGRG, ProRoc Type X, ProRoc Type C.
BPB CANADA INC -- ProRoc Type C, ProRoc Type X or ProRoc Type Abuse-Resistant.
CANADIAN GYPSUM COMPANY -- Type AR, C, IP-AR, IP-X1, IP-X2, IPC-AR, SCX, SHX, WRC, WRX.
G-P GYPSUM CORP, SUB OF GEORGIA-PACIFIC CORP -- Types 5, 9, C, DA, GPFS6.
LAFARGE NORTH AMERICA INC -- Types LGFC2, LGFC2A, LGFC6, LGFC6A, LGFC-C, LGFC-C/A.
PABCO BUILDING PRODUCTS L L C, DBA PABCO GYPSUM -- Type C or PG-9.
PANEL REY S A -- Type PRX.
SIAM GYPSUM INDUSTRY (SARABURI) CO LTD -- Type EX-1
TEMPLE-INLAND FOREST PRODUCTS CORP -- Type TG-C, Type X, Veneer Plaster Base-Type X, Water Rated-Type X, Sheathing Type-X, Soffit-Type X.
UNITED STATES GYPSUM CO -- Type AR, C, FRX-G, IP-AR, IP-X1, IP-X2, IPC-AR, SCX, SHX, WRC or WRX.
USG MEXICO S A DE C V -- Type AR, C, IP-AR, IP-X1, IP-X2, IPC-AR, SCX, SHX, WRC, WRX.

7A. Gypsum Board* -- (As an alternate to Item 7) -- 5/8 in. thick with square or tapered edges, applied vertically or horizontally with vertical joints centered over studs Horizontal edge joints and horizontal butt joints need not be staggered or backed. For horizontal application, fastened to studs and floor runners with 1 in. long Type S-screws spaced 8 in. OC. For vertical application, fastened to studs with 1 in. long, Type S- screws spaced 8 in. OC along the vertical edges and 12 in. OC in the field, a fastened to the floor runners with screws spaced 8 in. OC. When used in widths other than 48 in., gypsum panels to be installed horizontally.
CANADIAN GYPSUM COMPANY -- Type AR, C, IP-AR, IP-X1, IP-X2, IPC-AR, SCX, SHX, WRC, WRX.
UNITED STATES GYPSUM CO -- Type AR, C, FRX-G, IP-AR, IP-X1, IP-X2, IPC-AR, SCX, SHX, WRC or WRX.
USG MEXICO S A DE C V -- Type AR, C, IP-AR, IP-X1, IP-X2, IPC-AR, SCX, SHX, WRC, WRX.

8. Joints -- When taper edge gypsum board is used, joints covered with paper tape and joint compound. As an alternate, gypsum veneer plaster may be applied to the entire surface of Classified veneer baseboard with joints reinforced. When square-edge gypsum panels are used used, treatment of joints is optional.

9. Vapor Retarder, Water Barrier or Weather Resistive Barrier -- (Optional -- Not Shown) -- As required.
***Bearing the UL Classification Mark**

2 FIRE RATED ASSEMBLY
SCALE: N.T.S.

RECORD SET
The information presented on this drawing is diagrammatic and is presented for general information purposes and should not be relied on for accuracy of dimensions, details and locations. Actual and exact conditions if required should be determined in the field.

1 NOT USED
SCALE: N.T.S.

JMWA ARCHITECTS
STEVEN E. MYOTT AIA
JAMES R. WILLIAMS AIA
RODOLFO ACEVEDO AIA
949 CLINT MOORE ROAD
BOCA RATON, FLORIDA 33487
TEL 561 997 9997
FAX 561 997 1610
WWW.JMWA.NET

PALMETTO BAY VILLAGE HALL
Palmetto Bay, Florida
Master Builders of South Florida, Inc.
1400 E. Oakland Park Blvd. Suite 210
Oakland Park, FL 33334

FLORIDA LICENSURE

AAC002193 IB0001142

PROJECT NO.	8714.00
DESIGNED BY:	RA
DRAWN BY:	DW / EK / JS
CHECKED BY:	JW

SUBMITTALS:
BUILDING PERMIT 03.05.2010

REVISIONS:

FIRE RATED ASSEMBLY DETAILS

A806

© 2009 JMWA ARCHITECTS, INCORPORATED ALL RIGHTS RESERVED. NO PART OF THESE IDEAS, PLANS OR DESIGNS MAY BE REPRODUCED, COPIED OR UTILIZED GRAPHICALLY IN ANY FORM WHATSOEVER WITHOUT THE EXPRESSED WRITTEN CONSENT OF JMWA ARCHITECTS INCORPORATED AND ITS BOARD OF DIRECTORS.

S:\Projects\8700\8714\8714_Drawings\8714_Current\8714_A806_Fire Rated Assembly Details.dwg
1/5/2010 3:27:26 PM joses

Design No. U420

June 5, 2007
Non-Bearing Wall Rating - 1 or 2 HR

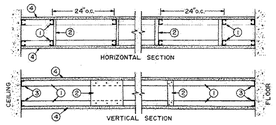

1. Studs -- Channel -- shaped 1 5/8 in. wide with 1 3/8 in. legs and 1/4 in. stiffening flanges. Fabricated from No. 25 MSG galv steel. Studs to be cut 1/4 in. less than assembly height.

2. Bracing -- Cut from the steel runners, min. 4-1/4 in. long, fastened to the studs with two No. 8 by 1/2 in. long self-drilling, self-tapping steel screws in each stud. As an alternate, but limits the stud cavity depth to maximum 9-1/2 in., cut from the gypsum wallboard, 9-1/2 in. long and 12 in. wide, fastened to the studs with three Type S wallboard screws in each stud. Vertical spacing of bracing not to exceed 48 in. OC.

3. Floor and Ceiling Runners -- Channel -- shaped 1 5/8 in. wide with 1 in. legs, fabricated from No. 25 MSG galv steel. Attached to floor and ceiling with fasteners spaced 24 in. OC.

4. Gypsum Board* -- Any 5/8 in. thick wallboard for fire resistance Classified with beveled, square, or tapered edges.

For 1 Hr Rating -- One layer of wallboard to be used. Applied vertically with joints centered over studs. Fastened to studs with 1 in. long, Type S, wallboard screws spaced 8 in. OC at the joints, located 3/8 in. from the edges, and 12 in. OC in the field. Fasteners to be spaced 8 in. OC at the runners.

For 2 Hr Rating -- Two layers of wallboard to be used. The inner layer to be applied in the same manner as for the 1 Hr Rating. The outer layer to be fastened to the studs (through the inner layer) using 1 5/8 in. long, Type S, wallboard screws spaced 8 in. OC at the joints, located 3/8 in. from the edges and 12 in. OC in the field.

Fasteners to be spaced 8 in. OC at the runners. Joints to be staggered 24 in. from the inner layer.

See Gypsum Board (CKNX) category for names of manufacturers.

4A. Gypsum Board* -- (As alternate to Item 4) - Nom 5/8 in. thick gypsum panels with beveled, square or tapered edges, applied vertically or horizontally. Vertical joints centered over studs and staggered one stud cavity on opposite sides of studs. Vertical joints in adjacent layers (2-hr system) staggered one stud cavity. Horizontal edge joints and horizontal butt joints on opposite sides of studs need not be staggered or backed with steel framing. Horizontal edge joints and horizontal butt joints in adjacent layers (2-hr system) staggered a minimum of 12 in. For the single layer system, panels attached to steel studs and floor runner with 1 in. long Type S steel screws spaced 8 in. OC when applied horizontally, or 8 in. OC along vertical and bottom edges and 12 in. OC in the field when applied vertically. For the double layer system, base layer panels attached to steel studs and floor runner with 1 in. long Type S steel screws spaced 16 in. Face layer panels attached to steel studs and floor runner with 1-5/8 in. long Type S steel screws spaced 16 in. OC.

CANADIAN GYPSUM COMPANY -- Type AR, C, IP-AR, IP-X1, IP-X2, IPC-AR, SCX, SHX, WRC or WRX.
UNITED STATES GYPSUM CO -- Type AR, C, FRX-G, IP-AR, IP-X1, IP-X2, IPC-AR, SCX, SHX, WRC or WRX.
USG MEXICO S A DE C V -- Type AR, C, IP-AR, IP-X1, IP-X2, IPC-AR, SCX, SHX, WRC or WRX.

4B. Gypsum Board* -- (As an alternate to Items 4 or 4A) - Nom 3/4 in. thick, 4 ft wide, installed as described in Item 4A with screw length increased to 1-1/4 in.

CANADIAN GYPSUM COMPANY -- Types AR, IP-AR.
UNITED STATES GYPSUM CO -- Types AR, IP-AR.
USG MEXICO S A DE C V -- Types AR. IP-AR.

5. Joint Tape and Compound -- Vinyl or casein, dry or premixed joint compound applied in two coats to joints and screw heads. Paper tape, 2 in. wide, embedded in first layer of compound over all joints.

6. Batts and Blankets* -- (Optional, not shown) Glass fiber batts may be installed in the interior or wall cavity. The max thickness of the batts shall be 2 1/2 in. for the walls with 2 Hr assembly ratings and 3 1/2 in for the walls with 1 Hr assembly ratings. Attached to wallboard with wire staples spaced horizontally 12 in. OC and vertically 24 in. OC.

CERTAINTEED CORP
GUARDIAN FIBERGLASS INC
JOHNS MANVILLE INTERNATIONAL INC
OWENS CORNING

6A. Fiber, Sprayed* -- As an alternate to Batts and Blankets (Item 6) -- Spray applied cellulose insulation material. The fiber is applied with water to completely fill the enclosed cavity in accordance with the application instructions supplied with the product. Nominal dry density of 3.0 lb/ft3. Alternate application method: The fiber is applied with U.S. Greenfiber LLC Type AD100 hot melt adhesive at a nominal ratio of one part adhesive to 6.6 parts fiber to completely fill the enclosed cavity in accordance with the application instructions supplied with the product. Nominal dry density of 2.5 lb/ft3.
U S GREENFIBER L L C -- Cocoon2 Stabilized or Cocoon-FRM (Fire Rated Material)

6B. Fiber, Sprayed* -- As an alternate to Batts and Blankets (Item 6) and Item 6A - Spray applied cellulose insulation material. The fiber is applied with water to interior surfaces in accordance with the application instructions supplied with the product. Applied to completely fill the enclosed cavity. Minimum dry density of 4.3 pounds per cubic ft.
NU-WOOL CO INC -- Cellulose Insulation

7. Cementitious Backer Units* -- (Optional Item Not Shown - For Use On Face Of 1 Hr Or 2 Hr Systems With All Standard Items Required) - 1/2 in., 5/8 in., 3/4 in. or 1 in. thick, min. 32 in. wide.- Applied vertically or horizontally with vertical joints centered over studs. Fastened to studs and runners with cement board screws of adequate length to penetrate stud by a minimum of 3/8 in. for steel framing members, and a minimum of 3/4 in. for wood framing members spaced a max of 8 in. OC. When 4 ft. wide boards are used, horizontal joints need not be backed by framing. 2-Hr System - Applied vertically with vertical joints centered over studs. Face layer fastened over gypsum board to studs and runners with cement board screws of adequate length to penetrate stud by a minimum of 3/8 in. for steel framing members, and a minimum of 3/4 in. for wood framing members spaced a max of 8 in. OC.
NATIONAL GYPSUM CO -- Type PermaBase

***Bearing the UL Classification Mark**

6 FIRE RATED ASSEMBLY
SCALE: N.T.S.

System NO. C-AJ-1366

December 26, 2001

F Rating — 2 Hr
T Rating — 0 Hr
L Rating At Ambient — Less Than 1 CFM/sq ft

L Rating At 400 F — 2 CFM/sq ft

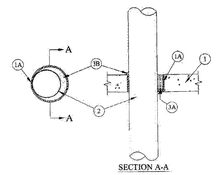

SECTION A-A

1. Floor or Wall Assembly — Min 2-1/2 in. thick reinforced lightweight or normal weight (100-150 pcf) concrete. Wall may also be constructed of any UL Classified Concrete Blocks*. Max diam of opening is 10 in. See Concrete Blocks (CAZT) category in the Fire Resistance Directory for names of manufacturers.

1A. Steel Sleeve (Optional) — Nom 10 in. diam (or smaller) Schedule 10 (or heavier) steel pipe sleeve cast into concrete floor or wall. Sleeve to be flush with top and bottom surfaces of floor or both surfaces of wall.

2. Through Penetrants — One metallic pipe, tubing or conduit to be installed either concentrically or eccentrically within the firestop system. The annular space between tube and periphery of opening shall be min 0 in. to max 7/8 in. Penetrants to be rigidly supported on both sides of floor assembly. The following types and sizes of metallic pipes, tubing or conduit may be used:

A. Steel Pipe — Nom 8 in. diam (or smaller) Schedule 10 (or heavier) steel pipe.

B. Iron Pipe — Nom 8 in. diam (or smaller) cast or ductile iron pipe.

C. Conduit — Nom 6 in. diam (or smaller) rigid steel conduit.

D. Conduit — Nom 4 in. (or smaller) steel electrical metallic tubing.

E. Copper Tubing — Nom 4 in. diam (or smaller) Type L (or heavier) copper tube.

F. Copper Pipe — Nom 4 in. diam (or smaller) Regular (or heavier) copper pipe.

3. Firestop System — The details of the firestop system shall be as follows:

A. Packing Material — Min 2 in. thickness of min 4 pcf mineral wool batt insulation firmly packed into opening as a permanent form. Packing material to be recessed from top surface of floor to accommodate the required thickness of fill material.

B. Fill, Void or Cavity Materials* — Caulk — Min 1/2 in. thickness of caulk applied within the annulus, flush with top surface of floor. Min 1/2 in. diam boad of caulk applied to the penetrant/concrete interface at the point contact location on the top surface of floor.
3M COMPANY — FireDam 150+

*Bearing the UL Classification Mark

4 FIRE RATED ASSEMBLY AT ELECTRICAL ROOM ONLY
SCALE: N.T.S.

System No. W-L-3024

August 06, 2003
F Ratings -- 1 and 2 Hr (See Items 2 and 2A)
T Ratings -- 0, 1/2, 1 and 2 Hr (See Items 2 and 2A)
L Rating At Ambient -- Less Than 1 CFM/sq ft
L Rating At 400 F -- Less Than 1 CFM/sq ft

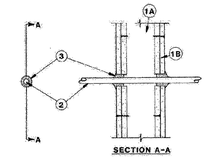

SECTION A-A

1. Wall Assembly -- The 1 or 2 hr fire rated gypsum board/stud wall assembly shall be constructed of the materials and in the manner specified in the individual U300 or U400 Series Wall and Partition Designs in the UL Fire Resistance Directory and shall include the following construction features:

A. Studs -- Wall framing may consist of either wood studs or steel channel studs. Wood studs to consist of nom 2 by 4 in. lumber spaced 16 in. OC. Steel studs to be min 2-1/2 in. wide and spaced max 24 in. OC.

B. Gypsum Board* -- 5/8 in. thick, 4 ft wide with square or tapered edges. The gypsum board type, thickness, number of layers, fastener type and sheet orientation shall be as specified in the individual U300 or U400 Series Design in the UL Fire Resistance Directory. Max diam of opening is 2-1/2 in.
The hourly F Rating of the firestop system is equal to the hourly fire rating of the wall assembly in which it is installed.

2. Cables -- One cable to be installed either concentrically or eccentricity within the firestop system. The annular space within the firestop system shall be a min 0 in. (point contact) to a max 1/4 in. Cable to be rigidly supported on both sides of wall assembly. The following types and sizes of cables may be used:
A. Max 200 pair No. 24 AWG (or smaller) copper conductor cable with polyvinyl chloride (PVC) jacketing and insulation. When 200 pair No. 24 AWG telephone cable is used, T Rating is 0 hr. When 50 pair No. 24 AWG telephone cable is used, T Rating is equal to the F rating of the firestop system.
B. Max 3/C No. 2/0 AWG (or smaller) aluminum conductor service entrance cable with PVC insulation and jacketing. When service entrance cable is used, the T Rating is equal to the F Rating of the firestop system.
C. Max 1/C-750 kcmil copper conductor power cable with cross-linked polyethylene (XLPE) insulation and jacketing. When 1/C-750 kcmil cable is used, the T Rating is equal to the F Rating of the firestop system.
D. Max 3/C No. 8 AWG (or smaller) PVC insulated and jacketed nonmetallic sheathed (Romex) cable. When Romex is used, the T Rating is equal to the F Rating of the firestop system.
E. Max RG59/U (or smaller) coaxial cable with fluorinated ethylene insulation and jacketing. When coaxial cable is used, the T Rating is equal to the F Rating of the firestop system.
F. Max 62.5/125 micron fiber optic cable with PVC insulation and jacketing. When fiber optic cable is used, the T Rating is equal to the F Rating of the firestop system.
G. Max 4 pair No. 24 AWG (or smaller) copper conductor data cable with Hylar insulation and jacketing. When data cable is used, the T Rating is equal to the F Rating of the firestop system.

2A. Through-Penetrating Product* -- As an alternate to Item 2, max one through-penetrating product to be installed either concentrically or eccentrically within the firestop system. Through-penetrating product to be rigidly supported on both sides of wall assembly. The following types of through-penetrating products may be used:
A. Max four copper conductors No. 4/0 AWG (or smaller) aluminum or steel Armored Cable+ or Metal-Clad Cable+. When armored or metal-clad cable is used, the T Rating is 1/2 hr.
AFC CABLE SYSTEMS INC
B. Two or more twisted copper conductors No. 6 AWG (or smaller) Power Limited Circuit Cable+ with or without a jacket under a metal armor. When Power Limited Circuit Cable+ is used, the T Rating is 1/2 hr.
AFC CABLE SYSTEMS INC
C. Two or more twisted copper conductors No. 10 AWG (or smaller) Power Limited Fire Alarm Cable+ with or without a jacket under a metal armor. When Power Limited Fire Alarm Cable+ is used, the T Rating is equal to the F Rating of the firestop system.
AFC CABLE SYSTEMS INC
D. Two or more twisted copper conductors No. 12 AWG (or smaller) Non Power Limited Fire Alarm Cable+ with or without a jacket under a metal armor. When Non Power Limited Fire Alarm Cable+ is the T Rating is equal to the F Rating of the firestop system.
AFC CABLE SYSTEMS INC

3. Fill Void or Cavity Material* -- Sealant or Putty -- Min 5/8 in. thickness of fill material installed within annulus, flush with both surfaces of wall assembly. Additional fill material installed such that a min 1/4 in. diam crown is formed around the through-penetrant on both sides of the wall.
SPECIFIED TECHNOLOGIES INC -- SpecSeal Series 100 Sealant or SpecSeal Putty
***Bearing the UL Classification Marking**
+Bearing the UL Listing Mark

2 FIRE RATED ASSEMBLY
SCALE: N.T.S.

System No. WW-D-1052

February 24, 2005
Assembly Rating - 3 Hr
L Rating at Ambient - Less than 1 CFM/Lin Ft
L Rating at 400° F - Less than 1 CFM/Lin Ft
Nominal Joint Width - 3-1/2 In.
Class II and III Movement Capabilities - 14 % Compression or Extension

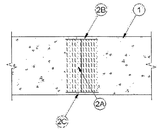

1. Wall Assembly -- Min 5-1/2 in. (140 mm) thick reinforced lightweight or normal weight (100-150 pcf or 1600-2400 kg/m3) concrete. Wall may also be constructed of any UL Classified Concrete Blocks*.

See Concrete Blocks (CAZT) category in the Fire Resistance Directory for names of manufacturers.

2. Joint System -- Max width of joint (at time of installation of joint system) is 3-1/2 in. (89 mm). The joint system is designed to accommodate a max 14 percent compression or extension from its installed width. The joint system shall consist of the following:

A. Forming Material* -- Min 4 pcf (64 kg/m3) mineral wool batt insulation installed in joint opening as a permanent form. Pieces of batt cut to min width of 5 in. (127 mm) and installed edge-first into joint opening, parallel with joint direction, such that batt sections are compressed min 56 percent in thickness and that the compressed batt sections are recessed from both surfaces of the wall as required to accommodate the required thickness of fill material. Adjoining lengths of batt to be tightly-butted with butted seams spaced min 36 in. (914 mm) apart along the length of the joint.

FIBREX INSULATIONS INC -- FBX Safing Insulation

ROCK WOOL MANUFACTURING CO -- Delta Board

B. Fill, Void or Cavity Material* -- Min 1/4 in. (6 mm) thickness of fill material applied within the annulus, flush with exterior side of wall.

TREMCO INC -- Dymeric 240FC

C. Fill, Void or Cavity Material* -- When Fyre-Sil or Dymeric 240FC is used, min 1/4 in. (6 mm) thickness of fill material applied within the joint, flush with interior side of wall. When TREMstop Acrylic SP is used, min 1/8 in. (3 mm) (wet) thickness of fill material spray or brush applied to completely cover bottom surface of mineral wool and lap min 1 in. (25 mm) onto each edge of concrete.

TREMCO INC -- Fyre-Sil, TREMstop Acrylic SP or Dymeric 240FC

***Bearing the UL Classification Mark**

5 FIRE RATED ASSEMBLY
SCALE: N.T.S.

System No. W-L-8011

February 07, 2003
F Ratings -- 1 & 2 Hr. (See Item 1B)
T Rating -- 1/2 Hr.

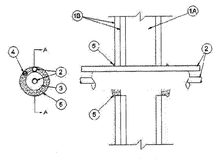

SECTION A-A

1. Wall Assembly -- The 1 or 2 hr fire-rated gypsum board/stud wall assembly shall be constructed of the materials and in the manner described in the individual U300 or U400 Series Wall or Partition Design in the UL Fire Resistance Directory and shall include the following construction features:

A. Studs -- Wall framing may consist of either wood studs or steel channel studs. Wood studs to consist of nom 2 by 4 in. lumber spaced 16 in. O.C. with nom 2 by 4 in. lumber end plates and cross braces. Steel studs to be min 3-5/8 in. wide and spaced max 24 in. O.C.

B. Gypsum Board* -- 5/8 in. thick, 4 ft wide with square or tapered edges. The gypsum board type, thickness, number of layers, fastener type and sheet orientation shall be as specified in the individual U300 or U400 Series Design in the UL Fire Resistance Directory. Max diam of opening is 3-1/2 in.
The hourly F Rating of the firestop system is equal to the hourly fire rating of the wall assembly in which it is installed.

2. Through Penetrant -- A max of two pipes or tubing to be installed within the opening. Of the two pipes, or tubing, only one of the pipes or tubing shall have a nom diam greater than 1/2 in. The annular space between pipes or tubing and periphery of opening shall be min 0 in. (point contact) to max 1/2 in. Pipes or tubing to be rigidly supported on both sides of wall assembly. The following types and sizes of metallic pipes or tubing may be used:

A. Steel Pipe -- Nom 1 in. diam (or smaller) Schedule 10 (or heavier) steel pipe.

B. Iron Pipe -- Nom 1 in. diam (or smaller) cast or ductile iron pipe.

C. Copper Tubing -- Nom 1 in. diam (or smaller) Type L (or heavier) copper tubing.

D. Copper Pipe -- Nom 1 in. diam (or smaller) Regular (or heavier) copper pipe.

3. Tube Insulation -- Plastics+ -- Nom 3/4 in. thick acrylonitrile butadiene/polyvinyl chloride (AB/PVC) flexible foam furnished in the form of tubing. The tube insulation may be installed on a max of one pipe or tubing. The annular space between penetrating item and periphery of opening shall be min 1/2 into max 3/4 in. The space between pipes or tubing shall be 0 in. (point contact)

See Plastics+ (QMFZ2) category in the Recognized Component Directory for names for manufacturers. Any Recognized Component tube insulation material meeting the above specifications and having a UL 94 Flammability Classification of 94-5VA may be used.

4. Cables -- One 4 pair No. 18 AWG (or smaller) thermostat cable with polyvinyl chloride (PVC) insulation and jacket materials. Cable to be spaced a min 0 in. (point contact) to max 1/2 in. from the other penetrants. The space between the cable and the periphery of the opening shall be a min 0 in. (point contact) to max 1/2 in. Cable to be rigidly supported on both sides of wall assembly.

5. Fill, Void or Cavity Material* -- Sealant -- Min 5/8 in.thickness of fill material applied within annulus, flush with both surfaces of wall. Additional fill material to be to be forced into intersties within groups of penetrating items to max extent possible and installed such that a min 1/4 in. thick crown is formed around the penetrating items and lapping 1/4 in. beyond the periphery of the opening.
SPECIFIED TECHNOLOGIES INC -- SpecSeal 100, 101, 102 or 105 Sealant

+Bearing the UL Recognized Component Mark
***Bearing the UL Classification Mark**

3 FIRE RATED ASSEMBLY
SCALE: N.T.S.

System No. W-L-2003

May 23, 2005
F Ratings -- 1 and 2 Hr (See Item 3)
T Ratings -- 1 and 2 Hr (See Item 3)
L Rating At Ambient -- 7 CFM/sq ft (See Item 3B)
L Rating At 400 F -- less than 1 CFM/sq ft (See Item 3B)

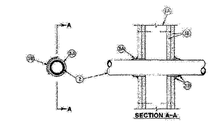

SECTION A-A

1. Wall Assembly -- The 1 or 2 hr fire-rated gypsum board/stud wall assembly shall be constructed of the materials and in the manner described in the individual U300, U400 or V400 Series Wall or Partition Design in the UL Fire Resistance Directory and shall include the following construction features:

A. Studs -- Wall framing may consist of either wood studs or steel channel studs. Wood studs to consist of nom 2 by 4 in. (51 by 102 mm) lumber spaced 16 in. (406 mm) OC with nom 2 by 4 in. (51 by 102 mm) lumber end plates and cross braces. Steel studs to be min 3-5/8 in. (92 mm) wide by 1-3/8 in. (35 mm) deep channels spaced max 24 in. (610 mm) OC.

B. Gypsum Board* -- 5/8 in. (16 mm) thick, 4 ft (122 cm) wide with square or tapered edges. The gypsum board type, thickness, number of layers, fastener type and sheet orientation shall be as specified in the individual U300, U400 or V400 Series Design in the UL Fire Resistance Directory. Max diam of opening is 3-1/8 in. (79 mm).

2. Through Penetrants -- One nonmetallic pipe or conduit to be centered in the through opening. The annular space between pipe or conduit and periphery of opening shall be min 1/4 in. (6 mm) and max 3/8 in. (10 mm). Pipe or conduit to be rigidly supported on both sides of the floor-ceiling assembly. The following types and sizes of nonmetallic pipes or conduits may be used:

A. Polyvinyl Chloride (PVC) Pipe -- Nom 2 in. (51 mm) diam (or smaller) Schedule 40 solid core PVC pipe for use in closed (process or supply) or vented (drain, waste or vent) piping system.

B. Rigid Nonmetallic Conduit++ -- Nom 2 in. (51 mm) diam (or smaller)(Schedule 40 or 80) PVC conduit installed in accordance with the National electric Code (NFPA No. 70).

C. Chlorinated Polyvinyl Chloride (CPVC) Pipe -- Nom 2 in. (51 mm) diam (or smaller) SDR13.5 CPVC pipe for use in closed (process or supply) piping systems.

D. Cellular Core Polyvinyl Chloride (ccPVC) Pipe -- Nom 2 in. (51 mm) diam (or smaller) Schedule 40 cellular core PVC pipe for use in closed (process or supply) or vented (drain, waste or vent) piping system.

E. Acrylonitrile Butadiene Styrene (ABS) Pipe -- Nom 2 in. (51 mm) diam (or smaller) Schedule 40 solid core ABS pipe for use in closed (process or supply) or vented (drain, waste or vent) piping systems.

F. Cellular Core Acrylonitrile Butadiene Styrene (ccABS) Pipe -- Nom 2 in. (51 mm) diam (or smaller) Schedule 40 cellular core ABS pipe for use in closed (process or supply) or vented (drain, waste or vent) piping systems.

3. Firestop System -- Installed symmetrically on both sides of wall assembly. The hourly F and T Ratings for the firestop system are equal to the hourly fire rating of the wall assembly in which it is installed. The details of the firestop system shall be as follows.

A. Fill, Void or Cavity Materials* -- Wrap Strip -- Nom 1/4 in. (6 mm) thick intumescent elastomeric material faced on one side with aluminum foil, supplied in 2 in. (51 mm) wide strips. Nom 2 in. (51 mm) wide strip tightly wrapped around nonmetallic pipe (foil side out) with seam butted. Wrap strip layer securely bound with steel wire or aluminum foil tape and slid into annular space approx 1-1/4 in. (32 mm) such that approx 3/4 in. (19 mm) of the wrap strip protrudes from the wall surface.
3M COMPANY -- FS-195+

B. Fill, Void or Cavity Materials* -- Caulk, Sealant or Putty -- Min 5/8 in. (16 mm) thickness of caulk or putty applied into annular space between wrap strip and periphery of opening. A nom 1/4 in. (6 mm) diam bead of caulk or putty to be applied to the wrap strip/wall interface and to the exposed edge of the wrap strip layers approx 3/4 in. (19 mm) from the wall surface.
3M COMPANY -- CP 25WB+ caulk or MP+ Stix putty, IC 15WB+ caulk, FireDam 150+ caulk or FB-3000 WT sealant. (Note: L Ratings apply only when Type CP 25WB+ caulk or FB-3000 WT sealant is used. CP 25WB+ not suitable for use with CPVC pipes.)

C. Foil Tape -- (not shown) -- Nom 4 in. (102 mm) wide, 3 mil thick aluminum tape wrapped around pipe prior to the installation of the wrap strip (Item 3A). Min of one wrap, flush with both sides of wall and proceeding outward. Tape is not required for pipes shown in Items 2A, 2B and 2C.

***Bearing the UL Classification Mark**

RECORD SET
The information presented on this drawing is diagrammatic and is presented for general information purposes and should not be relied on for accuracy of dimensions, details and locations. Actual and exact conditions if required should be determined in the field.

1 FIRE RATED ASSEMBLY
SCALE: N.T.S.

JMWA ARCHITECTS
STEVEN E. MYOTT AIA
JAMES R. WILLIAMS AIA
RODOLFO ACEVEDO AIA

949 CLINT MOORE ROAD
BOCA RATON, FLORIDA 33487
TEL 561 997 9997
FAX 561 997 1610

WWW.JMWA.NET

PALMETTO BAY VILLAGE HALL
Palmetto Bay, Florida

Master Builders of South Florida, Inc.
1400 E. Oakland Park Blvd. Suite 210
Oakland Park, FL 33334

FLORIDA LICENSURE

AAC002193 IB0001142

PROJECT NO.	8714.00
DESIGNED BY:	RA
DRAWN BY:	DW / EK / JS
CHECKED BY:	JW

SUBMITTALS:
BUILDING PERMIT 03.05.2010

REVISIONS:

FIRE RATED ASSEMBLY DETAILS

A807

© 2009 JMWA ARCHITECTS, INCORPORATED ALL RIGHTS RESERVED. NO PART OF THESE IDEAS, PLANS OR DESIGNS MAY BE REPRODUCED, COPIED OR UTILIZED GRAPHICALLY IN ANY FORM WHATSOEVER WITHOUT THE EXPRESSED WRITTEN CONSENT OF JMWA ARCHITECTS INCORPORATED AND ITS BOARD OF DIRECTORS.

S:\Projects\8700\8714\8714_Drawings\8714_Current\8714_A807_Fire Rated Assembly Details.dwg
1/5/2010 3:27:09 PM joses

ROOM FINISH SCHEDULE

1st FLOOR

ROOM NUMBER	ROOM NAME	FLOOR		BASE		WALL MATERIAL				PAINT FINISH				WAINSCOT				CEILING			REMARKS
		MATERIAL	FINISH	MATERIAL	FINISH	NORTH WALL	EAST WALL	SOUTH WALL	WEST WALL	NORTH WALL	EAST WALL	SOUTH WALL	WEST WALL	NORTH WALL	EAST WALL	SOUTH WALL	WEST WALL	MATERIAL	PAINT FINISH	HEIGHT - SEE SHEETS A221 & A222	
101	LOBBY	1	-	23	-	31	31	31	31	63	63	63	63	-	-	-	-	42	-	-	
102	CASHIER	1	-	23	-	31	31	31	31	63	63	63	63	-	-	-	-	41	-	-	
103	VILLAGE CLERK	2	-	23	-	31	31, 35	31	31	63	63	63	63	-	-	-	-	41	-	-	
104	STORAGE	2	-	23	-	31	31	31	31	63	63	63	63	-	-	-	-	41	-	-	
105	WAITING ROOM	2	-	23	-	31	31	31	31	63	63	63	63	-	-	-	-	41	-	-	
106	GRAPHICS	2	-	23	-	31	31	31	31	63	63	63	63	-	-	-	-	41	-	-	
107	MAIL ROOM	1	-	23	-	31	31	31	31	63	63	63	63	-	-	-	-	41	-	-	
108	WOMEN'S RESTROOM	1	-	21	-	32, 37	32, 37	32, 37	32, 37	63	63	63	63	-	-	-	-	43	63	-	TILE FINISH TO 6'-0" A.F.F. PAINT ABOVE
109	MEN'S RESTROOM	1	-	21	-	32, 37	32, 37	32, 37	32, 37	63	63	63	63	-	-	-	-	43	63	-	TILE FINISH TO 6'-0" A.F.F. PAINT ABOVE
110	ELECTRICAL ROOM	4	-	22	-	31	31	31	31	63	63	63	63	-	-	-	-	45	-	-	
111	ELEVATOR 1	1	-	-	-	33	33	33	33	-	-	-	-	-	-	-	-	-	-	-	
112	ELEVATOR 2	1	-	-	-	33	33	33	33	-	-	-	-	-	-	-	-	-	-	-	
113	STAIR 2	8, 9	-	22	-	31	31	31	31	63	63	63	63	-	-	-	-	42	63	-	
114	JANITOR CLOSET	4	-	22	-	32, 35	32	32	32, 35	51, 63	63	63	51, 63	51	-	-	51	45	-	-	
115	MEN'S RESTROOM	1	-	21	-	32, 37	32, 37	32, 37	32, 37	63	63	63	63	-	-	-	-	43	63	-	TILE FINISH TO 6'-0" A.F.F. PAINT ABOVE
116	WOMEN'S RESTROOM	1	-	21	-	32, 37	32, 37	32, 37	32, 37	63	63	63	63	-	-	-	-	43	63	-	TILE FINISH TO 6'-0" A.F.F. PAINT ABOVE
117	GYM	5	-	23	-	31	31	31	31	63	63	63	63	-	-	-	-	41	-	-	
118	BREAK / RECYCLING ROOM	1	-	23	-	31	31	31,32,37	31	63	63	63	63	-	-	-	-	41, 42	-	-	
119	CORRIDOR	1	-	23	-	31	31	31	31	63	63	63	63	-	-	-	-	41	-	-	
120	OFFICE	2	-	23	-	31	31	31	31	63	63	63	63	-	-	-	-	41	-	-	
121	FILES	2	-	23	-	31	31	31	31	63	63	63	63	-	-	-	-	41	-	-	
122	ELEVATOR ROOM	4	-	22	-	31	31	31	31	63	63	63	63	-	-	-	-	45	-	-	
123	POLICE DEPT. WAITING	1	-	21	-	31	31	31	31	63	63	63	63	-	-	-	-	41	-	-	
124	FINGERPRINTING	2	-	23	-	31	31	31	31	63	63	63	63	-	-	-	-	41	-	-	
125	FRONT DESK	2	-	23	-	31	31	31	31	63	63	63	63	-	-	-	-	41	-	-	
126	ADMIN. P.S.S.	2	-	23	-	31	31	31	31	63	63	63	63	-	-	-	-	41	-	-	
127	STAIR 1	10	-	-	-	31	31	31	31	63	63	63	63	-	-	-	-	42	63	-	
128	I.T.	2	-	23	-	31	31	31	31	63	63	63	63	-	-	-	-	41	-	-	
129	SERGEANT	2	-	23	-	31	31	31	31	63	63	63	63	-	-	-	-	41	-	-	
130	STORAGE	2	-	23	-	31	31	31	31	63	63	63	63	-	-	-	-	41	-	-	
131	ROLL CALL	2	-	23	-	31	31	31	-	63	63	63	63	-	-	-	-	41, 42	63	-	
132	INTERROGATION	4	-	23	-	31	31	31	31	63	63	63	63	-	-	-	-	41	-	-	
133	INTERROGATION	4	-	23	-	31	31	31	31	63	63	63	63	-	-	-	-	41	-	-	
134	COMPUTER ROOM	2	-	23	-	31	31	31	31	63	63	63	63	-	-	-	-	41	-	-	
135	COMMUNITY OUTREACH OFF.	2	-	23	-	31	31	31	31	63	63	63	63	-	-	-	-	41	-	-	
136	CORRIDOR	2	-	23	-	31	31	31	31	63	63	63	63	-	-	-	-	41	-	-	
137	SECRETARY	2	-	23	-	31	31	31	31	63	63	63	63	-	-	-	-	41	-	-	
138	LIEUTENANT	2	-	23	-	31	31	31	31	63	63	63	63	-	-	-	-	41	-	-	
139	COMMANDER	2	-	23	-	31	31	31	31	63	63	63	63	-	-	-	-	41	-	-	
140	BIKE STORAGE	10	-	-	-	31	31, 39	31, 39	31, 39	63	63	63	63	-	-	-	-	45	-	-	
141	G.I.U.	2	-	23	-	31	31	31	31	63	63	63	63	-	-	-	-	41	-	-	
142	INVESTIGATIVE OFFICERS	2	-	23	-	31	31	31	31	63	63	63	63	-	-	-	-	41	-	-	
143	VILLAGE COUNCIL	2	-	23	-	31	31	31, 35	31	63	63	63	63	-	-	-	-	41	-	-	
144	MAYOR	2	-	23	-	31, 36	31, 36	31, 36	31, 36	63, 66	63, 66	63, 66	63, 66					41, 42	63	-	WOOD CHAIR RAIL (CR-1) W/ PT-4 BELOW
145	CONFERENCE	2	-	23	-	31, 36	31, 36	31, 36	31, 36	63, 66	63, 66	63, 66	63, 66	-	-	-	-	41, 42	63	-	WOOD CHAIR RAIL (CR-1) W/ PT-4 BELOW
146	NOT USED	-	-	-	-	-	-	-	-	-	-	-	-	-	-	-	-	-	-	-	
147	KITCHEN	2	-	23	-	31	31	32, 37	31	63	63	63	63	-	-	-	-	41, 42	-	-	
148	STAFF	2	-	23	-	31	31	31	31	63	63	63	63	-	-	-	-	41	-	-	
149	AUDIO / VISUAL	2	-	23	-	31	31	31	31	63	63	63	63	-	-	-	-	41	-	-	
150	MEDIA	2	-	23	-	31	31	31	31	63	63	63	63	-	-	-	-	41	-	-	
151	CORRIDOR	1	-	23	-	31	-	31	31	63	63	63	63	-	-	-	-	41, 42	63	-	WOOD CHAIR RAIL (CR-1) W/ PT-4 BELOW
152	VILLAGE CHAMBERS	2	-	23	-	31, 36	31, 36	31, 36	36	63	63	63	63	-	-	-	-	42	-	-	WOOD CHAIR RAIL (CR-2)
153	CONFERENCE	2	-	23	-	31	31	31	31	63	63	63	63	-	-	-	-	41, 42	-	-	
154	VESTIBULE	2	-	23	-	31	31	31	31	63	63	63	63	-	-	-	-	41	-	-	
155	CORRIDOR	1	-	23	-	31	31	31	31	63	63	63	63	-	-	-	-	41, 42	-	-	WOOD CHAIR RAIL (CR-1) W/ PT-4 BELOW
156	CORRIDOR	2	-	23	-	31	31	31	31	63	63	63	63	-	-	-	-	41, 42	-	-	
157	NOT USED	-	-	-	-	-	-	-	-	-	-	-	-	-	-	-	-	-	-	-	
158	CODE COMPLIANCE	2	-	23	-	31	31	31	31	63	63	63	63	-	-	-	-	41	-	-	
159	RECORDS	2	-	23	-	31	31	31	31	63	63	63	63	-	-	-	-	41	-	-	
160	PLANNING & ZONING WAITING	1	-	23	-	31	31	31	31	63	63	63	63	-	-	-	-	41	-	-	
161	CONFERENCE	2	-	23	-	31	31	31	31	63	63	63	63	-	-	-	-	41, 42	63	-	
162	PLANNING & ZONING DIR.	2	-	23	-	31	31	31	31	63	63	63	63	-	-	-	-	41	-	-	
163	GRAPHIC INFO. SYSTEMS	2	-	23	-	31	31	31	31	63	63	63	63	-	-	-	-	41	-	-	
164	PLANNER	2	-	23	-	31	31	31	31	63	63	63	63	-	-	-	-	41	-	-	
165	COPY AREA	2	-	23	-	-	31	31	31	63	63	63	63	-	-	-	-	41	-	-	
166	RECEPTION	2	-	23	-	31	-	31	31	63	63	63	63	-	-	-	-	41	-	-	
167	STORAGE	2	-	23	-	31	31	31	31	63	63	63	63	-	-	-	-	41	-	-	
168	CORRIDOR	1	-	23	-	31	31	31	31	63	63	63	63	-	-	-	-	41, 42	-	-	WOOD CHAIR RAIL (CR-1) W/ PT-4 BELOW
169	CORRIDOR	1	-	23	-	31	31	31	31	63	63	63	63	-	-	-	-	41, 42	-	-	WOOD CHAIR RAIL (CR-1) W/ PT-4 BELOW
170	PLAN STORAGE	2	-	23	-	31	31	31	31	63	63	63	63	-	-	-	-	41	-	-	
171	BUILDING DEPARTMENT	2	-	23	-	31	31	31	31	63	63	63	63	-	-	-	-	41	-	-	
172	BUILDING DEPARTMENT	2	-	23	-	31	31	31	31	63	63	63	63	-	-	-	-	41	-	-	
173	CONFERENCE	2	-	23	-	31	31	31	31	63	63	63	63	-	-	-	-	41, 42	-	-	
174	BUILDING OFFICIAL ASSIST.	2	-	23	-	31	-	31	31	63	63	63	63	-	-	-	-	41, 42	-	-	
175	OFFICE MANAGER	2	-	23	-	31	-	31	31	63	63	63	63	-	-	-	-	41, 42	-	-	
176	BUILDING OFFICIAL	2	-	23	-	31	31	31	31	63	63	63	63	-	-	-	-	41	-	-	
178	STORAGE (177 NOT USED)	2	-	23	-	31	31	31	31	63	63	63	63	-	-	-	-	41	-	-	
179	CORRIDOR	1	-	23	-	31	31	31	31	63	63	63	63	-	-	-	-	41, 42	-	-	WOOD CHAIR RAIL (CR-1) W/ PT-4 BELOW
180	KITCHEN	1	-	23	-	31	31	32, 37	31	63	63	63	63	-	-	-	-	41, 42	-	-	
181	WOMEN'S RESTROOM	1	-	21	-	32, 37	32, 37	32, 37	32, 37	63	63	63	63	-	-	-	-	43	63	-	TILE FINISH TO 6'-0" A.F.F. PAINT ABOVE
182	MEN'S RESTROOM	1	-	21	-	32, 37	32, 37	32, 37	32, 37	63	63	63	63	-	-	-	-	43	63	-	TILE FINISH TO 6'-0" A.F.F. PAINT ABOVE
183	WAITING ROOM	1	-	23	-	31	31	31	31	63	63	63	63	-	-	-	-	41	-	-	
184	RECEPTION	2	-	23	-	31	31	31	31	63	63	63	63	-	-	-	-	41	-	-	
185	TELEPHONE ROOM	4	-	22	-	31	31	31	31	63	63	63	63	-	-	-	-	45	-	-	

ROOM FINISH SCHEDULE

2nd FLOOR

ROOM NUMBER	ROOM NAME	FLOOR		BASE		WALL MATERIAL				PAINT FINISH				WAINSCOT				CEILING			REMARKS
		MATERIAL	FINISH	MATERIAL	FINISH	NORTH WALL	EAST WALL	SOUTH WALL	WEST WALL	NORTH WALL	EAST WALL	SOUTH WALL	WEST WALL	NORTH WALL	EAST WALL	SOUTH WALL	WEST WALL	MATERIAL	PAINT FINISH	HEIGHT - SEE SHEETS A221 & A222	
186	VILLAGE COUNCIL	2	-	23	-	31	31	31	31	63	63	63	63	-	-	-	-	41	-	-	
187	STORAGE	2	-	23	-	31	31	31	31	63	63	63	63	-	-	-	-	41	-	-	
188	UNISEX RESTROOM	1	-	21	-	32, 37	32, 37	32, 37	32, 37	63	63	63	63	-	-	-	-	43	63	-	TILE FINISH TO 6'-0" A.F.F. PAINT ABOVE
189	KITCHEN	1	-	21	-	31	32, 37	32, 37	31	63	63	63	63	-	-	-	-	41, 42	-	-	
190	PERSONAL STORAGE	1	-	21	-	31	31	31	31	63	63	63	63	-	-	-	-	41	-	-	
201	WAITING ROOM	1	-	23	-	31, 36	31, 36	31, 36	31, 36	63, 66	63, 66	63, 66	63, 66	-	-	-	-	41, 42	-	-	WOOD CHAIR RAIL (CR-1) W/ PT-4 BELOW
202	RECEPTION	1	-	23	-	31	31	31	31	63	63	63	63	-	-	-	-	41, 42	-	-	
203	WOMEN'S RESTROOM	1	-	21	-	32, 37	32, 37	32, 37	32, 37	63	63	63	63	-	-	-	-	43	63	-	TILE FINISH TO 6'-0" A.F.F. PAINT ABOVE
204	MEN'S RESTROOM	1	-	21	-	32, 37	32, 37	32, 37	32, 37	63	63	63	63	-	-	-	-	43	63	-	TILE FINISH TO 6'-0" A.F.F. PAINT ABOVE
205	ELECTRICAL ROOM	4	-	22	-	31, 39	31, 39	31, 39	31, 39	63	63	63	63	-	-	-	-	45	-	-	
206	JANITOR CLOSET	4	-	22	-	32	32, 35	32	32	-	51, 63	-	-	-	51	-	-	45	-	-	
207	I.T. ROOM	4	-	23	-	31, 39	31, 39	31, 39	31, 39	63	63	63	63	-	-	-	-	41	-	-	
208	I.T. OFFICE	4	-	23	-	31	31	31	31	63	63	63	63	-	-	-	-	41	-	-	
209	BREAK AREA	1	-	23	-	31	31	31	31	63	63	63	63	-	-	-	-	41, 42	-	-	
209a	STORAGE	1	-	23	-	31	31	31	31	63	63	63	63	-	-	-	-	41	-	-	
210	TRAINING	2	-	23	-	31	31	31	31	63	63	63	63	-	-	-	-	41	-	-	
211	STORAGE	1	-	23	-	31	31	31	31	63	63	63	63	-	-	-	-	41	-	-	
212	FOYER	1	-	23	-	31	31	31	31	63	63	63	63	-	-	-	-	41, 42	-	-	
213	STAIR 2	8, 9	-	22	-	31	31	31	31	63	63	63	63	-	-	-	-	42	63	-	
214	MANAGER	1	-	23	-	31	31	31	31	63	63	63	63	-	-	-	-	41, 42	-	-	
215	CONFERENCE	2	-	23	-	31	31	31	31	63	63	63	63	-	-	-	-	41, 42	-	-	
216	ASSISTANT MANAGER	2	-	23	-	31	31	31	31	63	63	63	63	-	-	-	-	41	-	-	
217	PUBLIC INFO. OFFICER	2	-	23	-	31	31	31	31	63	63	63	63	-	-	-	-	41	-	-	
218	FINANCE DIRECTOR	2	-	23	-	31	31	31	31	63	63	63	63	-	-	-	-	41	-	-	
219	FINANCE ASSISTANT	2	-	23	-	31	31	31	31	63	63	63	63	-	-	-	-	41	-	-	
220	PARKS ASSISTANT	2	-	23	-	31	31	31	31	63	63	63	63	-	-	-	-	41	-	-	
221	PARKS DIRECTOR	2	-	23	-	31	31	31	31	63	63	63	63	-	-	-	-	41	-	-	
222	STORAGE	2	-	23	-	31	31	31	31	63	63	63	63	-	-	-	-	41	-	-	
223	PARKS DEPARTMENT	2	-	23	-	31	31	31	31	63	63	63	63	-	-	-	-	41	-	-	
224	CONFERENCE	2	-	23	-	31	31	31	31	63	63	63	63	-	-	-	-	41, 42	-	-	
225	TESTING	2	-	23	-	31	31	31	31	63	63	63	63	-	-	-	-	41	-	-	
226	HUMAN RESOURCES	2	-	23	-	31	31	31	31	63	63	63	63	-	-	-	-	41	-	-	
227	STAIR 1	10	-	-	-	31	31	31	31	63	63	63	63	-	-	-	-	42	63	-	
228	ASSISTANT	2	-	23	-	31	31	31	31	63	63	63	63	-	-	-	-	41	-	-	
229	STORAGE	2	-	23	-	31	31	31	31	63	63	63	63	-	-	-	-	41	-	-	
230	COPY AREA	2	-	23	-	31	31	31	31	63	63	63	63	-	-	-	-	41	-	-	
231	CORRIDOR	1	-	23	-	31	31	31	31	63	63	63	63	-	-	-	-	41, 42	-	-	
232	FINANCE DEPARTMENT	2	-	23	-	31	31	31	31	63	63	63	63	-	-	-	-	41	-	-	
233	BATH	1	-	21	-	32, 37	32, 37	32, 37	32, 37	63	63	63	63	-	-	-	-	43	63	-	
234	STORAGE	2	-	23	-	31	31	31	31	63	63	63	63	-	-	-	-	41	-	-	
235	CORRIDOR	1	-	23	-	31	31	31	31	63	63	63	63	-	-	-	-	41, 42	-	-	
236	MANAGER STORAGE	2	-	23	-	31	31	31	31	63	63	63	63	-	-	-	-	41	-	-	
237	WAITING	2	-	23	-	31	-	31	31	63	63	63	63	-	-	-	-	41	-	-	
238	CORRIDOR	2	-	23	-	31	31	31	31	63	63	63	63	-	-	-	-	41	-	-	
239	EXECUTIVE ASSISTANT	2	-	23	-	31	31	31	31	63	63	63	63	-	-	-	-	41	-	-	
240	CORRIDOR	1	-	23	-	31	31	31	31	63	63	63	63	-	-	-	-	41	-	-	
241	TELEPHONE ROOM	4	-	22	-	31	31	31	31	63	63	63	63	-	-	-	-	45	-	-	
242	FUTURE ROOF TERRACE	SEE A301		-	-	-	-	-	-	-	-	-	-	-	-	-	-	-	-	-	

ROOM FINISH LEGEND

FLOOR MATERIAL

1. PORCELAIN TILE
2. CARPET
3. N/A
4. VINYL COMPOSITION TILE
5. RUBERIZED FLOOR
6. CERAMIC TILE
7. ENTRY CARPET W/ALUMINUM AND NYLON INSERT
8. RUBBER STAIR LANDING TILE
9. RUBBER STAIR TREAD/RISER
10. SEALED CONCRETE

BASE MATERIAL

21. METAL COVE BASE
22. 4" RUBBER BASE
23. 4" WOOD BASE
24. N/A
25. N/A
26. N/A
27. N/A
28. N/A
29. N/A
30. N/A

WALL MATERIAL

31. GYPSUM BOARD
32. MOISTURE RESISTANT GYPSUM BOARD
33. PLASTIC LAMINATE
34. CONCRETE BLOCK
35. FIBERGLASS PANEL
36. WOOD PANELING (BAMBOO)
37. PORCELAIN TILE
38. N/A
39. PLYWOOD (REINFORCING)
40. N/A

CEILING MATERIAL

41. 2' X 2' ACOUSTICAL CEILING TILES
42. GYPSUM BOARD
43. MOISTURE RESISTANT GYPSUM BOARD
44. N/A
45. EXPOSED STRUCTURE
46. N/A
47. N/A
48. N/A
49. N/A
50. N/A

WAINSCOT MATERIAL

51. WHITE ~~FIBERGLASS REINFORCED PANELS~~
52. WOOD PANELING (BAMBOO) BY VILLAGE OF PALMETTO BAY
53. N/A
54. N/A
55. N/A
56. N/A
57. N/A
58. N/A
59. N/A
60. N/A

PAINT MATERIAL

61. GLOSS
62. SEMI-GLOSS
63. EGGSHELL
64. FLAT
65. EPOXY
66. MANUFACTURERS STANDARD FINISH
67. - 70. N/A

PAINT SHEENS ARE AS FOLLOWS:
1. ALL WALLS, CEILINGS AND SOFFITS TO BE EGGSHELL FINISH, U.N.O.
2. WALLS AND CEILINGS IN WET AREAS TO BE EPOXY ENAMEL W/EGGSHELL FINISH.
3. ALL RAILINGS TO BE GLOSS ENAMEL.
4. UNLESS NOTED OTHERWISE, ALL ROOMS ARE TO BE PAINTED.

NOTES:
1. ALL COLUMNS SHALL BE BOXED-OUT WITH DRYWALL.
2. ALL MIRROR EDGES SHALL BE GROUND / POLISHED.
3. ALL CABINET INTERIORS TO BE WHITE MELAMINE.
4. ALL INTERIOR METAL DOORS, FRAMES AND ACCESS PANELS SHALL BE PAINTED THE COLOR OF THE ADJACENT SURFACE, UNLESS NOTED OR DETAILED OTHERWISE. SEE DOOR SCHEDULE FOR ADDITIONAL INFO.
5. WATERPROOFING SHALL BE APPLIED UNDER ALL TILE SURFACES.
6. PAINT ALL HVAC GRILLES TO MATCH THE COLOR OF ADJACENT WALLS OR SOFFIT.
7. G.C. TO PREP SLAB UNDER WOOD / RUBBER FLOOR PER MANUFACTURER REQUIREMENTS.
8. ALL WALL / CEILING TILE IN SHOWER AREAS SHALL HAVE A SUBSTRATE OF WIRE LATH AND PORTLAND CEMENT PLASTER. ALL WALL TILE IN OTHER AREAS, INCLUDING ALL TILE WALL BASE, MUST HAVE CEMENTITIOUS WALL BOARD (SUCH AS DUROCK OR EQUAL) AS SUBSTRATE. NO TILE SHALL BE ADHERED TO A GYPSUM-BASED DRYWALL SUBSTRATE.
9. I.T. ROOM # 207 SHALL BE LAMINATED WITH 4' x 8' SHEETS OF FIRE-TREATED PLYWOOD
10. PROVIDE TEXTURED FINISH (LIGHT ORNAGE PEEL) FOR ALL DRYWALL, SOFFITS, BEAMS AND HARD LID CONDITIONS, U.N.O.
11. ALL CEMENTITIOUS WALL BOARD SHALL BE INSTALLED PER MANUFACTURERS RECOMMENDATIONS. JOINTS SHOULD BE SEALED WITH MESH TAPE AND THIN-SET [illegible] JOINT COMPOUND) INCLUDING JOINTS BETWEEN CEMENTITIOUS WALL BOARD AND DRYWALL.
12. ALL PAINTED WALLS / CEILINGS IN WET AREAS SHALL RECEIVE MOISTURE-RESISTANT GYPSUM BOARD SUBSTRATE (SUCH AS USG AQUA-TOUGH OR USG MOLD-TOUGH OR EQUAL)

RECORD SET
The information presented on this drawing is diagrammatic and is presented for general information purposes and should not be relied on for accuracy of dimensions, details and locations. Actual and exact conditions if required should be determined in the field.

MANUFACTURER LIST

ARMSTRONG	SHERWIN WILLIAMS	DAL-TILE	JOHNSONITE	COVERINGS, ETC.	LEES
STEPHEN YEAGER	LYNDE WEST	VIVIAN TROUT	MARK ECKSTROM	LISA FULLEDA	KATHY BREEN
1-877-276-7876, OPT.8, X3161	1-866-884-9586	1-561-848-3675	1-941-758-3497	1-305-572-1080	1-561-313-0632
SAYEAGER@ARMSTRONG.COM		VIVIAN.TROUT@DALTILE.COM	MECKSTROM@JOHNSONITE.COM	LISA.FULLEDA@COVERINGSETC.COM	KATHY_BREEN@MOHAWKIND.COM

JMWA ARCHITECTS

STEVEN E. MYOTT AIA
JAMES R. WILLIAMS AIA
RODOLFO ACEVEDO AIA

949 CLINT MOORE ROAD
BOCA RATON, FLORIDA 33487
TEL 561 997 9997
FAX 561 997 1610

WWW.JMWA.NET

PALMETTO BAY VILLAGE HALL
9705 E. Hibiscus St., Palmetto Bay, Florida

Master Builders of South Florida, Inc.
1400 E. Oakland Park Blvd. Suite 210
Oakland Park, FL 33334

FLORIDA LICENSURE
AAC002193 IB0001142

PROJECT NO. 8714.00
DESIGNED BY: RA
DRAWN BY: DW / EK / JS
CHECKED BY: JW

SUBMITTALS:
BUILDING PERMIT 03.05.2010

REVISIONS:
2 OWNER REVISIONS 06.22.10
3 OWNER REVISIONS 07.07.10

ROOM FINISH SCHEDULE

A901

© 2009 JMWA ARCHITECTS, INCORPORATED ALL RIGHTS RESERVED. NO PART OF THESE IDEAS, PLANS OR DESIGNS MAY BE REPRODUCED, COPIED OR UTILIZED GRAPHICALLY IN ANY FORM WHATSOEVER WITHOUT THE EXPRESSED WRITTEN CONSENT OF JMWA ARCHITECTS INCORPORATED AND ITS BOARD OF DIRECTORS.

S:\Projects\8700\8714\8714_Drawings\8714_Current\8714_A901_Interior Room Finish Schedule.dwg ekutterer 8/12/2010 2:11:18 PM

FINISH SPECIFICATIONS

MARK	MATERIAL	MANUFACTURER	COLOR	FINISH	NUMBER	SUPPLIED BY:	INSTALLED BY:	REMARKS
COUNTER AND SLAB								
SS-1	GRANITE SLAB	-	SANTA CECILIA GOLD	POLISHED	-	G.C.	G.C.	GENERAL MILLWORK AND RESTROOM COUNTERTOPS.
PL-1	PLASTIC LAMINATE	FORMICA	SELECT CHERRY	-	7759-43	G.C.	G.C.	CABINETRY / MILLWORK LAMINATE. SEE DETAILS.
MISC.								
CR-1	CHAIR RAIL	LOCKLANDO	STAIN TO MATCH PL-1	3/4" x 3"	LDM843	G.C.	G.C.	GENERAL CHAIR RAIL THROUGHOUT WHERE NOTED. INSTALLED AT 3'-0" A.F.F. SEE A901.
CR-2	CHAIR RAIL	LOCKLANDO	STAIN TO MATCH PL-1	1 3/8" x 5 3/4"	LDM838	G.C.	G.C.	GENERAL CHAIR RAIL AT VILLAGE CHAMBERS. INSTALLED AT 3'-0" A.F.F. SEE A907.
CG-1	CORNER GUARD	-	-	-	-	G.C.	G.C.	GENERAL CORNER GUARD AS SELECTED BY OWNER. SEE FINISH PLANS FOR LOCATIONS.

FINISH SPECIFICATIONS

MARK	MATERIAL	MANUFACTURER	COLOR	FINISH	NUMBER	SUPPLIED BY:	INSTALLED BY:	REMARKS
CARPET								
CPT-1	CARPET (GENERAL THROUGHOUT)	LEES	FIAMMA / WINTER SAGE	BRICK ASHLAR	241	G.C.	G.C.	GENERAL CARPET THROUGHOUT BUILDING. SEE FINISH PLAN FOR MORE INFORMATION.
CPT-2	CARPET (CHAMBERS, CONF. ROOMS, MAYOR'S OFFICE)	LEES	PARKWAY / ANSLEY PARK	QUARTER TURN	201	G.C.	G.C.	GENERAL CARPET IN CHAMBERS, CONFERENCE ROOMS AND MAYOR'S OFFICE. SEE FINISH PLAN FOR MORE INFORMATION.
CPT-3	PEDITRED CARPET INSERT	CONSTRUCTION SPECIALTIES	MONOTUFT HD - GRAPHITE	-	9325	G.C.	G.C.	HEAVY DUTY CARPET INSERT. SEE DETAIL 9/A803 FOR MORE INFORMATION. SYSTEM TO BE CLEANED AND MAINTAINED ON A REGULAR BASIS.
CPT-4	ENTRANCE MAT (ROLL-OUT)	AMERICAN FLOOR MATS (1-800-762-9010)	WATERHOG PREMIER ECO ENTRANCE MAT - BLACK SMOKE	GRIPPER BACKING - BLACK RUBBER BORDER	EPWECO - BLACK SMOKE	G.C.	G.C.	GENERAL ENTRANCE MAT. SEE FINISH FLOOR PLAN FOR LOCATIONS. MAT TO BE MAINTAINED ON WEEKLY BASIS BY A CONTRACTED SERVICE.
TILE								
T-1	PORCELAIN FLOOR TILE	ROCA / STRATOS ORION	BEIGE	24" x 24" POLISHED	FM20960041	G.C.	G.C.	PUBLIC LOBBY FIELD TILE. SEE FINISH PLAN FOR MORE INFORMATION.
T-2	PORCELAIN FLOOR TILE	ROCA / STRATOS ORION	MARRON	24" x 24" POLISHED	FM20960251	G.C.	G.C.	PUBLIC LOBBY BORDER TILE AND CENTER ACCENT TILES. SEE FINISH PLAN FOR MORE INFORMATION.
T-3	PORCELAIN FLOOR TILE	ROCA / STRATOS ORION	BEIGE	12" x 12" UNPOLISHED	U1411-12UP	G.C.	G.C.	RESTROOM BORDER TILE, KITCHENETTE FIELD TILE. SEE FINISH PLAN FOR MORE INFORMATION.
T-4	PORCELAIN FLOOR & WALL TILE	ROCA / STRATOS ORION	BLANCO	12" x 12" UNPOLISHED	U1410-12UP	G.C.	G.C.	RESTROOM FIELD TILE. SEE FINISH PLAN FOR MORE INFORMATION.
T-5	MOSAIC TILE (BACKSPLASH)	COVERINGS ETC.	ECO-GRES MOSAIC - DUSK BLUE	UNGLAZED PORCELAIN	-	G.C.	G.C.	10% OF THIS MOSAIC TILE FOR BACKSPLASH COMBINATION AT BREAK AREAS. 1" x 1" MOSAIC TILE MOUNTED ON 12" x 12" SHEETS. SEE ELEV.
T-6	MOSAIC TILE (BACKSPLASH)	COVERINGS ETC.	ECO-GRES MOSAIC - PEARL	UNGLAZED PORCELAIN	-	G.C.	G.C.	60% OF THIS MOSAIC TILE FOR BACKSPLASH COMBINATION AT BREAK AREAS. 1" x 1" MOSAIC TILE MOUNTED ON 12" x 12" SHEETS. SEE ELEV.
T-7	MOSAIC TILE (BACKSPLASH)	COVERINGS ETC.	ECO-GRES MOSAIC - HAVANA GREEN	UNGLAZED PORCELAIN	-	G.C.	G.C.	15% OF THIS MOSAIC TILE FOR BACKSPLASH COMBINATION AT BREAK AREAS. 1" x 1" MOSAIC TILE MOUNTED ON 12" x 12" SHEETS. SEE ELEV.
T-8	MOSAIC TILE (BACKSPLASH)	COVERINGS ETC.	ECO-GRES MOSAIC - BUTTERNUT	UNGLAZED PORCELAIN	-	G.C.	G.C.	15% OF THIS MOSAIC TILE FOR BACKSPLASH COMBINATION AT BREAK AREAS. 1" x 1" MOSAIC TILE MOUNTED ON 12" x 12" SHEETS. SEE ELEV.
T-9	WALL ACCENT TILE	COVERINGS ETC.	ECO-GRES ASIA - GENOA GREEN	UNGLAZED PORCELAIN	-	G.C.	G.C.	WALL ACCENT TILE AT RESTROOMS. SEE RESTROOM ELEVATIONS.
T-10	MOSAIC TILE (FLOORING)	DAL-TILE	KEYSTONES - ELEMENTAL TAN	2" x 2" UNGLAZED PORCELAIN	D166	G.C.	G.C.	SHOWER FLOOR TILE AT RESTROOMS. SEE FINISH FLOOR PLAN.
T-11	PORCELAIN FLOOR TILE	ROCA / STRATOS ORION	BEIGE	16" x 16" POLISHED	FM20940041 U1411-16PO	G.C.	G.C.	GENERAL CORRIDOR, BREAK ROOM ,ETC TILE. SEE FINISH PLAN FOR MORE INFORMATION.
T-12	PORCELAIN FLOOR TILE	ROCA / STRATOS ORION	MARRON	16" x 16" POLISHED	FM20940251PO U1412-16PO	G.C.	G.C.	CORRIDOR ACCENT BORDER TILE AT ELEVATOR LOBBY. SEE FINISH PLAN FOR MORE INFORMATION.
GROUT								
G-1	GROUT	LATICRETE	MUSHROOM	-	39	G.C.	G.C.	TILE GROUT AT TILES T-1, T-2, T-11 AND T-12. 1/16" GROUT JOINT WIDTH. INSTALL PER MANUFACTURERS RECOMMENDATIONS.
G-2	GROUT	LATICRETE	BRIGHT WHITE	-	44	G.C.	G.C.	TILE GROUT AT TILES T-5 THRU T-8. 1/16" GROUT JOINT WIDTH. INSTALL PER MANUFACTURERS RECOMMENDATIONS.
G-3	GROUT	LATICRETE	HEMP	-	27	G.C.	G.C.	TILE GROUT AT TILE T-10. 1/16" GROUT JOINT WIDTH. INSTALL PER MANUFACTURERS RECOMMENDATIONS.
G-4	GROUT	LATICRETE	MARBLE BEIGE	-	17	G.C.	G.C.	TILE GROUT AT TILES T-3, T-4 AND T-9. 1/16" GROUT JOINT WIDTH. INSTALL PER MANUFACTURERS RECOMMENDATIONS.
BASE								
RB-1	TRADITIONAL RUBBER WALL BASE	JOHNSONITE	WETLANDS	4"	150	G.C.	G.C.	GENERAL WALL BASE AT STAIR 2.
RB-2	TRADITIONAL RUBBER WALL BASE	JOHNSONITE	FAWN	4"	80	G.C.	G.C.	GENERAL WALL BASE WHERE VCT-1 IS SPECIFIED, U.N.O. SEE FINISH FLOOR PLANS
WB-1	WOOD BASE	LOCKLANDO	STAIN TO MATCH PL-1	1/2" x 4-1/4"	LDM650	G.C.	G.C.	GENERAL WOOD BASE THROUGHOUT
WB-2	WOOD BASE	LOCKLANDO	STAIN TO MATCH PL-1	3/4" x 6"	LDM631	G.C.	G.C.	GENERAL WOOD BASE THROUGHOUT.
MISCELLANEOUS FLOORING								
ST-1	RUBBER STAIR TREAD/RISER W/ VISUALLY IMPAIRED STRIP	JOHNSONITE	BAMBOO - WETLANDS	RUBBER STAIR TREAD/RISER	VIBMTR (150)	G.C.	G.C.	GENERAL STAIR TREAD/RISER. PROVIDE MATCHING STRINGER AND RUBBER BASE.
ST-2	RUBBER STAIR LANDING TILE	JOHNSONITE	BAMBOO - WETLANDS	STANDARD BAMBOO LANDING TILES	150	G.C.	G.C.	GENERAL LANDING TILES. TILE TO CONFORM TO ASTM F-1344.
ST-3	RUBBER STAIR TREAD NOSING	JOHNSONITE	VISUALLY IMPAIRED NOSING - BLACK	-	VIRSN-40-B	G.C.	G.C.	GENERAL STAIR NOSING.
RF-1	RUBBER SPORTS FLOORING	ECOSURFACES	ECOEARTH - ICED FRAPUCCINO	36" x 36" TILES	SRCN-40-B	G.C.	G.C.	GENERAL FLOORING AT GYM. PROVIDE UNDERLAYMENT AS SCHEDULED.
RFU-1	RUBBER SPORTS FLOORING UNDERLAYMENT	ECOSURFACES	ECOSILENCE	4MM	-	G.C.	G.C.	GENERAL FLOORING UNDERLAYMENT AT GYM.
VCT-1	VINYL COMPOSITION TILE	ARMSTRONG	MIGRATIONS - MUSHROOM BEIGE	-	T3509	G.C.	G.C.	GENERAL FLOOR FINISH AT JANITOR CLOSETS, SELECT STORAGE ROOMS, ELECTRICAL ROOMS, IT ROOMS, ETC. SEE PLAN FOR MORE INFO.
CONC-1	SEALED SMOOTH CONCRETE FINISH	-	-	-	-	G.C.	G.C.	SEALED CONCRETE FLOORING AT STAIR LOCATION.
WALL								
PT-1	GENERAL WALL PAINT	SHERWIN WILLIAMS	PROGREEN 200 - EXTRA WHITE	EGGSHELL	SW7006	G.C.	G.C.	GENERAL WALL PAINT THROUGHOUT, U.N.O.
PT-2	ACCENT WALL PAINT	SHERWIN WILLIAMS	PROGREEN 200 - WATERSCAPE	EGGSHELL	SW6470	G.C.	G.C.	ACCENT WALL PAINT. SEE FINISH PLAN FOR LOCATION.
PT-3	ACCENT WALL PAINT	SHERWIN WILLIAMS	PROGREEN 200 - HONEYDEW	EGGSHELL	SW6428	G.C.	G.C.	ACCENT WALL PAINT. SEE FINISH PLAN FOR LOCATION.
PT-4	ACCENT WALL PAINT	SHERWIN WILLIAMS	PROGREEN 200 - MUSLIN	EGGSHELL	SW6133	G.C.	G.C.	ACCENT WALL PAINT. SEE FINISH PLAN FOR LOCATION.
WP-1	~~BAMBOO WALL PANEL~~ N.I.C.	BY VILLAGE OF PALMETTO BAY	-	-	-	G.C.	G.C.	~~BAMBOO WALL PANELS AT CHAMBERS.~~ N.I.C.
WCP-1	~~FIBERGLASS COMPOSITE PANEL~~	CRANE COMPOSITES	CLASS A FIRE-RATED	PEBBLE EMBOSSED	85 WHITE	G.C.	G.C.	FIBERGLASS WALL PANEL AT JANITOR CLOSET MOP SINKS. SEE FINISH PLAN FOR LOCATION.

RECORD SET

The information presented on this drawing is diagrammatic and is presented for general information purposes and should not be relied on for accuracy of dimensions, details and locations. Actual and exact conditions if required should be determined in the field.

JMWA ARCHITECTS

STEVEN E. MYOTT AIA
JAMES R. WILLIAMS AIA
RODOLFO ACEVEDO AIA

980 CLINT MOORE ROAD
BOCA RATON, FLORIDA 33487
TEL 561 997 9997
FAX 561 997 1640

WWW.JMWA.NET

PALMETTO BAY VILLAGE HALL
9705 E. Hibiscus St., Palmetto Bay, Florida

Master Builders of South Florida, Inc.
1400 E. Oakland Park Blvd. Suite 210
Oakland Park, FL 33334

FLORIDA LICENSURE

AAC002193 IB0001142

PROJECT NO.	8714.00
DESIGNED BY:	RA
DRAWN BY:	DW / EK / JS
CHECKED BY:	JW

SUBMITTALS:
BUILDING PERMIT 03.05.2010

REVISIONS:
2 OWNER REVISIONS 06.22.10
3 OWNER REVISIONS 07.07.10

FINISH SPECIFICATIONS

2

A902

© 2009 JMWA ARCHITECTS, INCORPORATED ALL RIGHTS RESERVED. NO PART OF THESE IDEAS, PLANS OR DESIGNS MAY BE REPRODUCED, COPIED OR UTILIZED GRAPHICALLY IN ANY FORM WHATSOEVER WITHOUT THE EXPRESSED WRITTEN CONSENT OF JMWA ARCHITECTS INCORPORATED AND ITS BOARD OF DIRECTORS.

8/12/2010 2:11:12 PM ekutterer S:\Projects\8700\8714\8714_Drawings\8714_Current\8714_A902_Interior Finish Specifications.dwg

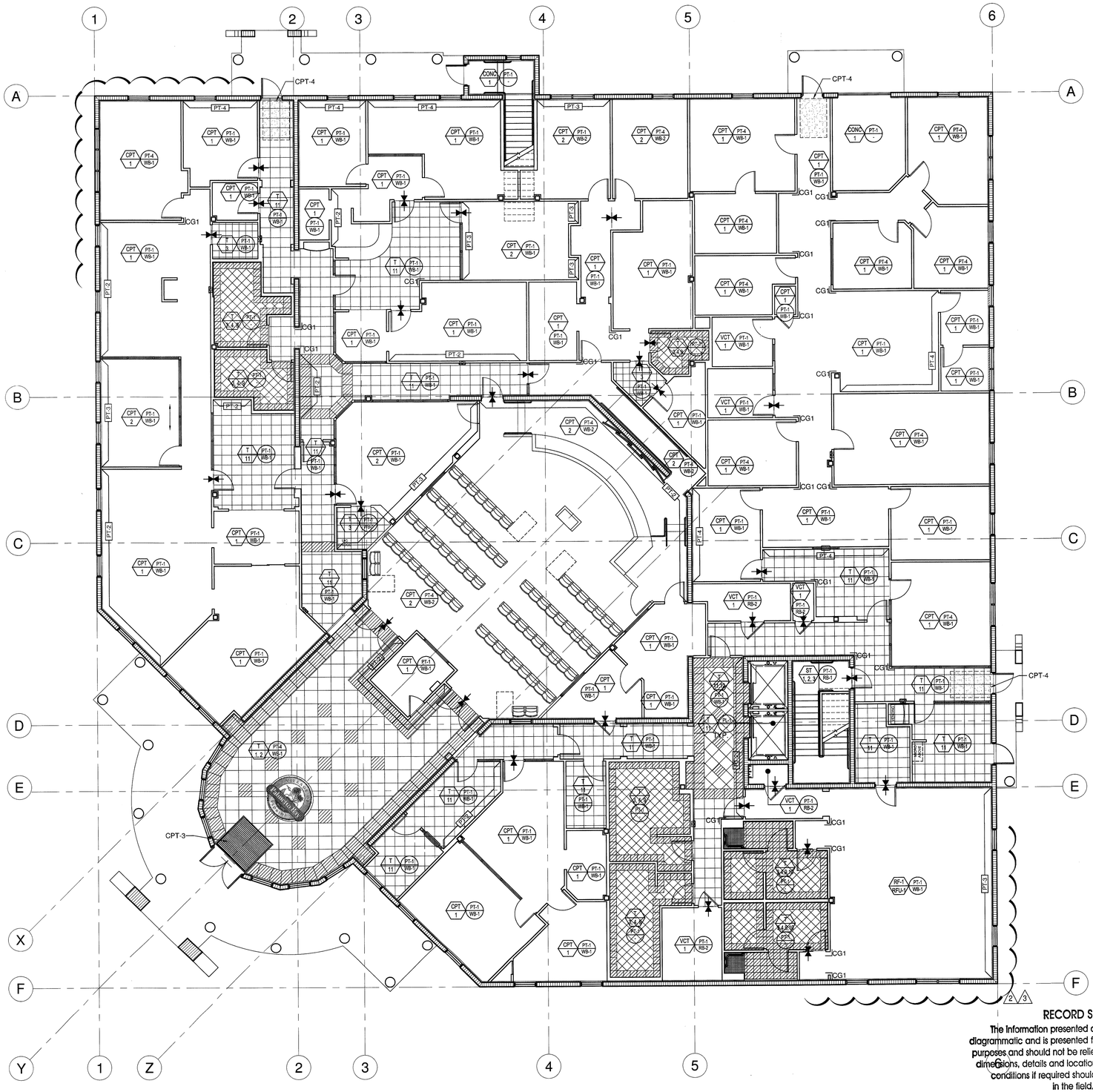

1 FIRST FLOOR FINISH PLAN
SCALE: 1/8" = 1'-0"

FINISH PLAN LEGEND

- KEY NOTE. SEE DESIGNATED # FOR MORE INFORMATION
- TRANSITION POINT BETWEEN FINISHES. PROVIDE TRANSITION STRIP AS APPROPRIATE.
- MATERIAL TYPE SEE FINISH SPECIFICATIONS A902 NUMBER. SEE FINISH SPECIFICATIONS A902
- ACCENT WALL SEE FINISH SPECIFICATIONS A902
- WALL TYPE SEE FINISH SPECIFICATIONS A902 BASE TYPE SEE FINISH SPECIFICATIONS A902
- CG — CORNER GUARD. SEE A902 FOR FINISH INFORMATION.
- DIRECTION OF CARPET PATTERN (IF APPLICABLE)

FINISH PLAN KEY NOTES

1. G.C. TO PROVIDE PROTECTIVE CORNER GUARDS AS INDICATED BY SYMBOL. TYPICAL ON EACH CORNER. SEE FINISH SCHEDULE A902 FOR MORE INFORMATION.
2. COLUMN TO BE PAINTED, PT-1. SEE FINISH SCHEDULE A902 FOR MORE INFORMATION.
3. G.C. TO VERIFY AND COORDINATE FLOOR PATTERN WITH MILLWORK IN FIELD.
4. SHOP GRIND TILE EDGES AT RESTROOMS TO A BULLNOSE AT WALL OUTSIDE CORNERS, TYP.

BUILDING DEPARTMENT NOTES

1. PER FBC 804.2: INTERIOR FLOOR FINISH AND FLOOR COVERING MATERIALS REQUIRED BY SECTION 804.5.1 TO BE OF CLASS I OR II.
2. MATERIALS SHALL BE CLASSIFIED IN ACCORDANCE WITH NFPA 253.
3. THE CLASSIFICATION REFERRED TO HEREIN CORRESPONDS TO THE CLASSIFICATIONS DETERMINED BY NFPA 253 AS FOLLOWS:
   CLASS 1: 0.45 WATTS/CM2 OR GREATER
   CLASS 2: 0.22 WATTS/CM2 OR GREATER PER NFPA 7.1.4.1
4. FINISHES IN EXIT PASSAGEWAYS, EXIT ACCESS CORRIDORS, AND OTHER EXITWAYS SHALL BE FLAME SPREAD INDEX B.
5. FINISHES IN EXIT ROOMS AND ENCLOSED SPACES SHALL BE FLAME SPREAD INDEX C.

G.C. TO VERIFY PER NFPA 101-7.2.1.3 FLOOR LEVEL 7.2.1.3.1 THE ELEVATIONS OF THE FLOOR SURFACE ON BOTH SIDES OF A DOOR SHALL NOT VARY BY MORE THAN 13 MM ($\frac{1}{2}$"). 7.2.1.3.2

THE ELEVATION OF THE FLOOR SURFACE REQUIRED BY 7.2.1.3.1 SHALL BE MAINTAINED ON BOTH SIDES OF THE DOORWAY FOR A DISTANCE NOT LESS THAN THE WIDTH OF THE WIDEST LEAF. 7.2.1.3.3.

THRESHOLDS AT DOORWAYS SHALL NOT EXCEED 13MM ($\frac{1}{2}$") HEIGHT.

FINISH PLAN GENERAL NOTES

PER FBC 803.8.2: FS.1-CARPET MATERIALS USED ON FLOORS OF EXIT ACCESS CORRIDORS AND ENCLOSED EXITS IN OTHER THAN GROUP I OCCUPANCIES SHALL SATISFACTORILY WITHSTAND A MINIMUM CRITICAL RADIANT FLUX OF 0.22 WATT/CM2 WHEN TESTED IN ACCORDANCE WITH NFPA 253.

PER N.F.P.A. 7,14

- INTERIOR FINISHES IN EXIT ENCLOSURE TO BE CLASS A OR CLASS B.
- INTERIOR WALL AND CEILING FINISHES SHALL BE CLASS A, CLASS B, OR CLASS C IN STORAGE AREAS.
- ALL FINISHES SHALL MEET THE REQUIREMENTS OF NFPA 101/ASTM-E662 (SMOKE CHAMBER) AND ASTM-E84 (STEINER TUNNEL) CURRENT EDITION SECTION 27-3.3.1 FOR FLAME SPREAD AND SMOKE GENERATION. PASSES DOC. FF1-70 CRITICAL RADIANT FLUX, AND AS PER FBC SECTION 803.2 AND BY TABLE 803.3 FOR MINIMUM INTERIOR FINISH CLASSIFICATION.

G.C TO VERIFY PER FLORIDA BUILDING CODE 7.2.1.3 FLOOR LEVEL. 7.2.1.3.1 THE ELEVATIONS OF THE FLOOR SURFACE ON BOTH SIDES OF A DOOR SHALL NOT VARY BY MORE THAN 1/2" (13 mm). 7.2.1.3.2 THE ELEVATION OF THE FLOOR SURFACES REQUIRED BY 7.2.1.3.1 SHALL BE MAINTAINED ON BOTH SIDES OF THE DOOR WAY FOR A DISTANCE NOT LESS THAN THE WIDTH OF THE WIDEST LEAF. 7.2.1.3.3 THRESHOLDS AT DOORWAYS SHALL NOT EXCEED 1/2" (13 mm) IN HEIGHT.

NOTES: REFER TO SHEETS A901 AND A902 FOR FINISH SPECIFICATIONS AND ADDITIONAL NOTES.

1. FLOOR PATTERNS T.B.D. SHOWN FOR REFERENCE ONLY. G.C. TO VERIFY WITH OWNER AND ARCHITECT.
2. G.C. TO VERIFY ALL INTERIOR FINISHES WITH OWNER AND ARCHITECT.
3. ALL OFFICE AREAS NOT NOTED TO BE PAINTED PT-1.
4. PROPERLY PREPARE ALL SURFACES AS REQUIRED TO RECEIVE FINISH PER MANUFACTURER'S SPECIFICATIONS.
5. PREPARE ALL GYP. BD. WALLS AS REQUIRED TO PROVIDE A SMOOTH LEVEL 4 FINISH SURFACE. CONTRACTOR TO PRIME WALLS AS REQUIRED PRIOR TO FINISH PAINTING 2 FINISH COATS.
6. ALL EXPOSED COUNTERTOPS TO BE TS-1 UNLESS NOTED OTHERWISE. ALL INTERIOR SHELVES & DIVIDERS TO BE WHITE MELAMINE, U.N.O.
7. VINYL BASE USED THROUGHOUT, U.N.O.
8. FLOORING TRANSITIONS OCCUR AT CENTER OF DOOR OPENING, U.N.O.
9. ALL TRANSITIONS BETWEEN MATERIALS SHALL BE SMOOTH.
10. A REDUCER STRIP TO BE UTILIZED BETWEEN ALL CARPET & VCT TRANSITIONS. SCHULTER-METAL OR EQUAL.
11. MAXIMUM HEIGHT DIFFERENCE BETWEEN FLOOR COVERING SURFACE SHALL BE $\frac{1}{2}$".
12. ALL WINDOW TREATMENT POCKETS, LIGHT COVES, & GYP. BD. CEILINGS TO BE PAINTED CEILING WHITE, FLAT FINISH, U.N.O.
13. G.C. TO FOLLOW MANUFACTURER'S INSTALLATION INSTRUCTIONS.
14. G.C. TO SUBMIT SAMPLES FOR CLIENT APPROVAL.

JMWA ARCHITECTS
STEVEN E. MYOTT AIA
JAMES R. WILLIAMS AIA
RODOLFO ACEVEDO AIA

949 CLINT MOORE ROAD
BOCA RATON, FLORIDA 33487
TEL 561 997 9997
FAX 561 997 1610

WWW.JMWA.NET

PALMETTO BAY VILLAGE HALL

9705 E. Hibiscus St., Palmetto Bay, Florida

Master Builders of South Florida, Inc.
1400 E. Oakland Park Blvd. Suite 210
Oakland Park, FL 33334

FLORIDA LICENSURE

AAC002193 IB0001142

PROJECT NO.	8714.00
DESIGNED BY:	RA
DRAWN BY:	DW / EK / JS
CHECKED BY:	JW

SUBMITTALS:
BUILDING PERMIT 03.05.2010

REVISIONS:
2 OWNER REVISIONS 06.22.10
3 OWNER REVISIONS 07.07.10

FIRST FLOOR FINISH PLAN

A903

© 2009 JMWA ARCHITECTS, INCORPORATED ALL RIGHTS RESERVED. NO PART OF THESE IDEAS, PLANS OR DESIGNS MAY BE REPRODUCED, COPIED OR UTILIZED GRAPHICALLY IN ANY FORM WHATSOEVER WITHOUT THE EXPRESSED WRITTEN CONSENT OF JMWA ARCHITECTS INCORPORATED AND ITS BOARD OF DIRECTORS.

8/12/2010 2:11:05 PM ekutterer S:\Projects\8700\8714\8714_Drawings\8714_Current\8714_A903_First Floor Finish Plan.dwg

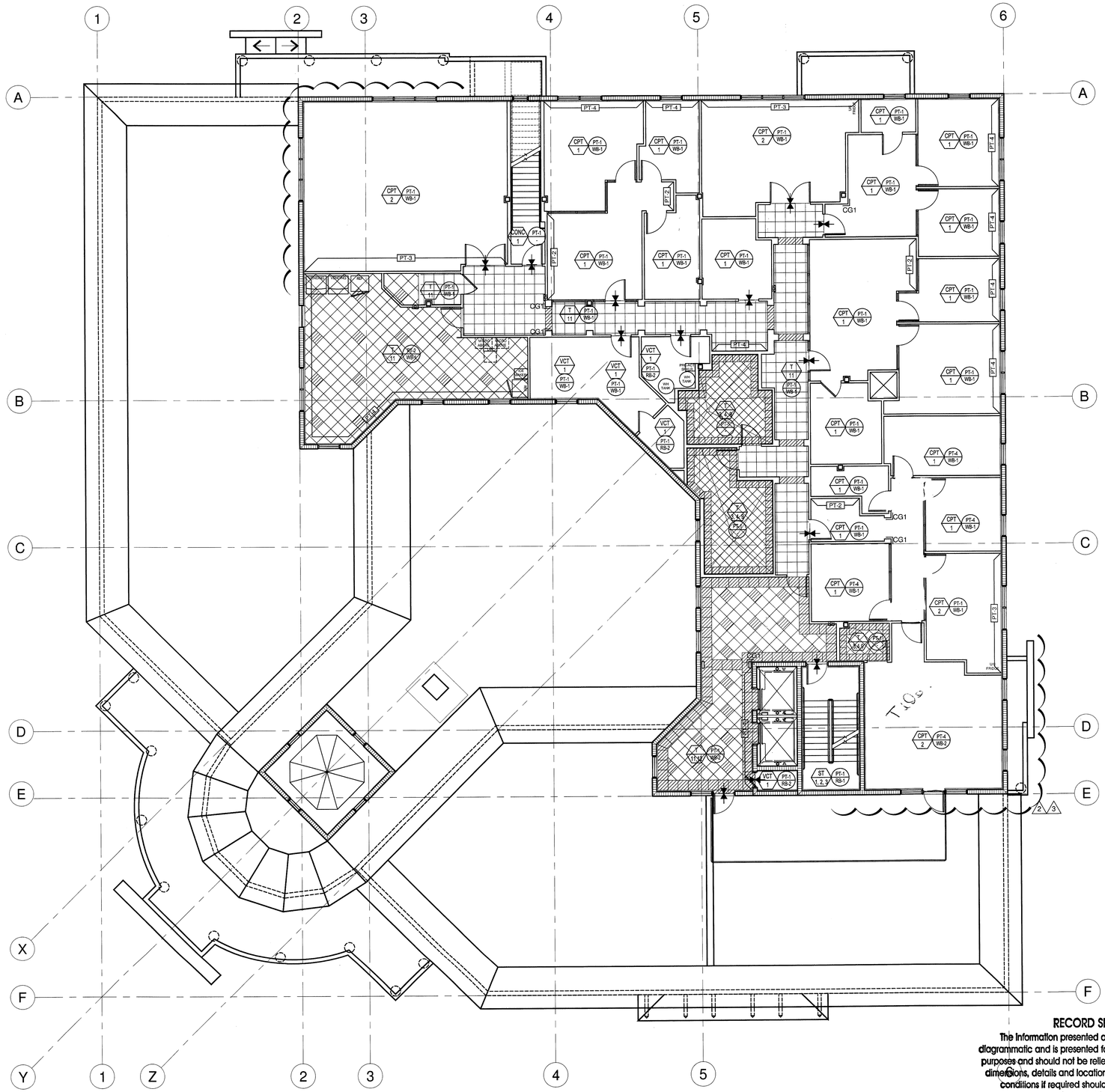

1 SECOND FLOOR FINISH PLAN
SCALE: 1/8" = 1'-0"

FINISH PLAN LEGEND

- (1) KEY NOTE. SEE DESIGNATED # FOR MORE INFORMATION
- TRANSITION POINT BETWEEN FINISHES. PROVIDE TRANSITION STRIP AS APPROPRIATE.
- MATERIAL TYPE SEE FINISH SPECIFICATIONS A902 NUMBER. SEE FINISH SPECIFICATIONS A902
- ACCENT WALL SEE FINISH SPECIFICATIONS A902
- WALL TYPE SEE FINISH SPECIFICATIONS A902 BASE TYPE SEE FINISH SPECIFICATIONS A902
- CG CORNER GUARD. SEE A902 FOR FINISH INFORMATION.
- DIRECTION OF CARPET PATTERN (IF APPLICABLE)

FINISH PLAN KEY NOTES

1. G.C. TO PROVIDE PROTECTIVE CORNER GUARDS AS INDICATED BY SYMBOL. TYPICAL ON EACH CORNER. SEE FINISH SCHEDULE A902 FOR MORE INFORMATION.
2. COLUMN TO BE PAINTED, PT-1. SEE FINISH SCHEDULE A902 FOR MORE INFORMATION.
3. G.C. TO VERIFY AND COORDINATE FLOOR PATTERN WITH MILLWORK IN FIELD.
4. SHOP GRIND TILE EDGES AT RESTROOMS TO A BULLNOSE AT WALL OUTSIDE CORNERS, TYP.

BUILDING DEPARTMENT NOTES

1. PER FBC 804.2: INTERIOR FLOOR FINISH AND FLOOR COVERING MATERIALS REQUIRED BY SECTION 804.5.1 TO BE OF CLASS I OR II.
2. MATERIALS SHALL BE CLASSIFIED IN ACCORDANCE WITH NFPA 253.
3. THE CLASSIFICATION REFERRED TO HEREIN CORRESPONDS TO THE CLASSIFICATIONS DETERMINED BY NFPA 253 AS FOLLOWS:
   CLASS 1: 0.45 WATTS/CM2 OR GREATER
   CLASS 2: 0.22 WATTS/CM2 OR GREATER PER NFPA 7.1.4.1
4. FINISHES IN EXIT PASSAGEWAYS, EXIT ACCESS CORRIDORS, AND OTHER EXITWAYS SHALL BE FLAME SPREAD INDEX B.
5. FINISHES IN EXIT ROOMS AND ENCLOSED SPACES SHALL BE FLAME SPREAD INDEX C.

G.C. TO VERIFY PER NFPA 101-7.2.1.3 FLOOR LEVEL 7.2.1.3.1
THE ELEVATIONS OF THE FLOOR SURFACE ON BOTH SIDES OF A DOOR SHALL NOT VARY BY MORE THAN 13 MM (½"). 7.2.1.3.2

THE ELEVATION OF THE FLOOR SURFACE REQUIRED BY 7.2.1.3.1 SHALL BE MAINTAINED ON BOTH SIDES OF THE DOORWAY FOR A DISTANCE NOT LESS THAN THE WIDTH OF THE WIDEST LEAF. 7.2.1.3.3.

THRESHOLDS AT DOORWAYS SHALL NOT EXCEED 13MM (½") HEIGHT.

FINISH PLAN GENERAL NOTES

PER FBC 803.8.2: FS.1-CARPET MATERIALS USED ON FLOORS OF EXIT ACCESS CORRIDORS AND ENCLOSED EXITS IN OTHER THAN GROUP I OCCUPANCIES SHALL SATISFACTORILY WITHSTAND A MINIMUM CRITICAL RADIANT FLUX OF 0.22 WATT/CM2 WHEN TESTED IN ACCORDANCE WITH NFPA 253.

PER N.F.P.A. 7.14
- INTERIOR FINISHES IN EXIT ENCLOSURE TO BE CLASS A OR CLASS B.
- INTERIOR WALL AND CEILING FINISHES SHALL BE CLASS A, CLASS B, OR CLASS C IN STORAGE AREAS.
- ALL FINISHES SHALL MEET THE REQUIREMENTS OF NFPA 101/ASTM-E662 (SMOKE CHAMBER) AND ASTM-E84 (STEINER TUNNEL) CURRENT EDITION SECTION 27-3.3.1 FOR FLAME SPREAD AND SMOKE GENERATION. PASSES DOC. FF1-70 CRITICAL RADIANT FLUX. AND AS PER FBC SECTION 803.2 AND BY TABLE 803.3 FOR MINIMUM INTERIOR FINISH CLASSIFICATION.

G.C TO VERIFY PER FLORIDA BUILDING CODE 7.2.1.3 FLOOR LEVEL. 7.2.1.3.1 THE ELEVATIONS OF THE FLOOR SURFACE ON BOTH SIDES OF A DOOR SHALL NOT VARY BY MORE THAN 1/2" (13 mm). 7.2.1.3.2 THE ELEVATION OF THE FLOOR SURFACES REQUIRED BY 7.2.1.3.1 SHALL BE MAINTAINED ON BOTH SIDES OF THE DOOR WAY FOR A DISTANCE NOT LESS THAN THE WIDTH OF THE WIDEST LEAF. 7.2.1.3.3 THRESHOLDS AT DOORWAYS SHALL NOT EXCEED 1/2" (13 mm) IN HEIGHT.

NOTES: REFER TO SHEETS A901 AND A902 FOR FINISH SPECIFICATIONS AND ADDITIONAL NOTES.

1. FLOOR PATTERNS T.B.D. SHOWN FOR REFERENCE ONLY. G.C. TO VERIFY WITH OWNER AND ARCHITECT.
2. G.C. TO VERIFY ALL INTERIOR FINISHES WITH OWNER AND ARCHITECT.
3. ALL OFFICE AREAS NOT NOTED TO BE PAINTED PT-1.
4. PROPERLY PREPARE ALL SURFACES AS REQUIRED TO RECEIVE FINISH PER MANUFACTURERS SPECIFICATIONS.
5. PREPARE ALL GYP. BD. WALLS AS REQUIRED TO PROVIDE A SMOOTH LEVEL 4 FINISH SURFACE. CONTRACTOR TO PRIME WALLS AS REQUIRED PRIOR TO FINISH PAINTING 2 FINISH COATS.
6. ALL EXPOSED COUNTERTOPS TO BE TS-1 UNLESS NOTED OTHERWISE. ALL INTERIOR SHELVES & DIVIDERS TO BE WHITE MELAMINE, U.N.O.
7. VINYL BASE USED THROUGHOUT, U.N.O.
8. FLOORING TRANSITIONS OCCUR AT CENTER OF DOOR OPENING, U.N.O.
9. ALL TRANSITIONS BETWEEN MATERIALS SHALL BE SMOOTH.
10. A REDUCER STRIP TO BE UTILIZED BETWEEN ALL CARPET & VCT TRANSITIONS. SCHULTER-METAL OR EQUAL.
11. MAXIMUM HEIGHT DIFFERENCE BETWEEN FLOOR COVERING SURFACE SHALL BE ¾".
12. ALL WINDOW TREATMENT POCKETS, LIGHT COVES, & GYP. BD. CEILINGS TO BE PAINTED CEILING WHITE, FLAT FINISH, U.N.O.
13. G.C. TO FOLLOW MANUFACTURER'S INSTALLATION INSTRUCTIONS.
14. G.C. TO SUBMIT SAMPLES FOR CLIENT APPROVAL.

JMWA ARCHITECTS
STEVEN E. MYOTT AIA
JAMES R. WILLIAMS AIA
RODOLFO ACEVEDO AIA

949 CLINT MOORE ROAD
BOCA RATON, FLORIDA 33487
TEL 561 997 9997
FAX 561 997 1610

WWW.JMWA.NET

PALMETTO BAY VILLAGE HALL

9705 E. Hibiscus St., Palmetto Bay, Florida

Master Builders of South Florida, Inc.
1400 E. Oakland Park Blvd. Suite 210
Oakland Park, FL 33334

FLORIDA LICENSURE

AAC002193 IB0001142

PROJECT NO.	8714.00
DESIGNED BY:	RA
DRAWN BY:	DW / EK / JS
CHECKED BY:	JW

SUBMITTALS:
BUILDING PERMIT 03.05.2010

REVISIONS:
2 OWNER REVISIONS 06.22.10
3 OWNER REVISIONS 07.07.10

SECOND FLOOR FINISH PLAN

A904

© 2009 JMWA ARCHITECTS, INCORPORATED ALL RIGHTS RESERVED. NO PART OF THESE IDEAS, PLANS OR DESIGNS MAY BE REPRODUCED, COPIED OR UTILIZED GRAPHICALLY IN ANY FORM WHATSOEVER WITHOUT THE EXPRESSED WRITTEN CONSENT OF JMWA ARCHITECTS INCORPORATED AND ITS BOARD OF DIRECTORS.

8/12/2010 2:10:56 PM ekutterer S:\Projects\8700\8714\8714_Drawings\8714_Current\8714_A904_Second Floor Finish Plan.dwg

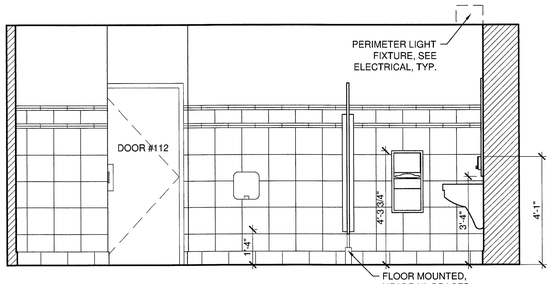

19 ELEVATION AT MEN'S RESTROOM #109
SCALE: 3/8" = 1'-0"

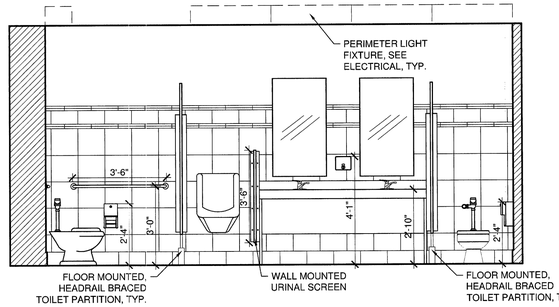

15 ELEVATION AT MEN'S RESTROOM #109
SCALE: 3/8" = 1'-0"

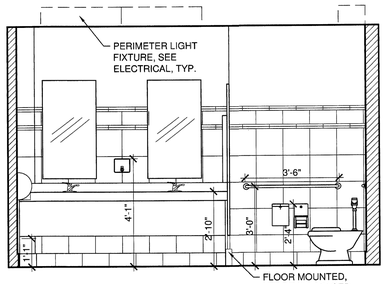

8 ELEVATION AT WOMEN'S RESTROOM #181
SCALE: 3/8" = 1'-0"

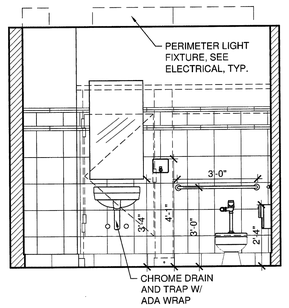

4 ELEVATION AT MEN'S RESTROOM #182
SCALE: 3/8" = 1'-0"

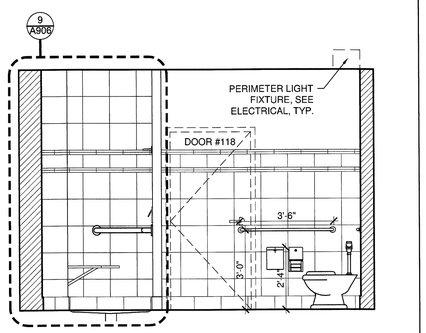

18 ELEVATION AT WOMEN'S RESTROOM #116
SCALE: 3/8" = 1'-0"

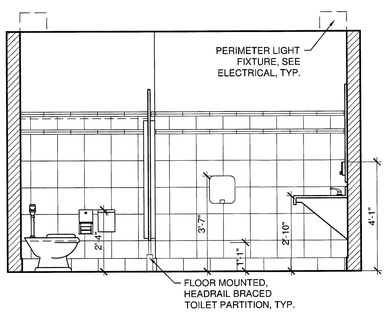

14 ELEVATION AT WOMEN'S RESTROOM #108
SCALE: 3/8" = 1'-0"

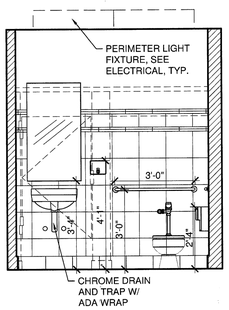

11 ELEVATION AT MEN'S RESTROOM #109
SCALE: 3/8" = 1'-0"

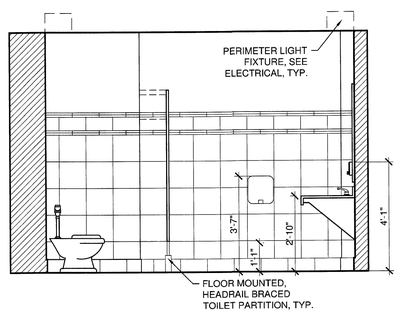

7 ELEVATION AT WOMEN'S RESTROOM #181
SCALE: 3/8" = 1'-0"

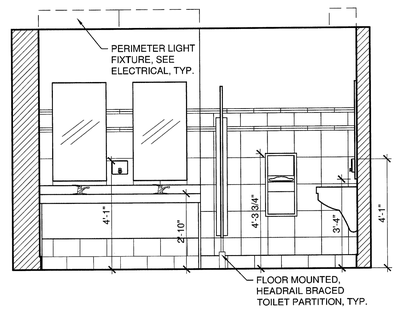

3 ELEVATION AT MEN'S RESTROOM #182
SCALE: 3/8" = 1'-0"

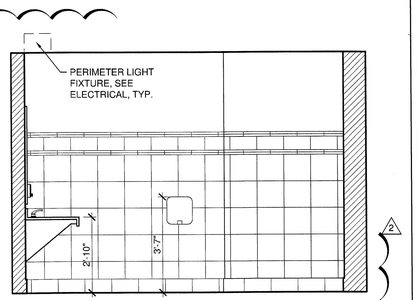

17 ELEVATION AT WOMEN'S RESTROOM #116
SCALE: 3/8" = 1'-0"

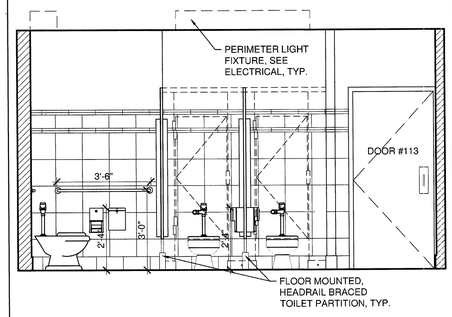

13 ELEVATION AT WOMEN'S RESTROOM #108
SCALE: 3/8" = 1'-0"

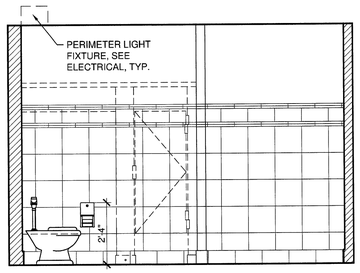

10 ELEVATION AT MEN'S RESTROOM #109
SCALE: 3/8" = 1'-0"

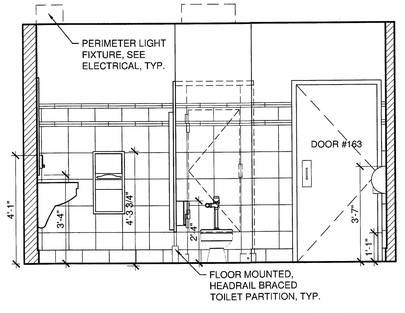

6 ELEVATION AT WOMEN'S RESTROOM #181
SCALE: 3/8" = 1'-0"

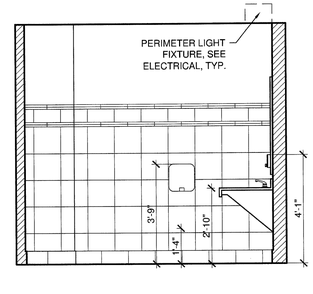

2 ELEVATION AT MEN'S RESTROOM #182
SCALE: 3/8" = 1'-0"

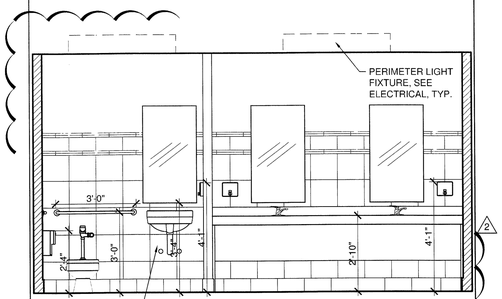

16 ELEVATION AT WOMEN'S RESTROOM #116
SCALE: 3/8" = 1'-0"

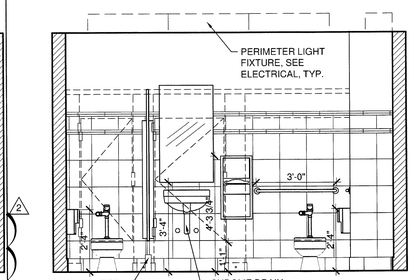

12 ELEVATION AT WOMEN'S RESTROOM #108
SCALE: 3/8" = 1'-0"

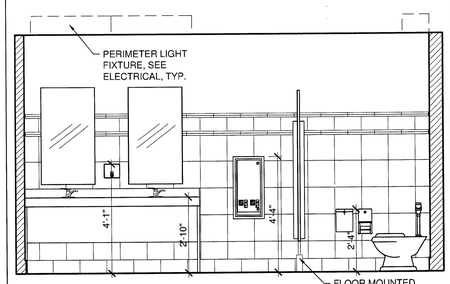

9 ELEVATION AT WOMEN'S RESTROOM #108
SCALE: 3/8" = 1'-0"

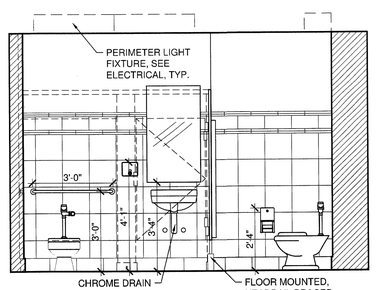

5 ELEVATION AT WOMEN'S RESTROOM #181
SCALE: 3/8" = 1'-0"

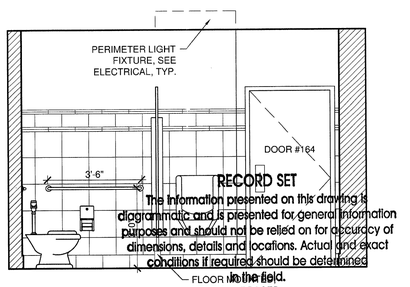

1 ELEVATION AT MEN'S RESTROOM #182
SCALE: 3/8" = 1'-0"

RECORD SET
The information presented on this drawing is diagrammatic and is presented for general information purposes and should not be relied on for accuracy of dimensions, details and locations. Actual and exact conditions if required should be determined in the field.

JMWA ARCHITECTS
STEVEN E. MYOTT AIA
JAMES R. WILLIAMS AIA
RODOLFO ACEVEDO AIA
949 CLINT MOORE ROAD
BOCA RATON, FLORIDA 33487
TEL 561 997 9997
FAX 561 997 1610
WWW.JMWA.NET

PALMETTO BAY VILLAGE HALL
9705 E. Hibiscus St., Palmetto Bay, Florida
Master Builders of South Florida, Inc.
1400 E. Oakland Park Blvd. Suite 210
Oakland Park, FL 33334

FLORIDA LICENSURE

AAC002193 IB0001142

PROJECT NO.	8714.00
DESIGNED BY:	RA
DRAWN BY:	DW / EK / JS
CHECKED BY:	JW

SUBMITTALS:
BUILDING PERMIT 03.05.2010

REVISIONS:
2 OWNER REVISIONS 06.22.10

INTERIOR ELEVATIONS

A905

© 2009 JMWA ARCHITECTS, INCORPORATED ALL RIGHTS RESERVED. NO PART OF THESE IDEAS, PLANS OR DESIGNS MAY BE REPRODUCED, COPIED OR UTILIZED GRAPHICALLY IN ANY FORM WHATSOEVER WITHOUT THE EXPRESSED WRITTEN CONSENT OF JMWA ARCHITECTS INCORPORATED AND ITS BOARD OF DIRECTORS.

8/12/2010 2:10:44 PM ekutterer S:\Projects\8700\8714\8714_Drawings\8714_Current\8714_A905_Interior Elevations - Restrooms.dwg

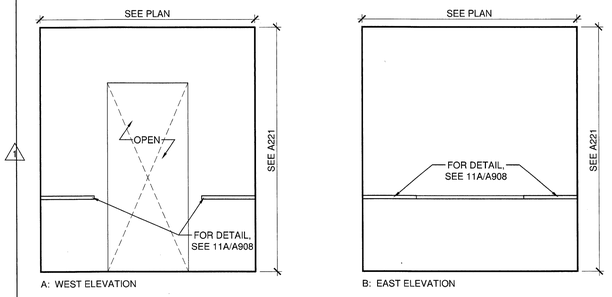

15 ROOM 184 INTERIOR ELEVATIONS
SCALE: 3/8" = 1'-0"

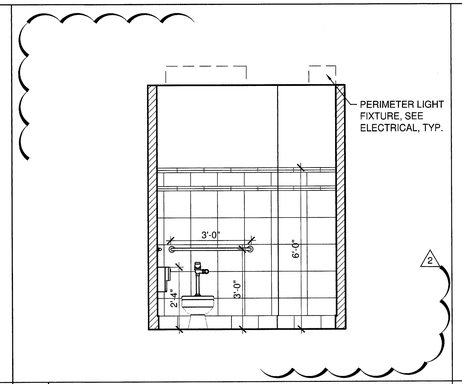

13 ELEVATION AT UNISEX RESTROOM #188
SCALE: 3/8" = 1'-0"

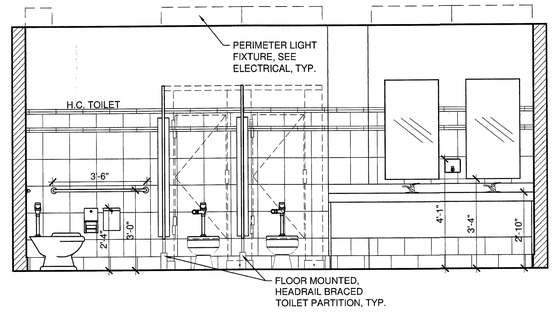

8 ELEVATION AT WOMEN'S RESTROOM #203
SCALE: 3/8" = 1'-0"

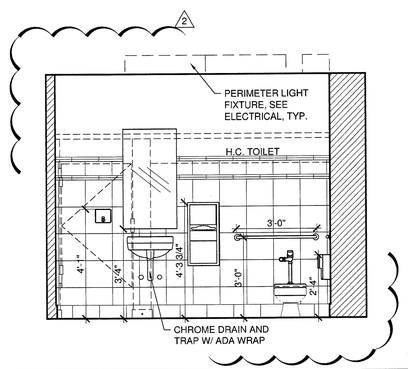

4 ELEVATION AT WOMEN'S RESTROOM #203
SCALE: 3/8" = 1'-0"

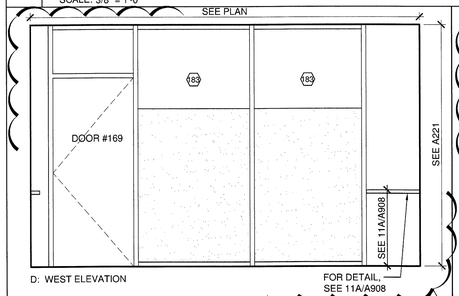

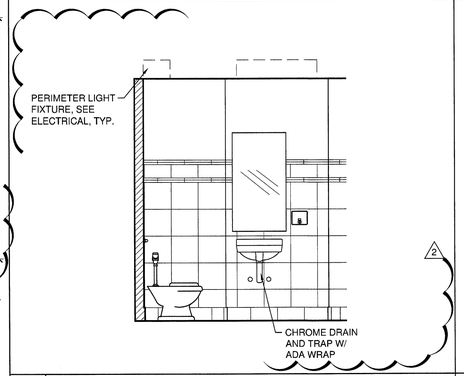

12 ELEVATION AT UNISEX RESTROOM #188
SCALE: 3/8" = 1'-0"

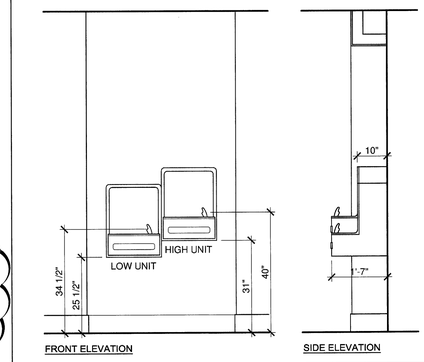

11 TYPICAL WATER FOUNTAIN DETAIL
SCALE: N.T.S.

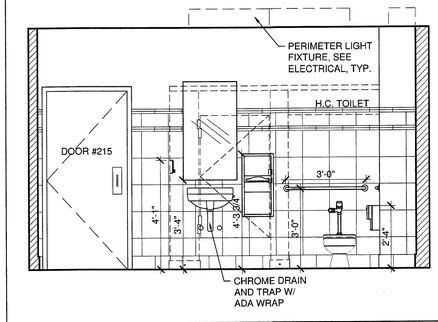

7 ELEVATION AT MEN'S RESTROOM #204
SCALE: 3/8" = 1'-0"

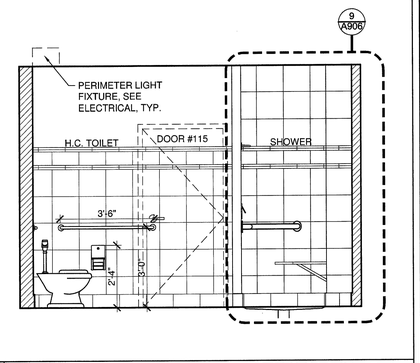

3 ELEVATION AT MEN'S RESTROOM #115
SCALE: 3/8" = 1'-0"

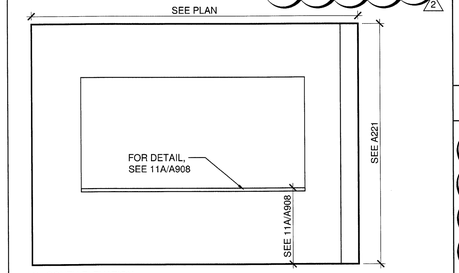

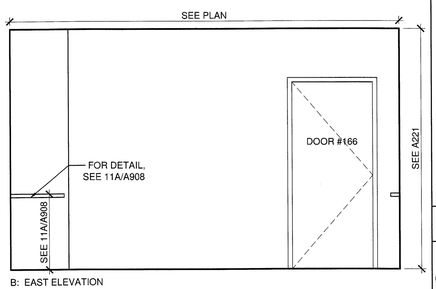

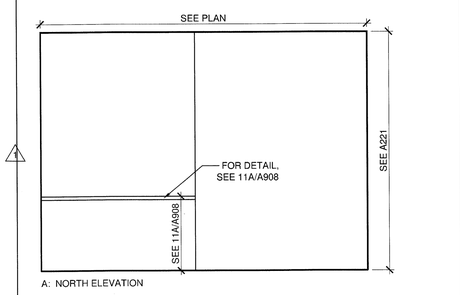

14 ROOM 183 INTERIOR ELEVATIONS
SCALE: 3/8" = 1'-0"

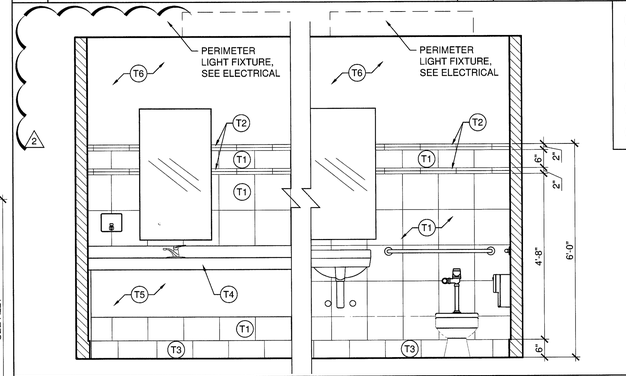

10 RESTROOM TILE DETAIL, TYPICAL
SCALE: N.T.S.

(T1) WALL TILE - SEE T-3, SHEET A902
(T2) WALL ACCENT TILE - SEE T-9, SHEET A902
(T3) METAL COVE BASE - SEE MB-1, SHEET A902
(T4) SOLID SURFACE COUNTER - SEE SS-1, SHEET A902
(T5) PLASTIC LAMINATE - SEE PL-1, SHEET A902
(T6) PAINT - SEE PT-1, SHEET A902

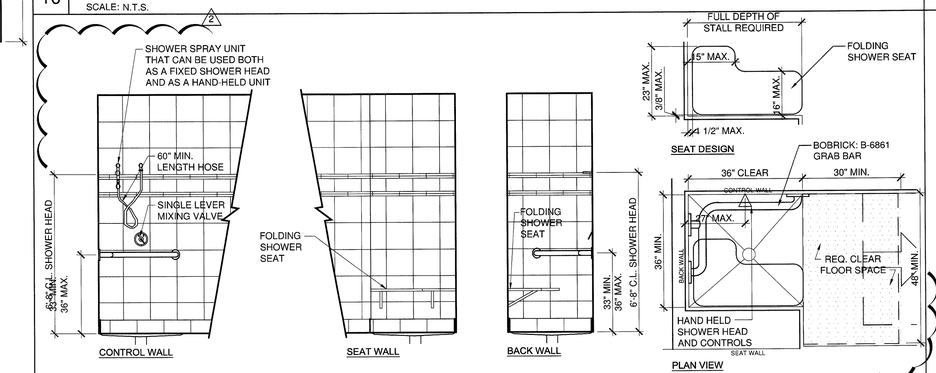

9 TYPICAL SHOWER ELEVATIONS AND PLAN
SCALE: 3/8" = 1'-0"

1 NOTE:
GRAB BARS AND SHOWER SEATS SHALL BE INSTALLED IN COMPLIANCE WITH FBC 11-4.26.3

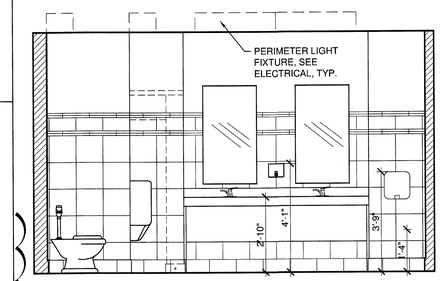

6 ELEVATION AT MEN'S RESTROOM #204
SCALE: 3/8" = 1'-0"

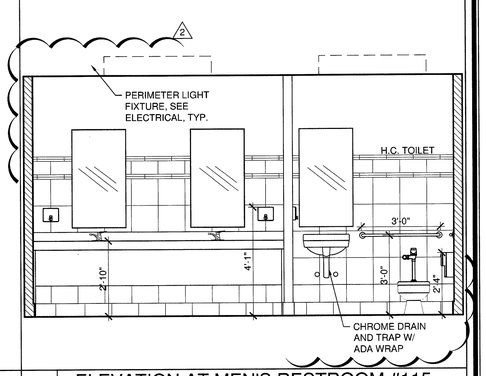

2 ELEVATION AT MEN'S RESTROOM #115
SCALE: 3/8" = 1'-0"

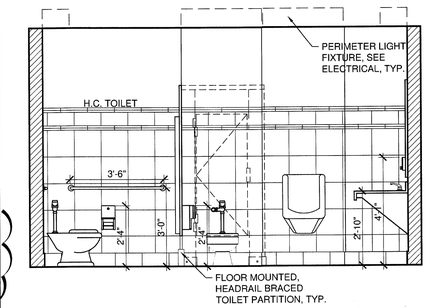

5 ELEVATION AT MEN'S RESTROOM #204
SCALE: 3/8" = 1'-0"

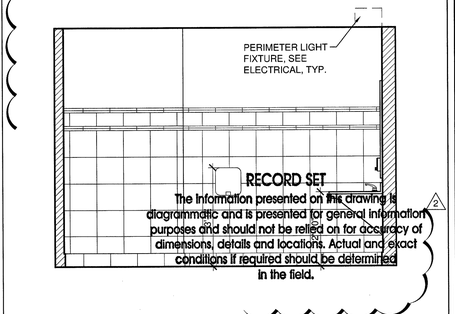

RECORD SET
The information presented on this drawing is diagrammatic and is presented for general information purposes and should not be relied on for accuracy of dimensions, details and locations. Actual and exact conditions if required should be determined in the field.

1 ELEVATION AT MEN'S RESTROOM #115
SCALE: 3/8" = 1'-0"

JMWA ARCHITECTS
STEVEN E. MYOTT AIA
JAMES R. WILLIAMS AIA
RODOLFO ACEVEDO AIA
949 CLINT MOORE ROAD
BOCA RATON, FLORIDA 33487
TEL 561 997 9997
FAX 561 997 1610
WWW.JMWA.NET

PALMETTO BAY VILLAGE HALL
9705 E. Hibiscus St., Palmetto Bay, Florida

Master Builders of South Florida, Inc.
1400 E. Oakland Park Blvd. Suite 210
Oakland Park, FL 33334

FLORIDA LICENSURE
AAC002193 IB0001142

PROJECT NO. 8714.00
DESIGNED BY: RA
DRAWN BY: DW / EK / JS
CHECKED BY: JW

SUBMITTALS:
BUILDING PERMIT 03.05.2010

REVISIONS:
1 PERMIT COMMENTS 04.02.10
2 OWNER REVISIONS 06.22.10

INTERIOR ELEVATIONS

A906

© 2009 JMWA ARCHITECTS, INCORPORATED ALL RIGHTS RESERVED. NO PART OF THESE IDEAS, PLANS OR DESIGNS MAY BE REPRODUCED, COPIED OR UTILIZED GRAPHICALLY IN ANY FORM WHATSOEVER WITHOUT THE EXPRESSED WRITTEN CONSENT OF JMWA ARCHITECTS INCORPORATED AND ITS BOARD OF DIRECTORS.

8/12/2010 2:10:36 PM ekutterer S:\Projects\8700\8714\8714_Drawings\8714_Current\8714_A906_Interior Elevations - Restrooms.dwg

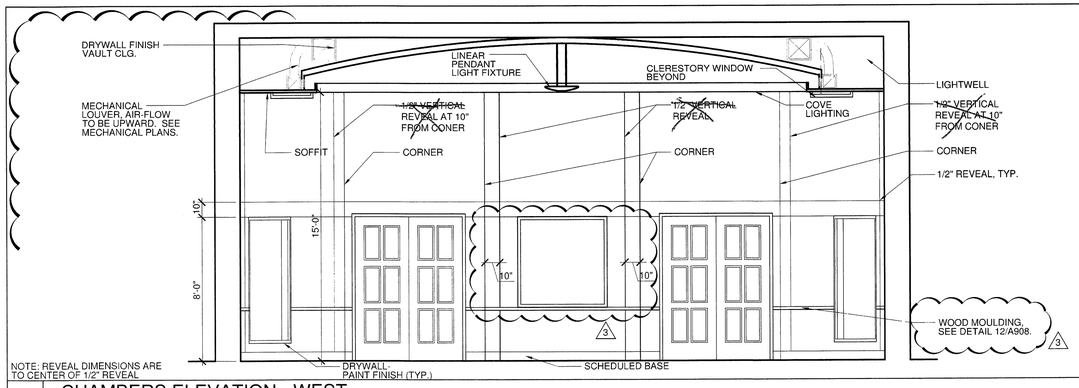

8 CHAMBERS ELEVATION - WEST
SCALE: 1/4" = 1'-0"

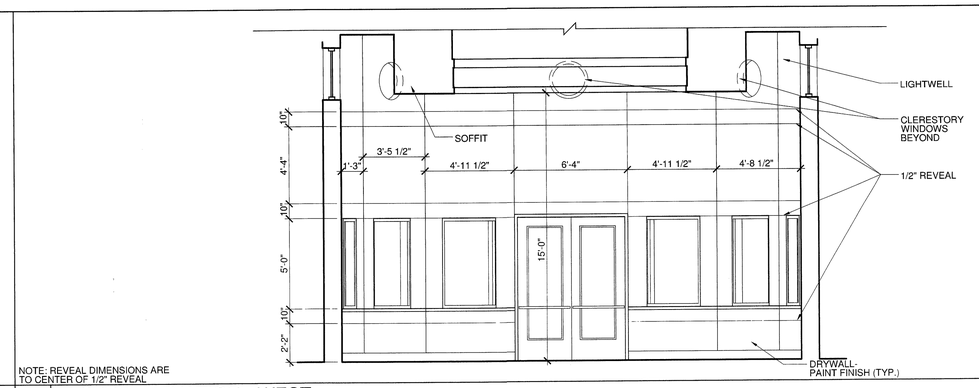

4 LOBBY ELEVATION - WEST
SCALE: 1/4" = 1'-0"

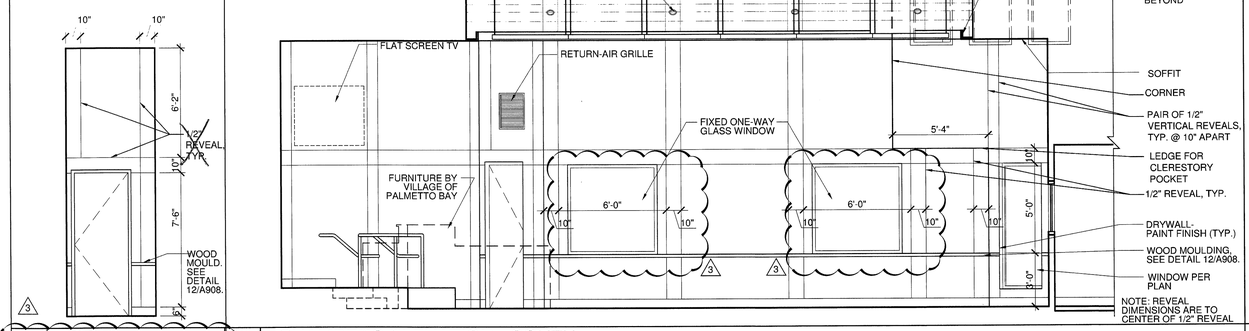

7 CHAMBERS ELEVATION - SOUTH
SCALE: 1/4" = 1'-0"

7a ELEV.
SCALE: 1/4" = 1'-0"

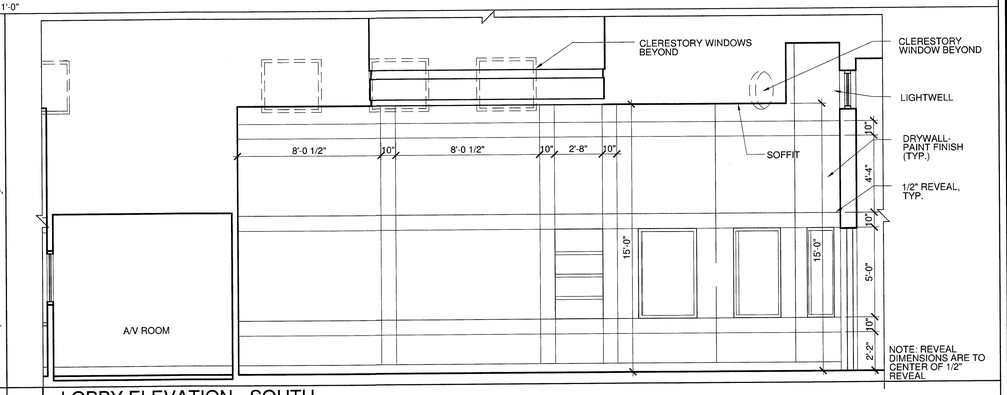

3 LOBBY ELEVATION - SOUTH
SCALE: 1/4" = 1'-0"

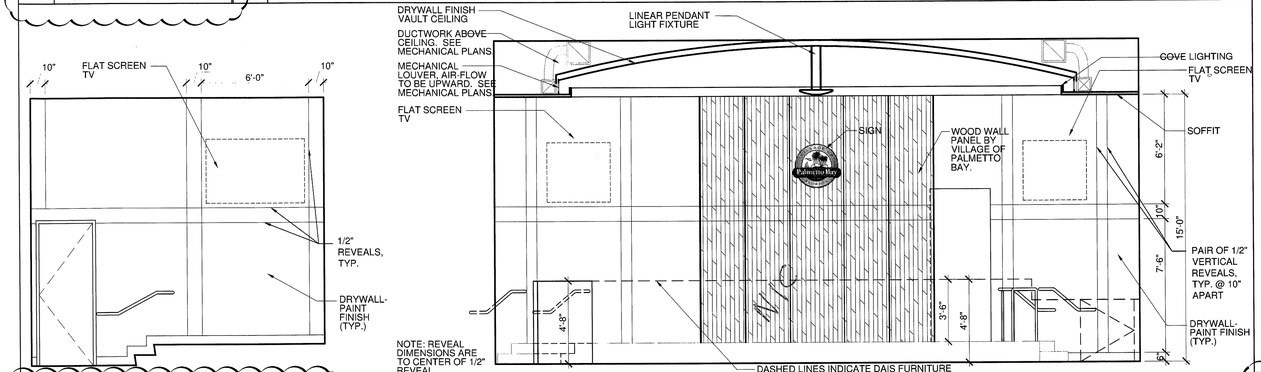

6a CHAMBERS ELEVATION - NE
SCALE: 1/4" = 1'-0"

6 CHAMBERS ELEVATION - EAST
SCALE: 1/4" = 1'-0"

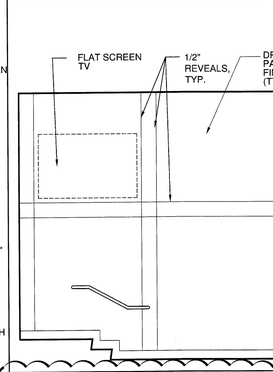

6b LOBBY ELEV. - SE
SCALE: 1/4" = 1'-0"

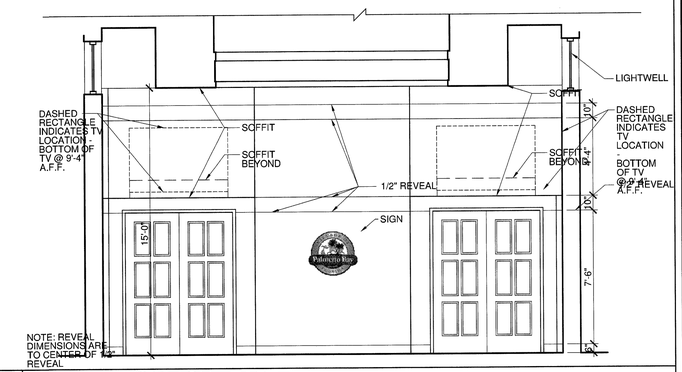

2 LOBBY ELEVATION - EAST
SCALE: 1/4" = 1'-0"

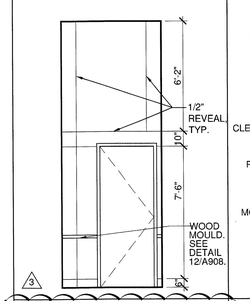

5a ELEV.
SCALE: 1/4" = 1'-0"

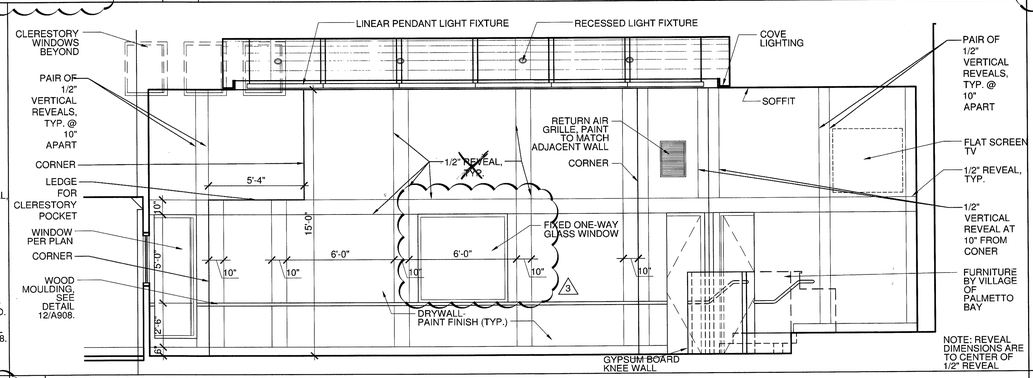

5 CHAMBERS ELEVATION - NORTH
SCALE: 1/4" = 1'-0"

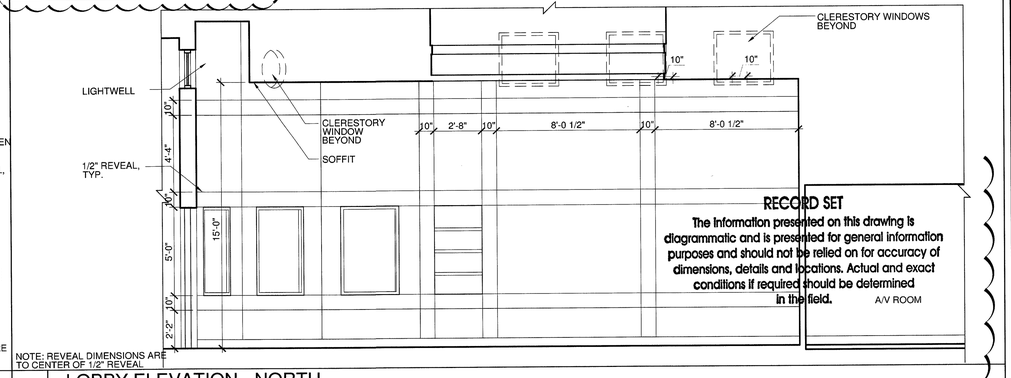

1 LOBBY ELEVATION - NORTH
SCALE: 1/4" = 1'-0"

RECORD SET
The information presented on this drawing is diagrammatic and is presented for general information purposes and should not be relied on for accuracy of dimensions, details and locations. Actual and exact conditions if required should be determined in the field.

JMWA
ARCHITECTS
STEVEN E. MYOTT AIA
JAMES R. WILLIAMS AIA
RODOLFO ACEVEDO AIA
949 CLINT MOORE ROAD
BOCA RATON, FLORIDA 33487
TEL 561 997 9997
FAX 561 997 1640
WWW.JMWA.NET

PALMETTO BAY VILLAGE HALL
9705 E. Hibiscus St., Palmetto Bay, Florida

Master Builders of South Florida, Inc.
1400 E. Oakland Park Blvd. Suite 210
Oakland Park, FL 33334

FLORIDA LICENSURE

AAC002193 IB0001142

PROJECT NO.	8714.00
DESIGNED BY:	RA
DRAWN BY:	DW / EK / JS
CHECKED BY:	JW

SUBMITTALS:
BUILDING PERMIT 03.05.2010

REVISIONS:
2 OWNER REVISIONS 06.22.10
3 OWNER REVISIONS 07.07.10

INTERIOR ELEVATIONS

A907

© 2009 JMWA ARCHITECTS, INCORPORATED ALL RIGHTS RESERVED. NO PART OF THESE IDEAS, PLANS OR DESIGNS MAY BE REPRODUCED, COPIED OR UTILIZED GRAPHICALLY IN ANY FORM WHATSOEVER WITHOUT THE EXPRESSED WRITTEN CONSENT OF JMWA ARCHITECTS INCORPORATED AND ITS BOARD OF DIRECTORS.

S:\Projects\8700\8714\8714_Drawings\8714_Current\8714_A907_Interior Elevations - Lobby and Chambers.dwg
8/12/2010 2:10:24 PM ekutterer

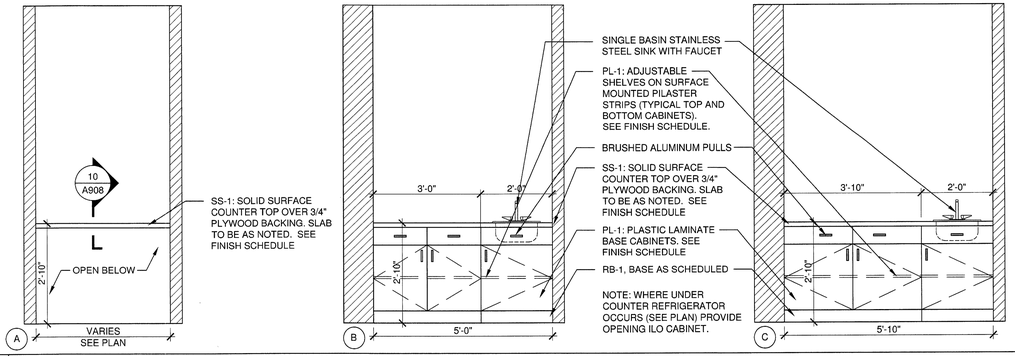

11 TYPICAL CONFERENCE ROOM MILLWORK DETAIL
SCALE: 1/2" = 1'-0"

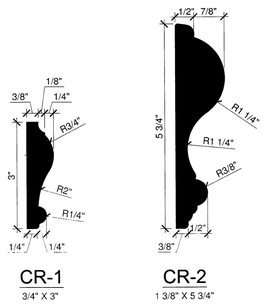

NOTE
TYPICAL MILLWORK AS SCHEDULED ON SHEET A901. MILLWORK TO BE PAINTED PT-1.

12 TYPICAL CHAIR RAIL PROFILES
SCALE: N.T.S.

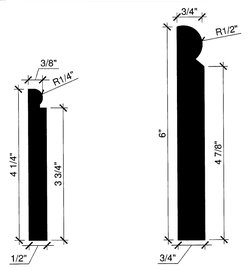

NOTE
TYPICAL MILLWORK AS SCHEDULED ON SHEET A901. MILLWORK TO BE PAINTED PT-1.

13 TYPICAL BASE BOARD PROFILES
SCALE: N.T.S.

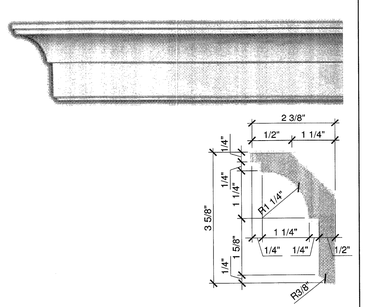

DECORATIVE POLYURETHANE CROWN MOLDING.
PAINT: PT-1.
CROWN MOLDING 4-1/2" x 94-1/2"

14 CROWN MOLDING DETAIL
SCALE: N.T.S.

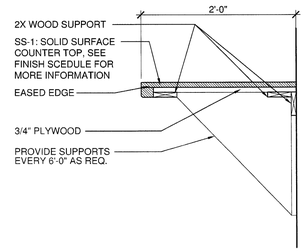

10 COUNTER DETAIL
SCALE: N.T.S.

9 NOT USED
SCALE: N.T.S.

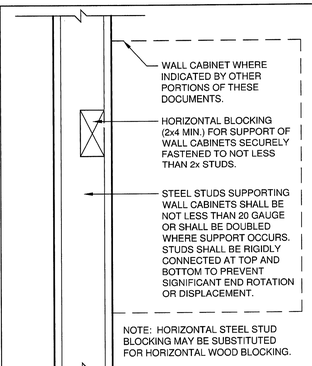

8 CABINET MOUNTING DETAIL
SCALE: 1" = 1'-0"

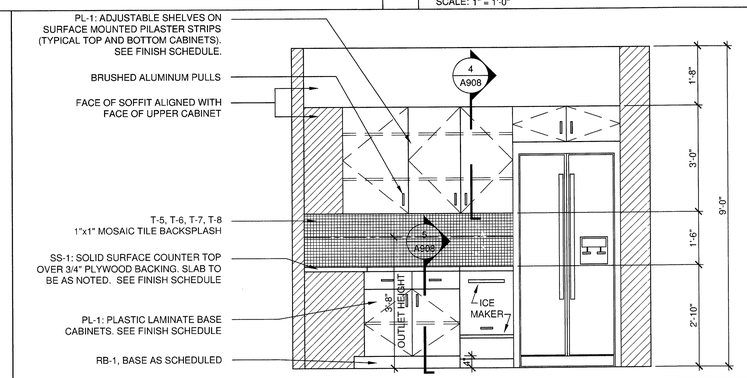

7 BREAK ROOM #209 EAST ELEVATION
SCALE: 1/2" = 1'-0"

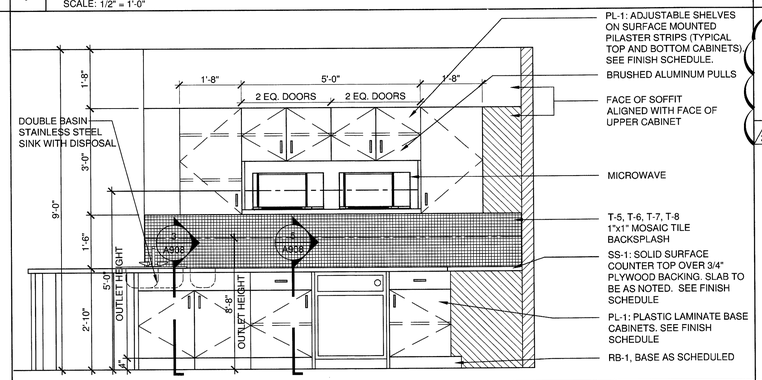

6 BREAK ROOM #209 NORTH ELEVATION
SCALE: 1/2" = 1'-0"

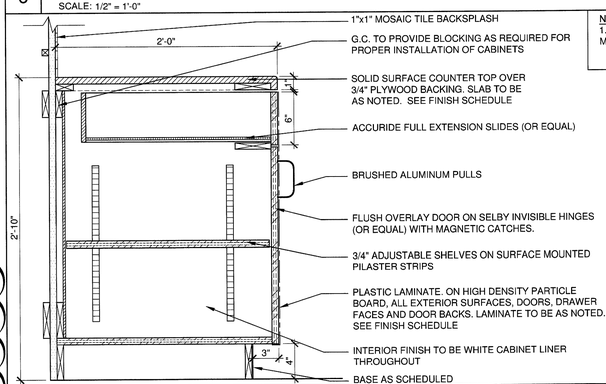

NOTES:
1. PLEASE SEE 9/A908 FOR MOUNTING SUPPORT DETAIL.

5 TYPICAL LOWER CABINET DETAIL
SCALE: 1-1/2" = 1'-0"

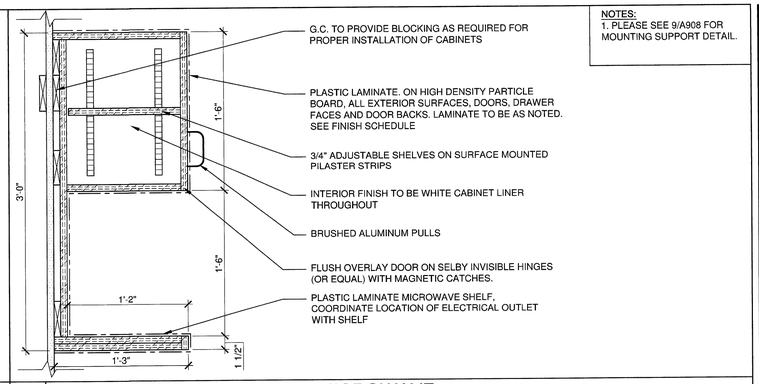

NOTES:
1. PLEASE SEE 9/A908 FOR MOUNTING SUPPORT DETAIL.

4 UPPER CABINET DETAIL W/ MICROWAVE
SCALE: 1-1/2" = 1'-0"

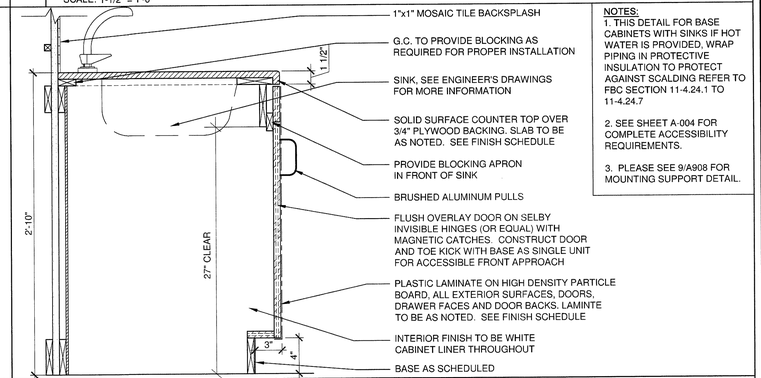

NOTES:
1. THIS DETAIL FOR BASE CABINETS WITH SINKS IF HOT WATER IS PROVIDED. WRAP PIPING IN PROTECTIVE INSULATION TO PROTECT AGAINST SCALDING REFER TO FBC SECTION 11-4.24.1 TO 11-4.24.7
2. SEE SHEET A-004 FOR COMPLETE ACCESSIBILITY REQUIREMENTS.
3. PLEASE SEE 9/A908 FOR MOUNTING SUPPORT DETAIL.

3 LOWER CABINET DETAIL W/ SINK
SCALE: 1-1/2" = 1'-0"

NOTE:
1. KITCHEN LAYOUT DESIGN FOR KITCHENS #147, #180 AND #189 SHALL BE SIMILAR TO THAT AS SHOWN IN THIS DETAIL. CABINETRY WIDTHS TO BE EQUAL AS SHOWN. PROVIDE ONE MICROWAVE AT EACH KITCHEN.

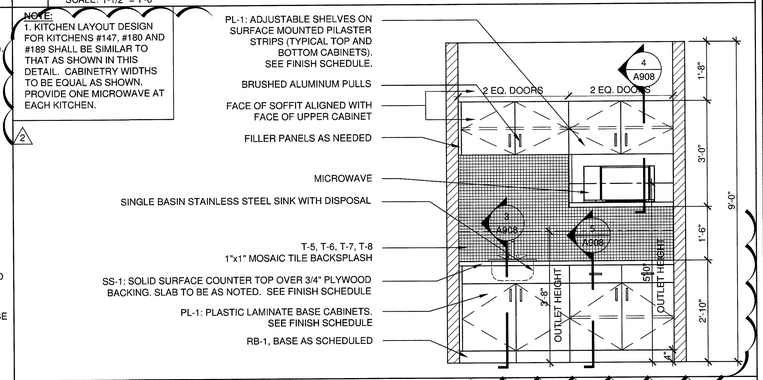

2 BREAK ROOM #118 SOUTH ELEVATION
SCALE: 1/2" = 1'-0"

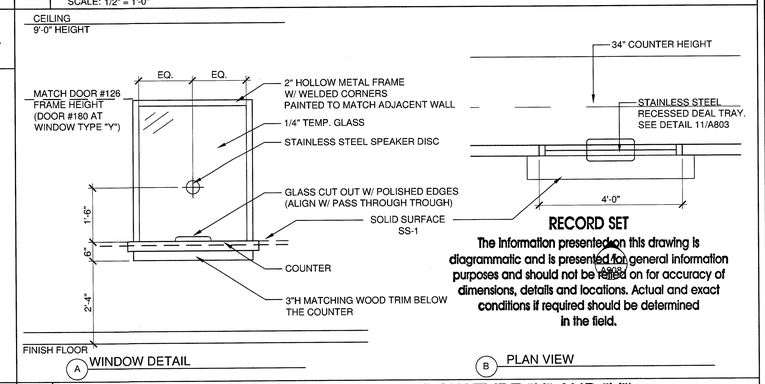

RECORD SET
The information presented on this drawing is diagrammatic and is presented for general information purposes and should not be relied on for accuracy of dimensions, details and locations. Actual and exact conditions if required should be determined in the field.

1 TRANSACTION WINDOW DETAILS (WINDOW TYPE "K" AND "Y")
SCALE: 1/2" = 1'-0"

JMWA
ARCHITECTS
STEVEN E. MYOTT AIA
JAMES R. WILLIAMS AIA
RODOLFO ACEVEDO AIA
949 CLINT MOORE ROAD
BOCA RATON, FLORIDA 33487
TEL 561 997 9997
FAX 561 997 1610
WWW.JMWA.NET

PALMETTO BAY VILLAGE HALL
9705 E. Hibiscus St., Palmetto Bay, Florida

Master Builders of South Florida, Inc.
1400 E. Oakland Park Blvd. Suite 210
Oakland Park, FL 33334

FLORIDA LICENSURE

AAC002193 IB0001142

PROJECT NO.	8714.00
DESIGNED BY:	RA
DRAWN BY:	DW / EK / JS
CHECKED BY:	JW

SUBMITTALS:
BUILDING PERMIT 03.05.2010

REVISIONS:
2 OWNER REVISIONS 06.22.10

MILLWORK DETAILS

A908

© 2009 JMWA ARCHITECTS, INCORPORATED ALL RIGHTS RESERVED. NO PART OF THESE IDEAS, PLANS OR DESIGNS MAY BE REPRODUCED, COPIED OR UTILIZED GRAPHICALLY IN ANY FORM WHATSOEVER WITHOUT THE EXPRESSED WRITTEN CONSENT OF JMWA ARCHITECTS INCORPORATED AND ITS BOARD OF DIRECTORS.

8/12/2010 2:14:05 PM ekutterer S:\Projects\8700\8714\8714_Drawings\8714_Current\8714_A908_Millwork Details.dwg

GENERAL NOTES & SPECIFICATIONS

1. DIMENSIONS AND DETAILS: THE CUSTOMER AND/OR HIS AGENT SHALL CHECK AND APPROVE ALL DIMENSIONS AND DETAILS IN THIS FRAMING PLAN AND REPORT ANY DISCREPENCIES TO FILIGREE WIDESLAB OF FLORIDA INC. BEFORE FABRICATION. FILIGREE WIDESLAB OF FLA., INC., WILL NOT BE RESPONSIBLE FOR ANY CHANGES MADE AFTER APPROVAL OF THESE DRAWINGS.

2. VERTICAL RISERS: THE GENERAL CONTRACTOR IS RESPONSIBLE FOR COORDINATING THE LOCATION OF VERTICAL RISERS AND WALL REINFORCEMENT SO AS NOT TO INTERFERE WITH INSTALLATION OF FILIGREE SLAB.

3. PENETRATIONS: PENETRATIONS ARE BY OTHERS UNLESS OTHERWISE INDICATED. FIELD CUT HOLES THRU THE UNITS MAY NOT CUT PRESTRESSING STRANDS WITHOUT PRIOR WRITTEN APPROVAL FROM FILIGREE WIDESLAB OF FLA., INC., ENGINEER. ALL PENETRATIONS THRU THE SLAB SHALL BE COORDINATED WITH FILIGREE ENGINEERING DURING SHOP DRAWING PREPARATION AND PRIOR TO FABRICATION OF WIDESLABS.

4. ALL REINFORCEMENT, CONCRETE POURS, AND VERTICAL & HORIZONTAL FORMWORK REQUIRED BY THESE PLANS ARE TO BE PROVIDE BY THE GENERAL CONTRACTOR AND UNLESS OTHERWISE NOTED NOT THE RESPONSIBILITY OF FILIGREE WIDESLAB OF FLORIDA INC.

5. BAR SUPPORTS MAY BE REQUIRED IN ORDER TO PROVIDE THE REQUIRED BAR ELEVATION WITHIN THE SLAB. GENERAL CONTRACTOR SHALL FURNISH THE NECESSARY BAR SUPPORTS FOR ALL REINFORCEMENT.

6. FILIGREE WIDESLAB REINFORCING SHALL CONSIST OF 3 OR 4 FILIGREE TRUSSES PER 8'-0" SLAB, 3/8" DIAMETER, 270 KSI, LOW RELAXATION, SEVEN WIRE STRAND, AND 60 KSI REINF. STEEL BARS.

7. WIDESLAB CONCRETE TO ATTAIN A MINIMUM OF 2,000 PSI AT RELEASE, 3,000 PSI AT TIME OF SHORING AND 4,000 PSI AT 28 DAYS.

8. FILIGREE WIDESLAB SHALL BE INSTALLED AND SHORED ACCORDING TO SHORING DIAGRAM PROVIDED BY FILIGREE WIDESLAB OF FLORIDA, INC.

9. CRACKS, SPALLS AND MINOR DAMAGE TO FILIGREE WIDESLAB UNITS MAY BE ACCEPTED IF THEY ARE APPROVED BY THE ENGINEER. SUCH DAMAGE SHALL BE REPAIRED AS DIRECTED BY THE ENGINEER.

10. EXPANSION JOINTS AND/OR CONTROL JOINTS MIGHT BE REQUIRED IN A STRUCTURAL CONCRETE BUILDING TO PREVENT EXCESSIVE CRAKING DUE TO THERMAL MOVEMENT AND/OR SHRINKAGE IN LARGE BUILDINGS AND IN T,L, AND Y SHAPED BUILDINGS. THE NECESSITY AND LOCATION OF THESE JOINTS SHALL BE DETERMINED BY THE ARCHITECT AND/ OR ENGINEER OF RECORD AND IS BEYOND THE SCOPE OF WORK PROVIDED BY FILIGREE WIDESLAB OF FLORIDA INC.

11. DESIGN LOADS:

	12.5" SOLID= 150.0 psf,	
	8" VOIDED= 79.50 psf,	
FILIGREE COMPOSITE SLAB:	7" VOIDED= 70.8 psf,	10" VOIDED= 87.6 psf.
SUPERIMPOSED DEAD LOAD:	D.L.= 25 psf. 2ND. FLOOR	D.L.= 25 psf. 2ND. FLOOR
SUPERIMPOSED LIVE LOAD:	L.L.= 80 psf. 2ND. FLOOR	L.L.= 30 psf. 2ND. FLOOR
CORRIDOR 80 psf	TERRACE 100 psf	

WIND: WIND LOADS ANALYSIS AND FLOOR DIAPHRAGM DESIGN ARE NOT COVERED BY THESE PLANS AND ARE THEREFORE THE RESPONSIBILITY OF OTHERS.

(a) CONCRETE SHALL BE NORMAL WEIGHT, 3/4" AGGREGATE, AND SHALL ATTAIN A 28-DAY MINIMUM COMPRESSIVE STRENGTH OF 4,000 psi. UNLESS OTHERWISE STATED IN THE PLANS.

(b) UNLESS OTHERWISE PERMITTED NO WATER SHALL BE ADDED AT THE JOB SITE TO READY-TO-USE CONCRETE WITHOUT THE APPROVAL OF THE ENGINEER OF RECORD

12. REINFORCING: REINFORCING STEEL SHALL BE GRADE 60.

12.1 CONCRETE PROTECTION FOR REINFORCEMENT: THE FOLLOWING MINIMUM CONCRETE COVER SHALL BE PROVIDED FOR REINFORCEMENT:

ITEM	MINIMUM COVER, IN.
a) SLABS-CONCRETE EXPOSED TO WEATHER:	
NO.6 THROUGH NO.11 BARS	2
NO.5 BARS AND SMALLER	1 1/2
b) SLABS-CONCRETE NOT EXPOSED TO WEATHER: (NO.11 OR SMALLER)	3/4

c) THE ABOVE PROTECTIVE COVERINGS ARE MINIMUMS, BUT PROTECTION SHALL NOT BE LESS THAN REQUIRED FOR FIRE-RESISTIVE RATINGS.

12.2 CONSTRUCTION JOINTS IN FLOORS SHALL BE LOCATED NEAR THE 1/3 POINT THE SPAN OF SLABS EXCEPT WHERE SUCH SLABS CARRY CONCENTRATED LOADS, IN WHICH CASE THE LOCATION OF CONSTRUCTION JOINTS SHALL BE DETERMINED BY ENGINEERING ANALYSIS.

13. PIPES AND CONDUIT EMBEDDED IN CONCRETE: ELECTRIC CONDUIT AND OTHER PIPES SHALL NOT DISPLACE THAT CONCRETE ON WHICH STRESS IS CALCULATED OR WHICH IS REQUIRED FOR FIRE PROTECTION TO A GREATER EXTENT THAN FOUR PERCENT OF THE AREA OF THE CROSS SECTION. SLEEVES OR OTHER PIPES PASSING THROUGH FLOORS SHALL NOT BE OF SUCH SIZE OR IN SUCH LOCATION AS UNDULY TO IMPAIR THE STRENGTH OF THE CONSTRUCTION. EMBEDDED PIPES AND CONDUITS OTHER THAN THOSE MERELY PASSING THROUGH SHALL NOT BE LARGER IN OUTSIDE DIAMETER THAN ONE-THIRD THE THICKNESS OF THE SLAB IN WHICH THEY ARE EMBEDDED AND SHALL NOT BE SPACED CLOSER THAN THREE DIAMETERS ON CENTERS, NOR SO LOCATED AS TO UNDULY IMPAIR THE STRENGTH OF THE CONCRETE.

14. SPECIALTY ENGINEER'S LIMITATION OF RESPONSIBILITY: THE ENGINEER SHALL NOT BE RESPONSIBLE FOR THE QUALITY OR COMPOSITION OF MATERIALS, SHOP DRAWINGS OTHER THAN FOR THE FILIGREE WIDESLAB PRECAST PANELS, OR FABRICATION, CONSTRUCTION INSPECTION, SUPERVISION, OR REVIEW, SPECIAL INSPECTION, OR THE QUALITY AND CORRECTNESS OF CONSTRUCTION UNLESS THE APPROPRIATE SUBMISSIONS, REPORTS, APPROVALS, SHOP DRAWINGS, INSPECTIONS, SITE VISIT, CONSTRUCTION REVIEW, OR SPECIAL INSPECTIONS ARE PERFORMED BY THE SPECIALTY ENGINEER OR HIS REPRESENTATIVE AS REQUIRED HEREIN, AND THEN ONLY SUCH RESPONSIBILITY AS IS ASSOCIATED WITH THE SPECIFIC WORK PERFORMED AND IS COMMONLY ASSIGNED A SPECIALTY STRUCTURAL ENGINEER IN RELATION TO OTHER ENGINEERING AND CONSTRUCTION DISCIPLINES ASSOCIATED WITH THE PROJECT.

15. THE SLAB HAS BEEN DESIGNED TO APPLICABLE BUILDING CODE (FBC 2004 WITH 2005 AND 2006 REVISIONS.)

(A+B)(CD/E) = A: INDICATES NUMBER OF 3/8" DIA. GRADE 270 ksi STRANDS IN A SINGLE PANEL
B: INDICATES NUMBER OF #5 REBAR GRADE 60 ksi IN A SINGLE PANEL
CD: INDICATES BUILDING LEVEL
A: INDICATES FILIGREE PANEL NUMBER

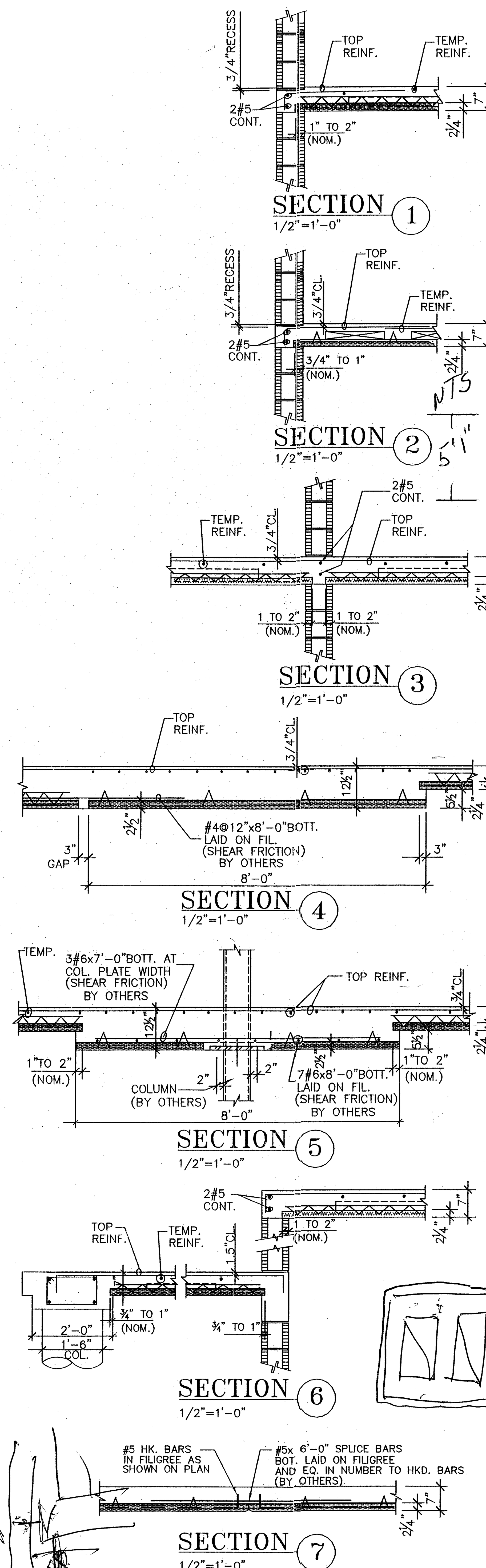

SECTION 1 — 1/2"=1'-0"
SECTION 2 — 1/2"=1'-0"
SECTION 3 — 1/2"=1'-0"
SECTION 4 — 1/2"=1'-0"
SECTION 5 — 1/2"=1'-0"
SECTION 6 — 1/2"=1'-0"
SECTION 7 — 1/2"=1'-0"

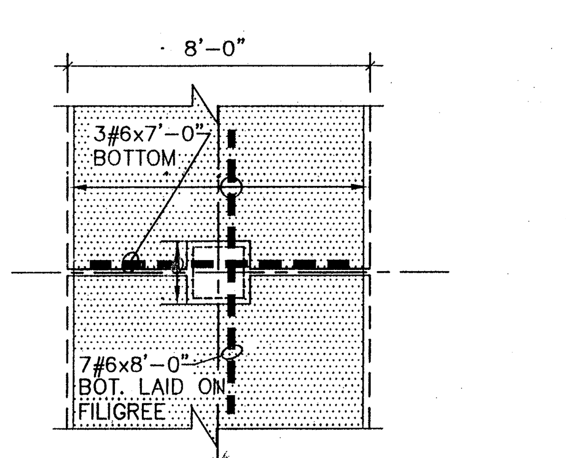

TYPICAL SHEAR FRICTION REINFORCEMENT @COLUMNS
1/4"=1'-0"

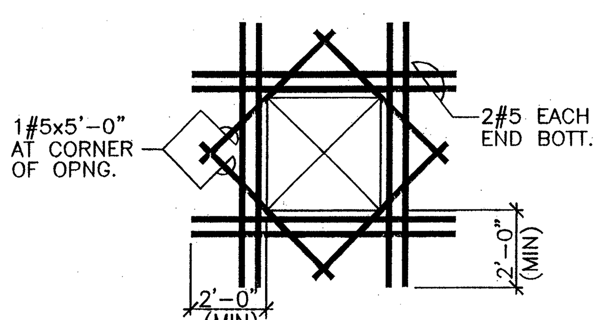

FILIGREE SLAB OPNG. DET.
SCALE: 1/4" =1'-0" OCCURS WHERE OPNG'S. IN FILIGREE SLAB ARE 10"x10"OR GREATER

THIS SHEET
1-ROOF TOP UNIT
1- 48x51 OPENING
4- 12x12 OPENINGS
1- 4" Round

AAAdvance Air
Terry Kondas 3-3-10

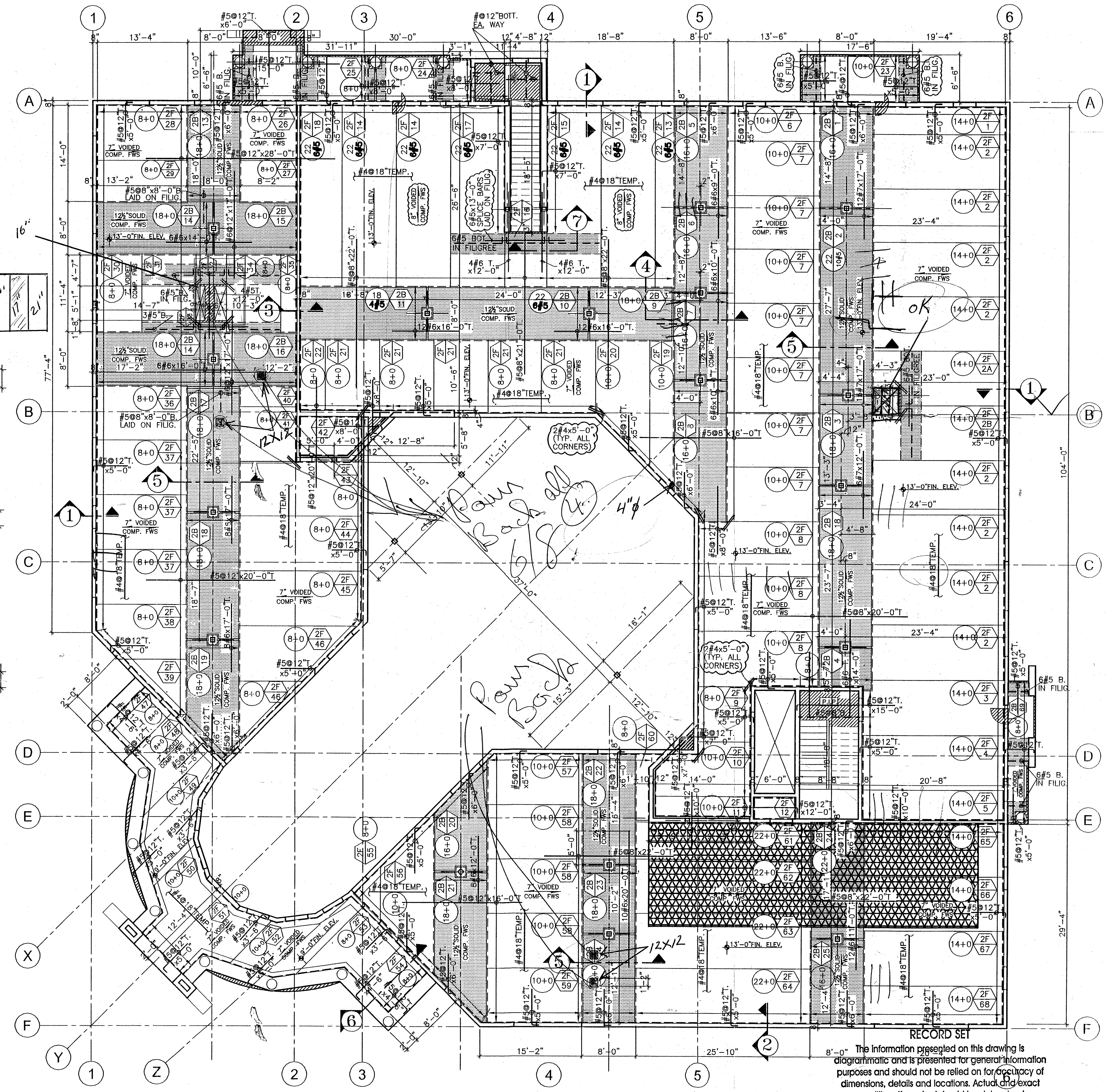

2ND. LEVEL/ROOF FRAMING PLAN AND TOP REINFORCEMENT
SCALE : 1/8" = 1'-0"

=FOR P.I.P. AREA USE #4@12" EA. WAY BOTT.

RECORD SET
The information presented on this drawing is diagrammatic and is presented for general information purposes and should not be relied on for accuracy of dimensions, details and locations. Actual and exact conditions if required should be determined in the field.

No.	REVISION	DATE

PALMETTO BAY VILLAGE HALL

FILIGREE WIDESLAB OF FLORIDA INC.
FT. LAUDERDALE, FLA. 33314
PH: 954-791 8200

ENGINEER: STRUCTURES INTERNATIONAL INC. 7501 WILES ROAD, SUITE 106-B CORAL SPRINGS, FL. 33067 CA # 9496
MONZER FARAMAWI P.E. # 57439

DWN: R.M. DATE: 11/09/09
CHKD: . DATE:

JOB NO.: 1414
SCALE: AS NOTED

F1
1 OF 2

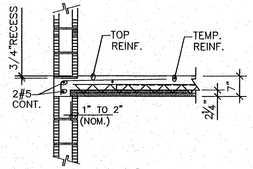

SECTION 1
1/2"=1'-0"

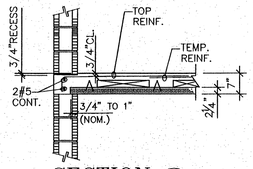

SECTION 2
1/2"=1'-0"

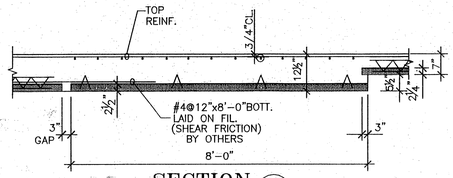

SECTION 3
1/2"=1'-0"

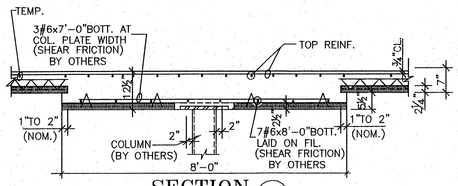

SECTION 4
1/2"=1'-0"

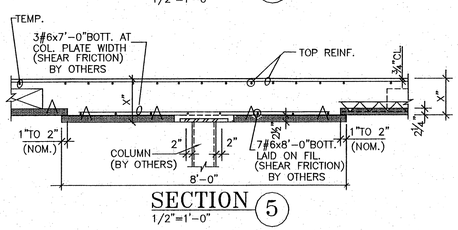

SECTION 5
1/2"=1'-0"

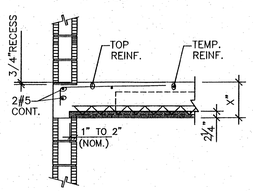

SECTION 6
1/2"=1'-0"

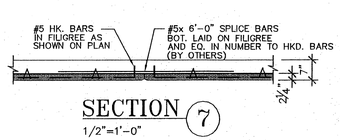

SECTION 7
1/2"=1'-0"

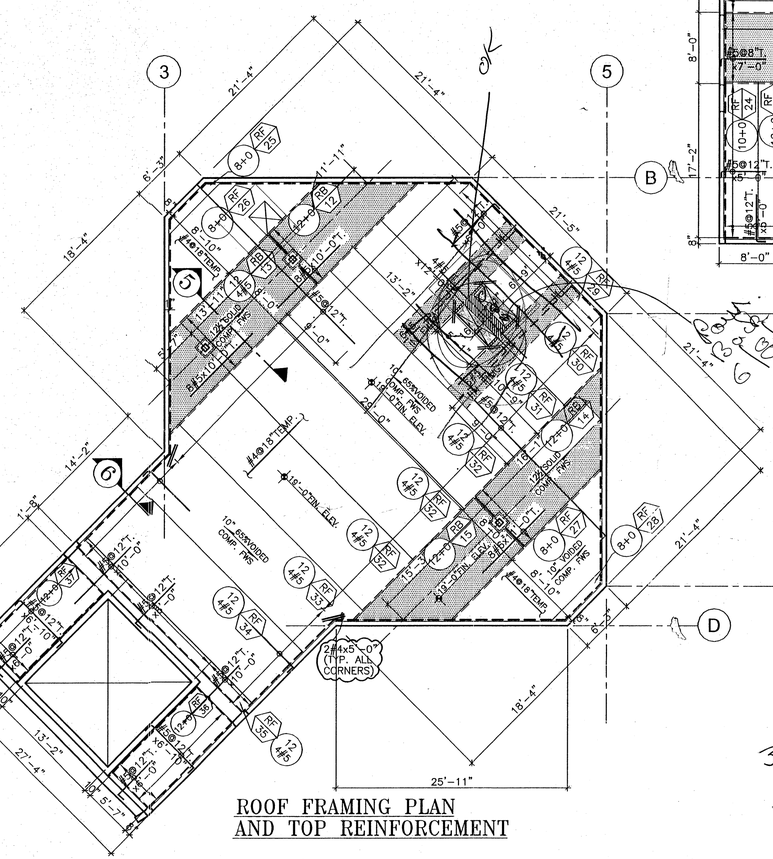

ROOF FRAMING PLAN
AND TOP REINFORCEMENT

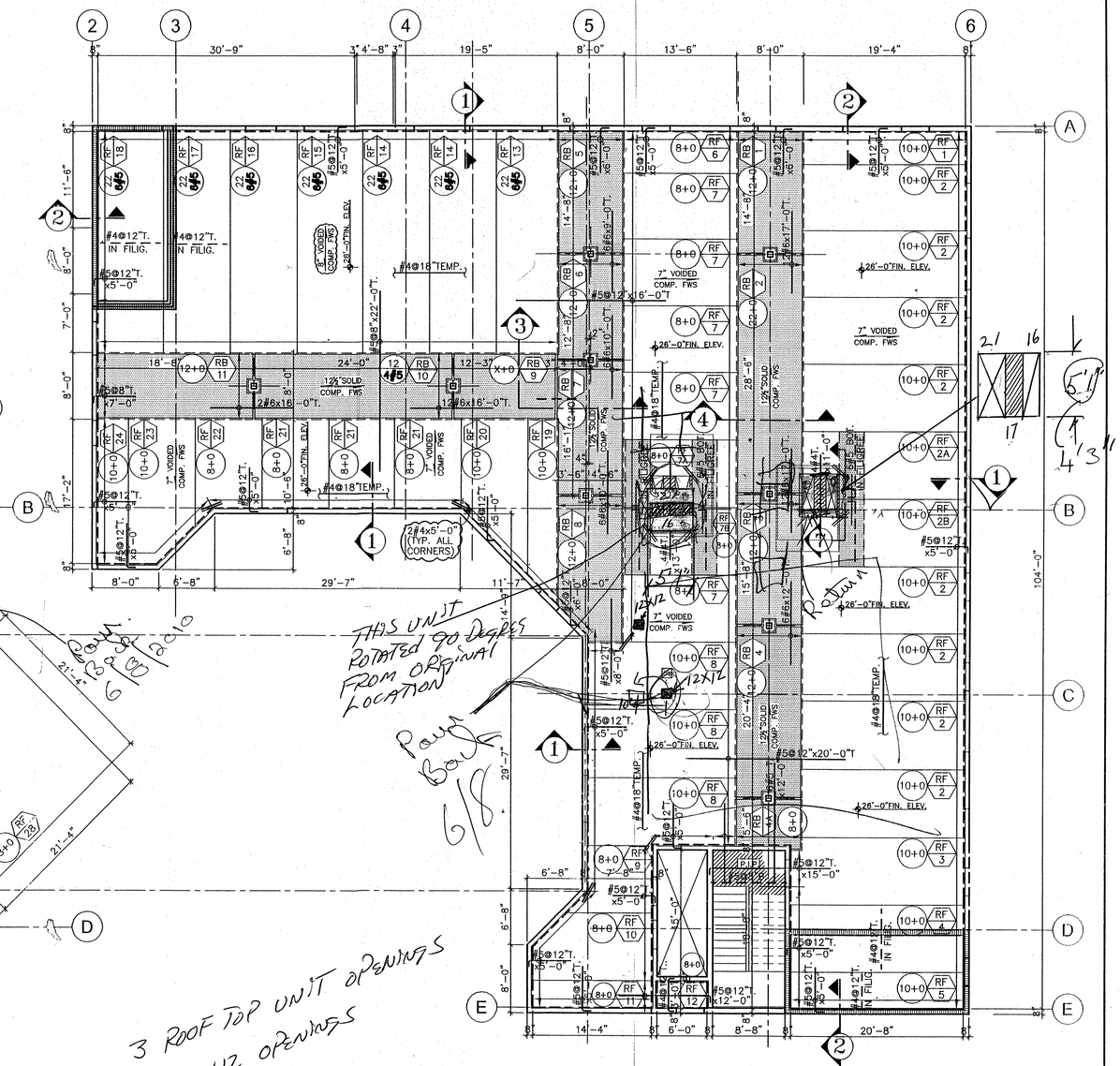

ROOF FRAMING PLAN
AND TOP REINFORCEMENT

3 ROOF TOP UNIT OPENINGS
2- 12x12 OPENINGS

=FOR P.I.P. AREA USE #4@12" EA. WAY BOTT.

FROM AAAD VANCE AIR
3-3-10 TERRY KONDAS

RECORD SET
The information presented on this drawing is diagrammatic and is presented for general information purposes and should not be relied on for accuracy of dimensions, details and locations. Actual and exact conditions if required should be determined in the field.

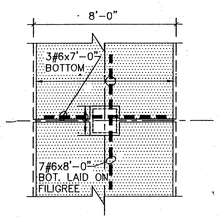

TYPICAL SHEAR FRICTION
REINFORCEMENT @COLUMNS

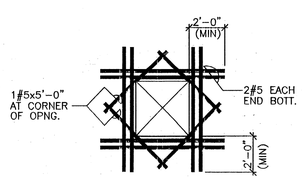

FILIGREE SLAB OPNG. DET.
SCALE: 1/4" = 1'-0" OCCURS WHERE OPNG'S. IN FILIGREE SLAB ARE 10"x10"OR GREATER

No.	REVISION	DATE

PALMETTO BAY VILLAGE HALL

FILIGREE WIDESLAB
OF FLORIDA INC.

ENGINEER: STRUCTURES INTERNATIONAL INC. MONZER FARAMAWI P.E. # 57439
7501 WILES ROAD, SUITE 106-E
CORAL SPRINGS, FL. 33067
CA # 9496

FT. LAUDERDALE, FLA. 33314
PH: 954-791 8200

DWN: R.M. DATE: 11/09/09
CHKD: R.M. DATE:

JOB No.: 1414
SCALE: AS NOTED

F 2
2 OF 2

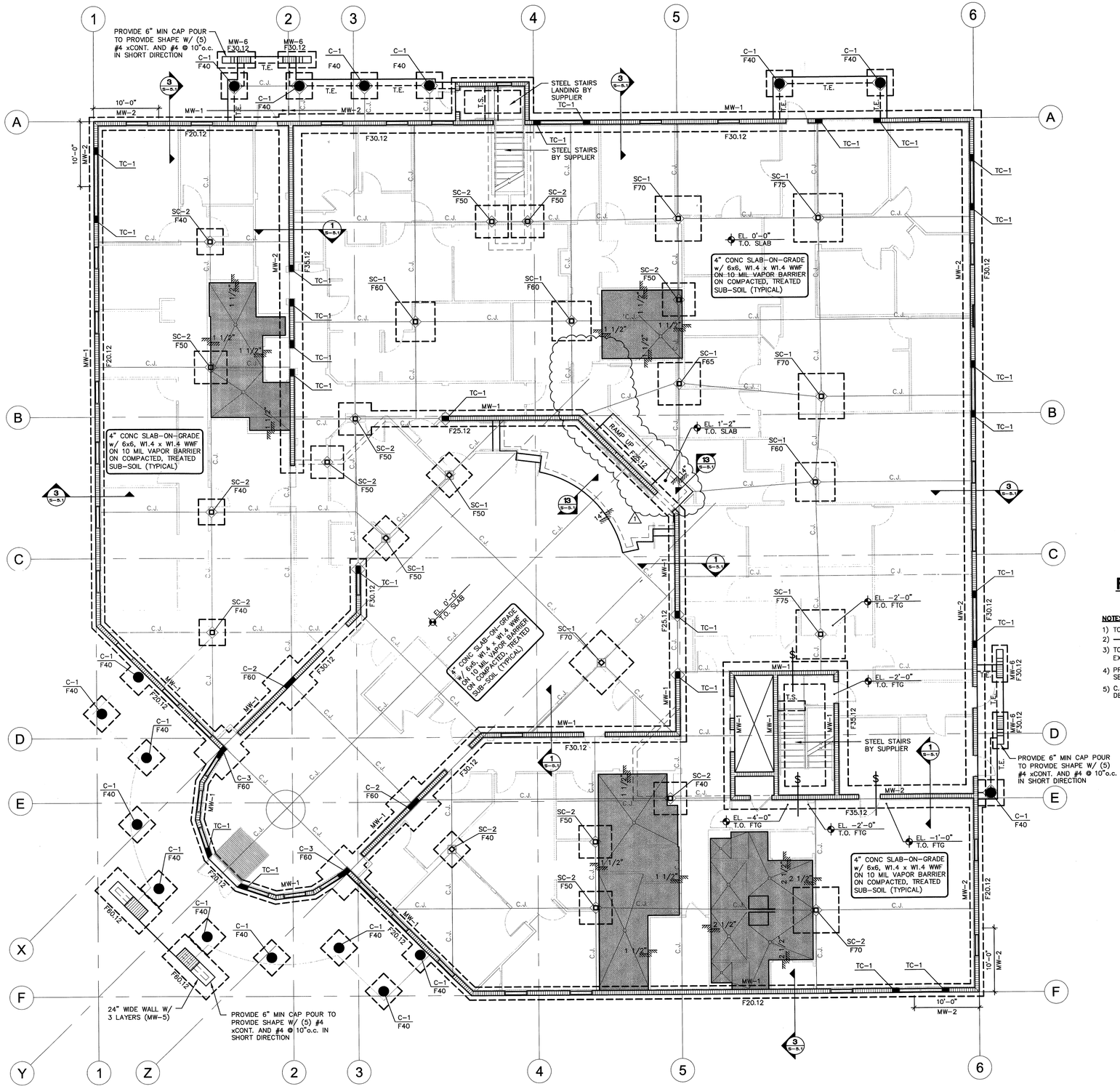

ALL MASONRY WALLS TO HAVE HIGH STRENGTH BLOCK F'm= 2500 PSI

FOUNDATION PLAN

1/8"=1'-0"

NOTES:

1) TOP OF SLAB ELEV. 0'-0" IS 13.0' NGVD.
2) ~~0~~ INDICATES STEP FOOTING. SEE TYPICAL DETAIL.
3) TOP OF FOOTINGS SHALL BE @ ELEV. -1'-0" OR 8" BELOW EXTERIOR GRADE FOR EXTERIOR WALL/ COLUMN FOOTINGS U.N.O.
4) PROVIDE TERMITE TREATMENT BELOW SLAB ON GRADE PER FBC SECTION 1816
5) C.J. INDICATES SLAB ON GRADE CONTROL JOINT. SEE TYPICAL DETAIL ON SHEET S-4.2.

RECORD SET

The information presented on this drawing is diagrammatic and is presented for general information purposes and should not be relied on for accuracy of dimensions, details and locations. Actual and exact conditions if required should be determined in the field.

NORTH

PERMIT SET
03/03/10

TOLLIVER J. FRAZIER
P.E. FLORIDA
REG. #56011
04-06-10

ONMJ
O'Donnell, Naccarato, Mignogna Jackson
STRUCTURAL ENGINEERS
321 15TH STREET, SUITE 200
WEST PALM BEACH, FLORIDA 33401
(561) 835 - 9994 FAX (561) 835 - 8255
LIC. #0004386
JOB # 900.839

JMWA
ARCHITECTS
STEVEN E. MYOTT AIA
JAMES R. WILLIAMS AIA
RODOLFO ACEVEDO AIA
949 CLINT MOORE ROAD
BOCA RATON, FLORIDA 33487
TEL 561 997 9997
FAX 561 997 1610
WWW.JMWA.NET

PALMETTO BAY VILLAGE HALL

9705 E. Hibiscus St., Palmetto Bay, Florida

Master Builders of South Florida, Inc.
1400 E. Oakland Park Blvd. Suite 210
Oakland Park, FL 33334

FLORIDA LICENSURE

AAC002193 IB0001142

PROJECT NO.	8714.00
DESIGNED BY:	RA
DRAWN BY:	DW / EK / JS
CHECKED BY:	JW

SUBMITTALS:
BUILDING PERMIT 03.05.2010

REVISIONS:
1 PERMIT COMMENTS 04/02/10

FOUNDATION PLAN

S-1

© 2009 JMWA ARCHITECTS, INCORPORATED ALL RIGHTS RESERVED. NO PART OF THESE IDEAS, PLANS OR DESIGNS MAY BE REPRODUCED, COPIED OR UTILIZED GRAPHICALLY IN ANY FORM WHATSOEVER WITHOUT THE EXPRESSED WRITTEN CONSENT OF JMWA ARCHITECTS INCORPORATED AND ITS BOARD OF DIRECTORS.

P:\PROJECT\2009-jobs\900839\S-1.dwg
4/5/2010 10:29:10 AM gnolin

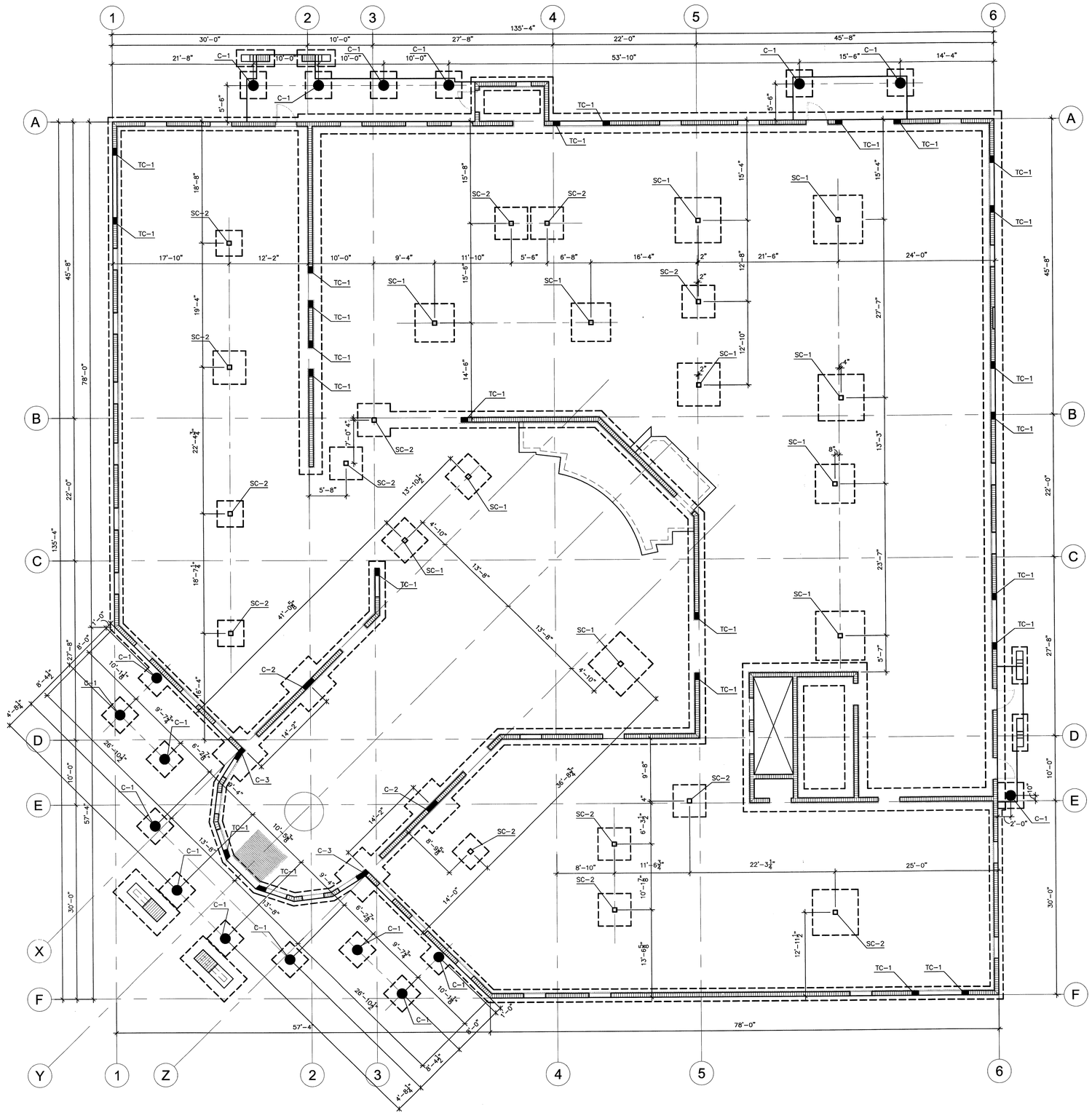

DIMENSION PLAN

1/8"=1'-0"

RECORD SET

The information presented on this drawing is diagrammatic and is presented for general information purposes and should not be relied on for accuracy of dimensions, details and locations. Actual and exact conditions if required should be determined in the field.

NORTH

PERMIT SET

03/03/10

TOLLIVER J. FRAZIER
P.E. FLORIDA
REG. #56011
03-05-10

O'Donnell, Naccarato, Mignogna Jackson
STRUCTURAL ENGINEERS
321 15TH STREET, SUITE 200
WEST PALM BEACH, FLORIDA 33401
(561) 835 - 9994 FAX (561) 835 - 8255
LIC. #0004386
JOB # 900.839

JMWA ARCHITECTS
STEVEN E. MYOTT AIA
JAMES R. WILLIAMS AIA
RODOLFO ACEVEDO AIA
949 CLINT MOORE ROAD
BOCA RATON, FLORIDA 33487
TEL 561 997 9997
FAX 561 997 1610
WWW.JMWA.NET

PALMETTO BAY VILLAGE HALL

Palmetto Bay, Florida

Master Builders of South Florida, Inc.
1400 E. Oakland Park Blvd. Suite 210
Oakland Park, FL 33334

FLORIDA LICENSURE

AAC002193 IB0001142

PROJECT NO.	8714.00
DESIGNED BY:	RA
DRAWN BY:	DW / EK / JS
CHECKED BY:	JW

SUBMITTALS:
BUILDING PERMIT 03.03.2010

REVISIONS:

DIMENSION PLAN

S-1D

© 2009 JMWA ARCHITECTS, INCORPORATED ALL RIGHTS RESERVED. NO PART OF THESE IDEAS, PLANS OR DESIGNS MAY BE REPRODUCED, COPIED OR UTILIZED GRAPHICALLY IN ANY FORM WHATSOEVER WITHOUT THE EXPRESSED WRITTEN CONSENT OF JMWA ARCHITECTS INCORPORATED AND ITS BOARD OF DIRECTORS.

3/3/2010 9:25:29 AM gnolin P:\PROJECT\2009-jobs\900839\S-1.dwg

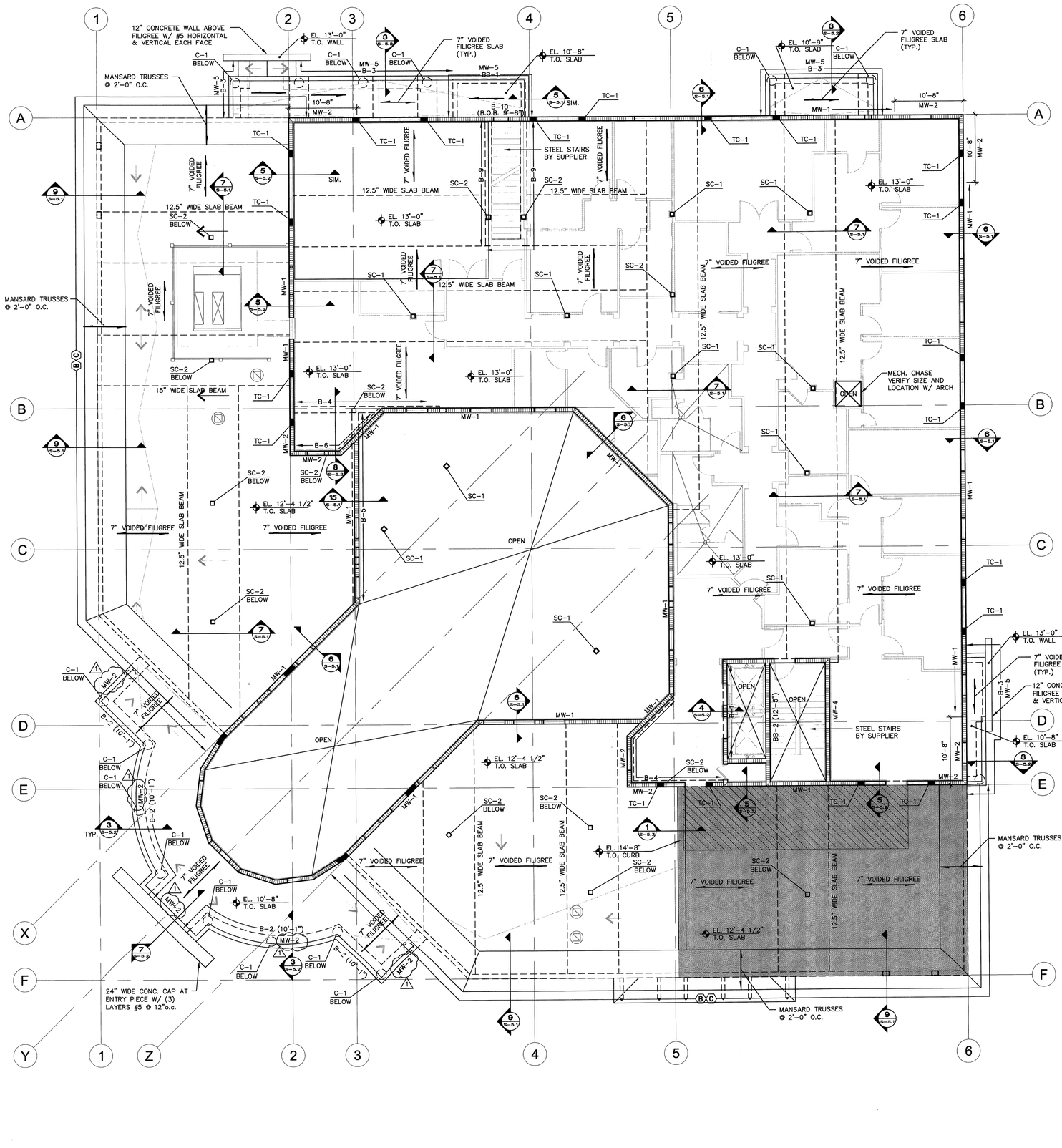

2ND FLOOR FRAMING PLAN

1/8"=1'-0"

ALL MASONRY WALLS TO HAVE HIGH-STRENGTH BLOCK f'm=2,500 PSI

FRAMING PLAN NOTES:

1) AT TOP OF MASONRY WALLS PROVIDE BB-1, U.N.O.

2) FILIGREE SPECIALTY ENGINEER TO PROVIDE ALL REQUIRED SLAB REBARS INCLUDING, BUT NOT LIMITED TO, TOP STEEL OVER THE COLUMNS, TEMPERATURE REBARS, PERIMETER REBARS, SHEAR FRICTION REBARS AND MIDSPAN MOMENT REBARS.

3) SEE SHEET S-4.1 FOR MASONRY WALL SCHEDULE.

4) PLACE (2) #7 REBAR GROUTED SOLID IN JAMB CELLS AT OPENINGS AND DOOR OPENINGS.

5) MASONRY WALLS ARE TO MEET ALL FIRE REQUIREMENTS (SEE ARCH'L DRAWINGS).

6) ADD BB-1 AT TOP OF 4" CMU WALL GLAZING WINDOW.

7) G.C. SHALL COORDINATE MEP SLEEVES AND PENETRATIONS WITH FILIGREE SUPPLIER.

1 8) PROVIDE 5/8" (19/32") EXPOSURE 1, 40/20 SPAN RATING, PLYWOOD ROOF TRUSS SHEATHING. FASTEN W/ 8d NAILS @ 4"o.c. AT PANEL EDGES AND INTERMEDIATE SUPPORTS.

FRAMING PLAN LEGEND:

(x'-xx") INDICATES TOP OF BEAM ELEVATION

INDICATES TRUSS TIE DOWN, SEE SCHEDULE ON S-3

HATCHED AREA INDICATES OUTDOOR TERRACE.
SUPERIMPOSED LOADING:
FLOOR FINISH = 10 PSF
LIVE LOAD = 80 PSF

SHADED AREA INDICATES CONCRETE SLOPED TOPPING SLAB: 3 1/4" MIN TO 7 1/2" MAX THICKNESS. (F'c=3'000) W/ 6x6-W2.4xW2.4xWF

RECORD SET

The information presented on this drawing is diagrammatic and is presented for general information purposes and should not be relied on for accuracy of dimensions, details and locations. Actual and exact conditions if required should be determined in the field.

NORTH

PERMIT SET
03/03/10

TOLLIVER J. FRAZIER
P.E. FLORIDA
REG. #56011
04-06-10

O'Donnell, Naccarato, Mignogna Jackson
STRUCTURAL ENGINEERS
321 15TH STREET, SUITE 200
WEST PALM BEACH, FLORIDA 33401
(561) 835 - 9994 FAX (561) 835 - 8255
LIC. #0004386
JOB # 900.839

JMWA
ARCHITECTS
STEVEN E. MYOTT AIA
JAMES R. WILLIAMS AIA
RODOLFO ACEVEDO AIA
949 CLINT MOORE ROAD
BOCA RATON, FLORIDA 33487
TEL 561 997 9997
FAX 561 997 1610
WWW.JMWA.NET

PALMETTO BAY VILLAGE HALL

9705 E. Hibiscus St., Palmetto Bay, Florida

Master Builders of South Florida, Inc.
1400 E. Oakland Park Blvd. Suite 210
Oakland Park, FL 33334

FLORIDA LICENSURE

AAC002193 IB0001142

PROJECT NO.	8714.00
DESIGNED BY:	RA
DRAWN BY:	DW / EK / JS
CHECKED BY:	JW

SUBMITTALS:
BUILDING PERMIT 03.05.2010

REVISIONS:
1 PERMIT COMMENTS 04/02/10

2ND FLOOR FRAMING PLAN

S-2

© 2009 JMWA ARCHITECTS, INCORPORATED ALL RIGHTS RESERVED. NO PART OF THESE IDEAS, PLANS OR DESIGNS MAY BE REPRODUCED, COPIED OR UTILIZED GRAPHICALLY IN ANY FORM WHATSOEVER WITHOUT THE EXPRESSED WRITTEN CONSENT OF JMWA ARCHITECTS INCORPORATED AND ITS BOARD OF DIRECTORS.

4/5/2010 10:22:33 AM gnolin P:\PROJECT\2009-jobs\900839\S-2.dwg

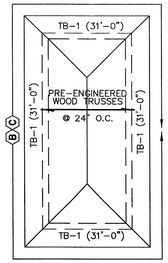

HIGH ROOF PLAN
1/8"=1'-0"

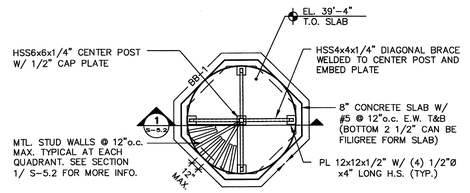

HIGH ROOF PLAN
1/8"=1'-0"

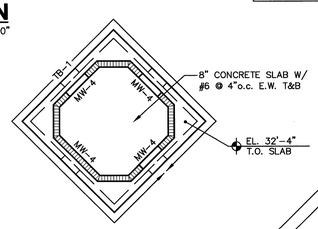

HIGH ROOF PLAN
1/8"=1'-0"

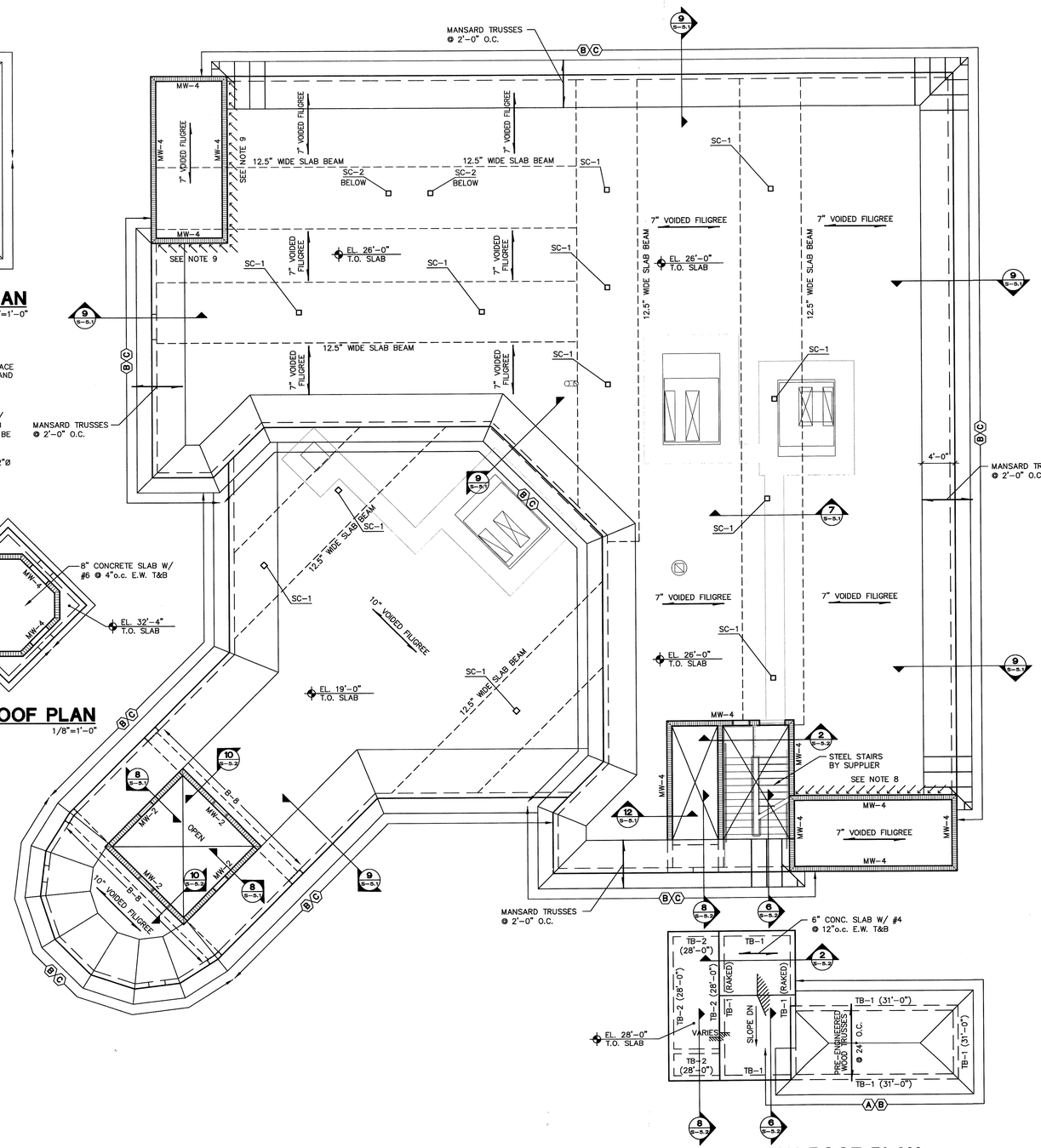

ROOF FRAMING PLAN
1/8"=1'-0"

ROOF FRAMING NOTES:

1) PROVIDE 5/8" (19/32") EXPOSURE 1, 40/20 SPAN RATING, PLYWOOD ROOF TRUSS SHEATHING. FASTEN W/ 8d NAILS @ 4"o.c. AT PANEL EDGES AND INTERMEDIATE SUPPORTS. (1)
2) ——— INDICATES PRE-ENGINEERED WOOD TRUSSES @ 24"o.c. MAX.
3) SEE SHEET S-4.1 FOR MASONRY WALL SCHEDULE.
4) AT TOP OF MASONRY WALL PROVIDE BB-1, U.N.O.
5) SEE MECHANICAL DWGS. FOR ADD'L MECH. ROOF TOP EQUIPMENT UNIT LOADING NOT INCLUDED, LOCATIONS AND DIMENSIONS.
6) UPLIFT LINE LOADS AT BACK OF MANSARD TRUSSES ON FILIGREE SLAB IS 564# PER TRUSS. DEAD LOAD = 40 PLF AND LIVE LOAD = 60 PLF
7) IN ADDITION TO THE LOADS SHOWN IN THE DESIGN LOAD SCHEDULE, THE WOOD TRUSS MANUFACTURER SHALL DESIGN FOR THE WEIGHT OF ALL MECHANICAL PLUMBING AND ELECTRICAL EQUIPMENT/FIXTURES.
8) WALL LIVE LOADS IMPOSED ON FILIGREE SLAB ARE AS FOLLOWS: DL= 575 PLF, LL= 130 PLF, UPLIFT= 1027 PLF
9) WALL LIVE LOADS IMPOSED ON FILIGREE SLAB ARE AS FOLLOWS: DL= 550 PLF, LL= 120 PLF, UPLIFT= 587 PLF

UPLIFT STRAPS:

(A) SIMPSON HETAL16 W/ (10) 10dx1 1/2" TO TRUSS (UPLIFT = 2235# F1 = 340# F2 = 815#)

(B) SIMPSON HGAM10 W/ (4) SDS 1/4"x1 1/2" TO TRUSS AND (4) 1/4"x2 3/4" TITEN TO BEAM (UPLIFT = 860# F1 = 1005# F2 = 1105#)

(C) SIMPSON HETAL16 W/ (14) 10dx1 1/2" TO TRUSS AND (5) 10dx1 1/2" TO TRUSS & SEAT (UPLIFT = 1810# F1 = 415# F2 = 1100#)

(D) SIMPSON HGA10 W/ (4) SDS 1/4"x1 1/2" TO PLATE AND (4) SDS 1/4"x1 1/2" TO TRUSS (UPLIFT = 695# F1 = 1165# F2 = 940#)

RECORD SET

The information presented on this drawing is diagrammatic and is presented for general information purposes and should not be relied on for accuracy of dimensions, details and locations. Actual and exact conditions if required should be determined in the field.

NORTH

PERMIT SET
03/03/10

TOLLIVER J. FRAZIER
P.E. FLORIDA
REG. #56011
04-06-10

O'Donnell, Naccarato, Mignogna Jackson
STRUCTURAL ENGINEERS
321 15TH STREET, SUITE 200
WEST PALM BEACH, FLORIDA 33401
(561) 835 - 9994 FAX (561) 835 - 8255
LIC. #0004386
JOB # 900.839

JMWA ARCHITECTS
STEVEN E. MYOTT AIA
JAMES R. WILLIAMS AIA
RODOLFO ACEVEDO AIA
949 CLINT MOORE ROAD
BOCA RATON, FLORIDA 33487
TEL 561 997 9997
FAX 561 997 1610
WWW.JMWA.NET

PALMETTO BAY VILLAGE HALL
9705 E. Hibiscus St., Palmetto Bay, Florida

Master Builders of South Florida, Inc.
1400 E. Oakland Park Blvd. Suite 210
Oakland Park, FL 33334

FLORIDA LICENSURE

AAC002193 IB0001142

PROJECT NO.	8714.00
DESIGNED BY:	RA
DRAWN BY:	DW / EK / JS
CHECKED BY:	JW

SUBMITTALS:
BUILDING PERMIT 03.05.2010

REVISIONS:
(1) PERMIT COMMENTS 04/02/10

ROOF FRAMING PLAN

S-3

© 2009 JMWA ARCHITECTS, INCORPORATED ALL RIGHTS RESERVED. NO PART OF THESE IDEAS, PLANS OR DESIGNS MAY BE REPRODUCED, COPIED OR UTILIZED GRAPHICALLY IN ANY FORM WHATSOEVER WITHOUT THE EXPRESSED WRITTEN CONSENT OF JMWA ARCHITECTS INCORPORATED AND ITS BOARD OF DIRECTORS.

4/5/2010 10:21:34 AM gnolin P:\PROJECT\2009-jobs\900839\S-3.dwg

CONTRACTOR NOTE:

THE CONTRACTOR IS SOLELY RESPONSIBLE FOR INITIATING, MAINTAINING AND SUPERVISING ALL SAFETY PRECAUTIONS AND PROGRAMS IN CONNECTION WITH THE WORK. O'DONNELL, NACCARATO, MIGNOGNA & JACKSON, INC. IS NOT RESPONSIBLE FOR THE MEANS AND METHODS OF CONSTRUCTION OR FOR RELATED SAFETY PRECAUTIONS AND PROGRAMS.

CODES AND STANDARDS

1. WIND LOADS AS PER:
   - A. ASCE 7-05/EDITION, FOR A 189 MPH WIND SPEED, EXPOSURE C AND 1.0 IMPORTANCE FACTOR.
2. THE PROJECT WAS DESIGNED IN ACCORDANCE WITH THE:
   - A. FLORIDA BUILDING CODE 2007 EDITION WITH 2009 SUPPLEMENTS.
   - B. BUILDING CODE REQUIREMENTS FOR REINFORCED CONCRETE (ACI 318/ 2005 EDITION).
   - C. MANUAL OF STANDARD PRACTICE FOR DETAILING REINFORCED CONCRETE STRUCTURES (ACI 315/ LATEST EDITION).
   - D. MANUAL OF STANDARD PRACTICE FOR WELDING REINFORCING STEEL, INSERTS & CONNECTIONS IN REINFORCED CONCRETE CONSTRUCTION. AWS. D1.4/ LATEST EDITION.
   - E. SPECIFICATION FOR THE DESIGN, FABRICATION & ERECTION OF STRUCTURAL STEEL FOR BUILDINGS. (AMERICAN INSTITUTE OF STEEL CONSTRUCTION) AISC ASD/ 9TH EDITION OR LRFD 3RD EDITION.
   - F. SPECIFICATION FOR STRUCTURAL CONCRETE FOR BUILDINGS, ACI 301/LATEST EDITION.
   - G. NATIONAL DESIGN SPECIFICATION, WOOD CONSTRUCTION NDS/LATEST EDITION.
   - H. BUILDING CODE REQUIREMENTS AND SPECIFICATIONS FOR MASONRY STRUCTURES (ACI 530, 530.1/ASCE 5, 6/TMS 402, 602/2005 EDITIONS).
3. ARCHITECTURAL AND MECHANICAL DRAWINGS:
   - A. THE STRUCTURAL DRAWINGS ARE PART OF THE CONTRACT DOCUMENTS AND DO NOT BY THEMSELVES PROVIDE ALL THE INFORMATION REQUIRED TO PROPERLY COMPLETE THE PROJECT STRUCTURE. THE GENERAL CONTRACTOR SHALL CONSULT THE ARCHITECTURAL, MECHANICAL AND ELECTRICAL DRAWINGS AND COORDINATE THE INFORMATION CONTAINED IN THESE DRAWINGS WITH THE STRUCTURAL DRAWINGS TO PROPERLY CONSTRUCT THE PROJECT.
   - B. REFER TO ARCHITECTURAL, MECHANICAL OR ELECTRICAL DRAWINGS FOR ADDITIONAL OPENINGS, DEPRESSIONS, FINISHES, INSERTS, BOLTS SETTINGS, DRAINS, REGLETS, ETC.
   - C. BEFORE ORDERING ANY MATERIALS OR DOING ANY WORK, THE CONTRACTOR SHALL VERIFY ALL MEASUREMENTS TO PROPERLY SIZE OR FIT THE WORK. NO EXTRA CHARGE OR COMPENSATION WILL BE ALLOWED BY THE OWNER RESULTING FROM THE CONTRACTOR'S FAILURE TO COMPLY WITH THIS REQUIREMENT.
   - D. DISCREPANCIES SHALL BE BROUGHT TO THE ATTENTION OF THE ARCHITECT AND ENGINEER BEFORE PROCEEDING WITH ANY WORK.
   - E. ALL STRUCTURES HAVE BEEN DESIGNED TO RESIST THE DESIGN LOADS LISTED ONLY AS COMPLETED STRUCTURES. THE GENERAL CONTRACTOR SHALL FULLY BRACE AND OTHERWISE PROTECT WORK IN PROGRESS UNTIL THE STRUCTURES ARE COMPLETED. THE GENERAL CONTRACTOR SHALL ALSO INSURE THAT ITS OPERATIONS AND PROCEDURES PROVIDE NO LOADING GREATER THAN THE DESIGN LOADS LISTED ON ANY MEMBER.
4. SECTIONS AND DETAILS:

   ALL DETAILS, SECTIONS AND NOTES SHOWN ON THE DRAWINGS ARE INTENDED TO BE TYPICAL AND SHALL APPLY TO SIMILAR SITUATIONS ELSEWHERE UNLESS OTHERWISE SHOWN.
5. MATERIALS AND ASSEMBLY TEST AS FOLLOWS:
   - A. EXTERIOR WINDOWS, SLIDING AND PATIO GLASS DOORS SHALL BE TESTED BY AN APPROVED INDEPENDENT TESTING LABORATORY, AND SHALL BE LABELED WITH AN APPROVED LABEL IDENTIFYING THE MANUFACTURER, PERFORMANCE CHARACTERISTICS AND APPROVED PRODUCT CERTIFICATION AGENCY, TESTING LABORATORY, EVALUATION ENTITY OR FLORIDA STATE WIDE PRODUCT APPROVAL NUMBER TO INDICATE COMPLIANCE WITH THE REQUIREMENTS OF ONE OF THE FOLLOWING SPECIFICATIONS:

     ANSI/AAMA/NWWDA 101/I.S. 2-97 OR TAS 202 (HVHZ SHALL COMPLY WITH TAS 202)
   - B. EXTERIOR DOOR ASSEMBLIES SHALL BE TESTED FOR STRUCTURAL INTEGRITY IN ACCORDANCE WITH ASTM E330 AT A LOAD OF 1.5 TIMES THE REQUIRED DESIGN PRESSURE LOAD. THE LOAD SHALL BE SUSTAINED FOR 10 SECONDS WITH NO PERMANENT DEFORMATION OF ANY MAIN FRAME OR PANEL MEMBER IN EXCESS OF 0.4 PERCENT OF ITS SPAN AFTER THE LOAD IS REMOVED. HVHZ SHALL COMPLY WITH TAS 202. AFTER EACH SPECIFIED LOADING, THERE SHALL BE NO GLASS BREAKAGE, PERMANENT DAMAGE TO FASTENERS, HARDWARE PARTS, OR ANY OTHER DAMAGE, WHICH CAUSES THE DOOR TO BE INOPERABLE.
   - C. SECTIONAL GARAGE DOORS SHALL BE TESTED FOR DETERMINATION OF STRUCTURAL PERFORMANCE UNDER UNIFORM STATIC AIR PRESSURE DIFFERENCE IN ACCORDANCE WITH ANSI/DASMA 108 OR TAS 202 (HVHZ SHALL COMPLY WITH TAS 202).
   - D. CUSTOM (ONE OF A KIND) EXTERIOR DOOR ASSEMBLIES SHALL BE TESTED BY AN APPROVED TESTING LABORATORY OR BE ENGINEERED IN ACCORDANCE WITH ACCEPTED ENGINEERING PRACTICES.
   - E. WINDOW AND DOOR ASSEMBLIES SHALL BE ANCHORED IN ACCORDANCE WITH THE PUBLISHED MANUFACTURER'S RECOMMENDATIONS TO ACHIEVE THE DESIGN PRESSURE SPECIFIED. SUBSTITUTE ANCHORING SYSTEM USED FOR SUBSTRATES NOT SPECIFIED BY THE FENESTRATION MANUFACTURER SHALL PROVIDE EQUAL OR GREATER ANCHORING PERFORMANCE AS DEMONSTRATED BY ACCEPTED ENGINEERING PRACTICE.
6. ALL FASTENERS DESIGNATED, AS STAINLESS STEEL SHALL CONFORM TO AISI 316 STAINLESS STEEL.

SPECIALTY ENGINEERED PRODUCTS

1. THE GENERAL CONTRACTOR IS RESPONSIBLE TO COORDINATE THE PROPER SUBMISSION OF SPECIALTY ENGINEERED SHOP DRAWINGS WHICH SHALL BE SIGNED AND SEALED BY AN ENGINEER REGISTERED IN THE STATE OF FLORIDA. IT IS THE GENERAL CONTRACTOR'S RESPONSIBILITY TO ASSURE THAT THE SPECIALTY ENGINEERED SHOP DRAWINGS ARE SUBMITTED IN A TIMELY MANNER SO AS TO ALLOW REVIEWS AND RESUBMISSIONS AS REQUIRED. ALL SPECIALTY ENGINEERED PRODUCTS SHALL BE DESIGNED FOR THE APPROPRIATE GRAVITY LOADS AND WIND LOADS INCLUDING UPLIFT AND LATERAL LOADS. INTERIOR SPECIALTY PRODUCTS SHALL BE DESIGNED FOR LATERAL LOADS TO ASSURE STABILITY. SPECIALTY ENGINEERED PRODUCTS SHALL BE, BUT ARE NOT LIMITED TO, THE FOLLOWING:
   - A. LIGHT GAUGE METAL, INCLUDING BUT NOT LIMITED TO, SOFFITS, CLADDING, CEILINGS, ETC.
   - B. MISCELLANEOUS METALS INCLUDING STEEL STAIRS, MECHANICAL EQUIPMENT SUPPORTS, FRAMES THAT SUPPORT MACHINES, PIPES OR OTHER STRUCTURAL METAL USED FOR SUPPORT OF MECHANICAL SYSTEMS.
   - C. MISCELLANEOUS HANGERS, CHANDELIERS, CABINETS, METAL FRAMES, LADDERS, RIGGING, HANGING WALLS, RAILINGS, GLAZING FRAMES, CLADDING SUCH AS STONE, PRECAST, ALUMINUM, METAL PANELS, CABLE BARRIER SYSTEMS, ETC. OR ANY OTHER MISCELLANEOUS PRODUCT REQUIRED BY ANY OF THE CONSTRUCTION DOCUMENTS.
   - D. IN ADDITION TO THE LOADS SHOWN IN THE DESIGN LOAD SCHEDULE, THE SPECIALTY ENGINEER SHALL DESIGN FOR THE WEIGHT OF ALL MECHANICAL, PLUMBING AND ELECTRICAL EQUIPMENT AND FIXTURES, AS WELL AS CHANDELIER FIXTURES, BAR CABINETS, AND ART WORK / MOBILES.

GENERAL CONTRACTOR TO INCLUDE IN THEIR BID THE COST OF THE ABOVE NOTED SPECIALTY ENGINEERING.

FOUNDATION

1. ALL SITE PREPARATION AND EXCAVATION WORK IS TO BE PERFORMED IN STRICT ACCORDANCE WITH THE REPORT ON SOILS AND FOUNDATION INVESTIGATION PREPARED BY SPERO CORPORATION, DATED OCTOBER 28, 2009.
2. BOTTOM OF FOOTINGS ASSUMED TO BEAR ON SOIL CAPABLE OF SAFELY SUPPORTING 4000 PSF.
3. SOILS SUPPORTING ALL FOOTINGS MUST BE INSPECTED AND APPROVED BY A REGISTERED SOILS ENGINEER BEFORE COMMENCING WORK. APPROVAL IN WRITING MUST INDICATE THE SOIL IS ADEQUATE TO SAFELY SUSTAIN SPECIFIED SOIL BEARING PRESSURE.
4. TOP OF ALL EXTERIOR FOOTINGS SHALL BE MINIMUM -0'-8" BELOW EXTERIOR FINISH GRADE.
5. EXCAVATION & BACKFILL:
   - A. ALL EXCAVATION SHALL BE KEPT DRY. EXCAVATE TO DEPTHS AND DIMENSIONS INDICATED. TAKE EVERY PRECAUTION TO GUARD AGAINST ANY MOVEMENT OR SETTLEMENT OF ADJACENT STRUCTURES, UTILITIES, PIPING, ETC.
   - B. PROVIDE ANY BRACING OR SHORING NECESSARY TO AVOID SETTLEMENT OR DISPLACEMENT OF EXISTING FOUNDATION OR STRUCTURES.
6. CENTERLINE OF FOOTINGS: SHALL COINCIDE WITH CENTERLINE OF COLUMNS UNLESS OTHERWISE NOTED ON DRAWINGS.
7. DIMENSIONS: ALL DIMENSIONS AND ELEVATIONS SHOWN ON THE STRUCTURAL DRAWINGS MUST BE VERIFIED AND COORDINATED WITH THE ARCHITECTURAL DRAWINGS BY THE CONTRACTOR BEFORE PROCEEDING WITH THE CONSTRUCTION. DISCREPANCIES SHALL BE BROUGHT TO THE ATTENTION OF THE ARCHITECT OR ENGINEER IN WRITING BEFORE PROCEEDING WITH ANY WORK.

CONCRETE

1. CONCRETE ELEMENTS TO HAVE THE FOLLOWING STRENGTHS:

A. FOUNDATIONS	3000 PSI
B. SLAB-ON-GRADE	3000 PSI
C. COLUMNS	4000 PSI
D. BEAMS	4000 PSI
E. TIE BEAMS	3000 PSI
F. STRUCTURAL SLABS	4000 PSI
G. MASONRY GROUT	3000 PSI

   ALL OTHER CONCRETE TO BE 4000 PSI UNLESS NOTED OTHERWISE.
2. ALL CONCRETE SHALL BE READY MIX AND MEET THE FOLLOWING REQUIREMENTS:
   - A. SLUMPS SHALL BE 3" MINIMUM AND 5" MAXIMUM.
   - B. ALL CONCRETE TO HAVE MAXIMUM WATER/CEMENT RATIO OF 0.55.
   - C. JOBSITE WATER SHALL NOT BE ADDED.
3. ALL CONCRETE WORK SHALL COMPLY WITH THE REQUIREMENTS OF THE ACI BUILDING CODE (ACI 318/ 2005 EDITION), THE ACI DETAILING MANUAL (ACI 315/ 1994 EDITION), AND THE SPECIFICATIONS FOR STRUCTURAL CONCRETE FOR BUILDINGS (ACI 301/ LATEST EDITION).
4. SUBMIT ALL REINFORCING STEEL SHOP DRAWINGS FOR APPROVAL PRIOR TO ANY FABRICATION.
5. CONCRETE COVER FOR REINFORCING STEEL SHALL BE AS REQUIRED BY ACI SPECIFICATIONS.
6. WELDED WIRE FABRIC SHALL COMPLY WITH ASTM A 185, UNLESS OTHERWISE SPECIFIED. PLACE FABRIC 2" CLEAR FROM TOP OF THE SLAB IN SLAB ON GRADE AND SUPPORT ON SLAB BOLSTERS SPACED AT 3'-0" O.C.
7. REQUIREMENTS:
   - A. ALL REINFORCING STEEL SHALL BE MANUFACTURED FROM HIGH STRENGTH BILLET STEEL CONFORMING TO ASTM DESIGNATION A 615 GRADE 60.
   - B. WWF SHALL COMPLY WITH ASTM A 185.
8. LAP ALL BARS WITH CLASS B TENSION LAP SPLICE UNLESS OTHERWISE NOTED ON DRAWINGS. LAP ALL WWF A MINIMUM OF 12 INCHES (UNLESS OTHERWISE NOTED).
9. REINFORCING BARS:
   - A. AT CORNERS OF CONCRETE WALLS, BEAMS AND CONTINUOUS WALL FOOTINGS, PROVIDE MATCHING HORIZONTAL BARS X 5'-0" BENT BAR FOR EACH HORIZONTAL BAR SCHEDULED AT EACH FACE.
   - B. WHERE COLUMNS ARE AN INTEGRAL PART OF CONCRETE WALLS, WALL REINFORCEMENT SHALL BE CONTINUOUS THRU THE COLUMNS.
   - C. ALL HOOKS SHOWN IN REINFORCEMENT SHALL BE ACI RECOMMENDED HOOKS UNLESS OTHERWISE NOTED.
   - D. CONTRACTOR SHALL INCLUDE IN HIS BASE BID THE COST OF 3 TONS. OF ADDITIONAL REINFORCING STEEL, INCLUDING DETAILING, FABRICATION, BENDING, FURNISHING, AND PLACING. THIS EXTRA STOCK SHALL BE FURNISHED AND USED FOR SPECIAL CONDITIONS AS DIRECTED BY THE ARCHITECT, THE ARCHITECT'S AGENT OR BY THE OWNER'S CONSTRUCTION SUPERVISOR. THE PRICE OF THE UNUSED EXTRA STOCK SHALL BE CREDITED TO THE OWNER'S ACCOUNT.
10. CONCRETE LINTELS:
    - A. DROP BOTTOM OF BEAM OR SLAB AT WINDOWS, DOORS AND MASONRY OPENINGS AS REQUIRED TO PROVIDE A CONCRETE CLOSURE BETWEEN THE BOTTOM OF THE BEAM AND WINDOW AND/OR DOOR HEADER OR PROVIDE A PRECAST CONCRETE LINTEL BY CASTCRETE IF NOT NEXT TO A POURED CONCRETE COLUMN.
    - B. MAXIMUM DROP SHALL BE 16" (TWO BLOCK COURSES) AND SPAN EQUAL TO MASONRY OPENING WIDTH. PROVIDE 2 #5 AT BOTTOM OF DROP INCLUDING #3 TIES @ 24" O.C. EXTENDING TO TOP OF BEAM REINFORCING. IF THE LINTEL EXCEEDS THE ABOVE LIMIT OF DROP, A SEPARATED LINTEL SHALL BE PROVIDED AS FOLLOWS:
      - L1. OPENING LESS THAN 6'0" WIDE 8" X 8" W/2 #5 BOTTOM BARS.
      - L2. OPENING BETWEEN 6'0" AND 12'0" WIDE 8" X 12" W/2 #6 BOTTOM BARS.
    - C. LINTELS TO HAVE 8" MINIMUM BEARING AT EACH END.
    - D. IF THE MASONRY OPENING HAS AN END ADJACENT TO A CONCRETE COLUMN PROVIDE (2) #5 OR #6 DOWELS, AS THE CASE MAY BE, IN THE CONCRETE COLUMN WITH SHEAR KEY 1-1/2 INCH DEEP BY LINTEL'S DEPTH AND WIDTH FOR ITS SUBSEQUENT CONSTRUCTION.

PRECAST CONCRETE

1. THE DESIGN, FABRICATION AND ERECTION OF PRECAST CONCRETE SHALL CONFORM TO THE REQUIREMENTS OF ACI 318/ 2005 AND ACI 311/ LATEST EDITIONS. PRECAST MANUFACTURE TO BE PCI APPROVED.
   - A. PRECAST MANUFACTURER SHALL SUBMIT DRAWINGS AND CALCULATIONS WHICH MUST BE SIGNED AND SEALED BY A PROFESSIONAL ENGINEER REGISTERED IN THE STATE OF FLORIDA.
2. FILIGREE SHALL BE DESIGNED TO SUPPORT ALL SUPERIMPOSED LOADS INCLUDING PARTITION LOADS. FOR LOCATIONS OF PARTITION, SEE ARCHITECTURAL DRAWINGS.
3. IF SHIMS ARE REQUIRED AT PRECAST PLANK BEARING, THEY MUST BE CONTINUOUS FOR THE FULL WIDTH OF THE PLANK. POINT SHIMMING IS NOT ACCEPTABLE.
4. PRECAST CONCRETE MEMBERS SHALL HAVE A MINIMUM COMPRESSIVE STRENGTH OF 5,000 PSI, UNLESS SHOWN OTHERWISE ON THE DRAWINGS.
5. FILIGREE TO COORDINATE WITH OTHER TRADES AND ALL CONTRACT DRAWINGS FOR SIZE AND LOCATION OF OPENINGS ON ALL FLOORS AND ROOF.
6. ALL OPENINGS IN PLANK MUST BE PROVIDED BY OR APPROVED IN WRITING BY FILIGREE NO REINFORCING IN FILIGREE IS TO BE CUT WITHOUT PRIOR APPROVAL OF PRECAST MANUFACTURER.
7. FRAMING ELEMENTS SUCH AS PRECAST CONCRETE PLANK (HOLLOW CORE, FILIGREE, ETC.) DOUBLE TEES, PRECAST CONCRETE JOISTS ARE SUPPLIED WITH AN UPWARD CAMBER. THE SLAB/TOPPING THICKNESS INDICATED ON THE PLANS IS THE MINIMUM THICKNESS. AS A RESULT, THE GENERAL CONTRACTOR SHALL SUPPLY ADDITIONAL SLAB/TOPPING, WHICH MAY BE REQUIRED FROM THE MIDSPAN TOWARDS THE END SUPPORTS OF THE FRAMING ELEMENTS TO COMPENSATE FOR THE FINAL POSITIVE (UPWARD) CAMBER AND TO PROVIDE A FLAT FINISHED FLOOR.
8. IN ADDITION TO ALL THE PRECAST SPECIFICATIONS NOTED, THE FILIGREE MANUFACTURER TO:
   - A. PROVIDE THE PROPER AMOUNT OF VOID MATERIAL TO BE USED.
   - B. PROVIDE REINFORCING NOT SHOWN ON PLANS THAT MAY BE REQUIRED FOR FILIGREE SYSTEM. FOR EXAMPLE, BUT NOT LIMITED TO TEMPERATURE STEEL, SHEAR FRICTION BARS, EDGE BARS, ETC.

MASONRY

1. MASONRY UNITS SHALL BE LOAD BEARING ASTM C90, NORMAL WEIGHT. ALL CMU SHALL BE LAID IN A FULL BED OF MORTAR IN RUNNING BOND(U.N.O.).
2. THE COMPRESSIVE STRENGTH OF MASONRY (F'M) SHALL BE 2,500 PSI AS CALCULATED IN ACCORDANCE WITH ASTM C1314.
3. ALL MORTAR SHALL BE IN ACCORDANCE WITH ASTM SPECIFICATION C270. FROM FIELD OBTAINED TEST CUBES. (MIN. OF TWO)
4. GROUT SHALL BE A HIGH SLUMP MIX IN ACCORDANCE WITH ASTM SPECIFICATION C476. HAVING A MINIMUM COMPRESSIVE STRENGTH OF 3,000 PSI. FROM FIELD OBTAINED TEST CUBES. (MIN. OF TWO)
5. ALL CONCRETE MASONRY BEARING AND SHEAR WALLS SHALL BE CONSTRUCTED IN ACCORDANCE WITH THE "BUILDING CODE REQUIREMENT FOR MASONRY STRUCTURES" (ACI 530/ASCE 5/TSM 402) AND "SPECIFICATIONS FOR MASONRY STRUCTURES" (ACI 530.1/ASCE 6/TSM 602)/ 2005 EDITIONS.
6. PROVIDE 8" X 8" MASONRY BEAM WITH 2 #5 CONT. AT EVERY WINDOW SILL. EXTEND BEAM 8" BEYOND EDGE OF OPENING.
7. PROVIDE HOT DIPPED GALVANIZED LADDER TYPE HORIZONTAL JOINT REINFORCEMENT (9 GA.) AT 16" ON CENTER VERTICAL IN ALL MASONRY WALLS. PROVIDE DOVE TAIL SLOT ANCHORS AT CONCRETE COLUMNS.

   FOR JOINT REINFORCEMENT, WALL TIES, ANCHORS AND INSERTS, APPLY A MINIMUM COAT OF 1.5 OUNCES PER SQUARE FOOT (PSF) (458/G/M2) COMPLY WITH THE REQUIREMENTS OF ASTM A153, CLASS B.
8. PROVIDE CONTROL JOINTS IN MASONRY WALLS AT A SPACING OF 30' + O.C. AND ALIGN WITH ARCHITECTURAL CONTROL JOINTS.
9. MINIMUM LAP SPLICES FOR REINFORCED CMU PER 2007 FBC WITH 2009 SUPPLEMENTS SECTION 2107:

BAR SIZE	#4	#5	#6	#7	#8
	24"	30"	36"	42"	48"

   - A. LAP SPLICES SHALL OCCUR DIRECTLY ABOVE FOOTINGS AND SLABS. NO SPLICES ARE ALLOWED AT MID-HEIGHT OF WALL.
   - B. LAP SPLICES THAT OCCUR AT CANTILEVERED WALLS SUCH AS: PARAPETS, RETAINING WALLS, ETC. SHALL HAVE LAP SPLICE LENGTHS INCREASED BY 50% TO 72 BAR DIAMETERS.
10. MASONRY LINTELS:
    - A. A PRECAST CONCRETE LINTEL BY CASTCRETE SHALL BE PROVIDED OVER ALL MASONRY WALL OPENINGS. THE LINTEL SHALL BE FULLY GROUTED.
    - B. LINTELS TO HAVE 4" MINIMUM BEARING AT EACH END.
    - C. SHORE PRECAST LINTEL PER MANUFACTURE'S INSTRUCTIONS.

STEEL

1. ALL STRUCTURAL STEEL SHALL BE FABRICATED AND ERECTED IN ACCORDANCE WITH THE LATEST AISC CODE. STRUCTURAL STEEL SHALL CONFORM TO:
   - A. ASTM SPECIFICATION A 992 GRADE 50 FOR ALL WIDE FLANGE BEAMS.
   - B. ASTM SPECIFICATION A 36 FOR MISCELLANEOUS STEEL SHAPES (ANGLES, PLATES, ETC.).
   - C. SQUARE OR RECTANGULAR HSS SHALL CONFORM TO ASTM SPECIFICATION A 500 GRADE B (FY=46 KSI).
   - D. ROUND HSS SHALL CONFORM TO ASTM SPECIFICATION A500, GRADE B (FY=42 KSI). ROUND HSS WITH A WALL THICKNESS GREATER THAN 5/8", SHALL CONFORM TO ASTM A53, GRADE B (FY=35 KSI).
   - E. ALL STEEL TO HAVE A SHOP COAT OF RUST INHIBITIVE PAINT.
   - F. DELETE PAINT ON ALL STEEL TO RECEIVE SPRAYED ON FIREPROOFING OR CONCRETE ENCASEMENT.
   - G. ALL MILL CAMBER TO BE ORIENTED UPWARD DURING FABRICATION AND ERECTION.
2. ALL SHOP AND FIELD WELDING SHALL BE PERFORMED BY WELDERS QUALIFIED, AS DESCRIBED IN "AMERICAN WELDING SOCIETY'S STANDARD QUALIFICATION PROCEDURE" (AWS D1.1), TO PERFORM THE TYPE OF WORK REQUIRED.
3. ALL CONNECTIONS SHALL BE BOLTED WITH 3/4" DIAMETER, A-325 HIGH STRENGTH BOLTS OR WELDED (UNLESS SHOWN OTHERWISE ON THE DRAWINGS).
4. ALL ALUMINUM AND STEEL MEMBERS TO BE TREATED OR PROPERLY SEPARATED TO PREVENT GALVANIC AND CORROSIVE EFFECTS.
5. ALL STEEL WELDING RODS SHALL BE E70XX ELECTRODES.
6. SUBMIT ALL STEEL SHOP DRAWINGS FOR APPROVAL PRIOR TO ANY FABRICATION.
7. SHEAR CONNECTORS TO BE HEADED STUD TYPE, ASTM A/108, GRADE 1015 OR 1020, COLD FINISHED CARBON STEEL, WITH DIMENSIONS COMPLYING WITH AISC SPECIFICATIONS.
8. EQUIPMENT SUPPORTS:

   PROVIDE ALL SUPPORTING STEEL NOT INDICATED ON PLAN AS REQUIRED FOR THE INSTALLATION OF MECHANICAL EQUIPMENT AND MATERIALS, INCLUDING ANGLES, CHANNELS, BEAMS, HANGERS, ETC. DO NOT SUPPORT EQUIPMENT OR PIPING FROM METAL DECKING.

STEEL STAIRS

1. ENGINEERED CONCRETE FILLED STEEL STAIR SYSTEM AND ALL CONNECTIONS OF THE SAME TO THIS STRUCTURE SHALL BE DESIGNED BY AN ENGINEER REGISTERED IN THE STATE OF FLORIDA. SUBMIT SHOP DRAWINGS BEARING THE EMBOSSED SEAL AND THE SIGNATURE OF THE ENGINEER FOR REVIEW PRIOR TO FABRICATION. THE CONFIGURATION OF THE STEEL STAIR SYSTEM SHALL BE SHOWN ON THE ARCHITECTURAL DRAWINGS. STEEL STAIR SYSTEM AND ALL CONNECTIONS SHALL BE DESIGNED FOR ALL APPLICABLE LOADS AS INDICATED ON THE PLANS AND IN ALL APPLICABLE BUILDING CODES. THE LOADS SHALL BE CLEARLY INDICATED ON ALL SHOP DRAWINGS. SHOP DRAWINGS SHALL SHOW AND SPECIFY ALL CONNECTIONS UTILIZED WITHIN THE STEEL STAIR SYSTEM AS WELL AS CONNECTIONS TO AND LOADS IMPOSED UPON THE STRUCTURAL SYSTEM SHOWN OF THESE PLANS.

WOOD

1. ALL STRUCTURAL WOOD MEMBERS ARE DESIGNED AS "DRY-USE". MOISTURE CONTENT MUST BE 19% OR LESS. STORE WOOD FRAMING ABOVE GROUND AND UNDER TARPS WITH PROPER AIR CIRCULATION.
2. ALL LUMBER SHALL BE SOUTHERN PINE SPECIES #2 GRADE OR APPROVED EQUAL. ALLOWABLE DESIGN STRESSES SHALL FOLLOW NATIONAL DESIGN SPECIFICATION (NDS) (LATEST EDITION).
3. PROVIDE SP ACQ PRESSURE TREATED LUMBER IN ACCORDANCE WITH AWPA STANDARDS TO A MINIMUM 0.40 PCF RETENTION WHERE LUMBER IS IN CONTACT WITH CONCRETE/MASONRY OR OUTSIDE OF BUILDING. ALL METAL CONNECTORS IN CONTACT WITH PRESSURE TREADED LUMBER SHALL BE GALVANIZED WITH A RATING OF G-185 AND CONFORM TO ASTM A653. ALL NAILS AND SCREWS USED WITH PRESSURE TREATED LUMBER ARE TO BE HOT-DIPPED GALVANIZED AND TO CONFORM TO ASTM A153 CLASS D. ELECTROGALVANIZED FASTENERS SHALL HAVE A CLASS RATING PER ASTM B695 NO LESS THAN 55. ALUMINUM NOT TO BE USED IN DIRECT CONTACT WITH ACQ TREATED LUMBER.
4. PLYWOOD SHEATHING:
   - C. ROOF: Use 19/32" 40/20 RATED, EXP. 1, PLYWOOD SHEATHING.
   - D. SEE FRAMING PLANS FOR NAILING AND/OR BLOCKING REQUIREMENTS. USE 8'- 0" LONG X 4'-0" WIDE SHEETS WITH LENGTH ACROSS FRAMING. STAGGER PANEL END JOINTS 4'-0" TYP., ALLOW 1/8" SPACE ALONG PANEL EDGES AND END JOINTS.
5. WOOD CONNECTIONS – ALL NAILS USED FOR STRUCTURAL FRAMING MEMBERS SHALL BE COMMON WIRE, U.N.O. ALL NAILS, TRUSS HANGERS, TRUSS ANCHORS AND STRAPS SHALL BE GALVANIZED FOR CORROSIVE RESISTANCE. ALL METAL STRAPS MUST BE INSTALLED WITH EQUAL LENGTHS ABOUT THE JOINT LINE. USE SIMPSON STRONG-TIE CONNECTOR PRODUCTS OR APPROVED EQUAL. TOE NAILING WILL NOT BE PERMITTED.

WOOD TRUSSES

1. WOOD ROOF TRUSSES ARE TO BE DESIGNED FOR THE WOOD FABRICATOR BY A PROFESSIONAL SPECIALTY ENGINEER REGISTERED IN THE STATE OF FLORIDA. SEALED CALCULATIONS AND LAYOUT DRAWINGS ARE TO BE SUBMITTED FOR APPROVAL. TRUSS FABRICATOR TO PROVIDE ALL TRUSS-TO-TRUSS HANGERS AS REQUIRED TO RESIST GRAVITY AND UPLIFT REACTION. (UPLIFT LOADING SHALL USE COMPONENTS & CLADDING WIND FORCES.)
2. WOOD TRUSSES SHALL BE BRACED AND ERECTED IN ACCORDANCE WITH THE 2006 EDITION OF THE BUILDING COMPONENT SAFETY INFORMATION GUIDE TO GOOD PRACTICE FOR HANDLING, INSTALLING, RESTRAINING & BRACING OF METAL PLATE CONNECTED WOOD TRUSSES, JOINTLY PRODUCED BY WTCA AND TRUSS PLATE INSTITUTE. BRACING IN THE PLANE OF THE WEB MEMBERS:
   - A. THE TRUSS FABRICATOR SHALL PROVIDE AND LOCATE CONTINUOUS LATERAL BRACING FOR EACH TRUSS WEB MEMBER AS REQUIRED.
   - B. LATERAL BRACING SHALL BE RESTRAINED BY DIAGONAL BRACING (MIN. 2" THICK NOMINAL LUMBER). THIS BRACING IS TO BE CONTINUOUS.
   - C. A MINIMUM OF TWO ROWS OF DIAGONAL BRACING IS REQUIRED, ONE AT EACH VERTICAL WEB MEMBER CLOSEST TO BEARING LOCATIONS.
3. THE BOTTOM CHORDS SHALL BE BRACED BY CONTINUOUS LATERAL BRACING SPACED AT 8'-0" ON CENTER WITH A CEILING ATTACHED TO BOTTOM OF TRUSSES. IF NO CEILING IS ATTACHED TO BOTTOM OF TRUSSES, BRACING SHALL BE MINIMUM 2X4 @ 36" ON CENTER NAILED TO THE TOP OF THE BOTTOM CHORD. DIAGONALS PLACED AT 45 DEGREES TO THE LATERAL BRACES SHALL BE LOCATED AT EACH END. IF BUILDING EXCEEDS 60 FEET IN LENGTH, DIAGONAL BRACING SHOULD BE REPEATED AT 20 FOOT INTERVALS.
4. TOP CHORD BRACING IF PLYWOOD DECKING IS APPLIED DIRECTLY TO TOP CHORD, PROPERLY LAPPED AND NAILED TO DEVELOP DIAPHRAGM ACTION, BRACING IS NOT REQUIRED.
5. DO NOT CUT, DRILL OR NOTCH ROOF OR FLOOR TRUSSES WITHOUT WRITTEN APPROVAL FROM TRUSS ENGINEER. COORDINATE MECHANICAL, ELECTRICAL, PLUMBING, ETC. SIZES AND LOCATIONS WITH TRUSS LAYOUT PRIOR TO ERECTION.
6. TRUSSES SHALL BE MANUFACTURED & DESIGNED IN ACCORDANCE WITH NATIONAL DESIGN SPECIFICATION(S) FOR WOOD CONSTRUCTION, AF & PA, AND NATIONAL DESIGN STANDARD FOR METAL PLATE CONNECTED WOOD TRUSS CONSTRUCTION, ANSI/TPI 1-1995, AND THE LOCAL CODE JURISDICTIONS.
7. DO NOT OVERLOAD FLOOR OR ROOF TRUSSES WITH BUILDING MATERIALS.
8. CONNECTOR PLATES SHALL BE MANUFACTURED BY A WTCA MEMBER PLATE SUPPLIER AND SHALL MEET OR EXCEED ASTM A653/A653M REQUIREMENTS FOR STRUCTURAL STEEL.
9. WOOD TRUSS MANUFACTURER TO DESIGN BOTTOM CHORDS OF WOOD ROOF TRUSSES FOR A MINIMUM 10 PSF LIVE LOAD. BOTTOM CHORDS OF WOOD ATTIC TRUSSES TO BE DESIGNED FOR 30 PSF MINIMUM LIVE LOAD.
10. WOOD TRUSSES MANUFACTURER TO DESIGN BOTTOM CHORD OF WOOD TRUSSES FOR 15 PSF DEAD LOAD.
11. IN ADDITION TO THE LOADS SHOWN IN THE DESIGN LOAD SCHEDULE, THE WOOD TRUSS MANUFACTURER SHALL DESIGN FOR THE WEIGHT OF ALL MECHANICAL, PLUMBING AND ELECTRICAL EQUIPMENT/FIXTURES AS WELL AS CHANDELIER FIXTURES, BAR CABINETS AND ART WORK/MOBILES.

SHOP DRAWINGS

1. THE SHOP DRAWINGS SHALL BE SUBMITTED IN COMPLETE PACKAGES FOR THE FOLLOWING:
   - A. CONCRETE MIX DESIGNS
   - B. CONCRETE REINFORCING STEEL AND WELDED WIRE FABRIC
   - C. PRECAST CONCRETE INCLUDING BUT NOT LIMITED TO HOLLOW CORE PLANKS, PRECAST JOISTS, SOFFIT BEAMS, DOUBLE-TEES, FILIGREE, PRECAST LINTELS AND OTHER PRECAST CONCRETE SYSTEMS
   - D. CONCRETE MASONRY UNIT SUBMITTALS AND OTHER MASONRY ACCESSORIES
   - E. STRUCTURAL STEEL
   - F. PRE-ENGINEERED STEEL STAIRS
   - G. PRE-ENGINEERED WOOD TRUSSES
2. PRE-ENGINEERED ITEMS SHALL BE SUBMITTED SIGNED AND SEALED BY A SPECIALTY ENGINEER REGISTERED IN THE STATE OF FLORIDA.

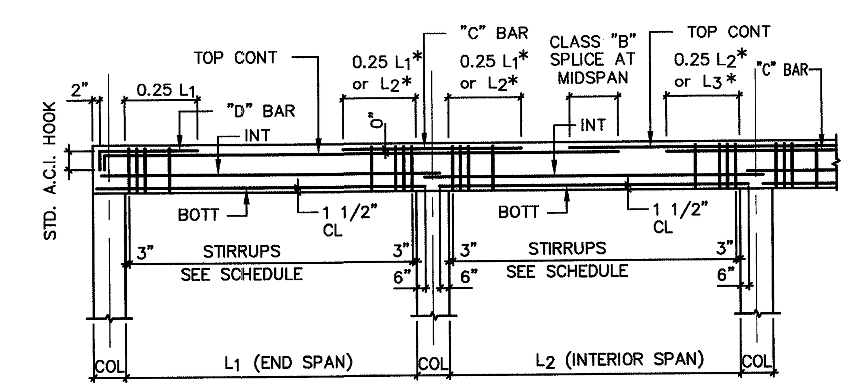

"C" BAR : TOP BAR AT INTERIOR SUPPORT (IN ADDITION TO TOP CONT BARS) PLACE IN SAME LAYER AS TOP CONT BARS (U.O.N.). LOCATE AT RIGHT SUPPORT OF SPAN INDICATED IN SCHEDULE.

"D" BAR : TOP BAR AT EXTERIOR SUPPORT (IN ADDITION TO TOP CONT BARS) PLACE IN SAME LAYER AS TOP CONT BARS (U.O.N.).

"INT" BARS : INTERMEDIATE BARS LOCATED AT A SPACING EQUAL TO THE WIDTH OF THE BEAM BUT NOT GREATER THAN 12" ABOVE BOTT BARS. IF MORE THAN ONE PAIR, PLACE IN LAYERS OF TWO.

CLASS "B" TENSION SPLICE (3000 PSI)

#4	38"	#7	82"
#5	47"	#8	93"
#6	56"	#9	105"

* WHICHEVER IS GREATER.

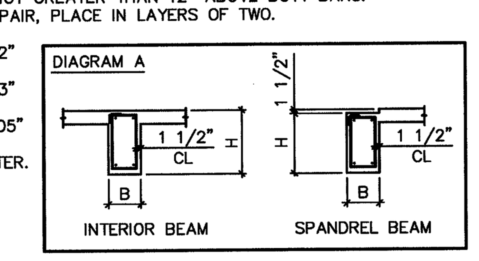

NOTES :

WHEN ADJACENT BEAMS OR TIE BEAMS HAVE TOP CONT BARS OF DIFFERENT SIZE, THE TRANSITION SHOULD BE MADE AT MIDSPAN OF THE BEAM WITH SMALLER SCHEDULED BARS. USE LAP SPLICE LENGTH OF SMALLER SIZE BAR.

(2L) – INDICATES BARS PLACE IN TWO LAYERS. WHERE BARS ARE PLACED IN TWO LAYERS, THE SECOND LAYER BARS MUST BE PLACED DIRECTLY UNDER BARS IN THE FIRST LAYER (IF TOP BAR) OR DIRECTLY OVER BAR IN THE FIRST LAYER (IF BOTT BAR). PROVIDE 1" CLEAR DISTANCE BETWEEN LAYERS OR ONE BAR DIAMETER, WHICHEVER IS THE GREATER DISTANCE.

SCHEDULED BEAM SIZES : [SEE DIAGRAM A]

"B" INDICATES BEAM WIDTH DIMENSION. WHEN BEAM IS OVER A BLOCK WALL, USE ACTUAL BLOCK WIDTH (7 5/8" or 11 5/8").
"H" INDICATES BEAM DEPTH DIMENSION. LESS 1 1/2" FOR RECESS FOR BLOCK WALL DEDUCTED WHERE APPLICABLE, OR MINIMUM DEPTH IN A VARIABLE DEPTH BEAM. COORDINATE BEAM CONFIGURATION WITH ARCHITECTURAL DRAWINGS.

TYPICAL BEAM BAR PLACEMENT DIAGRAM

N.T.S.

STEEL COLUMN SCHEDULE

MARK	SIZE	BASE PL	A.B.	REM
SC-1	HSS 8x8x½"	1 3/4x16x16	(4) ¾"ø J BOLTS	
SC-2	HSS 6x6x½"	1 1/2x16x16	(4) ¾"ø J BOLTS	

RECORD SET

The information presented on this drawing is diagrammatic and is presented for general information purposes and should not be relied on for accuracy of dimensions, details and locations. Actual and exact conditions if required should be determined in the field.

TOLLIVER J. FRAZIER
P.E. FLORIDA
REG. #56011
03-05-10

FOOTING SCHEDULE

MARK	SIZE	REINFORCING
F20.12	2'-0" x 12" x CONT.	3 #5 CONT.
F25.12	2'-6" x 12" x CONT.	3 #5 CONT.
F30.12	3'-0" x 12" x CONT.	4 #5 CONT. & #5 @ 14" o.c. TRANS.
F35.12	3'-6" x 12" x CONT.	4 #5 CONT. & #5 @ 14" o.c. TRANS.
F60.12	6'-0" x 12" x CONT.	6 #5 CONT. & #5 @ 12" o.c. TRANS.
F40	4'-0" x 4'-0" x 14"	5 #5 E.W. BOTT.
F50	5'-0" x 5'-0" x 17"	6 #5 E.W. BOTT.
F60	6'-0" x 6'-0" x 20"	8 #6 E.W. BOTT.
F65	6'-6" x 6'-6" x 22"	8 #6 E.W. BOTT.
F70	7'-0" x 7'-0" x 22"	8 #7 E.W. BOTT.
F75	7'-6" x 7'-6" x 24"	9 #7 E.W. BOTT.
F80	8'-0" x 8'-0" x 26"	9 #7 E.W. BOTT.

CONCRETE COLUMN SCHEDULE

MARK	SIZE (inches)	VERT. REINF.	TIES	SPACING
C-1	16"ø	6 #6	#3	@ 10" o.c.
C-2	8 x 24	8 #5	#3	@ 8" o.c.
C-3	8 x 24	8 #5	#3	@ 8" o.c.
TC-1	8 x 12	4 #5	#3	@ 8" o.c.

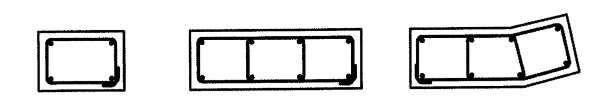

TC-1 C-2 C-3

BEAM SCHEDULE

MARK	SIZE BxH (inches)	REINFORCING			STIRRUPS	
		BOTT	TOP	INT	TIES	SPACING
BB-1	8 x 8	–	2 #5	–	–	–
BB-2	8 x 16	2 #5	2 #5	–	–	–
TB-1	8 x 12	2 #5	2 #5	–	#3	@ 12"o.c.
TB-2	8 x 24	2 #5	2 #5	2 #5	#3	@ 12"o.c.
B-1	8 x 24	2 #7	2 #5	2 #5	#3	@ 10"o.c.
B-2	24 x 19	4 #5	6 #6	2 #5	#3	@ 12"o.c.
B-3	16 x 19	4 #5	5 #5	2 #5	#3	@ 12"o.c.
B-4	12 x 24	3 #6	3 #6	2 #5	#3	@ 10"o.c.
B-5	12 x 24	3 #9	3 #9	4 #5	#3	@ 10"o.c.
B-6	12 x 24	2 #6	2 #6	4 #5	#3	@ 10"o.c.
B-7	10 x 26	3 #7	3 #6	4 #5	#3	@ 10"o.c.
B-8	20 x 26	6 #10	4 #6	4 #6	#3	@ 7"o.c.
B-9	12 x 24	4 #6	4 #6	4 #5	#3	@ 10"o.c.
B-10	8 x 40	2 #5	2 #5	6 #5	#3	@ 12"o.c.

NOTES :
1. TIE-BEAMS INTENDED TO BE CAST ATOP MASONRY WALLS – EXTEND AND HOOK WALL REINFORCING INTO TIE-BEAM.
2. (*) INDICATES BARS IN 2 LAYERS.

DESIGN LOAD SCHEDULE

(ALL LOADS SHOWN ARE IN POUNDS PER SQ. FT.)

COMPONENT \ AREA	FLOOR (9" VOIDED)	FLOOR (CORRIDOR)	ROOF	WOOD TRUSS ROOF	STAIRS				
MECH./CEILING/MISC.	15	15	15	5	10				
FRAMING	85	85	85	10	50				
PARTITIONS *	15	15	–	–	–				
MANSARD TRUSSES	–	–	10	–	–				
ROOFING	–	–	5	10	–				
TOTAL DEAD LOAD	115	115	115	25	70				
TOTAL LIVE LOAD	65	80	30	30	100				
TOTAL LOAD	180	195	145	55	170				

* CONSIDERED AS LIVE LOAD

MASONRY WALL SCHEDULE

MARK	THICKNESS	REINFORCING
MW-1	8" CMU (2500 PSI)	#7 @ 32"o.c.
MW-2	8" CMU (2500 PSI)	#7 @ 24"o.c.
MW-3	8" CMU (2500 PSI)	#7 @ 8"o.c.
MW-4	8" CMU	#5 @ 48"o.c.
MW-5	8" CMU	#5 @ 16"o.c.
MW-6	12" CMU	#5 @ 16"o.c.

MASONRY WALL NOTES:
1. WALL SEGMENTS SHALL BE REINFORCED WITH 9 GA. GALVANIZED LATERAL REINFORCING @ 16" O.C. HORIZ. EXTEND REINFORCING 6" INTO POURED ELEMENTS AND AROUND ENCASED STEEL.
2. ADJACENT TO ANY EXTERIOR/INTERIOR WALL OPENING, PLACE 2 #7 VERTICAL IN CELL GROUTED SOLID, FULL HEIGHT.
3. ALL MASONRY REINFORCED CELLS SHALL BE FILLED WITH 3000 PSI GROUT MIX.

PERMIT SET
03/03/10

ONM&J
O'Donnell, Naccarato, Mignogna & Jackson
STRUCTURAL ENGINEERS
321 15TH STREET, SUITE 200
WEST PALM BEACH, FLORIDA 33401
(561) 835-9994 FAX (561) 835-8255
LIC. #0004386
JOB # 900.839

JMWA ARCHITECTS
STEVEN E. MYOTT AIA
JAMES R. WILLIAMS AIA
RODOLFO ACEVEDO AIA
949 CLINT MOORE ROAD
BOCA RATON, FLORIDA 33487
TEL 561 997 9997
FAX 561 997 1610
WWW.JMWA.NET

PALMETTO BAY VILLAGE HALL

Palmetto Bay, Florida

Master Builders of South Florida, Inc.
1400 E. Oakland Park Blvd. Suite 210
Oakland Park, FL 33334

FLORIDA	LICENSURE
AAC002193	IB0001142

PROJECT NO.	8714.00
DESIGNED BY:	RA
DRAWN BY:	DW / EK / JS
CHECKED BY:	JW

SUBMITTALS:
BUILDING PERMIT 03.03.2010

REVISIONS:

NOTES & SCHEDULES

S-4.1

© 2009 JMWA ARCHITECTS, INCORPORATED ALL RIGHTS RESERVED. NO PART OF THESE IDEAS, PLANS OR DESIGNS MAY BE REPRODUCED, COPIED OR UTILIZED GRAPHICALLY IN ANY FORM WHATSOEVER WITHOUT THE EXPRESSED WRITTEN CONSENT OF JMWA ARCHITECTS INCORPORATED AND ITS BOARD OF DIRECTORS.

3/3/2010 9:23:18 AM gnolin P:\PROJECT\2009-jobs\900839\S-4.1.DWG

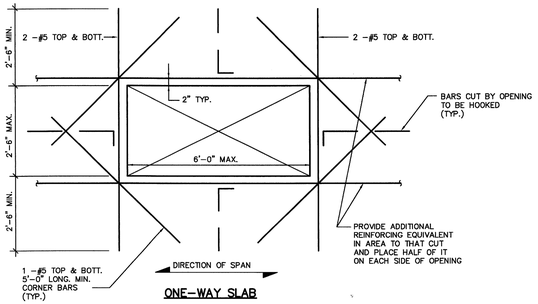

ONE-WAY SLAB

TYPICAL REINFORCING AT OPENING DETAIL
N.T.S.

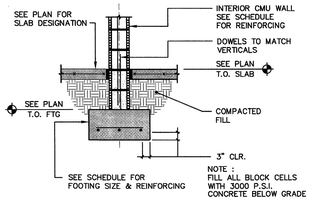

TYPICAL INTERIOR STEM WALL FOOTING
N.T.S.

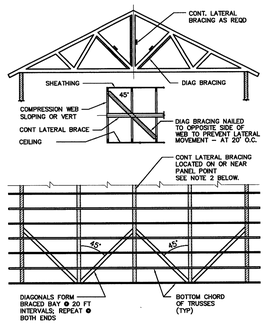

1. WOOD TRUSSES SHALL BE BRACED AND ERECTED IN ACCORDANCE WITH THE "TRUSS PLATE INSTITUTE" BRACING WOOD TRUSSES: COMMENTARY AND RECOMMENDATIONS, HIB–91, BRACING IN THE PLAN OF THE WEB MEMBERS :
   a. THE TRUSS FABRICATOR SHALL PROVIDE AND LOCATE CONTINUOUS LATERAL BRACING FOR EACH TRUSS WEB MEMBER AS REQUIRED.
   b. LATERAL BRACING SHALL BE RESTRAINED BY DIAGONAL BRACING (MIN. 2" THICK NOMINAL LUMBER). THIS BRACING IS TO BE CONTINUOUS.
   c. A MINIMUM OF TWO ROWS OF DIAGONAL BRACING IS REQUIRED, ONE AT EACH VERTICAL WEB MEMBER CLOSEST TO BEARING LOCATIONS.
2. THE BOTTOM CHORDS SHALL BE BRACED BY CONTINUOUS LATERAL BRACING SPACED AT 8'–0" O. C. WITH A CEILING ATTACHED TO BOTTOM OF TRUSSES. OR IF NO CEILING IS ATTACHED TO BOTTOM OF TRUSSES BRACING SHALL BE MIN. 2 x 4 @ 36" O.C. NAILED TO THE TOP OF THE BOTTOM CHORD. DIAGONALS PLACED AT 45° TO THE LATERAL BRACES SHALL BE LOCATED AT EACH END. IF BUILDING EXCEEDS 60 FEET IN LENGTH, DIAGONAL BRACING SHOULD BE REPEATED AT 20 FOOT INTERVALS.
3. TOP CHORD BRACING :
   a. IF PLYWOOD DECKING IS APPLIED DIRECTLY TO TOP CHORD, PROPERLY LAPPED AND NAILED TO DEVELOP DIAPRAGHM ACTION, BRACING IS NOT REQUIRED.
   b. IF PURLINS ARE USED, DIAGONAL TOP CHORD BRACING IS REQUIRED AT EACH END. IF BUILDING EXCEEDS 80 FEET IN LENGTH, DIAGONAL BRACING SHOULD BE REPEATED AT 20 FOOT INTERVALS.

WOOD TRUSS BRACING DETAIL

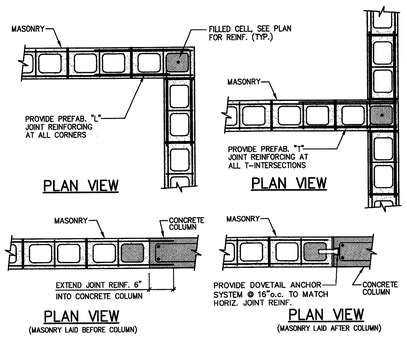

TYPICAL MASONRY DETAILS
N.T.S.

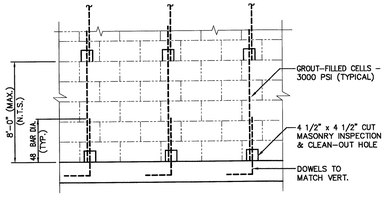

TYPICAL MASONRY FILLED CELL DETAIL

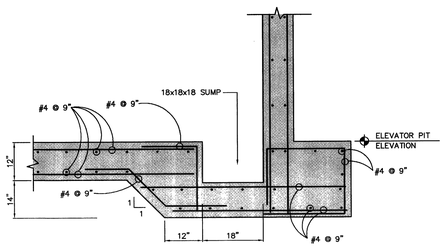

TYPICAL SUMP DETAIL
(AT SIDE WALL)

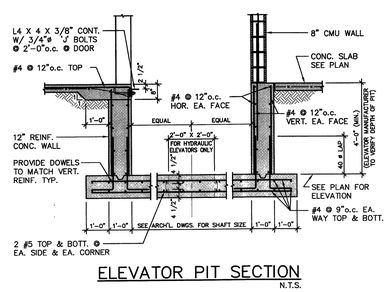

ELEVATOR PIT SECTION
N.T.S.

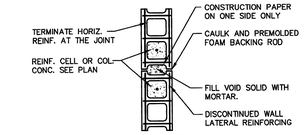

PLAN VIEW

NOTES :
1.– SAW CUT BOND BEAMS, TIE BEAMS 1" DEEP TO CONTINUE WALL CONTROL JOINT TO TOP OF WALL.
2.– CONTROL JOINT SPACING IS NOT TO EXCEED 25'–0"o.c. IN WALLS WITH MORE THAN 25'–0" OF UNINTERRUPTED MASONRY. REFER TO DWG'S. FOR ADDITIONAL SPECIFIED LOCATIONS AS NOTED THUS (WCJ).
3.– CONTINUE ALL BOND BEAMS, TIE BEAMS REINF. THROUGH THE JOINT.

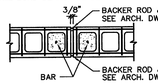

ALTERNATE METHOD

CMU WALL CONTROL JOINT (WCJ) DETAIL
N.T.S.

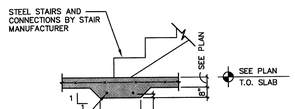

(DENOTED "TS" ON PLAN)

TYPICAL THICKENED SLAB AT STEEL STAIRS
N.T.S.

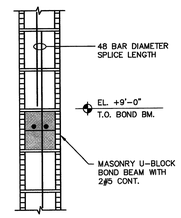

TYPICAL BOND BEAM DETAIL
N.T.S.

NOTES:
1. WHERE HEIGHT OF MASONRY WALL SEGMENT EXCEEDS 12'–0", INTERMEDIATE BOND BEAM IS REQUIRED.
2. BOND BEAM REINFORCEMENT MUST BE CONT. HOOK BARS INTO REINFORCED JAMB AT WALL OPENINGS.
3. OMIT BOND BEAMS WHERE IT COINCIDES WITH OPENING HEADERS (LINTELS/BEAMS), REINFORCEMENT MUST BE CONTINUOUS AT SUCH LOCATIONS.

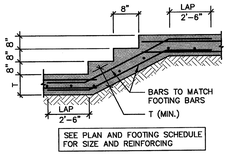

SEE PLAN AND FOOTING SCHEDULE FOR SIZE AND REINFORCING

TYPICAL STEP FOOTING DETAIL

SECTION 1 / S–4.1
N.T.S

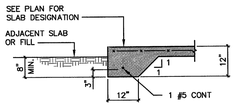

THICKENED EDGE (T.E.)
N.T.S.

SECTION 2 / S–4.1
N.T.S

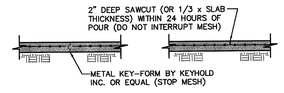

TYPICAL SLAB–ON–GRADE
N.T.S.

NOTE: CONTROL JOINTS/CONSTRUCTION JOINTS SHALL CREATE PANELS OF 400 SQ. FEET (MAXIMUM)

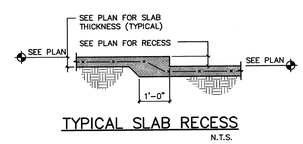

TYPICAL SLAB RECESS
N.T.S.

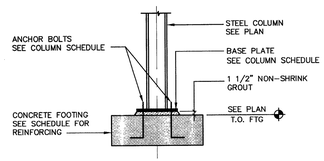

TYPICAL STEEL COLUMN ANCHOR
N.T.S.

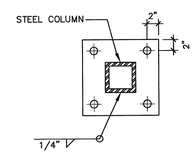

TYPICAL BASE PLATE DETAIL
N.T.S.

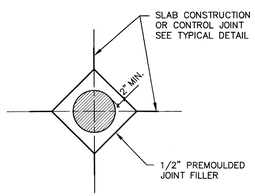

AT ROUND CONCRETE COLUMN

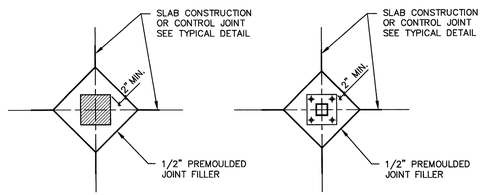

AT CONCRETE COLUMN AT STEEL TUBE COLUMN

TYPICAL ISOLATION JOINTS AT COLUMNS
N.T.S.

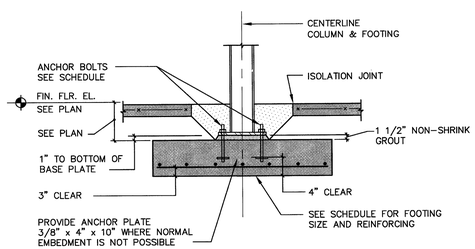

TYPICAL STEEL COLUMN FOOTING
N.T.S.

RECORD SET

The information presented on this drawing is diagrammatic and is presented for general information purposes and should not be relied on for accuracy of dimensions, details and locations. Actual and exact conditions if required should be determined in the field.

PERMIT SET
03/03/10

TOLLIVER J. FRAZIER
P.E. FLORIDA
REG. #56011
03–05–10

O'Donnell, Naccarato, Mignogna Jackson
STRUCTURAL ENGINEERS
321 15TH STREET, SUITE 200
WEST PALM BEACH, FLORIDA 33401
(561) 835 - 9994 FAX (561) 835 - 8255
LIC. #0004386
JOB # 900.839

JMWA ARCHITECTS
STEVEN E. MYOTT AIA
JAMES R. WILLIAMS AIA
RODOLFO ACEVEDO AIA
949 CLINT MOORE ROAD
BOCA RATON, FLORIDA 33487
TEL 561 997 9997
FAX 561 997 1610
WWW.JMWA.NET

PALMETTO BAY VILLAGE HALL
Palmetto Bay, Florida

Master Builders of South Florida, Inc.
1400 E. Oakland Park Blvd. Suite 210
Oakland Park, FL 33334

FLORIDA LICENSURE

AAC002193 IB0001142

PROJECT NO.	8714.00
DESIGNED BY:	RA
DRAWN BY:	DW / EK / JS
CHECKED BY:	JW

SUBMITTALS:
BUILDING PERMIT 03.03.2010

REVISIONS:

TYPICAL DETALS

S-4.2

© 2009 JMWA ARCHITECTS, INCORPORATED ALL RIGHTS RESERVED. NO PART OF THESE IDEAS, PLANS OR DESIGNS MAY BE REPRODUCED, COPIED OR UTILIZED GRAPHICALLY IN ANY FORM WHATSOEVER WITHOUT THE EXPRESSED WRITTEN CONSENT OF JMWA ARCHITECTS INCORPORATED AND ITS BOARD OF DIRECTORS.

3/3/2010 9:22:56 AM gnolin P:\PROJECT\2009-jobs\900839\S-4.2.dwg

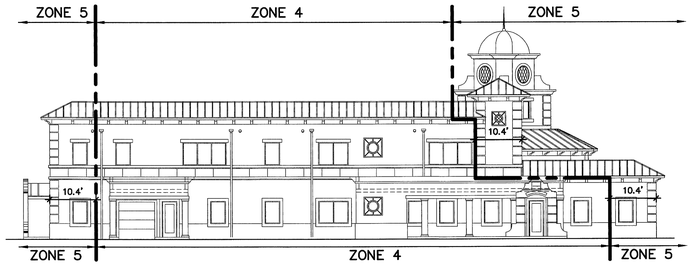

NORTH

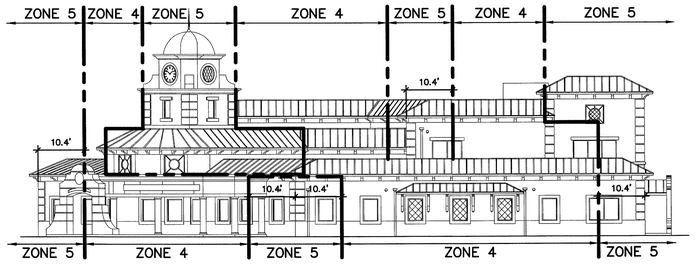

SOUTH

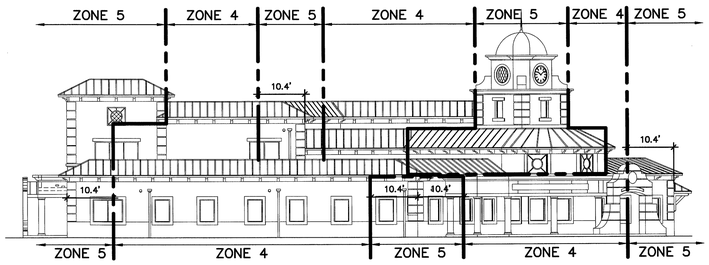

WEST

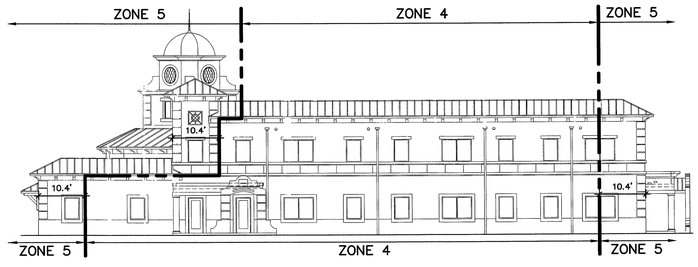

EAST

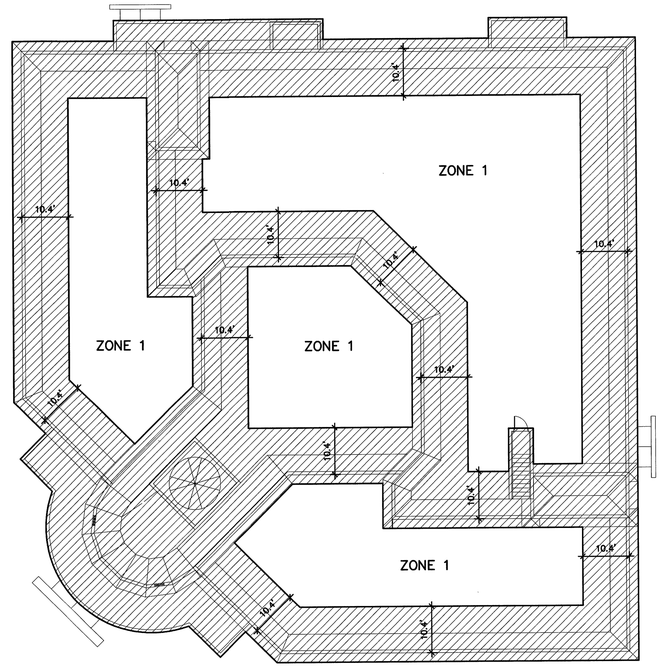

ROOF

NOTES:

INDICATES ZONE 2 AND ZONE 3

INDICATES ZONE 1

WIND LOAD SCHEDULE					
COMPONENTS & CLADDING Kd INCLUDED	ROOF WIND LOADS 10 FT² ROOF AREA			WALL WIND LOADS (SEE NOTE 1) 10 FT² WALL AREA	
	1	2	3	4	5
PRESSURE (PSF)	+35.6	+87.4	+35.6	+80.0	+80.0
SUCTION (PSF)	-87.4	-146.7	-146.7	-86.7	-106.7

1. EXTERIOR GLAZED OPENINGS IN BUILDINGS SHALL COMPLY WITH 2007 FLORIDA BUILDING CODE BY EITHER BEING DESIGNED FOR IMPACT RESISTANCE OR BEING PROTECTED BY IMPACT PROTECTIVE SYSTEMS.
2. CORNER DISTANCE, A = 10.4 FEET

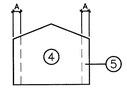

ELEVATION

RECORD SET

The information presented on this drawing is diagrammatic and is presented for general information purposes and should not be relied on for accuracy of dimensions, details and locations. Actual and exact conditions if required should be determined in the field.

PERMIT SET
03/03/10

TOLLIVER J. FRAZIER
P.E. FLORIDA
REG. #54011
03-05-10

O'Donnell, Naccarato, Mignogna Jackson
STRUCTURAL ENGINEERS
321 15TH STREET, SUITE 200
WEST PALM BEACH, FLORIDA 33401
(561) 835 - 9994 FAX (561) 835 - 8255
LIC. #0004386
JOB # 900.839

JMWA ARCHITECTS
STEVEN E. MYOTT AIA
JAMES R. WILLIAMS AIA
RODOLFO ACEVEDO AIA
949 CLINT MOORE ROAD
BOCA RATON, FLORIDA 33487
TEL 561 997 9997
FAX 561 997 1610
WWW.JMWA.NET

PALMETTO BAY VILLAGE HALL

Palmetto Bay, Florida

Master Builders of South Florida, Inc.
1400 E. Oakland Park Blvd. Suite 210
Oakland Park, FL 33334

FLORIDA LICENSURE

AAC002193 IB0001142

PROJECT NO.	8714.00
DESIGNED BY:	RA
DRAWN BY:	DW / EK / JS
CHECKED BY:	JW

SUBMITTALS:
BUILDING PERMIT 03.03.2010

REVISIONS:

WIND LOADS

S-4.3

© 2009 JMWA ARCHITECTS, INCORPORATED ALL RIGHTS RESERVED. NO PART OF THESE IDEAS, PLANS OR DESIGNS MAY BE REPRODUCED, COPIED OR UTILIZED GRAPHICALLY IN ANY FORM WHATSOEVER WITHOUT THE EXPRESSED WRITTEN CONSENT OF JMWA ARCHITECTS INCORPORATED AND ITS BOARD OF DIRECTORS.

P:\PROJECT\2009-jobs\900839\S-4.3.dwg
gnolin
1/6/2010 4:55:03 PM

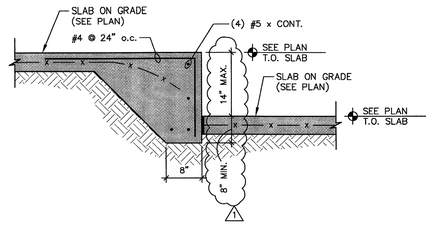

13 SECTION 3/4" = 1'-0"

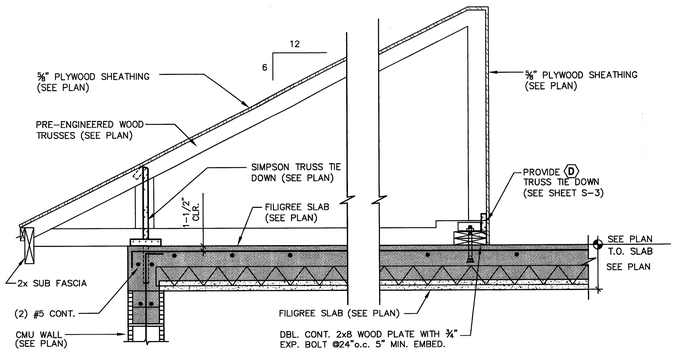

9 SECTION 3/4" = 1'-0"

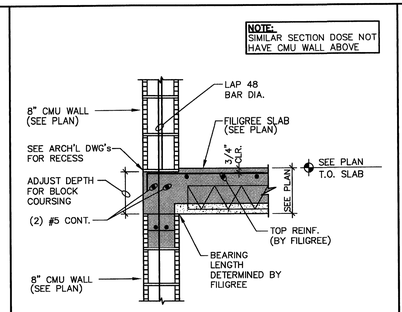

5 SECTION 3/4" = 1'-0"

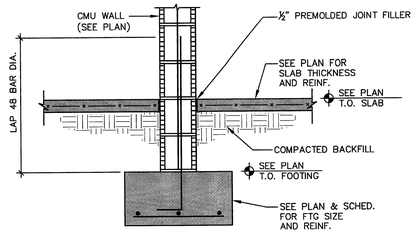

1 SECTION 3/4" = 1'-0"

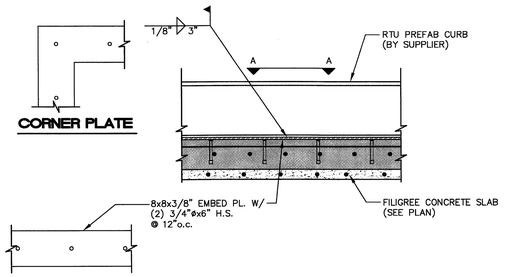

14 SECTION 3/4" = 1'-0"

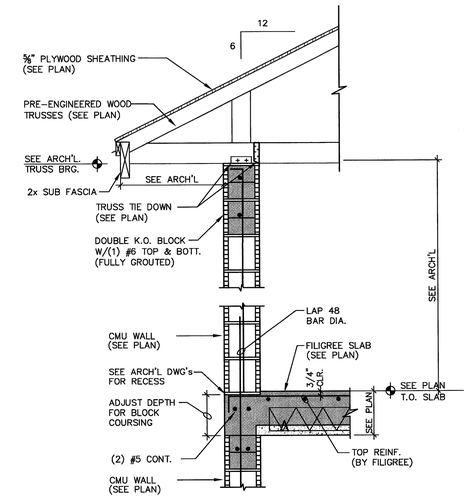

10 SECTION 3/4" = 1'-0"

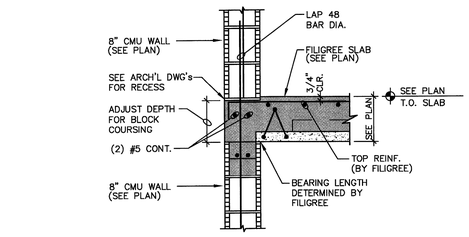

6 SECTION 3/4" = 1'-0"

NOT USED

RECORD SET

The information presented on this drawing is diagrammatic and is presented for general information purposes and should not be relied on for accuracy of dimensions, details and locations. Actual and exact conditions if required should be determined in the field.

2 SECTION 3/4" = 1'-0"

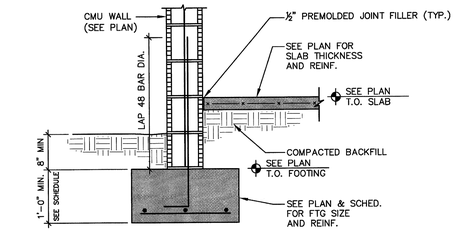

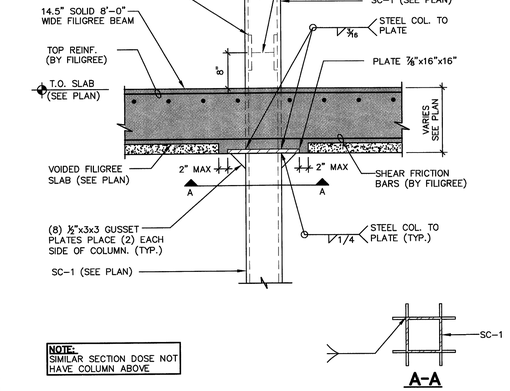

7 SECTION 3/4" = 1'-0"

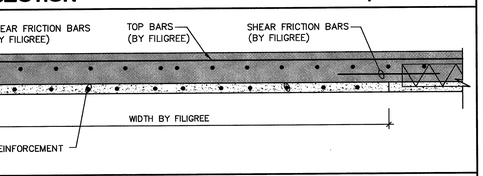

3 SECTION 3/4" = 1'-0"

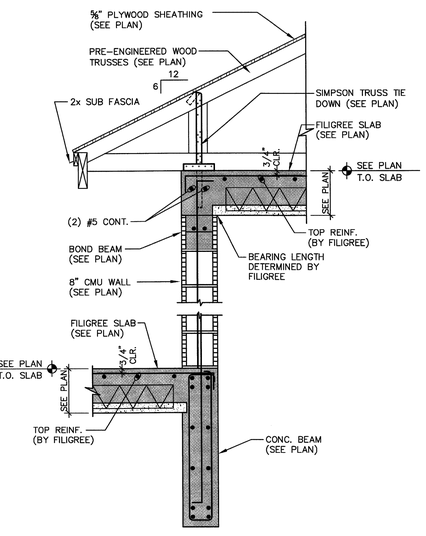

15 SECTION 3/4" = 1'-0"

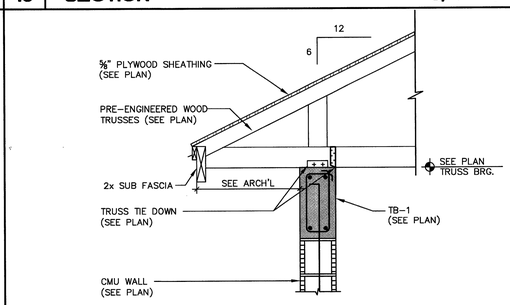

11 SECTION 3/4" = 1'-0"

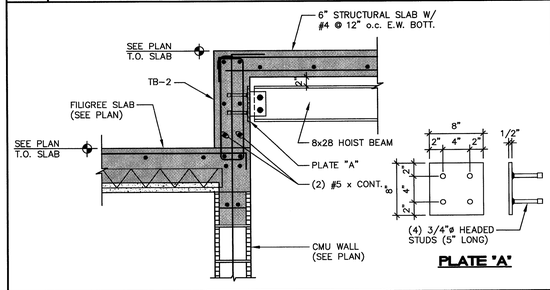

12 SECTION 3/4" = 1'-0"

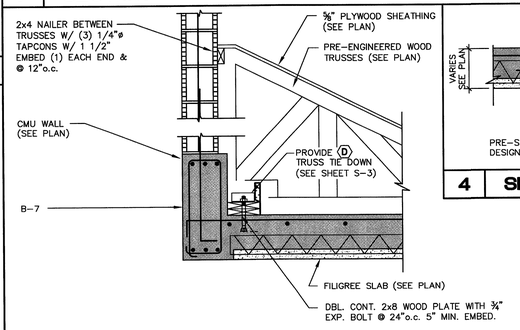

8 SECTION 3/4" = 1'-0"

PERMIT SET
03/03/10

TOLLIVER J. FRAZIER
P.E. FLORIDA
REG. #56011
04-06-10

ONM&J
O'Donnell, Naccarato, Mignogna Jackson
STRUCTURAL ENGINEERS
321 15TH STREET, SUITE 200
WEST PALM BEACH, FLORIDA 33401
(561) 835 - 9994 FAX (561) 835 - 8255
LIC. #0004386
JOB # 900.839

JMWA
ARCHITECTS
STEVEN E. MYOTT AIA
JAMES R. WILLIAMS AIA
RODOLFO ACEVEDO AIA
949 CLINT MOORE ROAD
BOCA RATON, FLORIDA 33487
TEL 561 997 9997
FAX 561 997 1610
WWW.JMWA.NET

PALMETTO BAY VILLAGE HALL
9705 E. Hibiscus St., Palmetto Bay, Florida

Master Builders of South Florida, Inc.
1400 E. Oakland Park Blvd. Suite 210
Oakland Park, FL 33334

FLORIDA LICENSURE

AAC002193 IB0001142

PROJECT NO.	8714.00
DESIGNED BY:	RA
DRAWN BY:	DW / EK / JS
CHECKED BY:	JW

SUBMITTALS:
BUILDING PERMIT 03.05.2010

REVISIONS:
1 PERMIT COMMENTS 04/02/10

SECTIONS

S-5.1

© 2009 JMWA ARCHITECTS, INCORPORATED ALL RIGHTS RESERVED. NO PART OF THESE IDEAS, PLANS OR DESIGNS MAY BE REPRODUCED, COPIED OR UTILIZED GRAPHICALLY IN ANY FORM WHATSOEVER WITHOUT THE EXPRESSED WRITTEN CONSENT OF JMWA ARCHITECTS INCORPORATED AND ITS BOARD OF DIRECTORS.

4/5/2010 10:31:30 AM gnolin P:\PROJECT\2009-jobs\900839\S-5.1.dwg

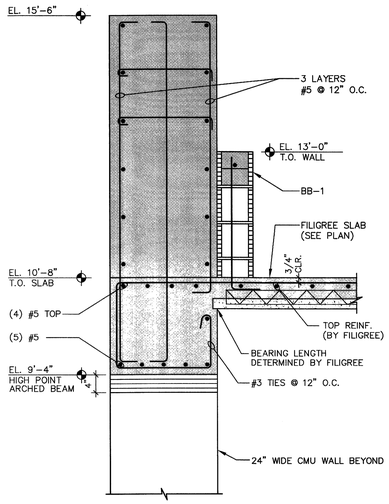

7 SECTION 3/4" = 1'-0"

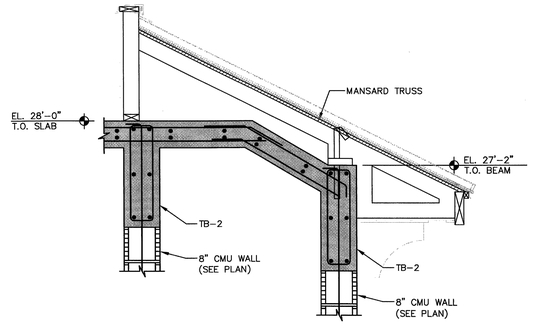

8 SECTION 3/4" = 1'-0"

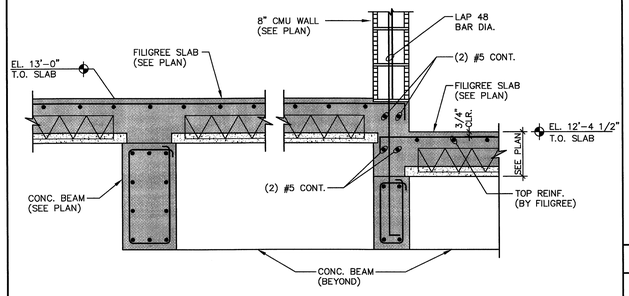

9 SECTION 3/4" = 1'-0"

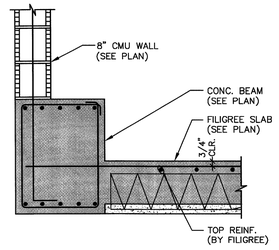

10 SECTION 3/4" = 1'-0"

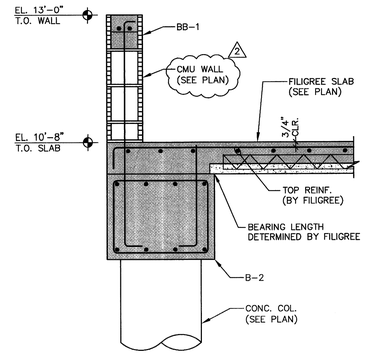

3 SECTION 3/4" = 1'-0"

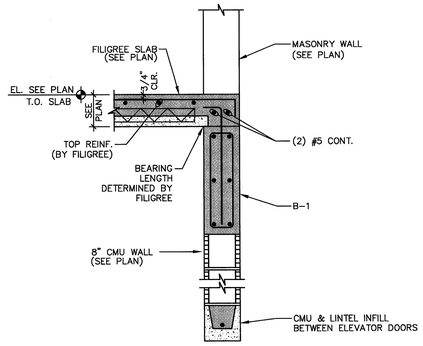

4 SECTION 3/4" = 1'-0"

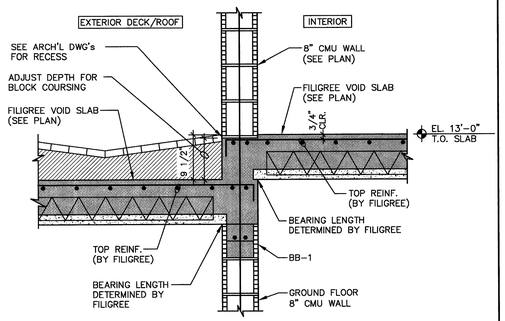

5 SECTION 3/4" = 1'-0"

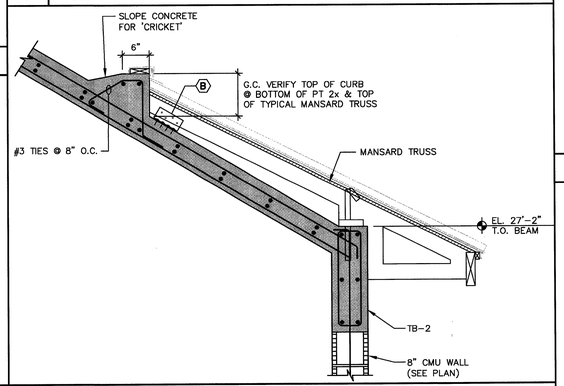

6 SECTION 3/4" = 1'-0"

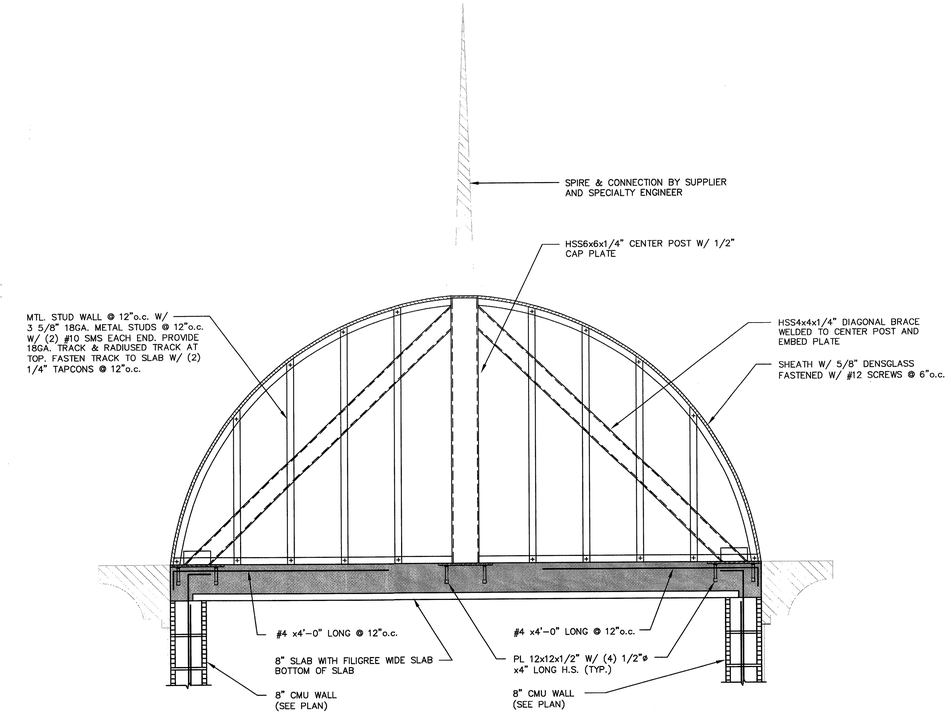

1 SECTION 3/4" = 1'-0"

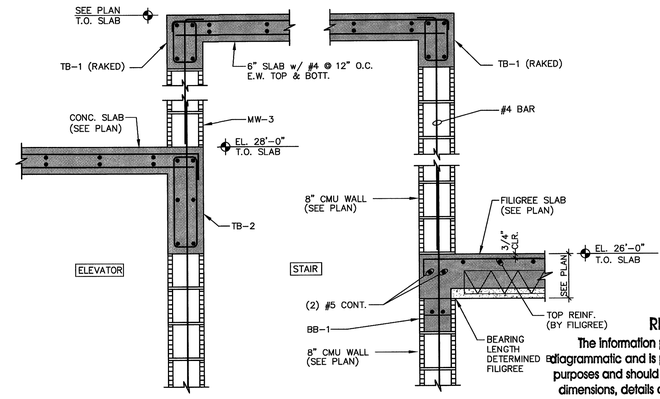

2 SECTION 3/4" = 1'-0"

RECORD SET

The information presented on this drawing is diagrammatic and is presented for general information purposes and should not be relied on for accuracy of dimensions, details and locations. Actual and exact conditions if required should be determined in the field.

PERMIT SET
03/03/10

TOLLIVER J. FRAZIER
P.E. FLORIDA
REG. #56011
04-06-10

ONMJ
O'Donnell, Naccarato, Mignogna Jackson
STRUCTURAL ENGINEERS
321 15TH STREET, SUITE 200
WEST PALM BEACH, FLORIDA 33401
(561) 835 - 9994 FAX (561) 835 - 8255
LIC. #0004386
JOB # 900.839

JMWA
ARCHITECTS
STEVEN E. MYOTT AIA
JAMES R. WILLIAMS AIA
RODOLFO ACEVEDO AIA
949 CLINT MOORE ROAD
BOCA RATON, FLORIDA 33487
TEL 561 997 9997
FAX 561 997 1610
WWW.JMWA.NET

PALMETTO BAY VILLAGE HALL

9705 E. Hibiscus St., Palmetto Bay, Florida

Master Builders of South Florida, Inc.
1400 E. Oakland Park Blvd. Suite 210
Oakland Park, FL 33334

FLORIDA LICENSURE

AAC002193 IB0001142

PROJECT NO.	8714.00
DESIGNED BY:	RA
DRAWN BY:	DW / EK / JS
CHECKED BY:	JW

SUBMITTALS:
BUILDING PERMIT 03.05.2010

REVISIONS:
1 PERMIT COMMENTS 04/02/10

SECTIONS

S-5.2

© 2009 JMWA ARCHITECTS, INCORPORATED ALL RIGHTS RESERVED. NO PART OF THESE IDEAS, PLANS OR DESIGNS MAY BE REPRODUCED, COPIED OR UTILIZED GRAPHICALLY IN ANY FORM WHATSOEVER WITHOUT THE EXPRESSED WRITTEN CONSENT OF JMWA ARCHITECTS INCORPORATED AND ITS BOARD OF DIRECTORS.

4/5/2010 10:21:10 AM gnolin P:\PROJECT\2009-jobs\900839\S-5.2.dwg

12	SECTION	3/4" = 1'-0"	8	SECTION	3/4" = 1'-0"	4	SECTION 3/4" = 1'-0"

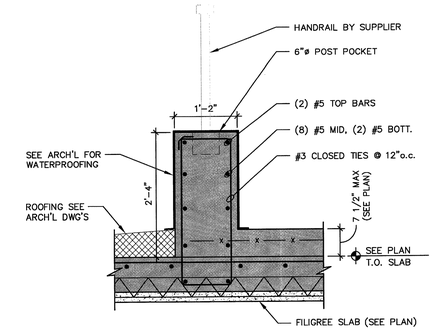

1	SECTION	3/4" = 1'-0"

13	SECTION	3/4" = 1'-0"	9	SECTION	3/4" = 1'-0"	5	SECTION 3/4" = 1'-0"

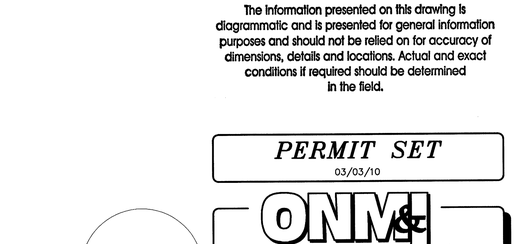

2	TYP. RTU ATTACHMENT TO SLAB DETAIL	3/4" = 1'-0"

14	SECTION	3/4" = 1'-0"	10	SECTION	3/4" = 1'-0"	6	SECTION 3/4" = 1'-0"

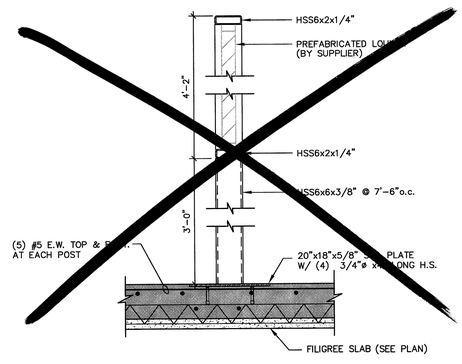

3	TYPICAL SCREEN ENCLOSURE POST DETAIL	3/4" = 1'-0"

15	SECTION	3/4" = 1'-0"	11	SECTION	3/4" = 1'-0"	7	SECTION 3/4" = 1'-0"

RECORD SET

The information presented on this drawing is diagrammatic and is presented for general information purposes and should not be relied on for accuracy of dimensions, details and locations. Actual and exact conditions if required should be determined in the field.

PERMIT SET
03/03/10

TOLLIVER J. FRAZIER
P.E. FLORIDA
REG. #56011
03-05-10

ONMJ
O'Donnell, Naccarato, Mignogna Jackson
STRUCTURAL ENGINEERS
321 15TH STREET, SUITE 200
WEST PALM BEACH, FLORIDA 33401
(561) 835 - 9994 FAX (561) 835 - 8255
LIC. #0004386
JOB # 900.839

JMWA
ARCHITECTS
STEVEN E. MYOTT AIA
JAMES R. WILLIAMS AIA
RODOLFO ACEVEDO AIA
949 CLINT MOORE ROAD
BOCA RATON, FLORIDA 33487
TEL 561 997 9997
FAX 561 997 1610
WWW.JMWA.NET

PALMETTO BAY VILLAGE HALL

Palmetto Bay, Florida

Master Builders of South Florida, Inc.
1400 E. Oakland Park Blvd. Suite 210
Oakland Park, FL 33334

FLORIDA LICENSURE

AAC002193 IB0001142

PROJECT NO.	8714.00
DESIGNED BY:	RA
DRAWN BY:	DW / EK / JS
CHECKED BY:	JW

SUBMITTALS:
BUILDING PERMIT 03.03.2010

REVISIONS:

SECTIONS

S-5.3

© 2009 JMWA ARCHITECTS, INCORPORATED ALL RIGHTS RESERVED. NO PART OF THESE IDEAS, PLANS OR DESIGNS MAY BE REPRODUCED, COPIED OR UTILIZED GRAPHICALLY IN ANY FORM WHATSOEVER WITHOUT THE EXPRESSED WRITTEN CONSENT OF JMWA ARCHITECTS INCORPORATED AND ITS BOARD OF DIRECTORS.

3/5/2010 11:59:41 AM gnolin P:\PROJECT\2009-jobs\900839\S-5.3.dwg

HVAC SYMBOL LEGEND

SYMBOL	DESCRIPTION
	-EXHAUST DUCT UP THROUGH SLAB W/FAN ON ROOF ABOVE
	-EXHAUST FAN ON ROOF W/DUCT DOWN THROUGH ROOF
	-CEILING DIFFUSER, ROUND NECK (CEILING DIFFUSERS ARE 4-WAY THROW UNO)
	-CEILING RETURN
	-CEILING EXHAUST
	-CEILING DIFFUSER, RECTANGULAR OR SQUARE NECK (CEILING DIFFUSERS ARE 4-WAY THROW UNO)
	-SUPPLY REGISTER OR GRILLE (VERTICAL MOUNT, SIDEWALL)
	-RETURN/EXHAUST REGISTER OR GRILLE (VERTICAL MOUNT, SIDEWALL)
1	-REVISION REFERENCE
1 / M-1	-DETAIL REFERENCE: TOP - DETAIL#; BOTTOM - DRAWING# SHOWN ON
T	-THERMOSTAT/TEMPERATURE SENSOR
H	-HUMIDISTAT/HUMIDITY SENSOR
CO2	-CARBON DIOXIDE SENSOR
	-DUCT SMOKE DETECTOR
M	-MOTORIZED CONTROL DAMPER
SP	-STATIC PRESSURE SENSOR
	-REMOTE TEST STATION
1	-SHEET NOTE CALLOUT
1	-SHEET NOTE CALLOUT
1	-SHEET NOTE CALLOUT
	-CEILING MOUNTED ACCESS DOOR

SYMBOL	DESCRIPTION
	-FIRE DAMPER (WITH ACCESS PANEL)
M	-MOTOR OPERATED CONTROL DAMPER (MOD)
FM	-AIR FLOW MEASURING STATION
	-MANUAL BALANCING DAMPER
	-DOOR GRILLE
UC	-UNDERCUT DOOR
M	-ACCESS DOORS, VERTICAL OR HORIZONTAL
	-STAINLESS STEEL DUCTWORK
	-FLEXIBLE CONNECTION
24x12	-NEW DUCTWORK, FIRST DIMENSION IS SIDE SHOWN
DOWN / UP W/IN FLOOR	-DUCT ELBOW, POSITIVE PRESSURE (SUPPLY)
	-DUCT ELBOW, EXHAUST
	-DUCT ELBOW, NEGATIVE PRESSURE, RETURN
	-DUCT ELBOW UP THROUGH ROOF OR SLAB ABOVE
	-RECTANGULAR DUCT SECTION UP, POSITIVE PRESSURE, SUPPLY OR OUTSIDE AIR
	-RECTANGULAR DUCT SECTION UP, NEGATIVE PRESSURE, RETURN
	-RECTANGULAR DUCT SECTION UP, EXHAUST
	-ROUND DUCT SECTION UP
	-FLAT OVAL DUCT SECTION UP
	-RECTANGULAR DUCT BELLMOUTH

SYMBOL	DESCRIPTION
	-TERMINAL UNIT, VARIABLE/CONSTANT AIR VOLUME WITHOUT ELECTRIC HEAT (42" MIN. CLEARANCE)
	-TERMINAL UNIT, VARIABLE/CONSTANT AIR VOLUME WITH ELECTRIC HEAT (42" MIN. CLEARANCE)
	-INLINE CENTRIFUGAL FAN
UP DN	-CHANGE OF ELEVATION
	-FLEXIBLE DUCT
	-TRANSITION, CONCENTRIC
	-TRANSITION, ECCENTRIC
10x8 8ø	-TRANSITION, SQUARE TO ROUND
	-SQUARE THROAT ELBOW W/TURNING VANES
	-RADIUS ELBOW
	-RECTANGULAR/ROUND BRANCH TAKE-OFF OR ROUND/ROUND BRANCH TAKE-OFF
	-SQUARE THROAT TEE
12x8	-RADIUS TEE
	-RECTANGLE-TO-ROUND TAKE-OFF
	-STANDARD BRANCH TAKE-OFF
	-SPIN-IN TAKE-OFF

HVAC ABBREVIATIONS

SYMBOL	DESCRIPTION	SYMBOL	DESCRIPTION
AFD	–ADJUSTABLE FREQUENCY DRIVE	MCA	–MINIMUM CIRCUIT AMPS
AFF	–ABOVE FINISHED FLOOR	MOCP	–MAXIMUM OVER CURRENT PROTECTION
AFR	–ABOVE FINISHED ROOF	MOD	–MOTOR OPERATED CONTROL DAMPER (MOD)
AHU	–AIR HANDLING UNIT	NC	–NORMALLY CLOSED
AP	–ACCESS PANEL	NO	–NORMALLY OPEN
BOP	–BOTTOM OF PIPE	NTS	–NOT TO SCALE
BHP	–BRAKE HORSEPOWER	OA	–OUTSIDE AIR
BTU	–BRITISH THERMAL UNIT	OAL	–OUTSIDE AIR LOUVER
℄	–CENTER LINE	PRV	–PRESSURE REDUCING VALVE
℄	–CFM (CUBIC FEET PER MINUTE)	PRS	–PRESSURE REDUCING STATION
CD	–CEILING DIFFUSER	PSI	–POUNDS PER SQUARE INCH
CT	–COOLING TOWER	PSIG	–PSI GAUGE
CV	–CONSTANT AIR VOLUME	PTAC	–PACKAGED TERMINAL AIR CONDITIONER
CFM	–CUBIC FEET PER MINUTE	PVC	–POLYVINYL CHLORIDE PIPE
CU	–CONDENSING UNIT	RA	–RETURN AIR
DDC	–DIRECT DIGITAL CONTROLS	RHC	–REHEAT COIL
DN	–DOWN	RHP	–ROOFTOP HEAT PUMP
EAT	–ENTERING AIR TEMPERATURE	RPM	–REVOLUTIONS PER MINUTE
ESP	–EXTERNAL STATIC PRESSURE	RS/L	–REFRIGERANT SUCTION & LIQUID LINES
EWT	–ENTERING WATER TEMPERATURE	RTU	–ROOFTOP AIR HANDLING UNIT
FCU	–FAN COIL UNIT	SA	–SUPPLY AIR
FD	–FIRE DAMPER	SP	–STATIC PRESSURE
FF	–FINAL FILTERS	TSP	–TOTAL STATIC PRESSURE
FLA	–FULL LOAD AMPS	UNO	–UNLESS NOTED OTHERWISE
FPM	–FEET PER MINUTE	V/PH	–VOLTS/PHASE
GPM	–GALLONS PER MINUTE	VAV	–VARIABLE AIR VOLUME
KW	–KILOWATT	VFD	–VARIABLE FREQUENCY DRIVE
LAT	–LEAVING AIR TEMPERATURE	VRF	–VARIABLE REFRIGERANT FLOW
LWT	–LEAVING WATER TEMPERATURE	△P	–CHANGE IN PRESSURE
LD	–LINEAR DIFFUSER	△T	–CHANGE IN TEMPERATURE
MBH	–THOUSAND BTUs PER HOUR		

GENERAL NOTES

1. CONNECTION TO EQUIPMENT SHALL BE VERIFIED WITH MANUFACTURER'S CERTIFIED DRAWINGS. TRANSITIONS TO ALL EQUIPMENT SHALL BE VERIFIED AND PROVIDED FOR EQUIPMENT FURNISHED.
2. DIMENSIONS SHALL BE FIELD-VERIFIED AND COORDINATED PRIOR TO PROCUREMENT OR FABRICATION. COORDINATE THE WORK WITH OTHER TRADES INVOLVED. FIELD MODIFICATIONS SUCH AS OFFSETS IN PIPING OR DUCTWORK (INCLUDING DIVIDED DUCTWORK) NEEDED DUE TO OBSTRUCTIONS OR INTERFERENCES SHALL BE PROVIDED AT NO ADDITIONAL COST. FOR PROJECTS INVOLVING RENOVATION, COORDINATE NEW WORK WITH EXISTING ELEMENTS SUCH AS THE BUILDING STRUCTURE AND ARCHITECTURAL FEATURES, SPRINKLER PIPING, LIGHTS, PLUMBING, AND ELECTRICAL CONDUIT.
3. DUCT CONSTRUCTION SHALL BE IN ACCORDANCE WITH THE LATEST EDITION OF THE SMACNA HVAC DUCT CONSTRUCTION STANDARD.
4. SEE SPECIFICATIONS FOR GAUGES, THICKNESS, BRACING, REQUIREMENTS, ETC., OF DUCTWORK.
5. PROVIDE AIR TURNING VANES IN ALL 90 DEGREE RECTANGULAR DUCT ELBOWS.
6. DUCT SIZES AND ALL OPENINGS THROUGH BUILDING CONSTRUCTION SHALL SUIT EQUIPMENT FURNISHED.
7. COORDINATE DIFFUSER, GRILLE AND REGISTER LOCATIONS WITH ARCHITECTURAL REFLECTED CEILING PLANS AND EQUIPMENT OF ALL TRADES.
8. LOCATE THERMOSTATS, TEMPERATURE SENSORS, HUMIDISTATS, AND HUMIDITY SENSORS AT 48" ABOVE FINISHED FLOOR UNLESS NOTED OTHERWISE. COORDINATE LOCATIONS WITH OTHER EQUIPMENT, FURNITURE, AND DOOR SWINGS. CO2 SENSORS SHALL BE LOCATED BETWEEN 36" A.F.F. AND 72" A.F.F.. COORDINATE LOCATION WITH ARCHITECT.
9. ALL EQUIPMENT, DUCTWORK, ETC., SHALL BE SUPPORTED AS DETAILED AND/OR SPECIFIED. PROVIDE ADDITIONAL SUPPORTS AS REQUIRED TO PROVIDE A VIBRATION-FREE, RIGID INSTALLATION.
10. ALL DUCT SIZES SHOWN ARE INSIDE CLEAR DIMENSIONS.
11. DAMPERS AND INSIDES OF DUCTS VISIBLE THROUGH GRILLES, REGISTERS AND DIFFUSERS SHALL BE PAINTED FLAT BLACK.
12. REFER TO TYPICAL DETAILS FOR PIPING AND INSTALLATION OF EQUIPMENT.
13. TRAPPED CONDENSATE DRAINS FROM ALL MECHANICAL EQUIPMENT SHALL BE PROVIDED FOR PROPER DRAINAGE TO SUIT EQUIPMENT FURNISHED.
14. ACCESS PANELS IN DUCTWORK AND CEILINGS SHALL BE PROVIDED WHERE REQUIRED FOR OPERATION, BALANCING OR MAINTENANCE OF ALL MECHANICAL EQUIPMENT.
15. ALL DUCTWORK AND PIPING IS SHOWN SCHEMATICALLY. PROVIDE ALL TRANSITIONS, TURNING VANES, ELBOWS, FITTINGS, ETC., TO ALLOW SMOOTH FLOWS. ALL SPLIT DUCT FITTINGS SHALL TRANSITION TO FULL SIZE OF THE SUM OF BOTH BRANCHES, UPSTREAM OF SPLIT.
16. VERIFY FINISH WITH ARCHITECT PRIOR TO PURCHASING GRILLES, REGISTERS, DIFFUSERS, LOUVERS AND OTHER AIR DISTRIBUTION DEVICES.
17. PROVIDE FLEXIBLE DUCT CONNECTIONS ON ALL DUCTWORK CONNECTING TO EACH FAN, AIR HANDLING UNITS, AND FAN COIL UNITS.
18. PROVIDE TRANSITIONS AT DIFFUSER NECKS AS REQUIRED TO MATCH SIZES OF FLEX DUCTS TO BE CONNECTED.
19. MAINTAIN CLEARANCE OF A MINIMUM OF 6" BETWEEN DUCTWORK, PIPING, EQUIPMENT, ETC., AND ALL FIRE RATED AND FIRE/SMOKE RATED PARTITIONS, TO ALLOW FOR INSPECTIONS OF RATED WALLS.
22. LOCATE ALL OUTSIDE AIR INTAKES A MINIMUM OF 10'-0" CLEAR FROM ALL PLUMBING VENTS AND EXHAUST AIR DISCHARGE LOCATIONS. LOWEST POINT OF EACH OUTSIDE AIR INTAKE ON ROOF SHALL BE A MINIMUM OF 24" ABOVE ROOF.
23. DUCT RUNOUTS TO DIFFUSERS SHALL MATCH THE SIZE OF THE DIFFUSER NECK.
24. UNLESS OTHERWISE NOTED, ALL EQUIPMENT AND VALVE DRAINS SHALL BE INDEPENDENTLY PIPED FULL SIZE TO THE NEAREST PLUMBING DRAIN.
25. ALL LOW PRESSURE DUCT WORK, DOWNSTREAM OF FAN COIL UNITS, SHALL BE OF 1-1/2" (R-6) HEAVY DUTY FOIL REINFORCED FIBERGLASS WITH MANUFACTURER'S LOGO PRINTED ON VAPOR BARRIER.
26. ALL OUTSIDE AIR DUCTWORK SHALL BE GALVANIZED SHEET METAL WITH SEALED SEAMS AND JOINTS. PROVIDE EXTERNAL BLANKET INSULATION AT R-4.2 MIN. THE CONTRACTOR SHALL PROVIDE ALL SHEETMETAL DUCTWORK, HANGERS, AND SUPPORT.
27. ALL EXHAUST AIR DUCTWORK SHALL BE GALVANIZED SHEET METAL WITH SEALED SEAMS AND JOINTS. THE CONTRACTOR SHALL PROVIDE ALL SHEETMETAL DUCTWORK, HANGERS, AND SUPPORT.

HVAC EQUIPMENT TAGS

TAG / A 200 / CFM — -AIR DISTRIBUTION DEVICE

AHU NUMBER / AHU-1
- -RTU: ROOF TOP UNIT
- -AHU: AIR HANDLER UNIT
- -CU: CONDENSING UNIT
- -OMD: OUTSIDE AIR MOTORIZED DAMPER
- -EMD: EXHAUST AIR MOTORIZED DAMPER

CEILING CASETTE AIR HANDLING UNIT

CEILING CONCEALED HIGH STATIC DUCTED AIR HANDLING UNIT

CEILING CONCEALED LOW STATIC DUCTED AIR HANDLING UNIT

VRF CONDENSING UNIT

THE SYMBOLS, NOTES AND ABBREVIATIONS SHOWN ON THIS DRAWING ARE STANDARD AND MAY NOT NECESSARILY ALL APPEAR ON THIS PROJECT.

HVAC PIPING SYMBOL LEGEND

SYMBOL	DESCRIPTION
	-BALL VALVE
CD	-CONDENSATE
CR	-CONDENSATE RETURN
PC	-PUMPED CONDENSATE
RL	-REFRIGERANT LIQUID
RS	-REFRIGERANT SUCTION
EQUIP.	- P-TRAP
	-CAP
	-CONNECTION, BOTTOM
	-CONNECTION, TOP
	-COUPLING
	-ELBOW, 90°
	-ELBOW, 45°
	-ELBOW, TURNED DOWN
	-ELBOW, TURNED UP
	-TEE, OUTLET DOWN
	-TEE, OUTLET UP
D	-45° PIPE RISE (R) / DROP (D)
	-PIPE ANCHORS
	-CONCENTRIC REDUCER
	-ECCENTRIC REDUCER

NOTE: SOME SYMBOLS SHOWN ON THIS LEGEND MAY NOT PERTAIN TO THIS PROJECT

CODE COMPLIANCE:

ALL WORK SHALL COMPLY WITH THE LATEST EDITION OF THE FOLLOWING CODES AND STANDARDS:

A. FLORIDA BUILDING CODE WITH MIAMI-DADE COUNTY AMENDMENTS.
B. NFPA-90A: STANDARD FOR THE INSTALLATION OF AIR CONDITIONING AND VENTILATING SYSTEMS.
C. SMACNA: HVAC DUCT CONSTRUCTION STANDARDS - METAL AND FLEXIBLE.
D. ANSI/ASME B31.9 – CODE FOR BUILDING SERVICE PIPING.
E. ANSI/ASHRAE 15: SAFETY CODE FOR MECHANICAL REFRIGERATION.

HVAC DESIGN REQUIRES:	YES	NO
DUCT SMOKE DETECTORS	✓	
FIRE DAMPER(S)	✓	
SMOKE DAMPER(S)		✓
FIRE RATED ENCLOSURE	✓	
FIRE RATED ROOF/FLOOR CEILING ASSEMBLY	✓	
FIRE STOPPING	✓	
SMOKE CONTROL		✓

LEED NC V.3 CREDITS HVAC/MECHANICAL

ENERGY & ATMOSPHERE	
PREREQ 2	MINIMUM ENERGY PERFORMANCE
PREREQ 3	FUNDAMENTAL REFRIGERANT MANAGEMENT
CREDIT 1	OPTIMIZE ENERGY PERFORMANCE
CREDIT 4	ENHANCED REFRIGERANT MANAGEMENT
INDOOR ENVIRONMENTAL QUALITY	
PREREQ 1	MINIMUM INDOOR AIR QUALITY PERFORMANCE
CREDIT 1	OUTDOOR AIR DELIVERY MONITORING
CREDIT 3.1	CONSTRUCTION IAQ MANAGEMENT PLAN
CREDIT 7.1	THERMAL COMFORT DESIGN
CREDIT 7.2	THERMAL COMFORT VERIFICATION

COOLING LOAD INPUTS

OUTSIDE AIR TEMP.	91°F/79°F DB/WB
GLAZING	0.84 U VALUE, 0.25 S.H.G.C.
WALL	0.13 U VALUE
ROOF	0.038 U VALUE, LIGHT COLOR

HVAC DRAWING INDEX

SHEET	DESCRIPTION	ISSUED
M0.1	HVAC LEGEND, GENERAL NOTES & SHEET INDEX	Yes
M0.2	HVAC SCHEDULES	Yes
M0.3	HVAC SCHEDULES	Yes
M0.4	HVAC SCHEDULES/CALCULATIONS	Yes
M2.1	HVAC 1ST FLOOR PLAN	Yes
M2.2	HVAC 2ND FLOOR PLAN	Yes
M2.3	HVAC ROOF PLAN	Yes
M2.4	HVAC 1ST FLOOR PIPING PLAN	Yes
M2.5	HVAC 2ND FLOOR PIPING PLAN	Yes
M5.1	HVAC DETAILS	Yes
M5.2	HVAC DETAILS	Yes
M5.3	HVAC DETAILS	Yes
M6.1	HVAC CONTROLS	Yes
M6.2	HVAC CONTROLS	Yes

RECORD SET

The information presented on this drawing is diagrammatic and is presented for general information purposes and should not be relied on for accuracy of dimensions, details and locations. Actual and exact conditions if required should be determined in the field.

TLC ENGINEERING FOR ARCHITECTURE
800 Fairway Drive, Suite 250
Deerfield Beach, Florida 33441
Phone: 954-418-9096
Fax: 954-418-9296
www.tlc-engineers.com

© Copyright 2007 TLC Engineering for Architecture, Inc.
EB #0000015 TLC NO: 609036

JMWA ARCHITECTS
STEVEN E. MYOTT AIA
JAMES R. WILLIAMS AIA
RODOLFO ACEVEDO AIA
949 CLINT MOORE ROAD
BOCA RATON, FLORIDA 33487
TEL 561 997 9997
FAX 561 997 1610
WWW.JMWA.NET

PALMETTO BAY VILLAGE HALL
9705 E. Hibiscus St., Palmetto Bay, Florida

Master Builders of South Florida, Inc.
1400 E. Oakland Park Blvd. Suite 210
Oakland Park, FL 33334

Alvaro Gonzalez, P.E.
Florida License #69003

PROJECT NO. 609036
DESIGNED BY: XXX
DRAWN BY: XXX
CHECKED BY: XXX

SUBMITTALS:
50% REVIEW 10.30.2009
PERMIT REVIEW 11.20.2009
BUILDING PERMIT 03.03.2010

REVISIONS:
4 DESIGN CHANGES 8/11/10

HVAC LEGEND AND GENERAL NOTES

M0.1

© 2009 JMWA ARCHITECTS. INCORPORATED ALL RIGHTS RESERVED. NO PART OF THESE IDEAS, PLANS OR DESIGNS MAY BE REPRODUCED, COPIED OR UTILIZED GRAPHICALLY IN ANY FORM WHATSOEVER WITHOUT THE EXPRESSED WRITTEN CONSENT OF JMWA ARCHITECTS INCORPORATED AND ITS BOARD OF DIRECTORS.

L:\2009-Jobs\609036-Palmetto Bay Municipal Center\CAD-MEP\Sheets M0.1.dwg 8/11/2010 5:11:11 PM jared.hunt

TLC ENGINEERING FOR ARCHITECTURE
800 Fairway Drive.
Suite 250
Deerfield Beach, Florida 33441
Phone: 954-418-9086
Fax: 954-418-9296
www.tlc-engineers.com
© Copyright 2007 TLC Engineering for Architecture, Inc.
EB #0000015 TLC NO: 609036

MINI-SPLIT SCHEDULE

AIR HANDLING UNIT				
UNIT TAG		MS-1	MS-2	MS-3
DESIGN BASIS	MANUFACTURER	LG	LG	LG
	MODEL	LS	LS181HSV	LS181HSV
DESIGN AIRFLOW, CFM		900	600	600
O. A. CFM		-	-	-
R. A. CFM		900	600	600
SYSTEM NOMINAL TONS		3.0	1.5	1.5
SYSTEM TOTAL CAPACITY, MBH		36.0	18.0	18.0
FAN MOTOR F.L.A.		-	-	-
V/P/H		208/1/60	208/1/60	208/1/60
MINIMUM CIRCUIT AMPACITY		N/A	N/A	N/A
MOCP		N/A	N/A	N/A
UNIT DIMENSIONS (WxDxH) IN		48x9x14	41x10x13	41x10x13
UNIT WEIGHT LBS		38	38	38
CONDENSING UNIT				
DESIGNATION		MCU-1	MCU-2	MCU-2
DESIGN BASIS	MANUFACTURER	LG	LG	LG
	MODEL	-	-	-
REFRIGERANT		R410A	R410A	R410A
SYSTEM SEER		15	17.8	17.8
CONDENSER ENTERING AIR TEMP., °F		95°	95°	95°
V/P/H		208/1/60	208/1/60	208/1/60
UNIT MCA		17	17	17
MOCP		30	25	25
REFRIGERANT LINE SIZES (GAS/LIQUID)		PER MANUFAC.	PER MANUFAC.	PER MANUFAC.
UNIT DIMENSIONS (WxDxH) IN		35x32x13	35x32x13	35x32x13
UNIT WEIGHT LBS		148	133	133
REMARKS		1-7	1-7	1-7

NOTES:

1. SELECTION IS BASED ON LG; APPROVED EQUAL SANYO, MITSUBISHI, DAIKIN.
2. PROVIDE SINGLE POINT CONNECTION.
3. PROVIDE MOTOR STARTER AND ALL ASSOCIATED CONTROLS.
4. WALL MOUNTED UNIT.
5. PROVIDE REMOTE PROGRAMMABLE THERMOSTAT.
6. REFRIGERNAT PIPING PER MANUFACTURERS RECOMMENDATIONS.
7. UNIT SHALL HAVE LOW AMBIENT OPERATION.
8. PROVIDE CONDENSATE PUMP

ROOFTOP EQUIPMENT SCHEDULE

SYSTEM	A/C UNIT TAG	ORTU-1
	MANUFACTURER	AAON
	MODEL	RN-013-8-0-BA02-122
	TOTAL SENSIBLE CAP. MBH.	93.7
	TOTAL COOLING CAP. MBH.	166.4
	ENT. AIR TEMP D.B./W.B. °F	83.1/71.8
	LEAV. AIR TEMP D.B./W.B. °F	55.4/55.2
	SUPPLY AIR CFM	3200
	OUTSIDE AIR CFM	3200
	VOLTAGE	208/3ø
	MCA/MOCP	80/100
	EER	16.1
	OPERATING WEIGHT LBS.	2470
	DIMENSIONS L x W x H (IN.)	129x96x48
		-
COND. SECTION	REFRIGERANT	R410A
	NOMINAL TONNAGE	12.5
	NO. OF COMPRESSORS	2
	COMP. R.L.A. TOTAL	22.4 EACH
	NO. OF OUTDOOR FANS	2
	FAN FLA. TOTAL	5.4 EACH
EVAP. SECTION	SUPPLY FAN VFD	YES
	FAN E.S.P. (IN. W.G.)	1.75
	FAN H.P./B.H.P.	3.0/2.72
	HEATER TYPE	ELECTRIC
	HEATER K.W.	15.0
	FILTER	2" 30%
ENERGY RECOVERY SECTION	TYPE	ER WHEEL
	EXHAUST FAN VFD	YES
	EXHAUST AIR TEMP D.B./W.B. °F	75/63
	GR/LBS	67
	OUTSIDE AIR TEMP D.B./W.B. °F	91/78
	GR/LBS	125
	LEAV. AIR TEMP D.B./W.B. °F	83/71.8
	GR/LBS	99.6
	EXHAUST CFM	2600
	FAN E.S.P. (IN. W.G.)	1.75
	FAN H.P./B.H.P.	2.0/1.52
	WHEEL FLA.	0.6
	FILTER	2" 30%

NOTES:

THESE NOTES APPLY TO ALL ROOFTOP UNITS UNLESS OTHERWISE STATED IN NOTE.

1. UNITS SHALL BE "ARI" LISTED. APPROVED EQUIVALENT: TRANE, AAON, McQUAY
2. PROVIDE FACTORY BUILT COMBINATION ROOFCURB FOR ENERGY RECOVERY AIRFLOW, INSTALL UNIT LEVEL WITHIN PRESCRIBED TOLERANCES.
3. PROVIDE COMPRESSOR 5-YEAR WARRANTY.
4. PROVIDE STAINLESS STEEL SLOPED CONDENSATE DRAIN PAN.
5. PROVIDE GALVANIZED STEEL CABINET COATED TO EXCEED 2,500 HOUR SALT SPRAY TEST.
6. PROVIDE LIQUID LINE FILTER DRIERS.
7. PROVIDE COASTAL CORROSION COATING FOR OUTDOOR COILS.
8. ALL TEMPERATURE AND HUMIDITY SENSORS SHALL BE CONNECTED TO THE BMS.
9. PROVIDE SERVICE CLEARANCES AS PER MANUFACTURER'S RECOMMENDATIONS.
10. PROVIDE SINGLE POINT POWER ENTRY. PROVIDE FACTORY MOUNTED NON-FUSED DISCONNECT, COORDINATE PRIOR TO PURCHASING.
11. PROVIDE MOTOR OVERLOAD AND THERMAL PROTECTION.
12. PROVIDE DIRTY FILTER SWITCH.
13. PROVIDE OUTSIDE AIR AND EXHAUST AIR HOODS WITH BIRD SCREEN.
14. PROVIDE PHASE AND BROWN OUT PROTECTION.
15. PROVIDE CONVENIENCE OUTLET. (POWERED AND NONPOWERED)
16. PROVIDE SMOKE DETECTOR IN THE SUPPLY AIR DUCT. FIELD COORDINATE FINAL LOCATION OF SD IN DUCT OR UNIT.
17. PROVIDE AN OVERFLOW, ELECTRONIC CONDENSATION CONTROL SYSTEM FOR DRAIN PAN.
18. PROVIDE A TEMPERATURE AND A HUMIDITY SENSOR.
19. PROVIDE VARIABLE FREQUENCY DRIVE FOR THE SUPPLY AND EXHAUST FANS.
20. PROVIDE A PROGRAMMABLE CONTROLLER.
21. PROVIDE DISCHARGE AIR TEMPERATURE CONTROL KIT. FIELD INSTALLED FACTORY ENCLOSED.
22. PROVIDE HIGH STATIC PRESSURE SAFETY SENSOR.
23. PROVIDE AN AIR FLOW MEASURING STATION FOR THE SUPPLY AND EXHAUST AIR.
24. PROVIDE MODULATING HOT GAS REHEAT COIL WITH CONTROLLABLE HOT GAS REHEAT - CIRCUIT #1
25. PROVIDE MODULATING HOT GAS BYPASS ON CIRCUIT #1.
26. PROVIDE TEMPERATURE RESET CONTROL CAPABILITIES FOR ALL ROOFTOP UNITS, SEE CONTROLS SHEET FOR SEQUENCE.
27. THE UNITS SHALL HAVE A REMOTE INDICATION STATUS (BMS) OF UNIT POWER ON, WHEEL ROTATION ALARM, OUTSIDE AIR DIRTY FILTER AND RETURN AIR DIRTY FILTER.
28. UNIT SHALL INCLUDE AN INTEGRAL AIRFLOW MONITORING STATION WITH THE ABILITY TO READ BOTH VENTILATION AND EXHAUST AIRFLOW EXPRESSED IN CFM. MONITOR GAGE SHALL BE FLUSH MOUNTED ON THE UNIT EXTERIOR AND WATERTIGHT. THE SENSORS SHALL BE ABLE TO INTERLOCK WITH THE BMS SYSTEM.
29. MOTORS SHALL COMPLY WITH THE U.S. ENERGY POLICY ACT (EPACT) MINIMUM EFFICIENCY STANDARDS.
30. THE UNIT MUST HAVE A SINGLE POINT POWER CONNECTION AND FACTORY MOUNTED FUSED DISCONNECTS.
31. ENERGY RECOVERY SECTION WARRANTY SHOULD BE 5 YEAR PARTS WARRANTY.
32. ERV SHALL BE INTERLOCKED WITH THE RTU TO RUN AT THE SAME TIME DURING OCCUPIED MODE.
33. PROVIDE ENTHALPY SENSOR IN RETURN AIR AND OUTSIDE AIR SECTIONS. ENTHALPY SENSORS SHALL BE USED TO STOP WHEEL IF OUTSIDE AIR ENTHALPY FALLS TO OR BELOW RETURN AIR ENTHALPY. SEE CONTROLS SHEET FOR SEQUENCE.
34. PROVIDE MODULATING OUTSIDE AIR DAMPER TO CLOSE WHEN UNIT IS OFF.
35. REFER TO CONTROL SHEET FOR SEQUENCING, OPERATIONAL MODES, AND ADDITIONAL CONTROL POINTS.

AIR DISTRIBUTION SCHEDULE

MARK	CFM	NECK SIZE	FACE SIZE LENGTH	DESCRIPTION
A	000-80 81-180 181-310 311-520 521-780 781-1100	6ø 8ø 10ø 12ø 14ø 16ø	24x24 24x24 24x24 24x24 24x24 24x24	SUPPLY DIFFUSER BASIS OF DESIGN: TITUS TMS-AA COLOR: WHITE MATERIAL: ALUMINUM OPPOSED BLADE DAMPERS: NO
B	PLENUM 000-110 111-220 221-350 351-530 531-730 731-970 971-1240 1241-1540 1541-1880	22x22 6x6 8x8 10x10 12x12 14x14 16x16 18x18 20x20 22x22	24x24 24x24 24x24 24x24 24x24 24x24 24x24 24x24 24x24 24x24	RETURN / EXHAUST GRILLE BASIS OF DESIGN: TITUS 355FL COLOR: WHITE MATERIAL: ALUMINUM OPPOSED BLADE DAMPERS: NO
C	000-80 81-180 181-310	6ø 8ø 10ø	4' LONG 4' LONG 4' LONG	LINEAR DIFFUSER BASIS OF DESIGN: TITUS ML-38 3-SLOTS, 3/4" WIDE SLOTS COLOR: WHITE MATERIAL: ALUMINUM OPPOSED BLADE DAMPERS: NO
D	000-110 111-240 241-420	- - -	4' LONG 4' LONG 4' LONG	LINEAR RETURN GRILLE BASIS OF DESIGN: TITUS MLR-38 2-SLOTS, 3/4" WIDE SLOTS COLOR: WHITE MATERIAL: ALUMINUM OPPOSED BLADE DAMPERS: NO
E	000-130 131-230 231-600 601-2000	6x6 10x6 12x12 24x24		RETURN/EXHAUST GRILLE BASIS OF DESIGN: TITUS 50F COLOR: WHITE MATERIAL: EXTRUDED ALUMINUM OPPOSED BLADE DAMPERS: NO CENTER EX, GRILLE IN CEILING TILE
F	000-80 81-180 181-310	6ø 8ø 10ø	4' LONG 4' LONG 4' LONG	LINEAR BAR DIFFUSER BASIS OF DESIGN: TITUS LL-1 MOUNTING: TYPE 1B, 1" FLANGE COLOR: WHITE MATERIAL: ALUMINUM OPPOSED BLADE DAMPERS: NO PROVIDE DUCTBOARD PLENUM BOX FOR SPAN OF BAR DIFFUSER.
G	000-80 81-180 181-310	6ø 8ø 10ø	12x12 12x12 12x12	SUPPLY DIFFUSER BASIS OF DESIGN: TITUS TMS-AA COLOR: WHITE MATERIAL: ALUMINUM OPPOSED BLADE DAMPERS: NO
H	000-110 111-150 151-250 251-440 441-890 891-1450	- - - - - -	6x6 8x6 12x6 18x6 18x10 24x12	SIDEWALL SUPPLY DIFFUSER BASIS OF DESIGN: TITUS 271FL COLOR: WHITE MATERIAL: EXTRUDED ALUMINUM OPPOSED BLADE DAMPERS: NO DUAL DEFLECTION 3/4" SPACING

NOTES:

1. AIR DISTRIBUTION DEVICES LOCATED WITHIN ACOUSTICAL TILE CEILINGS SHALL BE PROVIDED WITH BORDER TYPE 3 FOR LAY-IN MOUNTING. AIR DISTRIBUTION DEVICES LOCATED WITHIN GYPSUM BOARD CEILINGS OR WALLS SHALL BE PROVIDED WITH BORDER TYPE 1 FOR SURFACE MOUNTING. REFER TO ARCHITECTURAL DOCUMENTS FOR CEILING TYPES.
2. AIR DISTRIBUTION DEVICES LOCATED IN SMALL ROOMS WHERE FULL 24"x24" GRID ARE NOT AVAILABLE SHALL BE PROVIDED WITH SURFACE MOUNTING BORDERS IN LIEU OF LAY-IN. SECURE EACH DEVICE TO CEILING GRID WITH FIELD-FABRICATED SUPPORTS.
3. FLEX DUCT SIZE SHALL MATCH NECK SIZE OF SUPPLY DIFFUSERS.
4. PROVIDE DUCTBOARD PLENUM BOX FOR SPAN OF LL-1 BAR DIFFUSER TO ALLOW FOR FLEX DUCT CONNECTION AND EVEN AIR DISTRIBUTION.

RECORD SET

The information presented on this drawing is diagrammatic and is presented for general information purposes and should not be relied on for accuracy of dimensions, details and locations. Actual and exact conditions if required should be determined in the field.

JMWA ARCHITECTS
STEVEN E. MYOTT AIA
JAMES R. WILLIAMS AIA
RODOLFO ACEVEDO AIA
949 CLINT MOORE ROAD
BOCA RATON, FLORIDA 33487
TEL 561 997 9997
FAX 561 997 1610
WWW.JMWA.NET

PALMETTO BAY VILLAGE HALL
9705 E. Hibiscus St., Palmetto Bay, Florida

Master Builders of South Florida, Inc.
1400 E. Oakland Park Blvd. Suite 210
Oakland Park, FL 33334

Alvaro Gonzalez, P.E.
Florida License #69003

PROJECT NO. 609036
DESIGNED BY: XXX
DRAWN BY: XXX
CHECKED BY: XXX

SUBMITTALS:
50% REVIEW 10.30.2009
PERMIT REVIEW 11.20.2009
BUILDING PERMIT 03.03.2010

REVISIONS:
1 PERMIT COMMENTS 4/02/10

HVAC SCHEDULES

M0.2

© 2009 JMWA ARCHITECTS, INCORPORATED ALL RIGHTS RESERVED. NO PART OF THESE IDEAS, PLANS OR DESIGNS MAY BE REPRODUCED, COPIED OR UTILIZED GRAPHICALLY IN ANY FORM WHATSOEVER WITHOUT THE EXPRESSED WRITTEN CONSENT OF JMWA ARCHITECTS INCORPORATED AND ITS BOARD OF DIRECTORS.

L:\2009-Jobs\609036-Palmetto Bay Municipal Center\CAD-MEP\Sheets M0.2.dwg 8/11/2010 5:11:29 PM jared.hunt

VRF CONDENSING UNIT SCHEDULE

PLAN MARK	MANUFACTURER AND MODEL NO.	MANUFACTURER AND MODEL NO.	NOMINAL TONS	COOL CAP MBH	HEAT CAP MBH	REFRIGERANT	VOLTAGE/ PHASE	MCA/ MOCP	NO. COMP	COMP. MAX START AMPS	COMP. RLA AMPS	MOTOR STARTER	NO. FANS	FAN OUTPUT(kW)	WEIGHT (LBS)	L x W x H (IN)
CU-1-1	LG ARUN290BT2		24	286.6	322.5	TANDEM UNITS SEE NEXT 3 ROWS FOR INDIVIDUAL UNIT INFORMATION										
A		LG ARUN096BT2	8	96	108	R410A	208/3ø	42/60	2	103.9	8.5+18.7	INTEGRAL	2	0.35	628	29 x 51 x 64
B		LG ARUN096BT2	8	96	108	R410A	208/3ø	42/60	2	103.9	8.5+18.7	INTEGRAL	2	0.35	628	29 x 51 x 64
C		LG ARUN096BT2	8	96	108	R410A	208/3ø	42/60	2	103.9	8.5+18.7	INTEGRAL	2	0.35	628	29 x 51 x 64
CU-2-1	LG ARUN173BT2		14.5	191.1	225	TANDEM UNITS SEE NEXT 2 ROWS FOR INDIVIDUAL UNIT INFORMATION										
A		LG ARUN096BT2	8	96	108	R410A	208/3ø	42/60	2	103.9	8.5+18.7	INTEGRAL	2	0.35	628	29 x 51 x 64
B		LG ARUN076BT2	6.5	76	86	R410A	208/3ø	38/60	2	103.9	8.5+18.7	INTEGRAL	2	0.35	628	29 x 51 x 64
CU-1-2	LG ARUN115BT2		9.5	114.7	129	R410A	208/3ø	44/60	2	75.8	24.8	INTEGRAL	2	0.35	628	29 x 51 x 64

1. MINIMUM 10" CLEARANCE AROUND THE CONDENSER COIL, 60" OVERHEAD CLEARANCE, AND 36" SERVICE ACCESS.
2. PROVIDE UNITS POWER AT 208 VOLT AND 3 PHASE AT 60 HERTZ.
3. FACTORY MOUNTED, LIQUID LINE FILTER DRIER, SERVICE VALVES AND FAN.
4. FACTORY WIRED.
5. FACTORY 2 YEAR PARTS WARRANTY.
6. PROVIDE COMPRESSOR WITH CRANKCASE HEATER AND MINIMUM 5 YEAR WARRANTY.
7. PROVIDE DISCONNECT FOR EACH CU (INSTALLED BY ELECTRICAL CONTRACTOR) COORDINATE PRIOR TO PURCHASE ANY WORK.
8. PROVIDE AC SMART CONTROL SYSTEM OR EQUIVALENT TO CONTROL VRF SYSTEM. TIE INTO EMS.

VRF AIR HANDLING UNIT SCHEDULE

PLAN MARK	MANUFACTURER AND MODEL NO.	UNIT TYPE	NOM. TONS	COOL MBH	NOMINAL CFM	HEAT MBH	VOLTAGE/ PHASE	MCA/ MOCP	FAN MOTOR WATTS	FAN MOTOR STARTER	WEIGHT (LBS)	L x W x H (IN)
CU-1-1 (1ST FLOOR)												
AHU-1	ARNU363BGA2	DUCT HIGH STATIC	3.0	36.2	1140/1025/895	40.6	208/1	4.3/15	390	INTEGRAL	85	47x18x12
AHU-2	ARNU283BGA2	DUCT HIGH STATIC	2.5	28.0	915/850/770	31.5	208/1	4.5/15	390	INTEGRAL	85	47x18x12
AHU-4	ARNU243BGA2	DUCT HIGH STATIC	2.0	24.1	650/600/550	27.3	208/1	2.3/15	118	INTEGRAL	60	35x18x12
AHU-5A	ARNU363BGA2	DUCT HIGH STATIC	3.0	36.2	1140/1025/895	40.6	208/1	4.3/15	390	INTEGRAL	85	47x18x12
AHU-5B	ARNU243BGA2	DUCT HIGH STATIC	2.0	24.1	650/600/550	27.3	208/1	2.3/15	118	INTEGRAL	60	35x18x12
AHU-6	ARNU243BGA2	DUCT HIGH STATIC	2.0	24.1	650/600/550	27.3	208/1	2.3/15	118	INTEGRAL	60	35x18x12
AHU-7	ARNU283BGA2	DUCT HIGH STATIC	2.5	28.0	915/850/770	31.5	208/1	4.5/15	390	INTEGRAL	85	47x18x12
AHU-8A	ARNU183BHA2	DUCT HIGH STATIC	1.5	19.1	550/475/440	21.5	208/1	2.3/15	118	INTEGRAL	60	35x18x12
AHU-8B	ARNU123BHA2	DUCT HIGH STATIC	1.0	12.3	425/350/300	13.6	208/1	2.3/15	118	INTEGRAL	60	35x18x12
AHU-9	ARNU123BHA2	DUCT HIGH STATIC	1.0	12.3	425/350/300	13.6	208/1	2.3/15	118	INTEGRAL	60	35x18x12
AHU-10	ARNU283BGA2	DUCT HIGH STATIC	2.5	28.0	915/850/770	31.5	208/1	4.5/15	390	INTEGRAL	85	47x18x12
AHU-11	ARNU363BGA2	DUCT HIGH STATIC	3.0	36.2	1140/1025/895	40.6	208/1	4.3/15	390	INTEGRAL	85	47x18x12
AHU-12	ARNU183BHA2	DUCT HIGH STATIC	1.5	19.1	550/475/440	21.5	208/1	2.3/15	118	INTEGRAL	60	35x18x12
AHU-13	NOT IN USE											
AHU-14	ARNU073B1G2	DUCT LOW STATIC	0.75	7.5	300/265/225	8.5	208/1	1.2/15	28	INTEGRAL	50	34x22x8
AHU-15	ARNU183BHA2	DUCT HIGH STATIC	1.5	19.1	550/475/440	21.5	208/1	2.3/15	118	INTEGRAL	60	35x18x12
AHU-16	ARNU123B1G2	DUCT LOW STATIC	1.0	12.3	375/335/300	13.6	208/1	1.2/15	28	INTEGRAL	50	34x22x8
AHU-17	ARNU073B1G2	DUCT LOW STATIC	0.75	7.5	300/265/225	8.5	208/1	1.2/15	28	INTEGRAL	50	34x22x8
CU-2-1 (2ND FLOOR)												
AHU-18	NOT IN USE											
AHU-19	ARNU283BGA2	DUCT HIGH STATIC	2.5	24.1	915/850/770	31.5	208/1	4.5/15	390	INTEGRAL	85	47x18x12
AHU-20	ARNU123B1G2	DUCT LOW STATIC	1.0	12.3	375/335/300	13.6	208/1	1.2/15	28	INTEGRAL	50	34x22x8
AHU-21	ARNU093BHA2	DUCT HIGH STATIC	1.0	12.3	350/300/265	13.6	208/1	2.3/15	118	INTEGRAL	60	35x18x12
AHU-22	ARNU153BHA2	DUCT HIGH STATIC	1.25	15.4	475/425/300	17.1	208/1	2.3/15	118	INTEGRAL	60	35x18x12
AHU-23	ARNU073BHA2	DUCT HIGH STATIC	0.5	7.5	245/230/210	8.5	208/1	2.3/15	118	INTEGRAL	60	35x18x12
AHU-24	ARNU093B1G2	DUCT LOW STATIC	0.5	9.6	335/300/265	10.9	208/1	1.2/15	28	INTEGRAL	50	34x22x8
AHU-25	ARNU243BGA2	DUCT HIGH STATIC	2.0	24.1	650/600/550	27.3	208/1	2.3/15	118	INTEGRAL	60	35x18x12
AHU-26	NOT IN USE											
AHU-27	ARNU183BHA2	DUCT HIGH STATIC	1.5	19.1	550/475/440	21.5	208/1	2.3/15	118	INTEGRAL	60	35x18x12
AHU-28	ARNU183BHA2	DUCT HIGH STATIC	1.5	19.1	550/475/440	21.5	208/1	2.3/15	118	INTEGRAL	60	35x18x12
AHU-29	ARNU183BHA2	DUCT HIGH STATIC	1.5	19.1	550/475/440	21.5	208/1	2.3/15	118	INTEGRAL	60	35x18x12
AHU-30	NOT IN USE											
AHU-31	ARNU363BGA2	DUCT HIGH STATIC	3.0	36.2	1140/1025/895	40.6	208/1	4.3/15	390	INTEGRAL	85	47x18x12
AHU-32	ARNU283BGA2	DUCT HIGH STATIC	2.5	24.1	915/850/770	31.5	208/1	4.5/15	390	INTEGRAL	85	47x18x12
AHU-33	ARNU183BHA2	DUCT HIGH STATIC	1.5	19.1	550/475/440	21.5	208/1	2.3/15	118	INTEGRAL	60	35x18x12

VRF AIR HANDLING UNIT SCHEDULE (CONTINUED)

PLAN MARK	MANUFACTURER AND MODEL NO.	UNIT TYPE	NOM. TONS	COOL MBH	SENSIBLE MBH	NOMINAL CFM	HEAT MBH	VOLTAGE/ PHASE	MCA/ MOCP	FAN MOTOR WATTS	FAN MOTOR STARTER	WEIGHT (LBS)	L x W x H (IN)
CU-1-2 (CHAMBERS)													
AHU-3A	ARNU483BRA2	DUCT HIGH STATIC	4.0	41.5	31.9	1580/1435	51.5	208/1	4.5/15	390	INTEGRAL	120	49x23.5x15
AHU-3B	ARNU483BRA2	DUCT HIGH STATIC	4.0	41.5	31.9	1580/1435	51.5	208/1	4.5/15	390	INTEGRAL	120	49x23.5x15
AHU-3C	ARNU073B1G2	DUCT LOW STATIC	0.5	6.5	5.2	300/265	8.5	208/1	1.2/15	28	INTEGRAL	50	34x22x8
AHU-3D	ARNU093TEC2	CEILING CASETTE	~~0.75~~ 0.50	9.6	7.5	320/280/250	10.9	208/1	1.3/15	35	INTEGRAL	40	23x23x11
AHU-3E	ARNU183BHA2	DUCT HIGH STATIC	1.5	19.1	15.0	550/475/440	21.5	208/1	2.3/15	118	INTEGRAL	60	35x18x12

NOTES:

1. MINIMUM 36" CLEARANCE PER NEC.
2. FACTORY 1 YEAR PARTS WARRANTY.
3. AHU ARE SINGLE POINT POWER.
4. AHU WITH INTERNAL DRAIN PAN AND CONDENSATE PUMP.
5. PROVIDE INTEGRAL MOTOR STARTER DISCONNECT FOR AHU
6. PROVIDE A LIQUID LINE SOLENOID VALVE INSTALLED AT THE AHU IF THE INSTALLED LINEAL LENGTH OF THE REFRIGERANT LIQUID LINES EXCEEDS 75 FT OR THE VERTICAL RUN EXCEEDS 30 FT (FIELD VERIFY).
7. PROVIDE A SUCTION LINE ACCUMULATOR IF THE INSTALLED LINEAL LENGTH OF THE REFRIGERANT SUCTION LINES EXCEEDS 100 FT OR THE VERTICAL RUN EXCEEDS 50 FT (FIELD VERIFY).
8. PROVIDE FACTORY PROGRAMMABLE THERMOSTAT.
9. PROVIDE FACTORY MOUNTED FUSIBLE DISCONNECT/STARTER FOR AHU, COORDINATE PRIOR PURCHASING.
10. PROVIDE REFRIGERANT LINES SIZES AS RECOMMENDED BY MANUFACTURER; NOT TO EXCEED 150 FT. EQUIVALENT LENGTH FOR LONGER RUNS COORDINATE WITH MANUFACTURER PRIOR TO PURCHASE ANY WORK.
11. PROVIDE SET OF SHUT-OFF BALL VALVES FOR EACH AHU FOR ISOLATION.
12. PROVIDE AC SMART CONTROLS OR EQUIVALENT. TIE INTO EMS.
13. PROVIDE MANUFACTURER REUSABLE FILTER.

RECORD SET

The information presented on this drawing is diagrammatic and is presented for general information purposes and should not be relied on for accuracy of dimensions, details and locations. Actual and exact conditions if required should be determined in the field.

4

TLC ENGINEERING FOR ARCHITECTURE
800 Fairway Drive, Suite 250
Deerfield Beach, Florida 33441
Phone: 954-418-9096
Fax: 954-418-9296
www.tlc-engineers.com

© Copyright 2007 TLC Engineering for Architecture, Inc.
EB #0000015 TLC NO:609036

JMWA ARCHITECTS
STEVEN E. MYOTT AIA
JAMES R. WILLIAMS AIA
RODOLFO ACEVEDO AIA

949 CLINT MOORE ROAD
BOCA RATON, FLORIDA 33487
TEL 561 997 9997
FAX 561 997 1610

WWW.JMWA.NET

PALMETTO BAY VILLAGE HALL
9705 E. Hibiscus St., Palmetto Bay, Florida

Master Builders of South Florida, Inc.
1400 E. Oakland Park Blvd. Suite 210
Oakland Park, FL 33334

Alvaro Gonzalez, P.E.
Florida License #69003

PROJECT NO. 609036
DESIGNED BY: TLC
DRAWN BY: TLC
CHECKED BY: TLC

SUBMITTALS:
50% REVIEW 10.30.2009
PERMIT REVIEW 11.20.2009
BUILDING PERMIT 03.03.2010

REVISIONS:
4 DESIGN CHANGES 8/11/10

HVAC SCHEDULES

M0.3

© 2009 JMWA ARCHITECTS, INCORPORATED ALL RIGHTS RESERVED. NO PART OF THESE IDEAS, PLANS OR DESIGNS MAY BE REPRODUCED, COPIED OR UTILIZED GRAPHICALLY IN ANY FORM WHATSOEVER WITHOUT THE EXPRESSED WRITTEN CONSENT OF JMWA ARCHITECTS INCORPORATED AND ITS BOARD OF DIRECTORS.

L:\2009--Jobs\609036--Palmetto Bay Municipal Center\CAD--MEP\Sheets M0.3.dwg 8/11/2010 5:11:45 PM jpred.hunt

TLC ENGINEERING FOR ARCHITECTURE
800 Fairway Drive.
Suite 250
Deerfield Beach, Florida 33441
Phone: 954-418-9096
Fax: 954-418-9296
www.tlc-engineers.com
© Copyright 2007 TLC Engineering for Architecture, Inc.
EB #0000015 TLC NO: 609036

EXHAUST AIR CALCULATIONS

	SPACE SERVED OR UNIT TAG	SPACE AREA (SQ.FT.)	NUMBER OF FIXTURES	VENTILATION REQ'D CFM PER FIXTURE	TOTAL CFM REQUIRED	TOTAL CFM PROVIDED	NOTES
1ST FLOOR	MENS WOMENS RR & LOCKERS	220	10	50+(0.5 CFM/SQFT)	610	700	1
	UNISEX RESTROOM	–	1	50	50	75	1
	MENS 182 & WOMENS 181	–	4	50	200	200	1
	JANITOR'S CLOSET	–	–	1 CFM/SQ.FT.	20	30	–
	1ST FLOOR TOTAL				880	1000	
2ND FLOOR	MENS 204 & WOMENS 203	–	6	50	300	300	1
	JANITOR'S CLOSET	85	–	1 CFM/SQ.FT.	85	100	1
	–	–	–	–	–	–	–
	2ND FLOOR TOTAL				385	400	

NOTES:
1. CALCULATIONS ARE BASED ON LOCAL CODE REQUIREMENTS, FLORIDA BUILDING CODE 2007 (TABLE 403.3) AND ASHRAE 62.1–2007.

AIR BALANCE SCHEDULE

AREA SERVED	OUTSIDE AIR (CFM)	EXHAUST AIR (CFM)	PRESSURIZATION (CFM)
ORTU–1 MODE "1"	3200	2600	600
ORTU–1 MODE "2"	1500	1000	500
1ST FL MODE "1"	2450	1950	500
1ST FL MODE "2"	1500	1000	500
2ND FL MODE "1"	750	600	150
2ND FL MODE "2"	0	0	0

NOTES:
1. OUTSIDE AIR RATE WILL MODULATE BETWEEN 2 SETTINGS BASED ON OCCUPANCY CONDITIONS.
2. VALUES ARE BASED ON ASHRAE 62.1 TABLE 6 AND MAXIMUM OCCUPANCY.
3. MODE "1" REFERS TO THE STANDARD M-F 8-5 OFFICE SCHEDULE.
4. MODE "2" REFERS TO THE 24 HOUR POLICE STATION SCHEDULE.
5. MOTORIZED OUTSIDE AIR DAMPER OMD-1 AND MOTORIZED EXHAUST AIR DAMPER EMD-1 WILL BE OPEN DURING MODE "2" OPERATION, ALL OTHER OUTSIDE AIR AND EXHAUST AIR DAMPERS WILL BE CLOSED.
6. ALL MOTORIZED OUTSIDE AIR DAMPERS WILL BE CLOSED AND ALL EXHAUST AIR DAMPERS WILL BE CLOSED DURING UNOCCUPIED MODE.

OUTDOOR AIR CALCULATION

Area Served or Unit Tag	Occupancy Category	Net Occupiable Area SQ/FT	Area Outdoor Air Rate (RA)	Total Occupancy	People Outdoor Air Rate (RP)	Total CFM O/A Required	Total CFM O/A Provided
RTU-1-1	Storage	588.5	70.6	0.0	0.0	70.6	
RTU-1-1	Office/Conference	3039.7	182.4	40.0	200.0	382.4	
RTU-1-1	Corridors	1569.4	94.2	9.5	0.0	94.2	
RTU-1-1	Exercise/Training	823.1	49.4	6.0	120.0	169.4	
RTU-1-1 Total		6020.7	396.6	55.5	320.0	716.6	800
RTU-1-2	Storage	585.8	70.3	0.0	0.0	70.3	
RTU-1-2	Office/Conference	4460.4	267.6	88.4	442.1	709.7	
RTU-1-2	Corridors	2106.1	126.4	12.8	0.0	126.4	
RTU-1-2 Total		7152.2	464.3	101.2	442.1	906.3	950
RTU-1-3	Storage	152.1	18.3	0.0	0.0	18.3	
RTU-1-3	Office/Conference	183.4	11.0	2.0	10.0	21.0	
RTU-1-3	Corridors	41.2	2.5	0.3	0.0	2.5	
RTU-1-3	Auditorium	1641.0	98.5	111.0	555.0	653.5	
RTU-1-3 Total		2017.7	130.2	113.3	565.0	695.2	700
RTU-2-4	Storage	455.9	54.7	0.0	0.0	54.7	
RTU-2-4	Office/Conference	4588.2	275.3	48.0	240.0	515.3	
RTU-2-4	Corridors	1595.0	95.7	14.2	0.0	95.7	
RTU-2-4 Total		6639.1	425.7	62.2	240.0	665.7	750
Total		6020.7	1416.7	332.3	1567.1	2983.8	3200.0

NOTES:
1. CALCULATIONS ARE BASED ON ESTIMATED MAX. OCCUPANCY RATES PER ARCHITECTURAL PLANS AND ASHRAE 62.1-2007, VENTILATION RATES PER ASHRAE 62.1-2007.
2. THE DEFAULT OCCUPANCY DENSITY SHALL BE USED WHEN ACTUAL OCCUPANT DENSITY IS NOT KNOWN.

4

RECORD SET
The information presented on this drawing is diagrammatic and is presented for general information purposes and should not be relied on for accuracy of dimensions, details and locations. Actual and exact conditions if required should be determined in the field.

JMWA ARCHITECTS
STEVEN E. MYOTT AIA
JAMES R. WILLIAMS AIA
RODOLFO ACEVEDO AIA
949 CLINT MOORE ROAD
BOCA RATON, FLORIDA 33487
TEL 561 997 9997
FAX 561 997 1610
WWW.JMWA.NET

PALMETTO BAY VILLAGE HALL
9705 E. Hibiscus St., Palmetto Bay, Florida

Master Builders of South Florida, Inc.
1400 E. Oakland Park Blvd. Suite 210
Oakland Park, FL 33334

Alvaro Gonzalez, P.E.
Florida License #69003

PROJECT NO. 609036
DESIGNED BY: XXX
DRAWN BY: XXX
CHECKED BY: XXX

SUBMITTALS:
50% REVIEW 10.30.2009
PERMIT REVIEW 11.20.2009
BUILDING PERMIT 03.03.2010

REVISIONS:
4 DESIGN CHANGES 8/11/10

HVAC CALCULATIONS

M0.4

© 2009 JMWA ARCHITECTS, INCORPORATED ALL RIGHTS RESERVED. NO PART OF THESE IDEAS, PLANS OR DESIGNS MAY BE REPRODUCED, COPIED OR UTILIZED GRAPHICALLY IN ANY FORM WHATSOEVER WITHOUT THE EXPRESSED WRITTEN CONSENT OF JMWA ARCHITECTS INCORPORATED AND ITS BOARD OF DIRECTORS.

L:\2009--Jobs\609036--Palmetto Bay Municipal Center\CAD--MEP\Sheets M0.4.dwg 8/11/2010 5:12:01 PM jared.hunt

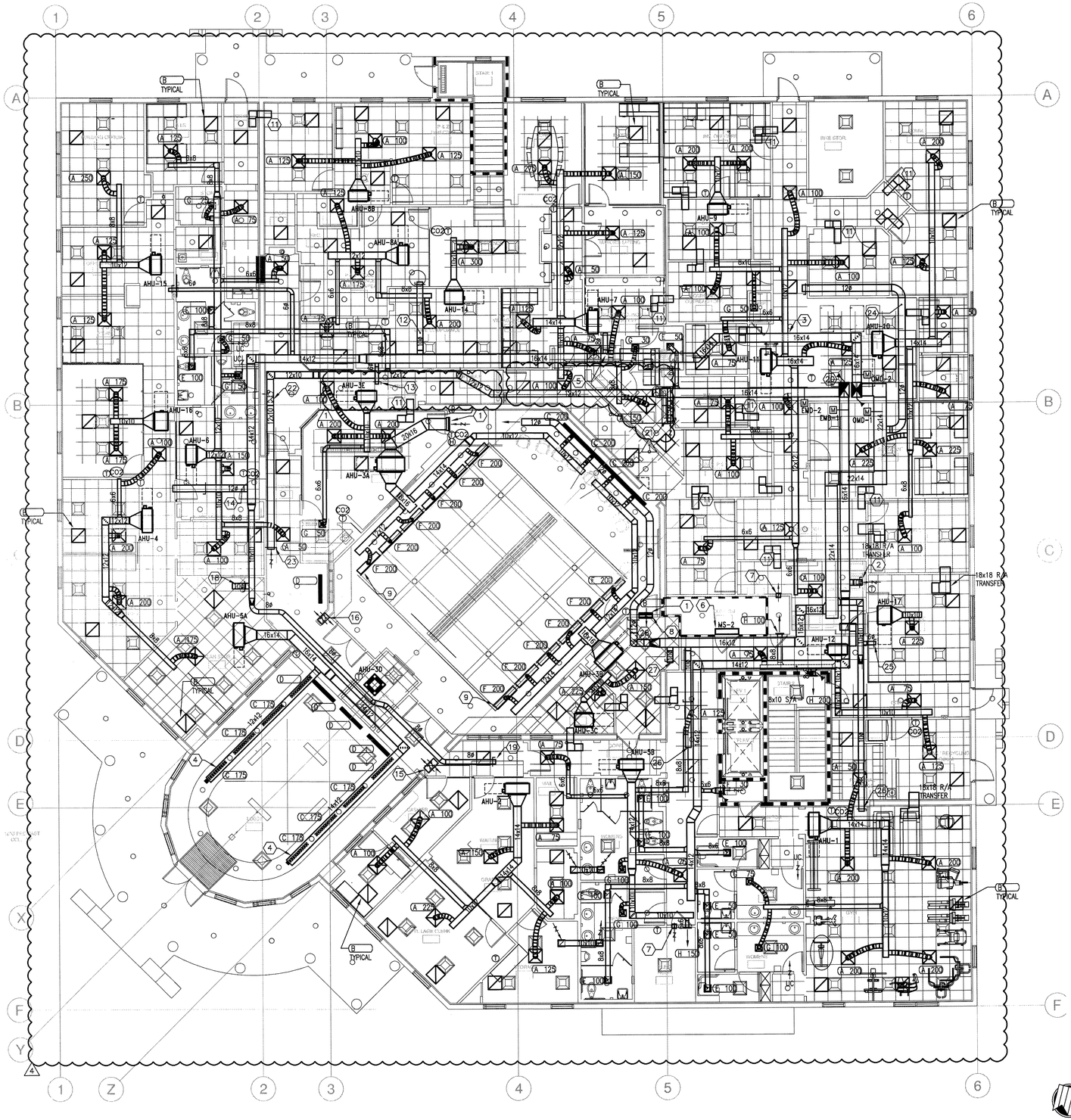

1 HVAC - FIRST FLOOR PLAN
SCALE: 1/8" = 1'-0"

KEYED NOTES

1. MOUNT 24x24 RETURN AIR GRILLE IN WALL, WITH BOTTOM OF GRILLE ABOVE ADJACENT ROOM CEILING AND TOP OF GRILLE BELOW CHAMBERS CEILING. ORIENT GRILLE SO THE 35° LOUVER BLADES POINT TOWARD CHAMBERS CEILING.
2. 10"Ø SHEET METAL EXHAUST DUCT WITH MANUAL VOLUME DAMPER, BALANCE FOR 270 CFM.
3. RUN 16x14 OUTSIDE AIR DUCT OVER 10x12 SUPPLY AIR DUCT. AVOID CROSSING UNDERNEATH SLAB BEAM. COORDINATE IN FIELD.
4. 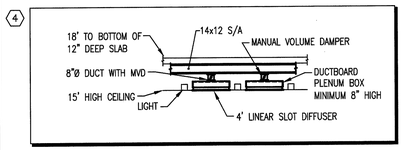

5. 8"Ø INSULATED SHEET METAL DUCT WITH MANUAL VOLUME DAMPER, BALANCE FOR 130 CFM.
6. HANG AIR HANDLING UNIT ON WALL ABOVE DOOR.
7. 8x8 RETURN AIR TRANSFER IN WALL, MOUNT AT HEAIGHT ABOVE CEILING IN ADJACENT SPACE.
8. INSTALL 24x24 RETURN AIR OPENING, IN STAFF 148 WALL, ABOVE VILLAGE CHAMBERS CEILING, FOR AIR TRANSFER.
9. INSTALL LINEAR BAR SUPPLY DIFFUSERS IN LIGHT TROFFER SPACE. INSTALL BAR DIFFUSERS "UPSIDE DOWN" SO THAT THE LOUVERED BARS DEFLECT THE AIRFLOW UPWARD. TYPICAL OF ALL "T" AIR DISTRIBUTION TAGS.
10. 8x8 RETURN AIR TRANSFER IN WALL WITH FIRE DAMPER, MOUNT AT HEAIGHT ABOVE CEILING IN ADJACENT SPACE.
11. TYPICAL 12x12 TRANSFER BOOT IN WALL ABOVE CEILING. SEE DETAIL ON SHEET M5.1.
12. 10"Ø INSULATED SHEET METAL DUCT WITH MANUAL VOLUME DAMPER, BALANCE FOR 170 CFM.
13. 6"Ø INSULATED SHEET METAL DUCT WITH MANUAL VOLUME DAMPER, BALNCE FOR 70 CFM.
14. 12"Ø INSULATED SHEET METAL DUCT WITH MANUAL VOLUME DAMPER, BALANCE FOR 275 CFM.
15. 24x24 RETURN AIR OPENING IN WALL ABOVE CEILING.
16. 18x30 RETURN AIR OPENING IN WALL ABOVE CEILING.
17. 6"Ø INSULATED SHEET METAL DUCT WITH MANUAL VOLUME DAMPER, BALNCE FOR 40 CFM.
18. 10"Ø INSULATED SHEET METAL DUCT WITH MANUAL VOLUME DAMPER, BALANCE FOR 210 CFM.
19. 8"Ø INSULATED SHEET METAL DUCT WITH MANUAL VOLUME DAMPER, BALANCE FOR 105 CFM.
20. 24x18 GALVANIZED OUTSIDE AIR AND EXHAUST AIR DUCTS DOWN FROM 2ND FLOOR CHASE ABOVE. PROVIDE VERTICAL 45° SHOE TAPS FOR MAIN BRANCH TAKEOFFS.
    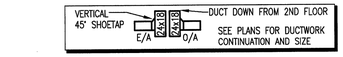

21. 12"Ø SHEET METAL EXHAUST DUCT WITH MANUAL VOLUME DAMPER, BALANCE FOR 350 CFM.
22. RUN 12x10 DUCT ABOVE LOW CEILING AND LIGHT AND THEN ELBOW DOWN TO RUN UNDERNEATH TIE BEAM.
23. 12x10 SHEET METAL EXHAUST DUCT WITH MANUAL VOLUME DAMPER, BALANCE FOR 400 CFM.
24. 12"Ø INSULATED SHEET METAL DUCT WITH MANUAL VOLUME DAMPER, BALANCE FOR 325 CFM. RUN DUCT HIGH ABOVE RETURN AIR TRANSFER BOOTS AND AHU'S.
25. 6"Ø INSULATED SHEET METAL DUCT WITH MANUAL VOLUME DAMPER, BALANCE FOR 75 CFM.
26. 10"Ø INSULATED SHEET METAL DUCT WITH MANUAL VOLUME DAMPER, BALANCE FOR 200 CFM.
27. 10"Ø INSULATED SHEET METAL DUCT WITH MANUAL VOLUME DAMPER, BALANCE FOR 350 CFM.
28. 12"Ø INSULATED SHEET METAL DUCT WITH MANUAL VOLUME DAMPER, BALANCE FOR 200 CFM. RUN UP TO ABOVE CHAMBERS CEILING HEIGHT AND THEN INTO CEILING ABOVE CHAMBERS.

GENERAL NOTES:

1. CONTRACTOR SHALL PROVIDE MANUAL VOLUME DAMPERS IN ALL SUPPLY, RETURN, EXHAUST AND OUTSIDE AIR DUCTS AS REQUIRED TO BALANCE THE SYSTEM TO THE SCHEDULED AIRFLOWS SHOWN ON THESE PLANS.
2. CONTRACTOR SHALL PROVIDE CABLE OPERATED DAMPER FOR MANUAL VOULME DAMPERS INSTALLED OVER HARD CEILING OR OTHER INACCESSIBLE LOCATIONS. FIELD COORDINATE.
3. THE SPACE ABOVE THE CEILING IS A RETURN PLENUM, NO COMBUSTIBLE MATERIALS ARE ALLOWED.
4. PROVIDE 18" UNOBSTRUCTED CLEARANCE BEHIND AIR HANDLING UNITS FOR AIR INTAKE.
5. CONTRACTOR SHALL COORDINATE ALL REFRIGERANT PIPING RUN-OUT ABOVE THE CEILING IN FIELD. SEE SHEET M2.4 FOR PIPING PLAN.

RECORD SET

The information presented on this drawing is diagrammatic and is presented for general information purposes and should not be relied on for accuracy of dimensions, details and locations. Actual and exact conditions if required should be determined in the field.

TLC ENGINEERING FOR ARCHITECTURE
800 Fairway Drive, Suite 250
Deerfield Beach, Florida 33441
Phone: 954-418-9096
Fax: 954-418-9286
www.tlc-engineers.com
© Copyright 2007 TLC Engineering for Architecture, Inc.
EB #0000015 TLC NO: 609036

JMWA ARCHITECTS
STEVEN E. MYOTT AIA
JAMES R. WILLIAMS AIA
RODOLFO ACEVEDO AIA
949 CLINT MOORE ROAD
BOCA RATON, FLORIDA 33487
TEL 561 997 9997
FAX 561 997 1610
WWW.JMWA.NET

PALMETTO BAY VILLAGE HALL
9705 E. Hibiscus St., Palmetto Bay, Florida

Master Builders of South Florida, Inc.
1400 E. Oakland Park Blvd. Suite 210
Oakland Park, FL 33334

Alvaro Gonzalez, P.E.
Florida License #69003

PROJECT NO. 609036
DESIGNED BY: XXX
DRAWN BY: XXX
CHECKED BY: XXX

SUBMITTALS:
50% REVIEW 10.30.2009
PERMIT REVIEW 11.20.2009
BUILDING PERMIT 03.03.2010

REVISIONS:
1 PERMIT COMMENTS 4/02/10
4 DESIGN CHANGES 8/11/10

HVAC
FIRST FLOOR
PLAN

M2.1

© 2009 JMWA ARCHITECTS, INCORPORATED ALL RIGHTS RESERVED. NO PART OF THESE IDEAS, PLANS OR DESIGNS MAY BE REPRODUCED, COPIED OR UTILIZED IN ANY FORM WHATSOEVER WITHOUT THE EXPRESSED WRITTEN CONSENT OF JMWA ARCHITECTS INCORPORATED AND ITS BOARD OF DIRECTORS.

L:\2009-Jobs\609036-Palmetto Bay Municipal Center\CAD-MEP\Sheets M2.1.dwg 8/11/2010 5:12:56 PM jared.hurt

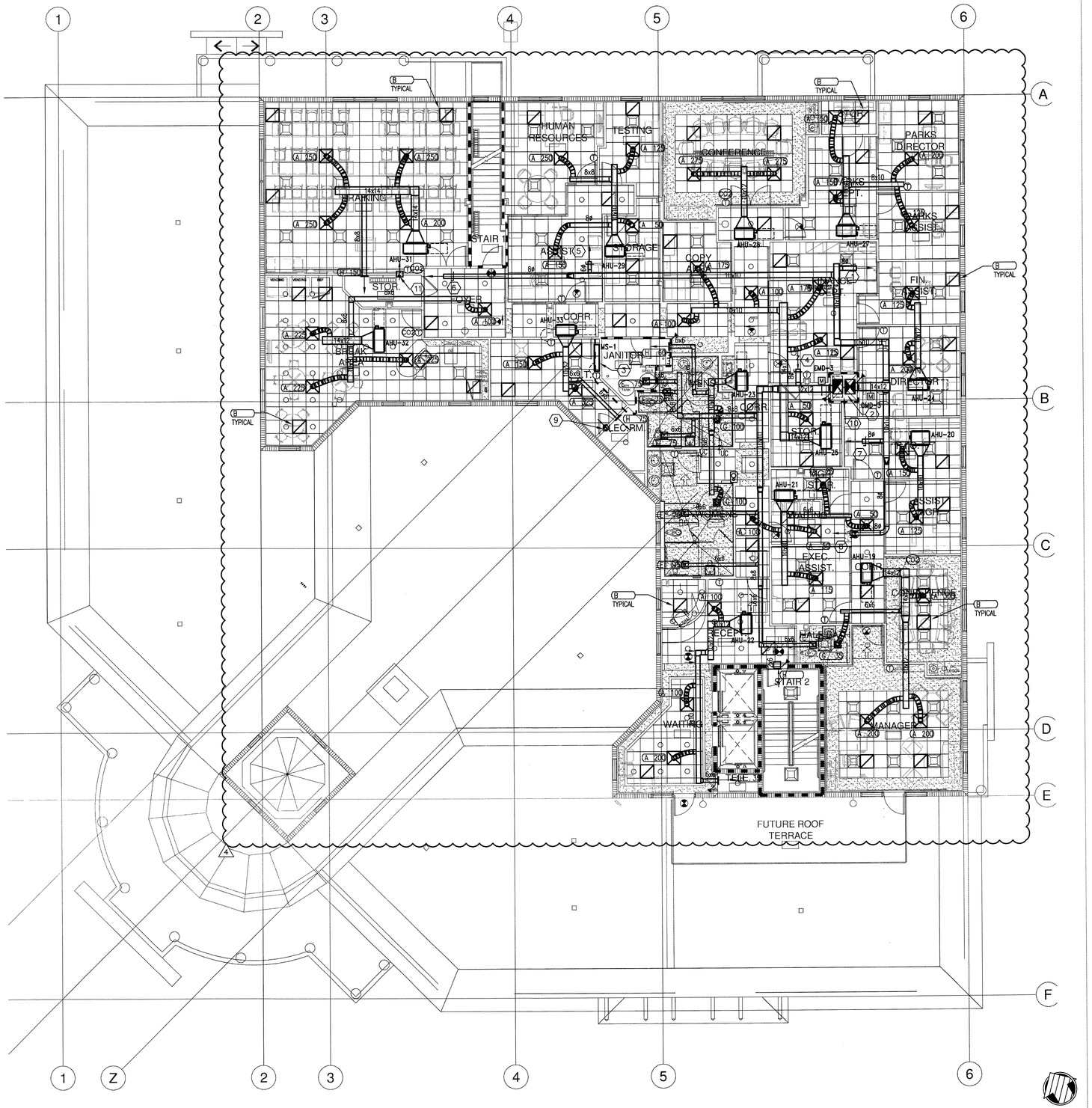

1 HVAC - SECOND FLOOR PLAN
SCALE: 1/8" = 1'-0"

KEYED NOTES

1. 8"Ø INSULATED SHEET METAL DUCT WITH MANUAL VOLUME DAMPER, BALANCE FOR 135 CFM.
2. 26x18 SUPPLY AND RETURN DUCTS, IN CHASE, FROM ORTU-1 ABOVE.
3. MOUNT AHU-1 BETWEEN 60" A.F.F. AND STRUCTURE AS NECESSARY TO ACCOMMODATE WIDTH OF UNIT AND TO AVOID DOOR SWING.
4. 8"Ø SHEET METAL EXHAUST DUCT WITH MANUAL VOLUME DAMPER, BALANCE FOR 175 CFM.
5. 6"Ø INSULATED SHEET METAL DUCT WITH MANUAL VOLUME DAMPER, BALANCE FOR 65 CFM.
6. 8"Ø INSULATED SHEET METAL DUCT WITH MANUAL VOLUME DAMPER, BALANCE FOR 175 CFM.
7. 10"Ø INSULATED SHEET METAL DUCT WITH MANUAL VOLUME DAMPER, BALANCE FOR 200 CFM.
8. 8"Ø INSULATED SHEET METAL DUCT WITH MANUAL VOLUME DAMPER, BALANCE FOR 135 CFM.
9. 8x8 RETURN AIR TRANSFER ABOVE CEILING
10. 24x18 GALVANIZED OUTSIDE AIR AND EXHAUST AIR DUCTS DOWN THROUGH ORTU-1 ABOVE. PROVIDE VERTICAL 45° SHOE TAPS FOR MAIN BRANCH TAKEOFFS.

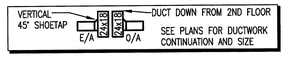

11. 12x12 AIR TRANSFER OPENING IN WALL ABOVE FOYER CEILING.

GENERAL NOTES:

1. CONTRACTOR SHALL PROVIDE MANUAL VOLUME DAMPERS IN ALL SUPPLY, RETURN, EXHAUST AND OUTSIDE AIR DUCTS AS REQUIRED TO BALANCE THE SYSTEM TO THE SCHEDULED AIRFLOWS SHOWN ON THESE PLANS.
2. CONTRACTOR SHALL PROVIDE CABLE OPERATED DAMPER FOR MANUAL VOULME DAMPERS INSTALLED OVER HARD CEILING OR OTHER INACCESSIBLE LOCATIONS. FIELD COORDINATE.
3. THE SPACE ABOVE THE CEILING IS A RETURN PLENUM, NO COMBUSTIBLE MATERIALS ARE ALLOWED.
4. PROVIDE 18" UNOBSTRUCTED CLEARANCE BEHIND AIR HANDLING UNITS FOR AIR INTAKE.
5. CONTRACTOR SHALL COORDINATE ALL REFRIGERANT PIPING RUN-OUT ABOVE THE CEILING IN FIELD. SEE SHEET M2.5 FOR PIPING PLAN.

4

RECORD SET

The information presented on this drawing is diagrammatic and is presented for general information purposes and should not be relied on for accuracy of dimensions, details and locations. Actual and exact conditions if required should be determined in the field.

TLC ENGINEERING FOR ARCHITECTURE
800 Fairway Drive.
Suite 250
Deerfield Beach, Florida 33441
Phone: 954-418-9096
Fax: 954-418-9296
www.tlc-engineers.com
© Copyright 2007 TLC Engineering for Architecture, Inc.
EB #0000015 TLC NO:609036

JMWA ARCHITECTS
STEVEN E. MYOTT AIA
JAMES R. WILLIAMS AIA
RODOLFO ACEVEDO AIA
949 CLINT MOORE ROAD
BOCA RATON, FLORIDA 33487
TEL 561 997 9997
FAX 561 997 1610
WWW.JMWA.NET

PALMETTO BAY VILLAGE HALL

9705 E. Hibiscus St., Palmetto Bay, Florida

Master Builders of South Florida, Inc.
1400 E. Oakland Park Blvd. Suite 210
Oakland Park, FL 33334

Alvaro Gonzalez, P.E.
Florida License #69003

PROJECT NO. 609036
DESIGNED BY: XXX
DRAWN BY: XXX
CHECKED BY: XXX

SUBMITTALS:
50% REVIEW 10.30.2009
PERMIT REVIEW 11.20.2009
BUILDING PERMIT 03.03.2010

REVISIONS:
4 DESIGN CHANGES 8/11/10

HVAC
SECOND FLOOR
PLAN

M2.2

THESE PLANS OR DESIGNS MAY BE REPRODUCED, COPIED OR UTILIZED GRAPHICALLY IN ANY FORM WHATSOEVER WITHOUT THE EXPRESSED WRITTEN CONSENT OF JMWA ARCHITECTS INCORPORATED AND ITS BOARD OF DIRECTORS.
© 2009 JMWA ARCHITECTS, INCORPORATED ALL RIGHTS RESERVED. NO PART OF

L:\2009-Jobs\609036-Palmetto Bay Municipal Center\CAD-MEP\Sheets V2.dwg 8/11/2010 5:27:28 PM jared.hunt

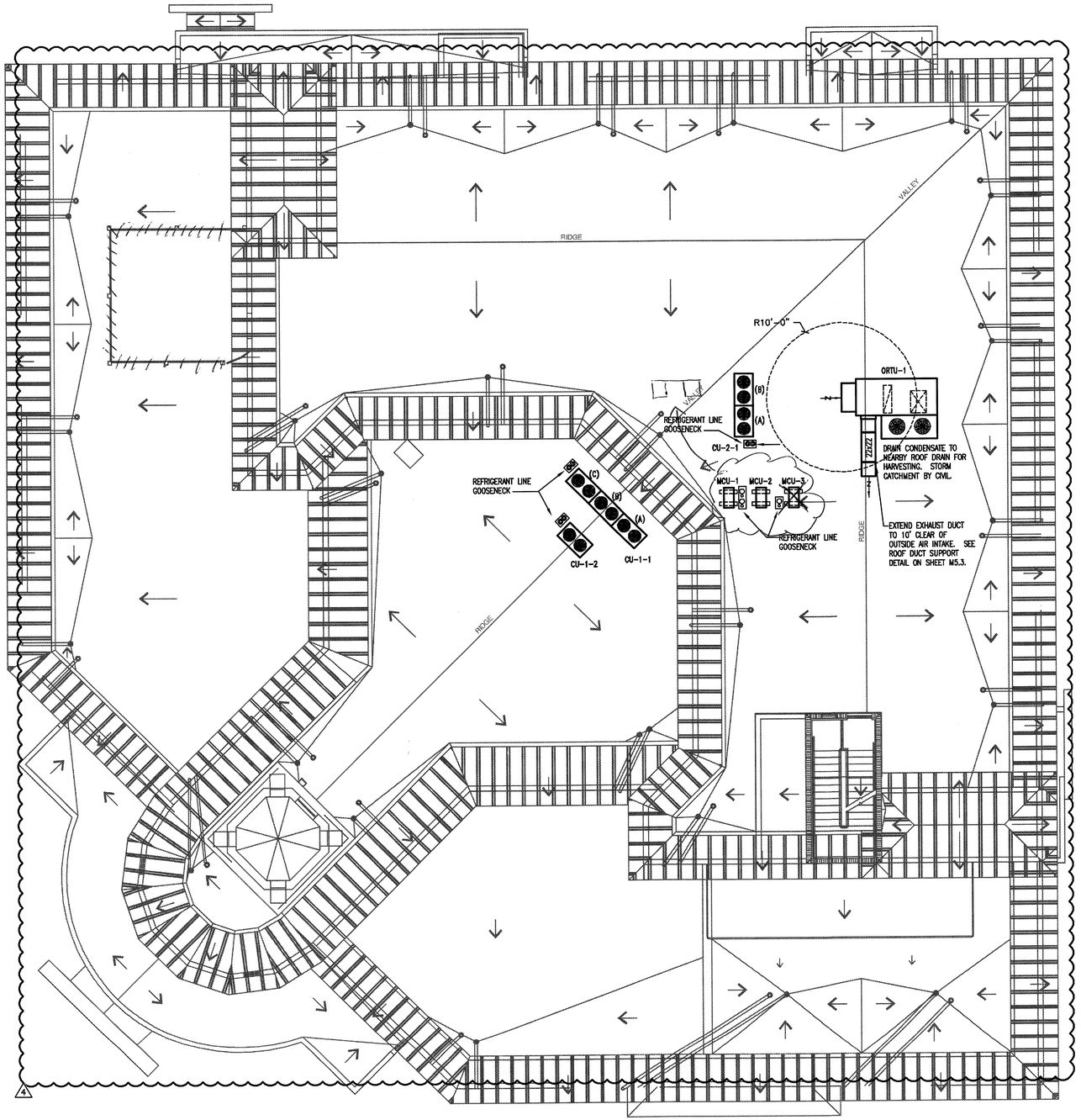

RECORD SET

The information presented on this drawing is diagrammatic and is presented for general information purposes and should not be relied on for accuracy of dimensions, details and locations. Actual and exact conditions if required should be determined in the field.

NORTH

1 HVAC - ROOF PLAN
SCALE: 1/8" = 1'-0"

800 Fairway Drive.
Suite 250
Deerfield Beach, Florida 33441
Phone: 954-418-9098
Fax: 954-418-9296
www.tlc-engineers.com

© Copyright 2007 TLC Engineering for Architecture, Inc.

EB #0000015 TLC NO: 609036

JMWA ARCHITECTS

STEVEN E. MYOTT AIA
JAMES R. WILLIAMS AIA
RODOLFO ACEVEDO AIA

949 CLINT MOORE ROAD
BOCA RATON, FLORIDA 33487
TEL 561 997 9997
FAX 561 997 1610

WWW.JMWA.NET

PALMETTO BAY VILLAGE HALL

9705 E. Hibiscus St., Palmetto Bay, Florida

Master Builders of South Florida, Inc.
1400 E. Oakland Park Blvd. Suite 210
Oakland Park, FL 33334

Alvaro Gonzalez, P.E.
Florida License #69003

PROJECT NO. 609036
DESIGNED BY: XXX
DRAWN BY: XXX
CHECKED BY: XXX

SUBMITTALS:

50% REVIEW	10.30.2009
PERMIT REVIEW	11.20.2009
BUILDING PERMIT	03.03.2010

REVISIONS:

4 DESIGN CHANGES 8/11/10

HVAC
ROOF PLAN

M2.3

©2009 JMWA ARCHITECTS, INCORPORATED ALL RIGHTS RESERVED. NO PART OF THESE IDEAS, PLANS OR DESIGNS MAY BE REPRODUCED, COPIED OR UTILIZED GRAPHICALLY IN ANY FORM WHATSOVER WITHOUT THE EXPRESSED WRITTEN CONSENT OF JMWA ARCHITECTS INCORPORATED AND ITS BOARD OF DIRECTORS.

L:\2009-Jobs\609036-Palmetto Bay Municipal Center\CAD-MEP\Sheets M2.3.dwg 8/11/2010 5:33:06 PM jared.hunt

TLC ENGINEERING FOR ARCHITECTURE
800 Fairway Drive.
Suite 250
Deerfield Beach, Florida 33441
Phone: 954-418-9096
Fax: 954-418-9296
www.tlc-engineers.com
© Copyright 2007 TLC Engineering for Architecture, Inc.
EB #0000015 TLC NO:609036

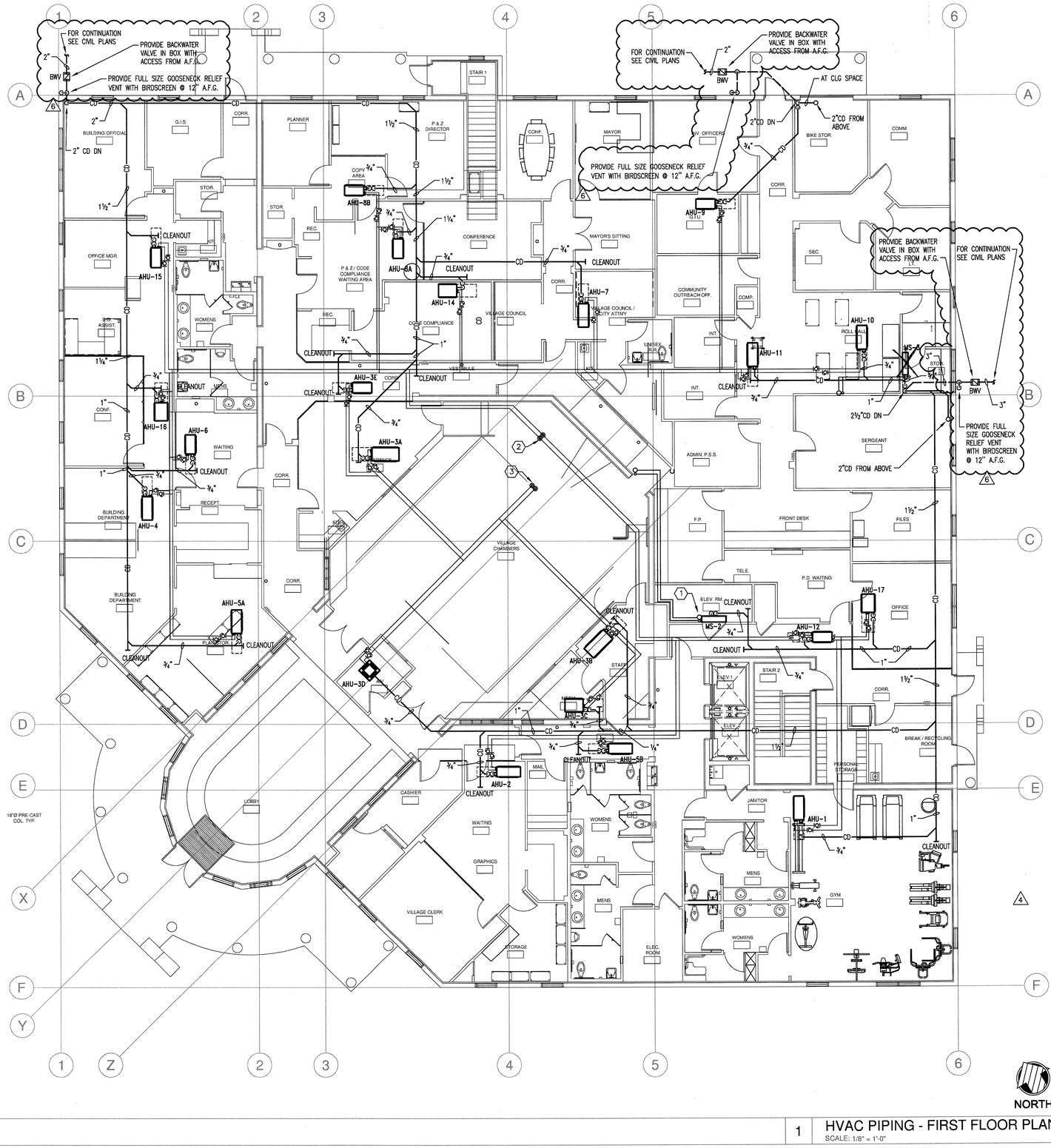

1 HVAC PIPING - FIRST FLOOR PLAN
SCALE: 1/8" = 1'-0"

KEYED NOTES

1. RUN REFRIGERANT LINES UP ABOVE CEILING AND OVER TO 2ND FLOOR CHASE AS SHOWN. SEE SHEET M2.5 FOR CONTINUATION.
2. REFRIGERANT LINES UP TO REFRIGERANT GOOSENECK AND INTO CU-1-1 ON ROOF.
3. REFRIGERANT LINES UP TO REFRIGERANT GOOSENECK AND INTO CU-1-2 ON ROOF.
4. ROUTE CONDENSATE INTO NEAREST STORM DRAIN. REFER TO PLUMBING DRAWINGS FOR STORM PIPING IN THIS LOCATION.

GENERAL NOTES:

1. THIS IS A HEAT PUMP SYSTEM, BOTH LINES OF REFRIGERANT PIPING ARE TO BE INSULATED WITH ARMAFLEX INSULATION.
2. SHUT OFF BALL VALVES SHALL BE PROVIDED IN THE REFRIGERANT PIPING AT EACH AIR HANDLING UNIT FOR ISOLATION. INSTALL BALL VALVES OVER LAY-IN CEILING TILES FOR ACCESS.
3. THE SPACE ABOVE THE CEILING IS A RETURN PLENUM, NO COMBUSTIBLE MATERIALS ARE ALLOWED.
4. REFRIGERANT PIPING IS DIAGRAMATIC AND PIPING RUNS SHOULD BE PER MANUFACTURER'S RECOMMENDATION. CONTRACTOR SHALL COORDINATE ALL REFRIGERANT PIPING RUN-OUTS ABOVE THE CEILING IN FIELD. COORDINATE CONDENSATE FINAL RUNS IN FIELD.

RECORD SET
The information presented on this drawing is diagrammatic and is presented for general information purposes and should not be relied on for accuracy of dimensions, details and locations. Actual and exact conditions if required should be determined in the field.

JMWA ARCHITECTS
STEVEN E. MYOTT AIA
JAMES R. WILLIAMS AIA
RODOLFO ACEVEDO AIA
949 CLINT MOORE ROAD
BOCA RATON, FLORIDA 33487
TEL 561 997 9997
FAX 561 997 1610
WWW.JMWA.NET

PALMETTO BAY VILLAGE HALL
9705 E. Hibiscus St., Palmetto Bay, Florida

Master Builders of South Florida, Inc.
1400 E. Oakland Park Blvd. Suite 210
Oakland Park, FL 33334

Alvaro Gonzalez, P.E.
Florida License #69003

PROJECT NO. 609036
DESIGNED BY: TLC
DRAWN BY: TLC
CHECKED BY: TLC

SUBMITTALS:
50% REVIEW 10.30.2009
PERMIT REVIEW 11.20.2009
BUILDING PERMIT 03.03.2010

REVISIONS:
4 DESIGN CHANGES 8/11/10
6 OWNER CHANGES 9/15/10

HVAC PIPING
FIRST FLOOR
PLAN

M2.4

© 2009 JMWA ARCHITECTS, INCORPORATED ALL RIGHTS RESERVED. NO PART OF THESE IDEAS PLANS OR DESIGNS MAY BE REPRODUCED, COPIED OR UTILIZED GRAPHICALLY IN ANY FORM WHATSOEVER WITHOUT THE EXPRESSED WRITTEN CONSENT OF JMWA ARCHITECTS INCORPORATED AND ITS BOARD OF DIRECTORS.

L:\2009--Jobs\609036--Palmetto Bay Municipal Center\CAD--MEP\Sheets M2.4.dwg 9/17/2010 1:55:50 PM yensi.izquierdo

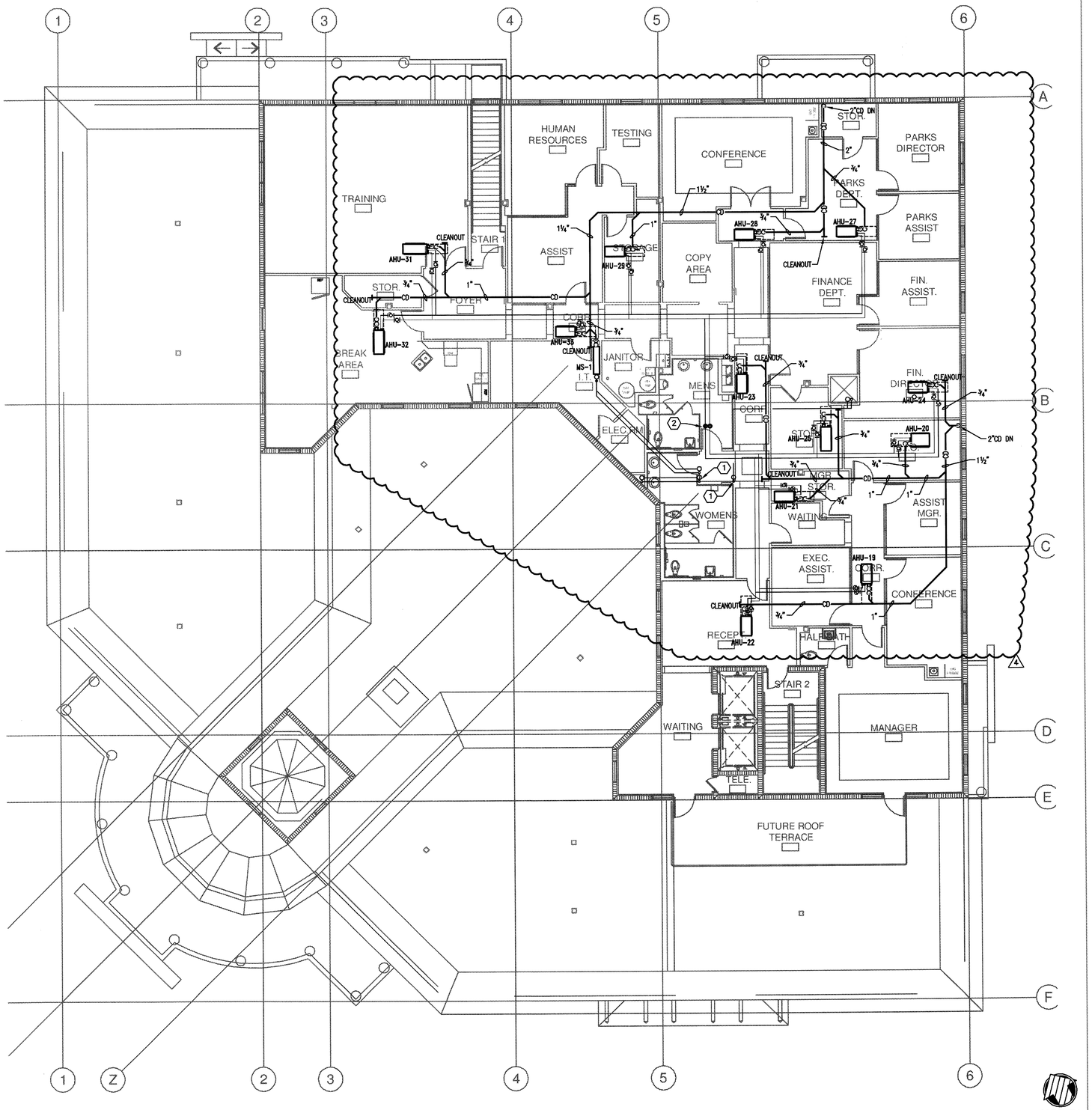

1 HVAC PIPING - SECOND FLOOR PLAN
SCALE: 1/8" = 1'-0"

KEYED NOTES

1. REFRIGERANT LINES UP TO REFRIGERANT GOOSENECK ON ROOF AND INTO MINI SPLIT CONDENSING UNITS.
2. REFRIGERANT LINES UP TO REFRIGERANT GOOSENECK AND INTO CU-2-1 ON ROOF.
3. ROUTE CONDENSATE INTO NEAREST STORM DRAIN. REFER TO PLUMBING DRAWINGS FOR STORM PIPING IN THIS LOCATION.

GENERAL NOTES:

1. THIS IS A HEAT PUMP SYSTEM, BOTH LINES OF REFRIGERANT PIPING ARE TO BE INSULATED WITH ARMAFLEX INSULATION.
2. SHUT OFF BALL VALVES SHALL BE PROVIDED IN THE REFRIGERANT PIPING AT EACH AIR HANDLING UNIT FOR ISOLATION.
3. THE SPACE ABOVE THE CEILING IS A RETURN PLENUM, NO COMBUSTIBLE MATERIALS ARE ALLOWED.
4. CONTRACTOR SHALL COORDINATE ALL REFRIGERANT PIPING RUN-OUT ABOVE THE CEILING IN FIELD. SEE SHEET M2.4 FOR PIPING PLAN.
5. REFER TO PLUMBING DRAWINGS FOR STORM DRAINAGE PIPING. COLLECT CONDENSATE DRAINAGE FROM 1ST AND 2ND FLOOR AHU'S AND ROUTE TO CONNECTION WITH STORM DRAINAGE SYSTEM BELOW FINISHED GRADE. COORDINATE CONDENSATE FINAL RUNS IN FIELD.

RECORD SET

The information presented on this drawing is diagrammatic and is presented for general information purposes and should not be relied on for accuracy of dimensions, details and locations. Actual and exact conditions if required should be determined in the field.

TLC ENGINEERING FOR ARCHITECTURE
500 Fairway Drive, Suite 280
Deerfield Beach, Florida 33441
Phone: 954-418-9095
Fax: 954-418-9096
www.tlc-engineers.com
© Copyright 2007 TLC Engineering for Architecture, Inc.
EB #0000015 TLC NO:609036

JMWA ARCHITECTS
STEVEN E. MYOTT AIA
JAMES R. WILLIAMS AIA
RODOLFO ACEVEDO AIA
949 CLINT MOORE ROAD
BOCA RATON, FLORIDA 33487
TEL 561 997 9997
FAX 561 997 1610
WWW.JMWA.NET

PALMETTO BAY VILLAGE HALL

9705 E. Hibiscus St., Palmetto Bay, Florida

Master Builders of South Florida, Inc.
1400 E. Oakland Park Blvd. Suite 210
Oakland Park, FL 33334

Alvaro Gonzalez, P.E.
Florida License #68003

PROJECT NO. 609036
DESIGNED BY: TLC
DRAWN BY: TLC
CHECKED BY: TLC

SUBMITTALS:
50% REVIEW 10.30.2009
PERMIT REVIEW 11.20.2009
BUILDING PERMIT 03.03.2010

REVISIONS:
4 DESIGN CHANGES 8/11/10

HVAC PIPING
SECOND FLOOR
PLAN

M2.5

© 2009 JMWA ARCHITECTS, INCORPORATED ALL RIGHTS RESERVED. NO PART OF THESE IDEAS, PLANS OR DESIGNS MAY BE REPRODUCED, COPIED OR UTILIZED GRAPHICALLY IN ANY FORM WHATSOEVER WITHOUT THE EXPRESSED WRITTEN CONSENT OF JMWA ARCHITECTS INCORPORATED AND ITS BOARD OF DIRECTORS.

L:\2009-Jobs\609036-Palmetto Bay Municipal Center\CAD-MEP\Sheets M2.5.dwg 8/11/2010 5:33:51 PM jared.hunt

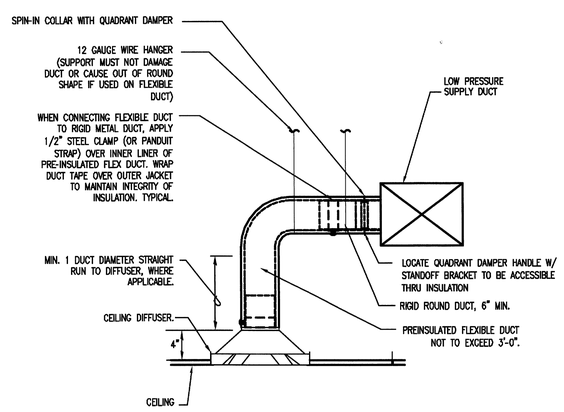

NOTE:
BRANCH DUCT SIZE SHALL BE EQUAL TO DIFFUSER NECK SIZE UNLESS OTHERWISE NOTED.

CEILING DIFFUSER CONNECTION DETAIL — 5
No Scale

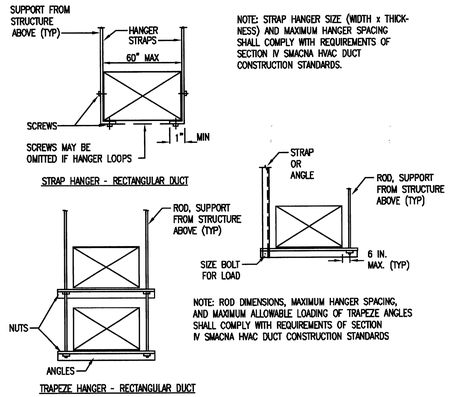

TYPICAL RECTANGULAR DUCT SUPPORT — 3
No Scale

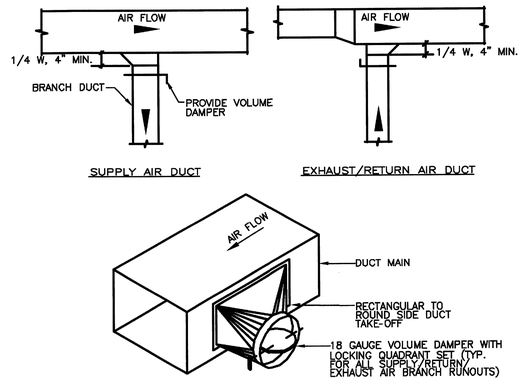

TAKE-OFF DETAILS — 1
No Scale

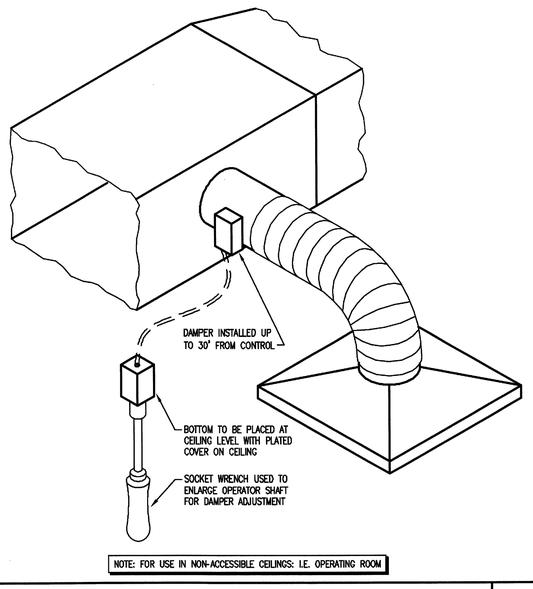

CABLE CONTROL VOLUME DAMPER — 6
No Scale

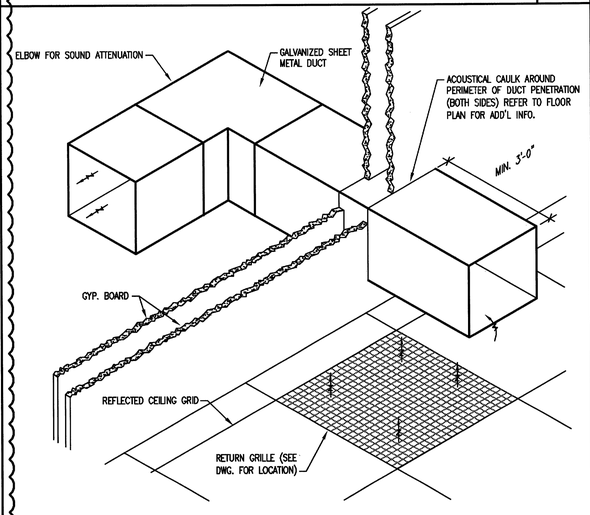

PLENUM RETURN TRANSFER BOOT — 4
No Scale

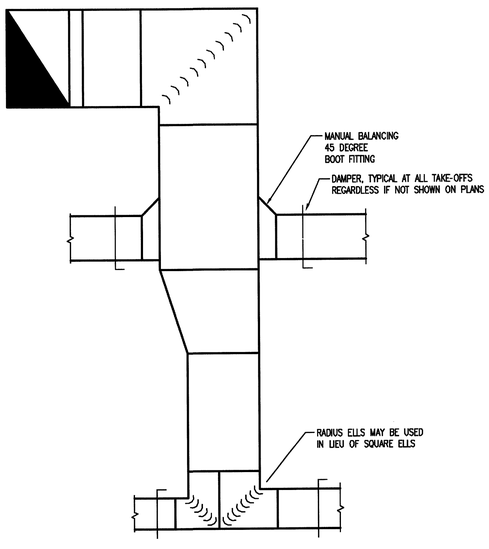

TYPICAL LOW PRESSURE DUCTWORK — 2
No Scale

RECORD SET
The information presented on this drawing is diagrammatic and is presented for general information purposes and should not be relied on for accuracy of dimensions, details and locations. Actual and exact conditions if required should be determined in the field.

TLC ENGINEERING FOR ARCHITECTURE
500 Fairway Drive, Suite 280
Deerfield Beach, Florida 33441
Phone: 954-418-9095
Fax: 954-418-9296
www.tlc-engineers.com
EB #0000015 TLC NO: 609036
© Copyright 2007 TLC Engineering for Architecture, Inc.

JMWA ARCHITECTS
STEVEN E. MYOTT AIA
JAMES R. WILLIAMS AIA
RODOLFO ACEVEDO AIA
949 CLINT MOORE ROAD
BOCA RATON, FLORIDA 33487
TEL 561 997 9997
FAX 561 997 1610
WWW.JMWA.NET

PALMETTO BAY VILLAGE HALL
9705 E. Hibiscus St., Palmetto Bay, Florida

Master Builders of South Florida, Inc.
1400 E. Oakland Park Blvd. Suite 210
Oakland Park, FL 33334

Alvaro Gonzalez, P.E.
Florida License #69003

PROJECT NO. 609036
DESIGNED BY: XXX
DRAWN BY: XXX
CHECKED BY: XXX

SUBMITTALS:
50% REVIEW 10.30.2009
PERMIT REVIEW 11.20.2009
BUILDING PERMIT 03.03.2010

REVISIONS:
4 DESIGN CHANGES 8/11/10

HVAC DETAILS

M5.1

© 2009 JMWA ARCHITECTS INCORPORATED ALL RIGHTS RESERVED. NO PART OF THESE IDEAS, PLANS OR DESIGNS MAY BE REPRODUCED, COPIED OR UTILIZED GRAPHICALLY IN ANY FORM WHATSOEVER WITHOUT THE EXPRESSED WRITTEN CONSENT OF JMWA ARCHITECTS INCORPORATED AND ITS BOARD OF DIRECTORS.

L:\2009--Jobs\609036--Palmetto Bay Municipal Center\CAD--MEP\Sheets M5.1.dwg 8/11/2010 5:34:11 PM jared.hunt

TLC ARCHITECTURE AND ENGINEERING
800 Fairway Drive.
Suite 280
Deerfield Beach, Florida 33441
Phone: 954-418-9096
Fax: 954-418-9296
www.tlc-engineers.com
© Copyright 2007 TLC Engineering for Architecture, Inc.
EB #0000015 TLC NO: 609036

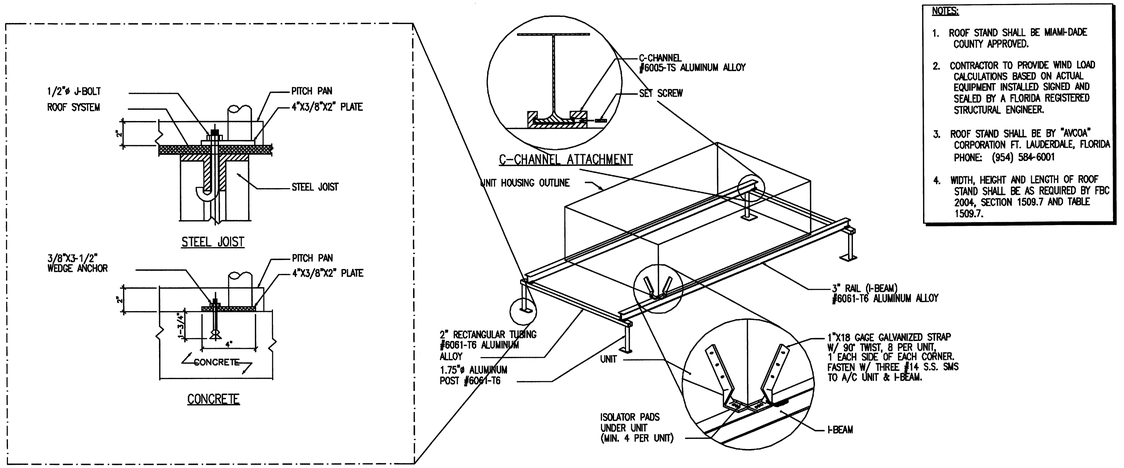

NOTES:

1. ROOF STAND SHALL BE MIAMI-DADE COUNTY APPROVED.
2. CONTRACTOR TO PROVIDE WIND LOAD CALCULATIONS BASED ON ACTUAL EQUIPMENT INSTALLED SIGNED AND SEALED BY A FLORIDA REGISTERED STRUCTURAL ENGINEER.
3. ROOF STAND SHALL BE BY "AVCOA" CORPORATION FT. LAUDERDALE, FLORIDA PHONE: (954) 584-6001
4. WIDTH, HEIGHT AND LENGTH OF ROOF STAND SHALL BE AS REQUIRED BY FBC 2004, SECTION 1509.7 AND TABLE 1509.7.

HVAC ROOF EQUIPMENT MOUNTING DETAIL
No Scale

3

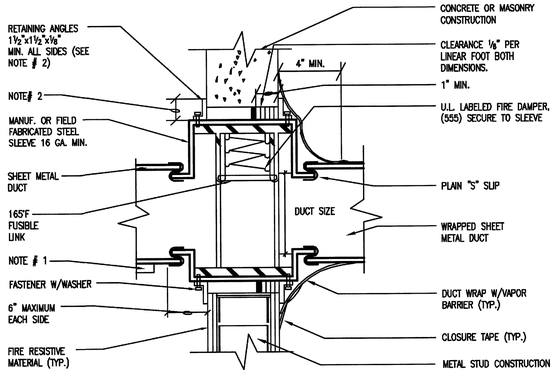

NOTES:

1. PROVIDE ACCESS DOOR & LABEL ON SIDE OR BOTTOM OF DUCT AS FOLLOWS:

DUCT WIDTH	DOOR SIZE
10" THRU 12"	8" x 8"
14" THRU 20"	12" x 12"
22" AND ABOVE	18" x 18"

2. 1½"x1½"x⅛" RETAINING ANGLES SHALL LAP STRUCTURAL OPENING 1" MIN. & COVER CORNERS OF OPENINGS. ANGLES ATTACH TO SLEEVE ONLY AND MUST NOT BE ATTACHED TO EACH OTHER AT CORNERS OR TO WALL.
3. ALL ATTACHMENTS PER MANUFACTURER'S APPROVED INSTALLATION INSTRUCTION.
4. VERTICAL POSITION SHOWN. HORIZONTAL INSTALLATION SIMILAR. DAMPER TO BE SPRING LOADED WHEN HORIZONTAL.

FIRE DAMPER INSTALLATION
No Scale

1

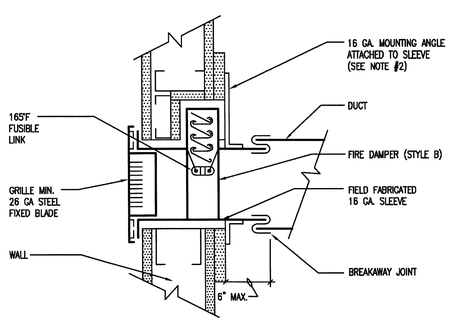

NOTES:

1. PROVIDE ACCESS DOOR & LABEL ON SIDE OR BOTTOM OF DUCT AS FOLLOWS:

DUCT WIDTH	DOOR SIZE
10" THRU 12"	8" x 8"
14" THRU 20"	12" x 12"
22" AND ABOVE	18" x 18"

2. RETAINING ANGLES SHALL LAP STRUCTURAL OPENING 1" MIN. & COVER CORNERS OF OPENINGS. ANGLES ATTACH TO SLEEVE ONLY AND MUST NOT BE ATTACHED TO EACH OTHER AT CORNERS OR TO WALL.
3. ALL ATTACHMENTS PER MANUFACTURER'S APPROVED INSTALLATION INSTRUCTION.
4. VERTICAL POSITION SHOWN. HORIZONTAL INSTALLATION SIMILAR. DAMPER TO BE SPRING LOADED WHEN HORIZONTAL.

FIRE DAMPER AT REGISTER OR GRILLE
No Scale

5

System No. W-L-5038
F Rating-2 Hr
T Rating-2 Hr

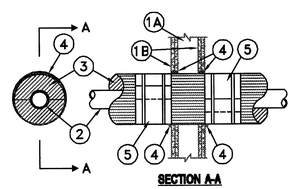

SECTION A-A

1. WALL ASSEMBLY - THE FIRE-RATED GYPSUM WALLBOARD/STUD WALL ASSEMBLY SHALL BE CONSTRUCTED OF THE MATERIALS AND IN THE MANNER SPECIFIED IN THE INDIVIDUAL U300 OR U400 SERIES WALL OR PARTITION DESIGNS IN THE UL FIRE RESISTANCE DIRECTORY AND SHALL INCLUDE THE FOLLOWING CONSTRUCTION FEATURES:

A. STUDS - WALL FRAMING MAY CONSIST OF EITHER WOOD STUDS OR STEEL CHANNEL STUDS. WOOD STUDS TO CONSIST OF NOM 2 BY 4 IN. LUMBER SPACED 16 IN. OC. STEEL STUDS TO BE MIN 3-5/8 IN. WIDE AND SPACED MAX 24 IN. OC.

B. WALLBOARD, GYPSUM* - TWO LAYERS OF NOM 5/8 IN. THICK, GYPSUM WALLBOARD, AS SPECIFIED IN THE INDIVIDUAL WALL AND PARTITION DESIGN. MAX DIAM OF OPENING IN GYPSUM WALLBOARD LAYERS IS 11 IN.

2. STEEL PIPE - NOM 4 IN. DIAM (OR SMALLER) SCHEDULE 10 (OR HEAVIER) STEEL PIPE. ONE PIPE TO BE INSTALLED EITHER CONCENTRICALLY OR ECCENTRICALLY WITHIN THE FIRESTOP SYSTEM. THE ANNULAR SPACE BETWEEN THE INSULATED PIPE AND THE EDGE OF THE THROUGH OPENING SHALL BE MIN 0 IN. (POINT CONTACT)TO MAX. 1/2 IN. PIPE TO BE RIGIDLY SUPPORTED ON BOTH SIDES OF WALL ASSEMBLY.

3. PIPE COVERING MATERIALS* - CELLULAR GLASS INSULATION - NOM 1-1/2 TO 3 IN. THICK CELLULAR GLASS UNITS SIZED TO THE OUTSIDE DIAM OF THE STEEL PIPE AND SUPPLIED IN NOM 24 IN. LONG HALF SECTIONS OR NOM 18 IN. LONG SEGMENTS. PIPE INSULATION INSTALLED ON PIPE IN ACCORDANCE WITH THE MANUFACTURER'S INSTRUCTIONS.
PITTSBURGH CORNING CORP. - FOAMGLAS

4. FILL, VOID OR CAVITY MATERIALS* - CAULK - INSTALLED TO FILL ANNULAR SPACE TO MIN. DEPTH OF 1-1/4 IN., FLUSH WITH EACH SURFACE OF WALL. A MIN. 1/2 IN. DIAM BEAD OF CAULK SHALL BE APPLIED TO THE PIPE INSULATION/WALLBOARD INTERFACE AT THE POINT CONTACT LOCATION ON BOTH SIDES OF WALLS.
MINNESOTA MINING & MFG. CO. - TYPE CP 25WB+

5. METAL JACKET - MIN. 12 IN. LONG JACKET FORMED OF MIN. 0.010 IN. THICK STEEL OR ALUMINUM SHEET CUT TO WRAP TIGHTLY AROUND THE PIPE INSULATION WITH A MIN. 2 IN. LAP AND SECURED USING BANDS AND SEALS OF SIMILAR MATERIAL. BANDS TO BE LOCATED WITHIN 2 IN. OF EACH END OF THE JACKET AND SPACED MAX. 10 IN. OC. JACKET TO BE INSTALLED WITH EDGE ABUTTING SURFACE OF CAULK FILL MATERIAL (ITEM 5) ON EACH SIDE OF WALL. METAL JACKET TO BE USED IN ADDITION TO ANY OTHER JACKETING MATERIAL WHICH MAY BE REQUIRED OR DESIRED ON THE PIPE INSULATION.

* BEARING THE UL CLASSIFICATION MARKING

RATED PIPE PENETRATION - GYPSUM BOARD WALLS
FOAM GLAS INSULATION - NTS

4

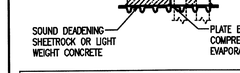

MAX. ALLOWABLE DIFFERENCE

A - B	B - C	A - C
0.5"	1.0"	1.0"

ROOFTOP UNIT LEVELING TOLERANCES

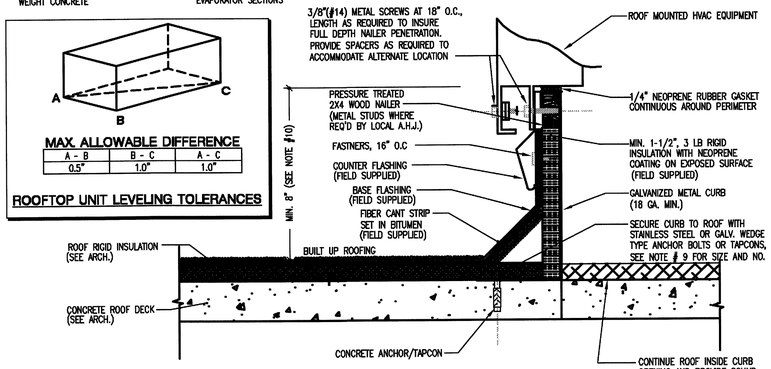

ROOFTOP UNIT INSTALLATION NOTES

1. DUCT TRANSITION FROM RTU TO DUCT SIZE SHOWN ON MECH. FLOOR PLAN SHALL BE MADE BETWEEN RTU & TOP OF ROOF WITHIN CURB.
2. SIZE OF OPENING IN ROOF DECK TO BE AS SMALL AS POSSIBLE, 6" MAX. LARGER THAN DUCT SIZE SHOWN. COORDINATE W/STRUCTURAL PLANS.
3. INSTALL PER MANUFACTURER'S RECOMMENDATION AND INSTALLATION MANUAL.
4. ALL WIRING BY ELECTRICAL CONTRACTOR.
5. SHIM CURB AS REQUIRED TO PROVIDE HORIZONTAL INSTALLATION OF UNIT WITHIN PRESCRIBED TOLERANCES
6. CONTRACTOR SHALL COORDINATE LOCATION OF ROOF CURB WITH STRUCTURE PRIOR TO INSTALLATION.
7. ROOF CURB BY AIR CONDITIONER MANUFACTURER. PROVIDE ADDITIONAL BRACING AND SUPPORT. AS REQUIRED FOR ROOF CURB INSTALLATION TO WITHSTAND WIND LOAD PER LOCAL CODES.
8. CURB TO BE HEAVY GAUGE GALVANIZED STEEL CONSTRUCTION AS RECOMMENDED BY MANUFACTURER, ALL FASTENERS SHALL BE CORROSION PROTECTED IF EXPOSED TO OUTDOORS
9. FOR A/C UNIT ROOFCURB, PROVIDE "RED HEAD" WEDGE TYPE ANCHOR/TAPCON WITH MIN. EMBEDMENT AS RECOMMENDED BY ANCHOR MANUFACTURER. PROVIDE NUMBER AND SIZE OF ANCHORS AS RECOMMENDED BY STRUCTURAL ENGINEER
10. CLEARANCE OF UNIT TO ABOVE FINISHED ROOF SHALL COMPLY WITH LOCAL CODE REQUIREMENTS: PAR. 1509.7 FOR FLORIDA BUILDING CODE, 2007 ED.

TYPICAL ROOFTOP EQUIPMENT CURB MOUNTING
No Scale

2

NOTE
DETAIL SHOWN FOR REFERENCE ONLY FOR ATTACHMENT PURPOSES. CODE COMPLIANCE SHALL BE DETERMINED AND VERIFIED BY A LICENSED STRUCTURAL ENGINEER.

RECORD SET
The information presented on this drawing is diagrammatic and is presented for general information purposes and should not be relied on for accuracy of dimensions, details and locations. Actual and exact conditions if required should be determined in the field.

JMWA ARCHITECTS
STEVEN E. MYOTT AIA
JAMES R. WILLIAMS AIA
RODOLFO ACEVEDO AIA
940 CLINT MOORE ROAD
BOCA RATON, FLORIDA 33487
TEL 561 997 9997
FAX 561 997 1610
WWW.JMWA.NET

PALMETTO BAY VILLAGE HALL
9705 E. Hibiscus St., Palmetto Bay, Florida

Master Builders of South Florida, Inc.
1400 E. Oakland Park Blvd. Suite 210
Oakland Park, FL 33334

Alvaro Gonzalez, P.E.
Florida License #69003

PROJECT NO. 609036
DESIGNED BY: XXX
DRAWN BY: XXX
CHECKED BY: XXX

SUBMITTALS:
50% REVIEW 10.30.2009
PERMIT REVIEW 11.20.2009
BUILDING PERMIT 03.03.2010

REVISIONS:
4 DESIGN CHANGES 8/11/10

HVAC
DETAILS

M5.2

© 2009 JMWA ARCHITECTS, INCORPORATED ALL RIGHTS RESERVED. NO PART OF THESE IDEAS, PLANS OR DESIGNS MAY BE REPRODUCED, COPIED OR UTILIZED GRAPHICALLY IN ANY FORM WHATSOEVER WITHOUT THE EXPRESSED WRITTEN CONSENT OF JMWA ARCHITECTS INCORPORATED AND ITS BOARD OF DIRECTORS.

L:\2009-Jobs\609036-Palmetto Bay Municipal Center\CAD-MEP\Sheets M5.2.dwg 8/11/2010 5:34:30 PM jared.hunt

TLC ARCHITECTURAL AND INTERIORS
800 Fairway Drive.
Suite 280
Deerfield Beach, Florida 33441
Phone: 954-418-9095
Fax: 954-418-9096
www.tlc-engineers.com
© Copyright 2007 TLC Engineering for Architecture, Inc.
EB #0000015 TLC NO: 609036

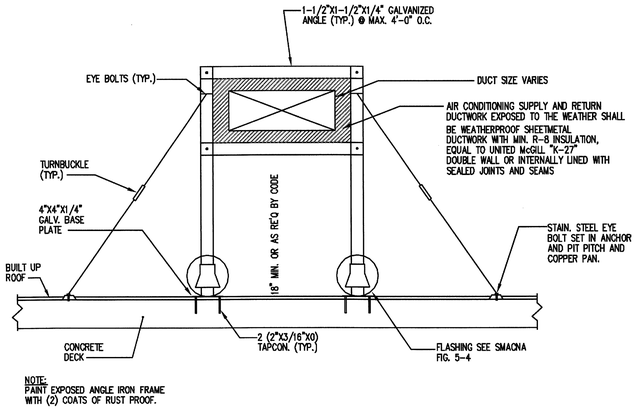

NOTE:
PAINT EXPOSED ANGLE IRON FRAME WITH (2) COATS OF RUST PROOF.

ROOF MOUNTED DUCT SUPPORT FRAME DETAIL
No Scale

6

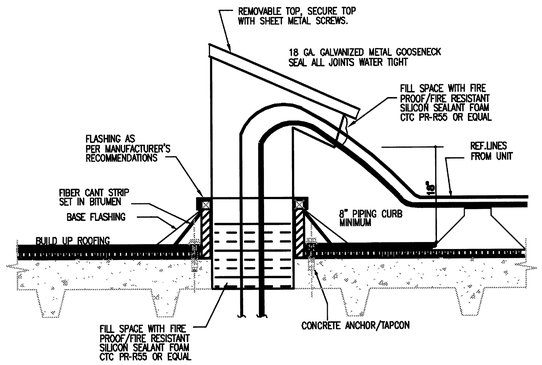

REFRIGERANT LINES GOOSENECK DETAIL
No Scale

3

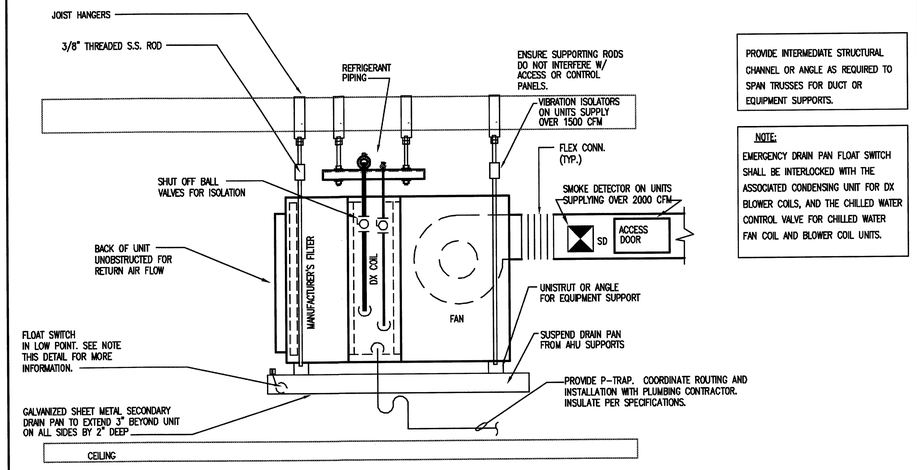

PROVIDE INTERMEDIATE STRUCTURAL CHANNEL OR ANGLE AS REQUIRED TO SPAN TRUSSES FOR DUCT OR EQUIPMENT SUPPORTS.

NOTE:
EMERGENCY DRAIN PAN FLOAT SWITCH SHALL BE INTERLOCKED WITH THE ASSOCIATED CONDENSING UNIT FOR DX BLOWER COILS, AND THE CHILLED WATER CONTROL VALVE FOR CHILLED WATER FAN COIL AND BLOWER COIL UNITS.

HORIZONTAL BLOWER COIL / FAN COIL INSTALLATION DETAIL
No Scale

1

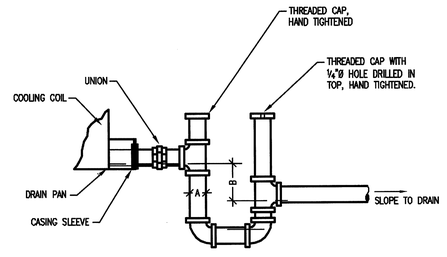

CONDENSATE DRAIN PIPING DIMENSIONS:

A = FULL SIZE OF UNIT DRAIN CONNECTION
B > 1½ TIMES FAN SUCTION STATIC PRESSURE

COORDINATE MOUNTING/CURB HEIGHT AS REQUIRED TO PROVIDE PROPER CONDENSATE DRAINAGE.

AHU CONDENSATE DRAIN TRAP
No Scale

5

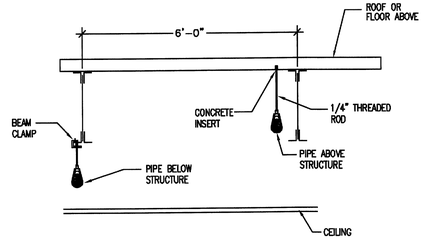

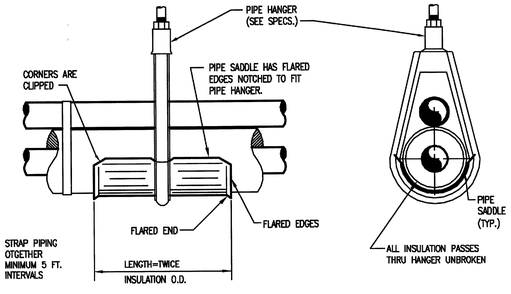

REFRIGERANT PIPE HANGER DETAIL
No Scale

4

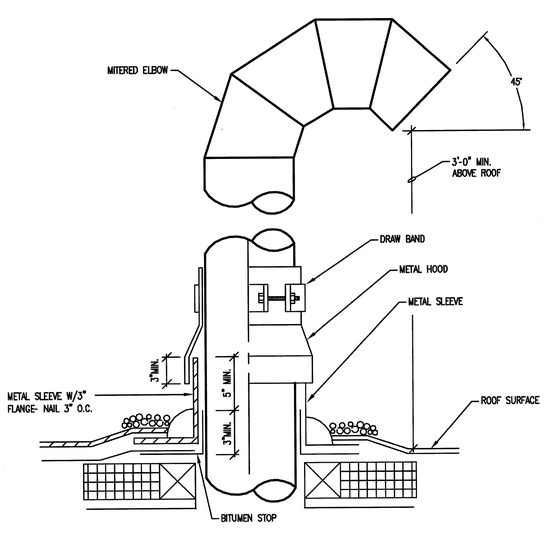

ROUND GOOSENECK
No Scale

2

RECORD SET
The information presented on this drawing is diagrammatic and is presented for general information purposes and should not be relied on for accuracy of dimensions, details and locations. Actual and exact conditions if required should be determined in the field.

JMWA ARCHITECTS
STEVEN E. MYOTT AIA
JAMES R. WILLIAMS AIA
RODOLFO ACEVEDO AIA
949 CLINT MOORE ROAD
BOCA RATON, FLORIDA 33487
TEL 561 997 9997
FAX 561 997 1610
WWW.JMWA.NET

PALMETTO BAY VILLAGE HALL
9705 E. Hibiscus St., Palmetto Bay, Florida

Master Builders of South Florida, Inc.
1400 E. Oakland Park Blvd. Suite 210
Oakland Park, FL 33334

Alvaro Gonzalez, P.E.
Florida License #69003

PROJECT NO. 609036
DESIGNED BY: TLC
DRAWN BY: TLC
CHECKED BY: TLC

SUBMITTALS:
50% REVIEW 10.30.2009
PERMIT REVIEW 11.20.2009
BUILDING PERMIT 03.03.2010

REVISIONS:
4 DESIGN CHANGES 8/11/10

HVAC DETAILS

M5.3

© 2009 JMWA ARCHITECTS, INCORPORATED ALL RIGHTS RESERVED. NO PART OF THESE IDEAS, PLANS OR DESIGNS MAY BE REPRODUCED, COPIED OR UTILIZED GRAPHICALLY IN ANY FORM WHATSOEVER WITHOUT THE EXPRESSED WRITTEN CONSENT OF JMWA ARCHITECTS INCORPORATED AND ITS BOARD OF DIRECTORS.

L:\2009-Jobs\609036-Palmetto Bay Municipal Center\CAD-MEP\Sheets M5.3.dwg 8/11/2010 5:34:48 PM jpred.hunt

TLC ENGINEERING FOR ARCHITECTURE
800 Fairway Drive, Suite 260
Deerfield Beach, Florida 33441
Phone: 954-418-9095
Fax: 954-418-9296
www.tlc-engineers.com
© Copyright 2007 TLC Engineering for Architecture, Inc.
EB #0000015 TLC NO: 609036

JMWA
ARCHITECTS
STEVEN E. MYOTT AIA
JAMES R. WILLIAMS AIA
RODOLFO ACEVEDO AIA
9219 CLINT MOORE ROAD
BOCA RATON, FLORIDA 33487
TEL 561 997 9997
FAX 561 997 1610
WWW.JMWA.NET

PALMETTO BAY VILLAGE HALL
9705 E. Hibiscus St., Palmetto Bay, Florida

Master Builders of South Florida, Inc.
1400 E. Oakland Park Blvd. Suite 210
Oakland Park, FL 33334

Alvaro Gonzalez, P.E.
Florida License #69003

PROJECT NO. 609036
DESIGNED BY: XXX
DRAWN BY: XXX
CHECKED BY: XXX

SUBMITTALS:
50% REVIEW 10.30.2009
PERMIT REVIEW 11.20.2009
BUILDING PERMIT 03.03.2010

REVISIONS:
4 DESIGN CHANGES 8/11/10

HVAC CONTROLS

M6.1

© 2009 JMWA ARCHITECTS, INCORPORATED ALL RIGHTS RESERVED. NO PART OF THESE IDEAS, PLANS OR DESIGNS MAY BE REPRODUCED, COPIED OR UTILIZED GRAPHICALLY IN ANY FORM WHATSOEVER WITHOUT THE EXPRESSED WRITTEN CONSENT OF JMWA ARCHITECTS INCORPORATED AND ITS BOARD OF DIRECTORS.

OCCUPIED MODE

COOLING MODE:
WHEN THE PARENT CONDENSING UNIT IS IN COOLING MODE, THE AIR HANDLING UNIT SHALL MODULATE THE COOLING CAPACITY TO MAINTAIN SPACE TEMPERATURE AT SET-POINT. THE CAPACITY MODULATION SHALL BE HANDLED INTERNALLY. UPON A DROP IN SPACE TEMPERATURE 2'F (ADJ.) BELOW SET POINT OF 75'F (ADJ.) THE AHU FAN SHALL BE SET TO ITS MINIMUM SPEED.

HEATING MODE:
WHEN THE PARENT CONDENSING UNIT IS IN HEATING MODE, THE AIR HANDLING UNIT SHALL MODULATE THE COOLING CAPACITY TO MAINTAIN SPACE TEMPERATURE AT SET-POINT. THE CAPACITY MODULATION SHALL BE HANDLED INTERNALLY. UPON AN INCREASE IN SPACE TEMPERATURE 2'F (ADJ.) ABOVE SET POINT OF 68'F (ADJ.) THE AHU FAN SHALL BE SET TO ITS MINIMUM SPEED.

UNOCCUPIED MODE

COOLING MODE:
WHEN AN AIR HANDLING UNIT IS PLACED INTO UNOCCUPIED MODE BY THE EMS, THAT AIR HANDLING UNIT SHALL BE SET TO OFF AND THE SPACE TEMPERATURE SET-POINT SHALL BE RESET TO 80'F (ADJ.). UPON A SPACE TEMPERATURE INCREASE ABOVE SET-POINT THE AIR HANDLING UNIT SHALL BE SET TO ON AND SHALL CYCLE TO MAINTAIN SPACE TEMPERATURE AT SET-POINT.

HEATING MODE:
WHEN AN AIR HANDLING UNIT IS PLACED INTO UNOCCUPIED MODE BY THE EMS, THAT AIR HANDLING UNIT SHALL BE SET TO OFF AND THE SPACE TEMPERATURE SET-POINT SHALL BE RESET TO 60'F (ADJ.). UPON A DROP IN SPACE TEMPERATURE BELOW SET-POINT THE AIR HANDLING UNIT SHALL BE SET TO ON AND SHALL CYCLE TO MAINTAIN SPACE TEMPERATURE AT SET-POINT.

VRF AHU - SEQUENCE OF OPERATION

ENTHALPY SET POINT:
THE ENTHALPY OF THE EXHAUST AIR STREAM, AS READ BY THE EXHAUST AIR ENTHALPY SENSOR.
(29 BTU PER POUND OF DRY AIR IF SENSOR FAILS)

FAN ONLY MODE:
WHEN THE UNIT SUPPLY FAN IS STARTED, AND THERE IS NO CALL FOR COOLING OR HEATING, THE SUPPLY FAN AND EXHASUT FAN MODULATES TO THEIR MINIMUM SET POINT FOR THE MODE OF OPERATION (MODE "1" OR MODE "2"), THE HEATWHEEL IS ACTIVATED AND THE HEATWHEEL FAN IS STARTED.

ECONOMIZER MODE:
WITH THE UNIT SUPPLY FAN IN OPERATION AND A CALL FOR COOLING IS MADE, IF THE OUTDOOR AIR TEMPERATURE AND HUMIDITY ARE BELOW THE ENTHALPY SETPOINT, THE HEATWHEEL EXHAUST FAN IS ACTIVATED, THE HEATWHEEL IS DEACTIVATED AND THE SUPPLY FAN AND EXHAUST FAN MODULATE TO MAINTAIN THE MIXED AIR SETPOINT.

COOLING MODE:
WITH THE UNIT SUPPLY FAN IN OPERATION AND A CALL FOR COOLING IS MADE, IF THE OUTDOOR AIR TEMPERATURE AND HUMIDITY ARE ABOVE THE ENTHALPY SETPOINT, THE SUPPLY FAN AND EXHAUST FAN MODULATE TO THEIR MINIMUM SET POINT FOR THE MODE OF OPERATION (MODE "1" OR MODE "2") AND MECHANICAL COOLING IS ACTIVATED. THE HEATWHEEL IS ACTIVATED AND THE HEATWHEEL EXHAUST FAN IS STARTED.

HEATING MODE:
UPON A CALL FOR HEAT, THE HEATING FUNCTION IS ACTIVATED, THE SUPPLY FAN IS ACTIVATED AND THE SUPPLY FAN AND EXHAUST FAN MODULATE TO THEIR MINIMUM POSITION FOR THE MODE OF OPERATION (MODE "1" OR MODE "2"). THE HEATWHEEL IS ACTIVATED AND THE HEATWHEEL EXHAUST FAN IS STARTED.

ERV - SEQUENCE OF OPERATION

ORTU-1

OCCUPIED MODE "1":
WHEN INDEXED TO OCCUPIED MODE "1" BY BUILDING ENERGY MANAGEMENT SYSTEM (EMS), ALL INTERIOR MOTORIZED OUTDOOR AIR DAMPERS AND EXHAUST AIR DAMPERS SHALL OPEN. THE OUTDOOR AIR RTU SUPPLY FAN VFD SHALL BRING THE FAN UP TO SPEED FOR MODE "1". THE COMPRESSOR AND CONDENSER FAN SHALL BE STAGED ON. THE ENERGY RECOVERY UNIT SUPPLY FAN, EXHAUST FAN, AND WHEEL SHALL START. UPON PROVING OF AIRFLOW, THE OUTDOOR AIR DAMPER SHALL OPEN IN THE RTU TO MAINTAIN A CONSTANT OUTDOOR AIR RATE AS SCHEDULED ON SHEET M0.3 FOR MODE "1" (3200 CFM).

OCCUPIED MODE "2":
WHEN INDEXED TO OCCUPIED MODE "2" BY BUILDING ENERGY MANAGEMENT SYSTEM (EMS), OMD-1 AND EMD-1 SHALL BE COMMANDED OPEN. ALL OTHER INTERIOR MOTORIZED OUTDOOR AIR DAMPERS AND EXHAUST AIR DAMPERS SHALL BE CLOSED. THE OUTDOOR AIR RTU SUPPLY FAN VFD SHALL MODULATE THE FAN SPEED TO THAT SCHEDULED FOR MODE "2". THE COMPRESSOR AND CONDENSER FAN SHALL BE STAGED ON. THE ENERGY RECOVERY UNIT SUPPLY FAN, EXHAUST FAN, AND WHEEL SHALL START. UPON PROVING OF AIRFLOW, THE OUTDOOR AIR DAMPER SHALL OPEN IN THE RTU TO MAINTAIN A CONSTANT OUTDOOR AIR RATE AS SCHEDULED ON SHEET M0.3 FOR MODE "2" (1500 CFM).

RUN CONDITIONS - SCHEDULED:
THE UNIT SHALL RUN IN BASED UPON AN OPERATOR ADJUSTABLE SCHEDULE. MANUAL OVERRIDE CAPABILITIES SHALL BE PROVIDED TO PLACE THE SYSTEM INTO OCCUPIED MODE "1" OR MODE "2".

EMERGENCY SHUTDOWN:
THE UNIT SHALL SHUT DOWN AND GENERATE AN ALARM UPON RECEIVING AN EMERGENCY SHUTDOWN SIGNAL.

SUPPLY AIR SMOKE DETECTION:
THE UNIT SHALL SHUT DOWN AND GENERATE AN ALARM UPON RECEIVING A SUPPLY AIR SMOKE DETECTOR STATUS.

RTU OPTIMAL START:
THE UNIT SHALL START PRIOR TO SCHEDULED OCCUPANCY BASED ON THE TIME NECESSARY FOR THE ZONES TO REACH THEIR OCCUPIED SETPOINTS. THE START TIME SHALL AUTOMATICALLY ADJUST BASED ON CHANGES IN OUTSIDE AIR TEMPERATURE AND ZONE TEMPERATURES.

SUPPLY FAN:
THE SUPPLY FAN SHALL RUN ANYTIME THE UNIT IS COMMANDED TO RUN, UNLESS SHUTDOWN ON SAFETIES. TO PREVENT SHORT CYCLING, THE SUPPLY FAN SHALL HAVE A USER DEFINABLE (ADJ.) MINIMUM RUNTIME.

SUPPLY AIR TEMPERATURE SETPOINT - FIXED:
THE RTU COMPRESSORS SHALL BE STAGED ON AND THE MODULATING HOT GAS VALVE (RAWAL DEVICE) SHALL MODULATE HOT GAS BY-PASS TO MAINTAIN A LEAVING AIR TEMPERATURE SETPOINT AT 54'F. (ADJUSTABLE). THE FIRST STAGE COMPRESSOR AND CONDENSER FAN SHALL OPERATE CONTINUOUSLY.

SAFETIES:
WHEN REFRIGERANT LIQUID LINE TEMPERATURE DROPS BELOW 87 DEGREES F, STRAP-ON SENSOR, CYCLE THE CONDENSER FAN OFF.
WHEN REFRIGERANT SUCTION LINE TEMPERATURE DROPS BELOW 32 DEGREES F, STRAP-ON SENSOR, SHUT DOWN STAGE # 1 COMPRESSOR.

UNOCCUPIED MODE:
WHEN INDEXED TO UNOCCUPIED MODE BY THE PROGRAMMABLE DIGITAL CONTROLLER, ALL OUTDOOR AIR DAMPERS AND EXHAUST AIR DAMPERS SHALL CLOSE. THE RTU SUPPLY FAN SHALL STOP. THE ENERGY RECOVERY UNIT SHALL SHUT DOWN. THE SPACE HUMIDITY SHALL CONTINUE TO BE MONITORED. WHEN THE SPACE HUMIDITY RISES ABOVE 60% (ADJUSTABLE), THE RTU SHALL BE CYCLED ON AND OFF PER THE MODE "1" SEQUENCE TO HELP MAINTAIN THE SPACE HUMIDITY. WHEN THE RTU IS ENERGIZED VIA A LOCAL OVERRIDE BUTTON, THE SYSTEM SHALL OPERATE IN THE MODE "1" SEQUENCE FOR TWO HOURS (ADJUSTABLE).

DEHUMIDIFICATION MODE:
THE ROOFTOP UNIT SHALL BE PROVIDED WITH HOT GAS REHEAT TO PROVIDE NEUTRAL AIR, AT 74'F INSTEAD OF 54'F, TO THE PLENUM DURING DEHUMIDIFCATION MODE.

WHEN THE HUMIDITY LEVEL IN THE SPACE RISES ABOVE THE SET POINT (55% R.H. ADJUSTABLE.) THE UNIT SHALL BE PLACED IN DEHUMIDIFICATION MODE. DURING THIS MODE THE COOLING COIL LEAVING AIR TEMPERATURE SHALL REMAIN AT 51-53'F AND THE UNIT LEAVING AIR TEMPERATURE SHALL BE RESET TO 75'F. ONCE THE HUMIDITY LEVEL DROPS TO BELOW SET POINT (ADJ.), THE UNIT LEAVING AIR TEMPERATURE SHALL BE SET BACK TO THE NORMAL 54'F L.A.T..

LOW AMBIENT OPERATION (HEATING MODE):
WHEN THE OUTSIDE AIR TEMPERATURE DROPS BELOW 62'F (ADJ.) THE ELECTRIC HEAT SHALL BE COMMANDED ON AND THE ROOFTOP UNIT SHALL BE SET TO PROVIDE A LEAVING AIR TEMPERATURE OF +20'F (ADJ.) ABOVE THE ENTERING AIR TEMPERATURE.

ORTU-1 - SEQUENCE OF OPERATION

GENERAL CONDITION:
COOLING SETPOINT: 75 DEGREES F
HEATING SETPOINT: 68 DEGREES F

OCCUPIED MODE "1" (FOR TYPICAL OFFICE HOURS):
WHEN INDEXED TO OCCUPIED MODE "1" BY THE BUILDING ENERGY MANAGEMENT SYSTEM (EMS), THE AIR HANDLING UNITS SHALL BE COMMANDED ON. THE OUTDOOR CONDENSING UNITS SHALL BE STAGED ON INTO A COOLING ONLY OPERATION. THE INVERTER COMPRESSORS SHALL MODULATE TO MEET INTERIOR DEMAND. THE AIR HANDLING UNITS SHALL START AT THEIR LOWEST SPEED AND RUN CONTINUOUSLY DURING OCCUPIED MODE "1". UPON A CALL FOR COOLING THE AIR HANDLING UNIT SHALL RAMP UP TO DESIGN SPEED AND THE MANUFACTURER'S CONTROL SEQUENCE SHALL TAKE OVER FROM HERE.

OCCUPIED MODE "2" (FOR 24 HOURS AND WEEKEND OPERATION):
WHEN INDEXED TO OCCUPIED MODE "2" BY THE BUILDING ENERGY MANAGEMENT SYSTEM (EMS), THE AIR HANDLING UNITS ASSOCIATED WITH CU-1-1 SHALL BE COMMANDED ON. THE OUTDOOR CONDENSING UNIT CU-1-1 SHALL BE STAGED ON INTO A COOLING ONLY OPERATION. THE AIR HANDLING UNITS SHALL START AT THEIR LOWEST SPEED AND RUN CONTINUOUSLY DURING OCCUPIED MODE "2". UPON A CALL FOR COOLING THE AIR HANDLING UNIT SHALL RAMP UP TO DESIGN SPEED AND THE MANUFACTURER'S CONTROL SEQUENCE SHALL TAKE OVER FROM HERE. ALL OTHER AIR HANDLING UNITS ASSOCIATED WITH CU-1-2 AND CU-2-1 SHALL BE PLACED INTO UNOCCUPIED MODE ALONG WITH CU-1-2 AND CU-2-1.

HEATING MODE:
WHEN THE SPACE TEMPERATURE OF 60%+ OF A SET OF AIR HANDLING UNITS ASSOCIATED WITH A GIVEN CONDENSING UNIT DROPS BELOW 68'F (ADJ.) THE ASSOCIATED CONDENSING UNIT SHALL BE PLACED INTO HEATING MODE. THE AIR HANDLING UNIT CONTROLS SEQUENCING SHALL SHIFT TO HEATING MODE. WHEN THE SPACE TEMPERATURE OF 60%+ OF A SET OF AIR HANDLING UNITS RISES ABOVE 75'F (ADJ.) THE ASSOCIATED CONDENSING UNIT SHALL BE PLACED BACK INTO COOLING MODE. PROVIDE MANUAL OVERRIDE CAPABILITIES IN THE BMS FOR THE HEATING/COOLING MODE OVERRIDE.

RUN CONDITIONS - SCHEDULED:
THE UNIT SHALL RUN IN BASED UPON AN OPERATOR ADJUSTABLE SCHEDULE. MANUAL OVERRIDE CAPABILITIES SHALL BE PROVIDED TO PLACE A SYSTEM INTO OCCUPIED MODE.

EMERGENCY SHUTDOWN:
THE UNIT SHALL SHUT DOWN AND GENERATE AN ALARM UPON RECEIVING AN EMERGENCY SHUTDOWN SIGNAL.

OPTIMAL START:
THE UNIT SHALL START PRIOR TO SCHEDULED OCCUPANCY BASED ON THE TIME NECESSARY FOR THE ZONES TO REACH THEIR OCCUPIED SETPOINTS. THE START TIME SHALL AUTOMATICALLY ADJUST BASED ON CHANGES IN OUTSIDE AIR TEMPERATURE AND ZONE TEMPERATURES.

SUPPLY FAN:
THE AIR HANDLING UNIT SUPPLY FANS SHALL RUN ANYTIME THE CONDENSING UNIT IS COMMANDED TO RUN, UNLESS SHUTDOWN ON SAFETIES. TO PROVIDE VENTILATION AIR FROM THE PLENUM. THE SUPPLY FAN SHALL RUN AT A FACTORY MINIMUM SETPOINT WHEN SPACE TEMPERATURE IS SATISFIED AND TXV'S ARE CLOSED, WHICH SHOULD BE AT A MAXIMUM 50% OF DESIGN AIRFLOW.

SAFETIES:
WHEN REFRIGERANT LIQUID LINE TEMPERATURE DROPS BELOW 87 DEGREES F, STRAP-ON SENSOR, CYCLE THE CONDENSER FAN OFF.
WHEN REFRIGERANT SUCTION LINE TEMPERATURE DROPS BELOW 32 DEGREES F, STRAP-ON SENSOR, SHUT DOWN STAGE # 1 COMPRESSOR.

UNOCCUPIED MODE:
WHEN INDEXED TO UNOCCUPIED MODE BY THE PROGRAMMABLE DIGITAL CONTROLLER, THE CONDENSING UNIT SHALL SHUT DOWN. THE AIR HANDLING UNITS SHALL SHUT DOWN. THE SPACE TEMPERATURE SHALL CONTINUE TO BE MONITORED. WHEN THE SPACE TEMPERATURE RISES ABOVE 80'F (ADJUSTABLE), THE CONDENSING UNIT SHALL BE STAGED ON. THE AIR HANDLING UNIT ASSOCIATED WITH THE HIGH TEMPERATURE ZONE SHALL BE CYCLED ON TO MAINTAIN THE SPACE TEMPERATURE (SEE VRF AHU SEQUENCE). WHEN ALL SPACE TEMPERATURES ARE SATISFIED THE CONDENSING UNIT SHALL CYCLE OFF AND REMAIN OFF FOR A MINIMUM OF 15 MINUTES.

VARIABLE REFRIGERANT FLOW SYSTEM - SEQUENCE OF OPERATION

BUILDING OPERATIONAL MODES SCHEDULE

AREA SERVED	ORTU-1 SUPPLY	ORTU-1 EXHAUST	CU-1-1	CU-1-2	CU-2-1	OMD-1	EMD-1	OMD-2	EMD-2	OMD-3	EMD-3
MODE "1"	3200	2600	OCCUPIED	OCCUPIED	OCCUPIED	OPEN	OPEN	OPEN	OPEN	OPEN	OPEN
MODE "2"	1500	900	OCCUPIED	UNOCCUPIED	UNOCCUPIED	OPEN	OPEN	CLOSED	CLOSED	CLOSED	CLOSED
UNOCCUPIED MODE	0	0	UNOCCUPIED	UNOCCUPIED	UNOCCUPIED	CLOSED	CLOSED	CLOSED	CLOSED	CLOSED	CLOSED

NOTES:
1.

RECORD SET
The information presented on this drawing is diagrammatic and is presented for general information purposes and should not be relied on for accuracy of dimensions, details and locations. Actual and exact conditions if required should be determined in the field.

4

L:\2009--Jobs\609036--Palmetto Bay Municipal Center\CAD--MEP\Sheets M6.1.dwg 8/11/2010 5:35:07 PM jpred.hunt

TLC ARCHITECTURE
800 Fairway Drive.
Suite 250
Deerfield Beach, Florida 33441
Phone: 954-418-9096
Fax: 954-418-9296
www.tlc-engineers.com
© Copyright 2007 TLC Engineering for Architecture, Inc.
EB #0000015 TLC No: 609036

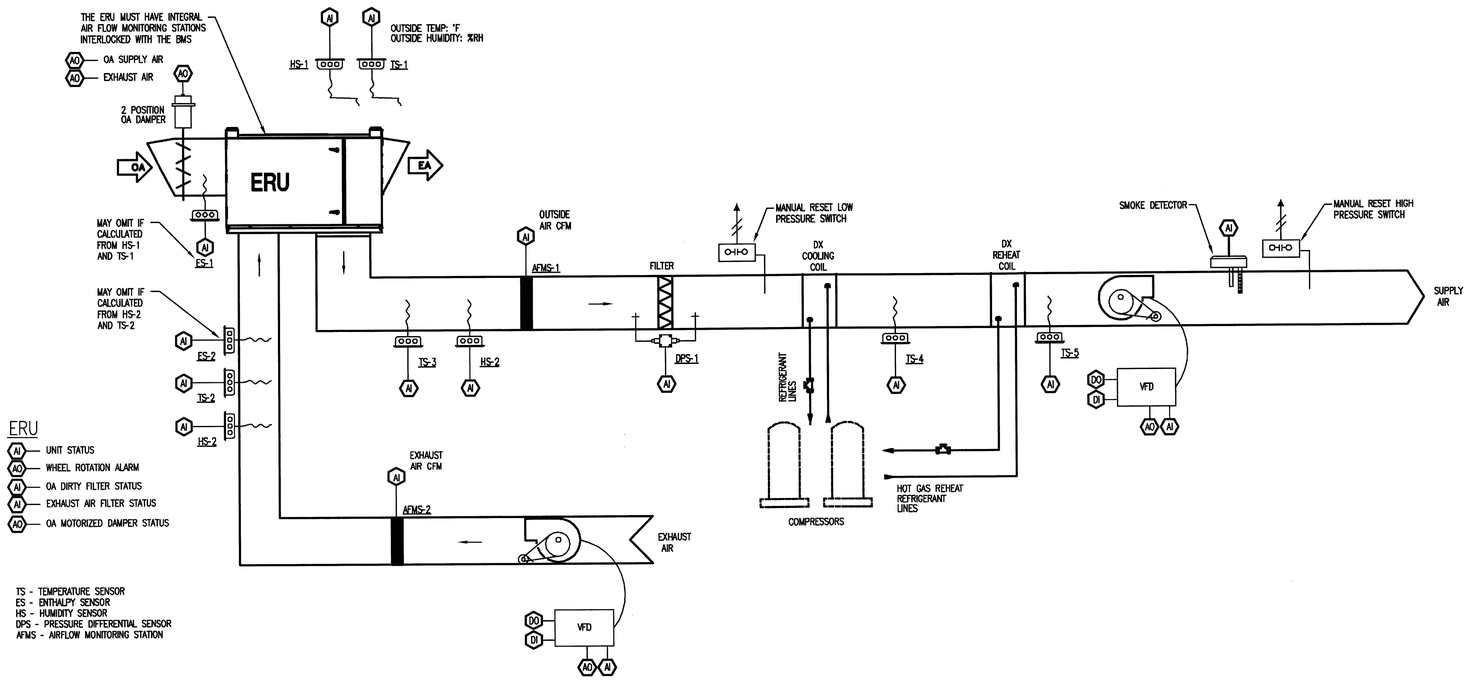

ORTU - 1 WITH ENERGY RECOVERY UNIT (ERU)

No Scale

1

4

RECORD SET

The information presented on this drawing is diagrammatic and is presented for general information purposes and should not be relied on for accuracy of dimensions, details and locations. Actual and exact conditions if required should be determined in the field.

JMWA ARCHITECTS

STEVEN E. MYOTT AIA
JAMES R. WILLIAMS AIA
RODOLFO ACEVEDO AIA

949 CLINT MOORE ROAD
BOCA RATON, FLORIDA 33487
TEL 561 997 9997
FAX 561 997 1610

WWW.JMWA.NET

PALMETTO BAY VILLAGE HALL

9705 E. Hibiscus St., Palmetto Bay, Florida

Master Builders of South Florida, Inc.
1400 E. Oakland Park Blvd. Suite 210
Oakland Park, FL 33334

Alvaro Gonzalez, P.E.
Florida License #69003

PROJECT NO. 609036
DESIGNED BY: TLC
DRAWN BY: TLC
CHECKED BY: TLC

SUBMITTALS:

50% REVIEW	10.30.2009
PERMIT REVIEW	11.20.2009
BUILDING PERMIT	03.03.2010

REVISIONS:

4 DESIGN CHANGES 8/11/10

HVAC CONTROLS

M6.2

© 2009 JMWA ARCHITECTS, INCORPORATED ALL RIGHTS RESERVED. NO PART OF THESE IDEAS, PLANS OR DESIGNS MAY BE REPRODUCED, COPIED OR UTILIZED GRAPHICALLY IN ANY FORM WHATSOEVER, WITHOUT THE EXPRESSED WRITTEN CONSENT OF JMWA ARCHITECTS INCORPORATED AND ITS BOARD OF DIRECTORS.

L:\2009-Jobs\609036-Palmetto Bay Municipal Center\CAD-MEP\Sheets M6.2.dwg 8/11/2010 5:35:30 PM jared.hunt

ELECTRICAL SYMBOL LEGEND

BASIC MATERIALS

SYMBOL	DESCRIPTION
S_a	SINGLE POLE SWITCH. 20A RATED TYPICAL FOR ALL SWITCHES (SUBSCRIPT INDICATES ITEM CONTROLLED)
S_3	THREE-WAY SWITCH
S_4	FOUR-WAY SWITCH
S_P	SINGLE POLE SWITCH WITH PILOT LIGHT
S_{WP}	SINGLE POLE SWITCH WITH IN USE WEATHERPROOF COVER
S_{WPL}	SINGLE POLE SWITCH WITH WEATHERPROOF LOCKING COVER
S_K	SINGLE POLE KEY SWITCH
S_{3K}	THREE-WAY KEY SWITCH
S_L	SINGLE POLE SWITCH WITH SECURITY LOCKING KEY
S_R	SWITCH WITH INTEGRAL DROP OUT RELAY
S_M	MANUAL MOTOR STARTER WITH OVERLOAD HEATERS
S_{MP}	MANUAL MOTOR STARTER WITH OVERLOAD HEATERS AND PILOT LIGHT
S_D	DIMMER SWITCH. LEVITON MNX20-7LW OR APPROVED EQUAL. (1500 WATTS UNLESS OTHERWISE INDICATED)
	DUPLEX RECEPTACLE. NEMA 5-20R TYPICAL FOR ALL RECEPTACLES U.O.N. MICR = MICROWAVE PROJ = PROJECTOR REF = REFRIGERATOR PS = PROJECTION SCREEN VM = VENDING MACHINE ICE = ICE MAKER DISH = DISHWASHER COP = COPIER
	FLOOR OUTLET BOX AND DUPLEX RECEPTACLE WITH APPROPRIATE FLANGE.
	FLOOR OUTLET BOX WITH DUPLEX RECEPTACLE AND ONE COMBINATION W/ VOICE/DATA OUTLET
	FLOOR OUTLET BOX WITH TWO DUPLEX RECEPTACLES AND ONE COMBINATION W/ VOICE/DATA OUTLET
PP	POWER POLE TOP FEED WITH EMPTY CEILING BOX FOR COMMUNICATIONS.
	CEILING MOUNTED DUPLEX RECEPTACLE.
	DUPLEX RECEPTACLE MOUNTED ABOVE COUNTER
EWC	GFI RECEPTACLE (EWC DENOTES ELECTRIC WATER COOLER. COORDINATE WITH EWC INSTALLER FOR MOUNTING HEIGHT)
WP	GFI RECEPTACLE. WP DENOTES IN USE WEATHERPROOF COVER.
	GFI RECEPTACLE MOUNTED ABOVE COUNTER
	TWO DUPLEX RECEPTACLES WITH COMMON COVER
	TWO DUPLEX RECEPTACLES WITH COMMON COVER MOUNTED ABOVE COUNTER
	SPECIAL PURPOSE RECEPTACLE, RATING AS NOTED
	GROUND BAR
J	JUNCTION BOX
J	JUNCTION BOX- WALL MOUNTED
J	JUNCTION BOX- FURNITURE SYSTEM FEED
SS C3	SURGE SUPRESSOR C3 = SERVICE ENTRANCE DEVICE B3 = DISTRIBUTION BOARD DEVICE A3 = PANELBOARD DEVICE
ST	SHUNT-TRIP BUTTON - FLUSH MOUNTED UNLESS OTHERWISE NOTED NEMA 3R FOR EXTERIOR LOCATIONS
	MAGNETIC MOTOR STARTER OR CONTACTOR SIZE AS NOTED
5	MOTOR CONNECTION, NUMBER DENOTES HORSEPOWER
VFD	VARIABLE FREQUENCY DRIVE
DDC	DIRECT DIGITAL CONTROL PANEL
T	TRANSFORMER

BASIC MATERIALS CONT.

SYMBOL	DESCRIPTION
30AR / NF	NON-FUSED DISCONNECT SWITCH, SIZE & # OF POLES NF DENOTES NON-FUSED AR DENOTES AMP RATING OF SWITCH
30AR / 20AF	FUSED DISCONNECT AR DENOTES AMP RATING OF SWITCH AF DENOTES AMP FUSE SIZE
MCP SIZE, 30/3, 0, 3R	# OF POLES COMBINATION MAGNETIC MOTOR STARTER, SIZE & # OF POLES 3 POLE UNLESS OTHERWISE NOTED ENCLOSURE NEMA RATING. NEMA STARTER SIZE
	BRANCH CIRCUIT PANELBOARD, UNDER 250 VOLTS, SURFACE MOUNTED
	BRANCH CIRCUIT PANELBOARD, UNDER 250 VOLTS, FLUSH MOUNTED
	BRANCH CIRCUIT PANELBOARD, OVER 250 VOLTS, SURFACE MOUNTED
	BRANCH CIRCUIT PANELBOARD, OVER 250 VOLTS, FLUSH MOUNTED
	BRANCH CIRCUIT CONDUIT CONCEALED ABOVE CEILING OR IN WALL. CONDUIT SHALL INCLUDE PHASE, NEUTRAL AND GROUND CONDUCTORS AS REQUIRED FOR CIRCUITS (UNLESS OTHERWISE NOTED).
	BRANCH CIRCUIT CONDUIT CONCEALED IN SLAB, UNDERGROUND OR UNDER FLOOR.
	GROUND OR GROUND ROD AS NOTED
UP	CONDUIT TURNING UP
DN	CONDUIT TURNING DOWN
	CONDUIT STUB
	CONDUIT CONTINUED
	FLEXIBLE CONDUIT
	NEW
OS	CEILING MOUNTED DUAL TECHNOLOGY OCCUPANCY SENSOR. GREENGATE OMC-DT-2000-R OR APPROVED EQUAL.
S_{OS}	WALL MOUNTED OCCUPANCY SENSOR SWITCH. GREENGATE OSW-DT OR APPROVED EQUAL.
OS H	CEILING MOUNTED ULTRASONIC HALLWAY OCCUPANCY SENSOR. GREENGATE ODC-U-0100-H-R OR APPROVED EQUAL.

LIGHTING

SYMBOL	DESCRIPTION
	FLUORESCENT STRIP FIXTURE
FIXTURE DESIGNATION — A	FLUORESCENT FIXTURE
CIRCUIT NUMBER — 2 a	LOWER CASE LETTER INDICATES CONTROL CIRCUIT SWITCH LEG
	DIAGONAL SHADING DENOTES EMERGENCY LIGHT FIXTURE PROVIDED WITH EMERGENCY BATTERY PACK (TYPICAL)
	FLUORESCENT WALL MOUNTED FIXTURE.
	HID, FLUORESCENT, OR INCANDESCENT FIXTURE
	EXIT LIGHT FIXTURE DIRECTION ARROWS AS SHOWN (SHADED QUADRANT INDICATES FACE(S) OF FIXTURE)
	WALL MOUNTED EXIT LIGHT FIXTURE
	EXTERIOR LIGHT FIXTURE WITH ARMS AS SHOWN ON DRAWINGS
	COVE/PERIMETER FIXTURE FLUORESCENT OR LED.
	FLUORESCENT WALL WASH FIXTURE
	CEILING MOUNTED EMERGENCY LIGHT FIXTURE

FIRE ALARM/DETECTION SYSTEM

SYMBOL	DESCRIPTION
F	MANUAL PULL STATION
	CEILING SMOKE DETECTOR, PHOTO-ELECTRIC TYPE UNLESS OTHERWISE NOTED E = ELEVATOR WITH RECALL CONTACTS I = IONIZATION
	DUCT SMOKE DETECTOR R = RETURN S = SUPPLY
R	SUPERVISED CONTROL RELAY
R	DUCT SMOKE REMOTE ALARM INDICATING LAMP, W/ TEST SWITCH, WALL MOUNTED 72" AFF
RT	REMOTE INDICATING LAMP FIRE ALARM WITH TEST SWITCH WALL MOUNTED 72" AFF
F XXCD	COMBINATION AUDIBLE/VISUAL HORN STROBE NOTIFICATION DEVICE CD = CANDELA RATING (75CD U.O.N.)
F	VISUAL SIGNALING UNIT, WALL MOUNTED (75CD U.O.N.)
TS	SPRINKLER TAMPER SWITCH CONNECTION
FS	SPRINKLER WATERFLOW SWITCH CONNECTION
H	ELECTROMAGNETIC DOOR HOLD OPEN DEVICE CONNECTION TO CLOSURE/ HOLDER
H	CEILING HEAT DETECTOR 135° F UNLESS OTHERWISE INDICATED.
FACP	FIRE ALARM CONTROL PANEL
FAAP	FIRE ALARM ANNUNCIATOR PANEL - FLUSH MOUNTED
S XXCD	COMBINATION AUDIBLE (SPEAKER) /VISUAL NOTIFICATION DEVICE CD = CANDELA RATING (75cd U.O.N.)
SS XXCD	SPEAKER NOTIFICATION DEVICE, WALL MOUNTED CD = CANDELA RATING (75cd U.O.N.)

LIGHTNING PROTECTION

SYMBOL	DESCRIPTION
	REBAR BOND PROVIDED BY BONDED LIGHTNING PROTECTION AND INSTALLED BY THE ELECTRICAL CONTRACTOR.
	NO. LP-C120 COPPER CABLE, U.L. LABELED, 29 ST., 17 GA., 192 LBS./1,000 FT., 59,450 CM. (#2 AWG).
	NO. LP-C151 COPPER SECONDARY BONDING WIRE, 80 LBS./1,000 FT., 26,240 CM. (#6 AWG).
	AIR TERMINAL
	THRU-ROOF LOCATION
	THRU-WALL LOCATION
	GROUND ROD LOCATION

ONE LINE DIAGRAM SYMBOL LEGEND

SYMBOL	DESCRIPTION
277/480V, 3Φ, 4W XXX AMPS	SWITCHBOARD OR DISTRIBUTION BOARD
	MAIN BREAKER PANEL
	MAIN LUG ONLY PANEL
	HORSE POWER
5	MOTOR
	GROUND ELECTRODE & GROUNDING ELECTRODE CONDUCTOR
T-X XX KVA 480V-120/208V	STEP-DOWN TRANSFORMER
VFD	VARIABLE FREQUENCY DRIVE
M	UTILITY COMPANY METER W/ CT'S
SS C3	SURGE SUPRESSOR C3 = SERVICE ENTRANCE DEVICE B3 = DISTRIBUTION BOARD DEVICE A3 = PANELBOARD DEVICE
	CIRCUIT BREAKER
	SUB-PANEL BREAKER
X (X AIC)	ENCLOSED CIRCUIT BREAKER

SCOPE OF WORK

THE GENERAL SCOPE OF WORK INVOLVES CONSTRUCTION OF TWO STORY OFFICE BUILDING AND SITE PLAN, INCLUDING COMPLETE POWER, LIGHTING, SIGNALING, AND FIRE ALARM SYSTEM.

FLORIDA BUILDING CODE (FBC-13) NOTE

1. PROVIDE AS BUILTS, OEM MANUALS WITHIN 30 DAYS C.O.O. TO OWNER.
2. CONDUCTORS HAVE BEEN PROVIDED FOR MAXIMUM VOLTAGE DROP OF 3% BRANCH CIRCUIT, 2% FEEDERS.

UTILITY CONTACTS

1. FP&L - JEANNETE CLOVER (954) 717-2089
2. AT&T - VINCE LOMAJAN (954) 476-2810
3. COMCAST - CHARLIE FOG (954) 517-8912

ELECTRICAL DRAWING INDEX

SHEET	DESCRIPTION	ISSUED
E0.1	ELECTRICAL LEGEND	Yes
E0.2	ELECTRICAL GENERAL NOTES	Yes
E1.1	ELECTRICAL SITE PLAN	Yes
E2.1	LIGHTING FIRST FLOOR PLAN	Yes
E2.2	LIGHTING SECOND FLOOR PLAN	Yes
E3.1	POWER FIRST FLOOR PLAN	Yes
E3.2	POWER SECOND FLOOR PLAN	Yes
E3.3	ELECTRICAL ENLARGED PLANS	Yes
E4.1	FIRE ALARM FIRST FLOOR PLAN	Yes
E4.2	FIRE ALARM SECOND FLOOR PLAN	Yes
E5.1	POWER ROOF PLAN	Yes
E6.1	ELEC ENLARGED PLANS	Yes
E6.2	SYSTEMS RISER DIAGRAMS	Yes
E6.3	SYSTEMS RISER DIAGRAMS	Yes
E7.1	ELECTRICAL RISER DIAGRAM	Yes
E7.2	SYSTEMS RISER DIAGRAM	Yes
E7.3	SYSTEMS RISER DIAGRAM	Yes
E7.4	ELECTRICAL DETAILS	Yes
E7.5	ELECTRICAL DETAILS	Yes
E7.6	ELECTRICAL DETAILS	Yes
E8.1	ELECTRICAL SCHEDULES	Yes
E8.2	ELECTRICAL PANEL SCHEDULES	Yes
E8.3	ELECTRICAL PANEL SCHEDULES	Yes

NOTE: SOME SYMBOLS SHOWN ON THIS LEGEND MAY NOT PERTAIN TO THIS PROJECT.

RECORD SET

The information presented on this drawing is diagrammatic and is presented for general information purposes and should not be relied on for accuracy of dimensions, details and locations. Actual and exact conditions if required should be determined in the field.

TLC ENGINEERING FOR ARCHITECTURE
800 Fairway Drive, Suite 250
Deerfield Beach, Florida 33441
Phone: 954-418-9096
Fax: 954-418-9298
www.tlc-engineers.com
EB #0000015 TLC NO: 609036

© Copyright 2007 TLC Engineering for Architecture, Inc.

JMWA ARCHITECTS
STEVEN E. MYOTT AIA
JAMES R. WILLIAMS AIA
RODOLFO ACEVEDO AIA
949 CLINT MOORE ROAD
BOCA RATON, FLORIDA 33487
TEL 561 997 9997
FAX 561 997 1610
WWW.JMWA.NET

PALMETTO BAY VILLAGE HALL
Palmetto Bay, Florida

Master Builders of South Florida, Inc.
1400 E. Oakland Park Blvd. Suite 210
Oakland Park, FL 33334

Jason A. Stinchcomb, P.E.
Florida License #58184

PROJECT NO. 609036
DESIGNED BY: MEB
DRAWN BY: JAS
CHECKED BY: JAS

SUBMITTALS:
50% REVIEW 10.30.2009
PERMIT REVIEW 11.20.2009
BUILDING PERMIT 03.03.2010

REVISIONS:

ELECTRICAL LEGEND

E0.1

© 2009 JMWA ARCHITECTS, INCORPORATED ALL RIGHTS RESERVED. NO PART OF THESE IDEAS, PLANS OR DESIGNS MAY BE REPRODUCED, COPIED OR UTILIZED GRAPHICALLY IN ANY FORM WHATSOEVER WITHOUT THE EXPRESSED WRITTEN CONSENT OF JMWA ARCHITECTS INCORPORATED AND ITS BOARD OF DIRECTORS.

L:\2009-Jobs\609036-Palmetto Bay Municipal Center\CAD-MEP\Sheets E0.1.dwg 3/8/2010 11:43:14 AM jared.hunt

GENERAL NOTES:

1. THE DRAWINGS AND APPLICABLE SPECIFICATIONS SHALL BE CONSIDERED SUPPLEMENTARY, ONE TO THE OTHER AND ARE CONSIDERED THE "CONTRACT DOCUMENTS." ALL WORKMANSHIP, METHODS, AND/OR MATERIALS DESCRIBED OR IMPLIED BY ONE AND NOT DESCRIBED OR IMPLIED BY THE OTHER SHALL BE PROVIDED, FURNISHED, OR PERFORMED AS IF IT HAD APPEARED IN BOTH SECTIONS. THE TERM "CONTRACT DOCUMENTS" DESCRIBED HEREIN IS NOT LIMITED SOLELY TO THE ELECTRICAL PORTION OF THE DRAWINGS AND SPECIFICATIONS, BUT ENCOMPASSES THE DRAWINGS AND SPECIFICATIONS OF ALL DIVISIONS AS A WHOLE.

2. WHERE A DISCREPANCY OR CONFLICT IS FOUND BETWEEN ONE DRAWING AND ANOTHER, OR BETWEEN A DRAWING AND APPLICABLE SPECIFICATIONS, THE CONTRACTOR SHALL NOTIFY THE A/E IMMEDIATELY IN WRITTEN FORM. CONTRACTOR SHALL NOT PROCEED WITH THAT PORTION OF THE WORK UNTIL A WRITTEN DIRECTIVE HAS BEEN RETURNED. IN GENERAL, THE MOST STRINGENT REQUIREMENT SHALL GOVERN UNLESS THE DISCREPANCY CONFLICTS WITH APPLICABLE CODES, WHEREIN THE CODE SHALL GOVERN.

3. THE DRAWINGS ARE DIAGRAMMATIC AND ARE NOT INTENDED TO SHOW EVERY DETAIL OF CONSTRUCTION, METHODS, MATERIALS AND EQUIPMENT, OR EXACT LOCATIONS, ROUTING, ETC. THEY INDICATE THE RESULT TO BE ACHIEVED BY THE ASSEMBLAGE OF SEVERAL SYSTEMS FOR A COMPLETE AND OPERATIONAL ELECTRICAL SYSTEM. DO NOT SCALE THE CONTRACT DOCUMENTS. COORDINATE EXACT EQUIPMENT LOCATIONS WITH THE ARCHITECTURAL AND STRUCTURAL PORTIONS OF THE CONTRACT DOCUMENTS, AS WELL AS FIELD CONDITIONS, APPROVED SHOP DRAWINGS, AND WORK OF ALL OTHER DIVISIONS/TRADES.

4. THE TERM "PROVIDE" USED IN THE CONTRACT DOCUMENTS INDICATES THAT THE CONTRACTOR SHALL FURNISH AND INSTALL MATERIALS, INCLUDING ALL COST FOR SHIPPING, UNLOADING, STORAGE, UNPACKING, ERECTION, ANCHORING, ETC. REQUIRED FOR CORRECT INSTALLATION OF A COMPLETE SYSTEM, UNLESS SPECIFICALLY NOTED OTHERWISE.

5. UNLESS NOTED AS EXISTING, ALL ELECTRICAL INDICATED IN THE CONTRACT DOCUMENTS SHALL BE NEW, SHALL BE U.L. LISTED, AND SHALL BEAR A U.L. LABEL. WHERE NO U.L. LABEL OR LISTING IS AVAILABLE THE MATERIAL SHALL BE LISTED WITH AN APPROVED, NATIONALLY RECOGNIZED ELECTRICAL TESTING AGENCY. WHERE NO LABELING OR LISTING IS AVAILABLE FOR MATERIAL, TEST DATA SHALL BE SUBMITTED TO THE A/E AS EVIDENCE THAT THE MATERIAL MEETS OR EXCEEDS AVAILABLE STANDARDS. EQUIPMENT SHALL BE INSTALLED AND USED IN ACCORDANCE WITH ANY INSTRUCTIONS INCLUDED IN THE LISTING OR LABELING.

6. ALL WORK SHALL BE PERFORMED IN ACCORDANCE WITH LATEST EDITION OF THE NATIONAL ELECTRICAL CODE (NEC), ALL APPLICABLE LOCAL CODES, ORDINANCES AND ALL REQUIREMENTS OF THE AUTHORITY HAVING JURISDICTION (AHJ), AS A MINIMUM.

7. THE CONTRACTOR SHALL PROVIDE EXPERIENCED, QUALIFIED, AND RESPONSIBLE SUPERVISION FOR ALL WORK REQUIRED BY THE CONTRACT DOCUMENTS. ALL ELECTRICAL EQUIPMENT SHALL BE INSTALLED IN A NEAT AND WORKMANLIKE MANNER, TO THE SATISFACTION OF THE A/E AND OWNER. ALL WORK SHALL BE PERFORMED IN A FIRST-CLASS MANNER.

8. THE CONTRACTOR SHALL CARRY ALL INSURANCE REQUIRED TO PROTECT AGAINST PUBLIC LIABILITY AND PROPERTY DAMAGE FOR THE DURATION OF THIS PROJECT.

9. THE CONTRACTOR SHALL GUARANTEE ALL MATERIALS AND WORKMANSHIP ARE FREE FROM DEFECTS FOR A PERIOD OF NOT LESS THAN ONE YEAR FROM THE DATE OF FINAL ACCEPTANCE BY THE A/E AND OWNER. THE CONTRACTOR, AT NO ADDITIONAL COSTS, SHALL PROVIDE THE CORRECTION OF ANY DEFECTS INCLUDING REPAIR OR REPLACEMENT.

10. THE CONTRACTOR SHALL INCLUDE ALL COSTS ASSOCIATED WITH PERMITS, LICENSES, FEES, INSPECTIONS, TESTING AND TEMPORARY POWER IN HIS PROPOSAL, UNLESS SPECIFICALLY NOTED OTHERWISE.

11. THE CONTRACTOR SHALL VISIT AND CAREFULLY EXAMINE THOSE PORTIONS OF THE BUILDING AND/OR SITE AFFECTED BY THIS WORK PRIOR TO SUBMITTING PROPOSALS, SO AS TO BECOME FAMILIAR WITH EXISTING CONDITIONS AND DIFFICULTIES THAT MAY AFFECT EXECUTION OF THE WORK. SUBMISSION OF A PROPOSAL WILL BE CONSTRUED AS EVIDENCE THAT SUCH EXAMINATION HAS BEEN MADE. LATER CLAIMS FOR LABOR, EQUIPMENT AND/OR MATERIALS REQUIRED DUE TO DIFFICULTIES ENCOUNTERED THAT COULD HAVE REASONABLY BEEN OBSERVED BY THE CONTRACTOR WILL NOT BE RECOGNIZED,

12. THE CONTRACTOR SHALL COORDINATE ALL PROJECT SCHEDULING AND PHASING REQUIREMENTS WITH A/E AND OWNER PRIOR TO SUBMITTING PROPOSAL. THIS PROJECT MAY REQUIRE PHASING SEQUENCES AND POTENTIAL PREMIUM TIME WORK AND ALL COSTS FOR SUCH SHALL BE INCLUDED IN THE CONTRACTOR'S PROPOSAL. THE CONTRACTOR SHALL PROVIDE ADEQUATE WORK FORCE EQUIPMENT, AND SHALL WORK SUCH HOURS INCLUDING PREMIUM TIME AS MAY BE REQUIRED IN ORDER TO ADHERE TO THE PROJECT SCHEDULE. ADDITIONALLY, THE CONTRACTOR SHALL ENSURE THAT LONG-LEAD ITEMS DO NOT IMPACT THE PROJECT'S SCHEDULE OR PHASING.

13. MC CABLE SHALL BE ALLOWED FOR BRANCH CIRCUITING WHERE APPROPRIATELY DERATED FOR VOLTAGE DROP.

14. THE CONTRACTOR SHALL COORDINATE THE EXACT REQUIREMENTS WITH ALL LOCAL UTILITY COMPANIES (ELECTRIC, TELEPHONE, CABLE TV, ETC.) AND INCLUDE ALL COSTS FOR PROVIDING TEMPORARY AND PERMANENT SERVICES REQUIRED FOR THIS PROJECT IN HIS BID. CONTRACTOR'S PROPOSAL SHALL INCLUDE, BUT IS NOT LIMITED TO: EXCAVATION, RACEWAYS, BACKFILL, EQUIPMENT, EQUIPMENT PADS, BACKBOARDS, METERS, GROUNDING AND IMPACT FEES.

15. THE CONTRACTOR SHALL INCLUDE ALL COST FOR THE PROPER STORAGE, TRANSPORT, DISPOSAL, AND/OR RECYCLING OF ALL WASTE MATERIALS GENERATED BY THIS WORK. CONTRACTOR SHALL COMPLY WITH ALL RULES, REGULATIONS AND GUIDELINES THAT APPLY. REMOVE DEBRIS, RUBBISH, ETC. RESULTING FROM THIS WORK FROM THE SITE DAILY.

16. IF HAZARDOUS MATERIALS ARE ENCOUNTERED, THE CONTRACTOR SHALL COMPLY WITH ALL APPLICABLE RULES, REGULATIONS AND GUIDELINES CONCERNING REMOVAL, HANDLING, DISPOSAL, AND PROTECTION AGAINST ENVIRONMENTAL EXPOSURE OR POLLUTION. CONTRACTOR SHALL PROVIDE DOCUMENTATION OF SAID COMPLIANCE.

17. CONDUCT WORK OPERATIONS AND DEBRIS REMOVAL IN A MANNER THAT ENSURES MINIMUM INTERFERENCE WITH NORMAL BUSINESS OPERATIONS, TRAFFIC, PARKING, ETC. ONGOING IN ADJACENT OCCUPIED SPACES OR FACILITIES. PROVIDE ALL THAT IS REQUIRED TO EFFECTIVELY PROTECT SURROUNDING OCCUPANTS, EQUIPMENT, FINISHES, FURNITURE, ETC. FROM DAMAGE OR EXCESSIVE NOISE THROUGHOUT THE DURATION OF THIS PROJECT. ANY DAMAGE TO SURROUNDING ELEMENTS RESULTING FROM THE CONTRACTOR'S FAILURE TO ADHERE TO THIS REQUIREMENT SHALL BE RESTORED TO ORIGINAL CONDITION BY THE CONTRACTOR, TO THE SATISFACTION OF THE A/E AND OWNER, AT NO ADDITIONAL COSTS. REPORT ANY SUCH OCCURRENCE TO THE A/E AND OWNER IMMEDIATELY AND AWAIT WRITTEN DIRECTION PRIOR TO PROCEEDING WITH REPAIRS.

18. WHERE THE CONTRACTOR ELECTS TO SUBSTITUTE A PRODUCT IN LIEU OF PROVIDING THE DESIGN BASIS, AND SAID SUBSTITUTION IS ACCEPTED BY THE A/E AND OWNER, THE CONTRACTOR SHALL MAKE ALL CORRECTIONS TO THE ELECTRICAL SYSTEM NECESSARY IN ORDER TO ENSURE A COMPLETE AND OPERATIONAL INSTALLATION OF THE EQUIPMENT AT NO ADDITIONAL COSTS. WHERE THE CONTRACTOR'S DECISION TO SUBSTITUTE PRODUCTS RESULTS IN THE NEED FOR THE A/E TO REVISE THE CONTRACT DOCUMENTS, THE A/E RESERVES THE RIGHT TO REQUEST COMPENSATION FROM THE CONTRACTOR FOR SAID SERVICES.

19. CONTRACTOR SHALL MAINTAIN A CURRENT ACCURATE SET OF PROJECT RECORD DOCUMENTS (AS-BUILTS) AT THE SITE THROUGHOUT THE DURATION OF THIS PROJECT. RECORD DRAWINGS SHALL BE UPDATED EACH DAY TO REFLECT THE ACTUAL LOCATIONS, SIZES, ROUTING, ETC. OF EACH PORTION OF THE ELECTRICAL SYSTEM AFFECTED BY THIS WORK. A FINAL SET OF RECORD DOCUMENTS SHALL BE ISSUED TO THE A/E FOR REVIEW AND THEN SUBMITTED TO THE OWNER AT THE CONCLUSION OF THE PROJECT.

20. ALL 120V, 20A BRANCH CIRCUITS OVER 80' -0" IN LENGTH SHALL BE #10 AWG CU. CONDUCTORS MINIMUM TO ACCOMMODATE VOLTAGE DROP. WHERE A CONFLICT EXISTS BETWEEN THIS REQUIREMENT AND CONDUCTOR SIZES INDICATED ELSEWHERE IN THE CONTRACT DOCUMENTS, THIS REQUIREMENT SHALL TAKE PRECEDENCE.

21. ALL 277V, 20A BRANCH CIRCUITS OVER 150'-0" IN LENGTH SHALL BE #10 AWG CU. CONDUCTORS MINIMUM TO ACCOMMODATE VOLTAGE DROP. WHERE A CONFLICT EXISTS BETWEEN THIS REQUIREMENT AND CONDUCTOR SIZES INDICATED ELSEWHERE IN THE CONTRACT DOCUMENTS, THIS REQUIREMENT SHALL TAKE PRECEDENCE.

22. IN GENERAL, VOLTAGE DROP FOR ANY BRANCH CIRCUIT SHALL NOT EXCEED 3% VOLTAGE DROP FOR ANY FEEDER SHALL NOT EXCEED 2% WHERE VOLTAGE DROP EXCEEDS THESE REQUIREMENTS, THE CONTRACTOR SHALL INCREASE THE SIZE OF THE CONDUCTORS AND RACEWAY AS REQUIRED.

23. CONTRACTOR SHALL PROVIDE ALL PENETRATIONS THROUGH FLOORS, WALLS, CEILINGS AND ROOFS. COORDINATE LOCATIONS AND SIZES WITH THE ARCHITECTURAL AND STRUCTURAL PORTIONS OF THE CONTRACT DOCUMENTS, FIELD CONDITIONS, AND WORK OF ALL OTHER DIVISIONS/TRADES. ALL OPENINGS SHALL BE SEALED WATERTIGHT.

24. WHERE OPENINGS PENETRATE A FIRE RATED FLOOR, WALL, CEILING, OR ROOF, FIRE STOPPING SHALL BE PROVIDED. MEET ALL REQUIREMENTS FOR THE U.L. ASSEMBLY AND RACEWAYS INVOLVED.

25. CONTRACTOR SHALL INCLUDE ALL COSTS FOR EXCAVATION, SAW CUTTING, DIRECTIONAL BORING, CORE DRILLING, BACKFILL, SURFACE RESTORATION, REPAIR OF FINISHES, ETC. THAT IS REQUIRED IN ORDER TO MEET THE PROJECT REQUIREMENTS.

26. CONTRACTOR SHALL LOCATE, IDENTIFY, PROTECT, AND DOCUMENT ALL UTILITY LINES LOCATED WITHIN THE PROJECT BOUNDARY. FOR LOCATING SITE UTILITIES CONTACT SUNSHINE STATE ONE CALL OF FLORIDA, INC. AT LEAST 48 HOURS BEFORE DIGGING AT 800-432-4770.

27. ALL COMPONENTS OF THE ELECTRICAL SYSTEM LOCATED OUTDOORS OR INDOORS WHERE EXPOSED TO SIGNIFICANT MOISTURE SHALL BE RAIN PROOF TYPE NEMA 3R (MINIMUM), WHETHER INDICATED ON CONTRACT DOCUMENTS OR NOT.

28. ALL COMPONENTS OF THE ELECTRICAL SYSTEM LOCATED IN A HAZARDOUS (CLASSIFIED) LOCATION SHALL BE APPROVED FOR USE IN SAID LOCATION WHETHER INDICATED ON THE CONTRACT DOCUMENTS OR NOT.

29. ALL WORK ON THE ELECTRICAL SYSTEM REQUIRED BY THE CONTRACT DOCUMENTS SHALL BE COORDINATED WITH THE WORK OF ALL OTHER DIVISIONS/TRADES PRIOR TO THE COMMENCEMENT OF WORK. AVOID INTERFERENCES WITH THE PROGRESS OF OTHER DIVISIONS/TRADES.

30. COORDINATE THE EXACT LOCATIONS OF ALL DEVICES (RECEPTACLES, TELECOMMUNICATIONS OUTLETS, FIRE ALARM, SECURITY, ETC.) WITH THE ARCHITECTURAL PLANS, APPROVED MILLWORK SHOP DRAWINGS, AND FIELD CONDITIONS.

31. COORDINATE THE EXACT REQUIREMENTS OF ALL MECHANICAL (DIVISION 15) EQUIPMENT PRIOR TO PREPARING SUBMITTALS (PRODUCT DATA & SHOP DRAWINGS). THE CONTRACTOR SHALL PROVIDE ALL RACEWAYS, CONDUCTORS, BOXES, EQUIPMENT, DISCONNECT SWITCHES, CIRCUIT BREAKERS, CONTROL CIRCUITS, CONTROL TRANSFORMERS, FIRE ALARM SHUTDOWN, ETC. REQUIRED FOR A COMPLETE AND OPERATIONAL DIVISION 15 SYSTEM. VERIFY EXACT LOCATION OF ALL MECHANICAL EQUIPMENT PRIOR TO COMMENCEMENT OF WORK.

32. COORDINATE THE EXACT REQUIREMENTS OF ALL MISCELLANEOUS EQUIPMENT (COPIERS, FAX MACHINES, PRINTERS, KITCHEN APPLIANCES, LAUNDRY APPLIANCES, PROJECTION SCREENS, SHOP TOOLS, MACHINERY, ELEVATORS, ETC.) WITH APPROVED SHOP DRAWINGS, MANUFACTURER'S INSTRUCTIONS, AND EQUIPMENT NAME PLATE AND PROVIDE ALL ELECTRICAL REQUIRED.

33. THE USE OF ALUMINUM CONDUCTORS, RACEWAYS, BOXES, BUSSING, WINDINGS, ETC. ARE PROHIBITED FOR FEEDERS AND CIRCUITS 100A AND LESS. UNLESS SPECIFICALLY NOTED OTHERWISE, OR UNLESS A/E AND OWNER GRANTS WRITTEN PERMISSION.

34. THE USE OF ELECTRICAL NON-METALLIC TUBING (ENT), AND LIQUID TIGHT FLEXIBLE NONMETALLIC CONDUIT (LFNC) ARE PROHIBITED UNLESS SPECIFICALLY NOTED OTHERWISE, OR UNLESS A/E AND OWNER GRANTS WRITTEN PERMISSION.

35. ALL FEEDER AND BRANCH CIRCUIT CONDUCTORS, INCLUDING LOW VOLTAGE SYSTEMS, SHALL BE INSTALLED IN A COMPLETE RACEWAY SYSTEM UNLESS SPECIFICALLY NOTED OTHERWISE.

36. ALL FEEDERS AND BRANCH CIRCUITS SHALL INCLUDE AN EQUIPMENT GROUND CONDUCTOR. RACEWAYS SHALL NOT BE USED AS EQUIPMENT GROUND.

37. PROVIDE A SEPARATE DEDICATED NEUTRAL CONDUCTOR FOR ALL 120-VOLT RECEPTACLE BRANCH CIRCUITS (INCLUDING MODULAR FURNITURE), AND ALL LIGHTING BRANCH CIRCUITS CONTROLLED BY A DIMMER. SHARED NEUTRALS ARE NOT ACCEPTABLE.

38. ALL BRANCH CIRCUITS SHALL BE INSTALLED IN 1/2" TRADE SIZE RACEWAY MINIMUM, INCLUDING FLEXIBLE METAL CONDUIT AND LIQUID TIGHT FLEXIBLE METAL CONDUIT (FMC & LFMC).

39. LIQUID TIGHT FLEXIBLE METAL CONDUIT (LFMC) SHALL NOT BE USED IN LENGTHS THAT EXCEED 6'-0" UNLESS SPECIFICALLY NOTED OTHERWISE, OR UNLESS A/E AND OWNER GRANTS WRITTEN PERMISSION.

40. PANEL SCHEDULES INDICATE DEDICATED HOME RUNS FOR EACH BRANCH CIRCUIT. AT HIS DISCRETION, THE CONTRACTOR MAY GROUP BRANCH CIRCUITS INTO A COMMON HOME RUN WHERE THE HOME RUN DOES NOT EXCEED 3 PHASE CONDUCTORS, 3 NEUTRAL CONDUCTORS, 1 EQUIPMENT GROUND AND 1 ISOLATED GROUND (8 WIRES MAXIMUM). THE CONTRACTOR SHALL INCREASE THE HOME RUN RACEWAY AND CONDUCTOR SIZE AS NECESSARY TO COMPLY WITH THE N.E.C. RACEWAY FILL AND DERATING REQUIREMENTS.

41. PROVIDE PLASTIC LAMINATE NAME TAGS ON EACH SWITCHGEAR, SWITCHBOARD, PANELBOARD, MOTOR CONTROL CENTER, SAFETY SWITCH, CONTROL PANEL, CABINET, AND ANY OTHER MAJOR COMPONENT OF THE ELECTRICAL SYSTEM.

42. PROVIDE TYPED PANEL DIRECTORIES FOR ALL PANELBOARDS. DIRECTORIES SHALL REFLECT TRUE PROJECT AS-BUILT CONDITIONS FOR ALL BRANCH CIRCUITS. DIRECTORIES SHALL INCLUDE WHERE EACH PANEL IS FED FROM. ADDITIONALLY, EACH BRANCH CIRCUIT LOAD DESCRIPTION SHALL INCLUDE THE ROOM NUMBERS FOR EACH LOAD SERVED (i.e. "RECEPTACLES -501,503"). ROOM NUMBERS SHALL BE BASED ON ACTUAL ROOM SIGNAGE INSTALLED IN FIELD. COORDINATE EXACT ROOM NUMBERS WITH A/E AND OWNER PRIOR TO COMPLETION OF PANEL DIRECTORIES.

43. FOR SWITCHGEAR, SWITCHBOARDS, MOTOR CONTROL CENTERS AND OTHER DISTRIBUTION EQUIPMENT THAT DOES NOT HAVE PROVISIONS FOR ATTACHMENT OF A PANEL DIRECTORY, PROVIDE PLASTIC LAMINATE NAME TAGS FOR EACH BRANCH CIRCUIT BREAKER. NAME TAG SHALL INCLUDE LOAD DESCRIPTION AND ROOM NUMBERS FOR EACH LOAD SERVED.

44. ALL DEVICE OUTLET BOXES, JUNCTION BOXES, PULL BOXES, AND RACEWAYS SHALL BE CONCEALED IN CEILINGS, WALLS OR BELOW SLAB UNLESS SPECIFICALLY NOTED OTHERWISE, OR UNLESS A/E AND OWNER GRANTS WRITTEN PERMISSION.

45. PROVIDE A REINFORCED CONCRETE PAD SIZED 4" LARGER IN BOTH DIRECTIONS AND 4" HIGH FOR ALL FREESTANDING, FLOOR MOUNTED ELECTRICAL EQUIPMENT. PROVIDE VIBRATION ISOLATORS AND/OR ANCHORS PER MANUFACTURER'S INSTRUCTIONS.

46. COORDINATE THE EXACT LOCATION OF ALL LIGHTING FIXTURES WITH THE ARCHITECTURAL REFLECTED CEILING PLAN (RCP). WHERE THE QUANTITY OF LIGHTING FIXTURES DIFFER BETWEEN THE ARCHITECTURAL RCP AND THE ELECTRICAL LIGHTING PLAN, THE CONTRACTOR SHALL PROVIDE THE HIGHEST QUANTITY OF FIXTURES WIRED PER THE N.E.C. TO THE LOCAL ROOM/AREA LIGHTING CIRCUIT(S) AND SWITCH(ES).

47. MODIFY ALL LIGHTING FIXTURE CATALOG NUMBERS AS REQUIRED TO COORDINATE WITH THE LIGHTING BRANCH CIRCUIT VOLTAGES INDICATED, AND TO COORDINATE THE CATALOG NUMBERS WITH THE EXACT FIXTURE MOUNTING AND TRIM REQUIRED BY THE CEILING IN WHICH EACH FIXTURE IS BEING INSTALLED.

48. ALL LIGHTING FIXTURES SHALL BE PROVIDED COMPLETE WITH LAMPS.

49. PROVIDE WET LOCATION LISTED FUSING AT EACH EXTERIOR LIGHTING FIXTURE THAT CONTAINS BALLASTS.

50. THE CONTRACTOR SHALL PROVIDE ALL TEMPORARY NORMAL LIGHTING, EMERGENCY LIGHTING, AND EXIT SIGNAGE REQUIRED FOR THE DURATION OF THIS PROJECT.

51. COORDINATE EXACT FOUNDATION AND/OR COMPACTING REQUIREMENTS FOR ALL POLE MOUNTED LIGHTING FIXTURES WITH STRUCTURAL ENGINEER. POLE BASES SHALL MEET OR EXCEED ALL WIND LOAD RATINGS, GUST FACTORS, IMPORTANCE FACTORS, ETC. REQUIRED BY FBC (FLORIDA BUILDING CODE) 2007.

52. PROVIDE PHONE/DATA OUTLET AND 120V RECEPTACLE WITH CIRCUIT IN EACH AHU AREA FOR CONTROLS.

53. COORDINATE/PROVIDE SERVICE OF CONTROLS CONTRACTOR FOR DESIGN AND PROVISION OF ALL CONTROLS.

52. SPACE REQUIREMENTS: ALL EQUIPMENT SHALL CONFORM TO ESTABLISHED SPACE REQUIREMENTS WITHIN THE PROJECT. EQUIPMENT WHICH DOES NOT MEET SPACE REQUIREMENTS, SHALL BE REPLACED AT NO ADDITIONAL EXPENSE TO THE CONTRACT. MODIFICATIONS OF RELATED SYSTEMS SHALL BE MADE AT NO ADDITIONAL EXPENSE TO THE CONTRACT. THE CONTRACTOR SHALL COORDINATE REQUIRED CLEARANCES FOR ALL EQUIPMENT WITH OTHER TRADES PRIOR TO EQUIPMENT PURCHASE AND INSTALLATION. ALL REQUIRED CODE AND MANUFACTURER LISTED CLEARANCES FOR ACCESS, MAINTENANCE, OPERATION, AND SAFETY SHALL BE MAINTAINED.

53. PROVIDE A PERMANENTLY MOUNTED PLACARD ON ALL ELECTRICAL PANELS REQUIRING PERSONAL PROTECTION DUE TO INCIDENT ENERGY PRESENT AS REQUIRED BY NEC RULE 110.16. DETERMINE THE POTENTIAL FOR ARC FLASH HAZARD BY USING ACCEPTED METHODS NOTED IN NFPA 70E.

RECORD SET

The information presented on this drawing is diagrammatic and is presented for general information purposes and should not be relied on for accuracy of dimensions, details and locations. Actual and exact conditions if required should be determined in the field.

TLC ENGINEERING FOR ARCHITECTURE
800 Fairway Drive.
Suite 250
Deerfield Beach, Florida 33441
Phone: 954-418-9096
Fax: 954-418-9296
www.tlc-engineers.com

© Copyright 2007 TLC Engineering for Architecture, Inc.
EB #0000015 TLC NO:609036

JMWA ARCHITECTS
STEVEN E. MYOTT AIA
JAMES R. WILLIAMS AIA
RODOLFO ACEVEDO AIA

949 CLINT MOORE ROAD
BOCA RATON, FLORIDA 33487
TEL 561 997 9997
FAX 561 997 1610

WWW.JMWA.NET

PALMETTO BAY VILLAGE HALL
Palmetto Bay, Florida

Master Builders of South Florida, Inc.
1400 E. Oakland Park Blvd. Suite 210
Oakland Park, FL 33334

Jason A. Stinchcomb, P.E.
Florida License #58184

PROJECT NO. 609036
DESIGNED BY: MEB
DRAWN BY: JAS
CHECKED BY: JAS

SUBMITTALS:
50% REVIEW 10.30.2009
PERMIT REVIEW 11.20.2009
BUILDING PERMIT 03.03.2010

REVISIONS:

ELECTRICAL
GENERAL NOTES

E0.2

© 2009 JMWA ARCHITECTS, INCORPORATED ALL RIGHTS RESERVED. NO PART OF THESE IDEAS, PLANS OR DESIGNS MAY BE REPRODUCED, COPIED OR UTILIZED GRAPHICALLY IN ANY FORM WHATSOEVER WITHOUT THE EXPRESSED WRITTEN CONSENT OF JMWA ARCHITECTS INCORPORATED AND ITS BOARD OF DIRECTORS.

L:\2009-Jobs\609036-Palmetto Bay Municipal Center\CAD-MEP\Sheets E0.2.dwg 3/8/2010 11:43:34 AM jared.hunt

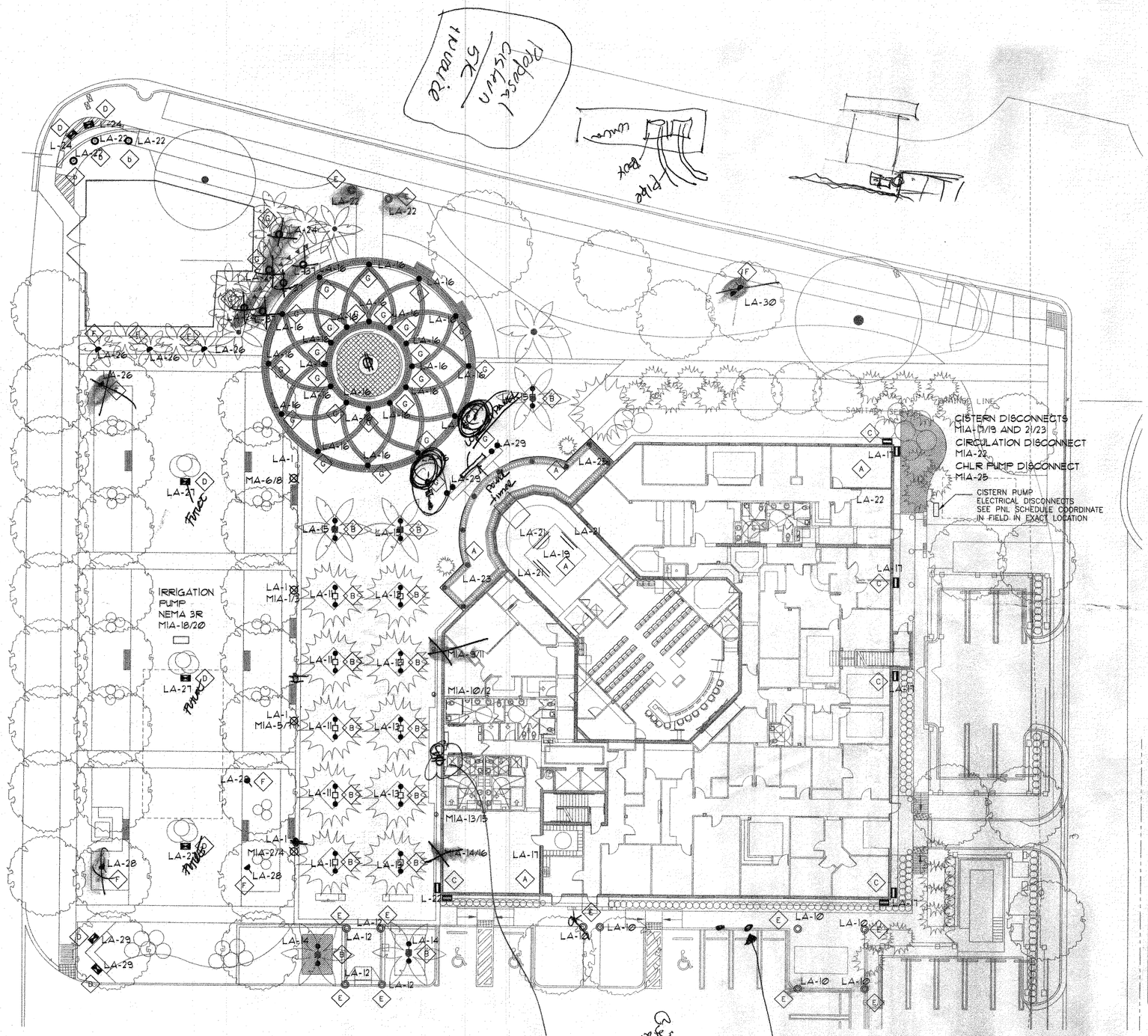

01 ELECTRICAL SITE PLAN

SCALE: 1/16"=1'-0"

LIGHTS	ZONE	DESCRIPTION
	1	BAND DOME TOWER
	2	TREES
	3	WATER FEATURE
	4	LEAVES & RGB
	5	MONUMENTS
	6	BOLLARDS
	7	SCULPTURES
	8	SCENIC LIGHTS

FOR LIGHT FIXTURE TYPE "H" CONTRACTOR SHALL PROVIDE TWO FEEDS ONE FOR THE LIGHT AND ONE FOR THE 30 A. TWIST LOCK RECEPTACLE CITY OF PALMETO BAY SHALL PROVIDE THE REQUIREMENTS FOR PROPER CONECTIO, DEVICE REQUIREMENTS AND SPECIFIC PLUG TO MATCH 30 A RECEPTACLE

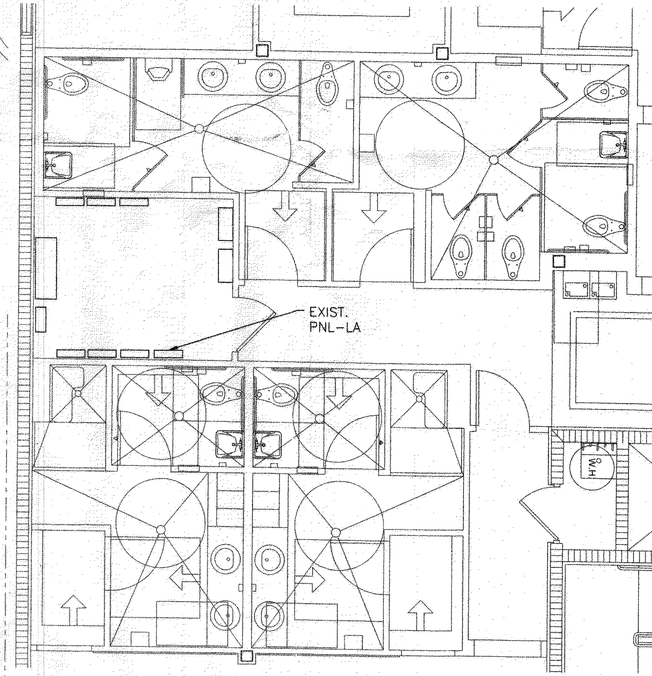

02 PARTIAL ELECTRICAL PLAN

SCALE: 1/4"=1'-0"

RECORD SET

The information presented on this drawing is diagrammatic and is presented for general information purposes and should not be relied on for accuracy of dimensions, details and locations. Actual and exact conditions if required should be determined in the field.

14335 SW 120 street
Suite 214
Miami, Florida, 33186
phone # (305-408-4025)
fax # (305-408-4026)
email-emfengineering@bellsouth.net

APPROVALS/REVISIONS

NOTES:

SITE LIGHTING FOR:
VILLAGE OF PALMETTO BAY - VILLAGE HALL
MASTER BUILDING
9705 EAST HIBISCUS STREET
PALMETTO BAY, MIAMI-DADE COUNTY, FLORIDA

SEAL

ENRIQUE L. FERNANDEZ P.E.
FL. REG. # 21218

PROJECT:

OWNER CONTACT: OWNER TELEPHONE:

SHEET TITLE:

ELECTRICAL SITE PLAN

Job No.
Drawn By:
Date:

Drawing No.
E-1
OF

TLC ENGINEERING FOR ARCHITECTURE
800 Fairway Drive.
Suite 250
Deerfield Beach, Florida 33441
Phone: 954-418-9266
Fax: 954-418-9236
www.tlc-engineers.com
© Copyright 2007 TLC Engineering for Architecture, Inc.
EB #0000015 TLC NO: 609036

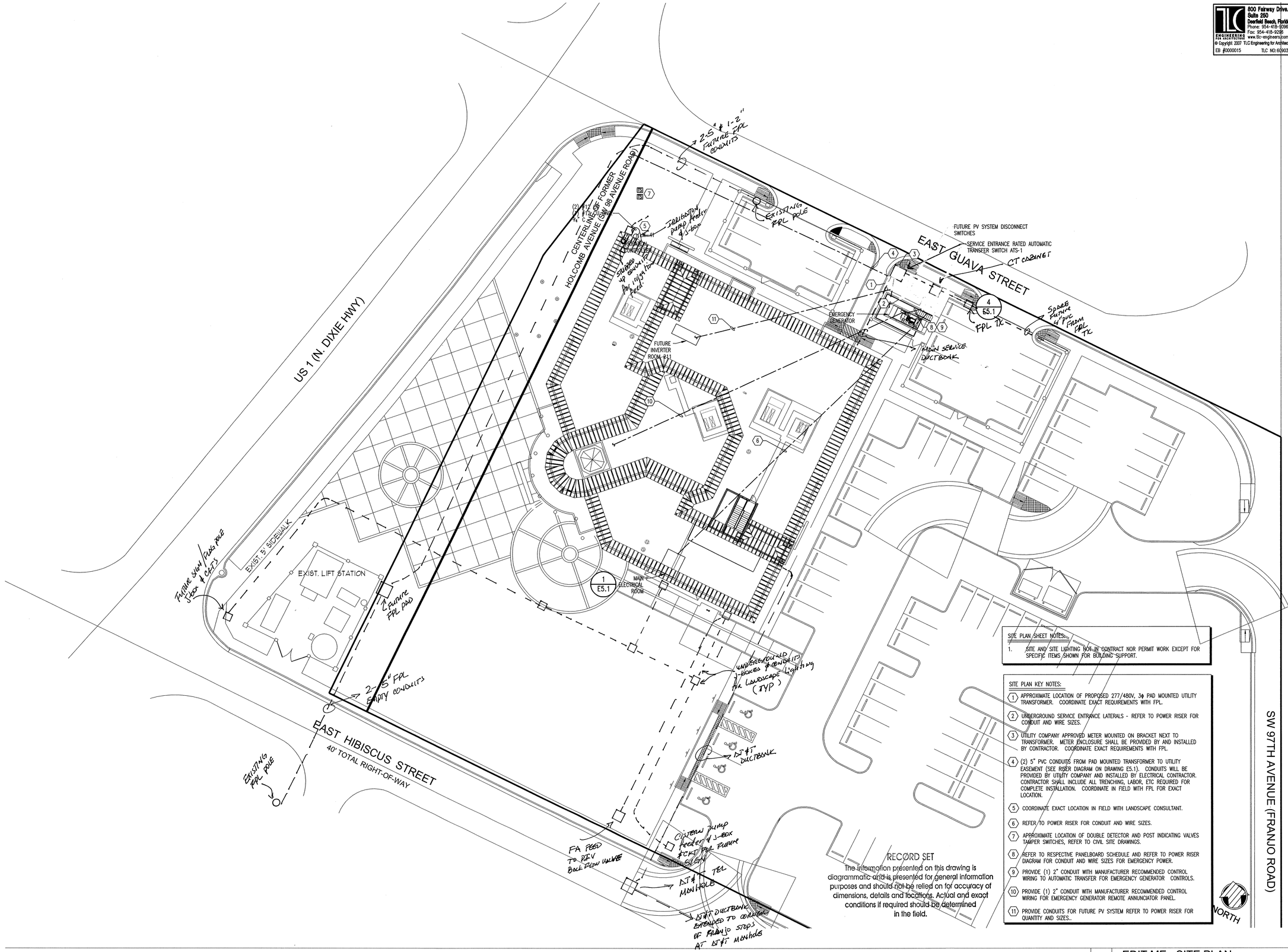

SITE PLAN SHEET NOTES:

1. SITE AND SITE LIGHTING NOT IN CONTRACT NOR PERMIT WORK EXCEPT FOR SPECIFIC ITEMS SHOWN FOR BUILDING SUPPORT.

SITE PLAN KEY NOTES:

1. APPROXIMATE LOCATION OF PROPOSED 277/480V, 3φ PAD MOUNTED UTILITY TRANSFORMER. COORDINATE EXACT REQUIREMENTS WITH FPL.
2. UNDERGROUND SERVICE ENTRANCE LATERALS - REFER TO POWER RISER FOR CONDUIT AND WIRE SIZES.
3. UTILITY COMPANY APPROVED METER MOUNTED ON BRACKET NEXT TO TRANSFORMER. METER ENCLOSURE SHALL BE PROVIDED BY AND INSTALLED BY CONTRACTOR. COORDINATE EXACT REQUIREMENTS WITH FPL.
4. (2) 5" PVC CONDUITS FROM PAD MOUNTED TRANSFORMER TO UTILITY EASEMENT (SEE RISER DIAGRAM ON DRAWING E5.1). CONDUITS WILL BE PROVIDED BY UTILITY COMPANY AND INSTALLED BY ELECTRICAL CONTRACTOR. CONTRACTOR SHALL INCLUDE ALL TRENCHING, LABOR, ETC REQUIRED FOR COMPLETE INSTALLATION. COORDINATE IN FIELD WITH FPL FOR EXACT LOCATION.
5. COORDINATE EXACT LOCATION IN FIELD WITH LANDSCAPE CONSULTANT.
6. REFER TO POWER RISER FOR CONDUIT AND WIRE SIZES.
7. APPROXIMATE LOCATION OF DOUBLE DETECTOR AND POST INDICATING VALVES TAMPER SWITCHES, REFER TO CIVIL SITE DRAWINGS.
8. REFER TO RESPECTIVE PANELBOARD SCHEDULE AND REFER TO POWER RISER DIAGRAM FOR CONDUIT AND WIRE SIZES FOR EMERGENCY POWER.
9. PROVIDE (1) 2" CONDUIT WITH MANUFACTURER RECOMMENDED CONTROL WIRING TO AUTOMATIC TRANSFER FOR EMERGENCY GENERATOR CONTROLS.
10. PROVIDE (1) 2" CONDUIT WITH MANUFACTURER RECOMMENDED CONTROL WIRING FOR EMERGENCY GENERATOR REMOTE ANNUNCIATOR PANEL.
11. PROVIDE CONDUITS FOR FUTURE PV SYSTEM REFER TO POWER RISER FOR QUANTITY AND SIZES..

RECORD SET

The information presented on this drawing is diagrammatic and is presented for general information purposes and should not be relied on for accuracy of dimensions, details and locations. Actual and exact conditions if required should be determined in the field.

NORTH

1 EDIT ME - SITE PLAN
SCALE: 1" = 20'-0"

JMWA ARCHITECTS
STEVEN E. MYOTT AIA
JAMES R. WILLIAMS AIA
RODOLFO ACEVEDO AIA

949 CLINT MOORE ROAD
BOCA RATON, FLORIDA 33487
TEL 561 997 9997
FAX 561 997 1610

WWW.JMWA.NET

PALMETTO BAY VILLAGE HALL

Palmetto Bay, Florida

Master Builders of South Florida, Inc.
1400 E. Oakland Park Blvd. Suite 210
Oakland Park, FL 33334

Jason A. Stinchcomb, P.E.
Florida License #58184

PROJECT NO. 609036
DESIGNED BY: MEB
DRAWN BY: JAS
CHECKED BY: JAS

SUBMITTALS:
50% REVIEW 10.30.2009
PERMIT REVIEW 11.20.2009

NOT FOR CONSTRUCTION

REVISIONS:

ELECTRICAL SITE PLAN

E1.1

© 2009 JMWA ARCHITECTS, INCORPORATED ALL RIGHTS RESERVED. NO PART OF THESE IDEAS, PLANS OR DESIGNS MAY BE REPRODUCED, COPIED OR UTILIZED GRAPHICALLY IN ANY FORM WHATSOEVER WITHOUT THE EXPRESSED WRITTEN CONSENT OF JMWA ARCHITECTS INCORPORATED AND ITS BOARD OF DIRECTORS

L:\2009-Jobs\609036-Palmetto Bay Municipal Center\CAD-MEP\Sheets E1.1.dwg 1/25/2010 1:42:12 PM jonathon.huber

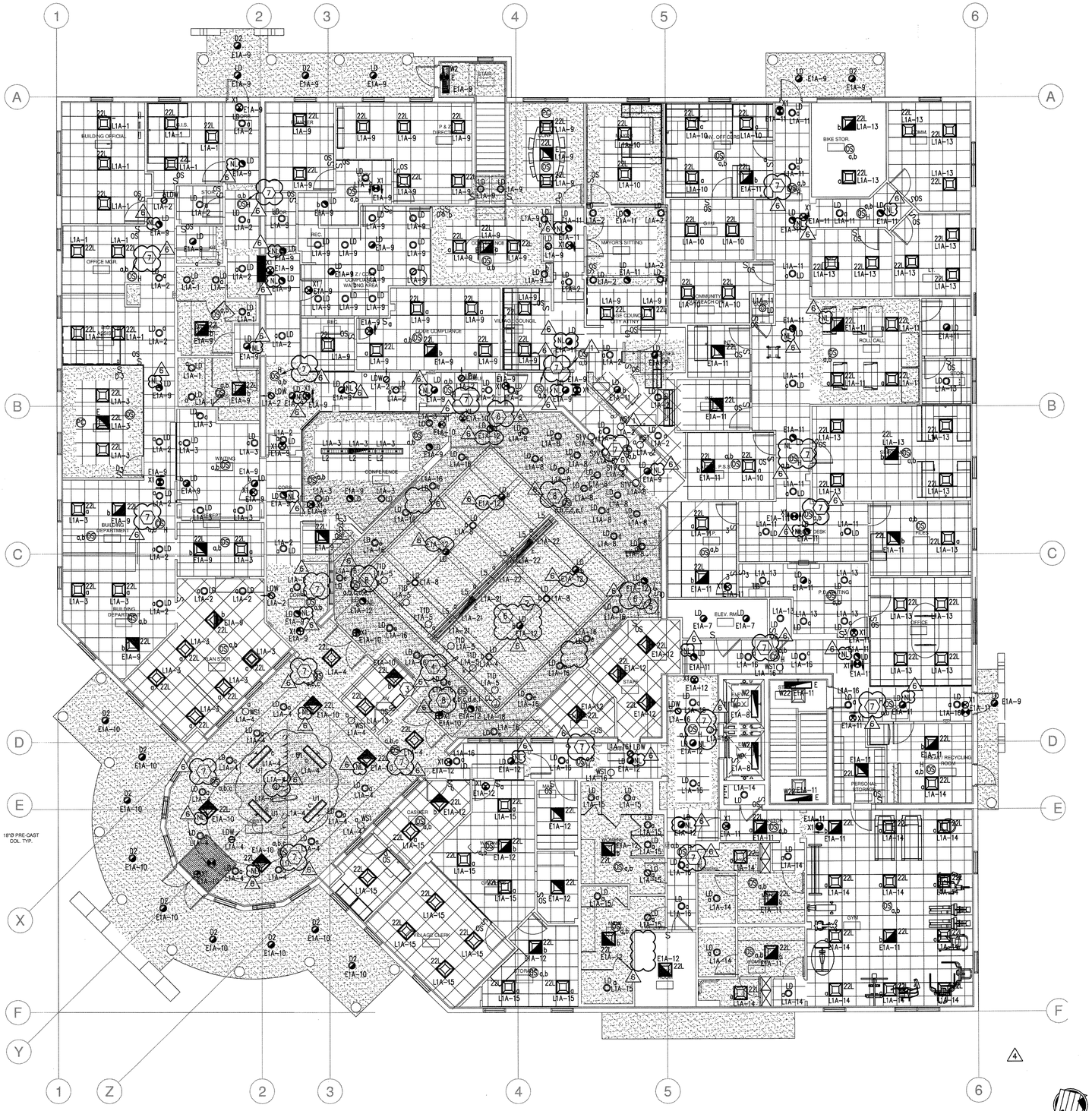

1 LIGHTING - FIRST FLOOR PLAN
SCALE: 1/8" = 1'-0"

SHEET LIGHTING NOTES:

1. ALL EXTERIOR LIGHTING TO BE ROUTED THROUGH LIGHTING CONTROL PANEL.
2. ALL EMERGENCY EGRESS ILLUMINATION SHALL BE AVERAGE 1FC AND A MINIMUM OF 0.1FC FOR PATH OF EGRESS.
3. REFER TO RISER DIAGRAM 4/E5.2.0 FOR ALL OUTDOOR LIGHTING CONTROLS. (U.O.N.)
4. ALL EMERGENCY BATTERY PACKS DESIGNATED BY 'E' ADJACENT TO FIXTURE, SHALL BE CONNECTED TO LOCAL LIGHTING CIRCUIT AHEAD OF THE LIGHTING CONTROLS.
5. REFER TO ARCHITECTURAL PLANS FOR EXACT LIGHTING FIXTURE LOCATIONS.
6. ALL OCCUPANCY SENSORS THA CONTROL AN EMERGENCY LIGHT RELAY PACK SHALL BE POWERED FROM LOCAL EMERGENCY CIRCUIT.
7. REFER TO OCCUPANCY SENSOR TYPICAL WIRING DIAGRAMS ON SHEET E6.3.
8. "NL" REFERS TO NIGHT LIGHT.

LIGHTING KEY NOTES:

1. PROVIDE BODINE GTD20A FOR OUTDOOR EMERGENCY LIGHTING CIRCUIT.
2. ALL FIXTURES IN CHAMBERS SHALL BE DIMMABLE ON SEPARATE ZONES.
3. PROVIDE INDIVIDUAL WALL DIMMERS FOR CONTROL OF THEATRICAL LIGHTING SWITCH LEGS (g,h,i,j,k & l).
4. PROVIDE 1-1/2" SCHED. 40 WHITE LIGHT PIPE SUPPORTED FROM STRUCTURE, AND ALL NECESSARY LIGHTING MOUNT HARDWARE AND CABLE MANAGEMENT. (ALL ACCESSORIES TO BE WHITE).
5. PROVIDE INDIVIDUAL WALL DIMMERS FOR CONTROL OF THEATRICAL LIGHTING SWITCH LEGS (a,b,c,d,e,f)
6. PROVIDE UL 924 LISTED RELAY FOR EM OVERRIDE.
7. OCCUPANCY SENSOR TO CONTROL LIGHTING CONTROL PANEL TIME CLOCK OVERRIDE FOR EACH RESPECTIVE SWITCH LEG. PROVIDE RELAY IN LIGHTING CONTROL PANEL FOR EACH RESPECTIVE SWITCH LEG.
8. OCCUPANCY SENSOR TO CONTROL LIGHTING CONTROL PANEL TIME CLOCK OVERRIDE FOR RELAY AHEAD OF DIMMING CONTROL POWER CIRCUITS.

LCP1
Location: 1ST FLOOR ELECTRICAL ROOM
LIGHTING CONTROL PANEL

Relay	Line Feed	Local Zone	Type	Voltage	Source	Description
1	E1A-9	OUTDOOR	NC	120V	EM	SHEET E2.1
2	E1A-10	OUTDOOR	NC	120V	EM	SHEET E2.1
3						
4						

RECORD SET
The information presented on this drawing is diagrammatic and is presented for general information purposes and should not be relied on for accuracy of dimensions, details and locations. Actual and exact conditions if required should be determined in the field.

TLC ENGINEERING FOR ARCHITECTURE
800 Fairway Drive.
Suite 250
Deerfield Beach, Florida 33441
Phone: 954-418-9096
Fax: 954-418-9286
www.tlc-engineers.com
© Copyright 2007 TLC Engineering for Architecture, Inc.
EB #0000015 TLC NO:609036

JMWA ARCHITECTS
STEVEN E. MYOTT AIA
JAMES R. WILLIAMS AIA
RODOLFO ACEVEDO AIA

949 CLINT MOORE ROAD
BOCA RATON, FLORIDA 33487
TEL 561 997 9997
FAX 561 997 1610

WWW.JMWA.NET

PALMETTO BAY VILLAGE HALL
9705 E. Hibiscus St., Palmetto Bay, Florida

Master Builders of South Florida, Inc.
1400 E. Oakland Park Blvd. Suite 210
Oakland Park, FL 33334

Jason A. Stinchcomb, P.E.
Florida License #58184

PROJECT NO. 609036
DESIGNED BY: MEB
DRAWN BY: JAS
CHECKED BY: JAS

SUBMITTALS:
50% REVIEW 10.30.2009
PERMIT REVIEW 11.20.2009
BUILDING PERMIT 03.03.2010

REVISIONS:
1 PERMIT COMMENTS 04.02.2010
4 DESIGN CHANGES 08.11.2010
6 OWNER CHANGES 09.15.2010

ELECTRICAL
FIRST FLOOR
LIGHTING PLAN

E2.1

© 2009 JMWA ARCHITECTS, INCORPORATED ALL RIGHTS RESERVED. NO PART OF THESE IDEAS, PLANS OR DESIGNS MAY BE REPRODUCED, COPIED OR UTILIZED GRAPHICALLY IN ANY FORM WHATSOEVER WITHOUT THE EXPRESSED WRITTEN CONSENT OF JMWA ARCHITECTS INCORPORATED AND ITS BOARD OF DIRECTORS.

L:\2009-Jobs\609036-Palmetto Bay Municipal Center\CAD-MEP\Sheets E2.1.dwg 9/15/2010 6:20:42 PM david.young

LIGHTING SOURCE GROUP

LSG

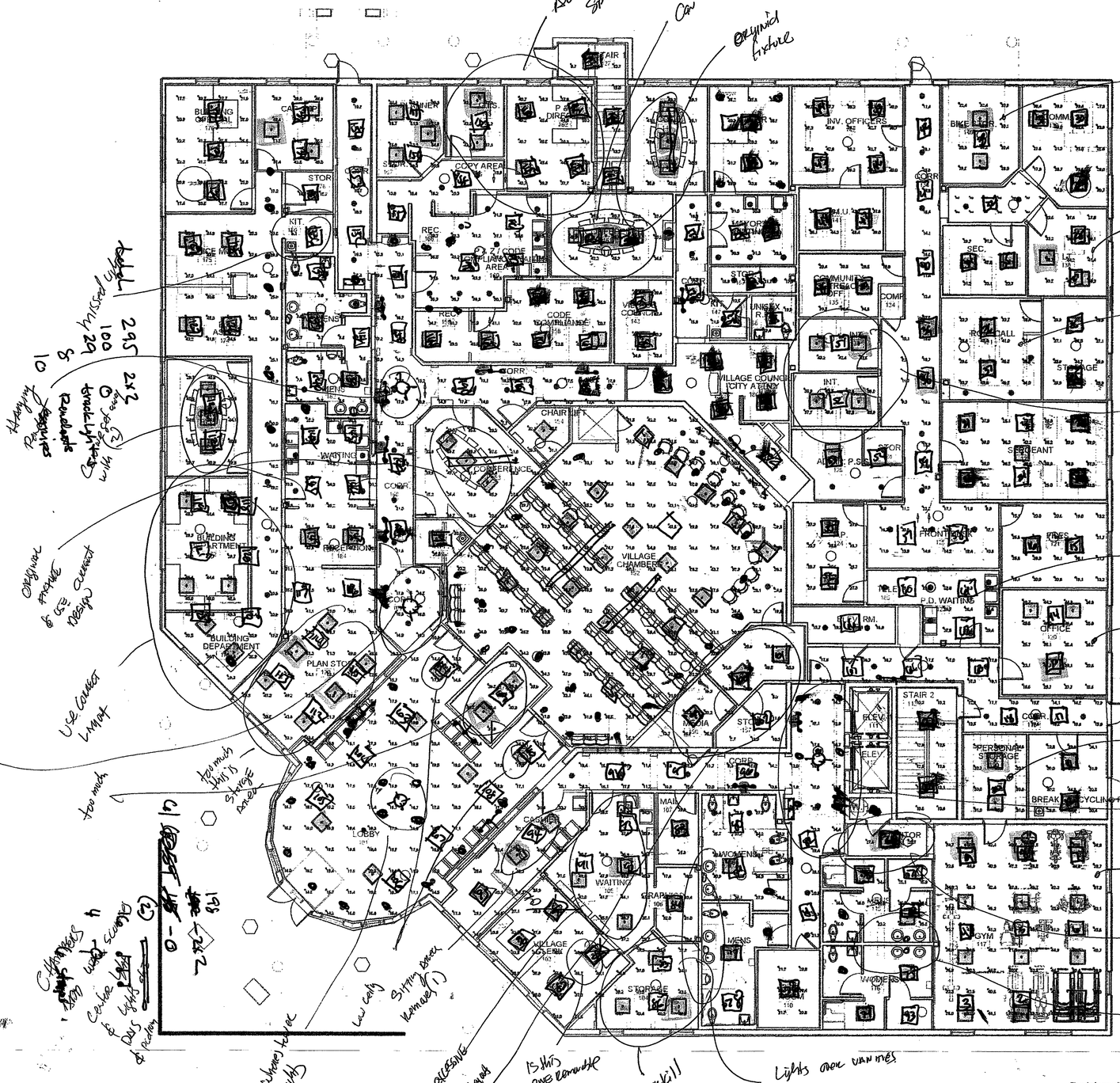

□ - 208
⊖ - 195
⊕ - 7
▭ - 3
◭ - 30
≈ - 6

20,475
50,960
12,900
76760

□ 127/47 = 194
● 157 = 214
◇ 11 = 20

□ - 132
● - 137
⊕ - 4
▭ - 2
▽ - 19
≈ - Stage Lights (6)

Lighting Source Group, 2085 Vining Circle #1101, Wellington, Fl 33414
Office 561-392-2293 Fax 561-368-6250

Project name : Palmetto v5

Prepared for: Dan Ocasio

RECORD SET
The information presented on this drawing is diagrammatic and is presented for general information purposes and should not be relied on for accuracy of dimensions, details and locations. Actual and exact conditions if required should be determined in the field.

Date:3/24/2010

AGi32 Version 2.04 Rev. 1

E2.1

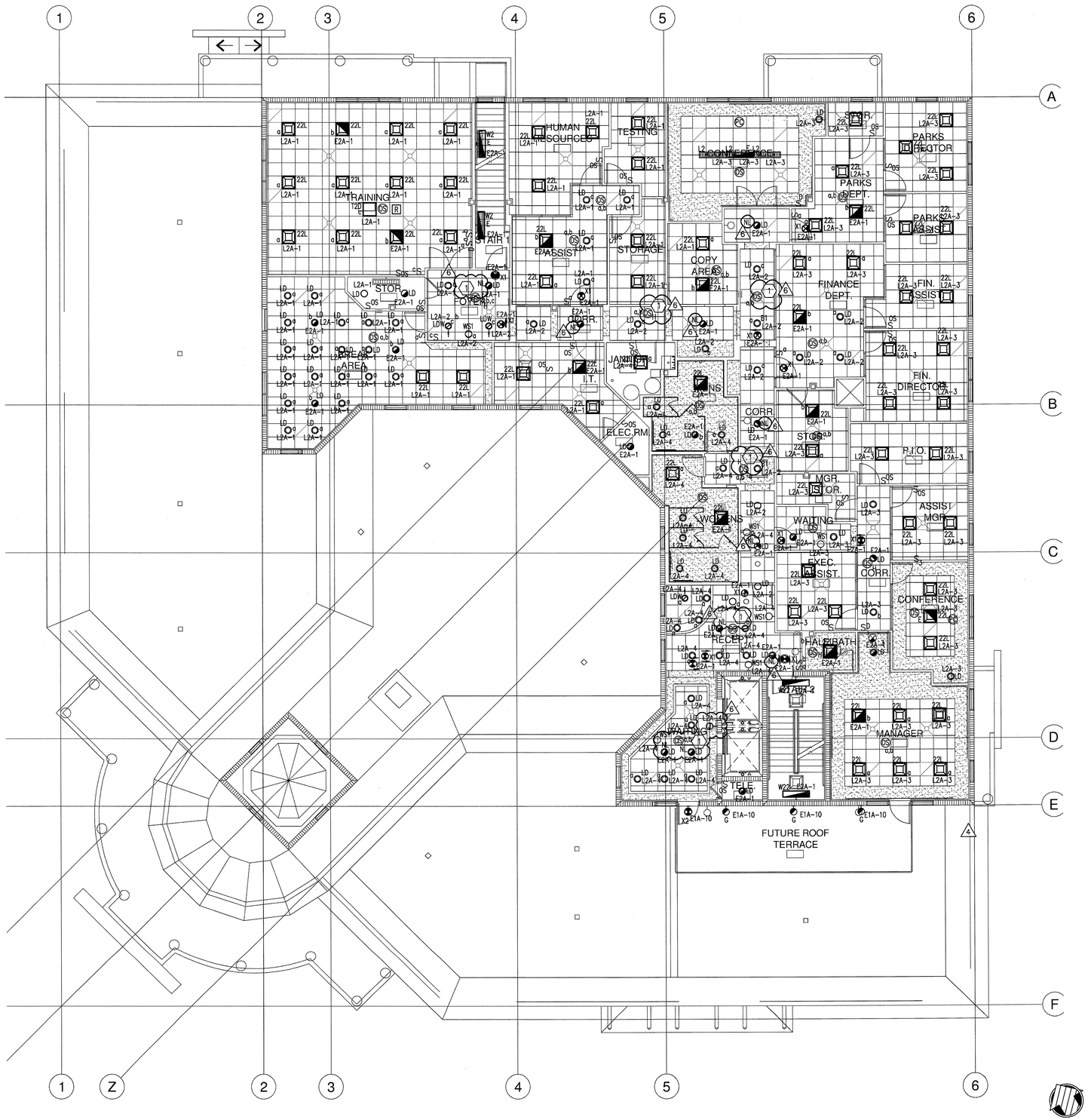

1 LIGHTING - SECOND FLOOR PLAN
SCALE: 1/8" = 1'-0"

SHEET LIGHTING NOTES:

1. ALL EXTERIOR LIGHTING TO BE ROUTED THROUGH LIGHTING CONTROL PANEL.
2. ALL EMERGENCY EGRESS ILLUMINATION SHALL BE AVERAGE 1FC AND A MINIMUM OF 0.1FC FOR PATH OF EGRESS.
3. REFER TO RISER DIAGRAM 4/E5.2.0 FOR ALL OUTDOOR LIGHTING CONTROLS. (U.O.N.)
4. ALL EMERGENCY BATTERY PACKS DESIGNATED BY 'E' ADJACENT TO FIXTURE, SHALL BE CONNECTED TO LOCAL LIGHTING CIRCUIT AHEAD OF THE LIGHTING CONTROLS.
5. REFER TO ARCHITECTURAL PLANS FOR EXACT LIGHTING FIXTURE LOCATIONS.
6. ALL OCCUPANCY SENSORS THA CONTROL AN EMERGENCY LIGHT RELAY PACK SHALL BE POWERED FROM LOCAL EMERGENCY CIRCUIT.
7. REFER TO OCCUPANCY SENSOR TYPICAL WIRING DIAGRAMS ON SHEET E6.3.

LIGHTING KEY NOTES:

(1) OCCUPANCY SENSOR TO CONTROL LIGHTING CONTROL PANEL TIME CLOCK OVERRIDE FOR EACH RESPECTIVE SWITCH LEG. PROVIDE RELAY IN LIGHTING CONTROL PANEL FOR EACH RESPECTIVE SWITCH LEG.

6

RECORD SET

The information presented on this drawing is diagrammatic and is presented for general information purposes and should not be relied on for accuracy of dimensions, details and locations. Actual and exact conditions if required should be determined in the field.

TLC ENGINEERING FOR ARCHITECTURE
800 Fairway Drive.
Suite 250
Deerfield Beach, Florida 33441
Phone: 954-418-9096
Fax: 954-418-9296
www.tlc-engineers.com
EB #0000015 TLC NO: 609036

© Copyright 2007 TLC Engineering for Architecture, Inc.

JMWA ARCHITECTS
STEVEN E. MYOTT AIA
JAMES R. WILLIAMS AIA
RODOLFO ACEVEDO AIA
949 CLINT MOORE ROAD
BOCA RATON, FLORIDA 33487
TEL 561 997 9997
FAX 561 997 1610
WWW.JMWA.NET

PALMETTO BAY VILLAGE HALL
9705 E. Hibiscus St., Palmetto Bay, Florida

Master Builders of South Florida, Inc.
1400 E. Oakland Park Blvd. Suite 210
Oakland Park, FL 33334

Jason A. Stinchcomb, P.E.
Florida License #58184

PROJECT NO. 609036
DESIGNED BY: MEB
DRAWN BY: JAS
CHECKED BY: JAS

SUBMITTALS:
50% REVIEW 10.30.2009
PERMIT REVIEW 11.20.2009
BUILDING PERMIT 03.03.2010

REVISIONS:
4 DESIGN CHANGES 08.11.2010
5 OWNER CHANGES 09.15.2010

ELECTRICAL
SECOND FLOOR
LIGHTING PLAN

E2.2

© 2009 JMWA ARCHITECTS, INCORPORATED ALL RIGHTS RESERVED. NO PART OF THESE IDEAS, PLANS OR DESIGNS MAY BE REPRODUCED, COPIED OR UTILIZED GRAPHICALLY IN ANY FORM WHATSOEVER WITHOUT THE EXPRESSED WRITTEN CONSENT OF JMWA ARCHITECTS INCORPORATED AND ITS BOARD OF DIRECTORS.

L:\2009--Jobs\609036--Palmetto Bay Municipal Center\CAD--MEP\Sheets E2.2.dwg 9/15/2010 6:21:14 PM david.young

LIGHTING SOURCE GROUP

LSG

Lighting Source Group, 2085 Vining Circle #1101, Wellington, Fl 33414
Office 561-392-2293 Fax 561-368-6250

Project name : Palmetto v6

Prepared for: Dan Ocasio

Date:3/24/2010

AGi32 Version 2.04 Rev. 1

RECORD SET

The information presented on this drawing is diagrammatic and is presented for general information purposes and should not be relied on for accuracy of dimensions, details and locations. Actual and exact conditions if required should be determined in the field.

E2.2

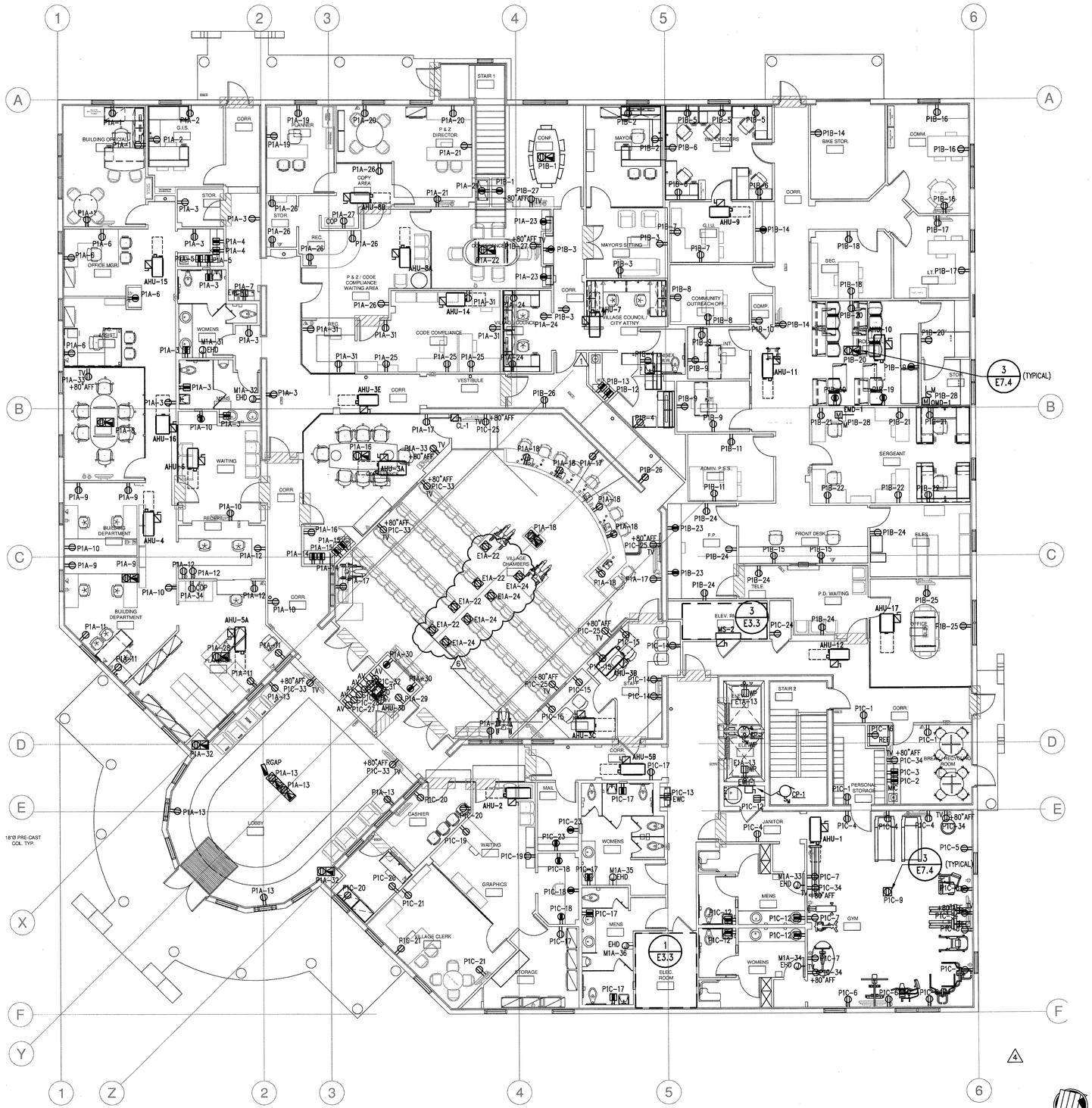

1 POWER - FIRST FLOOR PLAN
SCALE: 1/8" = 1'-0"

SHEET POWER/SYSTEMS NOTES:

1. REFER TO MECHANICAL DRAWINGS FOR EXACT LOCATION OF ALL MECHANICAL EQUIPMENT.
2. REFER TO EQUIPMENT CONNECTION SCHEDULE ON SHEET E8.1 FOR ELECTRICAL REQUIREMENTS AND CIRCUIT DESIGNATIONS. (TYPICAL FOR ALL EQUIPMENT INCLUDING HVAC)
3. PROVIDE CONDUIT AND WIRING AS REQUIRED TO MEET CIRCUITING SHOWN TO CONFORM TO NEC REQUIREMENTS. PROVIDE EQUIPMENT GROUND CONDUCTOR IN ALL RACEWAYS. REFER TO PANEL SCHEDULE DRAWINGS E8 SERIES.
4. SEE TYPICAL MOUNTING HEIGHTS DETAIL ON DRAWING E7.1 FOR MOUNTING HEIGHTS OF ALL WALL MOUNTED DEVICES.
5. EXACT FLOOR BOX LOCATIONS AND PENETRATIONS TO BE FIELD VERIFIED AND COORDINATED PER ARCHITECTURAL PLANS.
6. DOWNSTREAM RECEPTACLES MAY BE CONTROLLED BY A SINGLE FEED THROUGH A GFI RECEPTACLE.

RECORD SET

The information presented on this drawing is diagrammatic and is presented for general information purposes and should not be relied on for accuracy of dimensions, details and locations. Actual and exact conditions if required should be determined in the field.

TLC ENGINEERING FOR ARCHITECTURE
800 Fairway Drive.
Suite 250
Deerfield Beach, Florida 33441
Phone: 954-418-9096
Fax: 954-418-9296
www.tlc-engineers.com

© Copyright 2007 TLC Engineering for Architecture, Inc.

EB #0000015 TLC NO: 609036

JMWA ARCHITECTS
STEVEN E. MYOTT AIA
JAMES R. WILLIAMS AIA
RODOLFO ACEVEDO AIA

949 CLINT MOORE ROAD
BOCA RATON, FLORIDA 33487
TEL 561 997 9997
FAX 561 997 1610

WWW.JMWA.NET

PALMETTO BAY VILLAGE HALL

9705 E. Hibiscus St., Palmetto Bay, Florida

Master Builders of South Florida, Inc.
1400 E. Oakland Park Blvd. Suite 210
Oakland Park, FL 33334

Jason A. Stinchcomb, P.E.
Florida License #58184

PROJECT NO. 609036
DESIGNED BY: MEB
DRAWN BY: JAS
CHECKED BY: JAS

SUBMITTALS:
50% REVIEW 10.30.2009
PERMIT REVIEW 11.20.2009
BUILDING PERMIT 03.03.2010

REVISIONS:
1 PERMIT COMMENTS 04.02.2010
4 DESIGN CHANGES 08.11.2010
6 OWNER CHANGES 09.15.2010

ELECTRICAL
FIRST FLOOR
POWER PLAN

E3.1

© 2009 JMWA ARCHITECTS, INCORPORATED ALL RIGHTS RESERVED. NO PART OF THESE IDEAS, PLANS OR, DESIGNS MAY BE REPRODUCED, COPIED OR UTILIZED GRAPHICALLY IN ANY FORM WHATSOEVER WITHOUT THE EXPRESSED WRITTEN CONSENT OF JMWA ARCHITECTS INCORPORATED AND ITS BOARD OF DIRECTORS.

L:\2009-Jobs\609036-Palmetto Bay Municipal Center\CAD-MEP\Sheets E3.1.dwg 9/15/2010 6:21:53 PM david.young

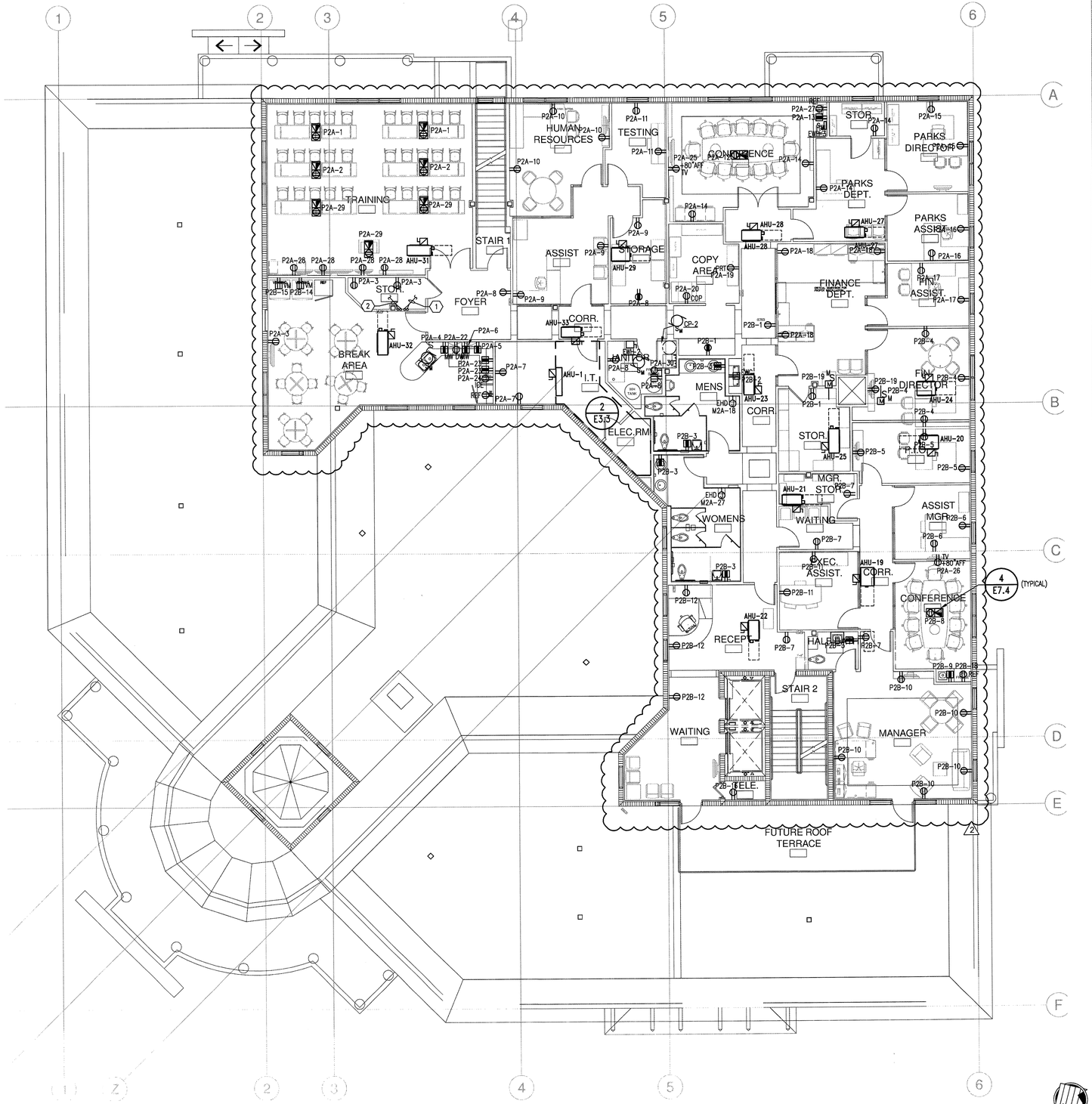

1 POWER - SECOND FLOOR PLAN
SCALE: 1/8" = 1'-0"

SHEET POWER NOTES:

1. REFER TO MECHANICAL DRAWINGS FOR EXACT LOCATION OF ALL MECHANICAL EQUIPMENT.
2. REFER TO EQUIPMENT CONNECTION SCHEDULE ON SHEET E8.1 FOR ELECTRICAL REQUIREMENTS AND CIRCUIT DESIGNATIONS. (TYPICAL FOR ALL EQUIPMENT INCLUDING HVAC)
3. PROVIDE CONDUIT AND WIRING AS REQUIRED TO MEET CIRCUITING SHOWN TO CONFORM TO NEC REQUIREMENTS. PROVIDE EQUIPMENT GROUND CONDUCTOR IN ALL RACEWAYS. REFER TO PANEL SCHEDULE DRAWINGS E8 SERIES.
4. SEE TYPICAL MOUNTING HEIGHTS DETAIL ON DRAWING E7.1 FOR MOUNTING HEIGHTS OF ALL WALL MOUNTED DEVICES.
5. EXACT FLOOR BOX LOCATIONS AND PENETRATIONS TO BE FIELD VERIFIED AND COORDINATED PER ARCHITECTURAL PLANS.
6. DOWNSTREAM RECEPTACLES MAY BE CONTROLLED BY A SINGLE FEED THROUGH A GFI RECEPTACLE.

POWER KEY NOTES:

(1) CONDUITS TO FUTURE PV DISCONNECT SWITCH LOCATION. REFER TO POWER RISER DIAGRAM ON SHEET E6.1 FOR QUANTITIES AND SIZES.

(2) CONDUITS TO ROOFTOP FOR FUTURE PV ARRAYS. REFER TO POWER RISER DIAGRAM ON SHEET E6.1 FOR QUANTITIES AND SIZES.

RECORD SET

The information presented on this drawing is diagrammatic and is presented for general information purposes and should not be relied on for accuracy of dimensions, details and locations. Actual and exact conditions if required should be determined in the field.

TLC ENGINEERING FOR ARCHITECTURE
800 Fairway Drive.
Suite 250
Deerfield Beach, Florida 33441
Phone: 954-418-9096
Fax: 954-418-9286
www.tlc-engineers.com

© Copyright 2007 TLC Engineering for Architecture, Inc.
EB #0000015 TLC NO: 609036

JMWA ARCHITECTS
STEVEN E. MYOTT AIA
JAMES R. WILLIAMS AIA
RODOLFO ACEVEDO AIA
949 CLINT MOORE ROAD
BOCA RATON, FLORIDA 33487
TEL 561 997 9997
FAX 561 997 1610
WWW.JMWA.NET

PALMETTO BAY VILLAGE HALL

9705 E. Hibiscus St., Palmetto Bay, Florida

Master Builders of South Florida, Inc.
1400 E. Oakland Park Blvd. Suite 210
Oakland Park, FL 33334

Jason A. Stinchcomb, P.E.
Florida License #58184

PROJECT NO. 609036
DESIGNED BY: MEB
DRAWN BY: JAS
CHECKED BY: JAS

SUBMITTALS:
50% REVIEW 10.30.2009
PERMIT REVIEW 11.20.2009
BUILDING PERMIT 03.03.2010

REVISIONS:
2 DESIGN CHANGES 08.11.2010

ELECTRICAL
SECOND FLOOR
POWER PLAN

E3.2

© 2009 JMWA ARCHITECTS INCORPORATED ALL RIGHTS RESERVED. NO PART OF THESE IDEAS, PLANS OR DESIGNS MAY BE REPRODUCED, COPIED OR UTILIZED GRAPHICALLY IN ANY FORM WHATSOEVER, WITHOUT THE EXPRESSED WRITTEN CONSENT OF JMWA ARCHITECTS INCORPORATED AND ITS BOARD OF DIRECTORS.

L:\2009--Jobs\609036-Palmetto Bay Municipal Center\CAD-MEP\Sheets E3.2.dwg 8/11/2010 5:06:16 PM jared.hunt

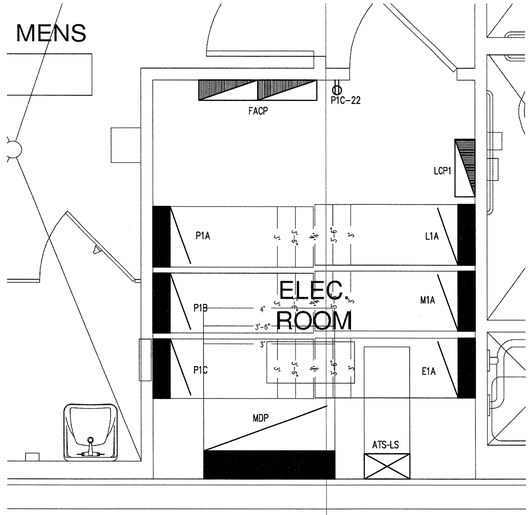

1 ENLARGED MAIN ELECTRICAL ROOM PLAN
SCALE: 1/2" = 1'-0"

NORTH

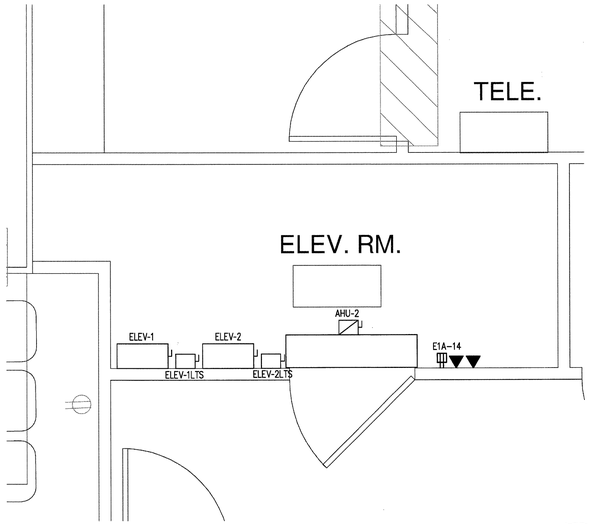

3 ENLARGED ELEVATOR MACHINE ROOM PLAN
SCALE: 1/2" = 1'-0"

NORTH

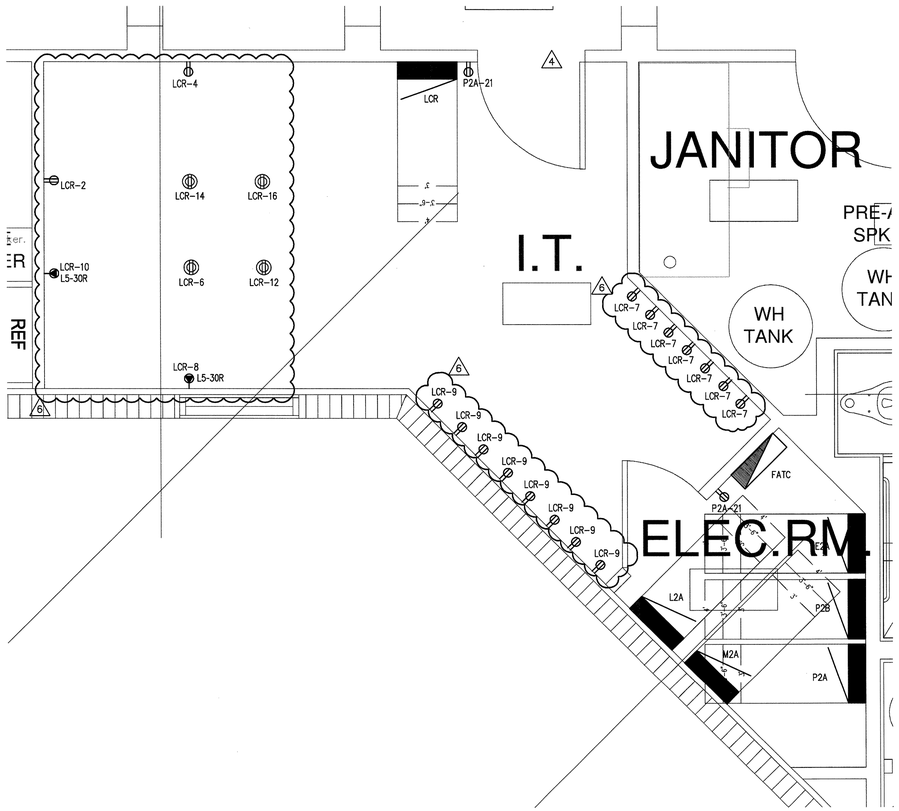

2 ENLARGED 2ND FLOOR IT/ELECTRICAL ROOM PLAN
SCALE: 1/2" = 1'-0"

NORTH

FUEL TANK AND GENERATOR TO BE PERMITTED SEPARATELY

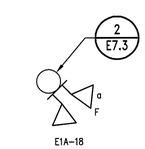

JACKET WATER HEATER E1A-19,21
BATTERY CHARGER E1A-15
FUEL PUMP E1A-16
WP E1A-17

EMERGENCY GENERATOR
WITH SUB-BASE FUEL
TANK

RECORD SET

The information presented on this drawing is diagrammatic and is presented for general information purposes and should not be relied on for accuracy of dimensions, details and locations. Actual and exact conditions if required should be determined in the field.

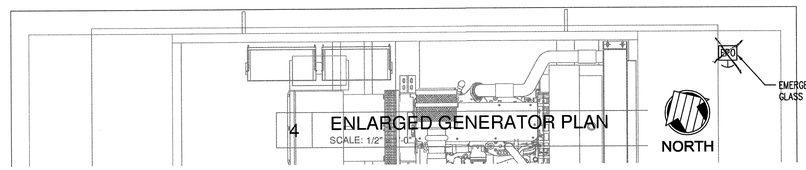

4 ENLARGED GENERATOR PLAN
SCALE: 1/2" = 1'-0"

NORTH

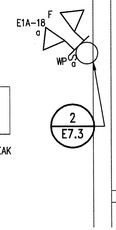

TLC ENGINEERING FOR ARCHITECTURE
800 Fairway Drive.
Suite 250
Deerfield Beach, Florida 33441
Phone: 954-418-9396
Fax: 954-418-9298
www.tlc-engineers.com
© Copyright 2007 TLC Engineering for Architecture, Inc.
EB #0000015 TLC NO:609036

JMWA ARCHITECTS
STEVEN E. MYOTT AIA
JAMES R. WILLIAMS AIA
RODOLFO ACEVEDO AIA
949 CLINT MOORE ROAD
BOCA RATON, FLORIDA 33487
TEL 561 997 9997
FAX 561 997 1610
WWW.JMWA.NET

PALMETTO BAY VILLAGE HALL

9705 E. Hibiscus St., Palmetto Bay, Florida

Master Builders of South Florida, Inc.
1400 E. Oakland Park Blvd. Suite 210
Oakland Park, FL 33334

Jason A. Stinchcomb, P.E.
Florida License #58184

PROJECT NO. 609036
DESIGNED BY: MEB
DRAWN BY: JAS
CHECKED BY: JAS

SUBMITTALS:
50% REVIEW 10.30.2009
PERMIT REVIEW 11.20.2009
BUILDING PERMIT 03.03.2010

REVISIONS:
1 PERMIT COMMENTS 04.02.2010
4 DESIGN CHANGES 08.11.2010
6 OWNER CHANGES 09.15.2010

ELECTRICAL ENLARGED PLANS

E3.3

© 2009 JMWA ARCHITECTS, INCORPORATED ALL RIGHTS RESERVED. NO PART OF THESE IDEAS, PLANS OR DESIGNS MAY BE REPRODUCED, COPIED OR UTILIZED GRAPHICALLY IN ANY FORM WHATSOEVER WITHOUT THE EXPRESSED WRITTEN CONSENT OF JMWA ARCHITECTS INCORPORATED AND ITS BOARD OF DIRECTORS.

L:\2009-Jobs\609036-Palmetto Bay Municipal Center\CAD-MEP\Sheets E3.3.dwg 9/15/2010 6:23:25 PM david.young

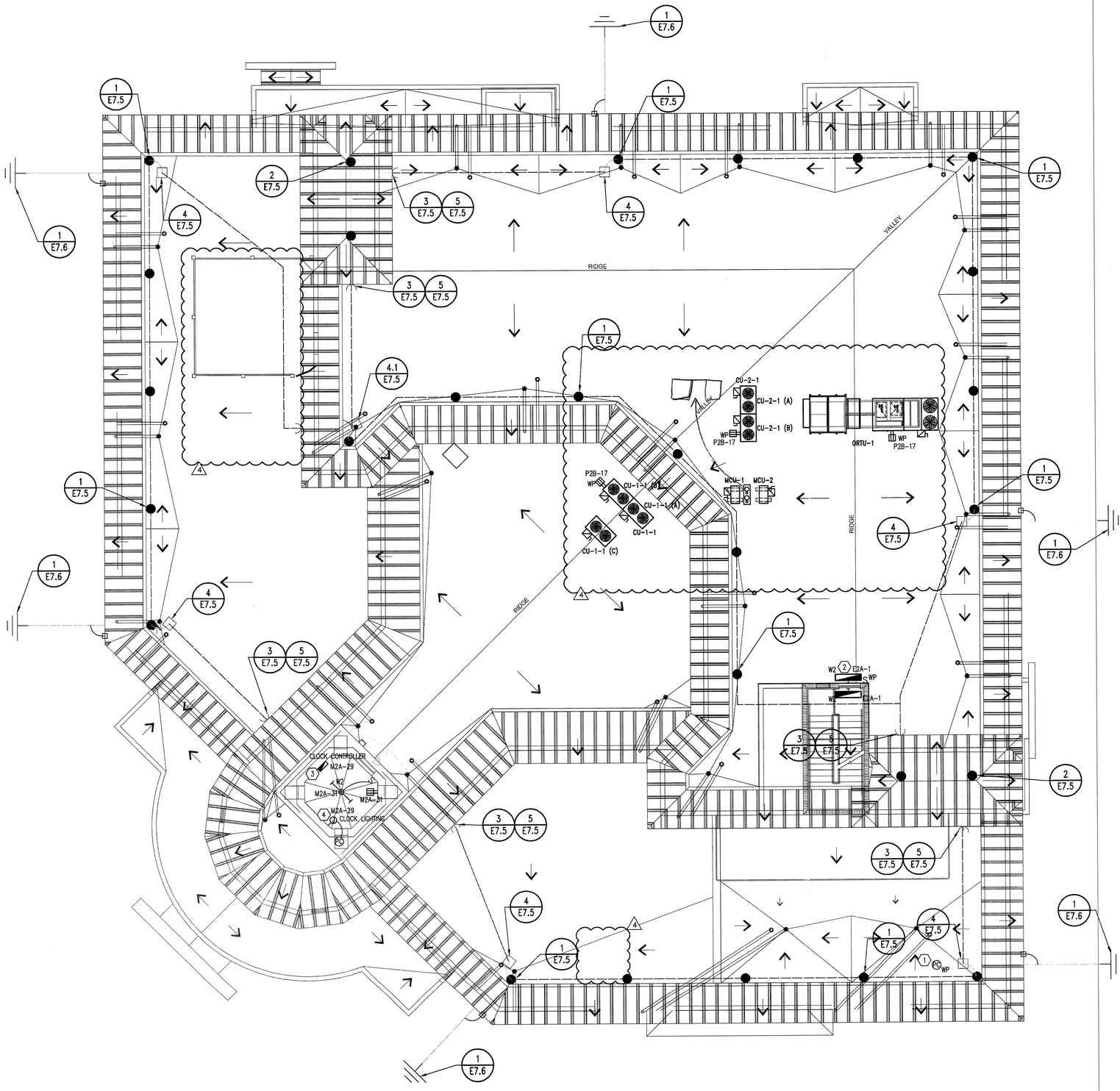

1 ELECTRICAL - ROOF PLAN
SCALE: 1/8" = 1'-0"

SHEET POWER NOTES:

1. REFER TO MECHANICAL DRAWINGS FOR EXACT LOCATION OF ALL MECHANICAL EQUIPMENT.
2. REFER TO EQUIPMENT CONNECTION SCHEDULE ON SHEET E10.1 FOR ELECTRICAL REQUIREMENTS AND CIRCUIT DESIGNATIONS. (TYPICAL FOR HVAC EQUIPMENT)

POWER KEY NOTES:

1. REFER TO LIGHTING CONTROL RISER DIAGRAM 1/E7.3.
2. PROVIDE INTEGRAL PHOTOCELL CONTROL FOR OUTDOOR FIXTURE.
3. PROVIDE FINAL ELECTRICAL CONNECTIONS FOR CLOCK SYSTEM. COORDINATE EXACT INSTALLATION REQUIREMENTS WITH HARDWARE PROVIDER.
4. PROVIDE JUNCTION BOX FOR CLOCK LIGHTING. CLOCK LIGHTING SHALL BE CONTROLLED BY A PHOTOCELL. VERIFY EXACT LOCATIONS IN FIELD.

SHEET LIGHTNING PROTECTION NOTES:

1. REFER TO LIGHTNING PROTECTION DETAILS ON SHEETS E7.5 AND E7.6 FOR MORE INFORMATION.
2. CONTRACTOR SHALL PROVIDE SERVICES OF A BONDED LIGHTNING PROTECTION INSTALLER TO PREPARE A CLASS 2 UL MASTER LABEL SYSTEM PLANS, SIGNED AND SEALED LIGHTNING PROTECTION DRAWINGS AND PRODUCT DATA FOR AHJ REVIEW AND PERMIT.
3. ALL CONDUCTOR ROUTING SHALL BE COORDINATED WITH ARCHITECT/STRUCTURAL ENGINEER PRIOR TO INSTALLATION.
4. ARRESTERS ARE REQUIRED ON ELECTRICAL SERVICE PANEL, DATA AND TELEPHONE LINE ENTRANCES BY THE ELECTRICAL CONTRACTOR OR BY VARIOUS UTILITY AGENCIES.
5. TELEPHONE AND/OR ELECTRICAL SERVICE ENTRANCE GROUNDS SHALL BE INTERCONNECTED TO ONE LIGHTNING PROTECTION GROUND. PVC CONDUIT SUPPLIED BY THE ELECTRICAL CONTRACTOR.
6. METAL BODIES OF INDUCTANCE LOCATED ABOUT THE ROOF SUCH AS; METAL FLASHING, GRAVEL STOPS, ROOF DRAINS, SOIL PIPE VENTS, INSULATION VENTS, LOUVERS AND DOOR FRAMES SITUATED WITHIN 6'-0" OF A LIGHTNING CONDUCTOR OR BONDED METAL BODY SHALL BE INTERCONNECTED TO THE LIGHTNING CONDUCTOR SYSTEM BY DIRECT OR INDIRECT MEANS.
7. NO BEND OF A CONDUCTOR SHALL FORM A FINAL INCLUDED ANGLE OF LESS THAN 90° NOR SHALL HAVE A RADIUS OF BEND OF LESS THAN 8".
8. CONDUCTORS SHALL INTERCONNECT ALL AIR TERMINALS AND SHALL FORM A TWO-WAY PATH FROM MOST AIR TERMINAL HORIZONTALLY OR DOWNWARD TO CONNECTIONS WITH GROUND TERMINALS.
9. ALL LIGHTNING PROTECTION CONDUCTORS SHALL BE FASTENED NOT MORE THAN 3'-0" MAXIMUM SPACING. EXPOSED CONDUIT 4'-0".
10. GROUND RODS SHALL BE DRIVEN TO A MINIMUM DEPTH OF 10'-0" BELOW GRADE AND 2'-0" AWAY FROM FOUNDATION WALL.
11. CONNECTIONS TO GROUND LOOP CONDUCTOR WHEN REQUIRED SHALL BE MADE AT A POINT NOT LESS THAN 18" BELOW GRADE AND 2'-0" AWAY FROM FOUNDATION WALL.
12. AIR TERMINALS SHALL BE PLACED AT ALL UNPROTECTED OUTSIDE CORNERS AND LOCATED INTERMEDIATELY ON 20'-0" MAXIMUM SPACING AROUND THE ROOF PERIMETER OR RIDGE AND WITHIN 2'-0" OF OUTSIDE EDGE UNLESS OTHERWISE PROTECTED.
13. FOR SAKE OF CLARITY, WE HAVE NOT LABELED EACH INDIVIDUAL ITEM OF LIGHTNING PROTECTION MATERIALS ON THE ROOF PLAN. WE HAVE SHOWN INSTALLATION DETAILS AND HAVE CALLED OUT EACH OF THESE DETAILS ON THE ROOF PLAN ONLY AT RANDOM LOCATIONS.
14. BOND ALL METALLIC PIPES INCLUDING WATER, FIRE, GAS, SEWER, STORM, ETC. WHICH ENTER THE STRUCTURE TO THE NEAREST DOWNLEAD, GROUND ROD OR GROUND LOOP BY DIRECT OR INDIRECT MEANS.
15. BARE COPPER LIGHTNING PROTECTION MATERIALS SHALL NOT BE INSTALLED ON ALUMINUM OR GALVANIZED ROOFING OR SIDING OR OTHER ALUMINUM OR GALVANIZED SURFACES AND VICE VERSA, ALUMINUM LIGHTNING PROTECTION MATERIALS SHALL NOT BE INSTALLED ON COPPER ROOFING OR SIDING OR OTHER COPPER SURFACES.
16. THE LIGHTNING PROTECTION SYSTEM SHALL BE INSTALLED IN A NEAT AND INCONSPICUOUS MANNER SO THAT ALL COMPONENTS WILL BLEND IN WITH THE APPEARANCE OF THE BUILDING.
17. ACTUAL JOB-SITE CONDITIONS MAY NECESSITATE SLIGHT ALTERATIONS IN AIR TERMINAL AND GROUND ROD LOCATIONS.
18. MIDROOF AIR TERMINALS SHALL BE PLACED ON 50'-0" MAXIMUM SPACING.
19. IF REQUIRED, ANY SACRIFICIAL ROOFING PADS, SHALL BE FURNISHED AND INSTALLED BY THE ROOFING CONTRACTOR.
20. ALL ADHESIVE TYPE FITTINGS SHALL BE SET IN PLACE WITH AN APPLICATION OF CHEM LINK M-1 STRUCTURAL SEALANT ON NON-BALISTED ROOFS.
21. SEAL ENDS OF CONDUIT MOISTURE TIGHT WITH CHEM LINK M-1 STRUCTURAL SEALANT.
22. ALL CONDUIT, CONDUIT FASTENERS AND MISCELLANEOUS ACCESSORIES SHALL BE FURNISHED AND INSTALLED BY THE ELECTRICAL CONTRACTOR.
23. ALL REINFORCING, STRUCTURAL, FRAMING AND MISCELLANEOUS STEEL SHALL BE MADE ELECTRICALLY CONTINUOUS THROUGHOUT CONSTRUCTION BY WELDING, CLIPPING, BOLTING OR OTHER APPROVED METHODS BY THE GENERAL CONTRACTOR.
24. THE DESIGN LAYOUT AND INSTALLATION DETAILS SHOWN HEREON SHALL MEET THE REQUIREMENTS OF UNDERWRITERS' LABORATORIES STANDARD 96A FOR MASTER LABELED LIGHTNING PROTECTION SYSTEMS WHEN REQUIRED BY SPECIFICATION.
25. THE DESIGN LAYOUT AND INSTALLATION DETAILS SHOWN HEREON SHALL MEET THE REQUIREMENTS OF NATIONAL FIRE PROTECTION ASSOCIATION STANDARD #780, CURRENT EDITION WHEN REQUIRED BY SPECIFICATION.
26. THE LIGHTNING PROTECTION INSTALLATION SHALL COMPLY IN ALL RESPECTS TO LIGHTNING PROTECTION INSTITUTE STANDARD 175. THE INSTALLATION SHALL BE MADE BY OR UNDER THE SUPERVISION OF AN L.P.I. CERTIFIED MASTER INSTALLER. WHEN REQUIRED BY SPECIFICATION.

RECORD SET

The information presented on this drawing is diagrammatic and is presented for general information purposes and should not be relied on for accuracy of dimensions, details and locations. Actual and exact conditions if required should be determined in the field.

TLC ENGINEERING FOR ARCHITECTURE
800 Fairway Drive.
Suite 250
Deerfield Beach, Florida 33441
Phone: 954-418-9096
Fax: 954-418-9296
www.tlc-engineers.com
EB #0000015 TLC NO: 609036

© Copyright 2007 TLC Engineering for Architecture, Inc.

JMWA ARCHITECTS
STEVEN E. MYOTT AIA
JAMES R. WILLIAMS AIA
RODOLFO ACEVEDO AIA
949 CLINT MOORE ROAD
BOCA RATON, FLORIDA 33487
TEL 561 997 9997
FAX 561 997 1610
WWW.JMWA.NET

PALMETTO BAY VILLAGE HALL

9705 E. Hibiscus St., Palmetto Bay, Florida

Master Builders of South Florida, Inc.
1400 E. Oakland Park Blvd. Suite 210
Oakland Park, FL 33334

Jason A. Stinchcomb, P.E.
Florida License #58184

PROJECT NO. 609036
DESIGNED BY: MEB
DRAWN BY: JAS
CHECKED BY: JAS

SUBMITTALS:
50% REVIEW 10.30.2009
PERMIT REVIEW 11.20.2009
BUILDING PERMIT 03.03.2010

REVISIONS:
2 DESIGN CHANGES 08.11.2010

ELECTRICAL ROOF PLAN

E5.1

© 2009 JMWA ARCHITECTS, INCORPORATED ALL RIGHTS RESERVED. NO PART OF THESE IDEAS, PLANS OR DESIGNS MAY BE REPRODUCED, COPIED OR UTILIZED GRAPHICALLY IN ANY FORM WHATSOEVER WITHOUT THE EXPRESSED WRITTEN CONSENT OF JMWA ARCHITECTS INCORPORATED AND ITS BOARD OF DIRECTORS.

L:\2009-Jobs\609036-Palmetto Bay Municipal Center\CAD-MEP\Sheets E5.1.dwg 8/11/2010 5:08:28 PM jared.hunt

TLC ENGINEERING FOR ARCHITECTURE
800 Fairway Drive.
Suite 250
Deerfield Beach, Florida 33441
Phone: 954-418-9096
Fax: 954-418-9296
www.tlc-engineers.com
© Copyright 2007 TLC Engineering for Architecture, Inc.
EB #0000015 TLC NO:609036

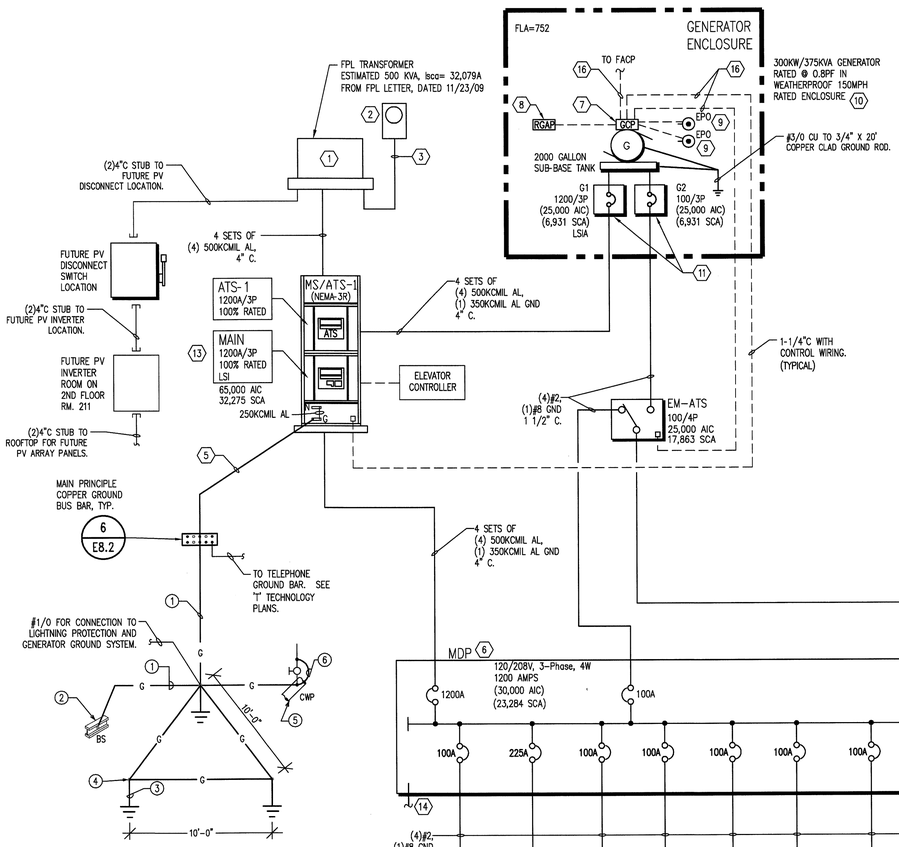

GROUNDING KEY NOTES :

1. (1) #3/0 CU GROUNDING ELECTRODE CONDUCTOR IN 1" SCHEDULE 40 PVC CONDUIT.
2. EXOTHERMIC CONNECTION. BUILDING STEEL, ELECTRICALLY CONTINUOUS STEEL REINFORCING BAR (25FT LENGTH) IN BOTTOM OF BUILDING FOUNDATION IN DIRECT CONTACT WITH EARTH.
3. 10 FT. LONG x 3/4" DIAMETER COPPER DRIVEN GROUND ELECTRODE. (TYPICAL)
4. EXOTHERMIC CONNECTION. (TYPICAL)
5. MAKE CONNECTION TO METALLIC COLD WATER ENTRANCE PIPE BEFORE FIRST VALVE WITH HEAVY DUTY BRONZE GROUND CLAMP.
6. PROVIDE (1) #3/0 CU BONDING JUMPER AROUND FIRST VALVE.

STANDBY GENERATOR NOTES

1. NEW UL 2085 FIRE RATED BASE MOUNTED TANK WITH SPECIFIC MANUFACTURER DERM I.D. NUMBER, DOUBLE WALL CONSTRUCTION - STEEL.
2. HOUSING - NEMA 3R, MIN. OF 150 MPH WIND RESISTANCE / IMPACT UL RATED WITH IMPORTANCE FACTOR OF 1.15. PROVIDE SIGNED/SEALED CALCULATIONS. (ALUM ENCLOSURE W/FINISH)
3. PROVIDE COMPLETE FDEP APPROVED PACKAGE, MONITORING AND FUEL SYSTEMS.
4. CRITICAL EXHAUST SILENCER, MUFFLER WITHIN HOUSING TO MEET LOCAL NOISE ORDINANCES.
5. PREPARE SPECIFIC AHJ DERM/FDEP APPLICATION FORMS; PROVIDE SPECIFIC PRODUCT I.D. NUMBERS.
6. PROVIDE COMPLETE SYSTEM GROUNDING BUT NOT LIMITED TO DISCONNECT RACEWAYS, CONTROLS, ETC.
7. HEIGHT OF FUEL TANK AND GENERATOR ELECTRICAL ACCESSORIES SHALL BE IN ACCORDANCE WITH THE 100 YEAR FLOOD PLAIN REQUIREMENTS. AND FEMA REQUIREMENTS.
8. ALL EQUIPMENT TO BE INSTALLED MUST BE APPROVED BY FLORIDA DEPARTMENT OF ENVIRONMENTAL PROTECTION (FDEP)
9. GENERATOR ENCLOSURE SHALL HAVE A MINIMUM LEVEL 2 SOUND ATTENUATION RATING (72dba) MAX.

GENERATOR FUEL CONSUMPTION CALCULATION

FUEL CONSUMPTION @ FULL LOAD (375 KVA)		=	25.4 GPH
(25.4 GPH X 72 HOURS REQUIRED PER NEC 708)		=	1828.8 GALLONS
TANK SIZE PROVIDED	SUB-BASE	=	2000 GALLONS
(DIESEL FUELED)			

POWER RISER NOTES :

1. UTILITY COMPANY PAD MOUNT 120/208V 3 ϕ TRANSFORMER. REFER TO ELECTRICAL SITE PLAN FOR PROPOSED LOCATION. THIS CONTRACTOR SHALL COORDINATE EXACT LOCATION AND CONNECTION DETAILS WITH UTILITY COMPANY FIELD ENGINEER.
2. METER CAN AND METER – METER CAN TO BE SUPPLIED AND INSTALLED BY THIS CONTRACTOR. METER TO BE PROVIDED AND INSTALLED BY UTILITY COMPANY.
3. 1 1/4" RIGID CONDUIT FROM C/T's IN TRANSFORMER PAD TO METER CAN.
4. PROVIDE 4" HIGH CONCRETE HOUSEKEEPING PAD. TYPICAL FOR ALL FREESTANDING ELECTRICAL EQUIPMENT.
5. 1"C – #3/0 Cu GROUND TO MAIN PRINCIPLE GROUND BAR.
6. REFER TO RESPECTIVE PANEL SCHEDULE FOR CONDUIT AND WIRE SIZES.
7. EMERGENCY GENERATOR CONTROL PANEL MOUNTED ON EMERGENCY GENERATOR.
8. EMERGENCY REMOTE GENERATOR ANNUNCIATOR PANEL MOUNTED AT SECURITY DESK.
9. ENGINE SHUTDOWN – EMERGENCY POWER OFF SWITCH – LOCATE ON GENSET AND REMOTE LOCATION WITHIN 25'=0" OF HOUSING, WEATHERPROOF STYLE.
10. 120/208V 3ϕ, 300 KW, EMERGENCY GENERATOR. THE CONTRACTOR SHALL BE RESPONSIBLE FOR A COMPLETE FUEL SYSTEM INSTALLATION. STORAGE TANK SHALL BE U.L. LISTED. REFER TO ELECTRICAL SPECIFICATIONS FOR MOR INFORMATION.
11. EMERGENCY GENERATOR IN-LINE CIRCUIT BREAKERS MOUNTED ON EMERGENCY GENERATOR. PROVIDE ELECTRONIC FULLY ADJUSTABLE CIRCUIT BREAKERS. SEE SPECIFICATIONS FOR MORE INFORMATION.
12. PANEL SHALL BE PROVIDED WITH 200% RATED NEUTRAL BUS.
13. SERVICE ENTRANCE LISTED ENCLOSED CIRCUIT BREAKER/ATS SWITCH. ASCO 300SE OR EQUAL.
14. 1"C – #4 Cu GROUND TO MAIN PRINCIPLE GROUND BAR.
15. ENGINE SHUTDOWN – EMERGENCY POWER OFF SWITCH – LOCATE ON GENSET AND REMOTE LOCATION WITHIN 25'=0" OF HOUSING, WEATHERPROOF STYLE.
16. 1-1/4" CONDUIT FOR GENERATOR CONTROL. PROVIDE WIRING PER MANUFACTURER REQUIREMENTS.
17. CONNECT TO EPO SWITCH IN COMPUTER ROOM. SEE DETAIL 3/E8.3 FOR MORE INFORMATION.

FPL UTILITIES NOTE:

1. CONTRACTOR RECOGNIZES THE FPL INFORMATION SHOWN IS BASED ON ESTIMATED ELECTRICAL INFORMATION AND HAS NOT BEEN CONFIRMED BY UTILITY.
2. CONTRACTOR MUST COORDINATE WITH UTILITY AND OWNER TO OBTAIN COMPLETE PROJECT SPECIFIC FPL DATA/CUSTOMER SERVICE AGREEMENT (CSA) AND PROVIDE LABOR AND MATERIALS TO MEET FPL AND PROJECT REQUIREMENTS.
3. SUBMIT FPL CSA TO ENGINEER AND ARCHITECT FOR RECORDS.

SHEET NOTES:

1. CONTRACTOR/VENDOR TO PROVIDE A FULLY RATED/SELECTIVE/COORDINATED SYSTEM.
2. REFER TO PANEL SCHEDULES FOR ALL CIRCUITING AND SIZES.
3. ALL CONDUCTORS SHALL BE COPPER.
4. ALL EQUIPMENT IS INDICATED WITH MINIMUM, BUT NOT LIMITED TO AIC RATINGS. 10,000 AIC IS MINIMUM RATING IF NOT INDICATED.
5. ALL GROUNDING SHALL BE PROVIDED AND TESTED IN ACCORDANCE WITH NEC 250.56.
6. PROVIDE SIEMENS INTEGRAL EMBEDED METERING FOR ALL BRANCH CIRCUITS IN EACH PANEL AS WELL AS ON MDP MAIN. PROVIDE PROGRAMMING AND INTERCONNECTIONS TO BMS FOR SEPARATE MONITORING OF SERVICE, LIGHTING, HVAC, WATER HEATERS AND GENERAL RECEPTACLES LOADS.

4

GENERATOR SPECIFICATIONS

A. DIESEL ENGINE DRIVEN GENERATOR SET SHALL BE DETROIT DIESEL MODEL 300-PXC6DT3 OR APPROVED EQUAL.
* STANDBY POWER RATED 300 KW / 375 KVA AT 80% POWER FACTOR.
* 120/208 VOLTS, 3 PHASE, 4 WIRE, 60HZ, 1800 RPM.
* GENERATOR SET SHALL INCLUDE ENGINE, ALTERNATOR AND CONTROLLER FURNISHED BY A SINGLE SUPPLIER AND U.L. 2200 LISTED AS A COMPLETE ASSEMBLY INCLUDING ALL STANDARD EQUIPMENT.
* GENERATOR INSTALLATION SHALL COMPLY WITH N.F.P.A. 110, CLASS 2 LEVEL 1 TYPE-10. AND N.F.P.A. 30 FOR CLASS 2 COMBUSTIBLE LIQUID. 4

1) INTEGRATED CONTROL SYSTEM, (U.L. 508 LISTED) INCLUDING:
   a. AC VOLTS, AMPS, HERTZ, KW, POWER FACTOR AND PERCENT LOAD READOUTS.
   b. COMPLETE ENGINE MONITOR AS REQUIRED BY N.F.P.A. 110, LEVEL 1.
   c. OVER/UNDER VOLTAGE MONITORING AND SHUT DOWN.
   d. OVER CURRENT AND SHORT CIRCUIT MONITORING AND SHUT DOWN.
   e. "AMPSENTRY" PROTECTION.
2) ENGINE:
   a. ENGINE JACKET WATER HEATER THERMOSTAT CONTROLLED, U.L. LISTED, RATED 2000 WATTS AT 208 VOLTS, SINGLE PHASE.
   b. ELECTRONIC/ISOCHRONOUS GOVERNOR.
   c. FLEXIBLE FUEL LINES.
   d. LOW PROFILE CRITICAL GRADE EXHAUST SILENCER WITH STAINLESS, FLEXIBLE EXHAUST COUPLINGS.
   e. LEAD ACID STARTING BATTERIES, CABLES AND RACKS AS REQUIRED BY N.F.P.A. 110.
3) ALTERNATOR:
   a. STANDARD 12 LEAD RECONNECTABLE ALTERNATOR.
   b. CLASS "H" INSULATION, 125°C TEMPERATURE RISE.
   c. PERMANENT MAGNET EXCITER.
   d. ALTERNATOR SET BREAKERS.
      1. BREAKER G-1: 1200 AMP/3P CIRCUIT BREAKER WITH SOLID STATE TRIP UNIT, LSIA ALARM.
      2. BREAKER G-2: 100 AMP/3P CIRCUIT BREAKER WITH SOLID STATE TRIP UNIT.
4) DIESEL FUEL TANK:
   a. 2000 GALLON MIN. U.L. 2085 LISTED, SUB BASE TANK WITH OVERFILL PROTECTION, ALL VENTS AND FITTINGS INCLUDING LOW LEVEL AND RUPTURE ALARMS AND ALL ACCESSORIES, ALARMS AND EQUIPMENT AS REQUIRED BY F.D.E.P. AND DERM.
   b. RUN TIME = 72 HOURS @ 100 % LOAD
5) WEATHER PROTECTIVE ENCLOSURE:
   a. ALUMINUM, LEVEL 2 SOUND ATTENUATED WEATHER PROTECTIVE ENCLOSURE FOR GENERATOR AND SUB-BASE TANK MOUNTING.
   b. FIXED ALUMINUM INTAKE LOUVERS WITH BIRD SCREENS AND GRAVITY OPEN ALUMINUM EXHAUST LOUVER.
   c. 20 AMP, 125 VOLT, GFI DUPLEX RECEPTACLE (FOR ENGINE/GENERATOR MAINTENANCE) MOUNTED INSIDE OF ENCLOSURE.
   d. INTERIOR LIGHTING FIXTURES (FOR ENGINE/GENERATOR MAINTENANCE) POWERED FROM ENGINE START BATTERY VOLTAGE, WITH TWST TIMER CONTROL SWITCH.
6) ACCESSORIES AND SERVICES:
   a. FLOAT EQUALIZER TYPE BATTERY CHARGER WITH ALARMS AS REQUIRED BY N.F.P.A. 110.
   b. LEAD ACID STARTING BATTERIES, CABLES AND RACKS AS REQUIRED BY N.F.P.A. 110.
   c. BREAK GLASS STATION FOR EMERGENCY SHUT-DOWN, ONE IN THE FIRE CONTROL ROOM, ONE IN THE MAIN ELECTRICAL ROOM AND ONE AT THE GENERATOR.
   d. START UP AND ACCEPTANCE TESTING AS REQUIRED BY N.F.P.A. 110 AND CONDUCTED BY FACTORY TRAINED TECHNICIANS.
   e. SPRING TYPE VIBRATIONS ISOLATORS.
   f. TWO SETS OF OPERATORS, PARTS AND INSTALLATION MANUALS.
   g. ONE YEAR, 1500 HOUR COMPREHENSIVE WARRANTY.
   h. REMOTE ANNUNCIATOR AS REQUIRED BY N.F.P.A. 110, LEVEL 1.
   i. CERTIFIED FACTORY TESTING.
   j. ALL ACCESSORIES REQUIRED TO HAVE A COMPLETE AND OPERATIONAL SYSTEM IN ACCORDANCE WITH ALL APPLICABLE CODES AND STANDARDS.
7) PERMITTING REQUIREMENTS:
   a. PROVIDE COMPLETE SYSTEMS IN CONFORMANCE WITH STATE OF FLORIDA DEPARTMENT OF ENVIRONMENTAL PROTECTION FDEP REGULATIONS.
   b. PREPARE ALL SIGNED AND SEALED PERMIT DOCUMENTS, DRAWINGS, ETC REQUIRED FOR AGENCY APPROVALS. PROVIDE PRODUCT DATA FOR SPILL PROTECTION, MONITORING LEVEL ALARMS, VENTING, ETC.

FUEL TANK AND GENERATOR TO BE PERMITTED SEPARATELY 1

RECORD SET

The information presented on this drawing is diagrammatic and is presented for general information purposes and should not be relied on for accuracy of dimensions, details and locations. Actual and exact conditions if required should be determined in the field.

JMWA ARCHITECTS
STEVEN E. MYOTT AIA
JAMES R. WILLIAMS AIA
RODOLFO ACEVEDO AIA
949 CLINT MOORE ROAD
BOCA RATON, FLORIDA 33487
TEL 561 997 9997
FAX 561 997 1610
WWW.JMWA.NET

PALMETTO BAY VILLAGE HALL

9705 E. Hibiscus St., Palmetto Bay, Florida

Master Builders of South Florida, Inc.
1400 E. Oakland Park Blvd. Suite 210
Oakland Park, FL 33334

Jason A. Stinchcomb, P.E.
Florida License #58184

PROJECT NO. 609036
DESIGNED BY: MEB
DRAWN BY: JAS
CHECKED BY: JAS

SUBMITTALS:
50% REVIEW 10.30.2009
PERMIT REVIEW 11.20.2009
BUILDING PERMIT 03.03.2010

REVISIONS:
1 PERMIT COMMENTS 04.02.2010
4 DESIGN CHANGES 08.11.2010

ELECTRICAL RISER DIAGRAM

E6.1

© 2009 JMWA ARCHITECTS, INCORPORATED ALL RIGHTS RESERVED. NO PART OF THESE IDEAS, PLANS OR DESIGNS MAY BE REPRODUCED, COPIED OR UTILIZED GRAPHICALLY IN ANY FORM WHATSOEVER WITHOUT THE EXPRESSED WRITTEN CONSENT OF JMWA ARCHITECTS INCORPORATED AND ITS BOARD OF DIRECTORS.

I:\2009-Jobs\609036-Palmetto Bay Municipal Center\CAD-MEP\Sheets E6.1.dwg 8/11/2010 5:08:44 PM jared.hunt

FIRE ALARM NOTES

1. CODE VERSIONS:
NFPA 72 2002 VERSION

FLORIDA FIRE PREVENTION CODE 2007 VERSION

NEC 2008 VERSION

FLORIDA BUILDING CODE 2007 VERSION

2. ALL EQUIPMENT TO BE NEW, U.L. LISTED FOR FIRE SERVICE AND SHALL BE COMPATIBLE WITH THE SYSTEM BEING USED.

3. ALL WIRING AND CONDUIT TO CONFORM TO NFPA 70 AND NEC 760. WIRING SHALL BE U.L. LISTED MINIMUM 300V TYPE FPLP PLENUM RATED SOLID COPPER OR STANDARD COPPER WITH A MAX OF 19 STRANDS FOR SIZES 18, 16, & 14 OR LARGER.

4. ALL STROBE LIGHTS SHALL ACTIVATE UPON INITIATION OF THE GENERAL ALARM. SHALL BE A MINIMUM OF 75CD.

5. MANUAL STATIONS TO BE INSTALLED AT 42" INCHES TO BOTTOM OF DEVICE NO HIGHER THAN 48" TO HANDLE ABOVE FINISHED FLOOR.

6. SMOKE DETECTORS TO BE INSTALLED AT PER NFPA 72. WALL MOUNTED SMOKE DETECTORS SHALL BE MOUNTED 4" INCHES MIN. FROM CEILING WITH 12" MAX FROM CEILING.

7. THE FIRE ALARM PANEL MUST HAVE A DEDICATED 120V CIRCUIT WITH EQUIPMENT GROUND CONNECTION AS PER MANUFACTURER'S RECOMMENDATIONS AND ARTICLE 760 OF THE NEC. MINIMUM WIRE SIZE IS 12 AWG FOR GROUND CONNECTION. (NOTE PANEL NEUTRAL OR CONDUIT GROUND IS NOT ACCEPTABLE.)

8. A SUPERVISORY SIGNAL SHALL BE ANNUNCIATED UPON ANY TAMPER SWITCH ACTIVATION. FAILURE OR REMOVAL OF ANY DETECTION OR MANUAL DEVICE SHALL ACTIVATE A TROUBLE SIGNAL.

9. FIRE ALARM CIRCUITS AND SHALL BE CLASS "B" STYLE "C" FOR INITIATION DEVICE CIRCUIT (IDC), AND CLASS "B" STYLE "Y" FOR NOTIFICATION DEVICE CIRCUITS (NAC) CIRCUITS.

10. SYSTEM SHALL BE A VOICE TYPE EVACUATION SYSTEM. ALL SPEAKER SHALL PROVIDE INTELLIGIBLE NOTIFICATION AND SHALL HAVE A SOUND PRESSURE LEVEL OF +15DB OVER AMBIENT NOISE IN EACH SPACE. PROVIDE PRE-RECORDED VOICE SIGNAL WITH ANNUNCIATOR MICROPHONE AS PRIORITY SIGNAL OVERRIDE.

11. ALL FIRE ALARM POWER CIRCUITS SHALL HAVE A DEDICATED 120VAC VOLTAGE BREAKER AND SHALL BE MECHANICALLY PROTECTED (LOCKED OUT) MARKED AS "FIRE ALARM CIRCUIT" IN RED.

12. STROBES TO BE INSTALLED PER ADA HEIGHT. WALL MOUNTED SHALL HAVE THEIR BOTTOMS AT HEIGHTS ABOVE THE FINISHED FLOOR OF 80".

13. A CERTIFICATION OF COMPLETION SHALL BE ISSUED ON THE FIRE ALARM PANEL.

14. ALL FIRE STOP PENETRATION SHALL BE MADE WITH APPROVED NEC ELECTRICAL AND FIRE STOP MATERIALS.

15. ALL 1900 BACK BOXES MUST BE INSTALLED SQUARE AND LEVEL FOR PROPER DEVICE MOUNTING.

16. ALL SMOKE DETECTORS SHALL BE MOUNTED 3-1/2' AWAY FROM ANY HVAC VENTS.

17. SPEAKER/STROBES AT END OF CORRIDORS MUST BE WITHIN 15' OF END.

18. SPEAKER/STROBES OPEN TO OUTSIDE AIR WILL BE (WP) WEATHER PROOF DEVICES IN APPROVED BACKBOXES.

19. ALL PULL STATIONS OPEN TO OUTSIDE AIR WILL BE (WP) WEATHER PROOF DEVICES AND INSTALLED IN APPROVED BACKBOXES.

20. ALL FIRE CABLE THAT IS FREE-AIR, SHALL BE PLENUM RATED AND INDEPENDENT SUPPORTED THROUGHOUT INSTALLATION AS PER NEC AND RATED PER AREA.

21. REMOTE ANNUNCIATOR AND FACP SHALL HAVE INTEGRAL MICROPHONE FOR OVERRIDE OF PRE-RECORDED VOICE SIGNAL.

22. SECONDARY BACKUP POWER SHALL BE PROVIDED BY INTEGRAL BATTERIES WITHIN FACP TO SUPPLY POWER TO SYSTEM UNDER QUIESCENT LOAD FOR A MINIMUM OF 24HRS AND THEN CAPABLE OF AN ADDITIONAL 15 MIN ALARM OPERATION AT MAXIMUM CONNECTED LOAD.

23. SMOKE DETECTORS SHALL BE ADDRESSABLE PHOTO ELECTRIC.

24. DUCT DETECTORS SHALL BE ADDRESSABLE PHOTO ELECTRIC AND RATED FOR VELOCITIES UP TO 5000FT/MIN.

25. HEAT DETECTORS SHALL BE ADDRESSABLE FIXED TYPE @ 135 DEG. F.

26. PRIOR TO INSTALLATION OF ELEVATOR HOISTWAY HEAT DETECTORS VERIFY WITH LOCAL AHJ IF THEY ARE REQUIRED.

61G15-33.006 DESIGN OF ALARM SYSTEMS

2) DESIGN DOCUMENTS FOR ALARM SYSTEMS SHALL, AT A MINIMUM, INDICATE THE FOLLOWING:

(A) SYSTEM RISER DIAGRAM:
- SEE RISER DIAGRAM ON THIS SHEET.

(B) DEVICE TYPES AND LOCATIONS:
- REFER TO E0.1 FOR LEGEND; PLAN SHEETS E4.1 - E4.4 FOR LOCATION AND NOTES ON THIS SHEET AS

(C) TYPE OF CONDUCTORS AND INSTALLATION REQUIREMENTS INCLUDING RATING IDENTIFICATION AND LISTING REQUIREMENTS:
- REFER TO NOTE #3 & #9 AND RISER DIAGRAM THIS SHEET.

(D) NOTIFICATION REQUIREMENTS:
- NOTIFICATION IS VIA VOICE EVACUATION THROUGHOUT WITH VISIBLE SIGNALIZATION. REFER TO RISER AND NOTES THIS SHEET.

(E) BACKUP POWER REQUIREMENTS
- REFER TO NOTE #22 THIS SHEET.

(F) WHERE APPLICABLE, BACKUP POWER SOURCES AND INTER-TIES TO OTHER SYSTEMS / COMPONENTS.
- REFER TO NOTE #22 THIS SHEET. AND RISER DIAGRAM.

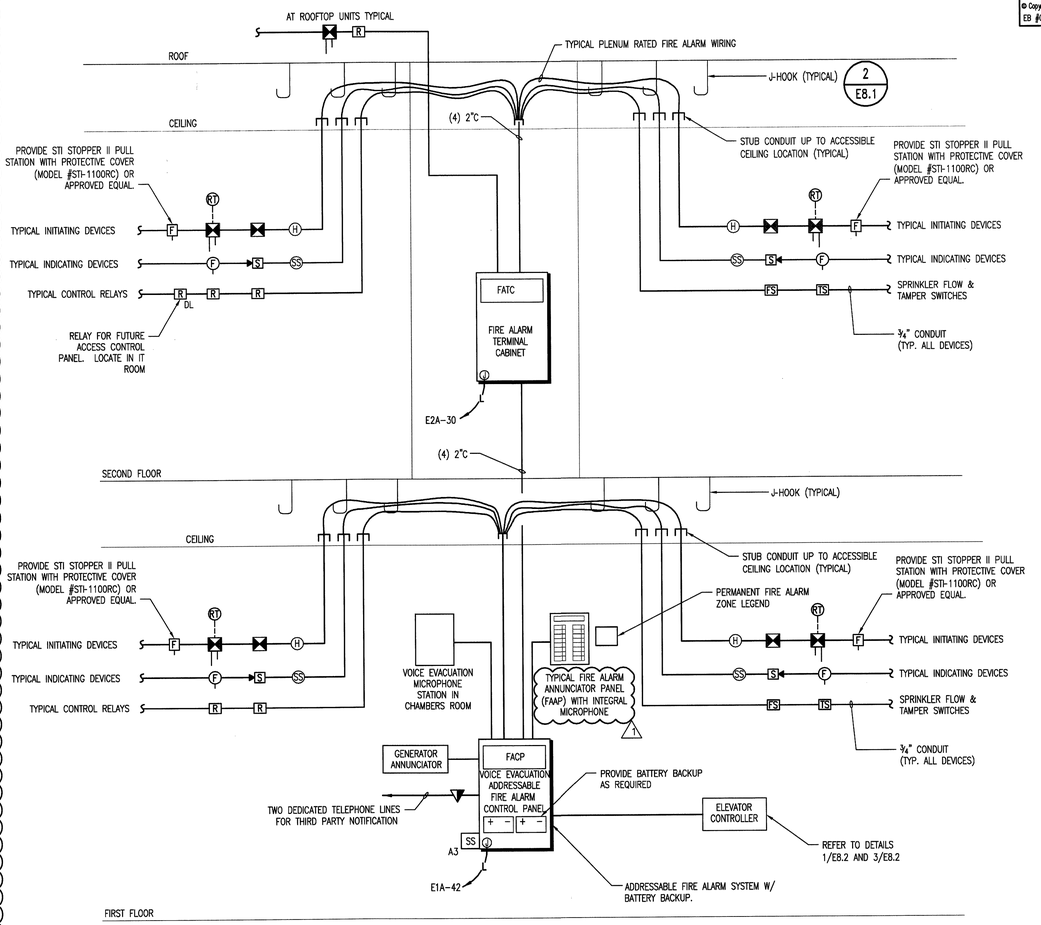

1 / E8.2 **FIRE ALARM RISER**
NO SCALE

SEQUENCE OF OPERATION

1. THE FIRST ACTIVATION OF ANY MANUAL FIRE ALARM PULL STATION, OR THE AUTOMATIC ACTUATION OF ANY THERMAL DETECTOR, WATER FLOW SWITCH, SMOKE DETECTOR, OR ANY OTHER APPROVED ALARM INITIATING DEVICE SHALL IMMEDIATELY RESULT IN THE FOLLOWING:

a) NOTIFYING AND DISPATCHING THE FIRE DEPARTMENT.

b) THE EVACUATION SIGNAL SHALL BE A PRE RECORDED VOICE SIGNAL, ELECTRONICALLY GENERATED UNTIL SIGNALS ARE SILENCED. WHEN SIGNALS ARE SILENCED, THE VISUAL ALARM DEVICES SHALL REMAIN ACTIVE UNTIL THE ALARM IS CLEARED AND THE FACP IS RESET.

c) ALL VISIBLE ALARM INDICATING APPLIANCES SHALL FLASH AT A SYNCHRONIZED RATE CONTINUOUSLY UNTIL THE SYSTEM IS RESET.

d)ALARM INDICATING APPLIANCES SHALL SOUND ALARM THROUGHOUT THE PREMISES WHERE ALARM INITIATED. EVACUATION NOTIFICATION SHALL BE ON GENERAL ALARM TYPE BASIS.

e) ANY SUBSEQUENT ZONE OR POINT ALARM SHALL REACTIVATE THE ALARM SEQUENCE ABOVE.

f) THE SYSTEM ALARM LED SHALL FLASH ON THE DISPLAY UNIT OF THE CONTROL PANEL AND ANY REMOTE ANNUNCIATOR ONCE ALARM IS RECEIVED. ONCE THE ALARM HAS BEEN ACKNOWLEDGED THE LED WILL LATCH IN ALARM UNTIL THE SYSTEM IS RESET OR ANOTHER ALARM HAS BEEN RECEIVED. THE CONTROL PANEL LCD DISPLAY SHALL INDICATE LOCATION, ADDRESS AND TYPE OF ALARM RECEIVED, AND WILL SCROLL THROUGH MULTIPLE ALARMS IF PRESENT.

g) A) ELEVATOR SMOKE DETECTORS ON FLOOR 1 TO RECALL ELEVATOR (S) TO ALTERNATE FLOOR.

B) ELEVATOR SMOKES ON FLOOR 2 TO RECALL ELEVATOR (S) TO MAIN FLOOR.

2. SUPERVISORY ALARM SHALL RESULT IN THE FOLLOWING:

a) ALL TAMPER SWITCHES AND GENERATOR STATUS TO BE SUPERVISORY SIGNAL ONLY.

b) SUPERVISORY SIGNAL WILL CAUSE A UNIQUE TONE ALARM AND ILLUMINATE A SUPERVISORY LED AT THE FIRE CONTROL PANEL, AND WILL NOTIFY THE OWNERS MONITORING SERVICE.

3. ALL AIR HANDLER AND ROOF TOP UNITS WILL BE SHUT DOWN UPON ACTIVATION OF GENERAL ALARM AND WILL RESTART UPON RESETTING OF THE FIRE ALARM CONTROL PANEL.

4. A BREAK IN ANY FIELD WIRING, DEVICE FAULT, OR REMOVING ANY DEVICE WILL RESULT IN AN AUDIBLE TROUBLE SIGNAL AT THE PANEL, AND WILL NOTIFY CUSTOMERS MONITORING SERVICE. TROUBLE SIGNAL WILL REMAIN AUDIBLE UNTIL TROUBLE IS CLEARED, OR TROUBLE SILENCE BUTTON IS ACTIVATED IN THE FACP. TROUBLE WILL CLEAR AUTOMATICALLY WHEN PROBLEM IS RESOLVED.

CONTRACTOR'S CAUTION
THE ABOVE MATRIX IS BASED ON NFPA TYPICAL INPUT/OUTPUT MATRIX

CONTRACTOR'S CAUTION (FA)
CONTRACTOR/VENDOR SHALL PREPARE FLORIDA LICENSED PE WORKING DRAWINGS INCORPORATING THE FIRE ALARM CRITERIA DESIGN AND CONFORMING TO AHJ REQUIREMENTS. SUBMIT TO DESIGN PROFESSIONAL AS A SHOP DRAWING FOR REVIEW. SUBMIT COMPLETE SIGNED/ SEALED DRAWINGS TO AGENCY FOR PERMIT AND C.O.O.

NOTE:
THE DIAGRAM IS FOR DIAGRAMMATIC PURPOSES ONLY AND DOES NOT REPRESENT A COMPLETE WIRING DISPLAY. ALL WIRING SHALL BE IN ACCORDANCE WITH SELECTED VENDOR'S POINT-BY-POINT WIRING DIAGRAM REFER TO FLOOR PLANS FOR EXACT QUANTITY OF FIRE ALARM DEVICES.

RECORD SET
The information presented on this drawing is diagrammatic and is presented for general information purposes and should not be relied on for accuracy of dimensions, details and locations. Actual and exact conditions if required should be determined in the field.

TLC ENGINEERING FOR ARCHITECTURE
800 Fairway Drive.
Suite 250
Deerfield Beach, Florida 33441
Phone: 954-418-9096
Fax: 954-418-9299
www.tlc-engineers.com

© Copyright 2007 TLC Engineering for Architecture, Inc.
EB #0000015 TLC NO: 609036

JMWA ARCHITECTS
STEVEN E. MYOTT AIA
JAMES R. WILLIAMS AIA
RODOLFO ACEVEDO AIA
949 CLINT MOORE ROAD
BOCA RATON, FLORIDA 33487
TEL 561 997 9997
FAX 561 997 1610
WWW.JMWA.NET

PALMETTO BAY VILLAGE HALL
9705 E. Hibiscus St., Palmetto Bay, Florida

Master Builders of South Florida, Inc.
1400 E. Oakland Park Blvd. Suite 210
Oakland Park, FL 33334

Jason A. Stinchcomb, P.E.
Florida License #58184

PROJECT NO. 609036
DESIGNED BY: MEB
DRAWN BY: JAS
CHECKED BY: JAS

SUBMITTALS:
50% REVIEW 10.30.2009
PERMIT REVIEW 11.20.2009
BUILDING PERMIT 03.03.2010

REVISIONS:
1 PERMIT COMMENTS 04.02.2010

SYSTEMS RISER DIAGRAMS

E6.2

© 2009 JMWA ARCHITECTS. INCORPORATED ALL RIGHTS RESERVED. NO PART OF THESE IDEAS, PLANS OR DESIGNS MAY BE REPRODUCED, COPIED OR UTILIZED GRAPHICALLY IN ANY FORM WHATSOEVER WITHOUT THE EXPRESSED WRITTEN CONSENT OF JMWA ARCHITECTS INCORPORATED AND ITS BOARD OF DIRECTORS.

L:\2009--Jobs\609036--Palmetto Bay Municipal Center\CAD-MEP\Sheets E6.2.dwg 4/22/2010 1:25:36 PM jared.hunt

TLC ENGINEERING FOR ARCHITECTURE
800 Fairway Drive.
Suite 260
Deerfield Beach, Florida 33441
Phone: 954-418-9096
Fax: 954-418-9298
www.tlc-engineers.com
© Copyright 2007 TLC Engineering for Architecture, Inc.
EB #0000015 TLC NO: 609036

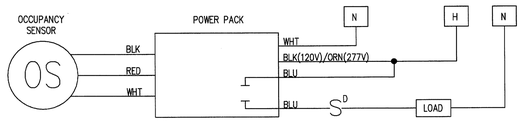

ALL SENSORS AS MANUFACTURED BY COOPER GREENGATE. DIMMING BALLAST CONTROLS VOLTAGE AND WIRING SHALL BE COORDINATED WITH THE CONTROL SYSTEM.

3 / E7.3 **CEILING MOUNTED OCCUPANCY SENSOR WIRING DIAGRAM WITH DIMMING CONTROLS**

SCALE: N.T.S.

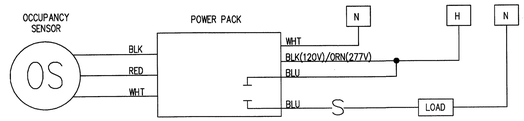

ALL SENSORS AS MANUFACTURED BY COOPER GREENGATE. DIMMING BALLAST CONTROLS VOLTAGE AND WIRING SHALL BE COORDINATED WITH THE CONTROL SYSTEM.

2 / E7.3 **TYPICAL CEILING MOUNTED OCCUPANCY SENSOR WIRING DIAGRAM**

SCALE: N.T.S.

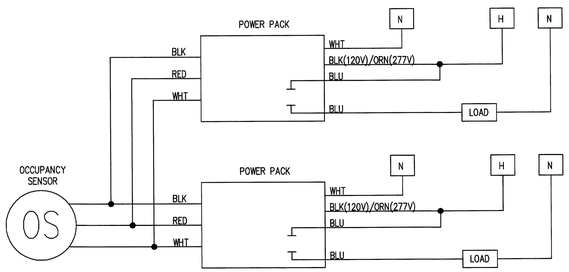

ALL SENSORS AS MANUFACTURED BY COOPER GREENGATE. DIMMING BALLAST CONTROLS VOLTAGE AND WIRING SHALL BE COORDINATED WITH THE CONTROL SYSTEM.

4 / E7.3 **CEILING MOUNTED OCCUPANCY SENSOR WIRING DIAGRAM WITH EMERGENCY CIRCUIT CONTROLS**

SCALE: N.T.S.

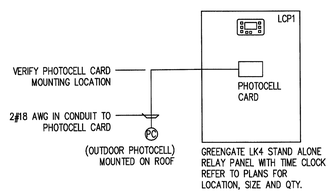

GENERAL NOTES:

1. PROVIDE GREENGATE CONTROL SYSTEM OR EQUAL. INCLUDE ALL SOFTWARE AND INTERFACE DEVICES FOR A COMPLETE AND OPERABLE SYSTEM.
2. ALL DEVICES TYPICAL.

1ST FLOOR

1 / E7.3 **AUTOMATED BUILDING LIGHTING CONTROLS**

SCALE: N.T.S.

RECORD SET

The information presented on this drawing is diagrammatic and is presented for general information purposes and should not be relied on for accuracy of dimensions, details and locations. Actual and exact conditions if required should be determined in the field.

JMWA ARCHITECTS
STEVEN E. MYOTT AIA
JAMES R. WILLIAMS AIA
RODOLFO ACEVEDO AIA

949 CLINT MOORE ROAD
BOCA RATON, FLORIDA 33487
TEL 561 997 9997
FAX 561 997 1610

WWW.JMWA.NET

PALMETTO BAY VILLAGE HALL

Palmetto Bay, Florida

Master Builders of South Florida, Inc.
1400 E. Oakland Park Blvd. Suite 210
Oakland Park, FL 33334

Jason A. Stinchcomb, P.E.
Florida License #58184

PROJECT NO. 609036
DESIGNED BY: MEB
DRAWN BY: JAS
CHECKED BY: JAS

SUBMITTALS:

50% REVIEW	10.30.2009
PERMIT REVIEW	11.20.2009
BUILDING PERMIT	03.03.2010

REVISIONS:

SYSTEMS
RISER DIAGRAMS

E6.3

© 2009 JMWA ARCHITECTS, INCORPORATED ALL RIGHTS RESERVED. NO PART OF THESE IDEAS, PLANS OR DESIGNS MAY BE REPRODUCED, COPIED OR UTILIZED GRAPHICALLY IN ANY FORM, WHATSOEVER, WITHOUT THE EXPRESSED WRITTEN CONSENT OF JMWA ARCHITECTS INCORPORATED AND ITS BOARD OF DIRECTORS.

L:\2009-Jobs\609036-Palmetto Bay Municipal Center\CAD-MEP\Sheets E6.3.dwg 3/8/2010 11:48:16 AM jared.hunt

TLC ENGINEERING FOR ARCHITECTURE
800 Fairway Drive.
Suite 250
Deerfield Beach, Florida 33441
Phone: 954-418-9096
Fax: 954-418-9296
www.tlc-engineers.com
© Copyright 2007 TLC Engineering for Architecture, Inc.
EB #0000015 TLC NO: 609036

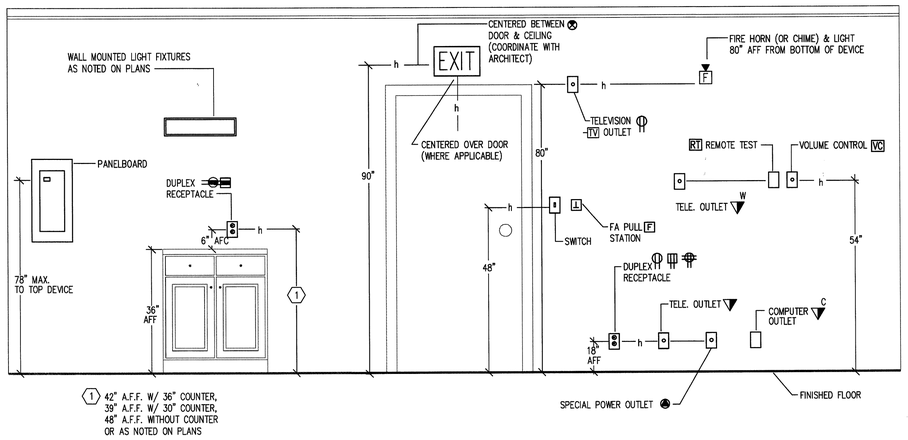

MOUNTING HEIGHTS
No Scale

3

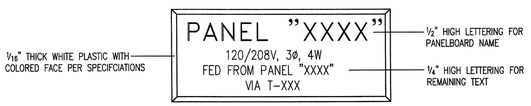

TYPICAL 120/208V PANELBOARD

PANELBOARD NAMEPLATE
No Scale

5

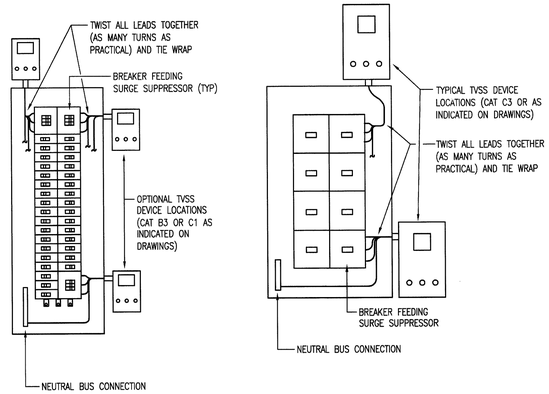

PANELBOARD SERVICE ENTRANCE OR DISTRIBUTION PANEL

NOTE: MOUNT TVSS DEVICE IN A LOCATION TO MAINTAIN ALL LEADS AS SHORT AS POSSIBLE. (18" MAX.)

TVSS EXTERIOR MOUNT INSTALLATION
No Scale

4

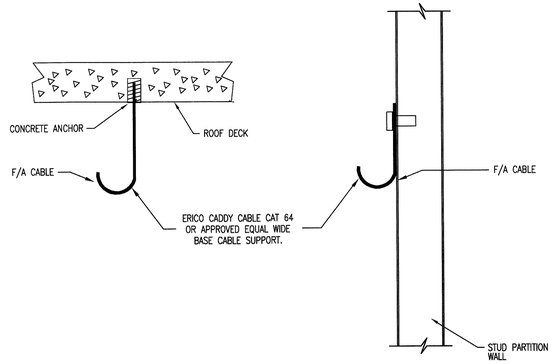

NOTE: TREE SYSTEM IS FOR MAIN CORRIDOR PATHWAYS. DOUBLE AND SINGLE TREES MAYBE USED IN ROOMS. J HOOKS SHALL BE SPACED 3' TO 5' ON CENTER.

CABLE HANGER
No Scale

2

RECORD SET

The information presented on this drawing is diagrammatic and is presented for general information purposes and should not be relied on for accuracy of dimensions, details and locations. Actual and exact conditions if required should be determined in the field.

JMWA ARCHITECTS
STEVEN E. MYOTT AIA
JAMES R. WILLIAMS AIA
RODOLFO ACEVEDO AIA
949 CLINT MOORE ROAD
BOCA RATON, FLORIDA 33487
TEL 561 997 9997
FAX 561 997 1610
WWW.JMWA.NET

PALMETTO BAY VILLAGE HALL
Palmetto Bay, Florida

Master Builders of South Florida, Inc.
1400 E. Oakland Park Blvd. Suite 210
Oakland Park, FL 33334

Jason A. Stinchcomb, P.E.
Florida License #58184

PROJECT NO. 609036
DESIGNED BY: MEB
DRAWN BY: JAS
CHECKED BY: JAS

SUBMITTALS:
50% REVIEW 10.30.2009
PERMIT REVIEW 11.20.2009
BUILDING PERMIT 03.03.2010

REVISIONS:

ELECTRICAL DETAILS
DETAILS

E7.1

© 2009 JMWA ARCHITECTS, INCORPORATED ALL RIGHTS RESERVED. NO PART OF THESE IDEAS, PLANS OR DESIGNS MAY BE REPRODUCED, COPIED OR UTILIZED GRAPHICALLY IN ANY FORM WHATSOEVER WITHOUT THE EXPRESSED WRITTEN CONSENT OF JMWA ARCHITECTS INCORPORATED AND ITS BOARD OF DIRECTORS.

L:\2009-Jobs\609036-Palmetto Bay Municipal Center\CAD-MEP\Sheets E7.1.dwg 3/8/2010 11:48:40 AM Jared.Hunt

ENGINEERING FOR ARCHITECTURE
800 Fairway Drive.
Suite 250
Deerfield Beach, Florida 33441
Phone: 954-418-9096
Fax: 954-418-9296
www.tlc-engineers.com
© Copyright 2007 TLC Engineering for Architecture, Inc.
EB #0000015 TLC NO: 609036

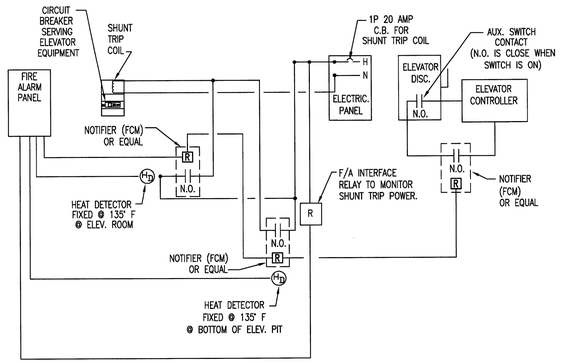

ELEVATOR SHUNT TRIP WIRING DIAGRAM
No Scale — 3

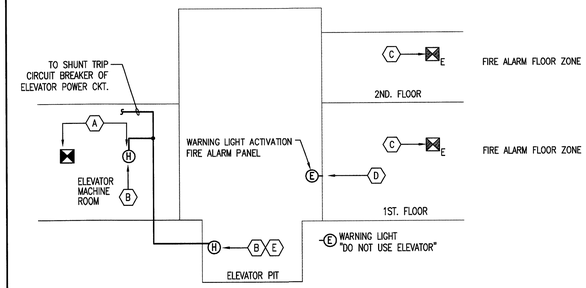

NOTES:

1. DERIVE POWER FOR FLASHING WARNING LIGHT FROM VISUAL ALARM CIRCUIT IN FIRE ALARM CONTROL PANEL.
2. COORDINATE HEAT DETECTOR LOCATIONS WITH SPRINKLERS. DETECTORS SHALL BE LOCATED WITHIN 24" OF EACH SPRINKLER HEAD.
3. INITIATION OF ELEVATOR LOBBY, TOP OF SHAFT, OR MACHINE ROOM SMOKE DETECTOR LOOP SHALL PLACE ELEVATOR CONTROL INTO PHASE 1 RECALL MODE & RETURN ELEVATOR TO DESIGNATED SAFE PLACE.

LEGEND

(A) SMOKE DETECTOR(S) AND 135 DEG F FIXED TEMPERATURE HEAT DETECTOR(S) LOCATED IN ELEVATOR MACHINE ROOM.
(B) SHUNT TRIP CONTACT LOCATED IN HEAT DETECTOR TO SHUNT TRIP POWER TO ELEVATOR UPON ACTIVATION OF HEAT DETECTOR. PROVIDE ONLY IF SPRINKLER IS PROVIDED.
(C) SMOKE DETECTOR LOCATED IN ELEVATOR LOBBY.
(D) FLASHING WARNING LIGHTS LOCATED ADJACENT TO ELEVATOR CALL BUTTON WITHIN ELEVATOR.
(E) 135 DEG F FIXED TEMPERATURE HEAT DETECTOR SHALL NOT BE PROVIDED IF SPRINKLER HEAD IS MOUNTED BELOW 24" AFF.

FIRE ALARM FOR HYDRAULIC ELEVATOR
FULLY SPRINKLED BUILDING - No Scale — 1

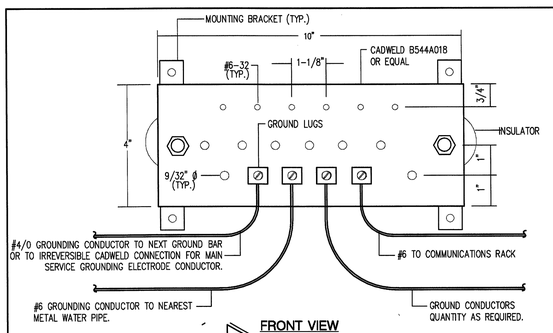

FRONT VIEW

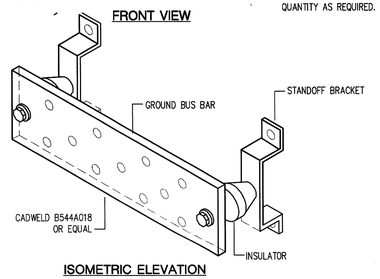

ISOMETRIC ELEVATION

GROUND BAR
No Scale — 6

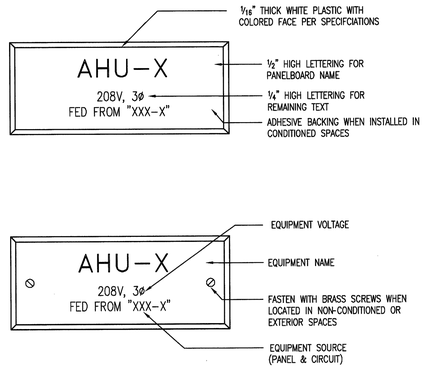

TYPICAL EQUIPMENT

EQUIPMENT NAMEPLATE
No Scale — 4

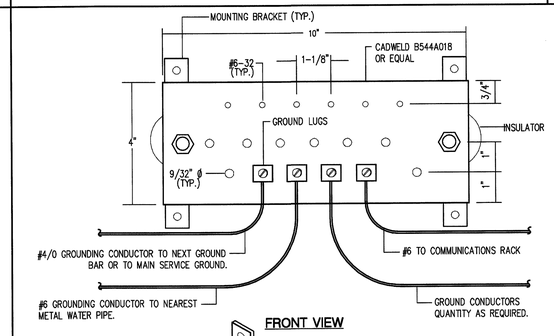

FRONT VIEW

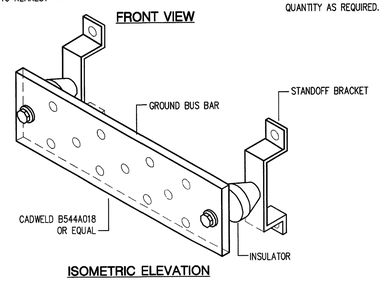

ISOMETRIC ELEVATION

COMMUNICATIONS GROUND BAR
No Scale — 2

RECORD SET

The information presented on this drawing is diagrammatic and is presented for general information purposes and should not be relied on for accuracy of dimensions, details and locations. Actual and exact conditions if required should be determined in the field.

JMWA ARCHITECTS
STEVEN E. MYOTT AIA
JAMES R. WILLIAMS AIA
RODOLFO ACEVEDO AIA
949 CLINT MOORE ROAD
BOCA RATON, FLORIDA 33487
TEL 561 997 9997
FAX 561 997 1610
WWW.JMWA.NET

PALMETTO BAY VILLAGE HALL
Palmetto Bay, Florida

Master Builders of South Florida, Inc.
1400 E. Oakland Park Blvd. Suite 210
Oakland Park, FL 33334

Jason A. Stinchcomb, P.E.
Florida License #58184

PROJECT NO. 609036
DESIGNED BY: MEB
DRAWN BY: JAS
CHECKED BY: JAS

SUBMITTALS:
50% REVIEW 10.30.2009
PERMIT REVIEW 11.20.2009
BUILDING PERMIT 03.03.2010

REVISIONS:

ELECTRICAL DETAILS

E7.2

© 2009 JMWA ARCHITECTS. INCORPORATED ALL RIGHTS RESERVED NO PART OF THESE IDEAS, PLANS OR DESIGNS MAY BE REPRODUCED, COPIED OR UTILIZED GRAPHICALLY IN ANY FORM WHATSOEVER WITHOUT THE EXPRESSED WRITTEN CONSENT OF JMWA ARCHITECTS INCORPORATED AND ITS BOARD OF DIRECTORS.

L:\2009-Jobs\609036-Palmetto Bay Municipal Center\CAD-MEP\Sheets E7.2.dwg 3/8/2010 11:48:59 AM jpred.hunt

TLC ENGINEERING FOR ARCHITECTURE
800 Fairway Drive.
Suite 250
Deerfield Beach, Florida 33441
Phone: 954-418-9096
Fax: 954-418-9296
www.tlc-engineers.com
© Copyright 2007 TLC Engineering for Architecture, Inc.
EB #0000015 TLC NO:609036

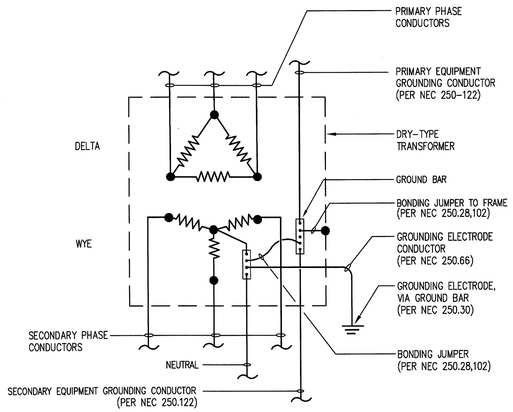

STEP DOWN TRANSFORMER GROUNDING
(3 PHASE, 3 WIRE, DELTA PRIMARY / 3 PHASE, 4 WIRE, WYE SECONDARY)

4

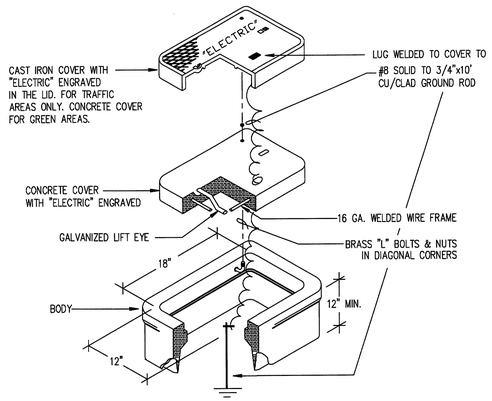

NOTE: ALL PULL BOXES SHALL BE H20 TRAFFIC LOAD RATED AND SIZE ADJUSTED AS REQUIRED PER NEC FOR CONDUIT SIZE REQUIREMENTS.

PULL BOX DETAIL
No Scale

1

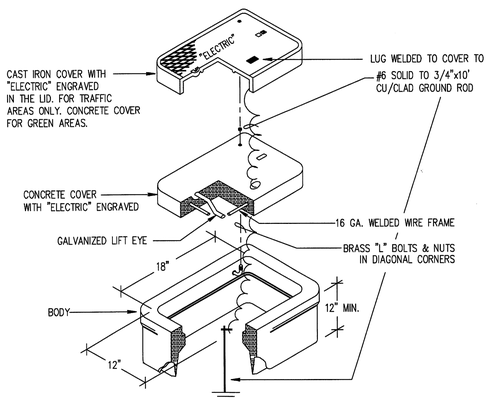

NOTE: ALL PULL BOXES SHALL BE H20 TRAFFIC LOAD RATED AND SIZE ADJUSTED AS REQUIRED PER NEC FOR CONDUIT SIZE REQUIREMENTS.

PULL BOX DETAIL
No Scale

5

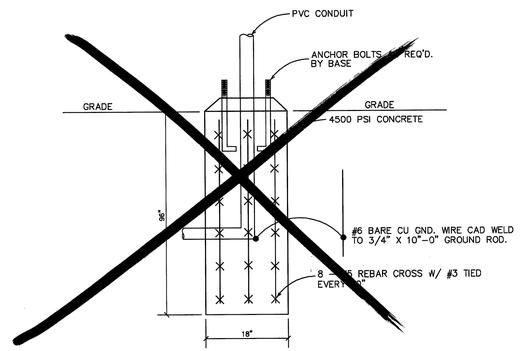

NOTE:
POLE SUPPLIER SHALL CERTIFY THAT POLE, BASE, & FIXTURE MEETS 2007 FLORIDA BUILDING CODE, 150 MPH & 3 SEC. GUST WIND LOAD CRITERIA AND SHALL PROVIDE SIGNED & SEALED CALCULATIONS BY A REGISTERED FLORIDA ENGINEER.

POLE ANCHOR BASE DETAIL
No Scale

3

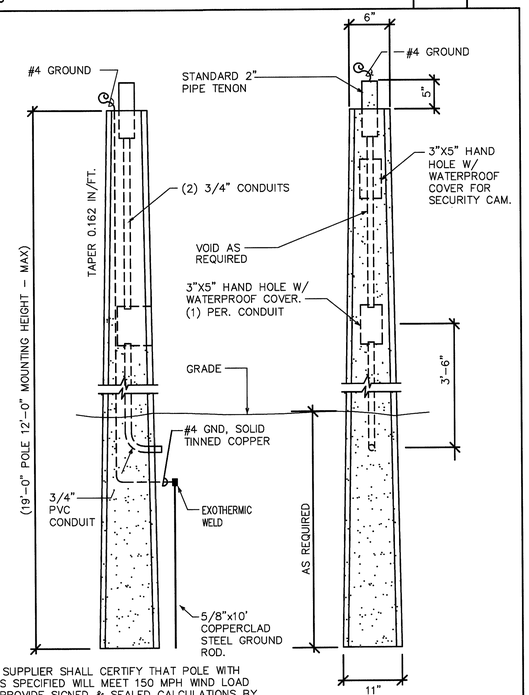

NOTE:
THE POLE SUPPLIER SHALL CERTIFY THAT POLE WITH FIXTURE AS SPECIFIED WILL MEET 150 MPH WIND LOAD CRITERIA. PROVIDE SIGNED & SEALED CALCULATIONS BY A REGISTERED FLORIDA ENGINEER

TYPICAL - CONCRETE DIRECT BURIED POLE DETAIL
No Scale

2

RECORD SET
The information presented on this drawing is diagrammatic and is presented for general information purposes and should not be relied on for accuracy of dimensions, details and locations. Actual and exact conditions if required should be determined in the field.

JMWA ARCHITECTS
STEVEN E. MYOTT AIA
JAMES R. WILLIAMS AIA
RODOLFO ACEVEDO AIA
949 CLINT MOORE ROAD
BOCA RATON, FLORIDA 33487
TEL 561 997 9997
FAX 561 997 1610
WWW.JMWA.NET

PALMETTO BAY VILLAGE HALL
Palmetto Bay, Florida

Master Builders of South Florida, Inc.
1400 E. Oakland Park Blvd. Suite 210
Oakland Park, FL 33334

Jason A. Stinchcomb, P.E.
Florida License #58184

PROJECT NO. 609036
DESIGNED BY: MEB
DRAWN BY: JAS
CHECKED BY: JAS

SUBMITTALS:
50% REVIEW 10.30.2009
PERMIT REVIEW 11.20.2009
BUILDING PERMIT 03.03.2010

REVISIONS:

ELECTRICAL DETAILS

E7.3

THESE IDEAS, PLANS OR DESIGNS MAY BE REPRODUCED, COPIED OR UTILIZED GRAPHICALLY IN ANY FORM WHATSOEVER WITHOUT THE EXPRESSED WRITTEN CONSENT OF JMWA ARCHITECTS INCORPORATED AND ITS BOARD OF DIRECTORS.
© 2009 JMWA ARCHITECTS, INCORPORATED ALL RIGHTS RESERVED. NO PART OF

L:\2009--Jobs\609036--Palmetto Bay Municipal Center\CAD--MEP\Sheets E7.3.dwg 3/8/2010 11:49:20 AM jared.hunt

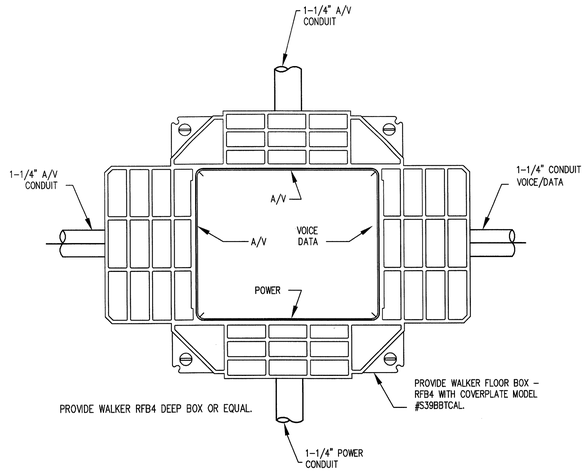

POWER/DATA FLOOR BOX
No Scale

3

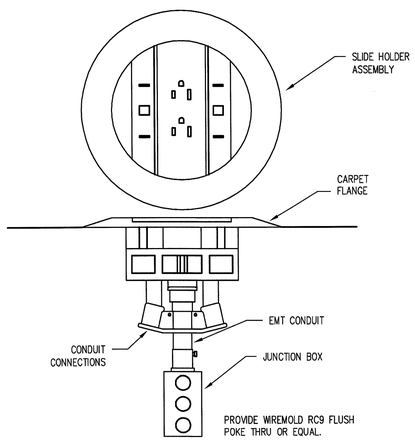

POWER/DATA FLUSH POKE THRU
No Scale

4

1 and 2 Hour Fire Rated Through Penetration Firestop for Single Metal Pipe through Gypsum Wall Assemblies using TREMstop IA.

Classified UL System

WL 1158

System No. W-L-1158
December 7, 2001
F Ratings - 1 and 2 Hr. (See Item 1)
T Rating - 0 Hr.
L Rating at Ambient - Less Than 1 CFM/sq. ft.

TREMCO®
Tremco Inc., 2628 Pearl Road, Medina, Ohio 44256
www.tremcofirestop.com

(Drawing not to scale)

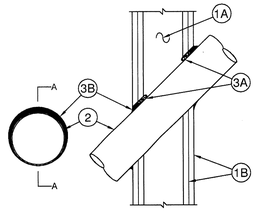

SECTION A–A

1. **Wall Assembly** The 1 or 2 hour fire-rated gypsum board stud wall assembly shall be constructed of the materials and in the manner specified in the individual U300,U400 or V400 Series Wall and Partition Designs in the UL Fire Resistance Directory and shall include the following construction features:
A. **Studs** Wall framing may consist of either wood studs or steel channel studs. Wood studs to consist of nom 2 by 4 in. (51 by 102 mm) lumber spaced 16 in. (406 mm) OC. Steel studs to be min 2-1/2 in. (64 mm) wide and spaced max 24 in. (610 mm) OC.
B. **Gypsum Board*** One or two layers of nom 1/2 or 5/8 in. (13 or 16 mm) thick gypsum board as specified in the individual Wall and Partition Design. Max diam of opening is 15-1/8 in. (384 mm).
The hourly F Rating of the firestop system is equal to the hourly fire rating of the wall assembly in which it is installed.
1A. **Steel Sleeve -** (Optional. Not shown.) Cylindrical sleeve fabricated from min 0.013 in. (0.330 mm) thick (No. 30 gauge) to max 0.056 in. (1.42 mm) (No. 16 gauge) galv steel sheet and having a min 1 in. (25 mm) lap along the longitudinal seam. Length of sleeve flush with both walls. Sleeve to be installed by coiling the sheet metal to a diam smaller than the through opening, inserting the coil through the opening and releasing the coil to let it uncoil against the circular cutouts in the gypsum board layers.
2. **Through Penetrants** One metallic pipe, tubing or conduit to be installed either concentrically or eccentrically within the firestop system. Pipe, tubing or conduit to be rigidly supported on both sides of wall assembly. The pipe, tubing or conduit may be installed at an angle not greater than 45 degrees from the perpendicular. The annular space shall be min 0 (point contact) in. to max 1-7/8 in. (48 mm). The following types and sizes of metallic pipe tubing or conduit may be used:
A. **Steel Pipe** Nom 12 in. (305 mm) diam (or smaller) Schedule 10 (or heavier) steel pipe.
B. **Iron Pipe** Nom 12 in. (305 mm) diam (or smaller) cast or ductile iron pipe.
C. **Conduit** Nom 4 in. (102 mm) diam (or smaller) steel electrical metallic tubing or nom 6 in. diam (or smaller) steel conduit.
D. **Copper Tubing** Nom 4 in. (102 mm) diam (or smaller) Type L (or heavier) copper tubing.
E. **Copper Pipe** Nom 4 in. (102 mm) diam (or smaller) Regular (or heavier) copper pipe.
3. **Firestop System** The firestop system shall consist of the following:
A. **Packing Material** (Optional) - Foam backer rod firmly packed into the opening as a permanent form. Packing material to be recessed from both surfaces of wall as required to accommodate the required thickness of fill material.
B. **Fill, Void or Cavity Material* - (Caulk)** Min 1/2 in. (13 mm) thickness of fill material applied within the annulus, flush with both surfaces of wall. When annular space exceeds 1/2 in. (13 mm), the min thickness of fill material is 5/8 in. (16 mm). Additional fill material to be installed such that a min 3/8 in. (10 mm) crown is applied at the pipe/wall interface at the point contact location.
TREMCO INC - TREMstop Intumescent Acrylic
*Bearing the UL Classification Mark

Reproduced courtesy of Underwriters Laboratories, Inc (UL/cUL)

FIRE SAFEING DETAIL
No Scale

2

2 and 4 Hour Fire Rated Through Penetration Firestop for Single Metal Pipe through Concrete Floors or Walls using FYRE-SIL.

Classified UL System

CAJ 1064

System No. 1064
March 16, 2004
F Ratings - 2, 3 & 4 (See Item 4)
T Rating - 0 Hr.

TREMCO®
Tremco Inc., 2628 Pearl Road, Medina, Ohio 44256
www.tremcofirestop.com

(Drawing not to scale)

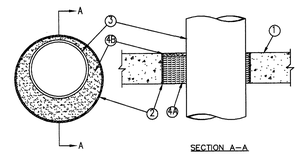

SECTION A–A

1. **Floor or Wall Assembly -** Reinforced lightweight or normal weight (100-150 pcf (1600-2400 kg/cu meter)) concrete as specified in the Table in Item 4 below. Floor may also be constructed of any UL Classified hollow-core **Precast Concrete Units ***. Wall may also be constructed of any UL Classified **Concrete Blocks***. Max diam of sleeved opening is 32 in. (813 mm). Max diam of sleeved opening in floors constructed of hollow-core precast concrete units is 7 in. (178 mm).
See **Concrete Blocks** (CAZT) and **Precast Concrete Units** (CFTV) categories in the Fire Resistance Directory for names of manufacturers.
2. **Steel Sleeve (Optional) -** Nom 32 in. (813 mm) diam (or smaller) Schedule 10 (or heavier) steel pipe sleeve cast or grouted into floor or wall assembly, flush with both surfaces of floor or wall. **Steel sleeve may be used in 2 and 3 hr F Rated systems only.**
3. **Through Penetrants -** One metallic pipe, conduit or tubing to be installed either concentrically or eccentrically within the firestop system. Pipe, conduit or tubing to be rigidly supported on both sides of floor or wall assembly. See Table in Item 4 for sizes of penetrants A, B, D and E that may be used. See Item 3C below for size of conduit that may be used. The annular space shall be as specified in Table in Item 4 below. The following types and sizes of metallic pipes, conduits or tubing may be used:
A. **Steel Pipe -** Schedule 10 (or heavier) steel pipe.
B. **Iron Pipe -** Cast or ductile iron pipe.
C. **Conduit -** Nom 4 in. (102 mm) diam (or smaller) steel electrical metallic tubing or nom 6 in. (152 mm) diam (or smaller) steel conduit.
D. **Copper Tubing -** Type L (or heavier) copper tubing.
E. **Copper Pipe -** Regular (or heavier) copper pipe.
4. **Firestop System -** The F Rating of the system is dependent upon the type of concrete, thickness of concrete, annular space, fill and packing material thickness, packing material density and penetrant size as shown in the Table below:

F Rating hr	Min Thick Concrete In. (mm)	Annular Space In. (mm)	Min Thick Packing Mtl In. (mm)	Min Density Packing Mtl pcf (kg/cu meter)	Min Thick Fill Mtl In. (mm)	Penetrant Size Diam (or Smaller) In (mm) D, E (Copper)	A, B, C (Steel, Iron)
2	4-1/2 (114)	⅛ to 3-3/8 (13 to 86)	3-1/2 (89)	6 (96)	½ (13)	4 (102)	16 (406)
2	5-1/2 (140)	0 to 1-7/8 (0 to 48)	5 (127)	4 (64)	½ (13)	4 (102)	16 (406)
3	4-1/2 (114)	⅛ to 3-3/8 (13 to 86)	3-1/2 (89)	6 (96)	½ (13)	4 (102)	8 (203)
3	4-1/2 (114)	0 to 2-1/8 (0 to 54)	4-1/4 (108)	4 (64)	¼ (6)	(1/2 6 (152)	30 (762)
4	5-1/2 (140)	0 to 1-7/8 (0 to 48)	5 (127)	4 (64)	½ (13)	4 (102)	8 (203)

Packing Material - Min 3-1/2, 4-1/4 or 5 in. (89, 108 or 127 mm) thickness of min 4.0 or 6.0 pcf (64 or 96 kg/cu meter) mineral wool batt insulation firmly packed into opening as a permanent form as specified in the Table above. Packing material to be recessed from top surface of floor or from both surfaces of wall as required to accommodate the required thickness of fill material.
B. **Fill, Void or Cavity Material* - Caulk -** Min ¼ or 1/2 in. (6 or 13 mm) thickness of fill material as specified in the Table above applied within the annulus, flush with top surface of floor or with both surfaces of wall. At the point contact location between pipe and concrete or sleeve, a min 1/2 in. (13 mm) diam bead of fill material shall be applied.
TREMCO INC - Fyre-Sil (floors or walls) and Fyre-Sil S.L. (floors)
*Bearing the UL Classification Mark

Reproduced courtesy of Underwriters Laboratories, Inc (UL/cUL)

FIRE SAFEING DETAIL
No Scale

1

RECORD SET
The information presented on this drawing is diagrammatic and is presented for general information purposes and should not be relied on for accuracy of dimensions, details and locations. Actual and exact conditions if required should be determined in the field.

TLC ENGINEERING FOR ARCHITECTURE
800 Fairway Drive, Suite 250
Deerfield Beach, Florida 33441
Phone: 954-418-9096
Fax: 954-418-9296
www.tlc-engineers.com

© Copyright 2007 TLC Engineering for Architecture, Inc.
EB #0000015 TLC NO: 609036

JMWA ARCHITECTS
STEVEN E. MYOTT AIA
JAMES R. WILLIAMS AIA
RODOLFO ACEVEDO AIA

949 CLINT MOORE ROAD
BOCA RATON, FLORIDA 33487
TEL 561 997 9997
FAX 561 997 1610

WWW.JMWA.NET

PALMETTO BAY VILLAGE HALL
Palmetto Bay, Florida

Master Builders of South Florida, Inc.
1400 E. Oakland Park Blvd. Suite 210
Oakland Park, FL 33334

Jason A. Stinchcomb, P.E.
Florida License #58184

PROJECT NO. 609036
DESIGNED BY: MEB
DRAWN BY: JAS
CHECKED BY: JAS

SUBMITTALS:
50% REVIEW 10.30.2009
PERMIT REVIEW 11.20.2009
BUILDING PERMIT 03.03.2010

REVISIONS:

ELECTRICAL DETAILS

E7.4

© 2009 JMWA ARCHITECTS, INCORPORATED ALL RIGHTS RESERVED. NO PART OF THESE IDEAS, PLANS OR DESIGNS MAY BE REPRODUCED, COPIED OR UTILIZED GRAPHICALLY IN ANY FORM WHATSOEVER WITHOUT THE EXPRESSED WRITTEN CONSENT OF JMWA ARCHITECTS INCORPORATED AND ITS BOARD OF DIRECTORS.

L:\2009--Jobs\609036--Palmetto Bay Municipal Center\CAD--MEP\Sheets E7.4.dwg 3/8/2010 11:49:43 AM jared.hunt

TLC ENGINEERING FOR ARCHITECTURE
800 Fairway Drive.
Suite 250
Deerfield Beach, Florida 33441
Phone: 954-418-9096
Fax: 954-418-9299
www.tlc-engineers.com
© Copyright 2007 TLC Engineering for Architecture, Inc.
EB #0000015 TLC NO:609036

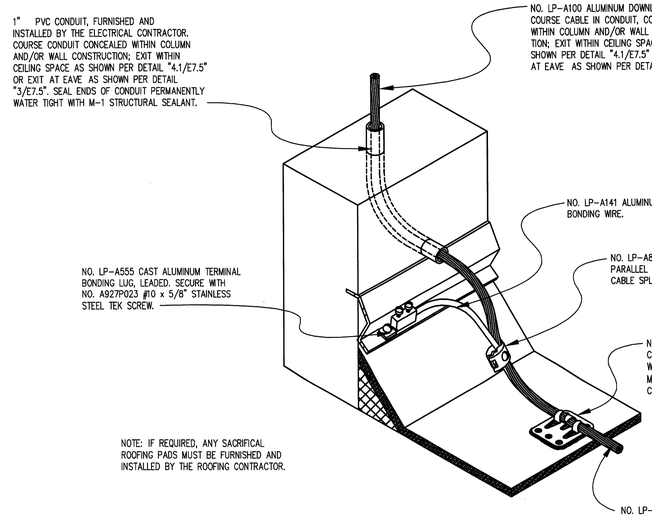

CONCEALED DOWNLEAD TO LOWER ROOF
No Scale | 3

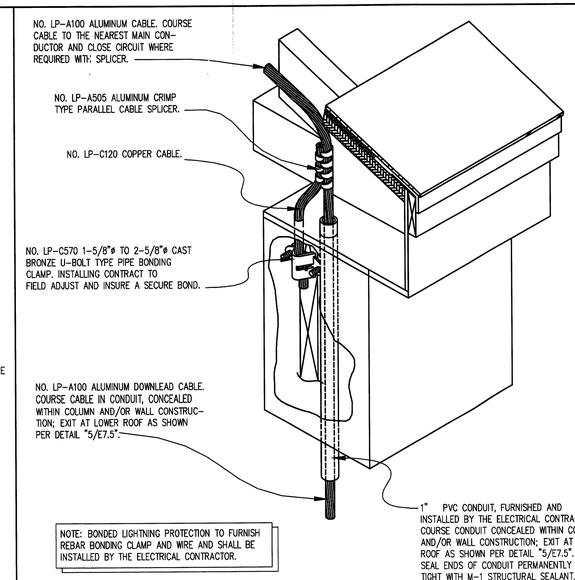

CONCEALED DOWNLEAD AT EAVE
No Scale | 3

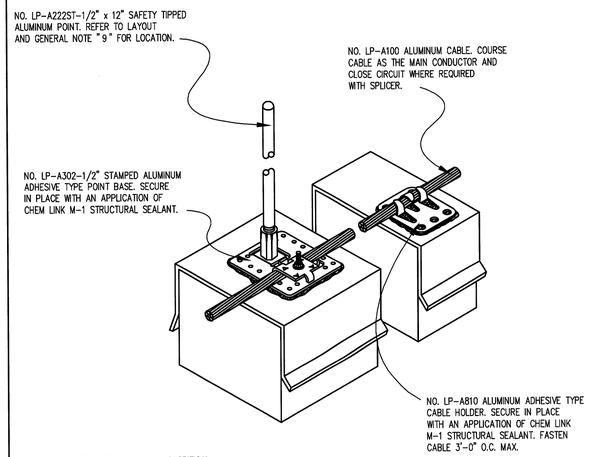

PARAPET AIR TERMINAL
No Scale | 1

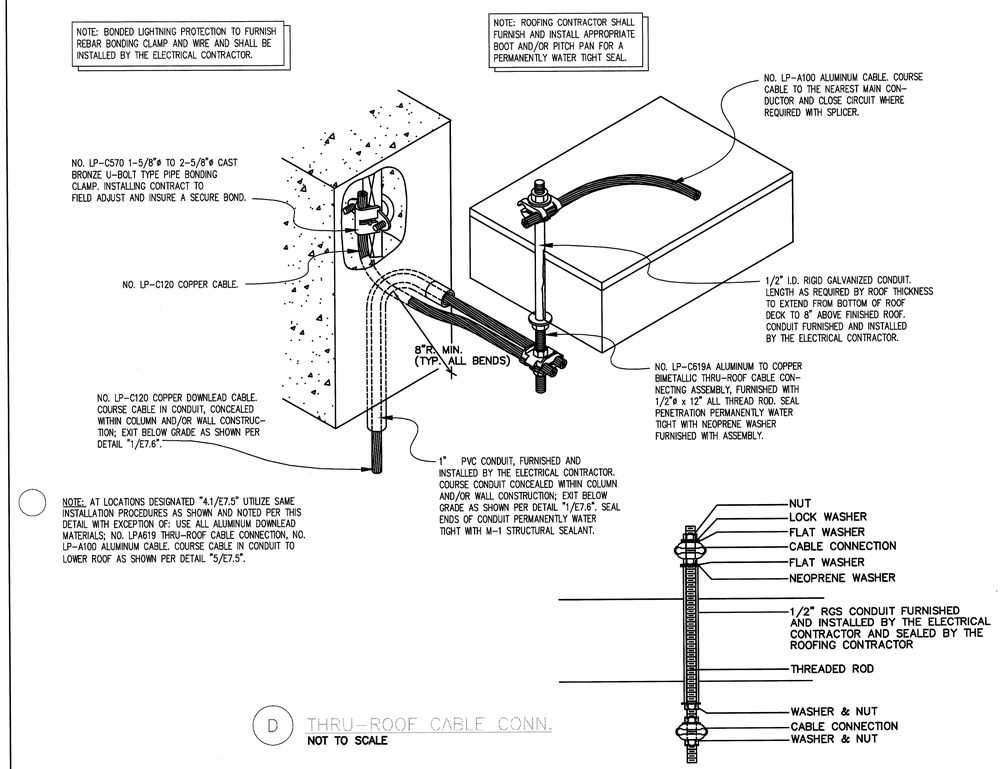

NOTE: AT LOCATIONS DESIGNATED "4.1/E7.5" UTILIZE SAME INSTALLATION PROCEDURES AS SHOWN AND NOTED PER THIS DETAIL WITH EXCEPTION OF: USE ALL ALUMINUM DOWNLEAD MATERIALS; NO. LPA619 THRU-ROOF CABLE CONNECTION, NO. LP-A100 ALUMINUM CABLE. COURSE CABLE IN CONDUIT TO LOWER ROOF AS SHOWN PER DETAIL "5/E7.5".

(D) THRU-ROOF CABLE CONN.
NOT TO SCALE

THRU-ROOF CABLE CONN.
No Scale | 4

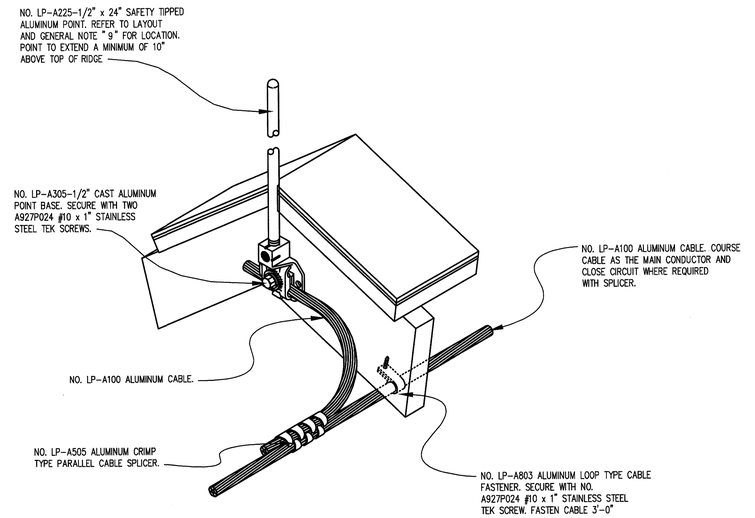

RIDGE AIR TERMINAL
No Scale | 2

RECORD SET
The information presented on this drawing is diagrammatic and is presented for general information purposes and should not be relied on for accuracy of dimensions, details and locations. Actual and exact conditions if required should be determined in the field.

JMWA ARCHITECTS
STEVEN E. MYOTT AIA
JAMES R. WILLIAMS AIA
RODOLFO ACEVEDO AIA
949 CLINT MOORE ROAD
BOCA RATON, FLORIDA 33487
TEL 561 997 9997
FAX 561 997 1610
WWW.JMWA.NET

PALMETTO BAY VILLAGE HALL
Palmetto Bay, Florida

Master Builders of South Florida, Inc.
1400 E. Oakland Park Blvd. Suite 210
Oakland Park, FL 33334

Jason A. Stinchcomb, P.E.
Florida License #58184

PROJECT NO. 609036
DESIGNED BY: MEB
DRAWN BY: JAS
CHECKED BY: JAS

SUBMITTALS:
50% REVIEW 10.30.2009
PERMIT REVIEW 11.20.2009
BUILDING PERMIT 03.03.2010

REVISIONS:

ELECTRICAL DETAILS

E7.5

© 2009 JMWA ARCHITECTS, INCORPORATED ALL RIGHTS RESERVED. NO PART OF THESE IDEAS, PLANS OR DESIGNS MAY BE REPRODUCED, COPIED OR UTILIZED GRAPHICALLY IN ANY FORM WHATSOEVER WITHOUT THE EXPRESSED WRITTEN CONSENT OF JMWA ARCHITECTS INCORPORATED AND ITS BOARD OF DIRECTORS.

L:\2009-Jobs\609036-Palmetto Bay Municipal Center\CAD-MEP\Sheets E7.5.dwg 3/8/2010 11:50:03 AM jared.hunt

TLC ENGINEERING FOR ARCHITECTURE
800 Fairway Drive.
Suite 250
Deerfield Beach, Florida 33441
Phone: 954-418-9096
Fax: 954-418-9299
www.tlc-engineers.com
© Copyright 2007 TLC Engineering for Architecture, Inc.
EB #0000015 TLC NO: 609036

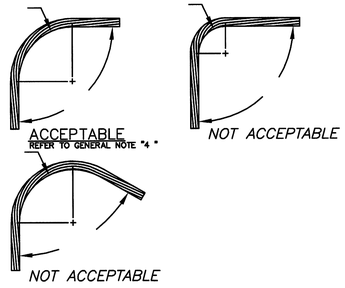

TYP. CABLE BEND REQUIREMENTS
No Scale

4

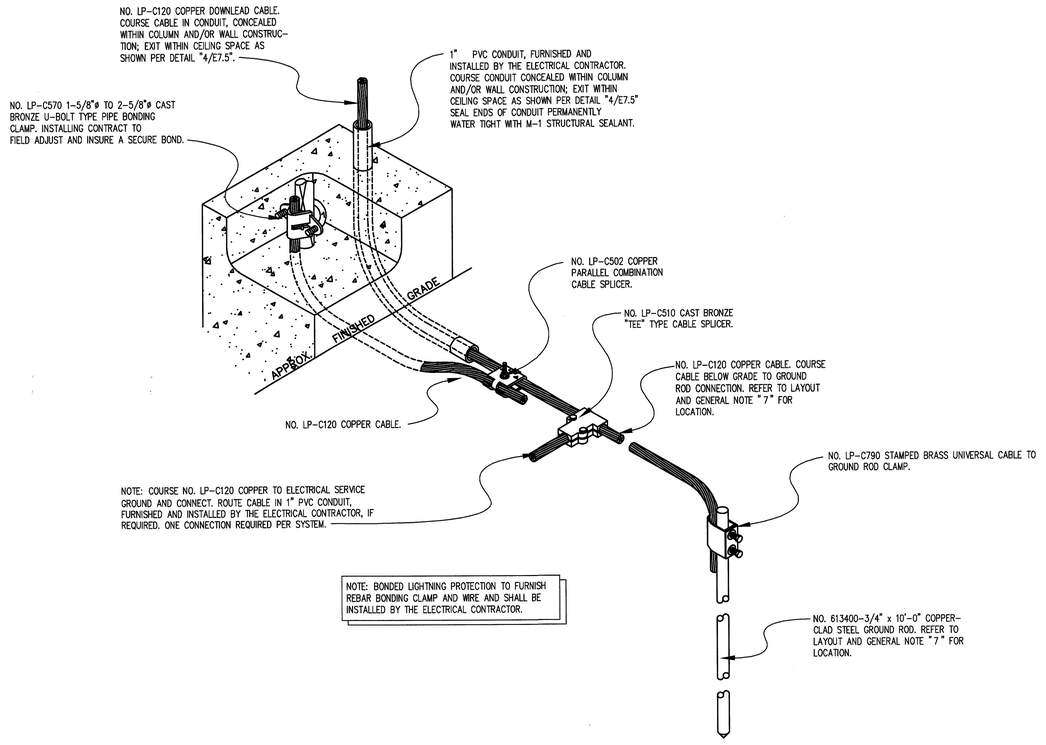

CONCEALED DOWNLEAD TO GROUNDING CONN.
No Scale

1

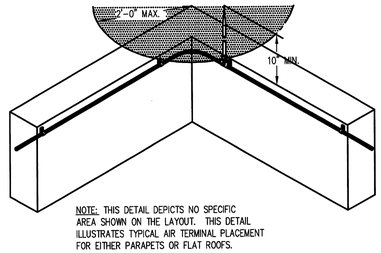

NOTE: THIS DETAIL DEPICTS NO SPECIFIC AREA SHOWN ON THE LAYOUT. THIS DETAIL ILLUSTRATES TYPICAL AIR TERMINAL PLACEMENT FOR EITHER PARAPETS OR FLAT ROOFS.

TYP. AIR TERMINAL AT OUTSIDE CORNERS
No Scale

3

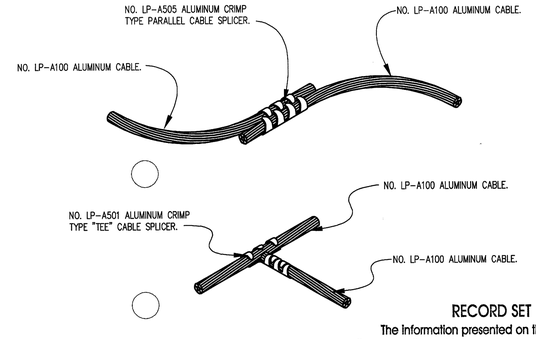

RECORD SET
The information presented on this drawing is diagrammatic and is presented for general information purposes and should not be relied on for accuracy of dimensions, details and locations. Actual and exact conditions if required should be determined in the field.

TYP. CRIMP TYPE CABLE SPLICERS
No Scale

2

JMWA ARCHITECTS
STEVEN E. MYOTT AIA
JAMES R. WILLIAMS AIA
RODOLFO ACEVEDO AIA
949 CLINT MOORE ROAD
BOCA RATON, FLORIDA 33487
TEL 561 997 9997
FAX 561 997 1610
WWW.JMWA.NET

PALMETTO BAY VILLAGE HALL
Palmetto Bay, Florida

Master Builders of South Florida, Inc.
1400 E. Oakland Park Blvd. Suite 210
Oakland Park, FL 33334

Jason A. Stinchcomb, P.E.
Florida License #58184

PROJECT NO. 609036
DESIGNED BY: MEB
DRAWN BY: JAS
CHECKED BY: JAS

SUBMITTALS:
50% REVIEW 10.30.2009
PERMIT REVIEW 11.20.2009
BUILDING PERMIT 03.03.2010

REVISIONS:

ELECTRICAL DETAILS

E7.6

© 2009 JMWA ARCHITECTS, INCORPORATED ALL RIGHTS RESERVED. NO PART OF THESE IDEAS, PLANS OR DESIGNS MAY BE REPRODUCED, COPIED OR UTILIZED GRAPHICALLY IN ANY FORM WHATSOEVER WITHOUT THE EXPRESSED WRITTEN CONSENT OF JMWA ARCHITECTS INCORPORATED AND ITS BOARD OF DIRECTORS.

L:\2009-Jobs\609036-Palmetto Bay Municipal Center\CAD-MEP\Sheets E7.6.dwg 3/8/2010 11:50:25 AM jared.hunt

EQUIPMENT CONNECTION SCHEDULE

TAG	MOTOR HP/ (WATTS)	LOAD KVA	MCA/MOCP	VOLT/	CONTROL/DISCONNECT DEVICE	PANEL/	BRANCH CIRCUIT
MS-1	–	0.03	–	208/1	30AR/15AF/2P/NEMA1	FROM MCU-1	(2) #12 CU (1)#12 CU GND
MCU-1	–	–	25.0	208/1	30AR/30AF/2P/NEMA3R	M2A-23,25	(2) #10 CU (1)#10 CU GND
MS-2	–	0.03	–	208/1	30AR/15AF/2P/NEMA1	FROM MCU-2	(2) #12 CU (1)#12 CU GND
MCU-2	–	–	13.0	208/1	30AR/15AF/2P/NEMA3R	M2A-24,26	(2) #10 CU (1)#10 CU GND
ORTU-1	5.0	18	74.5/90	208/3	100AR/90AF/3P/NEMA3R	MDP-12	(3) #3 CU, (1)#8 CU GND
ERV-1	3.62 (2X)	–	17.5/30	208/3	30AR/30AF/3P/NEMA3R	MDP-13	(3) #10 CU, (1)#10 CU GND
CU-1-1 (A)	–	–	42/60	208/3	60AR/60AF/3P/NEMA3R	M1A-17,19,21	(3) #6 CU, (1)#10 CU GND
CU-1-1 (B)	–	–	42/60	208/3	60AR/60AF/3P/NEMA3R	M1A-18,20,22	(3) #6 CU, (1)#10 CU GND
CU-1-1 (C)	–	–	42/60	208/3	60AR/60AF/3P/NEMA3R	M1A-23,25,27	(3) #6 CU, (1)#10 CU GND
CU-2-1 (A)	–	–	42/60	208/3	60AR/60AF/3P/NEMA3R	MDP-14	(3) #6 CU, (1)#10 CU GND
CU-2-1 (B)	–	–	38/55	208/3	60AR/55AF/3P/NEMA3R	MDP-15	(3) #6 CU, (1)#10 CU GND
CU-1-2	–	–	44/60	208/3	60AR/60AF/3P/NEMA3R	MDP-19	(3) #6 CU, (1)#10 CU GND
AHU-1	(390)	–	4.3/15	208/1	30AR/20AF/2P/NEMA1	M1A-1,3	(2) #12 CU (1)#12 CU GND
AHU-2	(390)	–	4.5/15	208/1	30AR/15AF/2P/NEMA1	M1A-1,3	(2) #12 CU (1)#12 CU GND
AHU-3A	(390)	–	4.5/15	208/1	30AR/15AF/2P/NEMA1	M1A-2,4	(2) #12 CU (1)#12 CU GND
AHU-3B	(390)	–	4.5/15	208/1	30AR/15AF/2P/NEMA1	M1A-2,4	(2) #12 CU (1)#12 CU GND
AHU-3C	(30)	–	1.2/15	208/1	30AR/15AF/2P/NEMA1	M1A-2,4	(2) #12 CU (1)#12 CU GND
AHU-3D	(35)	–	1.3/15	208/1	30AR/15AF/2P/NEMA1	M1A-2,4	(2) #12 CU (1)#12 CU GND
AHU-3E	(118)	–	2.3/15	208/1	30AR/15AF/2P/NEMA1	M1A-2,4	(2) #12 CU (1)#12 CU GND
AHU-4	(118)	–	4.3/15	208/1	30AR/15AF/2P/NEMA1	M1A-1,3	(2) #12 CU (1)#12 CU GND
AHU-5A	(390)	–	4.3/15	208/1	30AR/15AF/2P/NEMA1	M1A-1,3	(2) #12 CU (1)#12 CU GND
AHU-5B	(118)	–	2.3/15	208/1	30AR/15AF/2P/NEMA1	M1A-5,7	(2) #12 CU (1)#12 CU GND
AHU-6	(118)	–	2.3/15	208/1	30AR/15AF/2P/NEMA1	M1A-5,7	(2) #12 CU (1)#12 CU GND
AHU-7	(390)	–	4.5/15	208/1	30AR/15AF/2P/NEMA1	M1A-5,7	(2) #12 CU (1)#12 CU GND
AHU-8A	(118)	–	2.3/15	208/1	30AR/15AF/2P/NEMA1	M1A-5,7	(2) #12 CU (1)#12 CU GND
AHU-8B	(118)	–	2.3/15	208/1	30AR/15AF/2P/NEMA1	M1A-5,7	(2) #12 CU (1)#12 CU GND
AHU-9	(118)	–	2.3/15	208/1	30AR/15AF/2P/NEMA1	M1A-5,7	(2) #12 CU (1)#12 CU GND
AHU-10	(390)	–	4.5/15	208/1	30AR/15AF/2P/NEMA1	M1A-6,8	(2) #12 CU (1)#12 CU GND
AHU-11	(390)	–	4.3/15	208/1	30AR/15AF/2P/NEMA1	M1A-6,8	(2) #12 CU (1)#12 CU GND
AHU-12	(118)	–	2.3/15	208/1	30AR/15AF/2P/NEMA1	M1A-6,8	(2) #12 CU (1)#12 CU GND
AHU-13	–	–	–	–	NOT USED	–	–
AHU-14	(28)	–	1.2/15	208/1	30AR/15AF/2P/NEMA1	M1A-6,8	(2) #12 CU (1)#12 CU GND
AHU-15	(118)	–	2.3/15	208/1	30AR/15AF/2P/NEMA1	M1A-6,8	(2) #12 CU (1)#12 CU GND
AHU-16	(28)	–	1.2/15	208/1	30AR/15AF/2P/NEMA1	M1A-6,8	(2) #12 CU (1)#12 CU GND
AHU-17	(28)	–	1.2/15	208/1	30AR/15AF/2P/NEMA1	M1A-6,8	(2) #12 CU (1)#12 CU GND
AHU-18	–	–	–	–	NOT USED	–	–
AHU-19	(390)	–	4.5/15	208/1	30AR/15AF/2P/NEMA1	M2A-1,3	(2) #12 CU (1)#12 CU GND
AHU-20	(28)	–	1.2/15	208/1	30AR/15AF/2P/NEMA1	M2A-1,3	(2) #12 CU (1)#12 CU GND
AHU-21	(118)	–	2.3/15	208/1	30AR/15AF/2P/NEMA1	M2A-1,3	(2) #12 CU (1)#12 CU GND
AHU-22	(118)	–	2.3/15	208/1	30AR/15AF/2P/NEMA1	M2A-1,3	(2) #12 CU (1)#12 CU GND
AHU-23	(118)	–	2.3/15	208/1	30AR/15AF/2P/NEMA1	M2A-1,3	(2) #12 CU (1)#12 CU GND
AHU-24	(28)	–	1.2/15	208/1	30AR/15AF/2P/NEMA1	M2A-5,7	(2) #12 CU (1)#12 CU GND
AHU-25	(118)	–	2.3/15	208/1	30AR/15AF/2P/NEMA1	M2A-5,7	(2) #12 CU (1)#12 CU GND
AHU-26	–	–	–	–	NOT USED	–	–
AHU-27	(118)	–	2.3/15	208/1	30AR/15AF/2P/NEMA1	M2A-5,7	(2) #12 CU (1)#12 CU GND
AHU-28	(118)	–	2.3/15	208/1	30AR/15AF/2P/NEMA1	M2A-5,7	(2) #12 CU (1)#12 CU GND
AHU-29	(118)	–	2.3/15	208/1	30AR/15AF/2P/NEMA1	M2A-4,6	(2) #12 CU (1)#12 CU GND
AHU-30	–	–	–	–	NOT USED	–	–
AHU-31	(390)	–	4.3/15	208/1	30AR/15AF/2P/NEMA1	M2A-4,6	(2) #12 CU (1)#12 CU GND
AHU-32	(390)	–	4.5/15	208/1	30AR/15AF/2P/NEMA1	M2A-4,6	(2) #12 CU (1)#12 CU GND
AHU-33	(118)	–	2.3/15	208/1	30AR/15AF/2P/NEMA1	M2A-4,6	(2) #12 CU (1)#12 CU GND
EWH-1	–	12.0	–	208/3	30AR/1P/NEMA1	MDP-16	(3) #6 CU (1)#10 CU GND
EWH-2	–	3.00	–	208/1	30AR/20AF/2P/NEMA1	M2A-20,22	(2) #12 CU (1)#12 CU GND
EWH-3	–	4.15	–	208/1	30AR/25AF/2P/NEMA1 (1)	M2A-19,21	(2) #10 CU (1)#10 CU GND
ELEV-1	15.0	–	–	208/3	200AR/125AF/3P/NEMA1	MDP-17	(3) #2/0 AL (1)#4 AL GND
ELEV-LTS	–	1.5	–	120/1	30AR/20AF/3P/NEMA1 (1)	M1A-26	(2) #10 CU (1)#10 CU GND
ELEV-2	15.0	–	–	208/3	200AR/125AF/3P/NEMA1	MDP-18	(3) #2/0 AL (1)#4 AL GND
ELEV-LTS	–	1.5	–	120/1	30AR/20AF/3P/NEMA1	M1A-28	(2) #10 CU (1)#10 CU GND
SP-1	1/3	–	–	120/1	30AR/15AF/3P/NEMA3R	E1A-20	(2) #12 CU (1)#12 CU GND
GD-1	1/2	–	–	120/1	20/1P MOTOR RATED SWITCH	M2A-2 (4)	(2) #12 CU (1)#12 CU GND
CL-1	1.0	–	–	120/1	30AR/20AF/3P/NEMA1	M1A-30	(2) #10 CU (1)#10 CU GND

NOTES:
1. REFER TO MECHANICAL, PLUMBING, AND FIRE PROTECTION DRAWINGS FOR EXACT LOCATION OF EQUIPMENT.
2. E.C. TO VERIFY AND COORDINATE EXACT OCPD AND OVERLOAD RATING WITH RESPECTIVE CONTRACTOR AND EQUIPMENT SUPPLIER. ADJUST CIRCUIT ACCORDINGLY.
3. ALL CONDUIT SERVING ROOF-MOUNTED EQUIPMENT SHALL BE ROUTED CONCEALED.
4. PROVIDE CIRCUITING AND CONNECTIONS FROM ALL FUSED AND NON-FUSED DISCONNECT SWITCHES, COMBINATION STARTERS, MANUAL MOTOR STARTERS, VFD'S AND CONTROLLERS TO MECHANICAL EQUIPMENT SERVED. CONDUCTOR AND CONDUIT SIZES SHALL MATCH THOSE SERVING THE EQUIPMENT FROM THE PANELBOARD.
5. CONTRACTOR TO VERIFY AND PROVIDE AS REQUIRED IF INTEGRAL EQUIPMENT DISCONNECT AND OVERCURRENT PROTECTION ARE NOT INCLUDED WITH EQUIPMENT.

LIGHTING FIXTURE SCHEDULE

TYPE	DESCRIPTION	MANUFACTURER	MODEL NUMBER	VOLTAGE	REQUIRED LAMPS NUM.	REQUIRED LAMPS TYPE	VA	REMARKS
22L	2'X2' LED RECESSED LIGHTING FIXTURE	POLAR RAY - LED LIGHTING SOLUTIONS	CREE LR24-32SKA35	120	LED	LED	43	HALF SHADED LIGHTING FIXTURE INDICATES ON EMERGENCY CIRCUIT.
A2	2X4, RECESSED LENSED FLUORESCENT FIXTURE	DAYBRITE	2TG8332-12-UNV-1/2EB10R	120	2	F32T8 HI-LUMEN	47	
B1	PENDANT MOUNTED 24" BOWL FIXTURE	SCOTT	S2005-4C13E-BA	120	4	F13DBX	50	REFER TO ARCHITECTURAL ELEVATIONS FOR MOUNTING HEIGHT.
B12	ELEVATOR LOBBY PENDANT MOUNTED 24" BOWL FIXTURE	SCOTT	S2205-4C13E-BA	120	4	F13DBX	50	REFER TO ARCHITECTURAL ELEVATIONS FOR MOUNTING HEIGHT.
B2	PENDANT MOUNTED 32" BOWL FIXTURE	BETA CALCO	77-3604-TS-BA	120	6	F40BX	221	REFER TO ARCHITECTURAL ELEVATIONS FOR MOUNTING HEIGHT.
B3	PENDANT MOUNTED 39" BOWL FIXTURE	SCOTT	S2232-8C13E-BA	120	8	F13DBX	116	REFER TO ARCHITECTURAL ELEVATIONS FOR MOUNTING HEIGHT.
C	RECESSED SEMI SPECULAR REFLECTOR FLANGED FLUORESCENT PERIMETER LIGHT FIXTURE	PMC	SP1-D-FL-1T5-XX-SS-WHT-277	120	1	F32T8 HI-LUMEN	25	REFER TO PLANS FOR FIXTURE LENGTH.
CL	LED COVE STRIP LIGHT	COLOR KINETICS	523-00004-03	120	NA	LED	4.5	
D1	6" OPEN DOWNLIGHT WITH CLEAR SPECULAR REFLECTOR.	INFINITY	PH60-118Q-EB-BH-CS-UNV	120	1	F18DBX	20	
D12	6" OPEN DOWNLIGHT WITH CLEAR SPECULAR REFLECTOR.	INFINITY	PH60-126T-EB-BH-CS-UNV	120	1	F26TBX	28	
D1A	RECESSED METAL HALIDE ADJUSTABLE ACCENT LIGHT.	EDISON PRICE	ARCT4/5AA-E9-120-COL-WF-SP	120	1	MH35T4	45	
D1D	6" OPEN DOWNLIGHT WITH CLEAR SPECULAR REFLECTOR. PROVIDE WITH DIMMING BALLAST COMPATIBLE WITH LOCAL LIGHTING CONTROLS.	INFINITY	PH60-118Q-EB-BH-CS-UNV	120	1	F18DBX	20	
D1W	RECESSED LED ADJUSTABLE ACCENT LIGHT.	LITON	LH1299/LL20-LR1266W	120	NA	LED	20	
D2	6" OPEN DOWNLIGHT WITH CLEAR SPECULAR REFLECTOR.	INFINITY	PH60-226Q-EB-BH-CS-UNV	120	2	F26DBX	54	
D8D	8" OPEN DOWNLIGHT WITH CLEAR SPECULAR REFLECTOR. PROVIDE WITH DIMMING BALLAST COMPATIBLE WITH LOCAL LIGHTING CONTROLS.	INFINITY	PV75-142T-EB-CS-MWT	120	1	F42TBX	45	
DS	RECESSED FLUORESCENT SHOWER LIGHT WITH LENS.	CAPRI	CM6-F118U-H65SWR	120	1	F18DBX	20	LISTED FOR WET LOCATIONS.
E	IN FIXTURE EMERGENCY BATTERY BALLAST PACK.	BODINE OR APPROVED EQUAL	B50	120	2	F32T8	0	1325 LUMEN OUTPUT
E1	IN FIXTURE EMERGENCY BATTERY BALLAST PACK	BODINE OR APPROVED EQUAL	B74CST	120	1	F26TBX F32TBX	0	1000 LUMEN OUTPUT
EM	THERMOPLASTIC EMERGENCY BATTERY LIGHT	MCPHILBEN	NX12N50-PNG-WL	120	2	25W	100	LISTED FOR WET LOCATIONS
G	EXTERIOR WALL PACK, GLASS LENS, FIXTURE FINISH SHALL BE SELECTED BY ARCHITECT	GARDCO	111-MT-42TRF-277-WP	120	1	F42TBX	48	FIXTURES SHALL BE SEALED AND GASKETED AND UL LISTED FOR WET LOCATIONS. COORDINATE MOUNTING HEIGHTS WITH ARCHITECTURAL ELEVATIONS.
J	4' RECESSED SEMI SPECULAR REFLECTOR FLANGED FLUORESCENT PERIMETER LIGHT FIXTURE	PMC	SPS-SR-FL-1/OCT-4-WHT	120	1	F32T8 HI-LUMEN	25	
L2	4' PENDANT MOUNTED LINEAR DIRECT/INDIRECTF.LUORESCENT FIXTURE. PROVIDE WITH DIMMING BALLAST COMPATIBLE WITH LOCAL LIGHTING CONTROLS.	LEDALITE	7706-T02-W-N-04-1-22-W-DS	120	2	F32T8 HI-LUMEN	70	
L5	PENDANT MOUNTED LINEAR DIRECT/INDIRECT FLUORESCENT FIXTURE. PROVIDE WITH DIMMING BALLAST COMPATIBLE WITH LOCAL LIGHTING CONTROLS.	PMC	5057-DI-P-5T8-REC-CA-UNV-DIM	120	5	F32T8 HI-LUMEN	175	REFER TO ARCHITECTURAL ELEVATIONS FOR MOUNTING HEIGHT.
LD	LED DOWNLIGHT	POLAR RAY - LED LIGHTING SOLUTIONS	CREE LR6-GU24	120	LED	LED	11.9	HALF SHADED LIGHTING FIXTURE INDICATES ON EMERGENCY CIRCUIT.
LDW	LED DOWNLIGHT WALL WASHER	POLAR RAY - LED LIGHTING SOLUTIONS	CREE LR6 G24	120	LED	LED	11.9	
P1	1X4, RECESSED PARABOLIC FLUORESCENT FIXTURE.	DAYBRITE	1LP3GS132-18AL-UNV-1/1-EB10R	120	1	F32T8 HI-LUMEN	25	
P2	2X4, RECESSED 12 CELL PARABOLIC FLUORESCENT FIXTURE.	DAYBRITE	2LP3GS232-26AL-120-1/2-EB10R	120	2	F32T8 HI-LUMEN	47	
S1	4' SURFACE MOUNTED FLUORESCENT STRIP WITH WIRE GUARD.	DAYBRITE	T232-ENV-1/1EBL	120	1	F32T8 HI-LUMEN	25	
S1V	4' SURFACE MOUNTED FLUORESCENT STRIP, VERTICAL MOUNTED.	DAYBRITE	T232-ENV-1/1EBL	120	1	F32T8 HI-LUMEN	25	REFER TO ARCHITECTURAL PLANS FOR MOUNTING HEIGHT.
T1D	THEATRICAL CHAMBER LIGHT WITH C-CLAMP & SAFETY CABLE.	ETC SOURCE FOUR JR ZOOM	42550J-1C	120	1	HPL 575W	575	COORDINATE MOUNTING HEIGHTS WITH ARCHITECTURAL ELEVATIONS. PROVIDE RECEPTACE TO MATCH PLUG PROVIDED.
T2D	2'X2' DROP DOWN PODIUM LIGHT	BRIGHTLINE	T-SERIES 01LMISCM	120	1	55W T8	55	
U1	WALL MOUNTED FLUORESCENT UPLIGHT.	FINELITE	SSWM-4-T18-SC-SPEC-120-FE	120	1	F32T8 HILUMEN	25	REFER TO ARCHITECTURAL ELEVATIONS FOR MOUNTING HEIGHT. VERIFY FINISH WITH ARCHITECT.
W2	4' SURFACE MOUNTED FLUORESCENT VAPOR TIGHT WRAP-AROUND FIXTURE WITH FIBERGLASS HOUSING AND REFLECTOR LENS.	BEGHELLI	BS100-4-SA-D-120/277V	120	2	F32T8 HI-LUMEN	65	UL LISTED FOR WET LOCATION. REFER TO ARCHITECTURAL ELEVATIONS FOR MOUNTING HEIGHTS.
W22	4' SURFACE MOUNTED FLUORESCENT VANDAL RESISTANT DECORATIVE LENS FIXTURE..	LUMINAIRE	SPC848.60F-232-ELECT-277-CP-SIL	120	2	F32T8 HI-LUMEN	65	REFER TO ARCHITECTURAL ELEVATIONS FOR MOUNTING HEIGHTS.
WS	SURFACE MOUNTED LED WALL SCONCE	EVERGREEN	BEN-W-15-LED-MN-WF	120	NA	LED	10	COORDINATE MOUNTING HEIGHTS WITH ARCHITECTURAL ELEVATIONS.
WS1	SURFACE MOUNTED FLUORESCENT WALL SCONCE	SCOTT	S3260-1CF18-BA	120	1	F18DBX	30	COORDINATE MOUNTING HEIGHTS WITH ARCHITECTURAL ELEVATIONS. VERIFY FINISH WITH ARCHITECT.
X1	LED EXIT SIGN FIXTURE, UNIVERSAL MOUNT, RED LETTERS, EDGE LIT AND SINGLE OR DOUBLE FACE	BEGHELLI	OL2-TL-HT-LR-1/2M-CR-BA	120	NA	LED	10	COORDINATE MOUNTING HEIGHT WITH ARCHITECT. FINISH TO BE SELECTED BY ARCHITECT. EXIT LIGHTS SHALL BE CONNECTED TO AN UNSWITCHED CIRCUIT.
X2	LED HEAVY DUTY EXIT SIGN FIXTURE, UNIVERSAL MOUNT, RED LETTERS, EDGE LIT AND SINGLE OR DOUBLE FACE	BEGHELLI	FTZ-HT-LR-U-U-AT-WW	120	NA	LED	10	COORDINATE MOUNTING HEIGHT WITH ARCHITECT. FINISH TO BE SELECTED BY ARCHITECT. EXIT LIGHTS SHALL BE CONNECTED TO AN UNSWITCHED CIRCUIT. LISTED FOR WET LOCATIONS.

SEE SITE PLANS FOR SITE LIGHTING FIXTURES.

LUMINAIRE PACKAGE BASED ON "SESCO" AND USED AS "BASIS OF DESIGN" ALTERNATE LUMINAIRE PACKAGES OF EQUAL APPEARANCE, PERFORMANCE AND QUALITY BY "LIGHTING DYNAMICS INCORPORATED", "SOUTHEAST FLORIDA LIGHTING", "LIGHTOLIER", OR "POWER AND LIGHTING" SHALL BE ACCEPTABLE. ARCHITECT SHALL REVIEW ALTERNATES FOR APPEARANCE. THE ARCHITECT/ENGINEER SHALL HAVE THE SOLE DISCRETION ON DETERMINING THE EQUIVALENCY OF LUMINAIRES. SUBMISSION FOR APPROVAL MUST INCLUDE ALL IES FILES AND PHOTOMETRIC CALCULATIONS FOR REVIEW OF EQUALITY. LIGHTING POWER DENSITIES FOR ALTERNATIVE SELECTIONS SHALL COMPLY WITH AHRAE 90.1 STANDARDS. ALL BALLASTS AND LIGHTING CONTROLS SHALL BE INTEGRATED WITH LIGHT FIXTURE TO ALLOW FOR A COMPLETE AND OPERABLE SYSTEM.

LUMINAIRE NOTES

1. IT IS THE CONTRACTORS RESPONSIBILITY TO VERIFY ACTUAL CEILING CONSTRUCTION TYPE AS DEFINED ON THE ARCHITECTURAL DRAWINGS AND FURNISH ALL LUMINAIRES WITH THE CORRECT MOUNTING DEVICES WHETHER OR NOT SUCH VARIATIONS ARE INDICATED BY THE LUMINAIRE CATALOG NUMBER. THE CONTRACTOR SHALL VERIFY THE DEPTH OF ALL RECESSED LUMINAIRES WITH THE ARCHITECTURAL AND STRUCTURAL DRAWINGS PRIOR TO ORDERING LUMINAIRES. ANY DISCREPANCIES THAT WOULD CAUSE RECESSED LUMINAIRES NOT TO FIT INTO CEILING SHALL BE REPORTED TO THE ARCHITECT PRIOR TO ORDERING LUMINAIRES.
2. LUMINAIRES RECESSED IN FIRE RATED CEILINGS SHALL BE PROVIDED WITH APPROVED FIRE RATED ENCLOSURE WITH A FIRE RATING EQUAL TO THAT OF THE CEILING. PROVIDE A MINIMUM OF 3" CLEARANCE FROM SIDES AND TOP OF RECESSED LUMINAIRE.
3. VERIFY THE MOUNTING HEIGHT OF ALL WALL MOUNTED LUMINAIRES WITH ARCHITECT.
4. FLUORESCENT LUMINAIRES SHALL BE PROVIDE WITH SOLID STATE ELECTRONIC BALLAST, REFER TO SPECIFICATIONS.
5. CATALOG NUMBER SPECIFIES STYLE, TYPE AND STANDARD OF LIGHT FIXTURE QUALITY.
6. IF THERE IS A DISCREPANCY BETWEEN A FIXTURE DESCRIPTION AND GENERAL NOTES AND THE CATALOG NUMBER LISTED AND THE LAMPS LISTED, THE FIXTURE DESCRIPTION AND GENERAL NOTES SHALL DICTATE.
7. MINIMUM FLUORESCENT LAMP COLOR TEMPERATURE SHALL BE 3500K.
8. THE ABOVE FIXTURE SCHEDULE IS PREDICATED ON PERFORMANCE AND IS ALSO DESIGNED TO MEET CERTAIN AESTHETIC CRITERIA. ALL ALTERNATIVE SELECTIONS MUST BE SUBMITTED FOR PRIOR APPROVAL TO ARCHITECT TEN (10) DAYS PRIOR TO BID DATE. SUBMISSION FOR APPROVAL MUST HAVE ALL IES FILES ATTACHED FOR REVIEW OF EQUALITY. MANUFACTURERS NOT LISTED ON THE PLANS OR BY ADDENDUM WILL NOT BE ACCEPTED.
9. PROVIDE PROGRAM RAPID START BALLASTS FOR FLUORESCENT FIXTURES IN AREAS WITH OCCUPANCY SENSOR CONTROL.

RECORD SET
The information presented on this drawing is diagrammatic and is presented for general information purposes and should not be relied on for accuracy of dimensions, details and locations. Actual and exact conditions if required should be determined in the field.

TLC ENGINEERING FOR ARCHITECTURE
800 Fairway Drive, Suite 250, Deerfield Beach, Florida 33441
Phone: 954-418-9096 Fax: 954-418-9286 www.tlc-engineers.com
EB #0000015 TLC NO: 609036

© Copyright 2007 TLC Engineering for Architecture, Inc.

JMWA ARCHITECTS
STEVEN E. MYOTT AIA
JAMES R. WILLIAMS AIA
RODOLFO ACEVEDO AIA
949 CLINT MOORE ROAD
BOCA RATON, FLORIDA 33487
TEL 561 997 9997
FAX 561 997 1610
WWW.JMWA.NET

PALMETTO BAY VILLAGE HALL
9705 E. Hibiscus St., Palmetto Bay, Florida

Master Builders of South Florida, Inc.
1400 E. Oakland Park Blvd. Suite 210
Oakland Park, FL 33334

Jason A. Stinchcomb, P.E.
Florida License #58184

PROJECT NO. 609036
DESIGNED BY: MEB
DRAWN BY: JAS
CHECKED BY: JAS

SUBMITTALS:
50% REVIEW 10.30.2009
PERMIT REVIEW 11.20.2009
BUILDING PERMIT 03.03.2010

REVISIONS:
1 SUBMITTAL #008 03.22.2010
4 DESIGN CHANGES 08.11.2010

ELECTRICAL SCHEDULES

E8.1

© 2009 JMWA ARCHITECTS INCORPORATED ALL RIGHTS RESERVED. NO PART OF THESE IDEAS, PLANS OR DESIGNS MAY BE REPRODUCED, COPIED OR UTILIZED GRAPHICALLY IN ANY FORM WHATSOEVER WITHOUT THE EXPRESSED WRITTEN CONSENT OF JMWA ARCHITECTS INCORPORATED AND ITS BOARD OF DIRECTORS.

L:\2009-Jobs\609036-Palmetto Bay Municipal Center\CAD-MEP\Sheets E8.1.dwg 8/11/2010 5:09:00 PM jored.hunt

TLC ENGINEERING FOR ARCHITECTURE
800 Fairway Drive.
Suite 250
Deerfield Beach, Florida 33441
Phone: 954-418-9396
Fax: 954-418-9298
www.tlc-engineers.com
© Copyright 2007 TLC Engineering for Architecture, Inc.
EB #0000015 TLC NO: 609036

MDP

MAIN SIZE (AMPS) & TYPE: 1200 MCB
PANEL RATING (AMPS): 1200
NEUTRAL:
MOUNTING: SURFACE
NOTES: SERVICE ENTRANCE RATED
VOLTAGE/PHASE/WIRES: 208/120/3/4
FAULT CURRENT RATING: 30000
LOCATION:
FED FROM: MS/ATS-1

CKT	DESCRIPTION	TRIP	kVA A	kVA B	kVA C	NOTES
1	L1A	100/3	2.8	5.1	4.2	
2	M1A	225/3	25.2	22.2	23.0	
3	P1A	100/3	4.5	9.2	3.0	
4	P1B	100/3	3.0	4.0	2.2	
5	P1C	100/3	6.5	8.6	7.6	
6	L2A	100/3	1.8	2.2	---	
7	M2A	100/3	10.0	7.2	7.9	
8	P2A	100/3	5.6	6.8	5.6	
9	P2B	100/3	3.4	3.7	1.7	
10	EM-ATS	100/3	4.8	8.8	3.8	
11	LCR	175/3	3.8	4.0	0.4	
12	CL ORTU-1	90/3	8.9	8.9	8.9	2
13	CL ERV-1	30/3	2.1	2.1	2.1	
14	CL CU-2-1 (A)	60/3	5.0	5.0	5.0	
15	CL CU-2-1 (B)	60/3	4.6	4.6	4.6	
16	O EWH-1	45/3	4.0	4.0	4.0	
17	EL ELEV-1	175/3	9.1	9.1	9.1	1
18	EL ELEV-2	175/3	9.1	9.1	9.1	
19	CL CU-1-2	60/3	8.2	8.2	8.2	
20	SPARE	20/3	---	---	---	
	NO SUBFEED LUGS		---	---	---	
	EXISTING LOAD		---	---	---	
	TOTAL		122.2	132.9	110.4	

BALANCE RATIO

LOAD TYPE	CONNECTED kVA	QUANTITY	FACTOR	CODE SIZING kVA	COMMENTS
Cooling	139.0	10	1.00	139.0	
Elevators	54.7	2	0.95	52.0	NEC 2005 620.14
Interior Lighting	21.1	612	1.25	26.4	
Motor	3.6	3	1.00	3.6	
Other	61.5	63	1.00	61.5	
Receptacle	<81.3>				
0kVA TO 10kVA	10.0		1.00	10.0	
ABOVE 10kVA	71.3		0.50	35.7	
LARGEST MOTOR (ELEV-1)	<27.4>		0.25	6.8	
<undefined>	4.2		???	???	NO CODE RULE DEFINED
TOTALS	365.5		0.92	335.1	CODE RULE(S) MISSING; RESULTS MAY NOT BE ACCURATE!
				930.1 AMPS	

1 2

L1A

MAIN SIZE (AMPS) & TYPE: MLO
PANEL RATING (AMPS): 100
NEUTRAL:
MOUNTING: SURFACE
NOTES:
VOLTAGE/PHASE/WIRES: 208/120/3/4
FAULT CURRENT RATING: 30000
LOCATION:
FED FROM: MDP-1

CKT	DESCRIPTION	NOTE	TRIP	kVA A	kVA B	kVA C	TRIP	NOTE	DESCRIPTION	CKT
1	LTG		20/1	0.5	0.5		20/1		LTG	2
3	LTG		20/1		0.8	0.7	20/1		LTG	4
5	LTG		20/1			3.5 ---	20/1		SPARE	6
7	SPARE		20/1	---	0.3		20/1		LTG	8
9	LTG		20/1		1.1	0.4	20/1		LTG	10
11	LTG		20/1			0.3 ---	20/1		SPARE	12
13	LTG		20/1	1.0	0.6		20/1		LTG	14
15	LTG		20/1		0.6	0.4	20/1		LTG	16
17	SPARE		20/1			--- 0.5	20/1		LTG	18
19	SPARE		20/1	---	---		20/1		SPARE	20
21	LTG		20/1		0.5	0.5	20/1		LTG	22
23	SPARE		20/1			--- ---	20/1		SPARE	24
25	SPARE		20/1	---	---		20/1		SPARE	26
27	SPARE		20/1		---	---	20/1		SPARE	28
29	SPARE		20/1			--- ---	20/1		SPARE	30
31	SPARE		20/1			--- ---	20/1		SPARE	32
33	SPARE		20/1	---	---		20/1		SPARE	34
35	SPARE		20/1		---	---	20/1		SPARE	36
37	SPARE		20/1			--- ---	20/1		SPARE	38
39	SPARE		20/1	---	---		20/1		SPARE	40
41	SPARE		20/1			--- ---	20/1		SPARE	42
	NO SUBFEED LUGS				---	--- ---				
	EXISTING LOAD				---	--- ---				
	TOTAL			2.8	5.1	4.2				

BALANCE RATIO

LOAD TYPE	CONNECTED kVA	QUANTITY	FACTOR	CODE SIZING kVA	COMMENTS
Interior Lighting	12.1	279	1.25	15.1	
<undefined>	0.1		???	???	NO CODE RULE DEFINED
TOTALS	12.2		1.24	15.1	CODE RULE(S) MISSING; RESULTS MAY NOT BE ACCURATE!
				41.9 AMPS	

M1A

MAIN SIZE (AMPS) & TYPE: MLO
PANEL RATING (AMPS): 225
NEUTRAL:
MOUNTING: SURFACE
NOTES:
VOLTAGE/PHASE/WIRES: 208/120/3/4
FAULT CURRENT RATING: 30000
LOCATION:
FED FROM: MDP-2

CKT	DESCRIPTION	NOTE	TRIP	kVA A	kVA B	kVA C	TRIP	NOTE	DESCRIPTION	CKT
1				1.5	1.1					2
3	O AHU-1,2,4,5A		20/2			1.5 1.1	20/2		O AHU-3A,3B,3C,3D,3E	4
5				1.5	1.4					6
7	O AHU-5B,6,7,8A,8B		20/2			1.5 1.4	20/2		O AHU-9,10,11,12,14,15,16,17	8
9	SPARE		20/2			--- ---	20/2		SPARE	10
11						--- ---				12
13	SPARE		20/2	---	---		20/2		SPARE	14
15						--- ---				16
17						5.0 5.0				18
19	CL CU-1-1 (A)		60/3	5.0	5.0		60/3		CL CU-1-1 (B)	20
21						5.0 5.0				22
23						5.0 ---	20/1		SPARE	24
25	CL CU-1-1 (C)		60/3	5.0	1.5		20/1		O ELEV-LTS	26
27					5.0	1.5	20/1		O ELEV-LTS	28
29	SPARE		20/1			--- 1.9	20/1		MTR CL-1	30
31	O HAND DRYER	1	20/1	1.5	1.5		20/1	1	O HAND DRYER	32
33	O HAND DRYER	1	20/1		1.5	1.5	20/1	1	O HAND DRYER	34
35	O HAND DRYER	1	20/1			1.5 1.5	20/1	1	O HAND DRYER	36
37	SPARE		20/1	---	---		20/1		SPARE	38
39	SPARE		20/1		---	---	20/1		SPARE	40
41	SPARE		20/1			--- ---	20/1		SPARE	42
	NO SUBFEED LUGS				---	---				
	EXISTING LOAD				---	---				
	TOTAL			25.2	22.2	23.0				

BALANCE RATIO

LOAD TYPE	CONNECTED kVA	QUANTITY	FACTOR	CODE SIZING kVA	COMMENTS
Cooling	45.4	3	1.00	45.4	
Motor	1.9	1	1.00	1.9	
Other	23.1	30	1.00	23.1	
LARGEST MOTOR (CL-1)	<1.9>		0.25	0.5	
TOTALS	70.4		1.01	70.8	
				196.6 AMPS	

2

E1A

MAIN SIZE (AMPS) & TYPE: 100 MCB
PANEL RATING (AMPS): 100
NEUTRAL:
MOUNTING: SURFACE
NOTES:
VOLTAGE/PHASE/WIRES: 208/120/3/4
FAULT CURRENT RATING: 30000
LOCATION:
FED FROM: EM-ATS

CKT	DESCRIPTION	NOTE	TRIP	kVA A	kVA B	kVA C	TRIP	NOTE	DESCRIPTION	CKT
1				1.2	---					2
3	E2A		60/3		---	---	30/3		SPARE	4
5						0.5 ---				6
7	LTG		20/1	0.0	0.1		20/1		LTG	8
9	LTG		20/1		1.0	0.9	20/1		LTG	10
11	LTG		20/1			1.0 0.7	20/1		LTG	12
13	REC		20/1	0.4	0.2		20/1	6	REC	14
15	O BATTERY CHARGER		20/1		2.0	2.0	20/1		O FUEL PUMP	16
17	REC		20/1			0.0 0.3	20/1		LTG	18
19	O JACKET WATER HEATER		20/2	2.0	0.9		20/2		SP-SP-1	20
21					2.0	0.8	20/1		REC 6	22
23	SPARE		20/1			--- 0.8	20/1		REC 6	24
25	SPARE		20/1	---	---		20/1		SPARE	26
27	SPARE		20/1		---	---	20/1		SPARE	28
29	SPARE		20/1			--- ---	20/1		SPARE	30
31	SPARE		20/1	---	---		20/1		SPARE	32
33	SPARE		20/1		---	---	20/1		SPARE	34
35	SPARE		20/1			--- ---	20/1		SPARE	36
37	SPARE		20/1	---	---		20/1		SPARE	38
39	SPARE		20/1		---	---	20/1		SPARE	40
41	SPARE		20/1			--- 0.5	20/1		O FIRE ALARM PANEL	42
	NO SUBFEED LUGS				---	---				
	EXISTING LOAD				---	---				
	TOTAL			4.8	8.8	3.8				

BALANCE RATIO

LOAD TYPE	CONNECTED kVA	QUANTITY	FACTOR	CODE SIZING kVA	COMMENTS
Interior Lighting	5.3	198	1.25	6.8	
Motor	0.9	1	1.00	0.9	
Other	9.0	8	1.00	9.0	
Receptacle	<2.2>				
0kVA TO 10kVA	2.2		1.00	2.2	
LARGEST MOTOR (SP-1)	<0.9>		0.25	0.2	
TOTALS	17.3		1.09	18.9	
				52.3 AMPS	

PANEL SCHEDULE NOTE:

1. PROVIDE LOCKABLE CIRCUIT BREAKER.

BRANCH CIRCUIT WIRING SCHEDULE

BREAKER SIZE	THHN CONDUCTOR	GROUND
20A	12 CU	12 CU
30A	10 CU	10 CU
35A	8 CU	10 CU
40A	8 CU	10 CU
45A	6 CU	10 CU
50A	6 CU	10 CU
60A	4 CU	10 CU
80A	3 CU	6 CU

NOTE:
PROVIDE A CONDUCTOR PER BREAKER POLE. THESE ARE THE MINIMUM SIZES REQUIRED FOR EACH CIRCUIT. CONTRACTOR TO MAKE ALL THE NECESSARY FIELD ADJUSTMENTS TO COMPENSATE FOR VOLTAGE DROP.

P1A

MAIN SIZE (AMPS) & TYPE: MLO
PANEL RATING (AMPS): 100
NEUTRAL:
MOUNTING: SURFACE
NOTES:
VOLTAGE/PHASE/WIRES: 208/120/3/4
FAULT CURRENT RATING: 30000
LOCATION:
FED FROM: MDP-3

CKT	DESCRIPTION	NOTE	TRIP	kVA A	kVA B	kVA C	TRIP	NOTE	DESCRIPTION	CKT
1	REC		20/1	0.4	0.2		20/1		REC	2
3	REC		20/1			1.9 0.4	20/1		REC	4
5	REC		20/1			0.4 0.6	20/1		REC	6
7	REC EWC		20/1	0.7	0.0		20/1		REC	8
9	REC		20/1		0.0	0.9	20/1		REC	10
11	REC		20/1			0.0 0.0	20/1		REC	12
13	REC		20/1	0.7	0.4		20/1		REC	14
15	REC		20/1		0.4	0.2	20/1		REC	16
17	REC		20/1			0.9 0.0	20/1		REC	18
19	REC		20/1	0.2	0.4		20/1		REC	20
21	REC		20/1		0.4	0.0	20/1		REC	22
23	REC		20/1			0.4 0.2	20/1		REC	24
25	REC		20/1	0.0	0.9		20/1		REC	26
27	REC COPIER		20/1		1.5	1.5	20/1		REC COPIER	28
29	REC		20/1			0.2 0.4	20/1		REC	30
31	REC		20/1	0.7	0.0		20/1		REC	32
33	REC TV		20/1		0.5	1.5	20/1		REC COPIER	34
35	SPARE		20/1			--- ---	20/1		SPARE	36
37	SPARE		20/1	---	---		20/1		SPARE	38
39	SPARE		20/1		---	---	20/1		SPARE	40
41	SPARE		20/1			--- ---	20/1		SPARE	42
	NO SUBFEED LUGS				---	---				
	EXISTING LOAD				---	---				
	TOTAL			4.5	9.2	3.0				

BALANCE RATIO

LOAD TYPE	CONNECTED kVA	QUANTITY	FACTOR	CODE SIZING kVA	COMMENTS
Receptacle	<16.7>				
0kVA TO 10kVA	10.0		1.00	10.0	
ABOVE 10kVA	6.7		0.50	3.4	
TOTALS	16.7		0.80	13.4	
				37.1 AMPS	

P1B

MAIN SIZE (AMPS) & TYPE: MLO
PANEL RATING (AMPS): 100
NEUTRAL:
MOUNTING: SURFACE
NOTES:
VOLTAGE/PHASE/WIRES: 208/120/3/4
FAULT CURRENT RATING: 30000
LOCATION:
FED FROM: MDP-4

CKT	DESCRIPTION	NOTE	TRIP	kVA A	kVA B	kVA C	TRIP	NOTE	DESCRIPTION	CKT
1	REC		20/1	0.2	0.2		20/1		REC	2
3	REC		20/1		0.7	0.4	20/1		REC	4
5	REC		20/1			0.0 0.0	20/1		REC	6
7	REC		20/1	0.2	0.2		20/1		REC	8
9	REC		20/1		0.4	1.5	20/1		REC	10
11	REC		20/1			0.2 0.2	20/1		REC	12
13	REC		20/1	0.2	0.6		20/1		REC	14
15	REC		20/1		0.0	0.4	20/1		REC	16
17	REC		20/1			0.2 0.2	20/1		REC	18
19	REC		20/1	0.6	0.4		20/1		REC	20
21	REC		20/1		0.0	0.0	20/1		REC	22
23	REC		20/1			0.4 1.1	20/1		REC	24
25	REC		20/1	0.2	0.4		20/1		REC	26
27	REC TV		20/1		0.5	0.2	20/1		O MOTORIZED DAMPERS	28
29	SPARE		20/1			--- ---	20/1		SPARE	30
31	SPARE		20/1	---	---		20/1		SPARE	32
33	SPARE		20/1		---	---	20/1		SPARE	34
35	SPARE		20/1			--- ---	20/1		SPARE	36
37	SPARE		20/1	---	---		20/1		SPARE	38
39	SPARE		20/1		---	---	20/1		SPARE	40
41	SPARE		20/1			--- ---	20/1		SPARE	42
	NO SUBFEED LUGS				---	---				
	EXISTING LOAD				---	---				
	TOTAL			3.0	4.0	2.2				

BALANCE RATIO

LOAD TYPE	CONNECTED kVA	QUANTITY	FACTOR	CODE SIZING kVA	COMMENTS
Other	0.2	2	1.00	0.2	
Receptacle	<9.0>				
0kVA TO 10kVA	9.0		1.00	9.0	
TOTALS	9.2		1.00	9.2	
				25.6 AMPS	

P1C

MAIN SIZE (AMPS) & TYPE: MLO
PANEL RATING (AMPS): 100
NEUTRAL:
MOUNTING: SURFACE
NOTES:
VOLTAGE/PHASE/WIRES: 208/120/3/4
FAULT CURRENT RATING: 30000
LOCATION:
FED FROM: MDP-5

CKT	DESCRIPTION	NOTE	TRIP	kVA A	kVA B	kVA C	TRIP	NOTE	DESCRIPTION	CKT
1	REC		20/1	0.5	0.2		20/1		REC	2
3	REC		20/1			0.2 0.7	20/1		REC	4
5	REC		20/1			0.7 0.5	20/1		REC	6
7	REC		20/1	0.5	---		20/1		SPARE	8
9	REC		20/1		0.2	---	20/1		SPARE	10
11	SPARE		20/1			--- 1.0	20/1		REC	12
13	REC		20/1	0.2	0.5		20/1		REC	14
15	REC		20/1		0.7	0.9	20/1		REC REFRIGERATOR	16
17	REC		20/1			1.2 0.6	20/1		REC	18
19	REC		20/1	0.2	0.4		20/1		REC	20
21	REC		20/1		0.4	0.2	20/1		REC	22
23	REC		20/1			0.4 0.2	20/1		REC	24
25	REC TV		20/1	1.0	---		20/1		SPARE	26
27	REC AV RACK		20/1		1.5	1.5	20/1		REC AV RACK	28
29	REC AV RACK		20/1			1.5 1.5	20/1		REC AV RACK	30
31	REC AV RACK		20/1	1.5	1.5		20/1		REC AV RACK	32
33	REC TV		20/1		1.0	1.3	20/1		REC TV	34
35	SPARE		20/1			--- ---	20/1		SPARE	36
37	SPARE		20/1	---	---		20/1		SPARE	38
39	SPARE		20/1		---	---	20/1		SPARE	40
41	SPARE		20/1			--- ---	20/1		SPARE	42
	NO SUBFEED LUGS				---	---				
	EXISTING LOAD				---	---				
	TOTAL			6.5	8.6	7.6				

BALANCE RATIO

LOAD TYPE	CONNECTED kVA	QUANTITY	FACTOR	CODE SIZING kVA	COMMENTS
Receptacle	<22.7>				
0kVA TO 10kVA	10.0		1.00	10.0	
ABOVE 10kVA	12.7		0.50	6.3	
TOTALS	22.7		0.72	16.3	
				45.3 AMPS	

MDP	M1A	P1A
L1A	E1A	P1B
		P1C

RECORD SET

The information presented on this drawing is diagrammatic and is presented for general information purposes and should not be relied on for accuracy of dimensions, details and locations. Actual and exact conditions if required should be determined in the field.

JMWA ARCHITECTS
STEVEN E. MYOTT AIA
JAMES R. WILLIAMS AIA
RODOLFO ACEVEDO AIA
949 CLINT MOORE ROAD
BOCA RATON, FLORIDA 33487
TEL 561 997 9997
FAX 561 997 1610
WWW.JMWA.NET

PALMETTO BAY VILLAGE HALL

9705 E. Hibiscus St., Palmetto Bay, Florida

Master Builders of South Florida, Inc.
1400 E. Oakland Park Blvd. Suite 210
Oakland Park, FL 33334

Jason A. Strichcomb, P.E.
Florida License #58184

PROJECT NO. 609036
DESIGNED BY: MEB
DRAWN BY: JAS
CHECKED BY: JAS

SUBMITTALS:

50% REVIEW	10.30.2009
PERMIT REVIEW	11.20.2009
BUILDING PERMIT	03.03.2010

REVISIONS:

1	SUBMITTAL #008	03.22.2010
4	DESIGN CHANGES	08.11.2010
6	OWNER CHANGES	09.15.2010

ELECTRICAL PANEL SCHEDULES

E8.2

© 2009 JMWA ARCHITECTS, INCORPORATED ALL RIGHTS RESERVED. NO PART OF THESE IDEAS, PLANS OR DESIGNS MAY BE REPRODUCED, COPIED OR UTILIZED GRAPHICALLY IN ANY FORM, WHATSOEVER WITHOUT THE EXPRESSED WRITTEN CONSENT OF JMWA ARCHITECTS INCORPORATED AND ITS BOARD OF DIRECTORS.

L:\2009-Jobs\609036-Palmetto Bay Municipal Center\CAD-MEP\Sheets E8.2.dwg 9/15/2010 6:23:51 PM david.young

TLC ENGINEERING FOR ARCHITECTURE
800 Fairway Drive.
Suite 250
Deerfield Beach, Florida 33441
Phone: 954-418-9096
Fax: 954-418-9296
www.tlc-engineers.com
© Copyright 2007 TLC Engineering for Architecture, Inc.
EB #0000015 TLC NO:609036

L2A

MAIN SIZE (AMPS) & TYPE: MLO
PANEL RATING (AMPS): 100
NEUTRAL:
MOUNTING: SURFACE
NOTES:
VOLTAGE/PHASE/WIRES: 208/120/3/4
FAULT CURRENT RATING: 30000
LOCATION:
FED FROM: MDP-6

CKT	DESCRIPTION	NOTE	TRIP	kVA A	kVA B	kVA C	TRIP	NOTE	DESCRIPTION	CKT
1	LTG 2nd FL LIGHTING		20/1	1.3 0.2			20/1		LTG 2nd FL LIGHTING	2
3	LTG 2nd FL LIGHTING		20/1		1.7 0.5		20/1		LTG 2nd FL LIGHTING	4
5	SPARE		20/1			--- ---	20/1		SPARE	6
7	SPARE		20/1	--- ---			20/1		SPARE	8
9	SPARE		20/1		--- ---		20/1		SPARE	10
11	SPARE		20/1			--- ---	20/1		SPARE	12
13	SPARE		20/1	--- ---			20/1		SPARE	14
15	SPARE		20/1		--- ---		20/1		SPARE	16
17	SPARE		20/1			--- ---	20/1		SPARE	18
19	SPARE		20/1	--- ---			20/1		SPARE	20
21	SPARE		20/1		--- ---		20/1		SPARE	22
23	SPARE		20/1			--- ---	20/1		SPARE	24
25	SPARE		20/1	--- ---			20/1		SPARE	26
27	SPARE		20/1		--- ---		20/1		SPARE	28
29	SPARE		20/1			--- ---	20/1		SPARE	30
31	SPARE		20/1	--- ---			20/1		SPARE	32
33	SPARE		20/1		--- ---		20/1		SPARE	34
35	SPARE		20/1			--- ---	20/1		SPARE	36
37	SPARE		20/1	--- ---			20/1		SPARE	38
39	SPARE		20/1		--- ---		20/1		SPARE	40
41	SPARE		20/1			--- ---	20/1		SPARE	42
	NO SUBFEED LUGS			---	---	---				
	EXISTING LOAD			---	---	---				
	TOTAL			1.6	2.2	-/-				
	BALANCE RATIO									

LOAD TYPE	CONNECTED kVA	QUANTITY	FACTOR	CODE SIZING kVA	COMMENTS
Interior Lighting	3.8	134	1.25	4.7	
<undefined>	0.1	1	1.00	0.1	NO CODE RULE DEFINED
TOTALS	3.8		1.23	4.7	CODE RULE(S) MISSING; RESULTS MAY NOT BE ACCURATE!
				13.0 AMPS	

M2A

MAIN SIZE (AMPS) & TYPE: MLO
PANEL RATING (AMPS): 100
NEUTRAL:
MOUNTING: SURFACE
NOTES:
VOLTAGE/PHASE/WIRES: 208/120/3/4
FAULT CURRENT RATING: 30000
LOCATION:
FED FROM: MDP-7

CKT	DESCRIPTION	NOTE	TRIP	kVA A	kVA B	kVA C	TRIP	NOTE	DESCRIPTION	CKT
1	O AHU-19,20,21,22,23		20/2	1.0 0.9			20/1		MTR GD-1	2
3					1.0 1.1		20/2		O AHU-29,31,32,33	4
5	O AHU-24,25,27,28		20/2			0.7 1.1				6
7				0.7 ---			20/2		SPARE	8
9	SPARE		20/2		--- ---					10
11	SPARE					--- ---	20/1		SPARE	12
13	SPARE		20/1	--- ---			20/1		SPARE	14
15	SPARE		20/1		--- ---		20/1		SPARE	16
17	SPARE		20/1			--- 1.5	20/1		O HAND DRYER	18
19	O EWH-3		30/2	2.1 1.5			20/2		O EWH-2	20
21					2.1 1.5					22
23	CL MCU-1		30/2			2.3 1.4	30/2		CL MCU-2	24
25				2.3 1.4						26
27	O HAND DRYER	1	20/1		1.5 ---		30/1	1	SPARE	28
29	O CLOCK CONTROLLER CLOCK LIGHTING		20/1			1.0 ---	20/1		SPARE	30
31	LTG REC		20/1	0.2 ---			20/1		SPARE	32
33	SPARE		20/1		--- ---		20/1		SPARE	34
35	SPARE		20/1			--- ---	20/1		SPARE	36
37	SPARE		20/1	--- ---			20/1		SPARE	38
39	SPARE		20/1		--- ---		20/1		SPARE	40
41	SPARE		20/1			--- ---	20/1		SPARE	42
	NO SUBFEED LUGS			---	---	---				
	EXISTING LOAD			---	---	---				
	TOTAL			10.0	7.2	7.9				
	BALANCE RATIO									

LOAD TYPE	CONNECTED kVA	QUANTITY	FACTOR	CODE SIZING kVA	COMMENTS
Cooling	7.2	2	1.00	7.2	
Interior Lighting	0.0	1	1.25	0.0	
Motor	0.9	1	1.00	0.9	
Other	16.8	19	1.00	16.8	
Receptacle	<0.2>				
0kVA TO 10kVA	0.2		1.00	0.2	
LARGEST MOTOR (GD-1)	<0.9>		0.25	0.2	
TOTALS	25.1		1.01	25.3	
				70.3 AMPS	

2

P2A

MAIN SIZE (AMPS) & TYPE: MLO
PANEL RATING (AMPS): 100
NEUTRAL:
MOUNTING: SURFACE
NOTES:
VOLTAGE/PHASE/WIRES: 208/120/3/4
FAULT CURRENT RATING: 30000
LOCATION:
FED FROM: MDP-8

CKT	DESCRIPTION	NOTE	TRIP	kVA A	kVA B	kVA C	TRIP	NOTE	DESCRIPTION	CKT
1	REC		20/1	0.4 0.4			20/1		REC	2
3	REC		20/1		0.5 1.5		20/1		REC MICROWAVE	4
5	REC		20/1			0.5 1.5	20/1		REC MICROWAVE	6
7	REC		20/1	0.2 0.7			20/1		REC	8
9	REC		20/1		0.4 0.4		20/1		REC	10
11	REC		20/1			0.2 0.0	20/1		REC	12
13	REC		20/1	0.2 0.5			20/1		REC	14
15	REC		20/1		0.2 0.2		20/1		REC	16
17	REC		20/1			0.2 0.0	20/1		REC	18
19	REC PRINTER		20/1	1.2 1.5			20/1		REC COPIER	20
21	REC		20/1		0.4 1.7		20/1		REC	22
23	REC		20/1			1.0 1.5	20/1		REC ICE MAKER	24
25	REC TV		20/1	0.3 0.3			20/1		REC TV	26
27	REC REFRIGERATOR		20/1		0.9 0.7		20/1		REC	28
29	REC		20/1			0.5 0.2	20/1		O PRE-ACT COMP.	30
31	SPARE		20/1	--- ---			20/1		SPARE	32
33	SPARE		20/1		--- ---		20/1		SPARE	34
35	SPARE		20/1			--- ---	20/1		SPARE	36
37	SPARE		20/1	--- ---			20/1		SPARE	38
39	SPARE		20/1		--- ---		20/1		SPARE	40
41	SPARE		20/1			--- ---	20/1		SPARE	42
	NO SUBFEED LUGS			---	---	---				
	EXISTING LOAD			---	---	---				
	TOTAL			5.6	6.8	5.6				
	BALANCE RATIO									

LOAD TYPE	CONNECTED kVA	QUANTITY	FACTOR	CODE SIZING kVA	COMMENTS
Other	0.2	1	1.00	0.2	
Receptacle	<17.8>				
0kVA TO 10kVA	10.0		1.00	10.0	
ABOVE 10kVA	7.8		0.50	3.9	
TOTALS	18.0		0.78	14.1	
				39.1 AMPS	

P2B

MAIN SIZE (AMPS) & TYPE: MLO
PANEL RATING (AMPS): 100
NEUTRAL:
MOUNTING: SURFACE
NOTES:
VOLTAGE/PHASE/WIRES: 208/120/3/4
FAULT CURRENT RATING: 30000
LOCATION:
FED FROM: MDP-9

CKT	DESCRIPTION	NOTE	TRIP	kVA A	kVA B	kVA C	TRIP	NOTE	DESCRIPTION	CKT
1	REC		20/1	0.6 0.7			20/1		REC EWC	2
3	REC		20/1		0.9 0.5		20/1		REC	4
5	REC		20/1			0.4 0.2	20/1		REC	6
7	REC		20/1	0.7 0.0			20/1		REC	8
9	REC		20/1		0.2 0.7		20/1		REC	10
11	REC		20/1			0.2 0.2	20/1		REC	12
13	SPARE		20/1	--- 1.2			20/1		REC VENDING MACHINE	14
15	REC VENDING MACHINE		20/1		1.2 0.2		20/1		REC	16
17	REC		20/1			0.6 0.2	20/1		REC	18
19	O MOTORIZED DAMPERS		20/1	0.2 ---			20/1		SPARE	20
21	SPARE		20/1		--- ---		20/1		SPARE	22
23	SPARE		20/1			--- ---	20/1		SPARE	24
25	SPARE		20/1	--- ---			20/1		SPARE	26
27	SPARE		20/1		--- ---		20/1		SPARE	28
29	SPARE		20/1			--- ---	20/1		SPARE	30
31	SPARE		20/1	--- ---			20/1		SPARE	32
33	SPARE		20/1		--- ---		20/1		SPARE	34
35	SPARE		20/1			--- ---	20/1		SPARE	36
37	SPARE		20/1	--- ---			20/1		SPARE	38
39	SPARE		20/1		--- ---		20/1		SPARE	40
41	SPARE		20/1			--- ---	20/1		SPARE	42
	NO SUBFEED LUGS			---	---	---				
	EXISTING LOAD			---	---	---				
	TOTAL			3.4	3.7	1.7				
	BALANCE RATIO									

LOAD TYPE	CONNECTED kVA	QUANTITY	FACTOR	CODE SIZING kVA	COMMENTS
Other	0.2	2	1.00	0.2	
Receptacle	<8.6>				
0kVA TO 10kVA	8.6		1.00	8.6	
TOTALS	8.8		1.00	8.8	
				24.4 AMPS	

E2A

MAIN SIZE (AMPS) & TYPE: 100 MCB
PANEL RATING (AMPS): 100
NEUTRAL:
MOUNTING: SURFACE
NOTES:
VOLTAGE/PHASE/WIRES: 208/120/3/4
FAULT CURRENT RATING: 30000
LOCATION:
FED FROM: E1A-1,3,5

CKT	DESCRIPTION	NOTE	TRIP	kVA A	kVA B	kVA C	TRIP	NOTE	DESCRIPTION	CKT
1	LTG 2nd FL LIGHTING		20/1	1.2 ---			20/1		SPARE	2
3	SPARE		20/1		--- ---		20/1		SPARE	4
5	SPARE		20/1			--- ---	20/1		SPARE	6
7	SPARE		20/1	--- ---			20/1		SPARE	8
9	SPARE		20/1		--- ---		20/1		SPARE	10
11	SPARE		20/1			--- ---	20/1		SPARE	12
13	SPARE		20/1	--- ---			20/1		SPARE	14
15	SPARE		20/1		--- ---		20/1		SPARE	16
17	SPARE		20/1			--- ---	20/1		SPARE	18
19	SPARE		20/1	--- ---			20/1		SPARE	20
21	SPARE		20/1		--- ---		20/1		SPARE	22
23	SPARE		20/1			--- ---	20/1		SPARE	24
25	SPARE		20/1	--- ---			20/1		SPARE	26
27	SPARE		20/1		--- ---		20/1		SPARE	28
29	SPARE		20/1			--- 0.5	20/1		O FIRE ALARM PANEL	30
31	SPACE			--- ---					SPACE	32
33	SPACE				--- ---				SPACE	34
35	SPACE					--- ---			SPACE	36
37	SPACE			--- ---					SPACE	38
39	SPACE				--- ---				SPACE	40
41	SPACE					--- ---			SPACE	42
	NO SUBFEED LUGS			---	---	---				
	EXISTING LOAD			---	---	---				
	TOTAL			1.2	-/-	0.5				
	BALANCE RATIO									

LOAD TYPE	CONNECTED kVA	QUANTITY	FACTOR	CODE SIZING kVA	COMMENTS
Interior Lighting	1.2	49	1.25	1.5	
Other	0.5	1	1.00	0.5	
TOTALS	1.7		1.18	2.0	
				5.5 AMPS	

LCR

MAIN SIZE (AMPS) & TYPE: 175 MCB
PANEL RATING (AMPS): 225
NEUTRAL:
MOUNTING: SURFACE
NOTES: SHUNT TRIP MAIN CIRCUIT BREAKER
VOLTAGE/PHASE/WIRES: 208/120/3/4
FAULT CURRENT RATING: 30000
LOCATION:
FED FROM: MDP-11

CKT	DESCRIPTION	NOTE	TRIP	kVA A	kVA B	kVA C	TRIP	NOTE	DESCRIPTION	CKT
1				---	0.2		20/1		REC	2
3	SPARE		20/3		---	0.2	20/1		REC	4
5						--- 0.2	20/1		REC	6
7	REC		20/1	1.4 2.0			30/1		SPECIAL REC 6	8
9	REC		20/1		1.6 2.0		30/1		SPECIAL REC 6	10
11	SPARE		20/1			--- 0.2	20/1		REC	12
13	SPARE		20/1	--- 0.2			20/1		REC	14
15	SPARE		20/1		--- 0.2		20/1		REC	16
17	SPARE		20/1			--- ---	20/1		SPARE	18
19	SPARE		20/1	--- ---			20/1		SPARE	20
21	SPARE		20/1		--- ---		20/1		SPARE	22
23	SPARE		20/1			--- ---	20/1		SPARE	24
25	SPARE		20/1	--- ---			20/1		SPARE	26
27	SPARE		20/1		--- ---		20/1		SPARE	28
29	SPARE		20/1			--- ---	20/1		SPARE	30
31	SPARE		20/1	--- ---			20/1		SPARE	32
33	SPARE		20/1		--- ---		20/1		SPARE	34
35	SPARE		20/1			--- ---	20/1		SPARE	36
37	SPARE		20/1	--- ---			20/1		SPARE	38
39	SPARE		20/1		--- ---		20/1		SPARE	40
41	SPARE		20/1			--- ---	20/1		SPARE	42
	NO SUBFEED LUGS			---	---	---				
	EXISTING LOAD			---	---	---				
	TOTAL			3.8	4.0	0.4				
	BALANCE RATIO									

LOAD TYPE	CONNECTED kVA	QUANTITY	FACTOR	CODE SIZING kVA	COMMENTS
Receptacle	<4.2>				
0kVA TO 10kVA	4.2		1.00	4.2	
<undefined>	4.0		???	???	NO CODE RULE DEFINED
TOTALS	8.2		0.51	4.2	CODE RULE(S) MISSING; RESULTS MAY NOT BE ACCURATE!
				11.7 AMPS	

PANEL SCHEDULE NOTE:

1. PROVIDE LOCKABLE CIRCUIT BREAKER.

BRANCH CIRCUIT WIRING SCHEDULE

BREAKER SIZE	THHN CONDUCTOR	GROUND
20A	12 CU	12 CU
30A	10 CU	10 CU
35A	8 CU	10 CU
40A	8 CU	10 CU
45A	6 CU	10 CU
50A	6 CU	10 CU
60A	4 CU	10 CU
80A	3 CU	6 CU

NOTE:
PROVIDE A CONDUCTOR PER BREAKER POLE. THESE ARE THE MINIMUM SIZES REQUIRED FOR EACH CIRCUIT. CONTRACTOR TO MAKE ALL THE NECESSARY FIELD ADJUSTMENTS TO COMPENSATE FOR VOLTAGE DROP.

L2A	P2A	E2A
M2A	P2B	LCR

RECORD SET

The information presented on this drawing is diagrammatic and is presented for general information purposes and should not be relied on for accuracy of dimensions, details and locations. Actual and exact conditions if required should be determined in the field.

JMWA ARCHITECTS
STEVEN E. MYOTT AIA
JAMES R. WILLIAMS AIA
RODOLFO ACEVEDO AIA
949 CLINT MOORE ROAD
BOCA RATON, FLORIDA 33487
TEL: 561 997 9997
FAX: 561 997 1610
WWW.JMWA.NET

PALMETTO BAY VILLAGE HALL

9705 E. Hibiscus St., Palmetto Bay, Florida

Master Builders of South Florida, Inc.
1400 E. Oakland Park Blvd. Suite 210
Oakland Park, FL 33334

Jason A. Strichcomb, P.E.
Florida License #58184

PROJECT NO. 609036
DESIGNED BY: MEB
DRAWN BY: JAS
CHECKED BY: JAS

SUBMITTALS:
50% REVIEW 10.30.2009
PERMIT REVIEW 11.20.2009
BUILDING PERMIT 03.03.2010

REVISIONS:
4 DESIGN CHANGES 08.11.2010
6 OWNER CHANGES 09.15.2010

ELECTRICAL PANEL SCHEDULES

E8.3

© 2009 JMWA ARCHITECTS, INCORPORATED ALL RIGHTS RESERVED. NO PART OF THESE IDEAS, PLANS OR DESIGNS MAY BE REPRODUCED, COPIED OR UTILIZED GRAPHICALLY IN ANY FORM WHATSOEVER WITHOUT THE EXPRESSED WRITTEN CONSENT OF JMWA ARCHITECTS INCORPORATED AND ITS BOARD OF DIRECTORS.

L:\2009--Jobs\609036--Palmetto Bay Municipal Center\CAD--MEP\Sheets E8.3.dwg 9/15/2010 6:24:20 PM david.young

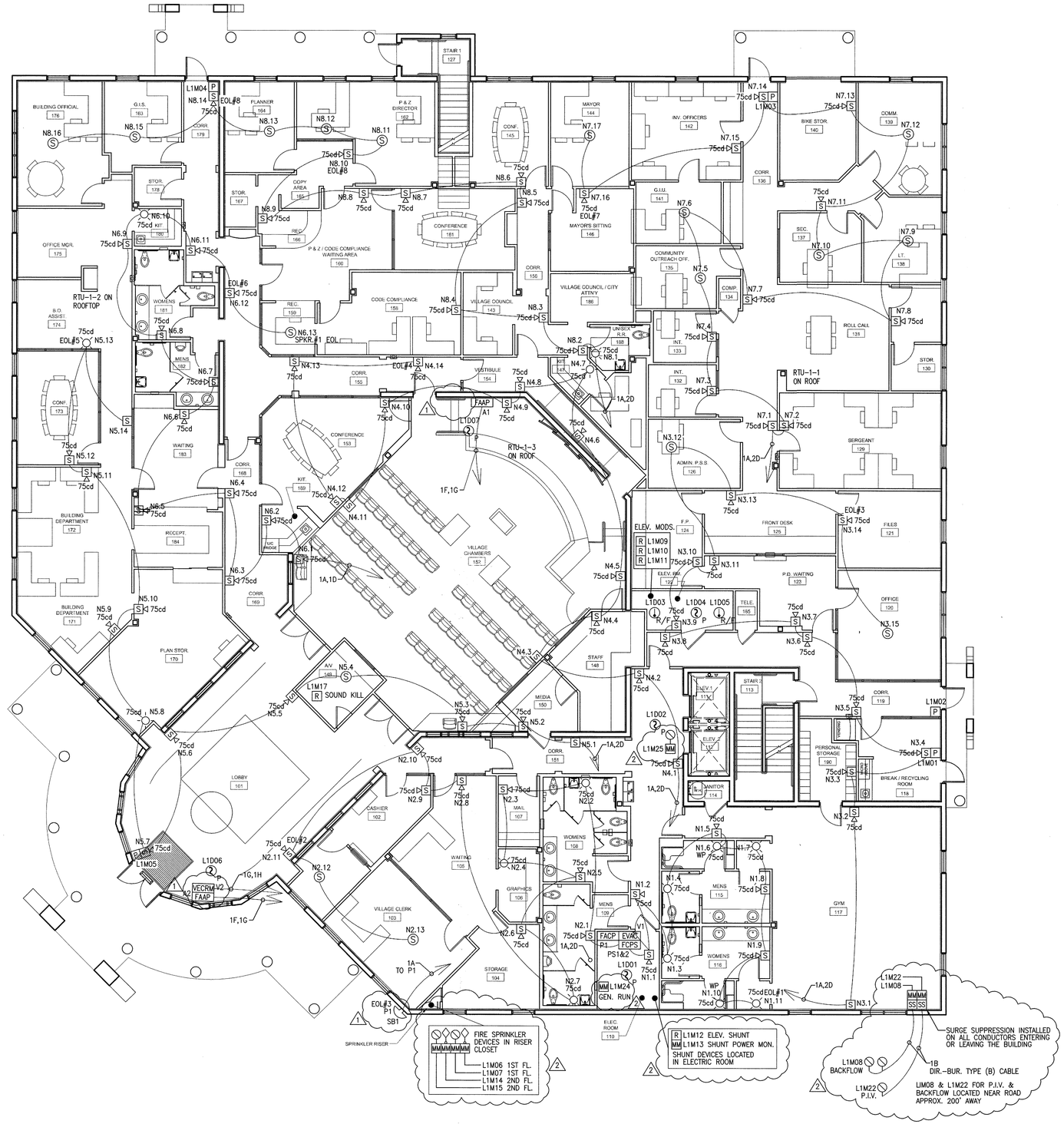

ALL SPEAKER TAPPED AT 1/4 (0.25) WATT UNLESS OTHREWISE NOTED

FIRST FLOOR FIRE ALARM PLAN

SCALE: 1/8"=1.0'

REVISED PLANS MDFR

FIRE ALARM SHALL BE A CENTRAL STATION SERVICE. A CERTIFICATE OR PLACARD SHALL BE POSTED AT FINAL INSPECTION, AS PER NFPA 72

FIRE ALARM SYSTEM TO BE INSTALLED IN ACCORDANCE WITH NFPA 72; 70; 101-

APPROVED
MIAMI-DADE COUNTY FIRE DEPARTMENT
BLDG. PERMIT
FIRE ALARM
FIRE SUPPRESSION
WATER MAIN EXT.
DATE: 02.07.11 BY:

AS-BUILTS
12/21/10

RECORD SET
The information presented on this drawing is diagrammatic and is presented for general information purposes and should not be relied on for accuracy of dimensions, details and locations. Actual and exact conditions if required should be determined in the field.

WSA
Systems-Boca, Inc.
442 NW 35TH STREET – BOCA RATON, FLORIDA 33431
Tel. (561) 392-2933 FAX. (561) 393-9890
E.F. 0001108
LIC. # 57075

Fire Alarm Drawings For:

PALMETTO BAY VILLAGE HALL
9705 E. HIBISCUS STREET
CUTLER BAY, FLORIDA 33157

REVISIONS:

DATE	NAME	DESCRIPTION
10/28/10	1	AS PER PLAN REVIEW
12/21/10	2	AS PER AS-BUILTS

TYEC HVAC PLUMBING ELECTRICAL

THOMPSON & YOUNGROSS ENGINEERING CONSULTANTS, LLC
TO THE BEST OF MY KNOWLEDGE THE PLANS, SPECIFICATIONS AND CALCULATIONS FOR THE ABOVE NAMED PROJECT ARE IN CONFORMANCE WITH APPLICABLE BUILDING CODES
DANIEL E. THOMPSON ELEC/MECH FLA. REG. NO. 33269
ANDREW J. YOUNGROSS ELEC FLA. REG. NO. 51768
CERTIFICATE of AUTHORIZATION NO. 25996
113 S.E. 12TH STREET TEL: 561-752-3995
DEERFIELD BEACH, FLORIDA 33441 FAX: 561-210-4555
E-MAIL: TYEC@AOL.COM WWW.TYEC.COM

1.22.11
ENGINEERS SEAL

DRAWN BY: K.O.
REVIEWED BY: DATE:
SCALE: 1/8"=1.0'
DATE: 09/01/10
WSA JOB NO: #7035

FIRE ALARM PLAN FIRST FLOOR
FA-1of8

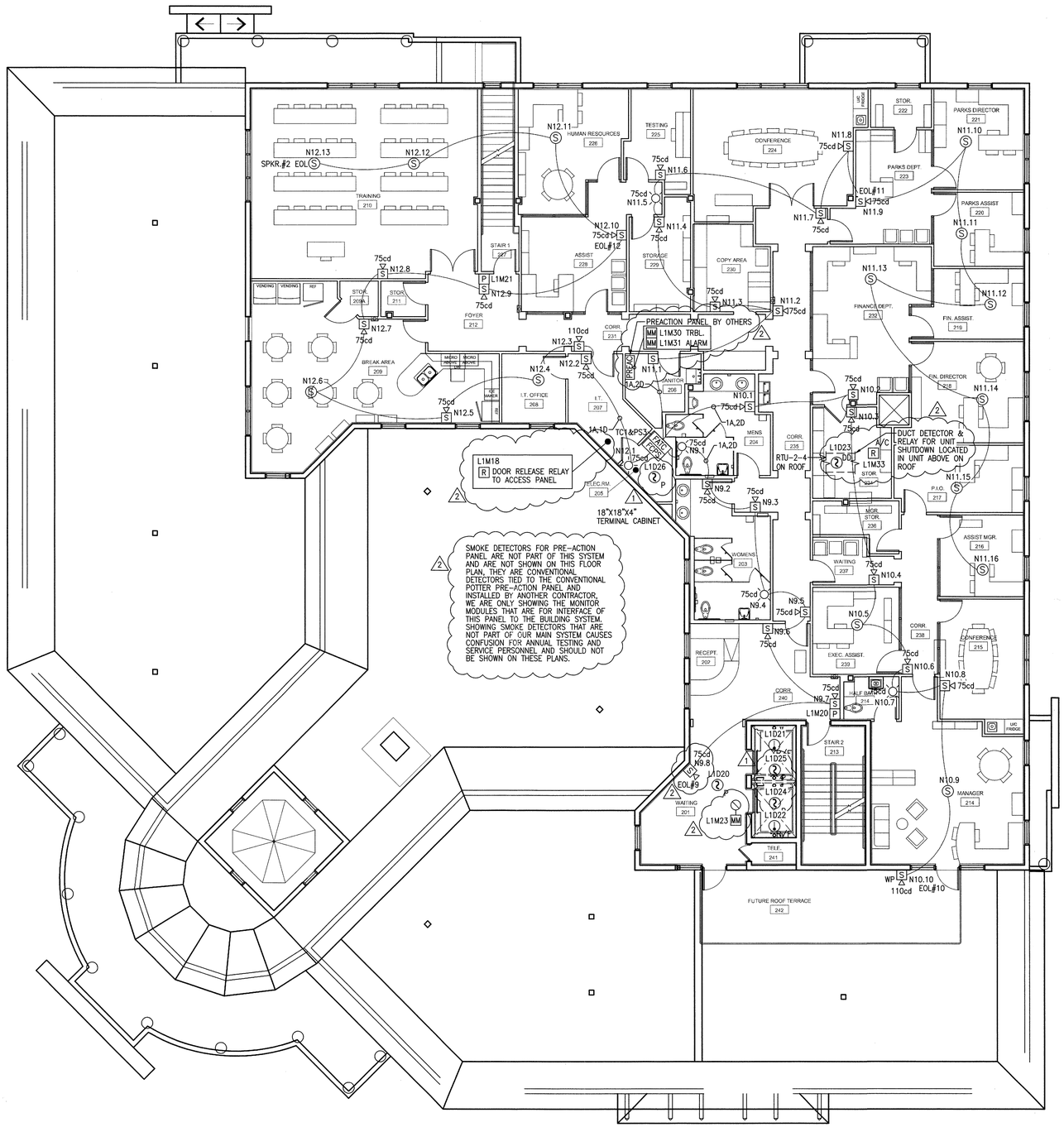

ALL SPEAKER TAPPED AT 1/4 (0.25) WATT UNLESS OTHREWISE NOTED

SECOND FLOOR FIRE ALARM PLAN

SCALE: 1/8"=1.0'

REVISED PLANS
MDPR

FIRE ALARM SHALL BE A CENTRAL STATION SERVICE. A CERTIFICATE OR PLACARD SHALL BE POSTED AT FINAL INSPECTION, AS PER NFPA 72

FIRE ALARM SYSTEM TO BE INSTALLED IN ACCORDANCE WITH NFPA 72; 70; 101-

APPROVED
MIAMI-DADE COUNTY FIRE DEPARTMENT
BLDG. PERMIT
FIRE SUPPRESSION
FIRE ALARM
WATER MAIN EXT.
DATE: 02.07.11 BY:

AS-BUILTS
12/21/10

RECORD SET
The information presented on this drawing is diagrammatic and is presented for general information purposes and should not be relied on for accuracy of dimensions, details and locations. Actual and exact conditions if required should be determined in the field.

WSA Systems-Boca, Inc.
442 NW 35TH STREET – BOCA RATON, FLORIDA 33431
Tel. (561) 393-2933 FAX. (561) 393-9890
U.L. # S7075 EF# 0001109

Fire Alarm Drawings For:
PALMETTO BAY VILLAGE HALL
9705 E. HIBISCUS STREET
CUTLER BAY, FLORIDA 33157

REVISIONS:

DATE	NAME	DESCRIPTION
10/28/10	1	AS PER PLAN REVIEW
12/21/10	2	AS PER AS-BUILTS

TYEC HVAC PLUMBING ELECTRICAL
THOMPSON & YOUNGROSS ENGINEERING CONSULTANTS, LLC
TO THE BEST OF MY KNOWLEDGE, THE PLANS AND SPECIFICATIONS COMPLY WITH THE MIAMI-DADE COUNTY CODE.
DANIEL E. THOMPSON ELEC/MECH
FLA. REG. NO. 33289
ANDREW J. YOUNGROSS ELEC
FLA. REG. NO. 51758
CERTIFICATE of AUTHORIZATION NO. 25996
112 S.E. 12th STREET
DELAY BEACH, FLA 33483-3428
E-MAIL: TEC@TYEC.COM
TEL: 561-274-0000
FAX: 561-274-0022
WWW.TYEC.COM

1.22.11
ENGINEERS SEAL

DRAWN BY: K.O.
REVIEWED BY: DATE:
SCALE: 1/8"=1.0'
DATE: 09/01/10
WSA JOB NO: #7035

FIRE ALARM PLAN
SECOND FLOOR
FA-2of8

FIRE ALARM NOTES:

1. ALL EQUIPMENT TO BE U.L. LISTED FOR FIRE SERVICE AND SHALL BE COMPATIBLE WITH THE SYSTEM BEING USED.
2. ALL WIRING AND CONDUIT TO CONFORM TO N.F.P.A. 70 AND N.E.C. 760. WIRING SHALL BE SOLID COPPER OR STRANDED COPPER WITH A MAX OF 19 STRANDS FOR SIZES 18,16, & 14 OR LARGER.
3. COLOR CODING MAY NOT APPLY TO EXISTING WIRE. (LABEL ALL EXISTING WIRE ACCORDINGLY.)
4. ROUTING OF THE FIRE ALARM SYSTEM CONDUIT IS DIAGRAMMATIC, VERIFY EXACT LOCATIONS PRIOR TO STARTING WORK.
5. ALL STROBE LIGHTS SHALL ACTIVATE UPON INITIATION OF THE GENERAL ALARM.
6. MANUAL STATIONS TO BE INSTALLED AT 42" INCHES TO BOTTOM OF DEVICE NO HIGHER THAN 48" TO HANDLE ABOVE FINISHED FLOOR.
7. SMOKE DETECTORS TO BE INSTALLED AS PER N.F.P.A 72 WALL MOUNTED SMOKE DETECTORS SHALL BE MOUNTED 4" INCHES MIN. FROM CEILING WITH 12" MAX FROM CEILING.
8. THE FIRE ALARM PANEL MUST HAVE AN EARTH GROUND CONNECTION AS PER MANUFACTURERS RECOMMENDATIONS AND ARTICLE 760 OF THE N.E.C. MINIMUM WIRE SIZE IS 14 AWG FOR GROUND CONNECTION. (NOTE PANEL NEUTRAL OR CONDUIT GROUND IS NOT ACCEPTABLE.)
9. SELECTIVE EVACUATION ALARM SHALL BE ANNUNCIATED UPON ACTIVATION OF ANY PULL STATION, DETECTION DEVICE. A SUPERVISORY SIGNAL SHALL BE ANNUNCIATED UPON ANY TAMPER SWITCH ACTIVATION. FAILURE OR REMOVAL OF ANY DETECTION OR MANUAL DEVICE SHALL ACTIVATE A TROUBLE SIGNAL.
10. FIRE ALARM PANEL SHALL BE LISTED FOR CENTRAL STATION SERVICE PER N.F.P.A. 72, 2002.
11. FIRE ALARM IDC & NAC CIRCUITS SHALL BE CLASS "B" STYLE "C" FOR IDC, & CLASS "B" STYLE "Y" FOR NAC
12. INSTALL HORN/STROBES WITH TEMPORAL 3 CODE PATTERN.
13. THE DEDICATED 120VAC VOLTAGE BREAKER SHALL BE MECHANICALLY PROTECTED, (LOCKED OUT) MARKED AS "FIRE ALARM CIRCUIT" IN RED.
14. F.A.C.P. SHALL BE LABELED WITH THE LOCATION OF THE 120 VAC PANEL AND BREAKER NUMBER.
15. ALL CONDUIT AND FIRE CABLE SHALL STAY 2" AWAY FROM HIGH VOLTAGE AT ALL TIMES.
16. ALL RACEWAYS, JUNCTION BOXES, PANELS, GUTTERS & 120VAC TO BE THE RESPONSIBILITY OF AND INSTALLED BY ELECTRICAL CONTRACTOR.
17. ELECTRICAL CONTRACTOR SHALL PROVIDE AS BUILT DRAWINGS OF CONDUIT.
18. CONDUIT SIZE SHALL ACCOMMODATE ALL FIRE ALARM WIRING TO APPROVED N.E.C. CODES.
19. DEDICATED 120 AC VOLTAGE WITH EARTH GROUND SHALL BE PROVIDED TO THE FIRE ALARM CONTROL PANEL BY ELECTRICAL CONTRACTOR.
20. STROBES TO BE INSTALLED PER A.D.A HEIGHT. WALL MOUNTED SHALL HAVE THEIR BOTTOMS AT HEIGHTS ABOVE THE FINISHED FLOOR OF 80".
21. FIRE ALARM PANEL SHALL BE ACCESSIBLE TO FIRE DEPT. AT ALL TIMES.
22. IDC&NAC CIRCUITS ARE SUPERVISED BY END OF LINE DEVICE.
23. A CERTIFICATION OF COMPLETION SHALL BE ISSUED ON THE FIRE ALARM PANEL.
24. ALL FIRE STOP PENETRATION SHALL BE MADE WITH APPROVED N.E.C. ELECTRICAL AND FIRE STOP MATERIALS.
25. WHEN WIRING IS TO BE INSTALLED BY WSA SYSTEMS INSTALLATION DEPT, PULL STRINGS WILL BE INSTALLED IN ALL RACEWAYS BY ELECTRICAL CONTRACTOR, PRIOR TO WSA INSTALLATION CREWS ARRIVAL.
26. ALL 1900 BACK BOXES MUST BE INSTALLED SQUARE AND LEVEL FOR PROPER DEVICE MOUNTING.
27. ALL SMOKE DETECTORS SHALL BE MOUNTED 3–1/2' AWAY FROM ANY HVAC VENTS.
28. HORN/STROBES AT END OF CORRIDORS MUST BE WITHIN 15' OF END.
29. ALL HORN/STROBES OPEN TO OUTSIDE AIR WILL BE (WP) WEATHER PROOF DEVICES IN APPROVED BACKBOXES
30. ALL PULL STATIONS OPEN TO OUTSIDE AIR WILL BE (WP) WEATHER PROOF DEVICES AND INSTALLED IN APPROVED BACKBOXES
31. ALL FIRE CABLE THAT IS FREE–AIR, SHALL BE INDEPENDENT SUPPORTED THROUGHOUT INSTALLATION AS PER N.E.C.
32. ALL FIRE CABLE WILL BE RATED FOR INSTALLATION TYPE AND ABOVE CEILING CONDITIONS
33. THE MAXIMUM NUMBER OF DEVICES PER SLC CIRCUIT IS 318
34. SLC CIRCUITS SHALL BE CLASS–B, STYLE–4 TYPE
35. ALL CIRCUITS ARE POWER LIMITED.
36. THIS IS A CERTIFICATED CENTRAL STATION TYPE SYSTEM.

DEVICE LEGEND

- FACP — NOTIFIER NFW2–100 FIRE ALARM CONTROL PANEL
- FCPS — NOTIFIER FCPS–24S8 POWER SUPPLY 8A
- FAAP — NOTIFIER FDU–80 REMOTE ANNUNCIATOR
- EVAC — NOTIFIER NFV–25/50 VOICE EVACUATION PANEL
- VECRM — NOTIFIER VEC–RM REMOTE MICROPHONE TO EVAC PANEL
- P — NOTIFIER NOT–BG12LX SERIES PULL STATION (PULL STATIONS TO INCLUDE UL LISTED STOPPER COVERS)
- P — NOTIFIER NP–100 PHOTO ELECTRIC SMOKE SENSOR
- R/F — NOTIFIER NH–100 HEAT DETECTOR
- DD — NOTIFIER DNR INOVAIRFLEX SERIES DUCT SMOKE DETECTOR
- S — SYSTEM SENSOR SPSW SERIES SPEAKER STROBE
- WP S — SYSTEM SENSOR SPSRK SERIES SPEAKER STROBE (WEATHERPROOF)
- S — SYSTEM SENSOR SPW SERIES SPEAKER ONLY (WALL MOUNT)
- S — SYSTEM SENSOR SPCW SERIES SPEAKER ONLY (CEILING MOUNT)
- NOTIFIER SW SERIES MULTICANDELA STROBE
- MM — NOTIFIER NMM–100/NMM–100P/NZM–100 MONITOR MODULE
- R — NOTIFIER NC–100R ADDRESSABLE RELAY
- CM — NOTIFIER NC–100 ADDRESSABLE CONTROL MODULE
- RT — NOTIFIER RTS–451 REMOTE TEST FOR DUCT DETECTOR
- TAMPER SWITCH (SUPPLIED BY OTHERS)
- FLOW SWITCH (SUPPLIED BY OTHERS)
- SS — DITEK SERIES SURGE SUPPRESSION CONTROL
- SYSTEM SENSOR SSM24–8 WEATHERPROOF SPRINKLER BELL (1)
- PREAC — POTTER PRE–ACTION PANEL (BY OTHERS) (2)

TOTAL CIRCUIT AMP DRAW

CIRCUIT # 3 (1)
P1

DEVICE	DEVICE COUNT	DEVICE AMP DRAW	TOTAL DEVICE AMP DRAW	MAX AMP 3.0
SSM24–8	1	0.0311	0.0311	
				TOTAL CIRCUIT DRAW
				TOTAL 0.0311

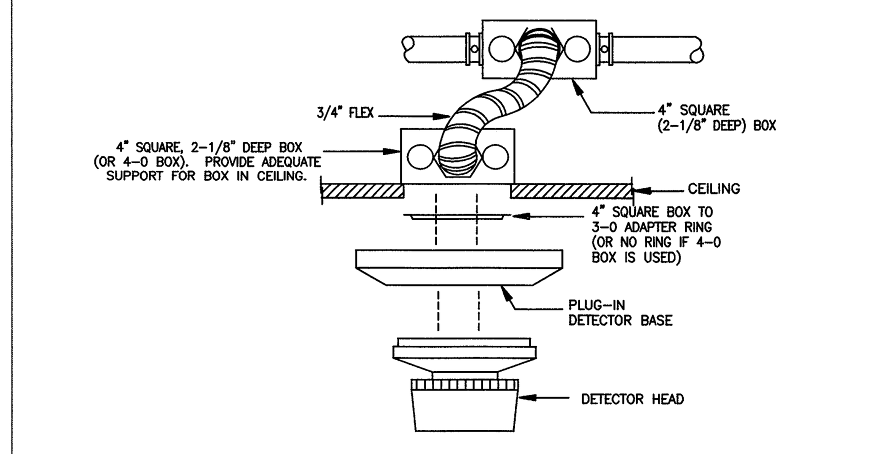

BOX MOUNTING IN LIFT OUT OR INTERLOCKING TYPE CEILINGS WITH SYSTEMS INSTALLED IN CONDUIT

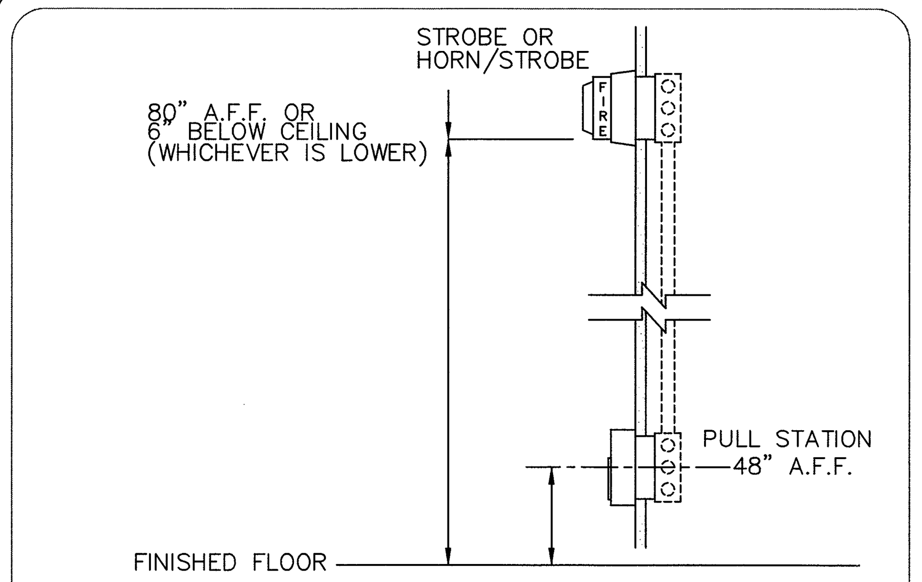

ADA HEIGHT REQUIREMENTS
NO SCALE

SCOPE OF WORK

1) SUPPLY AND INSTALL NEW ADDRESSABLE FIRE ALARM SYSTEM FOR THE BUILDING SHOWN ON THE ATTACHED PLANS. BUILDING IS A TWO STORY BUILDING, AND HAS A TOTAL OF 24,830 SQ. FT. AND IS FULLY SPRINKLED.

2) UPON COMPLETION, SYSTEM WILL BE TESTED AND CERTIFIED.

3) SYSTEM SHOULD BE INSTALLED ACCORDING TO THESE PLANS.

NFPA 72 2002/2007 VERSION
NFPA LIFE SAFETY 101 2003 VERSION
FLORIDA FIRE PREVENTION CODE 2004/2007 VERSION
NEC 2007 VERSION

REVISED PLANS
MDFD

FIRE ALARM SHALL BE A CENTRAL STATION SERVICE. A CERTIFICATE OR PLACARD SHALL BE POSTED AT FINAL INSPECTION, AS PER NFPA 72

FIRE ALARM SYSTEM TO BE INSTALLED IN ACCORDANCE WITH NFPA 72; 70; 101-

APPROVED
MIAMI-DADE COUNTY FIRE DEPARTMENT
BLDG. PERMIT ___ FIRE ALARM ✓
FIRE SUPPRESSION ___ WATERMAIN EXT. ___
DATE: 02.07.11 BY:

AS-BUILTS
12/21/10

ITEM	DESCRIPTION	STANDBY CURRENT PER UNIT (AMPS)		QTY		TOTAL STANDBY CURRENT PER ITEM (AMPS)	ALARM CURRENT PER UNIT (AMPS)		QTY		TOTAL ALARM CURRENT (AMPS)
1	NOTIFIER NFW2–100 CONTROL PANEL	0.255	X	1	=	0.255	0.325	X	1	=	0.325
2	NOTIFIER FDU–80 REMOTE ANNUNCIATOR	0.025	X	2	=	0.050	0.064	X	2	=	0.128
3	NOTIFIER NP–100 PHOTO SMOKE DETECTOR	0.00030	X	9	=	0.0027	0.0065	X	9	=	0.0585
4	NOTIFIER NC–100R RELAY MODULE	0.00023	X	7	=	0.00161	0.0065	X	7	=	0.0455
5	NOTIFIER NMM–100P MINI MONITOR MODULE	0.00038	X	15	=	0.0057	0.00038	X	15	=	0.0057
6	NOTIFIER NC–100 CONTROL MODULE	0.00035	X	2	=	0.0007	0.0065	X	2	=	0.013
7	NOTIFIER NOT–BG12LX PULL STATION	0.00023	X	7	=	0.00161	0.00023	X	7	=	0.00161
8	NOTIFIER NH–100 HEAT DETECTOR	0.00030	X	4	=	0.0012	0.0065	X	4	=	0.026
9	PAM–2 RELAY	0.0	X	0	=	0.0	0.015	X	0	=	0.0
10	NOTIFIER DNR INOVAIRFLEX DUCT DETECTOR	0.0003	X	1	=	0.0003	0.0185	X	1	=	0.0185
11	NAC CIRCUIT #1 STROBE TRIP	0.0	X	0	=	0.0	0.0315	X	1	=	0.0315
12	NAC CIRCUIT #2 EVAC TRIP	0.0	X	0	=	0.0	0.0315	X	1	=	0.0315
13 (1)	NAC CIRCUIT #3 SPRINKLER BELL	0.0	X	0	=	0.0	0.00535	X	1	=	0.00535
14	NAC CIRCUIT #4	0.0	X	0	=	0.0	0.0	X	0	=	0.0
		TOTAL SYSTEM STANDBY CURRENT (AMPS)				0.3187	TOTAL SYSTEM				0.6901 (1) (2)

REQUIRED OPERATING TIME OF SECONDARY POWER SOURCE FROM NFPA 72 4.4.1.5.2.2 (1) & 4.4.1.5.3.1
STANDBY: 24 HOURS ALARM: 15 MINUTES X 1/60 = 0.25 HOURS

REQUIRED STANDBY TIME (HOURS)		TOTAL SYSTEM STANDBY CURRENT (AMPS)		REQUIRED STANDBY CAPACITY (AMP–HOURS)	REQUIRED ALARM TIME (HOURS)		TOTAL SYSTEM ALARM CURRENT (AMPS)		REQUIRED ALARM CAPACITY (AMP–HOURS)
24	X	0.3187	=	7.650	0.25	X	0.6901	=	0.1725

REQUIRED STANDBY CAPACITY (AMP–HOURS)		REQUIRED ALARM CAPACITY (AMP–HOURS)		REQUIRED AMPERE HOUR BATTERY		DERATING FACTOR @ 1.2		MINIMUM AMP–HOUR BATTERY REQUIRED
7.650	+	0.1725	=	7.822	X	1.2	=	9.387

MINIMUM 12 AHR. BATTERY MINIMUM REQUIRED (1) (2)

P1 FIRE ALARM BATTERY CALCULATIONS NOTIFIER FIRE WARDEN NFW2–100

ITEM	DESCRIPTION	STANDBY CURRENT PER UNIT (AMPS)		QTY		TOTAL STANDBY CURRENT PER ITEM (AMPS)	ALARM CURRENT PER UNIT (AMPS)		QTY		TOTAL ALARM CURRENT (AMPS)
1	NOTIFIER NFV–25/50 VOICE EVAC	0.220	X	1	=	0.220	0.385	X	1	=	0.385
2	NOTIFIER AA–25 25WATT AMPLIFIER	0.065	X	2	=	0.130	2.000	X	2	=	4.000
	CALCULATION WITH FULL LOAD 50WATTS	TOTAL SYSTEM STANDBY CURRENT (AMPS)				0.350	TOTAL SYSTEM ALARM CURRENT (AMPS)				4.385 (1)

REQUIRED OPERATING TIME OF SECONDARY POWER SOURCE FROM NFPA 72 4.4.1.5
STANDBY: 24 HOURS ALARM: 15 MINUTES X 1/60 = 0.25 HOURS

REQUIRED STANDBY TIME (HOURS)		TOTAL SYSTEM STANDBY CURRENT (AMPS)		REQUIRED STANDBY CAPACITY (AMP–HOURS)	REQUIRED ALARM TIME (HOURS)		TOTAL SYSTEM ALARM CURRENT (AMPS)		REQUIRED ALARM CAPACITY (AMP–HOURS)
24	X	0.350	=	8.400	0.25	X	4.385	=	1.096

REQUIRED STANDBY CAPACITY (AMP–HOURS)		REQUIRED ALARM CAPACITY (AMP–HOURS)		REQUIRED AMPERE HOUR BATTERY		DERATING FACTOR @ 1.2		MINIMUM AMP–HOUR BATTERY REQUIRED
8.400	+	1.096	=	9.496	X	1.2	=	11.395

MINIMUM 12 AHR BATTERY MINIMUM REQUIRED

V1 FIRE ALARM BATTERY CALCULATIONS NOTIFIER NFV–25/50 FIRE VIOCE EVAC

SYSTEM INPUTS	ACTUATE BUILDING FIRE ALARM NOTIFICATION APPLIANCES	ACTUATE FACP A/V ALARM INDICATORS	ACTUATE FACP A/V SUPERVISORY SINGAL INDIC.	ACTUATE FACP TROUBLE INDICATORS	INDICATION OF POINT/ZONE & DESCRIPTION AT FACP		TRANSMIT ALARM SIGNAL TO CENTRAL MONITORING STATION	TRANSMIT SUPERV. SIGNAL TO CENTRAL MONITORING STATION	TRANSMIT TROUBLE SIGNAL TO CENTRAL MONITORING STATION		SHUTDOWN AIR HANDLING UNITS IN BUILDING	SWITCH TO SECONDARY POWER SUPPLY	
FIRE ALARM SIGNALS													
MANUAL FIRE ALARM STATION ACTUATION	X	X			X		X				X		
SYSTEM SMOKE DETECTOR ACTUATION	X	X			X		X				X		
SPRINKLER WATERFLOW	X	X			X		X				X		
SUPERVISORY SIGNALS													
VALVE SUPERVISORY SWITCH ACTUATION			X		X			X					
DUCT SMOKE DETECTOR ACTUATION			X		X			X			X		
TROUBLE SIGNALS													
FIRE ALARM CIRCUIT FAULT				X	X				X				
FIRE ALARM PRIMARY POWER SUPPLY FAIL				X	X				X				
FIRE ALARM SECONDARY POWER SUP. FAIL				X	X				X				

RECORD SET
The information presented on this drawing is diagrammatic and is presented for general information purposes and should not be relied on for accuracy of dimensions, details and locations. Actual and exact conditions if required should be determined in the field.

FIRE ALARM NOTES & CALCULATIONS
NOT TO SCALE

WSA Systems-Boca, Inc.
442 NW 35TH STREET – BOCA RATON, FLORIDA 33431
Tel. (561) 393–2933 FAX. (561) 393–9890
U.L. # S7075 EF# 0001109

Fire Alarm Drawings For:

PALMETTO BAY VILLAGE HALL
9705 E. HIBISCUS STREET
CUTLER BAY, FLORIDA 33157

REVISIONS:

DATE	NAME	DESCRIPTION
10/28/10	(1)	AS PER PLAN REVIEW
12/21/10	(2)	AS PER AS-BUILTS

TYEC HVAC PLUMBING ELECTRICAL
THOMPSON & YOUNGROSS ENGINEERING CONSULTANTS, LLC
TO THE BEST OF MY KNOWLEDGE, THE PLANS AND SPECIFICATIONS COMPLY WITH THE MINIMUM APPLICABLE BUILDING CODE.
DANIEL E. THOMPSON ELEC/MECH FLA. REG. NO. 33289
ANDREW J. YOUNGROSS ELEC FLA. REG. NO. 51758
CERTIFICATE of AUTHORIZATION NO. 25996
112 S.E. 10TH STREET DELRAY BEACH, FLA 33483-3426 E-MAIL: TEC@TECFLA.COM
TEL: 561-274-0200 FAX: 561-274-0222 WWW.TECFLA.COM

ENGINEERS SEAL

DRAWN BY: K.O.
REVIEWED BY: DATE:
SCALE: N.T.S.
DATE: 09/01/10
WSA JOB NO: #7035

FIRE ALARM NOTES LEGEND & CALCS.
FA-3of8

ITEM	DESCRIPTION	STANDBY CURRENT PER UNIT (AMPS)		QTY		TOTAL STANDBY CURRENT PER ITEM (AMPS)	ALARM CURRENT PER UNIT (AMPS)		QTY		TOTAL ALARM CURRENT (AMPS)
1	NOTIFIER FCPS-24S8 POWER SUPPLY	0.065	X	1	=	0.065	0.145	X	1	=	0.145
2	NAC CIRCUIT #1	0.0	X	1	=	0.0	1.738	X	1	=	1.738
3	NAC CIRCUIT #2	0.0	X	1	=	0.0	1.738	X	1	=	1.738
4	NAC CIRCUIT #3	0.0	X	1	=	0.0	1.896	X	1	=	1.896
5	NAC CIRCUIT #4	0.0	X	1	=	0.0	1.896	X	1	=	1.896
		TOTAL SYSTEM STANDBY CURRENT (AMPS)				0.065	TOTAL SYSTEM				7.413

REQUIRED OPERATING TIME OF SECONDARY POWER SOURCE FROM NFPA 72 (2002) 4.4.1.5

STANDBY: 24 HOURS ALARM: 15 MINUTES X 1/60 = 0.25 HOURS

REQUIRED STANDBY TIME (HOURS)		TOTAL SYSTEM STANDBY CURRENT (AMPS)		REQUIRED STANDBY CAPACITY (AMP-HOURS)	REQUIRED ALARM TIME (HOURS)		TOTAL SYSTEM ALARM CURRENT (AMPS)		REQUIRED ALARM CAPACITY (AMP-HOURS)
24	X	0.065	=	1.56	0.25	X	7.413	=	1.853

REQUIRED STANDBY CAPACITY (AMP-HOURS)		REQUIRED ALARM CAPACITY (AMP-HOURS)		REQUIRED AMPERE HOUR BATTERY		DERATING FACTOR @ 1.2		MINIMUM AMP-HOUR BATTERY REQUIRED
1.56	+	1.853	=	3.413	X	1.2	=	4.095

MINIMUM 4.5 AHR. BATTERY MINIMUM REQUIRED

PS1 FIRE ALARM BATTERY CALCULATIONS
NOTIFIER FCPS-24S8 POWER SUPPLY

ITEM	DESCRIPTION	STANDBY CURRENT PER UNIT (AMPS)		QTY		TOTAL STANDBY CURRENT PER ITEM (AMPS)	ALARM CURRENT PER UNIT (AMPS)		QTY		TOTAL ALARM CURRENT (AMPS)
1	NOTIFIER FCPS-24S8 POWER SUPPLY	0.065	X	1	=	0.065	0.145	X	1	=	0.145
2	NAC CIRCUIT #5	0.0	X	1	=	0.0	1.738	X	1	=	1.738
3	NAC CIRCUIT #6	0.0	X	1	=	0.0	1.896	X	1	=	1.896
4	NAC CIRCUIT #7	0.0	X	1	=	0.0	1.738	X	1	=	1.738
5	NAC CIRCUIT #8	0.0	X	1	=	0.0	1.738	X	1	=	1.738
		TOTAL SYSTEM STANDBY CURRENT (AMPS)				0.065	TOTAL SYSTEM				7.255

REQUIRED OPERATING TIME OF SECONDARY POWER SOURCE FROM NFPA 72 (2002) 4.4.1.5

STANDBY: 24 HOURS ALARM: 15 MINUTES X 1/60 = 0.25 HOURS

REQUIRED STANDBY TIME (HOURS)		TOTAL SYSTEM STANDBY CURRENT (AMPS)		REQUIRED STANDBY CAPACITY (AMP-HOURS)	REQUIRED ALARM TIME (HOURS)		TOTAL SYSTEM ALARM CURRENT (AMPS)		REQUIRED ALARM CAPACITY (AMP-HOURS)
24	X	0.065	=	1.56	0.25	X	7.255	=	1.813

REQUIRED STANDBY CAPACITY (AMP-HOURS)		REQUIRED ALARM CAPACITY (AMP-HOURS)		REQUIRED AMPERE HOUR BATTERY		DERATING FACTOR @ 1.2		MINIMUM AMP-HOUR BATTERY REQUIRED
1.56	+	1.813	=	3.373	X	1.2	=	4.048

MINIMUM 4.5 AHR. BATTERY MINIMUM REQUIRED

PS2 FIRE ALARM BATTERY CALCULATIONS
NOTIFIER FCPS-24S8 POWER SUPPLY

TOTAL CIRCUIT AMP DRAW — CIRCUIT # 1 PS1

DEVICE	DEVICE COUNT	DEVICE AMP DRAW	TOTAL DEVICE AMP DRAW	MAX AMP 3.0
SPSW 75CD	5	0.158	0.790	
SPSW 110CD	0	0.202	0.0	
SW 75CD	4	0.158	0.632	TOTAL CIRCUIT DRAW
SWK 75CD	2	0.158	0.316	TOTAL 1.738 (2)

TOTAL CIRCUIT AMP DRAW — CIRCUIT # 2 PS1

DEVICE	DEVICE COUNT	DEVICE AMP DRAW	TOTAL DEVICE AMP DRAW	MAX AMP 3.0
SPSW 75CD	8	0.158	1.264	
SPSW 110CD	0	0.202	0.0	
SW 75CD	3	0.158	0.474	TOTAL CIRCUIT DRAW
SW 110CD	0	0.202	0.0	TOTAL 1.738

TOTAL CIRCUIT AMP DRAW — CIRCUIT # 3 PS1

DEVICE	DEVICE COUNT	DEVICE AMP DRAW	TOTAL DEVICE AMP DRAW	MAX AMP 3.0
SPSW 75CD	12	0.158	1.896	
SPSW 110CD	0	0.202	0.0	
SW 75CD	0	0.158	0.0	TOTAL CIRCUIT DRAW
SW 110CD	0	0.202	0.0	TOTAL 1.896

TOTAL CIRCUIT AMP DRAW — CIRCUIT # 4 PS1

DEVICE	DEVICE COUNT	DEVICE AMP DRAW	TOTAL DEVICE AMP DRAW	MAX AMP 3.0
SPSW 75CD	11	0.158	1.738	
SPSW 110CD	0	0.202	0.0	
SW 75CD	1	0.158	0.158	TOTAL CIRCUIT DRAW
SW 110CD	0	0.202	0.0	TOTAL 1.896

TOTAL CIRCUIT AMP DRAW — CIRCUIT # 5 PS2

DEVICE	DEVICE COUNT	DEVICE AMP DRAW	TOTAL DEVICE AMP DRAW	MAX AMP 3.0
SPSW 75CD	9	0.158	1.422	
SPSW 110CD	0	0.202	0.0	
SW 75CD	2	0.158	0.316	TOTAL CIRCUIT DRAW
SW 110CD	0	0.202	0.0	TOTAL 1.738

TOTAL CIRCUIT AMP DRAW — CIRCUIT # 6 PS2

DEVICE	DEVICE COUNT	DEVICE AMP DRAW	TOTAL DEVICE AMP DRAW	MAX AMP 3.0
SPSW 75CD	11	0.158	1.738	
SPSW 110CD	0	0.202	0.0	
SW 75CD	1	0.158	0.158	TOTAL CIRCUIT DRAW
SW 110CD	0	0.202	0.0	TOTAL 1.896

TOTAL CIRCUIT AMP DRAW — CIRCUIT # 7 PS2

DEVICE	DEVICE COUNT	DEVICE AMP DRAW	TOTAL DEVICE AMP DRAW	MAX AMP 3.0
SPSW 75CD	11	0.158	1.738	
SPSW 110CD	0	0.202	0.0	
SW 75CD	0	0.158	0.0	TOTAL CIRCUIT DRAW
SW 110CD	0	0.202	0.0	TOTAL 1.738

TOTAL CIRCUIT AMP DRAW — CIRCUIT # 8 PS2

DEVICE	DEVICE COUNT	DEVICE AMP DRAW	TOTAL DEVICE AMP DRAW	MAX AMP 3.0
SPSW 75CD	10	0.158	1.580	
SPSW 110CD	0	0.202	0.0	
SW 75CD	1	0.158	0.158	TOTAL CIRCUIT DRAW
SW 110CD	0	0.202	0.0	TOTAL 1.738

ITEM	DESCRIPTION	STANDBY CURRENT PER UNIT (AMPS)		QTY		TOTAL STANDBY CURRENT PER ITEM (AMPS)	ALARM CURRENT PER UNIT (AMPS)		QTY		TOTAL ALARM CURRENT (AMPS)
1	NOTIFIER FCPS-24S8 POWER SUPPLY	0.065	X	1	=	0.065	0.145	X	1	=	0.145
2	NAC CIRCUIT #9	0.0	X	1	=	0.0	1.264	X	1	=	1.264
3	NAC CIRCUIT #10	0.0	X	1	=	0.0	1.308	X	1	=	1.308
4	NAC CIRCUIT #11	0.0	X	1	=	0.0	1.264	X	1	=	1.264
5	NAC CIRCUIT #12	0.0	X	1	=	0.0	1.308	X	1	=	1.308
		TOTAL SYSTEM STANDBY CURRENT (AMPS)				0.065	TOTAL SYSTEM				5.289

REQUIRED OPERATING TIME OF SECONDARY POWER SOURCE FROM NFPA 72 (2002) 4.4.1.5

STANDBY: 24 HOURS ALARM: 15 MINUTES X 1/60 = 0.25 HOURS

REQUIRED STANDBY TIME (HOURS)		TOTAL SYSTEM STANDBY CURRENT (AMPS)		REQUIRED STANDBY CAPACITY (AMP-HOURS)	REQUIRED ALARM TIME (HOURS)		TOTAL SYSTEM ALARM CURRENT (AMPS)		REQUIRED ALARM CAPACITY (AMP-HOURS)
24	X	0.065	=	1.56	0.25	X	5.289	=	1.322

REQUIRED STANDBY CAPACITY (AMP-HOURS)		REQUIRED ALARM CAPACITY (AMP-HOURS)		REQUIRED AMPERE HOUR BATTERY		DERATING FACTOR @ 1.2		MINIMUM AMP-HOUR BATTERY REQUIRED
1.56	+	1.322	=	2.882	X	1.2	=	3.458

MINIMUM 4.5 AHR. BATTERY MINIMUM REQUIRED

PS3 FIRE ALARM BATTERY CALCULATIONS
NOTIFIER FCPS-24S8 POWER SUPPLY

TOTAL CIRCUIT AMP DRAW — CIRCUIT # 9 PS3

DEVICE	DEVICE COUNT	DEVICE AMP DRAW	TOTAL DEVICE AMP DRAW	MAX AMP 3.0
SPSW 75CD	6	0.158	0.948	
SPSW 110CD	0	0.202	0.0	
SW 75CD	2	0.158	0.316	TOTAL CIRCUIT DRAW
SW 110CD	0	0.202	0.0	TOTAL 1.264

TOTAL CIRCUIT AMP DRAW — CIRCUIT # 10 PS3

DEVICE	DEVICE COUNT	DEVICE AMP DRAW	TOTAL DEVICE AMP DRAW	MAX AMP 3.0
SPSW 75CD	6	0.158	0.949	
SPSRK 110CD	1	0.202	0.202	
SW 75CD	1	0.158	0.158	TOTAL CIRCUIT DRAW
SW 110CD	0	0.202	0.0	TOTAL 1.308

TOTAL CIRCUIT AMP DRAW — CIRCUIT # 11 PS3

DEVICE	DEVICE COUNT	DEVICE AMP DRAW	TOTAL DEVICE AMP DRAW	MAX AMP 3.0
SPSW 75CD	7	0.158	1.106	
SPSW 110CD	0	0.202	0.0	
SW 75CD	1	0.158	0.158	TOTAL CIRCUIT DRAW
SW 110CD	0	0.202	0.0	TOTAL 1.264

TOTAL CIRCUIT AMP DRAW — CIRCUIT # 12 PS3

DEVICE	DEVICE COUNT	DEVICE AMP DRAW	TOTAL DEVICE AMP DRAW	MAX AMP 3.0
SPSW 75CD	6	0.158	0.948	
SPSW 110CD	1	0.202	0.202	
SW 75CD	1	0.158	0.158	TOTAL CIRCUIT DRAW
SW 110CD	0	0.202	0.0	TOTAL 1.308

SEQUENCE OF OPERATION (1)

1. THE FIRST ACTIVATION OF ANY MANUAL FIRE ALARM PULL STATION, OR THE AUTOMATIC ACTUATION OF ANY THERMAL DETECTOR, WATER FLOW SWITCH (NON-SILECEABLE), SMOKE DETECTOR, OR ANY OTHER APPROVED ALARM INITIATING DEVICE SHALL IMMEDIATELY RESULT IN THE FOLLOWING:

A. NOTIFY THE OWNER'S LISTED CENTRAL STATION SERVICE, FOR THE PURPOSE OF DISPATCHING THE FIRE DEPARTMENT TO THE PROTECTED PREMISES.
B. THE EVACUATION SIGNAL SHALL BE A VOICE ALARM TYPE SIGNAL, ELECTRONICALLY GENERATED UNTIL SIGNALS ARE SILENCED. WHEN SIGNALS ARE SILENCED THE VISUAL ALARM DEVICES SHALL REMAIN ACTIVE (FLASHING) UNTIL THE ALARM IS CLEARED, AND THE FACP IS RESET.
C. ALL ADA VISIBLE ALARM INDICATING APPLIANCES SHALL FLASH AT A SYNCHRONIZED RATE CONTINUOUSLY UNTIL THE SYSTEM IS RESET.
D. ALARM INDICATING APPLIANCES SHALL SOUND ALARM THROUGHOUT THE PREMISES WHERE ALARM INITIATED. EVACUATION NOTIFICATION SHALL BE ON GENERAL ALARM TYPE BASIS.
E. ANY SUBSEQUENT ZONE OR POINT ALARM SHALL REACTIVATE THE ALARM SEQUENCE ABOVE.
F. THE SYSTEM ALARM LED SHALL FLASH ON THE DISPLAY UNIT OF THE CONTROL PANEL AND ANY REMOTE ANNUNCIATORS ONCE ALARM IS RECEIVED, ONCE THE ALARM HAS BEEN ACKNOWLEDGED THE LED WILL LATCH IN ALARM UNTIL THE SYSTEM IS RESET OR ANOTHER ALARM HAS BEEN RECEIVED. THE CONTROL PANEL LCD DISPLAY SHALL INDICATE LOCATION, ADDRESS AND TYPE OF ALARM RECEIVED, AND WILL SCROLL THROUGH MULTIPLE ALARMS IF PRESENT.
G. 1. ELEVATOR SMOKE DETECTORS ON FLOOR 1 TO RECALL ELEVATOR(S) TO ALTERNATE FLOOR.
2. ELEVATOR SMOKES ON 2ND FLOOR AND ELEVATOR MACHINE RM. HEAT OR SMOKE DETECTORS AND TOP OF SHAFT DETECTORS TO RECALL ELEVATOR (S) TO MAIN FLOOR.
H. WHERE HEAT DETECTORS ARE USED TO SHUT DOWN ELEVATOR POWER PRIOR TO SPRINKLER OPERATION, THE DETECTOR SHALL HAVE BOTH A LOWER TEMPERATURE RATING AND A HIGHER SENSITIVITY AS COMPARED TO THE SPRINKLER HEAD.
FURTHERMORE THE HEAT DETECTOR SHALL BE PLACED WITHIN 2 FEET OF EACH SPRINKLER HEAD AND BE INSTALLED IN ACCORDANCE WITH NFPA 72 CH.5
CONTROL CIRCUITS TO SHUT DOWN ELEVATOR POWER SHALL BE MONITORED FOR PRESENCE OF OPERATING VOLTAGE. LOSS OF VOLTAGE TO THE CONTROL CIRCUIT FOR DISCONNECTING MEANS SHALL CAUSE A SUPERVISORY SIGNAL TO BE INDICATED AT THE CONTROL UNIT (FACP) AND REQUIRED REMOTE ANNUNCIATORS, AND REPORTED TO THE (CERTIFICATED) LISTED CENTRAL STATION. (1)

2. SUPERVISORY ALARM SHALL RESULT IN THE FOLLOWING:
A) ALL TAMPER SWITCHES, AND FIRE PUMP STATUS TO BE SUPERVISORY SIGNAL ONLY.
B) DUCT DETECTORS SHALL BE SUPERVISORY SIGNAL ONLY.
C) SUPERVISORY SIGNAL WILL CAUSE A UNIQUE TONE ALARM AND ILLUMINATE A SUPERVISORY LED AT THE FIRE CONTROL PANEL, AND WILL NOTIFY THE OWNERS LISTED CENTRAL STATION.

3. ALL AIR HANDLER AND ROOF TOP UNITS WILL BE SHUT DOWN UPON ACTIVATION OF GENERAL ALARM AND WILL RESTART UPON RESETTING OF THE FIRE ALARM CONTROL PANEL.

4. A BREAK IN ANY FIELD WIRING, DEVICE FAULT, OR REMOVING ANY DEVICE WILL RESULT IN AN AUDIBLE TROUBLE SIGNAL AT THE PANEL, AND WILL NOTIFY CUSTOMERS LISTED CENTRAL STATION. TROUBLE SIGNAL WILL REMAIN AUDIBLE UNTIL TROUBLE IS CLEARED, OR TROUBLE SILENCE BUTTON IS ACTIVATED IN THE FACP.

5. SPRINKLER BELL OPERATION IS AS FOLLOWS:
A) FLOW BELL SHALL SOUND UPON ACTIVATION OF THE FLOW SWITCH ONLY.
B) FLOW BELL SHALL SOUND THE ENTIRE TIME OF WATER FLOW.
C) FLOW BELL SHALL BE INCAPABLE OF BEING SILENCED FROM FACP. (1)

NAC LOADS BY CIRCUIT

REVISED PLANS MDFR

FIRE ALARM SHALL BE A CENTRAL STATION SERVICE. A CERTIFICATE OR PLACARD SHALL BE POSTED AT FINAL INSPECTION, AS PER NFPA 72

FIRE ALARM SYSTEM TO BE INSTALLED IN ACCORDANCE WITH NFPA 72; 70; 101-

APPROVED
MIAMI-DADE COUNTY FIRE DEPARTMENT
BLDG. PERMIT ____ FIRE ALARM ✓
FIRE SUPPRESSION ____ WATER MAIN EXT. ____
DATE: 02.07.11 BY:

AS-BUILTS
12/21/10

RECORD SET
The information presented on this drawing is diagrammatic and is presented for general information purposes and should not be relied on for accuracy of dimensions, details and locations. Actual and exact conditions if required should be determined in the field.

WSA Systems-Boca, Inc.
442 NW 35TH STREET - BOCA RATON, FLORIDA 33431
Tel. (561) 393-2933 FAX. (561) 393-9890
U.L. # S7075 EF# 0001109

Fire Alarm Drawings For:
PALMETTO BAY VILLAGE HALL
9705 E. HIBISCUS STREET
CUTLER BAY, FLORIDA 33157

REVISIONS:

DATE	NAME	DESCRIPTION
10/28/10	(1)	AS PER PLAN REVIEW
12/21/10	(2)	AS PER AS-BUILTS

TYEC HVAC PLUMBING ELECTRICAL
THOMPSON & YOUNGROSS ENGINEERING CONSULTANTS, LLC
TO THE BEST OF MY KNOWLEDGE, THE PLANS AND SPECIFICATIONS COMPLY WITH THE MINIMUM APPLICABLE BUILDING CODE.
DANIEL E. THOMPSON ELEC/MECH FLA. REG. NO. 33289
ANDREW J. YOUNGROSS ELEC FLA. REG. NO. 51758
CERTIFICATE of AUTHORIZATION NO. 25996
112 S.E. 10TH STREET DELRAY BEACH, FLA 33483-3426 E-MAIL: TEC@TECFLA.COM
TEL: 561-274-0200 FAX: 561-274-0222 WWW.TECFLA.COM

ENGINEERS SEAL

DRAWN BY: K.O.
REVIEWED BY: DATE:
SCALE: N.T.S.
DATE: 09/01/10
WSA JOB NO: #7035

FIRE ALARM PLAN BATTERY CALCS.
FA-4of8

WIRE LEGEND

SYMBOL	WIRE TYPE AND DESCRIPTION
A	14-2 FPLR/FPLP WIRE FOR STROBES (NAC'S)
B	16-2 WIRE FPLR(P) FOR DATA COMMUNICATION (SLC&DC) OR 16-2 WIRE NPLF-FPL DIR-BUR FOR DATA (SLC&IDC)
C	14-2 FPLR/FPLP 24V AUX. POWER/DUCT DETECTOR POWER
D	18-2 TSP FPLR/FPLP WIRE FOR NAC SPEAKERS (TSP=TWISTED SHIELDED PAIR)
E	18-4 FPLR/FPLP WIRE FOR REMOTE TEST SWITCHES
F	18-4 FPLR/FPLP WIRE FOR ANNUNCIATOR COMMUNICATION
G	16-2 FPLR/FPLP WIRE FOR ANNUNCIATOR POWER
H	18-4 FPLR/FPLP TSP WIRE FOR REM. MICROPHONE COMM.

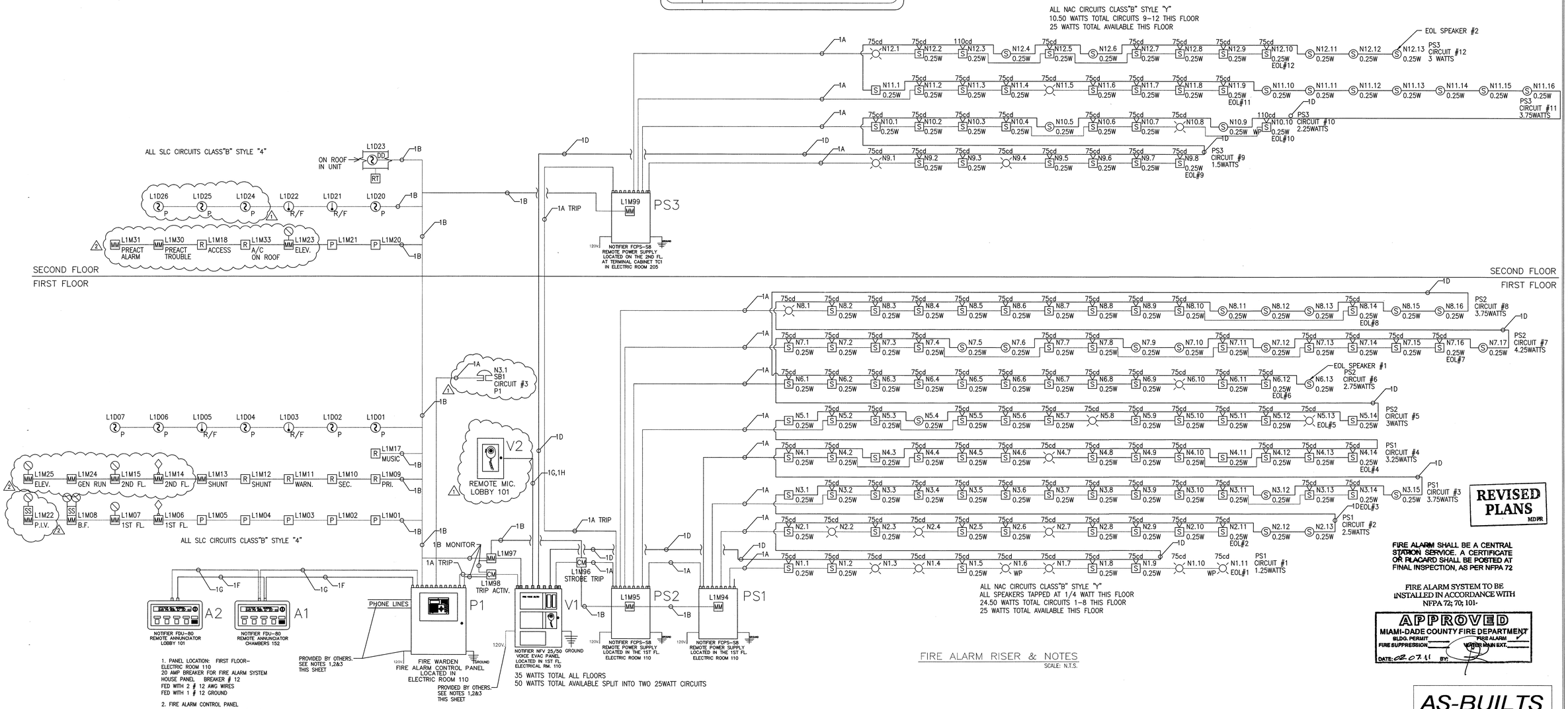

1. PANEL LOCATION: FIRST FLOOR-ELECTRIC ROOM 110
20 AMP BREAKER FOR FIRE ALARM SYSTEM
HOUSE PANEL BREAKER # 12
FED WITH 2 # 12 AWG WIRES
FED WITH 1 # 12 GROUND

2. FIRE ALARM CONTROL PANEL EQUIPED WITH UL LISTED COMMUNICATOR TO COMMUNICATE WITH MONITORING STATION VIA TWO DEDICATED PHONE LINES PROVIDED BY OTHERS.

3. SUPLY AND INSTALL SURGE SUPPRESSION ON 120VAC & PHONE LINES SERVING FACP SUPPLIED BY WSA SYSTEMS BOCA INC.

35 WATTS TOTAL ALL FLOORS
50 WATTS TOTAL AVAILABLE SPLIT INTO TWO 25WATT CIRCUITS

FIRE ALARM RISER & NOTES
SCALE: N.T.S.

REVISED PLANS MDPR

FIRE ALARM SHALL BE A CENTRAL STATION SERVICE. A CERTIFICATE OR PLACARD SHALL BE POSTED AT FINAL INSPECTION, AS PER NFPA 72

FIRE ALARM SYSTEM TO BE INSTALLED IN ACCORDANCE WITH NFPA 72; 70; 101-

APPROVED
MIAMI-DADE COUNTY FIRE DEPARTMENT
BLDG. PERMIT
FIRE ALARM
FIRE SUPPRESSION
WATER MAIN EXT.
DATE: 02.07.11 BY:

AS-BUILTS
12/21/10

RECORD SET

The information presented on this drawing is diagrammatic and is presented for general information purposes and should not be relied on for accuracy of dimensions, details and locations. Actual and exact conditions if required should be determined in the field.

WSA Systems-Boca, Inc.
442 NW 35TH STREET - BOCA RATON, FLORIDA 33431
TEL. (561) 392-2933 FAX. (561) 393-8990
U.L. # S7075 ETF# 0001109

Fire Alarm Drawings For:

PALMETTO BAY VILLAGE HALL
9705 E. HIBISCUS STREET
CUTLER BAY, FLORIDA 33157

REVISIONS:

DATE	NAME	DESCRIPTION
10/28/10	1	AS PER PLAN REVIEW
12/21/10	2	AS PER AS-BUILTS

TYEC
HVAC PLUMBING ELECTRICAL
THOMPSON & YOUNGROSS ENGINEERING CONSULTANTS, LLC
TO THE BEST OF MY KNOWLEDGE, THE PLANS ARE SPECIFICATION COMPLY WITH THE MINIMUM APPLICABLE INFLUENCE CODE.
DANIEL E. THOMPSON FLA. REG. NO. 53289 ELEC/MECH
ANDREW J. YOUNGROSS FLA. REG. NO.: 51758 ELEC
CERTIFICATE of AUTHORIZATION NO. 25996

DRAWN BY: K.O.
REVIEWED BY: DATE:
SCALE: N.T.S.
DATE: 09/01/10
WSA JOB NO: #7035

FIRE ALARM PLAN RISER & NOTES
FA-5of8

PRODUCT: NOTIFIER NOT-BG12LX PULL STATION

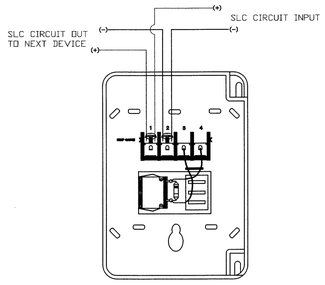

PRODUCT: NOTIFIER NMM-100P MONITOR MODULE

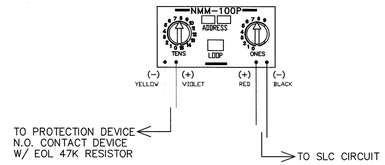

PRODUCT: NOTIFIER NC-100R SERIES RELAY MODULE

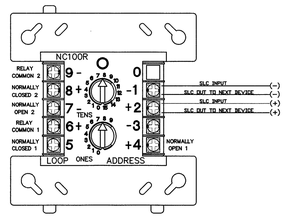

PRODUCT: NOTIFIER FCPS 24S8 REMOTE POWER SUPPLY

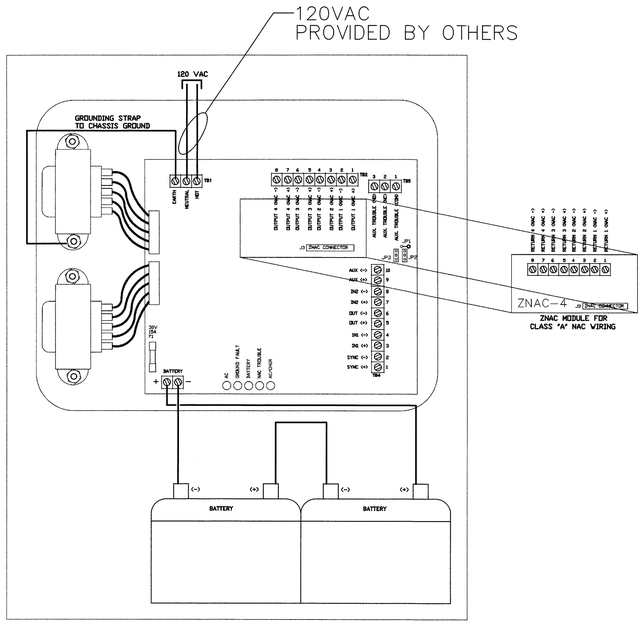

PRODUCT: NOTIFIER FDU-80 REMOTE ANNUNCIATOR

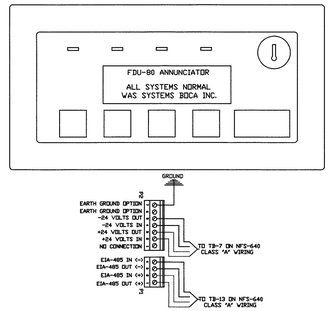

WIRING ON BACKSIDE

PRODUCT: NOTIFIER DNR DUCT DETECTOR

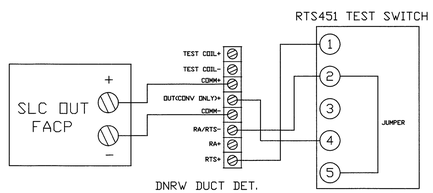

WIRING FOR DNRW WITHOUT 24VDC AUX. POWER (SLC ONLY)

PRODUCT: NOTIFIER (B710LP) DETECTOR BASE FOR HEAT & SMOKE DETECTORS

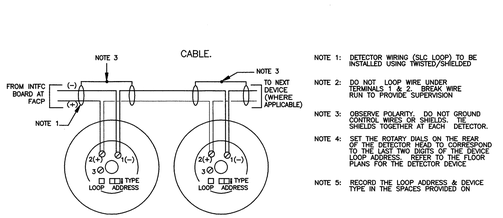

B710LP DETECTOR BASE WIRING DIAGRAM

THE DETECTOR BASE.

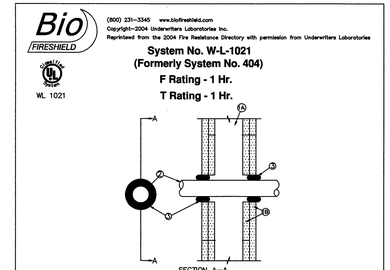

1. Wall Assembly The fire rated gypsum wallboard/stud wall assembly shall be constructed of the materials and in the manner specified in the individual U300 or U400 Series Wall and Partition Designs in the UL Fire Resistance Directory and shall include the following construction features:

A. Studs Wall framing may consist of either wood studs or steel channel studs. Wood studs to consist of nom 2 by 4 in. lumber spaced 16 in. OC. Steel studs to be minimum 3-5/8 in. wide and spaced max 24 in. OC.

B. Gypsum Board* Two layers of nom 5/8 in. thick gypsum wallboard as specified in the individual Wall and Partition Design. Max diam of opening is 1-1/2 in.

2. Through Penetrants One metallic pipe, conduit or tubing to be centered within the firestop system. Pipe, conduit or tubing to be rigidly supported on both sides of the wall assembly. The following types and sizes of metallic pipes, conduits or tubing may be used:

A. Steel Pipe Nom 1 in. diam (or smaller) Schedule 5 (or heavier) steel pipe. A nom annular space of 1/8 in. required within the firestop system.

B. Conduit Nom 1 in. diam (or smaller) steel electrical metallic tubing or steel conduit A nom annular space of 1/8 in. required within the firestop system.

3. Fill, Void or Cavity Material* -Caulk Nom 5/16 in. thickness of fill material applied within the annulus on both surfaces of the wall assembly. Additional fill material to be installed such that min 1/4 in. high crown around the penetrating item. RECTORSEAL-BioStop 500 Caulk

* Bearing the UL Classification Marking

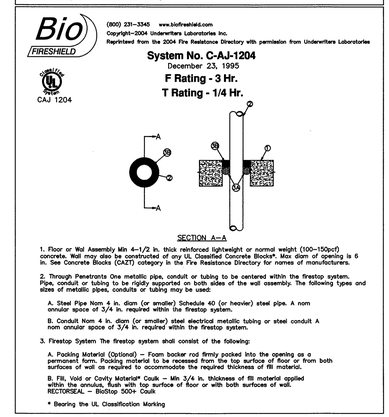

1. Floor or Wal Assembly Min 4-1/2 in. thick reinforced lightweight or normal weight (100-150pcf) concrete. Wall may also be constructed of any UL Classified Concrete Blocks*. Max diam of opening is 6 in. See Concrete Blocks (CAZT) category in the Fire Resistance Directory for names of manufacturers.

2. Through Penetrants One metallic pipe, conduit or tubing to be centered within the firestop system. Pipe, conduit or tubing to be rigidly supported on both sides of the wall assembly. The following types and sizes of metallic pipes, conduits or tubing may be used:

A. Steel Pipe Nom 4 in. diam (or smaller) Schedule 40 (or heavier) steel pipe. A nom annular space of 3/4 in. required within the firestop system.

B. Conduit Nom 4 in. diam (or smaller) steel electrical metallic tubing or steel conduit A nom annular space of 3/4 in. required within the firestop system.

3. Firestop System The firestop system shall consist of the following:

A. Packing Material (Optional) - Foam backer rod firmly packed into the opening as a permanent form. Packing material to be recessed from the top surface of floor or from both surfaces of wall as required to accommodate the required thickness of fill material.

B. Fill, Void or Cavity Material* Caulk - Min 3/4 in. thickness of fill material applied within the annulus, flush with top surface of floor or with both surfaces of wall. RECTORSEAL - BioStop 500+ Caulk

* Bearing the UL Classification Marking

FIRE ALARM DEVICE DETAILS

NOT TO SCALE

RECORD SET

The information presented on this drawing is diagrammatic and is presented for general information purposes and should not be relied on for accuracy of dimensions, details and locations. Actual and exact conditions if required should be determined in the field.

AS-BUILTS

12/21/10

MIAMI-DADE COUNTY FIRE DEPARTMENT

WSA Systems-Boca, Inc.
442 NW 35TH STREET - BOCA RATON, FLORIDA 33431
Tel.: (561) 392-2933 FAX: (561) 392-3996
F.I.C. # 3013 U.L. # S10179

Fire Alarm Drawings For:

PALMETTO BAY VILLAGE HALL
9705 E. HIBISCUS STREET
CUTLER BAY, FLORIDA 33157

REVISIONS:

DATE	NAME	DESCRIPTION
10/28/10	1	AS PER PLAN REVIEW
12/21/10	2	AS PER AS-BUILTS

TYEC — HVAC, PLUMBING, ELECTRICAL

THOMPSON & YOUNGROSS ENGINEERING CONSULTANTS, LLC

TO THE BEST OF MY KNOWLEDGE, THE PLANS ARE SPECIFICATIONS COMPLY WITH THE MINIMUM APPLICABLE BUILDING CODE.
DANIEL E. THOMPSON ELEC/MECH
F.L.A. REG. NO. 53289
ANDREW J. YOUNGROSS ELEC
F.L.A. REG. NO.
CERTIFICATE of AUTHORIZATION NO. 25996

ENGINEERS SEAL

DRAWN BY: K.O.

REVIEWED BY: DATE:

SCALE: N.T.S.

DATE: 09/01/10

WSA JOB NO: #7035

FIRE ALARM PLAN DEVICE DETAILS

FA-6of8

This calculator provided voltage drop calculations in three formats (Point to Point, End of Line, and Load Centering).
Make sure that you know what method is accepted by, and the results do not exceed the limits set by the respective jurisdiction

Project Name	PALMETTO BAY VILLAGE HALL
Date	4/20/2010
Circuit Number	1 PS1
Area Covered	FIRST FLOOR
Nominal System Voltage	20.4
Minimum Device Voltage	16
Total Circuit Current	1.738

		Wire Gauge	Ohm's Per 1000
Distance from source to 1st device	8	14	3.07
Wire Gauge for balance of circuit		14	3.07

Point to Point Method			End of Line Method			Load Centering Method		
CIRCUIT IS WITHIN LIMITS			**CIRCUIT IS WITHIN LIMITS**			**CIRCUIT IS WITHIN LIMITS**		
Totals		Voltage	Totals		Voltage	Totals		Voltage
Current	Distance	Drop	Current	Distance	Drop	Current	Distance	Drop
1.738	112	**0.65**	1.738	112	**1.195**	1.738	112	**0.598**
End of Line Voltage		**19.75**	End of Line Voltage		**19.20**	End of Line Voltage		**19.80**
Percent Drop		3.20%	Percent Drop		5.86%	Percent Drop		2.93%

End of Line and Load Centering Methods use only the wire guage for the first device to source
Standard Wire Resistance in Ohms per 1000 feet.
18=7.77 16=4.89 14=3.07 12=1.98 10=1.24
18-14 Awg = Solid Conductors 12-10 Awg = Stranded Conductors

Enter current in amps. .150 = 150 ma

Device Number	Device Current	Distance from previous device	At Device	Voltage Drop from source	Percent Drop
Device 1	0.158	8	20.31	0.085	0.42%
Device 2	0.158	8	20.24	0.163	0.80%
Device 3	0.158	13	20.12	0.276	1.36%
Device 4	0.158	13	20.02	0.377	1.85%
Device 5	0.158	12	19.94	0.459	2.25%
Device 6	0.158	8	19.89	0.505	2.48%
Device 7	0.158	10	19.85	0.554	2.72%
Device 8	0.158	10	19.81	0.593	2.91%
Device 9	0.158	11	19.78	0.625	3.06%
Device 10	0.158	10	19.76	0.644	3.16%
Device 11	0.158	9	19.75	0.653	3.20%
END			19.75	0.653	3.20%
END			19.75	0.653	3.20%
END			19.75	0.653	3.20%
END			19.75	0.653	3.20%
END			19.75	0.653	3.20%
END			19.75	0.653	3.20%
END			19.75	0.653	3.20%
END			19.75	0.653	3.20%
END			19.75	0.653	3.20%
Totals	1.738	112	End of Line Voltage	**19.75**	

Notes:
Wire resistance is doubled in the calculations for two wires (Positive and Negative)
The voltage calculated to the last device in any method must not be lower then
the manufactures listed minimum operating voltage (IE: rated operating voltage 20-32 VDC).

Device Manufacturer SYSTEM SENSOR

Horn & Speaker Strobes		Current @Rated
Model #	Candela	Voltage
SPSR	75	0.158
SPSR	110	0.202
SPSRK	110	0.202
P2R	75	0.157
P2R	110	0.201
P2RK	110	0.201
P2R	185	0.289
SPSR	185	0.286

Device Manufacturer SYSTEM SENSOR

Strobe Only		Current @Rated
Model #	Candela	Voltage
SR	75	0.158
SR	110	0.202
SRK	110	0.202
SR	185	0.286

This calculator provided voltage drop calculations in three formats (Point to Point, End of Line, and Load Centering).
Make sure that you know what method is accepted by, and the results do not exceed the limits set by the respective jurisdiction

Project Name	PALMETTO BAY VILLAGE HALL
Date	4/20/2010
Circuit Number	2 PS1
Area Covered	FIRST FLOOR
Nominal System Voltage	20.4
Minimum Device Voltage	16
Total Circuit Current	1.738

		Wire Gauge	Ohm's Per 1000
Distance from source to 1st device	8	14	3.07
Wire Gauge for balance of circuit		14	3.07

Point to Point Method			End of Line Method			Load Centering Method		
CIRCUIT IS WITHIN LIMITS			**CIRCUIT IS WITHIN LIMITS**			**CIRCUIT IS WITHIN LIMITS**		
Totals		Voltage	Totals		Voltage	Totals		Voltage
Current	Distance	Drop	Current	Distance	Drop	Current	Distance	Drop
1.738	167	**0.96**	1.738	167	**1.782**	1.738	167	**0.891**
End of Line Voltage		**19.44**	End of Line Voltage		**18.62**	End of Line Voltage		**19.51**
Percent Drop		4.73%	Percent Drop		8.74%	Percent Drop		4.37%

End of Line and Load Centering Methods use only the wire guage for the first device to source
Standard Wire Resistance in Ohms per 1000 feet.
18=7.77 16=4.89 14=3.07 12=1.98 10=1.24
18-14 Awg = Solid Conductors 12-10 Awg = Stranded Conductors

Enter current in amps. .150 = 150 ma

Device Number	Device Current	Distance from previous device	At Device	Voltage Drop from source	Percent Drop
Device 1	0.158	8	20.31	0.085	0.42%
Device 2	0.158	24	20.08	0.318	1.56%
Device 3	0.158	14	19.96	0.440	2.16%
Device 4	0.158	12	19.87	0.534	2.62%
Device 5	0.158	13	19.78	0.622	3.05%
Device 6	0.158	12	19.71	0.692	3.39%
Device 7	0.158	15	19.64	0.764	3.75%
Device 8	0.158	37	19.49	0.908	4.45%
Device 9	0.158	8	19.47	0.931	4.57%
Device 10	0.158	10	19.45	0.951	4.66%
Device 11	0.158	14	19.44	0.964	4.73%
END			19.44	0.964	4.73%
END			19.44	0.964	4.73%
END			19.44	0.964	4.73%
END			19.44	0.964	4.73%
END			19.44	0.964	4.73%
END			19.44	0.964	4.73%
END			19.44	0.964	4.73%
END			19.44	0.964	4.73%
END			19.44	0.964	4.73%
Totals	1.738	167	End of Line Voltage	**19.44**	

Notes:
Wire resistance is doubled in the calculations for two wires (Positive and Negative)
The voltage calculated to the last device in any method must not be lower then
the manufactures listed minimum operating voltage (IE: rated operating voltage 20-32 VDC).

Device Manufacturer SYSTEM SENSOR

Horn & Speaker Strobes		Current @Rated
Model #	Candela	Voltage
SPSR	75	0.158
SPSR	110	0.202
SPSRK	110	0.202
P2R	75	0.157
P2R	110	0.201
P2RK	110	0.201
P2R	185	0.289
SPSR	185	0.286

Device Manufacturer SYSTEM SENSOR

Strobe Only		Current @Rated
Model #	Candela	Voltage
SR	75	0.158
SR	110	0.202
SRK	110	0.202
SR	185	0.286

This calculator provided voltage drop calculations in three formats (Point to Point, End of Line, and Load Centering).
Make sure that you know what method is accepted by, and the results do not exceed the limits set by the respective jurisdiction

Project Name	PALMETTO BAY VILLAGE HALL
Date	4/20/2010
Circuit Number	3 PS1
Area Covered	FIRST FLOOR
Nominal System Voltage	20.4
Minimum Device Voltage	16
Total Circuit Current	1.896

		Wire Gauge	Ohm's Per 1000
Distance from source to 1st device	63	14	3.07
Wire Gauge for balance of circuit		14	3.07

Point to Point Method			End of Line Method			Load Centering Method		
CIRCUIT IS WITHIN LIMITS			**CIRCUIT IS WITHIN LIMITS**			**CIRCUIT IS WITHIN LIMITS**		
Totals		Voltage	Totals		Voltage	Totals		Voltage
Current	Distance	Drop	Current	Distance	Drop	Current	Distance	Drop
1.896	212	**1.52**	1.896	212	**2.468**	1.896	212	**1.234**
End of Line Voltage		**18.88**	End of Line Voltage		**17.93**	End of Line Voltage		**19.17**
Percent Drop		7.46%	Percent Drop		12.10%	Percent Drop		6.05%

End of Line and Load Centering Methods use only the wire guage for the first device to source
Standard Wire Resistance in Ohms per 1000 feet.
18=7.77 16=4.89 14=3.07 12=1.98 10=1.24
18-14 Awg = Solid Conductors 12-10 Awg = Stranded Conductors

Enter current in amps. .150 = 150 ma

Device Number	Device Current	Distance from previous device	At Device	Voltage Drop from source	Percent Drop
Device 1	0.158	63	19.67	0.733	3.60%
Device 2	0.158	8	19.58	0.819	4.01%
Device 3	0.158	13	19.46	0.945	4.63%
Device 4	0.158	14	19.33	1.067	5.23%
Device 5	0.158	13	19.23	1.168	5.73%
Device 6	0.158	8	19.18	1.222	5.99%
Device 7	0.158	22	19.05	1.350	6.62%
Device 8	0.158	8	19.01	1.389	6.81%
Device 9	0.158	10	18.97	1.428	7.00%
Device 10	0.158	8	18.95	1.451	7.11%
Device 11	0.158	27	18.90	1.504	7.37%
Device 12	0.158	18	18.88	1.521	7.46%
END			18.88	1.521	7.46%
END			18.88	1.521	7.46%
END			18.88	1.521	7.46%
END			18.88	1.521	7.46%
END			18.88	1.521	7.46%
END			18.88	1.521	7.46%
END			18.88	1.521	7.46%
END			18.88	1.521	7.46%
Totals	1.896	212	End of Line Voltage	**18.88**	

Notes:
Wire resistance is doubled in the calculations for two wires (Positive and Negative)
The voltage calculated to the last device in any method must not be lower then
the manufactures listed minimum operating voltage (IE: rated operating voltage 20-32 VDC).

Device Manufacturer SYSTEM SENSOR

Horn & Speaker Strobes		Current @Rated
Model #	Candela	Voltage
SPSR	75	0.153
SPSR	110	0.195
SPSRK	110	0.195
P2R	75	0.16
P2R	110	0.202
P2RK	110	0.202
P2R	185	0.258
SPSR	185	0.258
SPW		0.001
SPC		0.001

Device Manufacturer SYSTEM SENSOR

Strobe Only		Current @Rated
Model #	Candela	Voltage
SR	75	0.153
SR	110	0.195
SRK	110	0.195
SR	185	0.258

This calculator provided voltage drop calculations in three formats (Point to Point, End of Line, and Load Centering).
Make sure that you know what method is accepted by, and the results do not exceed the limits set by the respective jurisdiction

Project Name	PALMETTO BAY VILLAGE HALL
Date	4/20/2010
Circuit Number	4 PS1
Area Covered	FIRST FLOOR
Nominal System Voltage	20.4
Minimum Device Voltage	16
Total Circuit Current	1.896

		Wire Gauge	Ohm's Per 1000
Distance from source to 1st device	29	14	3.07
Wire Gauge for balance of circuit		14	3.07

Point to Point Method			End of Line Method			Load Centering Method		
CIRCUIT IS WITHIN LIMITS			**CIRCUIT IS WITHIN LIMITS**			**CIRCUIT IS WITHIN LIMITS**		
Totals		Voltage	Totals		Voltage	Totals		Voltage
Current	Distance	Drop	Current	Distance	Drop	Current	Distance	Drop
1.896	213	**1.38**	1.896	213	**2.480**	1.896	213	**1.240**
End of Line Voltage		**19.02**	End of Line Voltage		**17.92**	End of Line Voltage		**19.16**
Percent Drop		6.76%	Percent Drop		12.16%	Percent Drop		6.08%

End of Line and Load Centering Methods use only the wire guage for the first device to source
Standard Wire Resistance in Ohms per 1000 feet.
18=7.77 16=4.89 14=3.07 12=1.98 10=1.24
18-14 Awg = Solid Conductors 12-10 Awg = Stranded Conductors

Enter current in amps. .150 = 150 ma

Device Number	Device Current	Distance from previous device	At Device	Voltage Drop from source	Percent Drop
Device 1	0.158	29	20.06	0.338	1.65%
Device 2	0.158	15	19.90	0.498	2.44%
Device 3	0.158	25	19.66	0.740	3.63%
Device 4	0.158	9	19.58	0.819	4.01%
Device 5	0.158	23	19.40	0.997	4.89%
Device 6	0.158	12	19.32	1.079	5.29%
Device 7	0.158	12	19.25	1.149	5.63%
Device 8	0.158	8	19.21	1.187	5.82%
Device 9	0.158	19	19.14	1.261	6.18%
Device 10	0.158	19	19.08	1.316	6.45%
Device 11	0.158	22	19.04	1.359	6.66%
Device 12	0.158	20	19.02	1.379	6.76%
END			19.02	1.379	6.76%
END			19.02	1.379	6.76%
END			19.02	1.379	6.76%
END			19.02	1.379	6.76%
END			19.02	1.379	6.76%
END			19.02	1.379	6.76%
END			19.02	1.379	6.76%
END			19.02	1.379	6.76%
Totals	1.896	213	End of Line Voltage	**19.02**	

Notes:
Wire resistance is doubled in the calculations for two wires (Positive and Negative)
The voltage calculated to the last device in any method must not be lower then
the manufactures listed minimum operating voltage (IE: rated operating voltage 20-32 VDC).

Device Manufacturer SYSTEM SENSOR

Horn & Speaker Strobes		Current @Rated
Model #	Candela	Voltage
SPSR	75	0.158
SPSR	110	0.202
SPSRK	110	0.202
P2R	75	0.157
P2R	110	0.201
P2RK	110	0.201
P2R	185	0.289
SPSR	185	0.286

Device Manufacturer SYSTEM SENSOR

Strobe Only		Current @Rated
Model #	Candela	Voltage
SR	75	0.158
SR	110	0.202
SRK	110	0.202
SR	185	0.286

This calculator provided voltage drop calculations in three formats (Point to Point, End of Line, and Load Centering).
Make sure that you know what method is accepted by, and the results do not exceed the limits set by the respective jurisdiction

Project Name	PALMETTO BAY VILLAGE HALL
Date	4/20/2010
Circuit Number	5 PS2
Area Covered	FIRST FLOOR
Nominal System Voltage	20.4
Minimum Device Voltage	16
Total Circuit Current	1.738

		Wire Gauge	Ohm's Per 1000
Distance from source to 1st device	38	14	3.07
Wire Gauge for balance of circuit		14	3.07

Point to Point Method			End of Line Method			Load Centering Method		
CIRCUIT IS WITHIN LIMITS			**CIRCUIT IS WITHIN LIMITS**			**CIRCUIT IS WITHIN LIMITS**		
Totals		Voltage	Totals		Voltage	Totals		Voltage
Current	Distance	Drop	Current	Distance	Drop	Current	Distance	Drop
1.738	227	**1.47**	1.738	227	**2.422**	1.738	227	**1.211**
End of Line Voltage		**18.93**	End of Line Voltage		**17.98**	End of Line Voltage		**19.19**
Percent Drop		7.20%	Percent Drop		11.87%	Percent Drop		5.94%

End of Line and Load Centering Methods use only the wire guage for the first device to source
Standard Wire Resistance in Ohms per 1000 feet.
18=7.77 16=4.89 14=3.07 12=1.98 10=1.24
18-14 Awg = Solid Conductors 12-10 Awg = Stranded Conductors

Enter current in amps. .150 = 150 ma

Device Number	Device Current	Distance from previous device	At Device	Voltage Drop from source	Percent Drop
Device 1	0.158	38	19.99	0.406	1.99%
Device 2	0.158	14	19.86	0.541	2.65%
Device 3	0.158	27	19.62	0.777	3.81%
Device 4	0.158	16	19.50	0.901	4.42%
Device 5	0.158	32	19.28	1.119	5.48%
Device 6	0.158	22	19.15	1.247	6.11%
Device 7	0.158	17	19.07	1.329	6.52%
Device 8	0.158	8	19.04	1.360	6.67%
Device 9	0.158	26	18.96	1.436	7.04%
Device 10	0.158	8	18.95	1.451	7.11%
Device 11	0.158	19	18.93	1.470	7.20%
END			18.93	1.470	7.20%
END			18.93	1.470	7.20%
END			18.93	1.470	7.20%
END			18.93	1.470	7.20%
END			18.93	1.470	7.20%
END			18.93	1.470	7.20%
END			18.93	1.470	7.20%
END			18.93	1.470	7.20%
END			18.93	1.470	7.20%
Totals	1.738	227	End of Line Voltage	**18.93**	

Notes:
Wire resistance is doubled in the calculations for two wires (Positive and Negative)
The voltage calculated to the last device in any method must not be lower then
the manufactures listed minimum operating voltage (IE: rated operating voltage 20-32 VDC).

Device Manufacturer SYSTEM SENSOR

Horn & Speaker Strobes		Current @Rated
Model #	Candela	Voltage
SPSR	75	0.158
SPSR	110	0.202
SPSRK	110	0.202
P2R	75	0.157
P2R	110	0.201
P2RK	110	0.201
P2R	185	0.289
SPSR	185	0.286

Device Manufacturer SYSTEM SENSOR

Strobe Only		Current @Rated
Model #	Candela	Voltage
SR	75	0.158
SR	110	0.202
SRK	110	0.202
SR	185	0.286

This calculator provided voltage drop calculations in three formats (Point to Point, End of Line, and Load Centering).
Make sure that you know what method is accepted by, and the results do not exceed the limits set by the respective jurisdiction

Project Name	PALMETTO BAY VILLAGE HALL
Date	4/20/2010
Circuit Number	6 PS2
Area Covered	FIRST FLOOR
Nominal System Voltage	20.4
Minimum Device Voltage	16
Total Circuit Current	1.896

		Wire Gauge	Ohm's Per 1000
Distance from source to 1st device	69	14	3.07
Wire Gauge for balance of circuit		14	3.07

Point to Point Method			End of Line Method			Load Centering Method		
CIRCUIT IS WITHIN LIMITS			**CIRCUIT IS WITHIN LIMITS**			**CIRCUIT IS WITHIN LIMITS**		
Totals		Voltage	Totals		Voltage	Totals		Voltage
Current	Distance	Drop	Current	Distance	Drop	Current	Distance	Drop
1.896	192	**1.55**	1.896	192	**2.235**	1.896	192	**1.118**
End of Line Voltage		**18.85**	End of Line Voltage		**18.16**	End of Line Voltage		**19.28**
Percent Drop		7.58%	Percent Drop		10.96%	Percent Drop		5.48%

End of Line and Load Centering Methods use only the wire guage for the first device to source
Standard Wire Resistance in Ohms per 1000 feet.
18=7.77 16=4.89 14=3.07 12=1.98 10=1.24
18-14 Awg = Solid Conductors 12-10 Awg = Stranded Conductors

Enter current in amps. .150 = 150 ma

Device Number	Device Current	Distance from previous device	At Device	Voltage Drop from source	Percent Drop
Device 1	0.158	69	19.60	0.803	3.94%
Device 2	0.158	9	19.50	0.899	4.41%
Device 3	0.158	12	19.38	1.016	4.98%
Device 4	0.158	14	19.26	1.138	5.58%
Device 5	0.158	15	19.15	1.254	6.15%
Device 6	0.158	9	19.08	1.315	6.45%
Device 7	0.158	13	19.01	1.391	6.82%
Device 8	0.158	9	18.97	1.435	7.03%
Device 9	0.158	16	18.90	1.497	7.34%
Device 10	0.158	8	18.88	1.520	7.45%
Device 11	0.158	9	18.86	1.538	7.54%
Device 12	0.158	9	18.85	1.546	7.58%
END			18.85	1.546	7.58%
END			18.85	1.546	7.58%
END			18.85	1.546	7.58%
END			18.85	1.546	7.58%
END			18.85	1.546	7.58%
END			18.85	1.546	7.58%
END			18.85	1.546	7.58%
END			18.85	1.546	7.58%
Totals	1.896	192	End of Line Voltage	**18.85**	

Notes:
Wire resistance is doubled in the calculations for two wires (Positive and Negative)
The voltage calculated to the last device in any method must not be lower then
the manufactures listed minimum operating voltage (IE: rated operating voltage 20-32 VDC).

Device Manufacturer SYSTEM SENSOR

Horn & Speaker Strobes		Current @Rated
Model #	Candela	Voltage
SPSR	75	0.158
SPSR	110	0.202
SPSRK	110	0.202
P2R	75	0.157
P2R	110	0.201
P2RK	110	0.201
P2R	185	0.289
SPSR	185	0.286

Device Manufacturer SYSTEM SENSOR

Strobe Only		Current @Rated
Model #	Candela	Voltage
SR	75	0.158
SR	110	0.202
SRK	110	0.202
SR	185	0.286

This calculator provided voltage drop calculations in three formats (Point to Point, End of Line, and Load Centering).
Make sure that you know what method is accepted by, and the results do not exceed the limits set by the respective jurisdiction

Project Name	PALMETTO BAY VILLAGE HALL
Date	4/20/2010
Circuit Number	7 PS2
Area Covered	FIRST FLOOR
Nominal System Voltage	20.4
Minimum Device Voltage	16
Total Circuit Current	1.738

		Wire Gauge	Ohm's Per 1000
Distance from source to 1st device	88	14	3.07
Wire Gauge for balance of circuit		14	3.07

Point to Point Method			End of Line Method			Load Centering Method		
CIRCUIT IS WITHIN LIMITS			**CIRCUIT IS WITHIN LIMITS**			**CIRCUIT IS WITHIN LIMITS**		
Totals		Voltage	Totals		Voltage	Totals		Voltage
Current	Distance	Drop	Current	Distance	Drop	Current	Distance	Drop
1.738	269	**1.83**	1.738	269	**2.871**	1.738	269	**1.435**
End of Line Voltage		**18.57**	End of Line Voltage		**17.53**	End of Line Voltage		**18.96**
Percent Drop		8.95%	Percent Drop		14.07%	Percent Drop		7.04%

End of Line and Load Centering Methods use only the wire guage for the first device to source
Standard Wire Resistance in Ohms per 1000 feet.
18=7.77 16=4.89 14=3.07 12=1.98 10=1.24
18-14 Awg = Solid Conductors 12-10 Awg = Stranded Conductors

Enter current in amps. .150 = 150 ma

Device Number	Device Current	Distance from previous device	At Device	Voltage Drop from source	Percent Drop
Device 1	0.158	88	19.46	0.939	4.60%
Device 2	0.158	8	19.38	1.017	4.98%
Device 3	0.158	14	19.26	1.139	5.58%
Device 4	0.158	10	19.18	1.217	5.96%
Device 5	0.158	25	19.01	1.386	6.80%
Device 6	0.158	22	18.89	1.514	7.42%
Device 7	0.158	28	18.75	1.650	8.09%
Device 8	0.158	23	18.66	1.739	8.53%
Device 9	0.158	14	18.62	1.780	8.73%
Device 10	0.158	11	18.60	1.802	8.83%
Device 11	0.158	26	18.57	1.827	8.95%
END			18.57	1.827	8.95%
END			18.57	1.827	8.95%
END			18.57	1.827	8.95%
END			18.57	1.827	8.95%
END			18.57	1.827	8.95%
END			18.57	1.827	8.95%
END			18.57	1.827	8.95%
END			18.57	1.827	8.95%
END			18.57	1.827	8.95%
Totals	1.738	269	End of Line Voltage	**18.57**	

Notes:
Wire resistance is doubled in the calculations for two wires (Positive and Negative)
The voltage calculated to the last device in any method must not be lower then
the manufactures listed minimum operating voltage (IE: rated operating voltage 20-32 VDC).

Device Manufacturer SYSTEM SENSOR

Horn & Speaker Strobes		Current @Rated
Model #	Candela	Voltage
SPSR	75	0.158
SPSR	110	0.202
SPSRK	110	0.202
P2R	75	0.157
P2R	110	0.201
P2RK	110	0.201
P2R	185	0.289
SPSR	185	0.286

Device Manufacturer SYSTEM SENSOR

Strobe Only		Current @Rated
Model #	Candela	Voltage
SR	75	0.158
SR	110	0.202
SRK	110	0.202
SR	185	0.286

This calculator provided voltage drop calculations in three formats (Point to Point, End of Line, and Load Centering).
Make sure that you know what method is accepted by, and the results do not exceed the limits set by the respective jurisdiction

Project Name	PALMETTO BAY VILLAGE HALL
Date	4/20/2010
Circuit Number	8 PS2
Area Covered	FIRST FLOOR
Nominal System Voltage	20.4
Minimum Device Voltage	16
Total Circuit Current	1.580

		Wire Gauge	Ohm's Per 1000
Distance from source to 1st device	88	14	3.07
Wire Gauge for balance of circuit		14	3.07

Point to Point Method			End of Line Method			Load Centering Method		
CIRCUIT IS WITHIN LIMITS			**CIRCUIT IS WITHIN LIMITS**			**CIRCUIT IS WITHIN LIMITS**		
Totals		Voltage	Totals		Voltage	Totals		Voltage
Current	Distance	Drop	Current	Distance	Drop	Current	Distance	Drop
1.580	204	**1.38**	1.580	204	**1.979**	1.580	204	**0.990**
End of Line Voltage		**19.02**	End of Line Voltage		**18.42**	End of Line Voltage		**19.41**
Percent Drop		6.74%	Percent Drop		9.70%	Percent Drop		4.85%

End of Line and Load Centering Methods use only the wire guage for the first device to source
Standard Wire Resistance in Ohms per 1000 feet.
18=7.77 16=4.89 14=3.07 12=1.98 10=1.24
18-14 Awg = Solid Conductors 12-10 Awg = Stranded Conductors

Enter current in amps. .150 = 150 ma

Device Number	Device Current	Distance from previous device	At Device	Voltage Drop from source	Percent Drop
Device 1	0.158	88	19.55	0.854	4.18%
Device 2	0.158	8	19.48	0.924	4.53%
Device 3	0.158	8	19.41	0.986	4.83%
Device 4	0.158	15	19.31	1.088	5.33%
Device 5	0.158	18	19.21	1.192	5.84%
Device 6	0.158	8	19.17	1.231	6.03%
Device 7	0.158	19	19.10	1.305	6.40%
Device 8	0.158	9	19.07	1.331	6.52%
Device 9	0.158	15	19.04	1.360	6.67%
Device 10	0.158	16	19.02	1.376	6.74%
END			19.02	1.376	6.74%
END			19.02	1.376	6.74%
END			19.02	1.376	6.74%
END			19.02	1.376	6.74%
END			19.02	1.376	6.74%
END			19.02	1.376	6.74%
END			19.02	1.376	6.74%
END			19.02	1.376	6.74%
END			19.02	1.376	6.74%
END			19.02	1.376	6.74%
Totals	1.580	204	End of Line Voltage	**19.02**	

Notes:
Wire resistance is doubled in the calculations for two wires (Positive and Negative)
The voltage calculated to the last device in any method must not be lower then
the manufactures listed minimum operating voltage (IE: rated operating voltage 20-32 VDC).

Device Manufacturer SYSTEM SENSOR

Horn & Speaker Strobes		Current @Rated
Model #	Candela	Voltage
SPSR	75	0.158
SPSR	110	0.202
SPSRK	110	0.202
P2R	75	0.157
P2R	110	0.201
P2RK	110	0.201
P2R	185	0.289
SPSR	185	0.286

Device Manufacturer SYSTEM SENSOR

Strobe Only		Current @Rated
Model #	Candela	Voltage
SR	75	0.158
SR	110	0.202
SRK	110	0.202
SR	185	0.286

FIRE ALARM VOLTAGE DROP PS1 & PS2

SCALE: N.T.S.

REVISED PLANS
MDFR

FIRE ALARM SHALL BE A CENTRAL STATION SERVICE. A CERTIFICATE OR PLACARD SHALL BE POSTED AT FINAL INSPECTION, AS PER NFPA 72

FIRE ALARM SYSTEM TO BE INSTALLED IN ACCORDANCE WITH NFPA 72; 70; 101

APPROVED
MIAMI-DADE COUNTY FIRE DEPARTMENT
BLDG. PERMIT ____ FIRE ALARM ✓
FIRE SUPPRESSION ____ WATER MAIN EXT. ____
DATE: 02.07.11 BY:

AS-BUILTS
12/21/10

RECORD SET
The information presented on this drawing is diagrammatic and is presented for general information purposes and should not be relied on for accuracy of dimensions, details and locations. Actual and exact conditions if required should be determined in the field.

WSA Systems-Boca, Inc.
442 NW 35TH STREET – BOCA RATON, FLORIDA 33431
Tel. (561) 393-2933 FAX. (561) 393-9890
U.L. # S7075 EF# 0001109

Fire Alarm Drawings For:
PALMETTO BAY VILLAGE HALL
9705 E. HIBISCUS STREET
CUTLER BAY, FLORIDA 33157

REVISIONS:

DATE	NAME	DESCRIPTION
10/28/10	1	AS PER PLAN REVIEW
12/21/10	2	AS PER AS-BUILTS

TYEC HVAC PLUMBING ELECTRICAL
THOMPSON & YOUNGROSS ENGINEERING CONSULTANTS, LLC
TO THE BEST OF MY KNOWLEDGE, THE PLANS AND SPECIFICATIONS COMPLY WITH THE MINIMUM APPLICABLE BUILDING CODE.
DANIEL E. THOMPSON ELEC/MECH FLA. REG. NO. 33289
ANDREW J. YOUNGROSS ELEC FLA. REG. NO. 51758
CERTIFICATE of AUTHORIZATION NO. 25996
112 S.E. 10TH STREET DELRAY BEACH, FLA 33483-3428 E-MAIL: TEC@TECFLA.COM
TEL: 561-274-0200 FAX: 561-274-0222 WWW.TECFLA.COM

1-22-11
ENGINEERS SEAL

DRAWN BY: K.O.
REVIEWED BY: DATE:
SCALE: N.T.S.
DATE: 09/01/10
WSA JOB NO: #7035

FIRE ALARM PLAN VOLTAGE DROP
FA-7of8

This calculator provided voltage drop calculations in three formats (Point to Point, End of Line, and Load Centering).
Make sure that you know what method is accepted by, and the results do not exceed the limits set by the respective jurisdiction

Project Name	PALMETTO BAY VILLAGE HALL
Date	4/20/2010
Circuit Number	9 PS3
Area Covered	SECOND FLOOR
Nominal System Voltage	20.4
Minimum Device Voltage	16
Total Circuit Current	1.264

	Distance	Wire Gauge	Ohm's Per 1000
Distance from source to 1st device	8	14	3.07
Wire Gauge for balance of circuit		14	3.07

Point to Point Method			End of Line Method			Load Centering Method		
CIRCUIT IS WITHIN LIMITS			**CIRCUIT IS WITHIN LIMITS**			**CIRCUIT IS WITHIN LIMITS**		
Totals		Voltage	Totals		Voltage	Totals		Voltage
Current	Distance	Drop	Current	Distance	Drop	Current	Distance	Drop
1.264	96	**0.36**	1.264	96	**0.745**	1.264	96	**0.373**
End of Line Voltage		**20.04**	End of Line Voltage		**19.65**	End of Line Voltage		**20.03**
Percent Drop		1.76%	Percent Drop		3.65%	Percent Drop		1.83%

End of Line and Load Centering Methods use only the wire guage for the first device to source
Standard Wire Resistance in Ohms per 1000 feet.
18=7.77 16=4.89 14=3.07 12=1.98 10=1.24
18-14 Awg = Solid Conductors 12-10 Awg = Stranded Conductors

Notes:
Wire resistance is doubled in the calculations for two wires (Positive and Negative)
The voltage calculated to the last device in any method must not be lower then
the manufactures listed minimum operating voltage (IE: rated operating voltage 20-32 VDC).

Device Number	Device Current (Enter current in amps. .150 = 150 ma)	Distance from previous device	At Device	Voltage Drop from source	Percent Drop
Device 1	0.158	8	20.34	0.062	0.30%
Device 2	0.158	9	20.28	0.123	0.60%
Device 3	0.158	10	20.22	0.181	0.89%
Device 4	0.158	15	20.15	0.254	1.25%
Device 5	0.158	8	20.11	0.285	1.40%
Device 6	0.158	8	20.09	0.308	1.51%
Device 7	0.158	14	20.06	0.336	1.65%
Device 8	0.158	24	20.04	0.359	1.76%
END			20.04	0.359	1.76%
END			20.04	0.359	1.76%
END			20.04	0.359	1.76%
END			20.04	0.359	1.76%
END			20.04	0.359	1.76%
END			20.04	0.359	1.76%
END			20.04	0.359	1.76%
END			20.04	0.359	1.76%
END			20.04	0.359	1.76%
END			20.04	0.359	1.76%
END			20.04	0.359	1.76%
END			20.04	0.359	1.76%
Totals	1.264	96	End of Line Voltage		**20.04**

Device Manufacturer: SYSTEM SENSOR

Horn & Speaker Strobes Model #	Candela	Current @Rated Voltage
SPSR	75	0.158
SPSR	110	0.202
SPSRK	110	0.202
P2R	75	0.157
P2R	110	0.201
P2RK	110	0.201
P2R	185	0.289
SPSR	185	0.286

Device Manufacturer: SYSTEM SENSOR

Strobe Only Model #	Candela	Current @Rated Voltage
SR	75	0.158
SR	110	0.202
SRK	110	0.202
SR	185	0.286

This calculator provided voltage drop calculations in three formats (Point to Point, End of Line, and Load Centering).
Make sure that you know what method is accepted by, and the results do not exceed the limits set by the respective jurisdiction

Project Name	PALMETTO BAY VILLAGE HALL
Date	4/20/2010
Circuit Number	10 PS3
Area Covered	SECOND FLOOR
Nominal System Voltage	20.4
Minimum Device Voltage	16
Total Circuit Current	1.308

	Distance	Wire Gauge	Ohm's Per 1000
Distance from source to 1st device	14	14	3.07
Wire Gauge for balance of circuit		14	3.07

Point to Point Method			End of Line Method			Load Centering Method		
CIRCUIT IS WITHIN LIMITS			**CIRCUIT IS WITHIN LIMITS**			**CIRCUIT IS WITHIN LIMITS**		
Totals		Voltage	Totals		Voltage	Totals		Voltage
Current	Distance	Drop	Current	Distance	Drop	Current	Distance	Drop
1.308	125	**0.54**	1.308	125	**1.004**	1.308	125	**0.502**
End of Line Voltage		**19.86**	End of Line Voltage		**19.40**	End of Line Voltage		**19.90**
Percent Drop		2.67%	Percent Drop		4.92%	Percent Drop		2.46%

End of Line and Load Centering Methods use only the wire guage for the first device to source
Standard Wire Resistance in Ohms per 1000 feet.
18=7.77 16=4.89 14=3.07 12=1.98 10=1.24
18-14 Awg = Solid Conductors 12-10 Awg = Stranded Conductors

Notes:
Wire resistance is doubled in the calculations for two wires (Positive and Negative)
The voltage calculated to the last device in any method must not be lower then
the manufactures listed minimum operating voltage (IE: rated operating voltage 20-32 VDC).

Device Number	Device Current (Enter current in amps. .150 = 150 ma)	Distance from previous device	At Device	Voltage Drop from source	Percent Drop
Device 1	0.158	14	20.29	0.112	0.55%
Device 2	0.158	16	20.17	0.225	1.10%
Device 3	0.158	8	20.13	0.274	1.34%
Device 4	0.158	25	20.00	0.402	1.97%
Device 5	0.158	15	19.94	0.464	2.28%
Device 6	0.158	6	19.92	0.484	2.37%
Device 7	0.158	10	19.89	0.506	2.48%
Device 8	0.202	31	19.86	0.544	2.67%
END			19.86	0.544	2.67%
END			19.86	0.544	2.67%
END			19.86	0.544	2.67%
END			19.86	0.544	2.67%
END			19.86	0.544	2.67%
END			19.86	0.544	2.67%
END			19.86	0.544	2.67%
END			19.86	0.544	2.67%
END			19.86	0.544	2.67%
END			19.86	0.544	2.67%
END			19.86	0.544	2.67%
END			19.86	0.544	2.67%
Totals	1.308	125	End of Line Voltage		**19.86**

Device Manufacturer: SYSTEM SENSOR

Horn & Speaker Strobes Model #	Candela	Current @Rated Voltage
SPSR	75	0.158
SPSR	110	0.202
SPSRK	110	0.202
P2R	75	0.157
P2R	110	0.201
P2RK	110	0.201
P2R	185	0.289
SPSR	185	0.286
SPW		

Device Manufacturer: SYSTEM SENSOR

Strobe Only Model #	Candela	Current @Rated Voltage
SR	75	0.158
SR	110	0.202
SRK	110	0.202
SR	185	0.286

This calculator provided voltage drop calculations in three formats (Point to Point, End of Line, and Load Centering).
Make sure that you know what method is accepted by, and the results do not exceed the limits set by the respective jurisdiction

Project Name	PALMETTO BAY VILLAGE HALL
Date	4/20/2010
Circuit Number	11 PS3
Area Covered	SECOND FLOOR
Nominal System Voltage	20.4
Minimum Device Voltage	16
Total Circuit Current	1.422

	Distance	Wire Gauge	Ohm's Per 1000
Distance from source to 1st device	14	14	3.07
Wire Gauge for balance of circuit		14	3.07

Point to Point Method			End of Line Method			Load Centering Method		
CIRCUIT IS WITHIN LIMITS			**CIRCUIT IS WITHIN LIMITS**			**CIRCUIT IS WITHIN LIMITS**		
Totals		Voltage	Totals		Voltage	Totals		Voltage
Current	Distance	Drop	Current	Distance	Drop	Current	Distance	Drop
1.422	124	**0.62**	1.422	124	**1.083**	1.422	124	**0.541**
End of Line Voltage		**19.78**	End of Line Voltage		**19.32**	End of Line Voltage		**19.86**
Percent Drop		3.01%	Percent Drop		5.31%	Percent Drop		2.65%

End of Line and Load Centering Methods use only the wire guage for the first device to source
Standard Wire Resistance in Ohms per 1000 feet.
18=7.77 16=4.89 14=3.07 12=1.98 10=1.24
18-14 Awg = Solid Conductors 12-10 Awg = Stranded Conductors

Notes:
Wire resistance is doubled in the calculations for two wires (Positive and Negative)
The voltage calculated to the last device in any method must not be lower then
the manufactures listed minimum operating voltage (IE: rated operating voltage 20-32 VDC).

Device Number	Device Current (Enter current in amps. .150 = 150 ma)	Distance from previous device	At Device	Voltage Drop from source	Percent Drop
Device 1	0.158	14	20.28	0.122	0.60%
Device 2	0.158	21	20.11	0.285	1.40%
Device 3	0.158	10	20.05	0.353	1.73%
Device 4	0.158	15	19.96	0.440	2.16%
Device 5	0.158	8	19.92	0.479	2.35%
Device 6	0.158	8	19.89	0.510	2.50%
Device 7	0.158	24	19.82	0.580	2.84%
Device 8	0.158	12	19.80	0.603	2.96%
Device 9	0.158	12	19.78	0.615	3.01%
END			19.78	0.615	3.01%
END			19.78	0.615	3.01%
END			19.78	0.615	3.01%
END			19.78	0.615	3.01%
END			19.78	0.615	3.01%
END			19.78	0.615	3.01%
END			19.78	0.615	3.01%
END			19.78	0.615	3.01%
END			19.78	0.615	3.01%
END			19.78	0.615	3.01%
END			19.78	0.615	3.01%
Totals	1.422	124	End of Line Voltage		**19.78**

Device Manufacturer: SYSTEM SENSOR

Horn & Speaker Strobes Model #	Candela	Current @Rated Voltage
SPSR	75	0.158
SPSR	110	0.202
SPSRK	110	0.202
P2R	75	0.157
P2R	110	0.201
P2RK	110	0.201
P2R	185	0.297
SPSR	185	0.286

Device Manufacturer: SYSTEM SENSOR

Strobe Only Model #	Candela	Current @Rated Voltage
SR	75	0.158
SR	110	0.202
SRK	110	0.202
SR	185	0.286

This calculator provided voltage drop calculations in three formats (Point to Point, End of Line, and Load Centering).
Make sure that you know what method is accepted by, and the results do not exceed the limits set by the respective jurisdiction

Project Name	PALMETTO BAY VILLAGE HALL
Date	4/20/2010
Circuit Number	12 PS3
Area Covered	SECOND FLOOR
Nominal System Voltage	20.4
Minimum Device Voltage	16
Total Circuit Current	1.308

	Distance	Wire Gauge	Ohm's Per 1000
Distance from source to 1st device	8	14	3.07
Wire Gauge for balance of circuit		14	3.07

Point to Point Method			End of Line Method			Load Centering Method		
CIRCUIT IS WITHIN LIMITS			**CIRCUIT IS WITHIN LIMITS**			**CIRCUIT IS WITHIN LIMITS**		
Totals		Voltage	Totals		Voltage	Totals		Voltage
Current	Distance	Drop	Current	Distance	Drop	Current	Distance	Drop
1.308	120	**0.49**	1.308	120	**0.964**	1.308	120	**0.482**
End of Line Voltage		**19.91**	End of Line Voltage		**19.44**	End of Line Voltage		**19.92**
Percent Drop		2.38%	Percent Drop		4.72%	Percent Drop		2.36%

End of Line and Load Centering Methods use only the wire guage for the first device to source
Standard Wire Resistance in Ohms per 1000 feet.
18=7.77 16=4.89 14=3.07 12=1.98 10=1.24
18-14 Awg = Solid Conductors 12-10 Awg = Stranded Conductors

Notes:
Wire resistance is doubled in the calculations for two wires (Positive and Negative)
The voltage calculated to the last device in any method must not be lower then
the manufactures listed minimum operating voltage (IE: rated operating voltage 20-32 VDC).

Device Number	Device Current (Enter current in amps. .150 = 150 ma)	Distance from previous device	At Device	Voltage Drop from source	Percent Drop
Device 1	0.158	8	20.34	0.064	0.31%
Device 2	0.158	17	20.22	0.184	0.90%
Device 3	0.202	8	20.17	0.233	1.14%
Device 4	0.158	21	20.07	0.335	1.64%
Device 5	0.158	18	20.00	0.405	1.98%
Device 6	0.158	9	19.97	0.431	2.11%
Device 7	0.158	17	19.94	0.464	2.27%
Device 8	0.158	22	19.91	0.485	2.38%
END			19.91	0.485	2.38%
END			19.91	0.485	2.38%
END			19.91	0.485	2.38%
END			19.91	0.485	2.38%
END			19.91	0.485	2.38%
END			19.91	0.485	2.38%
END			19.91	0.485	2.38%
END			19.91	0.485	2.38%
END			19.91	0.485	2.38%
END			19.91	0.485	2.38%
END			19.91	0.485	2.38%
END			19.91	0.485	2.38%
Totals	1.308	120	End of Line Voltage		**19.91**

Device Manufacturer: SYSTEM SENSOR

Horn & Speaker Strobes Model #	Candela	Current @Rated Voltage
SPSR	75	0.158
SPSR	110	0.202
SPSRK	110	0.202
P2R	75	0.157
P2R	110	0.201
P2RK	110	0.201
P2R	185	0.289
SPSR	185	0.286

Device Manufacturer: SYSTEM SENSOR

Strobe Only Model #	Candela	Current @Rated Voltage
SR	75	0.158
SR	110	0.202
SRK	110	0.202
SR	185	0.286

FIRE ALARM VOLTAGE DROP PS3

SCALE: N.T.S.

REVISED PLANS
MDFR

FIRE ALARM SHALL BE A CENTRAL STATION SERVICE. A CERTIFICATE OR PLACARD SHALL BE POSTED AT FINAL INSPECTION, AS PER NFPA 72

FIRE ALARM SYSTEM TO BE INSTALLED IN ACCORDANCE WITH NFPA 72; 70; 101

APPROVED
MIAMI-DADE COUNTY FIRE DEPARTMENT
BLDG. PERMIT ___ FIRE ALARM ___
FIRE SUPPRESSION ___ WATER MAIN EXT. ___
DATE: 02.07.11 BY:

AS-BUILTS
12/21/10

RECORD SET
The information presented on this drawing is diagrammatic and is presented for general information purposes and should not be relied on for accuracy of dimensions, details and locations. Actual and exact conditions if required should be determined in the field.

WSA Systems-Boca, Inc.
442 NW 35TH STREET - BOCA RATON, FLORIDA 33431
Tel. (561) 393-2933 FAX. (561) 393-9890
U.L. # S7075 EF# 0001109

Fire Alarm Drawings For:
PALMETTO BAY VILLAGE HALL
9705 E. HIBISCUS STREET
CUTLER BAY, FLORIDA 33157

REVISIONS:

DATE	NAME	DESCRIPTION
10/28/10	1	AS PER PLAN REVIEW
12/21/10	2	AS PER AS-BUILTS

TYEC HVAC PLUMBING ELECTRICAL
THOMPSON & YOUNGROSS ENGINEERING CONSULTANTS, LLC
TO THE BEST OF MY KNOWLEDGE, THE PLANS AND SPECIFICATIONS COMPLY WITH THE MINIMUM APPLICABLE BUILDING CODE.
DANIEL E. THOMPSON ELEC/MECH FLA. REG. NO. 33289
ANDREW J. YOUNGROSS ELEC FLA. REG. NO. 51758
CERTIFICATE of AUTHORIZATION NO. 25996
112 S.E. 10TH STREET DELRAY BEACH, FLA 33483-3426 E-MAIL: TEC@TECFLA.COM
TEL: 561-274-0200 FAX: 561-274-0222 WWW.TECFLA.COM

ENGINEERS SEAL

DRAWN BY: K.O.
REVIEWED BY: DATE:
SCALE: N.T.S.
DATE: 09/01/10
WSA JOB NO: #7035

FIRE ALARM PLAN VOLTAGE DROP
FA-8of8

PLUMBING SYMBOL LEGEND

SYMBOL	DESCRIPTION
———————	- DOMESTIC COLD WATER
———————	- DOMESTIC HOT WATER
———————	- DOMESTIC HOT WATER RETURN
——— S ———	- ABOVE GROUND SANITARY
——— S ———	- BELOW GROUND SANITARY
——— V ———	- SANITARY VENT
——— ST ———	- ABOVE GROUND STORM
——— ST ———	- BELOW GROUND STORM
——— STO ———	- STORM OVERFLOW
HG	- HOSE BIBB OR WALL HYDRANT
CO	- CLEAN OUT PLUG
CO	- WALL CLEANOUT
CO	- FLOOR CLEAN OUT
FD FD	- FLOOR DRAIN
	- ROOF DRAIN
	- SHUT-OFF VALVE IN VALVE BOX
	- BALL VALVE
	- SHUTOFF VALVE ON RISER
	- CONNECTION, TOP
	- CONNECTION, BOTTOM
	- ELBOW, TURNED DOWN
	- ELBOW, TURNED UP
	- TEE, TURNED UP
	- TEE, TURNED DOWN
	- CAP
1	- REVISION REFERENCE
1 / P1	- DETAIL REFERENCE: TOP-DETAIL#, BOTTOM-DRAWING# SHOWN ON
SD	- SUMP DRAIN

NOTE: SOME SYMBOLS SHOWN ON THIS LEGEND MAY NOT PERTAIN TO THIS PROJECT

PLUMBING ABBREVIATIONS

SYMBOL	DESCRIPTION
AFF	- ABOVE FINISH FLOOR
CO	- CLEANOUT
CONT	- CONTINUATION
CW	- DOMESTIC COLD WATER
DN	- DOWN
DWG	- DRAWING
FCO	- FLOOR CLEANOUT
FD	- FLOOR DRAIN
HB	- HOSE BIBB
HW	- DOMESTIC HOT WATER
IE	- INVERT ELEVATION
NTS	- NOT TO SCALE
RD	- ROOF DRAIN
SAN	- SANITARY
SD	- SUMP DRAIN
SF	- SQUARE FEET
SH	- SHEET
ST	- STORM
V	- VENT
VTR	- VENT THRU ROOF
WCO	- WALL CLEANOUT
WTR	- WATER
WH	- WATER HYDRANT
STO	- STORM OVERFLOW
HWR	- HOT WATER RETURN
BFP	- BACK FLOW PREVENTOR

GENERAL NOTES

1. REFERENCE THE SPECIFICATIONS FOR MATERIAL AND EQUIPMENT INSTALLATION STANDARDS.
2. THE PLUMBING INSTALLATION SHALL COMPLY WITH ALL STATE AND LOCAL CODES.
3. UTILITIES AND SERVICES INDICATED ARE TAKEN FROM VARIOUS OLD AND NEW SURVEYS, AS-BUILT RECORDS AND FIELD INVESTIGATIONS. UNFORSEEN CONDITIONS PROBABLY EXIST AND NEW WORK MAY NOT BE FIELD LOCATED EXACTLY AS SHOWN ON DRAWINGS. COOPERATION WITH OTHER TRADES IN ROUTING AND BURIAL DEPTHS, AS DETERMINED DURING CONSTRUCTION, WILL BE NECESSARY.
4. NOTIFY OWNER AT LEAST 24 HOURS PRIOR TO INTERRUPTING EXISTING SERVICE. SCHEDULE DISCONNECTION AND TIE-INS TO MINIMIZE DISRUPTION OF SERVICES. SERVICES ARE NOT TO BE LEFT DISRUPTED DURING NON-NORMAL CONTRACTOR WORKING HOURS.
5. PLANS ARE NOT COMPLETELY TO SCALE. PIPE ROUTING SHOWN IS SCHEMATIC AND IS NOT INTENDED TO INDICATE EXACT ROUTING. CONTRACTOR SHALL PROVIDE ANY ADDITIONAL OFFSETS AND FITTINGS REQUIRED FOR PROPER INSTALLATION AND TO MAINTAIN CLEARANCES. VERIFY STRUCTURAL, MECHANICAL AND ELECTRICAL INSTALLATIONS AND OTHER POTENTIAL OBSTRUCTIONS AND ROUTE PIPING TO AVOID INTERFERENCES.
6. CONCEAL PIPING ABOVE CEILINGS, WITHIN WALLS OR CHASES EXCEPT IN MECHANICAL ROOMS OR AS SPECIFICALLY NOTED.
7. PROVIDE ALL OFFSETS AND FITTINGS AND MAKE CONNECTION TO SITE UTILITIES.
8. PROVIDE ACCESS PANELS FOR ALL VALVES CONCEALED IN WALLS OR ABOVE NON-ACCESSIBLE CEILINGS.
9. SLEEVE AND/OR FIRESTOP ALL PENETRATIONS THROUGH RATED WALLS, CEILINGS, AND FLOORS WITH U/L LISTED ASSEMBLIES. FIRESTOP ASSEMBLIES SHALL BE EQUAL TO OR EXCEED THE RATING OF THE WALL, CEILING OR FLOOR. SEE ARCHITECTURAL DRAWINGS FOR FINAL FINISHES.
10. FLASH AND COUNTER-FLASH ROOF PENETRATIONS.
11. WHEN BEAM SLEEVE PENETRATIONS ARE NECESSARY, COORDINATE PENETRATIONS WITH ALL TRADES, THE ARCHITECT AND THE STRUCTURAL ENGINEER.
12. PROVIDE FOUNDATION PAD PENETRATION SLEEVES. ALLOW 1" MINIMUM CLEARANCE BETWEEN SLEEVE INSIDE SURFACE AND PIPE EXTERIOR.
13. SEE ARCHITECTURAL DRAWINGS FOR FIXTURE LOCATIONS AND MOUNTING HEIGHTS.
14. PROVIDE AUTOMATIC TRAP PRIMERS FOR FLOOR DRAIN TRAP SEALS.
15. PROVIDE AN AIR GAP, WHEN REQUIRED BY CODE, SERVING INDIVIDUAL FIXTURES, DEVICES, APPLIANCES AND APPARATUS.
16. ALL EXPOSED PIPE AND FITTINGS IN FINISHED AREAS SHALL BE CHROME PLATED.
17. MOUNT WALL HYDRANTS @ 24" ABOVE FINISHED GRADE.
18. MOUNT HOSE BIBBS @ 24" ABOVE FINISHED FLOOR.
19. PROVIDE CLEANOUTS IN ACCORDANCE WITH ALL STATE AND LOCAL CODES. INSTALL CLEANOUT WITH COVER FLUSH TO FINISH SURFACE.
20. COORDINATE EXACT FLOOR DRAIN LOCATIONS WITH ARCHITECTURAL DRAWINGS. SET FLOOR DRAINS BELOW FINISHED FLOOR TO ALLOW FOR FLOOR SLOPING TO THE DRAIN.
21. COORDINATE PIPING WITH ALL ELECTRICAL EQUIPMENT (PANELS, TRANSFORMERS, ETC.) PRIOR TO ANY INSTALLATION. DO NOT ROUTE ANY PIPING OVER ANY ELECTRICAL PANELS UNDER ANY CIRCUMSTANCES. ANY PIPING RUN OVER PANELS SHALL BE RE-ROUTED AT NO ADDITIONAL COST.
22. ALL WALL MOUNTED LAVATORIES SHALL BE ATTACHED TO FLOOR MOUNTED CARRIER DESIGNED TO WITHSTAND A VERTICAL LOAD OF 250 POUNDS ON THE FRONT OF THE FIXTURE.
23. PROVIDE SANITARY WASTE, VENT, DOMESTIC WATER, ETC. ROUGH-IN AND MAKE FINAL CONNECTIONS (TO INCLUDE PROVIDING ALL NECESSARY RELATED STOPS, VALVES, TRAPS, ETC. AND MAKE READY FOR USE) TO ALL EQUIPMENT, WHETHER FURNISHED BY THIS CONTRACTOR OR FURNISHED BY OTHERS.
24. RAINWATER LEADERS SHALL BE LOCATED AT THE CENTER OF PANEL LEGS.

PLUMBING DRAWING INDEX

SHEET	DESCRIPTION	ISSUED	REVISIONS
P0.1	PLUMBING – LEGEND NOTES & SYMBOLS	Yes	
P0.2	PLUMBING – SCHEDULES	Yes	
P1.1	PLUMBING – STE PLAN	Yes	
P1.2	PLUMBING – FOUNDATION PLAN	Yes	
P2.1	PLUMBING – FIRST FLOOR PLAN – SANITARY	Yes	
P2.2	PLUMBING – FIRST FLOOR PLAN – WATER	Yes	
P2.3	PLUMBING – SECOND FLOOR PLAN – SANITARY	Yes	
P2.4	PLUMBING – SECOND FLOOR PLAN – WATER	Yes	
P2.5	PLUMBING – ROOF PLAN	Yes	
P3.1	PLUMBING – WATER RISER DIAGRAM	Yes	
P3.2	PLUMBING – SANITARY RISER DIAGRAM	Yes	
P3.3	PLUMBING – STORM RISER DIAGRAM	Yes	
P3.4	PLUMBING – NON-POTABLE WATER RISER	Yes	
P5.1	PLUMBING – DETAILS	Yes	
P5.2	PLUMBING – DETAILS	Yes	
P5.3	PLUMBING – DETAILS	Yes	

RECORD SET

The information presented on this drawing is diagrammatic and is presented for general information purposes and should not be relied on for accuracy of dimensions, details and locations. Actual and exact conditions if required should be determined in the field.

TLC ENGINEERING FOR ARCHITECTURE
800 Fairway Drive, Suite 250
Deerfield Beach, Florida 33441
Phone: 954-418-9096
Fax: 954-418-9296
www.tlc-engineers.com

© Copyright 2007 TLC Engineering for Architecture, Inc.

EB #0000015 TLC NO: 609036

JMWA ARCHITECTS
STEVEN E. MYOTT AIA
JAMES R. WILLIAMS AIA
RODOLFO ACEVEDO AIA

949 CLINT MOORE ROAD
BOCA RATON, FLORIDA 33487
TEL 561 997 9997
FAX 561 997 1610

WWW.JMWA.NET

PALMETTO BAY VILLAGE HALL
9705 E. Hibiscus St., Palmetto Bay, Florida

Master Builders of South Florida, Inc.
1400 E. Oakland Park Blvd. Suite 210
Oakland Park, FL 33334

Alvaro Gonzalez, P.E.
Florida License #69003

PROJECT NO. 609036
DESIGNED BY: JB
DRAWN BY: DLT
CHECKED BY: DHA

SUBMITTALS:
50% REVIEW 10.30.2009
PERMIT REVIEW 11.20.2009
BUILDING PERMIT 03.03.2010

REVISIONS:
1 PERMIT COMMENTS 4-02-10

PLUMBING LEGEND NOTES AND SYMBOLS

P0.1

© 2009 JMWA ARCHITECTS, INCORPORATED ALL RIGHTS RESERVED. NO PART OF THESE IDEAS, PLANS OR DESIGNS MAY BE REPRODUCED, COPIED OR UTILIZED GRAPHICALLY IN ANY FORM WHATSOEVER WITHOUT THE EXPRESSED WRITTEN CONSENT OF JMWA ARCHITECTS INCORPORATED AND ITS BOARD OF DIRECTORS.

L:\2009--Jobs\609036--Palmetto Bay Municipal Center\CAD--MEP\Sheets P0.1.dwg 8/11/2010 5:35:47 PM Jared.hunt

TLC ENGINEERING FOR ARCHITECTURE
800 Fairway Drive.
Suite 250
Deerfield Beach, Florida 33441
Phone: 954-418-9096
Fax: 954-418-9296
www.tlc-engineers.com
© Copyright 2007 TLC Engineering for Architecture, Inc.
EB #0000015 TLC NO: 609036

PLUMBING FIXTURES AND CONNECTIONS SCHEDULE

MARK	FIXTURE	MANUFACTURER	MODEL NO.	TYPE	MATERIAL	STYLE	COLOR	FAUCET/VALVE				DRAIN		DOMESTIC CW	DOMESTIC TW	DOMESTIC HW	SANITARY WASTE	SANITARY VENT	REMARKS	MARK
								MANUFACTURER & MODEL	SPOUT	HANDLES	CENTERS	TYPE	SIZE							
WC-1	WATER CLOSET	ZURN	Z5660	FLUSH VALVE FLOOR SET	VITREOUS CHINA	A.D.A. ELONGATED SIPHON-JET	WHITE	ZURN Z6000AV-DF	---	TO OPEN SIDE OF STALL	---	---	---	1"	---	---	4"	2"	1½" TOP SPUD W/ 1.6/1.1 GALLON DUAL FLUSH. PROVIDE ZURN Z5955SS-EL SEAT.	WC-1
WC-2	WATER CLOSET	ZURN	Z5650	FLUSH VALVE FLOOR SET	VITREOUS CHINA	STD. ELONGATED SIPHON-JET	WHITE	ZURN Z6000AV-DF	---	TO OPEN SIDE OF STALL	---	---	---	1"	---	---	4"	2"	1½" TOP SPUD W/ 1.6/1.1 GALLON DUAL FLUSH. PROVIDE ZURN Z5955SS-EL SEAT.	WC-2
U-1	URINAL	ZURN	Z5738.205.00	FLUSH VALVE WALL HUNG	VITREOUS CHINA	A.D.A. HEIGHT	WHITE	ZURN BATTERY-POWERED ⅛ GPF	---	SENSOR	---	---	---	---	---	---	2"	2"	PROVIDE ZURN Z1222 CARRIER.	U-1
L-1	LAVATORY	ZURN	Z5341	WALL-HUNG	VITREOUS CHINA	A.D.A. HEIGHT SINGLE HOLE	WHITE	ZURN Z6915-GEN-F-MV-SH	5" RIGID	SENSOR	---	Z8746-PC OFFSET GRID STRAINER	1¼"	½"	---	---	2"	2"	PROVIDE TRAP WRAP INSULATION ON EXPOSED SUPPLIES & TRAP. PROVIDE ZURN Z1231 CONCEALED-ARM CARRIER. SET FAUCET TEMPERATURE TO 105°F. PROVIDE WITH IN-LINE HYDRO-ELECTRIC GENERATOR AND RECHARGEABLE NICKEL-CADMIUM CELL. PROVIDE 0.5 GPM MAX FLOW VANDAL RESISTANT AERATOR.	L-1
L-2	LAVATORY	ZURN	Z5111	DROP-IN SELF-RIMMING	VITREOUS CHINA	STD. HEIGHT SINGLE HOLE	WHITE	ZURN Z6915-GEN-F-MV-SH	5" RIGID	SENSOR	---	Z8746-PC OFFSET GRID STRAINER	1¼"	½"	---	---	2"	2"	PROVIDE TRAP WRAP INSULATION ON EXPOSED SUPPLIES & TRAP. SET FAUCET TEMPERATURE TO 105°F. PROVIDE WITH IN-LINE HYDRO-ELECTRIC GENERATOR AND RECHARGEABLE NICKEL-CADMIUM CELL. PROVIDE 0.5 GPM MAX FLOW VANDAL RESISTANT AERATOR.	L-2
EWC-1	ELECTRIC WATER COOLER	SUNROC	ADADF8BL	AIR-COOLED	SS TOP W/ POWDER COATED GALVANIZED STEEL CABINET	A.D.A. COMPLIANT BI-LEVEL	GRANITE	---	---	TRIPLE PUSH PADS ON EACH EWC	---	INTEGRAL	1¼"	½"	---	---	2"	2"	PROVIDE W/ NSF STANDARDS 42 & 53 COMPLIANT 100-MICRON FILTER AND ZURN Z1225-BL CARRIER.	EWC-1
S-1	SINK	JUST	DL-2243-A-GR	LEDGE BACK/ SELF-RIMMING	18 GAUGE STAINLESS STEEL	4-HOLE DOUBLE COMPARTMENT	---	ZURN Z-82300-CP8-HS-3M	10" X 6" HT. SWING	SINGLE LEVER	8"	J-35-SSF GRID STRAINER	1½"	½"	½"	---	2"	2"	PROVIDE FAUCET W/ SIDE SPRAY. SET HW LIMIT STOP TO 105°F.	S-1
S-2	SINK	JUST	SL-ADA6.5-2122-A-GR	A.D.A. LEDGE BACK/ SELF-RIMMING	18 GAUGE STAINLESS STEEL	3-HOLE SINGLE COMPARTMENT	---	ZURN Z-82300-CP8-3M	10" X 6" HT. SWING	SINGLE LEVER	8"	J-35-SSF GRID STRAINER	1½"	½"	½"	---	2"	2"	SET HW LIMIT STOP TO 105°F. PROVIDE 0.5 GPM MAX FLOW VANDAL RESISTANT AERATOR.	S-2
MS-1	MOP SINK	ZURN	Z1996-24	FLOOR SET	MOLDED HIGH DENSITY COMPOSITE	24"x24" CORNER SET	WHITE	ZURN Z-842M1-LSI-RC-WHK-5H	PAIL HOOK, HOSE THREADS, & WALL BRACE	LEVERS	8"	3" GRID STRAINER	3"	½"	½"	---	3"	2"	PROVIDE W/ STAINLESS STEEL RIM GUARDS & WALL GUARDS, 5'-LONG HOSE, WALL HOOK, & MOP HANGER.	MS-1
WH-1	WALL HYDRANT	ZURN	Z1330	CONCEALED MODERATE CLIMATE	BRONZE W/ STAINLESS STEEL BOX	ENCASED W/ ACCESS DOOR	---	---	HOSE THREADS	LOOSE KEY OPERATED	---	---	---	¾"	---	---	---	---	MOUNT @ 24" A.F.F. PROVIDE W/ CODE-COMPLIANT VACUUM BREAKER & ISO VALVE IN CW SUPPLY.	WH-1
HB-1	HOSE BIBB	ZURN	Z1350-VB	CONCEALED	BRONZE W/ STAINLESS STEEL BOX	ENCASED W/ ACCESS DOOR	---	---	HOSE THREADS	LOOSE KEY OPERATED	---	---	---	¾"	---	---	---	---	MOUNT @ 24" A.F.F. PROVIDE W/ CODE-COMPLIANT VACUUM BREAKER.	HB-1
HB-2	HOSE BIBB	WOODFORD	Y24	EXPOSED	ROUGH BRONZE	VERTICAL MOUNT "Y" PATTERN	---	---	HOSE THREADS	LOOSE KEY OPERATED	---	---	---	¾"	---	---	---	---	MOUNT ON ROOF @ 24" ABOVE DECK. PROVIDE W/ CODE-COMPLIANT VACUUM BREAKER.	HB-2
OB-1	OUTLET BOX @ REFRIG.	GUY GRAY	BIM875	ICE MAKER SUPPLY	HOT-DIPPED GALVANIZED STEEL	RECESSED WALL MOUNT	---	INTEGRAL WITH BOX	---	---	---	---	---	½"	---	---	---	---	MOUNT @ 48" A.F.F. CENTERED IN WALL BEHIND EQUIPMENT.	OB-1
SH-1	SHOWER	REFER TO ARCHITECTURAL	---	A.D.A. COMPLIANT FOLD-UP SEAT	---	A.D.A. COMPLIANT LEVER VALVE OPPOSITE SEAT	---	ZURN Z7301-SS-MT-DV2P-HW-1.50-S9	FIXED & HAND-HELD SHOWER HEADS W/SLIDE BAR	SINGLE LEVER	---	ZURN ZN415-B-VP	2"	½"	½"	---	2"	2"	SET HW LIMIT STOP TO 110°F. PROVIDE SHOWER HEAD WITH 1.5 GPM MAX FLOW. REFER TO ARCHITECTURAL FOR ORIENTATION OF SEAT AND VALVE.	SH-1

ELECTRIC WATER HEATER SCHEDULE

MARK	MANUFACTURER	MODEL NO.	SERVICE	LOCATION	TANK CAPACITY	RECOVERY @ 100°F TEMPERATURE RISE	THERMAL EFFICIENCY	INPUT (KW)	FULL-LOAD AMPERES	VOLTAGE	PHASE	FREQUENCY	WATER CONNECTIONS	REMARKS	MARK

ELECTRIC TANKLESS WATER HEATER SCHEDULE

MARK	MANUFACTURER	MODEL NO.	SERVICE	LOCATION	TEMPERATURE RISE @ RATED FLOW	THERMAL EFFICIENCY	INPUT (KW)	FULL-LOAD AMPERES	VOLTAGE	PHASE	FREQUENCY	WATER CONNECTIONS	REMARKS	MARK

MIXING VALVE SCHEDULE

MARK	MANUFACTURER	MODEL NO.	SERVICE	LOCATION	MINIMUM FLOW	FLOW @ 20 PSI PRESSURE DROP	FINISH	INLET WATER CONNECTION	OUTLET WATER CONNECTION	REMARKS	MARK
MV-1	LEONARD	TM-20-E-RF	BUILDING MASTER TEMPERED HOT WATER SUPPLY	2ND FLOOR JANITOR ROOM	1.0 GPM	11.0 GPM	ROUGH BRONZE	¾" W/ INTEGRAL COMBINATION CHECK STOPS	¾"	REFER TO DETAILS. PROVIDE W/ OUTLET THERMOMETER. SET OUTLET TEMPERATURE @ 110°F.	MV-1

4

DRAINAGE SPECIALTIES AND CONNECTIONS SCHEDULE

MARK	SPECIALTY	MANUFACTURER	MODEL NO.	TYPE	MATERIAL	STYLE	SIZE	DOMESTIC CW	REMARKS	MARK
FD-1	FLOOR DRAIN (FINISHED AREA)	ZURN	ZN415-P-VP	NO HUB OR NEO-LOCK	CAST IRON/ NICKEL BRONZE TOP	POLISHED ROUND TOP	PER DWGS.	½" TRAP PRIMER	PROVIDE W/ TRAP PRIMER CONNECTION & VANDAL-PROOF SECURED TOP	FD-1
RD-1	ROOF DRAIN	ZURN	ZC100-DP-VP	NO HUB OR NEO-LOCK	CAST IRON BODY AND DOME	15" DIAMETER	PER DWGS.	---	PROVIDE W/ DECK PLATE (OR ROOF SUMP RECEIVER & UNDER DECK CLAMP) AND VANDAL RESISTANT SECURED DOME. REFER TO PLUMBING ROOF PLAN FOR DRAIN LOCATIONS & SIZES.	RD-1
RD-2	ROOF OVERFLOW DRAIN	ZURN	ZC100-DP-VP-W2	NO HUB OR NEO-LOCK	CAST IRON BODY AND DOME	15" DIAMETER	PER DWGS.	---	PROVIDE W/ DECK PLATE (OR ROOF SUMP RECEIVER & UNDER DECK CLAMP), 2" EXTERNAL WATER DAM, AND VANDAL RESISTANT SECURED DOME. REFER TO PLUMBING ROOF PLAN FOR DRAIN LOCATIONS & SIZES.	RD-2
FCO	FLOOR CLEANOUT	ZURN	ZN1400-BP-K-VP	ADJUSTABLE/ NO HUB OR NEO-LOCK	CAST IRON/ NICKEL BRONZE TOP	SCORIATED ROUND TOP	PER DWGS.	---	PROVIDE W/ VANDAL RESISTANT SECURED TOP. PROVIDE NICKEL BRONZE TOP IN FINISHED AREAS, BRONZE TOP IN UNFINISHED AREAS.	FCO
WCO	WALL CLEANOUT	ZURN	Z1441-BP-VP OR Z1446-BP-VP	NO HUB	CAST IRON/ STAINLESS STEEL COVER	POLISHED ROUND COVER	PER DWGS.	---	PROVIDE W/ VANDAL RESISTANT SECURED TOP.	WCO
BWV	BACKWATER VALVE	ZURN	Z1095-BV	FLAPPER TYPE	CAST IRON	UNDERGROUND	PER DWGS.	---	PROVIDE WITH VALVE BOX ACCESSIBLE FROM ABOVE FINISHED GRADE.	BWV

6

4

PUMP SCHEDULE

MARK	MANUFACTURER	MODEL NO.	SERVICE	LOCATION	CAPACITY (GPM)	DISCHARGE HEAD (FEET)	CONNECTIONS	MOTOR DATA					REMARKS	MARK
								HP	RPM	VOLTS	PHASE	FREQ.		
SP-1	WEIL	1409	ELEVATOR SUMP	ELEVATOR SUMP PIT	50	25	2"	1/3	1750	115	1	60 Hz	REFER TO DETAIL. MOUNT ELECTRICAL CONTROL PANEL ON WALL.	SP-1
CP-1	BELL & GOSSETT	SERIES 100	IN-LINE TEMPERED HOT WATER CIRCULATING PUMP	2ND FLOOR JANITOR ROOM	11	7	3/4"	1/12	1800	115	1	60 Hz	MOUNT ON WALL BELOW TEMPERING VALVE. REFER TO DETAILS.	CP-1

SA-1 SHOCK ARRESTER

PISTON OPERATED, TYPE "K" COPPER BARREL WITH BRASS THREADED ADAPTOR. ALL JOINTS SHALL BE MADE WITH 95-5 LEAD FREE SOLDER. THE PISTON SHALL BE EQUIPPED WITH TWO (2) "O" RINGS TO PROVIDE A PERMANENT MECHANICAL BARRIER BETWEEN FLUID AND PRE-LOAD AIR CHARGE. ARRESTORS MAY BE INSTALLED IN VERTICAL AND HORIZONTAL POSITION.

THE ARRESTOR SHALL BE FULLY GUARANTEED FOR ENTIRE SYSTEM LIFE.

NOTE:

SHOCK ARRESTORS SHALL BE PROVIDED AT ALL FIXTURES AND BATTERIES OF FIXTURES WHETHER OR NOT THEY ARE SHOWN ON THE DRAWINGS.

BASIS OF DESIGN

PRECISION PLUMBING PRODUCTS - SC SERIES

TP-1 AUTOMATIC TRAP PRIMER VALVE

MACHINED OF CORROSION RESISTANT BRASS SHALL NOT CONTAIN SPRINGS OR DIAPHRAMS, "O" RING SEALS TESTED FOR RELIABILITY BETWEEN -40 TO 4500 F. INLET OPENING SHALL BE 1/2-INCH MALE NPT, OUTLET SHALL BE 1/2-INCH FEMALE NPT.

TRAP PRIMER OPERATES VIA LINE PRESSURE DROP AND DOES NOT NEED TO BE PLACED NEAR A FIXTURE.

BASIS OF DESIGN

PRECISION PLUMBING PRODUCTS

GD-1 GARBAGE DISPOSER

½ HP HEAVY DUTY MOTOR (QUIET DURA DRIVE MOTOR)
GALVANIZED STEEL CONSTRUCTION.
120/1/60

BASIS OF DESIGN

IN-SINK-ERATOR MODEL-BADGER-5

RECORD SET
The information presented on this drawing is diagrammatic and is presented for general information purposes and should not be relied on for accuracy of dimensions, details and locations. Actual and exact conditions if required should be determined in the field.

JMWA ARCHITECTS
STEVEN E. MYOTT AIA
JAMES R. WILLIAMS AIA
RODOLFO ACEVEDO AIA
949 CLINT MOORE ROAD
BOCA RATON, FLORIDA 33487
TEL 561 997 9997
FAX 561 997 1610
WWW.JMWA.NET

PALMETTO BAY VILLAGE HALL
9705 E. Hibiscus St., Palmetto Bay, Florida

Master Builders of South Florida, Inc.
1400 E. Oakland Park Blvd. Suite 210
Oakland Park, FL 33334

Alvaro Gonzalez, P.E.
Florida License #69003

PROJECT NO. 609036
DESIGNED BY: JB
DRAWN BY: DLT
CHECKED BY: DHA

SUBMITTALS:
50% REVIEW 10.30.2009
PERMIT REVIEW 11.20.2009
BUILDING PERMIT 03.03.2010

REVISIONS:
4 DESIGN CHANGES 8/11/10
6 OWNER CHANGES 9/15/10

PLUMBING SCHEDULES

P0.2

© 2009 JMWA ARCHITECTS, INCORPORATED ALL RIGHTS RESERVED. NO PART OF THESE IDEAS, PLANS OR DESIGNS MAY BE REPRODUCED, COPIED OR UTILIZED GRAPHICALLY IN ANY FORM, WHATSOEVER WITHOUT THE EXPRESSED WRITTEN CONSENT OF JMWA ARCHITECTS INCORPORATED AND ITS BOARD OF DIRECTORS.

L:\2009--Jobs\609036--Palmetto Bay Municipal Center\CAD--MEP\Sheets P0.2.dwg 9/17/2010 1:47:21 PM yensi.izquierdo

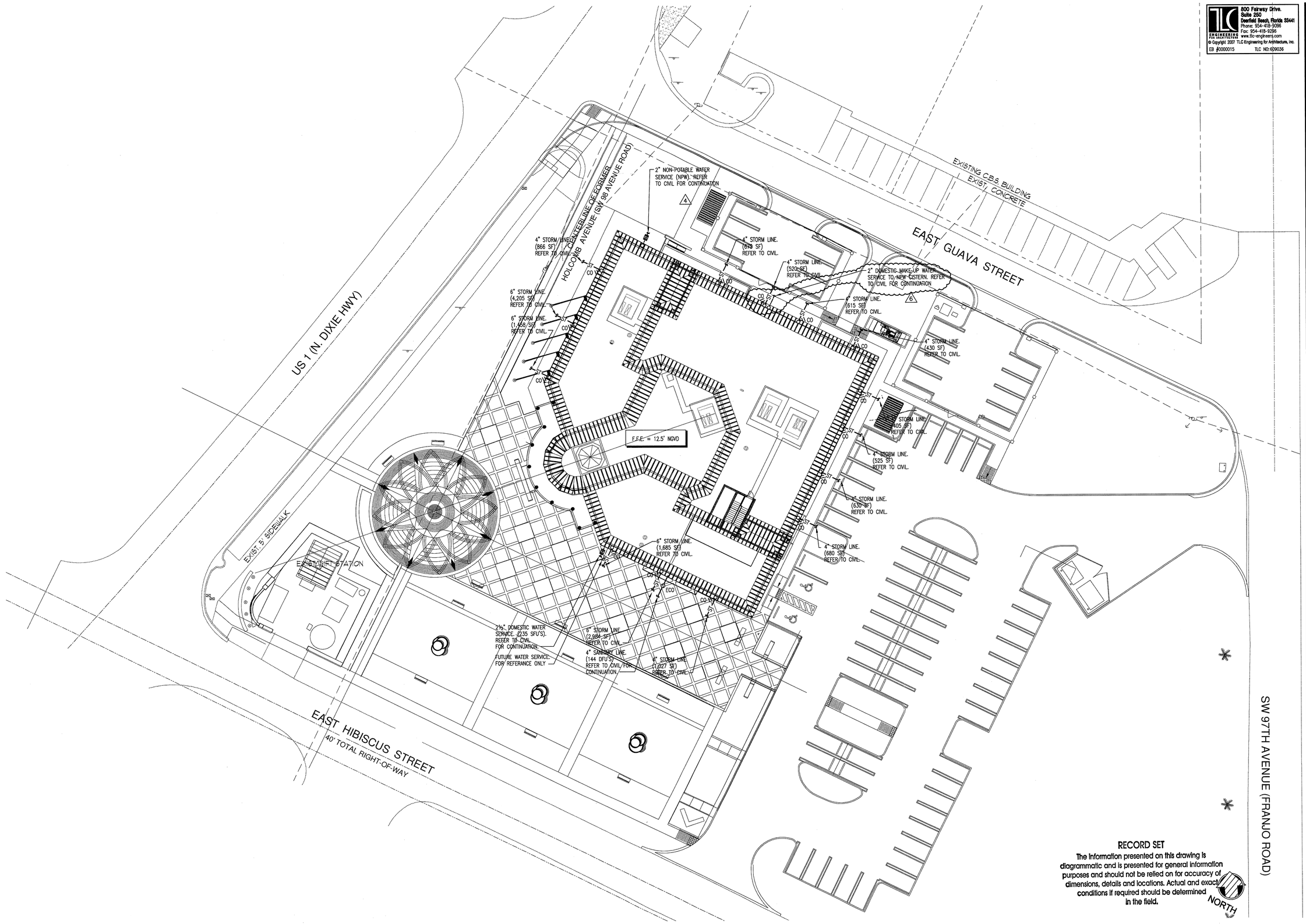

RECORD SET

The information presented on this drawing is diagrammatic and is presented for general information purposes and should not be relied on for accuracy of dimensions, details and locations. Actual and exact conditions if required should be determined in the field.

1 PLUMBING - SITE PLAN
SCALE: 1" = 20'-0"

TLC ENGINEERING FOR ARCHITECTURE
800 Fairway Drive, Suite 250
Deerfield Beach, Florida 33441
Phone: 954-418-9036
Fax: 954-418-9298
www.tlc-engineers.com
EB #0000015 TLC NO:609036

© Copyright 2007 TLC Engineering for Architecture, Inc.

JMWA ARCHITECTS
STEVEN E. MYOTT AIA
JAMES R. WILLIAMS AIA
RODOLFO ACEVEDO AIA
949 CLINT MOORE ROAD
BOCA RATON, FLORIDA 33487
TEL 561 997 9997
FAX 561 997 1610
WWW.JMWA.NET

PALMETTO BAY VILLAGE HALL

9705 E. Hibiscus St., Palmetto Bay, Florida

Master Builders of South Florida, Inc.
1400 E. Oakland Park Blvd. Suite 210
Oakland Park, FL 33334

Alvaro Gonzalez, P.E.
Florida License #69003

PROJECT NO. 609036
DESIGNED BY: JB
DRAWN BY: DLT
CHECKED BY: DHA

SUBMITTALS:
50% REVIEW 10.30.2009
PERMIT REVIEW 11.20.2009
BUILDING PERMIT 03.03.2010

REVISIONS:
4 DESIGN CHANGES 8/11/10
6 OWNER CHANGES 9/15/10

PLUMBING SITE PLAN

P1.1

© 2009 JMWA ARCHITECTS, INCORPORATED ALL RIGHTS RESERVED. NO PART OF THESE IDEAS, PLANS OR DESIGNS MAY BE REPRODUCED, COPIED OR UTILIZED GRAPHICALLY IN ANY FORM WHATSOEVER WITHOUT THE EXPRESSED WRITTEN CONSENT OF JMWA ARCHITECTS INCORPORATED AND ITS BOARD OF DIRECTORS.

L:\2009-Jobs\609036-Palmetto Bay Municipal Center\CAD-MEP\Sheets P1.1.dwg 9/17/2010 1:48:15 PM yensi.izquierdo

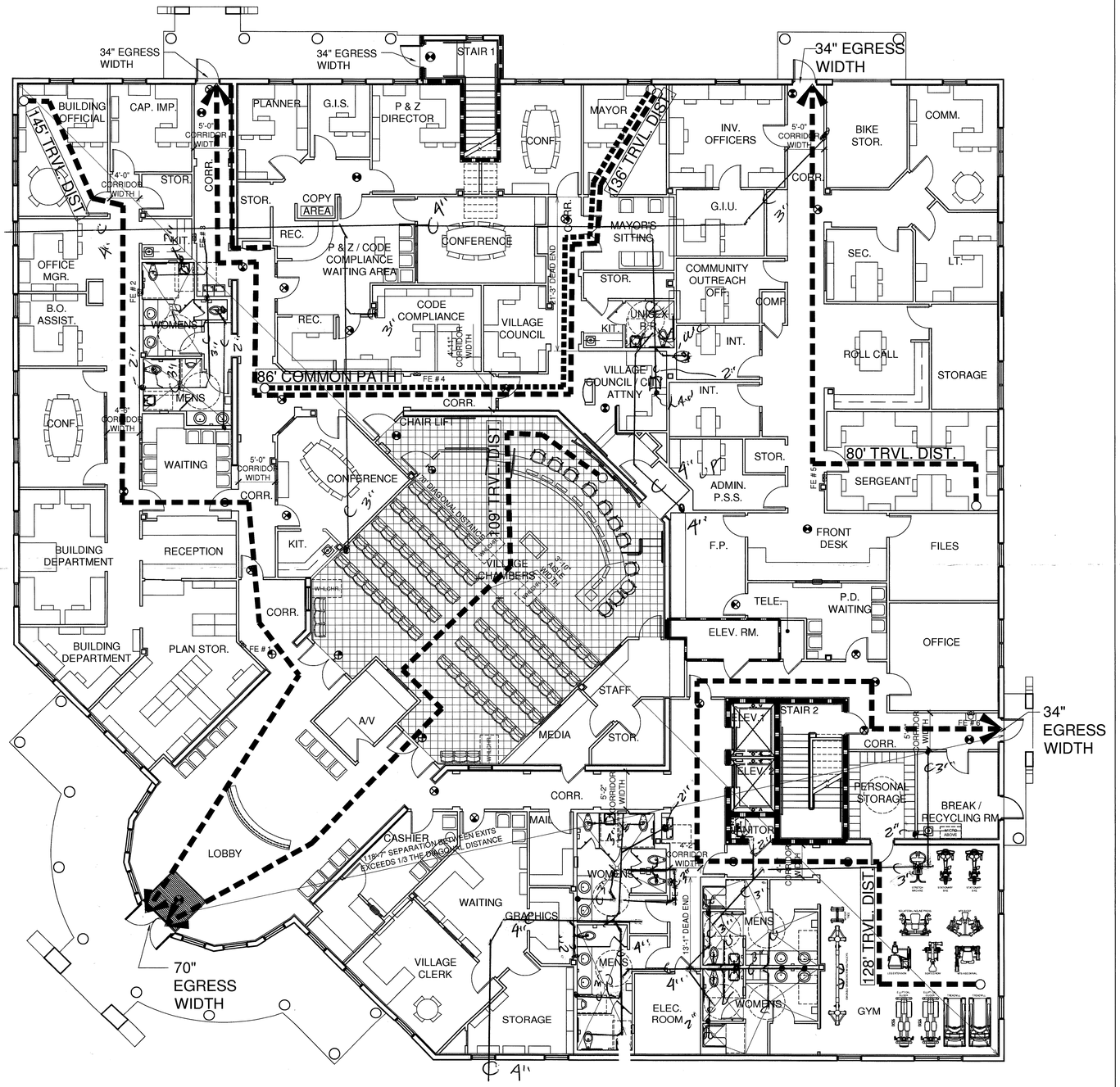

1 FIRST FLOOR LIFE SAFETY AND FURNITURE PLAN
SCALE: 1/8" = 1'-0"

MIXED OCCUPANCY AREA AND OCCUPANT CALCULATIONS

FUNCTION OF SPACE		SQUARE FEET PER OCCUPANT OR OCCUPANTS PER SEAT PER TABLE 1004.1.1	NUMBER OF SQUARE FEET	PERCENT OF TOTAL GROSS AREA	OCCUPANT LOAD
BUSINESS	1ST FLOOR	100 GROSS SF	16,483 SF	61.5 %	165
	2ND FLOOR INCL. FUTURE ROOF TERRACE	100 GROSS SF	8,617 SF	32.1 %	87
	TOTAL BUSINESS OCCUPANTS		25,100 SF		252
A-3 ASSEMBLY (ALL ON 1ST FLOOR)	WITH FIXED SEATS	1 PER SEAT	1,471 SF, 96 SEATS INCL. HC SPACES	5.5%	96
	UNCONC. TBLS. & CHRS.	15 SF NET	234 SF	0.9%	16
	TOTAL ASMBLY OCCUPANTS		1,705 SF		112
TOTALS			26,805 SF	100%	364

ALLOWABLE AREA, HEIGHT & EGRESS REQUIREMENTS

ALLOWABLE BUILDING AREA	ALLOWED	PROVIDED
ALLOWABLE BUILDING AREA IS PER F.B.C. CHAPTER 5, TABLE 503 GROUP A-3 (MOST RESTRICTIVE OCCUPANCY OF MIXED OCCUPANCY) AS MODIFIED BY FBC SECTION 506	32,874 SF/FLOOR	18,188 SF/1ST FL 8,617 SF/2ND FL
ALLOWABLE BUILDING HEIGHT	ALLOWED	PROVIDED
ALLOWABLE BUILDING HEIGHT IS PER F.B.C. CHAPTER 5, TABLE 503 GROUP A-3 (MOST RESTRICITVE OCCUPANCY OF MIXED OCCUPANCY ALLOWABLE HEIGHT FOR TYPE V-B MIXED OCCUPANCY INCLUDES A 1-STORY AUTOMATIC FIRE SPRINKLER INCREASE.	2 STORIES	2 STORIES
NUMBER OF EXITS (AS REQUIRED PER FBC SECION 1019.1)	REQUIRED	PROVIDED
1ST FLOOR	2	4
2ND FLOOR	2	2
EGRESS WIDTH	REQUIRED	PROVIDED
EGRESS WIDTH .PER FBC TABLE 1005.1 IS .2" PER OCCUPANT 364 OCCUPANTS X .2"/OCCUPANT = XX.X" REQUIRED EGRESS WIDTH	72.8"	206.0"
STAIR WIDTH	REQUIRED	PROVIDED
STAIR WIDTH .PER FBC TABLE 1005.1 IS .3" PER OCCUPANT 87OCCUPANTS X .3"/OCCUPANT = XX.X" REQUIRED EGRESS WIDTH	26.1"	96.0"
EXIT ACCESS TRAVEL DISTANCE	MAXIMUM	PROVIDED
MAX.TRVL. DISTANCE PER TABLE 1016.1 FOR SPRNKLERED B OCCUPANCY	300'	145'
MINIMUM CORRIDOR WIDTH	MINIMUM	PROVIDED
MINIMUM CORRIDOR WIDTH PER TABLE 1017.2	44"	MIN 48 "
MINIMUM CORRIDOR FIRE RATING	MINIMUM	PROVIDED
MINIMUM CORRIDOR FIRE RATING PER TABLE 1017.2 AND FOOTNOTE C	0 HOURS	0 HOURS
MAXIMUM DEAD END CORRIDOR	MAXIMUM	PROVIDED
MAXIMUM DEAD END CORRIDOR PER SECTION 1017.3 B OCCUPANCY	50'	21'-3"
MAXIMUM COMMON PATH OF TRAVEL LENGTH	MAXIMUM	PROVIDED
MAX. COMMON PATH OF EGRESS TRAVEL PER SEC.1014.3 FOR B OCCUPANCY	100'	86'

GENERAL NOTES

1. OCCUPANCY CLASSIFICATION IS MIXED OCCUPANCY WITH **UNSEPARATED OCCUPANCIES**

2. CLASSIFICATION OF HAZARD IS **ORDINARY HAZARD** IN ACCORDANCE WITH NFPA 101 - 6.2.2.3

3. BUILDING TO BE FULLY AUTOMATIC SPRINKLERED. SEE FIRE PROTECTION PERMIT DRAWINGS BY OTHERS.

4. SPRINKLER SYSTEM SHALL BE INSTALLED BY AN APPROVED AUTOMATIC FIRE SPRINKLER CONTRACTOR WHO MUST SUBMIT COMPLETE ENGINEERED SPRINKLER PLANS AND HYDRAULIC CALCULATIONS SIGNED AND SEALED BY A REGISTERED PROFESSIONAL FLORIDA ENGINEER. THE SYSTEM SHALL COMPLY WITH N.F.P.A. SECTIONS 13, 14, 20 AND ALL APPLICABLE SECTIONS OF THE FLORIDA BUILDING CODE, 2007 EDITION.

5. ALL SPRINKLER HEADS IN FINISHED AREAS SHALL BE CHROME PLATED, SEMI RECESSED.

6. THE CONTRACTOR SHALL PROVIDE AND INSTALL (1) 10 LB. ABC TYPE U.L. LISTED FIRE EXTINGUISHER 1 PER 75'-0" OR 2500 S.F. LOCATION SHALL BE APPROVED BY FIRE MARSHALL PRIOR TO INSTALLATION.

7. FURNITURE SHOWN FOR EGRESS INFORMATION ONLY

8. ALL FIRE AND/OR SMOKE SEPARATION WALLS MUST BE IDENTIFIED ABOVE DECORATIVE CEILING AND IN CONCEALED SPACES BY STENCILED SIGN READING: "FIRE AND SMOKE BARRIER PROTECT ALL OPENINGS"

9. HEADROOM IN ALL MEANS OF EGRESS SHALL BE MINIUM 7'-6" WITH PROJECTIONS NOT LESS THAN 6'-8"

10. ABRUPT CHANGES IN ELEVATION OF WALKING SURFACES SHALL NOT EXCEED 1/4". CHANGES IN ELEVATION BETWEEN 1/4" AND 1/2" SHALL BE LEVELED 1 TO 2.

INTERIOR WALL AND CEILING FINISH INFORMATON

BUSINESS OCCUPANCY		ASSEMBLY OCCUPANCY	
EXIT OR EXIT ACCCES CORRIDORS	ALL OTHER AREAS	CORRIDORS OR LOBBIES	COUNCIL CHAMBER ASSEMBLY AREA
CLASS A OR B	CLASS A, B, OR C	CLASS A OR B	CLASS A, B, OR C

INTERIOR FLOOR FINISH INFORMATON

BUSINESS OCCUPANCY EXIT ENCLOSURES SHALL BE CLASS I OR II	ASSEMBLY OCCUPANCY EXIT ENCLOSURES AND EXIT ACCESS CORRIDORS AND IS SPACES NOT SEPARATED FROM THEM SHALL BE CLASS I OR II

LEGEND

- XX' TRAVEL DISTANCE — DENOTES PATH OF EGRESS AND TRAVEL DISTANCE
- XX' COMMON PATH — DENOTES COMMON PATH OF EGRESS TRAVEL DISTANCE
- 2 HOUR FIRE RATED WALL
- 1 HOUR FIRE RATED WALL
- FE # — FIRE EXTINGUISHER CABINET
- EXIT SIGN
- HATCHED AREA INDICATES ASSEMBLY OCCUPANCY

RECORD SET

The information presented on this drawing is diagrammatic and is presented for general information purposes and should not be relied on for accuracy of dimensions, details and locations. Actual and exact conditions if required should be determined in the field.

JMWA ARCHITECTS

STEVEN E. MYOTT AIA
JAMES R. WILLIAMS AIA
RODOLFO ACEVEDO AIA

949 CLINT MOORE ROAD
BOCA RATON, FLORIDA 33487
TEL 561 997 9997
FAX 561 997 1610

WWW.JMWA.NET

PALMETTO BAY VILLAGE HALL
Palmetto Bay, Florida

Master Builders of South Florida, Inc.
1400 E. Oakland Park Blvd. Suite 210
Oakland Park, FL 33334

FLORIDA LICENSURE

AAC002193 IB0001142

PROJECT NO.	8714.00
DESIGNED BY:	RA
DRAWN BY:	DW / EK / JS
CHECKED BY:	JW

SUBMITTALS:
FOUNDATION PERMIT 12.16.2009

50% REVIEW	10.30.2009
PERMIT REVIEW	11.20.2009
95% REVIEW	01.26.2010

NOT FOR CONSTRUCTION

REVISIONS:

FIRST FLOOR LIFE SAFETY & FURNITURE PLAN

P1.2

A121

© 2009 JMWA ARCHITECTS, INCORPORATED ALL RIGHTS RESERVED. NO PART OF THESE IDEAS, PLANS OR DESIGNS MAY BE REPRODUCED, COPIED OR UTILIZED GRAPHICALLY IN ANY FORM WHATSOEVER WITHOUT THE EXPRESSED WRITTEN CONSENT OF JMWA ARCHITECTS INCORPORATED AND ITS BOARD OF DIRECTORS.

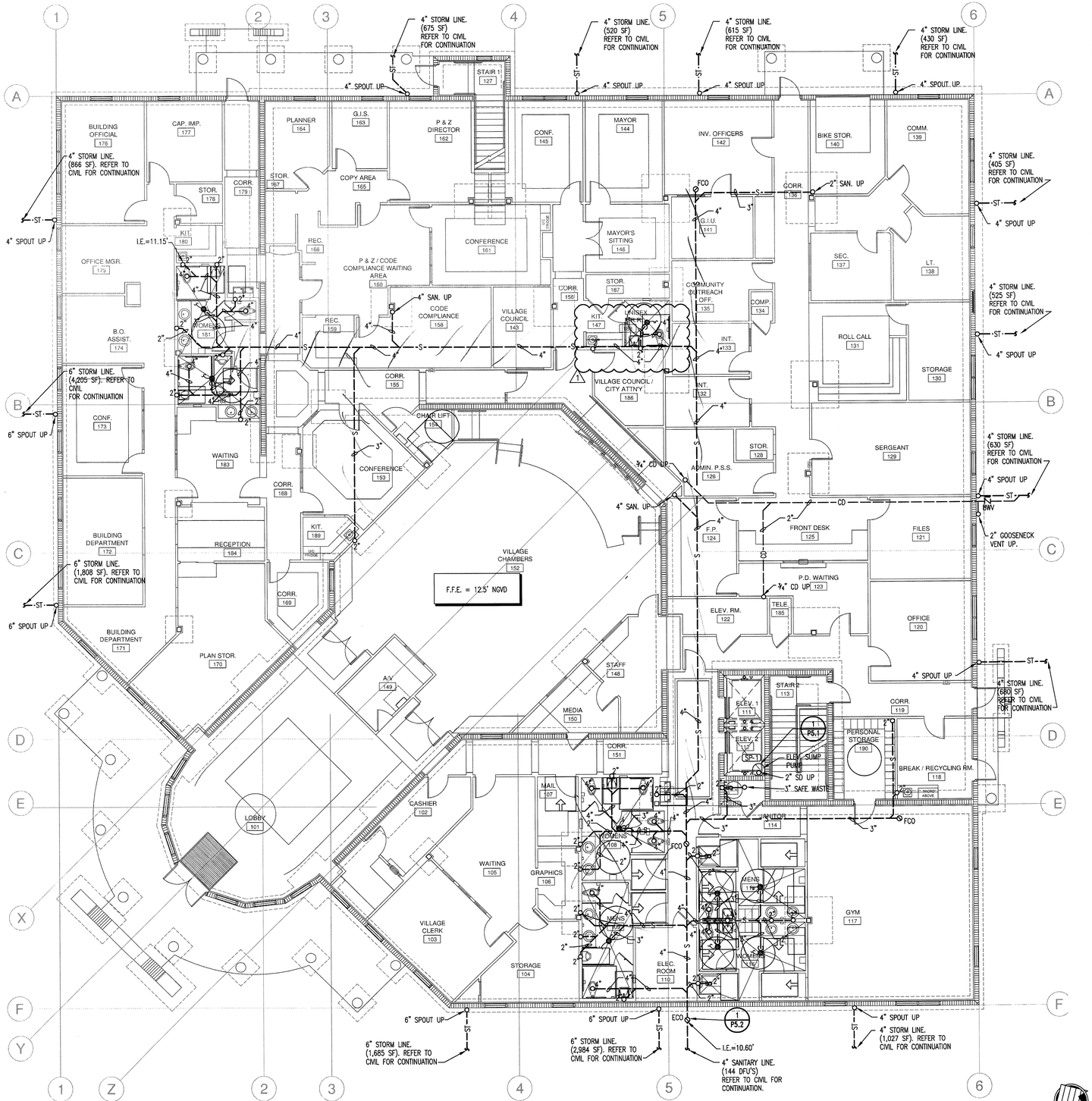

1 PLUMBING - FOUNDATION PLAN
SCALE: 1/8" = 1'-0"

See P1.2 for interior

RECORD SET

The information presented on this drawing is diagrammatic and is presented for general information purposes and should not be relied on for accuracy of dimensions, details and locations. Actual and exact conditions if required should be determined in the field.

TLC ENGINEERING FOR ARCHITECTURE
800 Fairway Drive.
Suite 250
Deerfield Beach, Florida 33441
Phone: 954-418-9096
Fax: 954-418-9296
www.tlc-engineers.com

© Copyright 2007 TLC Engineering for Architecture, Inc.
EB #0000015 TLC NO: 609036

JMWA ARCHITECTS
STEVEN E. MYOTT AIA
JAMES R. WILLIAMS AIA
RODOLFO ACEVEDO AIA

949 CLINT MOORE ROAD
BOCA RATON, FLORIDA 33487
TEL 561 997 9997
FAX 561 997 1610

WWW.JMWA.NET

PALMETTO BAY VILLAGE HALL

9705 E. Hibiscus St., Palmetto Bay, Florida

Master Builders of South Florida, Inc.
1400 E. Oakland Park Blvd. Suite 210
Oakland Park, FL 33334

Alvaro Gonzalez, P.E.
Florida License #69003

PROJECT NO. 609036
DESIGNED BY: JB
DRAWN BY: DLT
CHECKED BY: DHA

SUBMITTALS:
50% REVIEW 10.30.2009
PERMIT REVIEW 11.20.2009
BUILDING PERMIT 03.03.2010

REVISIONS:
1. PERMIT COMMENTS 4-02-10

PLUMBING FOUNDATION PLAN

P1.2

©2009 JMWA ARCHITECTS, INCORPORATED ALL RIGHTS RESERVED. NO PART OF THESE IDEAS, PLANS OR DESIGNS MAY BE REPRODUCED, COPIED OR UTILIZED GRAPHICALLY IN ANY FORM WHATSOEVER WITHOUT THE EXPRESSED WRITTEN CONSENT OF JMWA ARCHITECTS INCORPORATED AND ITS BOARD OF DIRECTORS.

L:\2009-Jobs\609036-Palmetto Bay Municipal Center\CAD-MEP\Sheets P1.2.dwg 4/22/2010 1:28:12 PM jared.hunt

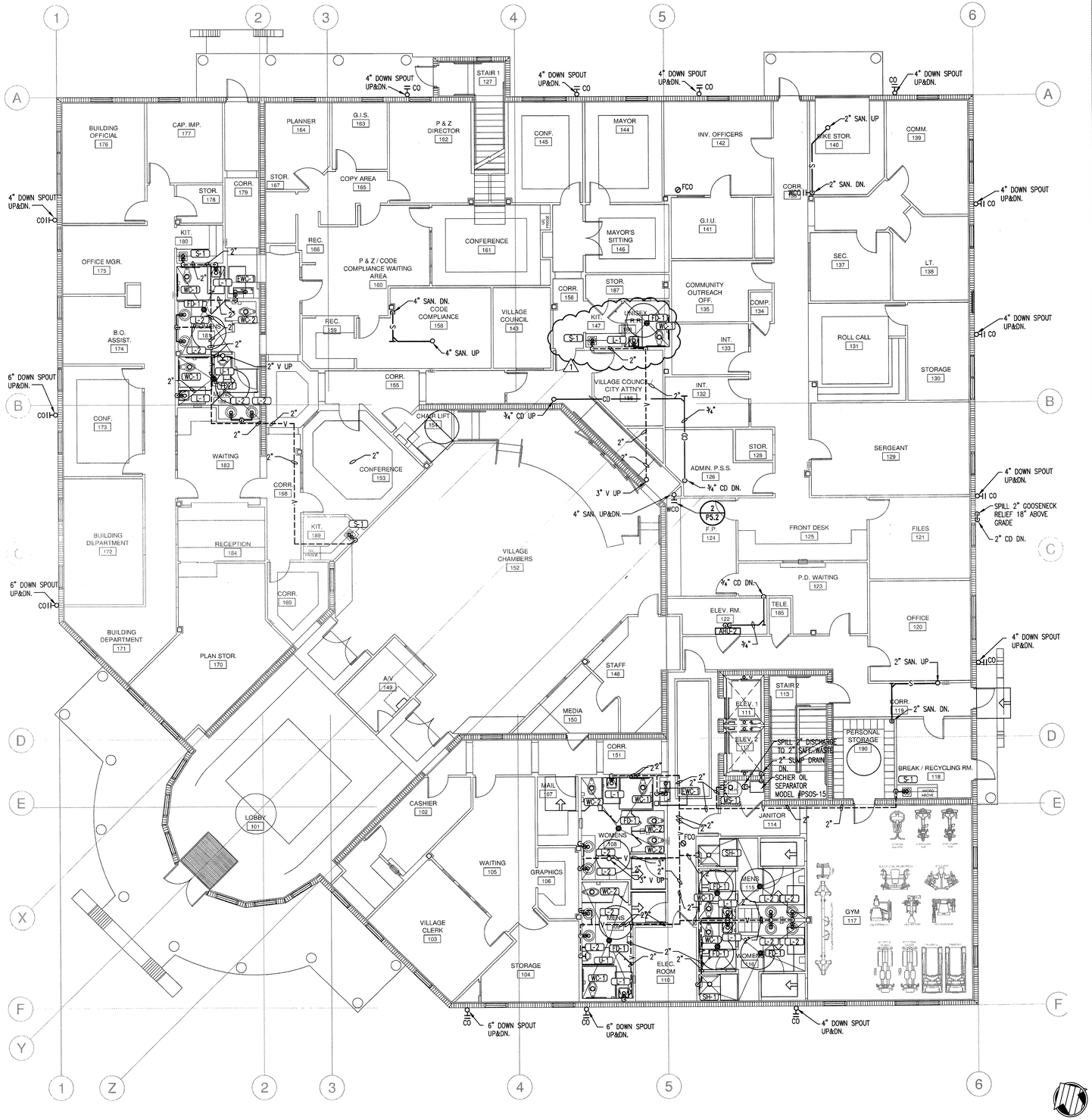

1 PLUMBING - FIRST FLOOR PLAN - SANITARY
SCALE: 1/8" = 1'-0"

RECORD SET

The information presented on this drawing is diagrammatic and is presented for general information purposes and should not be relied on for accuracy of dimensions, details and locations. Actual and exact conditions if required should be determined in the field.

TLC ENGINEERING FOR ARCHITECTURE
800 Fairway Drive.
Suite 250
Deerfield Beach, Florida 33441
Phone: 954-418-9096
Fax: 954-418-9296
www.tlc-engineers.com

© Copyright 2007 TLC Engineering for Architecture, Inc.

EB #0000015 TLC NO: 609036

JMWA ARCHITECTS
STEVEN E. MYOTT AIA
JAMES R. WILLIAMS AIA
RODOLFO ACEVEDO AIA

949 CLINT MOORE ROAD
BOCA RATON, FLORIDA 33487
TEL 561 997 9997
FAX 561 997 1610

WWW.JMWA.NET

PALMETTO BAY VILLAGE HALL

9705 E. Hibiscus St., Palmetto Bay, Florida

Master Builders of South Florida, Inc.
1400 E. Oakland Park Blvd. Suite 210
Oakland Park, FL 33334

Alvaro Gonzalez, P.E.
Florida License #69003

PROJECT NO. 609036
DESIGNED BY: JB
DRAWN BY: DLT
CHECKED BY: DHA

SUBMITTALS:
50% REVIEW 10.30.2009
PERMIT REVIEW 11.20.2009
BUILDING PERMIT 03.03.2010

REVISIONS:
1 PERMIT COMMENTS 4-02-10

PLUMBING
FIRST FLOOR PLAN
SANITARY

P2.1

© 2009 JMWA ARCHITECTS, INCORPORATED ALL RIGHTS RESERVED. NO PART OF THESE IDEAS, PLANS OR DESIGNS MAY BE REPRODUCED, COPIED OR UTILIZED GRAPHICALLY IN ANY FORM WHATSOEVER WITHOUT THE EXPRESSED WRITTEN CONSENT OF JMWA ARCHITECTS INCORPORATED AND ITS BOARD OF DIRECTORS.

L:\2009--Jobs\609036--Palmetto Bay Municipal Center\CAD--MEP\Sheets P2.1.dwg 4/22/2010 1:28:32 PM jared.hunt

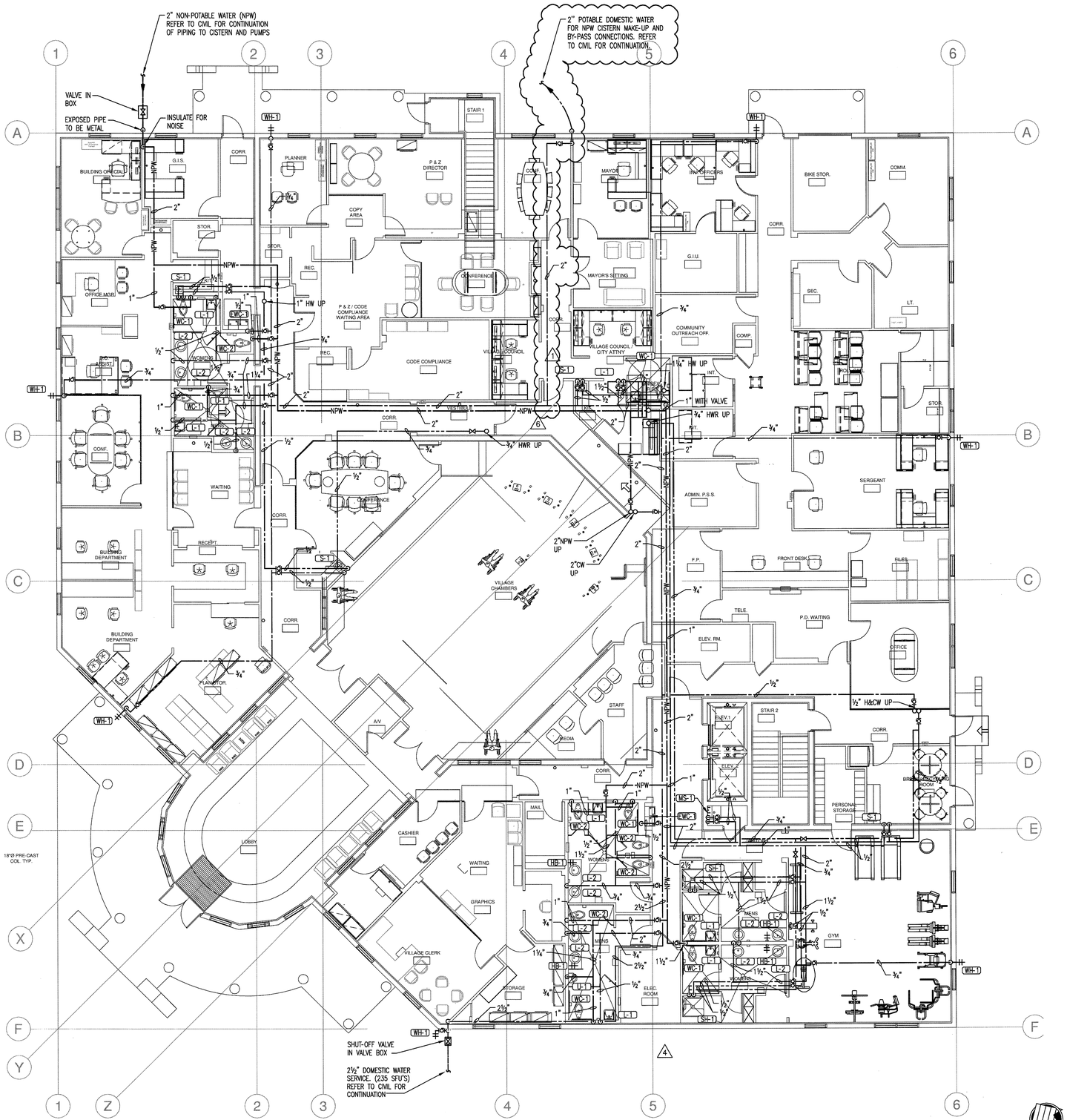

1 PLUMBING - FIRST FLOOR PLAN - WATER
SCALE: 1/8" = 1'-0"

RECORD SET

The information presented on this drawing is diagrammatic and is presented for general information purposes and should not be relied on for accuracy of dimensions, details and locations. Actual and exact conditions if required should be determined in the field.

TLC ENGINEERING FOR ARCHITECTURE
800 Fairway Drive.
Suite 250
Deerfield Beach, Florida 33441
Phone: 954-418-9096
Fax: 954-418-9296
www.tlc-engineers.com
EB #0000015 TLC NO:609036

© Copyright 2007 TLC Engineering for Architecture, Inc.

JMWA ARCHITECTS
STEVEN E. MYOTT AIA
JAMES R. WILLIAMS AIA
RODOLFO ACEVEDO AIA

949 CLINT MOORE ROAD
BOCA RATON, FLORIDA 33487
TEL 561 997 9997
FAX 561 997 1610

WWW.JMWA.NET

PALMETTO BAY VILLAGE HALL

9705 E. Hibiscus St., Palmetto Bay, Florida

Master Builders of South Florida, Inc.
1400 E. Oakland Park Blvd. Suite 210
Oakland Park, FL 33334

Alvaro Gonzalez, P.E.
Florida License #69003

PROJECT NO. 609036
DESIGNED BY: JB
DRAWN BY: DLT
CHECKED BY: DHA

SUBMITTALS:

50% REVIEW	10.30.2009
PERMIT REVIEW	11.20.2009
BUILDING PERMIT	03.03.2010

REVISIONS:

1	PERMIT COMMENTS	4/02/10
4	DESIGN CHANGES	8/11/10
6	OWNER CHANGES	9/15/10

PLUMBING
FIRST FLOOR PLAN
WATER

P2.2

© 2009 JMWA ARCHITECTS. INCORPORATED ALL RIGHTS RESERVED. NO PART OF THESE IDEAS, PLANS OR DESIGNS MAY BE REPRODUCED, COPIED OR UTILIZED GRAPHICALLY IN ANY FORM WHATSOEVER WITHOUT THE EXPRESSED WRITTEN CONSENT OF JMWA ARCHITECTS INCORPORATED AND ITS BOARD OF DIRECTORS.

L:\2009-Jobs\609036-Palmetto Bay Municipal Center\CAD-MEP\Sheets P2.2.dwg 9/17/2010 1:48:54 PM yensi.izquierdo

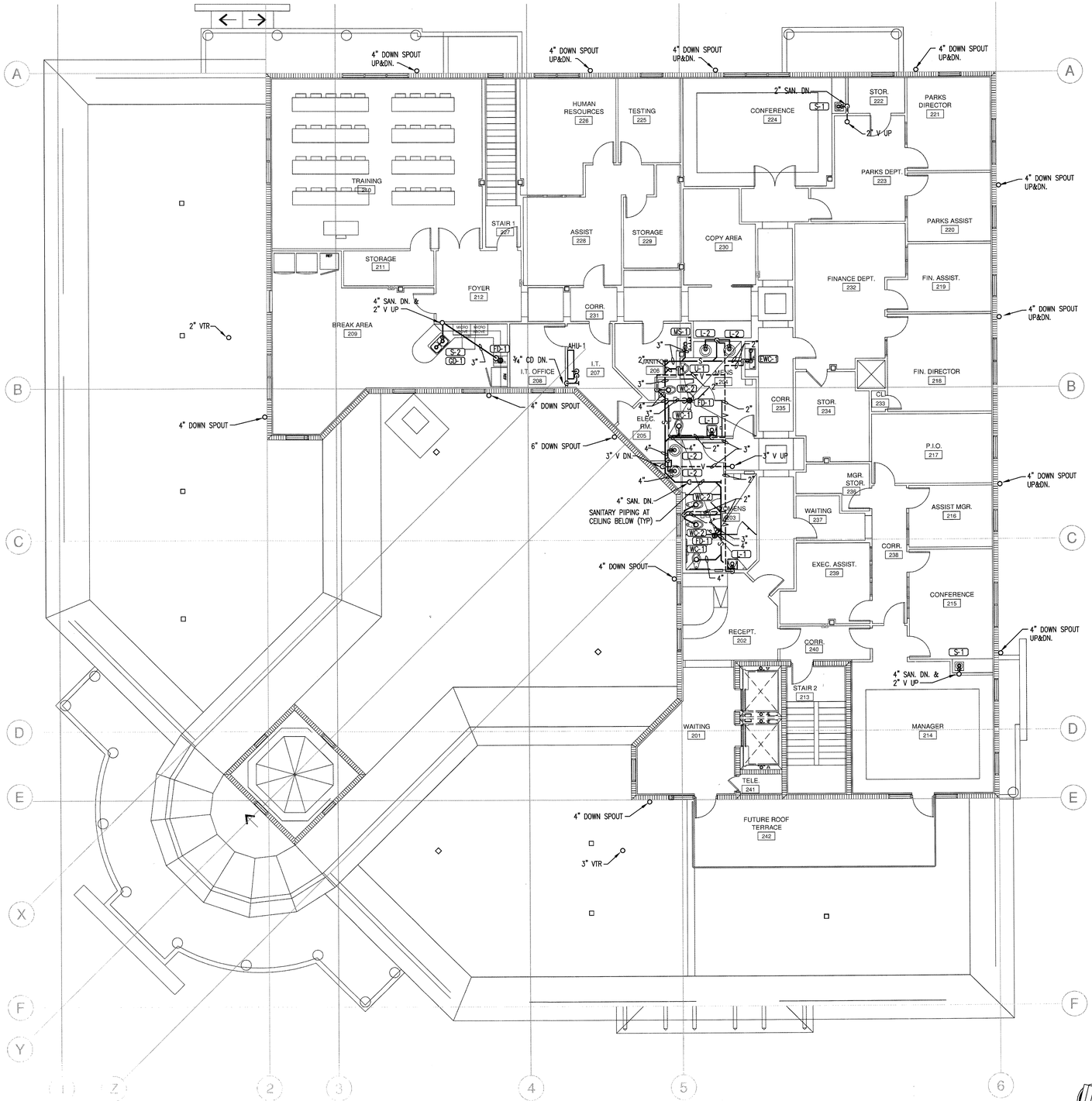

NORTH

1 PLUMBING - SECOND FLOOR PLAN - SANITARY
SCALE: 1/8" = 1'-0"

RECORD SET
The information presented on this drawing is diagrammatic and is presented for general information purposes and should not be relied on for accuracy of dimensions, details and locations. Actual and exact conditions if required should be determined in the field.

TLC ENGINEERING FOR ARCHITECTURE
800 Fairway Drive.
Suite 250
Deerfield Beach, Florida 33441
Phone: 954-418-9096
Fax: 954-418-9298
www.tlc-engineers.com

© Copyright 2007 TLC Engineering for Architecture, Inc.
EB #0000015 TLC NO: 609036

JMWA ARCHITECTS
STEVEN E. MYOTT AIA
JAMES R. WILLIAMS AIA
RODOLFO ACEVEDO AIA
949 CLINT MOORE ROAD
BOCA RATON, FLORIDA 33487
TEL 561 997 9997
FAX 561 997 1610
WWW.JMWA.NET

PALMETTO BAY VILLAGE HALL
Palmetto Bay, Florida

Master Builders of South Florida, Inc.
1400 E. Oakland Park Blvd. Suite 210
Oakland Park, FL 33334

Alvaro Gonzalez, P.E.
Florida License #69003

PROJECT NO. 609036
DESIGNED BY: JB
DRAWN BY: DLT
CHECKED BY: DHA

SUBMITTALS:
50% REVIEW 10.30.2009
PERMIT REVIEW 11.20.2009
BUILDING PERMIT 03.03.2010

REVISIONS:

PLUMBING
SECOND FLOOR PLAN
SANITARY

P2.3

© 2009 JMWA ARCHITECTS, INC. INCORPORATED ALL RIGHTS RESERVED. NO PART OF THESE IDEAS, PLANS OR DESIGNS MAY BE REPRODUCED, COPIED OR UTILIZED GRAPHICALLY IN ANY FORM WHATSOEVER WITHOUT THE EXPRESSED WRITTEN CONSENT OF JMWA ARCHITECTS INCORPORATED AND ITS BOARD OF DIRECTORS.

L:\2009-Jobs\609036-Palmetto Bay Municipal Center\CAD-MEP\Sheets P2.3.dwg 3/8/2010 12:00:31 PM jared.hunt

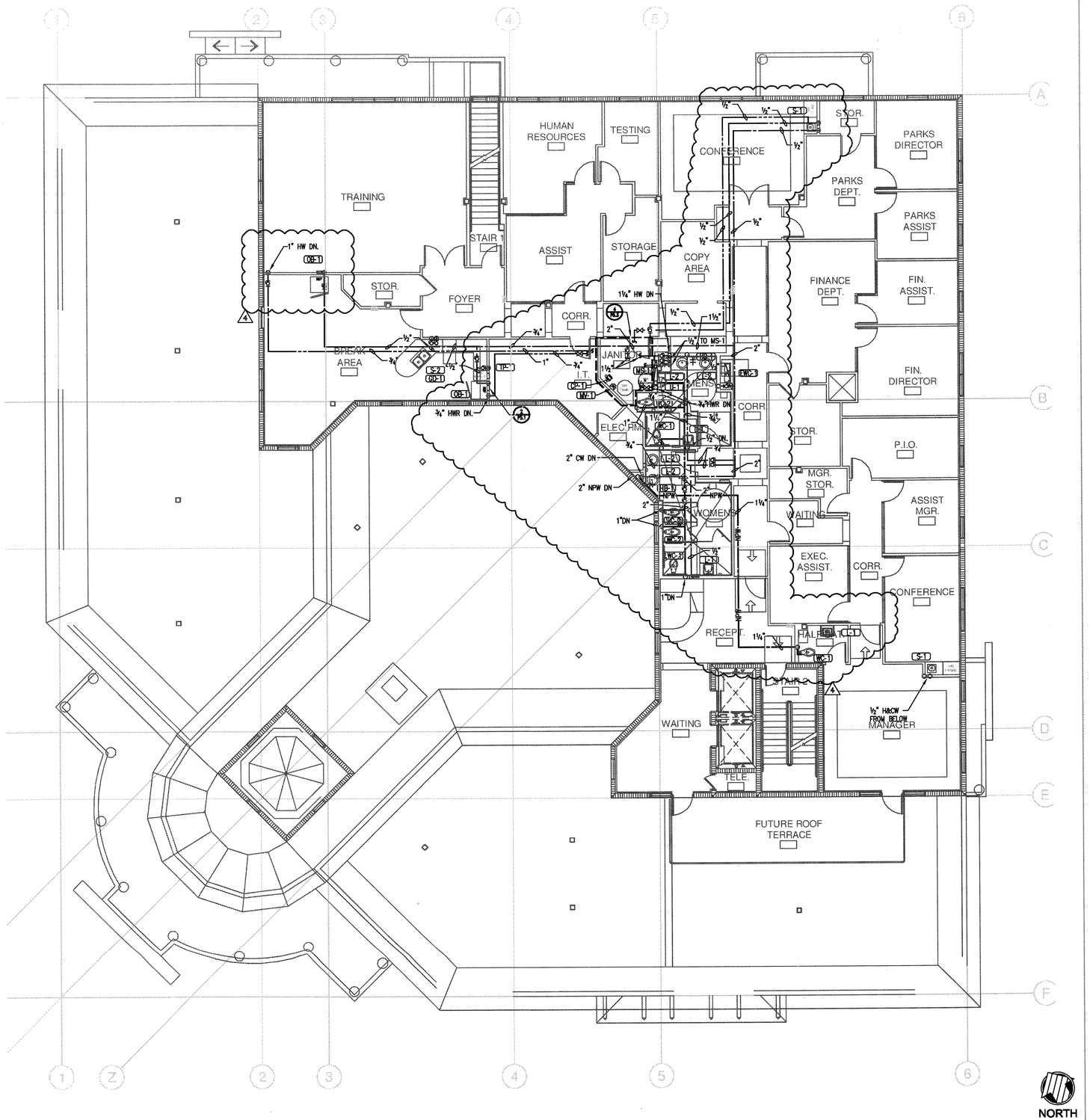

1 PLUMBING - SECOND FLOOR PLAN - WATER
SCALE 1/8" = 1'-0"

RECORD SET

The information presented on this drawing is diagrammatic and is presented for general information purposes and should not be relied on for accuracy of dimensions, details and locations. Actual and exact conditions if required should be determined in the field.

TLC ARCHITECTURE
800 Fairway Drive.
Suite 260
Deerfield Beach, Florida 33441
Phone: 954-418-9005
Fax: 954-418-9296
www.tlc-engineers.com

© Copyright 2007 TLC Engineering for Architecture, Inc.

EB #0000015 TLC NO: 609036

JMWA ARCHITECTS
STEVEN E. MYOTT AIA
JAMES R. WILLIAMS AIA
RODOLFO ACEVEDO AIA
949 CLINT MOORE ROAD
BOCA RATON, FLORIDA 33487
TEL 561 997 9997
FAX 561 997 1610
WWW.JMWA.NET

PALMETTO BAY VILLAGE HALL

9705 E. Hibiscus St., Palmetto Bay, Florida

Master Builders of South Florida, Inc.
1400 E. Oakland Park Blvd. Suite 210
Oakland Park, FL 33334

Alvaro Gonzalez, P.E.
Florida License #69003

PROJECT NO. 609036
DESIGNED BY: JB
DRAWN BY: DLT
CHECKED BY: DHA

SUBMITTALS:
50% REVIEW 10.30.2009
PERMIT REVIEW 11.20.2009
BUILDING PERMIT 03.03.2010

REVISIONS:
4 DESIGN CHANGES 8/11/10

PLUMBING SECOND FLOOR PLAN WATER

P2.4

© 2009 JMWA ARCHITECTS, INCORPORATED ALL RIGHTS RESERVED. NO PART OF THESE IDEAS, PLANS OR DESIGNS MAY BE REPRODUCED, COPIED OR UTILIZED GRAPHICALLY IN ANY FORM WHATSOEVER WITHOUT THE EXPRESSED WRITTEN CONSENT OF JMWA ARCHITECTS INCORPORATED AND ITS BOARD OF DIRECTORS.

L:\2009-Jobs\609036-Palmetto Bay Municipal Center\CAD-MEP\Sheets P2.4.dwg 8/11/2010 5:37:15 PM jared.hunt

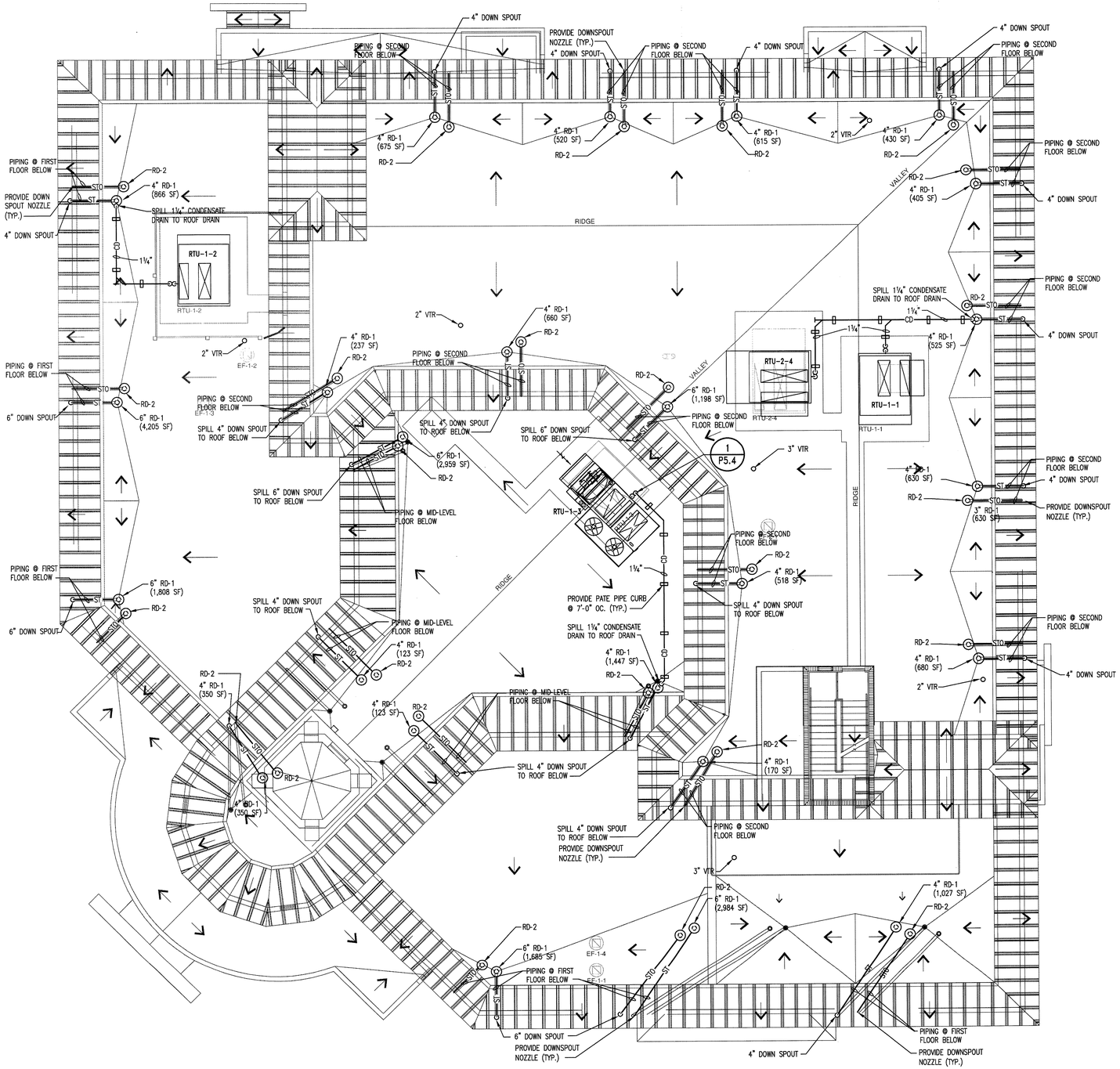

1 PLUMBING - ROOF PLAN
SCALE: 1/8" = 1'-0"

RECORD SET

The information presented on this drawing is diagrammatic and is presented for general information purposes and should not be relied on for accuracy of dimensions, details and locations. Actual and exact conditions if required should be determined in the field.

TLC ENGINEERING FOR ARCHITECTURE
800 Fairway Drive.
Suite 250
Deerfield Beach, Florida 33441
Phone: 954-418-9096
Fax: 954-418-9296
www.tlc-engineers.com

© Copyright 2007 TLC Engineering for Architecture, Inc.

EB #0000015 TLC NO: 609036

JMWA ARCHITECTS
STEVEN E. MYOTT AIA
JAMES R. WILLIAMS AIA
RODOLFO ACEVEDO AIA

949 CLINT MOORE ROAD
BOCA RATON, FLORIDA 33487
TEL 561 997 9997
FAX 561 997 1610

WWW.JMWA.NET

PALMETTO BAY VILLAGE HALL

Palmetto Bay, Florida

Master Builders of South Florida, Inc.
1400 E. Oakland Park Blvd. Suite 210
Oakland Park, FL 33334

Alvaro Gonzalez, P.E.
Florida License #69003

PROJECT NO. 609036
DESIGNED BY: JB
DRAWN BY: DLT
CHECKED BY: DHA

SUBMITTALS:

50% REVIEW	10.30.2009
PERMIT REVIEW	11.20.2009
BUILDING PERMIT	03.03.2010

REVISIONS:

PLUMBING
ROOF PLAN

P2.5

© 2009 JMWA ARCHITECTS, INCORPORATED ALL RIGHTS RESERVED. NO PART OF THESE IDEAS, PLANS OR DESIGNS MAY BE REPRODUCED, COPIED OR UTILIZED GRAPHICALLY IN ANY FORM WHATSOEVER WITHOUT THE EXPRESSED WRITTEN CONSENT OF JMWA ARCHITECTS INCORPORATED AND ITS BOARD OF DIRECTORS.

L:\2009--Jobs\609036-Palmetto Bay Municipal Center\CAD-MEP\Sheets P2.5.dwg 3/8/2010 12:01:12 PM jared.hunt

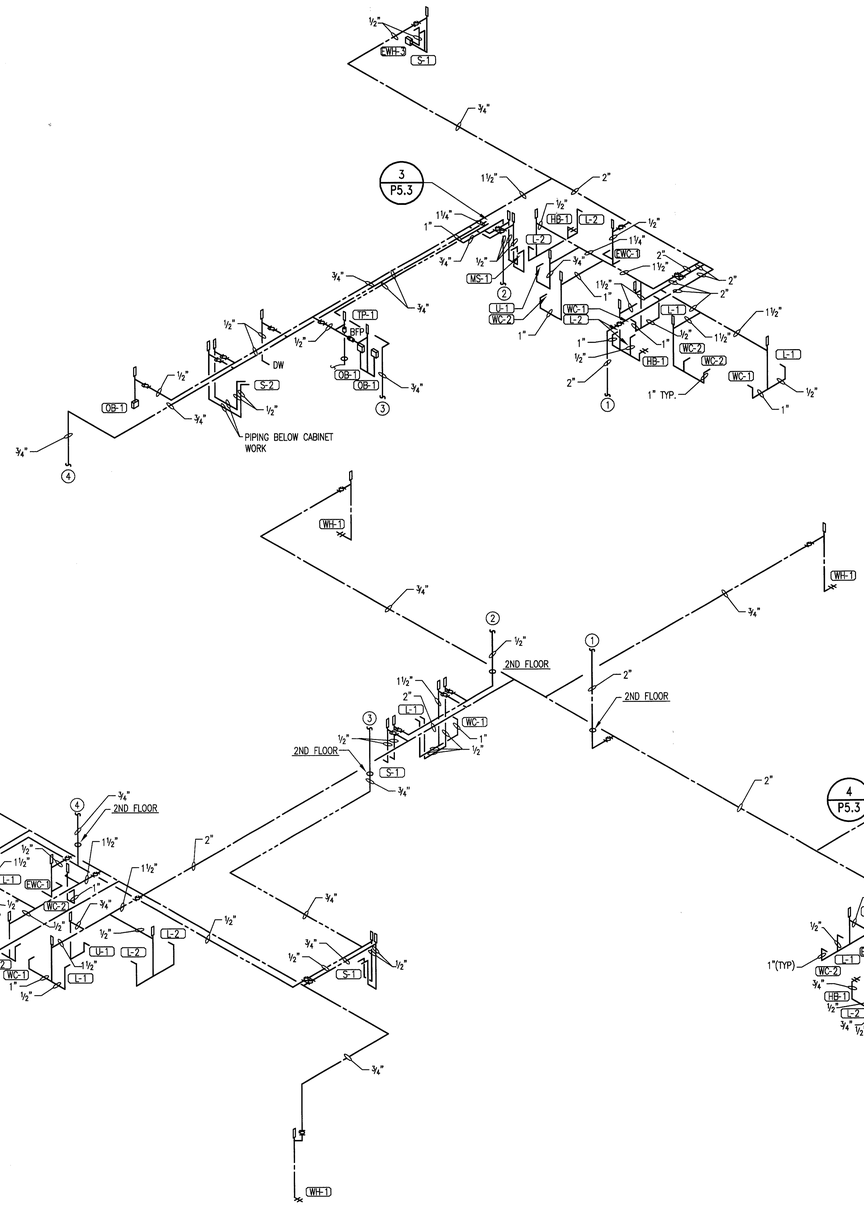

WATER RISER DIAGRAM

SCALE: NTS

RECORD SET

The information presented on this drawing is diagrammatic and is presented for general information purposes and should not be relied on for accuracy of dimensions, details and locations. Actual and exact conditions if required should be determined in the field.

ENGINEERING PLAN ARCHITECTURE
800 Fairway Drive.
Suite 250
Deerfield Beach, Florida 33441
Phone: 954-418-9096
Fax: 954-418-9298
www.tlc-engineers.com

© Copyright 2007 TLC Engineering for Architecture, Inc.

EB #0000015 TLC NO: 609036

JMWA
ARCHITECTS
STEVEN E. MYOTT AIA
JAMES R. WILLIAMS AIA
RODOLFO ACEVEDO AIA
949 CLINT MOORE ROAD
BOCA RATON, FLORIDA 33487
TEL 561 997 9997
FAX 561 997 1610
WWW.JMWA.NET

PALMETTO BAY VILLAGE HALL

9705 E. Hibiscus St., Palmetto Bay, Florida

Master Builders of South Florida, Inc.
1400 E. Oakland Park Blvd. Suite 210
Oakland Park, FL 33334

Alvaro Gonzalez, P.E.
Florida License #69003

PROJECT NO. 609036
DESIGNED BY: JB
DRAWN BY: JB
CHECKED BY: DLT

SUBMITTALS:
50% REVIEW 10.30.2009
PERMIT REVIEW 11.20.2009
BUILDING PERMIT 03.03.2010

REVISIONS:
1 PERMIT COMMENTS 4-02-10

PLUMBING
WATER RISER
DIAGRAM

1 P3.1

© 2009 JMWA ARCHITECTS, INCORPORATED ALL RIGHTS RESERVED. NO PART OF THESE IDEAS, PLANS OR DESIGNS MAY BE REPRODUCED, COPIED OR UTILIZED GRAPHICALLY IN ANY FORM WHATSOEVER WITHOUT THE EXPRESSED WRITTEN CONSENT OF JMWA ARCHITECTS INCORPORATED AND ITS BOARD OF DIRECTORS.

L:\2009--Jobs\609036--Palmetto Bay Municipal Center\CAD-MEP\Sheets P3.1.dwg 4/22/2010 1:29:10 PM jared.hunt

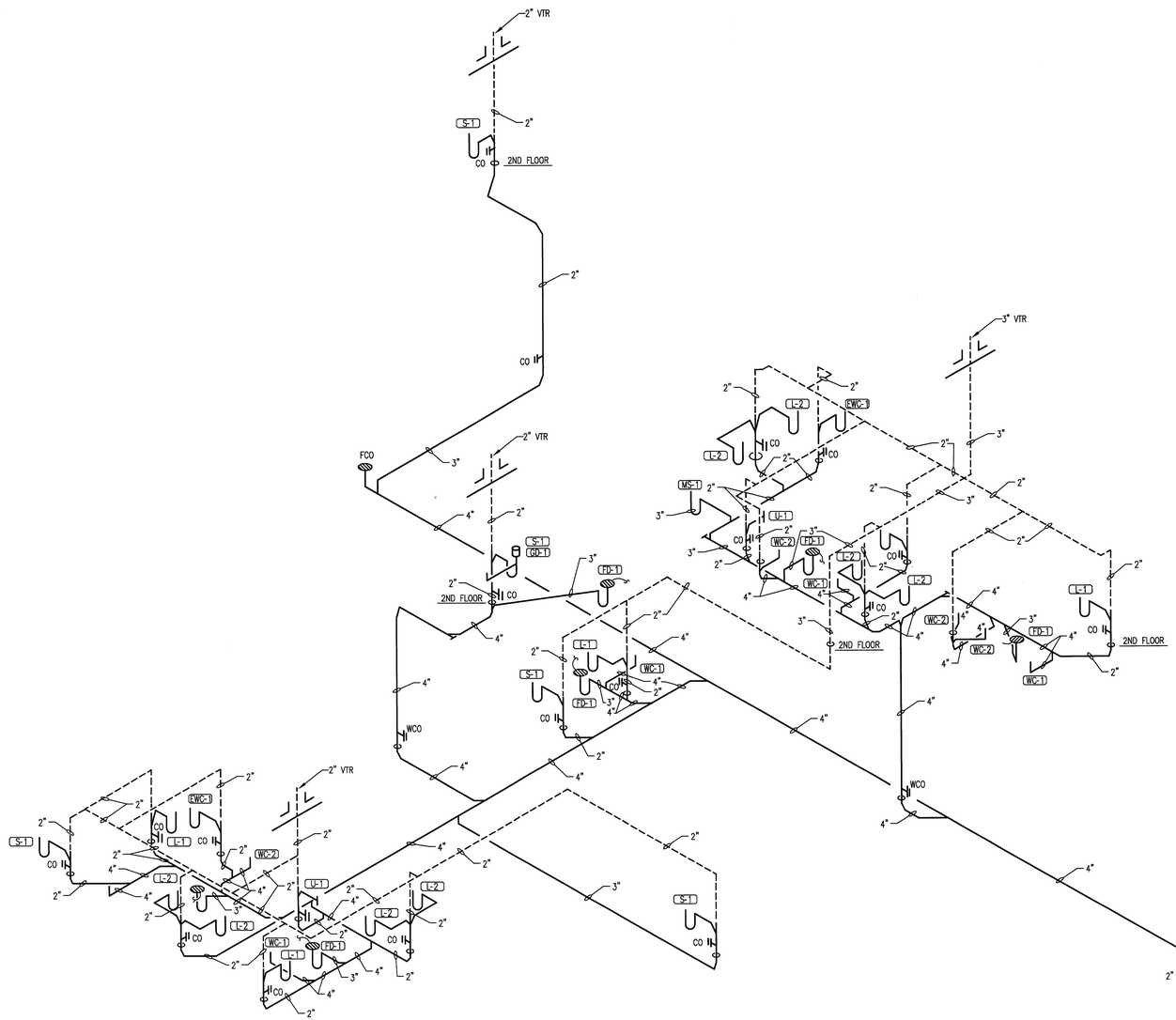

See P1.2

SANITARY RISER DIAGRAM

SCALE: NTS

RECORD SET

The information presented on this drawing is diagrammatic and is presented for general information purposes and should not be relied on for accuracy of dimensions, details and locations. Actual and exact conditions if required should be determined in the field.

TLC ENGINEERING FOR ARCHITECTURE
800 Fairway Drive.
Suite 250
Deerfield Beach, Florida 33441
Phone: 954-418-9096
Fax: 954-418-9298
www.tlc-engineers.com

© Copyright 2007 TLC Engineering for Architecture, Inc.

EB #0000015 TLC NO: 609036

JMWA ARCHITECTS

STEVEN E. MYOTT AIA
JAMES R. WILLIAMS AIA
RODOLFO ACEVEDO AIA

949 CLINT MOORE ROAD
BOCA RATON, FLORIDA 33487
TEL 561 997 9997
FAX 561 997 1610

WWW.JMWA.NET

PALMETTO BAY VILLAGE HALL

9705 E. Hibiscus St., Palmetto Bay, Florida

Master Builders of South Florida, Inc.
1400 E. Oakland Park Blvd. Suite 210
Oakland Park, FL 33334

Alvaro Gonzalez, P.E.
Florida License #69003

PROJECT NO. 609036
DESIGNED BY: JB
DRAWN BY: JB
CHECKED BY: DLT

SUBMITTALS:

50% REVIEW	10.30.2009
PERMIT REVIEW	11.20.2009
BUILDING PERMIT	03.03.2010

REVISIONS:

1 PERMIT COMMENTS 4-02-10

PLUMBING
SANITARY RISER
DIAGRAM

P3.2

© 2009 JMWA ARCHITECTS, INCORPORATED ALL RIGHTS RESERVED NO PART OF THESE IDEAL PLANS OR DESIGNS MAY BE REPRODUCED, COPIED OR UTILIZED GRAPHICALLY IN ANY FORM WHATSOEVER WITHOUT THE EXPRESSED WRITTEN CONSENT OF JMWA ARCHITECTS INCORPORATED AND ITS BOARD OF DIRECTORS.

L:\2009-Jobs\609036-Palmetto Bay Municipal Center\CAD-MEP\Sheets P3.2.dwg 4/22/2010 1:29:32 PM jpred.hunt

TLC ENGINEERING FOR ARCHITECTURE
800 Fairway Drive.
Suite 250
Deerfield Beach, Florida 33441
Phone: 954-418-9096
Fax: 954-418-9296
www.tlc-engineers.com
© Copyright 2007 TLC Engineering for Architecture, Inc.
EB #0000015 TLC NO: 609036

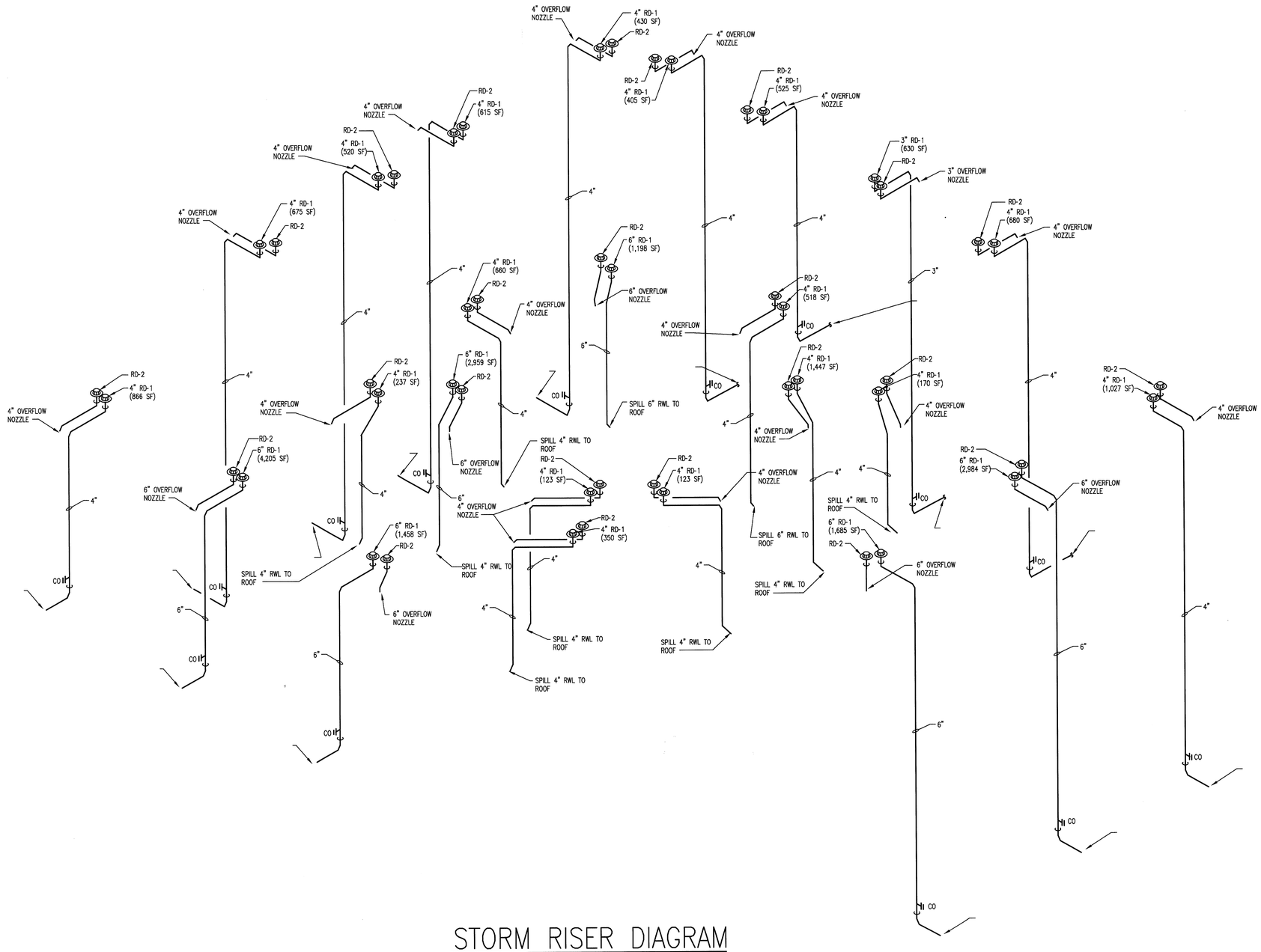

STORM RISER DIAGRAM

SCALE: NTS

RECORD SET

The information presented on this drawing is diagrammatic and is presented for general information purposes and should not be relied on for accuracy of dimensions, details and locations. Actual and exact conditions if required should be determined in the field.

JMWA ARCHITECTS
STEVEN E. MYOTT AIA
JAMES R. WILLIAMS AIA
RODOLFO ACEVEDO AIA

949 CLINT MOORE ROAD
BOCA RATON, FLORIDA 33487
TEL 561 997 9997
FAX 561 997 1610

WWW.JMWA.NET

PALMETTO BAY VILLAGE HALL

9705 E. Hibiscus St., Palmetto Bay, Florida

Master Builders of South Florida, Inc.
1400 E. Oakland Park Blvd. Suite 210
Oakland Park, FL 33334

Alvaro Gonzalez, P.E.
Florida License #69003

PROJECT NO. 609036
DESIGNED BY: JB
DRAWN BY: JB
CHECKED BY: DLT

SUBMITTALS:

50% REVIEW	10.30.2009
PERMIT REVIEW	11.20.2009
BUILDING PERMIT	03.03.2010

REVISIONS:

1	PERMIT COMMENTS	4-02-10

PLUMBING
STOM RISER
DIAGRAM

P3.3

© 2009 JMWA ARCHITECTS, INCORPORATED ALL RIGHTS RESERVED. NO PART OF THESE IDEAS, PLANS OR DESIGNS MAY BE REPRODUCED, COPIED OR UTILIZED GRAPHICALLY IN ANY FORM WHATSOEVER WITHOUT THE EXPRESSED WRITTEN CONSENT OF JMWA ARCHITECTS INCORPORATED AND ITS BOARD OF DIRECTORS

L:\2009-Jobs\609036-Palmetto Bay Municipal Center\CAD-MEP\Sheets P3.3.dwg 4/22/2010 1:29:47 PM jared.hunt

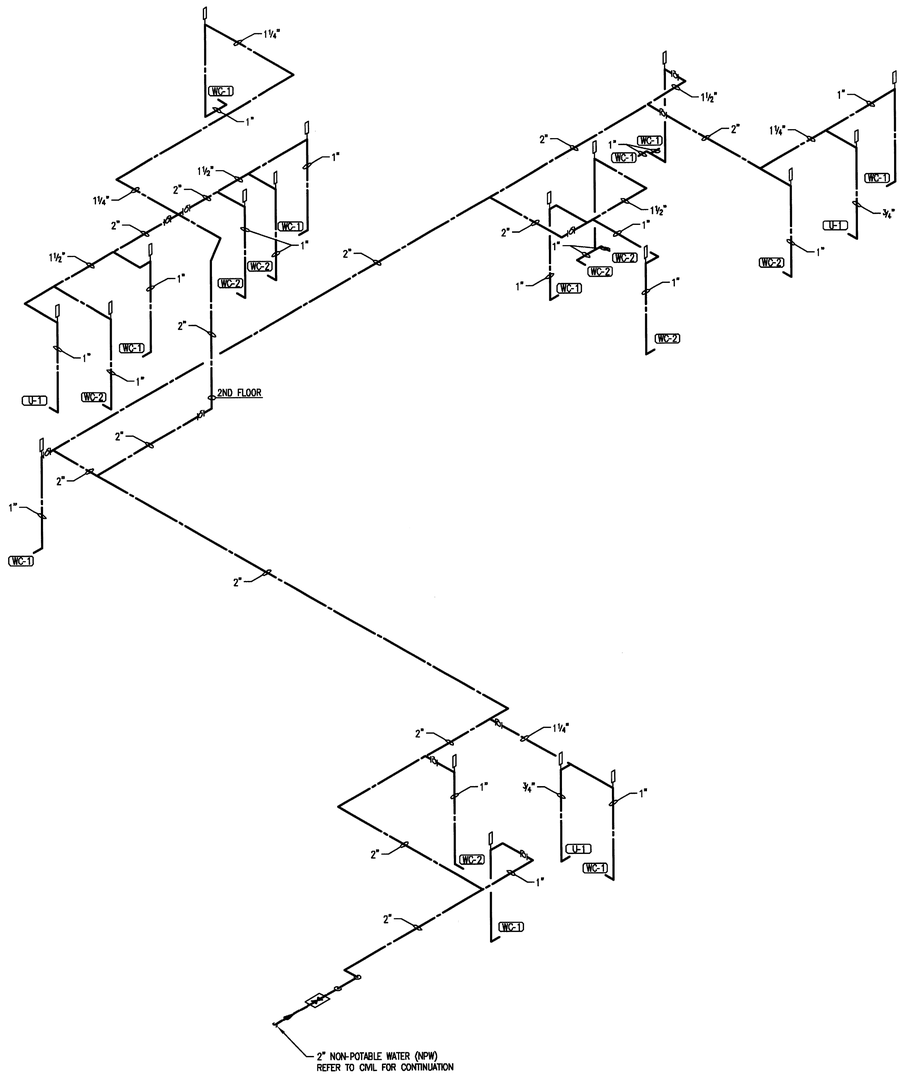

NON POTABLE WATER (NPW) RISER DIAGRAM

SCALE: NTS

RECORD SET
The information presented on this drawing is diagrammatic and is presented for general information purposes and should not be relied on for accuracy of dimensions, details and locations. Actual and exact conditions if required should be determined in the field.

TLC ARCHITECTURE AND ENGINEERING
800 Fairway Drive.
Suite 260
Deerfield Beach, Florida 33441
Phone: 954-418-9095
Fax: 954-418-9296
www.tlc-engineers.com
© Copyright 2007 TLC Engineering for Architecture, Inc.
EB #0000015 TLC NO: 609036

JMWA ARCHITECTS
STEVEN E. MYOTT AIA
JAMES R. WILLIAMS AIA
RODOLFO ACEVEDO AIA
9410 CLINT MOORE ROAD
BOCA RATON, FLORIDA 33487
TEL 561 997 9997
FAX 561 997 1640
WWW.JMWA.NET

PALMETTO BAY VILLAGE HALL
9705 E. Hibiscus St., Palmetto Bay, Florida

Master Builders of South Florida, Inc.
1400 E. Oakland Park Blvd. Suite 210
Oakland Park, FL 33334

Alvaro Gonzalez, P.E.
Florida License #69003

PROJECT NO. 609036
DESIGNED BY: XXX
DRAWN BY: XXX
CHECKED BY: XXX

SUBMITTALS:
50% REVIEW 10.30.2009
PERMIT REVIEW 11.20.2009
BUILDING PERMIT 03.03.2010

REVISIONS:
4 DESIGN CHANGES 8/11/10

NON-POTABLE WATER RISER

4 P3.4

© 2009 JMWA ARCHITECTS INCORPORATED ALL RIGHTS RESERVED. NO PART OF THESE IDEAS, PLANS OR DESIGNS MAY BE REPRODUCED, COPIED OR UTILIZED GRAPHICALLY IN ANY FORM WHATSOEVER WITHOUT THE EXPRESSED WRITTEN CONSENT OF JMWA ARCHITECTS INCORPORATED AND ITS BOARD OF DIRECTORS.

L:\2009-Jobs\609036-Palmetto Bay Municipal Center\CAD-MEP\Sheets P3.4.dwg 8/11/2010 5:37:31 PM jared.hunt

System No. W-L-1001
(Formerly System No. 147)
F Rating--1, 2, 3 and 4 Hr (See Items 2 and 3)
T Ratings--0, 1, 2, 3, and 4 Hr (See Items 2 and 3)
L Rating at Ambient--less than 1 CFM/sq ft
L Rating At 400 F--less than 1 CFM/sq ft

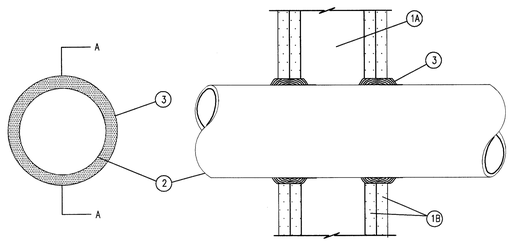

SECTION A-A

1. Wall Assembly--The 1, 2, 3 or 4 hr fire-rated gypsum wallboard/stud wall assembly shall be constructed of the materials and in the manner described in the individual U300 or U400 Series Wall or Partition Designs in the UL Fire Resistance Directory and shall include the following construction features:
   A. Studs--Wall framing may consist of either wood studs (max 2 h fire rated assemblies) or steel channel studs. Wood studs to consist of nom 2 by 4 in. lumber spaced 16 in. OC with nom 2 by 4 in. lumber end plates and cross braces. Steel studs to be min 3-5/8 in. wide by 1-3/8 in. deep channels spaced max 24 in. OC.
   B. Wallboard, Gypsum *--Nom 1/2 or 5/8 in. thick, 4 ft. wide with square or tapered edges. The gypsum wallboard type, thickness, number of layers, fastener type and sheet orientation shall be as specified in the individual U300 or U400 Series Design in the UL Fire Resistance Directory. Max diam of opening is 13-1/2 in.
2. Pipe or Conduit--Nom 12 in. diam (or smaller) Schedule 10 (or heavier) steel pipe, nom 12 in. diam (or smaller) service weight (or heavier) cast iron soil pipe, nom 12 in. diam (or smaller) Class 50 (or heavier) ductile iron pressure pipe, nom 6 in. diam (or smaller) steel conduit, nom 4 in. diam (or smaller) steel electrical metallic tubing, nom 6 in. diam (or smaller) Type L or (or heavier) copper tubing or nom 1 in. diam (or smaller) flexible steel conduit. When copper pipe is used, max F Rating of firestop system (Item 3) is 2 h. Steel pipes or conduits larger than nom 4 in. diam may only be used in walls constructed using steel channel studs. A max of one pipe or conduit is permitted in the firestop system. Pipe or conduit to be installed near center of stud cavity width and to be rigidly supported on both sides of wall assembly.
3. Fill, Void or Cavity Material*--Caulk--Caulk fill material installed to completely fill annular space between pipe or conduit and gypsum wallboard and with a min 1/4 in. diam bead of caulk applied to perimeter of pipe or conduit at its egress from the wall. Caulk installed symmetrically on both sides of wall assembly. The hourly F Rating of the firestop system is dependent upon the hourly fire rating of the wall assembly in which it is installed, as shown in the following table. The hourly T Rating of the firestop system is dependent upon the type or size of the pipe or conduit and the hourly fire rating of the wall assembly in which it is installed, as tabulated below:

Max pipe or Conduit Diam In.	Annular Space In.	F Rating Hr.	T Rating Hr.
1	3 to 3/16	1 or 2	0+, 1 or 2
1	1/4 to 1/2	3 or 4	3 or 4
4	0 to 1-1/2	1 or 2	0
6	1/4 to 1/2	3 or 4	0
12	3/16 to 3/8	1 or 2	0

WALL - DRYWALL - PIPE - 1/2/3/4 HR
System No. W-L-1001

4

System No. C-AJ-5001
(Formerly System No. 91)
F Rating - 1-1/2, 2 and 3 Hr. (See Item 4)
T Rating - 0, 1/2, 3/4 and 1 Hr. (See Item 1a and 4)
L Rating At Ambient - 2 CFM/sq.ft.
L Rating At 400F - less than 1 CFM/sq.ft.

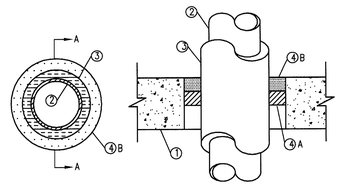

SECTION A-A

1. Floor or Wall assembly - Min. 2- 1/2" thick reinforced lightweight or normal weight (100-150) pcf concrete. Wall may also be constructed of any UL Classifed Concrete Blocks®. Max. diameter of opening is 18". See Concrete Blocks (CAZT) category in the Fire Resistance Directory for names of manufactureres.

1A. Steel Sleeve - Optional, not shown) - Nom. 10" (or smaller) Schedule 10 (or heavier) steel sleeve cast or grouted into floor or wall assembly. Sleeve may extend a max. of 2" above top of floor or beyond either surface of wall. T Rating is 0 Hr. when sleeve is used.

2. Through Penetrants - Nom. 4" dia. (or smaller) type L (or heavier) copper pipe, nom. 12" dia. (or smaller) service weight (or heavier) cast iron soil pipe, nom. 12" dia. (or smaller) class 50 (or heavier) ductile iron pressure pipe or nom. 12" dia. (or smaller) Schedule 10 (or heavier) steel pipe centered in the opening and rigidly supported on both sides of the floor or wall assembly.

3. Pipe-Covering* - Nom. 1/2 to 2" thick hollow cylindrical heavy density (min. 3.5 pcf) glass fiber units jacketed on the outside with an all service jacket. Longitudinal joints sealed with metal fasteners or factory-applied self-sealing lap tape. Transverse joints secured with metal fasteners or with butt strip tape supplied with the product.
   See pipe and equipment covering - Materials*(BRGU) category in Building Materials Directory for names of manufacturers. Any pipe covering material meeting the above specifications and bearing the UL Classification working with a Flame Spread Index of 25 or less and a Smoke Developed Index of 50 or less must be used.

4. Firestop System - The details of the firestop system shall be as follows:
   A. Packing Material - Nom. 1" thickness of firmly packed mineral wool batt insulation used as a permanenet form. packing material to be recessed from top surface of floor or above or from both surfaces of as required to accommodate the required thickness of caulk. fill material (item b).
   B. Fill, Void or Cavity Material* - Caulk - Applied to fill the annular spoce flush with top surface of floor or sleeve or fluch with both surfaces of wall. When nom. pipe covering thickness is 2", min. thickness of caulk fill material is 2". When nom. pipe covering thickness is 1-1/2" or less, min. thickness of caulk fill material is 1". The hourly F and T Ratings of the firestop system are dependent upon the thickness of the floor or wall, the size of pipe, the thickness of pipe covering material and the size of the annular space (between the pipe covering material and the edge of the circular through opening), as shown in the following table:

Min. Floor Or Wall Thickness, In.	Max. Pipe Dia.	Nom. Pipe Covering Thickness, In.	Annular Space, In.	F Rating, Hr.	T Rating, Hr.
2-1/2	4	1 OR 1-1/2	1/2 TO 2-3/8	2	1
4-1/2	4	2	1/4 TO 3-5/8	2	1-1/2
2-1/2	12	1	1/2 TO 1-1/2	2	1/2
4-1/2	12	1	1/2 TO 2-3/8	3	1
2-1/2	12	1/2	1/2 TO 2-3/8	2	0

WALL/FLR - CONC - PIPE/INSULATED - 2/3 HR
System No. C-AJ-5001

3

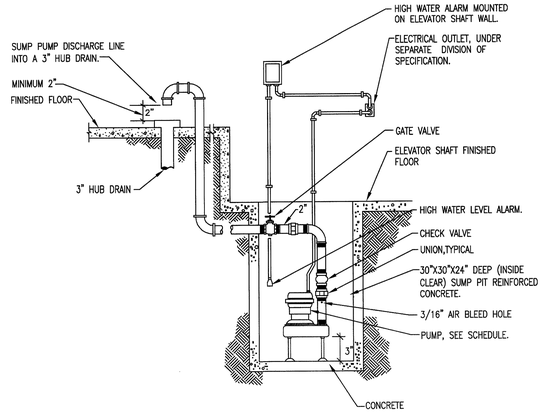

SIMPLEX ELEVATOR SUMP PUMP
No Scale

1

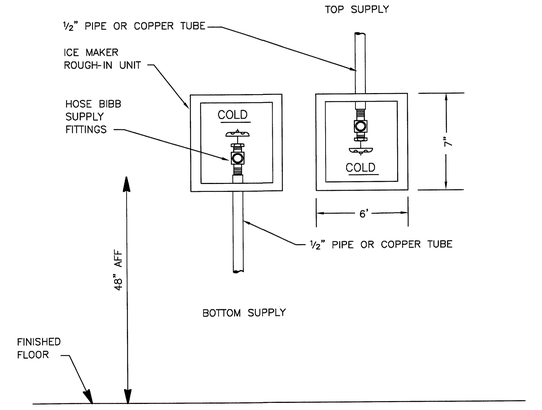

COLD WATER BOX HOOK-UP DETAIL
No Scale

2

RECORD SET
The information presented on this drawing is diagrammatic and is presented for general information purposes and should not be relied on for accuracy of dimensions, details and locations. Actual and exact conditions if required should be determined in the field.

TLC ENGINEERING FOR ARCHITECTURE
800 Fairway Drive.
Suite 250
Deerfield Beach, Florida 33441
Phone: 954-418-9096
Fax: 954-418-9298
www.tlc-engineers.com

© Copyright 2007 TLC Engineering for Architecture, Inc.

EB #0000015 TLC NO: 609036

JMWA
ARCHITECTS
STEVEN E. MYOTT AIA
JAMES R. WILLIAMS AIA
RODOLFO ACEVEDO AIA
949 CLINT MOORE ROAD
BOCA RATON, FLORIDA 33487
TEL 561 997 9997
FAX 561 997 1610
WWW.JMWA.NET

PALMETTO BAY VILLAGE HALL
Palmetto Bay, Florida

Master Builders of South Florida, Inc.
1400 E. Oakland Park Blvd. Suite 210
Oakland Park, FL 33334

Alvaro Gonzalez, P.E.
Florida License #69003

PROJECT NO. 609036
DESIGNED BY: JB
DRAWN BY: DLT
CHECKED BY: DHA

SUBMITTALS:
50% REVIEW 10.30.2009
PERMIT REVIEW 11.20.2009
BUILDING PERMIT 03.03.2010

REVISIONS:

PLUMBING DETAILS

P5.1

THIS DRAWING IS COPYRIGHTED AND ITS BOARD OF DIRECTORS. ARCHITECTS INCORPORATED AND IS PROTECTED GRAPHICALLY IN ANY FORM WHATSOEVER WITHOUT THE EXPRESSED WRITTEN CONSENT OF JMWA ARCHITECTS INCORPORATED AND ITS BOARD OF DIRECTORS. NO PART OF THESE IDEAS, PLANS OR DESIGNS MAY BE REPRODUCED, COPIED OR UTILIZED GRAPHICALLY IN ANY FORM WHATSOEVER.
© 2009 JMWA ARCHITECTS, INCORPORATED ALL RIGHTS RESERVED.

L:\2009-Jobs\609036-Palmetto Bay Municipal Center\CAD-MEP\Sheets P5.1.dwg 3/8/2010 12:01:34 PM jared.hunt

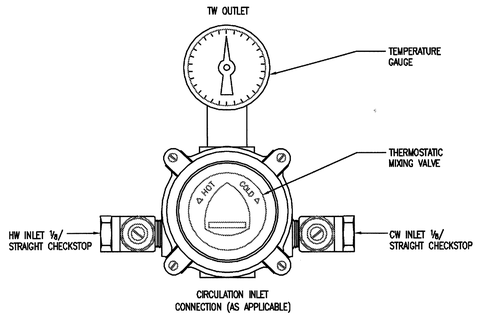

MODEL # (210)

THERMOSTATIC MIXING VALVE 5
No Scale

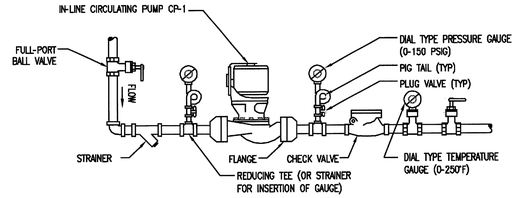

IN-LINE CIRCULATING PUMP 3
No Scale

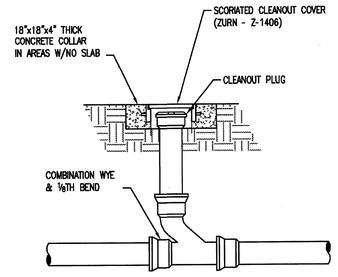

EXTERIOR CLEANOUT 1
No Scale

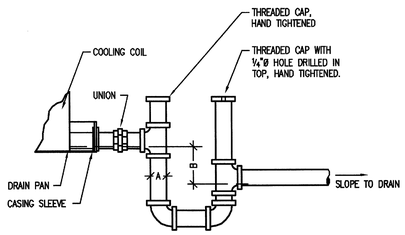

CONDENSATE DRAIN PIPING DIMENSIONS:

A = FULL SIZE OF UNIT DRAIN CONNECTION
B ≥ 1½ TIMES FAN SUCTION STATIC PRESSURE

COORDINATE MOUNTING/CURB HEIGHT AS REQUIRED TO PROVIDE PROPER CONDENSATE DRAINAGE.

AHU CONDENSATE DRAIN TRAP 6
No Scale

NOT USED 4
No Scale

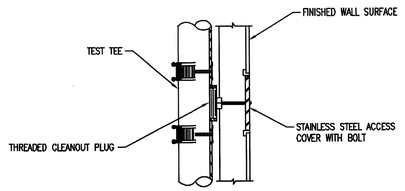

WALL CLEANOUT 2
No Scale

RECORD SET

The information presented on this drawing is diagrammatic and is presented for general information purposes and should not be relied on for accuracy of dimensions, details and locations. Actual and exact conditions if required should be determined in the field.

TLC ENGINEERING FOR ARCHITECTURE
500 Fairway Drive, Suite 280
Deerfield Beach, Florida 33441
Phone: 954-418-9095
Fax: 954-418-9096
www.tlc-engineers.com

© Copyright 2007 TLC Engineering for Architecture, Inc.
EB #0000015 TLC NO: 609036

JMWA ARCHITECTS
STEVEN E. MYOTT AIA
JAMES R. WILLIAMS AIA
RODOLFO ACEVEDO AIA

949 CLINT MOORE ROAD
BOCA RATON, FLORIDA 33487
TEL 561 997 9997
FAX 561 997 1610

WWW.JMWA.NET

PALMETTO BAY VILLAGE HALL
9705 E. Hibiscus St., Palmetto Bay, Florida

Master Builders of South Florida, Inc.
1400 E. Oakland Park Blvd. Suite 210
Oakland Park, FL 33334

Alvaro Gonzalez, P.E.
Florida License #69003

PROJECT NO. 609036
DESIGNED BY: JB
DRAWN BY: DLT
CHECKED BY: DHA

SUBMITTALS:
50% REVIEW 10.30.2009
PERMIT REVIEW 11.20.2009
BUILDING PERMIT 03.03.2010

REVISIONS:
4 DESIGN CHANGES 8/11/10

PLUMBING DETAILS

P5.2

© 2009 JMWA ARCHITECTS, INCORPORATED ALL RIGHTS RESERVED. NO PART OF THESE IDEAS, PLANS OR DESIGNS MAY BE REPRODUCED, COPIED OR UTILIZED GRAPHICALLY IN ANY FORM WHATSOEVER WITHOUT THE EXPRESSED WRITTEN CONSENT OF JMWA ARCHITECTS INCORPORATED AND ITS BOARD OF DIRECTORS.

L:\2009--Jobs\609036--Palmetto Bay Municipal Center\CAD--MEP\Sheets P5.2.dwg 8/11/2010 5:37:47 PM jared.hunt

TLC Engineering for Architecture
800 Fairway Drive.
Suite 260
Deerfield Beach, Florida 33441
Phone: 954-418-9096
Fax: 954-418-9296
www.tlc-engineers.com
EB #0000015 TLC NO: 609036
© Copyright 2007 TLC Engineering for Architecture, Inc.

JMWA ARCHITECTS
STEVEN E. MYOTT AIA
JAMES R. WILLIAMS AIA
RODOLFO ACEVEDO AIA
949 CLINT MOORE ROAD
BOCA RATON, FLORIDA 33487
TEL 561 997 9997
FAX 561 997 1610
WWW.JMWA.NET

PALMETTO BAY VILLAGE HALL

9705 E. Hibiscus St., Palmetto Bay, Florida

Master Builders of South Florida, Inc.
1400 E. Oakland Park Blvd. Suite 210
Oakland Park, FL 33334

Alvaro Gonzalez, P.E.
Florida License #69003

PROJECT NO. 609036
DESIGNED BY: JB
DRAWN BY: DLT
CHECKED BY: DHA

SUBMITTALS:
50% REVIEW 10.30.2009
PERMIT REVIEW 11.20.2009
BUILDING PERMIT 03.03.2010

REVISIONS:
4 DESIGN CHANGES 8/11/10

PLUMBING DETAILS

P5.3

© 2009 JMWA ARCHITECTS, INCORPORATED ALL RIGHTS RESERVED. NO PART OF THESE IDEAS, PLANS OR DESIGNS MAY BE REPRODUCED, COPIED OR UTILIZED GRAPHICALLY IN ANY FORM WHATSOEVER, WITHOUT THE EXPRESSED WRITTEN CONSENT OF JMWA ARCHITECTS INCORPORATED AND ITS BOARD OF DIRECTORS.

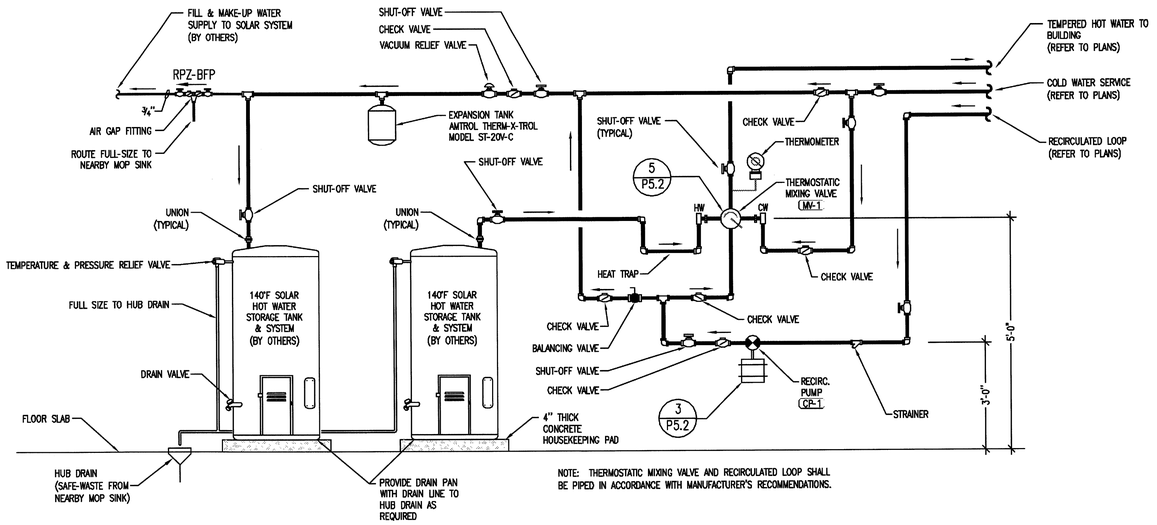

SOLAR WATER HEATER STORAGE TANKS WITH MIXING VALVE AND IN-LINE RECIRCULATING PUMP

No Scale

4

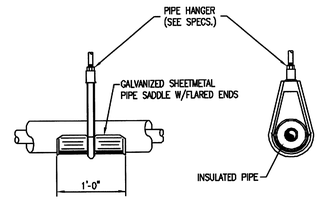

INSULATED PIPE HANGER

No Scale

1

NOT USED

No Scale

3

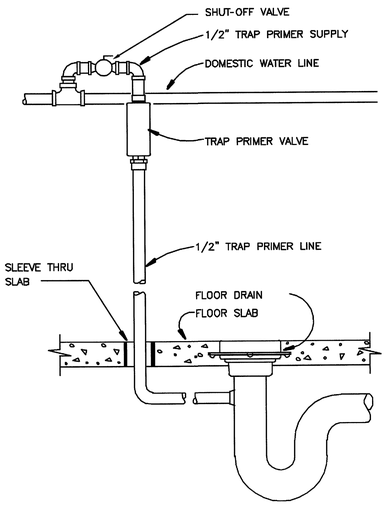

TRAP PRIMER DETAIL

No Scale

2

RECORD SET

The information presented on this drawing is diagrammatic and is presented for general information purposes and should not be relied on for accuracy of dimensions, details and locations. Actual and exact conditions if required should be determined in the field.

L:\2009-Jobs\609036-Palmetto Bay Municipal Center\CAD-MEP\Sheets P5.3.dwg 8/11/2010 5:38:05 PM jared.hunt

800 Fairway Drive.
Suite 250
Deerfield Beach, Florida 33441
Phone: 954-418-9096
Fax: 954-418-9296
www.tlc-engineers.com
© Copyright 2007 TLC Engineering for Architecture, Inc.
EB #0000015 TLC NO: 609036

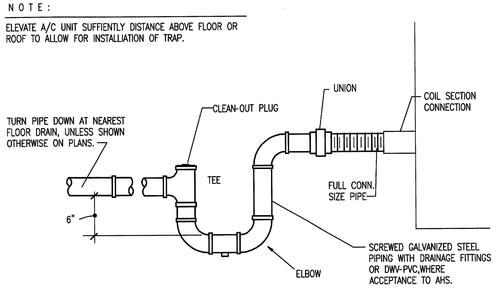

COOLING COIL CONDENSATE DRAIN

No Scale

1

RECORD SET

The information presented on this drawing is diagrammatic and is presented for general information purposes and should not be relied on for accuracy of dimensions, details and locations. Actual and exact conditions if required should be determined in the field.

JMWA
ARCHITECTS

STEVEN E. MYOTT AIA
JAMES R. WILLIAMS AIA
RODOLFO ACEVEDO AIA

949 CLINT MOORE ROAD
BOCA RATON, FLORIDA 33487
TEL 561 997 9997
FAX 561 997 1610

WWW.JMWA.NET

PALMETTO BAY VILLAGE HALL

Palmetto Bay, Florida

Master Builders of South Florida, Inc.
1400 E. Oakland Park Blvd. Suite 210
Oakland Park, FL 33334

Alvaro Gonzalez, P.E.
Florida License #69003

PROJECT NO. 609036
DESIGNED BY: JB
DRAWN BY: DLT
CHECKED BY: DHA

SUBMITTALS:
50% REVIEW 10.30.2009
PERMIT REVIEW 11.20.2009
BUILDING PERMIT 03.03.2010

REVISIONS:

PLUMBING DETAILS

P5.4

© 2009 JMWA ARCHITECTS. INCORPORATED ALL RIGHTS RESERVED. NO PART OF THESE IDEAS, PLANS OR DESIGNS MAY BE REPRODUCED, COPIED OR UTILIZED GRAPHICALLY IN ANY FORM WHATSOVER WITHOUT THE EXPRESSED WRITTEN CONSENT OF JMWA ARCHITECTS INCORPORATED AND ITS BOARD OF DIRECTORS

L:\2009-Jobs\609036-Palmetto Bay Municipal Center\CAD-MEP\Sheets P5.4.dwg 3/8/2010 12:02:36 PM jared.hunt

PER NFPA 25, 2002 EDITION SECTION 4.1.2 – THE RESPONSIBILITY FOR PROPERLY MAINTAINING A WATER BASED FIRE PROTECTION SYSTEM SHALL BE THAT OF THE OWNER OF THE PROPERTY

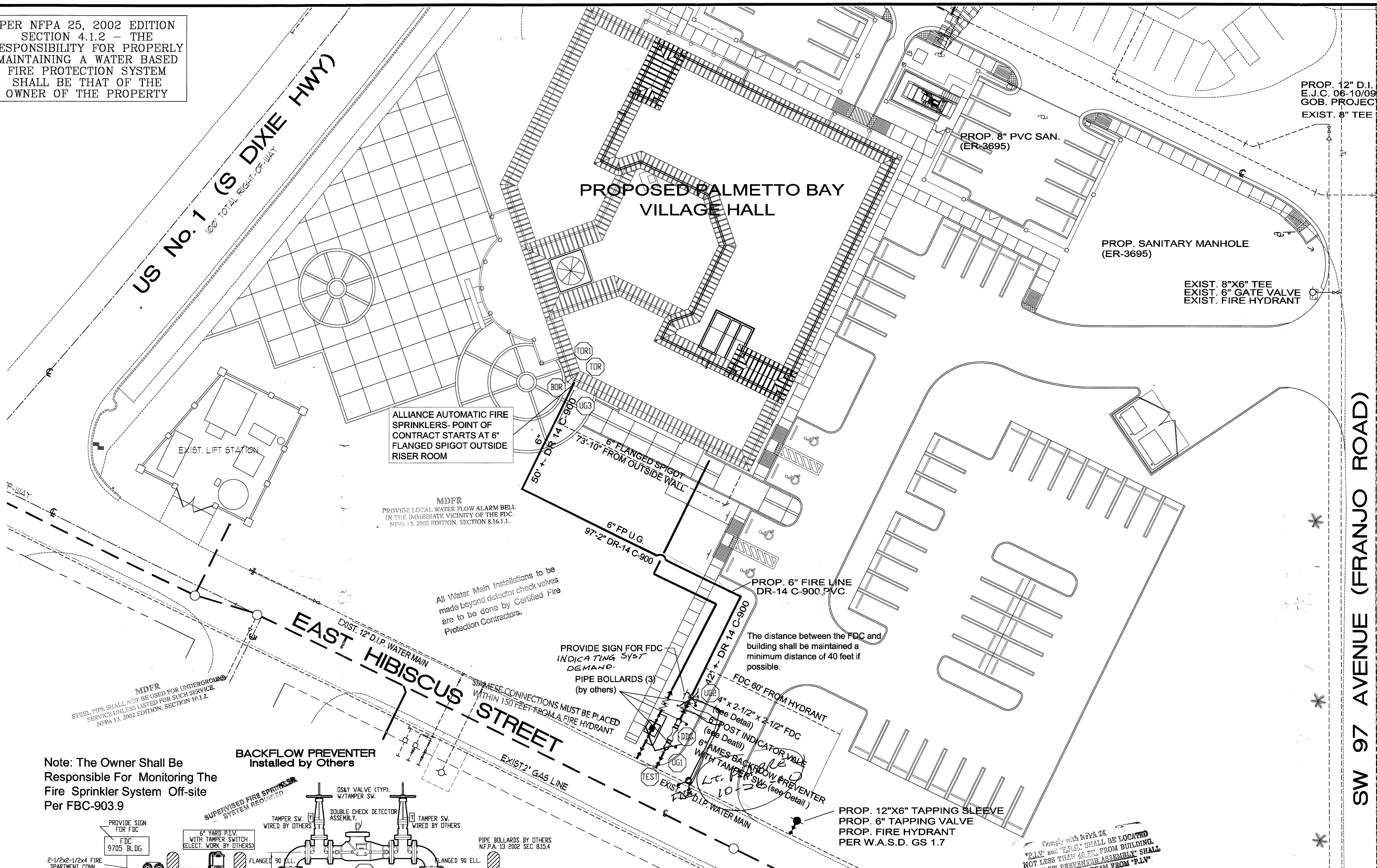

Notes For Automatic Sprinkler Installation

1. The equipment and installation shall be in conformity with all City, State and Federal codes, laws, and regulations as well as National Fire Protection Association Standard NFPA 13-2002, Installation of Sprinkler Systems.

2. Equipment, materials, devices shall be listed by Underwriters Laboratories, Inc. and Factory Mutual approved for use in automatic sprinkler systems.

3. Water Supply: Verify The Following Water Supply, Based On The 02/25/2010 flow test located at 9705 E. Hjibiscus Street by The Miami Dade Fire Dept., and is available for automatic sprinkler protection:
   1. Static pressure: 45 psi
   2. Residual pressure: 35 psi
   3. Flow: 1924 gpm

SCOPE: NFPA 13 2002 ED. Light Hazard Office Areas 1st & 2nd Floor, Palmetto Bay Village City Hall

A. Design Criteria for 1st Floor Light Hazard Office Areas:
Remote Area #1 .10/900 sq. ft. Globe Q/R 5.6 k 1/2" (see NFPA 13 2002 sec. A.5.2)
Calculations reflect 144sq.ft. @ 7.0 starting psi. (11 heads calced)

B. Design Criteria for 1st Floor Light Hazard Chamber Office Areas: △1
Remote Area #1-A .10/1075 sq. ft. Globe Q/R 5.6 k 1/2" (see NFPA 13 2002 sec. A.5.2)
Calculations reflect 144sq.ft. @ 7.0 starting psi. (13 heads calced)

C. Design Criteria for 2nd Floor Light Hazard Office Areas:
Remote Area #2 .10/RM Design Method Globe Q/R 5.6 k 1/2" (see NFPA 13 2002 sec. 11.2.3.3)
Calculations reflect 144sq.ft. @ 7.0 starting psi. (11 heads calced)

D. Design Criteria for Exterior Mansards Light Hazard Areas: NFPA 13 2002-Sec 11.2.3.4.2*
Remote Areas #3, #4, & #5 .10/ 7 Heads Globe Q/R 5.6 k 1/2" 200°
Calculations reflect 130sq.ft. @ 7.0 starting psi. (7 heads calced)

4. Pipe shall be new, designed for 175 psi working pressure, conforming to ASTM specifications and shall have the manufacturer's name or brand along with the applicable ASTM standard permanently marked on each length of pipe. Minimum pipe diameter is 1-inch.

A. Pipe inside the building size 2½ inch and larger shall be steel, schedule 10, black and in accordance with ASTM-A 135.

B. Pipe inside the building size 2 inch and smaller where screwed joints are desired, shall be XL thinwall or equal steel pipe, or Underwriters Laboratories listed pipe having a corrosion resistance rating (CRR) of not less that 1.00 and a pressure rating of 300 psi.

C. All underground pipe shall be listed for fire protection service and comply with AWWA standards. Piping used in lead-in connections shall be designed to withstand a working pressure of not less than 200 psi. Piping shall be bluebrute C-900 DR-14 PVC from Backflow to Building.
All Underground to be flushed as per NFPA 24 2002 Ed. & NFPA 13 2002 Ed. Sec. 10.10.2.1.3

5. Schedule 10 black steel ASTM-A 135 sprinkler pipe shall be joined by mechanically grooved couplings or push-on couplings, joined by NFPA No. 13 approved combination of couplings, gaskets and grooves. Grooves may be rolled, but not cut, and they shall be dimensionally compatible with the couplings. XL thinwall steel pipe or UL listed pipe specified in Note 4B, above, shall be joined by screwed joints and or grooved in accordance with ANSI/ASTM B1,20.1.

6. Grooved couplings and mechanical fittings shall be malleable iron, 250 psi working pressure, in accordance with ASTM-A 47. Screwed fittings shall be cast iron, 250 psi class, black and in accordance with ANSI-B 16.4 or malleable iron, 250 psi class, black and in accordance with ANSI-B 16.3.

7. Any exposed piping shall comply with NFPA 13 02 Edition Section 8-15.3.2. Whereas any corrosive conditions are known to exist piping shall be protected by a resistant coating to all exposed surfaces to protect against weather elements.

8. Riser Drain shall comply with NFPA 13 02 Edition Section 8-15.2.4.2. All drain runs shall be 2" with 2" Drain valve attached. A 2-1/2" Hose Valve was used for Riser Drain to Forward Flow Backflow Preventer

9. Hangers and Supports shall be as follows:

A. All piping shall be supported by means of FM approved and/or UL listed hangers. Spacing and installation shall be in accordance with NFPA No. 13. For hangar assemblies under concrete decks use power driven pin type, threaded rod and pipe ring. Provide adjustable hangers as required for proper support of all pipe lines.

10. The system shall be Hydrostatically tested at 200psi for 2 hours conforming to NFPA 13 2002 sec 10.10.2.2.1, before final approval.

11. Above Ground and Below Ground certificates shall be signed and provided to owner upon approval of pressure test and final inspection. As per NFPA 13 2002 edition sec. 10.10.1

12. Attach properly lettered approved metal signs conforming to NFPA No. 13 to each valve and alarm device. Permanently affix hydraulic sprinkler design data nameplates to the riser of each system. See Sec. 7.6.1.5 NFPA 13 2002 Edition

13. A copy of NFPA 25 2002 edition shall be turned over to owner or his (her) representive upon final approval from Authority Having Jurisdiction.

14. Additional sprinkler heads and sprinkler head wrenches shall be provided in a cabinet installed near the sprinkler riser. The additional heads shall consist of a minimum of 12 heads with the number of each type proportional to the number of each type furnished.

15. The building owner or occupants shall not make changes in the occupancy the use or process, or materials used or stored in the building without evaluation of the fire protection systems for their capability to protect the new occupancy,use,or materials. see NFPA 25 2002 sec. 4.1.2*

16. All Fire Sprinkler piping including underground piping to the point of service shall be installed by a Certified License Contractor as per Florida Administrative Code Rule 4A-46 and State Statute 489.105(N)

APPROVED BY MIAMI-DADE COUNTY FIRE DEPARTMENT
SPK ✓ BLDG. PERMIT ON-SITE
WATER MAIN EXTENSION
DATE 6/30/10 BY FLOW TEST
MIAMI DADE FIRE RESCUE

Note: The Owner Shall Be Responsible For Monitoring The Fire Sprinkler System Off-site Per FBC-903.9

BACKFLOW PREVENTER
Installed by Others

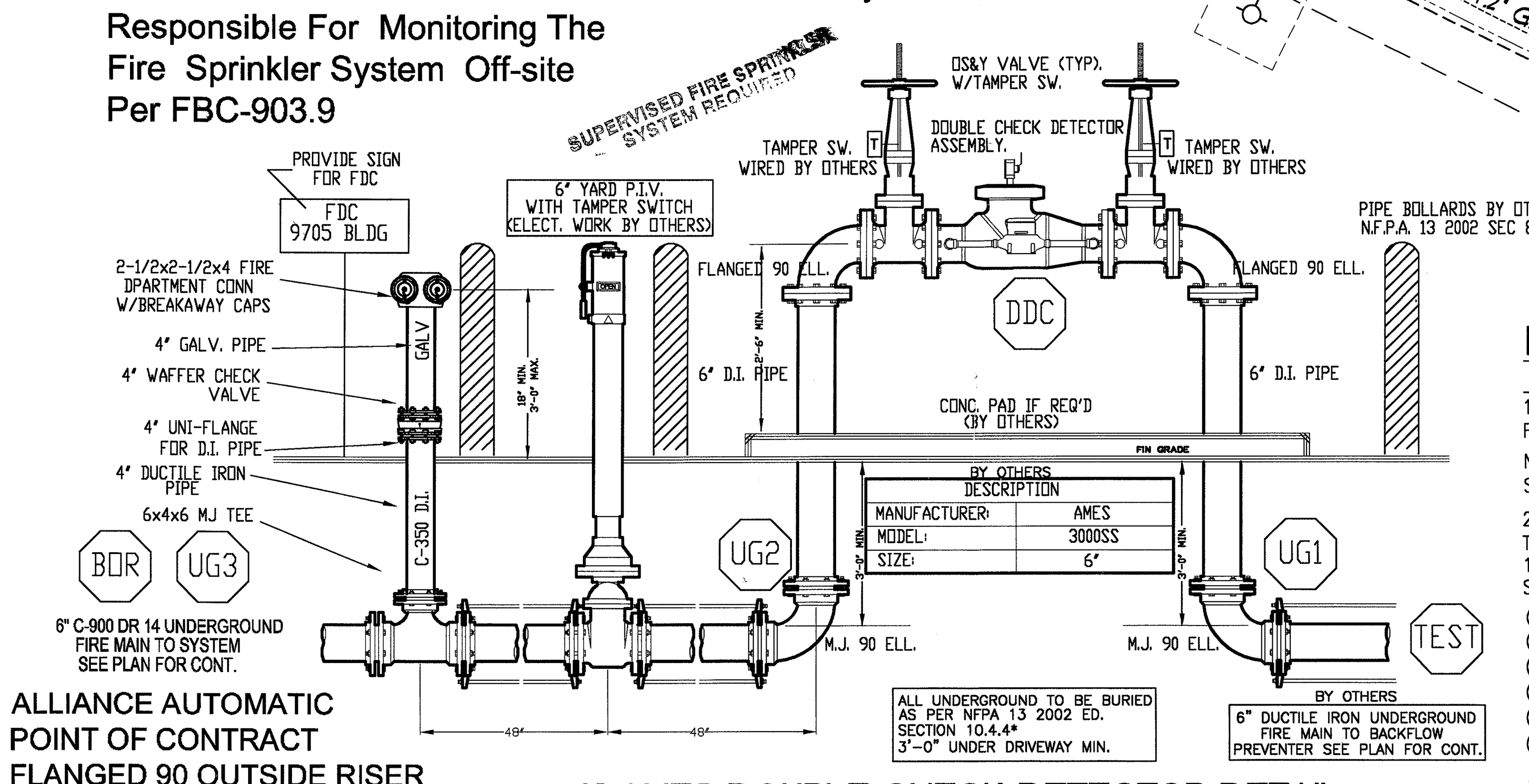

ALLIANCE AUTOMATIC POINT OF CONTRACT FLANGED 90 OUTSIDE RISER RM. (see plan above)

6" AMES DOUBLE CHECK DETECTOR DETAIL
Installed by Others

Notes For Underground and Owner
Installed by Others

1A. Above Ground and Below Ground Items Shall be protected against Mechancial or Fire Damage as per NFPA 13 2002 Sec. 8.15.3.1 through 8.15.4 (By Owner)

Note: 1: Pipe Bollards shall be provided (by owner) In order to protect the Fire Sprinkler System Componets from possible damage.

2A. Where Thrust block will not be used per NFPA 24 2002 Ed. 10.8.2
Then the following shall be observed:
10.8.3 Restrained Joint Systems: Fire mains utilizing restrained joint system Shall include the following:
(1) Locking mechanical or push-on joints
(2) Mechanical joints utilizing setscrew retainer glands
(3) Bolted flange joints
(4) Heat-fused or welded joints
(5) Pipe clamps and tie rods
(6) Other approved methods or devices

3A. All Fire Sprinkler piping including underground piping to the point of service shall be installed by a Certified License Contractor as per Florida Administrative Code Rule 4A-46 and State Statute 489.105(N)

NORTH

Fire Sprinkler Site Plan for Palmetto Bay Village Hall New 2 Story Building
Total Sq. Ft. 24,296
SCALE: 1"=20'-0"

RECORD SET
The information presented on this drawing is diagrammatic and is presented for general information purposes and should not be relied on for accuracy of dimensions, details and locations. Actual and exact conditions if required should be determined in the field.

Call 48 hours before you dig in Florida
It's the Law! 1-800-432-4770
FP&L (305) 347-3900
Sunshine State One Call of Florida, Inc.

WATERFLOW TEST INFORMATION	
STATIC PRESS	45
RESIDUAL PRESS	35
PITOT READING	-
FLOW IN G.P.M.	1924
DATE OF TEST	02/25/2010
TIME OF TEST	15:36
TEST APPROVED BY	CAPT. LEGRA
DADE CO.	-

Location:
9705 E. HIBISCUS ST.
Provided by:
Miami Dade Fire Rescue
Capt J. Legra

SHANTILAL C. PATEL LICENSE No. 28551 STATE OF FLORIDA PROFESSIONAL ENGINEER
GPM ENGINEERING, INC. 5502 S.W. 114 AVENUE COOPER CITY FL 33330 CERT.# 0028551
Shantilal C. Patel P.E.

SITE PLAN

DESIGN CRITERIA						
SYSTEM No	1	1-A	2	3	4	5
HAZARD	LIGHT	LIGHT	LIGHT	LIGHT	LIGHT	LIGHT
SPACING	225 MAX	225 MAX	225 MAX	130 MAX	130 MAX	130 MAX
K FACTOR	5.6	5.6	5.6	5.6	5.6	5.6
INSIDE HOSE	--	--	--	--	--	--
OUTSIDE HOSE	100	100	100	100	100	100
RACK GPM	N/A	N/A	N/A	N/A	N/A	N/A

HYDRAULICALLY DESIGNED SYSTEMS						
DENSITY	.10	.10	.10	.10	.10	.10
DESIGN AREA	995	1075	RM DESIGN	7 HDS	7 HDS	7 HDS
No OF SPRINKLERS	11	13	11	7	7	7
GPM @ BOR	182.76	213.13	175.40	104.36	108.18	109.31
RESIDUAL @ BOR	29.73	35.4	38.3	41.4	27.68	35.96
GPM @ TEST	282.76	313.13	275.40	204.36	208.18	209.31
RESIDUAL @ TEST	33.19	39.0	41.79	44.6	30.86	39.14

TYPES OF SPRINKLERS										
SYMBOL	QTY	SIZE	K	TEMP	MAKE	TYPE	FINISH	ESC.	SIN#
◉	282	1/2"	5.6	155	GLOBE	PENDENT	WHITE	WHITE	GL5601
⊘	11	1/2"	5.6	155	GLOBE	UPRIGHT	BRASS	BRASS	GL5615
◀	2	1/2"	5.6	286	GLOBE	SDWL	BRASS	BRASS	GL5626
○	3	1/2"	5.6	155	GLOBE	UPRIGHT	BRASS	BRASS	GL5615
◐	79	1/2"	5.6	200°	GLOBE	UPRIGHT	BRASS	BRASS	GL5615
TOTAL	377								

NO.	DATE	REVISION DESCRIPTION	
	05/03/10	SUBMITTED FOR PERMIT	T.I
△1	06/16/10	REVISE AS PER CITY COMMENTS ADD	T.I
		HEADS IN LOBBY CEILING SOFFIT	
		ADD REMOTE AREA IN CHAMBER CEILING	
		REVISE NOTES FOR MANARDS	
		SECTION LINES FP-2 & FP-3	

ALLIANCE AUTOMATIC FIRE SPRINKLERS
4981 SW 122 TERRACE
COOPER CITY, FLORIDA
TEL: 954.275.9353
FAX: 954.434.8836
Protecting Lives & Property

CUSTOMER PROJECT NO. 10-103
DRAWING NAME: PALMETTO FP

PROJECT NAME
PALMETTO BAY VILLAGE HALL
9705 EAST HIBISCUS
MIAMI, FL.

DRAWN BY: TI	DATE: 05/03/10
SPRKS. ON JOB: 377	SCALE: 1"=20'
APPROVALS: A.H.J.	
CONTRACT NO. 10-103	SHEET NO. FP-1 OF 5

PER NFPA 25, 2002 EDITION SECTION 4.1.2 – THE RESPONSIBILITY FOR PROPERLY MAINTAINING A WATER BASED FIRE PROTECTION SYSTEM SHALL BE THAT OF THE OWNER OF THE PROPERTY

PIPE DIMENSIONS (03/15/10)

NOMINAL PIPE SIZE	OUTSIDE DIAMETER	INSIDE DIAMETER
CPVC BLAZEMASTER		
3/4"	1.050"	.874
1"	1.315"	1.101
1-1/4"	1.660"	1.394
1-1/2"	1.900"	1.598
2"	2.375	2.003
SCHEDULE 40 STEEL		
1"	1.315"	1.049
1-1/4"	1.660"	1.380
1-1/2"	1.900"	1.610
2"	2.375	2.067
SCHEDULE 10 STEEL		
1"	1.315"	1.097
1-1/4"	1.660"	1.442
1-1/2"	1.900"	1.682
2"	2.375	2.157
2-1/2"	2.875"	2.635
3"	3.500"	3.260
4"	4.500"	4.260
6"	6.625"	6.407
8"	8.625	8.249
THREADABLE LIGHT WALL (XL)		
1"	1.290	1.104
1-1/4"	1.638	1.452
1-1/2"	1.883	1.682
2"	2.380	2.154
SCHEDULE 7 (DYNAFLO)		
1"	1.315"	1.197"
1-1/4"	1.900"	1.754"
1-1/2"	1.975"	1.707"
2"	2.875"	2.703"
2-1/2"	3.500"	3.315"
4"	4.500"	4.310"

APPLICABLE CODES

BUILDING CODE: 2007 FLORIDA BUILDING CODE

FIRE CODE: 2004 FLORIDA FIRE PREVENTION CODE

STANDARDS: NFPA 13, 2002 EDITION
NFPA 24, 2002 EDITION
NFPA 25, 2002 EDITION

HANGER DETAIL
NO SCALE

HANGER SCHEDULE

SIZE	ATR	LENGTH
1"	3/8"	30"
1-1/4"	3/8"	29"
1-1/2"	3/8"	29"
2"	3/8"	29"
3"	3/8"	38"
6"	1/2"	

HANGER SPACING
AS PER NFPA 13 TABLE 9.2.2.1

THREADED LIGHTWALL	SPACING OF HANGERS
1" TO 2" PIPE	12'-0"
SCH. 10 MAINS	SPACING OF HANGERS
2-1/2" TO 6" PIPE	15'-0"

NORTH

Fire Sprinkler Site Plan for Palmetto Bay Village Hall 1st Floor

1st Flr Total Sq. Ft. 16,506

SCALE: 1/8"=1'-0"

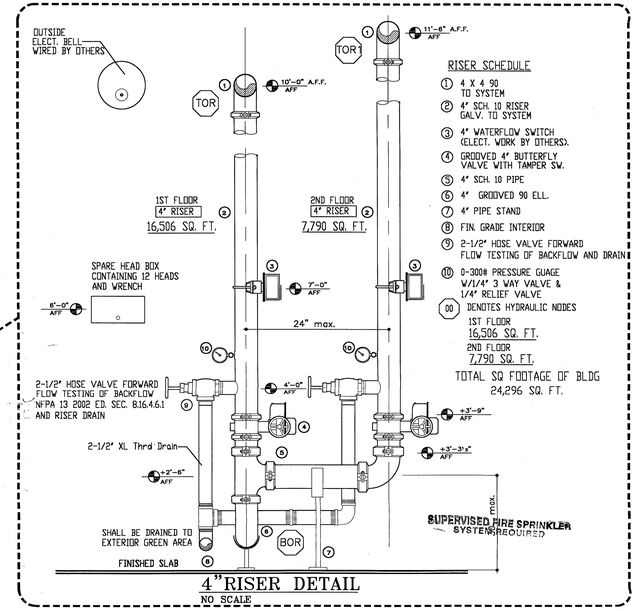

ARMOVER SCHEDULE
1. NEW BRANCHLINE.
2. 1" ARMOVER.*
3. NEW 1" DROP.
4. NEW SEMI RECESSED WHITE FIRE SPRINKLER HEAD/QUICK RESPONSE CENTER OF TILE WHERE POSSIBLE

** ARMOVERS GREATER THAN 24" IN LENGTH SHALL BE SUPPORTED BY A HANGER.

NEW ARMOVER DETAIL
NO SCALE

RISER SCHEDULE
1. 4 X 4 90 TO SYSTEM
2. 4" SCH. 10 RISER GALV. TO SYSTEM
3. 4" WATERFLOW SWITCH (ELECT. WORK BY OTHERS).
4. GROOVED 4" BUTTERFLY VALVE WITH TAMPER SW.
5. 4" SCH. 10 PIPE
6. 4" GROOVED 90 ELL.
7. 4" PIPE STAND
8. FIN. GRADE INTERIOR
9. 2-1/2" HOSE VALVE FORWARD FLOW TESTING OF BACKFLOW AND DRAIN
10. 0-300# PRESSURE GUAGE W/1/4" 3 WAY VALVE & 1/4" RELIEF VALVE
00. DENOTES HYDRAULIC NODES

1ST FLOOR 16,506 SQ. FT.
2ND FLOOR 7,790 SQ. FT.
TOTAL SQ FOOTAGE OF BLDG 24,296 SQ. FT.

4"RISER DETAIL
NO SCALE

NOTE:
A NONCORROSIVE, METALLIC PLACARD INDICATING HYDRAULIC DESIGN AND DEMAND INFORMATION SHALL BE PROVIDED NEXT TO THE FIRE SPRINKLER RISER DENOTING ALL AREAS OF CONCERN.
A CONTRACTOR'S MATERIAL AND TEST CERTIFICATE WILL BE COMPLETED AND SUBMITTED TO OWNERS INSURANCE AT THE COMPLETION OF INSTALLATION.

APPROVED BY
MIAMI-DADE COUNTY FIRE DEPARTMENT
SPK FIRE PERMIT ON SITE
WATER MAIN EXTENSION
DATE 6/30/10 BY

FLOW TEST
MIAMI DADE FIRE RESCUE

WATERFLOW TEST INFORMATION	
STATIC PRESS	45
RESIDUAL PRESS	35
PITOT READING	-
FLOW IN G.P.M.	1924
DATE OF TEST	02/25/2010
TIME OF TEST	15:36
TEST APPROVED BY	CAPT. LEGRA
DADE CO.	-

Location:
9705 E. HIBUSCUS ST.
Provided by:
Miami Dade Fire Rescue
Capt J. Legra

RECORD SET
The information presented on this drawing is diagrammatic and is presented for general information purposes and should not be relied on for accuracy of dimensions, details and locations. Actual and exact conditions if required should be determined in the field.

Call 48 hours before you dig in Florida
It's the Law!
1-800-432-4770
FP&L (305) 347-3900
Sunshine State One Call of Florida, Inc.

STATE OF FLORIDA
SHANTILAL C. PATEL
No. 24581
PROFESSIONAL ENGINEER
11/24/10
CERT.# 0028551
Shantilal C. Patel P.E.

1ST FLOOR

DESIGN CRITERIA

SYSTEM No	1	1-A	2	3	4	5
HAZARD	LIGHT	LIGHT	LIGHT	LIGHT	LIGHT	LIGHT
SPACING	225 MAX	225 MAX	225 MAX	130 MAX	130 MAX	130 MAX
K FACTOR	5.6	5.6	5.6	5.6	5.6	5.6
INSIDE HOSE	--	--	--	--	--	--
OUTSIDE HOSE	100	100	100	100	100	100
RACK GPM	N/A	N/A	N/A	N/A	N/A	N/A

HYDRAULICALLY DESIGNED SYSTEMS

DENSITY	.10	.10	.10	.10	.10	.10
DESIGN AREA	995	1075	RM DESIGN	7 HDS	7 HDS	7 HDS
No OF SPRINKLERS	11	13	11	7	7	7
GPM @ BOR	182.76	213.13	175.40	104.36	108.18	109.31
RESIDUAL @ BOR	29.73	35.4	38.3	41.4	27.68	35.96
GPM @ TEST	282.76	313.13	275.40	204.36	208.18	209.31
RESIDUAL @ TEST	33.19	39.0	41.79	44.6	30.86	39.14

TYPES OF SPRINKLERS

SYMBOL	QTY	SIZE	K	TEMP	MAKE	TYPE	FINISH	ESC.	SIN#
⊙	202	1/2"	5.6	155	GLOBE	PENDENT	WHITE	WHITE	GL5601
○	1	1/2"	5.6	155	GLOBE	UPRIGHT	BRASS	BRASS	GL5615
◀	2	1/2"	5.6	286	GLOBE	SDWL	BRASS	BRASS	GL5626
⊘	8	1/2"	5.6	155	GLOBE	UPRIGHT	BRASS	BRASS	GL5615
TOTAL	203								

NO.	DATE	REVISION DESCRIPTION	
	05/03/10	SUBMITTED FOR PERMIT	T.I
1	06/16/10	REVISE AS PER CITY COMMENTS ADD	T.I
		HEADS IN LOBBY CEILING SOFFIT	
		ADD REMOTE AREA IN CHAMBER CEILING	
		REVISE NOTES FOR MANARDS	
		SECTION LINES FP-2 & FP-3	

ALLIANCE AUTOMATIC FIRE SPRINKLERS
4981 SW 122 TERRACE
COOPER CITY, FLORIDA
TEL: 954.475.9353
FAX: 954.434.9353
Protecting Lives & Property

CUSTOMER PROJECT NO. 09-168 DRAWING NAME: PALMETTO FP

PROJECT NAME
PALMETTO BAY VILLAGE HALL
9705 EAST HIBISCUS
MIAMI, FL.

DRAWN BY: TI	DATE: 05/03/10
SPRKS. ON JOB: 377	SCALE: 1/8"=1'-0"
APPROVALS: A.H.J.	
CONTRACT NO. 10-103	SHEET NO. FP-2 OF 5

PER NFPA 25, 2002 EDITION SECTION 4.1.2 — THE RESPONSIBILITY FOR PROPERLY MAINTAINING A WATER BASED FIRE PROTECTION SYSTEM SHALL BE THAT OF THE OWNER OF THE PROPERTY

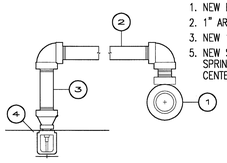

ARMOVER SCHEDULE

1. NEW BRANCHLINE.
2. 1" ARMOVER.*
3. NEW 1" DROP.
5. NEW SEMI RECESSED FIRE SPRINKLER HEAD/QUICK RESPONSE CENTER OF TILE WHERE POSSIBLE

** ARMOVERS GREATER THAN 24" IN LENGTH SHALL BE SUPPORTED BY A HANGER.

NEW ARMOVER DETAIL
NO SCALE

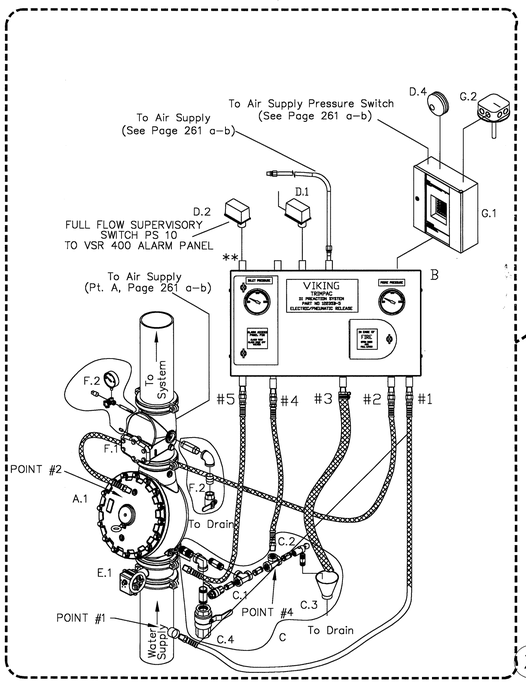

F-1 1-1/2" DRY PRE-ACTION VALVE & TRIM
ISOMETRIC VIEW (see cut sht)
VALVE LOCATED IN IT ROOM

Palmetto Bay IT Room

IT RM. — 101.20 SQ.FT.
3 HEADS TOTAL

3 Heads

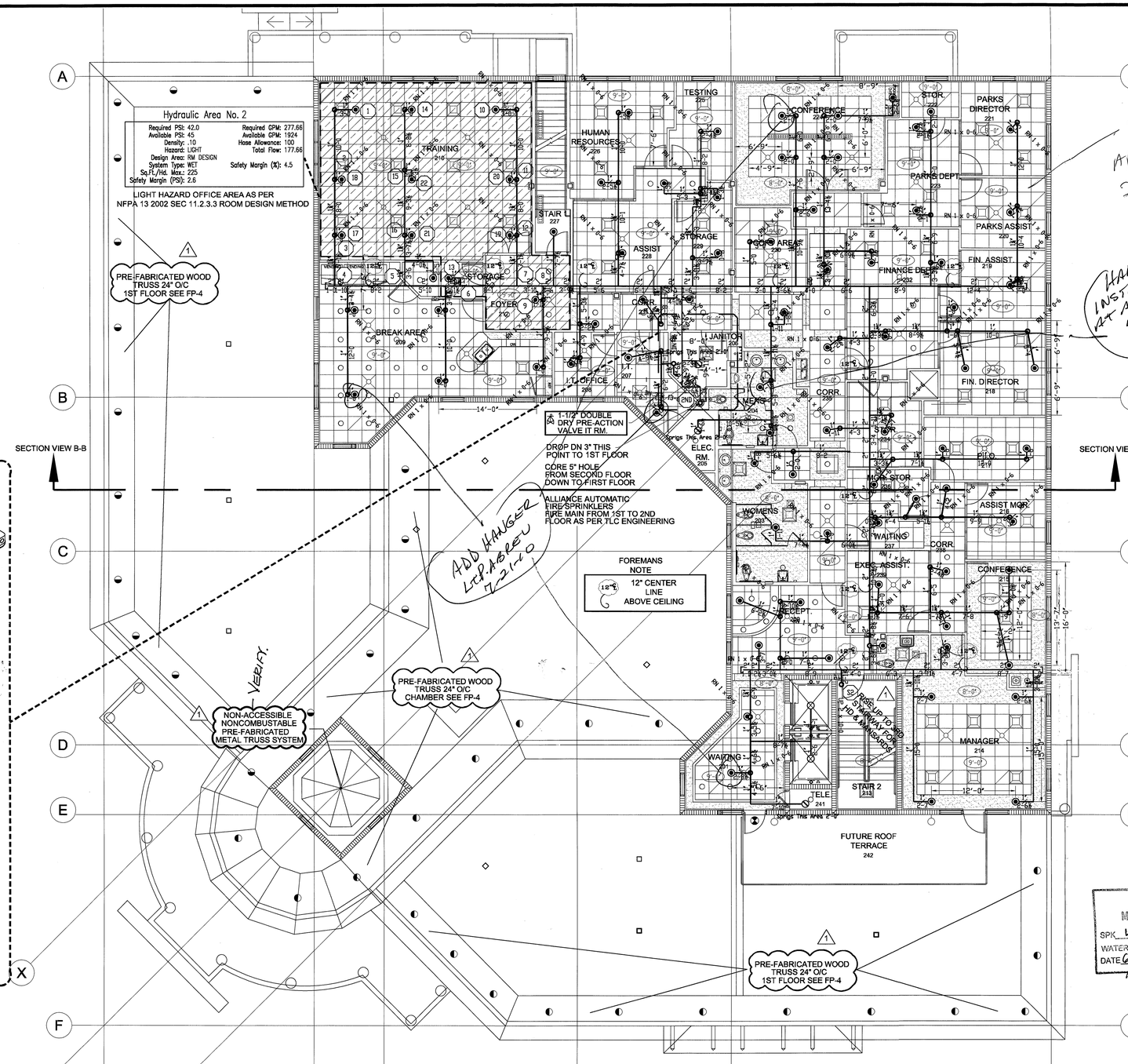

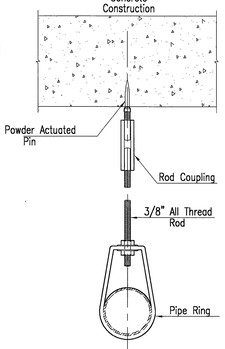

HANGER DETAIL
NO SCALE

HANGER SCHEDULE

SIZE	ATR	LENGTH
1"	3/8"	30"
1-1/4"	3/8"	29"
1-1/2"	3/8"	29"
2"	3/8"	38"
3"	3/8"	38"
6"	1/2"	

HANGER SPACING
AS PER NFPA 13 TABLE 9.2.2.1

THREADED LIGHTWALL	SPACING OF HANGERS
1" TO 2" PIPE	12'-0"
SCH. 10 MAINS	SPACING OF HANGERS
2-1/2" TO 6" PIPE	15'-0"

APPROVED BY
MIAMI-DADE COUNTY FIRE DEPARTMENT
SPK ✓ BLDG. PERMIT ON-SITE
WATER MAIN EXTENSION
DATE 6/30/10 BY

FLOW TEST
MIAMI DADE FIRE RESCUE

WATERFLOW TEST INFORMATION	
STATIC PRESS	45
RESIDUAL PRESS	35
PITOT READING	-
FLOW IN G.P.M.	1924
DATE OF TEST	02/25/2010
TIME OF TEST	15:36
TEST APPROVED BY	CAPT. LEGRA
DADE CO.	-

Location:
9705 E. HIBUSCUS ST.
Provided by:
Miami Dade Fire Rescue
Capt J. Legra

RECORD SET
The information presented on this drawing is diagrammatic and is presented for general information purposes and should not be relied on for accuracy of dimensions, details and locations. Actual and exact conditions if required should be determined in the field.

Call 48 hours before you dig in Florida
It's the Law!
1-800-432-4770
FP&L (305) 347-3900
Sunshine State One Call of Florida, Inc.

NORTH

Fire Sprinkler Site Plan for Palmetto Bay Village Hall 2nd Floor
Total Sq. Ft. 7,790
SCALE: 1/8"=1'-0"

2ND FLOOR

SHANTILAL C. PATEL LICENSE No.28551 STATE OF FLORIDA REGISTERED PROFESSIONAL ENGINEER
Shantilal C. Patel P.E.

FIRE PROTECTION ENGINEERING SERVICE U.S.A. CERT.# 0028551 COOPER CITY, FL 33330

DESIGN CRITERIA						
SYSTEM No	1	1-A	2	3	4	5
HAZARD	LIGHT	LIGHT	LIGHT	LIGHT	LIGHT	LIGHT
SPACING	225 MAX	225 MAX	225 MAX	130 MAX	130 MAX	130 MAX
K FACTOR	5.6	5.6	5.6	5.6	5.6	5.6
INSIDE HOSE	--	--	--	--	--	--
OUTSIDE HOSE	100	100	100	100	100	100
RACK GPM	N/A	N/A	N/A	N/A	N/A	N/A

HYDRAULICALLY DESIGNED SYSTEMS						
DENSITY	.10	.10	.10	.10	.10	.10
DESIGN AREA	995	1075	RM DESIGN	7 HDS	7 HDS	7 HDS
No OF SPRINKLERS	11	13	11	7	7	7
GPM @ BOR	182.76	213.13	175.40	104.36	108.18	109.31
RESIDUAL @ BOR	29.73	35.4	38.3	41.4	27.68	35.96
GPM @ TEST	282.76	313.13	275.40	204.36	208.18	209.31
RESIDUAL @ TEST	33.19	39.0	41.79	44.6	30.86	39.14

TYPES OF SPRINKLERS										
SYMBOL	QTY	SIZE	K	TEMP	MAKE	TYPE	FINISH	ESC.	SIN#
◉	85	1/2"	5.6	155	GLOBE	PENDENT	WHITE	WHITE	GL5601
⊘	3	1/2"	5.6	155	GLOBE	UPRIGHT	BRASS	BRASS	GL5615
◀	--	1/2"	5.6	286	GLOBE	SDWL	BRASS	BRASS	GL5626
○	2	1/2"	5.6	155	GLOBE	UPRIGHT	BRASS	BRASS	GL5615
TOTAL	95								

NO.	DATE	REVISION DESCRIPTION	
	05/03/10	SUBMIT FOR PERMIT	T.I
1	06/16/10	REVISE AS PER CITY COMMENTS ADD	T.I
		HEADS IN LOBBY CEILING SOFFIT	
		ADD REMOTE AREA IN CHAMBER CEILING	
		REVISE NOTES FOR MANARDS	
		SECTION LINES FP-2 & FP-3	

ALLIANCE AUTOMATIC FIRE SPRINKLERS
4981 SW 122 TERRACE
COOPER CITY, FLORIDA
TEL: 954.275.9855
FAX: 954.424.9855
Protecting Lives & Property

CUSTOMER PROJECT NO. 09-168 | DRAWING NAME: PALMETTO FP

PROJECT NAME
PALMETTO BAY VILLAGE HALL
9705 EAST HIBISCUS
MIAMI, FL.

DRAWN BY: TI	DATE: 05/03/10
SPRKS. ON JOB: 377	SCALE: 1/8"=1'-0"
APPROVALS: A.H.J.	
CONTRACT NO. 10-103	SHEET NO. FP-3 OF 5

PIPE DIMENSIONS (03/15/10)

NOMINAL PIPE SIZE	OUTSIDE DIAMETER	INSIDE DIAMETER
CPVC BLAZEMASTER		
3/4"	1.050"	.874
1"	1.315"	1.101
1-1/4"	1.660"	1.394
1-1/2"	1.900"	1.598
2"	2.375"	2.003
SCHEDULE 40 STEEL		
1"	1.315"	1.049
1-1/4"	1.660"	1.380
1-1/2"	1.900"	1.610
2"	2.375"	2.067
SCHEDULE 10 STEEL		
1"	1.315"	1.097
1-1/4"	1.660"	1.442
1-1/2"	1.900"	1.682
2"	2.375"	2.157
2-1/2"	2.875"	2.635
3"	3.500"	3.260
4"	4.500"	4.260
6"	6.625	6.357
8"	8.625	8.249
THREADABLE LIGHT WALL (XL)		
1"	1.290	1.104
1-1/4"	1.638	1.527
1-1/2"	1.883	1.687
2"	2.360	2.154
SCHEDULE 7 (DYNAFLO)		
1"	1.315"	1.197"
1-1/4"	1.660"	1.542"
1-1/2"	1.900"	1.726"
2"	2.375"	2.197"
2-1/2"	2.875"	2.703"
3"	3.500"	3.374"
4"	4.500"	4.310"

APPLICABLE CODES

BUILDING CODE: 2007 FLORIDA BUILDING CODE

FIRE CODE: 2004 FLORIDA FIRE PREVENTION CODE

STANDARDS: NFPA 13, 2002 EDITION
NFPA 24, 2002 EDITION
NFPA 25, 2002 EDITION

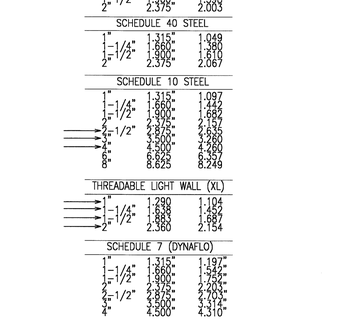

TYPICAL HEAD POSITION
WOOD MANSARD DETAIL
NO SCALE

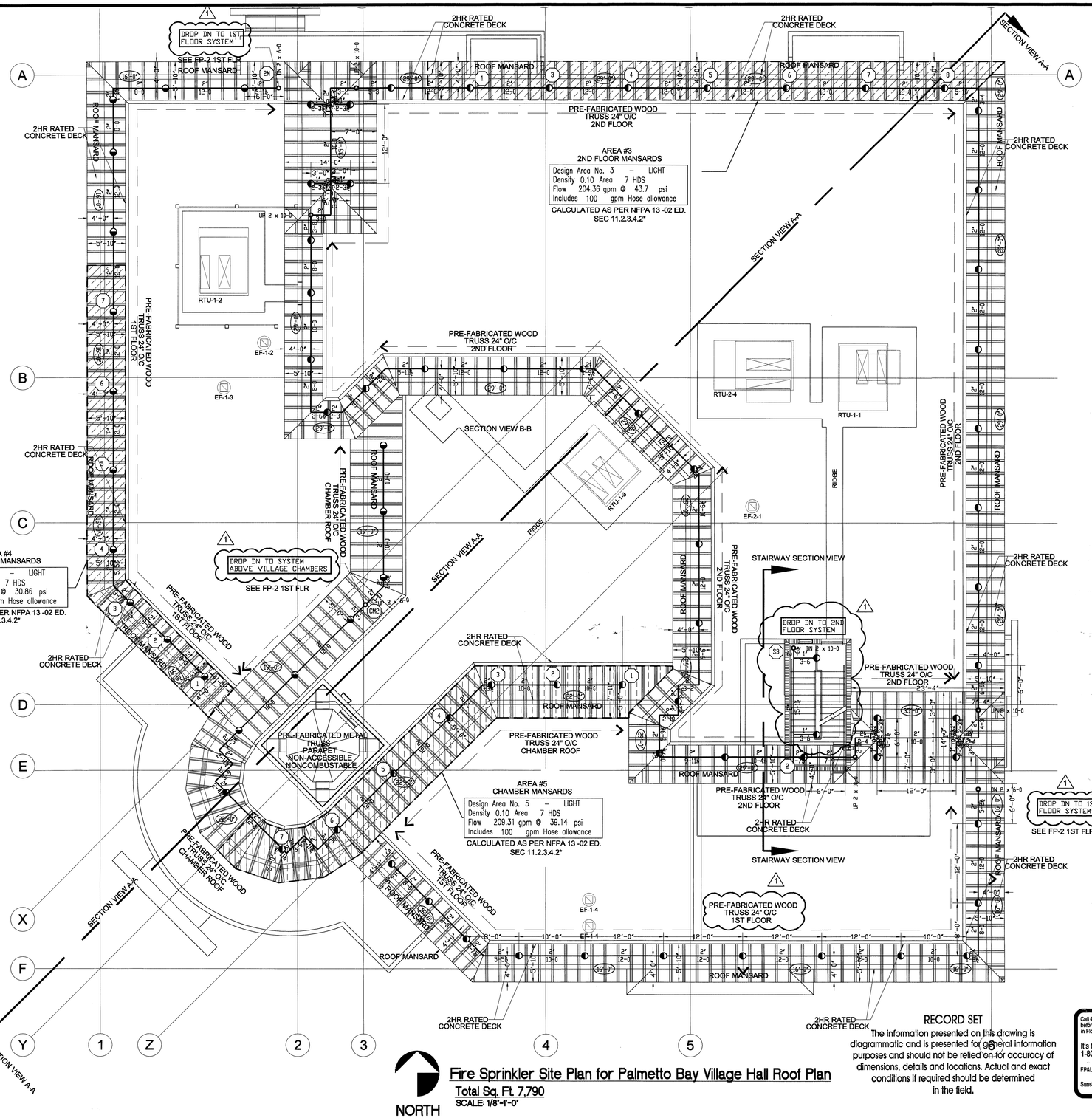

Fire Sprinkler Site Plan for Palmetto Bay Village Hall Roof Plan

Total Sq. Ft. 7,790

SCALE: 1/8"=1'-0"

RECORD SET

The information presented on this drawing is diagrammatic and is presented for general information purposes and should not be relied on for accuracy of dimensions, details and locations. Actual and exact conditions if required should be determined in the field.

PER NFPA 25, 2002 EDITION SECTION 4.1.2 – THE RESPONSIBILITY FOR PROPERLY MAINTAINING A WATER BASED FIRE PROTECTION SYSTEM SHALL BE THAT OF THE OWNER OF THE PROPERTY

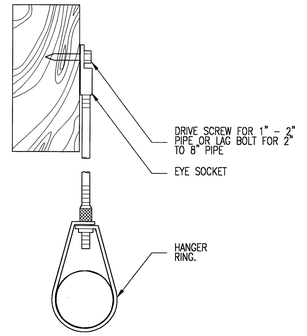

WOOD HANGER DETAIL
NO SCALE

HANGER SCHEDULE

SIZE	ATR	LENGTH
1"	3/8"	30"
1-1/4"	3/8"	29"
1-1/2"	3/8"	29"
2"	3/8"	29"
3"	3/8"	38"
6"	1/2"	

HANGER SPACING
AS PER NFPA 13 TABLE 9.2.2.1

THREADED LIGHTWALL	SPACING OF HANGERS
1" TO 2" PIPE	12'-0"
SCH. 10 MAINS	SPACING OF HANGERS
2-1/2" TO 6" PIPE	15'-0"

APPROVED BY
MIAMI-DADE COUNTY FIRE DEPARTMENT
CFK FLOOR HEIGHT ON-SITE
WATER MAIN EXTENSION
DATE 6/30/10 BY

FLOW TEST
MIAMI DADE FIRE RESCUE

WATERFLOW TEST INFORMATION	
STATIC PRESS	45
RESIDUAL PRESS	35
PITOT READING	-
FLOW IN G.P.M.	1924
DATE OF TEST	02/25/2010
TIME OF TEST	15:36
TEST APPROVED BY	CAPT. LEGRA
DADE CO.	-

Location:
9705 E. HIBUSCUS ST.
Provided by:
Miami Dade Fire Rescue
Capt J. Legra

Call 48 hours before you dig in Florida
It's the Law!
1-800-432-4770
FP&L (305) 347-3900
Sunshine State One Call of Florida, Inc.

SHANTILAL C. PATEL LICENSE No. 28551 STATE OF FLORIDA PROFESSIONAL ENGINEER
CERT.# 0028551
Shantilal C. Patel P.E.

ROOF PLAN

DESIGN CRITERIA						
SYSTEM No	1	1–A	2	3	4	5
HAZARD	LIGHT	LIGHT	LIGHT	LIGHT	LIGHT	LIGHT
SPACING	225 MAX	225 MAX	225 MAX	130 MAX	130 MAX	130 MAX
K FACTOR	5.6	5.6	5.6	5.6	5.6	5.6
INSIDE HOSE	--	--	--	--	--	--
OUTSIDE HOSE	100	100	100	100	100	100
RACK GPM	N/A	N/A	N/A	N/A	N/A	N/A

HYDRAULICALLY DESIGNED SYSTEMS							
DENSITY	.10	.10	.10	.10	.10	.10	
DESIGN AREA	995	1075	RM DESIGN	7 HDS	7 HDS	7 HDS	
No OF SPRINKLERS	11	13	11	7	7	7	
GPM @ BOR	182.76	213.13	175.40	104.36	108.18	109.31	
RESIDUAL @ BOR	29.73	35.4	38.3	41.4	27.68	35.96	
GPM @ TEST	282.76	313.13	275.40	204.36	208.18	209.31	
RESIDUAL @ TEST	33.19	39.0	41.79	44.6	30.86	39.14	

TYPES OF SPRINKLERS										
SYMBOL	QTY	SIZE	K	TEMP	MAKE	TYPE	FINISH	ESC.	SIN#
●	--	1/2"	5.6	155	GLOBE	PENDENT	WHITE	WHITE	GL5601
◐	79	1/2"	5.6	200°	GLOBE	UPRIGHT	BRASS	BRASS	GL5615
◀	--	1/2"	5.6	286	GLOBE	SDWL	BRASS	BRASS	GL5626
TOTAL	79								

NO.	DATE	REVISION DESCRIPTION	
	05/03/10	SUBMIT FOR PERMIT	T.I
1	06/16/10	REVISE AS PER CITY COMMENTS ADD	T.I
		HEADS IN LOBBY CEILING SOFFIT	
		ADD REMOTE AREA IN CHAMBER CEILING	
		REVISE NOTES FOR MANARDS	
		SECTION LINES FP-2 & FP-3	
		ADD 2 HDS TOP OF STAIRWAY	

ALLIANCE AUTOMATIC FIRE SPRINKLERS
4981 SW 122 TERRACE
COOPER CITY, FLORIDA
TEL: 954.275.0355
FAX: 954.424.8330
Protecting Lives & Property

CUSTOMER PROJECT NO. 09-168 | DRAWING NAME: PALMETTO FP

PROJECT NAME
PALMETTO BAY VILLAGE HALL
9705 EAST HIBISCUS
MIAMI, FL.

DRAWN BY: TI	DATE: 05/03/10
SPRKS. ON JOB: 377	SCALE: 1/8"=1'-0"
APPROVALS: A.H.J.	
CONTRACT NO. 10-103	SHEET NO. FP-4 OF 5

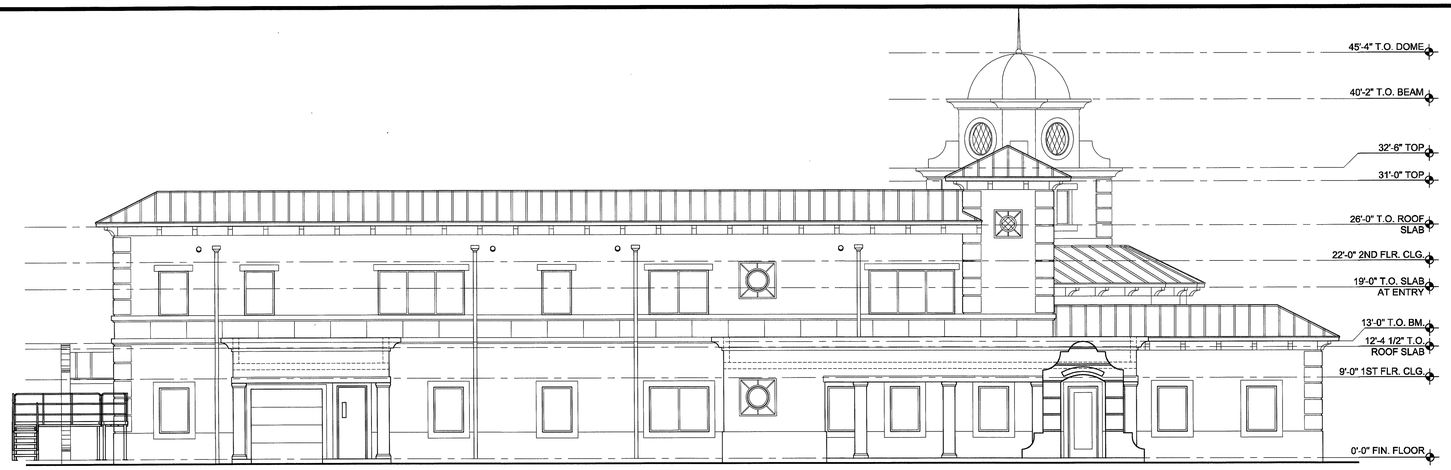

Fire SprinklerSection View West Side Exterior

SCALE: 1/8"=1'-0"

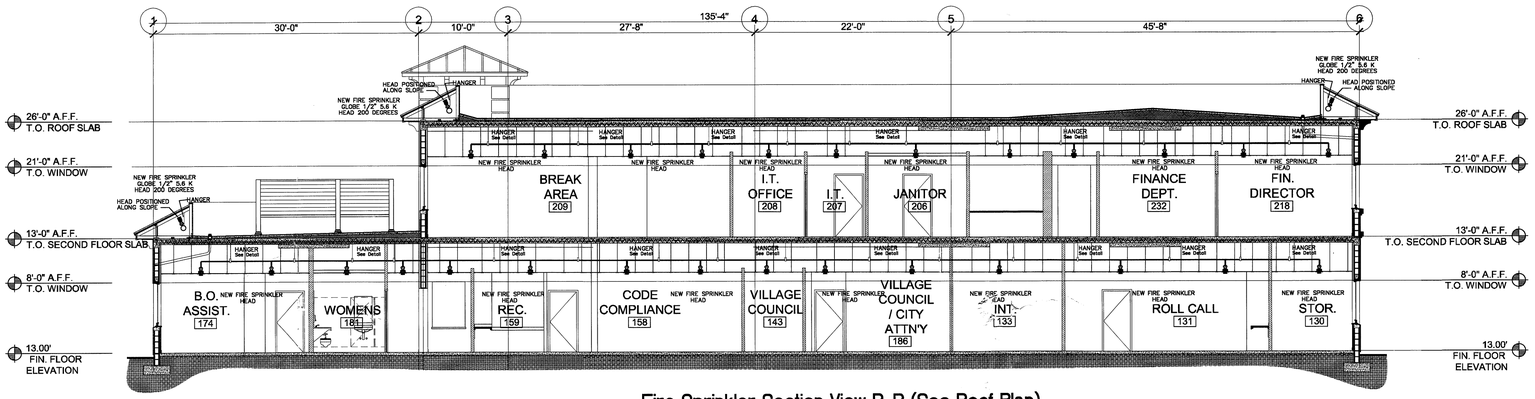

Fire Sprinkler Section View B-B (See Roof Plan)

SCALE: 1/8"=1'-0"

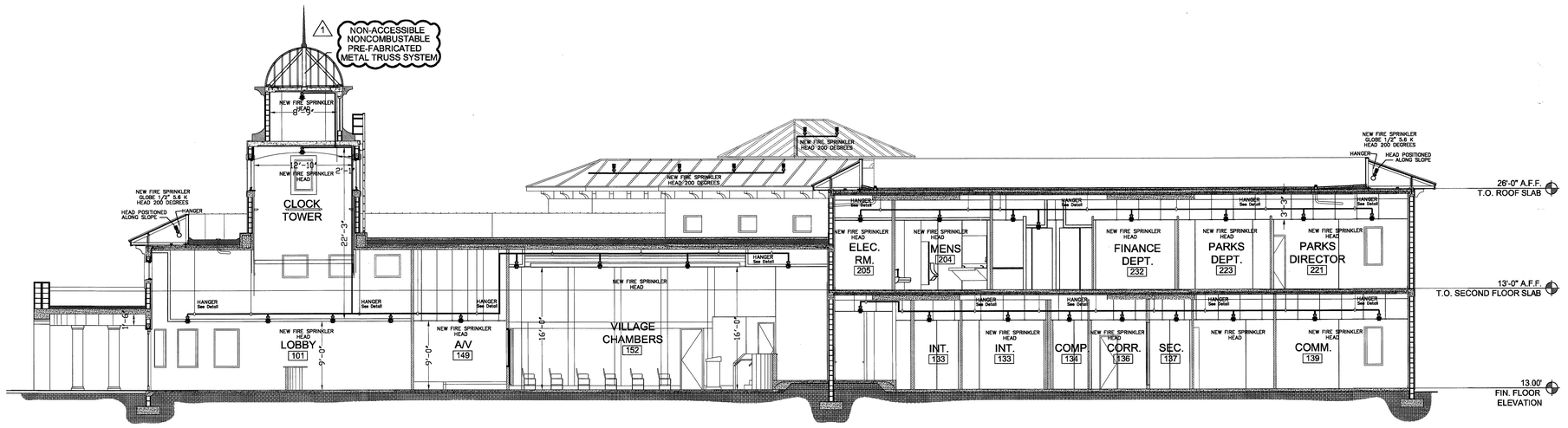

Fire Sprinkler Section View A-A (See Roof Plan)

SCALE: 1/8"=1'-0"

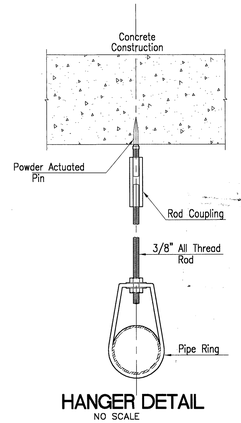

HANGER DETAIL

NO SCALE

PER NFPA 25, 2002 EDITION SECTION 4.1.2 – THE RESPONSIBILITY FOR PROPERLY MAINTAINING A WATER BASED FIRE PROTECTION SYSTEM SHALL BE THAT OF THE OWNER OF THE PROPERTY

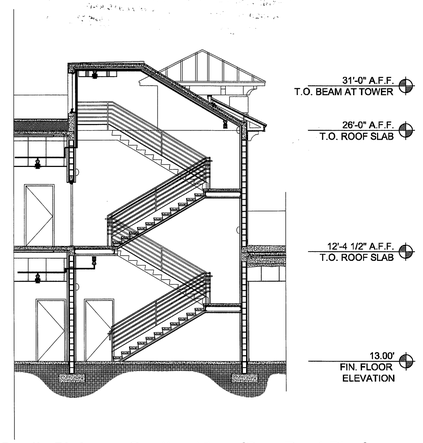

South Stairway Section View (See Roof Plan)

SCALE: 1/8"=1'-0"

RECORD SET

The information presented on this drawing is diagrammatic and is presented for general information purposes and should not be relied on for accuracy of dimensions, details and locations. Actual and exact conditions if required should be determined in the field.

APPROVED BY
MIAMI-DADE COUNTY FIRE DEPARTMENT
SPK'L ✓ BLDG. PERMIT ON SITE
WATER MAIN EXTENSION
DATE 6/30/10 BY

Call 48 hours before you dig in Florida
It's the Law! 1-800-432-4770
FP&L (305) 347-3900
Sunshine State One Call of Florida, Inc.

FLOW TEST
MIAMI DADE FIRE RESCUE

WATERFLOW TEST INFORMATION	
STATIC PRESS	45
RESIDUAL PRESS	35
PITOT READING	-
FLOW IN G.P.M.	1924
DATE OF TEST	02/25/2010
TIME OF TEST	15:36
TEST APPROVED BY	CAPT. LEGRA
DADE CO.	-

Location:
9705 E. HIBUSCUS ST.
Provided by:
Miami Dade Fire Rescue
Capt J. Legra

SHANTILAL C. PATEL LICENSED PROFESSIONAL ENGINEER No. 28551 STATE OF FLORIDA CERT# 0028551 COOPER CITY, FL 33330
Shantilal C. Patel P.E.

SECTION VIEWS

DESIGN CRITERIA						
SYSTEM No	1	1-A	2	3	4	5
HAZARD	LIGHT	LIGHT	LIGHT	LIGHT	LIGHT	LIGHT
SPACING	225 MAX	225 MAX	225 MAX	130 MAX	130 MAX	130 MAX
K FACTOR	5.6	5.6	5.6	5.6	5.6	5.6
INSIDE HOSE	--	--	--	--	--	--
OUTSIDE HOSE	100	100	100	100	100	100
RACK GPM	N/A	N/A	N/A	N/A	N/A	N/A

HYDRAULICALLY DESIGNED SYSTEMS						
DENSITY	.10	.10	.10	.10	.10	.10
DESIGN AREA	995	1075	RM DESIGN	7 HDS	7 HDS	7 HDS
No OF SPRINKLERS	11	13	11	7	7	7
GPM @ BOR	182.76	213.13	175.40	104.36	108.18	109.31
RESIDUAL @ BOR	29.73	35.4	38.3	41.4	27.68	35.96
GPM @ TEST	282.76	313.13	275.40	204.36	208.18	209.31
RESIDUAL @ TEST	33.19	39.0	41.79	44.6	30.86	39.14

TYPES OF SPRINKLERS										
SYMBOL	QTY	SIZE	K	TEMP	MAKE	TYPE	FINISH	ESC.	SIN#
◉	--	1/2"	5.6	155	GLOBE	PENDENT	WHITE	WHITE	GL5601
○	--	1/2"	5.6	155	GLOBE	UPRIGHT	BRASS	BRASS	GL5615
◀	--	1/2"	5.6	286	GLOBE	SDWL	BRASS	BRASS	GL5626
TOTAL	--								

NO.	DATE	REVISION DESCRIPTION	
	05/03/10	SUBMIT FOR PERMIT	T.I
1	06/16/10	REVISE AS PER CITY COMMENTS ADD HEADS IN LOBBY CEILING SOFFIT ADD REMOTE AREA IN CHAMBER CEILING REVISE NOTES FOR MANARDS SECTION LINES FP-2 & FP-3	T.I

ALLIANCE AUTOMATIC FIRE SPRINKLERS
4981 SW 122 TERRACE
COOPER CITY, FLORIDA
TEL: 954.275.9353
FAX: 954.434.8353
Protecting Lives & Property

CUSTOMER PROJECT NO. 09-168 | DRAWING NAME: PALMETTO FP

PROJECT NAME
PALMETTO BAY VILLAGE HALL
9705 EAST HIBISCUS
MIAMI, FL.

DRAWN BY: TI	DATE: 05/03/10
SPRKS. ON JOB: 377	SCALE: 1/8"=1'-0"
APPROVALS: A.H.J.	
CONTRACT NO. 10-103	SHEET NO. FP-5 OF 5

TECHNOLOGY SYSTEMS SYMBOL LEGEND

BASIC MATERIALS

SYMBOL	DESCRIPTION
J	JUNCTION BOX
J	FLOOR MOUNTED JUNCTION BOX
J	PEDESTAL MOUNTED JUNCTION BOX
	INGROUND PULL BOX
	EXISTING CONDUIT ABOVE HARD CEILING BETWEEN CEILING BOXES
	CONDUIT CONCEALED ABOVE CEILING OR IN WALL
	CONDUIT CONCEALED IN SLAB, UNDERGROUND OR UNDER FLOOR
	CONDUIT EXPOSED
	CONDUIT TURNING UP
	CONDUIT TURNING DOWN
	CONDUIT STUB
	CONDUIT CONTINUED
	FLEXIBLE CONDUIT
	GROUND OR GROUND ROD AS NOTED
	SLEEVE TURNING UP
	SLEEVE TURNING DOWN
	EXISTING TO BE REMOVED
	EXISTING TO REMAIN
	EXISTING AFFECTED BY THIS PROJECT
	FUTURE
	NEW
	CABLE TRAY FOR HORIZONTAL CABLING.
2	TWO TIER CABLE TRAY
	PENETRATION CONDUIT SLEEVE WITH BUSHINGS.

BROADBAND TELEVISION SYSTEM

SYMBOL	DESCRIPTION
	2 PORT TAP
	4 PORT TAP
	6 PORT TAP
2.5	8 PORT TAP
	TERMINATION TAP
	2 WAY SPLITTER
	3 WAY SPLITTER
	4 WAY SPLITTER
T	AMPLIFIER
	DIRECTIONAL COUPLER

AUDIO/VIDEO SYSTEM

SYMBOL	DESCRIPTION
X x Y	OVERHEAD PROJECTOR WITH SCREEN, SCREEN SIZE SHOWN ON PLANS
XX	FLAT PANEL DISPLAY - XX DENOTES THE SCREEN SIZE
X	OVERHEAD PROJECTOR - CEILING MOUNTED X - DENOTES TYPE
	CEILING MOUNTED DOCUMENT CAMERA
AV	AUDIO/VIDEO CAMERA
X x Y	PULLDOWN PROJECTION SCREEN, SIZE SPECIFIED ON PLANS
X x Y	MOTORIZED PROJECTION SCREEN, SIZE SPECIFIED ON PLANS
	OVERHEAD PROJECTION SCREEN MOTOR
S_X	WALL SWITCH FOR MOTORIZED SCREEN
AV X	X = A, B, C... INTERFACE TYPE. AUDIO VISUAL OUTLET – WALL MOUNTED WITH ADJACENT DEDICATED DUPLEX RECEPTACLE BY **DIVISION 16**
TV	TELEVISION OUTLET - WALL MOUNTED AT 7'-0" ABOVE FINISHED FLOOR. ADJACENT DUPLEX RECEPTACLE BY ELECTRICAL INSTALLER
FS	FLAT SCREEN INFRASTRUCTURE - UNLESS OTHERWISE SPECIFIED, MOUNTED AT 5'-6" ABOVE FINISHED FLOOR.
ALT	ASSISTED LISTENING TRANSMITTER
TS	TOUCH SCREEN AUDIO/VIDEO CONTROL
TS	WALL MOUNTED TOUCH SCREEN AUDIO/VIDEO CONTROL
SX Y	CEILING MOUNTED SPEAKER x DENOTES TYPE y DENOTES ZONE
SX Y	WALL MOUNTED SPEAKER x DENOTES TYPE y DENOTES ZONE NO ZONE DENOTES LOCAL AUDIO/VIDEO SYSTEM
S	SPEAKER - DEMOLITION PLAN
VC	VOLUME CONTROL. PROVIDE 3/4" CONDUIT STUB-UP ABOVE CEILING AND SINGLE STANDARD ELECTRICAL BOX AT 52" ABOVE FINISHED FLOOR
MX Y	CEILING MOUNTED MICROPHONE OUTLET x DENOTES TYPE y DENOTES ZONE
MX Y	WALL MOUNTED MICROPHONE x DENOTES TYPE y DENOTES ZONE NO ZONE DENOTES LOCAL AUDIO/VIDEO SYSTEM
MX Y	SURFACE MOUNTED MICROPHONE x DENOTES TYPE y DENOTES ZONE NO ZONE DENOTES LOCAL AUDIO/VIDEO SYSTEM
M	MICROPHONE - COORDINATE WITH MILLWORK
SD	SATELLITE DISH
PODIUM	SEE PODIUM DETAILS

NOTES:

1. ALL RACEWAYS AND BOXES SHOWN ARE IN CONTRACT BY THE ELECTRICAL INSTALLER.
2. AUDIO/VIDEO DEVICES AND EQUIPMENT BY THE AUDIO/VIDEO INSTALLER.

VOICE & DATA SYSTEM

SYMBOL	DESCRIPTION
C X N N N	MOUNTING 2" ABOVE COUNTER OR BACK SPLASH X = MOUNTING (F)LUSH, (S)URFACE, (M)ODULAR FURNITURE ADAPTER (P)OLE, (R)ACEWAY, (D)OUBLE GANG FLUSH, (PD) PEDESTAL N = # OF VOICE/DATA JACKS N = # OF COAX CONNECTORS "F" TYPE CONNECTOR N = # OF FIBER OPTIC CONNECTORS. SC, ST, LC COMMUNICATIONS "INFORMATION OUTLET" MTD. AT RECEPTACLE HEIGHT UNLESS OTHERWISE NOTED. MODULE AND FACEPLATE DESCRIPTIONS ON DETAIL 3, SHEET T7.1 SPECIAL NOTES: 1. VOICE/DATA JACKS: EACH RJ45 CAT6 JACK FOR VOICE/DATA SHALL BE CONNECTED TO A DEDICATED UTP 4 PR CAT6 CABLE.
W F1	WALL TELEPHONE OUTLET FOR HOUSE PHONE. MOUNTED AT 52" ABOVE FINISHED FLOOR TO TOP.
W P1	WALL TELEPHONE OUTLET FOR PAY PHONE. MOUNTED AT 48" ABOVE FINISHED FLOOR.
P ADA	WALL TELEPHONE OUTLET FOR PAY PHONE. ADA COMPLIANT 42" ABOVE FINISHED FLOOR.
WAP XON	WIRELESS ACCESS POINT OUTLET. ACTUAL QUANTITY AND LOCATIONS OF WIRELESS ACCESS POINTS BASED ON SIGNAL SURVEY BY WLAN VENDOR. X = MOUNTING (F)LUSH, (S)URFACE, (C)EILING. N = # OF DATA JACKS. MAXIMUM CABLE LENGTH 262 FT
S1 ELV	WALL TELEPHONE OUTLET FOR TELEPHONE IN ELEVATOR MACHINE ROOM. (S)URFACE MOUNTED AT 52" ABOVE FINISHED FLOOR.
XNNN	COMBINED VOICE/DATA, AUDIO/VIDEO AND POWER OUTLETS IN FLOOR BOX. POWER RECEPTACLE IS SHOWN FOR REFERENCE ONLY. CONDUIT, BOX AND POWER RECEPTACLE PROVIDED BY **DIVISION 16**. X = A, B, C... FLOOR BOX TYPE. N'S ARE DESCRIBED ABOVE.
TB XNNN	TABLE TOP POP-UP WITH VOICE/DATA, AUDIO/VIDEO AND POWER INTERFACE. X = A, B, C... FLOOR BOX TYPE. N'S ARE DESCRIBED ABOVE.
P XNNN	POKE THRU WITH COMBINED VOICE/DATA, AUDIO/VIDEO AND POWER. X = A, B, C... FLOOR BOX TYPE. N'S ARE DESCRIBED ABOVE.
	3/4" PLYWOOD BACKBOARD. BY DIVISION 16
	IDF – 2 POST RACK
	IDF – 4 POST RACK
	TELECOMM PANEL
TEF:	TELECOMMUNICATIONS ENTRANCE FACILITY
TR:	TELECOMMUNICATIONS ROOM
TER:	TELECOMMUNICATIONS EQUIPMENT ROOM

NOTES:

1. ALL CABLE TRAY, CONDUITS AND BOXES SHOWN ARE IN CONTRACT BY THE ELECTRICAL INSTALLER. J-HOOKS AND LADDER RACKS BY SCS INSTALLER.
2. STRUCTURED CABLING SYSTEM BY **DIVISION 17** CABLING INSTALLER.

SECURITY SYSTEM

SYMBOL	DESCRIPTION
FIX	FIXED CCTV CAMERA
PTZ	PAN/TILT/ZOOM CCTV CAMERA
C #	CAMERA NUMBER DESIGNATION
	SECURITY PANEL
DPS	DOOR POSITION SWITCH
BMS	BALANCED MAGNETIC SWITCH
CR	CARD READER
KP	KEYPAD
CK	COMBINED CARD READER/KEYPAD
HS	HIRSH SCRAMBLE KEYPAD
IK	INTRUSION ALARM KEYPAD
BR	BIOMETRIC READER
SA	LOCAL HORN STROBE ALARM
EL	ELECTRIC LATCH
EM	ELECTRIC MORTISE/TRIM LOCK
ES	ELECTRIC STRIKE
ML	MAGNETIC LOCK
SL	SHEAR LOCK
DE	DELAYED EGRESS
DL	DETENTION LOCK
DI	DOOR INTERLOCK
	REMOTE DOOR RELEASE BUTTON
	REX OR ADA DOOR OPEN BUTTON
AS	ASSISTANCE STATION
IS	INTERCOM SUBSTATION
SP	ASSISTANCE STATION
D	DURESS BUTTON MOUNTED UNDERSIDE OF COUNTER
D	DURESS BUTTON WALL MOUNTED
MON	CCTV MONITOR
P	PHOTO ELECTRIC BEAM
IS	INTERCOM SUBSTATION WALL MOUNTED
MI	INTERCOM MASTER STATION
SP	SPEAKER PHONE
M	DIRECTIONAL MOTION DETECTOR
	360° MOTION DETECTOR
G	GLASS BREAK SENSOR
R	REQUEST TO EXIT MOTION SENSOR
I	INFANT ABDUCTION DETECTOR
X	ASSOCIATED DOOR DETAIL REFERENCE
PC	PERSONAL COMPUTER WORKSTATION

NOTES:

1. ALL RACEWAYS AND BOXES SHOWN ARE IN CONTRACT BY THE ELECTRICAL INSTALLER.
2. SECURITY DEVICES AND EQUIPMENT BY **DIVISION 17** SECURITY INSTALLER.

NOTE: SOME SYMBOLS SHOWN ON THIS LEGEND MAY NOT PERTAIN TO THIS PROJECT.

GENERAL NOTES

GENERAL SYSTEM NOTES

1. PRODUCTS SHALL BE OF MATERIALS THAT ARE SUITABLE FOR THE ENVIRONMENT IN WHICH THEY ARE TO BE INSTALLED.
2. WORKING CLEARANCES AROUND ELECTRICAL EQUIPMENT SHALL BE MAINTAINED IN COMPLIANCE WITH THE NATIONAL ELECTRICAL CODE ARTICLE 110, COORDINATE EQUIPMENT INSTALLATION TO MAINTAIN REQUIRED CLEARANCES.
3. IF AN OUTLET BOX IS REQUIRED TO BE LOCATED IN AN ASSEMBLY OR PARTITION RATED AS "FIRE/SMOKE" OR "SMOKE" OR IDENTIFIED AS EITHER "FIRE/SMOKE" OR "SMOKE", THEN ALL OF THE FOLLOWING CONDITIONS SHALL BE MET:
   A. THE OUTLET BOX SHALL BE METALLIC.
   B. THE OUTLET BOX OPENINGS SHALL OCCUR ONLY ON ONE SIDE OF THE FRAMING SPACE.
   C. THE OUTLET BOX OPENINGS SHALL NOT EXCEED 16 SQUARE INCHES.
   D. ALL CLEARANCES BETWEEN THE OUTLET BOX AND THE WALL BOARD MATERIAL SHALL BE COMPLETELY SEALED WITH APPROVED MATERIALS IN ACCORDANCE WITH THE APPLICABLE CODES AND STANDARDS FOR THE PROJECT.
   E. PROVIDE A SUPPLEMENTAL BARRIER AROUND OUTLETS LARGER THAN 16 INCHES SO THAT THE ORIGINAL RATING OF THE PENETRATION IS MAINTAINED.
   F. THE TOTAL AGGREGATE SURFACE AREA OF THE OUTLET BOX SHALL NOT EXCEED 100 SQUARE INCHES PER 100 SQUARE FEET.
   G. THE OUTLET BOX SHALL BE SEPARATED FROM OPENINGS ON THE OPPOSITE SIDE OF THE RATED PARTITION BY A MINIMUM HORIZONTAL DISTANCE OF 24 INCHES.
   H. THE OUTLET BOX SHALL BE SECURELY FASTENED TO A PARTITION FRAMING MEMBER BY MEANS OF AN APPROVED ATTACHMENT METHOD.
   I. OPENINGS CUT INTO THE WALL BOARD MATERIAL SHALL NOT EXCEED 1/8 INCH BETWEEN THE EDGES OF THE OUTLET BOX AND THE EDGES OF THE OPENING.
4. LOCATIONS OF EQUIPMENT SHOWN ON THE DRAWINGS ARE APPROXIMATE, COORDINATE EXACT EQUIPMENT LOCATION AND CONNECTION REQUIREMENTS WITH THE APPROPRIATE TRADE PRIOR TO INSTALLATION.
5. FOR EXACT LOCATION OF CEILING MOUNTED EQUIPMENT REFER TO THE ARCHITECTURAL REFLECTED CEILING PLAN. LOCATIONS OF EQUIPMENT NOT INCLUDED ON THE REFLECTED CEILING PLAN SHALL BE COORDINATED WITH THOSE ITEMS SHOWN. COORDINATION OF CEILING MOUNTED EQUIPMENT SHALL BE PRIOR TO ANY ROUGH-IN. NOTIFY ENGINEER OF ANY DISCREPANCY.
6. PROVIDE FINAL CONNECTIONS TO OWNER PROVIDED EQUIPMENT WHERE INDICATED ON THE PLAN DRAWINGS.
7. PRIOR TO ROUGH-IN AND INSTALLATION OF ANY FLOOR MOUNTED DEVICE, VERIFY LOCATION WITH THE OWNER AND ARCHITECT.
8. VERIFY AND COORDINATE THE LOCATION OF REQUIRED **DIVISION 17** OUTLETS WITH OTHER TRADE DRAWINGS AND OWNER PROVIDED EQUIPMENT.
9. EACH TELEVISION OUTLET LOCATION SHOWN, SHALL HAVE A DOUBLE GANG OUTLET BOX WITH A SINGLE GANG PLASTER RING AND (1) 1" CONDUIT STUBBED UP TO AN ACCESSIBLE LOCATION ABOVE THE FINISHED CEILING.
10. THE DESIGNATION "N.I.C." SHALL DENOTE ITEMS, WHICH ARE "NOT IN CONTRACT".
11. THE DESIGNATION "U.S.C." SHALL DENOTE ITEMS, WHICH ARE "UNDER SEPARATE CONTRACT".
12. THE DESIGNATION "F.B.O." SHALL DENOTE ITEMS, WHICH ARE "FURNISHED BY OTHERS".
13. THE DESIGNATION "O.F.E." SHALL DENOTE ITEMS, WHICH ARE "OWNER FURNISHED EQUIPMENT".
14. THE DESIGNATION "D.H.C." SHALL DENOTE "DOOR HARDWARE INSTALLER".
15. ALL RACEWAY SYSTEMS SHOWN TO SUPPORT THE INSTALLATION OF THE **DIVISION 17** EQUIPMENT SHALL BE PROVIDED BY THE ELECTRICAL INSTALLER. PROVIDE COORDINATION FOR THE INSTALLATION OF THIS RACEWAY SYSTEM WITH THE ELECTRICAL INSTALLER.
16. THE SYMBOL LEGENDS SHOWN ON THIS SHEET ARE ALL INCLUSIVE, SYMBOLS INCLUDED IN THE LEGENDS MAY OR MAY NOT BE USED IN THESE PROJECT DRAWINGS.
17. EACH VOICE/DATA OUTLET LOCATION SHOWN, SHALL HAVE A DOUBLE GANG OUTLET BOX WITH A SINGLE GANG PLASTER RING AND (1) 1" CONDUIT STUBBED UP TO AN ACCESSIBLE LOCATION ABOVE THE FINISHED CEILING OR HOMERUN IN SLAB TO NEAREST COMMUNICATIONS ROOM. WORK BY ELECTRICAL INSTALLER PER SPECS SECTION 17110.
18. EACH FLOOR MOUNTED VOICE/DATA OUTLET SHALL HAVE A SINGLE GANG SPACE WITHIN THE FLOOR BOX AND (1) 1" CONDUIT CONCEALED IN SLAB STUBBED UP TO AN ACCESSIBLE LOCATION ABOVE THE FINISHED CEILING. WORK BY ELECTRICAL INSTALLER PER SPECS SECTION 17110 AND 17130.
19. ALL BONDING AND GROUNDING ELEMENTS UTILIZED FOR STRUCTURED CABLING SYSTEM SHALL BE IN COMPLIANCE WITH SPECIFICATION SECTION 17450.
20. PROVIDE ALL SLEEVES AS REQUIRED FOR ALL LOW VOLTAGE CABLE PATHWAYS. RESTORE THE FIRE RATING OF THE SURFACE.
21. ALL CABLES SHALL BE SUITABLE TO THE ENVIRONMENT TO WHERE THEY WILL BE INSTALLED.
22. ALL INDOOR CONDUITS NO LARGER THAN 1" SHOWN ON THE GROUND FLOOR SHALL BE INSTALLED EMBEDDED IN THE SLAB. CONDUITS SHALL BE KEPT DRY AND CLEAN PRIOR TO PULLING CABLES.
23. ANYTHING NOT DESIGNATED AS ROUGH-IN AND SUPPORT RESPONSIBILITY ON THESE DRAWINGS IS IN THE SYSTEM INSTALLER SCOPE OF WORK.
24. SEE DETAIL SHEETS FOR DEVICE MOUNTING REQUIREMENTS AND ADDITIONAL INFORMATION.
25. IN ELECTRICAL AND MECHANICAL ROOMS, CONDUIT FOR LOW VOLTAGE OUTLETS SHALL BE EXTENDED TO ACCESSIBLE CEILING OUTSIDE OF THE ROOM.

SECURITY SYSTEM NOTES

1. ALL DOUBLE DOORS ARE TO RECEIVE (1) DOOR POSITION SWITCH ON EACH DOOR LEAF AND SHALL REPORT AS ONE ALARM POINT.
2. ALL 120V POWER WIRING SHALL BE INSTALLED IN A SEPARATE CONDUIT.
3. FIBER CCTV LOCATION WHICH EXCEEDS 3000 FEET SHALL BE EQUIPPED WITH 2 FIBER CONNECTIONS 1 VIDEO, 1 DATA
4. ALL POWER CIRCUITS, 120VAC AND 24VAC, SHALL INCLUDE AN EQUIPMENT GROUNDING CONDUCTOR WHICH IS EQUAL IN SIZE TO THE PHASE AND NEUTRAL CONDUCTORS.
5. ALL CONDUIT ABOVE GRADE SHALL BE METALLIC, ALL CONDUIT BELOW GRADE SHALL BE PVC UNLESS OTHERWISE NOTED ON DRAWINGS.
6. ALL CARD READERS AND KEYPADS DEDICATED FOR ELEVATOR FLOOR SELECTION CONTROL ARE SHOWN INSIDE THE ELEVATOR CAB ON THE LOWEST LEVEL FLOOR PLAN TO WHICH THE ELEVATOR TRAVELS.
7. ALL CONDUIT, WIRING, AND ASSOCIATED BACK BOXES SHALL BE FULLY CONCEALED WITHIN WALLS, FLOORS, AND CEILINGS.
8. INSTALLATION OF CATEGORY 6 UTP CABLE SHALL BE IN ACCORDANCE WITH EIA/TIA GUIDELINES. CABLE INSTALLATION AND TERMINATIONS THAT DO NOT COMPLY SHALL BE REPLACED BY THE INSTALLER.
   A. THE MAXIMUM PULLING TENSION SHALL NOT EXCEED 25 POUNDS TO AVOID STRETCHING THE CONDUCTORS.
   B. THE MINIMUM BENDING RADIUS OF THE CABLE SHALL NOT BE LESS THAN 4X THE OUTSIDE DIAMETER OF THE CABLE.
   C. THE CABLE SHALL BE INSTALLED WITHOUT KINKS OR TWISTS AND THE APPLICATION OF CABLE TIES SHALL NOT DEFORM THE CABLE BUNDLE.
   D. STRIP BACK ONLY AS MUCH CABLE JACKET AS IS REQUIRED TO TERMINATE THE CABLE. CABLE PAIRS SHALL NOT BE UNTWISTED MORE THAN 1/2 INCH.
9. INSTALLATION OF FIBER OPTIC CABLES SHALL BE IN ACCORDANCE WITH EIA/TIA GUIDELINES. CABLE INSTALLATION AND TERMINATIONS THAT DO NOT COMPLY SHALL BE REPLACED BY THE INSTALLER.
   A. THE BEND RADIUS FOR INTRABUILDING 2 AND 4-FIBER HORIZONTAL OPTICAL FIBER CABLE SHALL NOT BE LESS THAN 1 INCH UNDER NO-LOAD CONDITIONS. WHEN UNDER A MAXIMUM TENSILE LOAD OF 50 LBF, THE BEND RADIUS SHALL NOT BE LESS THAN 2 INCHES.
   B. THE BEND RADIUS FOR INTRABUILDING OPTICAL FIBER BACKBONE SHALL NOT BE LESS THAN THAT RECOMMENDED BY THE MANUFACTURER IF NO RECOMMENDATION IS KNOWN, THEN THE APPLIED BEND RADIUS SHALL NOT BE LESS THAN 10 TIMES THE CABLE OUTSIDE DIAMETER UNDER NO-LOAD CONDITIONS AND NOT LESS THAN 15 TIMES THE CABLE OUTSIDE DIAMETER WHEN THE CABLE IS UNDER TENSILE LOAD.
   C. THE BEND RADIUS FOR INTER BUILDING (OSP) OPTICAL FIBER BACKBONE SHALL NOT BE LESS THAN THAT RECOMMENDED BY THE MANUFACTURER IF NO RECOMMENDATION IS KNOWN, THEN THE APPLIED BEND RADIUS SHALL NOT BE LESS THAN 10 TIMES THE CABLE OUTSIDE DIAMETER NO-LOAD CONDITIONS AND NOT LESS THAN 20 TIMES THE CABLE OUTSIDE DIAMETER WHEN THE CABLE IS UNDER A TENSILE LOAD UP TO THE RATING OF THE CABLE, USUALLY 600 LBF.
10. COORDINATE LOCATION OF ALL FIRE RATED PENETRATIONS PRIOR TO PROCEEDING WITH INSTALLATION. ALL PENETRATIONS THROUGH FIRE RATED BARRIERS SHALL BE COMPLETELY SEALED WITH APPROPRIATE FIRE STOP MATERIAL IN ACCORDANCE WITH NFPA AND FIRE AUTHORITY HAVING JURISDICTION.
11. ALL DELAYED EGRESS LOCKS AND MAGNETIC LOCKS, SHALL RECEIVE A FIRE ALARM RELAY TO RELEASE THE DOOR UPON ALARM AS REQUIRED BY CODE.

RECORD SET

The information presented on this drawing is diagrammatic and is presented for general information purposes and should not be relied on for accuracy of dimensions, details and locations. Actual and exact conditions if required should be determined in the field.

TECHNOLOGY DRAWING INDEX

SHEET	DESCRIPTION	ISSUED
T0.1	TECHNOLOGY LEGEND	Yes
T1.1	TECHNOLOGY – SITE PLAN	Yes
T2.1	VOICE/DATA – FIRST FLOOR PLAN	Yes
T2.2	VOICE/DATA – SECOND FLOOR PLAN	Yes
T2.3	VOICE/DATA – ROOF PLAN	Yes
T3.1	AUDIO/VIDEO & SECURITY – FIRST FLOOR PLAN	Yes
T3.2	AUDIO/VIDEO & SECURITY – SECOND FLOOR PLAN	Yes
T4.1	TECHNOLOGY ENLARGED PLANS	Yes
T5.1	TECHNOLOGY RACK ELEVATION	Yes
T5.2	TECHNOLOGY RACK ELEVATION	Yes
T6.1	TECHNOLOGY RISER DIAGRAMS	Yes
T6.2	TECHNOLOGY RISER DIAGRAMS	Yes
T6.3	TECHNOLOGY RISER DIAGRAMS	Yes
T6.4	TECHNOLOGY RISER DIAGRAMS	Yes
T6.5	TECHNOLOGY RISER DIAGRAMS	Yes
T7.1	TECHNOLOGY DETAILS	Yes
T7.2	TECHNOLOGY DETAILS	Yes
T7.3	TECHNOLOGY DETAILS	Yes
T7.4	TECHNOLOGY DETAILS	Yes
T7.5	TECHNOLOGY DETAILS	Yes
T7.6	TECHNOLOGY DETAILS	Yes
T7.7	TECHNOLOGY DETAILS	Yes
T7.8	TECHNOLOGY DETAILS	Yes
T7.9	TECHNOLOGY DETAILS	Yes
T7.10	TECHNOLOGY DETAILS	Yes
T7.11	TECHNOLOGY DETAILS	Yes
T7.12	TECHNOLOGY DETAILS	Yes

TLC ENGINEERING FOR ARCHITECTURE
800 Fairway Drive.
Suite 250
Deerfield Beach, Florida 33441
Phone: 954-418-9096
Fax: 954-418-9296
www.tlc-engineers.com
EB #0000015 TLC NO: 609036

© Copyright 2007 TLC Engineering for Architecture, Inc.

JMWA ARCHITECTS
STEVEN E. MYOTT AIA
JAMES R. WILLIAMS AIA
RODOLFO ACEVEDO AIA
949 CLINT MOORE ROAD
BOCA RATON, FLORIDA 33487
TEL 561 997 9997
FAX 561 997 1610
WWW.JMWA.NET

PALMETTO BAY VILLAGE HALL
Palmetto Bay, Florida

Master Builders of South Florida, Inc.
1400 E. Oakland Park Blvd. Suite 210
Oakland Park, FL 33334

Jason A. Stinchcomb, P.E.
Florida License #58184

PROJECT NO. 609036
DESIGNED BY: JTA
DRAWN BY: MBR
CHECKED BY: TLM

SUBMITTALS:
50% REVIEW 10.30.2009
PERMIT REVIEW 11.20.2009
BUILDING PERMIT 03.03.2010

REVISIONS:

TECHNOLOGY LEGEND

T0.1

© 2009 JMWA ARCHITECTS, INCORPORATED ALL RIGHTS RESERVED. NO PART OF THESE IDEAS, PLANS OR DESIGNS MAY BE REPRODUCED, COPIED OR UTILIZED GRAPHICALLY IN ANY FORM WHATSOEVER WITHOUT THE EXPRESSED WRITTEN CONSENT OF JMWA ARCHITECTS INCORPORATED AND ITS BOARD OF DIRECTORS.

L:\2009--Jobs\609036--Palmetto Bay Municipal Center\CAD--MEP\Sheets T0.1.dwg 3/8/2010 12:02:58 PM jared.hunt

TLC ENGINEERING FOR ARCHITECTURE
800 Fairway Drive.
Suite 250
Deerfield Beach, Florida 33441
Phone: 954-418-9096
Fax: 954-418-9286
www.tlc-engineers.com
© Copyright 2007 TLC Engineering for Architecture, Inc.
EB #0000015 TLC NO: 609036

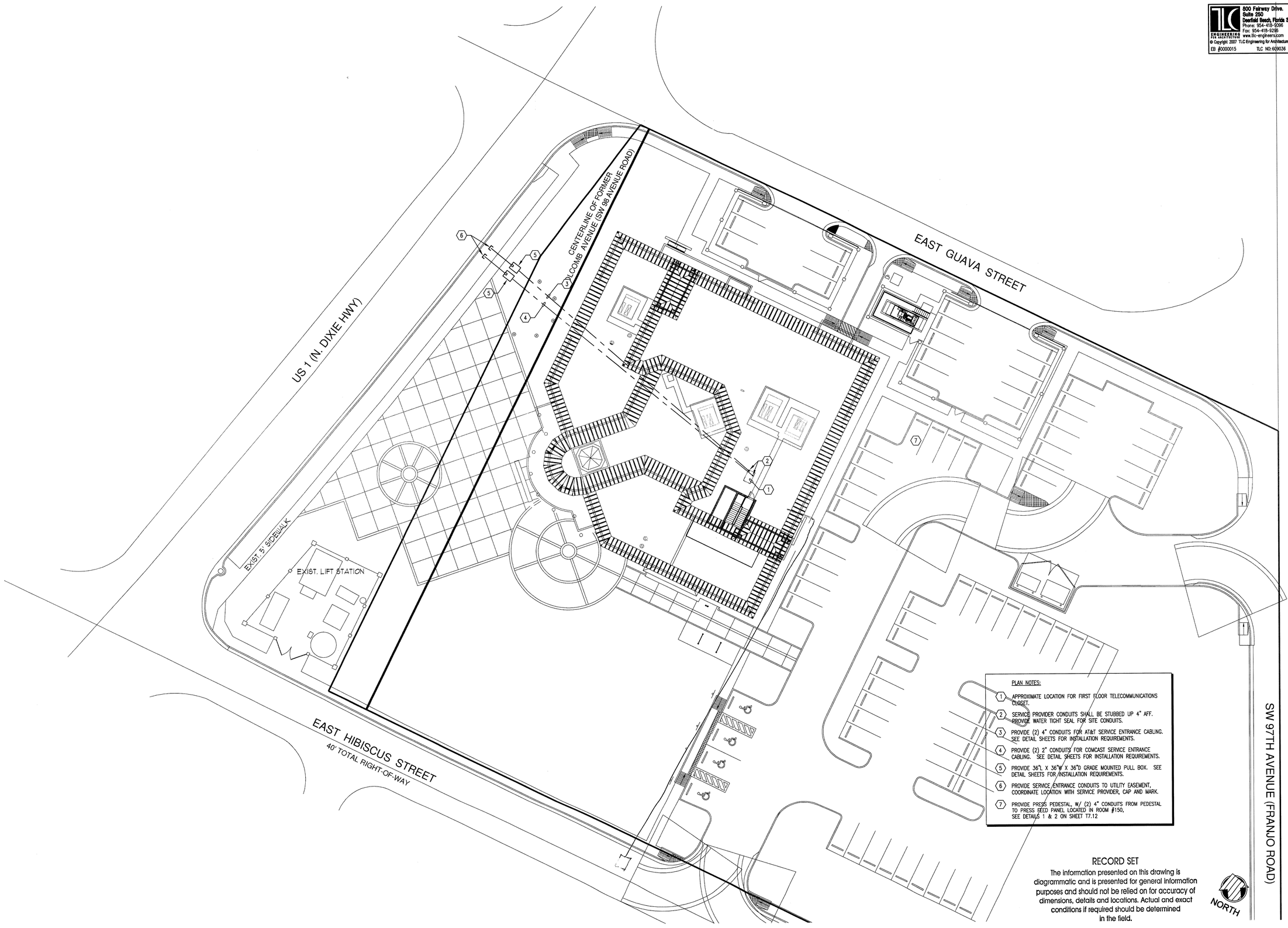

PLAN NOTES:

1. APPROXIMATE LOCATION FOR FIRST FLOOR TELECOMMUNICATIONS CLOSET.
2. SERVICE PROVIDER CONDUITS SHALL BE STUBBED UP 4" AFF. PROVIDE WATER TIGHT SEAL FOR SITE CONDUITS.
3. PROVIDE (2) 4" CONDUITS FOR AT&T SERVICE ENTRANCE CABLING. SEE DETAIL SHEETS FOR INSTALLATION REQUIREMENTS.
4. PROVIDE (2) 2" CONDUITS FOR COMCAST SERVICE ENTRANCE CABLING. SEE DETAIL SHEETS FOR INSTALLATION REQUIREMENTS.
5. PROVIDE 36"L X 36"W X 36"D GRADE MOUNTED PULL BOX. SEE DETAIL SHEETS FOR INSTALLATION REQUIREMENTS.
6. PROVIDE SERVICE ENTRANCE CONDUITS TO UTILITY EASEMENT, COORDINATE LOCATION WITH SERVICE PROVIDER, CAP AND MARK.
7. PROVIDE PRESS PEDESTAL, W/ (2) 4" CONDUITS FROM PEDESTAL TO PRESS FEED PANEL LOCATED IN ROOM #150, SEE DETAILS 1 & 2 ON SHEET T7.12

RECORD SET

The information presented on this drawing is diagrammatic and is presented for general information purposes and should not be relied on for accuracy of dimensions, details and locations. Actual and exact conditions if required should be determined in the field.

1 TECHNOLOGY - SITE PLAN
SCALE: 1" = 20'-0"

JMWA ARCHITECTS
STEVEN E. MYOTT AIA
JAMES R. WILLIAMS AIA
RODOLFO ACEVEDO AIA

949 CLINT MOORE ROAD
BOCA RATON, FLORIDA 33487
TEL 561 997 9997
FAX 561 997 1610

WWW.JMWA.NET

PALMETTO BAY VILLAGE HALL

Palmetto Bay, Florida

Master Builders of South Florida, Inc.
1400 E. Oakland Park Blvd. Suite 210
Oakland Park, FL 33334

Jason A. Stinchcomb, P.E.
Florida License #58184

PROJECT NO. 609036
DESIGNED BY: MBR
DRAWN BY: JTA
CHECKED BY: JTA

SUBMITTALS:
50% REVIEW 10.30.2009
PERMIT REVIEW 11.20.2009
BUILDING PERMIT 03.03.2010

REVISIONS:

TECHNOLOGY
SITE PLAN

T1.1

© 2009 JMWA ARCHITECTS, INCORPORATED ALL RIGHTS RESERVED. NO PART OF THESE IDEAS, PLANS OR DESIGNS MAY BE REPRODUCED, COPIED OR UTILIZED GRAPHICALLY IN ANY FORM WHATSOEVER WITHOUT THE EXPRESSED WRITTEN CONSENT OF JMWA ARCHITECTS INCORPORATED AND ITS BOARD OF DIRECTORS.

L:\2009-Jobs\609036-Palmetto Bay Municipal Center\CAD-MEP\Sheets T1.1.dwg 3/8/2010 12:03:23 PM jcred.hunt

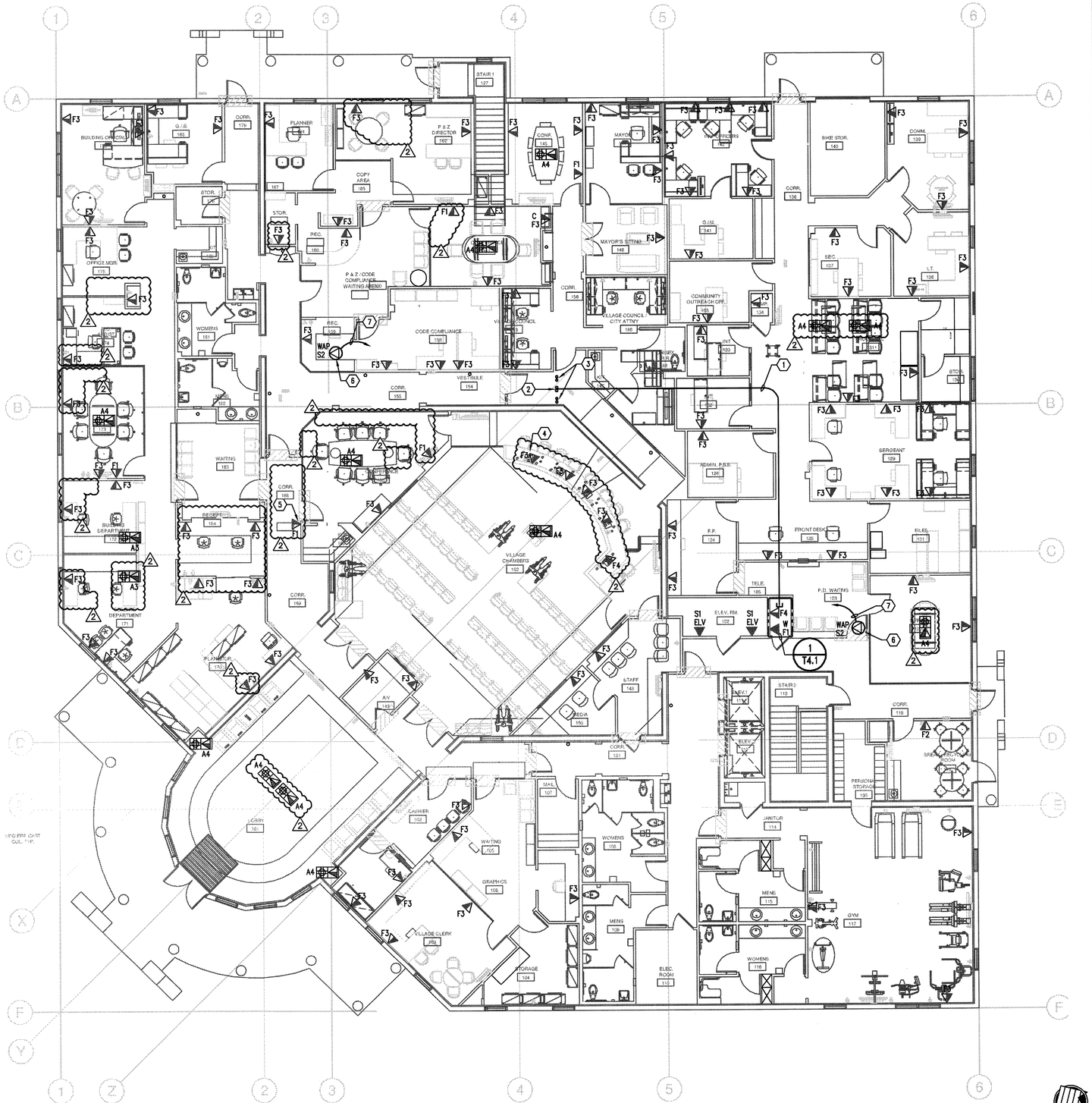

1 VOICE/DATA - FIRST FLOOR PLAN
SCALE: 1/8" = 1'-0"

PLAN NOTES:

1. PROVIDE (2) 4" CONDUITS FOR SERVICE PROVIDER'S ENTRANCE CABLE INSTALLED ABOVE CEILING.
2. CONDUITS UP TO 2ND FLOOR TR.
3. PROVIDE (2) 4" CONDUIT SLEEVES UP TO 2ND FLOOR TR, FOR HORIZONTAL CABLE SEE DETAILS SHEETS FOR INSTALLATION REQUIREMENTS.
4. OUTLETS SHALL BE MOUNTED IN ARCHITECTURAL CASEWORK, COORDINATE INSTALLATION. CABLING SHALL BE IN CONDUIT.
5. MOUNT @ 56" A.F.F., CONNECT TO SCHEDULING PANEL, SEE AV DETAILS 4 ON SHEET T7.9 & 1 ON SHEET T7.10
6. PROVIDE DBA INDOOR ANTENNA ABOVE CEILING.
   DESIGN SELECTION: CELLANTENNA, PACKAGE#CAE800DB8519.
7. PROVIDE ANTENNA CABLE TO AMPLIFIER.
   DESIGN SELECTION: CELLANTENNA, PACKAGE#CAE800DB8519.

RECORD SET
The information presented on this drawing is diagrammatic and is presented for general information purposes and should not be relied on for accuracy of dimensions, details and locations. Actual and exact conditions if required should be determined in the field.

TLC ENGINEERING FOR ARCHITECTURE
800 Fairway Drive, Suite 260
Deerfield Beach, Florida 33441
Phone: 954-418-9095
Fax: 954-418-9296
www.tlc-engineers.com
© Copyright 2007 TLC Engineering for Architecture, Inc.
EB #0000015 TLC NO: 609036

JMWA ARCHITECTS
STEVEN E. MYOTT AIA
JAMES R. WILLIAMS AIA
RODOLFO ACEVEDO AIA
949 CLINT MOORE ROAD
BOCA RATON, FLORIDA 33487
TEL 561 997 9997
FAX 561 997 1610
WWW.JMWA.NET

PALMETTO BAY VILLAGE HALL
9705 E. Hibiscus St., Palmetto Bay, Florida

Master Builders of South Florida, Inc.
1400 E. Oakland Park Blvd. Suite 210
Oakland Park, FL 33334

Mason A. Stinchcomb, P.E.
Florida License #58184

PROJECT NO. 609036
DESIGNED BY: MBR
DRAWN BY: JTA
CHECKED BY: TLM

SUBMITTALS:
50% REVIEW 10.30.2009
PERMIT REVIEW 11.20.2009
BUILDING PERMIT 03.03.2010

REVISIONS:
2 DESIGN CHANGES 08/11/10

VOICE/DATA
FIRST FLOOR
PLAN

T2.1

© 2009 JMWA ARCHITECTS, INCORPORATED ALL RIGHTS RESERVED. NO PART OF THESE IDEAS, PLANS OR DESIGNS MAY BE REPRODUCED, COPIED OR UTILIZED GRAPHICALLY IN ANY FORM WHATSOEVER WITHOUT THE EXPRESSED WRITTEN CONSENT OF JMWA ARCHITECTS INCORPORATED AND ITS BOARD OF DIRECTORS.

L:\2009--Jobs\609036--Palmetto Bay Municipal Center\CAD--MEP\Sheets T2.1.dwg 8/11/2010 5:38:29 PM jared.hunt

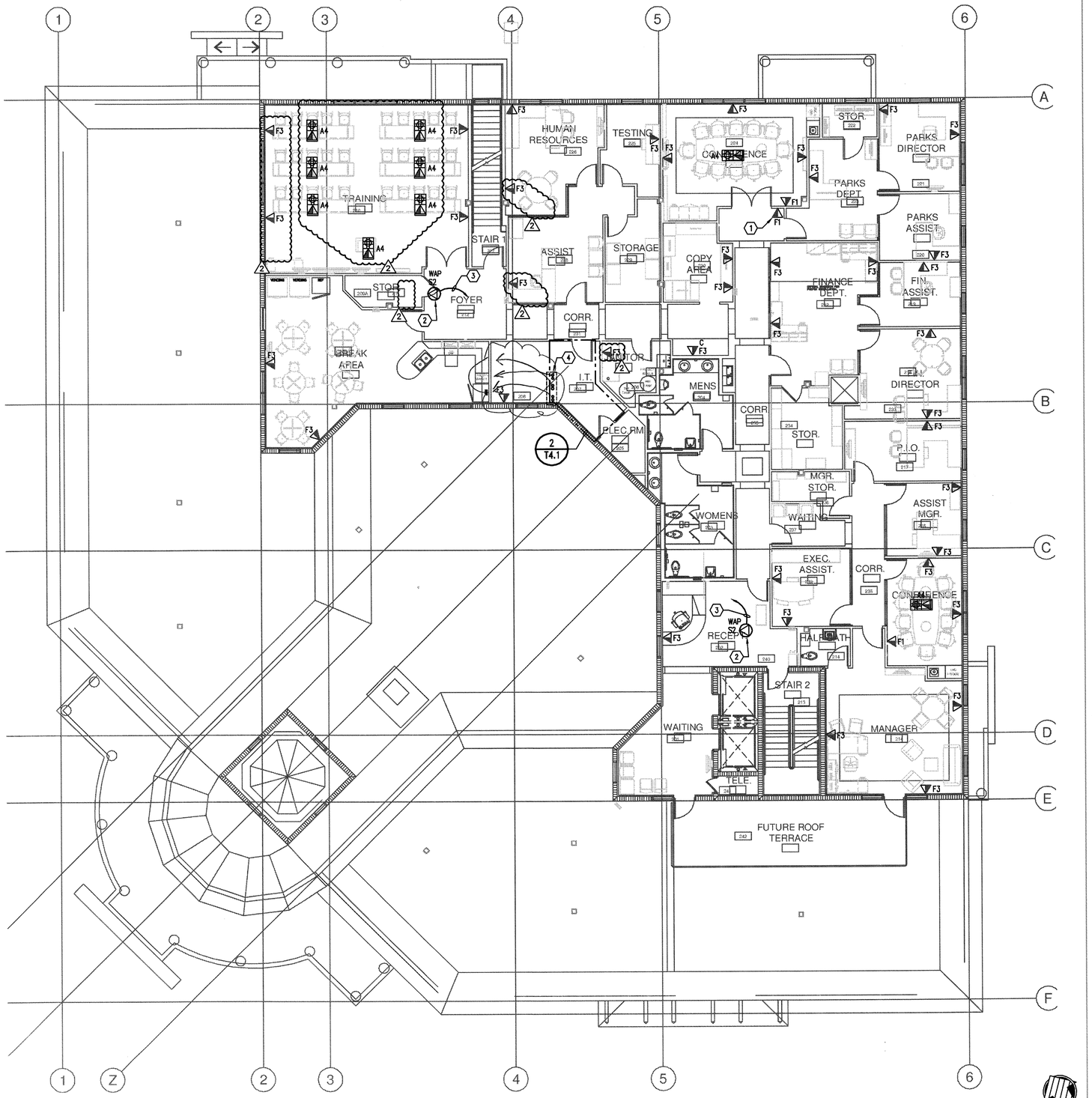

1 VOICE/DATA - SECOND FLOOR PLAN
SCALE: 1/8" = 1'-0"

PLAN NOTES:

1. MOUNT @ 56" A.F.F., CONNECT TO SCHEDULING PANEL, SEE AV DETAILS 4 ON SHEET T7.9 & 1 ON SHEET T7.10
2. PROVIDE DBA ANTENNA ABOVE CEILING.
   DESIGN SELECTION: CELL ANTENNA #CAE800DB8519.
3. PROVIDE ANTENNA CABLE TO AMPLIFIER.
   DESIGN SELECTION: CELL ANTENNA #LMR400.
4. CONDUITS FROM 1ST FLOOR, SEE ENLARGED PLAN 2 ON SHEET T4.1 FOR MORE INFORMATION.

RECORD SET

The information presented on this drawing is diagrammatic and is presented for general information purposes and should not be relied on for accuracy of dimensions, details and locations. Actual and exact conditions if required should be determined in the field.

TLC Engineering for Architecture
500 Fairway Drive, Suite 203
Deerfield Beach, Florida 33441
Phone: 954-418-9095
Fax: 954-418-9296
www.tlc-engineers.com
EB #0000015 TLC NO: 609036

© Copyright 2007 TLC Engineering for Architecture, Inc.

JMWA ARCHITECTS
STEVEN E. MYOTT AIA
JAMES R. WILLIAMS AIA
RODOLFO ACEVEDO AIA
949 CLINT MOORE ROAD
BOCA RATON, FLORIDA 33487
TEL 561 997 9997
FAX 561 997 1610
WWW.JMWA.NET

PALMETTO BAY VILLAGE HALL

9705 E. Hibiscus St., Palmetto Bay, Florida

Master Builders of South Florida, Inc.
1400 E. Oakland Park Blvd. Suite 210
Oakland Park, FL 33334

Jason A. Stinchcomb, P.E.
Florida License #58184

PROJECT NO. 609036
DESIGNED BY: MBR
DRAWN BY: JTA
CHECKED BY: TLM

SUBMITTALS:
50% REVIEW 10.30.2009
PERMIT REVIEW 11.20.2009
BUILDING PERMIT 03.03.2010

REVISIONS:
4 DESIGN CHANGES 8/11/10

VOICE/DATA SECOND FLOOR PLAN

T2.2

© 2009 JMWA ARCHITECTS, INCORPORATED ALL RIGHTS RESERVED. NO PART OF THESE IDEAS, PLANS OR DESIGNS MAY BE REPRODUCED, COPIED OR UTILIZED GRAPHICALLY IN ANY FORM WHATSOEVER WITHOUT THE EXPRESSED WRITTEN CONSENT OF JMWA ARCHITECTS INCORPORATED AND ITS BOARD OF DIRECTORS.

L:\2009--Jobs\609036--Palmetto Bay Municipal Center\CAD--MEP\Sheets T2.2.dwg 8/11/2010 5:38:50 PM jared.hunt

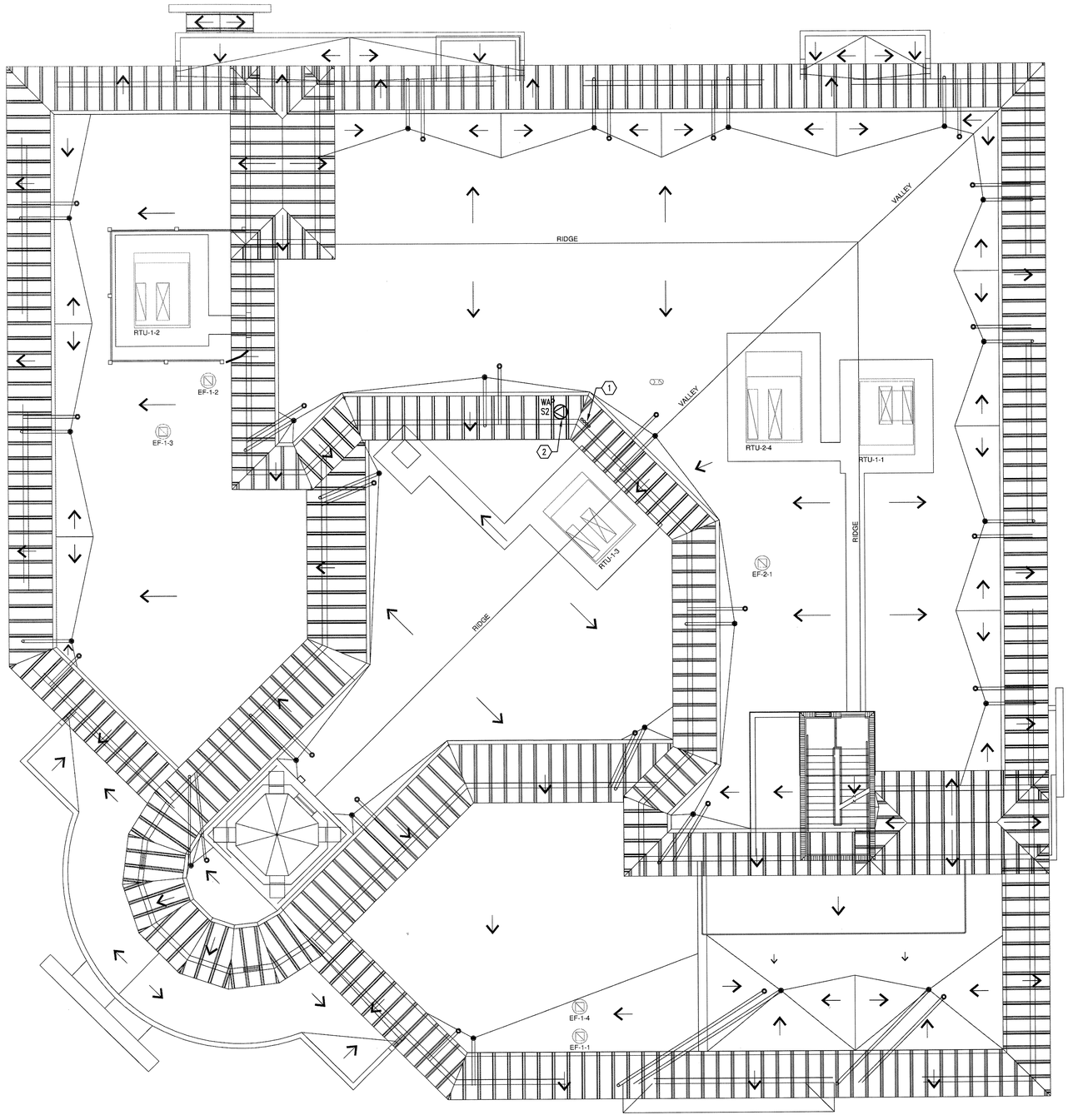

NORTH

1 VOICE/DATA - ROOF PLAN
SCALE: 1/8" = 1'-0"

PLAN NOTES:

1. APPROXIMATE LOCATION FOR (4) 2" CONDUITS TO ROOF VIA 2ND FLOOR TR. SEE DETAIL 4 ON SHEET T7.13.
2. PROVIDE DBA ANTENNA. DESIGN SELECTION: CELL ANTENNA #CAE800DB-2.

RECORD SET

The information presented on this drawing is diagrammatic and is presented for general information purposes and should not be relied on for accuracy of dimensions, details and locations. Actual and exact conditions if required should be determined in the field.

TLC ENGINEERING FOR ARCHITECTURE
800 Fairway Drive.
Suite 250
Deerfield Beach, Florida 33441
Phone: 954-418-9096
Fax: 954-418-9286
www.tlc-engineers.com

© Copyright 2007 TLC Engineering for Architecture, Inc.
EB #0000015 TLC NO: 609036

JMWA ARCHITECTS

STEVEN E. MYOTT AIA
JAMES R. WILLIAMS AIA
RODOLFO ACEVEDO AIA

949 CLINT MOORE ROAD
BOCA RATON, FLORIDA 33487
TEL 561 997 9997
FAX 561 997 1610

WWW.JMWA.NET

PALMETTO BAY VILLAGE HALL

Palmetto Bay, Florida

Master Builders of South Florida, Inc.
1400 E. Oakland Park Blvd. Suite 210
Oakland Park, FL 33334

Jason A. Stinchcomb, P.E.
Florida License #58184

PROJECT NO. 609036
DESIGNED BY: MBR
DRAWN BY: JTA
CHECKED BY: TLM

SUBMITTALS:
50% REVIEW 10.30.2009
PERMIT REVIEW 11.20.2009
BUILDING PERMIT 03.03.2010

REVISIONS:

VOICE/DATA
ROOF PLAN

T2.3

© 2009 JMWA ARCHITECTS, INCORPORATED ALL RIGHTS RESERVED. NO PART OF THESE IDEAS, PLANS OR DESIGNS MAY BE REPRODUCED, COPIED OR UTILIZED GRAPHICALLY IN ANY FORM WHATSOEVER WITHOUT THE EXPRESSED WRITTEN CONSENT OF JMWA ARCHITECTS INCORPORATED AND ITS BOARD OF DIRECTORS.

L:\2009--Jobs\609036--Palmetto Bay Municipal Center\CAD--MEP\Sheets T2.3.dwg 3/8/2010 12:04:29 PM jared.hunt

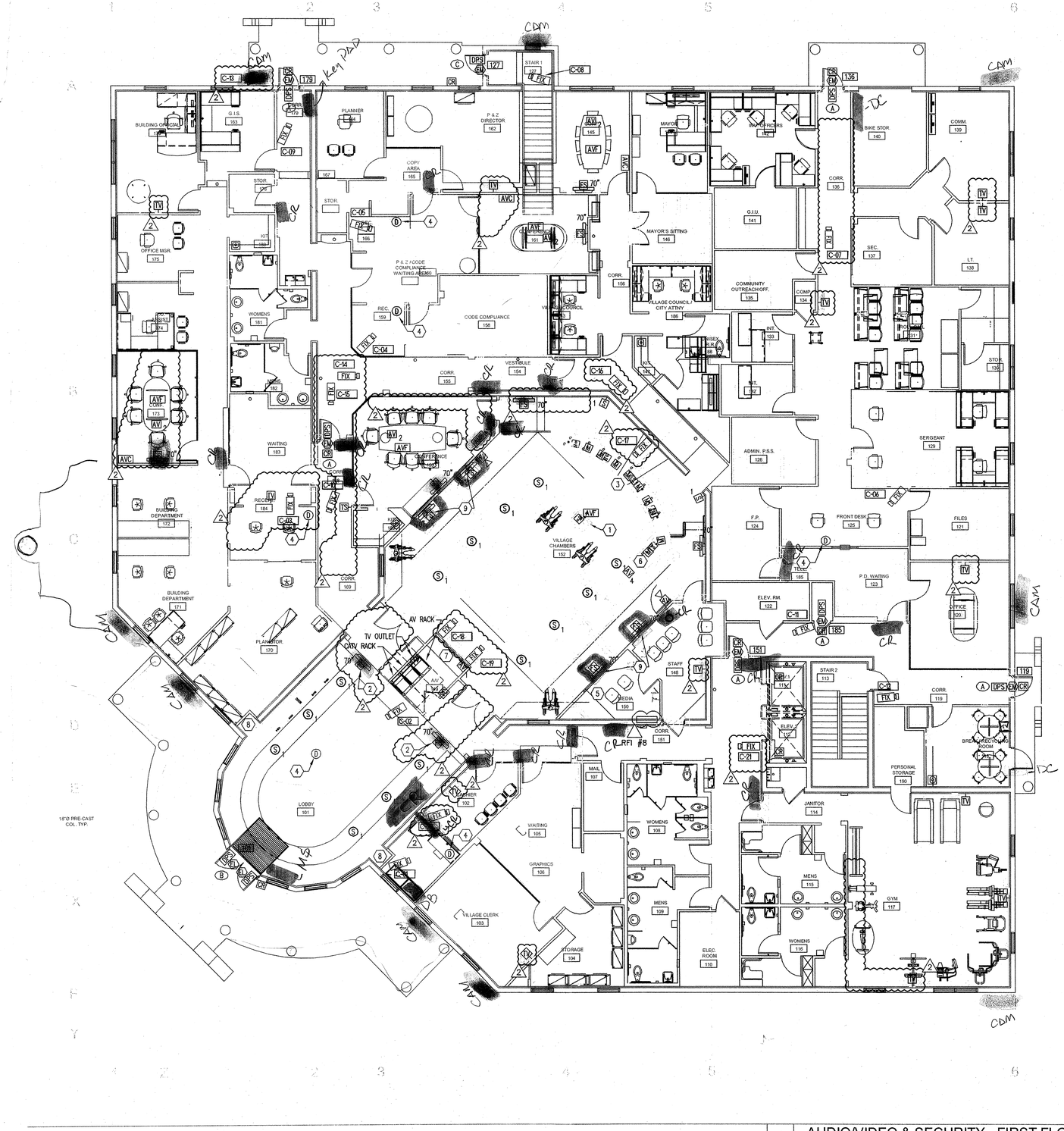

1 AUDIO/VIDEO & SECURITY - FIRST FLOOR PLAN
SCALE: 1/8" = 1'-0"

PLAN NOTES:

1. SEE DETAIL #1 ON SHEET T7.9.
2. PROVIDE CEILING MOUNT BRACKET.
3. EACH DAIS RADIUS SEATING POSITION SHALL CONTAIN AN AUTON LCD LIFT (1000-D W/ LV-56 CONTROLLER), A GALAXY AUDIO MICRO SPOT VC AUDIO MONITOR & A VOTING DEVICE (TURNING TECHNOLOGIES RESPONSE CARD XR AND RECEIVER).
4. DURESS BUTTON SHALL BE INSTALLED ON ARCHITECTURAL CASEWORK. COORDINATE LOCATION TO BE CONCEALED. SEE DETAIL #1 ON SHEET T7.8.
5. PROVIDE PRESS FEED PANEL, SEE DETAIL #2 ON SHEET T7.11.
6. PROVIDE A SAMSUNG SDP-860 DOCUMENT PRESENTER CONNECTED TO THE LOCAL RGBHV MATRIX SWITCH.
7. PROVIDE A JANDS VISTA S3 LIGHT CONTROL BOARD FOR FUTURE DMX LIGHTING CONTROL.
8. PROVIDE AND INSTALL INTO MILLWORK KIOSK AN ELO TOUCHSYSTEMS 17A2 (ALL IN ONE) TOUCHSCEEN COMPUTER.
9. THESE (4) LCD SCREENS SHALL BE MOUNTED @ 90" A.F.F., PENDANT MOUNTED FROM CEILING. SEE DETAIL #3, SHEET T7.12.

D - DELETED AFTER ROUGH INSTALLED (NO CREDIT)

- ADDED TV, VC - VOLUME CONTROL

TV - TV & POWER COMBO

FS - FLAT SCREEN TV & POWER COMBO

- RELOCATED

- RELOCATED AFTER ROUGH

- SECURITY ADDITIONS
DC DOOR CONTACT
MS MOTION SENSOR
CR CARD READER
DB DURESS BUTTON

- OUTDOOR CAMERAS STUB-OUT & TO ABOVE CEILING

RECORD SET
The information presented on this drawing is diagrammatic and is presented for general information purposes and should not be relied on for accuracy of dimensions, details and locations. Actual and exact conditions if required should be determined in the field.

TLC ENGINEERING FOR ARCHITECTURE
800 Fairway Drive, Suite 250
Deerfield Beach, Florida 33441
Phone: 954-418-9095
Fax: 954-418-9296
www.tlc-engineers.com
© Copyright 2007 TLC Engineering for Architecture, Inc.
EB #0000015 TLC NO: 609036

JMWA ARCHITECTS
STEVEN E. MYOTT AIA
JAMES R. WILLIAMS AIA
RODOLFO ACEVEDO AIA
949 CLINT MOORE ROAD
BOCA RATON, FLORIDA 33487
TEL 561 997 9997
FAX 561 997 1610
WWW.JMWA.NET

PALMETTO BAY VILLAGE HALL
9705 E. Hibiscus St., Palmetto Bay, Florida

Master Builders of South Florida, Inc.
1400 E. Oakland Park Blvd. Suite 210
Oakland Park, FL 33334

PROJECT NO. 609036
DESIGNED BY: JEL
DRAWN BY: JTA
CHECKED BY: TLM

SUBMITTALS:
50% REVIEW 10.30.2009
PERMIT REVIEW 11.20.2009
BUILDING PERMIT 03.03.2010

RECEIVED
AUG 26 2010
CANAM

REVISIONS:
4 DESIGN CHANGES 8/11/10

AUDIO/VIDEO & SECURITY FIRST FLOOR PLAN

T3.1

© 2009 JMWA ARCHITECTS, INCORPORATED ALL RIGHTS RESERVED. NO PART OF THESE IDEAS, PLANS OR DESIGNS MAY BE REPRODUCED, COPIED OR UTILIZED GRAPHICALLY IN ANY FORM WHATSOEVER WITHOUT THE EXPRESSED WRITTEN CONSENT OF JMWA ARCHITECTS INCORPORATED AND ITS BOARD OF DIRECTORS.

L:\2009--Jobs\609036-Palmetto Bay Municipal Center\CAD-MEP\Sheets T3.1.dwg 8/11/2010 5:39:17 PM jared.hunt

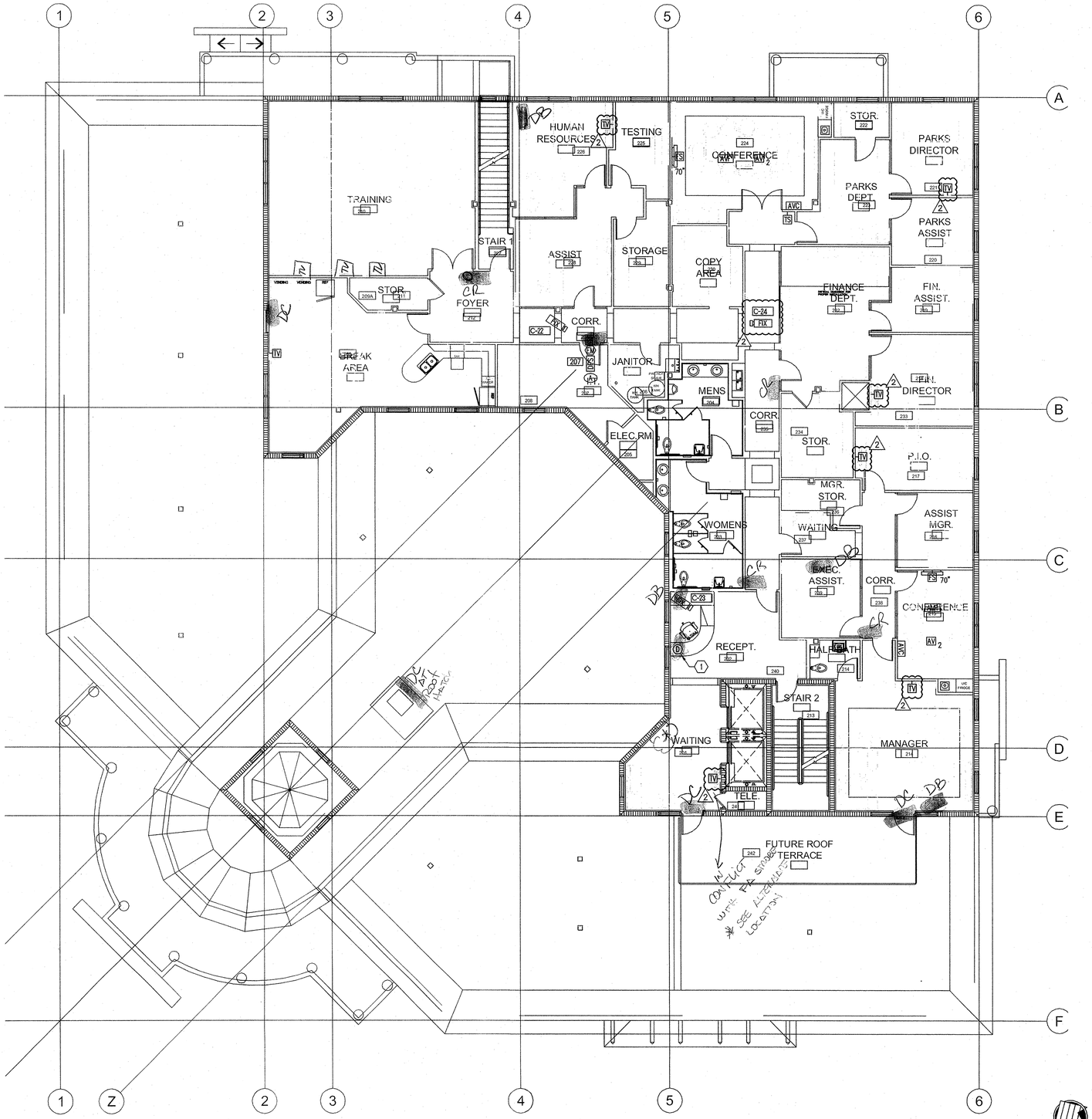

1 AUDIO/VIDEO & SECURITY - SECOND FLOOR PLAN
SCALE: 1/8" = 1'-0"

PLAN NOTES:

1. DURESS BUTTON SHALL BE INSTALLED ON ARCHITECTURAL CASEWORK. COORDINATE LOCATION TO BE CONCEALED. SEE DETAIL 1 ON SHEET T7.8.

RECORD SET
The information presented on this drawing is diagrammatic and is presented for general information purposes and should not be relied on for accuracy of dimensions, details and locations. Actual and exact conditions if required should be determined in the field.

TLC ENGINEERING FOR ARCHITECTURE
800 Fairway Drive, Suite 250
Deerfield Beach, Florida 33441
Phone: 954-418-9096
Fax: 954-418-9295
www.tlc-engineers.com
EB #0000015 TLC NO: 609036
© Copyright 2007 TLC Engineering for Architecture, Inc.

JMWA ARCHITECTS
STEVEN E. MYOTT AIA
JAMES R. WILLIAMS AIA
RODOLFO ACEVEDO AIA
949 CLINT MOORE ROAD
BOCA RATON, FLORIDA 33487
TEL 561 997 9997
FAX 561 997 1610
WWW.JMWA.NET

PALMETTO BAY VILLAGE HALL
9705 E. Hibiscus St., Palmetto Bay, Florida

Master Builders of South Florida, Inc.
1400 E. Oakland Park Blvd. Suite 210
Oakland Park, FL 33334

Jason A. Stinchcomb, P.E.
Florida License #58184

PROJECT NO. 609036
DESIGNED BY: XXX
DRAWN BY: XXX
CHECKED BY: XXX

SUBMITTALS:
50% REVIEW 10.30.2009
PERMIT REVIEW 11.20.2009
BUILDING PERMIT 03.03.2010

RECEIVED
AUG 26 2010
CANAM

REVISIONS:
4 DESIGN CHANGES 8/11/10

AUDIO/VIDEO & SECOND FLOOR PLAN

T3.2

©2009 JMWA ARCHITECTS, INCORPORATED ALL RIGHTS RESERVED. NO PART OF THESE IDEAS, PLANS OR DESIGNS MAY BE REPRODUCED, COPIED OR UTILIZED GRAPHICALLY IN ANY FORM WHATSOEVER WITHOUT THE EXPRESSED WRITTEN CONSENT OF JMWA ARCHITECTS INCORPORATED AND ITS BOARD OF DIRECTORS.

L:\2009--Jobs\609036--Palmetto Bay Municipal Center\CAD--MEP\Sheets T3.2.dwg 8/11/2010 5:39:39 PM jared.hunt

TLC ENGINEERING FOR ARCHITECTURE
800 Fairway Drive.
Suite 250
Deerfield Beach, Florida 33441
Phone: 954-418-9096
Fax: 954-418-9296
www.tlc-engineers.com
© Copyright 2007 TLC Engineering for Architecture, Inc.
EB #0000015 TLC NO: 609036

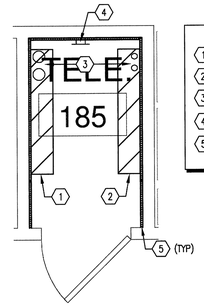

ENLARGED NOTES:

1. LOCATION FOR AT&T SERVICE ENTRANCE DEMARK.
2. LOCATION FOR COMCAST SERVICE ENTRANCE DEMARK.
3. SERVICE ENTRANCE SITE CONDUITS STUB 4" AFF.
4. PROVIDE GROUND BAR, SEE DETAILS FOR INSTALLATION REQUIREMENTS.
5. 4' X 8' X 3/4" PLYWOOD PAINTED ON ALL SIDES WITH FIRE RETARDANT PAINT, MOUNTED TO WALL 4" AFF.

TELECOM ROOM 185 - FIRST FLOOR
No Scale

1

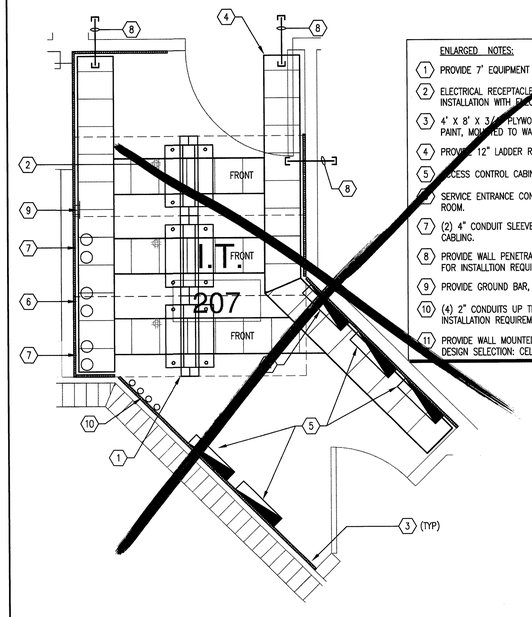

ENLARGED NOTES:

1. PROVIDE 7' EQUIPMENT RACKS, TYPICAL FOR THREE.
2. ELECTRICAL RECEPTACLE MOUNTED ON LADDER RACK, COORDINATE INSTALLATION WITH ELECTRICAL CONTRACTOR, TYPICAL PER RACK.
3. 4' X 8' X 3/4" PLYWOOD PAINTED ON ALL SIDES WITH FIRE RETARDANT PAINT, MOUNTED TO WALL 4" AFF.
4. PROVIDE 12" LADDER RACK WALL MOUNTED 7'-6" AFF.
5. ACCESS CONTROL CABINETS.
6. SERVICE ENTRANCE CONDUITS UP FROM 1ST FLOOR TELECOMMUNICATIONS ROOM.
7. (2) 4" CONDUIT SLEEVES UP FROM THE 1ST FLOOR FOR HORIZONTAL CABLING.
8. PROVIDE WALL PENETRATIONS FOR HORIZONTAL CABLING, SEE DETAIL SHEETS FOR INSTALLTION REQUIREMENTS.
9. PROVIDE GROUND BAR, SEE DETAILS FOR INSTALLATION REQUIREMENTS.
10. (4) 2" CONDUITS UP THRU ROOF. SEE ROOF PLAN T2.3 AND DETAILS FOR INSTALLATION REQUIREMENTS.
11. PROVIDE WALL MOUNTED DBA AMPLIFIER. DESIGN SELECTION: CELLANTENNA, PACKAGE#CAE800DB8519.

TELECOM ROOM 207 - SECOND FLOOR
No Scale

2

RECORD SET

The information presented on this drawing is diagrammatic and is presented for general information purposes and should not be relied on for accuracy of dimensions, details and locations. Actual and exact conditions if required should be determined in the field.

JMWA
ARCHITECTS
STEVEN E. MYOTT AIA
JAMES R. WILLIAMS AIA
RODOLFO ACEVEDO AIA
949 CLINT MOORE ROAD
BOCA RATON, FLORIDA 33487
TEL 561 997 9997
FAX 561 997 1610
WWW.JMWA.NET

PALMETTO BAY VILLAGE HALL
Palmetto Bay, Florida

Master Builders of South Florida, Inc.
1400 E. Oakland Park Blvd. Suite 210
Oakland Park, FL 33334

Jason A. Stinchcomb, P.E.
Florida License #58184

PROJECT NO. 609036
DESIGNED BY: MBR
DRAWN BY: JTA
CHECKED BY: TLM

SUBMITTALS:

50% REVIEW	10.30.2009
PERMIT REVIEW	11.20.2009
BUILDING PERMIT	03.03.2010

REVISIONS:

TECHNOLOGY
ENLARGED PLANS

T4.1

© 2009 JMWA ARCHITECTS, INCORPORATED ALL RIGHTS RESERVED. NO PART OF THESE IDEAS, PLANS OR DESIGNS MAY BE REPRODUCED, COPIED OR UTILIZED GRAPHICALLY IN ANY FORM WHATSOEVER WITHOUT THE EXPRESSED WRITTEN CONSENT OF JMWA ARCHITECTS INCORPORATED AND ITS BOARD OF DIRECTORS.

L:\2009--Jobs\609036--Palmetto Bay Municipal Center\CAD--MEP\Sheets T4.1.dwg 3/8/2010 12:05:51 PM jared.hunt

TLC ENGINEERING FOR ARCHITECTURE
800 Fairway Drive.
Suite 250
Deerfield Beach, Florida 33441
Phone: 954-418-9096
Fax: 954-418-9296
www.tlc-engineers.com
© Copyright 2007 TLC Engineering for Architecture, Inc.
EB #0000015 TLC NO:609036

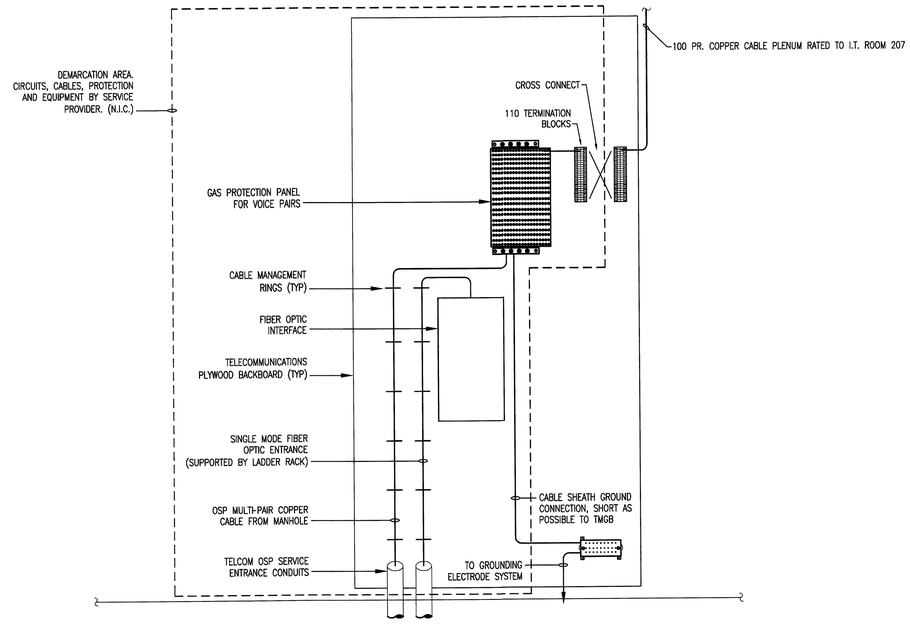

RACK ELEVATION - FIRST FLOOR TELECOM ROOM 185

No Scale

1

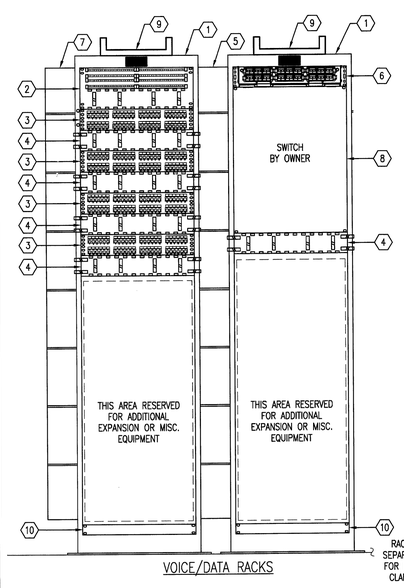

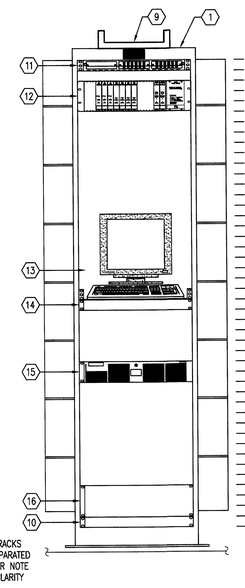

RACK ELEVATION NOTES:

1. 7' X 19" RACKS - BLACK FINISH, CPI #55053-703.
2. 200 PR. 110 WIRING BLOCK, SYSTIMAX #110RD2-100-19.
3. 48 PORT PATCH PANEL - VOICE & DATA WORKSTATIONS (2RU), SYSTIMAX #1100GS3-48.
4. 2 RU HORIZONTAL WIRE MANAGER - BLACK FINISH, CPI #30530-719
5. 7' X 6" VERTICAL WIRE MANAGER - BLACK FINISH. (BETWEEN RACKS), CPI #14831-703.
6. 2 RU, 48 PORT FIBER OPTIC SHELVE, SYSTIMAX #60023-2U4-MOD-SD WITH ADAPTER PANEL FULLY LOADED TO SUPPORT 24 MMLC CONNECTORS AND 24 SMLC CONNECTORS.
7. 7' X 4" VERTICAL WIRE MANAGER-BLACK FINISH. (AT END OF RACK ASSEMBLIES), CPI 14830-703.
8. NETWORK ELECTRONICS (BY OWNER).
9. CONNECTION TO LADDER RACK.
10. POWER STRIP. LEVITON 5500-192.
11. FIBER OPTIC PATCH PANEL
12. FIBER OPTIC CARD CAGE AND MODULES
13. MONITOR AND KEYBOARD
14. KVM SWITCH
15. VIDEO RECORDER, 16 CHANNEL. INTEGRAL DSNVR161500
16. UNINTERRUPTED POWER SUPPLY

RACK ELEVATION GENERAL NOTE:

1. CABLING CONTRACTOR TO PROVIDE ALL REQUIRED CONNECTIVITY HARDWARE TO TERMINATE ALL OUTLETS BEING CABLED FROM THIS TR AS SHOWN ON THE FLOOR PLAN.

RACK ELEVATION - SECOND FLOOR TELECOM ROOM 207

No Scale

2

RECORD SET

The information presented on this drawing is diagrammatic and is presented for general information purposes and should not be relied on for accuracy of dimensions, details and locations. Actual and exact conditions if required should be determined in the field.

JMWA ARCHITECTS
STEVEN E. MYOTT AIA
JAMES R. WILLIAMS AIA
RODOLFO ACEVEDO AIA
949 CLINT MOORE ROAD
BOCA RATON, FLORIDA 33487
TEL 561 997 9997
FAX 561 997 1610
WWW.JMWA.NET

PALMETTO BAY VILLAGE HALL

Palmetto Bay, Florida

Master Builders of South Florida, Inc.
1400 E. Oakland Park Blvd. Suite 210
Oakland Park, FL 33334

Jason A. Stinchcomb, P.E.
Florida License #58184

PROJECT NO. 609036
DESIGNED BY: MBR
DRAWN BY: JTA
CHECKED BY: TLM

SUBMITTALS:

50% REVIEW	10.30.2009
PERMIT REVIEW	11.20.2009
BUILDING PERMIT	03.03.2010

REVISIONS:

TECHNOLOGY
RACK ELEVATIONS

T5.1

© 2009 JMWA ARCHITECTS, INCORPORATED ALL RIGHTS RESERVED. NO PART OF THESE IDEAS, PLANS OR DESIGNS MAY BE REPRODUCED, COPIED OR UTILIZED GRAPHICALLY IN ANY FORM WHATSOEVER WITHOUT THE EXPRESSED WRITTEN CONSENT OF JMWA ARCHITECTS INCORPORATED AND ITS BOARD OF DIRECTORS.

L:\2009-Jobs\609036-Palmetto Bay Municipal Center\CAD-MEP\Sheets T5.1.dwg 3/8/2010 12:06:17 PM jared.hunt

TLC ENGINEERING FOR ARCHITECTURE
800 Fairway Drive.
Suite 250
Deerfield Beach, Florida 33441
Phone: 954-418-9096
Fax: 954-418-9295
www.tlc-engineers.com
© Copyright 2007 TLC Engineering for Architecture, Inc.
EB #0000015 TLC NO: 609036

JMWA ARCHITECTS
STEVEN E. MYOTT AIA
JAMES R. WILLIAMS AIA
RODOLFO ACEVEDO AIA

949 CLINT MOORE ROAD
BOCA RATON, FLORIDA 33487
TEL 561 997 9997
FAX 561 997 1610

WWW.JMWA.NET

PALMETTO BAY VILLAGE HALL
Palmetto Bay, Florida

Master Builders of South Florida, Inc.
1400 E. Oakland Park Blvd. Suite 210
Oakland Park, FL 33334

Jason A. Stinchcomb, P.E.
Florida License #58184

PROJECT NO. 609036
DESIGNED BY: MBR
DRAWN BY: JTA
CHECKED BY: TLM

SUBMITTALS:
50% REVIEW 10.30.2009
PERMIT REVIEW 11.20.2009
BUILDING PERMIT 03.03.2010

REVISIONS:

TECHNOLOGY DETAILS

T7.1

© 2009 JMWA ARCHITECTS, INCORPORATED ALL RIGHTS RESERVED. NO PART OF THESE IDEAS, PLANS OR DESIGNS MAY BE REPRODUCED, COPIED OR UTILIZED GRAPHICALLY IN ANY FORM WHATSOEVER WITHOUT THE EXPRESSED WRITTEN CONSENT OF JMWA ARCHITECTS INCORPORATED AND ITS BOARD OF DIRECTORS.

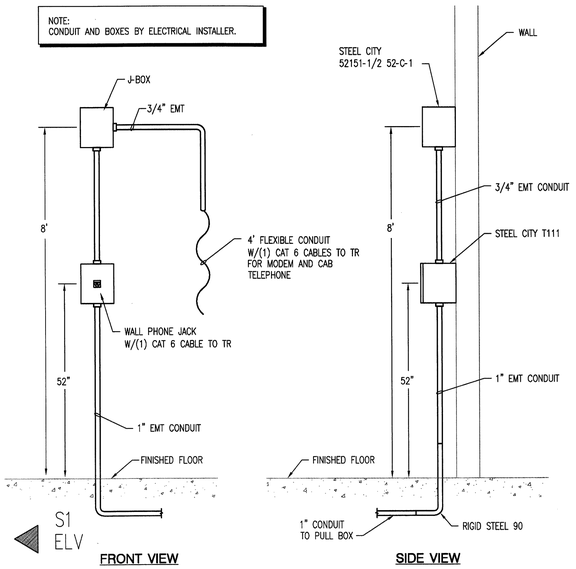

SURFACE MOUNTED OUTLET
No Scale FOR ELEVATOR MACHINE ROOM - BY SCS INSTALLER-DIV. 17

5

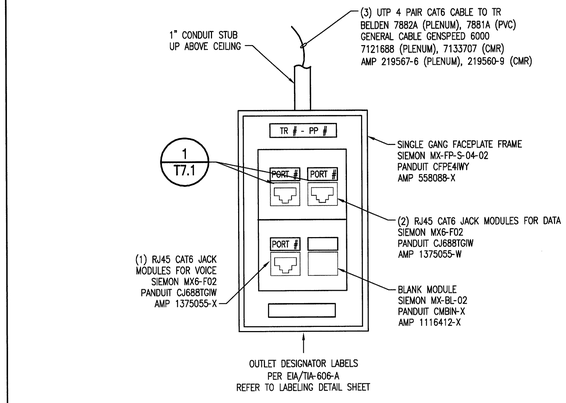

F3

WALL MOUNTED OUTLET - VOICE/DATA
No Scale

3

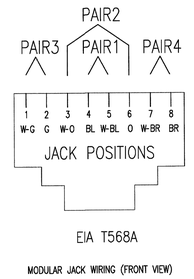

MODULAR JACK WIRING (FRONT VIEW)

MODULAR JACK WIRING DETAIL
No Scale BY SCS INSTALLER-DIV. 17

1

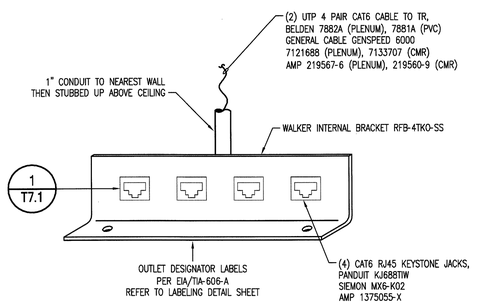

AN

OUTLET IN FLOOR BOX - VOICE/DATA
No Scale

6

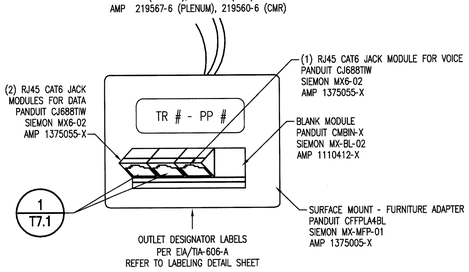

M3

NOTE:
COORDINATE WITH INTERIOR DESIGN ARCHITECT FOR PANEL CUTOUT REQUIREMENTS.

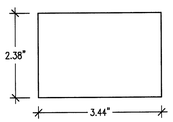

PANEL CUT OUT REQUIREMENTS

MODULAR FURNITURE OUTLET- VOICE/DATA
No Scale

4

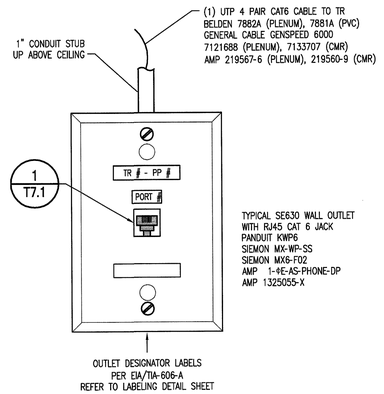

W
F1

WALL PHONE OUTLET - W/F1
No Scale BY SCS INSTALLER-DIV. 17

2

RECORD SET
The information presented on this drawing is diagrammatic and is presented for general information purposes and should not be relied on for accuracy of dimensions, details and locations. Actual and exact conditions if required should be determined in the field.

L:\2009-Jobs\609036-Palmetto Bay Municipal Center\CAD-MEP\Sheets T7.1.dwg 3/8/2010 12:08:56 PM jared.hunt

TLC ENGINEERING FOR ARCHITECTURE
800 Fairway Drive.
Suite 250
Deerfield Beach, Florida 33441
Phone: 954-418-9086
Fax: 954-418-9296
www.tlc-engineers.com
© Copyright 2007 TLC Engineering for Architecture, Inc.
EB #0000015 TLC NO: 609036

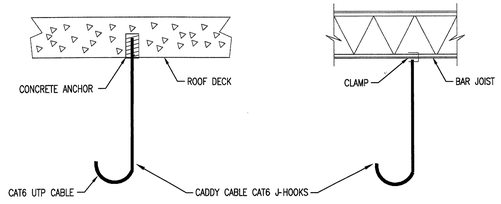

NOTES:
1) SPACING SHALL NOT EXCEED FOUR FEET MAXIMUM.
2) EQUAL BY COOPER B-LINE.

CABLE HANGER
No Scale

5

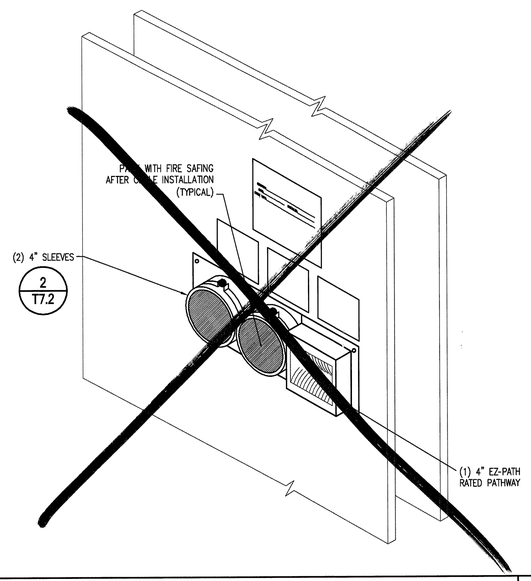

WALL PENETRATION - AT TELECOM ROOM
No Scale FIRE RESISTANCE PATHWAY - BY ELECTRICAL INSTALLER

3

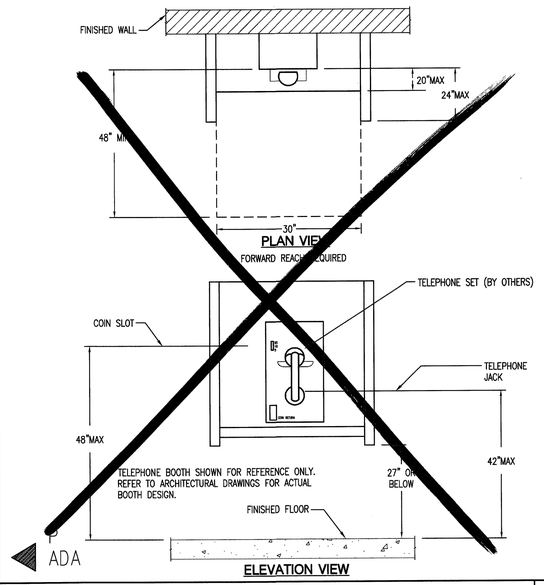

ELEVATION VIEW

PAY PHONES WITH ADA REQUIREMENTS
No Scale MOUNTING HEIGHTS AND CLEARANCES

1

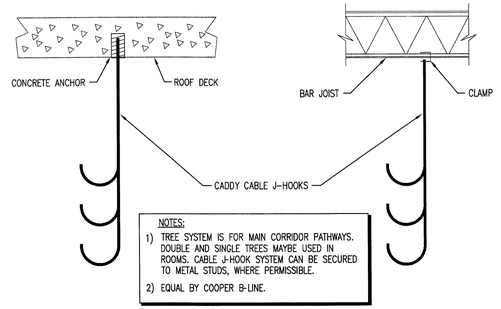

NOTES:
1) TREE SYSTEM IS FOR MAIN CORRIDOR PATHWAYS. DOUBLE AND SINGLE TREES MAYBE USED IN ROOMS. CABLE J-HOOK SYSTEM CAN BE SECURED TO METAL STUDS, WHERE PERMISSIBLE.
2) EQUAL BY COOPER B-LINE.

CABLE HANGER
No Scale

6

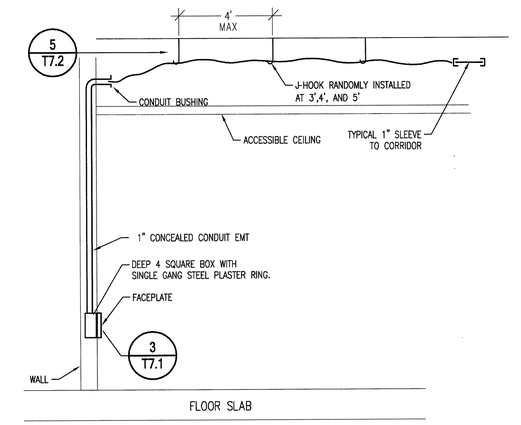

TYPICAL FLUSH OUTLET MOUNTING
No Scale CONDUIT OVERHEAD

4

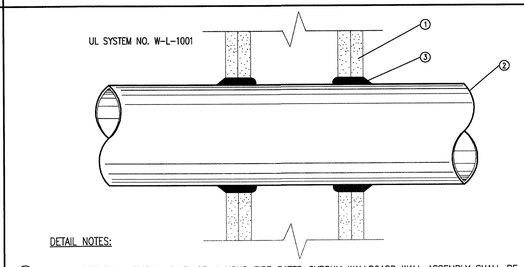

DETAIL NOTES:

(1) WALL ASSEMBLY - THE 1, 2, 3, OR 4 HOUR FIRE RATED GYPSUM WALLBOARD WALL ASSEMBLY SHALL BE CONSTRUCTED OF THE MATERIALS AND IN THE MANNER DESCRIBED IN THE INDIVIDUAL U300 OR U400 SERIES WALL OR PARTITION DESIGNS IN THE UL FIRE RESISTANCE DIRECTORY.

(2) CONDUIT - NOM 4" DIAMETER OR SMALLER STEEL ELECTRICAL METALLIC TUBING. A MAXIMUM OF ONE CONDUIT IS PERMITTED IN THE FIRE STOP SYSTEM. CONDUIT TO BE INSTALLED NEAR CENTER OF STUD CAVITY WIDTH AND TO BE RIGIDLY SUPPORTED ON BOTH SIDES OF WALL ASSEMBLY.

(3) FILL VOID OR CAVITY MATERIAL - CAULK FILL MATERIAL BEARING THE UL CLASSIFICATION MARKING INSTALLED TO COMPLETELY FILL ANNULAR SPACE BETWEEN PIPE OR CONDUIT AND GYPSUM WALLBOARD AND WITH A MIN. 1/4" DIAMETER BEAD OF CAULK APPLIED TO PERIMETER OF CONDUIT AT ITS EGRESS FROM THE WALL. CAULK INSTALLED SYMMETRICALLY ON BOTH SIDES OF WALL ASSEMBLY. THE HOURLY F RATING OF THE FIRE STOP SYSTEM IS DEPENDENT UPON THE HOURLY FIRE RATING OF THE WALL ASSEMBLY IN WHICH IT IS INSTALLED, AS SHOWN IN THE FOLLOWING TABLE. THE HOURLY T RATING OF THE FIRE STOP SYSTEM IS DEPENDENT UPON THE TYPE OR SIZE OF THE CONDUIT AND THE HOURLY FIRE RATING OF THE WALL ASSEMBLY IN WHICH IT IS INSTALLED, AS TABULATED BELOW:

MAXIMUM CONDUIT DIAMETER IN INCHES	ANNULAR SPACE IN INCHES	FIRE RATING IN HOURS	T RATING IN HOURS
1	0 TO 3/16	1 OR 2	0, 1 OR 2
1	1/4 TO 1/2	3 OR 4	3 OR 4
4	0 TO 1-1/2	1 OR 2	0
6	1/4 TO 1/2	3 OR 4	0
12	3/16 TO 3/8	1 OR 2	0

CONDUIT PENETRATION OF FIRE WALL
No Scale

2

RECORD SET
The information presented on this drawing is diagrammatic and is presented for general information purposes and should not be relied on for accuracy of dimensions, details and locations. Actual and exact conditions if required should be determined in the field.

JMWA ARCHITECTS
STEVEN E. MYOTT AIA
JAMES R. WILLIAMS AIA
RODOLFO ACEVEDO AIA
949 CLINT MOORE ROAD
BOCA RATON, FLORIDA 33487
TEL 561 997 9997
FAX 561 997 1610
WWW.JMWA.NET

PALMETTO BAY VILLAGE HALL
Palmetto Bay, Florida

Master Builders of South Florida, Inc.
1400 E. Oakland Park Blvd. Suite 210
Oakland Park, FL 33334

Jason A. Stinchcomb, P.E.
Florida License #58184

PROJECT NO. 609036
DESIGNED BY: MBR
DRAWN BY: JTA
CHECKED BY: TLM

SUBMITTALS:
50% REVIEW 10.30.2009
PERMIT REVIEW 11.20.2009
BUILDING PERMIT 03.03.2010

REVISIONS:

TECHNOLOGY DETAILS

T7.2

© 2009 JMWA ARCHITECTS, INCORPORATED ALL RIGHTS RESERVED. NO PART OF THESE IDEAL PLANS OR DESIGNS MAY BE REPRODUCED, COPIED OR UTILIZED GRAPHICALLY IN ANY FORM WHATSOEVER WITHOUT THE EXPRESSED WRITTEN CONSENT OF JMWA ARCHITECTS INCORPORATED AND ITS BOARD OF DIRECTORS.

L:\2009-Jobs\609036-Palmetto Bay Municipal Center\CAD-MEP\Sheets T7.2.dwg 3/8/2010 12:09:18 PM jared.hunt

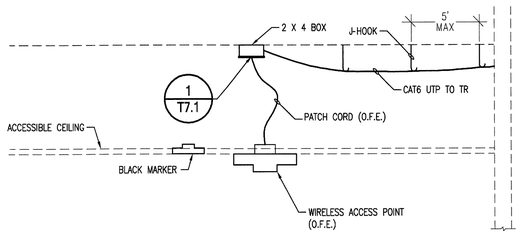

WAP
S2

NOTE:
WIRELESS ACCESS POINT AND PATCH CORD NOT IN CONTRACT.

OUTLET MOUNTING FOR WIRELESS ACCESS POINT — 5
No Scale

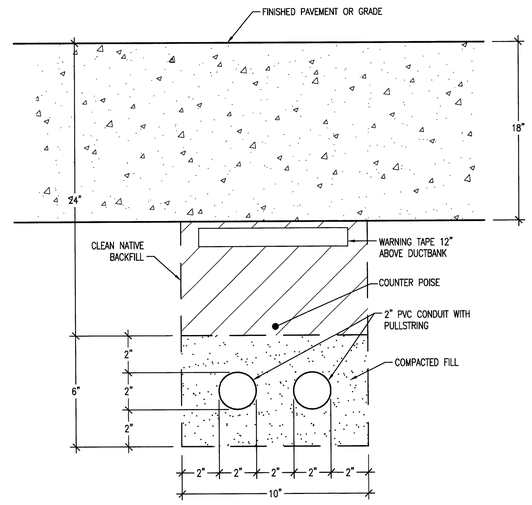

2W2" TELECOMM DUCTBANK - COMCAST — 2
No Scale BY ELECTRICAL INSTALLER-DIV. 16

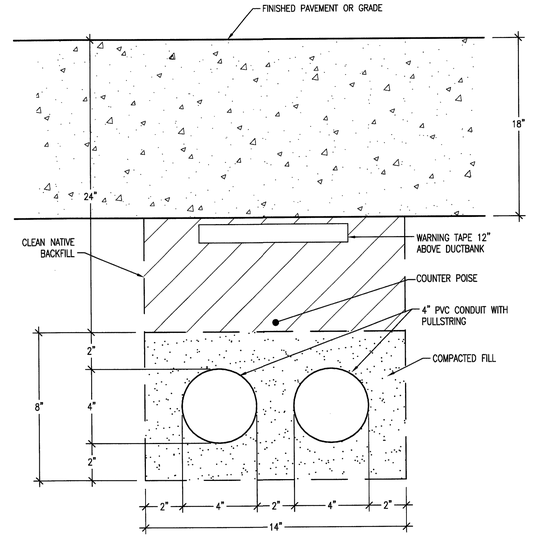

2W4" TELECOMM DUCTBANK - AT&T — 1
No Scale BY ELECTRICAL INSTALLER-DIV. 16

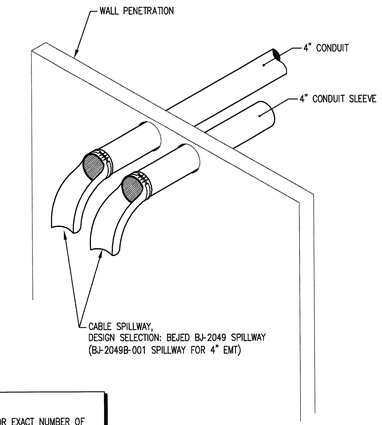

NOTES:
1. SEE FLOORPLANS FOR EXACT NUMBER OF CONDUITS & CONDUIT SLEEVES.
2. REFER TO HORIZONTAL/VERTICAL FIRE RATED PENETRATION DETAIL FOR FIRE RATING REQUIREMENTS.

4" CONDUIT SPILLWAY — 6
No Scale

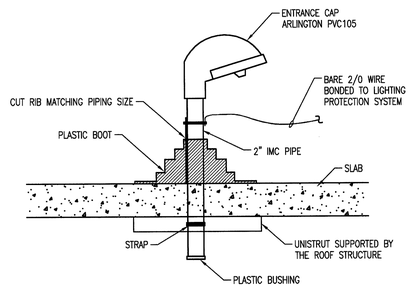

NOTE:
FOR 3" IMC PIPE ENTRANCE CAP ARLINGTON PVC109.

GOOSENECK ROOF PENETRATIONS — 4
No Scale

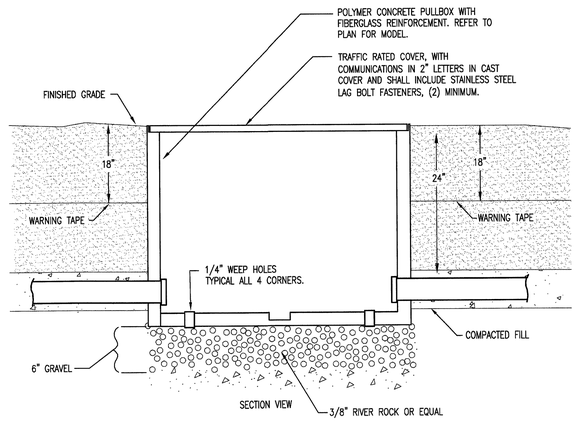

DIMENSIONS: 36"L x 36"W x 36"D

COMMUNICATIONS PULL BOX — 2
No Scale BY ELECTRICAL INSTALLER-DIV. 16

RECORD SET
The information presented on this drawing is diagrammatic and is presented for general information purposes and should not be relied on for accuracy of dimensions, details and locations. Actual and exact conditions if required should be determined in the field.

TLC ENGINEERING FOR ARCHITECTURE
800 Fairway Drive.
Suite 250
Deerfield Beach, Florida 33441
Phone: 954-418-9096
Fax: 954-418-9296
www.tlc-engineers.com

© Copyright 2007 TLC Engineering for Architecture, Inc.

EB #0000015 TLC NO: 609036

JMWA ARCHITECTS
STEVEN E. MYOTT AIA
JAMES R. WILLIAMS AIA
RODOLFO ACEVEDO AIA
949 CLINT MOORE ROAD
BOCA RATON, FLORIDA 33487
TEL 561 997 9997
FAX 561 997 1610
WWW.JMWA.NET

PALMETTO BAY VILLAGE HALL
Palmetto Bay, Florida

Master Builders of South Florida, Inc.
1400 E. Oakland Park Blvd. Suite 210
Oakland Park, FL 33334

Jason A. Stinchcomb, P.E.
Florida License #58184

PROJECT NO. 609036
DESIGNED BY: MBR
DRAWN BY: JTA
CHECKED BY: TLM

SUBMITTALS:
50% REVIEW 10.30.2009
PERMIT REVIEW 11.20.2009
BUILDING PERMIT 03.03.2010

REVISIONS:

TECHNOLOGY DETAILS

T7.3

© 2009 JMWA ARCHITECTS, INCORPORATED All RIGHTS RESERVED. NO PART OF THESE IDEAS, PLANS OR DESIGNS MAY BE REPRODUCED, COPIED OR UTILIZED GRAPHICALLY IN ANY FORM WHATSOEVER WITHOUT THE EXPRESSED WRITTEN CONSENT OF JMWA ARCHITECTS INCORPORATED AND ITS BOARD OF DIRECTORS.

L:\2009--Jobs\609036--Palmetto Bay Municipal Center\CAD-MEP\Sheets T7.3.dwg 3/8/2010 12:09:37 PM jared.hunt

TLC ENGINEERING FOR ARCHITECTURE
800 Fairway Drive.
Suite 250
Deerfield Beach, Florida 33441
Phone: 954-418-9096
Fax: 954-418-9296
www.tlc-engineers.com
© Copyright 2007 TLC Engineering for Architecture, Inc.
EB #0000015 TLC NO:609036

JMWA ARCHITECTS
STEVEN E. MYOTT AIA
JAMES R. WILLIAMS AIA
RODOLFO ACEVEDO AIA
949 CLINT MOORE ROAD
BOCA RATON, FLORIDA 33487
TEL 561 997 9997
FAX 561 997 1610
WWW.JMWA.NET

PALMETTO BAY VILLAGE HALL
Palmetto Bay, Florida

Master Builders of South Florida, Inc.
1400 E. Oakland Park Blvd. Suite 210
Oakland Park, FL 33334

Jason A. Stinchcomb, P.E.
Florida License #58184

PROJECT NO. 609036
DESIGNED BY: MBR
DRAWN BY: JTA
CHECKED BY: TLM

SUBMITTALS:
50% REVIEW 10.30.2009
PERMIT REVIEW 11.20.2009
BUILDING PERMIT 03.03.2010

REVISIONS:

TECHNOLOGY DETAILS

T7.4

© 2009 JMWA ARCHITECTS, INCORPORATED ALL RIGHTS RESERVED. NO PART OF THESE IDEAS, PLANS OR DESIGNS MAY BE REPRODUCED, COPIED OR UTILIZED GRAPHICALLY IN ANY FORM WHATSOEVER WITHOUT THE EXPRESSED WRITTEN CONSENT OF JMWA ARCHITECTS INCORPORATED AND ITS BOARD OF DIRECTORS

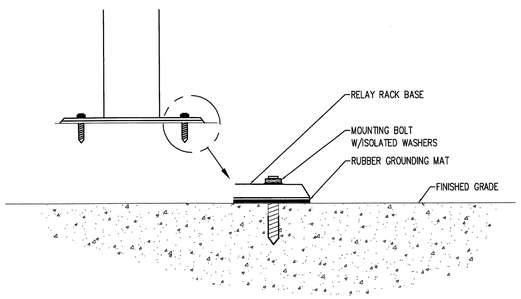

FLOOR RACK MOUNTING ON SLAB
No Scale BY SCS INSTALLER-DIV. 17

5

KEYNOTES

1. COMMUNICATION GROUND BUS. SEE DETAIL. BY ELECTRICAL INSTALLER.
2. 5/8" X 20'-0" COPPER CLAD DRIVEN ROD GROUND. BY ELECTRICAL INSTALLER. REQUIRED ONLY IF ELECTRICAL PANEL SERVING THIS EQUIPMENT IS NOT WITHIN 20' RADIUS.
3. #6 COPPER FROM GROUNDING POINT BACK TO GROUND BUS. BY ELECTRICAL INSTALLER.
4. GROUNDING CONNECTION TO IDF/MDF RACK.
5. #6 COPPER TO ELECTRICAL SERVICE GROUNDING BUS IN PANEL SERVING THIS EQUIPMENT. BY ELECTRICAL INSTALLER.
6. (N) 24 PORT, FULLY LOADED W/ PANELS FIBER OPTIC ENCLOSURE AND SC ADAPTERS.
7. (N) 48 PORT CAT5E MOD-TO-110 PATCH PANEL.
8. (N) WIRE MANAGERS.
9. (2) VERTICAL WIRE MANAGERS 4" WIDE.
10. (1) 19" RACK, 7' EXISTING OR NEW AS REQUIRED. REFER TO FLOOR PLANS.
11. ANTI STATIC RUBBER MAT.

N:
PROVIDE REQUIRED QUANTITY OF TERMINATION HARDWARE FOR TERMINATION OF ALL CABLES IN THE RACK.

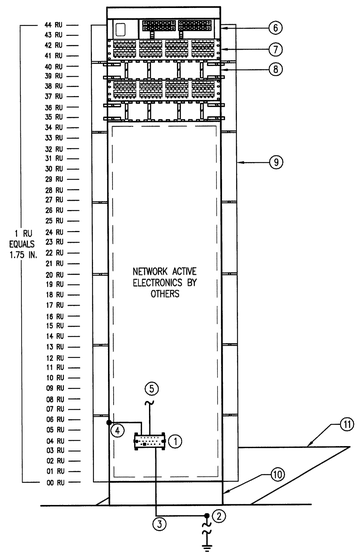

OPEN 7' RACK - FLOOR MOUNTED
No Scale IDF TYPE I

3

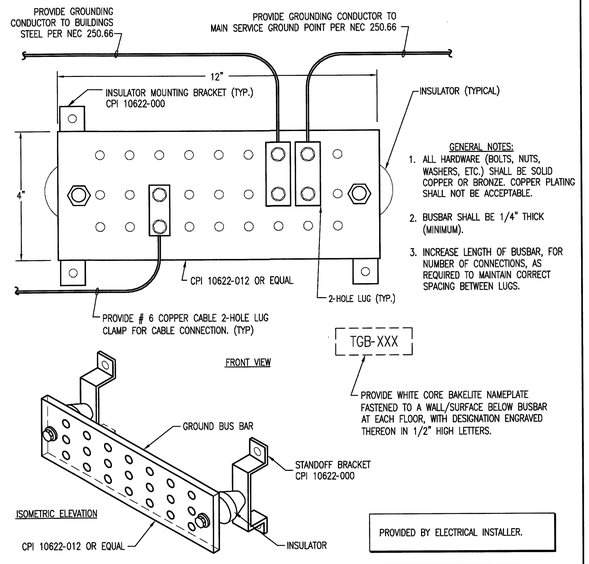

GENERAL NOTES:
1. ALL HARDWARE (BOLTS, NUTS, WASHERS, ETC.) SHALL BE SOLID COPPER OR BRONZE. COPPER PLATING SHALL NOT BE ACCEPTABLE.
2. BUSBAR SHALL BE 1/4" THICK (MINIMUM).
3. INCREASE LENGTH OF BUSBAR, FOR NUMBER OF CONNECTIONS, AS REQUIRED TO MAINTAIN CORRECT SPACING BETWEEN LUGS.

GROUND BUS BAR (TYPICAL FOR ALL TR'S)
No Scale

1

NOTES:
"A" MEASURED FROM END OF STRINGER TO MIDDLE OF CROSS SLAT.
"B" MEASURED FROM MIDDLE OF CROSS SLATS.

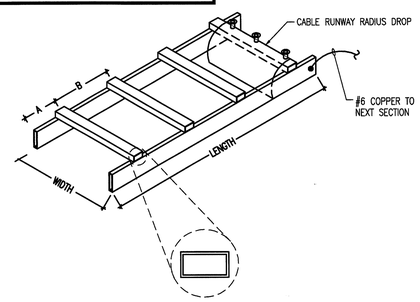

UNIVERSAL TUBULAR RUNWAY SYSTEM

TUBULAR RUNWAY / LADDER RACK IN TR'S
No Scale

6

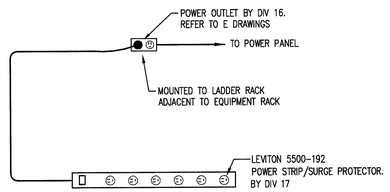

POWER CONNECTION DETAIL
No Scale

4

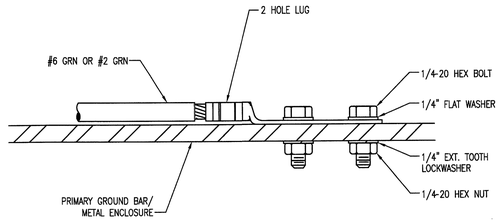

#6 OR #2 GRN TO GROUND BAR OF FLAT SURFACE.

#6 IS USED PRIMARILY AS CABINET TO BUS LINK.

INSTALLATION NOTES:
A. SELECT BOLT LENGTH TO PROVIDE A MINIMUM OF TWO EXPOSED THREADS.
B. BURNISH MOUNTING SURFACE TO REMOVE PAINT IN THE AREA OF LUG CONTACT.
C. APPLY ANTI-OXIDANT COMPOUND TO MATING SURFACE OF LUG AND WIPE CLEAN EXCESS COMPOUND.
D. USE SOLID COPPER WIRE AND MECHANICAL 2-HOLE LUG FOR ALL EXTERIOR GROUNDING.

GROUND BAR 2-HOLE LUG TERMINATION
No Scale

2

RECORD SET
The information presented on this drawing is diagrammatic and is presented for general information purposes and should not be relied on for accuracy of dimensions, details and locations. Actual and exact conditions if required should be determined in the field.

L:\2009--Jobs\609036--Palmetto Bay Municipal Center\CAD-MEP\Sheets T7.4.dwg 3/8/2010 12:09:59 PM jpred.hunt

800 Fairway Drive.
Suite 250
Deerfield Beach, Florida 33441
Phone: 954-418-9096
Fax: 954-418-9296
www.tlc-engineers.com
© Copyright 2007 TLC Engineering for Architecture, Inc.
EB #0000015 TLC NO: 609036

JMWA
ARCHITECTS
STEVEN E. MYOTT AIA
JAMES R. WILLIAMS AIA
RODOLFO ACEVEDO AIA
949 CLINT MOORE ROAD
BOCA RATON, FLORIDA 33487
TEL 561 997 9997
FAX 561 997 1610
WWW.JMWA.NET

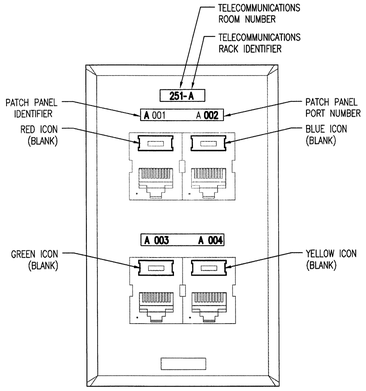

ALL LABELING SHALL BE MACHINE GENERATED, AND INSTALLED UNDER FACTORY PLASTIC COVER.

TYPICAL WORK AREA OUTLET LABEL DETAIL 5
No Scale

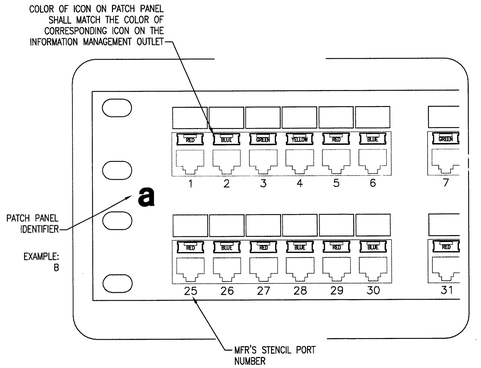

ALL LABELING SHALL BE MACHINE GENERATED, AND INSTALLED UNDER FACTORY PLASTIC COVER.

TYPICAL COPPER PATCH PANEL LABELING 3
No Scale

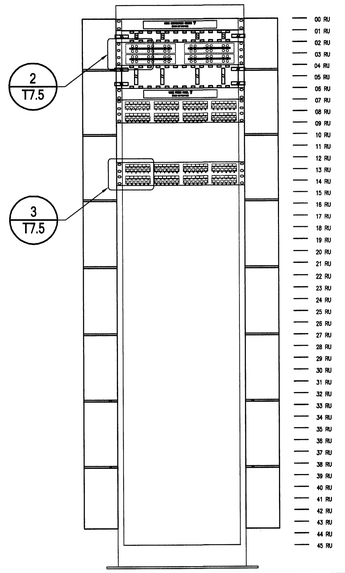

RACK LABELING ELEMENTS 1
No Scale

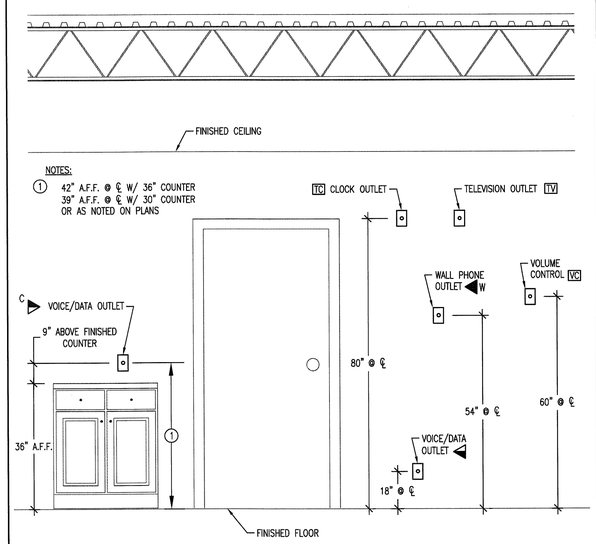

TYPICAL SYSTEMS OUTLET MOUNTING HEIGHTS 6
No Scale GE-MD-01

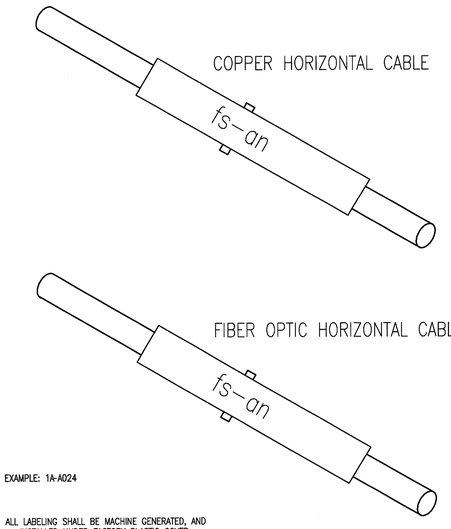

EXAMPLE: 1A-A024

ALL LABELING SHALL BE MACHINE GENERATED, AND INSTALLED UNDER FACTORY PLASTIC COVER.

TYPICAL HORIZONTAL CABLE I.D. LABEL DETAIL 4
No Scale

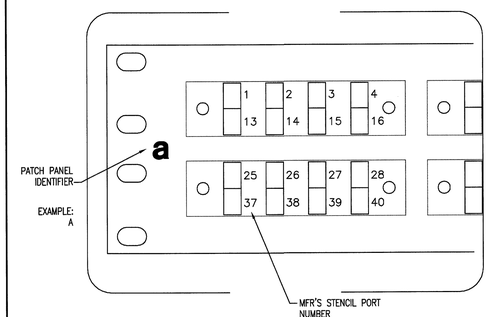

ALL LABELING SHALL BE MACHINE GENERATED, AND INSTALLED UNDER FACTORY PLASTIC COVER.

TYPICAL FIBER OPTIC PATCH PANEL LABELING 2
No Scale

RECORD SET

The information presented on this drawing is diagrammatic and is presented for general information purposes and should not be relied on for accuracy of dimensions, details and locations. Actual and exact conditions if required should be determined in the field.

PALMETTO BAY VILLAGE HALL
Palmetto Bay, Florida

Master Builders of South Florida, Inc.
1400 E. Oakland Park Blvd. Suite 210
Oakland Park, FL 33334

Jason A. Stinchcomb, P.E.
Florida License #58184

PROJECT NO. 609036
DESIGNED BY: MBR
DRAWN BY: JTA
CHECKED BY: TLM

SUBMITTALS:
50% REVIEW 10.30.2009
PERMIT REVIEW 11.20.2009
BUILDING PERMIT 03.03.2010

REVISIONS:

TECHNOLOGY DETAILS

T7.5

© 2009 JMWA ARCHITECTS, INCORPORATED ALL RIGHTS RESERVED. NO PART OF THESE IDEAS, PLANS OR DESIGNS MAY BE REPRODUCED, COPIED OR UTILIZED GRAPHICALLY IN ANY FORM WHATSOEVER WITHOUT THE EXPRESSED WRITTEN CONSENT OF JMWA ARCHITECTS INCORPORATED AND ITS BOARD OF DIRECTORS.

L:\2009--Jobs\609036--Palmetto Bay Municipal Center\CAD--MEP\Sheets T7.5.dwg 3/8/2010 12:10:22 PM jared.hunt

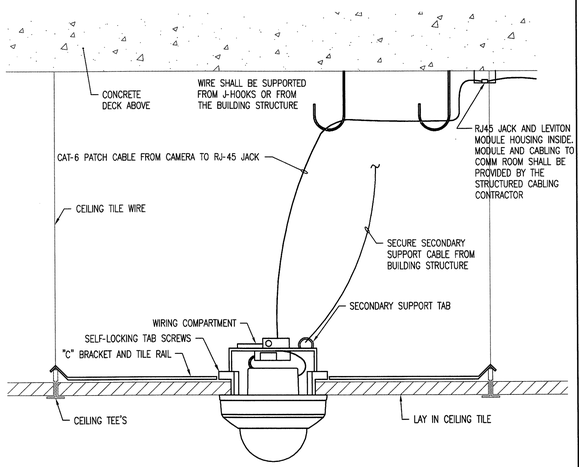

INTERIOR RECESSED MOUNTED FIXED CAMERA | 3

No Scale TYPICAL FOR DROP CEILINGS

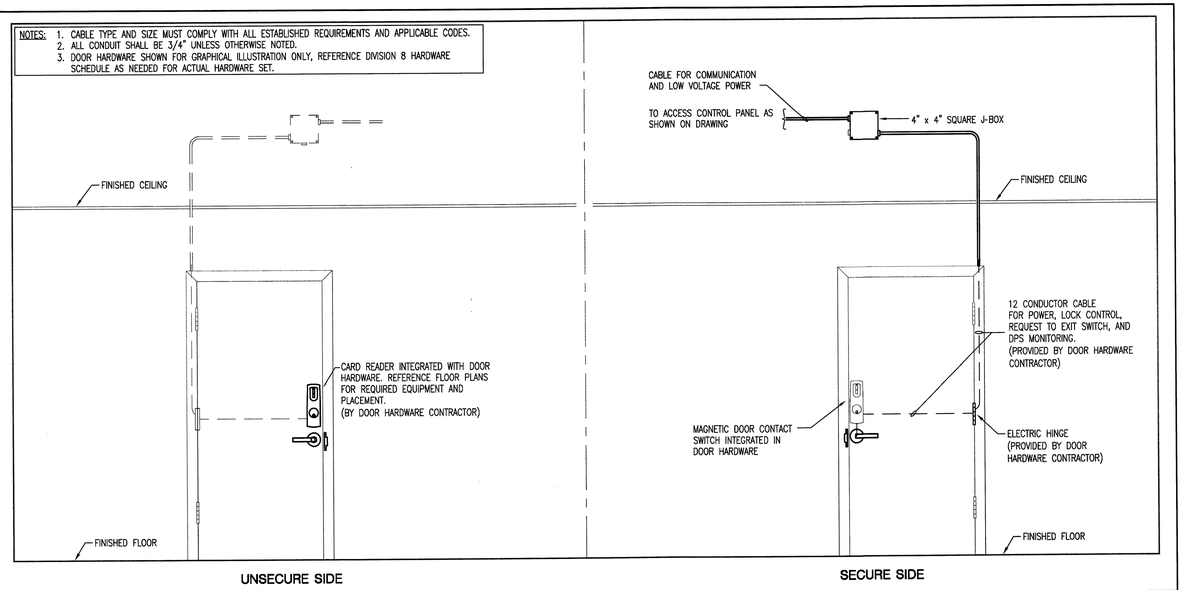

SECURITY SINGLE DOOR - ELECTRIC MORTISE LOCK WITH INTEGRATED CARD READER - DOOR TYPE "A" | 1

No Scale

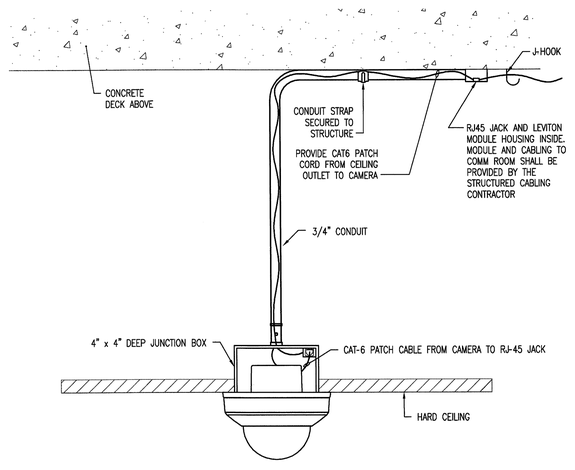

INTERIOR RECESSED MOUNTED FIXED CAMERA | 4

No Scale TYPICAL FOR HARD CEILINGS

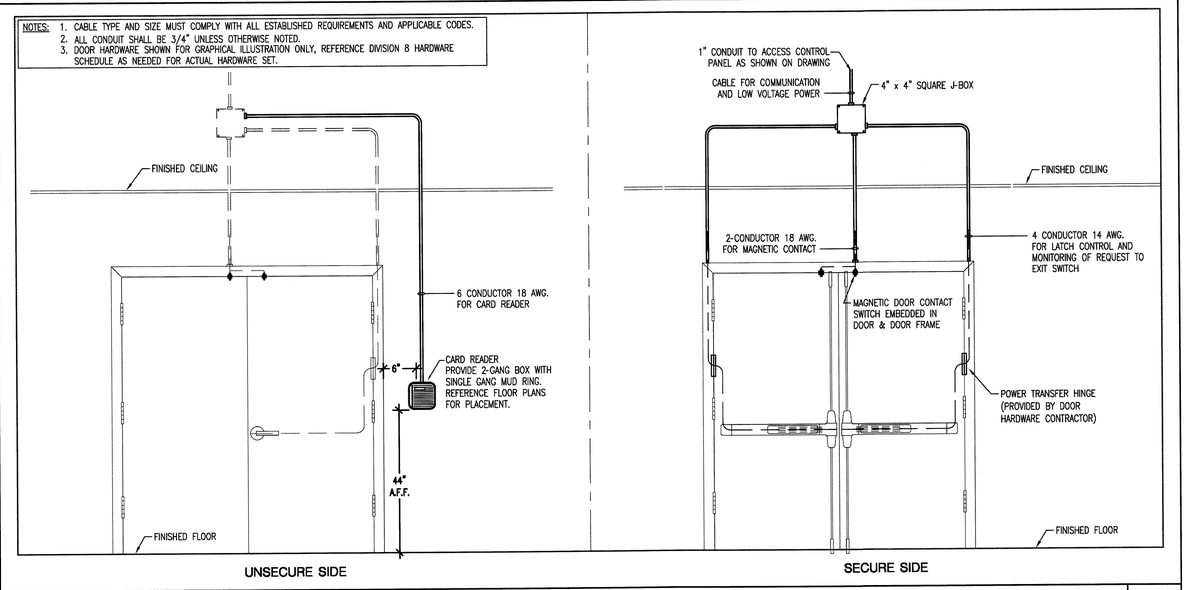

SECURITY DOUBLE DOOR - ELECTRIC LATCH WITH CARD READER - DOOR TYPE 'B' | 2

No Scale

RECORD SET

The information presented on this drawing is diagrammatic and is presented for general information purposes and should not be relied on for accuracy of dimensions, details and locations. Actual and exact conditions if required should be determined in the field.

TLC ENGINEERING FOR ARCHITECTURE
800 Fairway Drive. Suite 250 Deerfield Beach, Florida 33441
Phone: 954-418-9096 Fax: 954-418-9286 www.tlc-engineers.com
© Copyright 2007 TLC Engineering for Architecture, Inc.
EB #0000015 TLC NO: 609036

JMWA ARCHITECTS
STEVEN E. MYOTT AIA
JAMES R. WILLIAMS AIA
RODOLFO ACEVEDO AIA
949 CLINT MOORE ROAD
BOCA RATON, FLORIDA 33487
TEL 561 997 9997
FAX 561 997 1610
WWW.JMWA.NET

PALMETTO BAY VILLAGE HALL

Palmetto Bay, Florida

Master Builders of South Florida, Inc.
1400 E. Oakland Park Blvd. Suite 210
Oakland Park, FL 33334

Jason A. Stinchcomb, P.E.
Florida License #58184

PROJECT NO. 609036
DESIGNED BY: MBR
DRAWN BY: JTA
CHECKED BY: TLM

SUBMITTALS:
50% REVIEW 10.30.2009
PERMIT REVIEW 11.20.2009
BUILDING PERMIT 03.03.2010

REVISIONS:

TECHNOLOGY DETAILS

T7.6

© 2009 JMWA ARCHITECTS, INCORPORATED ALL RIGHTS RESERVED. NO PART OF THESE IDEAS, PLANS OR DESIGNS MAY BE REPRODUCED, COPIED OR UTILIZED GRAPHICALLY IN ANY FORM WHATSOEVER WITHOUT THE EXPRESSED WRITTEN CONSENT OF JMWA ARCHITECTS INCORPORATED AND ITS BOARD OF DIRECTORS.

L:\2009-Jobs\609036-Palmetto Bay Municipal Center\CAD-MEP\Sheets T7.6.dwg 3/8/2010 12:10:41 PM jared.hunt

TLC ENGINEERING FOR ARCHITECTURE
800 Fairway Drive.
Suite 250
Deerfield Beach, Florida 33441
Phone: 954-418-9096
Fax: 954-418-9266
www.tlc-engineers.com
© Copyright 2007 TLC Engineering for Architecture, Inc.
EB #0000015 TLC NO: 609036

JMWA ARCHITECTS
STEVEN E. MYOTT AIA
JAMES R. WILLIAMS AIA
RODOLFO ACEVEDO AIA
949 CLINT MOORE ROAD
BOCA RATON, FLORIDA 33487
TEL 561 997 9997
FAX 561 997 1610
WWW.JMWA.NET

NOTES:
1. CABLE TYPE AND SIZE MUST COMPLY WITH ALL ESTABLISHED REQUIREMENTS AND APPLICABLE CODES.
2. ALL CONDUIT SHALL BE 3/4" UNLESS OTHERWISE NOTED.
3. DOOR HARDWARE SHOWN FOR GRAPHICAL ILLUSTRATION ONLY, REFERENCE DIVISION 8 HARDWARE SCHEDULE AS NEEDED FOR ACTUAL HARDWARE SET.

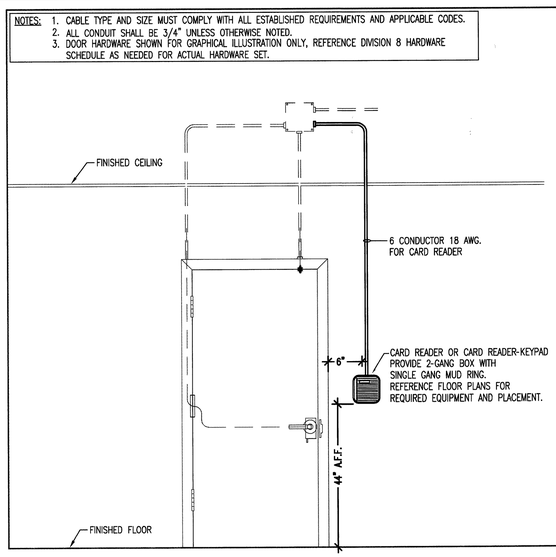

UNSECURE SIDE

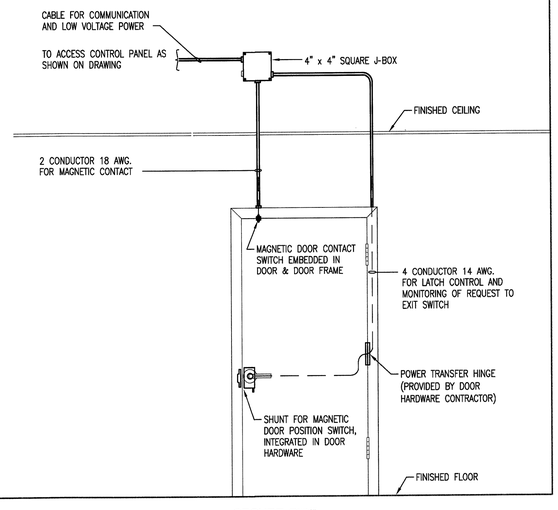

SECURE SIDE

NOT USED
No Scale

3

SECURITY SINGLE DOOR - ELECTRIC MORTISE LOCK - CARD READER OR CARD READER-KEYPAD - DOOR TYPE 'C'
No Scale

1

NOT USED
No Scale

4

ELEVATOR CONTROL DETAIL - DOOR TYPE 'I'
No Scale

2

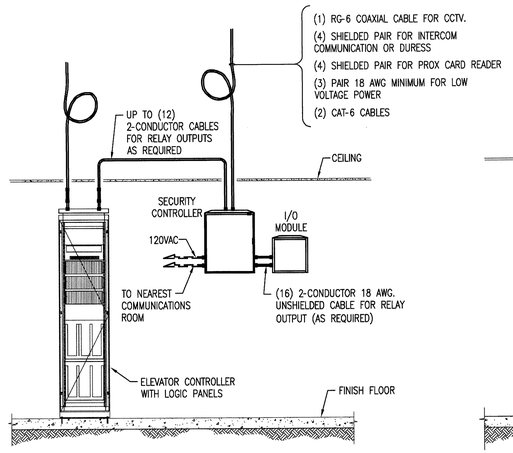

ELEVATOR MACHINE ROOM CONFIGURATION

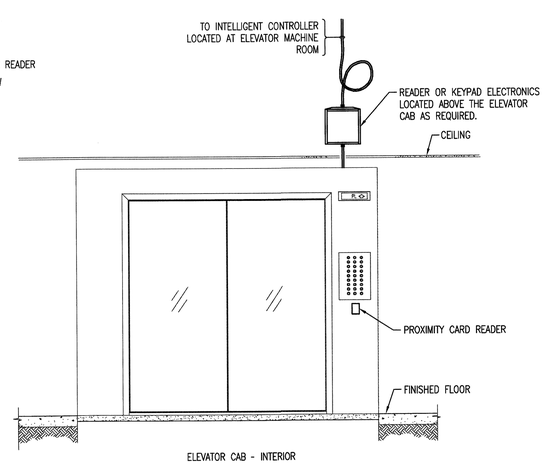

ELEVATOR CAB - INTERIOR

RECORD SET
The information presented on this drawing is diagrammatic and is presented for general information purposes and should not be relied on for accuracy of dimensions, details and locations. Actual and exact conditions if required should be determined in the field.

PALMETTO BAY VILLAGE HALL
Palmetto Bay, Florida

Master Builders of South Florida, Inc.
1400 E. Oakland Park Blvd. Suite 210
Oakland Park, FL 33334

Jason A. Stinchcomb, P.E.
Florida License #58184

PROJECT NO. 609036
DESIGNED BY: MBR
DRAWN BY: JTA
CHECKED BY: TLM

SUBMITTALS:
50% REVIEW 10.30.2009
PERMIT REVIEW 11.20.2009
BUILDING PERMIT 03.03.2010

REVISIONS:

TECHNOLOGY
DETAILS

T7.7

© 2009 JMWA ARCHITECTS, INCORPORATED ALL RIGHTS RESERVED. NO PART OF THESE IDEAS, PLANS OR DESIGNS MAY BE REPRODUCED, COPIED OR UTILIZED IN ANY FORM WHATSOEVER WITHOUT THE EXPRESSED WRITTEN CONSENT OF JMWA ARCHITECTS INCORPORATED AND ITS BOARD OF DIRECTORS.

L:\2009-Jobs\609036-Palmetto Bay Municipal Center\CAD-MEP\Sheets T7.7.dwg 3/8/2010 12:11:03 PM jared.hunt

ENGINEERING FOR ARCHITECTURE
800 Fairway Drive.
Suite 250
Deerfield Beach, Florida 33441
Phone: 954-418-9096
Fax: 954-418-9266
www.tlc-engineers.com
© Copyright 2007 TLC Engineering for Architecture, Inc.
EB #0000015 TLC NO: 609036

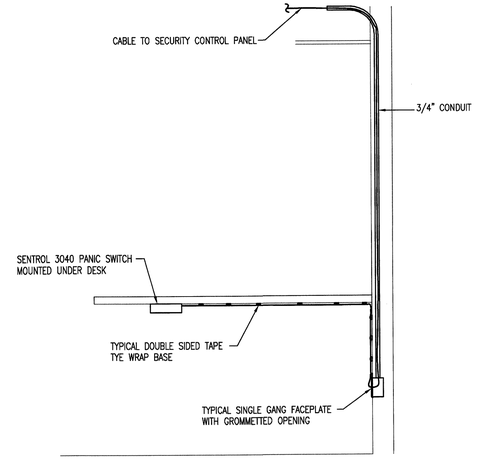

DURESS BUTTON — **1**
No Scale

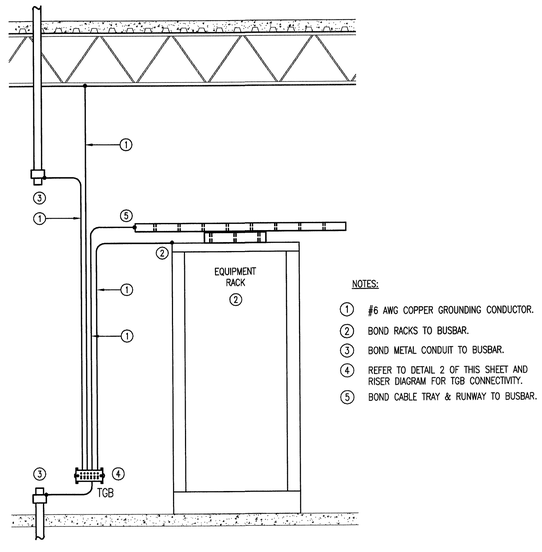

GROUNDING DETAIL (TYP. TELECOM ROOM) — **2**
No Scale

RECORD SET
The information presented on this drawing is diagrammatic and is presented for general information purposes and should not be relied on for accuracy of dimensions, details and locations. Actual and exact conditions if required should be determined in the field.

JMWA ARCHITECTS
STEVEN E. MYOTT AIA
JAMES R. WILLIAMS AIA
RODOLFO ACEVEDO AIA
949 CLINT MOORE ROAD
BOCA RATON, FLORIDA 33487
TEL 561 997 9997
FAX 561 997 1610
WWW.JMWA.NET

PALMETTO BAY VILLAGE HALL
Palmetto Bay, Florida

Master Builders of South Florida, Inc.
1400 E. Oakland Park Blvd. Suite 210
Oakland Park, FL 33334

Jason A. Stinchcomb, P.E.
Florida License #58184

PROJECT NO. 609036
DESIGNED BY: MBR
DRAWN BY: JTA
CHECKED BY: TLM

SUBMITTALS:
50% REVIEW 10.30.2009
PERMIT REVIEW 11.20.2009
BUILDING PERMIT 03.03.2010

REVISIONS:

TECHNOLOGY DETAILS

T7.8

© 2009 JMWA ARCHITECTS, INCORPORATED ALL RIGHTS RESERVED NO PART OF THESE IDEAS, PLANS OR DESIGNS MAY BE REPRODUCED, COPIED OR UTILIZED GRAPHICALLY IN ANY FORM WHATSOEVER WITHOUT THE EXPRESSED WRITTEN CONSENT OF JMWA ARCHITECTS INCORPORATED AND ITS BOARD OF DIRECTORS.

L:\2009-Jobs\609036-Palmetto Bay Municipal Center\CAD-MEP\Sheets T7.8.dwg 3/8/2010 12:11:26 PM jared.hunt

TLC ENGINEERING FOR ARCHITECTURE
800 Fairway Drive.
Suite 250
Deerfield Beach, Florida 33441
Phone: 954-418-9096
Fax: 954-418-9296
www.tlc-engineers.com
© Copyright 2007 TLC Engineering for Architecture, Inc.
EB #0000015 TLC NO: 609036

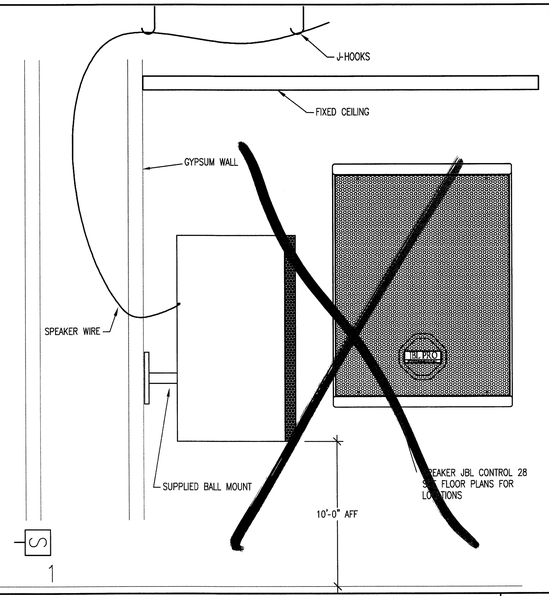

WALL MOUNTED SPEAKERS - JBL CONTROL 28
No Scale

3

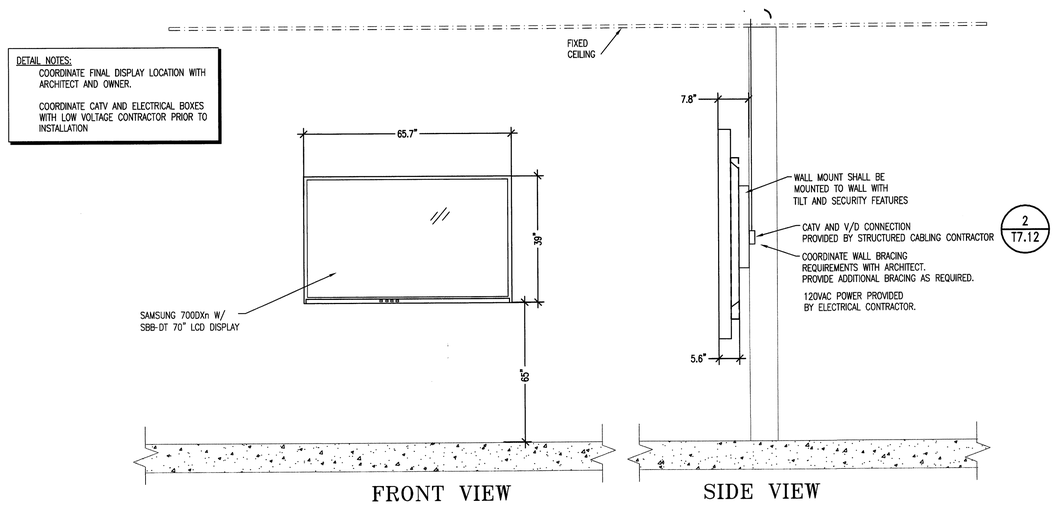

70" DISPLAY MOUNTING DETAIL
No Scale

1

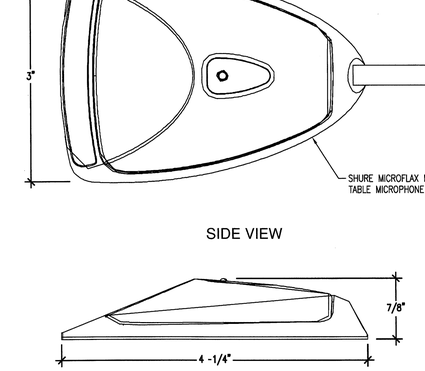

M

TABLE MICROPHONE TYPE 1
No Scale

4

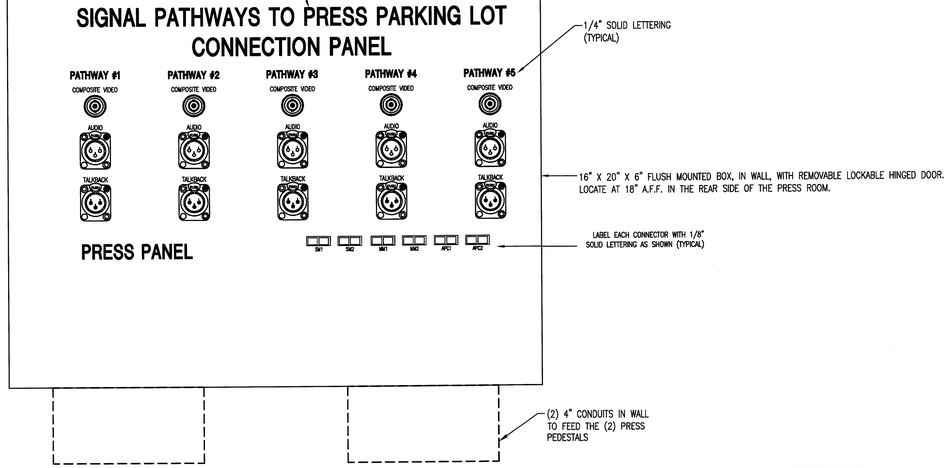

PRESS PEDESTAL FEED BOX IN PRESS ROOM
Scale = 1" = 2.4"

2

RECORD SET
The information presented on this drawing is diagrammatic and is presented for general information purposes and should not be relied on for accuracy of dimensions, details and locations. Actual and exact conditions if required should be determined in the field.

JMWA ARCHITECTS
STEVEN E. MYOTT AIA
JAMES R. WILLIAMS AIA
RODOLFO ACEVEDO AIA
949 CLINT MOORE ROAD
BOCA RATON, FLORIDA 33487
TEL 561 997 9997
FAX 561 997 1610
WWW.JMWA.NET

PALMETTO BAY VILLAGE HALL
Palmetto Bay, Florida

Master Builders of South Florida, Inc.
1400 E. Oakland Park Blvd. Suite 210
Oakland Park, FL 33334

Jason A. Stinchcomb, P.E.
Florida License #58184

PROJECT NO. 609036
DESIGNED BY: JEL
DRAWN BY: JTA
CHECKED BY: TLM

SUBMITTALS:
50% REVIEW 10.30.2009
PERMIT REVIEW 11.20.2009
BUILDING PERMIT 03.03.2010

REVISIONS:

TECHNOLOGY DETAILS

T7.11

© 2009 JMWA ARCHITECTS, INCORPORATED ALL RIGHTS RESERVED. NO PART OF THESE IDEAS, PLANS OR DESIGNS MAY BE REPRODUCED, COPIED OR UTILIZED GRAPHICALLY IN ANY FORM WHATSOEVER WITHOUT THE EXPRESSED WRITTEN CONSENT OF JMWA ARCHITECTS INCORPORATED AND ITS BOARD OF DIRECTORS.

L:\2009-Jobs\609036-Palmetto Bay Municipal Center\CAD-MEP\Sheets T7.11.dwg 3/8/2010 12:12:33 PM jared.hunt

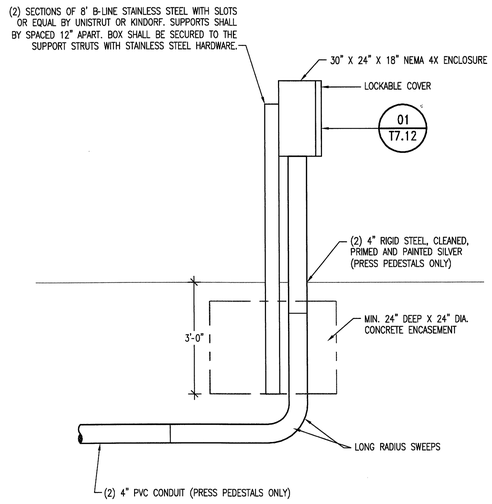

NEMA 4X ENCLOSURE - PRESS PEDESTAL

No Scale

2

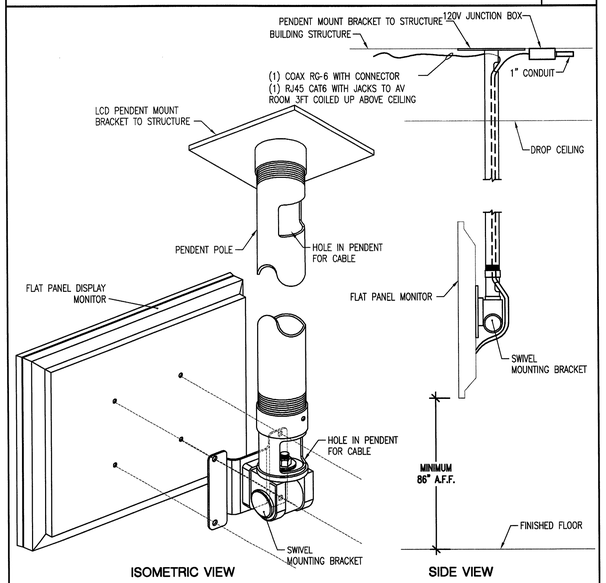

CEILING MOUNTED FLAT SCREEN DISPLAY

No Scale

3

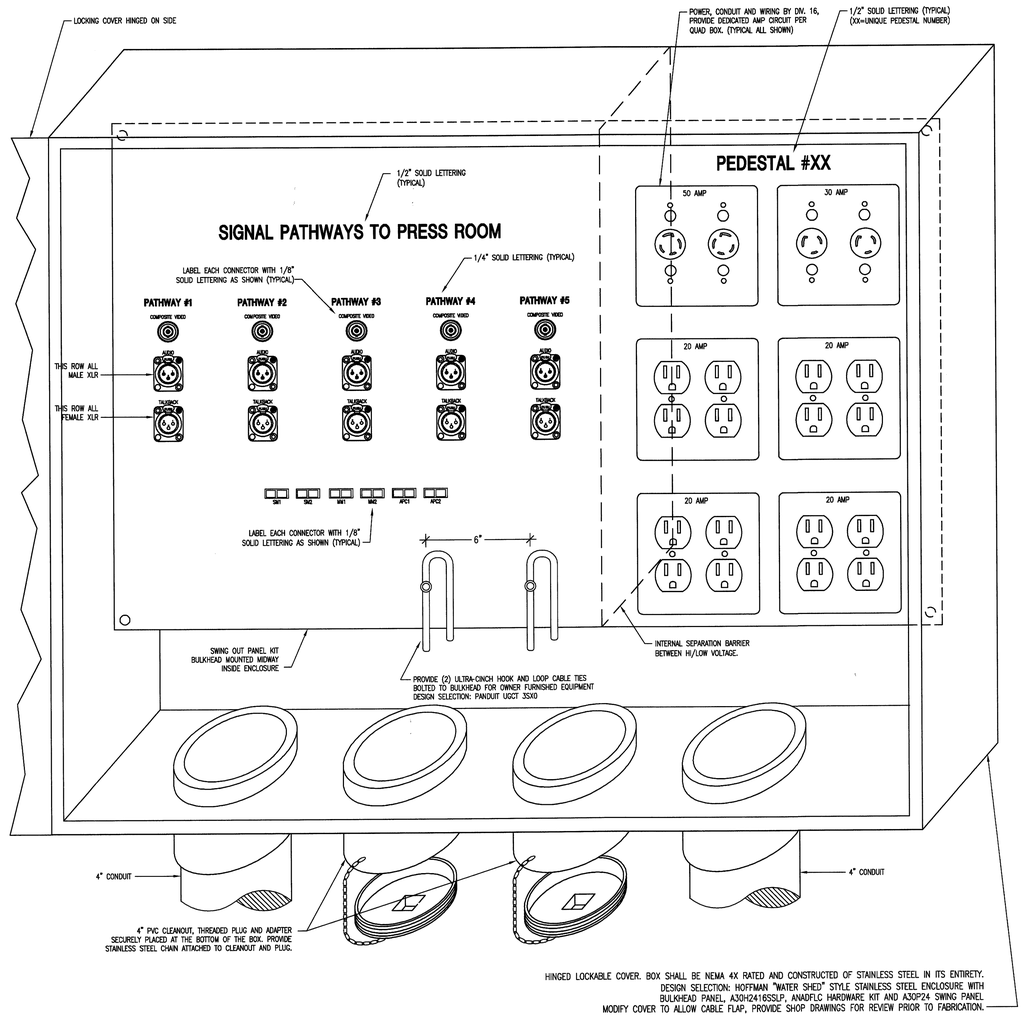

PARKING LOT PEDESTAL PRESS FEED INTERFACE PANEL

Scale : 1" = 2"

1

RECORD SET

The information presented on this drawing is diagrammatic and is presented for general information purposes and should not be relied on for accuracy of dimensions, details and locations. Actual and exact conditions if required should be determined in the field.

TLC ENGINEERING FOR ARCHITECTURE
800 Fairway Drive.
Suite 250
Deerfield Beach, Florida 33441
Phone: 954-418-9096
Fax: 954-418-9299
www.tlc-engineers.com
© Copyright 2007 TLC Engineering for Architecture, Inc.
EB #0000015 TLC NO: 609036

JMWA ARCHITECTS
STEVEN E. MYOTT AIA
JAMES R. WILLIAMS AIA
RODOLFO ACEVEDO AIA
949 CLINT MOORE ROAD
BOCA RATON, FLORIDA 33487
TEL 561 997 9997
FAX 561 997 1610
WWW.JMWA.NET

PALMETTO BAY VILLAGE HALL

Palmetto Bay, Florida

Master Builders of South Florida, Inc.
1400 E. Oakland Park Blvd. Suite 210
Oakland Park, FL 33334

Jason A. Stinchcomb, P.E.
Florida License #58184

PROJECT NO. 609036
DESIGNED BY: JEL
DRAWN BY: JTA
CHECKED BY: TLM

SUBMITTALS:

50% REVIEW	10.30.2009
PERMIT REVIEW	11.20.2009
BUILDING PERMIT	03.03.2010

REVISIONS:

TECHNOLOGY DETAILS

T7.12

© 2009 JMWA ARCHITECTS, INCORPORATED ALL RIGHTS RESERVED. NO PART OF THESE IDEAS, PLANS OR DESIGNS MAY BE REPRODUCED, COPIED OR UTILIZED GRAPHICALLY IN ANY FORM WHATSOEVER WITHOUT THE EXPRESSED WRITTEN CONSENT OF JMWA ARCHITECTS INCORPORATED AND ITS BOARD OF DIRECTORS.

L:\2009--Jobs\609036-Palmetto Bay Municipal Center\CAD-MEP\Sheets T7.12.dwg 3/8/2010 12:13:09 PM jpedrun

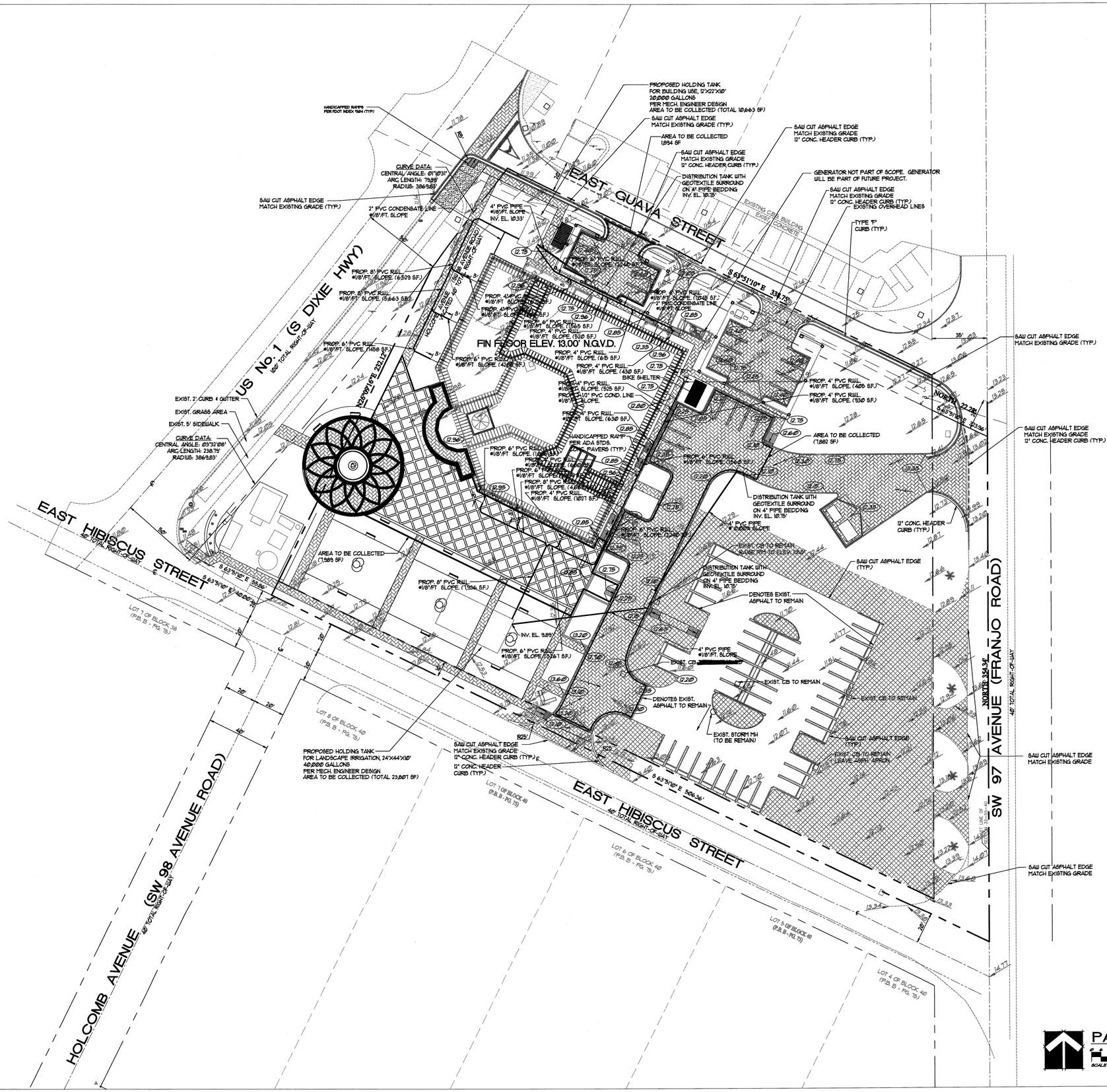

LEGEND

- EXISTING PAVEMENT
- PROPOSED PAVEMENT
- PROPOSED STORM SEWER
- PROPOSED PERFORATED C.M.P. W/DRAINFIELD
- PROPOSED GRADE
- EXISTING GRADE
- DIRECTION OF DRAINAGE FLOW
- PROPOSED CATCH BASIN OR INLET
- EXISTING CATCH BASIN OR INLET
- EXISTING STORM MANHOLE
- PROPOSED STORM MANHOLE
- PROPOSED TYPE 'F' CURB & GUTTER
- EXISTING TYPE 'F' CURB & GUTTER
- EXISTING UTILITY POLE
- RIGHT-OF-WAY LINE OR PROPERTY LINE
- HANSON AQUAFLOW PAVERS
- 4' CONCRETE SIDEWALK
- PROPOSED ASPHALT PAVEMENT
- EXISTING ASPHALT TO BE REMOVED
- C.A.P. CORRUGATE ALUMINUM PIPE
- W.T.H.D.P.E. WATER TIGHT HIGH DENSITY POLYETHYLENE PIPE
- R.C.P. REINFORCED CONCRETE PIPE
- R.W.L. RAIN WATER LEADER
- (T) THERMOPLASTIC, REFLECTORIZED
- (R1-1) STOP SIGN SHALL BE HIGH INTENSITY REFLECTORIZED MATERIAL

ALL MAINTENANCE OF TRAFFIC SHALL CONFORM TO F.D.O.T. STANDARD INDEX NO. 600.

RECORD SET

The information presented on this drawing is diagrammatic and is presented for general information purposes and should not be relied on for accuracy of dimensions, details and locations. Actual and exact conditions if required should be determined in the field.

PAVING + DRAINAGE PLAN

0 6 12 18 24 30 60 90

SCALE IN FEET 1" = 30'-0"

SEAL
JORGE L. CAMERO
REG. 32545
EB0000427
CIVIL ENGINEER

REVISIONS

1. REV. PER OWNER	JLC 8-27-10
2. REV. PER OWNER	JLC 9-13-10

VILLAGE OF PALMETTO BAY - VILLAGE HALL

MASTER BUILDING

9705 EAST HIBISCUS STREET

PALMETTO BAY, MIAMI-DADE COUNTY, FLORIDA

CAMERO + ASSOCIATES, INC.
ENGINEERS PLANNERS
7400 SW. 50th TERR. SUITE 204 MIAMI, FL. 33155
(305) 665-1602 FAX (305) 665-8488

SCALE: 1"=30'
DATE: 10-16-09
DRAWN BY: F.A.
CHECKED BY: J.L.C.
PROJECT#: 09-127

C-1

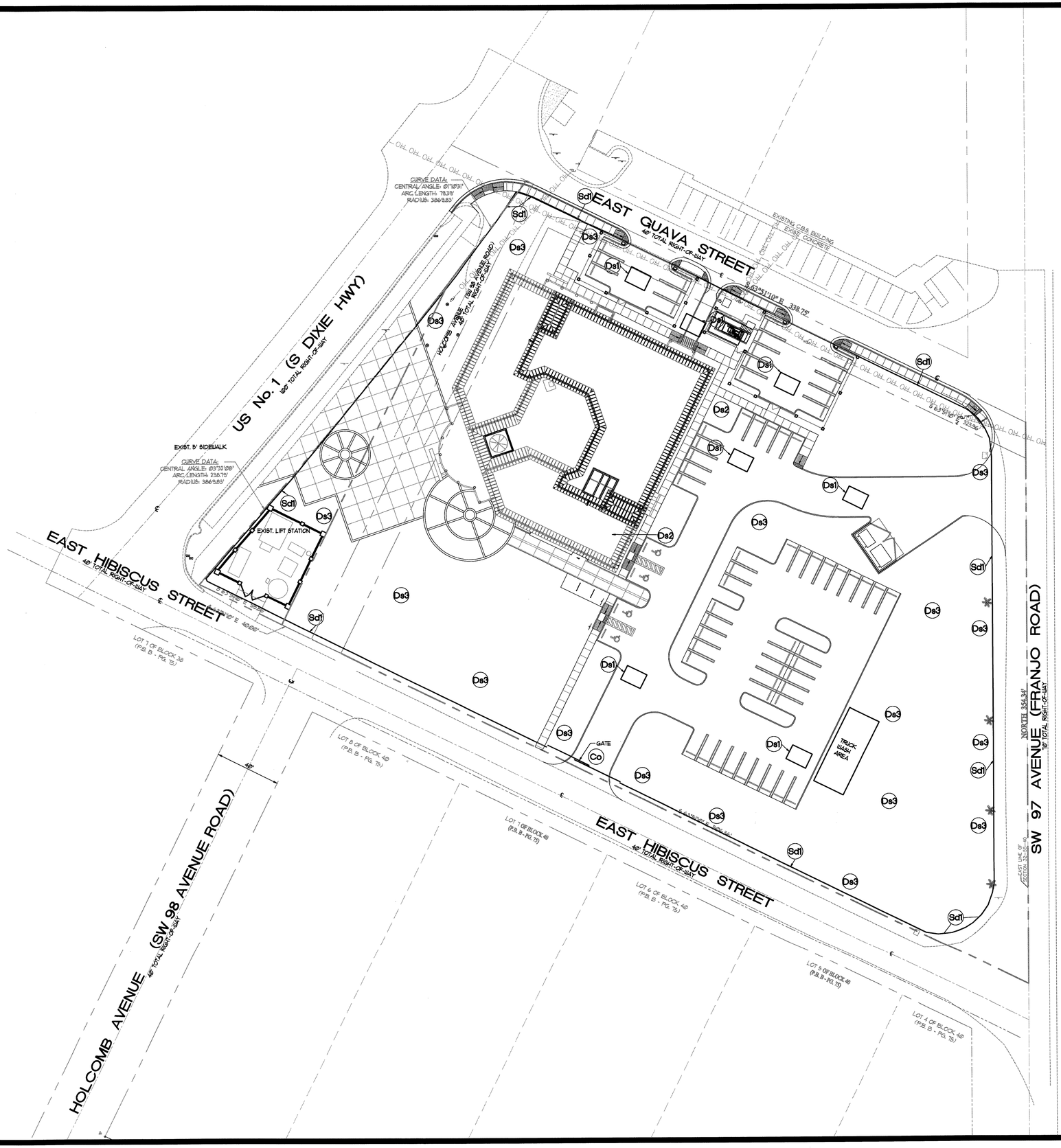

LEGEND:

- Sd1 SILT FENCE
- Ds1 DISTURBED AREA STABILIZATION, WITH TEMPORARY SOD
- Ds2 DISTURBED AREA STABILIZATION, WITH TEMPORARY SEEDING
- Ds3 DISTURBED AREA STABILIZATION, WITH PERMANENT SOD
- Co CONSTRUCTION ENTRANCE / EXIT

SOIL EROSION + SEDIMENTATION CONTROL NARRATIVE:

DESCRIPTION:
VILLAGE OF PALMETTO BAY MUNICIPAL BUILDING IS LOCATED AT 9128 EAST HIBISCUS STREET
THIS PROJECT IS LOCATED IN PALMETTO BAY, MIAMI-DADE COUNTY, FL.
THE PROPOSED SURFACE WATER MANAGEMENT SYSTEM CONSISTS OF EXFILTRATION TRENCHES.

THE PROJECT'S PROPERTY IS CURRENTLY COMMERCIAL WITH BUILDINGS AND ASPHALT TO BE DEMOLISHED.
TOTAL AREA 2.63 ACRES, LANDSCAPE AREA IS 1.22 AC., PAVING PROPOSED IS 0.58 ACRES AND RETENTION AREA 0.09 AC, BLDG = 2.11 AC.

DEVELOPER:
MASTER BUILDERS OF SOUTH FLORIDA
1400 EAST OAKLAND PARK BOULEVARD
SUITE 210
OAKLAND PARK, FL 33334
954-563-8553 EXT 321

OWNER:
VILLAGE OF PALMETTO BAY
8950 SW 152ND STREET
PALMETTO BAY, FL 33157
305-259-1234

VEGETATION:
THE SITE IS FLAT AND SOILS WILL BE IMPORTED FOR THE BUILDING PAD.

DATES OF CONSTRUCTION:
IT IS ANTICIPATED THAT CONSTRUCTION WILL BEGIN IN NOVEMBER 2009 AND TO BE COMPLETED IN NOVEMBER 2010.
THE INSTALLATION OF EROSION CONTROL MEASURES AND PRACTICES SHALL BE INSTALLED PRIOR TO OR CONCURRENT WITH LAND DISTURBING ACTIVITIES.

EROSION CONTROL PROGRAM:
CLEARING AND GRADING OPERATIONS WILL BE MINIMUM FOR THIS SITE. LAND DISTURBING WILL BE SCHEDULED TO LIMIT EXPOSURE OF BARE SOILS TO EROSIVE ELEMENTS. STORM WATER MANAGEMENT STRUCTURES WILL BE EMPLOYED TO PREVENT EROSION IN AREAS OF CONCENTRATED WATER FLOWS. DISTURBED AREAS WILL BE GRASSED IMMEDIATELY AFTER GRADING IS COMPLETED. TEMPORARY AND PERMANENT VEGETATIVE PRACTICE SHALL BE AS FOLLOWS:

SEED SPECIES APPLICATION/ ACRE

(PERMANENT)
ST. AUGUSTINE GRASS 90 LBS/ ACRE

(TEMPORARY)
BAHIA 50 LBS/ ACRE

FERTILIZER SHALL BE APPLIED AT A RATE OF 1000 LBS/ ACRE. LIME SHALL BE APPLIED AT A RATE OF 1500 LBS/ ACRE. MULCHING SHALL BE SPREAD AT A RATE OF 15 TONS/ ACRE.

SEDIMENT CONTROL PROGRAM:
SEDIMENT CONTROL WILL BE ACCOMPLISHED BY THE INSTALLATION OF SEDIMENT BARRIERS IN AREAS OF CONCENTRATED WATER FLOWS. VEGETATIVE COVER WILL BE ESTABLISHED ON ALL DISTURBED AREAS.

MAINTENANCE PROGRAM:
EROSION CONTROL MEASURES WILL BE MAINTAINED AT ALL TIMES. IF FULL IMPLEMENTATION OF APPROVED PLAN DOES NOT PROVIDE FOR EFFECTIVE EROSION CONTROL, ADDITIONAL EROSION & SEDIMENT CONTROL MEASURES SHALL BE IMPLEMENTED TO CONTROL OR TREAT THE SEDIMENT SOURCE. SEDIMENT CONTROL STRUCTURES WILL BE CLEANED AND THE SEDIMENT WILL BE SPREAD ON SITE. SEDIMENT AND EROSION CONTROL MEASURES WILL REMAIN IN PLACE AND BE MAINTAINED UNTIL THE DISTURBED AREAS ARE STABILIZED.

NOTES:
1. ALL ELEVATIONS REFER TO N.G.V.D. (NATIONAL GEODETIC VERTICAL DATUM) IN FEET.
2. ALL AREAS CLEARED AND GRUBBED BEYOND THE EDGE OF PAVED AREAS WILL BE GRASSED AND MULCHED IMMEDIATELY AFTER GRADING IS COMPLETED. THESE AREAS WILL BE REGRASSED AFTER THE CONSTRUCTION OF ALL UTILITIES ARE COMPLETED.
3. ALL EROSION AND SEDIMENT CONTROL DEVICES SHALL BE CONSTRUCTED SIMULTANEOUSLY WITH THE DISTURBANCE OF THE LAND AND SHALL REMAIN FUNCTIONAL UNTIL THE CONTRIBUTING DISTURBED AREAS ARE STABILIZED.
4. ALL EROSION AND SEDIMENT CONTROL DEVICES SHALL BE BUILD IN ACCORDANCE WITH THE APPROPRIATED CODES AND ORDINANCES.
5. ALL EROSION AND SEDIMENT DEVICES SHOWN SHALL BE SEDIMENT BARRIERS (S.D.) CONSTRUCTED OF AN APPROVED MATERIAL.
6. EGRESS FROM SITE MUST BE CONTROLLED SUCH THAT VEHICLES LEAVING SITE MUST TRAVERSE CONSTRUCTION EXITS TO REMOVE MUD FROM TIRES.
7. CONTRACTOR SHALL BE RESPONSIBLE FOR ALL UNDERGROUND UTILITIES AND SHALL COORDINATE ALL WORK WITH THE OWNER AND UTILITY COMPANIES.
8. ALL EROSION CONTROL MEASURES SHALL BE MAINTAINED DAILY AND REPAIRED / CLEANED AS NECESSARY. ADDITIONAL EROSION AND SEDIMENTATION CONTROL MEASURES WILL BE INSTALLED AS DEEMED NECESSARY BY ON-SITE INSPECTION.

RECORD SET

The information presented on this drawing is diagrammatic and is presented for general information purposes and should not be relied on for accuracy of dimensions, details and locations. Actual and exact conditions if required should be determined in the field.

EROSION + SEDIMENTATION PLAN

SCALE IN FEET 1" = 30'-0"

SEAL
JORGE L. CAMERO
REG. 32545 EB0000427B
CIVIL ENGINEER

REVISIONS

VILLAGE OF PALMETTO BAY CITY HALL

MASTER BUILDING

PALMETTO BAY, MIAMI-DADE COUNTY, FLORIDA

CAMERO + ASSOCIATES, INC.
ENGINEERS PLANNERS
7400 SW 50th TERR. SUITE 204 MIAMI, FL 33155
(305) 665-7602 FAX (305) 665-8488

SCALE: 1"=30'
DATE: 10-16-09
DRAWN BY: F.A.
CHECKED BY: J.L.C.
PROJECT#: 09-121

C-1A

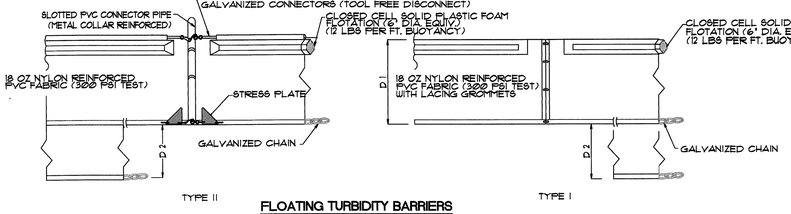

FLOATING TURBIDITY BARRIERS
(N.T.S.)

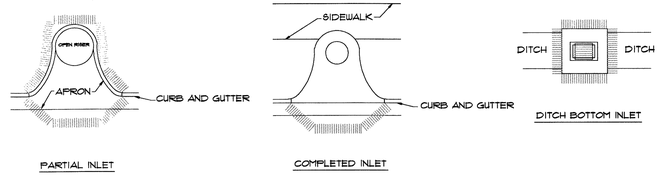

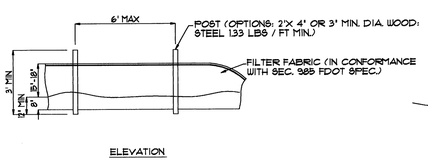

TYPE III SILT FENCE
(N.T.S.)

NOTE
BALES TO BE STAKED AT THE DIRECTION OF THE ENGINEER

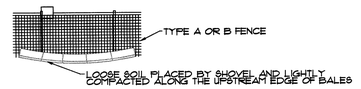

BALES BACKED BY FENCE
(N.T.S.)

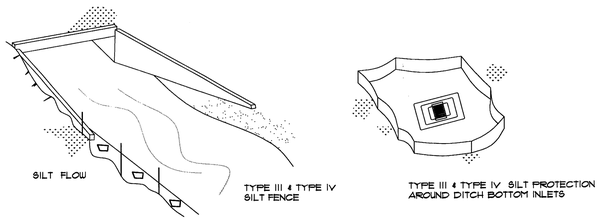

DO NOT DEPLOY IN MANNER THAT SILT FENCES WILL ACT AS DAM ACROSS PERMANENT FLOWING WATERCOURSES. SILT FENCES ARE TO BE USED AT UPLAND LOCATIONS AND TURBIDITY BARRIERS USED AT PERMANENT BODIES OF WATER.

PROTECTION AROUND INLETS OR SIMILAR STRUCTURES
(N.T.S.)

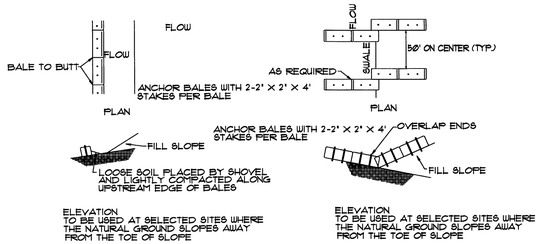

SILT FENCE TYPE III + TYPE IV
(N.T.S.)

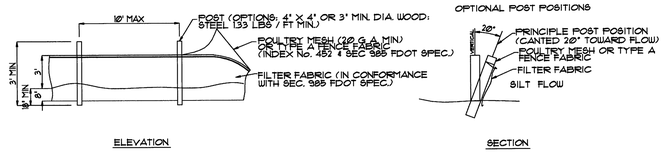

TYPE IV SILT FENCE
(N.T.S.)

BARRIERS FOR FILL SLOPES
(N.T.S.)

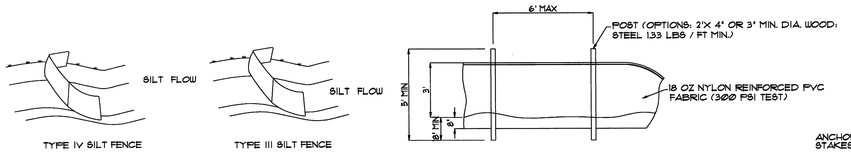

NOTE:
SPACING FOR TYPE III & TYPE IV FENCE TO BE IN ACCORDANCE WITH CHART 1, SHEET 1 OF 3 FDOT INDEX No. 102 AND DITCH INSTALLATIONS AT DRAINAGE STRUCTURES SHEET 2 OF 3, FDOT INDEX No. 102

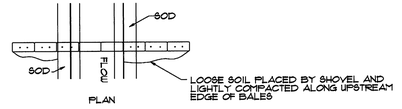

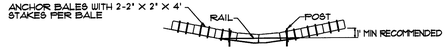

SPACING:
BALE BARRIERS FOR PAVED DITCHES SHOULD BE SPACED IN ACCORDANCE WITH CHART-1, SHEET 1 OF 3, INDEX No. 102

BARRIER FOR PAVED DITCH

STAKED TURBIDITY BARRIER
(N.T.S.)

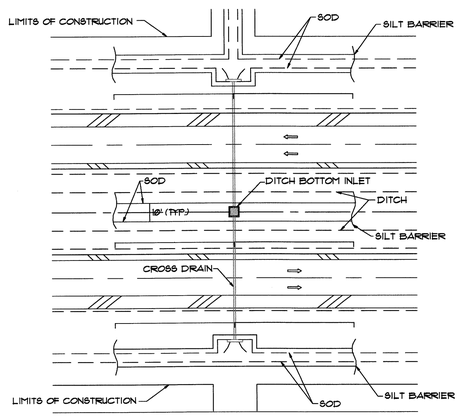

DITCH INSTALLATIONS AT DRAINAGE STRUCTURES
(N.T.S.)

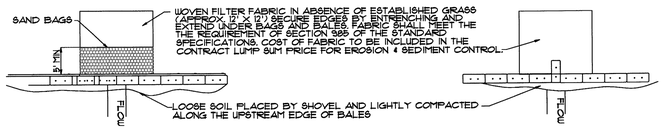

APPLICATION AND SPACING:
THE USE OF TYPES I AND II BALE BARRIERS SHOULD BE LIMITED TO THE CONDITIONS OUTLINED IN CHART 1, SHEET 1 OF 3 INDEX No. 102

TYPE II — BARRIER FOR UNPAVED DITCHES — TYPE I

DITCH INSTALLATIONS AT DRAINAGE STRUCTURES
(N.T.S.)

EROSION AND SEDIMENT CONTROL NOTES:

1. THE CONTRACTOR IS RESPONSIBLE FOR REMOVING SILT FROM SITE IF NOT REUSABLE ON-SITE AND ASSURING PLAN ALIGNMENT AND GRADE IN ALL DITCHES AND SWALES AT COMPLETION OF CONSTRUCTION.
2. THE SITE CONTRACTOR IS RESPONSIBLE FOR REMOVING THE TEMPORARY EROSION AND SEDIMENT CONTROL DEVICES AFTER COMPLETION OF CONSTRUCTION AND ONLY WHEN AREAS HAVE BEEN STABILIZED.
3. ADDITIONAL PROTECTION ON - SITE PROTECTION IN ADDITION TO THE ABOVE MUST BE PROVIDED THAT WILL NOT PERMIT SILT TO LEAVE THE PROJECT CONFINES DUE TO UNSEEN CONDITIONS OR ACCIDENTS.
4. CONTRACTOR SHALL INSURE THAT ALL DRAINAGE STRUCTURES PIPES, E.T.C ARE CLEANED OUT AND WORKING PROPERLY AT TIME OF ACCEPTANCE.
5. WIRE MESH SHALL BE LAID OVER THE DROP INLET SO THAT THE WIRE EXTENDS A MINIMUM OF 1 FOOT BEYOND EACH SIDE OF THE INLET STRUCTURE. HARDWARE CLOTH OR COMPARABLE WIRE MESH WITH 1/2 INCH OPENINGS SHALL BE USED. IF MORE THAN ONE STRIP OF MESH IS NECESSARY, THE STRIPS SHALL BE OVERLAPPED.
6. FDOT NO 1 COARSE AGGREGATE SHALL BE PLACED OVER THE WIRE MESH AS INDICATED IN D- 903. THE DEPTH OF STONE SHALL BE AT LEAST 12 INCHES OVER THE ENTIRE INLET OPENING. THE STONE SHALL EXTEND BEYOND THE INLET OPENING AT LEAST 18 INCHES ON ALL SIDES.
7. IF THE STONE FILTER BECOMES CLOGGED WITH SEDIMENT SO THAT IT NO LONGER ADEQUATELY PERFORMS ITS FUNCTION, THE STONES MUST BE PULLED AWAY FROM THE INLET, CLEANED AND REPLACED.
8. BALES SHALL BE EITHER WIRE-BOUND OR STRING-TIED WITH THE BINDINGS ORIENTED AROUND THE SIDES RATHER THAN OVER AND UNDER THE BALES.
9. BALES SHALL BE PLACED LENGTHWISE IN A SINGLE ROW SURROUNDING THE INLET, WITH THE ENDS OF ADJACENT BALES PRESSED TOGETHER.
10. THE FILTER BARRIER SHALL BE ENTRENCHED AND BACKFILLED. A TRENCH SHALL BE EXCAVATED TO A MINIMUM DEPTH OF 8 INCHES. AFTER THE BALES ARE STAKED, THE EXCAVATED SOIL SHALL BE BACKFILLED AND COMPACTED AGAINST THE FILTER BARRIER.
11. EACH BALE SHALL BE SECURELY ANCHORED AND HELD IN PLACE BY AT LEAST TWO STAKES OR REBARS DRIVEN THROUGH THE BALE.
12. LOOSE STRAW SHOULD BE WEDGED BETWEEN BALES TO PREVENT WATER FROM ENTERING BETWEEN BALES.
13. STRAW BALE BARRIERS SHALL BE INSPECTED IMMEDIATELY AFTER EACH RAINFALL AND AT LEAST DAILY DURING PROLONGED RAINFALL.
14. CLOSE ATTENTION SHALL BE PAID TO THE REPAIR OF DAMAGED BALES, END RUNS AND UNDERCUTTING BENEATH BALES.
15. NECESSARY REPAIRS TO BARRIERS OR REPLACEMENT OF BALES SHALL BE ACCOMPLISHED PROMPTLY.
16. ANY SEDIMENT DEPOSITS REMAINING IN PLACE AFTER THE STRAW BALE BARRIER IS NO LONGER REQUIRED SHALL BE DRESSED TO CONFORM TO THE EXISTING GRADE, PREPARED AND SEEDED.
17. SILT FENCES AND FILTER BARRIERS SHALL BE INSPECTED IMMEDIATELY AFTER EACH RAINFALL AND AT LEAST DAILY DURING PROLONGED RAINFALL . ANY REQUIRED REPAIRS SHALL BE MADE IMMEDIATELY.
18. SHOULD THE FABRIC ON A SILT FENCE OR FILTER BARRIER DECOMPOSE OR BECOME INEFFECTIVE PRIOR TO THE END OF THE EXPECTED USABLE LIFE AND THE BARRIER STILL BE NECESSARY, THE FABRIC SHALL BE REPLACED PROMPTLY.
19. SEDIMENT DEPOSITS SHOULD BE REMOVED AFTER EACH STORM EVENT. THEY MUST BE REMOVED WHEN DEPOSITS REACH APPROXIMATELY ONE -THIRD THE HEIGHT OF THE BARRIER
20. ANY SEDIMENT DEPOSITS REMAINING IN PLACE AFTER THE SILT FENCE OR FILTER BARRIER IS NO LONGER REQUIRED SHALL BE DRESSED TO CONFORM WITH THE EXISTING GRADE, PREPARED AND SEED.
21. THE STRUCTURE SHALL BE INSPECTED AFTER EACH RAIN AND REPAIRS MADE AS NEEDED.
22. SEDIMENT SHALL BE REMOVED AND THE TRAP RESTORED TO ITS ORIGINAL DIMENSIONS WHEN THE SEDIMENT HAS ACCUMULATED TO 1/3 THE DESIGN DEPTH OF THE TRAP. REMOVED SEDIMENT SHALL BE DEPOSITED IN A SUITABLE AREA IN SUCH A MANER THAT IT WILL NOT ERODE.
23. THE CONTRACTOR IS RESPONSIBLE FOR THE FOLLOWING THE BEST EROSION AND SEDIMENT CONTROL PRACTICES.
24. FOR ADDITIONAL INFORMATION ON SEDIMENT AND EROSION CONTROL, REFER TO "THE FLORIDA DEVELOPMENT MANUAL , A GUIDE TO SOUND LAND AND WATER MANAGEMENT" FROM THE STATE OF FLORIDA DEPARTMENT OF ENVIRONMENTAL REGULATION (FDER) CHAPTER 6.
25. EROSION AND SEDIMENT CONTROL BARRIERS SHALL BE PLACED ADJACENT TO ALL LAND AREAS WHERE THERE IS A POTENTIAL FOR DOWNSTREAM WATER QUALITY DEGRADATION. SEE DETAIL SHEET FOR TYPICAL CONSTRUCTION.
26. ALL DISTURBED AREAS SHALL BE GRASSED FERTILIZED, MULCHED AND MAINTAINED UNTIL A PERMANENT VEGETATIVE COVER IS ESTABLISHED.
27. SOD SHALL BE PLACE IN AREAS WHICH MAY REQUIRE IMMEDIATE EROSION PROTECTION TO ENSURE WATER QUALITY STANDARDS ARE MANTAINED.
28. ANY DISCHARGE FROM DEWATERING ACTIVITY SHALL BE FILTERED AND COVEYED TO THE OUTFALL IN A MANNER WHICH PREVENTS EROSION AND TRANSPORTATION OF SUSPENDED SOLIDS TO THE RECEIVING OUTFALL.
29. DEWATERING PUMPS SHALL NOT EXCEED THE CAPACITY OF THAT WHICH REQUIRES A CONSUMPTIVE USE PERMIT FROM THE DEPARTMENT OF ENVIRONMENTAL PROTECTION.
30. ALL DISTURBED AREAS ARE TO BE STABILIZED THROUGH COMPACTION, SILT SCREENS, HAY BALES, AND GRASSING. ALL THE FILL SLOPES 3:1 OR STEEPER TO RECEIVE STAKED SOLID SOD.
31. ALL DEWATERING, EROSION, AND SEDIMENT CONTROL TO REMAIN IN PLACE AFTER COMPLETION OF CONSTRUCTION AND REMOVE ONLY WHEN AREAS HAVE STABILIZED.
32. THIS PLAN INDICATES MINIMUM EROSION AND SEDIMENT MEASURES REQUIRED FOR THIS PROJECT. THE CONTRACTOR IS RESPONSIBLE FOR MEETING ALL APPLICABLE RULES, REGULATIONS AND WATER QUALITY GUIDELINES AND MAY NEED TO INSTALL ADDITIONAL CONTROLS.
33. THE CONTRACTOR SHALL BE REQUIRED TO RESPOND TO ALL WATER DEP INQUIRIES RELATIVE TO COMPLIANCE OF DEP FOR EROSION AND SEDIMENTATION CONTROL. THE COST OF THIS COMPLIANCE SHALL BE PART OF THE CONTRACT.

NOTE:
WHERE FDOT SPECS AND INDEX ARE REFERENCED, PLEASE REFER TO FDOT ROADWAY & TRAFFIC DESIGN STANDARDS AND FDOT STANDARD SPECIFICATIONS FOR ROAD & BRIDGE CONSTRUCTION.

RECORD SET

The information presented on this drawing is schematic and is presented for general information purposes and should not be relied on for accuracy of dimensions, details and locations. Actual and exact conditions if required should be determined in the field.

CAMERO + ASSOCIATES, INC.
CIVIL ENGINEERS
CAMERO & ASSOCIATES, INC.
JORGE L. CAMERO, P.E.
7400 SW. 50th TERR. SUITE 204
(305) 665-7602
PLANNERS
EB NO. 0004275
FLA. REG. NO. 32545
MIAMI, FL 33155
FAX (305) 665-8488
OUR JOB # 03-127

SEAL
JORGE L. CAMERO
REG. 32545 EB#0004275
CIVIL ENGINEER

REVISIONS

VILLAGE OF PALMETTO BAY CITY HALL

MASTER BUILDING

PALMETTO BAY, MIAMI-DADE COUNTY, FLORIDA

CAMERO + ASSOCIATES, INC.
ENGINEERS
PLANNERS
7400 SW. 50th TERR. SUITE 204
(305) 665-7602
MIAMI, FL 33155
FAX (305) 665-8488

SCALE:	N.T.S.
DATE:	10-16-09
DRAWN BY:	F.A.
CHECKED BY:	J.L.C.
PROJECT#:	03-127

C-1B

STORM WATER POLLUTION PREVENTION PLAN

COUNTY REQUIREMENTS

SITE DESCRIPTION

PROJECT NAME AND LOCATION:
VILLAGE OF PALMETTO BAY MUNICIPAL
9398EAST HIBISCUS STREET
PALMETTO BAY MIAMI-DADE COUNTY, FLORIDA

OWNER:
VILLAGE OF PALMETTO BAY
8950 SW 152ND STREET
PALMETTO BAY, FL 33157
305-259-1694

DESCRIPTION:

BUILDING OFFICIAL
ON A 2.63 +/- ACRE SITE

SOIL DISTURBING ACTIVITIES WILL INCLUDE:
CLEARING AND GRUBBING: EARTHWORK, PAVEMENT AND GRADING& STORM SEWER, UTILITIES, AND PREPARATION FOR FINAL PLANTING AND SEEDING.
RUNOFF CURVE NUMBERS
1. PRE-CONSTRUCTION: CN = 65
2. DURING CONSTRUCTION: CN = 90
3. POST-CONSTRUCTION: CN = 90

SOIL:
SEE SOIL BORING REPORT FOR SOIL DATA
SITE MAPS:
• SEE ATTACHED GRADING PLAN FOR PRE & POST DEVELOPMENT GRADES, AREAS OF SOILS, DISTURBANCE, LOCATION OF SURFACE WATERS, WETLANDS, PROTECTED AREAS, MAJOR STRUCTURAL AND NONSTRUCTURAL CONTROLS AND STORM WATER DISCHARGE POINTS.

• SEE ATTACHED EROSION & TURBIDITY CONTROL PLAN FOR LOCATION OF TEMPORARY STABILIZATION PRACTICES, AND TURBIDITY BARRIERS.
• SEE GENERAL NOTES FOR REQUIREMENTS FOR TEMPORARY AND PERMANENT STABILIZATION.

SITE AREA:
1. TOTAL AREA OF SITE= 4.00 +/- ACRES
2. TOTAL AREA TO BE DISTURBED = 4.00 ACRES (APPROX)

NAME OF RECEIVING WATERS: RETENTION SYSTEM

CONTROLS

THIS PLAN UTILIZES BEST MANAGEMENT PRACTICES TO CONTROL EROSION AND TURBIDITY CAUSED BY STORM WATER RUN OFF. AN EROSION AND TURBIDITY PLAN HAS BEEN PREPARED TO INSTRUCT THE CONTRACTOR ON PLACEMENT OF THESE CONTROLS. IT IS THE CONTRACTORS RESPONSIBILITY TO INSTALL AND MAINTAIN THE CONTROLS PER PLAN AS WELL AS ENSURING THE PLAN IS PROVIDING THE PROPER PROTECTION AS REQUIRED BY FEDERAL, STATE AND LOCAL LAWS. REFER TO "CONTRACTORS RESPONSIBILITY" FOR A VERBAL DESCRIPTION OF CONTROLS THAT MAY BE IMPLEMENTED.

STORM WATER MANAGEMENT

STORM WATER DRAINAGE WILL BE PROVIDED BY: (DESCRIPTION.)
STORM WATER RUNOFF WILL BE COLLECTED BY PIPING SYSTEM AND DISCHARGED INTO MASTER STORM WATER SYSTEM.

TIMING OF CONTROLS/MEASURES

REFER TO "CONTRACTORS RESPONSIBILITY" FOR THE TIMING OF CONTROL/MEASURES.

CERTIFICATION OF COMPLIANCE WITH FEDERAL, STATE AND LOCAL REGULATIONS

IN ACCORDANCE WITH FEDERAL, STATE AND LOCAL LAWS RELATED TO STORM WATER MANAGEMENT AND EROSION AND TURBIDITY CONTROLS, THE FOLLOWING PERMITS HAVE BEEN OBTAINED.

D.E.P. PERMIT #

POLLUTION PREVENTION PLAN CERTIFICATION

I CERTIFY UNDER PENALTY OF LAW THAT THIS DOCUMENT AND ALL ATTACHMENTS WERE PREPARED UNDER MY DIRECTION OR SUPERVISION IN ACCORDANCE WITH A SYSTEM DESIGNED TO ASSURE THAT QUALIFIED PERSONNEL PROPERLY GATHERED AND EVALUATED THE INFORMATION SUBMITTED. BASED ON MY INQUIRY OF THE PERSON OR PERSONS WHO MANAGE THE SYSTEM, OR THOSE PERSONS DIRECTLY RESPONSIBLE FOR GATHERING THE INFORMATION, THE INFORMATION SUBMITTED IS, TO THE BEST OF MY KNOWLEDGE AND BELIEF, TRUE, ACCURATE, AND COMPLETE. I AM AWARE THAT ARE SIGNIFICANT PENALTIES FOR SUBMITTING FALSE INFORMATION, INCLUDING THE POSSIBILITY OF FINE AND IMPRISONMENT FOR KNOWING VIOLATIONS.

SIGNED:
CITY CONTRACTOR

DATED:

CONTRACTOR'S REQUIREMENTS

GENERAL

THE CONTRACTOR SHALL AT A MINIMUM IMPLEMENT THE CONTRACTOR'S REQUIREMENTS OUTLINED BELOW AND THOSE MEASURES SHOWN ON THE EROSION AND TURBIDITY CONTROL PLAN. IN ADDITION THE CONTRACTOR SHALL UNDERTAKE ADDITIONAL MEASURES REQUIRED TO BE IN COMPLIANCE WITH APPLICABLE PERMIT CONDITIONS AND STATE WATER QUALITY STANDARDS, DEPENDING ON THE NATURE OF MATERIALS AND METHODS OF CONSTRUCTION THE CONTRACTOR MAY BE REQUIRED TO ADD FLOCCULENTS TO THE RETENTION SYSTEM PRIOR TO PLACING THE SYSTEM INTO OPERATION.

SEQUENCE OF MAJOR ACTIVITIES:

THE ORDER OF ACTIVITIES WILL BE AS FOLLOWS:

1. INSTALL STABILIZED CONSTRUCTION ENTRANCE
2. INSTALL SILT FENCES AND HAY BALES AS REQUIRED
3. CLEAR AND GRUB FOR DIVERSION SWALE/DIKES AND SEDIMENT BASIN
4. CONSTRUCT SEDIMENTATION BASIN
5. CONTINUE CLEARING AND GRUBBING
6. STOCK PILE TOP SOIL IF REQUIRED
7. PERFORM PRELIMINARY GRADING ON SITE AS REQUIRED
8. STABILIZE DENUDED AREAS AND STOCKPILES AS SOON AS PRACTICABLE
9. INSTALL UTILITIES,STORM SEWER, CURBS & GUTTER.
10. APPLY 1" BASE TO PROJECT
11. COMPLETE GRADING AND INSTALL PERMANENT SEEDING/ SOD AND PLANTING
12. COMPLETE FINAL PAVING
13. REMOVE ACCUMULATED SEDIMENT FROM BASINS
14. WHEN ALL CONSTRUCTION ACTIVITY IS COMPLETE AND THE SITE IS STABILIZED, REMOVE ANY TEMPORARY DIVERSION SWALE/DIKES AND RESEED /SOD AS REQUIRED

TIMING OF CONTROLS/ MEASURES

AS INDICATED IN THE SEQUENCE OF MAJOR ACTIVITIES, THE SILT FENCES AND HAY BALES, STABILIZED CONSTRUCTION ENTRANCE AND SEDIMENT BASIN WILL BE CONSTRUCTED PRIOR TO CLEARING OR GRADING OF ANY OTHER PORTIONS OF THE SITE. STABILIZATION MEASURES SHALL BE INITIATED AS SOON AS PRACTICAL IN PORTIONS OF THE SITE WHERE CONSTRUCTION ACTIVITIES HAVE TEMPORARILY OR PERMANENTLY CEASED. ONCE CONSTRUCTION ACTIVITY CEASES PERMANENTLY IN AN AREA, THAT AREA WILL BE STABILIZED PERMANENTLY IN ACCORDANCE WITH THE PLANS. AFTER THE ENTIRE SITE IS STABILIZED THE ACCUMULATED SEDIMENT WILL BE REMOVED FROM THE SEDIMENT TRAPS AND THE EARTH DIKE/SWALES WILL BE REGRADED/REMOVED AND STABILIZED IN ACCORDANCE WITH THE EROSION & TURBIDITY CONTROL PLAN.

CONTROLS

IT IS THE CONTRACTORS RESPONSIBILITY TO IMPLEMENT THE EROSION AND TURBIDITY CONTROLS AS SHOWN ON THE EROSION AND TURBIDITY CONTROL PLAN. IT IS ALSO THE CONTRACTORS RESPONSIBILITY TO ENSURE THESE CONTROLS ARE PROPERLY INSTALLED, MAINTAINED AND FUNCTIONING PROPERLY TO PREVENT TURBID OR POLLUTED WATER FROM LEAVING THE PROJECT SITE. THE CONTRACTOR WILL ADJUST THE EROSION AND TURBIDITY CONTROLS SHOWN ON THE EROSION AND TURBIDITY CONTROL PLAN AND ADD ADDITIONAL CONTROL MEASURES, AS REQUIRED, TO ENSURE THE SITE MEETS ALL FEDERAL, STATE AND LOCAL EROSION AND TURBIDITY CONTROL REQUIREMENTS. THE FOLLOWING BEST MANAGEMENT PRACTICES WILL BE IMPLEMENTED BY THE CONTRACTOR AS REQUIRED BY THE EROSION AND TURBIDITY REQUIREMENTS IMPOSED ON THE PROJECT SITE BY THE REGULATORY AGENCIES.

EROSION AND SEDIMENT CONTROLS STABILIZATION PRACTICES

1. HAY BALE BARRIER: HAY BALE BARRIERS CAN BE USED BELOW DISTURBED AREAS SUBJECT TO SHEET AND RILL EROSION WITH THE FOLLOWING LIMITATIONS:
   A. WHERE THE MAXIMUM SLOPE BEHIND THE BARRIER IS 33 PERCENT.
   B. IN MINOR SWALES OR DITCH LINES WHERE THE MAXIMUM CONTRIBUTING DRAINAGE AREA IS NO GREATER THAN 2 ACRES.
   C. WHERE EFFECTIVENESS IS REQUIRED FOR LESS THAN 3 MONTHS.
   D. EVERY EFFORT SHOULD BE MADE TO LIMIT THE USE OF STRAW BALE BARRIERS CONSTRUCTED IN LIVE STREAMS OR IN SWALES WHERE THERE IS THE POSSIBILITY OF A WASHOUT. IF NECESSARY, MEASURES SHALL BE TAKEN TO PROPERLY ANCHOR BALES TO INSURE AGAINST WASHOUT.
2. FILTER FABRIC BARRIER: FILTER FABRIC BARRIERS CAN BE USED BELOW DISTURBED AREAS SUBJECT TO SHEET AND RILL EROSION WITH THE FOLLOWING LIMITATIONS:
   A. WHERE THE MAXIMUM SLOPE BEHIND THE BARRIER IS 33 PERCENT.
   B. IN MINOR SWALES OR DITCH LINES WHERE THE MAXIMUM CONTRIBUTING DRAINAGE AREA IS NO GREATER THAN 2 ACRES.
3. BRUSH BARRIER WITH FILTER FABRIC: BRUSH BARRIER MAY BE USED BELOW DISTURBED AREAS SUBJECT TO SHEET AND RILL EROSION WHERE ENOUGH RESIDUE MATERIAL IS AVAILABLE ON SITE.
4. LEVEL SPREADER: A LEVEL SPREADER MAY BE USED WHERE SEDIMENT-FREE STORM RUNOFF IS INTERCEPTED AND DIVERTED AWAY FROM THE GRADED AREAS ONTO UNDISTURBED STABILIZED AREAS. THIS PRACTICE APPLIES ONLY IN THOSE SITUATIONS WHERE THE SPREADER CAN BE CONSTRUCTED ON UNDISTURBED SOIL AND THE AREA BELOW THE LEVEL LIP IS STABILIZED. THE WATER SHOULD NOT BE ALLOWED TO RECONCENTRATE AFTER RELEASE.
5. STOCKPILING MATERIAL: NO EXCAVATED MATERIAL SHALL BE STOCKPILED IN SUCH A MANNER AS TO DIRECT RUNOFF DIRECTLY OFF THE PROJECT SITE INTO ANY ADJACENT WATER BODY OR STORM WATER COLLECTION FACILITY.
6. EXPOSED AREA LIMITATION: THE SURFACE AREA OF OPEN, RAW ERODIBLE SOIL EXPOSED BY CLEARING AND GRUBBING OPERATIONS OR EXCAVATION AND FILLING OPERATIONS SHALL NOT EXCEED 10 ACRES. THIS REQUIREMENT MAY BE WAIVED FOR LARGE PROJECTS WITH AN EROSION CONTROL PLAN WHICH DEMONSTRATES THAT OPENING OF ADDITIONAL AREA WILL NOT SIGNIFICANTLY AFFECT OFF - SITE DEPOSIT OF SEDIMENTS.
7. INLET PROTECTION: INLETS AND CATCH BASINS WHICH DISCHARGE DIRECTLY OFF-SITE SHALL BE PROTECTED FROM SEDIMENT-LADEN STORM RUNOFF UNTIL THE COMPLETION OF ALL CONSTRUCTION OPERATIONS THAT MAY CONTRIBUTE SEDIMENT TO THE INLET.
8. TEMPORARY SEEDING: AREAS OPENED BY CONSTRUCTION OPERATIONS AND THAT ARE NOT ANTICIPATED TO BE RE-EXCAVATED OR DRESSED AND RECEIVE FINAL GRASSING TREATMENT WITHIN 30 DAYS SHALL BE SEEDED WITH A QUICK GROWING GRASS SPECIES WHICH WILL PROVIDE AN EARLY COVER DURING THE SEASON IN WHICH IT IS PLANTED AND WILL NOT LATER COMPETE WITH THE PERMANENT GRASSING.
9. TEMPORARY SEEDING AND MULCHING: SLOPES STEEPER THAN 6:1 THAT FALL WITHIN THE CATEGORY ESTABLISHED IN PARAGRAPH 8 ABOVE SHALL ADDITIONALLY RECEIVE MULCHING OF APPROXIMATELY 2 INCHES LOOSE MEASURE OF MULCH MATERIAL CUT INTO THE SOIL OF THE SEEDED AREA ADEQUATE TO PREVENT MOVEMENT OF SEED AND MULCH.
10. TEMPORARY GRASSING: THE SEEDED OR SEEDED AND MULCHED AREA(S) SHALL BE ROLLED AND WATERED OR HYDROMULCHED OR OTHER SUITABLE METHODS IF REQUIRED TO ASSURE OPTIMUM GROWING CONDITIONS FOR THE ESTABLISHMENT OF A GOOD GRASS COVER. TEMPORARY GRASSING IN THE CONTRACT SPECIFICATIONS.
11. TEMPORARY REGRASSING: IF, AFTER 14 DAYS FROM SEEDING, THE TEMPORARY GRASSED AREAS HAVE NOT ATTAINED A MINIMUM OF 75 PERCENT GOOD GRASS COVER, THE AREA WILL BE REWORKED AND ADDITIONAL SEED APPLIED SUFFICIENT TO ESTABLISH THE DESIRED VEGETATIVE COVER.
12. MAINTENANCE: ALL FEATURES OF THE PROJECT DESIGNED AND CONSTRUCTED TO PREVENT EROSION AND SEDIMENT SHALL BE MAINTAINED DURING THE LIFE OF THE CONSTRUCTION SO AS TO FUNCTION AS THEY WERE ORIGINALLY DESIGNED AND CONSTRUCTED.
13. PERMANENT EROSION CONTROL: THE CONTROL FACILITIES OF THE PROJECT SHOULD BE DESIGNED TO MINIMIZE THE IMPACT ON THE OFFSITE FACILITIES.
14. PERMANENT SEEDING: ALL AREAS WHICH HAVE BEEN DISTURBED BY CONSTRUCTION WILL AS A MINIMUM, BE SEEDED. THE SEEDED MIX MUST PROVIDE BOTH LONG-TERM VEGETATION AND RAPID GROWTH SEASONAL VEGETATION. SLOPES STEEPER THAN 4:1 SHALL BE SEEDED AND MULCHED OR SODDED.

STRUCTURAL PRACTICES

1. TEMPORARY DIVERSION DIKE: TEMPORARY DIVERSION DIKES MAY BE USED TO DIVERT RUNOFF THROUGH A SEDIMENT-TRAPPING FACILITY.
2. TEMPORARY SEDIMENT TRAP: A SEDIMENT TRAP SHALL BE INSTALLED IN AN DRAINAGE WAY AT A STORM DRAIN INLET OR AT OTHER POINTS OF DISCHARGE FROM A DISTURBED AREA.
THE FOLLOWING SEDIMENT TRAPS MAY BE CONSTRUCTED EITHER INDEPENDENTLY OR IN CONJUNCTION WITH A TEMPORARY DIVERSION DIKE:
   A. BLOCK & GRAVEL SEDIMENT FILTER: THIS PROTECTION IS APPLICABLE WHERE HEAVY FLOWS AND/OR WHERE AN OVERFLOW CAPACITY IS NECESSARY TO PREVENT EXCESSIVE PONDING AROUND THE STRUCTURE.
   B. GRAVEL SEDIMENT TRAP: THIS PROTECTION IS APPLICABLE WHERE HEAVY CONCENTRATED FLOWS ARE EXPECTED, BUT NOT WHERE PONDING AROUND THE STRUCTURE MIGHT CAUSE EXCESSIVE INCONVENIENCE OR DAMAGE TO ADJACENT STRUCTURES & UNPROTECTED AREAS.
   C. DROP INLET SEDIMENT TRAP: THIS PROTECTION IS APPLICABLE WHERE THE INLET DRAINS A RELATIVELY FLAT AREA (<5%) AND WHERE SHEET OR OVERLAND FLOW (<0.5 CFS) ARE TYPICAL. THIS METHOD SHALL NOT APPLY TO INLETS RECEIVING CONCENTRATED FLOWS SUCH AS IN STREET OR HIGHWAY MEDIANS.
3. OUTLET PROTECTION: APPLICABLE TO THE OUTLETS OF ALL PIPES AND PAVED CHANNEL SECTIONS WHERE THE FLOW COULD CAUSE EROSION & SEDIMENT PROBLEM TO THE RECEIVING WATER BODY. SILT FENCES & HAY BALES ARE TO BE INSTALLED IMMEDIATELY DOWNSTREAM OF THE DISCHARGING STRUCTURE AS SHOWN ON THE OUTLET PROTECTION DETAIL.
4. SEDIMENT BASIN: WILL BE CONSTRUCTED AT THE COMMON DRAINAGE LOCATIONS THAT SERVE AN AREA WITH 10 OR MORE DISTURBED ACRES AT ONE TIME. THE PROPOSED STORM WATER PONDS (OR TEMPORARY PONDS) WILL BE CONSTRUCTED FOR USE AS SEDIMENT BASIN. THESE SEDIMENT BASIN MUST PROVIDE A MINIMUM OF 3,600 CUBIC FEET OF STORAGE PER ACRE DRAINED UNTIL FINAL STABILIZATION OF THE SITE. THE 3,600 CUBIC FEET OF STORAGE AREA PER ACRE DRAINED DOES NOT APPLY TO FLOWS FROM OFFSITE AREAS AND FLOWS FROM ONSITE AREAS THAT ARE EITHER UNDISTURBED OR HAVE UNDERGONE FINAL STABILIZATION WHERE SUCH FLOWS ARE DIVERTED AROUND BOTH THE DISTURBED AREA AND THE SEDIMENT BASIN. ANY TEMPORARY SEDIMENT BASIN CONSTRUCTED MUST BE BACKFILLED AND COMPACTED IN ACCORDANCE WITH THE SPECIFICATIONS FOR STRUCTURAL FILL. ALL SEDIMENT COLLECTED IN PERMANENT OR TEMPORARY SEDIMENT TRAPS MUST BE REMOVED UPON FINAL STABILIZATION.

OTHER CONTROLS

WASTE DISPOSAL

WASTE MATERIALS

ALL WASTE MATERIALS EXCEPT LAND CLEARING DEBRIS SHALL BE COLLECTED AND STORED IN A SECURELY LIDDED METAL DUMPSTER. THE DUMPSTER WILL MEET ALL LOCAL AND STATE SOLID WASTE MANAGEMENT REGULATIONS. THE DUMPSTER WILL BE EMPTIED AS NEEDED AND THE TRASH WILL BE HAULED TO A STATE APPROVED LANDFILL. ALL PERSONNEL WILL BE INSTRUCTED REGARDING THE CORRECT PROCEDURE FOR WASTE DISPOSAL. NOTICES STATING THESE PRACTICES WILL BE POSTED AT THE CONSTRUCTION SITE BY THE CONSTRUCTION SUPERINTENDENT, THE INDIVIDUAL WHO MANAGES THE DAY-TO-DAY SITE OPERATIONS, WILL BE RESPONSIBLE FOR SEEING THAT THESE PROCEDURES ARE FOLLOWED.

HAZARDOUS WASTE

ALL HAZARDOUS WASTE MATERIALS WILL BE DISPOSED OF IN THE MANNER SPECIFIED BY LOCAL OR STATE REGULATION OR BY THE MANUFACTURER. SITE PERSONNEL WILL BE INSTRUCTED IN THESE PRACTICES AND THE SITE SUPERINTENDENT, THE INDIVIDUAL WHO MANAGES DAY-TO-DAY SITE OPERATIONS WILL BE RESPONSIBLE FOR SEEING THAT THESE PRACTICES ARE FOLLOWED.

SANITARY WASTE

ALL SANITARY WASTE WILL BE COLLECTED FROM THE PORTABLE UNITS AS NEEDED TO PREVENT POSSIBLE SPILLAGE. THE WASTE WILL BE COLLECTED AND DISPOSED OF IN ACCORDANCE WITH STATE AND LOCAL WASTE DISPOSAL REGULATIONS FOR SANITARY SEWER SYSTEMS.

OFFSITE VEHICLE TRACKING

A STABILIZED CONSTRUCTION ENTRANCE WILL BE PROVIDED TO HELP REDUCE VEHICLE TRACKING OF SEDIMENTS. THE PAVED STREET ADJACENT TO THE SITE ENTRANCE WILL BE SWEPT DAILY TO REMOVE ANY EXCESS MUD, DIRT OR ROCK TRACKED FROM THE SITE. DUMP TRUCKS HAULING MATERIAL FROM THE CONSTRUCTION SITE WILL BE COVERED WITH A TARPAULIN.

INVENT. FOR POLLUTION PREVENTION PLAN

THE MATERIALS OR SUBSTANCES LISTED BELOW ARE EXPECTED TO BE PRESENT ONSITE DURING CONSTRUCTION:

☐ CONCRETE	☐ FERTILIZERS	☐ WOOD
☐ ASPHALT	☐ PETROLEUM BASED PRODUCTS	☐ MASONRY BLOCKS
☐ TAR	☐ CLEANING SOLVENTS	☐ ROOFING MATERIALS
☐ DETERGENTS	☐ PAINTS	☐ METAL STUDS
☐ _____	☐ _____	☐ _____

SPILL PREVENTION

MATERIAL MANAGEMENT PRACTICES

THE FOLLOWING ARE THE MATERIAL MANAGEMENT PRACTICES THAT WILL BE USED TO REDUCE THE RISK OF SPILLS OR OTHER ACCIDENTAL EXPOSURE OF MATERIALS AND SUBSTANCES TO STORM WATER RUNOFF.

GOOD HOUSEKEEPING

THE FOLLOWING GOOD HOUSEKEEPING PRACTICES WILL BE FOLLOWED ONSITE DURING THE CONSTRUCTION PROJECT.

- AN EFFORT WILL BE MADE TO STORE ONLY ENOUGH PRODUCT REQUIRED TO DO THE JOB.
- ALL MATERIALS STORED ONSITE WILL BE STORED IN A NEAT, ORDERLY MANNER IN THEIR APPROPRIATE CONTAINERS AND, IF POSSIBLE, UNDER A ROOF OR OTHER ENCLOSURE.
- PRODUCTS WILL BE KEPT IN THEIR ORIGINAL CONTAINERS WITH THE ORIGINAL MANUFACTURER'S LABEL.
- SUBSTANCES WILL NOT BE MIXED WITH ONE ANOTHER UNLESS RECOMMENDED BY THE MANUFACTURER.
- WHENEVER POSSIBLE, ALL OF A PRODUCT WILL BE USED UP BEFORE DISPOSING OF THE CONTAINER.
- MANUFACTURER'S RECOMMENDATIONS FOR PROPER USE AND DISPOSAL WILL BE FOLLOWED.
- THE SITE SUPERINTENDENT WILL INSPECT DAILY TO ENSURE MATERIALS ONSITE RECEIVE PROPER USE AND DISPOSAL.

HAZARDOUS PRODUCTS

THESE PRACTICES ARE USED TO REDUCE THE RISKS ASSOCIATED WITH

HAZARDOUS MATERIALS.

- PRODUCTS WILL BE KEPT IN ORIGINAL CONTAINERS UNLESS THEY ARE NOT RESEALABLE.
- ORIGINAL LABELS AND MATERIAL SAFETY DATA WILL BE RETAINED4 THEY CONTAIN IMPORTANT PRODUCT INFORMATION.
- IF SURPLUS PRODUCT MUST BE DISPOSED OF, MANUFACTURER'S OR LOCAL AND STATE RECOMMENDED METHODS FOR PROPER DISPOSAL WILL BE FOLLOWED.

PRODUCT SPECIFIC PRACTICES
THE FOLLOWING PRODUCT SPECIFIC WILL BE FOLLOWED ONSITE:
PETROLEUM PRODUCTS
ALL ONSITE VEHICLES WILL BE MONITORED FOR LEAKS AND RECEIVE REGULAR PREVENTIVE MAINTENANCE TO REDUCE THE CHANGE OF LEAKAGE. PETROLEUM PRODUCTS WILL BE STORED IN TIGHTLY SEALED CONTAINERS WHICH ARE CLEARLY LABELED. ANY ASPHALT SUBSTANCES USED ONSITE WILL BE APPLIED ACCORDING TO THE MANUFACTURER'S RECOMMENDATIONS.
FERTILIZERS
FERTILIZERS USED WILL BE APPLIED ONLY IN THE MINIMUM AMOUNTS RECOMMENDED BY THE MANUFACTURED. ONCE APPLIED, FERTILIZER WILL BE WORKED INTO THE SOIL TO LIMIT EXPOSURE TO STORM WATER. STORAGE WILL BE IN A COVERED AREA. THE CONTENTS OF ANY PARTIALLY USED BAGS OR FERTILIZER WILL BE TRANSFERRED TO A SEALABLE PLASTIC BIN TO AVOID SPILLS.
PAINTS
ALL CONTAINERS WILL BE TIGHTLY SEALED AND STORED WHEN NOT REQUIRED FOR USE. EXCESS PAINT WILL NOT BE DISCHARGED TO THE STORM SEWER SYSTEM BUT WILL BE PROPERLY DISPOSED OF ACCORDING TO MANUFACTURER'S INSTRUCTIONS OR STATE AND LOCAL REGULATIONS.
CONCRETE TRUCKS
CONCRETE TRUCKS WILL NOT BE ALLOWED TO WASH OUT OR DISCHARGE SURPLUS CONCRETE OR DRUM WASH WATER ON THE SITE.

SPILL CONTROL PRACTICES

IN ADDITION TO THE GOOD HOUSEKEEPING AND MATERIAL MANAGEMENT PRACTICES DISCUSSED IN THE PREVIOUS SECTIONS OF THIS PLAN, THE FOLLOWING PRACTICES WILL BE FOLLOWED FOR SPILL PREVENTION AND CLEANUP:
MANUFACTURERS' RECOMMENDED METHODS FOR SPILL CLEANUP WILL BE CLEARLY POSTED ON SITE AND SITE PERSONNEL WILL BE MADE AWARE OF THE PROCEDURES AND THE LOCATION OF THE INFORMATION AND CLEANUP SUPPLIES.
MATERIALS AND EQUIPMENT NECESSARY FOR SPILL CLEANUP WILL BE KEPT IN THE MATERIAL STORAGE AREA ONSITE. EQUIPMENT AND MATERIALS WILL INCLUDE BUT NOT BE LIMITED TO BROOMS, DUST PANS, MOPS, RAGS, GLOVES, GOGGLES, LIQUID ABSORBENT (i.e. KITTY LITTER OR EQUAL), SAND &SAWDUST, AND PLASTIC AND METAL TRASH CONTAINERS SPECIFICALLY FOR THIS PURPOSE.

ALL SPILLS WILL BE CLEANED UP IMMEDIATELY AFTER DISCOVERY.
THE SPILL AREA WILL BE KEPT WELL VENTILATED AND PERSONNEL WILL WEAR APPROPRIATE PROTECTIVE CLOTHING TO PREVENT INJURY FROM CONTACT WITH A HAZARDOUS SUBSTANCE.
SPILL OF TOXIC OR HAZARDOUS MATERIAL WILL BE REPORTED TO THE APPROPRIATE STATE OR LOCAL GOVERNMENT AGENCY, REGARDLESS OF THE SIZE OF THE SPILL.
THE SPILL PREVENTION PLAN WILL BE ADJUSTED TO INCLUDE MEASURES TO PREVENT THIS TYPE OF SPILL FROM RECCOURRING AND HOW TO CLEAN UP THE SPILL IF THERE IS ANOTHER ONE. A DESCRIPTION OF THE SPILL, WHAT CAUSED IT, AND THE CLEANUP MEASURES WILL ALSO BE INCLUDED.
THE SITE SUPERINTENDENT RESPONSIBLE FOR THE DAY-TO-DAY SITE OPERATIONS, WILL BE THE SPILL PREVENTION AND CLEANUP COORDINATOR. HE/SHE WILL DESIGNATE AT LEAST ONE OTHER SITE PERSONNEL WHO WILL RECEIVE SPILL PREVENTION AND CLEANUP TRAINING. THESE INDIVIDUALS WILL EACH BECOME RESPONSIBLE FOR A PARTICULAR PHASE OF PREVENTION AND CLEANUP. THE NAMES OF RESPONSIBLE SPILL PERSONNEL WILL BE POSTED IN THE MATERIAL STORAGE AREA AND IF APPLICABLE, IN THE OFFICE TRAILER ONSITE.

MAINTENANCE/INSPECTION PROCEDURES

EROSION AND SEDIMENT CONTROL INSPECTION AND MAINTENANCE PRACTICES

THE FOLLOWING ARE INSPECTION AND MAINTENANCE PRACTICES THAT WILL BE USED TO MAINTAIN EROSION AND SEDIMENT CONTROLS.

- NO MORE THAN 10 ACRES OF THE SITE WILL BE DENUDED AT ONE TIME WITHOUT WRITTEN PERMISSION FROM THE ENGINEER.
- ALL CONTROL MEASURES WILL BE INSPECTED BY THE SUPERINTENDENT, THE PERSON RESPONSIBLE FOR THE DAY TO DAY SITE OPERATION OR SOMEONE APPOINTED BY THE SUPERINTENDENT, AT LEAST ONCE A WEEK AND FOLLOWING ANY STORM EVENT OF 0.25 INCHES OR GREATER.
- ALL TURBIDITY CONTROL MEASURES WILL BE MAINTAINED IN GOOD WORKING ORDER; IF A REPAIR IS NECESSARY, IT WILL BE INITIATED WITHIN 24 HOURS OF REPORT.
- BUILT UP SEDIMENT WILL BE REMOVED FROM SILT FENCE WHEN IT HAS REACHED ONE-THIRD THE HEIGHT OF THE FENCE.
-SILT FENCE WILL BE INSPECTED FOR DEPTH OF SEDIMENT, TEARS, TO SEE IF THE FABRIC IS SECURELY ATTACHED TO THE FENCE POSTS, AND TOO SEE THAT THE FENCE POSTS ARE FIRMLY IN THE GROUND.
- THE SEDIMENT BASIN WILL BE INSPECTED FOR THE DEPTH OF SEDIMENT, AND BUILT UP SEDIMENT WILL BE REMOVED WHEN IT REACHES 10 PERCENT OF THE DESIGN CAPACITY OR AT THE END OF THE JOB, WHICHEVER COMES FIRST.
- DIVERSION DIKES/SWALES WILL BE INSPECTED AND ANY BREACHES PROMPTLY REPAIRED.
- TEMPORARY AND PERMANENT SEEDING AND PLANTING WILL BE INSPECTED FOR BARE SPOTS, WASHOUTS, AND HEALTHY GROWTH.
- A MAINTENANCE INSPECTION REPORT WILL BE MADE AFTER EACH INSPECTION. A COPY OF THE REPORT FORM TO BE COMPLETED BY THE INSPECTOR IS ATTACHED.
THE REPORTS WILL BE KEPT ON SITE DURING CONSTRUCTION AND AVAILABLE UPON REQUEST TO THE OWNER, ENGINEER OR ANY FEDERAL, STATE OR LOCAL AGENCY APPROVING SEDIMENT AND EROSION PLANS, OR STORM WATER MANAGEMENT PLANS.
THE REPORTS SHALL BE MADE AND RETAINED AS PART OF THE STORM WATER POLLUTION PREVENTION PLAN FOR AT LEAST THREE YEARS FROM THE DATE THAT THE SITE IS FINALLY STABILIZED AND THE NOTICE OF TERMINATION IS SUBMITTED THE REPORTS SHALL IDENTIFY ANY INCIDENTS OF NON-COMPLIANCE.
-THE SITE SUPERINTENDENT WILL SELECT UP TO THREE INDIVIDUALS WHO WILL BE RESPONSIBLE FOR INSPECTIONS, MAINTENANCE AND REPAIR ACTIVITIES, AND FILLING OUT THE INSPECTION AND MAINTENANCE REPORT.
- PERSONNEL SELECTED FOR INSPECTION AND MAINTENANCE RESPONSIBILITIES WILL BE RECEIVE TRAINING FROM THE SITE SUPERINTENDENT. THEY WILL BE TRAINED IN ALL THE INSPECTION AND MAINTENANCE PRACTICES NECESSARY FOR KEEPING THE EROSION AND SEDIMENT CONTROLS USED ONSITE IN GOOD WORKING ORDER.

NON-STORM WATER DISCHARGES

IT IS EXPECTED THAT THE FOLLOWING NON-STORM WATER DISCHARGES WILL OCCUR FROM THE SITE DURING THE CONSTRUCTION PERIOD:

-WATER FROM WATER LINE FLUSHING
-PAVEMENT WASH WATERS (WHERE NO SPILLS OR LEAKS OF TOXIC OR HAZARDOUS MATERIALS HAVE OCCURRED).
-UNCONTAMINATED GROUNDWATER (FROM DEWATERING EXCAVATION).

CONTRACTOR'S CERTIFICATION

I CERTIFY UNDER PENALTY OF LAW THAT I UNDERSTAND THE TERMS AND CONDITIONS OF GENERAL NATIONAL POLLUTANT DISCHARGE ELIMINATION SYSTEM (NPDES) PERMIT THAT AUTHORIZES THE STORM WATER DISCHARGES ASSOCIATED WITH INDUSTRIAL ACTIVITY FROM THE CONSTRUCTION SITE IDENTIFIED AS PART OF THIS CERTIFICATION.

RESPONSIBLE PERSONNEL	GENERAL CONTRACTOR	SUB-CONTRACTOR	SUB-CONTRACTOR	SUB-CONTRACTOR
BUSINESS NAME AND ADDRESS OF CONTRACTOR & ALL SUBS				
SIGNATURE				

RECORD SET
The information presented on this drawing is diagrammatic and is presented for general information purposes and should not be relied on for accuracy of dimensions, details and locations. Actual and exact conditions if required should be determined in the field.

CAMERO + ASSOCIATES, INC.
CIVIL ENGINEERS
CAMERO & ASSOCIATES, INC.
JORGE L. CAMERO, P.E.
7400 SW. 50th TERR. SUITE 204
(305) 665-7602
OUR JOB # 09-127

PLANNERS
EB NO. 0004275
FLA. REG. NO. 32545
MIAMI, FL 33155
FAX (305) 665-8488

SEAL
JORGE L. CAMERO
REG. 32545 EB0004275
CIVIL ENGINEER

REVISIONS

VILLAGE OF PALMETTO BAY CITY HALL
MASTER BUILDING
PALMETTO BAY, MIAMI-DADE COUNTY, FLORIDA

CAMERO + ASSOCIATES, INC.
ENGINEERS
PLANNERS
7400 SW. 50th TERR. SUITE 204
(305) 665-7602
MIAMI, FL 33155
FAX (305) 665-8488

SCALE: 1"=30'
DATE: 10-16-09
DRAWN BY: F.A.
CHECKED BY: J.L.C.
PROJECT#: 09-127

C-1C

THIS IS THE CONTRACTOR CERTIFICATION REQUIRED BY THE EPA'S NATIONAL POLLUTION DISCHARGE ELIMINATION SYSTEM (NPDES) STORM WATER POLLUTION PREVENTION PLAN FOR CONSTRUCTION SITES OVER 5 ACRES. THIS CERTIFICATION MUST BE COMPLETED WEEKLY AND AFTER EVERY RAINFALL EVENT OVER .25 INCHES. IT IS SUGGESTED THAT THIS SHEET BE REMOVED FROM THE PLAN SET AND DUPLICATED AS NEEDED BY THE CONTRACTOR.

PROJECT: VILLAGE OF PALMETTO BAY

STORM WATER POLLUTION PREVENTOR PLAN
INSPECTION AND MAINTENANCE REPORT FORM

TO BE COMPLETED EVERY 7 DAYS AND WITHIN 24 HOURS OF
A RAINFALL EVENT OF .25 INCHES OR MORE

INSPECTOR:_____ DATE:

INSPECTOR'S QUALIFICATIONS:

DAYS SINCE LAST RAINFALL: AMOUNT OF LAST RAINFALL INCHES

STABILIZATION MEASURES

INSPECTION AREA (DESCRIPTION OF LOCATION)	DAYS SINCE LAST DISTURBED	DAYS OF NEXT DISTURBANCE	STABILIZED ? (YES/ NO)	STABILIZED WITH	CONDITION

STABILIZATION REQUIRED:

TO BE PERFORMED BY: ON OR BEFORE:

PROJECT: VILLAGE OF PALMETTO BAY

STORM WATER POLLUTION PREVENTOR PLAN
INSPECTION AND MAINTENANCE REPORT FORM

STRUCTURAL CONTROLS

DATE:_____

EARTH DIKES/SWALES

DIKE OR SWALE	FROM	TO	IS DIKE OR SWALE STABILIZED ?	IS THERE EVIDENCE OF WASHOUT OR OVERTOPPING

MAINTENANCE REQUIRED FOR EARTH DIKES/SWALES:

TO BE PERFORMED BY: ON OR BEFORE:

CATCH BASIN/CURB INLET/OUTFALL TURBIDITY CONTROL

STRUCTURE/ OUTFALL	ARE TURBIDITY CONTROL IN PLACE	ANY EVIDENCE OF CLOGGING/WASHOUT OR BYPASSING?	ARE TURBIDITY CONTROLS IN NEED OF REPLACING	DOES SILT NEED TO BE REMOVED FROM AROUND CONTROL

MAINTENANCE REQUIRED FOR CATCH BASIN/CURB INLET/OUTFALL TURBIDITY CONTROLS:

ON OR BEFORE:

TO BE PERFORMED BY:

PROJECT: VILLAGE OF PALMETTO BAY

STORM WATER POLLUTION PREVENTOR PLAN
INSPECTION AND MAINTENANCE REPORT FORM
SEDIMENT BASIN

DEPTH OF SEDIMENT IN BASIN	DEPTH OF SEDIMENT SIDE BASIN	ANY EVIDENCE OF OVERTOPPING OF THE EMBANKMENT ?	CONDITION OF OUTFALL FROM SEDIMENT BASIN

MAINTENANCE REQUIRED FOR SEDIMENT BASIN:

TO BE PERFORMED BY: ON OR BEFORE:

OTHER CONTROLS
STABILIZED CONSTRUCTION ENTRANCE

DOES MUCH SEDIMENT GET TRACKED ON TO ROAD?	IS THE GRAVEL CLEAN OR IS IT FILLED WITH SEDIMENT?	DOES ALL TRAFFIC USE THE STABILIZED ENTRANCE TO LEAVE THE SITE?	IS THE CULVERT BENEATH THE ENTRANCE WORKING? (IF APPLICABLE)

MAINTENANCE REQUIRED FOR SEDIMENT BASIN:

TO BE PERFORMED BY: ON OR BEFORE:

PROJECT: VILLAGE OF PALMETTO BAY

STORM WATER POLLUTION PREVENTOR PLAN
INSPECTION AND MAINTENANCE REPORT FORM

CHANGES REQUIRED TO THE POLLUTION PREVENTOR PLAN:

REASONS FOR CHANGES:

I CERTIFY UNDER PENALTY OF LAW THAT THIS DOCUMENT AND ALL ATTACHMENTS WERE PREPARED UNDER MY DIRECTION OR SUPERVISION IN ACCORDANCE WITH A SYSTEM DESIGNED TO ASSURE THAT QUALIFIED PERSONNEL PROPERLY GATHERED AND EVALUATED THE INFORMATION SUBMITTED. BASED ON MY INQUIRY OF THE PERSON OR PERSONS WHO MANAGE THE SYSTEM, OR THOSE PERSONS DIRECTLY RESPONSIBLE FOR GATHERING THE INFORMATION, THE INFORMATION SUBMITTED IS, TO THE BEST OF MY KNOWLEDGE AND BELIEF, TRUE, ACCURATE, AND COMPLETE. I AM AWARE THAT THERE ARE SIGNIFICANT PENALTIES FOR SUBMITTING FALSE INFORMATION, INCLUDING THE POSSIBILITY OF FINE AND IMPRISONMENT FOR KNOWING VIOLATIONS.

SIGNATURE:_____

DATE:_____

RECORD SET

The information presented on this drawing is diagrammatic and is presented for general information purposes and should not be relied on for accuracy of dimensions, details and locations. Actual and exact conditions if required should be determined in the field.

CAMERO + ASSOCIATES, INC.
CIVIL ENGINEERS
CAMERO + ASSOCIATES, INC.
JORGE L. CAMERO, P.E.
7400 SW. 50th TERR. SUITE 204
(305) 665-7602
PLANNERS
EB NO. 0004275
FLA. REG. NO. 32545
MIAMI, FL 33155
FAX (305) 665-8488
OUR JOB # 09-127

SEAL
JORGE L. CAMERO
REG. 32545 EB#0004275
CIVIL ENGINEER

REVISIONS

VILLAGE OF PALMETTO BAY CITY HALL
MASTER BUILDING
PALMETTO BAY, MIAMI-DADE COUNTY, FLORIDA

CAMERO + ASSOCIATES, INC.
ENGINEERS PLANNERS
7400 SW. 50th TERR. SUITE 204 MIAMI, FL 33155
(305) 665-7602 FAX (305) 665-8488

SCALE: 1"=30'
DATE: 10-16-09
DRAWN BY: F.A.
CHECKED BY: J.L.C.
PROJECT#: 09-127

C-1D

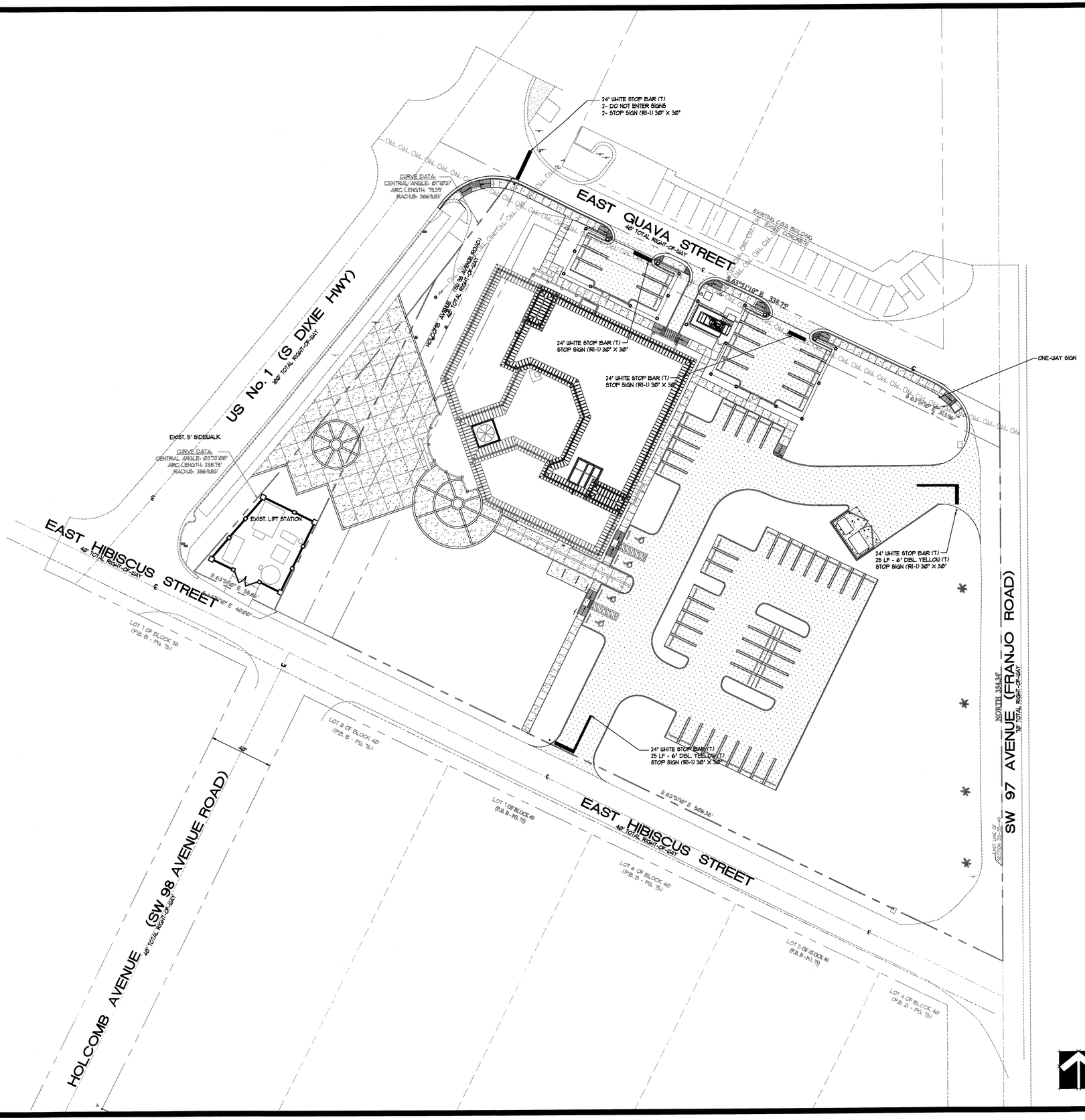

LEGEND

- EXISTING PAVEMENT
- PROPOSED PAVEMENT
- PROPOSED BUILDING
- PROPOSED EDGE LINE
- ONLY — PROPOSED PAVEMENT ARROW AND MESSAGE
- DIRECTION OF TRAFFIC
- TRAFFIC SIGN
- STOP SIGN (RI-1) 24" WHITE STOP BAR

TRAFFIC GENERAL NOTES AND CONDITIONS:

1. ENGINEER SHALL PREPARE SIGNING & PAVEMENT MARKING PLANS IN A SEPARATE SHEET (1" = 50' SCALE MINIMUM).
2. ENGINEER SHALL VISIT SITE & VERIFY FIELD CONDITIONS BEFORE PREPARING PROPOSED SIGNING AND PAVEMENT MARKINGS PLANS.
3. CONTRACTOR SHALL BE RESPONSIBLE FOR THE REMOVAL OF ALL PAVEMENT MARKINGS AND SIGNS CONFLICTING WITH THE PROPOSED ROADWAY CONSTRUCTION.
4. CONTRACTOR SHALL BE RESPONSIBLE FOR THE INSTALLATION OF ALL PAVEMENT MARKINGS AND SIGNS AS SHOWN IN THE PLANS AND APPLICABLE TRAFFIC DESIGN STANDARDS.
5. CONTRACTOR SHALL BE RESPONSIBLE FOR MATCHING EXISTING PAVEMENT MARKINGS AT THE BEGINNING AND AT THE END OF THE PROJECT, AND AT ALL INTERSECTING SIDE STREETS.
6. CONTRACTOR SHALL BE RESPONSIBLE FOR THE INSTALLATION OF REFLECTIVE PAVEMENT MARKERS ALONG THE ENTIRE LENGTH OF THE PROJECT.
7. ANY SIGNING MATERIAL, INCLUDING SUPPORTS TO BE REMOVED, SHALL BE DELIVERED BY THE CONTRACTOR TO MIAMI-DADE COUNTY'S TRAFFIC SIGNALS AND SIGNS MAINTENANCE FACILITY LOCATED AT 1100 N.W. 36TH STREET, MIAMI, FLORIDA.
8. SIGN ASSEMBLY LOCATIONS SHOWN IN THE PLANS WHICH ARE IN CONFLICT WITH STREET LIGHTING UTILITIES, DRIVEWAYS, PEDESTRIAN RAMPS, ETC. MAY BE ADJUSTED AS DIRECTED BY THE ENGINEER / INSPECTOR.
9. CONTRACTOR SHALL BE RESPONSIBLE FOR PROVIDING RAMPS AND CROSSWALKS WHERE SIDEWALK EXISTS AND FOR PROPOSED (ADA) (TYP.-FIRM).

RECORD SET
The information presented on this drawing is diagrammatic and is presented for general information purposes and should not be relied on for accuracy of dimensions, details and locations. Actual and exact conditions if required should be determined in the field.

PAVEMENT MARKING + SIGNING PLAN

0 6 12 18 24 30 60 90
SCALE IN FEET 1" = 30'-0"

SEAL
JORGE L. CAMERO
REG. 32545 EB#0004275
CIVIL ENGINEER

REVISIONS

VILLAGE OF PALMETTO BAY CITY HALL

MASTER BUILDING

PALMETTO BAY, MIAMI-DADE COUNTY, FLORIDA

CAMERO + ASSOCIATES, INC.
ENGINEERS PLANNERS
7400 SW. 50th TERR. SUITE 204 MIAMI, FL 33155
(305) 665-7602 FAX (305) 665-8488

SCALE: 1"=30'
DATE: 10-16-09
DRAWN BY: FA
CHECKED BY: JLC
PROJECT#: 09-127

C-2

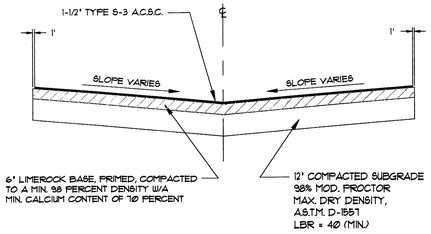

PAVEMENT SECTION

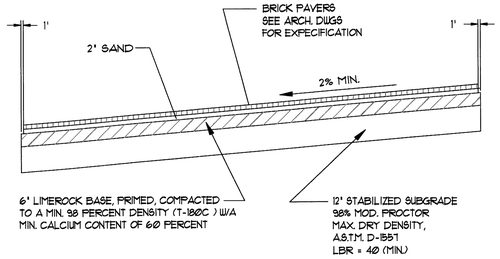

PAVERS SECTION

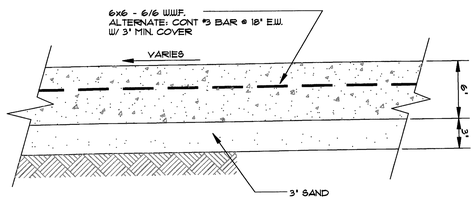

CONCRETE PAVEMENT SECTION

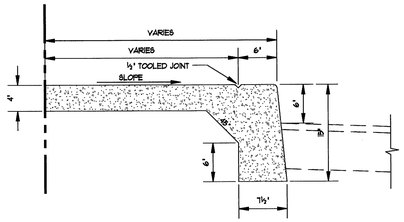

CURB AND SIDEWALK COMBINATION DETAIL

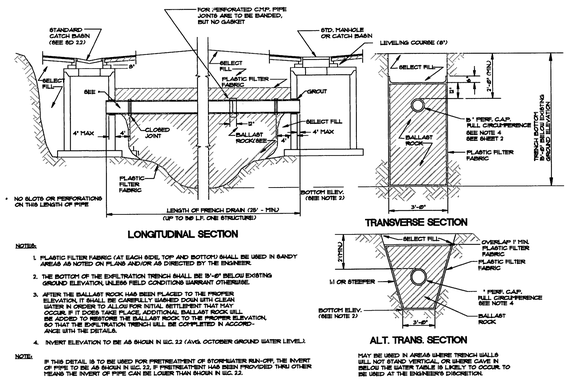

FRENCH DRAIN DETAIL

PAVING + DRAINAGE NOTES:

1. ALL MUCK UNDER THE PROPOSED DRIVEWAY AND PARKING AREAS SHALL BE REMOVED AND REPLACED WITH COMPACT ACCEPTABLE FILL IN ONE-FOOT LIFTS TO 98% DENSITY.
2. ALL LABOR, MATERIALS AND METHODS OF INSTALLATION SHALL BE IN STRICT ACCORDANCE WITH THE MINIMUM ENGINEERING AND CONSTRUCTION STANDARDS ADOPTED BY MIAMI-DADE COUNTY AND VILLAGE OF PALMETTO BAY.
3. ALL UNDERGROUND UTILITIES AND DRAINAGE IS TO BE INSTALLED BEFORE SUBGRADE IS CONSTRUCTED.
4. ALL ELEVATIONS REFER TO N.G.V.D.
5. ALL PIPE SHALL BE REINFORCED CONCRETE PIPE, OR AS INDICATED.
6. CONTRACTOR SHALL TAKE ALL NECESSARY PRECAUTIONS TO SAFEGUARD ALL EXISTING STRUCTURES AND UTILITIES. ANY DAMAGE DONE TO EXISTING UTILITIES SHALL BE REPAIRED BY THE CONTRACTOR AT NO EXPENSE TO THE SUBJECT UTILITY. CALL U.N.C.L.E. (1-800-432-4770) 48 HOURS BEFORE DIGGING.
7. ALL CONCRETE SHALL BE 2500 P.S.I., UNLESS OTHERWISE NOTED.
8. CONTRACTOR SHALL VERIFY LOCATION OF EXISTING UNDERGROUND UTILITIES.
9. ALL PERFORATED PIPE SHALL BE PERFORATED FOR THE FULL CIRCUMFERENCE. THE FIRST FOUR FEET FROM CATCH BASIN SHALL BE NON-PERFORATED.
10. CONTRACTOR TO DISCARD ALL UNUSABLE MATERIAL AT APPROVED DISPOSAL SITE.
11. CONTRACTOR TO PROTECT ALL EXISTING UTILITIES.
12. CONTRACTOR SHALL VERIFY EXISTING ELEVATION ON PAVEMENTS, RIMS, ETC. & INFORM ENGINEER OF DISCREPANCY.
13. CONTRACTOR SHALL REFER TO ARCHITECTURAL DRAWINGS AND/OR SPECIFICATIONS FOR FILL REQUIREMENTS UNDERNEATH BUILDING PADS.

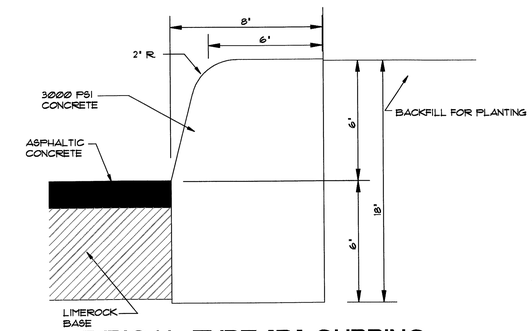

TYPICAL TYPE "D" CURBING

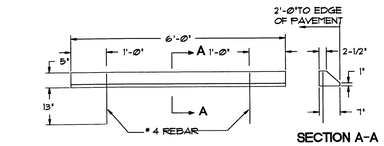

CONCRETE WHEEL STOP DETAIL

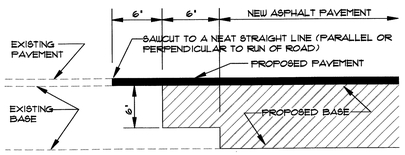

SAWCUT DETAIL

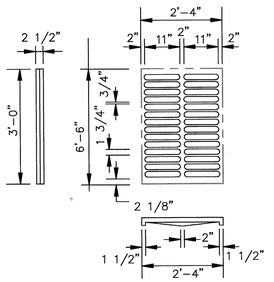

GRATE DETAIL FOR TYPE "C" INLET

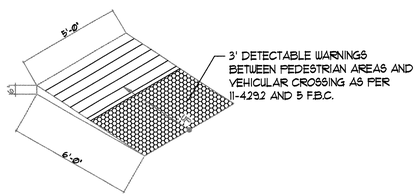

H.C. RAMP DETAIL

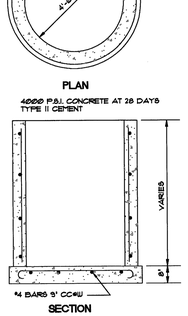

TYPE "P" STRUCTURE

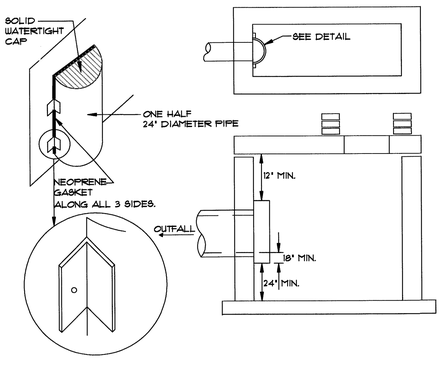

POLLUTION RETARDANT

NOTE:
ACCESSIBLE SPACES AND AISLES SHALL HAVE 2% SLOPE MAXIMUM PER 11-4.1.

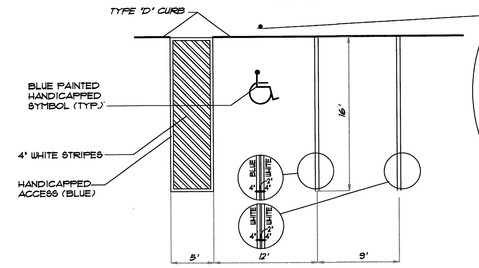

NOTE:
SIGNING AND MARKING FOR HANDICAP PARKING STALLS MUST BE IN ACCORDANCE WITH FDOT STANDARD INDEX 17346.

ALL PAINT SHALL BE REFLECTORIZED PAINT

1. HANDICAPPED SIGN WILL BE OF F.D.O.T. (BLUE) COLOR.
2. PAVEMENT BORDER LINES (ONE ON EACH SIDE) OF THE HANDICAP SPACE WILL BE OF A BLUE COLOR OF A QUALITY EQUIVALENT TO SUPER STRIPE TRAFFIC PAINT SOLD BY FOX VALLEY SYSTEMS, INC. OF CARY, ILLINOIS, PHONE 1-800-323-4770. SHALL BE STRIPED ON THE WEARING SURFACE OF EACH SPACE DESIGNED FOR THE HANDICAP PARKING SPACE. ORDINANCE NO. 1550.
3. ALL LETTERS IN MIDDLE PORTION OF SIGN ARE 13" SERIES AT 15" SPACING.
4. ALL LETTERS IN BOTTOM PORTION OF SIGN ARE 7" SERIES AT 1" SPACING.
5. MINIMUM FINE SHALL BE $250.00 PER ORDINANCE 2149, 11.46.4 F.B.C.

TYPICAL PARKING STALL DETAILS

N.T.S.

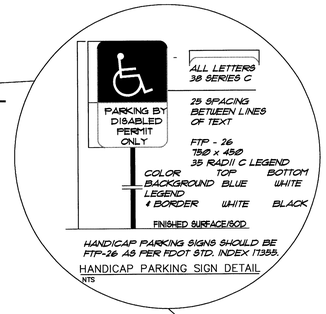

HANDICAP PARKING SIGN DETAIL
NTS

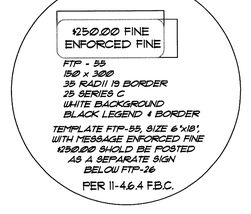

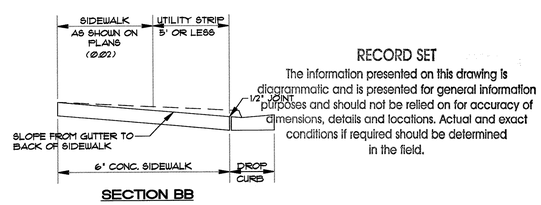

SECTION BB

SOUTH CONCRETE DRIVEWAY

RECORD SET
The information presented on this drawing is diagrammatic and is presented for general information purposes and should not be relied on for accuracy of dimensions, details and locations. Actual and exact conditions if required should be determined in the field.

SEAL
JORGE L. CAMERO
REG. 32545 STATE OF FLORIDA
CIVIL ENGINEER

REVISIONS

VILLAGE OF PALMETTO BAY CITY HALL
MASTER BUILDING
PALMETTO BAY, MIAMI-DADE COUNTY, FLORIDA

CAMERO + ASSOCIATES, INC.
ENGINEERS PLANNERS
7400 SW 50th TERR SUITE 204 MIAMI, FL 33155
(305) 665-7602 FAX (305) 665-8488

SCALE: 1"=30'
DATE: 10-16-09
DRAWN BY: F.A.
CHECKED BY: J.L.C.
PROJECT#: 09-127

C-3

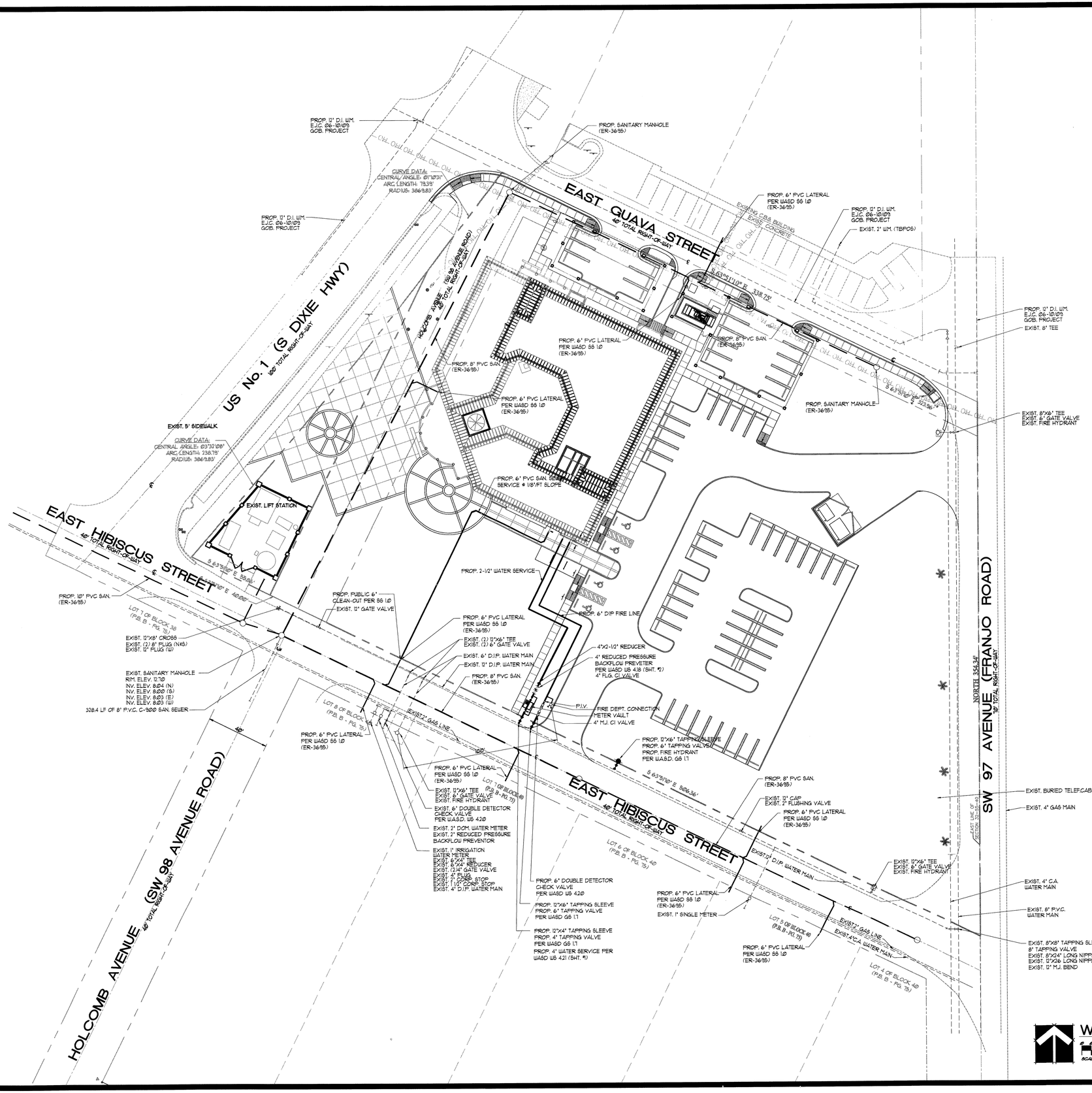

SEAL
JORGE L. CAMERO
REG. 32545 EB0000427B
CIVIL ENGINEER

REVISIONS

1 REV. PER FIRE COMMENTS JLC	4-5-10

VILLAGE OF PALMETTO BAY CITY HALL

MASTER BUILDING

PALMETTO BAY, MIAMI-DADE COUNTY, FLORIDA

CAMERO + ASSOCIATES, INC.
ENGINEERS PLANNERS
7400 SW 50th TERR. SUITE 204 MIAMI, FL 33155
(305) 665-7602 FAX (305) 665-8488

SCALE: 1"=30'
DATE: 10-16-09
DRAWN BY: F.A.
CHECKED BY: J.L.C.
PROJECT#: 09-121

C-4

1. ALL MATERIALS AND LABOR UNDER THIS PROJECT SHALL BE IN STRICT ACCORDANCE WITH THE REQUIREMENTS OF THE MIAMI-DADE WATER AND SEWER DEPARTMENT AND SHALL CONFORM TO THE STANDARDS AND SPECIFICATIONS AVAILABLE AND ON FILE WITH THE DEPARTMENT. SUBMIT SHOP DRAWINGS FOR ALL MATERIALS.
2. COVER OVER WATER OR SEWER FORCE MAINS SHALL BE 4'-0" MIN.
3. ALL MAIN LINE VALVES SHALL BE INSTALLED COMPLETE WITH 10" RISER PIPES AND NO. 3 OR 53 VALVE BOXES FIRE HYDRANTS AND SERVICE VALVES SHALL BE INSTALLED COMPLETE WITH 6" RISER PIPES AND NO. 2 VALVE BOXES.
4. ALL FORCE MAIN SERVICE CONNECTIONS INTO PRESSURE TRANSMISSION MAINS SHALL HAVE A SHUT OFF VALVE AND CHECK VALVE AT THE POINT OF ENTRY.
5. ALL GRAVITY SYSTEMS SHALL BE CONSTRUCTED IN ACCORDANCE WITH DEPARTMENT STANDARDS.
6. ALL WATER METERS WILL BE INSTALLED BY THE MIAMI-DADE WATER AND SEWER DEPARTMENT PROVIDING THE APPROPRIATE CHARGES HAVE BEEN PREPAID.
7. FIRE HYDRANT REQUIREMENTS (NUMBER AND LOCATION) SHALL BE AS REQUIRED BY THE MIAMI-DADE COUNTY FIRE DEPARTMENT OR THE APPROPRIATE FIRE AGENCY WITH INSTALLATION IN ACCORDANCE WITH DEPARTMENT STANDARDS.
8. CONTRACTOR MUST CALL M-DWASD INSPECTION DIVISION TO ARRANGE FOR A PRECONSTRUCTION MEETING 2 FULL BUSINESS DAYS PRIOR TO PROPOSED START OF CONSTRUCTION. CONTACT ONE CALL CENTER 48 HRS PRIOR TO EXCAVATION.
9. CONTRACT INSPECTOR WILL INSPECT ANY FACILITIES APPROVED BY THE DEPARTMENT. ALL OTHER REQUIREMENTS OF THE PERMITTING AGENCY SHALL BE IN ACCORDANCE WITH THEIR STANDARDS AND REQUIREMENTS.
10. WORK PERFORMED UNDER THIS PROJECT WILL NOT BE CONSIDERED AS COMPLETE UNTIL FINAL ACCEPTANCE OF THE SYSTEM BY THE DEPARTMENT AND UNTIL THE FOLLOWING DOCUMENTS ARE RECEIVED AND APPROVED BY THE DEPARTMENT.
    a. EASEMENTS, IF REQUIRED.
    b. CONTRACTOR'S WAIVER AND RELEASE OF LIEN.
    c. ABSOLUTE BILL OF SALE.
    d. 1 CONTRACTOR'S LETTER OF WARRANTY (I.E., LETTER AGREEMENT).
    5. DEVELOPER'S CONTRACT BOND (I.E., CONTRACT AGREEMENT).
    e. "AS-BUILT PRINTS 24"x36" SHOWING SPECIFIC LOCATIONS, DEPTH, ETC. OF ALL WATER AND SEWER FACILITIES AS LOCATED BY A LICENSED FLORIDA SURVEYOR, ALONG WITH PRINTS OF "AS-BUILT" WHICH HAVE BEEN SIGNED AND SEALED BY A REGISTERED SURVEYOR. (No. OF PRINTS: 3-FOR WATER, 4-FOR GRAVITY SEWER AND 5-FOR FORCE MAIN OR PUMP STATION PROJECTS). THE DEPARTMENT RESERVES THE RIGHT TO REQUIRE SUBMITTAL ON ELECTRONIC MEDIA IN ACCORDANCE WITH SEC. 01775 "MAGNETIC MEDIA SUBMITTAL".
    f. M.R.S. LETTER OF RELEASE REQUIRED FOR ALL WATER PROJECTS.
    g. BILL OF SALE SKETCH (8½"x11") FOR WATER AND SEWER, SEPARATELY.
11. ALL NEW CONNECTIONS FROM EXISTING DEPARTMENT MAINS TO BE MADE BY DEPARTMENT FORCES ONLY. THE CONTRACTOR TO EXCAVATE AT REQUIRED LOCATIONS, PROVIDE AND INSTALL MATERIAL WITH FITTINGS, PRIOR TO TAP.
12. AN APPROVED PAVING AND DRAINAGE PLAN MUST BE SUBMITTED TO MDWASD FOR ALL NEW SUBDIVISIONS PRIOR TO APPROVAL OF WATER AND SEWER PERMIT PLANS, UPON REQUEST.
13. UNLESS OTHERWISE SPECIFIED, ALL TAPS 20 INCHES AND SMALLER FOR CONNECTIONS TO EXISTING MAINS WILL BE DONE BY DEPARTMENT FORCES. UNDER NO CIRCUMSTANCES WILL THE CONTRACTOR BE PERMITTED TO TAP EXISTING MAINS IN THE SIZE RANGE SPECIFIED ABOVE. THE TAPPING SLEEVE AND TAPPING VALVE ARE FURNISHED AND INSTALLED BY THE CONTRACTOR UNDER THE SUPERVISION OF THE INSPECTOR.

ITEM	CROSS REF.	SPEC. REF.

MIAMI-DADE COUNTY	ISSUE DATE	APPROVED BY	STANDARD DETAIL	
WATER & SEWER DEPARTMENT	03/01/2010	V.F.C.	STANDARD REQUIREMENTS WATER AND SEWER CONSTRUCTION	GS 0.5 SHEET 1 OF 2

1. AT THE COMPLETION OF ANY WATER AND SEWER JOB, EITHER DONATION OR CONTRACT, THE CONTRACTOR SHALL SUBMIT:
    a. AS-BUILT PRINTS WHICH HAVE BEEN SIGNED AND SEALED BY A FLORIDA LICENSED PROFESSIONAL SURVEYOR AND MAPPER. (QTY. OF PRINTS, AS REQUIRED BY THE DEPARTMENT.)
2. "AS-BUILT" FORMAT:
    a. 24"x36" PRINTS.
    b. LOCATION MAP SCALE SHOULD BE 1"=300' AND SECTION-TOWNSHIP-RANGE SHOULD BE SHOWN.
    c. THE WORD "AS-BUILT" IN LARGE LETTERS.
    d. TITLE BLOCK WITH DEPARTMENT DS, DW OR ER NUMBER AND PERTINENT INFORMATION.
    e. PREFERRED SCALE TO BE 1"= 40' HORIZONTALLY AND 1"= 4' VERTICALLY*.
    f. STREET NOMENCLATURE.
    g. SEPARATE AS-BUILTS FOR WATER AND SEWER.
    h. SEPARATE WATER AND SEWER PROFILE.
    i. STATIONING STARTING WITH 0+00 AT PERMANENT REFERENCE POINT (I.E., P.I., P.T., ETC.) OR AS SHOWN ON DESIGN POTABLE PLANS, AND TO RUN CONTINUOUSLY TO END OF MAIN.
    j. EASEMENTS, IF ANY, TIED TO PERMANENT REFERENCE POINT.
    k. IDENTIFY ALL CONTROL LINES (I.E. BLOCK LINE, PROPERTY LINE, R/W, ETC).
    l. ALL "PROPOSED" INFORMATION TO BE REMOVED FROM PRINTS, LEAVING ONLY "AS-BUILT" INFORMATION REFLECTED IN DRAWINGS.
3. WATER "AS-BUILTS" MUST INCLUDE:
    a. PLANS SHOWING PIPE SIZE, MATERIAL AND OFFSET OF MAIN, DEFLECTIONS (IF ANY), STATION OF SERVICES, HYDRANTS AND FITTINGS AT THE MAINLINE (IF PERPENDICULAR TO IT), AND AT MAIN AND END OF SERVICES IF ANY, OTHER ANGLE, AND DEFLECTION OF PIPE, IF ANY.
    b. PROFILE SHOWING TOP OF GROUND AND TOP OF PIPE ELEVATIONS AT EVERY 100' STATION AND AT ANY CHANGE IN GRADE (WITH CORRESPONDING STATION), PIPE SIZE AND PIPE MATERIALS REFERENCED TO PLAN.
4. SEWER "AS-BUILTS" MUST INCLUDE:
    a. PLAN SHOWING MANHOLE NUMBER, PIPE SIZE AND PIPE MATERIAL OF PIPE, DEFLECTION, IF ANY (FORCE MAIN ONLY), AND LOCATION OF LATERALS WITH REFERENCE TO MANHOLE.
    b. PROFILE SHOWING MANHOLE NUMBER (AS PER PLAN), RIM AND INVERT ELEVATIONS (IF MORE THAN ONE INVERT, LABEL NORTH, SOUTH , ETC). AND STATION STARTING AT EACH 0+00 AT DOWNSTREAM MANHOLE.
5. FORCE MAIN "AS-BUILT" SAME AS WATER MAIN ABOVE.
6. EACH AS-BUILT SHALL SHOW THE FLORIDA STATE PLANE COORDINATES (CURRENT READJUSTMENT) OF ALL THE MANHOLES AND VALVES AND OF AT LEAST TWO HORIZONTAL CONTROL POINTS PROPERLY IDENTIFIED AND LOCATED WITHIN THE PROJECT.

* OTHER SCALE MAY BE PERMITTED, BUT MUST BE APPROVED BY THE DEPA... OF DRAWINGS.

ITEM	CROSS REF.	SPEC. REF.

MIAMI-DADE COUNTY	ISSUE DATE	APPROVED BY	STANDARD DETAIL	
WATER & SEWER DEPARTMENT	03/11/2009	V.F.C.	"AS-BUILT" REQUIREMENTS	GS 0.5 SHEET 2 OF 2

NOTES ON WATER-SEWER INSTALLATION
(NOT PART OF W.A.S.D. NOTES NOR APPROVAL)

1. A HORIZONTAL DISTANCE OF 10ft. SHALL BE MAINTAINED BETWEEN WATER AND SEWER MAINS. WHEN THE 10 FEET HORIZONTAL DISTANCE CRITERIA CANNOT BE MET DUE TO AN EXISTING UNDERGROUND FACILITY CONFLICT, THE SEWER SHALL BE CONSTRUCTED OF DUCTILE IRON PIPE WITH MECHANICAL JOINTS.
2. A VERTICAL DISTANCE OF AT LEAST 18 INCHES SHALL BE MAINTAINED BETWEEN ANY WATER AND SEWER MAINS. THE SEWER SHALL BE A DUCTILE IRON SINGLE 20 FEET LENGTH CENTERED ON THE CROSSING IF THE MINIMUM VERTICAL DISTANCE IS LESS THAN 18 INCHES OR THE SEWER IS INSTALLED ABOVE THE WATER MAIN (REGARDLESS OF SEPARATION).
3. IN HIGHLY CONGESTED AREAS, WHERE EITHER WATER OR SEWER FACILITIES ARE EXISTING AND THE SEPARATION REQUIREMENTS CANNOT BE MET, SPECIAL CONSIDERATION MAY BE GIVEN SUBJECT TO A COMPLETE EVALUATION OF EXISTING AN PROPOSED CONDITIONS.
4. THE MAXIMUM ALLOWABLE EXFILTRATION RATE OF GRAVITY SANITARY SEWERS CONSTRUCTED IN A PUBLIC WELLFIELD PROTECTION AREA SHALL BE FIFTY (50) GALLONS PER INCH PIPE DIAMETER PER MILE PER DAY FOR RESIDENTIAL LAND USE AND TWENTY (20) GALLONS PER INCH PIPE DIAMETER PER MILE PER DAY FOR NON-RESIDENTIAL LAND USE.
5. FORCE MAIN SEWERS CONSTRUCTED IN A PUBLIC WELLFIELD PROTECTION AREA SHALL BE EITHER DUCTILE IRON OR REINFORCED CONCRETE PRESSURE SEWER PIPE. THE DUCTILE IRON PIPE EXFILTRATION RATE SHALL NOT BE GREATER THAN THE ALLOWABLE LEAKAGE RATE SPECIFIED IN AMERICA WATER WORKS ASSOCIATION STANDARD (AWWA) C600-82 AT A TEST PRESSURE OF 100 POUNDS PER SQUARE INCH.

    THE REINFORCED CONCRETE PRESSURE SANITARY SEWER FORCE MAIN EXFILTRATION RATE SHALL NOT BE GREATER THAN ONE-HALF (1/2) THE ALLOWABLE LEAKAGE RATE SPECIFIED IN AWWA C600-82 AT A TEST PRESSURE OF 100 POUNDS PER SQUARE INCH.
6. THE CONTRACTOR SHALL VERIFY NATURE, DEPTH, CHARACTER OF EXISTING UNDERGROUND UTILITIES PRIOR TO START OF CONSTRUCTION.
7. ALL OTHER PUBLIC OR PRIVATE UTILITY FACILITIES SHALL BE CONSTRUCTED AT LEAST 3 FEET FROM ANY WATER AND SEWER MAIN AS MEASURED FROM THE OUTSIDE BELL OF THE WATER AND SEWER PIPE TO THE OUTSIDE OF THE UTILITY PIPE.
8. WHEN THE 3 FEET SEPARATION BETWEEN PROPOSED AND EXISTING LINE IS NOT POSSIBLE, THE CONTRACTOR SHALL HAND DIG OR EXPOSE THE WATER AND SEWER PIPES BEFORE PROCEEDING WITH POWER EQUIPMENT EXCAVATION.
9. IN NO CASE SHALL A CONTRACTOR INSTALL UTILITY PIPES, CONDUITS, CABLES, ETC. IN THE SAME TRENCH PARALLEL TO AND ABOVE EXISTING WATER AND SEWER PIPES EXCEPT WHERE THE CROSS, ANY DEVIATION FROM NOTES 6, 7 AND 8 SHALL BE APPROVED IN WRITING BY THE RESPONSIBLE WATER AND SEWER UTILITY.
10. A NON-RESETTABLE ELAPSE TIME METER SHALL BE INSTALLED AT EACH PUMP TO RECORD THE TOTAL OPERATING HOURS OF THE STATION.

WATER GENERAL NOTES: (NOT PART OF W.A.S.D. NOTES NOR APPROVAL)

1. CONTRACTOR SHALL TAKE ALL NECESSARY PRECAUTIONS TO SAFEGUARD ALL EXISTING STRUCTURES AND UTILITIES. ANY DAMAGE DONE TO EXISTING UTILITIES SHALL BE REPAIRED BY THE CONTRACTOR AT NO EXPENSE TO THE MIAMI DADE WATER AND SEWER AUTHORITY.
2. WHEN A WATER MAIN PARALLELS A SEWER MAIN, A HORIZONTAL SEPARATION OF LEAST 10' - 0" SHALL BE MAINTAINED.
3. WHERE A WATER MAIN CROSSES OVER A SEWER MAIN WITH LESS THAN 18" VERTICAL CLEARANCE, THE SEWER SHALL BE 20 FEET OF EITHER CAST IRON PIPE OR CONCRETE ENCASED P.V.C. CENTERED ON THE POINT OF CROSSING. WHEN A WATER MAIN CROSSES UNDER A SEWER LINE, THE ABOVE MENTIONED PRECAUTIONS SHALL BE OBSERVED REGARDLESS OF THE VERTICAL SEPARATIONS.

NOTES PER DEPARTMENT OF HEALTH
(NOT PART OF W.A.S.D. NOTES NOR APPROVAL)

1. STORM DRAINAGE LINES ARE TREATED THE SAME AS SANITARY SEWER LINES. EXFILTRATION DRAINAGE TRENCHES ARE EXEMPTED.
2. MINIMUM 10 FEET HORIZONTAL SEPARATION BETWEEN WATER MAINS AND SEWER LINES IS REQUIRED. IF UNABLE TO MAINTAIN MINIMUM SEPARATION HORIZONTALLY, EACH PIPE SHALL BE SHELVED A MINIMUM 18 INCHES VERTICAL SEPARATION.
3. FORCE MAINS MUST HAVE AN 18-INCH VERTICAL SEPARATION FROM WATER LINES. NO EXCEPTIONS.
4. SEWER LINES, INCLUDING LATERALS, MUST HAVE 18-INCH VERTICAL CLEARANCE BETWEEN WATER MAINS AND/OR 6 INCHES MINIMUM CLEARANCE IF SEWER LINE IS DIP AND HAS NO JOINTS WITHIN 10 FEET OF INTERSECTION (I.E., ONE 20 FT. JOINT DIP CENTERED ON INTERSECTION). STORM DRAINAGE LINES ARE EXEMPT IF DIP WATER MAIN SEPARATION OF 6" IS MAINTAINED AND BOTH PIPES HAVE NO JOINTS WITHIN 10 FEET OF INTERSECTION.

RECORD SET

The information presented on this drawing is diagrammatic and is presented for general information purposes and should not be relied on for accuracy of dimensions, details and locations. Actual and exact conditions if required should be determined in the field.

811 KNOW WHAT'S BELOW ALWAYS CALL 811 BEFORE YOU DIG
It's free. It's three. It's the law.
www.callsunshine.com

SEAL
JORGE L. CAMERO
REG. 32545 EB0000427
CIVIL ENGINEER

REVISIONS

VILLAGE OF PALMETTO BAY CITY HALL
MASTER BUILDING
PALMETTO BAY, MIAMI-DADE COUNTY, FLORIDA

CAMERO + ASSOCIATES, INC.
ENGINEERS PLANNERS
14000 SW. 50th TERR. SUITE 204 MIAMI, FL 33185
(305) 665-1602 FAX (305) 665-8488

SCALE: 1"=30'
DATE: 10-16-09
DRAWN BY: F.A.
CHECKED BY: J.L.C.
PROJECT#: 09-127

C-5

INSPECTOR NOTE
STRUCTURAL COMPONENTS WERE DESIGNED BASED ON THE FBC 2007, W/ 2009 AMENDMENTS, BUILDING CODE HVHZ SECTIONS.

NOTES
1. CONC. SHALL BE 5,000 PSI @ 28 DAYS, 5" SLUMP MAX.
2. ALL STEEL REINFORCING SHALL BE GRADE 60 Ksi
3. CONTRACTOR SHALL TAKE ADEQUATE PRECAUTION WHEN STRIPPING THE SHORING FROM THE CONFINED SPACE.
4. SHORING MAY BE REMOVED ONCE THE CONC. HAS CURED A MIN. OF 7 DAYS AND REACHED A COMPRESSIVE STRENGTH OF 3,500 PSI.
5. COORIDINATE ANY OTHER VENT OR PIPING OPENINGS WITH APPROVED DOCUMENTATION
6. NOTIFY THIS ENGINEER OF ANY DISCREPANCIES.

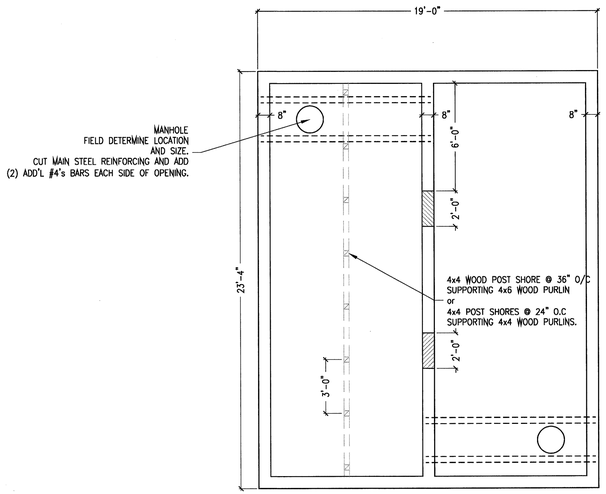

PLAN VIEW #2
SCALE: 1/4" = 1'-0"

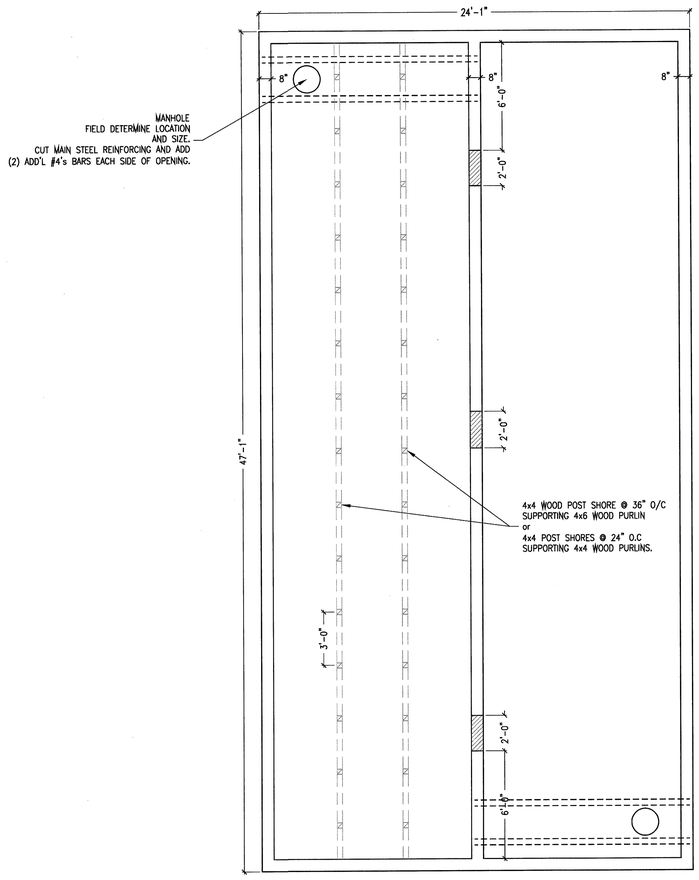

PLAN VIEW #1
SCALE: 1/4" = 1'-0"

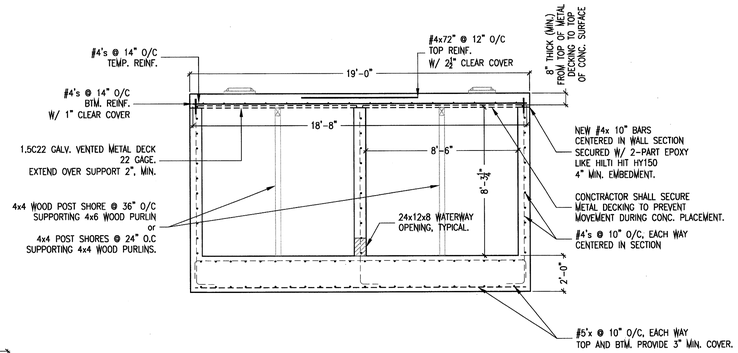

2 S-1 CISTERN #2
SCALE: 1/4" = 1'-0"

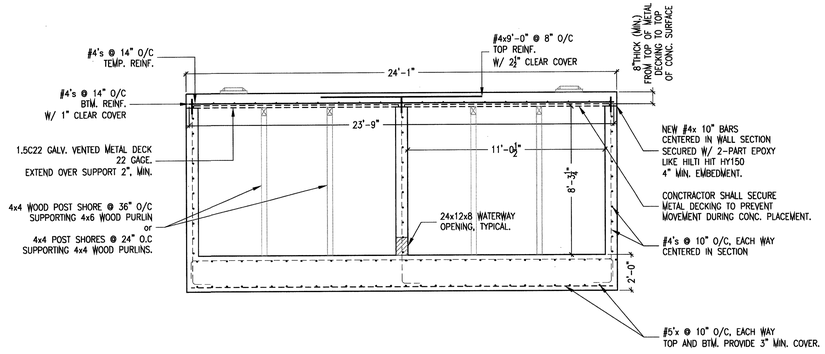

1 S-1 CISTERN #1
SCALE: 1/4" = 1'-0"

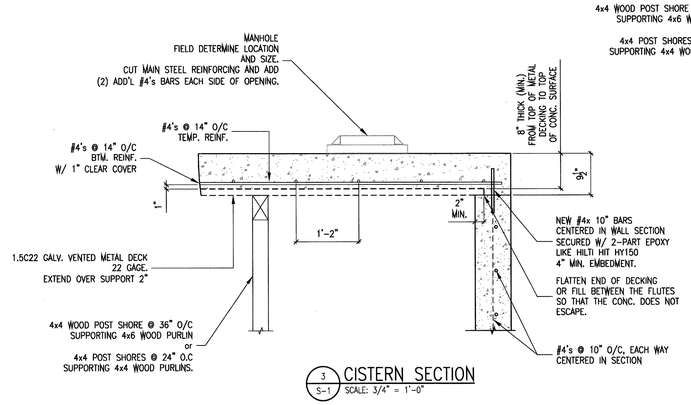

3 S-1 CISTERN SECTION
SCALE: 3/4" = 1'-0"

RECORD SET
The information presented on this drawing is diagrammatic and is presented for general information purposes and should not be relied on for accuracy of dimensions, details and locations. Actual and exact conditions if required should be determined in the field.

The use of these specifications and plans shall be restricted to the original client and site for which they were prepared. Any reproduction or distribution is expressly limited to such use. Any other reproduction, reuse, or disclosure by any method, in whole or in part, is prohibited. These drawings and specifications contain proprietary information and title remains with
Specialty Engineering Consultants, Inc.

SHEET INFORMATION
CISTERN
FOUNDATION

PROJECT INFORMATION
TOWN HALL
9705 E. HIBISCUS STREET
PALMETTO BAY, FL

CLIENT INFORMATION
CURRENT BUILDERS
2251 BLOUNT ROAD
POMPANO BEACH, FL

SPECIALTY ENGINEERING CONSULTANTS, Inc
1599 SW 30th AVE.
SUITE #20
BOYNTON BEACH, FL 33426

DADE - BROWARD - PALM BEACH
FL. CA. #009217

561 - 752 - 5440 OFFICE
561 - 752 - 5542 FAX

FILE NAME.
struct_cistern_PalmettoBay_Current
SCALE 1/4"=1'-0"
DATE 2/9/11
RV'D. BY G.McD.
DRWN. BY G.McD.

REVISION 1

SEAL
GARY McDOUGLE, PE FL #56214

SHEET # S1 OF 1

Z:\Drwgs 2009\Projects\Current\Builders\Permits Revs\struct_cistern_PalmettoBay_Current_2-Aug_2010@1:1 2:39:51 PM

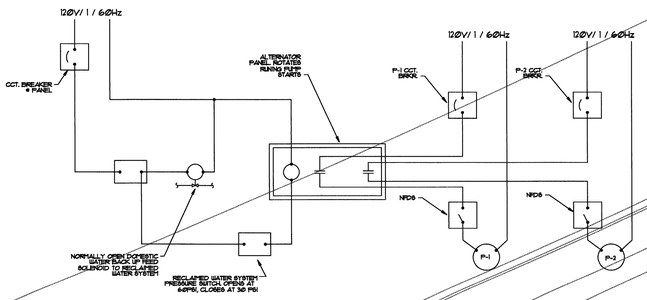

RECLAIMED WATER SYSTEM CONTROL DIAGRAM
N.T.S.

COORDINATE WITH CIVIL ENGINEER PROFILES,DEPTH AND ROUTING OF RAIN WATER COLLECTION AND MINIMUM SIZE REQUIREMENTS FOR COLLECTION TANK TO BE MIN 48" SQUARE DEPTH BY CIVIL ENGINEER

2" SCDL 40 PURPLE PVC WATER SUPPLY INTO BUILDING

DRAINGE LINE

SANITARY SERVICE

2" WATER FLOW METER

2" BACK-FLOW PREVENTOR W/ FLOW METER

TANK #2

TANK #1
(20,000 GALS BY OTHERS FOR DISTRIBUTION TO URINALS AND WATER CLOSETS PROVIDE A 2" WATER CONNECTION TO CISTERN SEE PD-2 FOR DETAILS COORDINATE WITH BUILDING ENGINEER, CIVIL AND SITE ENGINEER FOR ALL CONNECTIONS TO CISTERN
CISTERN CONTRACTOR TO PROVIDE SHOP DRAWING AND CUTSHEETS FOR EQUIPMENT TO BE INSTALLED

DOMESTIC SUPPLEMENTAL WATER SUPPLY LINE 3/4" LINE WITH BACK FLOW PREVENTOR AND ¾" FLOW METER

6" OVER FLOW

8" PIPE TO CISTERN FROM COLLECTION BOX

CONCRETE COLLECTION BOX FROM ROOF DRAIN AND SITE DRAIN
MECHANICAL FILTRATION TO BE PROVIDED WITH SEDIMENT TRAP FOR MAINTENANCE

PUMP, CHLORINATING EQUIPMENT, DYE EQUIPMENT AND BACK-FLOW PREVENTOR LOCATION BACK FLOW PREVENTOR TO BE CONNECTED BEFORE ENTERING BUILDING COORDINATE WITH BUILDING ENGINEER OF WATER SUPPLY FROM CISTERN, ROUTING AND PROPER DISTRIBUTION

3 HP PUMP BY IRRIGATION AND LANDSCAPE ARCHITECTC

6" OVER FLOW

40,000 GAL CISTERN BY OTHERS
CONTRACTOR TO PROVIBE SHOP DRAWINGS FOR INSTALLATION
CISTERN USE FOR LANDSCAPE IRRIGATION
LANSCAPE COMPANY TO PROVIDE INFORMATION OF PUMP SIZE AND LANSCARE IRRIGATION PLAN

DOMESTIC SUPPLEMENTAL WATER SUPPLY LINE ¾" LINE WITH BACK FLOW PREVENTOR AND ¾" FLOW METER

10" PIPE TO CISTERN FROM COLLECTION BOX

CONCRETE COLLECTION BOX FROM ROOF DRAIN AND SITE DRAIN
MECHANICAL FILTRATION TO BE PROVIDED WITH SEDIMENT TRAP FOR MAINTENANCE

LOT 8 OF BLOCK 40
(PB. B - PG. 75)

LOT 7
(P

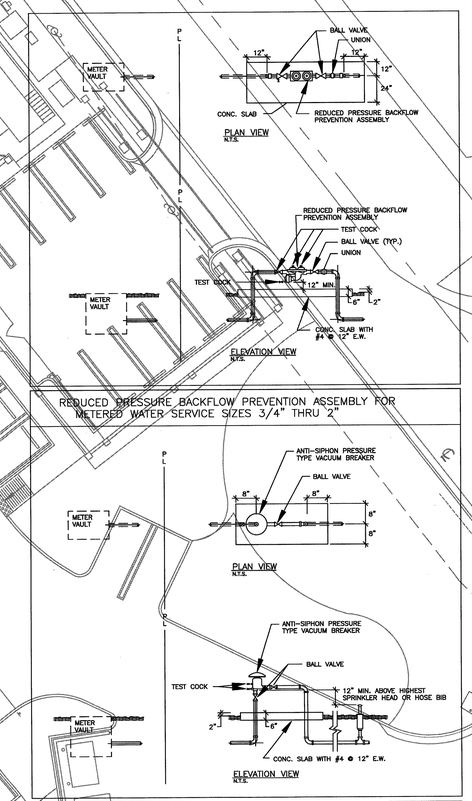

EMF ENGINEERING
14335 SW 120 street
Suite 214
Miami, Florida, 33186
phone # (305-408-4025)
fax # (305-408-4026)
email-emfengineering@bellsouth.n

APPROVALS/REVISIONS

NOTES:

Cistern Design
VILLAGE OF PALMETTO BAY - VILLAGE HALL
MASTER BUILDING
9705 EAST HIBISCUS STREET
PALMETTO BAY, MIAMI-DADE COUNTY, FLORIDA

SEAL

RECORD SET
The information presented on this drawing is diagrammatic and is presented for general information purposes and should not be relied on for accuracy of dimensions, details and locations. Actual and exact conditions if required should be determined in the field.
ENRIQUE L. FERNANDEZ P.E.
FL. REG. # 21218

PROJECT:

OWNER CONTACT: OWNER TELEPHONE:

SHEET TITLE:

CISTERN PLAN

Job No. Drawing No.
Drawn By:
Date:
Scale: 1/16"=1'-0"

PD 1

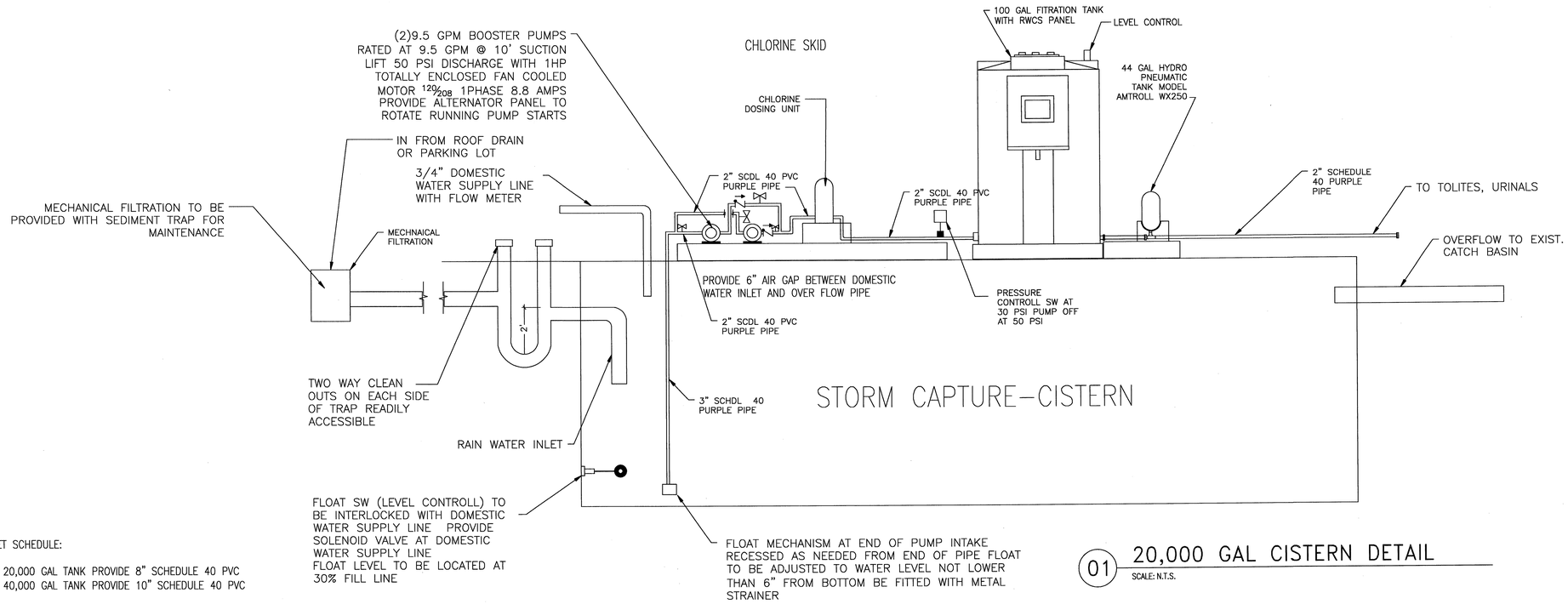

01 20,000 GAL CISTERN DETAIL

SCALE: N.T.S.

PIPE INLET SCHEDULE:

FOR THE 20,000 GAL TANK PROVIDE 8" SCHEDULE 40 PVC
FOR THE 40,000 GAL TANK PROVIDE 10" SCHEDULE 40 PVC

PIPE OUTLET SCHEDULE:

FOR THE 20,000 GAL TANK PROVIDE 2" SCHEDULE 40 PVC
FOR THE 40,000 GAL TANK PROVIDE 2" SCHEDULE 40 PVC

PUMP SCHEDULE:

FOR 20,000 GAL TANK: 1 HP PUMP
FOR THE 40,000 GAL TANK: 3 HP PUM BY IRRIGATION ARCHITECT

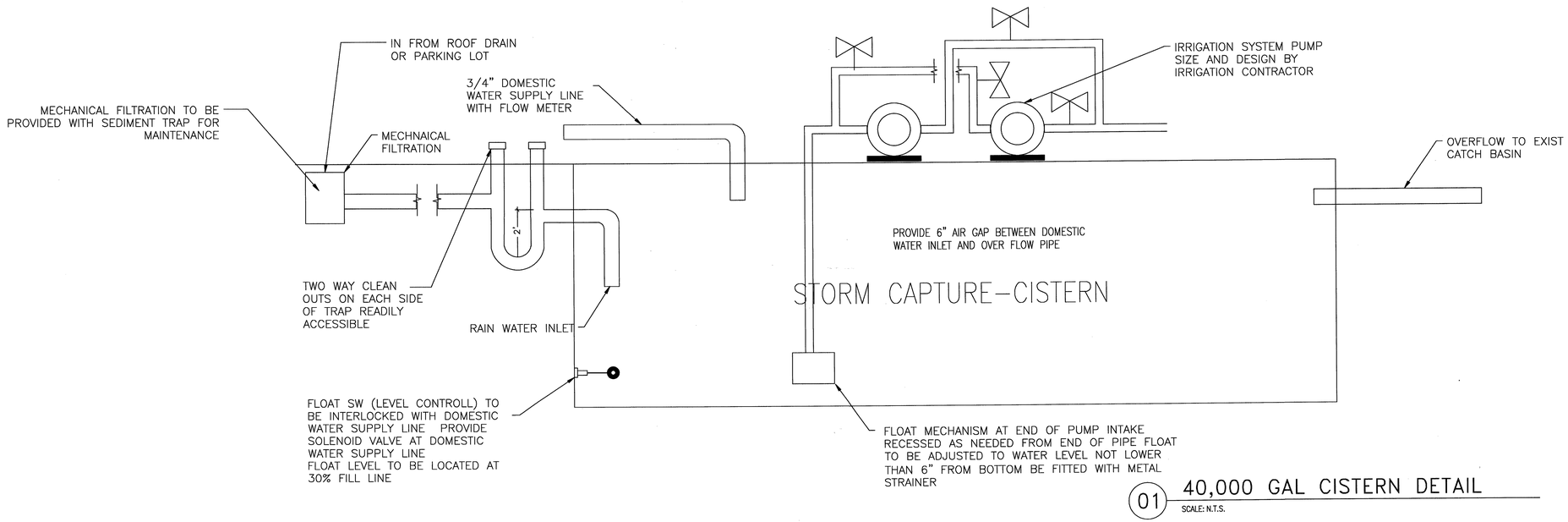

01 40,000 GAL CISTERN DETAIL

SCALE: N.T.S.

EMF ENGINEERING
14335 SW 120 street
Suite 214
Miami, Florida, 33186
phone # (305-408-4025)
fax # (305-408-4026)
email-emfengineering@bellsouth.n

APPROVALS/REVISIONS

NOTES:

Cistern Design
VILLAGE OF PALMETTO BAY - VILLAGE HALL
MASTER BUILDING
9705 EAST HIBISCUS STREET
PALMETTO BAY, MIAMI-DADE COUNTY, FLORIDA

SEAL

RECORD SET

The information presented on this drawing is diagrammatic and is presented for general information purposes and should not be relied on for accuracy of dimensions, details and locations. Actual and exact conditions if required should be determined in the field.

ENRIQUE L. FERNANDEZ P.E.
FL. REG. # 21218

PROJECT:

OWNER CONTACT: OWNER TELEPHONE:

SHEET TITLE:

Cistern details

Job No. Drawing No.

Drawn By:

Date:

Scale: N.T.S.

PD 2

Date printed: 2010-09-01

Palmetto Bay Municipal Center

Village of Palmetto Bay, Florida

98% Construction Documents - Not for Construction

September 1, 2010

LIST OF DRAWINGS

L1.00 SITE PLAN
L2.00 MATERIALS PLAN - WEST
L2.01 MATERIALS PLAN - EAST
L3.01 LAYOUT PLAN - WEST
L4.00 DETAILS - SITE PAVING
L4.01 DETAILS - PAVING ENLARGEMENTS
L4.02 DETAILS - FOUNTAIN PLAZA
L4.03 DETAILS - SITE
L4.04 PAVING SPECIFICATIONS
L5.00 PLANTING PLAN - WEST
L5.01 PLANTING PLAN - EAST
L5.02 LANDSCAPE NOTES & PLANT LIST
L5.03 PLANTING DETAILS
L5.04 LANDSCAPE SPECIFICATIONS
L6.00 IRRIGATION PLAN - WEST
L6.01 IRRIGATION PLAN - EAST
L6.02 IRRIGATION LEGEND & NOTES
L6.03 IRRIGATION DETAILS
L6.04 IRRIGATION SPECIFICATIONS

VILLAGE OF PALMETTO BAY COUNCIL

MAYOR:	EUGENE P. FLINN, JR.
VICE MAYOR:	BRIAN W. PARISER
COMMISSIONERS:	EDWARD J. FELLER, MD
	HOWARD J. TENDRICH
	SHELLEY STANCZYK
VILLAGE MANAGER:	RON E. WILLIAMS

O'Leary Richards Design Associates, Inc.
Landscape Architecture & Planning

Oak Plaza Professional Center
8525 SW 92nd Street, Suite C-11, Miami, FL 33156
p. 305.596.6628 f. 305.596.9160
www.olearyrichards.com

RECORD SET

The information presented on this drawing is diagrammatic and is presented for general information purposes and should not be relied on for accuracy of dimensions, details and locations. Actual and exact conditions if required should be determined in the field.

p:\olearyprojects2010\projects\palmetto bay village hall\cad\M3.0 cover sheet.dwg

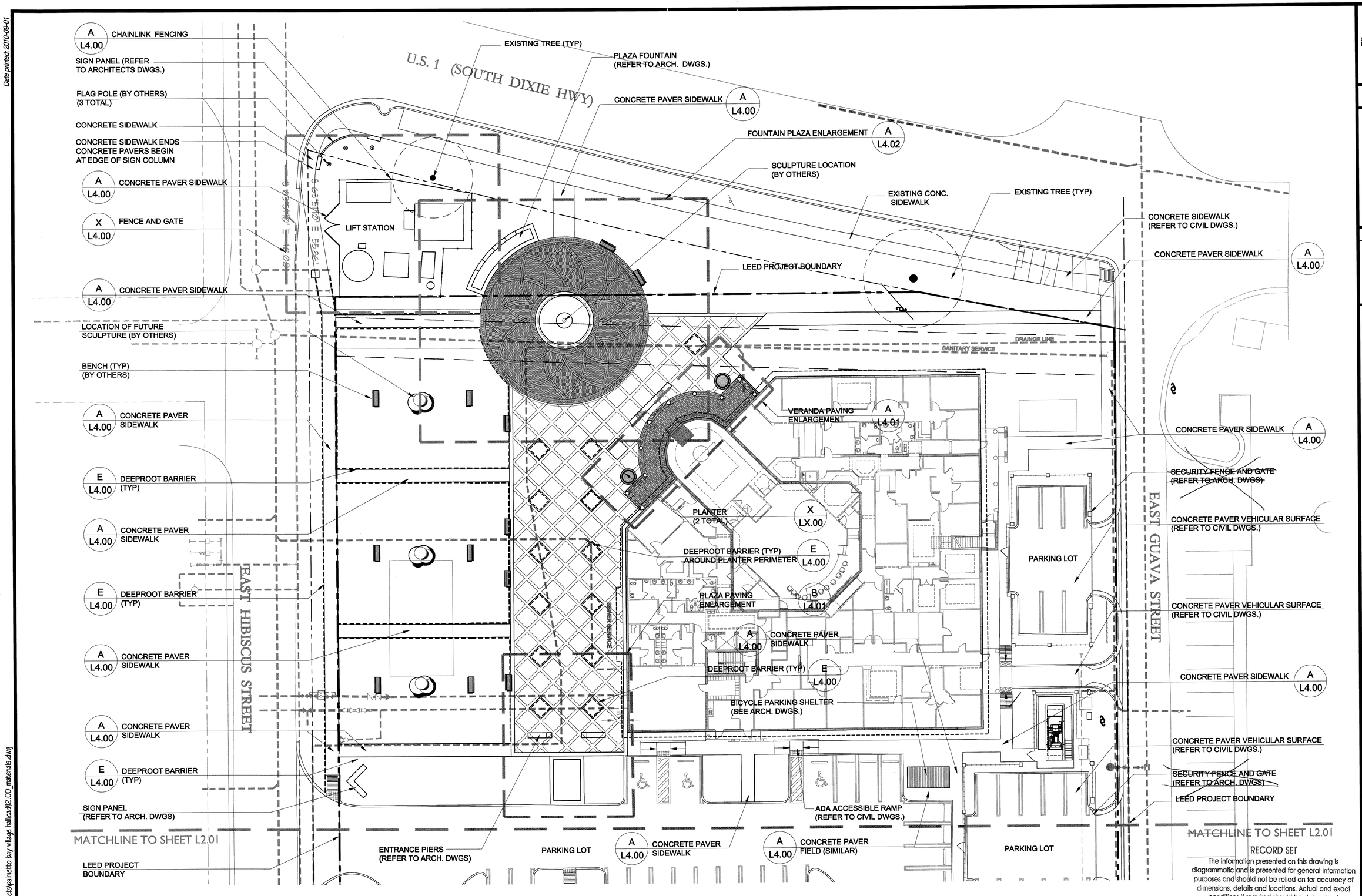

1 L2.00 MATERIALS PLAN
SCALE: 1"=16'-0"

RECORD SET

The information presented on this drawing is diagrammatic and is presented for general information purposes and should not be relied on for accuracy of dimensions, details and locations. Actual and exact conditions if required should be determined in the field.

PROGRESS SET - NOT FOR CONSTRUCTION

Date printed: 2010-09-01

p:\ordaprojects\2010 projects\palmetto bay village hall\cad\l2.00_materials.dwg

KATHRYN O'LEARY RICHARDS, ASLA
FL. LANDSCAPE ARCHITECT
FL. LA REG. NO. 1317

O'Leary Richards Design Associates, Inc.
Landscape Architecture & Planning

Oak Plaza Professional Center
8525 SW 92nd Street, Suite C-11
Miami, Florida 33156
p. 305.596.6628 f. 305.596.9160
www.olearyrichards.com

PREPARED FOR:

VILLAGE OF PALMETTO BAY

PALMETTO BAY MUNICIPAL CENTER

PALMETTO BAY, FLORIDA

ISSUE DATE: September 1, 2010

REVISION DATE:

SCALE: AS NOTED
DRAWN BY: CES
CHECKED BY: KOR

DRAWING TITLE

Materials Plan - West

SHEET NUMBER

L2.00

OF

Date printed: 2010-09-01

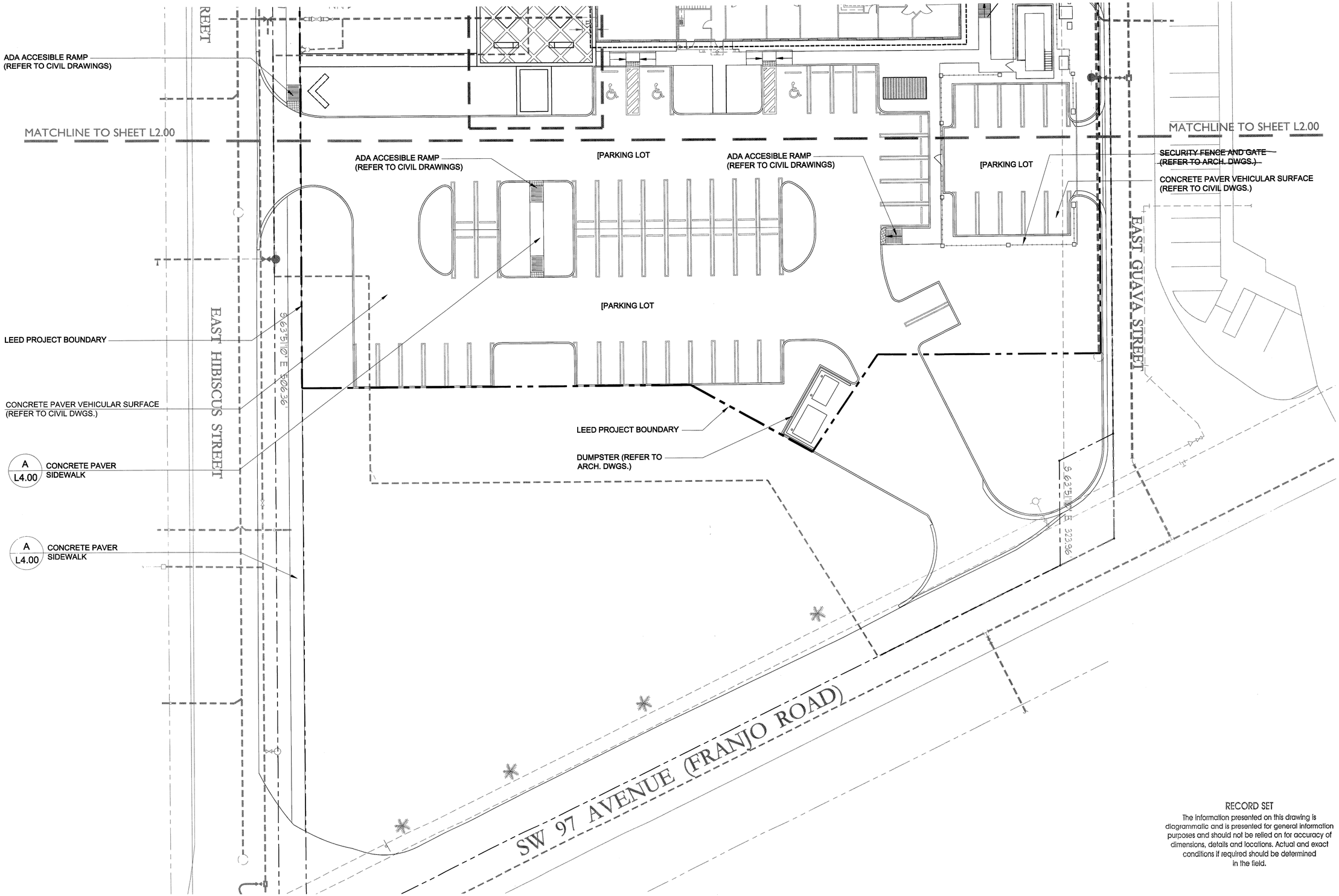

1 L2.01 MATERIALS PLAN
SCALE: 1"=16'-0"

RECORD SET
The information presented on this drawing is diagrammatic and is presented for general information purposes and should not be relied on for accuracy of dimensions, details and locations. Actual and exact conditions if required should be determined in the field.

NORTH

0 8 16 32 64 FT
SCALE: 1" = 16'-0"

PROGRESS SET - NOT FOR CONSTRUCTION

SEAL

KATHRYN O'LEARY RICHARDS, ASLA
FL. LANDSCAPE ARCHITECT
FL. LA REG. NO. 1317

O'Leary Richards Design Associates, Inc.
Landscape Architecture & Planning

Oak Plaza Professional Center
8525 SW 92nd Street, Suite C-11
Miami, Florida 33156
p. 305.596.6628 f. 305.596.9160
www.olearyrichards.com

PREPARED FOR:

VILLAGE OF PALMETTO BAY

PALMETTO BAY MUNICIPAL CENTER

PALMETTO BAY, FLORIDA

ISSUE DATE: September 1, 2010

REVISION DATE:

SCALE: AS NOTED
DRAWN BY: CES
CHECKED BY: KOR

DRAWING TITLE
Materials Plan - East

SHEET NUMBER
L2.01
OF

P:\ondaprojects\2010 projects\palmetto bay village hall\cad\L2.01_materials.dwg

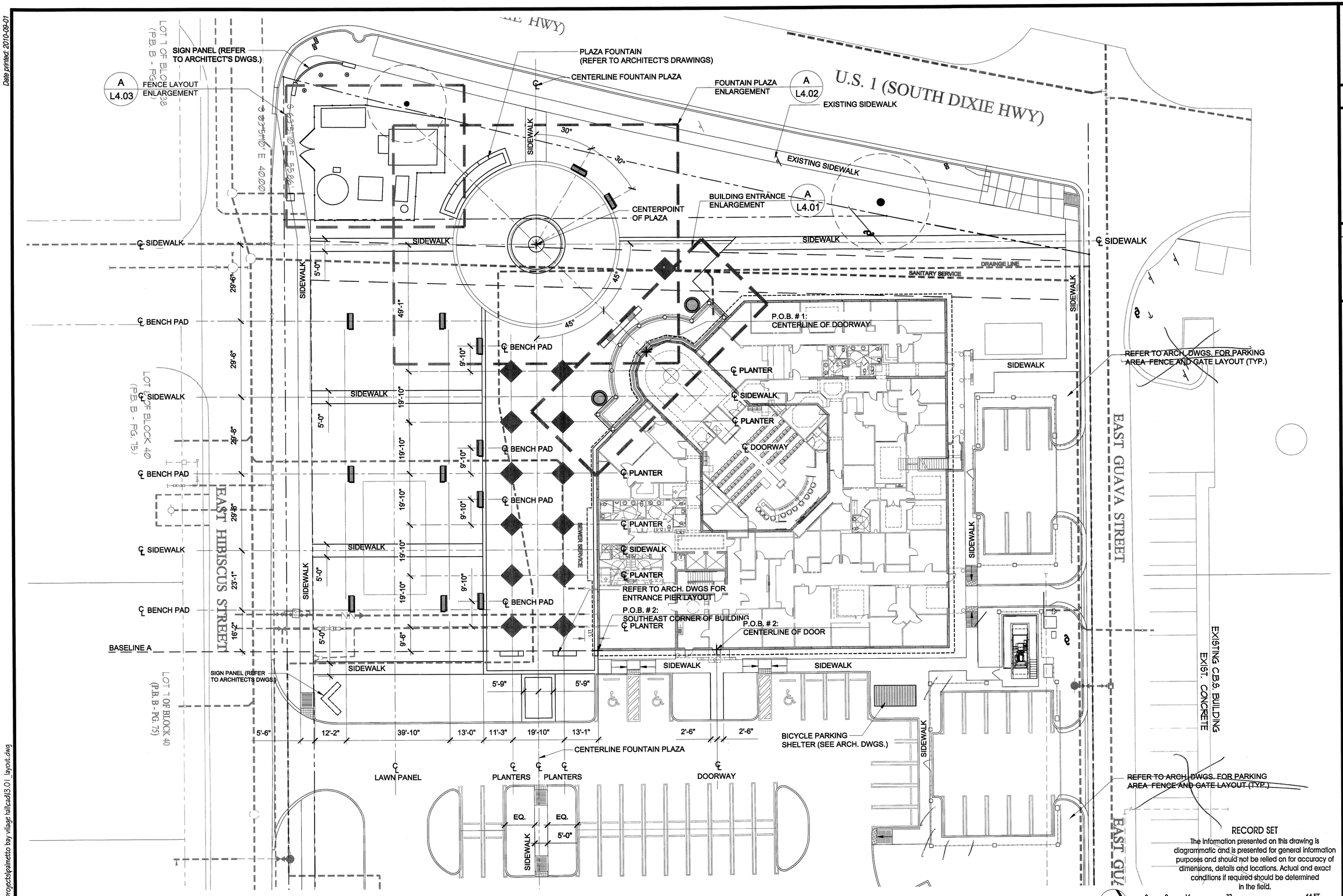

1 L3.01 LAYOUT PLAN
SCALE: 1"=16'-0"

NOTE:
REFER TO CIVIL DRAWINGS FOR LAYOUT AND DIMENSIONS OF ALL PARKING AND PERIMETER SIDEWALK LOCATIONS.

RECORD SET
The information presented on this drawing is diagrammatic and is presented for general information purposes and should not be relied on for accuracy of dimensions, details and locations. Actual and exact conditions if required should be determined in the field.

PROGRESS SET - NOT FOR CONSTRUCTION

SEAL

KATHRYN O'LEARY RICHARDS, ASLA
FL LANDSCAPE ARCHITECT
FL LA REG. NO. 1317

O'Leary Richards Design Associates, Inc.
Landscape Architecture & Planning
Oak Plaza Professional Center
8525 SW 92nd Street, Suite C-11
Miami, Florida 33156
p. 305.596.6628 f. 305.596.9160
www.olearyrichards.com

PREPARED FOR:
VILLAGE OF PALMETTO BAY

PALMETTO BAY MUNICIPAL CENTER
PALMETTO BAY, FLORIDA

ISSUE DATE: September 1, 2010
REVISION DATE:

SCALE: AS NOTED
DRAWN BY: CES
CHECKED BY: KOR

DRAWING TITLE
Layout Plan

SHEET NUMBER
L3.01
OF

Date printed: 2010-09-01

p:\ordaprojects\2010 projects\palmetto bay village hall\cad\l3.01_layout.dwg

Date printed: 2010-09-01

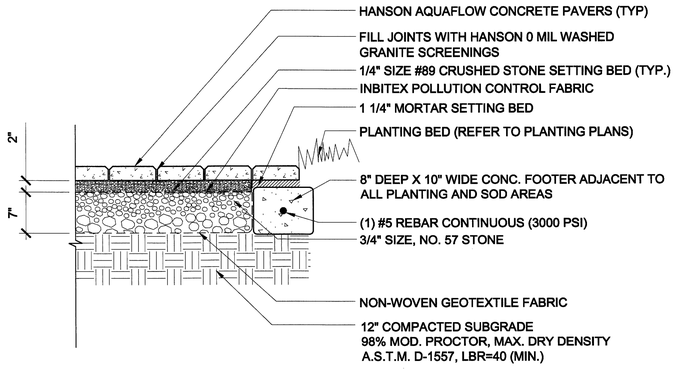

A L4.00 TYPICAL PEDESTRIAN PAVING - PERMEABLE PAVEMENT (ADJACENT TO PLANTING BEDS) Scale: 1" = 1'-0"

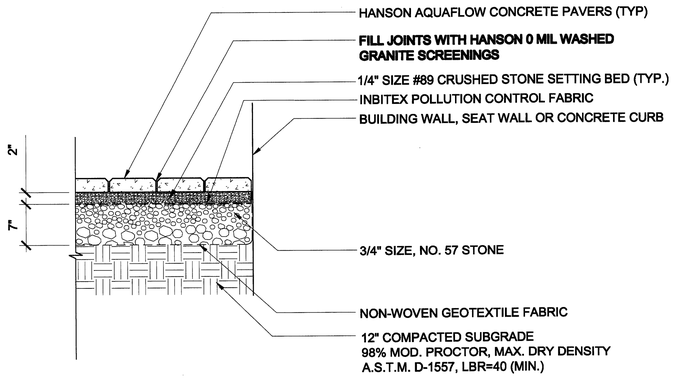

B L4.00 TYPICAL PEDESTRIAN PAVING - PERMEABLE PAVEMENT (ADJACENT TO WALLS) Scale: 1" = 1'-0"

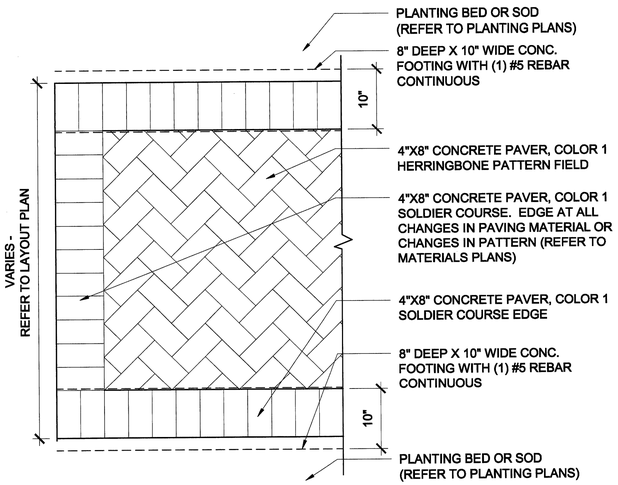

PLAN
SCALE: 1/2"=1'-0"

C L4.00 TYPICAL CONCRETE PAVER SIDEWALKS Scale: 1/2" = 1' - 0"

PAVING NOTES:

1. REFER TO CIVIL PLANS FOR ALL GRADING, DRAINAGE AND UTILITY INFORMATION.
2. PAVERS SHALL BE IN CONFORMANCE WITH ASTM C-936-82
3. WHERE REQUIRED, CUT PAVERS WITH A MANUFACTURED-APPROVED CUTTER. TO FIT NEATLY AND WITHOUT DAMAGED EDGES. NO CUT PIECES SHALL BE LESS THAN 4" SQUARE.
4. AFTER INSTALLATION, ALL CONCRETE PAVERS SHALL BE SEALED WITH A SOLVENT BASE ACRYLIC SEALER 'CRYSTAL CLEAR SEALER' BY COBBLE COAT OF POMPANO BEACH, FL (CONTACT TEL 954-971-9111) OR APPROVED EQUAL. APPLY 2 THIN COATS (2-3 MILS) PRIOR TO FILLING JOINTS WITH GRANITE SCREENING AS PER MANUFACTURER'S RECOMMENDATIONS.

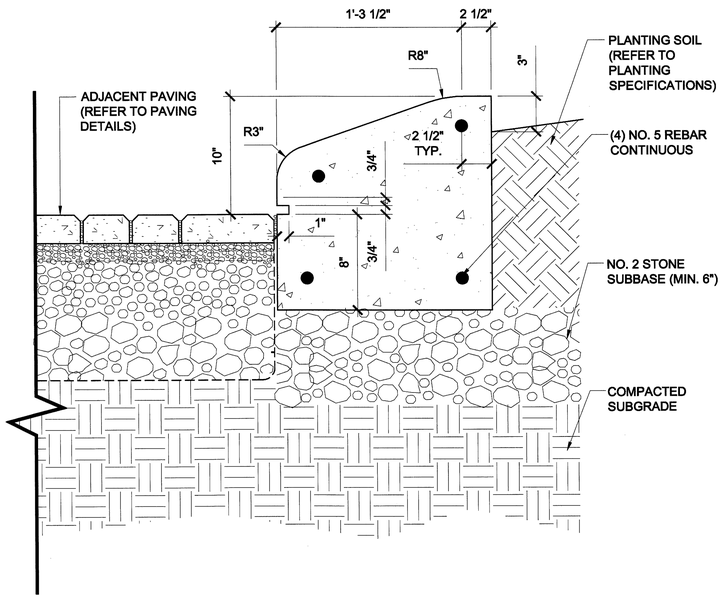

D L4.00 CONCRETE PLANTER Scale: 1/2" = 1'-0"

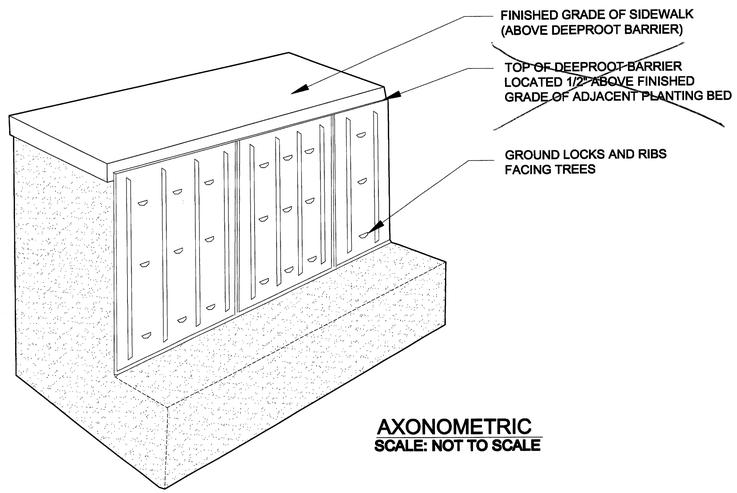

AXONOMETRIC
SCALE: NOT TO SCALE

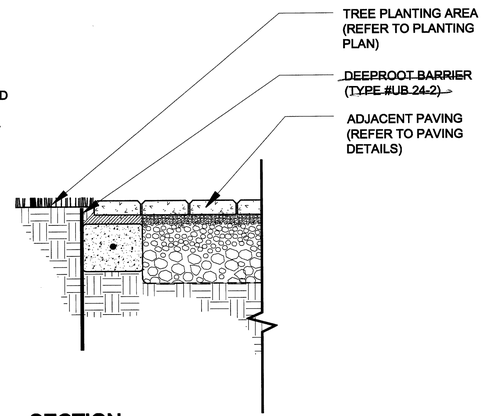

SECTION
SCALE: 1/2"=1'-0"

RECORD SET
The information presented on this drawing is diagrammatic and is presented for general information purposes and should not be relied on for accuracy of dimensions, details and locations. Actual and exact conditions if required should be determined in the field.

E L4.00 DEEPROOT INSTALLATION BARRIER
APPROXIMATELY 1280 LINEAR FEET (CONTRACTOR TO VERIFY) Scale: As Noted

PROGRESS SET - NOT FOR CONSTRUCTION

SEAL

KATHRYN O'LEARY RICHARDS, ASLA
FL LANDSCAPE ARCHITECT
FL. LA REG. NO. 1317

O'Leary Richards Design Associates, Inc.
Landscape Architecture & Planning

Oak Plaza Professional Center
8525 SW 92nd Street, Suite C-11
Miami, Florida 33156
p. 305.596.6628 f. 305.596.9160
www.olearyrichards.com

PREPARED FOR:

VILLAGE OF PALMETTO BAY

PALMETTO BAY MUNICIPAL CENTER
PALMETTO BAY, FLORIDA

ISSUE DATE: September 1, 2010
REVISION DATE:

SCALE: AS NOTED
DRAWN BY: CES
CHECKED BY: KOR

DRAWING TITLE
Details - Site Paving

SHEET NUMBER
L4.00
OF

p:\ordaprojects\2010 projects\palmetto bay village hall\cad\l4.00_details_site.dwg

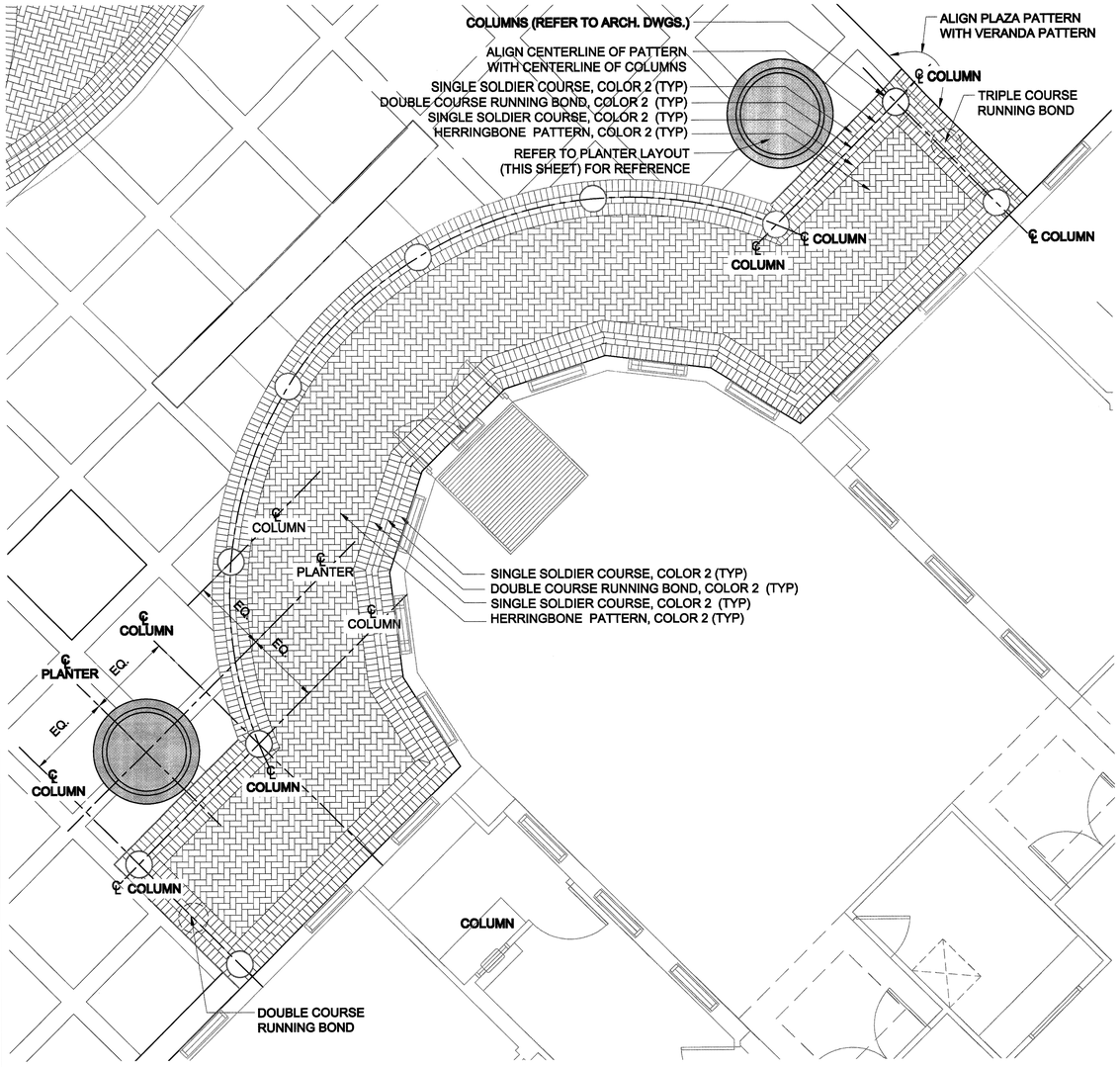

A L4.01 BUILDING ENTRANCE VERANDA PAVING PATTERN ENLARGEMENT

SCALE: 1"=4'-0"

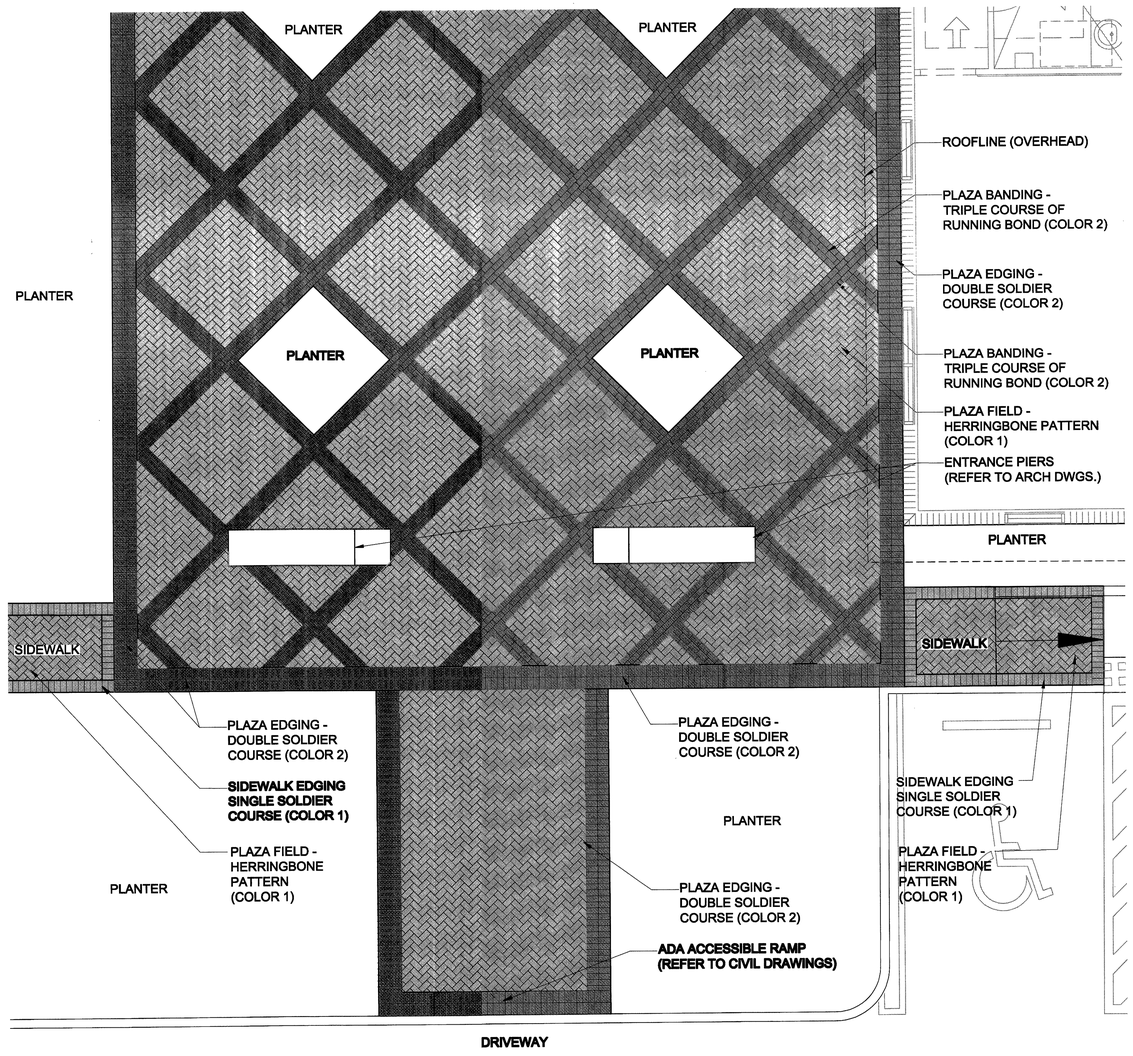

B L4.01 PLAZA PAVING PATTERN ENLARGEMENT

SCALE: 1"=4'-0"

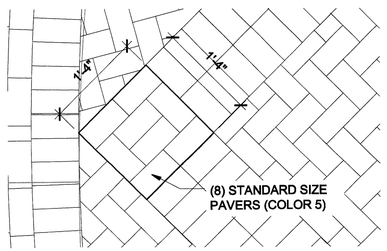

ACCENT PAVER TYPE 1

Scale: 1" = 1' - 0"

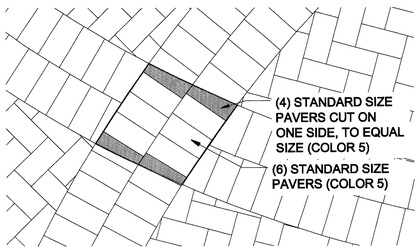

ACCENT PAVER TYPE 2

Scale: 1" = 1' - 0"

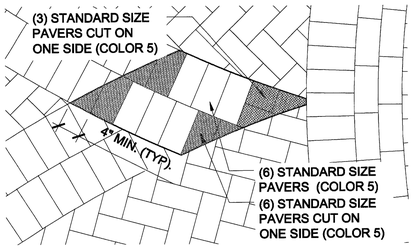

ACCENT PAVER TYPE 3

Scale: 1" = 1' - 0"

C L4.01 FOUNTAIN PLAZA PAVING ENLARGEMENT

Scale: As Noted

PAVER COLOR LEGEND

COLOR #	COLOR NAME/DESCRIPTION	PAVER COLOR CODE / % OF FIELD
COLOR 1	SANDSTONE BLEND	60% COLOR P2 WITH 40% COLOR P28
COLOR 2	CAMEL BLEND	60% COLOR E8 WITH 40% COLOR E24
COLOR 3	PARKING BLEND	60% COLOR P225 WITH 40% COLOR E58. ALL STRIPING WILL BE COLOR P2.
COLOR 4	BLUE	100% CUSTOM COLOR SB65 (5%)
COLOR 5	YELLOW	100% CUSTOM COLOR SB144 (5%)
COLOR 6	MOSS GREEN (LIGHT)	TBD
COLOR 7	MOSS GREEN (MEDIUM)	TBD
COLOR 8	MOSS GREEN (DARK)	TBD
COLOR 9	SANDSTONE	100% COLOR P2

PAVER TYPE:
AQUAFLOW PERMEABLE PAVER

MANUFACTURER:
HANSON HARDSCAPES
1590 North Andrews Avenue Ext.
Pompano Beach, FL 33069
TEL (954) 972-7400 | (800) 273-7084
CONTACT: Jose Gonzalez

RECORD SET

The information presented on this drawing is diagrammatic and is presented for general information purposes and should not be relied on for accuracy of dimensions, details and locations. Actual and exact conditions if required should be determined in the field.

PROGRESS SET - NOT FOR CONSTRUCTION

SEAL

KATHRYN O'LEARY RICHARDS, ASLA
FL. LANDSCAPE ARCHITECT
FL. LA REG. NO. 1317

O'Leary Richards Design Associates, Inc.
Landscape Architecture & Planning
Oak Plaza Professional Center
8525 SW 92nd Street, Suite C-11
Miami, Florida 33156
p. 305.596.6628 f. 305.596.9160
www.olearyrichards.com

PREPARED FOR:

VILLAGE OF PALMETTO BAY

PALMETTO BAY MUNICIPAL CENTER

PALMETTO BAY, FLORIDA

ISSUE DATE: September 1, 2010

REVISION DATE:

SCALE: AS NOTED
DRAWN BY: CES
CHECKED BY: KOR

DRAWING TITLE

Details- Paving Enlargements

SHEET NUMBER

L4.01

OF

Date printed: 2010-09-01

p:\lorodaprojects\2010 projects\palmetto bay village hall\cad\l4.01 _details _ paving.dwg

Date printed: 2010-09-01

PLAZA FOUNTAIN
(REFER TO ARCHITECT'S DRAWINGS)

C.P. #1
CENTER POINT OF ARC #1 (TYP)

CENTERLINE PETAL BAND

℄ CENTER LINE OF PETAL PATTERN

CENTERLINE OF PETAL BAND

℄ CENTER LINE OF PETAL PATTERN

℄ CENTER LINE OF PETAL PATTERN

POINT OF TANGENCY

POINT OF TANGENCY

C.P. #2
CENTER POINT OF ARC #2 (TYP)

℄ CENTER LINE OF PETAL PATTERN

℄ CENTER LINE OF PETAL PATTERN

R17'-6 1/2"

ALIGN C.L. OF FIXTURE WITH C.L. OF PATTERN

9'-1 1/2"

9'-1 1/2"

14'-9"

14'-9"

15° TYP.

15° TYP.

30°

30°

30°

30°

30°

30°

1'-6"

2'-0"

17'-0 1/2"

2'-0"

22.5° TYP.

9'-7 1/2"

22.5° TYP.

CENTER POINT OF PLAZA

℄ CENTER LINE OF PLAZA

℄ CENTER LINE OF SIDEWALK

COLOR 7

COLOR 6

COLOR 7

COLOR 6

COLOR 6

OUTERMOST BANDING COLOR 2 (TYP)

PETAL BANDING COLOR 8 (TYP)

OUTERMOST BANDING COLOR 2 (TYP)

PETAL BANDING COLOR 8 (TYP)

COLOR 9

COLOR 9

CONCRETE PLANTER
(REFER TO SHEET L4.00)

COLOR 7

COLOR 6

COLOR 4

COLOR 6

COLOR 7

COLOR 6

COLOR 6

LIGHTING FIXTURE EMBEDDED IN 8"X 8" CONCRETE BASE, 8 TOTAL (REFER TO LIGHTING PLANS)

PLANTER LIGHTING FIXTURE, EIGHT TOTAL (REFER TO LIGHTING PLANS)

COLOR 9

COLOR 7

COLOR 7

COLOR 9

C / L4.01 ACCENT PAVER TYPE 1
COLOR 5 (TYP)

C / L4.01 **ACCENT PAVER TYPE 2**
COLOR 5 (TYP)

C / L4.01 ACCENT PAVER TYPE 2
COLOR 5 (TYP)

COLOR 7

COLOR 9

COLOR 9

COLOR 2

OUTERMOST BANDING COLOR 2 (TYP)

PETAL BANDING COLOR 8 (TYP)

RECORD SET

The information presented on this drawing is diagrammatic and is presented for general information purposes and should not be relied on for accuracy of dimensions, details and locations. Actual and exact conditions if required should be determined in the field.

NOTE:
1. REFER TO SHEET L4.01 FOR PAVER COLOR LEGEND.
2. REFER TO SHEET L4.00 FOR PAVER DETAILS AND NOTES.

A / L4.02 FOUNTAIN PLAZA ENLARGEMENT PLAN
SCALE: 1"=4'-0"

NORTH

0 2 4 8 16 FT
SCALE: 1" = 4'-0"

PROGRESS SET - NOT FOR CONSTRUCTION

SEAL

KATHERYN O'LEARY RICHARDS, ASLA
FL. LANDSCAPE ARCHITECT
FL. LA REG. NO. 1317

O'Leary Richards Design Associates, Inc.
Landscape Architecture & Planning

Oak Plaza Professional Center
8525 SW 92nd Street, Suite C-11
Miami, Florida 33156
p. 305.596.6628 f. 305.596.9160
www.olearyrichards.com

PREPARED FOR:

VILLAGE OF PALMETTO BAY

PALMETTO BAY MUNICIPAL CENTER

PALMETTO BAY, FLORIDA

ISSUE DATE:
September 1, 2010
REVISION DATE:
SCALE: AS NOTED
DRAWN BY: CES
CHECKED BY: KOR

DRAWING TITLE

Details-Fountain Plaza

SHEET NUMBER

L4.02

OF

p:\ord\projects\2010 projects\palmetto bay village hall\cad\l4.02_fountain plaza.dwg

Date printed: 2010-09-01

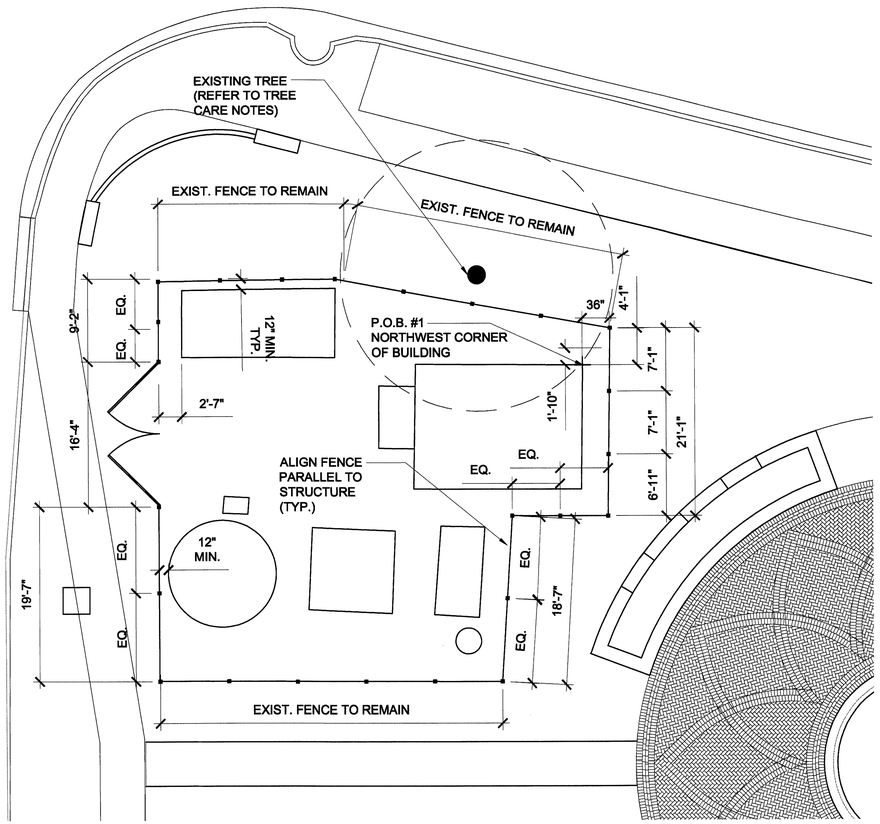

NOTE:
RELOCATE FENSE AS SHOWN USING EXISTING POSTS AND CHAIN LINK FENCING. ADD NEW FENCING AS NEEDED.

1 / L4.02 FENCE LAYOUT
SCALE: 1/8"= 1'-0"

RECORD SET
The information presented on this drawing is diagrammatic and is presented for general information purposes and should not be relied on for accuracy of dimensions, details and locations. Actual and exact conditions if required should be determined in the field.

PROGRESS SET - NOT FOR CONSTRUCTION

SEAL

KATHRYN O'LEARY RICHARDS, ASLA
FL. LANDSCAPE ARCHITECT
FL. LA REG. NO. 1317

O'Leary Richards Design Associates, Inc.
Landscape Architecture & Planning

Oak Plaza Professional Center
8525 SW 92nd Street, Suite C-11
Miami, Florida 33156
p. 305.596.6628 f. 305.596.9160
www.olearyrichards.com

PREPARED FOR:

VILLAGE OF PALMETTO BAY

PALMETTO BAY MUNICIPAL CENTER

PALMETTO BAY, FLORIDA

ISSUE DATE: September 1, 2010

REVISION DATE:

SCALE: AS NOTED
DRAWN BY: CES
CHECKED BY: KOR

DRAWING TITLE
Details-Site

SHEET NUMBER
L4.03
OF

p:\ord\projects\2010 projects\palmetto bay village hall\cad\l4.03_details_fence.dwg

Date printed: 2010-09-01

SECTION 02515
CONCRETE UNIT PAVERS

PART 1 - GENERAL

1.01 RELATED DOCUMENTS

A. Drawings and provisions of the Contract.

1.02 DESCRIPTION OF WORK

B. The CONTRACTOR shall furnish all concrete pavers, labor, materials, equipment and services necessary for, and reasonably incidental to the construction of finish paving as shown on the drawings and as specified herein.

1.03 SUBMITTALS

A. Shop Drawings: Before constructing a concrete paver sample and before laying any finished paving, the CONTRACTOR shall submit shop drawings of the paving pattern as indicated on the drawings. Such shop drawings shall show the layout of the paving bands, and proposed paving pattern to be installed. Shop drawings shall include measurements of paver sizes, joints, pattern layout and all dimensions as necessary.

B. Sample Panel: At a location to be approved by the Landscape Architect, the CONTRACTOR shall construct a sample panel, 8' x 8', using the concrete pavers and methods proposed for use in the finished Work. The panels shall demonstrate both the header course and paving pattern (including all colors specified) as shown on the drawings. The CONTRACTOR shall rebuild or review the sample panels as often as required to obtain the Owner's and Landscape Architect's approval of the pavers, pattern, cleaning and workmanship. The panel shall not be altered, moved or destroyed without the Owner's approval.

1. The CONTRACTOR shall coordinate the Work of this section with all other appropriate sections of the specification as necessary to insure that proper provisions are made for the Work of this section.

C. The CONTRACTOR shall submit the mixes and bedding systems they intend to use to the Owner's Representative for approval before the CONTRACTOR commences the Work.

D. Testing: Destructive testing reports for representative samples of unit pavers at no less than a ratio of 1 unit per 5,000 s.f. of surface area of installed pavers shall be forwarded to the Owner's Representative by an approved independent local testing firm contracted by CONTRACTOR prior to shipment and delivery to site. Test results to be in accordance with ASTM C936-82.

1.04 QUALITY ASSURANCE

A. CONTRACTOR must have 24 months of previous continuous experience in the installation of compressed concrete paver units in the State of Florida.

B. Qualification of Workers: Provide at least one person who shall be present at all times during execution of this portion of the Work, who shall be thoroughly familiar with the type of materials being installed and the best methods for their installation and who shall direct all Work performed under this section.

PART 2 - PRODUCTS

2.01 MANUFACTURERS

A. Approved manufacturer's include, but are not limited to, the following:

1. Hanson Paver Products, Inc.

2.02 CONCRETE PAVERS

A. Paver blocks shall be composed of Aquaflow interlocking concrete pavers and meet or exceed performance standards set by Hanson Paver Products, Inc. Pompano Beach, Florida or approved equal. Pavers shall be in conformance with ASTM C936-82.

B. Color shall be selected by Landscape to include up to a 12 color scheme.

C. Concrete paver sizes shall be those necessary to construct the paving pattern as recommended by the manufacturer.

D. All concrete pavers shall be shipped and packaged in pallets in accordance with manufacturer's standard packaging procedures. Concrete pavers shall not be dumped at the site.

E. Concrete pavers shall be kept protected, until they are installed, with weatherproof, non-staining tarpaulins. Cracked, broken, stained, or otherwise damaged pavers will not be acceptable in finished Work.

2.03 PAVER SEALER

A. Solvent based Acrylic Sealer - Crystal Clear Sealer by Cobble Coat, 1880 NW 18th St., Pompano Beach, Florida 33069 (954) 971-9111.

2.04 MATERIAL MIXED FOR SETTING BED AND JOINTS

B. Bed and Joint Sand: Fine aggregate shall be clean, hard sand with durable particles and free from adherent coatings, lumps of clay, alkali salts and organic matter.

PART 3 - EXECUTION

3.01 SETTING BED INSTALLATION

A. Place aggregate for compacted base over properly prepared and compacted sub-base consisting of ¾" size, #57 stone. Provide compacted thickness of base indicated on drawings to allow for thickness of leveling bed and concrete paving units. Compact subgrade to 98% of maximum dry density in accordance with ASTM D 1557. Place non-woven geo-textile fabric between sub-base and subgrade.

B. Place ¼" size #89 crushed stone for leveling base and screed loose to a minimum thickness of 2", taking care to ensure it remains loose until paving units are set and compacted.

C. Treat leveling base with suitable soil sterilizer to prohibit growth of grass and weeds.

D. Place Inbitex Pollution Control Fabric, a nonwoven geotextile that optimizes the cleansing of water entering the Aquaflow system between the leveling base and sub-base (refer to civil plans for locations).

D. Set concrete paving units hand tight, being careful not to disturb leveling base. Use string lines to keep straight lines. Use block splitter to cut edges when full-size units cannot be used. Select units from 4 or more cubes to blend color and texture variations.

E. Vibrate concrete masonry paving units into leveling base with a plate vibrator capable of a 3,500 to 5,000 lb. compaction force. Perform this operation on installed areas of paving at end of each day or before any rain.

F. Fill joints after vibration with Hanson #0 mil washed granite joint screenings.

G. Finish grade to allow for settlement: finish elevation for ungrouted, mortarless block pavers shall be 1/8" higher than adjacent concrete. In lawn areas as indicated on drawings the finish elevation at the pavers shall be 1" higher than the finished grade of lawn.

3.02 GENERAL PAVER INSTALLATION

A. Do not use pavers with excessive chips, cracks, voids, discolorations or other defects which might be visible or cause staining in finished Work.

B. Cut pavers with motor-driven saw equipment to provide clean, sharp, unchipped edges. Cut units to provide pattern shown and to fit adjoining work neatly. Use full units without cutting.

C. Set pavers accurately to lines, levels and in patterns as indicated on drawings and with uniform joints of width indicated. Back cut all pavers as required to accommodate Work of other trades located in setting beds.

D. Tolerances

1. Maintain surface plane for finished masonry paving not exceeding a tolerance of 1/8" in 10' when tested with a 10' straight edge.

E. Provide edging as indicated on plans. Install edging prior to placing masonry paving units.

3.03 CUTTING PAVER BLOCKS

A. Layout paver and adjust brick coursing such that no brick shall have to be cut along, or parallel to, its long axis, unless approved by Owner's Representative.

B. Layout pavers and adjust brick coursing such that no brick shall be cut to less than half its length across its long axis. If it is unavoidable to cut bricks smaller than one-half (1/2) their long dimension due to the necessity of maintaining the paving pattern, the CONTRACTOR shall notify the Landscape Architect and request their permission to proceed with the cutting.

3.04 REPAIR, POINTING, CLEANING AND PROTECTION

A. Remove and replace paver units which are loose, chipped, broken, stained or otherwise damaged, or if units do not match adjoining units and install in same manner as original units, with same joint treatment to eliminate evidence or replacement.

B. Protect paver block installations from deterioration, discoloration or damage during subsequent construction and until acceptance of Work, in compliance with recommendations of installer and paving unit manufacturer.

C. Exposed paver surfaces shall be thoroughly cleaned and free from any traces of stains. At the CONTRACTOR'S option, he may employ normal, on-site measures to protect exposed brick surfaces from traces of stains, including waxing the exposed surface of the bricks. The CONTRACTOR shall submit to the Landscape Architect for approval, the method of protection and cleaning of the paver surface prior to beginning any paver Work. Method of protection and cleaning shall be incorporated in the sample paving panel.

1. Particular care shall be taken cleaning stains from the pavers. Cleaning agents shall be as recommended by the paving manufacturer.

2. The Owner's Representative shall review materials and method for cleaning paver blocks prior to the CONTRACTOR installation of paving

.

3. Do not clean with acid.

4. Dispose of all excess materials following approved installation of all concrete paver areas.

5. Cut paver with abrasive cut-off saw. Do not clip or crack. Cut surfaces shall be concealed in the Work.

6. No paver saw dust resulting from cutting shall be permitted to be deposited or disposed in planting areas.

7. After installation, and prior to sweeping joint screening, seal pavers with Crystal Clear Sealer, as per specifications by Hanson Cobble Coat, Pompano Beach, Florida. Apply two thin coats (2-3 wet mils) per manufacturer's recommendations. (Do not seal pavers in roadway or vehicular areas).

RECORD SET
The information presented on this drawing is diagrammatic and is presented for general information purposes and should not be relied on for accuracy of dimensions, details and locations. Actual and exact conditions if required should be determined in the field.

PROGRESS SET - NOT FOR CONSTRUCTION

SEAL

KATHRYN O'LEARY RICHARDS, ASLA
FL. LANDSCAPE ARCHITECT
FL. LA REG. NO. 1317

O'Leary Richards Design Associates, Inc.
Landscape Architecture & Planning

Oak Plaza Professional Center
8525 SW 92nd Street, Suite C-11
Miami, Florida 33156
p. 305.596.6628 f. 305.596.9160
www.olearyrichards.com

PREPARED FOR:

VILLAGE OF PALMETTO BAY

PALMETTO BAY MUNICIPAL CENTER
PALMETTO BAY, FLORIDA

ISSUE DATE: September 1, 2010

REVISION DATE:

SCALE: AS NOTED
DRAWN BY: CES
CHECKED BY: KOR

DRAWING TITLE
Paving Specifications

SHEET NUMBER
L4.04

OF

p:\ordaprojects\2010 projects\palmetto bay village hall\cad\l4.04_paving_spec.dwg

Date printed: 2010-09-01

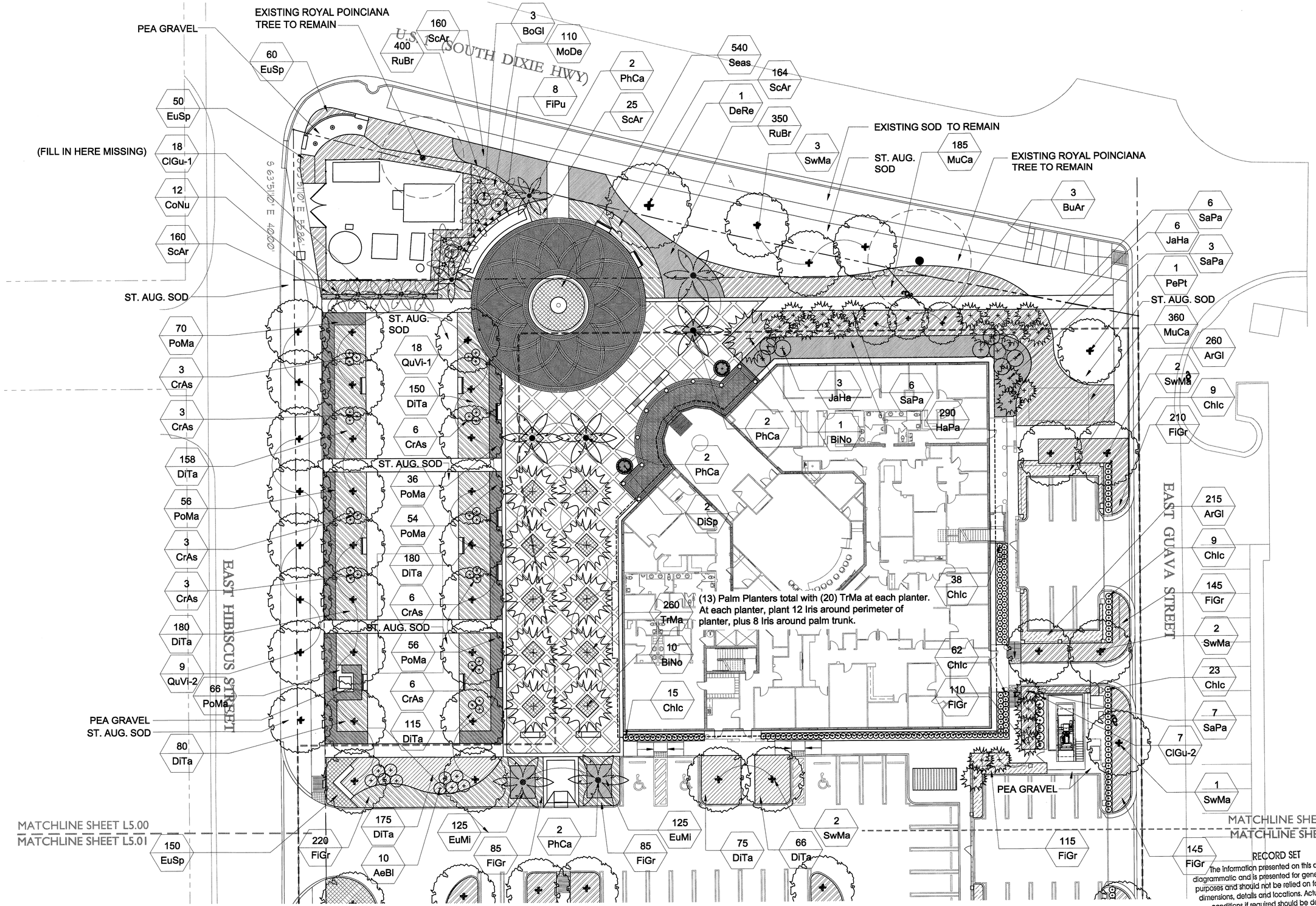

1 L5.00 PLANTING PLAN
SCALE: 1"=16'-0"

NOTE: REFER TO SHEET L2.00 FOR LOCATION OF DEEPROOT BARRIER

NORTH

0 8 16 32 64 FT
SCALE: 1" = 16'-0"

RECORD SET
The information presented on this drawing is diagrammatic and is presented for general information purposes and should not be relied on for accuracy of dimensions, details and locations. Actual and exact conditions if required should be determined in the field.

PROGRESS SET - NOT FOR CONSTRUCTION

SEAL

KATHRYN O'LEARY RICHARDS, ASLA
FL. LANDSCAPE ARCHITECT
FL. LA REG. NO. 1317

O'Leary Richards Design Associates, Inc.
Landscape Architecture & Planning
Oak Plaza Professional Center
8525 SW 92nd Street, Suite C-11
Miami, Florida 33156
p. 305.596.6628 f. 305.596.9160
www.olearyrichards.com

PREPARED FOR:
VILLAGE OF PALMETTO BAY

PALMETTO BAY MUNICIPAL CENTER
PALMETTO BAY, FLORIDA

ISSUE DATE: September 1, 2010
REVISION DATE:

SCALE: AS NOTED
DRAWN BY: CES
CHECKED BY: KOR

DRAWING TITLE
Planting Plan- West

SHEET NUMBER
L5.00
OF

p:\ord\projects\2010 projects\palmetto bay village hall\cad\l5.00_planting.dwg

Date printed: 2010-09-01

MATCHLINE SHEET L5.00
MATCHLINE SHEET L5.01

2 QuVi-2
290 EuMi
290 TrFL
10 PlPu

EAST HIBISCUS STREET

S 63°51'10" E 506.36'

2 BuSi
90 TrFl
55 TrFl
4 BuSi
55 TrFl
5 AeBl
2 BuSi
230 FlGr

BAHIA SOD

72 ClGu-2
17 PlPu

BAHIA SOD

BAHIA SOD

EXISTING ROYAL PALMS (TYP)

SW 97 AVENUE (FRANJO ROAD)

MATCHLINE SHEET L5.00
MATCHLINE SHEET L5.01

2 BuSi
90 TrFl
2 BuSi
175 TrFl

BAHIA SOD

270 ArGl
35 ChIc
3 BuSi
360 TrFl
3 SwMa

EAST GUAVA STREET

S 63°51'10" E 323.96'

RECORD SET

The information presented on this drawing is diagrammatic and is presented for general information purposes and should not be relied on for accuracy of dimensions, details and locations. Actual and exact conditions if required should be determined in the field.

NORTH

0 8 16 32 64 FT

SCALE: 1" = 16'-0"

PROGRESS SET - NOT FOR CONSTRUCTION

1 L5.01 PLANTING PLAN
SCALE: 1"=16'-0"

SEAL

KATHRYN O'LEARY RICHARDS, ASLA
FL. LANDSCAPE ARCHITECT
FL. LA REG. NO. 1317

O'Leary Richards Design Associates, Inc.
Landscape Architecture & Planning

Oak Plaza Professional Center
8525 SW 92nd Street, Suite C-11
Miami, Florida 33156
p. 305.596.6628 f. 305.596.9160
www.olearyrichards.com

PREPARED FOR:

VILLAGE OF PALMETTO BAY

PALMETTO BAY MUNICIPAL CENTER

PALMETTO BAY, FLORIDA

ISSUE DATE: September 1, 2010

REVISION DATE:

SCALE: AS NOTED
DRAWN BY: CES
CHECKED BY: KOR

DRAWING TITLE

Planting Plan- East

SHEET NUMBER

L5.01

OF

p:\cnd\projects\2010 projects\palmetto bay village hall\cad\l5.01_planting.dwg

Date printed: 2010-09-01

VARIETAL PLANT LIST

PALMS

KEY	SCIENTIFIC/COMMON NAME	UNIT	QTY	INSTALLED SIZE	SPACING	MAXIMUM MAINTAINED SIZE	NOTES
BiNo	Bismarckia nobilis Silver Bismark Palm	EA	11	24'-26' Ht. X 8'-10' GW, Full Compact Head, FL Fancy	As Shown on Plans	Natural Height	
DiSp	Dioon spinulosum Dioon	EA	2	5' Ht. X 5' Sp., 15 Gal., Full	As Shown on Plans	Natural Height	
CoNu	Cocos nucifera 'Gr. Malayan' Coconut Palm	EA	12	20'-26' Ht. X 8'-12' GW, Full Head, FL Fancy, Certified	As Shown on Plans	Natural Height	(3) 20' Ht., (3) 22' Ht. (3) 24' Ht., (3) 26' Ht.
PhCa	Phoenix canariensis Canary Island Date Palm	EA	8	24'-26' Ht. X 8'-10' GW, Full Head, FL Fancy, Certified	As Shown on Plans	Natural Height	
SaPa	Sabal palmetto Cabbage Palm	EA	22	18'-22' Ht., Staggered Hts., 7 @ 18', 7 @ 20', 8 @ 22' Ht.	As Shown on Plans	Natural Height	

TREES

KEY	SCIENTIFIC/COMMON NAME	UNIT	QTY	INSTALLED SIZE	SPACING	MAXIMUM MAINTAINED SIZE	NOTES
BuAr	Bulnesia arborea Verawood	EA	3	12' Ht. X 5' Sp., 2" DBH., 4' C.T., Full, Straight Trunk	As Shown on Plans	Natural Height	
BuSi	Bursera simaruba Gumbo Limbo	EA	15	14'-16' Ht. X 7'-8' Sp., 3" DBH., 6' C.T., Full, Straight Trunk	As Shown on Plans	Natural Height	
DeRe	Delonix regia Royal Poinciana	EA	1	16'-18' Ht. X 12' Sp., 4" DBH., 6' C.T., Full, Straight Trunk	As Shown on Plans	Natural Height	
JaHa	Jatropha hastata Jatropha	EA	9	6'-7' Ht. X 3'-4' Sp., Full, Single Trunk	As Shown on Plans	Natural Height	
PePt	Peltophorum pterocarpum Copperpod	EA	1	14' Ht. X 6'-7' Sp., 3" Cal., Full, Straight Trk., 5' C.T.	As Shown on Plans	Natural Height	
QuVi-1	Quercus virginiana Live Oak	EA	18	18'-20' Ht. X 14' Sp., 6" DBH., 6'-8' C.T., Full, Straight Trunk	As Shown on Plans	Natural Height	
QuVi-2	Quercus virginiana Live Oak	EA	11	14'-16' Ht. X 7' Sp., 3" DBH., 5' C.T., Full, Straight Trunk	As Shown on Plans	Natural Height	
SwMa	Swietenia mahagoni Mahogany Tree	EA	13	14'-16' Ht. X 7'-8' Sp., 3" DBH., 5'-6' C.T., Full, Straight Trunk	As Shown on Plans	Natural Height	

SHRUBS

KEY	SCIENTIFIC/COMMON NAME	UNIT	QTY	INSTALLED SIZE	SPACING	MAXIMUM MAINTAINED SIZE	NOTES
AeBl	Aechmea Blanchetiana Yelow-Orange Bromeliad	EA	15	30" Ht. X 30" Sp., 7 Gal., Full To Ground	36" o.c.	Natural height	
BoGl	Bougainvillea 'Purple' Purple Bougainvillea	EA	3	6-7' Ht. x 5' Sp., 25 Gal., Full	As Shown on Plans	Standard Tree Form, Heavy	
Chlc	Chrysobalanus icaco 'Red Tip' Cocoplum	EA	191	30" Ht. X 24" Sp., 3 Gal., Full To Ground	24" o.c.	36" ht.	
ClGu-1	Clusia guttifera Small Leaf Clusia	EA	18	6' - 7' Ht. X 6' Sp., 15 Gal., Full To Ground	6' o.c.	10' ht.	
ClGu-2	Clusia guttifera Small Leaf Clusia	EA	79	3.5' Ht. X 3.5' Sp., 7 Gal., Full To Ground	36" o.c.	48" ht.	
CrAs	Crinum asiaticum 'Queen Emma' Queen Emma Crinum Lily	EA	30	36" Ht. X 36" Sp., 10 Gal., Full To Ground	36" o.c.	Natural height	
EuMi	Euphorbia milii 'MaNeeJinTaNa' Thai Hybird Crown of Thorns	EA	340	14" Ht. X 12" Sp., 3 Gal., Full	18" o.c.	24" ht.	
EuSp	Euphorbia milii var. Rosy Dwarf Crown of Thorns	EA	260	16" Ht. X 14" Sp., 3 Gal., Full	12" o.c.	18" ht.	
FiGr	Ficus microcarpa var. 'Green Island' Green Island Ficus	EA	1345	18" Ht. X 18" Sp., 3 Gal., Full	18" o.c.	24" ht.	
HaPa	Hamelia patens 'compacta' Dwarf Firebush	EA	290	18" Ht. X 18" Sp., 3 Gal., Full	24" o.c.	30" ht.	
MoDe	Monstera deliciosa Split Leaf Philadendron	EA	110	18" Ht. X 18" Sp., 3 Gal., Full	24" o.c.	36" ht.	
TrMa	Trimezia martinicensis Yellow Walking Iris	EA	260	18" Ht. X 16" Sp., 3 Gal., Full 10-12 Bibs per Pot	18" o.c.	Natural height	
PlAu	Plumbago auriculata Plumbago	EA	27	18" Ht. X 18" Sp., 3 Gal., Full	24" o.c.	30" ht.	
ScAr	Schefflera arboricola 'Trinette' Arboricola	EA	509	18" Ht. X 18" Sp., 3 Gal., Full	18" o.c.	20" ht.	

GROUNDCOVERS

KEY	SCIENTIFIC/COMMON NAME	UNIT	QTY	INSTALLED SIZE	SPACING	MAXIMUM MAINTAINED SIZE	NOTES
ArGl	Arachis glabrata Perennial Peanut	EA	745	6" Ht. X 12" Sp., 1 Gal., Full	12" o.c.	Natural Height	
DiTa	Dianella tasmanica 'Variegata' Variegated Flax Lily	EA	1179	18" Ht. X 18" Sp., 3 Gal., Full	24" o.c.	Natural Height	
MuCa	Muhlenbergia capillaris Pink Muhly Grass	EA	545	24" Ht. X 24" Sp., 3 Gal., Full	30" o.c.	Natural Height	
RuBr	Ruellia brittoniana 'Purple Showers' Mexican Bluebell	EA	750	18" Ht. X 12" Sp., 3 Gal., Full	18" o.c.	Natural Height	
TrFL	Tripsacum floridiana Florida Gamma Grass	EA	1025	18" Ht. X 18" Sp., 3 Gal., Full	24" o.c.	Natural Height	

VINES

KEY	SCIENTIFIC/COMMON NAME	UNIT	QTY	INSTALLED SIZE	SPACING	MAXIMUM MAINTAINED SIZE	NOTES
FiPu	Ficus pumila Creeping Fig	EA	8	6" Ht. X 6" Sp., 1 Gal., Full	3' o.c.	Shear adjacent to wall	

SEASONAL

KEY	SCIENTIFIC/COMMON NAME	UNIT	QTY	INSTALLED SIZE	SPACING	MAXIMUM MAINTAINED SIZE	NOTES
Seas	Seasonal Color	EA	540	4" pots, 6" ht. x 6" Sp., Full Color to be slected	9" o.c.	Natural Height	Rotate Seasonal Color 4 times a year

LEGEND:

C.T.	CLEAR TRUNK
GAL.	GALLON
GW	GREY WOOD
HT.	HEIGHT
OA	OVERALL
SP.	SPREAD
TRK	TRUNK
O.C.	ON CENTER
DBL	DOUBLE
DIA.	DIAMETER
EA	EACH
DBH	DIAMETER AT BREAST HT.

LANDSCAPE NOTES

1. CONTRACTOR IS RESPONSIBLE FOR DETERMINING ALL UTILITY LOCATIONS INCLUDING CONDUITS AND PIPE ETC., AND INSTALLING FACILITIES SO AS TO NOT CONFLICT.
2. THE APPROPRIATE UTILITY COMPANY SHALL BE NOTIFIED BY THE CONTRACTOR AT LEAST 48 HOURS IN ADVANCE OF ANY EXCAVATION SO THAT A UTILITY COMPANY REPRESENTATIVE CAN BE PRESENT.
3. ALL PLANT MATERIALS TO BE FLORIDA NO.1 OR BETTER, UNLESS OTHERWISE NOTED, AS PER FLORIDA DEPT. OF AGRICULTURE GRADES & STANDARDS, LATEST EDITION.
4. APPLY 3" OF SHREDDED EUCALYPTUS BARK MULCH FREE OF WEED RETARDANT AND FOREIGN MATTER TO ALL PLANTING AREAS.
5. CONTRACTOR TO COMPLY WITH ALL STATE AND LOCAL CODE REQUIREMENTS.
6. WHERE THERE IS A DISCREPANCY EITHER IN QUANTITIES, PLANT NAMES, SIZES OR SPECIFICATIONS BETWEEN THE PLAN OR PLANT LIST, THE PLAN TAKES PRECEDENCE.
7. THE SUCCESSFUL BIDDER SHALL FURNISH TO THE OWNER A UNIT PRICE BREAKDOWN FOR ALL MATERIALS. THE OWNER MAY, AT ITS' DISCRETION, ADD TO OR DELETE FROM THE MATERIALS UTILIZING THE UNIT PRICE BREAKDOWN SUBMITTED.
8. NO PALMS WILL BE ACCEPTED SHOWING EVIDENCE OF CABLE, CHAIN MARKS, EQUIPMENT SCARS, OR ANY OTHER TYPE OF DAMAGE.
9. PLANT MATERIAL WILL NOT BE ACCEPTED WHEN THE BALL OF EARTH SURROUNDING IT'S ROOTS HAS BEEN CRACKED, BROKEN, OR OTHERWISE DAMAGED.
10. NOTE SIZE OF PLANTING PITS ON SHRUB, TREE AND PALM PLANTING DETAILS.
11. CONTRACTOR SHALL STAKE ALL TREES AND PALMS AS PER THE APPROPRIATE DETAIL. CONTRACTOR IS RESPONSIBLE FOR THE MAINTENANCE AND/OR REPAIR OF ALL STAKING DURING THE WARRANTY PERIOD. CONTRACTOR SHALL REMOVE BRACES AT END OF WARRANTY PERIOD OR SOONER PER THE DIRECTION OF THE TOWN OF GOLDEN BEACH.
12. CONTRACTOR SHALL RESTORE ALL AREAS DISTURBED DURING PLANTING, INCLUDING ALL WALKS, FENCE, WALLS, CURBS, IRRIGATION, ETC. TO ORIGINAL CONDITION AFTER TREES ARE PLANTED.
13. CONTRACTOR SHALL PROTECT ALL EXISTING VEGETATION AND ALL SITE IMPROVEMENTS AS WELL AS MATERIAL ADJACENT TO THE PROJECT THAT MAY BE IMPACTED. IF THE EXISTING LANDSCAPE MATERIAL IS IMPACTED DURING LANDSCAPE INSTALLATION, THEN THE CONTRACTOR SHALL BE RESPONSIBLE FOR ALL REPLACEMENTS AND ALL ASPECTS OF REMEDIATION. ALL IMPACTED MATERIAL SHALL BE REPLACED WITH ITEMS OF SIMILAR SIZE, VALUE, AND SHALL BE SATISFACTORY TO THE TOWN OF GOLDEN BEACH. THE COST OF REMEDIATION SHALL BE THE CONTRACTOR'S RESPONSIBILITY.
14. CONTRACTOR IS RESPONSIBLE FOR ANY REQUIRED PERMITS FOR REMOVAL/RELOCATION OF PLANT MATERIAL.
15. NO SUBSTITUTIONS ON VARIETIES LISTED WILL BE ALLOWED WITHOUT WRITTEN APPROVAL FROM LANDSCAPE ARCHITECT.
16. NO LANDSCAPING ADDED UNDER THIS PROJECT SHALL BE LOCATED SUCH THAT SAID LANDSCAPING OBSCURES MOTORISTS' VISIBILITY OF ANY EXISTING OR PROPOSED SIGN(S) OR OBSTRUCTS SIGHT LINES.
17. SOD: REFER TO THESE PLANS FOR ALL SOD QUANTITIES PROPOSED.
18. DURING CONSTRUCTION, THE CONTRACTOR SHALL KEEP PAVEMENT CLEAN AND WORK AREAS IN AN ORDERLY CONDITION. ALL TRASH AND DEBRIS SHALL BE REMOVED FROM SITE DAILY. CONTRACTOR SHALL PROPERLY DISPOSE OF EXCAVATED MATERIAL OFF-SITE.
19. THE CONTRACTOR IS RESONSIBLE FOR KEEPING ALL INLETS FREE OF EXCAVATED MATERIAL AND DEBRIS FOR THE DURATION OF THE PROJECT WITH APPROPRIATE EROSION CONTROL DEVICES AT NO ADDITIONAL COST.
20. LANDSCAPING (INCLUDING SOD) THAT WILL NOT HAVE IRRIGATION COVERAGE SHALL BE HAND WATERED BY THE CONTRACTOR UPON INSTALLATION AND CONTINUE UNTIL FINAL ACCEPTANCE.
21. ALL EXISTING TREES TO REMAIN ARE TO BE PROTECTED. KEEP EX. TREES/PALMS WATERED, FERTILIZED, MULCHED AND PRUNED AS NECESSARY TO ASSURE THAT THEY ARE HEALTHY, VIGOROUS AND UNDAMAGED THROUGHOUT THE DURATION OF THE PROJECT CONSTRUCTION PERIOD AND WARRANTY PERIOD.
22. ALL SHRUB BEDS TO RECEIVE (2) APPLICATIONS, 10 DAYS APART, OF PRE-EMERGENT HERBICIDE FOLLOWING MANUFACTURER'S INSTRUCTIONS, PRIOR TO PLANTING.
23. THE CONTRACTOR SHALL BE CERTIFIED AS A CERTIFIED LANDSCAPE CONTRACTOR REGISTERED WITH THE FLORIDA NURSERY, GROWERS AND LANDSCAPE ASSOCIATION AND BE REGISTERED WITH THE FL. DEPT. OF AGRICULTURE & CONSUMER SERVICES DIVISION OF PLANT INDUSTRY.
24. THE CONTRACTOR SHALL SUBMIT A TYPEWRITTEN MAINTENANCE SCHEDULE AT THE TIME OF FINAL INSPECTION AND DETAILED LIST OF MAINTENANCE ACTIVITIES AND THEIR DESCRIPTIONS.
25. THE CONTRACTOR SHALL NOTIFY THE LAND. ARCHITECT AT LEAST ONE PRIOR TO FINAL WALK-THROUGH. FINAL ACCEPTANCE WILL NOT BE GIVEN UNTIL COMPLETE INSTALLATION PER PLAN SET, SITE CLEAN UP AND RESTORATION, COMPLETION OF PUNCH LIST ITEMS, SUBMISSION OF WARRANTY AND CLOSE OUT DOCUMENTS, BOND AND FINAL WALK-THROUGH BY VILLAGE. ANY COST OR REQUIREMENTS NECESSARY FOR FINAL ACCEPTANCE SHALL BE CONSIDERED INCIDENTAL TO THE WORK BEING PERFORMED.
26. ROOTGUARD: UB-24-2 LINEAR DEEPROOT ROOTGUARD BY DEEPROOT PARTNERS, L.P. INSTALL AS PER MANUF. INSTRUCTIONS. CONTRACTOR TO PROVIDESHOP DRAWINGS (SEE SHT. L2.00 FOR LOCATION AND SHT. L4.00 FOR DETAIL).
27. THE VILLAGE IS RESPONSIBLE TO MAINTAIN ALL VEGETATION AND REMOVE ALL DEAD AND HANGING FRONDS FROM ALL PALMS (INCLUDING COCONUTS) AFTER FINAL ACCEPTANCE.
28. CONTRACTOR IS RESPONSIBLE FOR WATERING ALL PLANTING MATERIAL UNTIL FINAL ACCEPTANCE BY OWNER.

RECORD SET

The information presented on this drawing is diagrammatic and is presented for general information purposes and should not be relied on for accuracy of dimensions, details and locations. Actual and exact conditions if required should be determined in the field.

PROGRESS SET - NOT FOR CONSTRUCTION

SEAL

KATHRYN O'LEARY RICHARDS, ASLA
FL. LANDSCAPE ARCHITECT
FL. LA REG. NO. 1317

O'Leary Richards Design Associates, Inc.
Landscape Architecture & Planning

Oak Plaza Professional Center
8525 SW 92nd Street, Suite C-11
Miami, Florida 33156
p. 305.596.6628 f. 305.596.9160
www.olearyrichards.com

PREPARED FOR:

VILLAGE OF PALMETTO BAY

PALMETTO BAY MUNICIPAL CENTER

PALMETTO BAY, FLORIDA

ISSUE DATE: September 1, 2010

REVISION DATE:

SCALE: AS NOTED
DRAWN BY: CES
CHECKED BY: KOR

DRAWING TITLE

Landscape Notes & Plant List

SHEET NUMBER

L5.02

OF

p:\fordprojects\2010 projects\palmetto bay village hall\cad\l5.02_plant_notes.dwg

Date printed: 2010-09-01

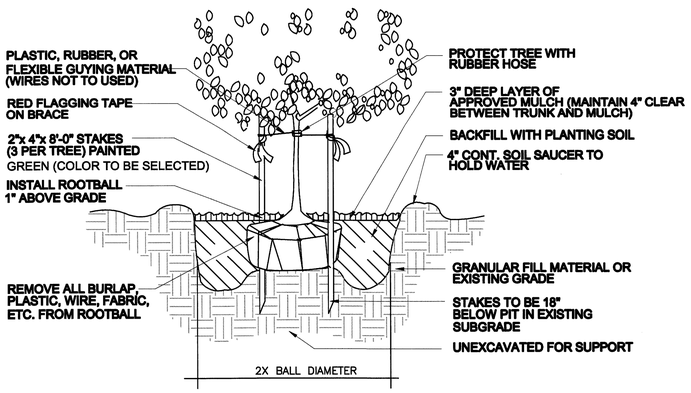

A L6.03 SMALL TREE PLANTING DETAIL

FOR TREE 12' HT. AND BELOW

Not to Scale

MINIMUM 15' CLEARANCE OF ALL TREES FROM ALL LIGHT FIXTURES. CLEARANCE TO BE FROM THE LIGHT FIXTURE OR LAMP, NOT THE LIGHT POST.

CONTRACTOR TO ADJUST ANY AND ALL TREES IN THE FIELD TO PROVIDE FOR MIN. 15' CLEARANCE FOR ANY SITUATIONS NOT PER PLAN.

MINIMUM CLEARANCE FOR ALL PALMS IS THE PALM FROND LENGTH PLUS TWO (2') FEET PER FPL GUIDELINES. SEE FPL'S 'PLANT THE RIGHT TREE IN THE RIGHT PLACE' FOR SPECIFIC PALM FROND LENGTH INFORMATION.

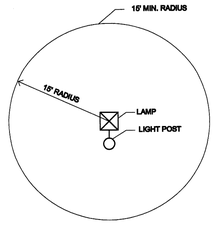

B L6.03 MIN. TREE CLEARANCE FROM LIGHT FIXTURE DETAIL

Not to Scale

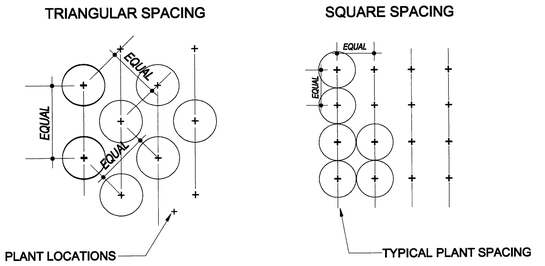

NOTE:
IN MOST CASES TRIANGULAR SPACING IS PREFERRED. USE SQUARE SPACING ONLY IN SMALL RECTILINEAR SPACES.

C L6.03 TYPICAL PLANTINGS FOR GROUND MOUNTED EQUIPMENT

Not to Scale

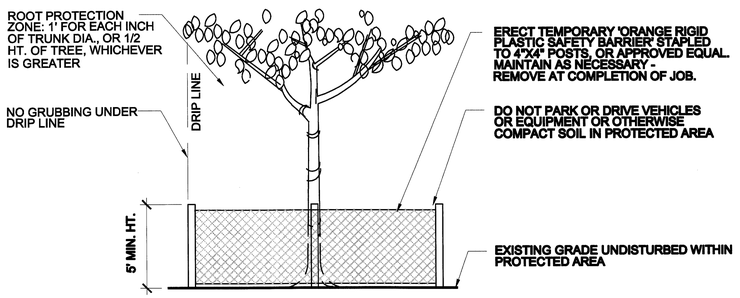

D L6.03 EXISTING TREE PROTECTION DETAIL

Not to Scale

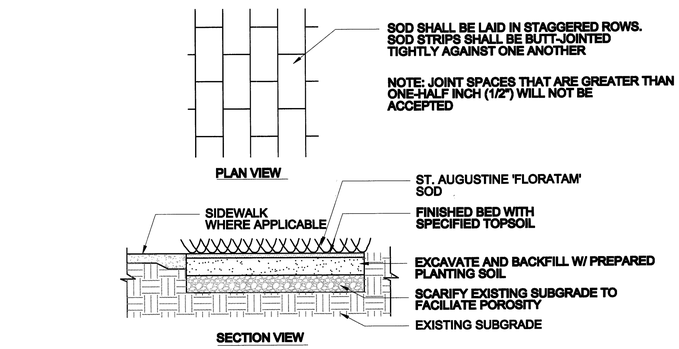

E L6.03 SOD INSTALLATION DETAIL

Not to Scale

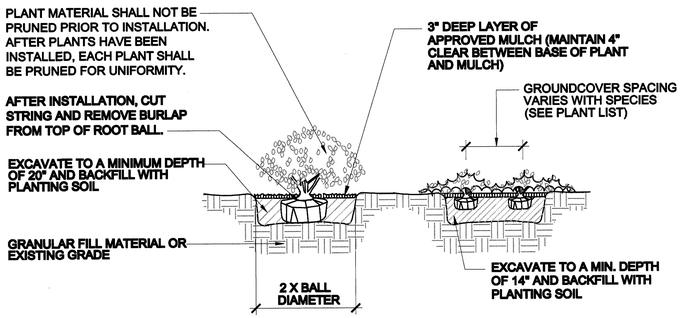

F L6.03 SHRUB/GROUNDCOVER PLANTING DETAIL

Not to Scale

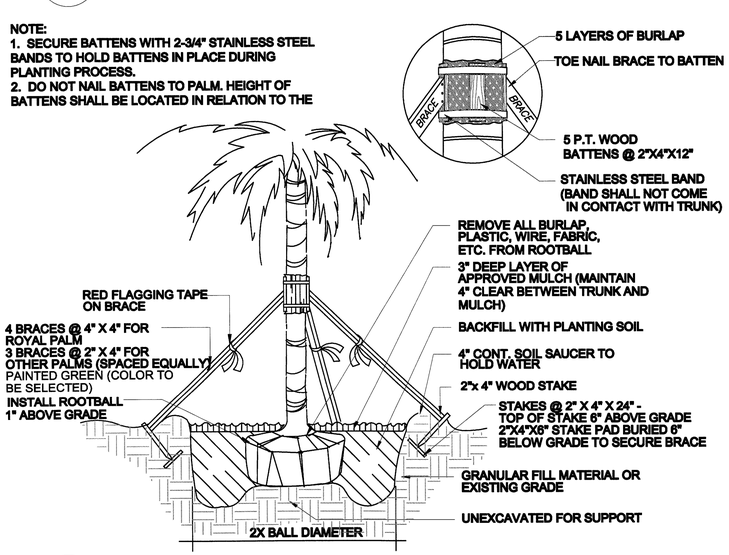

G L6.03 PALM PLANTING DETAIL

Not to Scale

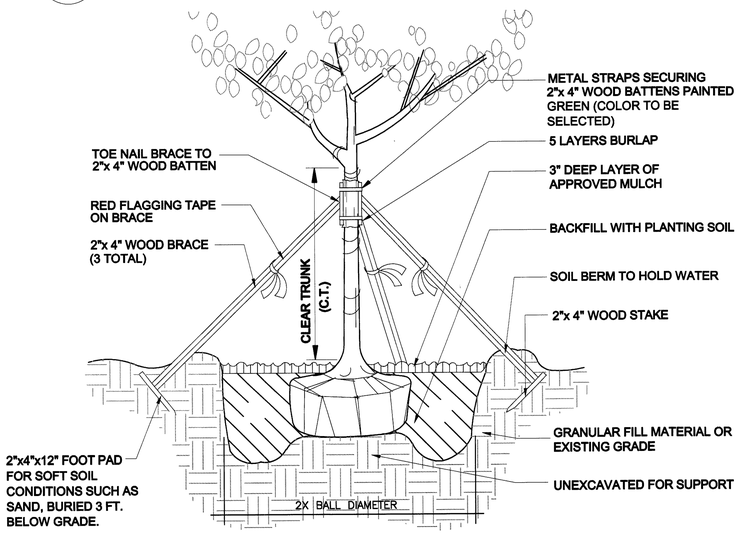

H L6.03 LARGE TREE PLANTING DETAIL

Not to Scale

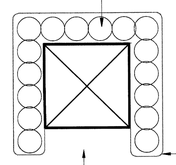

PLANT HEDGE TYPE MATERIAL AROUND ALL GROUND MOUNTED EQUIPMENT - TYPICAL FOR ALL FPL TRANSFORMER BOXES OR PADS, TELEPHONE AND CABLE BOXES, SANITARY LIFT STATIONS, IRRIGATION PUMPS OR ANY OTHER ABOVE GROUND UTILITY EQUIPMENT.

CLEARANCES FOR ANY AND ALL UNDERGROUND UTILITIES MUST BE COORDINATED WITH THE LOCAL GOVERNING AGENCY AND / OR THE INDIVIDUAL UTILITIES AND / OR U.N.C.L.E. - TEL: 1-800-432-4770

PLANT MATERIAL TO BE COCOPLUM OR OTHERWISE SPECIFIED ON THE PLANS - 3 GAL. 24" X 24", 2. O.C. OR LARGER PER THE LOCAL REQUIREMENTS. QUANTITY TO BE PER THE SIZE OF THE UTILITY. PROVIDE UNIT PRICE ABD BILL PER QUANTITY INSTALLED.

3" MIN. APPROVED MULCH FOR ALL PLANTING AREAS.

PROVIDE OPENING FOR ACCESS ON ONE SIDE ONLY - OR AS REQUIRED BY THE UTILITY.

I L6.03 TYPICAL PLANT SPACING DETAIL

Not to Scale

RECORD SET

The information presented on this drawing is diagrammatic and is presented for general information purposes and should not be relied on for accuracy of dimensions, details and locations. Actual and exact conditions if required should be determined in the field.

PROGRESS SET - NOT FOR CONSTRUCTION

SEAL

KATHRYN O'LEARY RICHARDS, ASLA
FL. LANDSCAPE ARCHITECT
FL. LA REG. NO. 1317

O'Leary Richards Design Associates, Inc.
Landscape Architecture & Planning

Oak Plaza Professional Center
8525 SW 92nd Street, Suite C-11
Miami, Florida 33156
p. 305.596.6628 f. 305.596.9160
www.olearyrichards.com

PREPARED FOR:

VILLAGE OF PALMETTO BAY

PALMETTO BAY MUNICIPAL CENTER

PALMETTO BAY, FLORIDA

ISSUE DATE: September 1, 2010

REVISION DATE:

SCALE: AS NOTED

DRAWN BY: CES

CHECKED BY: KOR

DRAWING TITLE: Planting Details

SHEET NUMBER: L5.03

OF

p:\ordaprojects\2010 projects\palmetto bay village hall\cad\l5.03_plant_details.dwg

Date printed: 2010-09-01

SECTION 02900
LANDSCAPE SPECIFICATIONS

PART 1 GENERAL

1.01 SCOPE

A. Contractor shall provide all labor, materials, equipment, watering, supervision, and related work necessary to complete the landscape work in accordance with the intent of the Landscape Plans, schedules and these specifications. The extent of work is shown on the drawings which are a part of this document.

1.02 RELATED WORK

A. Irrigation

1.03 QUALITY ASSURANCE

A. Qualification of Workers: Provide at least one person who shall be present at all times during execution of this portion of the Work, who shall be thoroughly familiar with the type of materials being installed and the best methods for their installation and who shall direct all Work performed under this section.

B. Standards: The following (where applicable) form a part of these specifications:

1. Grades and Standards for Nursery Plants, Part I and II: Florida State Dept. of Agriculture (latest edition).
2. Standardized Plant Names: American Joint Committee on Horticultural Nomenclature, latest edition.
3. Hortus: (latest edition)
4. Exotica: A.B. Graff, Series 3, 9th Edition.

C. Obtain written acceptance from the Owner or Owner's Representative for any variation from the above or specified requirements before proceeding.

D. All planting materials shall meet or exceed specifications of Federal, State, and County laws requiring inspection for plant disease and insect control.

1.04 SUBMITTALS

A. Unit Prices: Within (10) ten days after award of Contract, and before any planting materials are delivered to the job site, submit to the Owner or Owner's Representative a complete itemized price list of all items proposed to be installed. Owner reserves the right to add or delete materials at unit prices given to adjust lump sum Contract price. Unit prices shall be be a breakdown of landscaping Contract price.

1. Claims as to unsuitability or unavailability of any specified materials or species will not be considered unless such claims are made in writing to the Owner and submitted 10 (ten) days prior to Bid due date.
2. The Contractor shall demonstrate complete conformance with requirements of this section in submitting price list.
3. This provision of unit prices shall in no way be construed as permitting substitution for specific items on the drawings or these specifications unless substitution has been accepted in writing in advance by the Owner.

A. Material Review and Certification:

1. The Owner shall review all materials identified as "matched", "tree form" or "specimen", or as defined in these specifications, at the nursery source to verify species, vigor, size, condition, shape, quantity, for compliance with specification and drawings. Request of nursery review shall be received at least five days prior to the desired review date. Contractor shall tag all trees and palms before inspection.
2. Photographs or representative, individual samples to the satisfaction of the Owner, shall be submitted for review and acceptance of all other plant materials. Samples of plants shall be submitted to the Owner for review as indicated on the plans, or as requested by Owner.
3. Inspection certificates shall accompany the invoice of each shipment or order of stock, as may be required by law for transportation. Upon completion of installation deliver all certificates to Owner.
4. Submit one quart sample of specified mulch and planting soil for review and acceptance by Owner.

1.05 MATERIAL HANDLING

A. Delivery and Storage

1. Deliver all items to the site with all labels intact and legible at time of Owner's inspection.
2. Immediately remove from the site all materials which do not comply with the provisions of this section in these specifications.
3. Use all means necessary to protect materials before, during and after installation and to protect installed Work and materials of all other trades.

B. Replacements: In the event of damage or rejection, immediately make all repairs and replacements necessary to the acceptance of Owner at no additional cost to Owner.

PART 2 GENERAL

2.01 MISCELLANEOUS MATERIALS

A. Planting Soil: For plants and trees, use a weed and rock free mixture of 60 (sixty) percent fresh water sand (medium to coarse grade) and 40 (forty) percent Florida Horticultural Grade Peat thoroughly mixed with a commercial shredder/blender or equivalent.

1. Peat shall consist of ninety percent (90%) organic peat and shall be suitable for horticultural purposes.
2. Peat shall be brown in color, clean, low in content of mineral and woody material, pH 4 to 5, and shall be shredded into particles not larger than one-half inch (1/2") in diameter.
3. Peat shall contain no more than thirty-five percent (35%) moisture and the ash content not exceed ten percent (10%) and free from weedy grasses, sedges, rushes, or mineral matter harmful to plant growth.
4. Material shall be proportioned by volume rather than weight.
5. Site mixing will not be acceptable.
6. Sand shall be free from silt and sludge.
7. Mixture shall be free of rocks greater than one-half (1/2") inch in size, limbs, roots, and other deleterious material.
8. The Owner reserves the right to reject topsoil utilized at any time during the execution of the Work that does not meet specification.

B. Topsoil: For sod areas, use a weed and rock free mixture of 80 (eighty) percent fresh water sand (medium to coarse grade) and 20 (twenty) percent inland glades muck thoroughly mixed with a commercial shredder/blender or equivalent.

1. Material shall be proportioned by volume rather than weight.
2. Site mixing will not be acceptable.
3. Sand shall be free from silt and sludge.
4. Mixture shall be free of rocks greater than one-half (1/2") inch in size, limbs, roots, and other deleterious material.
8. The Owner reserves the right to reject topsoil utilized at any time during the execution of the Work that does not meet specification.

C. Fertilizer used for planting backfill admixture shall be 21 gram Agriform planting tablets used at a rate recommended by the manufacturer, unless otherwise specified herein. Include Terra-sorb super absorbent polymer in backfill. Follow manufacturer's recommendations for amount. Do not place tablets at bottom of hole. Tablets should be placed 1/3 from bottom of rootball.

D. Water: The Contractor shall be responsible for watering throughout the establishment period.

E. Tree Guying (if applicable): Guying shall be double strand, 12 guage galvanized steel wire; min. 3/4 inch, fiber bearing 2 ply, rubber garden hose; pressure treated, 2 inch x 4 inch x 1 foot (deadman) Southern Yellow Pine tree of knots, rot or other weakening characteristics; 3 inch galvanized steel turnbuckles; and plastic flagging.

F. Peat: Shall be Spaghnum peat moss for horticultural use.

G. Mulch: Shall be shredded Eucalyptus, Grade B.

H. Bracing (if applicable): (4) 2x4x2'-0" pressure-treated Southern Yellow Pine bracing pads; (4) 2x4 pressure-treated Southern Yellow Pine wood braces; (5) 2x4x10" wood battens; hi-carbon steel banding; (5) layers of burlap wrapping.

I. Anti-transparent: "Dowax", "Wilt-Pruf", or equivalent.

J. St. Augustine 'Floratam' Sod

1. Sod strongly rooted and free of pernicious weeds.
2. Mow sod to a height not to exceed 1-1/2 inches before lifting.
3. Lifts shall have uniform thickness with not over 1-1/2 inches or less than one inch of soil.
4. Sod containing nutgrasses, lippia, water sedge and dollar weed is not acceptable.

2.02 PLANT MATERIAL

A. The words "plant materials" or "plants" refer to and include trees, palms, and herbaceous materials.

B. Plant species shall conform to those indicated on the drawings.

C. Plant Quality:

1. Plants shall be freshly dug, balled and burlapped nursery grown stock or container grown nursery stock. All plants shall be free of broken, damaged root balls or root bound conditions. Plants shall be sound, healthy, vigorous, free from plant diseases, insect pests or their eggs, and shall have healthy normal root systems.
2. Collected plants shall not be used unless authorized in writing by the Owner.
3. All plant material not otherwise specified as being Florida Fancy, shall be Florida No. 1 or better quality, graded in accordance with Grades and Standards for Nursey Plants, published by the State of Florida, Dept. of Agriculture. Plants judged to be not in accordance with said standards will be rejected.
4. Caliper measurement, height measurement, height relation to caliper, spread, bare root and ball dimensions, number of canes, and related requirements shall confirm to the applicable standards above.
5. Substitutions in plant species or sizes shall be made only after written authorization by the Owner or Owner's Representative.
6. Any materials and/or work may be rejected if, in the opinion of the Owner, such Work does not meet requirements of the specifications. All rejected materials shall be promptly removed from the site by the Contractor at no expense to the Owner.
7. "Specimen" shall mean an exceptional, heavy, symmetrical, tightly knit plant, so trained or favored in its development that its appearance is unquestionably and outstandingly superior in form, number of branches, compactness and symmetry. "Specimen" shall conform to the standard "Florida Fancy" per the State of Florida, Dept. of Agriculture.

D. Pruning:

1. Plants shall not be pruned prior to delivery except as authorized by the Owner.
2. Plants shall have been transplanted or root pruned at least once in the three years prior to contract date.
3. Immediately upon selection by the Contractor and acceptance by the Owner, all major trees shall be completely rootpruned at the nursey site and held in that condition for a period of 45-60 days. Plants shall not be further dug or transported without acceptance of Owner.
4. If the Contractor wishes to strip the foliage of certain species prior to transplanting, removal of not more than one-half of foliage shall be conducted at time of root-pruning. In this event the plant shall fully conform to this specification at the time of planting and review for acceptance.

PART 3 EXECUTION

3.01 EXISTING CONDITIONS

A. Before Work of this section, carefully inspect Work of other trades and verify that such Work of other trades is complete to the point at which this landscape Work may properly commence. Verify that planting may be completed in accordance with construction plans and referenced details.

B. Discrepancies:

1. In the event of discrepancy, immediately notify Owner.
2. Do not proceed with installation of materials or plants in areas of discrepancy until all such discrepancies have been fully resolved to the satisfaction of the Owner.

C. Soil Testing and Amendment:

1. Obtain and have tested, at a private testing laboratory, a minimum of four samples of soil to be taken from those areas to be planted. Samples shall be representative of the sensitive general conditions prevailing in those areas within which planting and sodding shall be performed. Also, obtain and have tested one representative, mixed sample each of the planting soil and soil blanket materials intended for use on this project. Contractor is responsible for all tests associated with soil testing.
2. Soils shall be tested for horticultural purposes and the test results shall be submitted to the Owner or Owner's Representative accompanied by a recommendation from the testing agency regarding the suitability of the samples and appropriate soil amendments required to correct any detrimental or deficient soil conditions.
3. Testing shall include, but not be limited to, those tests required to determine soil pH and the identification and quantity of soluble salts or other common pollutants that may be in the sample.
4. If the pH of the samples representing the rough grade soil is determined to be in excess of 6.5, the entire planting area of the site shall be treated with an application of wetable sulfur. This amendment shall be applied at a rate of 8 pounds per 1,000 square feet for each whole point of pH in excess of 6.0. The material shall be thoroughly worked into the top 6 inches of the rough grade soil. The soil surface shall then be made smooth and the area completely watered to the full depth of the soil amendment.

3.02 SCHEDULE OF WORK

A. Stake the proposed location of trees to be planted. The Owner reserves the right to adjust the location of plant material.

B. Excavate planting pits and beds, and prepare fine subgrade.

C. Provide plants. fertilizer. planting soil and incidental materials required herein.

D. Place plants, backfill and guy or brace plants as required.

E. Complete fine grading and incidental Work specified herein.

F. Maintain and protect planting, including incidental materials, until end of maintenance period.

G. Bracing of palms shall remain in place and its removal shall be the responsibility of the Contractor at end of Warranty.

3.03 FINISH SUBGRADE

A. Upon acceptance of the rough grading, establish fine sub-grade with smooth and even finish. Remove all rocks more than one inch diameter, sticks, debris and vegetation to a depth of six inches. Final sub-grade shall be established as herein specified.

3.04 SHIPMENT AND DELIVERY

A. Notify the Owner a minimum of 2 (two) working days in advance of when plant material is to be delivered.

B. Plant material shall be protected from weather, adequately packed to prevent breakage and drying out during transit. The use of anti-transparent, in compliance with the manufacturer's specification, is encouraged.

C. Plants shall not be planted on job until they have been inspected at receiving site and accepted by Owner.

D. Plants which show improper handling, bruised trunks, broken branches or rootballs or arrive on site in an unsatisfactory condition will be rejected.

E. Acceptance of plant material will be given by the Owner only after the material is planted and after meeting all of the incidental requirements prescribed herein and on the plans.

3.05 PLANTING TREES

A. General

1. Locate and mark proposed positions of all plants or plant beds with stakes. Before digging, notify Owner for review and acceptance or possible relocation.
2. If location indicated on planting plans cannot be used, other locations shall be chosen subject to approval by Owner.
3. Coordinate with site lighting, irrigation, paving, piping, electrical and other related site work.

B. Excavation:

1. Excavations identified as having potential utility or service line conflicts shall be excavated by hand tools to determine the location of any utilities that may otherwise be damaged by excavation.
2. Excavate tree and palm pits as necessary to accomodate root balls of material when plant is set to finished grade, with a minimum six inches of "planting soil" under the spread of bottom-most roots. Diameter of pits for trees shall be as shown on the drawings.
3. Barricade or mark excavations to prevent danger to cars and pedestrians.

C. Planting:

1. Set trees in vertical position such that the top of rootball flare remains approximately 1" above finish grade. All plant material shall be watered in at the time of installation to eliminate air pockets.
2. Set plant in upright position in center of hole, on compacted planting dome as indicated. Place "planting soil" around rootball in layers up to 12" deep. Carefully tamp and thoroughly water each layer. When 2/3 of the hole has been backfilled and compacted, remove burlap from the upper part of the ball. Fill planting hole to finish grade (minus allowance for mulch or other cover as required); form a saucer with a 4" lip as wide as the opening of the pit; and water thoroughly so that soil is saturated and settled.
3. If settlement of any plant after planting is determined by the Owner to be excessive, the Contractor shall replant it at no cost the Owner.
4. Fertilize planting soil for trees using "Agriform" tablets; fertilize all other planting soil with a general purpose fertilizer. Apply fertilizers in quantities as recommended by the manufacturer or as directed by the Owner. In groundcover beds, mix fertilizer into the soil at a rate no less than 26 pounds per 1,000 sq. ft. In addition, use "terra-sorb" Super Absorbent Polymer", per manufacturer's instructions for all new plant material.
5. Guy and secure all plant material according the the drawings. All material shall be plumb unless otherwise directed by Owner. Allow no direct contact between wire or banding and any part of a tree or palm; where a guy wire or nylon strap wraps a limb or trunk, cover wire or nylon strap with a limb or trunk, cover wire or nylon straps with a rubber hose wrapped around the limb or trunk for a full turn. Do not girdle trunk.
6. Pruning, if required, shall be in accordance with standard horticultural practices as published by the National Arborist Association, or as directed by the Owner. Prune to remove dead wood, injured branches, or suckers, or to generally thin and shape in conformance with natural growth of the species. Cuts more than 3/4 inch diameter shall be painted with an accepted horticultural tree wound paint. All plant material shall meet specifications after pruning.
7. If planting is performed after sod placement, proper protection shall be provided and damage resulting from planting operations shall be repaired promptly.
8. Palms shall be installed in a vertical position and braced. For large palms, a minimum of 5 layers of burlap shall be placed around the trunk and shall, in turn, have a minimum of 5 wood battens placed vertically over it. battens shall be retained in place by two 3/4 inch high carbon steel bands. Four wood braces, placed at a 60 degree angle equidistant around the plant, shall be nailed to the battens. No nails shall be placed into the palm trunk. Four bracing pads shall be placed below grade at the bottom of each brace.
9. The Contractor is prohibited from storing on-site any plant material, materials, or equipment if a storm approaching or exceeding hurricane force winds is immanent.
10. The Contractor is responsible for re-setting and re-bracing of trees and palms blown over or leaning from hurricane force or greater winds. This Work will occur immediately (within one week from date of hurricane). Payment for this Work will be additional and will be negotiated by the Owner. Any re-setting and re-bracing caused by winds less than hurricane force, and until final acceptance, is the responsibility of the Contractor, at no additional cost to Owner.
1. Install sod as soon as practical following placement and grading of topsoil mixture.
2. Fertilizer: Spread 30 lbs. of commercial fertilizer per 1,000 SF of finished topsoil, lightly rake in and level.
3. Sod Placement: Lift sod from trucks or storage piles and place by hand with closed joints and no overlapping.
4. Ground shall be leveled with the back of a rake and sod laid with joints closely butted so no voids are visible, keeping surface of sod flush with the adjoining pavements.
5. After laying, sprinkle sod thoroughly, and tamp sufficiently to incorporate sod with topsoil blanket and to insure tight joints between sections or strips.
6. After laying, cover sod with sufficient sand top dressing to fill voids remaining and then thoroughly water to wash top dressing into sodded surface.
7. Completed sod surface shall be true to finish grade indicated on plans, even and firm at all points and shall, after settlement, be flush with top of abutting walks, paving, concrete borders, catch basins and the like.
8. Keep new sod properly watered until final completion.
7. Protect sodded areas against trespassing and damage of any kind for the duration of

3.06 CONSTRUCTION REVIEW

A. In addition to other progress construction reviews, the Contractor shall schedule and facilitate the following sub-trade related reviews, giving the Owner at least

1. Review of proposed tree pit locations, as represented by staking.
2. Review, upon delivery, of plant materials at the site to verify species, vigor, size, condition, shape, quantity, in compliance with specifications and
3. Review of tree pit excavation and fine subgrade.
4. Review of Work and materials after completion of planting. This review shall be scheduled in advance and in cooperation with the Owner so that it may be conducted within 48 (forty-eight) hours after completion of planting.
5. Review after a 30-day (thirty) period of maintenance, upon written request by the Contractor. Request shall be received at least five days before anticipated date of review.
6. Review for final acceptance.
7. Prepare (4) sets of As-Builts on a blueprint that shows deviations from Bid Documents made during construction. Said As-Builts shall be delivered to Owner prior to Final Acceptance.

3.07 MAINTENANCE

A. General: The Contractor shall maintain all planting, starting at the time of planting and continuing until all planting is complete and accepted by the Owner.

B. Work included:

1. Maintenance shall include all watering, weeding, fertilizing, cultivating, spraying for insects and diseases, adjustment of guying, staking, restoring water rings, mowing sod to keep less than 4", and pruning necessary to keep plant material in a healthy vigorous growing condition and keep planted areas neat and attractive.
2. Provide all equipment and means for proper application of water to those planted areas not provided with an irrigation system.
3. Contractor sha;; submit a written schedule for proposed maintenance of sodded areas.

C. Replacements:

1. At Final acceptance, plant material shall be in a healthy growing condition.
2. During maintenance period immediately replace any plants showing weakness and probability of failure with a new, healthy plant of the same type and size, without additional cost to Owner.

3.08 WARRANTY

A. The Contractor shall warranty trees, plants and palms as defined below, after acceptance by the Owner. Any planting that fails, dies or fails below Florida No. 1 Standards as originally specified within that period shall be replaced and replanted within (14) days notification from the Owner without expense to Owner, provided that the Contractor shall not be held responsible for losses beyond their reasonable control arising from "Acts of God"; acts of vandalism; or losses arising from documented neglect on the part of Owner to properly care for planting after acceptance. The Warranty period shall begin again for replacement plant material at time of replacement. The following warranty period shall apply:

1. Grass areas in unsightly or damaged condition for a period of 90 days after Final Acceptance.
2. Shrubs and groundcover for a period of 18 months after Final Acceptance.
3. Trees and palms for a period of 18 months after Final Acceptance.

B. The Contractor shall make periodic reviews of the planting, at no extra cost to Owner, during warranty period to determine what changes, if any, should be made in Owner's maintenance program. Proposed changes shall be submitted, in writing, to the Owner.

C. At conclusion of the warranty period, the Owner shall make a construction review to determine the condition of planting. Plants that have died or, in the opinion of the Owner, are in an unhealthy or badly impaired condition for reasons other than vandalism, "Acts of God", or documented neglect by the Owner, shall be replaced by the Contractor as soon as possible, except that replacement will not be required in any season definitely unfavorable for the kinds of plants involved.

RECORD SET
The information presented on this drawing is diagrammatic and is presented for general information purposes and should not be relied on for accuracy of dimensions, details and locations. Actual and exact conditions if required should be determined in the field.

PROGRESS SET - NOT FOR CONSTRUCTION

SEAL

KATHRYN O'LEARY RICHARDS, ASLA
FL. LANDSCAPE ARCHITECT
FL. LA REG. NO. 1317

O'Leary Richards Design Associates, Inc.
Landscape Architecture & Planning

Oak Plaza Profissional Center
8525 SW 92nd Street, Suite C-11
Miami, Florida 33156
p. 305.596.6628 f. 305.596.9160
www.olearyrichards.com

PREPARED FOR:

VILLAGE OF PALMETTO BAY

PALMETTO BAY MUNICIPAL CENTER
PALMETTO BAY, FLORIDA

ISSUE DATE:
September 1, 2010

REVISION DATE:

SCALE: AS NOTED
DRAWN BY: CES
CHECKED BY: KOR

DRAWING TITLE
Landscape Specifications

SHEET NUMBER
L5.04

OF

p:\orda\projects\2010 projects\palmetto bay village hall\cad\15.04_plant_spec.dwg

Date printed: 2010-10-01

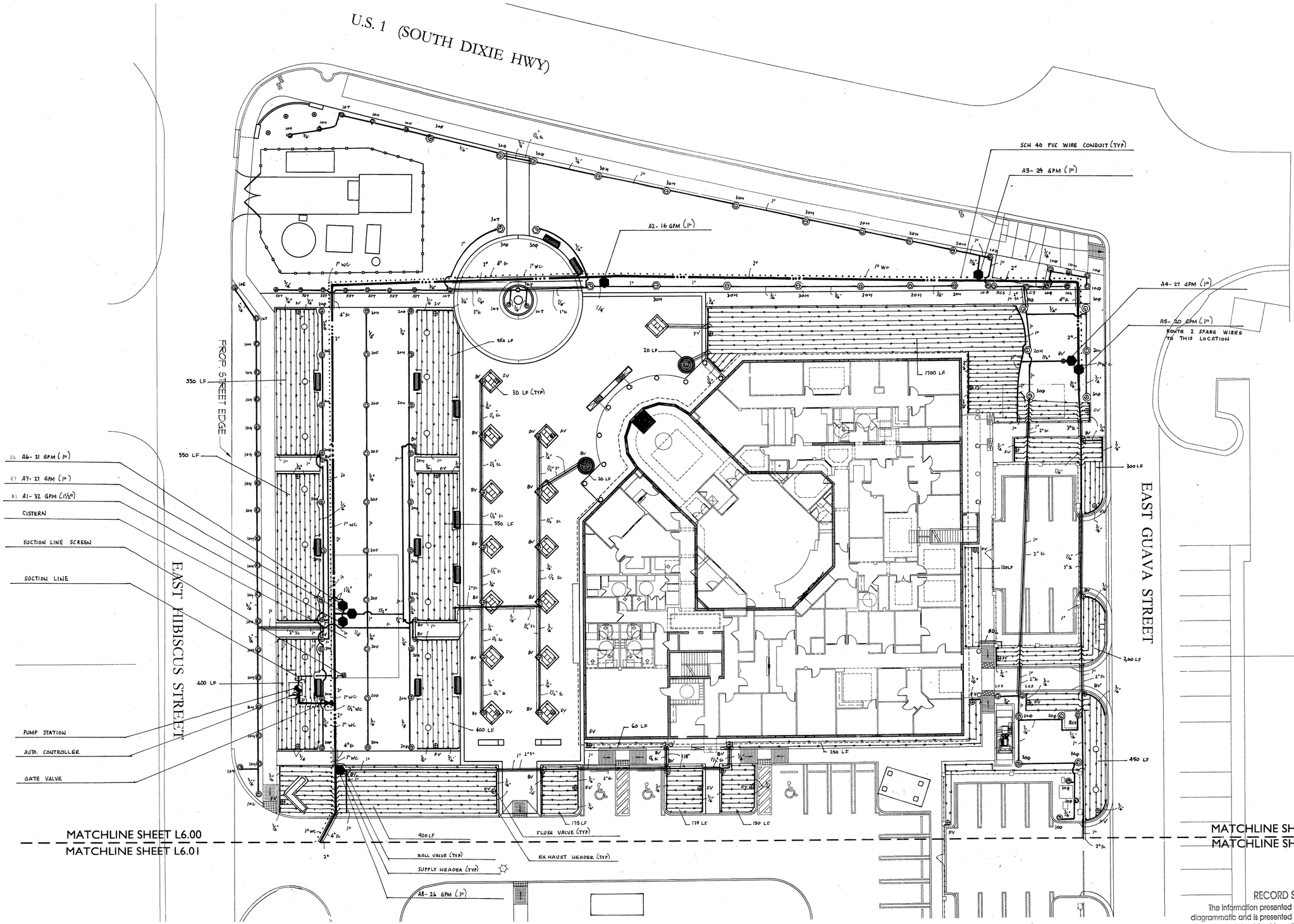

1 L6.00 IRRIGATION PLAN
SCALE: 1"=16'-0"

RECORD SET

The information presented on this drawing is diagrammatic and is presented for general information purposes and should not be relied on for accuracy of dimensions, details and locations. Actual and exact conditions if required should be determined in the field.

SEAL

KATHRYN O'LEARY RICHARDS, ASLA
FL. LANDSCAPE ARCHITECT
FL. LA REG. NO. 1317

O'Leary Richards Design Associates, Inc.
Landscape Architecture & Planning

Oak Plaza Professional Center
8525 SW 92nd Street, Suite C-11
Miami, Florida 33156
p. 305.596.6628 f. 305.596.9160
www.olearyrichards.com

PREPARED FOR:

VILLAGE OF PALMETTO BAY

PALMETTO BAY MUNICIPAL CENTER

PALMETTO BAY, FLORIDA

ISSUE DATE:
November 10, 2010
REVISION DATE:
SCALE: AS NOTED
DRAWN BY: CES
CHECKED BY: KOR

DRAWING TITLE

Irrigation Plan West

SHEET NUMBER

L6.00

OF

P:\ordaprojects2010 projects\palmetto bay village hall\cad\L6.00_irrg_plan.dwg

Date printed: 2010-10-01

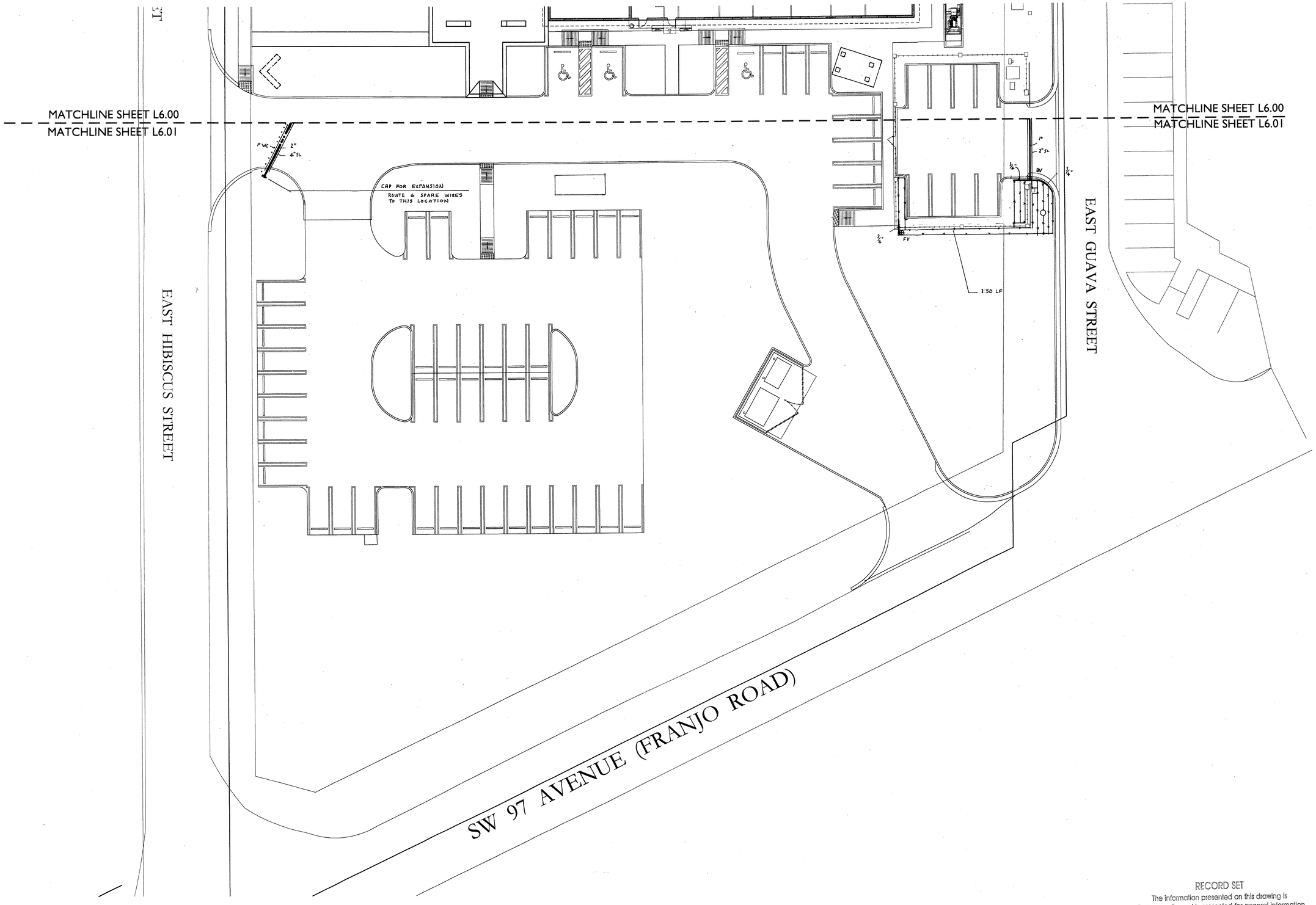

1 L6.01 IRRIGATION PLAN
SCALE: 1"=16'-0"

RECORD SET
The information presented on this drawing is diagrammatic and is presented for general information purposes and should not be relied on for accuracy of dimensions, details and locations. Actual and exact conditions if required should be determined in the field.

KATHRYN O'LEARY RICHARDS, ASLA
FL. LANDSCAPE ARCHITECT
FL. LA REG. NO. 1317

O'Leary Richards Design Associates, Inc.
Landscape Architecture & Planning

Oak Plaza Professional Center
8525 SW 92nd Street, Suite C-11
Miami, Florida 33156
p. 305.596.6628 f. 305.596.9160
www.olearyrichards.com

PREPARED FOR:

VILLAGE OF PALMETTO BAY

PALMETTO BAY MUNICIPAL CENTER

PALMETTO BAY, FLORIDA

ISSUE DATE: November 10, 2010
REVISION DATE:

SCALE: AS NOTED
DRAWN BY: CES
CHECKED BY: KOR

DRAWING TITLE
Irrigation Plan - East

SHEET NUMBER
L6.01

OF

p:\lordaprojects\2010 projects\palmetto bay village hall\cad\l6.01_irrig_plan.dwg

Date printed: 2010-11-12

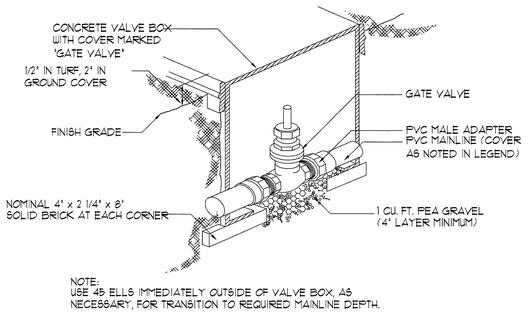

1 GATE VALVE DETAIL

NTS

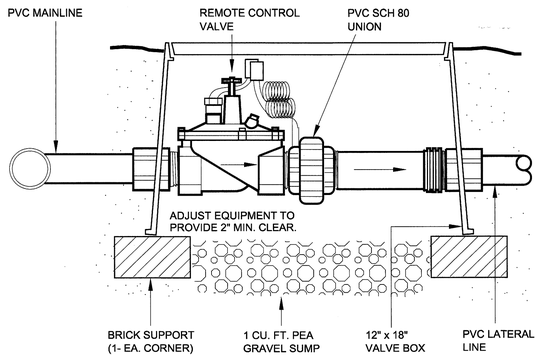

2 REMOTE CONTROL VALVE DETAIL

NTS

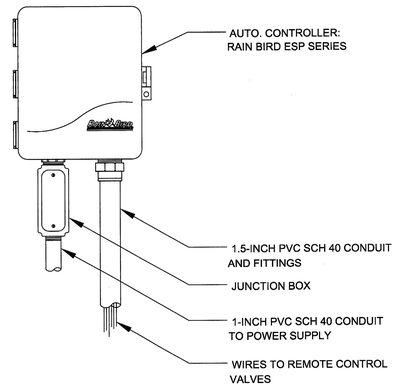

3 ESP AUTOMATIC CONTROLLER SMART SERIES

NTS

WIRE COLOR CODING CHART	
STATION #	WIRE COLOR
1 , 11	BLACK
2 , 12	RED
3 , 13	GREEN
4 , 14	YELLOW
5 , 15	ORANGE
6 , 16	BLUE
7 , 17	BROWN
8 , 18	PURPLE
9 , 19	TAN
10 , 20	GREY
COMMON	WHITE
SPARE	PINK

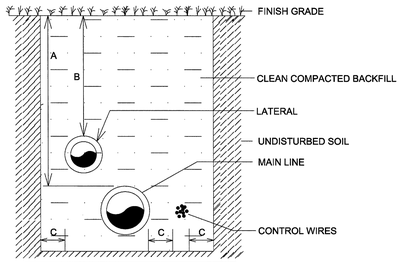

PIPE SIZE	DIMENSIONS		
	A	B	C
3/4" TO 2"	18"	12"	4"
2 1/2" AND 3"	18"	18"	4"
4" AND LARGER	24"		4"

NON-VEHICLE TRAFFIC AREA

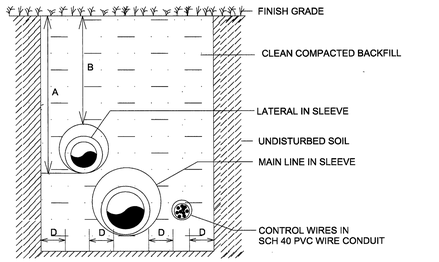

PIPE SIZE	DIMENSIONS		
	A	B	C
1 1/2" AND 2"	24"	18"	4"
3" AND 4"	30"	24"	4"
6" AND LARGER	36"	30"	4"

NOTE
SLEEVES SHALL BE TWICE THE DIAMETER OF THE LATERAL OR WIRE BUNDLE CARRIED

VEHICLE TRAFFIC AREA

4 TRENCHING DETAIL

NTS

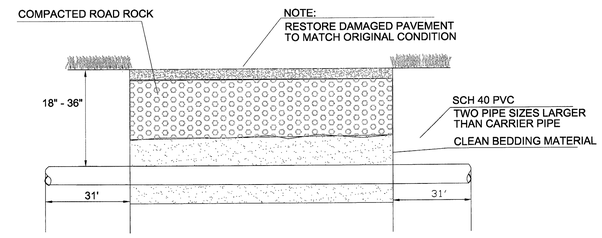

5 PIPE SLEEVE DETAIL

NTS

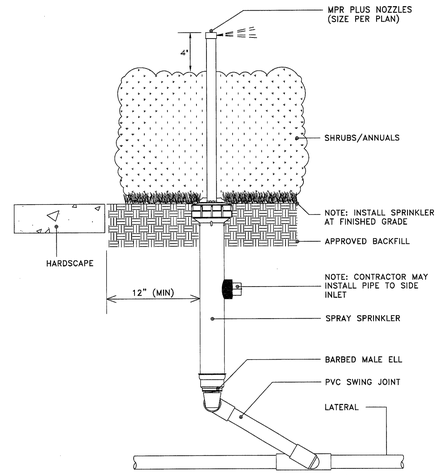

6 SPRINKLER DETAIL

12" POP-UP SPRAY ON PVC SWING JOINT LOCATED IN PLANTS MAINTAINED TO A MAXIMUM HEIGHT OF 8".

NTS

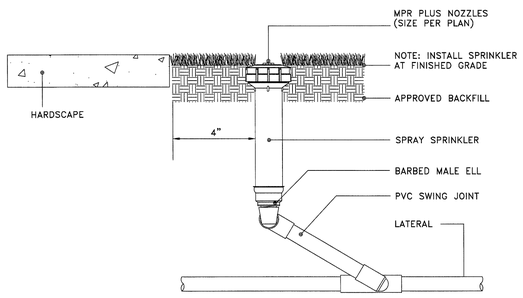

7 SPRINKLER DETAIL

POP-UP SPRAY ON PVC SWING JOINT LOCATED IN SOD OR MULCH

NTS

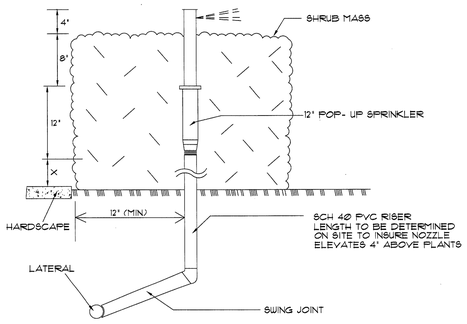

8 SPRINKLER DETAIL

12" POP-UP ON PVC SWING JOINT WITH RISER LOCATED IN PLANT MASS MAINTAINED TO A MINIMUM HEIGHT OF 24".

NTS

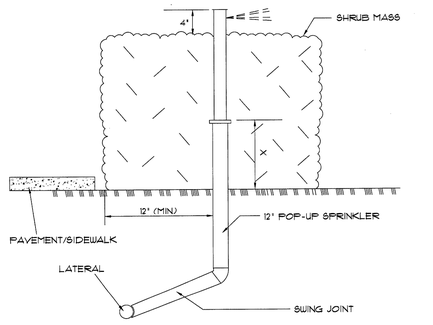

9 SPRINKLER DETAIL

12" POP-UP INSTALLED ON PVC SWING JOINT LOCATED IN PLANT MASS MAINTAINED TO A MAXIMUM HEIGHT OF 18".

NTS

RECORD SET

The information presented on this drawing is diagrammatic and is presented for general information purposes and should not be relied on for accuracy of dimensions, details and locations. Actual and exact conditions if required should be determined in the field.

SEAL

KATHERYN O'LEARY RICHARDS, ASLA
FL. LANDSCAPE ARCHITECT
FL. LA REG. NO. 1317

O'Leary Richards Design Associates, Inc.
Landscape Architecture & Planning

Oak Plaza Professional Center
8525 SW 92nd Street, Suite C-11
Miami, Florida 33156
p. 305.596.6628 f. 305.596.9160
www.olearyrichards.com

PREPARED FOR:

VILLAGE OF PALMETTO BAY

PALMETTO BAY MUNICIPAL CENTER
PALMETTO BAY, FLORIDA

ISSUE DATE:
November 10, 2010
REVISION DATE:
SCALE: AS NOTED
DRAWN BY: CES
CHECKED BY: KOR

DRAWING TITLE

Irrigation Details

SHEET NUMBER

L6.02

OF

p:\ord\projects\2010 projects\palmetto bay village hall\cad\irrigation 100% cd's\l6.02_irrig_details.dwg

Date printed: 2010-11-12

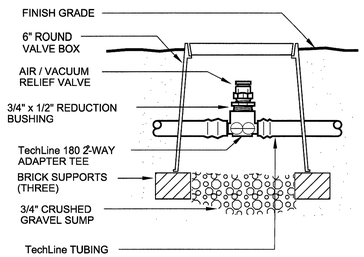

1 AIR VACUUM RELIEF PLUMBED TO TECHLINE — NTS

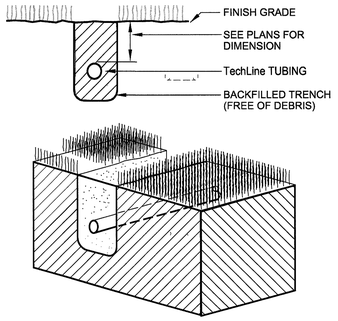

2 TRENCHING DETAIL — NTS

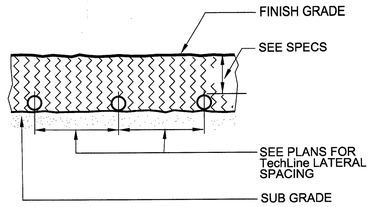

3 SUBGRADE INSTALLATION — NTS

WIRE COLOR CODING CHART	
STATION #	WIRE COLOR
1 , 11	BLACK
2 , 12	RED
3 , 13	GREEN
4 , 14	YELLOW
5 , 15	ORANGE
6 , 16	BLUE
7 , 17	BROWN
8 , 18	PURPLE
9 , 19	TAN
10 , 20	GREY
COMMON	WHITE
SPARE	PINK

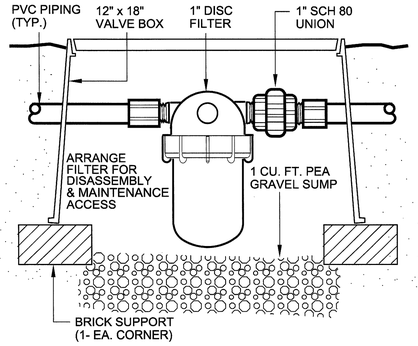

4 DISC FILTER — NTS

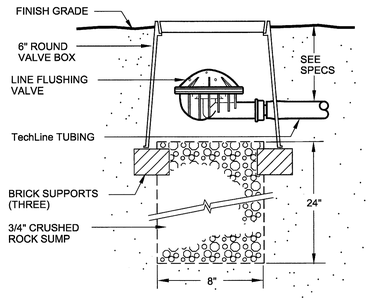

5 LINE FLUSHING VALVE PLUMBED TO TECHLINE — NTS

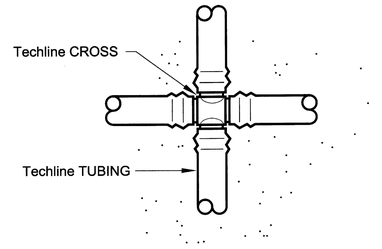

6 TYPICAL CROSS — NTS

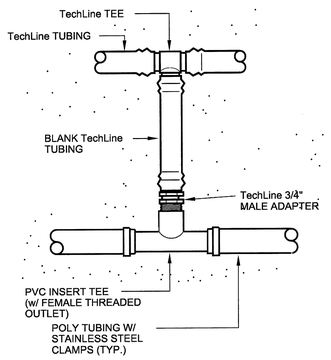

7 START CONNECTION POLY TO TEE — NTS

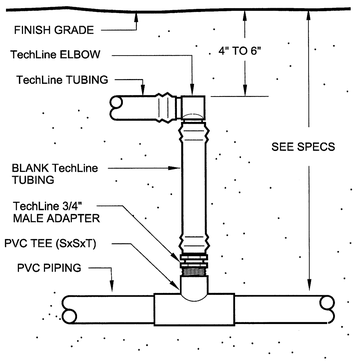

8 START CONNECTION PVC TO ELBOW — NTS

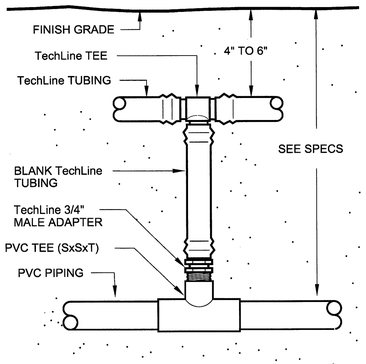

9 START CONNECTION PVC TO TEE — NTS

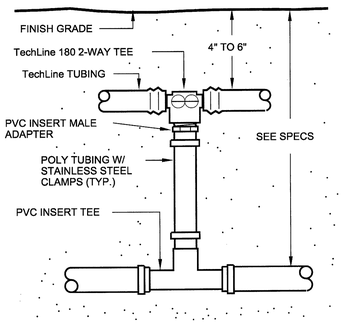

10 START CONNECTION POLY TO TECHLINE — NTS

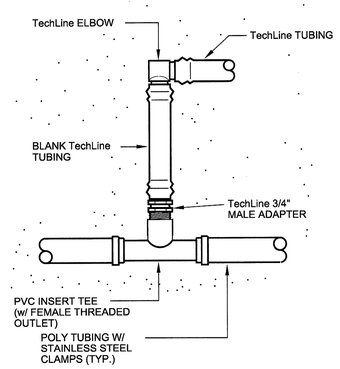

11 START CONNECTION POLY TO ELL — NTS

RECORD SET

The information presented on this drawing is diagrammatic and is presented for general information purposes and should not be relied on for accuracy of dimensions, details and locations. Actual and exact conditions if required should be determined in the field.

SEAL

KATHRYN O'LEARY RICHARDS, ASLA
FL. LANDSCAPE ARCHITECT
FL. LA REG. NO. 1317

O'Leary Richards Design Associates, Inc.
Landscape Architecture & Planning

Oak Plaza Professional Center
8525 SW 92nd Street, Suite C-11
Miami, Florida 33156
p. 305.596.6628 f. 305.596.9160
www.olearyrichards.com

PREPARED FOR:

VILLAGE OF PALMETTO BAY

PALMETTO BAY MUNICIPAL CENTER

PALMETTO BAY, FLORIDA

ISSUE DATE:
November 10, 2010
REVISION DATE:
SCALE: AS NOTED
DRAWN BY: CES
CHECKED BY: KOR

DRAWING TITLE

Irrigation Details Drip Irrigation

SHEET NUMBER

L6.03

OF

p:\ordaprojects\2010 projects\palmetto bay village hall\cad\irrigation 100% cds\L6.03_irrig_details_drip.dwg

Date printed: 2010-11-12

LEGEND

SYMBOL	MODEL NO.	DESCRIPTION	* EST. QUANTITY
10C	1806-MPCORNER	RAIN BIRD 6" POP-UP SPRINKLER/MP ROTOR NOZZLE	02
10Q	1806-MP1000-90	RAIN BIRD 6" POP-UP SPRINKLER/MP ROTOR NOZZLE	09
10T	1806-MP1000-120	RAIN BIRD 6" POP-UP SPRINKLER/MP ROTOR NOZZLE	01
10H	1806-MP1000-180	RAIN BIRD 6" POP-UP SPRINKLER/MP ROTOR NOZZLE	19
20Q	1806-MP2000-90	RAIN BIRD 6" POP-UP SPRINKLER/MP ROTOR NOZZLE	06
20H	1806-MP2000-180	RAIN BIRD 6" POP-UP SPRINKLER/MP ROTOR NOZZLE	23
20F	1806-MP2000-360	RAIN BIRD 6" POP-UP SPRINKLER/MP ROTOR NOZZLE	08
30Q	1806-MP2000-90	RAIN BIRD 6" POP-UP SPRINKLER/MP ROTOR NOZZLE	08
30H	1806-MP3000-180	RAIN BIRD 6" POP-UP SPRINKLER/MP ROTOR NOZZLE	04
RCS	1806-MPRCS515	RAIN BIRD 6" POP-UP SPRINKLER/MP ROTOR NOZZLE	02
LCS	1806-MPLCS515	RAIN BIRD 6" POP-UP SPRINKLER/MP ROTOR NOZZLE	03
10T	1812-MP1000-120	RAIN BIRD 12" POP-UP SPRINKLER/MP ROTOR NOZZLE	05
10H	1812-MP1000-180	RAIN BIRD 12" POP-UP SPRINKLER/MP ROTOR NOZZLE	04
SST	1812-MPSST530	RAIN BIRD 12" POP-UP SPRINKLER/MP ROTOR NOZZLE	07
20H	1812-MP2000-180	RAIN BIRD 12" POP-UP SPRINKLER/MP ROTOR NOZZLE	03
30T	1812-MP3000-120	RAIN BIRD 12" POP-UP SPRINKLER/MP ROTOR NOZZLE	03
30H	1812-MP3000-180	RAIN BIRD 12" POP-UP SPRINKLER/MP ROTOR NOZZLE	03
	TLCV9-12	TECHLINE NETAFIM DRIPPER LINE	8,000 LF
BDL		TECHLINE BLANK DRIPPER LINE	50 LF
FV	TLFV	TECHLINE FLUSH VALVE	27
NOT SHOWN	TLS6	TECHLINE SOIL STAPLES	AS REQUIRED
NOT SHOWN	TL ACC	TECHLINE ACCESSORIES	AS REQUIRED
NOT SHOWN	TLDF200120	TECHLINE DISK FILTER	01
	PGA SERIES	RAIN BIRD 24 VAC SOLENOID VALVE	
		1"	07
		1 1/2"	01
"A"	ESP-SMT4	RAIN BIRD SMART SERIES CONTROLLER	01
NOT SHOWN	ESP-SM3	RAIN BIRD 3 STATION EXPANSION MODULE	03
NOT SHOWN		PAIGE THHN WIRE #14 AWG VALVE CONTROL #12 AWG VALVE COMMON	AS REQUIRED
NOT SHOWN		SCH 40 GALVANIZED STEEL	AS REQUIRED
		SCH 40 PVC	AS REQUIRED
		MAIN LINE	
		LATERALS	
		SUCTION LINE	
		SUPPLY HEADERS	
		EXHAUST HEADERS	
NOT SHOWN		PVC FITTINGS	
		WIRE CONDUIT	
		ISOLATION VALVES	
		GATE TYPE	01
BV		BALL TYPE	31
FV, BV		VALVE BOX	67
"A"		GROUNDING LOCATION	01
		PUMP STATION	01

NOTES: ABOVE QUANTITIES ARE FOR COMPARISON ONLY.
CONTRACTOR SHALL VERIFY PRIOR TO SUBMITTING BID.

THE SMART CONTROLLER, WEATHER SENSOR, AND FILTER SHALL BE COMPONENTS OF THE PUMP STATION.

SPRINKLER PERFORMANCE CHART

NOZZLE	RADIUS	ARC	FLOW	PRESSURE	PRECIPITATION RATE
10 MPC	10'	45°	0.18 GPM	35 PSI	0.4 INCH/HR
10Q	13'	90°	0.18 GPM	35 PSI	0.4 INCH/HR
10T	13'	120°	0.23 GPM	35 PSI	0.4 INCH/HR
10H	13'	180°	0.35 GPM	35 PSI	0.4 INCH/HR
10F	13'	360°	0.70 GPM	35 PSI	0.4 INCH/HR
20Q	19'	90°	0.37 GPM	35 PSI	0.4 INCH/HR
20H	19'	180°	0.69 GPM	35 PSI	0.4 INCH/HR
20F	19'	360°	1.37 GPM	35 PSI	0.4 INCH/HR
30Q	28'	90°	0.85 GPM	35 PSI	0.4 INCH/HR
30H	28'	180°	1.70 GPM	35 PSI	0.4 INCH/HR
LCS	5X15	LEFT STRIP	0.22 GPM	35 PSI	0.4 INCH/HR
RCS	5X15	RIGHT STRIP	0.22 GPM	25 PSI	0.4 INCH/HR
TLDL	---	---	0.92 GPM	35 PSI	0.85 INCH/HR

IRRIGATION NOTES & SPECIFICATIONS

AUTOMATIC IRRIGATION SYSTEM	
WATER DEMAND / ZONE	REFER TO PLAN
WATER SOURCE	CISTERN
PRESSURE REQUIRED	40 PSI

GENERAL

IRRIGATION SHALL BE INSTALLED IN ACCORDANCE WITH LOCAL CODES, CONTRACT DRAWINGS, AND CONTRACT SPECIFICATIONS.

IRRIGATION DESIGN BASED ON "PLANTING PLAN" DATED NOVEMBER 10, 2010. CONTRACTOR SHALL REFER TO THIS PLAN TO COORDINATE SPRINKLER LOCATIONS AND PIPE ROUTING WITH NEW AND EXISTING PLANT LOCATIONS.

THIS IRRIGATION PLAN SHALL BE USED AS A GUIDE ONLY. CONTRACTOR SHALL INSTALL IRRIGATION TO MATCH ON SITE CONDITIONS AND TO OVERCOME THE INHERENT INACCURACIES THAT RESULT WHEN DESIGNING FROM BASE PLANS SCALED AT 1" = 16'.

THIS IRRIGATION HAS BEEN DESIGNED AS A TYPICAL BLOCK VALVE TYPE USING NETAFIM TECHLINE DRIPPER LINE AND RAINBIRD SPRINKLERS, SOLENOID VALVES, AND CONTROL SYSTEM. WATER CONSERVATION EQUIPMENT SHALL BE INSTALLED.

THE WATER SOURCE SHALL BE A PUMP SUPPLIED FROM A CISTERN. MINIMUM PRESSURE REQUIRED TO INSURE PROPER OPERATION IS 40 PSI.

CONTRACTOR IS ADVISED TO VISIT THE SITE TO BECOME FAMILIAR WITH ON SITE CONDITIONS, AND TO REFER TO THE PLAN FOR ADDITIONAL INFORMATION.

TO ENSURE PROPER OPERATION, PUMPING CAPACITY, SOURCE SIZE, VALVE SIZES, ZONE CAPACITIES, SPRINKLER AND DRIPPER LINE SPACING, PIPE AND WIRE SIZES, INSTALLATION NOTES AND DETAILS, SPECIFICATIONS, CITY OF PALMETTO BAY SPECIFICATIONS AND APPENDIX"F" OF THE FLORIDA BUILDING CODE SHALL BE FOLLOWED AS SHOWN.

PIPING

PIPE ROUTING IS SCHEMATIC ONLY AND SHALL BE ADJUSTED FOR ON SITE CONDITIONS.

PIPE SHALL BE INSTALLED IN ACCORDANCE WITH LOCAL CODES AND PIPE MANUFACTURER'S INSTRUCTIONS.

PIPE ROUTED UNDER HARDSCAPED AREAS SHALL BE SLEEVED IN SCH 40 PVC. EACH SLEEVE SHALL: (1) BE BURIED TO A MINIMUM DEPTH OF 24", (2) BE TWO PIPE SIZES LARGER THAN CARRIER PIPE, AND (3) EXTEND 3' BEYOND HARDSCAPED AREA ON EACH END. CONTRACTOR SHALL VERIFY THE SIZE, DEPTH AND LOCATION OF ALL EXISTING SLEEVES.

PIPE AND FITTINGS INSTALLED ABOVE GRADE AT THE PUMP STATION SHALL BE SCH 40 GALVANIZED STEEL. ALL OTHER PIPE AND FITTINGS SHALL BE SCH 40 TYPE 1120 PVC.

PIPE SIZED TO LIMIT FLOW VELOCITIES TO 5 FEET/SECOND AND TO LIMIT FRICTION LOSS IN THE PIPING NETWORK.

PIPE SHALL BE INSTALLED AT SUFFICIENT DEPTH BELOW GROUND TO PROTECT IT FROM HAZARD SUCH AS VEHICULAR TRAFFIC OR ROUTINE OCCURRENCES WHICH OCCUR IN THE NORMAL USE AND MAINTENANCE OF THE PROPERTY. DEPTHS OF COVER SHALL MEET OR EXCEED SCS CODE 430-DD. REFER TO THE APPLICABLE DETAIL FOR ADDITIONAL INFORMATION.

BACKFILL SHALL BE OF SUITABLE MATERIAL, FREE OF ROCKS, STONES, AND OTHER DEBRIS THAT WOULD DAMAGE IRRIGATION SYSTEM COMPONENTS.

GATE AND BALL VALVES SHALL BE INSTALLED FOR ISOLATION. EACH VALVE SHALL BE TO LINE SIZE AND INSTALLED IN A VALVE BOX. POROUS MATERIAL SHALL BE INSTALLED PER BOX TO PROMOTE DRAINAGE.

SPRINKLERS

SPRINKLER LOCATIONS ARE SCHEMATIC ONLY AND SHALL BE ADJUSTED FOR LANDSCAPING, SITE LIGHTING, PREVAILING WIND, UTILITIES, ETC., TO ENSURE PROPER COVERAGE WITH MINIMAL UNDESIRABLE OVERTHROW.

SPRINKLERS SHALL BE RAIN BIRD 1800 SERIES SIX INCH AND TWELVE INCH POP-UP TYPE WHICH SHALL BE INSTALLED ON PVC SWING JOINTS CONSISTING OF MARLEX STREET ELBOWS AND SCH 80 NIPPLES.

EACH SPRINKLER SHALL BE EQUIPPED WITH THE APPROPRIATE MP ROTOR NOZZLE.

SPRINKLERS SHALL BE INSTALLED AND MAINTAINED AT THE PROPER HEIGHT TO ELIMINATE THE CHANCE OF INJURY AND TO MINIMIZE OVERTHROW ONTO PAVEMENT.

ADJUSTMENT FEATURES OF SPRINKLERS SPECIFIED SHALL BE UTILIZED TO ENSURE PROPER COVERAGE WITH MINIMAL UNDESIRABLE OVERTHROW.

SPRINKLERS LOCATED ADJACENT TO HARDSCAPED AREAS SHALL BE INSTALLED AWAY FROM HARDSCAPED AREAS TO MINIMIZE OVERTHROW AND THE CHANCE OF DAMAGE BY VEHICLES, PEDESTRIANS, AND LAWN MAINTENANCE PERSONNEL. AS A GENERAL RULE, 6" POP-UP SPRINKLERS SHALL BE INSTALLED IN 4" AND 12" POP-UP SPRINKLERS SHALL BE INSTALLED IN 12". REFER TO APPROPRIATE INSTALLATION DETAILS FOR ADDITIONAL INFORMATION.

DRIP IRRIGATION

DRIP IRRIGATION SHALL BE INSTALLED TO IRRIGATE AREAS LANDSCAPED WITH SHRUBS AND GROUND COVERS.

DRIP IRRIGATION SHALL CONSIST OF TECHLINE NETAFIM CV DRIPPER LINE, DISC FILTER, FLUSH VALVES, SOIL STAPLES, AND ACCESSORIES.

DRIPPER LINE WITH EMITTERS SPACED ON 12" ON-CENTER WHICH DELIVER 0.9 GPH SHALL BE INSTALLED TO MATCH PLANTING PATTERNS. THE MAXIMUM DISTANCE BETWEEN ROWS SHALL BE 24".

DRIPPER LINE SHALL BE INSTALLED IN ACCORDANCE WITH MANUFACTURER'S INSTRUCTIONS AND UNDER THE SUPERVISION OF THE LANDSCAPE ARCHITECT.

LINE FLUSH VALVES SHALL BE INSTALLED AS RECOMMENDED FOR MAINTENANCE.

A DISC FILTER SHALL BE INSTALLED TO INSURE PROPER OPERATION. THIS UNIT SHALL BE A COMPONENT OF THE PUMP STATION.

QUANTITIES OF TECHLINE INDICATED ON THE PLAN ARE VERY APPROXIMATE. CONTRACTOR SHALL SUBMIT A PER FOOT UNIT PRICE TO INSTALL TECHLINE SO ADDITIONS AND DELETIONS TO THE CONTRACT MAY BE MADE AT A PRE-DETERMINED PRICE.

CONTROL SYSTEM

A RAIN BIRD ESP SMART SERIES ELECTRIC CONTROL SYSTEM SHALL BE INSTALLED. ONE 13 STATION CONTROLLER SHALL ACTIVATE 8 IN-LINE VALVES. ONE VALVE SHALL BE CONTROLLED PER STATION.

CONTROLLER SHALL BE INSTALLED IN ACCORDANCE WITH LOCAL CODES AND MANUFACTURER'S INSTRUCTIONS. PROPER GROUNDING EQUIPMENT SHALL BE PROVIDED.

CONTROLLER LOCATION SHALL BE APPROVED BY THE OWNER'S REPRESENTATIVE. A 110 VAC ELECTRIC SOURCE IS REQUIRED PER LOCATION. THE CONTROLLER SHALL BE A COMPONENT OF THE PUMP STATION.

CONTROL LINES FROM AUTOMATIC CONTROLLER TO IN-LINE AUTOMATIC VALVES SHALL BE #14 AWG THHN TYPE WHICH SHALL BE: (1) INSTALLED IN ACCORDANCE WITH LOCAL CODES, (2) INSTALLED IN WIRE CONDUIT THROUGHOUT, (3) BURIED TO THE DEPTH OF THE MAIN LINE, (4) COLOR CODED TO FACILITATE TROUBLESHOOTING, AND (5) SPLICED MOSTLY AT VALVE LOCATIONS. SPLICES SHALL BE MADE WATERPROOF USING APPROVED METHODS. SPARE WIRES SHALL BE ROUTED FROM THE CONTROLLER IN ALL DIRECTIONS TO THE FARTHEST VALVES CONTROLLED.

AN INDIVIDUAL CONTROL WIRE SHALL BE ROUTED TO EACH VALVE AND VALVES WHICH OPERATE SIMULTANEOUSLY SHALL BE TEED TOGETHER AT THE CONTROLLER.

AUTOMATIC VALVE LOCATIONS ARE SCHEMATIC ONLY AND SHALL BE ADJUSTED FOR ON SITE CONDITIONS. EACH VALVE SHALL BE INSTALLED IN A VALVE BOX. A MINIMUM OF ONE CUBIC FOOT OF GRAVEL SHALL BE PROVIDED PER BOX TO PROMOTE DRAINAGE.

WATER CONSERVATION EQUIPMENT SHALL BE INSTALLED IN ACCORDANCE WITH MANUFACTURER'S INSTRUCTIONS. THE WEATHER SENSOR SHALL BE A COMPONENT OF THE PUMP STATION.

PUMP STATION

LOCATION OF PUMP STATION SHALL BE VERIFIED ON SITE.

STATION SHALL BE A PRE-FABRICATED TYPE WITH A CAPACITY OF 30 GPM @ 92 FT.HD. BASIC COMPONENTS SHALL INCLUDE: (1) A SELF PRIMING CENTRIFUGAL PUMP WITH THE CAPACITY NOTED, (2) A 2 HP MOTOR SELECTED TO MATCH ON SITE ELECTRIC, (3) DISC FILTER (4) SMART SERIES CONTROL WITH WEATHER SENSOR, (5) GATE AND CHECK VALVES, (6) ALMINUM SKID, (7) FIBERGLASS ENCLOSURE, AND (8) APPROPRIATE PROTECTIVE EQUIPMENT.

STATION SHALL BE MANUFACTURED BY HOOVER PUMP OR APPROVED EQUAL.

STATION SHALL BE INSTALLED IN ACCORDANCE WITH MANUFACTURER'S RECOMMENDATION, AND SHALL BE MOUNTED ON A 6" REINFORCED CONCRETE SLAB SIZED TO ACCOMMODATE THE STATION AND ASSOCIATED EQUIPMENT.

THE PUMP SHALL BE ACTIVATED BY THE AUTOMATIC CONTROLLER.

THE WATER SOURCE SHALL BE A CISTERN. SUCTION LINE SHALL BE PROPERLY INSTALLED TO INSURE PROPER OPERATION. THE WATER LEVEL IN THE CISTERN SHALL BE MONITORED VIA FLOAT SWITCHES TO PROTECT THE PUMP.

TIMING AND PRECIPITATION

TIMING OF EACH STATION SHALL BE SET IN THE FIELD TO MATCH LOCAL REQUIREMENTS. REFER TO ZONE SUMMARY CHART FOR RECOMMENDED RUN TIMES TO APPLY 1.5 INCH/WEEK ON SOD AND 1.0 IN/WK ON SHRUBS.

PROGRAMMING

SYSTEM SHALL BE PROGRAMMED TO INSURE IRRIGATION IS COMPLETED WITHIN THE SFWMD GUIDELINES FOR PHASE II WATER RESTRICTIONS.

ZONE SUMMARY CHART

STA NO.	VALVE	PLANT TYPE	SPRINKLER TYPE	VALVE SIZE	WATER DEMAND	RUN *TIME	WEEKLY USAGE
1	A1	SOD	MP ROTOR	1 1/2"	31 GPM	180 MIN/WK	5,580 GAL/WK
2	A2	SHRUBS	MP ROTOR	1"	16 GPM	120 MIN/WK	1,920 GAL/WK
3	A3	SOD	MP ROTOR	1"	24 GPM	180 MIN/WK	4,320 GAL/WK
4	A4	SHRUBS	DRIP	1"	27 GPM	70 MIN/WK	1,890 GAL/WK
5	A5	SHRUBS	DRIP	1"	20 GPM	70 MIN/WK	1,400 GAL/WK
6	A6	SHRUBS	DRIP	1"	21 GPM	70 MIN/WK	1,470 GAL/WK
7	A7	SHRUBS	DRIP	1"	27 GPM	70 MIN/WK	1,890 GAL/WK
8	A8	SHRUBS	DRIP	1"	32 GPM	70 MIN/WK	2,240 GAL/WK
9-13	SPARE						
							20,710 GAL/WK

* TO APPLY 1.5 IN/WK ON SOD AND 1 IN/WK ON SHRUBS.

NOTE:

IRRIGATION SYSTEM INCLUDES ALL LABOR, MATERIALS, EQUIPMENT AND INCIDENTALS FOR THE COMPLETE INSTALLATION OF AUTOMATIC IRRIGATION SYSTEM BY MEANS OF OPEN TRENCHING AS SPECIFIED IN THE PLANS AND SPECIFICATIONS. IT INCLUDES THE COST OF ALL SYSTEM COMPONENTS AND INSTALLATION INCLUDING, BUT NOT LIMITED TO VALVES, RAIN SENSORS, IRRIGATION HEADS, NOZZLES, FITTINGS, PIPES, ELECTRICAL & IRRIGATION SLEEVES, PULL WIRES, DIRECTIONAL DRILLING, EMS MARKERS, CONTROLLERS, CLOCKS, BACKFILLING, DEBRIS REMOVAL, SYSTEM TESTING, MOT AND ALL REQUIRED PERMITS TO PERFORM THIS WORK.

RECORD SET

The information presented on this drawing is diagrammatic and is presented for general information purposes and should not be relied on for accuracy of dimensions, details and locations. Actual and exact conditions if required should be determined in the field.

SEAL

KATHRYN O'LEARY RICHARDS, ASLA
FL. LANDSCAPE ARCHITECT
FL. LA REG. NO. 1317

O'Leary Richards Design Associates, Inc.
Landscape Architecture & Planning
Oak Plaza Professional Center
8525 SW 92nd Street, Suite C-11
Miami, Florida 33156
p. 305.596.6628 f. 305.596.9160
www.olearyrichards.com

PREPARED FOR:

VILLAGE OF PALMETTO BAY

PALMETTO BAY MUNICIPAL CENTER
PALMETTO BAY, FLORIDA

ISSUE DATE: November 10, 2010
REVISION DATE:
SCALE: AS NOTED
DRAWN BY: CES
CHECKED BY: KOR

DRAWING TITLE

Irrigation Legend & Notes

SHEET NUMBER

L6.04

OF

p:\orda\projects\2010 projects\palmetto bay village hall\cad\irrigation 100% cds\l6.03_irrig_notes.dwg

Date printed: 2010-11-12

SECTION 02810

IRRIGATION SPECIFICATIONS

PART 1 - GENERAL

1.01 SCOPE

A. Contractor shall provide all labor, materials, equipment, supervision, and related work necessary to complete the irrigation work in accordance with the Irrigation Plans, schedules and these specifications. The extent of work is shown on the drawings which are a part of this document.

1.02 WORK INCLUDED

A. Provide labor, materials, equipment, and services to install the irrigation system as indicated on the drawings, as specified herein or both.

B. The completed and proper construction of the irrigation system including, but not limited to:

1. All piping including mains, laterals, fittings, sleeves, connections to existing laterals, tees, risers, and swing joints.

2. All control, gate, globe, pressure reducing, air relief, quick coupling and other valves including valve boxes, markers, connections, operators and other accessories.

3. Complete automatic control system as shown on plans including controller, water conservation equipment, control wiring, and grounding.

4. All stationary spray sprinklers, rotor sprinklers and bubblers including proper nozzles as called for herein and shown on the plans and all other appurtenances and accessories for proper operation.

5. All drip irrigation equipment.

6. Pre-fabricated pump station.

7. All excavation, site work, relocation or replacement of utilities, backfill and restoration of all disturbed areas.

8. Providing a complete and operable system for the irrigation of all landscaping on the project site.

9. Adjusting head location, type and size, and any other system components to comply with the requirements of landscaping as actually installed, and to minimize overthrow onto pavement.

10. Supplying, delivering, storing and protecting all equipment and materials including pipe and fittings, sprinkler heads, valves, controllers, wire, drip equipment, and other component parts necessary for the installation of a fully automatic irrigation system as indicated in the plans and specifications.

PART 2 - PRODUCTS

2.01 PVC PIPE

A. PVC pipe shall be virgin, high impact, polyvinyl chloride pipe which shall be continuously and permanently marked with the manufacturer's name, material, size, and schedule or type. Pipe shall conform to U.S. Department of Commerce Commercial Standard CS 207-60 or latest revision. Material shall conform to all requirements of Commercial Standard (CS,256-63) or latest revision.

B. Main line, laterals, supply and exhaust headers, and sleeves shall be SCH 40 PVC conforming to ASTM D, 1785.

2.02 GALVANIZED PIPE

A. Pipe installed above grade for the pump station shall be galvanized painted steel conforming to ASTM A.120 Schedule 40.

2.03 FITTINGS

A. PVC fittings shall be SCH 40, Type 1, and must be of domestic manufacturer. Fittings shall be identified according to pressure rating or schedule.

B. Galvanized fittings shall be malleable iron screwed fittings conformed to ANSI B 16.3.

2.04 SWING JOINTS AND RISERS

A. Pop-up sprinklers shall be installed on PVC swing joints consisting of Marlex street elbows and SCH 80 nipples.

2.05 SPRINKLER HEADS

A. All sprinkler heads shall be as manufactured by Rain Bird or approved equal. The manufacturer shall guarantee all sprinklers and components for not less than one year from installation, warranty against all defects in normal material and workmanship.

B. Pop-up Heads (Series 1800) shall be designed for in-ground installation. The sprinkler shall be capable of covering from 8' radius to 27' radius at 30 psi.

1. The nozzle shall be MP rotor type, and shall elevate six (6) inches when in operation. Retraction shall be achieved by a heavy duty stainless steel spring. The nozzle position shall have a smooth external surface operation in a resilient guide. A riser wiper shall be included in the sprinkler for continuous operation under the pressure of sand and other foreign material.

2. Coverage shall be either full or part circle. The part circle coverage shall be available in arcs of 90 degrees to 270 degrees. Also included shall be special configurations. Nozzle delivery shall be such as to allow part circle patterns to match full circle patterns in precipitation rates. Nozzles shall be manufactured by Hunter.

3. The body of the sprinkler shall be constructed of non-corrosive heavy duty Cycolac. A filter screen shall be in the nozzle piston. All sprinkler parts shall be removable through the top of the unit by removal of a threaded cap.

2.06 ELECTRICAL VALVES

A. Series and Manufacturer

1. Rain Bird Manufacturer

2. PGA Series Diaphragm Valves

B. Electrically activated remote control valves shall be of plastic construction with stainless steel trim, normally closed with manual bled plug and manual control (cross handle on 1-1/2" and 2" models; screwdriver adjustment on 1" model). Solenoid shall be 3.5 watt, 24 volt A.C. with waterproof molded coil and removable from valve without running coil and twisting wire. Diaphragm shall be of rubber material. Tir-Act solenoid porting shall prevent a continuous flow of water through the ports during operation. Inlet port to solenoid shall be filtered with self-flushing stainless steel screen, removable from outside of valve body for maintenance. All parts shall be serviceable without removing valve from the line. Valve shall have no external plumbing or tubing and may be installed at any angle without affecting valve operation. Valves shall be as sized on the plan.

2.07 VALVE BOXES

A. Valve boxes for electric and manual valves shall be Brooks concrete type or approved equal, designed for installation with irrigation systems. Each valve box shall be large enough to provide at least two inches of clearance around all valve parts. The word "irrigation" shall be imprinted in the valve box cover. Covers for valve boxes shall have an anti-theft locking mechanism.

2.08 AUTOMATIC CONTROLLER

A. Series and manufacturer

1. Rain Bird Manufacturer

2. ESP smart series

B. The sprinkler controller shall provide for complete automatic operation of the sprinkler system and shall be a component of the pump station.The controller shall have a station capacity as noted. Each station shall have independent time control with a 1 minute to 4 hour timing (in one minute increments). Minor timing adjustments shall be made from the face of the controller with no disassembly necessary. The controller shall provide for rapid advance between stations. Stations may be programmed to be omitted. The controller shall provide for manual operation when particular stations require special irrigation. The controller shall provide variable day cycles for every day, every other day, every third day, etc.

C. All station wiring shall be color-coded with a section indicator key printed and visible at the connection point.

D. There shall be fused circuit protection to prevent damage due to excessive voltage surges. A pump start circuit which can also be used to control a master valve shall be included in each unit. Each controller shall have U.L. approval.

E. The controller shall have a weather sensor with a removable tipping bucket rain gauge and a temperature sensor.

2.09 CONTROL WIRE

A. Electrical control and ground wire shall be irrigation control cable. Wiring to be used for connecting automatic remote control valves to each automatic controller shall be Type THHN, 600 volt, solid copper, single conductor wire with PVC insulation and bear U.L. approval for in conduit installations.

B. Wires shall be installed in SCH 40 PVC conduit sized so the wires occupy less than forty per cent of the cross sectional area of the conduit. Wires shall be spliced using 3MDBR/Y direct bury splice kits.

C. Verification of wire types and installation procedures shall be checked with and made to conform to local codes. Wires shall be color coded to facilitate troubleshooting.

2.10 ISOLATION VALVES

A. Gate and ball valves shall be 150 lb. brass, and shall be manufactured by Nibco or approved equal. Gate valves shall have non-rising stems. Valves shall be to line size.

2.11 PAINT

A. Exterior alkyd enamel, flat black or approved equal shall be used on above ground PVC risers and other designated irrigation equipment. CONTRACTOR shall provide paint sample to ILandscape Architect for approval prior to execution of painting.

2.12 DRIP IRRIGATION

A. Drip irrigation equipment shall be manufactured by Netafim or approved equal.

B. Drip equipment shall consist of cv dripper line with 0.92 gph emitters spaced 12" on center, disc filter, flush valves, soil staples, and appropriate accessories.

2.13 PUMP STATION

A. Pump station shall be a pre-fabricated type manufactured by Hoover Pump or approved equal.

B. Pump Station shall be have a capacity of 30 gpm @ 92 FT HD. Basic components shall include: (1) a self priming centrifugal pump with the capacity noted, (2) a 2 hp motor selected to match on site electric, (3) filter, (4) smart series controller with weather sensor, (5) gate and check valves, (6) alminum skid, (7) fiberglass enclosure, and (8) appropriate protective control equipment.

PART 3 - EXECUTION

3.01 PREPARATION

A. Layout mainlines and laterals and perform line adjustments and site modifications prior to excavation.

B. Stake sprinkler head locations and dripper line routing and check for uniformity of coverage and correctness of pattern.

C. Locate valves to assure ease of access for maintenance and so there is no physical interference with other elements of the project. Align valves parallel to each other in manifold system. Locate valves to be least susceptible to damage by vehicles.

D. Furnish temporary support, adequate protection and maintenance of underground and surface utilities, structures, drains, sewers, and other obstructions encountered in the progress of work.

E. Where the grade or alignment of the pipe is obstructed by existing utility structures such as conduit, ducts, pipe branch connections to sewer mains, main drains, water services, etc., the obstruction shall be permanently supported, relocated, removed, or reconstructed by the CONTRATOR in cooperation with the Owner of such utility. No deviation from the required line or grade shall be made without written approval.

3.02 PIPE INSTALLATION

A. Excavation shall be unclassified and shall include materials encountered in the excavation of trenches for pipe installation. The trench shall be of sufficient width and depth for installation of the pipe as indicated herein and cause minimum disturbance to existing conditions. Directional bore under existing pavement and sidewalks rather than cut and restore. No pavement shall be cut without written approval.

B. Pipe shall be delivered and stored on the job site with suitable protection against any damage to pipe and fittings.

C. Trenches shall be made wide enough to allow a minimum of six (6) inches between parallel pipe lines. Trenches for pipe lines shall be made of sufficient depths to provide the minimum cover from finish grade as follows:

1. 24" minimum cover over all sleeved lines routed under pavement.

2. 18" minimum cover over main line installed in landscaped areas.

3. 12" minimum cover over all lateral lines routed in landscaped areas.

4. Sufficient width shall be allowed for excavating and working in trenches made in unstable soil.

D. Pipe and fittings shall be carefully inspected before installation in the trench. Rocks over 1" diameter and unsuitable bearing material shall be removed from trench.

1. Solvent welded joints shall be made only on clean, dry, square cut, smooth pipe sections. The fitting shall be "dry" tested for proper size before solvent is applied. The assembly shall proceed in strict accordance with recommended procedures furnished by the manufacturer.

2. Solvent welded pipe sections shall be "snaked" from side to side in the trench to prevent joint rupture due to thermal contraction.

3. Pipe openings shall be plugged during construction to prevent entrance of foreign material.

E. Pipe to be installed under roadways, sidewalks, or other hardscape areas shall be placed in a SCH 40 PVC sleeve with an inside diameter two pipe sizes larger than the outside diameter of the pipe or the combined outside diameter of pipes installed. Sleeves shall be extend a minimum of 36" beyond edge of pavement and stabilize for construction. Verify locations with other contractors and notify CONSULTANT or CITY'S representative immediately of any conflicts.

F. Backfill shall be carefully placed to avoid pipe dislocation. Backfill material shall be free of rocks, stumps, roots and other unsuitable material. Backfill shall be placed in six inch (6") lifts and shall be thoroughly compacted, except in areas to receive trees and shrubs. Backfill under pavement or sidewalks shall be compacted to 98% of maximum A.A.S.H.O. T-180 density. The surface of backfilled trenches shall be even with the surrounding ground surface.

3.03 SPRINKLER HEAD INSTALLATION

A. The plans are schematic in nature. Place sprinkler heads, adjust nozzles, spray patterns and make adjustments that may be required to give the landscaped areas full, complete and proper coverage and distribution of water, and to meet manufacturer's requirements for even precipitation rates.

B. Install sprinkler heads to minimize vandalism and overthrow onto pavement.

C. Pop-up sprinklers shall be installed on PVC swing joints as shown in the detailed drawings. Each sprinkler shall be installed so that the top is slightly above the finished grade level. Backfill around swing joints and sprinklers shall be free of large rocks, roots, or foreign debris.

D. Six inch pop-up sprinklers located adjacent to curbs, sidewalks, fences, or edge of paving shall be installed four (4) inches from back of curb, sidewalk, pavement, or fences.

3.04 CONTROLLER

A. The controller shall be installed following the recommendations of the manufacturer of the equipment. The location of the controller shall be approved by the CONSULTANT or CITY prior to installation. The controller shall be a component of the pump station.

3.05 CONTROL WIRE

A. Control wires shall be installed in SCH 40 PVC conduit which shall be laid to the side and depth of the main line. Looped slack shall be provided at valves, and wires shall be snaked in.

B. No underground splices shall be made except at electric valves in valve boxes. Solder splices and coat with elastometric waterproof cement. Wrap with electrical tape and coat again with elastometric waterproof cement.

C. Wires shall be color coded to facilitate troubleshooting.

3.06 AUTOMATIC VALVES

A. Each automatic valve shall be installed in a valve box and shall be arranged for easy adjustment. Valve boxes shall be installed flush with grade and shall contain a minimum of one cubic foot of coarse gravel under the valve itself. CONTRACTOR shall insure percolation through the box. Valve boxes shall be located and installed to deter vandalism.

3.07 WEATHER SENSOR

A. A weather sensor shall be installed to conserve water. This unit shall be installed in accordance with local codes and manufacturer's instructions. This sensor shall be a component of the pump station.

3.08 ISOLATION VALVES

A. Gate and ball valves shall be installed in accordance with local codes, and arranged in valve box for easy adjustment and removal.

3.09 VALVE BOXES

A. Valve boxes shall be installed so the top of the box is at finished grade and parallel to adjacent boxes, curbs, walks. Each valve box cover shall be equipped with an anti-theft mechanism. Valve boxes shall be installed to deter vandalism and damage by vehicular traffic.

B. Proper drainage material shall be provided per box.

3.10 DRIP IRRIGATION

A. Drip irrigation shall be installed to irrigate areas landscaped with shrubs and ground covers.

B. Drip irrigation shall consist of Techline Netafim CV dripper line, disc filter, flush valves, soil staples, and accessories.

C. Dripper line with emitters spaced on 12" on-center which deliver 0.9 gph shall be installed to match planting patterns. The maximum distance between rows shall be 24".

D. Dripper line shall be installed in accordance with manufacturer's instructions and under the supervision of the landscape architect.

E. Line flush valves shall be installed as recommended for maintenance.

F. A disc filter shall be installed to insure proper operation. This unit shall be a component of the pump station.

3.11 PUMP STATION

A. Location of pump station shall be verified on site.

B. Station shall be a pre-fabricated type with a capacity of 30 gpm @ 92 FT.HD. Basic components of the station shall include: (1) a self priming centrifugal pump with the capacity noted, (2) a 2 hp motor selected to match on site electric, (3) filter, (4) smart series control with weather sensor, (5) gate and check valves, (6) alminum skid, (7) fiberglass enclosure, and (8) appropriate protective equipment.

C. Station shall be manufactured by Hoover Pump or approved equal.

D. Station shall be installed in accordance with manufacturer's recommendation, and shall be mounted on a 6" reinforced concrete slab sized to accommodate the unit and associated equipment.

E. The pump shall be activated by the automatic controller.

F. The water source is a cistern. Suction line shall be properly installed to insure proper operation. The water level in the cistern shall be monitored via float switches.

3.12 TESTING AND INSPECTION

A. Cleaning and Pressure Testing: Flush irrigation system with water to clear lines of foreign materials after system assembly is complete prior to installation of sprinkler heads. Cap and plug outlets and fill lines with water. Pressurize assembly to 100 P.S.I. and shut off pump. System shall hold at 100 P.S.I. for one hour with no loss in pressure. Joints, tees, elbows, caps and connections shall be left uncovered during this test. Main line sections of solid unbroken pipe should be buried at intervals adequate to secure stabilization of pipe runs when pressurized. If necessary, repair leaks and retest assembly until satisfactory. Install sprinkler heads after approval of test results of complete assembly, less sprinkler heads.

B. Make repairs, replacements, adjustments, and reconstruction required to pass inspections and test.

C. Final inspection shall be made when the complete system is in place, operable and all repairs, additions, adjustments and other work is complete. Demonstrate the proper operation of the system, show the system's conformance with the plans and specifications, and demonstrate that the irrigation system gives proper and adequate coverage of landscaped areas.

D. Make further repairs, corrections and adjustments to eliminate any deficiencies which may be discovered after acceptance.

E. Prepare (4) sets of as-builts that show deviations from Bid Documents modified during construction. Said as-builts shall be delivered to City prior to final acceptance.

3.13 WARRANTY

A. Warranty the landscape irrigation system for a period of one (1) year after the written final acceptance.

B. Enforce manufacturer's and supplier's warranties. Malfunctions, deficiencies, breaks, damages, disrepair or other disorder due to materials, workmanship, or installation shall be immediately and properly corrected.

C. Make full and immediate restoration of damages caused by system malfunction.

RECORD SET

The information presented on this drawing is diagrammatic and is presented for general information purposes and should not be relied on for accuracy of dimensions, details and locations. Actual and exact conditions if required should be determined in the field.

SEAL

KATHRYN O'LEARY RICHARDS, ASLA
FL. LANDSCAPE ARCHITECT
FL. LA REG. NO. 1317

O'Leary Richards Design Associates, Inc.
Landscape Architecture & Planning

Oak Plaza Professional Center
8525 SW 92nd Street, Suite C-11
Miami, Florida 33156
p. 305.596.6628 f. 305.596.9160
www.olearyrichards.com

PREPARED FOR:

VILLAGE OF PALMETTO BAY

PALMETTO BAY MUNICIPAL CENTER
PALMETTO BAY, FLORIDA

ISSUE DATE:
November 10, 2010

REVISION DATE:

SCALE: AS NOTED
DRAWN BY: CES
CHECKED BY: KOR

DRAWING TITLE

Irrigation Specifications

SHEET NUMBER

L6.05

OF

r:\ordaprojects\2010 projects\palmetto bay village hall\cad\irrigation 100% cd's\l6.05_irrig spec.dwg