DESIGN DESIGNATION

1980 A.D.T.	6500
2000 A.D.T.	7345
D.H.V.	955
D	50/50
T	9.2%
V	35 MPH

CONVENTIONAL SIGNS

CENTERLINE

RIGHT OF WAY — R/W — R/W

RAILROAD — RR

EXISTING UTILITIES: WATER LINE — W — W

GAS LINE — G — G

TELEPHONE LINE — T — T

UTILITY POLES — POWER

SEWER LINES — EXISTING

MANHOLES — M.H. — EXISTING

CATCH BASINS — C.B. — EXISTING

WATER VALVE — W.V. — EXISTING

INDEX OF SHEETS

LINE DATA

BEGIN PROJECT	STA. 9+44.00
END PROJECT	STA. 10+58.00
LENGTH OF PROJECT	114 FEET OR 0.021 MILES
BEGIN WORK	STA. 8+90
END WORK	STA. 10+66.00
LENGTH OF WORK	176 FEET OR 0.033 MILES

PREPARED AND RECOMMENDED BY:

W.E. QUICKSALL AND ASSOCIATES, INC.
CONSULTING ENGINEERS
NEW PHILADELPHIA, OHIO

FILE NO.	STARK COUNTY	CITY OF CANTON 15TH ST. S.W.
	DATE OF LETTING _____ 19 ___	
	CONTRACT NO. _____	

DRAWN CED 8-21-80 | CK'D. JMB | CORR. | CK'D.

STATE OF OHIO
DEPARTMENT OF TRANSPORTATION

452-8073

M-2E79(1)

G.P.840

FHWA REGION	STATE	PROJECT	
5	OHIO	M-2E79(1)	

STARK COUNTY
CITY OF CANTON
15 TH. STREET S.W.

STARK COUNTY
CITY OF CANTON
15 TH. STREET S.W. BRIDGE
DECK REPLACEMENT

1979 SPECIFICATIONS

THE STANDARD SPECIFICATIONS OF THE STATE OF OHIO, DEPARTMENT OF TRANSPORTATION, INCLUDING CHANGES AND SUPPLEMENTAL SPECIFICATIONS LISTED IN THE PROPOSAL SHALL GOVERN THIS IMPROVEMENT.

I HEREBY APPROVE THESE PLANS AND DECLARE THAT THE MAKI OF THIS IMPROVEMENT WILL REQUIRE THE CLOSING TO TRAFFIC OF 1 STREET AND THAT DETOURS WILL BE AS SHOWN ON DETOUR MAP

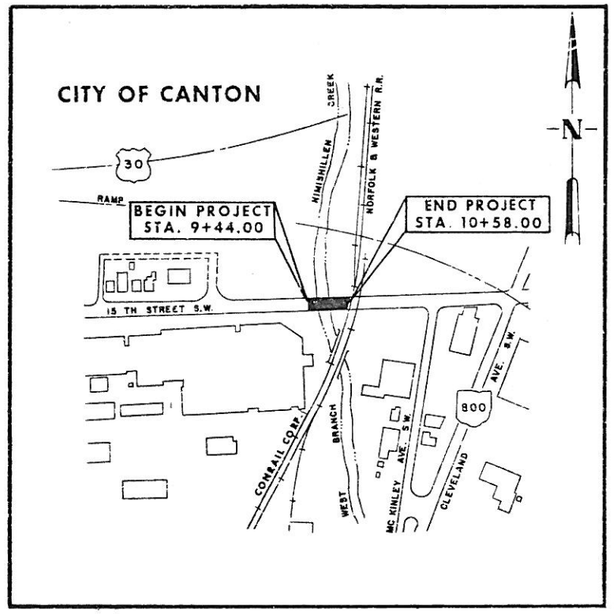

LOCATION MAP

0 200 400
SCALE IN FEET

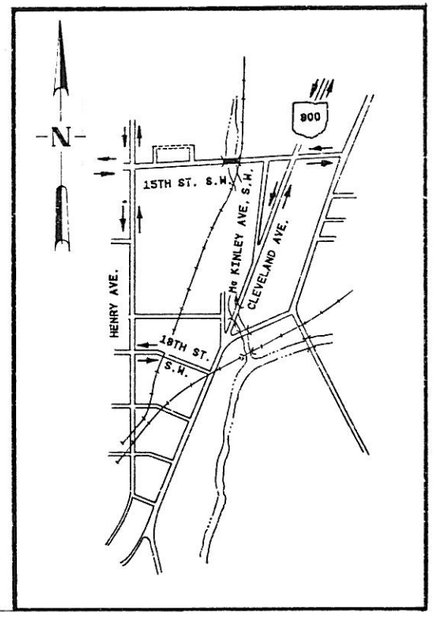

DETOUR MAP

0 400 800
SCALE IN FEET

STANDARD DRAWINGS	
AS-1-72	6-30-72
BP-5	4-16-79
BR-2-67	10-15-71
MC-3	6-1-73

PORTION TO BE IMPROVED

FEDERAL ROADS

STATE ROADS

OTHER ROADS & STREETS

SCALE

PLAN 0 10 20

PROFILE HORIZONTAL 0 10 20

PROFILE VERTICAL 0 10 20

SUPPLEMENTAL SPECIFICATIONS	
814	1-6-69
836	3-12-75
849	4-25-77
853	6-26-78
956	6-26-78
1001	1-3-77

5816
2
14
3

APPROVED J.L. Gallagher
DATE 12/18/80 CANTON TRAFFIC ENGINEER

APPROVED Shirley L. Stoff
DATE 12-18-80 CANTON CITY ENGINEER

APPROVED William M. Goldman
DATE 2-9-81 DISTRICT DEPUTY DIRECTOR OF TRANSPORT

APPROVED Robert B. Pfeifer
DATE 4-3-81 ENGINEER, BUREAU OF BRIDGES AND STRUCTURAL DESIGN

APPROVED Howard E. Nolan
DATE 5-14-81 CHIEF ENGINEER, PLANNING AND DESIGN

APPROVED David L. Weis
DATE 5-14-81 DIRECTOR, DEPARTMENT OF TRANSPORTAT

DEPARTMENT OF TRANSPORTATION
FEDERAL HIGHWAY ADMINISTRATION

5816
2
14
3

APPROVED:

DIVISION ADMINISTRATOR — DATE

MADE BY J.M.G. 8-22-80
CHK'D BY W.D.A. 10-24-80

FHWA REGION	STATE	PROJECT	
5	OHIO		

STARK COUNTY
CITY OF CANTON
15th STREET S.W.

GENERAL NOTES

FIELD OFFICE: THE CONTRACTOR SHALL PROVIDE A SUITABLE FIELD OFFICE HAVING A MINIMUM OF 150 SQ. FT. OF FLOOR SPACE. THE ABOVE HAS BEEN CARRIED TO THE GENERAL SUMMARY.
ITEM 619 - FIELD OFFICE LUMP SUM

ESTIMATED QUANTITIES: SPECIFIC LOCATIONS AND USAGE OF ESTIMATED QUANTITIES SET UP ON THIS PLAN TO BE USED "AS DIRECTED BY THE ENGINEER" SHALL BE MADE A MATTER OF RECORD BY INCORPORATION INTO THE FINAL CHANGE ORDER GOVERNING COMPLETION OF THIS PROJECT. ESTIMATED QUANTITIES OF MATERIALS SHALL NOT BE ORDERED FOR DELIVERY TO THE PROJECT UNLESS AUTHORIZED BY THE ENGINEER.

ELEVATION DATUM: ALL ELEVATIONS ARE BASED ON THE U.S.G.S. DATUMS.

MAINTENANCE OF TRAFFIC: DURING REMOVAL AND CONSTRUCTION OF THE BRIDGE A DETOUR SHALL BE PROVIDED AS SHOWN IN THESE PLANS, SHEET 1. THE CITY WILL PROVIDE, ERECT, MAINTAIN, AND REMOVE DETOUR SIGNING AS NECESSARY. TRAFFIC SHALL BE DETOURED UNTIL ALL CONSTRUCTION WITHIN THE WORK LIMITS HAS BEEN COMPLETED.

THE CONTRACTOR SHALL MAINTAIN LOCAL TRAFFIC IN ACCORDANCE WITH THE PROVISIONS OF ITEM 614.

UTILITY OWNERSHIP
THE FOLLOWING UTILITIES AND OWNERS ARE LOCATED WITHIN THE WORK LIMITS OF THIS PROJECT:

THE CITY OF CANTON SEWER DEPARTMENT, 218 CLEVELAND AVENUE, S. W., CANTON, OHIO 44702. PHONE: (216) 489-3450

THE CANTON WATER DEPARTMENT, 2664 HARRISBURG ROAD, N. E., CANTON, OHIO 44705. PHONE: (216) 489-3310

THE OHIO BELL TELEPHONE COMPANY, 832 McKINLEY AVENUE, N. W., ROOM 01, CANTON, OHIO 44703. PHONE: (216) 489-9931

THE OHIO POWER COMPANY, 301 CLEVELAND AVENUE, S. W., CANTON, OHIO 44701. PHONE: (216) 456-8173

THE EAST OHIO GAS COMPANY, 332 SECOND STREET, N. W., CANTON, OHIO 44705. PHONE: (216) 456-1328

WARNER CABLE TV, 2700 ATLANTIC, N. E., CANTON, OHIO 44709. PHONE: (216) 456-8166

UNDERGROUND UTILITIES
THE LOCATIONS OF THE UNDERGROUND UTILITIES SHOWN ON THE PLANS HAVE BEEN OBTAINED BY DILIGENT FIELD CHECKS AND SEARCHES OF AVAILABLE RECORDS. IT IS BELIEVED THAT THEY ARE ESSENTIALLY CORRECT, BUT THE STATE OF OHIO DOES NOT GUARANTEE THEIR ACCURACY OR COMPLETENESS.

CROWN AT RAILROAD CROSSINGS: THE CROWN SHALL BE WORKED OUT OF THE PAVEMENT ON THE APPROACH SLAB BY RAISING THE EDGE OF PAVEMENT TO MEET THE RAIL ELEVATION.

WATER VALVE BOX ADJUSTED TO GRADE: THIS WORK CONSISTS OF ADJUSTING THE EXISTING WATER VALVE BOX TO GRADE. THE CONTRACTOR SHALL EXCAVATE AROUND THE EXISTING WATER VALVE BOX WITHOUT INJURING THE BOX OR PIPE. BOX SHALL THEN BE ADJUSTED TO GRADE. IF NECESSARY ADJUSTMENT IS OUTSIDE THE DESIGN LIMITS OF THE EXISTING BOX, AN EXTENSION SHALL BE ADDED OR A NEW VALVE BOX INSTALLED AS DIRECTED BY THE ENGINEER. INSTALLATION OF A VALVE BOX AND BACKFILL SHALL BE PERFORMED IN A MANNER SATISFACTORY TO THE ENGINEER. THE FOLLOWING QUANTITY HAS BEEN CARRIED TO THE GENERAL SUMMARY.
ITEM 814 - VALVE BOX - - - - - - - - - - - - - - - - - 1 EACH

ADJUSTMENT OF EXISTING SIGNING: WHERE THE WORK REQUIRES MOVEMENT OF EXISTING TRAFFIC CONTROL SIGNS, CITY UTILITY POLES, SIGNAL SUPPORTS AND RELATED CONCRETE FOUNDATIONS. THE CITY WILL REMOVE AND RESET OR DISPOSE OF THEM. ALL SIGNING WITHIN THE RAILROAD RIGHT-OF-WAY WHICH REQUIRES REMOVAL OR RESETTING SHALL BE BORNE BY OTHERS.

SEEDING: THE AREAS OF DISTURBED SOIL WITHIN THE WORK LIMITS SHALL BE SEEDED IN ACCORDANCE WITH ITEM 659. THE FOLLOWING QUANTITY HAS BEEN CARRIED TO THE GENERAL SUMMARY.
ITEM 659 - SEEDING - - - - - - - - - - - - - - - - - -22.0 SQ.YD.

APPROACH SLABS: JACKING HOLES, AS SHOWN ON AS-1-72, SHALL BE OMITTED. THE REINFORCING IN THE TOP OF THE SLAB SHALL BE 3" CLEAR.

RAILROAD PAVEMENT MARKING AND SIGNING
SHALL BE FURNISHED BY THE CITY OF CANTON ACCORDING TO THE OHIO MANUAL OF UNIFORM TRAFFIC CONTROL DEVICES FOR STREETS AND HIGHWAYS.

DRAWN	CK'D.	CORR.	BK CK'D.
JMS	WDA		

FHWA REGION	STATE	PROJECT	
5	OHIO		

GENERAL SUMMARY

CALC. BY C.F.D. 8-19-80
CHK'D BY D.O.Q.10-23-80

STARK COUNTY
CITY OF CANTON
15TH STREET S.W.

FROM SHEET NO. 2	4	5				GRAND TOTAL	UNIT	ITEM	DESCRIPTION (TYPE CODE UNLESS NOTED 0)
		227				227	SQ.YD.	202	PAVEMENT REMOVED
		808				808	SQ.FT.	202	SIDEWALK REMOVED
		150				150	LIN.FT.	202	CURB REMOVED
		210				210	SQ.YD.	203	SUBGRADE COMPACTION
		894				894	SQ.FT.	608	4" CONCRETE WALK, AS PER PLAN
		54				54	CU.YD.	310	SUBBASE, TYPE I
		7				7	CU.YD.	402	ASPHALT CONCRETE AC-20
	9	7				16	CU.YD.	404	ASPHALT CONCRETE AC-20
	20	21				41	GAL.	407	TACK COAT: RC-250, MS-2, RS-1, SS-1, OR SS-1H
		.7				.7	TON	407	COVER AGGREGATE
		12				12	SQ.YD.	452	8" PLAIN PORTLAND CEMENT CONCRETE PAVEMENT
		98				98	LIN.FT.	609	CURB, CITY OF CANTON STANDARD
		210				210	SQ.YD.	611	REINFORCED CONCRETE APPROACH SLAB, T-14
		2				2	EACH	604	MANHOLE, ADJUSTED TO GRADE
		4				4	EACH	604	CATCH BASIN, ADJUSTED TO GRADE
		1				1	EACH	604	CATCH BASIN CURB CASTING, CITY OF CANTON STAN INSTALLED ONLY
		1				1	EACH	814	WATER VALVE BOX, ADJUSTED TO GRADE
22						22	SQ.YD.	659	SEEDING AND MULCHING
						LUMP	LUMP	624	MOBILIZATION
LUMP						LUMP	LUMP	614	MAINTAINING TRAFFIC
LUMP						LUMP	LUMP	619	FIELD OFFICE
									FOR BRIDGE QUANITIES, SEE SHEET NO. 9

DRAWN	CK'D.	CORR.	BK.CK'D.
CFD	DOQ		

FHWA REGION	STATE	PROJECT	
5	OHIO		

MADE BY C.F.D. 8-15-80
CHK'D BY D.O.Q. 10-23-80

STARK COUNTY
CITY OF CANTON
15th STREET S.W.

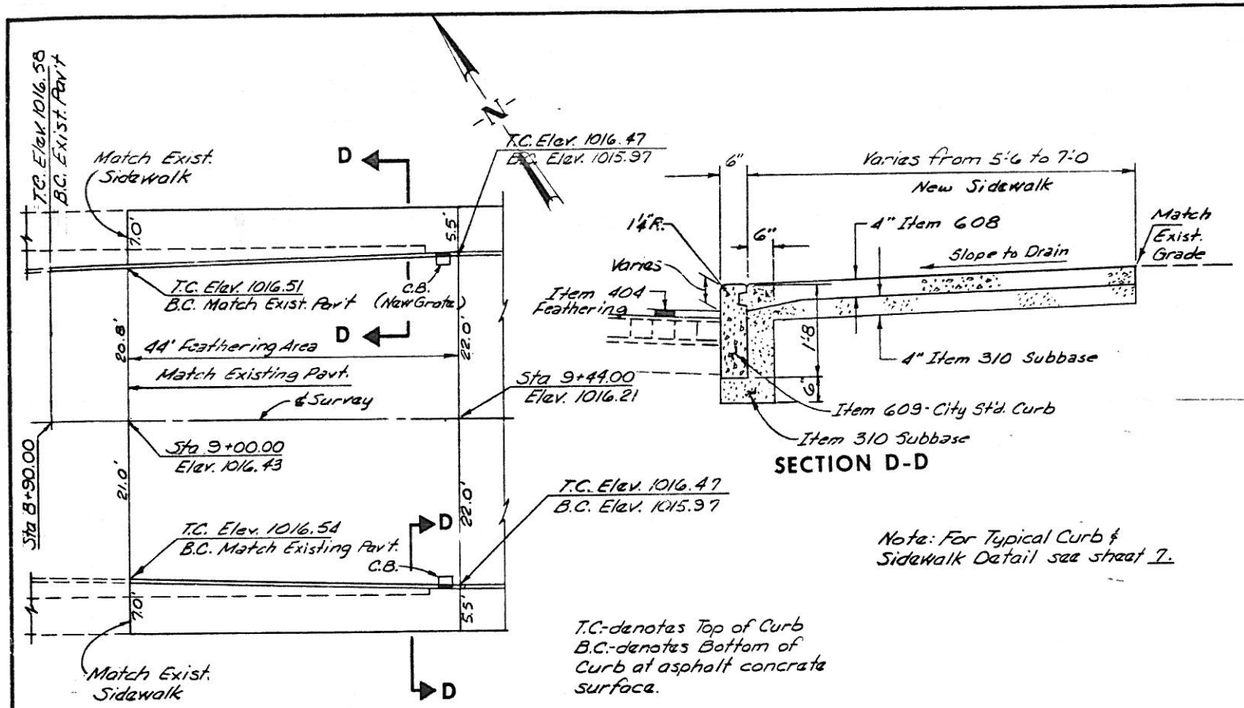

CURB AND SIDEWALK DETAILS
STA 9+00 TO STA 9+44

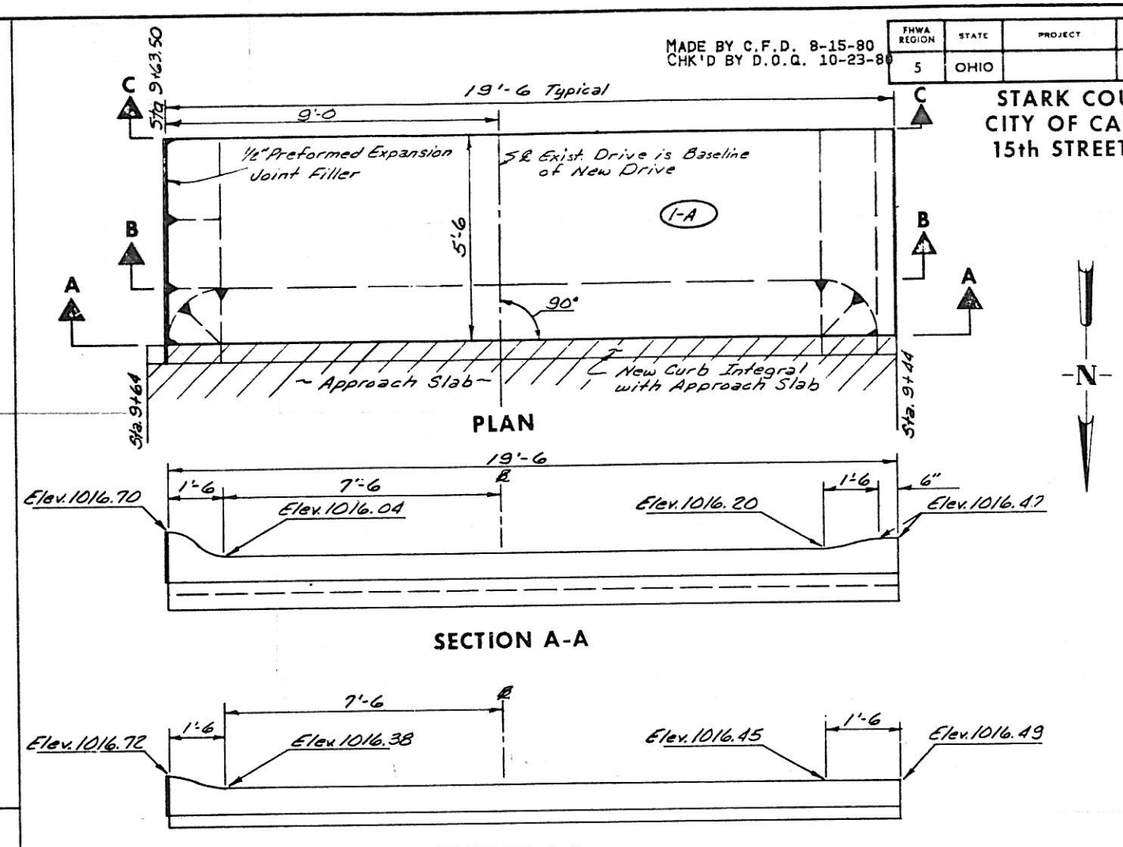

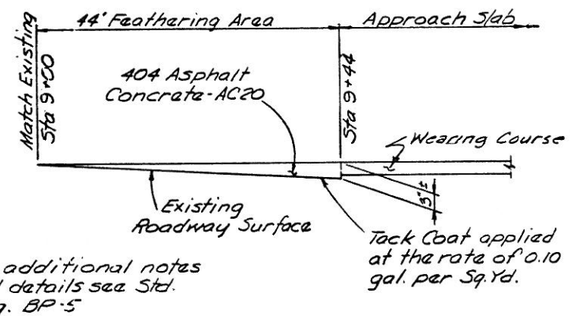

For additional notes and details see Std. Dwg. BP-5

TYPICAL FEATHERING AREA DETAIL

Item 404 - Asphalt Concrete-AC20 8.7 Cu Yds.
Item 407 - Tack Coat — — — — — — — 20 Gal.

Quantities carried to General Summary Sheet 3.

ESTIMATED QUANTITIES

Item 452 - 8" Plain Portland Cement Concrete — 1.1
Item 310 - Subbase, Type 1 — — — — 1.

(1-A) Quantities carried to Plan & Profile Sheet 5.

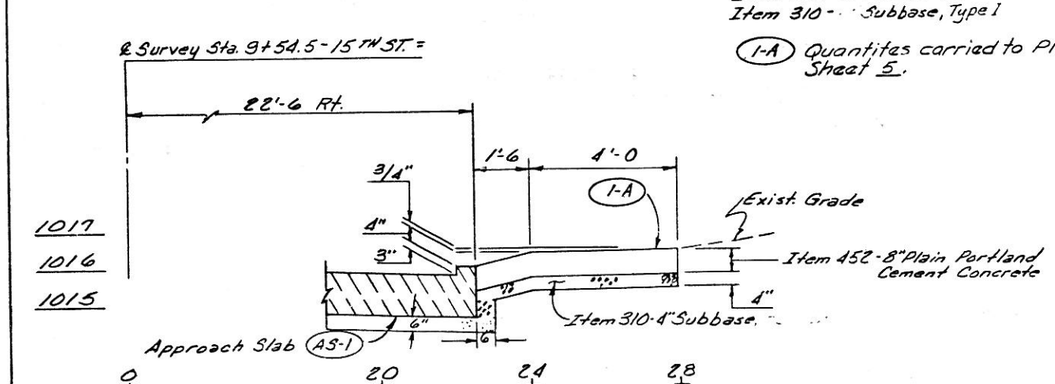

DRIVEWAY PROFILE

DRAWN	CHK'D.	CORR.	BK CK'D.
CFD 8-28-80	DOQ 10-23-80		

MISCELLANEOUS DETA

MADE BY C.F.D. 8-18-80
CHK'D BY D.O.Q 10-16-80

STARK COUNTY
CITY OF CANTON
15TH ST. S.W.

FHWA REGION	STATE	PROJECT	
5	OHIO		

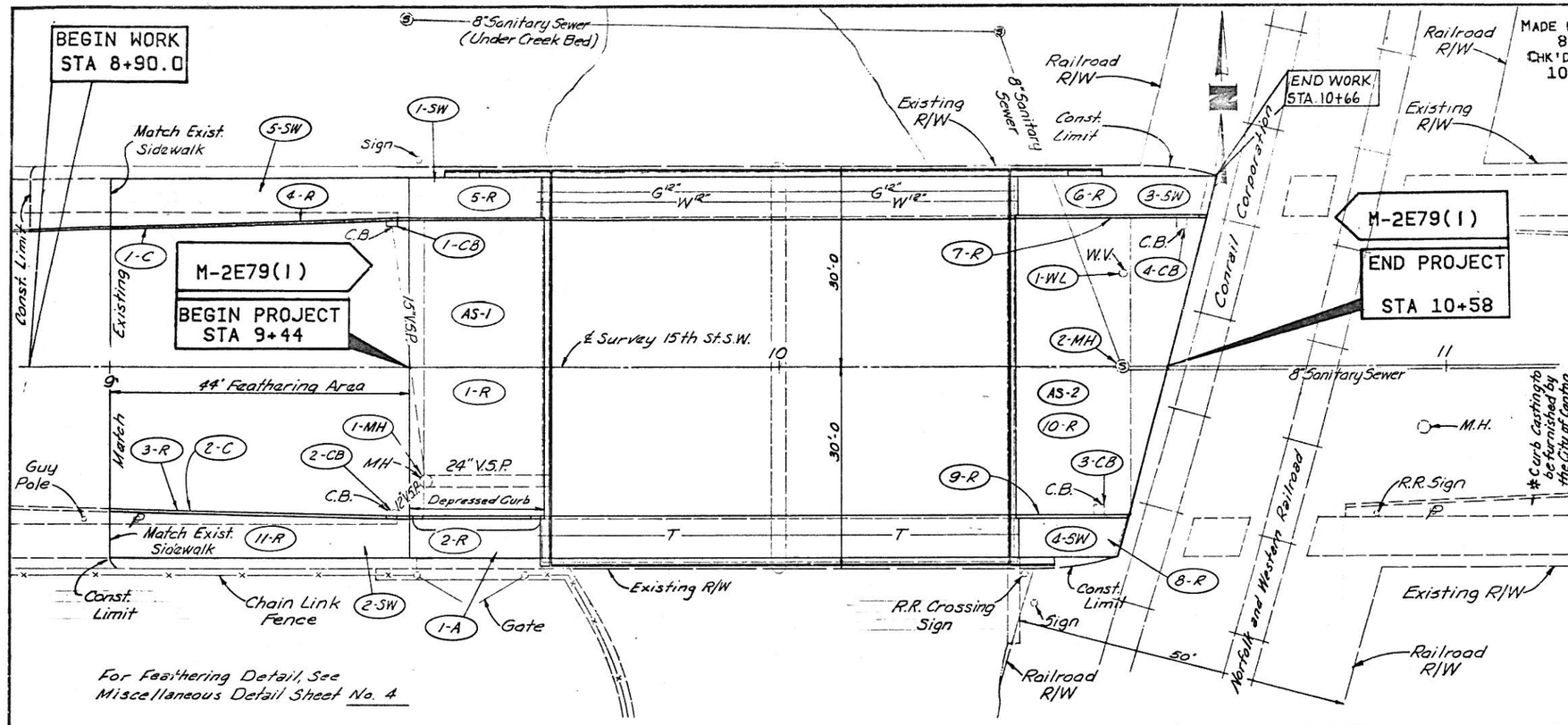

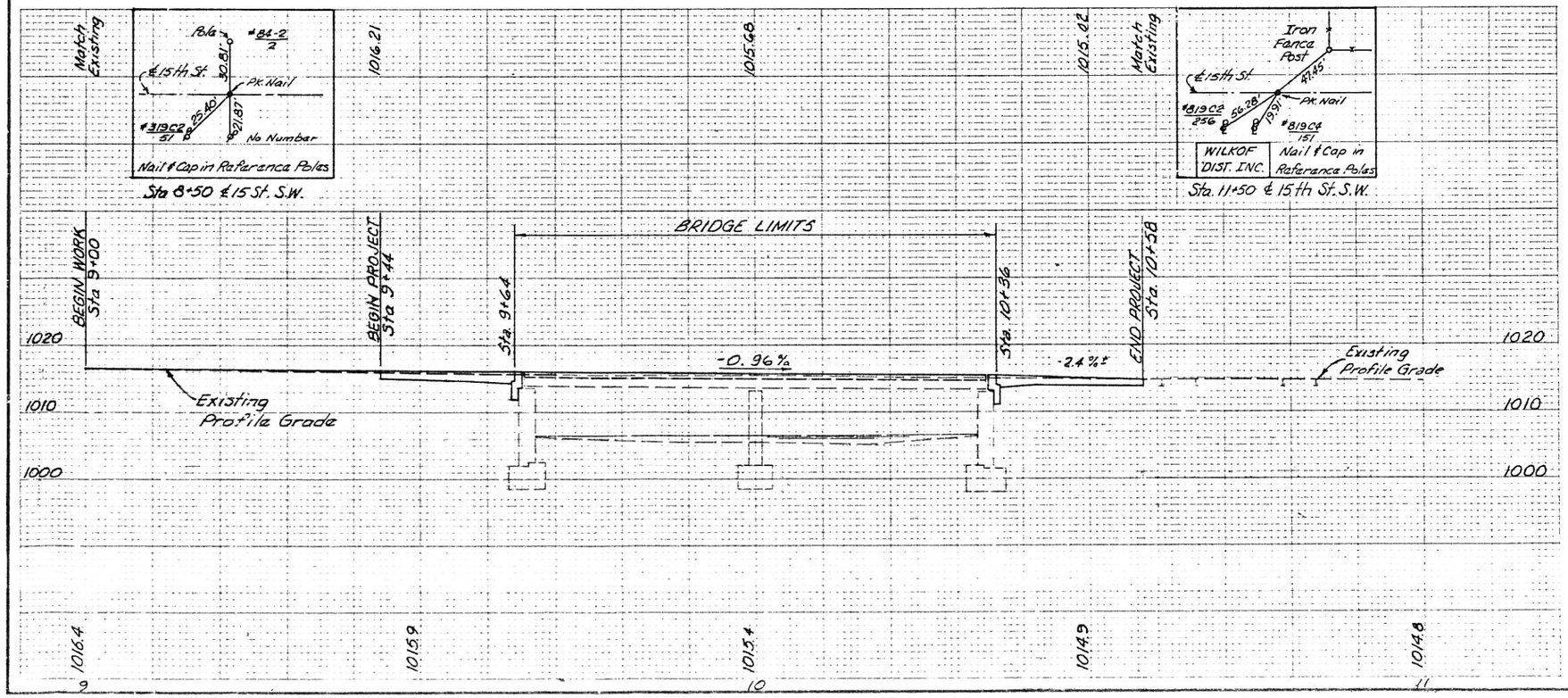

ESTIMATED QUANTITIES

REF. NO.	STATION TO STATION	SIDE	202 Pavement Removed Sq. Yd.	202 Sidewalk Removed Sq. Ft.	202 Curb Removed Lin. Ft.	203 Subgrade Compact. Sq. Yd.	203 Iron	310 Subbase Type I Cu. Yd.	402 Asphalt Concrete AC-20 Cu. Yd.	404 Asphalt Concrete AC-20 Cu. Yd.	407 Tack Coat Gal.	407 Cover Aggregate Ton	452 8" Plain Portland Cem. Conc. Pavement Sq. Yd.	604 Storm Manhole Adjusted to Grade Each	604 Sanitary Manhole Adjusted to Grade Each	604 Catch Basin Adjusted to Grade Each	604 Catch Basin Casting Curb City Std. * Each	608 4" Conc. Walk as per Plan Sq. Ft.	609 Curb City Standard Lin. Ft.	611 Reinf. Conc. Approach Slab, Tld Sq. Yd.	814 Waterline Valve Box Adjusted to Grade Each	S.E. SHEET NO.
AS-1	9+44.00 to 9+64.00	℄				100.0	14.7	2.1														6
AS-2	10+36.00 to 10+58.00	℄				110.0	18.3	3.4														7
1-R	9+41.00 to 9+65.25	LT & RT	103.6					2.9														
2-R	9+41.00 to 9+65.25	RT.	13.0					1.6														
3-R	9+00.00 to 9+44.00	RT.			65.3																	
4-R	8+90.00 to 9+44.00	LT.			54.0																	
5-R	9+00.00 to 9+65.25	LT.		348.5				3.4														
6-R	10+35.50 to 10+63.50	LT.		154.0	14.0			2.0														
7-R	10+48.50 to 10+62.50	LT.						1.6														
8-R	10+35.50 to 10+51.00	RT.		85.3	16.5																	
9-R	10+35.50 to 10+58.00	LT & RT	110.0					1.5														
10-R	10+35.50 to 10+58.00	RT.		220.0																		
11-R	9+00.00 to 9+44.00	RT.																				
1-SW	9+44.00 to 9+63.50	LT.											11.9									4
2-SW	9+00.00 to 9+44.00	RT.																				
3-SW	10+36.50 to 10+64.99	LT.																				
4-SW	10+36.50 to 10+52.33	RT.																				
5-SW	9+00.00 to 9+44.00	LT.																				
1-C	8+90.00 to 9+44.00	LT.																				
2-C	9+00.00 to 9+44.00	RT.																				
1-A	9+54.5	RT.																				
1-MH	9+47.00	RT.																				
2-MH	10+51.50	℄																				
1-CB	9+43.00	LT.																				
2-CB	9+43.00	RT.																				

FHWA REGION	STATE	PROJECT	
5	OHIO		

STARK COUNTY
CITY OF CANTON
15th STREET S.W.

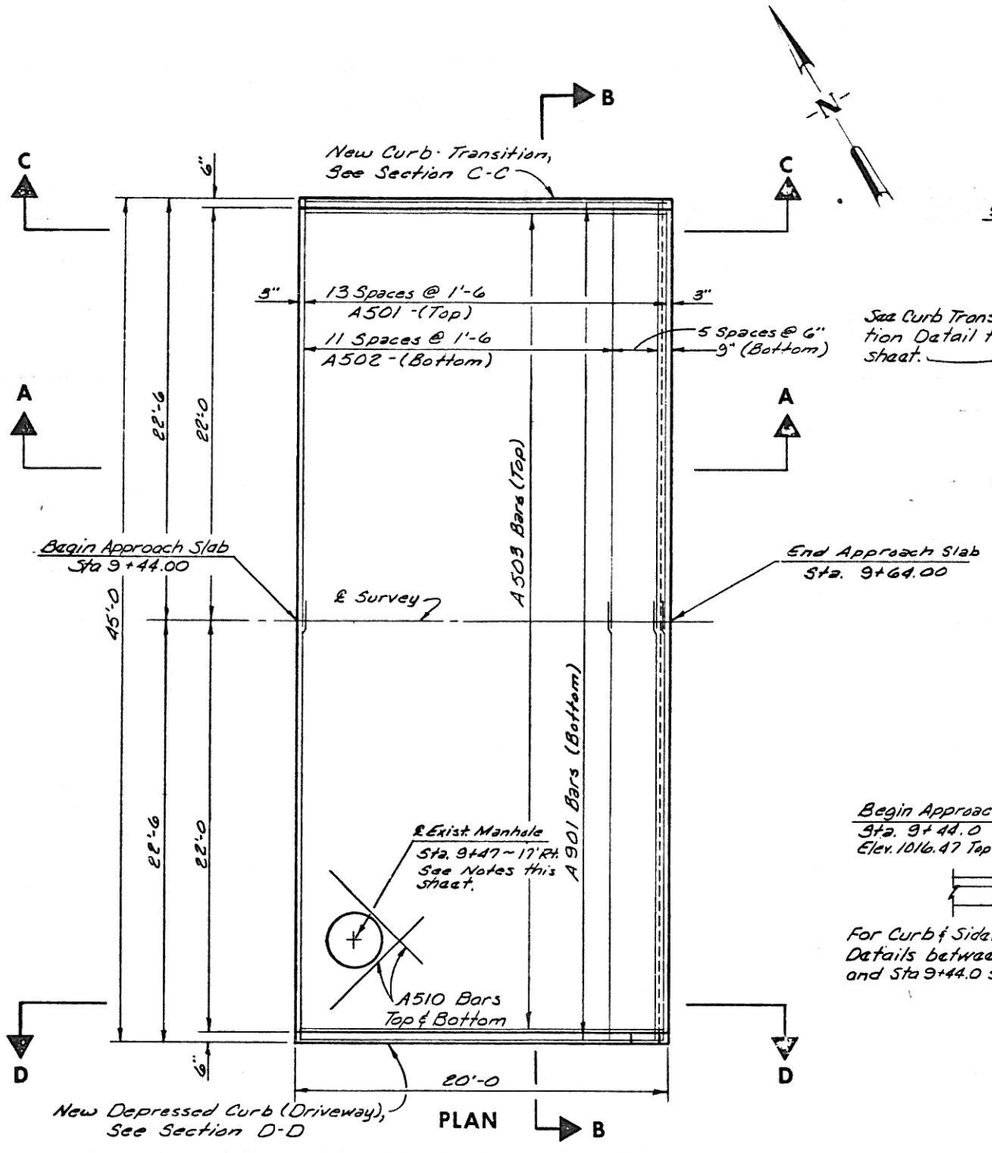

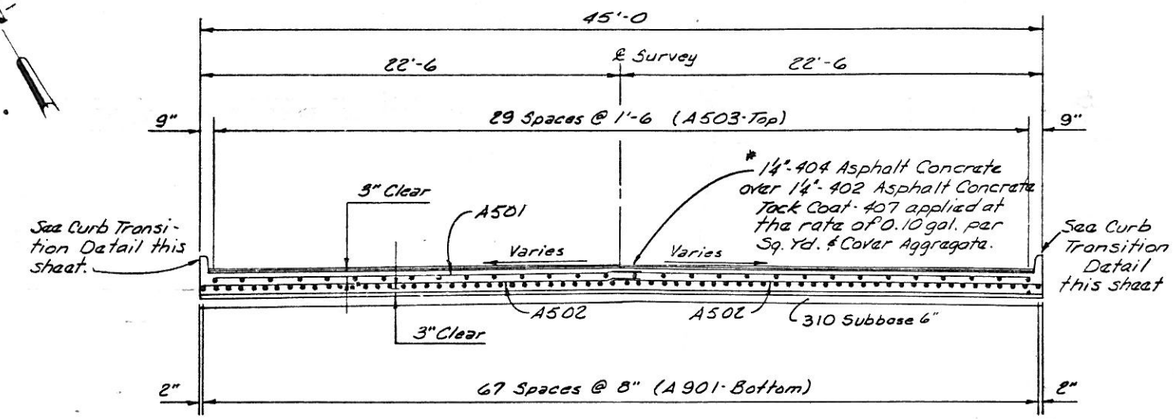

SECTION B-B

REINFORCING STEEL			
MARK	NO. REQ'D.	LENGTH	DI A
A 501	28	22'-7	–
A 502	34	23'-2	–
A 503	30	19'-6	–
A-510	4	7'-7	–
A-901	68	20'-9	19

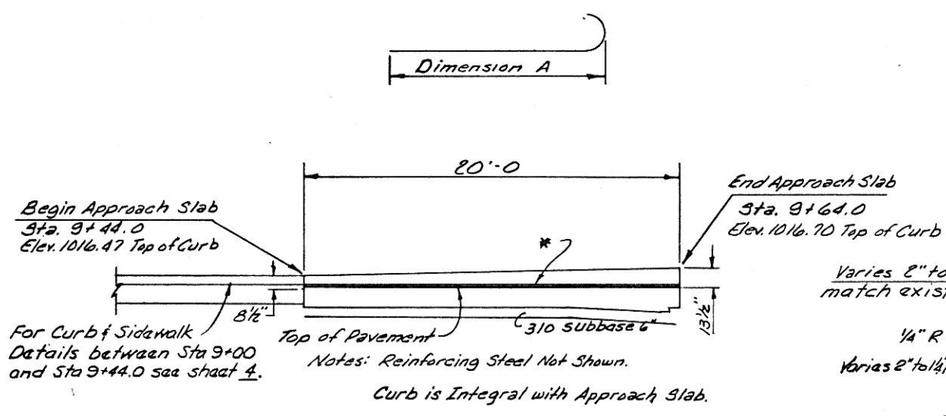

SECTION C-C

ITEM	TOTAL	UNIT	DESCRIPTION
402	3.26	Cu.Yd.	Asphalt Concrete
404	3.26	Cu.Yd.	Asphalt Concrete
407	9.78	Gal.	Tack Coat
407	0.34	Tons	Cover Aggregate
611	100	Sq.Yd.	Reinf. Concrete Approach Slab T
310	16.7	Cu.Yd.	Subbase Type I

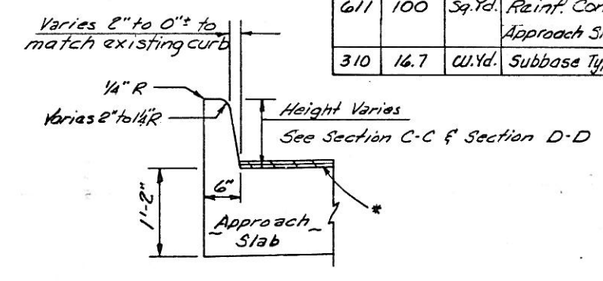

CURB TRANSITION DETAIL

Notes:
Existing Manhole to be adjusted to grade under Item 604.
Use adjusted manhole casting to form approach slab concrete

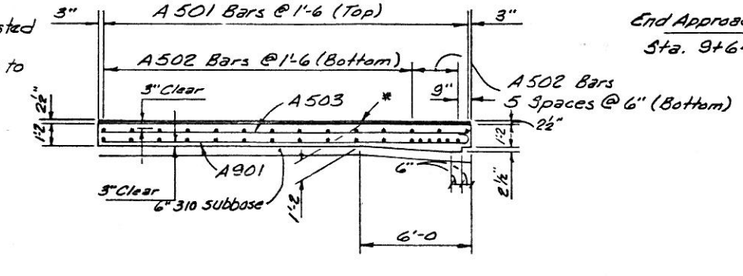

SECTION A-A

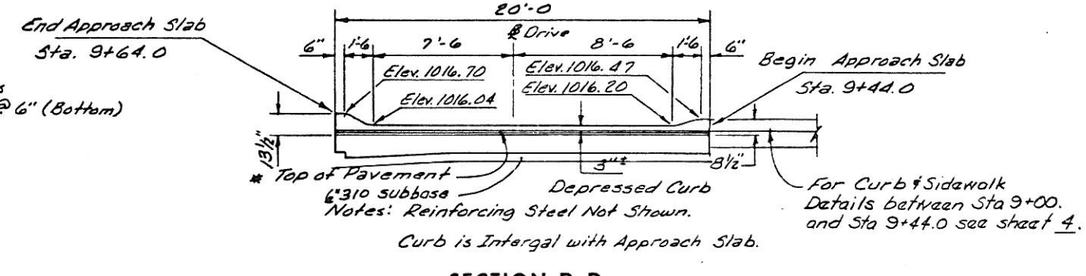

SECTION D-D

For additional Approach Slab & notes see std dwg. AS-1-72.

W. E. QUICKSALL AND ASSOCIATES, I
CONSULTING ENGINEERS • NEW PHILADELPH

AS-1 APPROACH SLAB D

15TH ST. S.W. BRIDGE OVE
WEST BRANCH NIMISHILLEN C

STARK COUNTY

DESIGNED	DRAWN	TRACED	CHECKED	REVIEWED	DA
GHD	GHD		DOQ	JAG	19

FHWA REGION	STATE	PROJECT	
5	OHIO		

STARK COUNTY
CITY OF CANTON
15th STREET S.W.

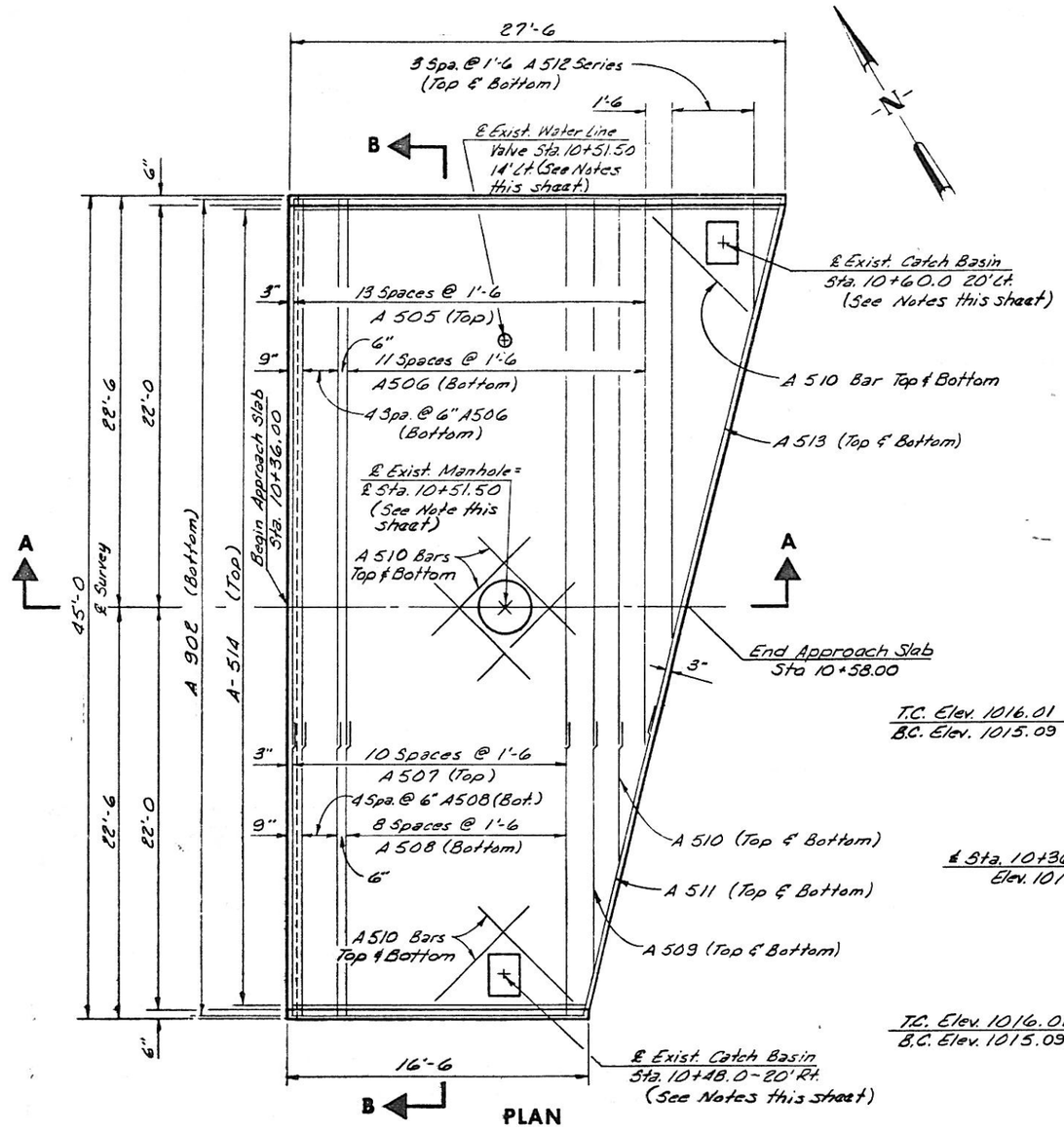

PLAN

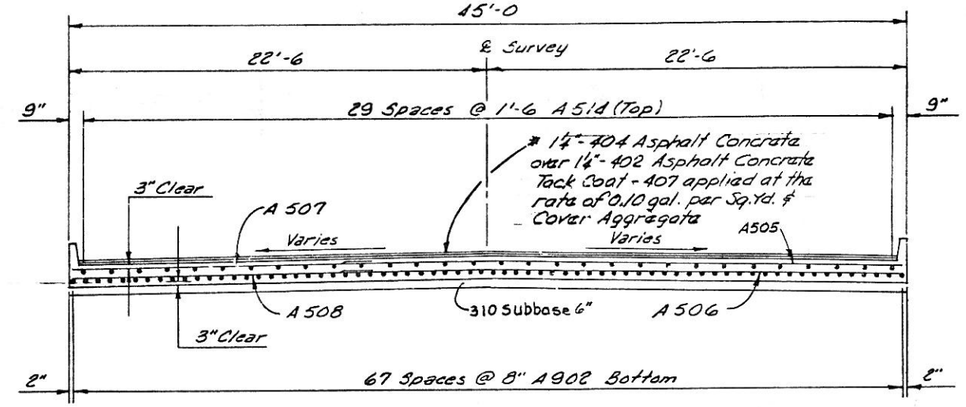

SECTION B-B

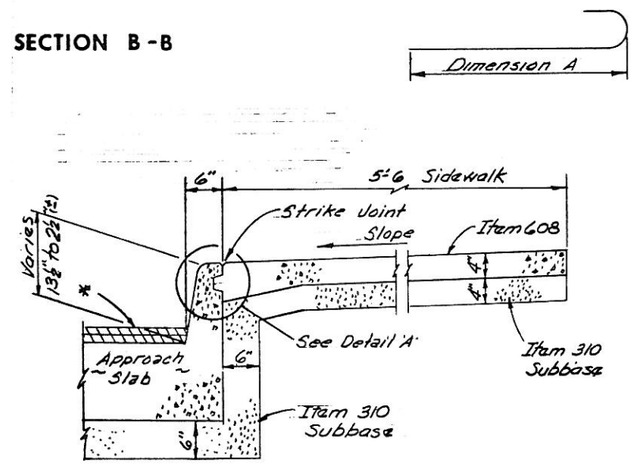

SECTION C-C

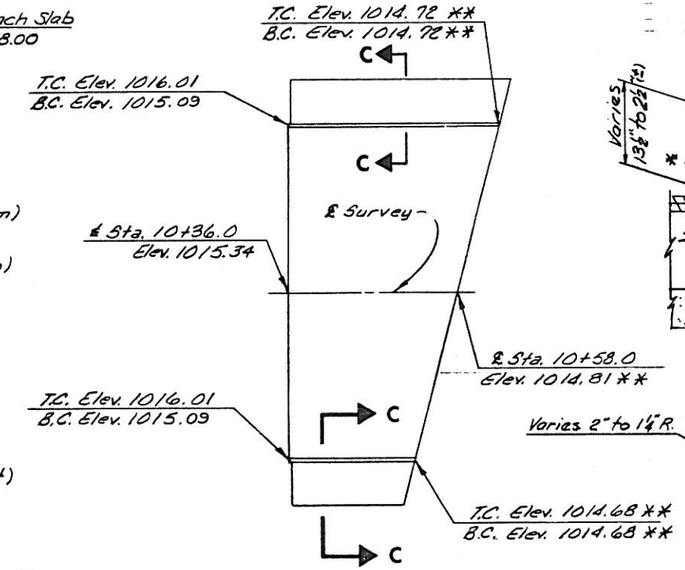

PLAN

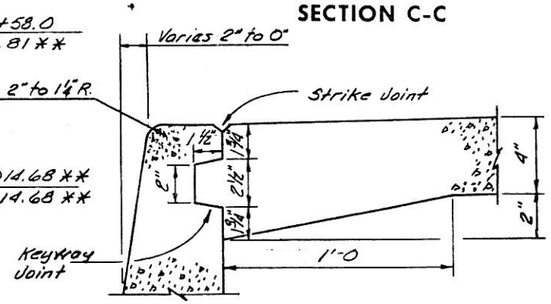

DETAIL A

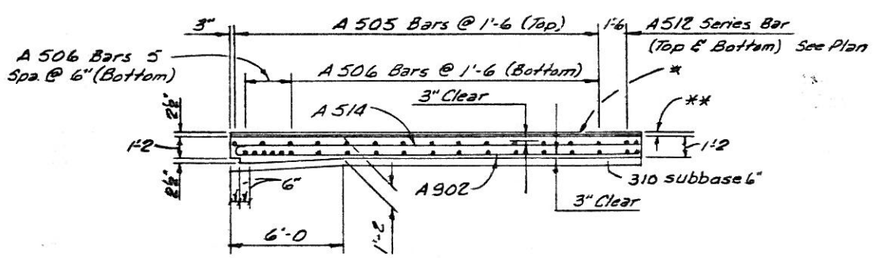

SECTION A-A

Notes: Existing Manhole & Catch Basins to be adjusted to grade under Item 604.
Water Valve Box adjusted to grade under Item 814.
T.C. denotes Top of Curb
B.C. denotes Bottom of Curb at asphalt concrete surface

** Note: Elevations of Approach Slab surface where it parallels the R.R. tracks shall be set to match existing top rail elevation.

TYPICAL CURB & SIDEWALK DETAILS AT APPROACH SLABS

REINFORCING STEEL			
MARK	No. REQD	LENGTH	DIM.
A505	14	30'-0	—
A506	17	30'-0	—
A507	11	16'-3	—
A508	14	16'-3	—
A509	2	13'-9	—
A510	16	7'-8	—
A511	2	17'-7	—
A512	1 Series	24'-0 to	
		6'-0	—
A513	2	30'-0	—
A514	30	16'-0 to	
		27'-0	—
A902	68	17'-3 to	16'-0
		28'-3	27'-

ITEM	TOTAL	UNIT	DESCRIPTION
402	3.59	Cu. Yd.	Asphalt Concre
404	3.59	Cu. Yd.	Asphalt Concre
407	10.76	Gal.	Tack Coat
407	0.38	Tons.	Cover Aggrega
611	110	Sq. Yd	Reinf. Concrete Approach Slab T
310	18.3	Cu. Yd.	Subbase Type

For additional Approach Slab notes see std dwg. AS-1-72.

W. E. QUICKSALL AND ASSOCIATES, I
CONSULTING ENGINEERS • NEW PHILADELPHI

AS-2 APPROACH SLAB D

15TH ST. S.W. BRIDGE OVE
WEST BRANCH NIMISHILLEN C

STA 10
STA 10

STARK COUNTY

DESIGNED	DRAWN	TRACED	CHECKED	REVIEWED	DA
				JMG	10

FHWA REGION	STATE	PROJECT	
5	OHIO		

STARK COUNTY
CITY OF CANTON
15th STREET S.W.

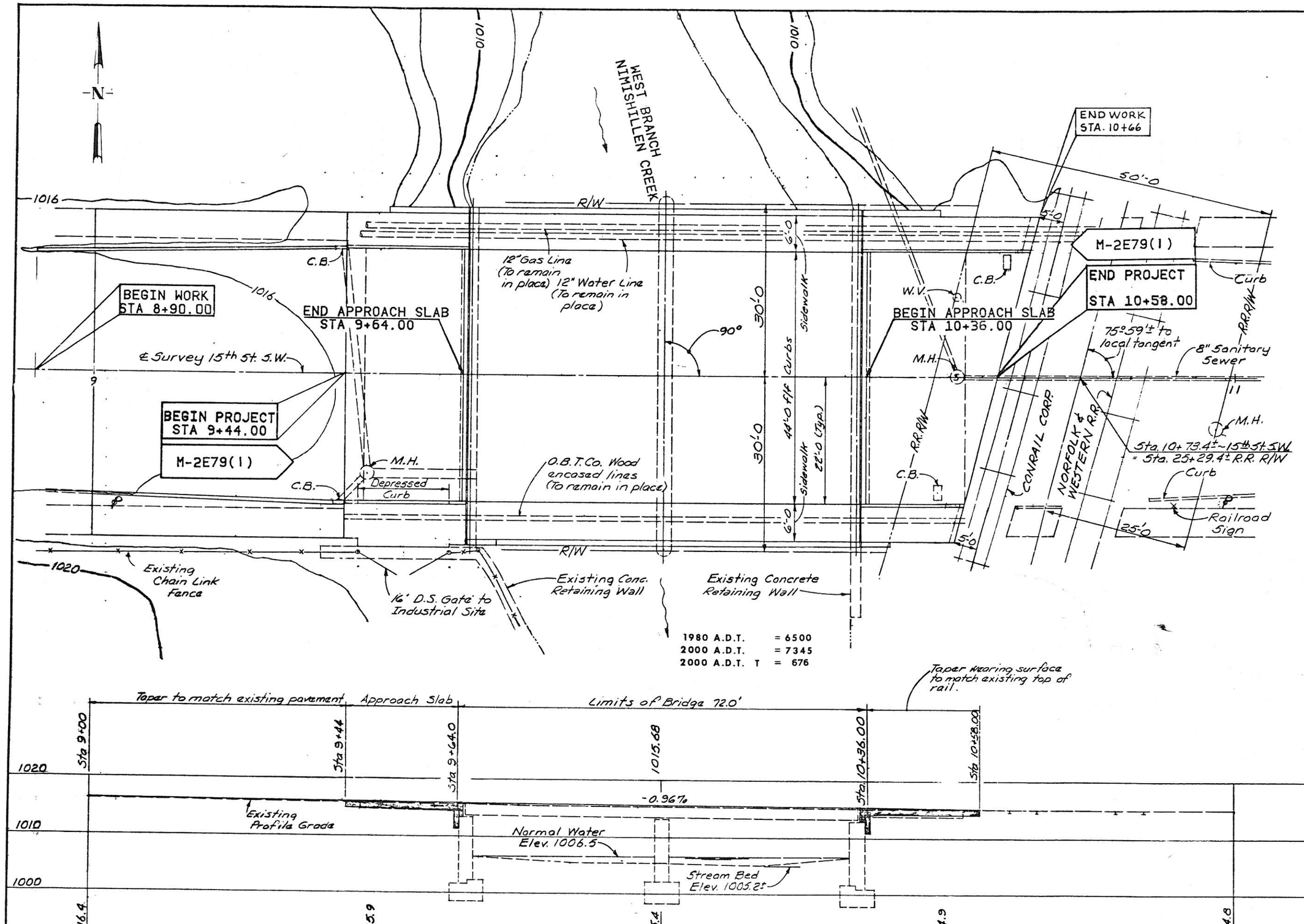

EXISTING STRUCTUR

TYPE: Continuous steel bean
concrete filled steel gr
and reinforced concr
substructure units.
SPANS: 34.0'~34.0'
SKEW: 0°00'
ROADWAY: 44'0 f/f curbs + 2
sidewalks.
APPROACH SLABS: 18'0 long
ALIGNMENT: Tangent

PROPOSED STRUCTURI

TYPE: Continuous steel bea
with reinforced conc
deck and modified
substructure units.
SPANS: 34.0'~34.0' c/c Bear

SKEW: 0°-00'
ROADWAY: 44'0 f/f curbs + 2
sidewalks.
LIVE LOAD: H5 20-44, Case
the Alternate Milita
Loading.
WEARING SURFACE: Mon
Concrete
APPROACH SLABS: A5-1-72,
ALIGNMENT: Tangent

BENCH MARK: B.M. #1 On co
℄ large door of Wilkof Distr
Inc. facing 15th St. S.W., Elev.

STREAM DATA

HIGH WATER DATA: *
20 Year: Elev. 1013.5
100 Year: Elev. 1015.7
* From Flood Plain Profiles d
by U.S. Army Corps of Engineer

Stations along the ℄ Survey shoul
verified in the field prior to con
See General Notes, sheet 2
Sheet

W. E. QUICKSALL AND ASSOCIATES, IN
CONSULTING ENGINEERS • NEW PHILADELPHI

SITE PLAN

15TH ST. S.W. BRIDGE OVE
WEST BRANCH NIMISHILLEN C

STA. 9+6
STA. 10+

STARK COUNTY

DESIGNED	DRAWN	TRACED	CHECKED	REVIEWED	DAT
PMZ	PMZ		JMG	wda	10/8

FED. RD. DIVISION	STATE	PROJECT	
5	OHIO		

STARK COUNTY
CITY OF CANTON
15th STREET S.W.

ESTIMATED QUANTITIES

ITEM	TOTAL	UNIT	DESCRIPTION	ABUTS	PIERS	SUPER	GEN'L.		
202	LUMP	SUM	PORTIONS OF STRUCTURES REMOVED				LUMP		
503	14	CU.YD.	UNCLASSIFIED EXCAVATION	14					
509	15,416	LB.	REINFORCING STEEL	4,331		11,085			
510	280	EACH	DOWEL HOLES	280					
511	113	CU.YD.	CLASS "S" CONCRETE, SUPERSTRUCTURE			113			
511	26	CU.YD.	CLASS "C" CONCRETE, ABUTMENTS ABOVE FOOTINGS	26					
512	2	SQ.YD.	TYPE B WATERPROOFING	2					
513	5,693	LB.	STRUCTURAL STEEL	1,223		4,470			
514	LUMP	SUM	FIELD PAINTING OF EXISTING STEEL, SURFACE PREP.			LUMP			
514	LUMP	SUM	FIELD PAINTING OF EXISTING STEEL, SPOT PRIME			LUMP			
514	LUMP	SUM	FIELD PAINTING OF EXISTING STEEL, COMP. COAT PRIME			LUMP			
514	LUMP	SUM	FIELD PAINTING OF EXISTING STEEL, COMP. COAT FINISH			LUMP			
517	171.5	LIN.FT	RAILING (CONCRETE PARAPET WITH DOUBLE PIPE RAIL)	33		138.5			
518	25	CU.YD.	POROUS BACKFILL	25					
849	119.74	LIN.FT	ELASTOMERIC COMPRESSION SEALS FOR STRUCTURAL STEEL, 3" WIDTH				119.74		
SPECIAL	17,522	LB.	EPOXY COATED REINFORCING STEEL (SEE PROPOSAL NOTE)			17,522			

NOTES

DESIGN SPECIFICATIONS:
THIS STRUCTURE CONFORMS TO "STANDARD SPECIFICATIONS FOR HIGHWAY BRIDGES" ADOPTED BY THE AMERICAN ASSOCIATION OF STATE HIGHWAY OFFICIALS, 1977, INCLUDING THE 1978, 1979, 1980 INTERIM SPECIFICATIONS AND THE OHIO "SUPPLEMENT" TO THESE SPECIFICATIONS.

DESIGN DATA:
DESIGN LOADING - HS20-44 CASE II AND THE ALTERNATE MILITARY LOADING.
CONCRETE CLASS S - UNIT STRESS 1200 P.S.I. (SUPERSTRUCTURE)
CONCRETE CLASS C - UNIT STRESS 1333 P.S.I. (SUPERSTRUCTURE)
STRUCTURAL STEEL - ASTM A36 - UNIT STRESS 20,000 P.S.I.
REINFORCING STEEL - ASTM A615, A616, or A617 - UNIT STRESS 20,000 P.S.I.

DECK PROTECTION METHOD: EPOXY COATED REINFORCING STEEL, TOP MAT ONLY.
MONOLITHIC WEARING SURFACE THICKNESS IS ASSUMED FOR DESIGN PURPOSES TO BE 1".

REFERENCE SHALL BE MADE TO:

STANDARD DRAWING:	SUPPLEMENTAL SPECIFICATION:
BR-2-67, REVISED 10-15-71	836, DATED 3-12-75
AS-1-72, DATED 6-30-72	849, DATED 4-25-77
	853, DATED 6-26-78
	956, DATED 6-26-78

REINFORCING STEEL SPLICES:
UNLESS NOTED OTHERWISE, ALL REINFORCING STEEL SPLICES SHALL BE MADE BY OVERLAPPING THE ENDS OF THE BARS NOT LESS THAN 30 DIAMETERS.

PLANS OF THE EXISTING BRIDGE ARE ON FILE WITH AND CAN BE SEEN AT THE CANTON CITY ENGINEER'S OFFICE.

PORTIONS OF STRUCTURE TO BE REMOVED:
THE FOLLOWING PORTIONS OF THE EXISTING STRUCTURE SHALL BE REMOVED TO THE LIMITS SHOWN ON THE PLANS:
1. CONCRETE FILLED STEEL GRID DECK
2. CONCRETE FILLED STEEL GRID SIDEWALKS
3. REINFORCED CONCRETE PARAPETS
4. EXISTING STRUCTURAL STEEL END DAM ANGLES
5. APPROACH SLABS
6. ABUTMENT BACKWALLS (DOWN TO ELEVATION OF EXISTING BEAM SEATS)

SPECIAL CARE AND APPROPRIATE MEASURES SHALL BE TAKEN TO PREVENT REMOVAL DEBRIS FROM FALLING INTO THE CREEK.

NEW BRIDGE WORK SHALL CONSIST OF THE FOLLOWING:
1. REINFORCED CONCRETE ABUTMENT BACKWALLS
2. REINFORCED CONCRETE DECK AND SIDEWALKS
3. RAILING WITH CONCRETE PARAPETS
4. APPROACH SLABS

SPECIAL CARE SHALL BE TAKEN DURING BRIDGE REMOVAL AND CONSTRUCTION TO INSURE THAT NO DAMAGE OCCURS TO THE EXISTING GAS LINE, WATER LINE AND THE TELEPHONE DUCT THAT WILL REMAIN IN PLACE.

BONDING ELASTOMERIC COMPRESSION SEALS IN STRUCTURAL STEEL JOINTS
DESCRIPTION: THIS ITEM SHALL CONFORM TO SUPPLEMENTAL SPECIFICATION 849 EXCEPT AS FOLLOWS:
MATERIALS: ADHESIVES SHALL BE SIKASTIX 360, FEL-POXY FP-101 OR AN APPROVED ALTERNATE. METAL SURFACE PRIMERS ARE NOT REQUIRED.

PREPARATION FOR INSTALLATION: TO AVOID THE SUBSEQUENT CONTAIMINATION OF PREPARED SURFACES, ALL EXTERIOR ELASTOMERIC SURFACES SHALL BE CLEANED WITH MEK, T OR OTHER APPROVED SOLVENT USING CLEAN DISPOSABLE CLOTHS. THEN, NOT MORE THAN SEVEN DAYS PRIOR TO SEAL INSTALLATION, A THIN COATING OF CYCLIZING PASTE* SHALL BE APPLIED TO THE ELASTOMERIC BONDING SURFACES ONLY. AFTER FROM 25 TO 40 MINUTES, THE PASTE SHALL BE WASHED FROM THE SURFACES WITH CLEAN WATER.

THE PREPARATION OF THE STEEL SURFACES SHALL BE ACCOMPLISHED NOT MORE THAN 24 HOURS PRIOR TO ADHESIVE BONDING.

INSTALLATION: IMMEDIATELY PRIOR TO ADHESIVE APPLICATION, BONDING SURFACES SHALL BE CLEAN, DRY AND WARMER THAN 45°F, AND THEY SHALL BE MAINTAINED AT OR ABOVE THIS TEMPERATURE UNTIL THE ADHESIVE HAS CURED. ADHESIVE SHALL BE APPLIED LIBERALLY TO BOTH THE STEEL AND ELASTOMERIC BONDING SURFACES USING A SERRATED SPATULA IF NECESSARY TO ACHIEVE A COMPLETE AND RELATIVELY UNIFORM COATING. THEN THE ELASTOMERIC SEAL SHALL BE COMPRESSED SUFFICIENTLY SO THAT IT CAN BE INSERTED AND ALLOWED TO EXPAND WITHIN THE JOINT. AFTER INSTALLATION, EXCESS ADHESIVE (EXCEPT FOR THE 1/4 INCH BEAD) SHALL BE REMOVED FROM THE EXPOSED SEAL SURFACES.

*CYCLIZING PASTE IS A MIXTURE OF ONE POUND OF PITTSBURGH PLATE GLASS INDUSTRIES' HISIL 233 OR AN APPROVED ALTERNATE AND SIX POUNDS OF CONCENTRATED SULFURIC ACID (18 MOLAR). TO MIX THE PASTE, ADD HISIL TO ACID SLOWLY WHILE STIRRING MIXTURE TO ACHIEVE A SMOOTH VISCOUS PASTE. NOTE: SINCE CONCENTRATED SULFURIC ACID IS VERY CORROSIVE AND HISIL IS AN EXTREMPLY FINE NON-TOXIC POWDER, RUBBER GLOVES AND GLASSES SHOULD BE USED BY THOSE USING THE PASTE WHILE GLOVES, GLASSES AND A RESPIRATOR SHOULD BE USED BY THOSE MIXING THE PASTE.

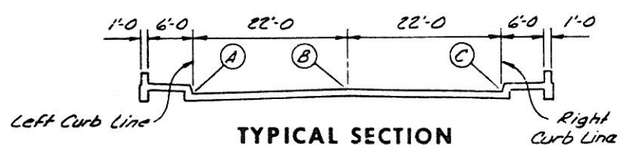

TYPICAL SECTION

TOP OF SLAB ELEVATIONS					
STATION	POINT A	STATION	POINT B	STATION	POINT C
9+66	1015.75	9+66	1016.00	9+66	1015.75
9+83	1015.60	9+83	1015.85	9+83	1015.60
10+00	1015.43	10+00	1015.68	10+00	1015.43
10+17	1015.27	10+17	1015.52	10+17	1015.27
10+34	1015.11	10+34	1015.36	10+34	1015.11

NOTE: ELEVATIONS ARE THOSE REQUIRED BEFORE DECK CONCRETE IS PLACED TO ALLOW FOR DEAD LOAD DEFLECTION CAUSED BY THE WEIGHT OF THE CONCRETE.

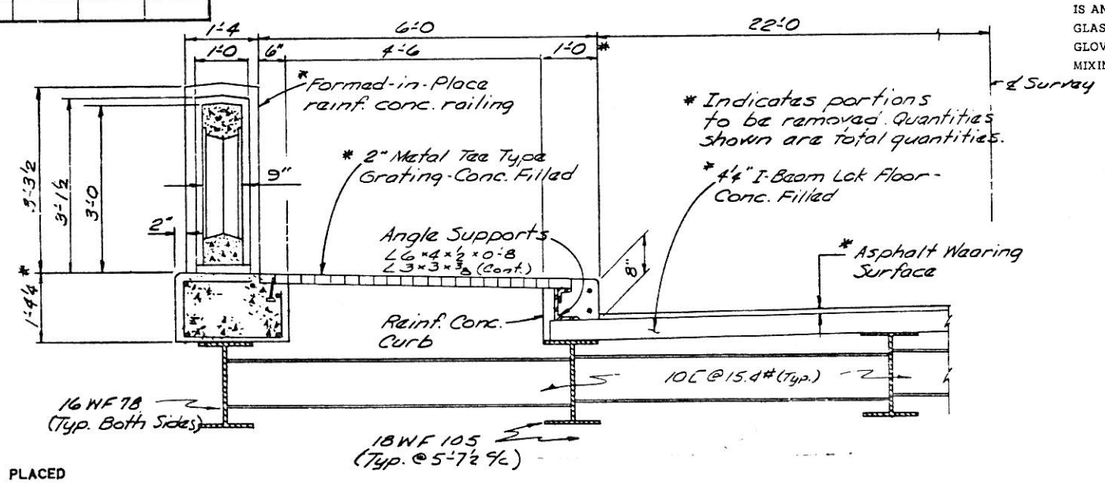

PARTIAL EXISTING TRANSVERSE SECTION

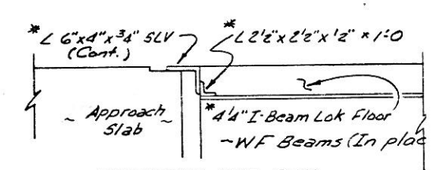

EXISTING END DAM

Sheet 2

W. E. QUICKSALL AND ASSOCIATES, INC.
CONSULTING ENGINEERS • NEW PHILADELPHIA, OH

NOTES, ESTIMATED QUANTIT
& TOP OF SLAB ELEVATIO

15TH ST. S.W. BRIDGE OVER
WEST BRANCH NIMISHILLEN CREE
STA. 9+64.0

STARK COUNTY STA. 10+36

DESIGNED	DRAWN	TRACED	CHECKED	REVIEWED	DATE
JWKS	JWKS		DOQ	wda	10/80

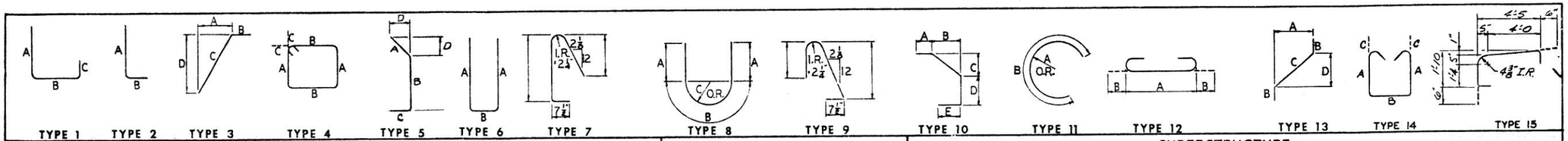

ABUTMENTS

MARK	TYPE	A	B	C	D	E	NUMBER REAR	NUMBER FORWARD	TOTAL	LENGTH	WEIGHT
A801	5	1'-6½	2'-4	1'-1	1'-1		30	30	60	4'-10	774
A601	2	2'-4	1'-10				57	57	114	4'-0	684
A602	Str.						57	57	114	3'-2	542
A603	1	2'-5	1'-5	8"			44	45	89	4'-2	557
A604	1	3'-0	11"	1'-7			44	45	89	5'-2	691
A605	1	3'-9	1'-5	1'-7			13	12	25	6'-5	241
A501	Str.						6	-	6	29'-8	186
A502	Str.						5	5	10	27'-0	282
A503	Str.						1	1	2	23'-0	48
A504	Str.						2	-	2	7'-6	16
A505	Str.						2	2	4	6'-8	28
A506	Str.						2	2	4	5'-7	24
A507	Str.						4	4	8	2'-4	20
A508	Str.						-	6	6	29'-2	183
A509	Str.						-	2	2	7'-0	15
A510	Str.						-	4	4	4'-8	19
A511	6	2'-2	8"				-	1	1	4'-9	5
A512	6	1'-10	8"				-	1	1	4'-1	4
A513	6	1'-2	8"				-	1	1	2'-9	3
A514	3	11"	2'-9½	2'-1½	1'-11		-	2	2	4'-11	10

RAILING BARS

MARK	TYPE	A	B	C	D	E	NUMBER REAR	NUMBER FORWARD	TOTAL	LENGTH	WEIGHT
R501	Str.								16	14'-8	*
R502	Str.								16	11'-9	*
R503	Str.								36	4'-8	*
R504	Str.								12	13'-8	*
R505	6	4'-2	8"						8	8'-9	*
R506	8	1'-3	9"	3¼"					16	3'-3	*
R507	6	3'-2	8"						16	6'-9	*
R508	14	3'-6	8"	5"					8	8'-3	*
R509	1	3'-6	4'-8	8"					4	8'-7	*
R510	1	4'-2	4'-8	8"					4	9'-3	*
R511	15	(See Detail)							8	6'-11	*

SUPERSTRUCTURE

MARK	TYPE	A	B	C	D	E	NUMBER	TOTAL	LENGTH	WEIGHT
S601	Str.							130	6'-9	1318
S501	Str.							256	23'-11	6386
S502	Str.							80	30'-0	2503
S503	Str.							40	11'-11	497
S401	Str.							16	30'-0	321
S402	Str.							8	11'-3	60
E601	Str.							128	26'-10	5159
E602	Str.							128	21'-3	4085
E603	1	8½"	6'-8	5½"				130	7'-6	1464
E501	Str.							16	30'-0	501
E502	Str.							8	11'-11	99
E503	4	1'-7	10"	5"				130	5'-3	712
E504	4	1'-4	9"	5"				130	4'-7	621
E505	14	2'-3	8"	5"				130	5'-9	780
E401	Str.							142	30'-0	2846
E402	Str.							71	11'-3	534
E403	Str.							72	15'-0	721

FHWA REGION	STATE	PROJECT	
5	OHIO		

STARK COUNTY
CITY OF CANTON
15th STREET S.W.

NOTES

Refer to CMS Sections 106.03, 700, 709.01 through 709.05 and 709.08, sufficient additional reinforcing steel shall be provided for sampling. Random samples shall be replaced in the structures by the additional steel, spliced in accordance with 509.08.

All dimensions are out-to-out.

Str. in the 'TYPE' column indicates straight bars.

AN 'E' DESIGNATION PRECEDING THE BAR SIZE EPOXY COATED BARS.

* INDICATES REINFORCING TO BE INCLUDED RAILING FOR PAYMENT.

ALL RAILING BARS SHALL BE EPOXY COATED AS PER PROPOSAL NOTE.

Sheet

W. E. QUICKSALL AND ASSOCIATES,
CONSULTING ENGINEERS • NEW PHILADEL

REINFORCING BAR SCH

15TH ST. S.W. BRIDGE OV
WEST BRANCH NIMISHILLEN

STA. 9
STA. 1

STARK COUNTY

DESIGNED	DRAWN	TRACED	CHECKED	REVIEWED
JMS	JMG		wda	D.O.O.

FED. RD. DIVISION	STATE	PROJECT
5	OHIO	

STARK COUNTY
CITY OF CANTON
15th STREET S.W.

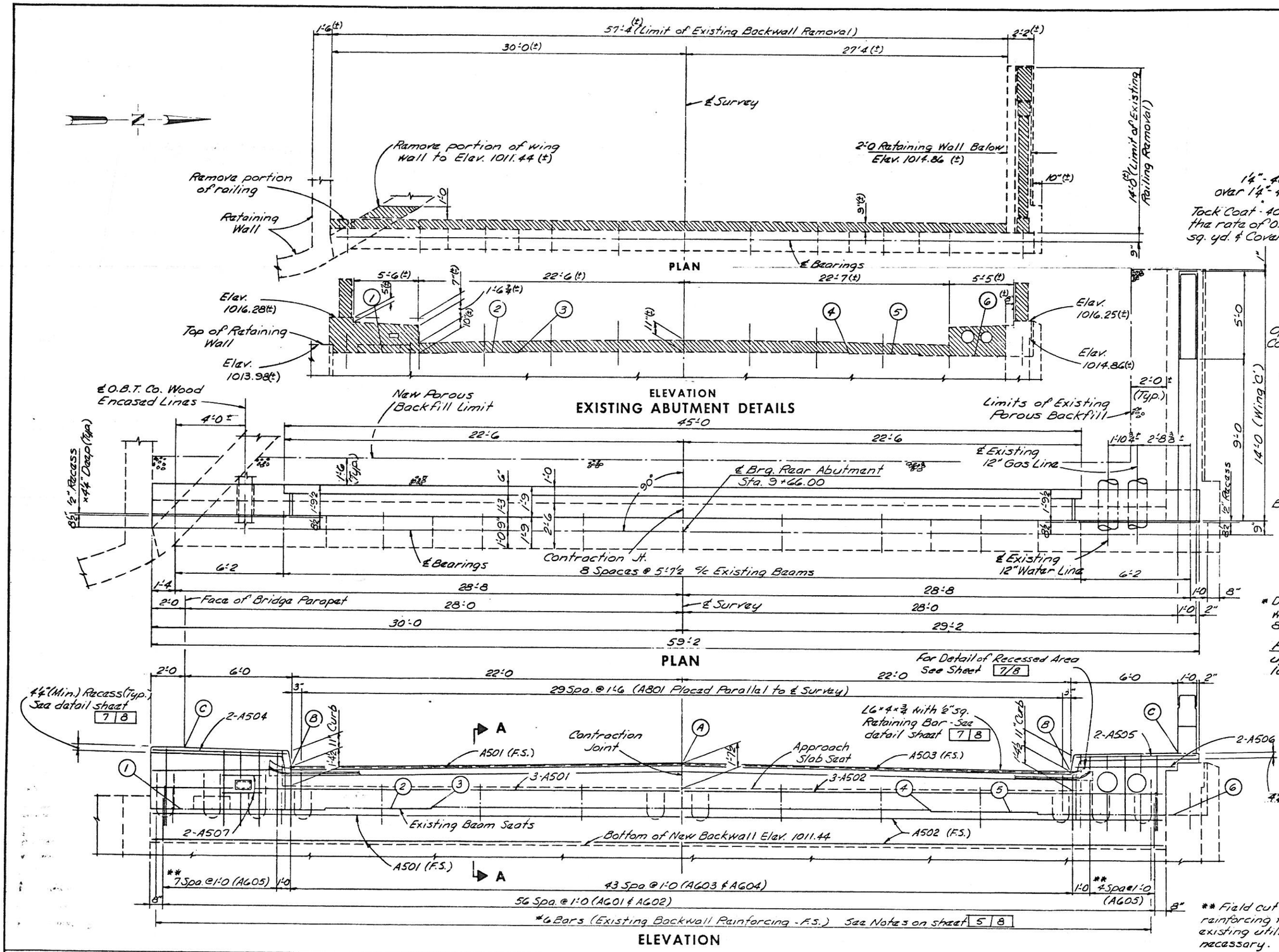

* Dowel holes for A601 and A602 shall be in with Item 510 and Supplemental Specifi 853, and paid for under Item 510.

Porous Backfill; 1'-6 thick shall a up to the plane of the subgrade a laterally to the existing wing walls.

For Wing 'C' Detail see sheet 6/8
N.S. denotes Near Side
F.S. denotes Far Side
For Contraction Joint Detail s sheet 6/8
For existing Abutment and Re notes see sheet 5/8

** Field cut or adjust reinforcing to clear existing utility lines as necessary.

ELEVATIONS			EXISTING BEAM SEAT ELEVATIONS					
A	B	C	1	2	3	4	5	6
1016.01	1015.76	1016.76	1013.28	1013.38	1013.46	1013.45	1013.36	1013.25

Shea

W. E. QUICKSALL AND ASSOCIATE
CONSULTING ENGINEERS • NEW PHILADI

REAR ABUTMENT DE

15TH ST. S.W. BRIDGE O
WEST BRANCH NIMISHILLEN

STA.
STA.

STARK COUNTY

DESIGNED	DRAWN	TRACED	CHECKED	REVIEWED
JMB	JMB		wdb	D.O.Q

FED. RD. DIVISION	STATE	PROJECT	
5	OHIO		

STARK COUNTY
CITY OF CANTON
15th STREET S.W.

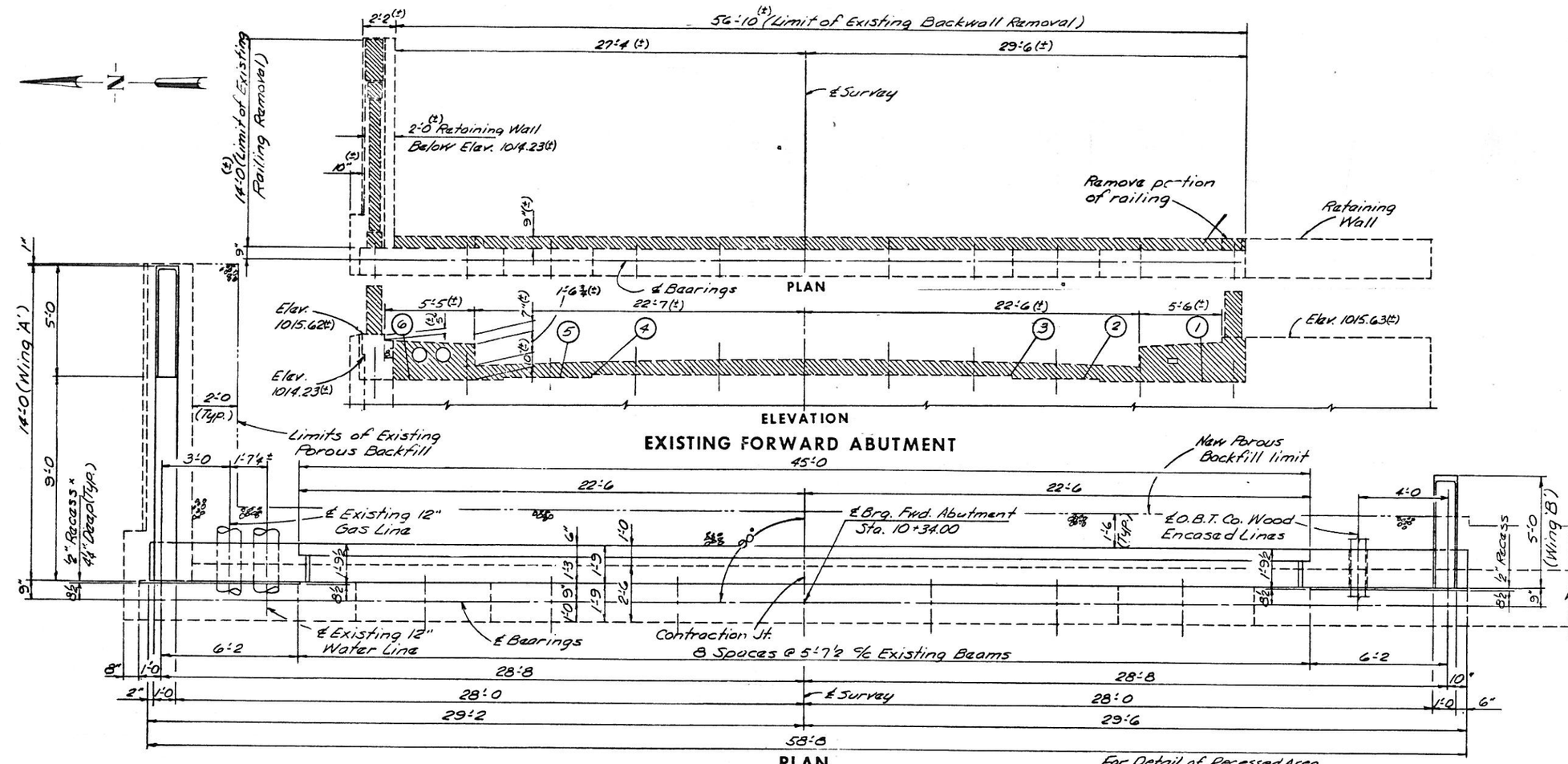

Notes:
Cross-hatched areas on existing abutm
detail denotes portions of abutments an
retaining walls to be removed (to limits sh

All existing vertical or horizontal reinfo
steel which will extend into the new abu
backwalls and railings shall remain in plu
after removal of concrete. These bars
be cleaned of all foreign material and
(if required) to limits shown.

All existing reinforcing steel which woul
otherwise be exposed after final co
struction shall be burned off to a de
of 1 to 2 inches below surface and
void filled with epoxy mortar.

For Section A-A see sheet 4/8

For Wing 'A' & Wing B see detail sheet

Any existing reinforcement which is to remo
place and becomes damaged due to rem
operations, must be replaced with new
dowel bars at the Contractor's expens

Dowel holes and grout anchoring shall
accordance with Item 510 and Supplement
Specification 853, and paid for under Item

N.S. denotes Near Side
F.S. denotes Far Side
For Contraction Joint Detail see sheet 6

Note: Existing beam seat elevations are b
field survey of exterior seats only. All othe
elevations were determined from existing p
and must be verified in the field prior to
ing new construction.

** Field cut or adjust reinforcing to clear existing utility lines as necessary.

ELEVATIONS			EXISTING BEAM SEAT ELEVATIONS					
A	B	C	1	2	3	4	5	6
1015.35	1015.10	1016.10	1012.63	1012.73	1012.81	1012.80	1012.72	1012.62

Sheet

W. E. QUICKSALL AND ASSOCIATES, I
CONSULTING ENGINEERS • NEW PHILADELPH

FORWARD ABUTMENT D

15TH ST. S.W. BRIDGE OVE
WEST BRANCH NIMISHILLEN C
STA. 9+
STA. 10

STARK COUNTY

DESIGNED	DRAWN	TRACED	CHECKED	REVIEWED	DA
JMB	JMB		wda	D.D.O.	19

FED. RD DIVISION	STATE	PROJECT	
5	OHIO		

STARK COUNTY
CITY OF CANTON
15th STREET S.W.

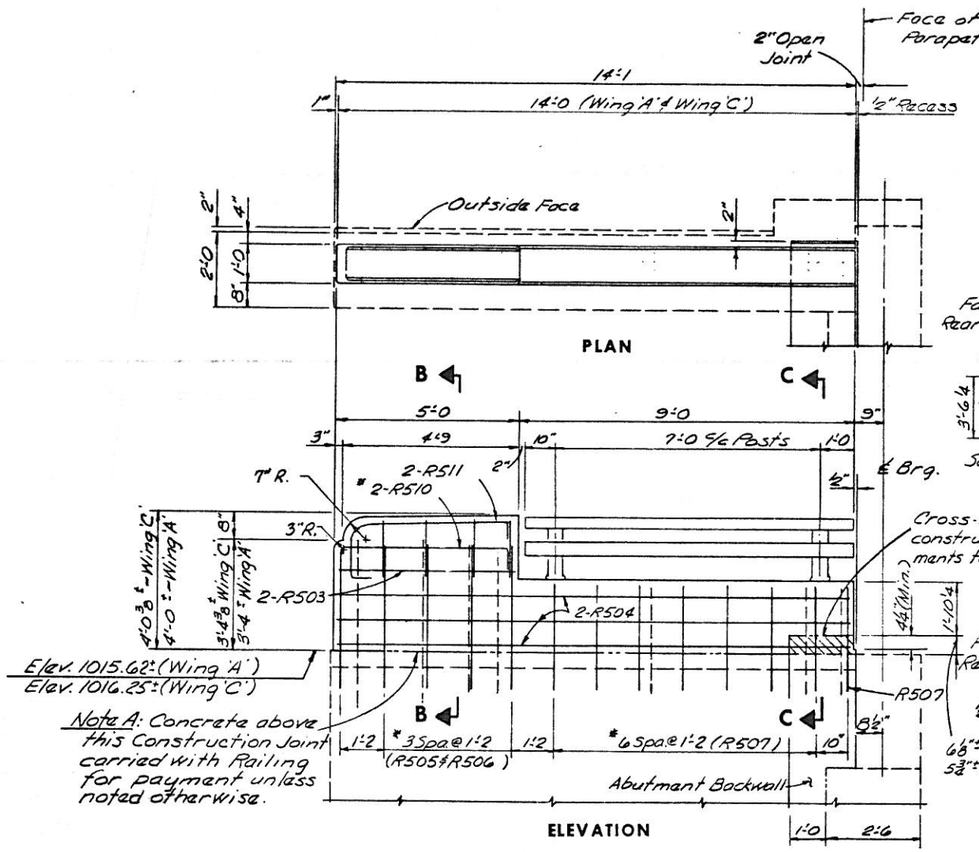

PLAN

ELEVATION

WING A (OPPOSITE HAND & AS NOTED)
WING C (AS SHOWN & AS NOTED)

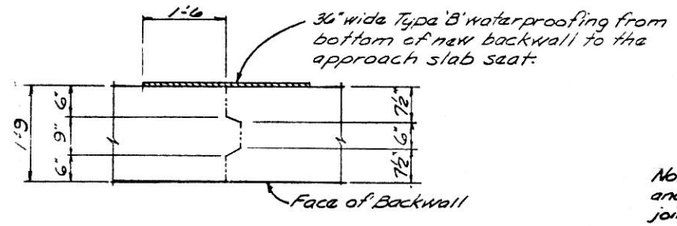

CONTRACTION JOINT DETAIL

Note B: For additional detail and notes above this construction joint refer to Wing 'B' details.

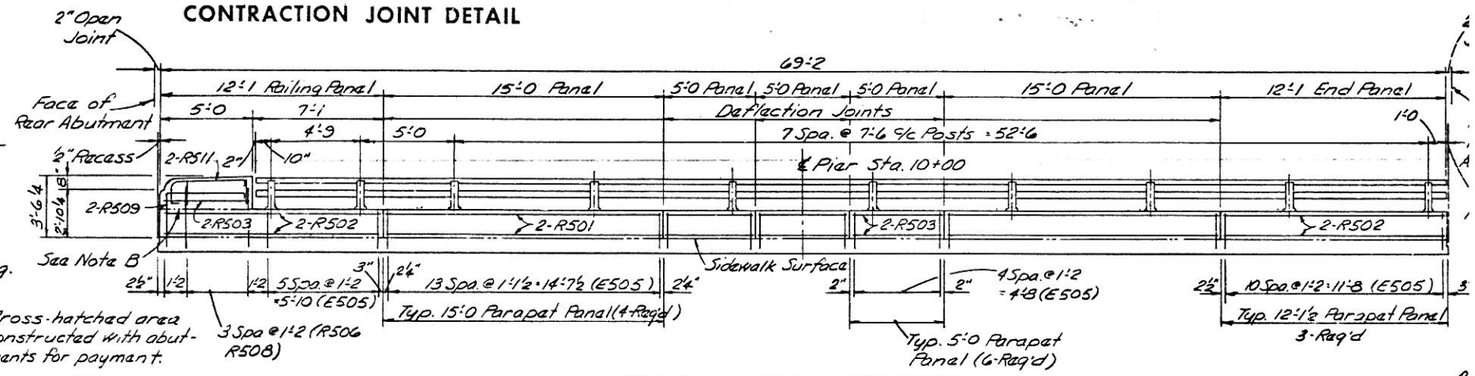

RIGHT RAILING ELEVATION

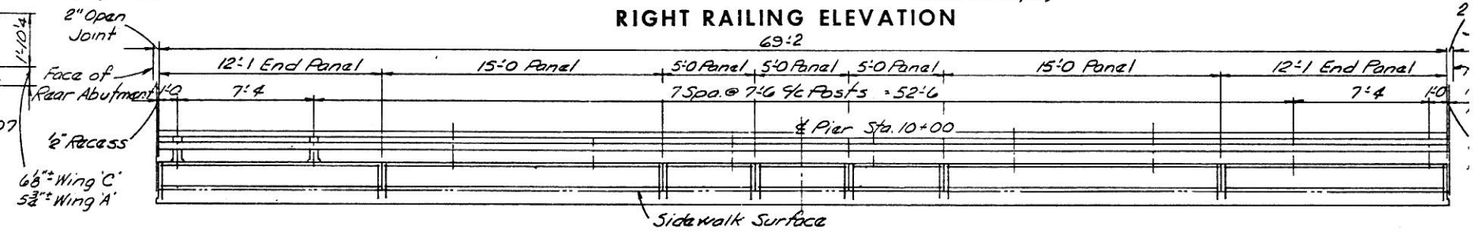

LEFT RAILING ELEVATION

Note: For mark numbers, quantities and spacing of left railing elevation reinf. - refer to Typical Panel details on right elevation.

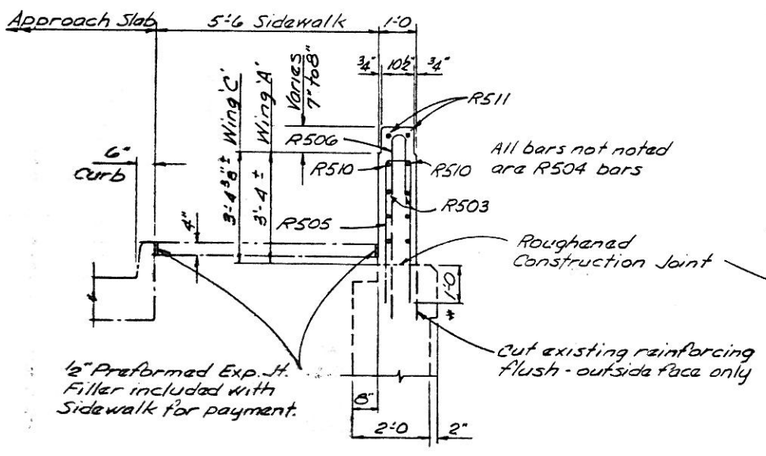

SECTION B-B

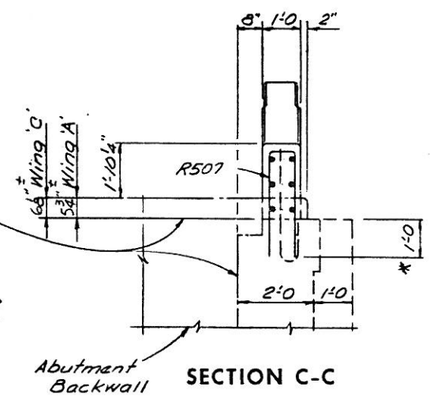

SECTION C-C

* Note: Dowel Holes for R505, R507 and R510 bars shall be in accordance with Item 510, and Supplemental Specification 853, and paid for under Item 510.

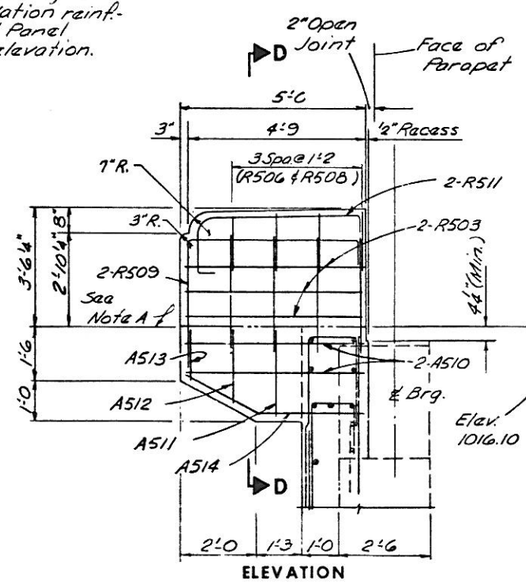

ELEVATION

WING B

All bars not noted are R503 bars

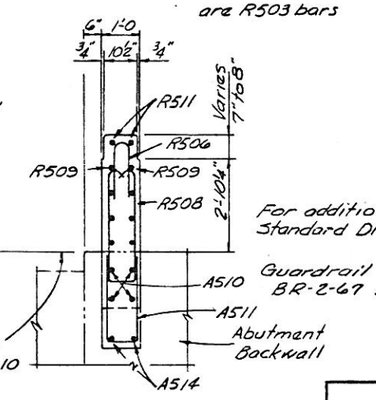

SECTION D-D

For additional railing details refer Standard Drawing BR-2-67.

Guardrail anchorage as shown on BR-2-67 shall not be provided.

Sheet

W. E. QUICKSALL AND ASSOCIATES, IN
CONSULTING ENGINEERS • NEW PHILADELPHI

SUPERSTRUCTURE DETA

15TH ST. S.W. BRIDGE OVER
WEST BRANCH NIMISHILLEN CR

STA. 9+6
STARK COUNTY STA. 10+

DESIGNED	DRAWN	TRACED	CHECKED	REVIEWED	D.V.
JMS	JMS		w.da	D.O.O.	106

Elevation	'A'	'B'	'C'
Rear Abutment	1016.01	1015.76	1016.76
Fwd. Abutment	1015.36	1015.11	1016.11

Note: Elevations are given at the top edge and face of backwall.

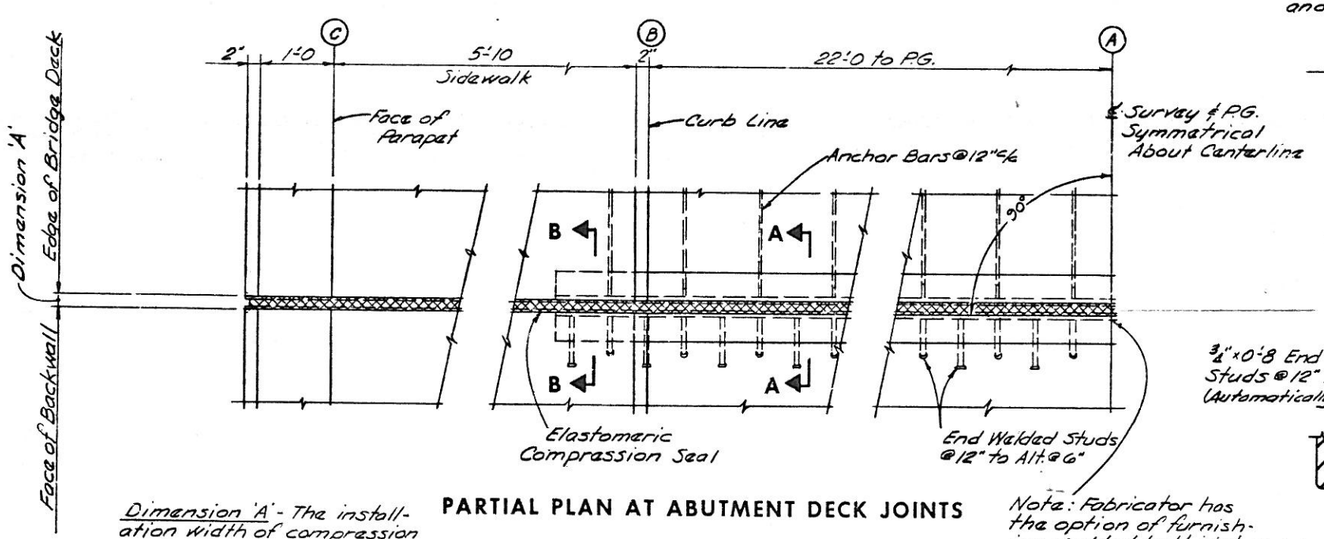

Dimension 'A' - The installation width of compression seals = 2 inches at temperatures between 40° & 80°F.

PARTIAL PLAN AT ABUTMENT DECK JOINTS

Note: Fabricator has the option of furnishing welded butt joint at apex of roadway per Standard Drawing SD-1-69

Retaining Bar Welding Detail

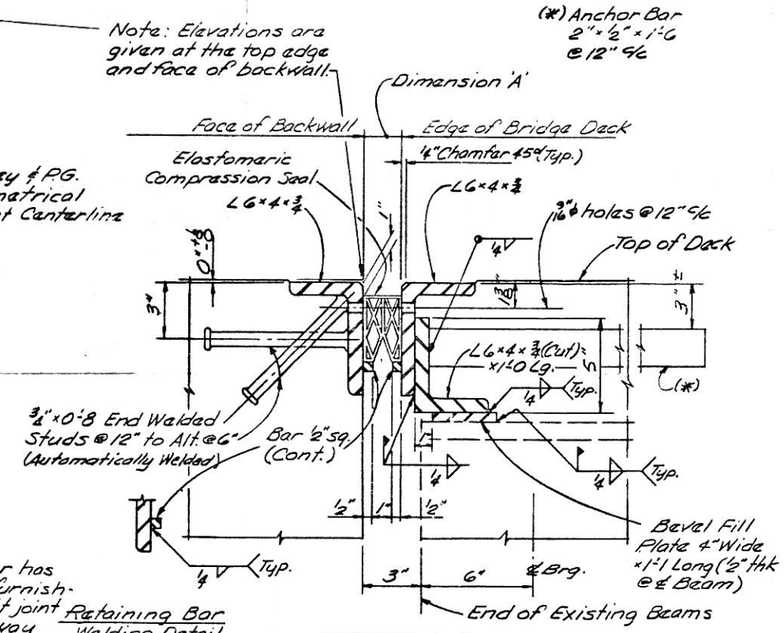

SECTION A-A

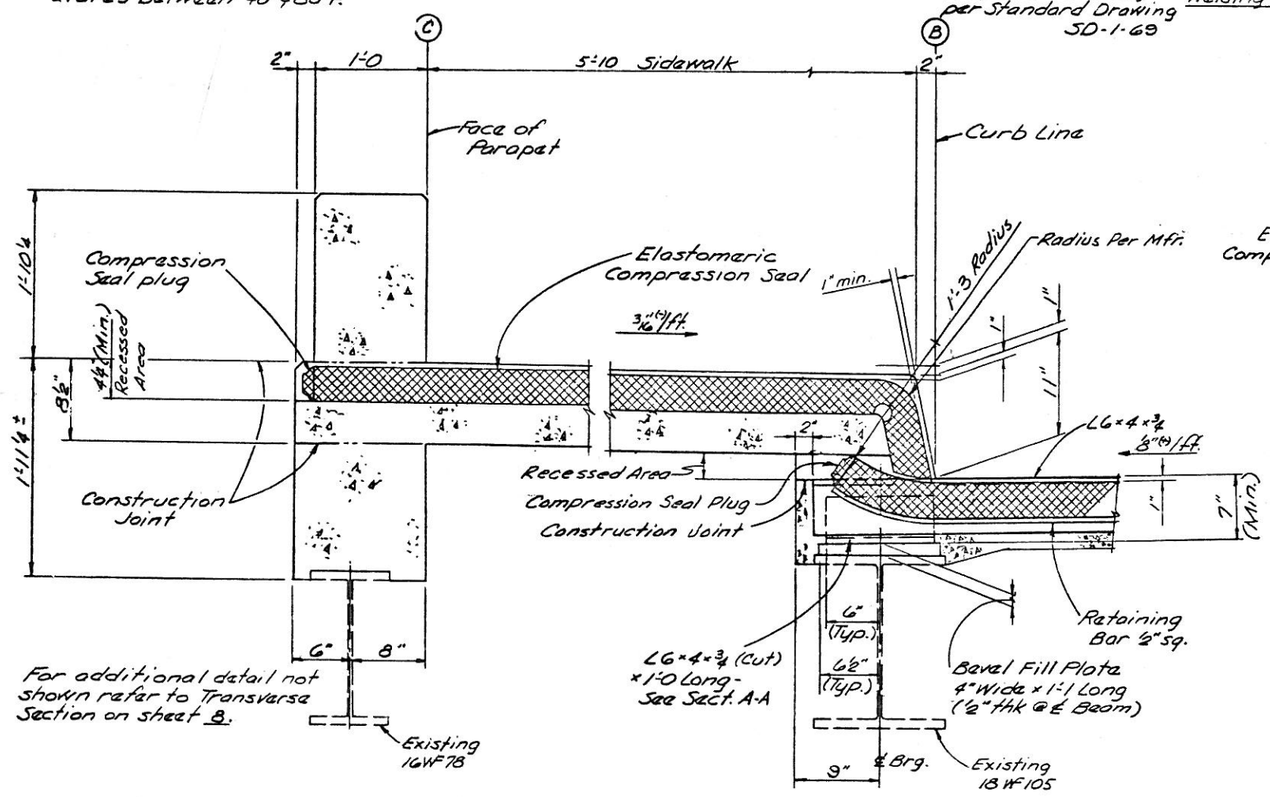

TYPICAL SECTION THRU DECK EXPANSION JOINT

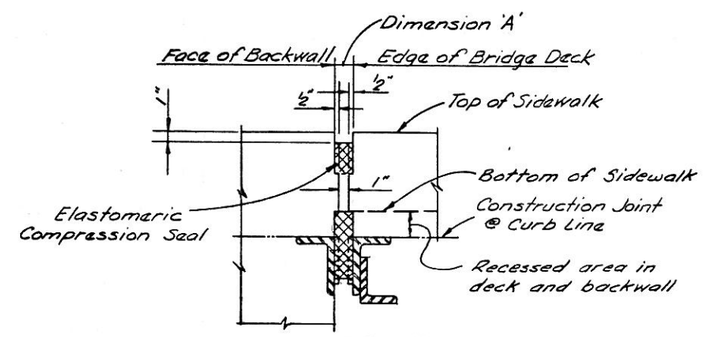

SECTION B-B

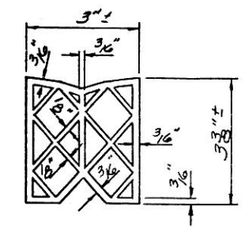

ELASTOMERIC COMPRESSION SEAL DETAIL

FHWA REGION	STATE	PROJECT	
5	OHIO		

STARK COUNTY
CITY OF CANTON
15th STREET S.W.

WORK DESCRIPTION: THIS WORK WILL CONSIST OF SUPPLYING EQUIPMENT, MATERIALS, AND LABOR REQUIRED TO INSTALL AN ELASTOMERIC COMPRESSION SEAL AT EACH ABUTMENT DECK JO IN ACCORDANCE WITH THE DETAIL DRAWINGS. THE CONTRACT WILL PROVIDE THE PROPER LENGTH OF SEAL AND THE NECESSAR HARDWARD INCLUDING THE STRUCTURAL STEEL JOINT ARMOR, TAINER BARS, PRIMER AND ADHESIVE FOR THE PROPER INSTALLA OF THE COMPRESSION SEAL. THE COMPRESSION SEAL SHALL BE PREFABRICATED IN ACCORDANCE WITH APPROVED SHOP DRAWIN WHERE SPECIFIC INSTRUCTIONS ARE NOT CONTAINED HEREIN, USE OF SPECIALIZED MATERIALS AND COMPOUNDS SHALL BE AC TO MANUFACTURER'S RECOMMENDATIONS.

PRODUCT DESCRIPTION: THE JOINTS SHALL BE SEALED WITH A PERFORMED ELASTOMERIC COMPRESSION JOINT SEAL OF THE SI AND SHAPE SHOWN ON THE DETAIL DRAWINGS. THE SEAL SHAL IN ACCORDANCE WITH THE REQUIREMENTS OF SUPPLEMENTAL SPECIFICATION 849, ELASTOMERIC COMPRESSION SEALS FOR STRUCTURAL STEEL JOINTS.

THE SEAL FURNISHED SHOULD BE ONE WHICH WILL COMPRESS ITSELF WITHOUT APPRECIABLE VERTICAL BULDING OR MOVEMEN THE JOINT. THE PRESSURE EXERTED BY THE SEAL UPON THE SID JOINT SHOULD BE NOT LESS THAN 4 PSI (BASED ON MANUFACTU CALIBRATIONS) WITH THE SEAL 20% COMPRESSED.

THE CONTRACTOR SHALL INSURE THAT THE SHOP DRAWINGS OF STRUCTURAL STEEL FABRICATOR AND THE SEAL MANUFACTURER COORDINATED AND APPROVED PRIOR TO FABRICATION. ALL NE MATERIAL CERTIFICATIONS AND SAMPLES SHALL HAVE BEEN SUB AND APPROVED PRIOR TO THE INCORPORATION OF SUCH MATER THE PRODUCT.

STRUCTURAL STEEL: JOINT ARMOR AND RETAINER BARS SHALL B ACCORDANCE WITH ASTM A-36.

METHOD OF MEASUREMENT AND PAYMENT: JOINT ARMOR, INC RETAINER BARS SHALL BE INCLUDED WITH ITEM 513 - STRUCTU STEEL FOR PAYMENT.

Sheet

W. E. QUICKSALL AND ASSOCIATES,
CONSULTING ENGINEERS • NEW PHILADELPH

EXPANSION JOINT DET

15TH ST. S.W. BRIDGE OVI
WEST BRANCH NIMISHILLEN C

STA. 9+
STA. 10

STARK COUNTY

DESIGNED	DRAWN	TRACED	CHECKED	REVIEWED
JMG	JMS		RL	wda

FHWA REGION	STATE	PROJECT	
5	OHIO		

STARK COUNTY
CITY OF CANTON
15th STREET S.W.

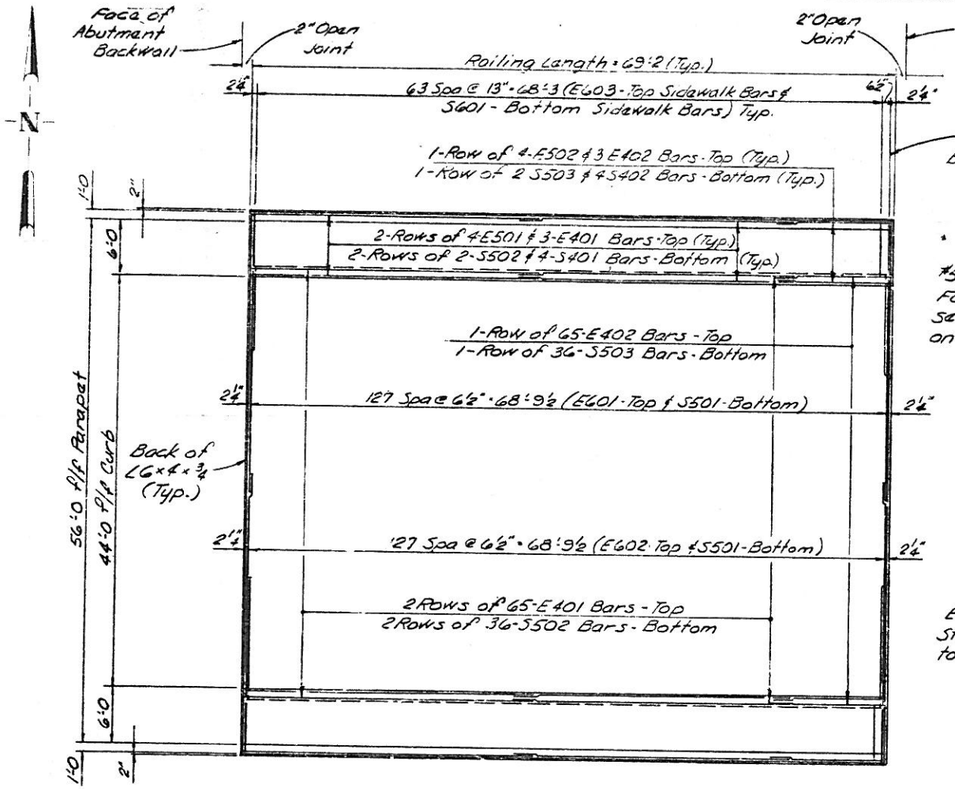

PLAN OF DECK REINFORCING STEEL

Note A: Concrete above this construction joint to be included with railing for payment.

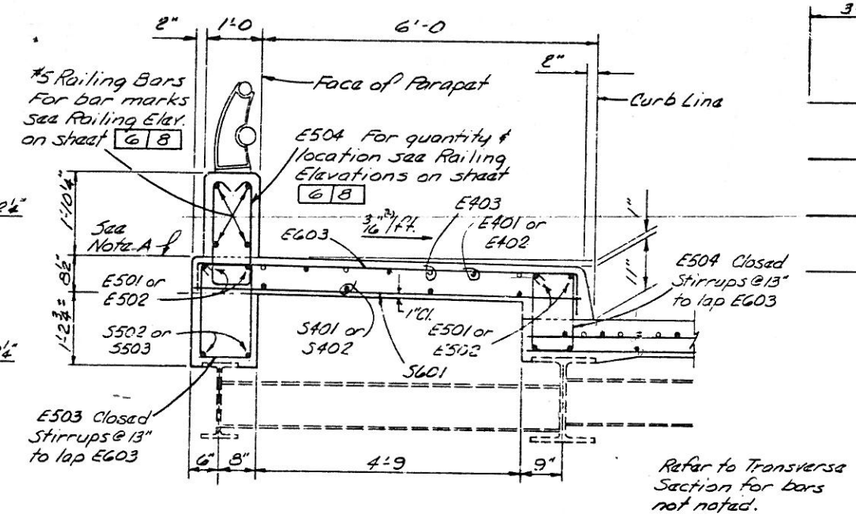

TYPICAL CURB & SIDEWALK DETAIL

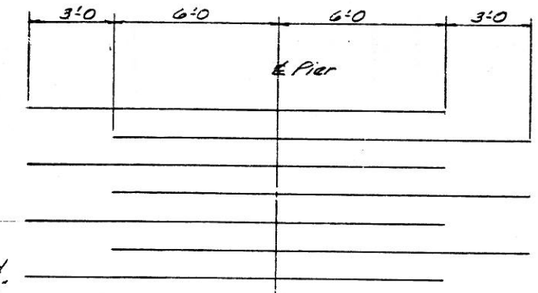

STAGGER SYSTEM OF E403 BARS OVER PIER

Note - Minimum lap for reinforcing is:
1'-3 for #4 Bars
1'-7 for #5 Bars
1'-11 for #6 Bars

** The distance from top of concrete to top of existing steel beams varies but in no case is the dimension less than 7½". The quantity of deck concrete to be paid for shall be based on 7½".

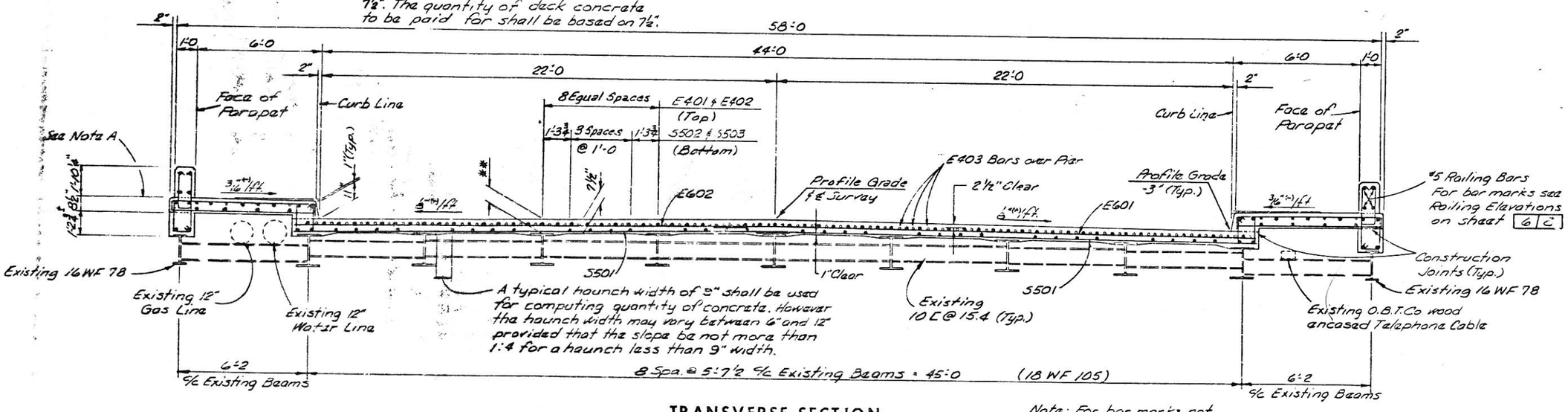

TRANSVERSE SECTION

For partial transverse section of existing bridge see sheet 2 8

Note: For bar marks not shown refer to Typical Curb & Sidewalk Detail.

Sheet

W. E. QUICKSALL AND ASSOCIATES, INC
CONSULTING ENGINEERS • NEW PHILADELPHIA

SUPERSTRUCTURE DETA

15TH ST. S.W. BRIDGE OVER
WEST BRANCH NIMISHILLEN CRE

STA. 9+6.
STA. 10+

STARK COUNTY

DESIGNED	DRAWN	TRACED	CHK'D	REVIEWED	DATE
JMG	JMG		u da	D.O.O.	10/6

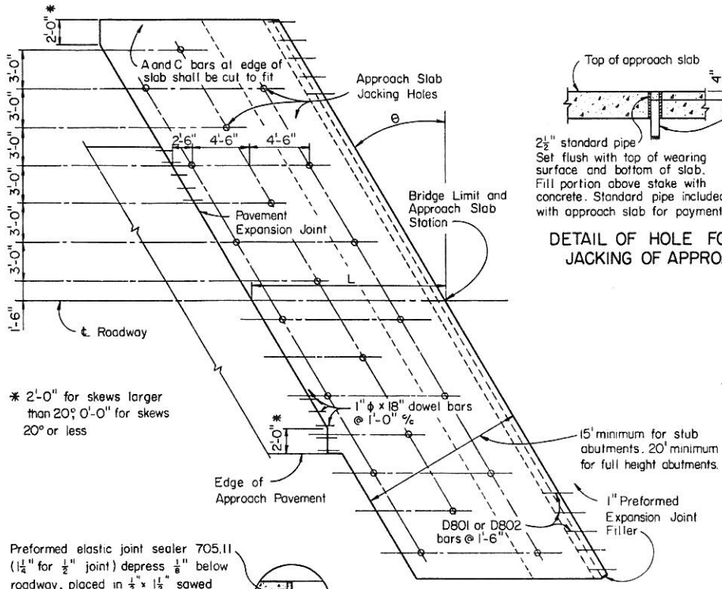

APPROACH SLAB FOR SKEWED BRIDGE

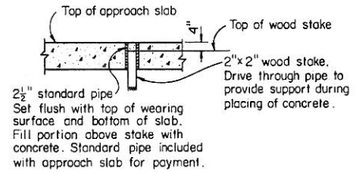

DETAIL OF HOLE FOR FUTURE JACKING OF APPROACH SLAB

REINFORCING STEEL (FOR ONE APPROACH SLAB)															D801 OR D802
Length L	Thickness T	A BARS					B501 (Bottom)		B501 (Top)		C BARS				
		Sp'c'g M	Mark	Length	Dimension A	No req'd	Length	No req'd	Length	No req'd	Mark	Length	No req'd		No req'd
15'-0"	12"	10"	A901	15'-9"	14'-6"	* [W-0.5] ÷ I	* ○ (W-0.5)(sec θ)	14	* ○ (W-0.5)(sec θ)	11	C501	14'-6"	* [W-0.5] ÷ I		* [W-0.5] ÷ I
20'-0"	14"	8"	A902	20'-9"	19'-6"			17		14	C502	19'-6"			
25'-0"	15"	6½"	A903	25'-9"	24'-6"			20		18	C503	24'-6"			
30'-0"	17"	6"	A904	30'-9"	29'-6"	12		23		21	C504	29'-6"	12	18	12

* W = Approach Slab Width, out-to-out, in feet
θ = Angle of skew
S = A bar spacing in inches

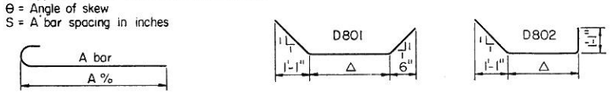

△ Dimension dependent upon thickness of approach slab, width of backwall and depth of beam or girder.
○ At the option of the contractor, the B501 bars may be lapped thirty diameters at the centerline of roadway, or where required for longitudinal construction joints.

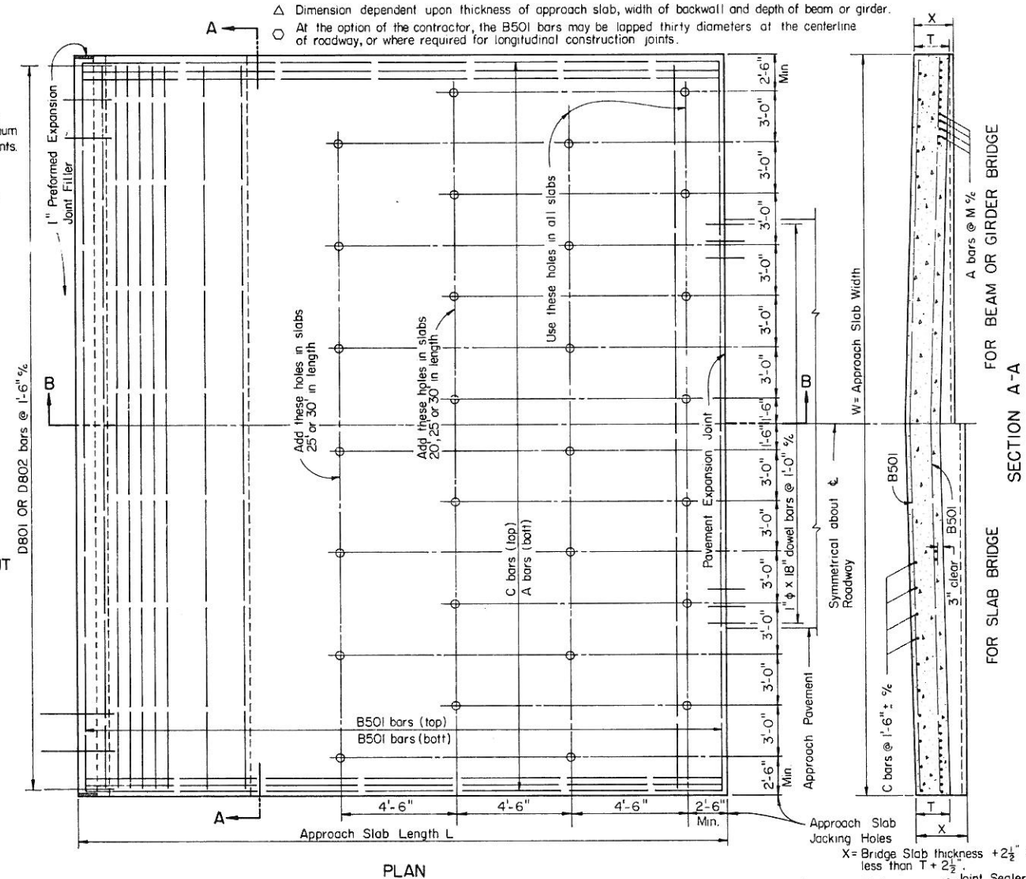

PLAN

FOR BEAM OR GIRDER BRIDGE

SECTION A-A

FOR SLAB BRIDGE

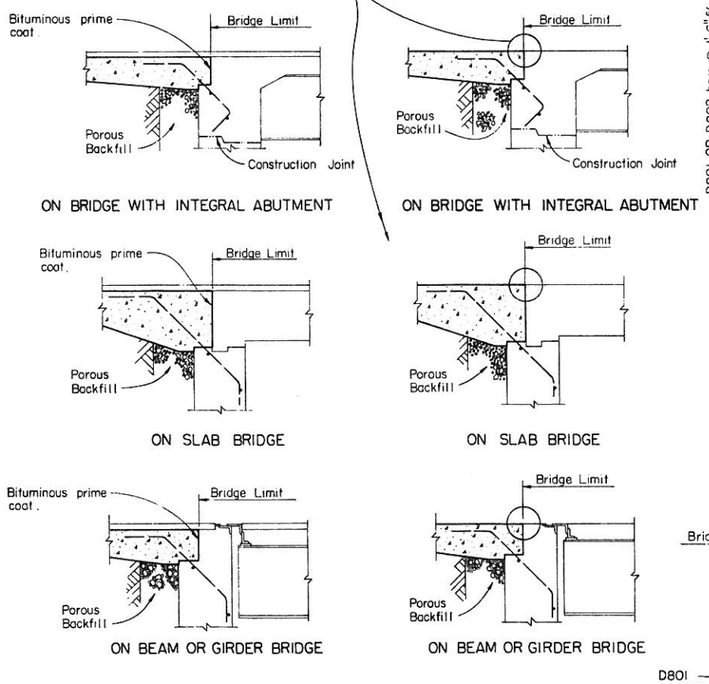

TYPICAL SECTIONS SHOWING JUNCTION OF APPROACH SLAB WITH BRIDGE

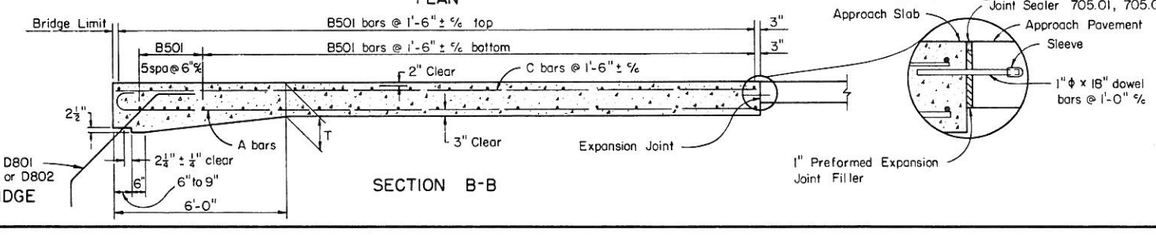

SECTION B-B

GENERAL NOTES

DESIGN SPECIFICATIONS: This standard drawing conforms to "Standar Specifications for Highway Bridges" adopted by the American Association State Highway Officials, 1969, including the Ohio "Supplement" to these specifications.

DESIGN DATA

Design Loading: HS20-44 and the Interstate Alternate Loading
Concrete Class C: Unit stress 1,333 p.s.i.
Reinforcing Steel: ASTM A615, A616 or A617, unit stress 20,000 p

REINFORCING STEEL: For skewed bridges the A and C bars shall be pla parallel to the center line of roadway and the B bars shall be placed p to the abutments.

PREFORMED EXPANSION JOINT FILLER AND SEALER at the corners ar of the approach slab shall be included in the price bid per sq. yd. for th approach slab.

PREFORMED ELASTIC JOINT SEALER shown at the bridge limit end of th approach slab shall be included in the price bid per sq. yd. for the approach s

LONGITUDINAL CONSTRUCTION JOINTS required for stage construction sl as per 511.09.

BRIDGE WITH SIDEWALKS: The curbs on the approach slabs shall transit the bridge curb height on the approach curb height on the approach slab, t the abutments have turnback wings, in which case the transition shall oc beyond the wings. This transition shall occur, on the approach pavement necessary, in a minimum of 10 feet.

EXPANSION JOINT details at the approach pavement end of the approach are used only in conjunction with concrete pavement or concrete base cour Payment for the expansion joint, including dowel bars, preformed expansi filler and joint sealer, is included in the price bid per sq. yd. for the appro

DESIGN NOTES

GENERAL: This drawing provides design and general construction details project plans will show length, skew, curbs (if any), estimated quantity (s and special notes and details where necessary. For conditions other than indicated hereon, the approach slab shall be adapted to fit the ends of and the approach pavement.

APPROACH SLAB WIDTH (W): Generally approach slabs shall be the same the bridge roadway. For bridges constructed with raised sidewalks, bridge railing or other types of construction which retain roadway surface drainc approach slabs shall either include curbs or be constructed in conjunctio curbs.

LENGTH of approach slabs shall be shown on project plans.

CROWN shall conform to that of the approach pavement and bridge deck. rate of crown of the bridge deck differs from that of the approach paven smooth transition shall be provided within the limits of the approach slab.

WEARING SURFACE: If an asphalt concrete surface course is specified fo bridge it shall also be used on the approach slab. Membrane waterproo should not be used on the approach slab.

APPROACH SLAB JACKING HOLES shown are those required for a two- (44' wide) approach slab. If a different width approach slab is used, jackin shall be provided following approximately the same pattern and spacing c Supplemental Specification 813 and Mudjacking Concrete Pavement instr on file with each Division Operations Engineer, should be used as guides f mudjacking the approach slab.

ANCHOR BARS D801 or D802 shall be detailed for the specific bridge a be included with 509 under abutments or superstructure for payment.

REVISIONS	STATE OF OHIO DEPARTMENT OF HIGHWAYS DIVISION OF DESIGN AND CONSTRUCTION BUREAU OF BRIDGES
	STANDARD
	REINFORCED CONCRETE APPROACH SLABS
	LENGTHS - 15'-0", 20'-0" 25'-0" AND 3(
	APPROVED: DATE: 6-30-72 C. H. Schroder ENGINEER OF BRIDGES — DR A
	PREPARED DLM · TRACED TGC · CHECKED CPD · REVIEWED BFG — SH OF

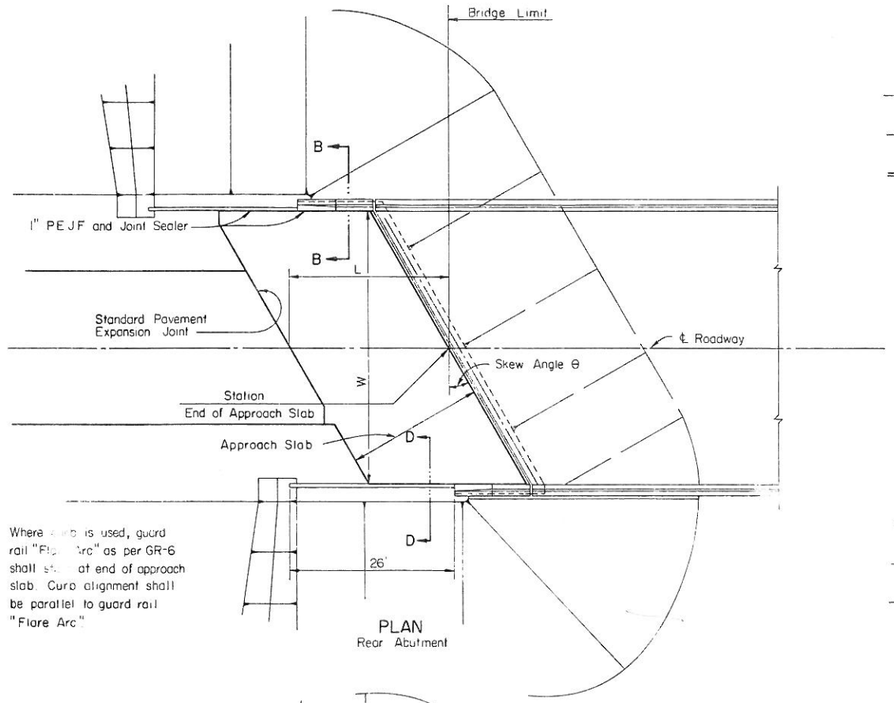

PLAN
Rear Abutment

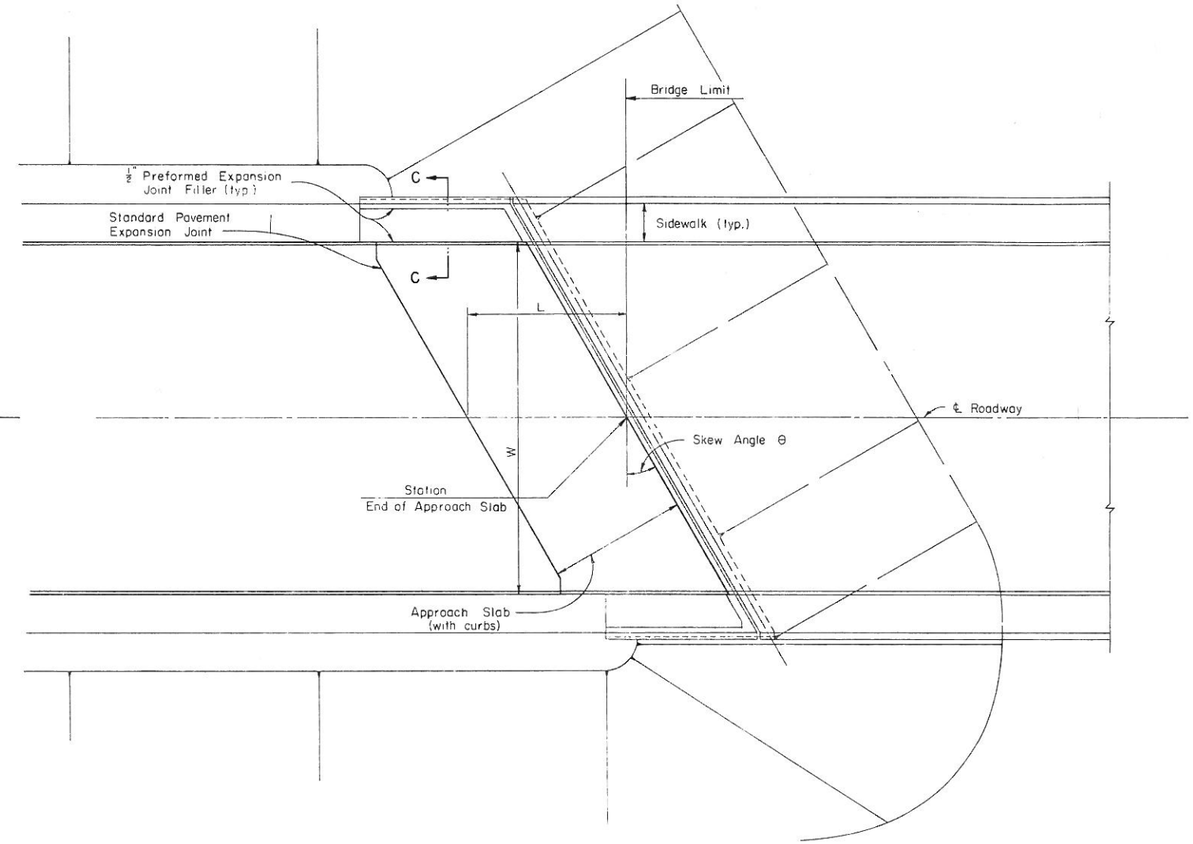

PLAN
Rear Abutment

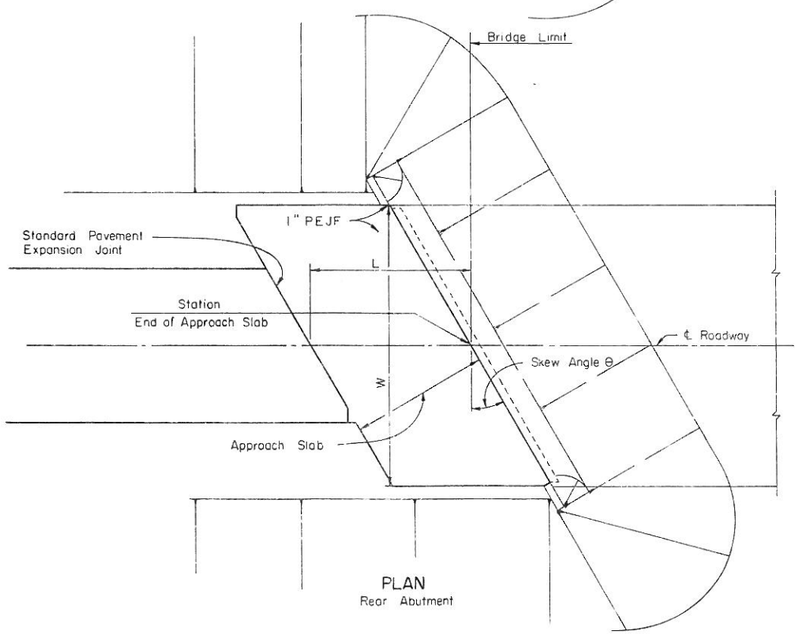

PLAN
Rear Abutment

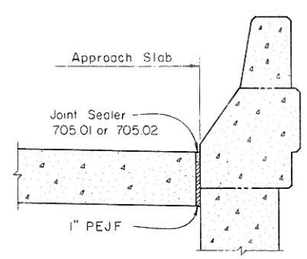

SECTION B-B

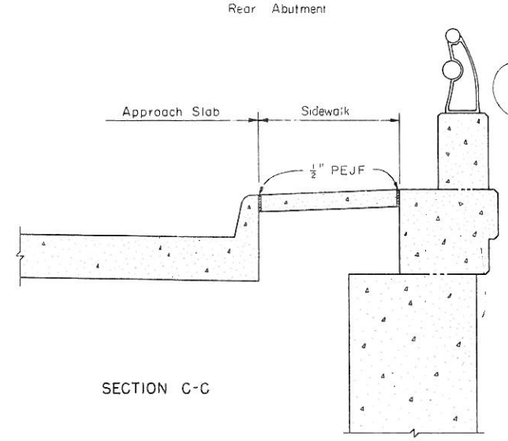

SECTION C-C

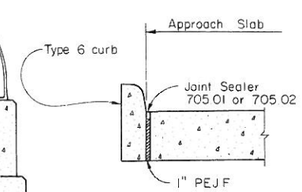

SECTION D-D

REVISIONS	STATE OF OHIO DEPARTMENT OF HIGHWAYS DIVISION OF DESIGN AND CONSTRUCTION BUREAU OF BRIDGES				
	STANDARD REINFORCED CONCRETE APPROACH SLABS LENGTHS - 15'-0", 20'-0", 25'-0" AND 30				
	APPROVED DATE 5-30-78 ENGINEER OF BRIDGES				DRA AS
	PREPARED DLM	TRACED TGC	CHECKED CPD	REVIEWED BFG	SH OF

RESURFACING

+ Increase as necessary to maintain 2" min. opening.
* Vertical extension of joints found to be closed to 1/2" or less may be non-performed as directed by the Engineer.

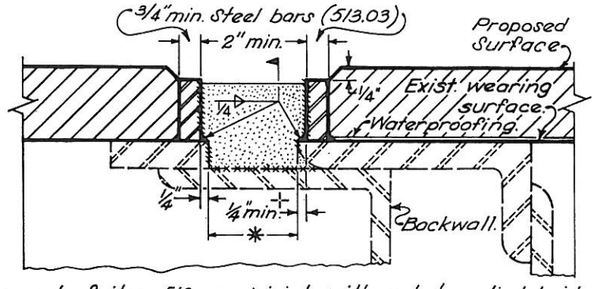

As a part of item 516, seal joint with a hot-applied bridge deck waterproofing material which also meets the requirements of 705.01. Sandblast vertical surfaces (▒) and wipe clean. Seal joint before rust forms. If rust forms, re-sandblast. Use bond breaker on the horizontal surface (▪▪▪▪▪).

MAINTENANCE OF TRAFFIC: Generally the bars shall be welded while the lane is closed for waterproofing or resurfacing. However, if traffic is routed over the bars before resurfacing, temporary ramps shall be constructed to the tops of the bars using 402 or 404 feathering at a max. slope of 6 ft/in. The ramps shall be removed prior to resurfacing. Payment for placing and removing the ramps shall be included in the lump sum bid for item 614.

VERTICAL EXTENSION OF STRUCTURAL EXPANSION JOINTS

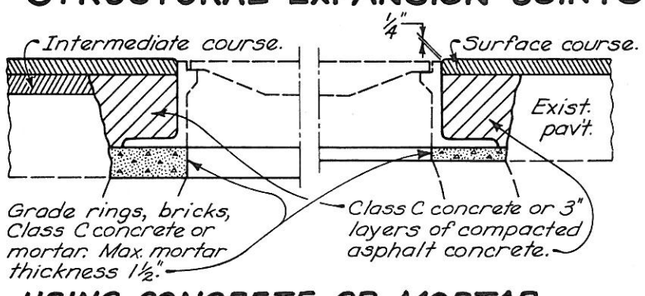

USING CONCRETE OR MORTAR

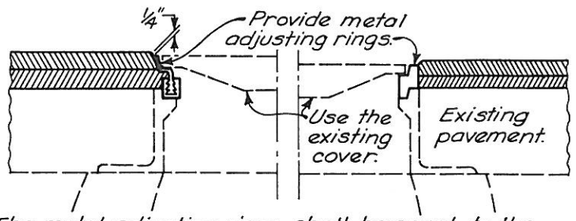

The metal adjusting rings shall be equal to the Series R-1979 by the Neenah Foundry Co. or the models LS, LB, SB, NB or MB by the National Utility Products Co. or an approved equal. Adjustment range 1" to 4 1/8".

USING METAL ADJUSTING RINGS

MANHOLES ADJUSTED TO GRADE

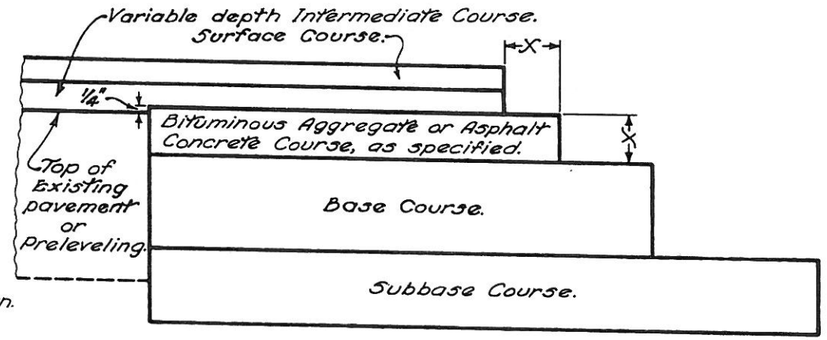

The Bituminous Aggregate in the upper part of the base widening shall finish approximately 1/4" above the edge of the existing pavement where no preleveling is used. Where a preleveling (using intermediate course material) is specified, it shall be placed prior to excavation of the widening trench and the upper course of the base widening shall finish approximately 1/4" above the preleveling.

COURSE DETAIL FOR WIDENING

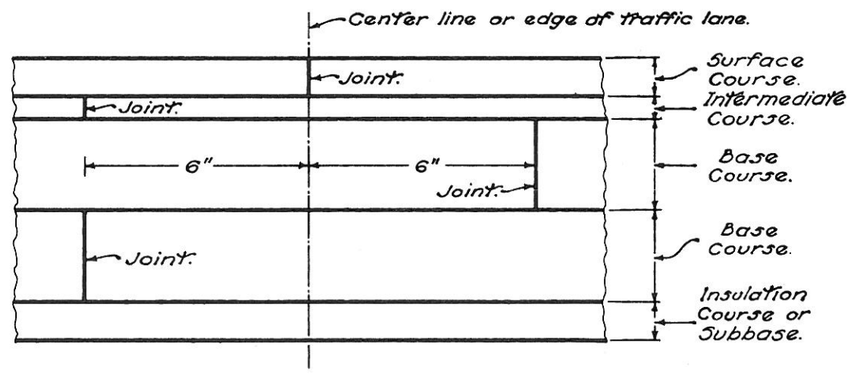

LAPPING LONGITUDINAL JOINTS

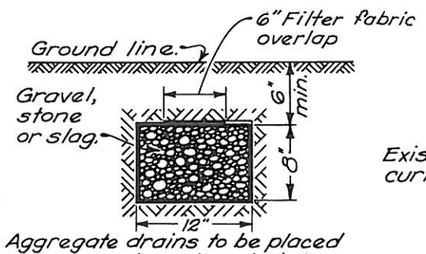

Aggregate drains to be placed where and as directed by Engineer. Provide filter fabric when specified as a separate pay item.

AGGREGATE DRAIN

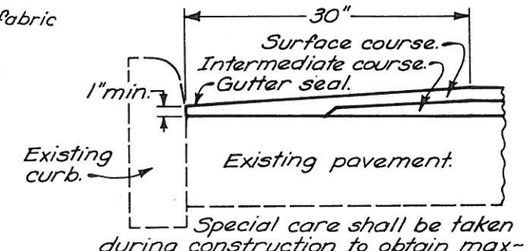

Special care shall be taken during construction to obtain maximum compaction of bituminous concrete in gutters.

GUTTER FINISH

NOTE: Either type feathered area may be used unless type is specified by the plan.

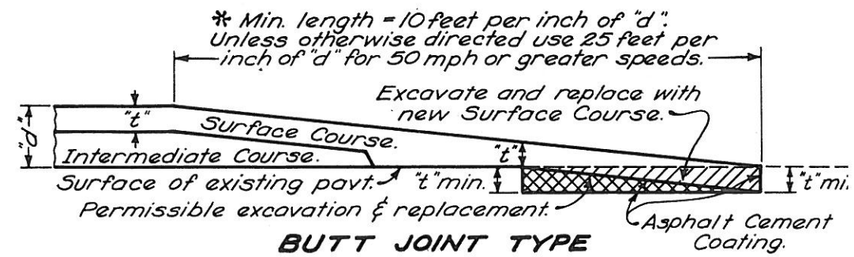

BUTT JOINT TYPE

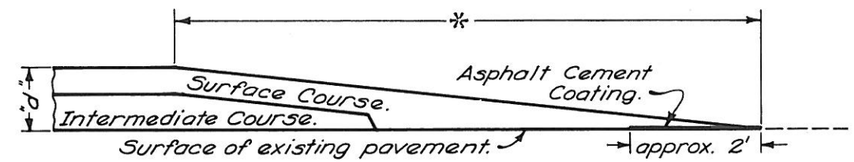

FEATHER EDGE TYPE

PLACING FEATHERED AREAS

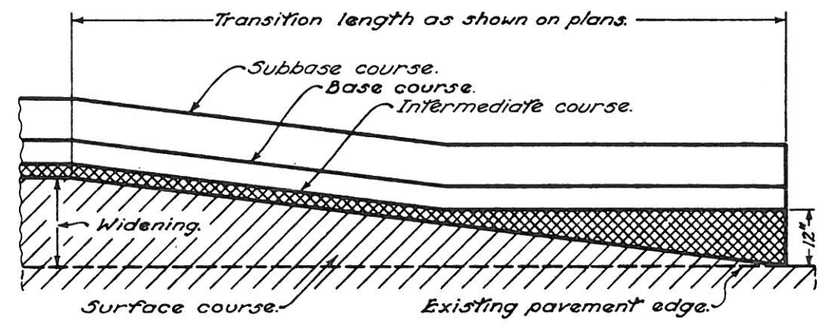

MERGING EDGE OF PAVEMENT WIDENING WITH EDGE OF EXISTING PAVEMENT

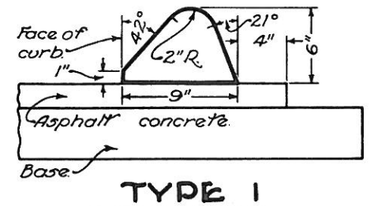

TYPE I ASPHALT CONCRETE CURB

BUREAU OF LOCATION AND DESIGN
OHIO DEPARTMENT OF TRANSPORTATION

RESURFACING

DATE
6-1-
1-1-
6-1-
8-1-
4-16-

STANDARD CONSTRUCTION DRAWING BP-5

APPROVED M. J. Cunningham ENGR., L.D.

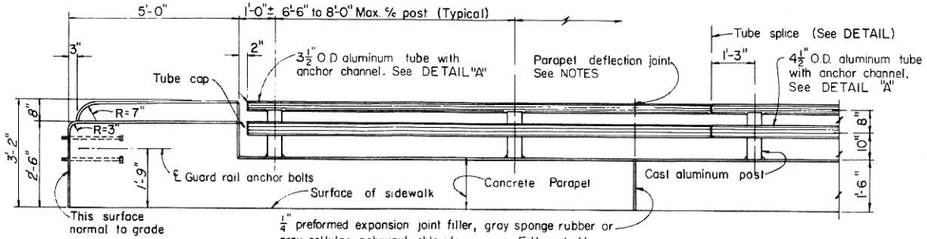

Concrete above sidewalk surface construction joint is included with Railing for payment.

¼" preformed expansion joint filler, gray sponge rubber or gray cellular polyvinyl chloride sponge. Filler shall conform to AASHO M-153, Type I, except density of PVC sponge shall be not less than 20 lb. per cu. ft. Include with railing for payment.

INSIDE ELEVATION OF RAILING

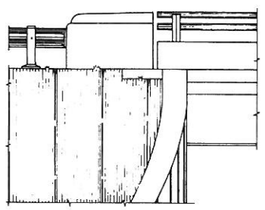

RAILING DETAIL
CANTILEVER ABUTMENT

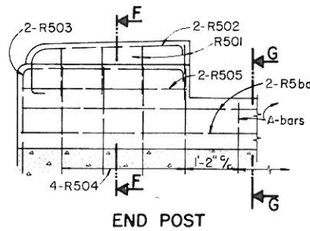

END POST

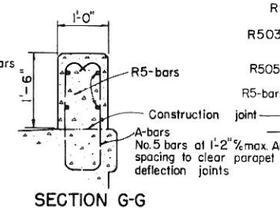

SECTION G-G

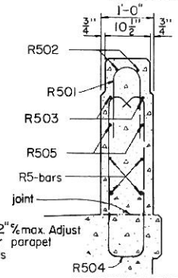

SECTION F-F

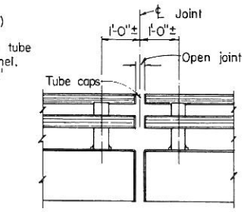

RAILING DETAIL
AT DECK EXPANSION JOINT

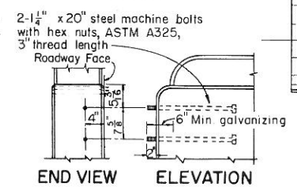

END VIEW ELEVATION
GUARD RAIL ANCHOR

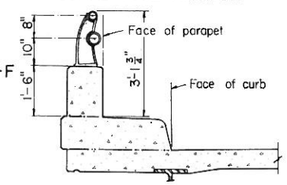

PART DECK SECTION

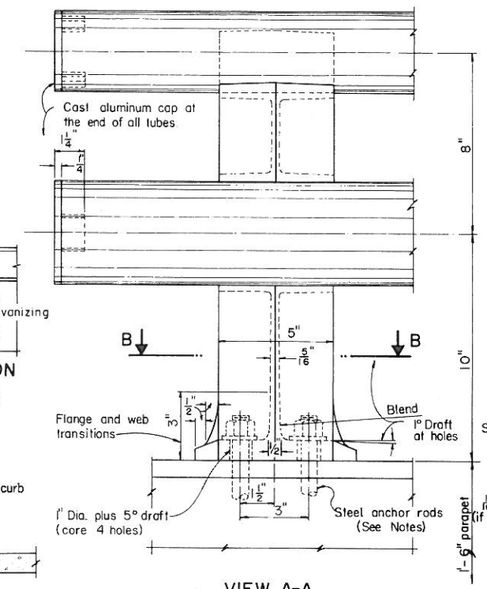

VIEW A-A

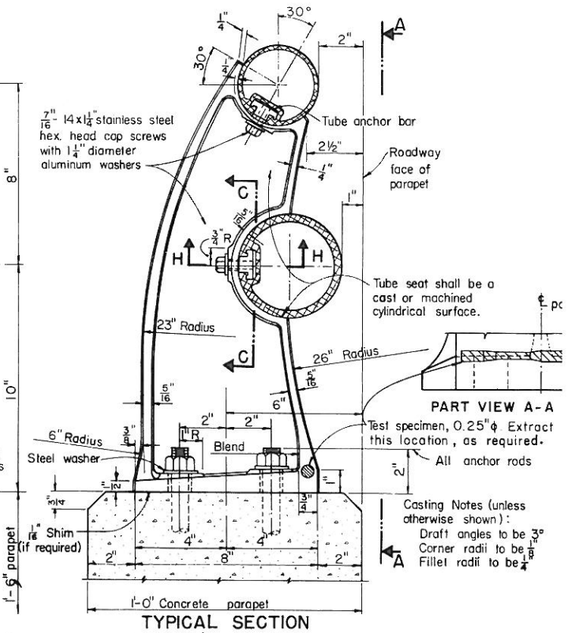

PART VIEW A-A

TYPICAL SECTION

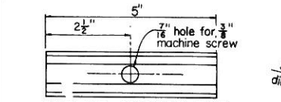

SLEEVE ANCHOR BAR
Refer to tube anchor bar for other details

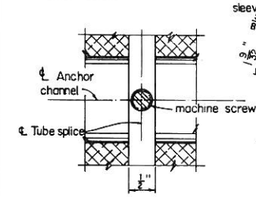

SECTION E-E

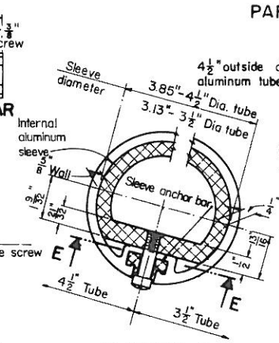

SECTION D-D
Internal sleeve detail

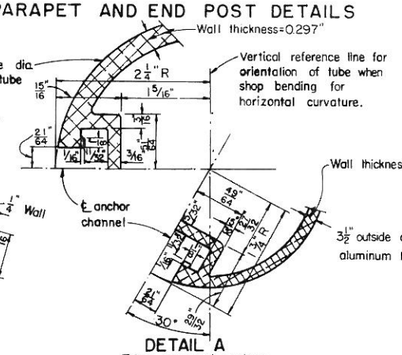

DETAIL A
Tubes symmetrical about ℄ anchor channel

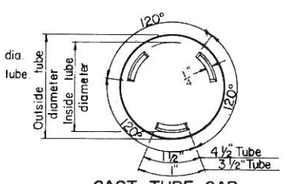

CAST TUBE CAP
Cap shall fit tight in tubes

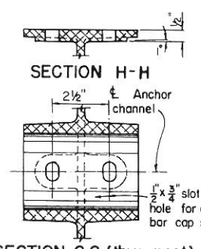

SECTION H-H

SECTION C-C (thru post)
Lower tube seat shown, Upper tube seat similar.

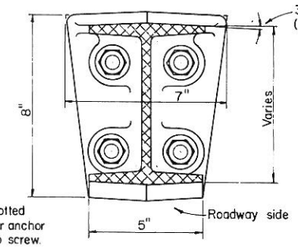

SECTION B-B

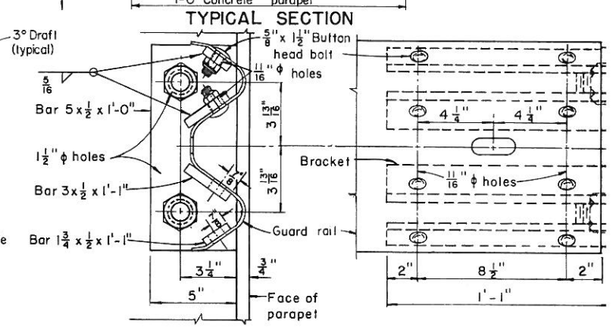

GUARD RAIL CONNECTION BRACKET

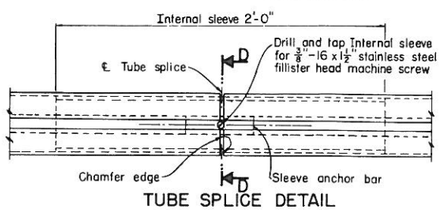

TUBE SPLICE DETAIL

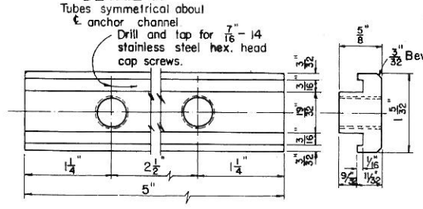

TUBE ANCHOR BAR DETAIL
(aluminum)

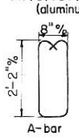

A-bar

A-Bars are included with superstructure, abutments, or other parapet supporting elements, under Reinforcing Steel, for payment, L = 5'-7"

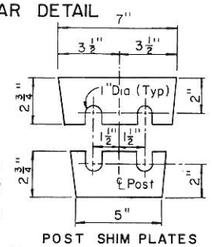

POST SHIM PLATES

RAILING REINFORCING STEEL				
Mark	Length	Weight	Shape	Bending Diagrams
R501	3'-3"	Included with Railing for payment	B1.	
R502	6'-7"		B1.	
R503	8'-3"		B1.	
R504	7'-7"		B1.	
R505	4'-8"		S1.	
R5 bars	*		S1.	

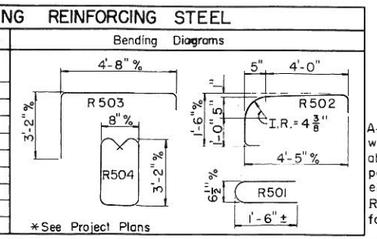

*See Project Plans

GENERAL: This drawing provides design and construction details. The project plans for each structure shall give necessary additional railing dimensions including parapet and tube panel lengths, reinforcing steel details, reinforcing steel list, estimated quantities, and any other pertinent information, including special notes and details.

DESIGN SPECIFICATION: "Standard Specifications for Highway Bridges" adopted by AASHO, 1969, including the Ohio "Supplement" to these Specifications.

ALUMINUM DESIGN DATA:

Basic unit stresses: Tubes = 21,000 p.s.i.
Post = 6,000 p.s.i.

TUBE SPLICES are to be located so that each tube segment shall be connected to not less than two posts nor more than three.

CONCRETE PARAPETS shall be placed in alternate sections by the use of bulkheads. Closing sections shall be placed after removal of bulkheads and after placement of sponge filler. Filler shall be flush with surface of concrete and exposed edges shall be free of mortar.

MATERIAL: Railing posts shall be permanent mold castings. Tubes, internal sleeves and anchor bars shall conform to ASTM B221, 6061-T6 or 6351-T5.

SHIMS shall be provided under railing post, where necessary, to provide for the vertical adjustment of the post. Shims shall be of aluminum alloy, 1/16 inch thick, cut as shown. Where more adjustment of the post is required, for plumb alignment, than can be corrected by one shim, the post shall be removed and the concrete surface corrected by grinding.

FINISH: The outside surface of the post flanges and the tube caps shall be given a 40 grit finish.

GUARD RAIL CONNECTION BRACKET included with railing for payment.

ANCHORS: Hexagonal nuts, washers and a minimum of 6" of the threaded end of anchor bolts and anchor rods shall be galvanized. Anchor rods, as fabricated, shall have the following minimum dimensions and mechanical properties.

Diameter at root of threads	0.620"
Straight portion of rod	1'-0" long
Hook at bottom	2½"-90° bend
Anchor tensile strength	21,000 lbs.

Hexagonal nut shall develop the tensile strength of the anchor rod.

Cap screws shall be stainless steel, ASTM A276, type 410 with a minimum yield strength of 80,000 psi.

Fillister head machine screws shall be stainless steel, ASTM A276, Type 302 with a minimum yield strength of 45,000 psi.

PARAPET DEFLECTION JOINTS generally shall be located midway between rail posts and spaced two rail panel lengths apart. For continuous structures the parapet panels shall be further subdivided in the negative moment region (over the piers) into panel lengths of not less than 5'-0" nor more than 7'-6". Joints shall clear post anchors by 8" minimum.

HORIZONTAL CURVATURE: This standard is applicable to structures havi a railing curvature radius of 20 feet or more. For a radius less than 20 fe the design shall be special. For structures on curvatures of 3° or less, the tubes may be furnished straight and forced into position in the field.

GUARD RAIL ANCHOR BOLTS included with Railing for payment. Furn anchors at each end of bridge rail unless otherwise noted on project pla

Revisions
9-17-69
1-1-71
10-15-71

STATE OF OHIO
DEPARTMENT OF HIGHWAYS
DIVISION OF DESIGN AND CONSTRUCTION
BUREAU OF BRIDGES

STANDARD

BRIDGE SIDEWALK RAILING

WITH CONCRETE PARAPETS

APPROVED C. H. Abbreiter
DATE 11-6-67 ENGINEER OF BRIDGES

PREPARED	TRACED	CHECKED	REVIEWED	DRAWING
MPB	CAM N.R.B.	JDR	MHH BFG CDB	BR-2

MOVABLE GATE

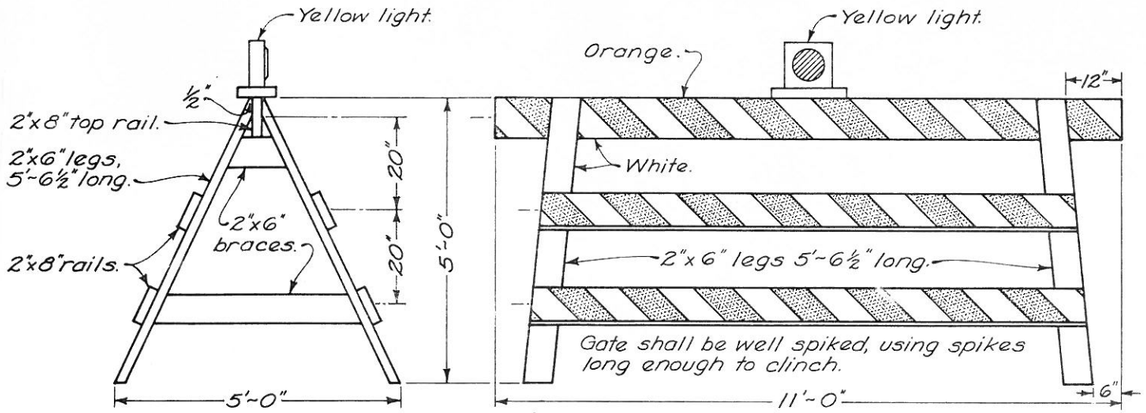

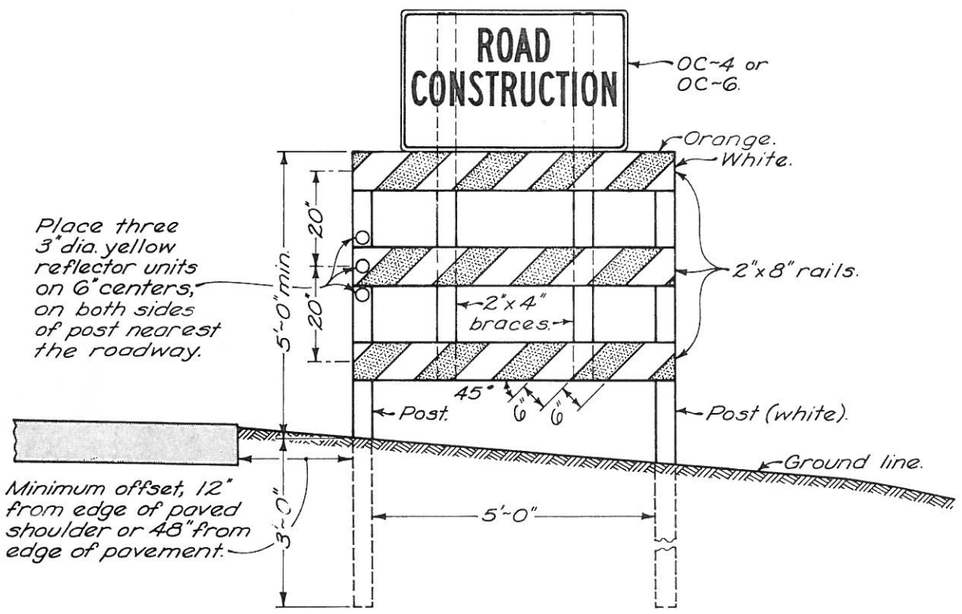

WING BARRICADE

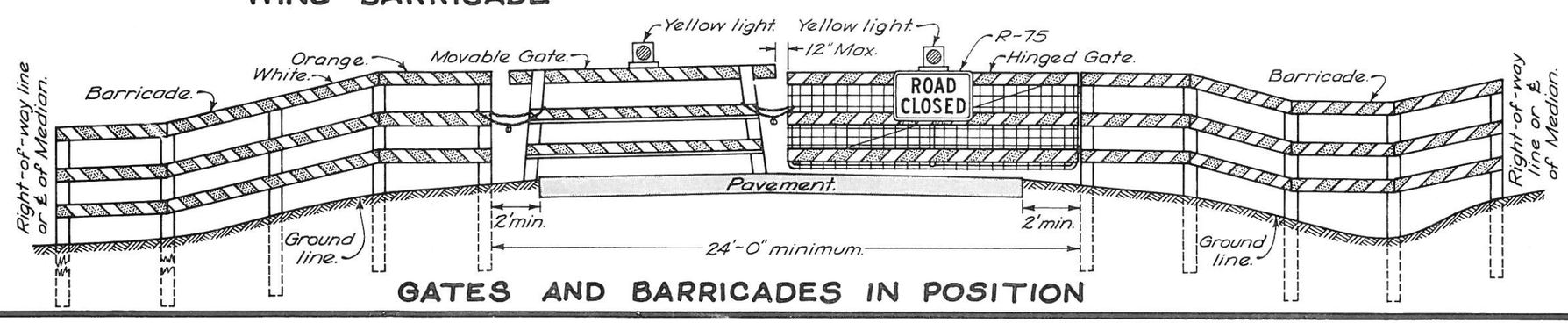

GATES AND BARRICADES IN POSITION

NOTES

BARRICADES shall be constructed according to details shown. Where traffic is maintained during construction, wing barricades shall be used on each shoulder: (1) at both ends of the project, (2) on all interchange entrance ramps or on the cross road preceeding the entrance ramp, (3) on all other major approach roads as directed by the Engineer. When the road is closed to traffic, barricades and gates shall be used to effectively close the entire roadway including the median of divided highways. In urban areas and at locations where it is impracticable to extend the barricade to the right-of-way line because of a sidewalk or other obstruction, the ends of the barricade shall be located as directed by the Engineer to effect the desired closing of the highway.

PAINTING AND REFLECTORIZATION: All rails of the barricades and gates shall be reflectorized with orange and white reflectorized sheeting in 6" wide alternate stripes which slope downward toward the center line of the road at an angle of 45°. All three rails of the Road Closed barricade shall be striped on the side facing traffic. All three rails of the wing barricade and all gate rails shall be striped on both sides. All posts, braces, gate legs and any unstriped rails shall be painted white.

GATES: One gate shall be erected for each traffic lane. Gates shall be chained and padlocked to one another and to adjacent posts of the barricades. Chains shall be ¼" stock or larger with welded links.

A hinged gate may be used and shall be an approved 12' by 4' steel frame form type, or a type approved by the Engineer. The gate shall be hung on hinge screw hooks, or as otherwise approved. Striping similar to that used on the movable gate shall be accomplished with 1"x8" lumber or with metal strips fastened to the gate. The gate shall be supported at the center in an approved manner.

YELLOW LIGHT: Each gate shall be equipped with a steady burning yellow light, conspicuously visable at all distances up to 1000' under normal atmospheric conditions. The light, operated by battery, electric generator, commercial power or propane gas, shall be in operation at all times between sunset and sunrise during the period the highway is closed.

SIGNS: Where the road is closed to traffic by the erection of gates and barricades, a ROAD CLOSED sign (R-75) shall be mounted on the gate as shown. On three-lane pavement, the sign shall be mounted on the middle gate facing traffic.

Where traffic is maintained, a ROAD CONSTRUCTION TRAFFIC MAINTAINED sign (OC-4) shall be used on the right shoulder wing barricade on the approaches to major construction or maintenance jobs less than 2 miles in length. A ROAD CONSTRUCTION NEXT __ MILES sign (OC-6) shall be used on the right shoulder wing barricade on the approaches to any major construction or maintenance job of 2 miles or more in length. An END CONSTRUCTION sign (OC-8) shall be erected above the right hand wing barricade facing traffic leaving the construction section. The signs on the wing barricades shall be erected above the top rail of the wing barricade on braces, as detailed hereon.

LUMBER used in the construction of the gates and barricades shall be No. 1 common yellow pine or No. 1 common Douglas fir, surfaced on four sides standard, or other materials approved by the Engineer. All sizes are nominal.

POSTS shall be sound 4"x4" sawed or 4½" round. Rails of the barricade shall be bolted to the posts with ⅝" bolts.

BUREAU OF ROADWAY DESIGN
OHIO DEPARTMENT OF TRANSPORTATI

BARRICADES AND GATES

DAT
6-1-
5-1-
11-1-
68-20
6-1-

STANDARD CONSTRUCTION DRAWING

MC-3

APPROVED E. J. Schaefer ENGR., R. D.

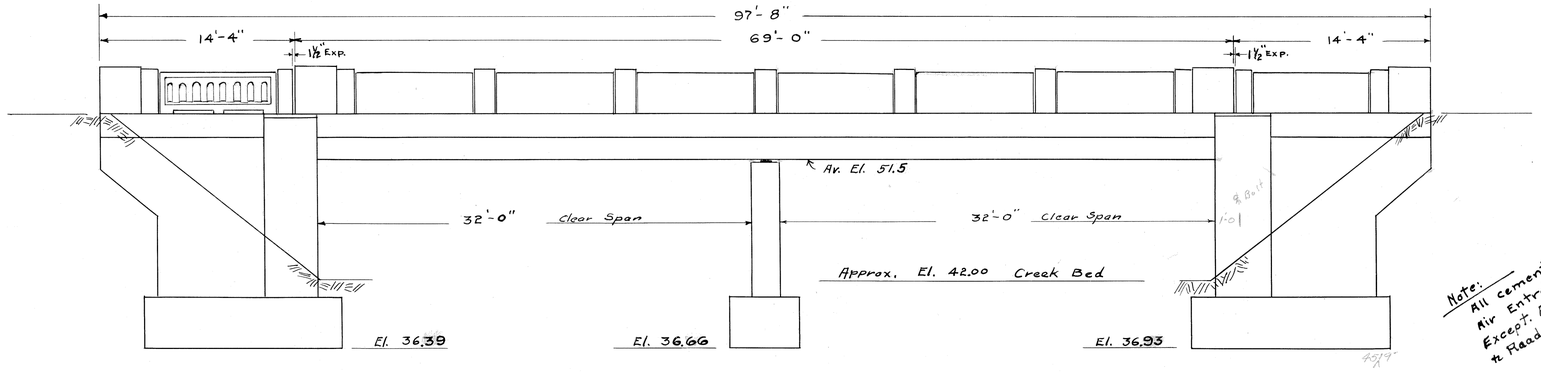

Note: All cement to be Air Entraining, Except Approach Slabs & Roadway Base

Approx. 600 Sq. ft. of Waterway

NORTH ELEVATION

Scale 3/16" = 1'

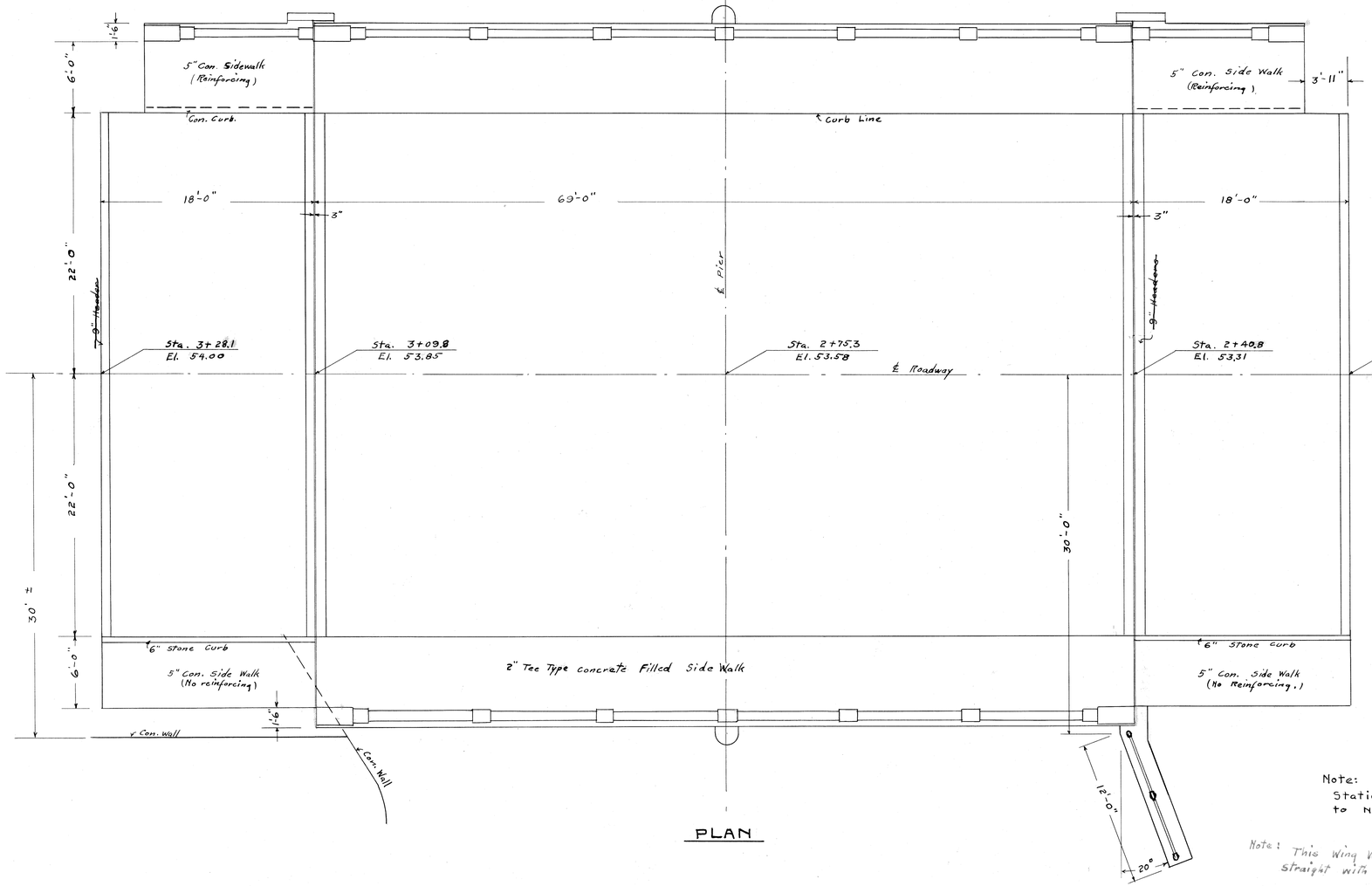

PLAN

Note: Stations & Elevations subject to Note on Sheet 4.

Note: This Wing Wall was set Straight with Abutment.

PROPOSED STRUCTURE

Two Span I-Beam Lok Floor Bridge. (see note below.) 34 foot c-c of Bearings. 44 foot Roadway. Two 6 foot Side Walks. Two 18 ft. Approach Slabs. On a 0.8% Grade to West.

CONCRETE

Concrete in Footers & Approach Slabs to be Class 3 using Local Gravel. Wall Concrete to be Class 3 using Grade "A" Blue Lime Stone. Superstructure, Side Walks, Railing and ~~Headers~~ to be Class 2 Concrete using Grade "A" Blue Lime Stone. All Concrete exposed to view to be finished. Concrete to be vibrated as necessary. Back Walls to be poured after Structural Steel is set.

STRUCTURAL STEEL

18" x 16" WF I-Beams. Continuous Welded Construction over Pier. 10" Channels Welded in place for bracing. Welding to Confirm to Item S-7.12 of the State Highway Specifications

PAINT

One Shop Coat of a 21# weight per gallon mixed Red Lead Paint. Field Paint to be two coats of good ~~Grey Iron~~ paint, Item M-9.12 and shall be applied in accordance with Item S-8 of the State Hiway Specifications

One Field Coat of Red Lead was used on Beams & underside of Floor & Side Walk. Outside of Outside Beam were painted grey.

CAMBER

No Camber required.

ANCHOR BOLTS

Were set in the concrete. O.K.

~~Holes to be drilled in concrete.~~

WEARING SURFACE (for Approach Slabs & Pavement.)

3" Vertical Fiber Brick with ¼" Lugs to be laid on ¾" oil & Sand Bedding Course.

~~WATER PROOFING~~

~~Type "B" 36" wide to cover Construction Joint of Back Wall. Type "C" to be used on Bridge Slab. Item S-3 S.H.S.~~

OLD BRIDGE

To be removed & placed available for hauling. Same to remain the property of the City of Canton as Salvage Material.

FLOOR & SIDE WALK

To be constructed with 4¼" U.S.S. I-Beam Lok Floor & 2" Tee Type (heavy weight) Side Walk or Equivalent. Both to be concrete filled, using Air Entraining Portland Cement. (Special Mix.) & vibrated to place. Used pretty Dry.

See Sheet 7 for Quantities.

CITY OF CANTON
DEP'T. OF
CITY CIVIL ENGINEER

BRIDGE
ON
15TH ST. S.W.
OVER
WEST BRANCH
OF
NIMISHILLEN CREEK

F.B. No	Drawn by: 5/44	3889
Reported: June 18, '45	Checked by:	11 ~~80~~
GEN. PROJ. No 268	Revised: Jan. 1945	15

Catch Basins not built. Widening of Curb extend to Return Curb @ Park Drive. Includes New Base & Pavement.

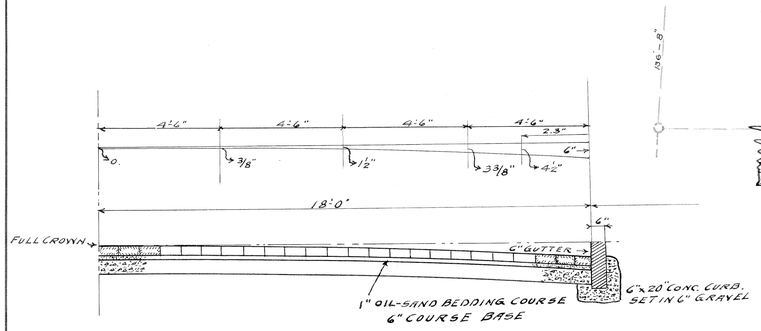

1/2 CROSS-SECTION 36' BRICK ROADWAY

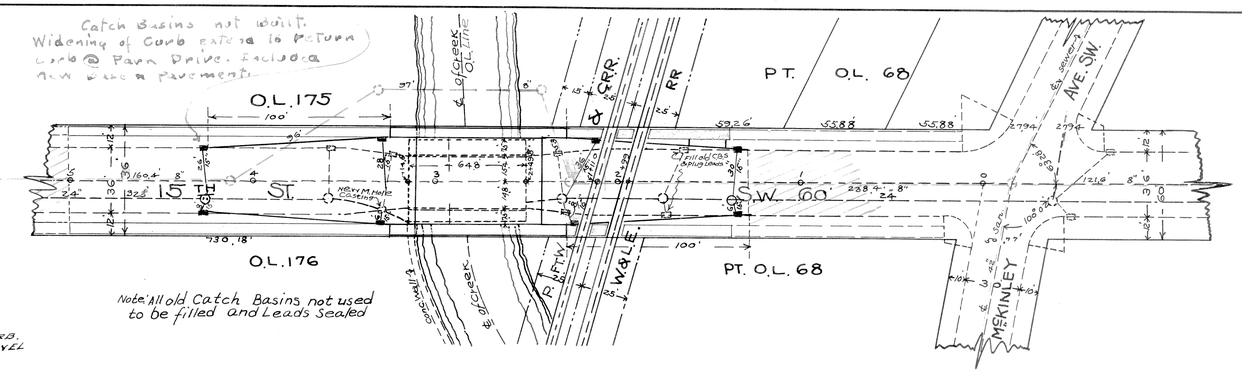

12" gas line & 12" water line were put under bridge & on side walk on N. side. & Telephone Conduit were placed under S. side walk.

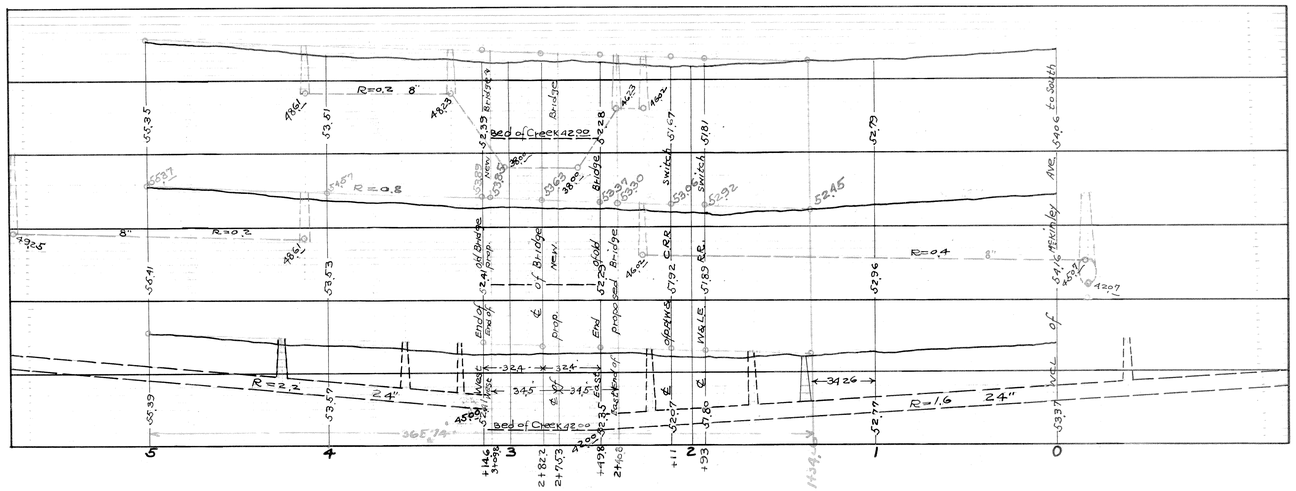

CITY OF CANTON DEPT. OF CITY CIVIL ENGINEER		
BRIDGE AND 15TH ST. S.W. IMPROVEMENT OVER WEST BRANCH OF NIMISHILLEN CREEK		
F.B. No. 387P.57 Reported: June 18, '45	Drawn by Checked by Revised	3889 11 ~~88~~ 15
GEN. PROJ. NO. 268		

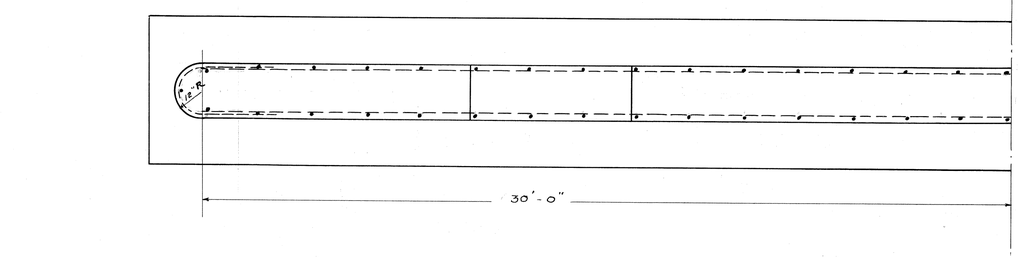

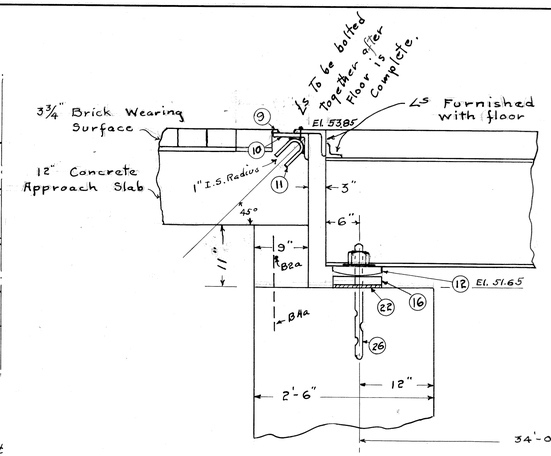

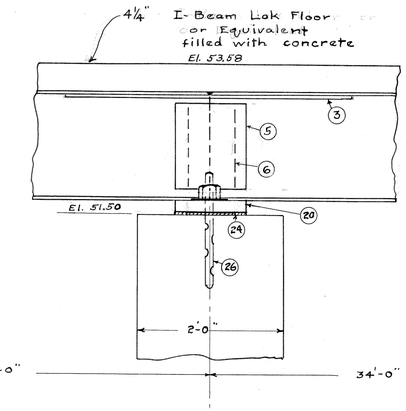

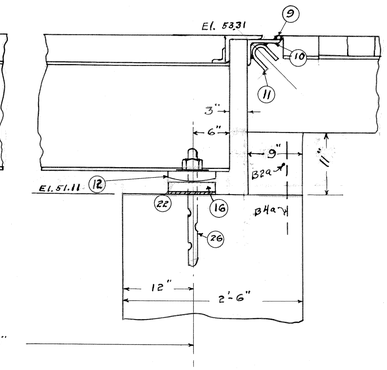

SECTION THRU CENTER

Scale 1" = 1'

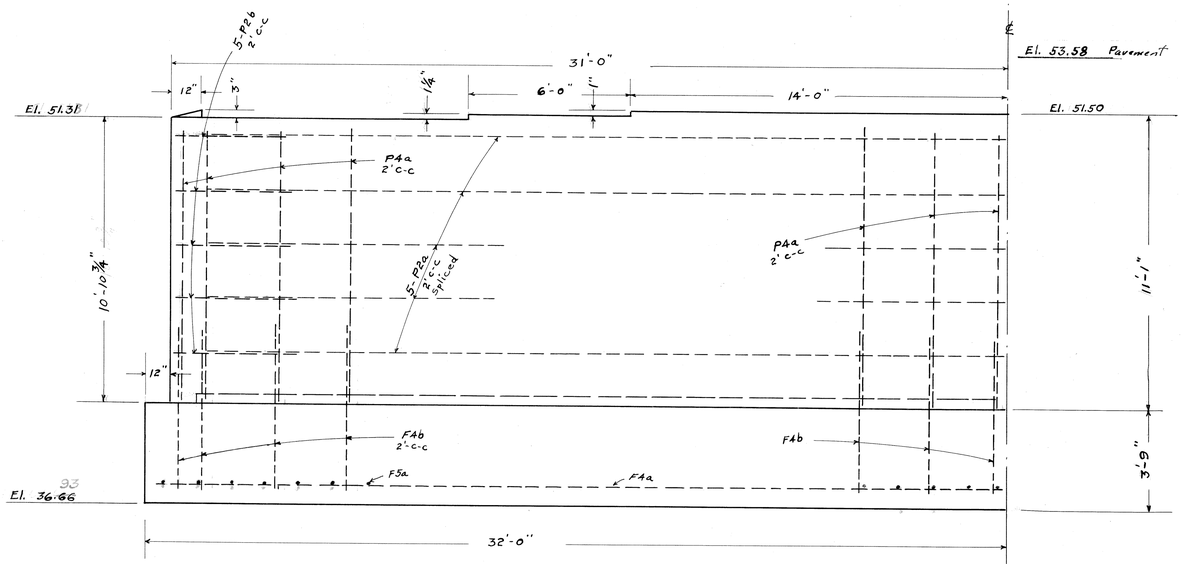

HALF PLAN & ELEVATION OF PIER

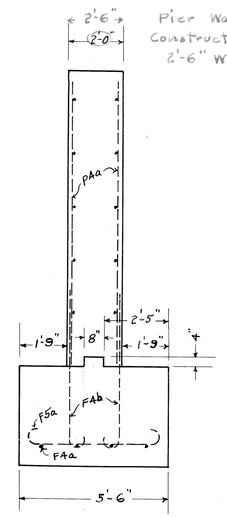

SECTION

⑨	Bar 1" x ½" x 43'-11½" fillet weld Top & Bottom
⑩	∠ 6" x 4" x ⅜" x 43'-11½"
⑪	U-Bolts ¾" x 1'-6" weld to both legs 12" c-c
⑤	Plates 12" x ⅜" x 14" ¼" fillet weld all around
⑥	" 8" x ⅜" x 14" opposite side
⑫	Rocker Plate 8" x 1½" x 19½"
⑯	Bed Plate 8" x 2¼" x 19½"
㉒	Lead Plate 8" x ⅛" x 19½"
⑳	Bed Plate 12" x 2¼" x 19½"
㉔	Lead " 12" x ⅛" x 19½"
③	Plate 4" x ¾" x 4'-0"
㉖	Anchor Bolts 1¼" x 18" Hex. Nut & Cut Washer

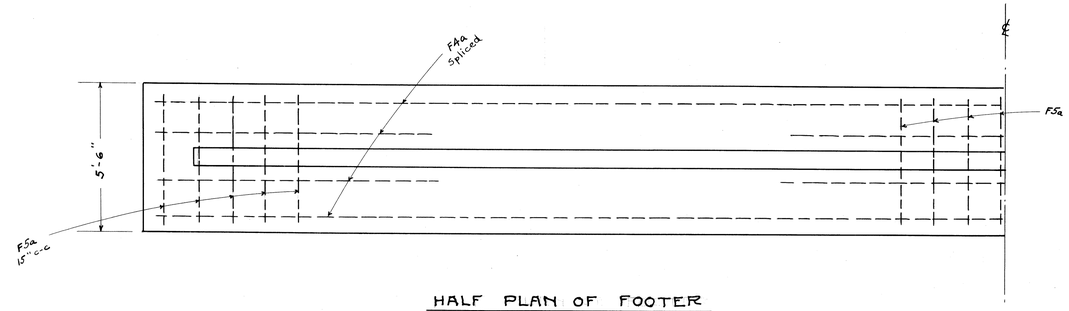

HALF PLAN OF FOOTER

Scale ⅜" = 1'

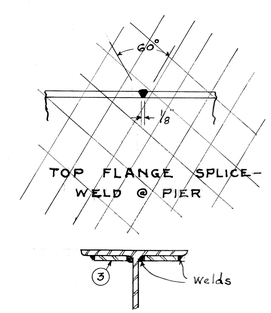

49 Cu. Yd. Concrete in Footer
50 " " " " Pier
61 " " " " "

CITY OF CANTON
DEP'T. OF
CITY CIVIL ENGINEER

BRIDGE AND 15TH ST. S.W. IMPROVEMENT OVER WEST BRANCH OF NIMISHILLEN CREEK

F. B. No	Drawn by:	3889
Reported: June 18, '45	Checked by:	11-~~30~~
GEN. PROJ. No 268	Revised: Jan 1945	15

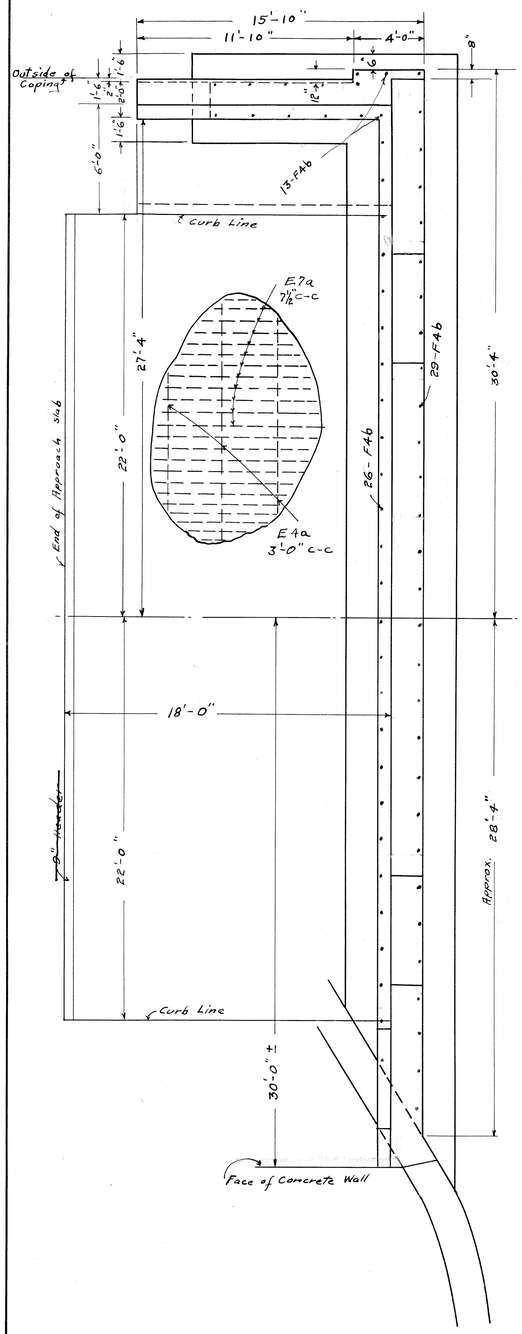

PLAN

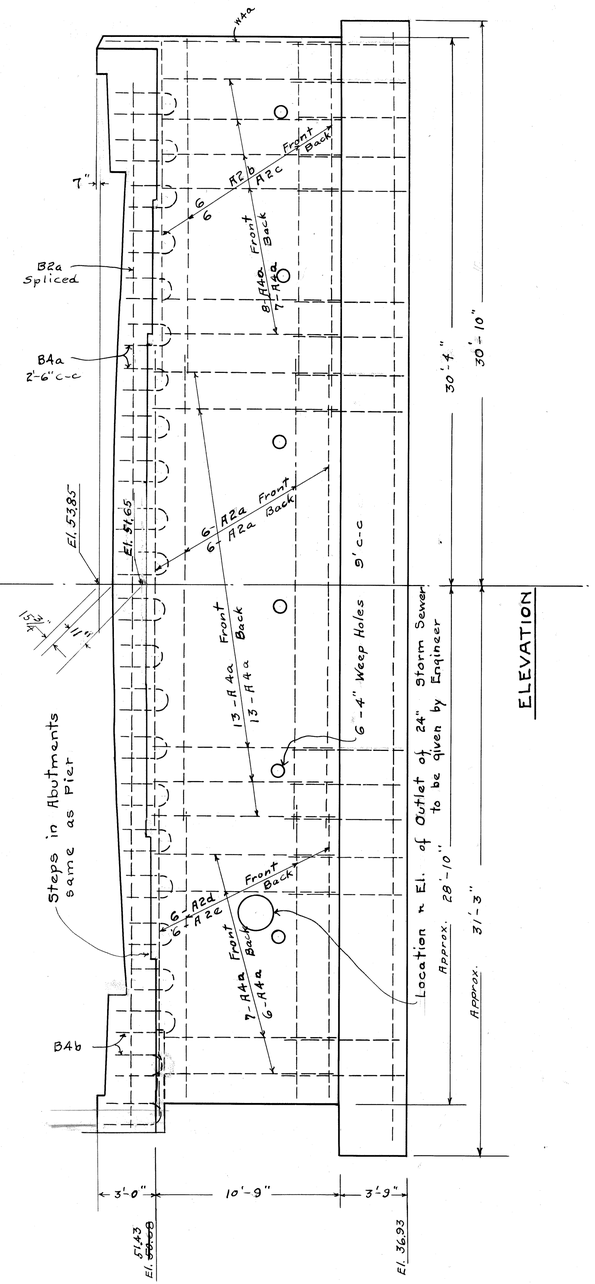

ELEVATION

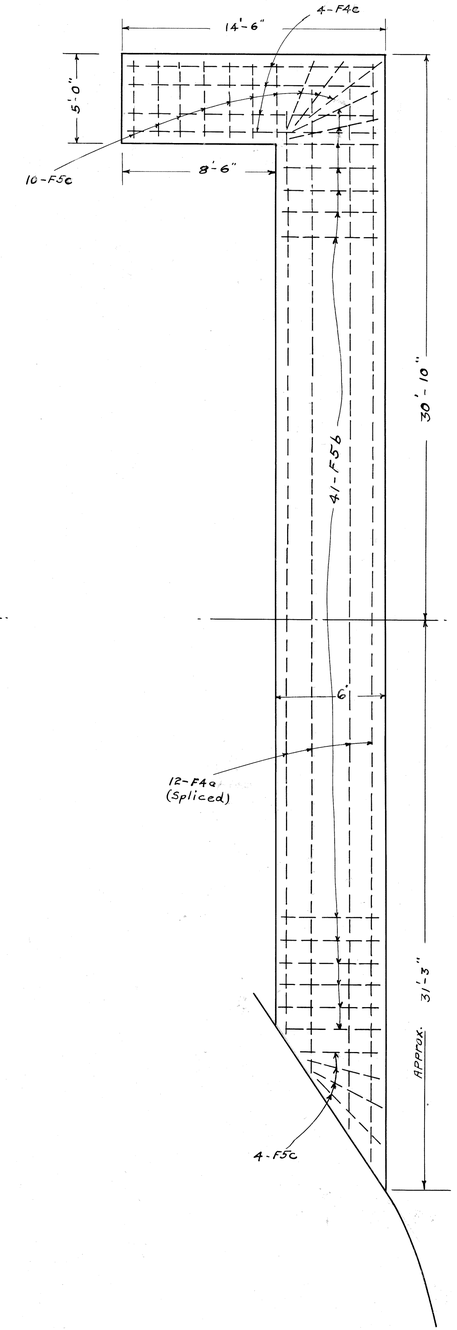

FOOTER

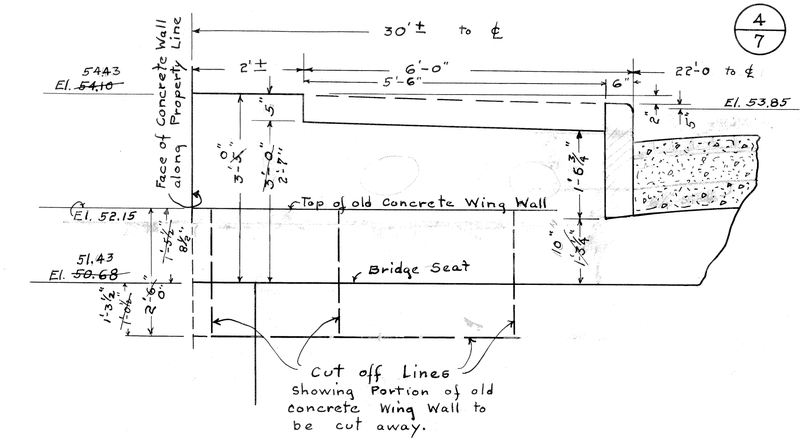

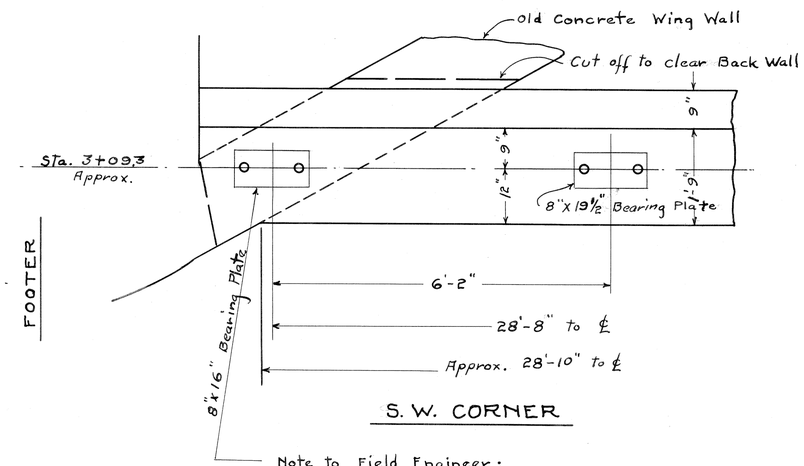

S. W. CORNER

Note to Field Engineer:
Locate line of Center of Bearing for West Abutment First, by Centering 8"x16" Bearing Plate over old Concrete Wing Wall to best advantage. See sketch above. Have assumed Sta. 3+09.3 as ℄ of Bearing. From this line Lay out Pier and East Abutment.

52 Cu. Yd. Con. in Footer
74 " " " " Wall

section on sheet #5

WEST ABUTMENT

Scale ¼" = 1'

CITY OF CANTON
DEP'T. OF
CITY CIVIL ENGINEER

BRIDGE
ON
15TH ST. S.W.
over
WEST BRANCH
OF
NIMISHILLEN CREEK

F.B. No	Drawn by: [illegible] 5/44	3889
Reported: June 18, '45	Checked by:	11 ~~80~~
GEN. PROJ. No 268	Revised: Jan. 1945	15

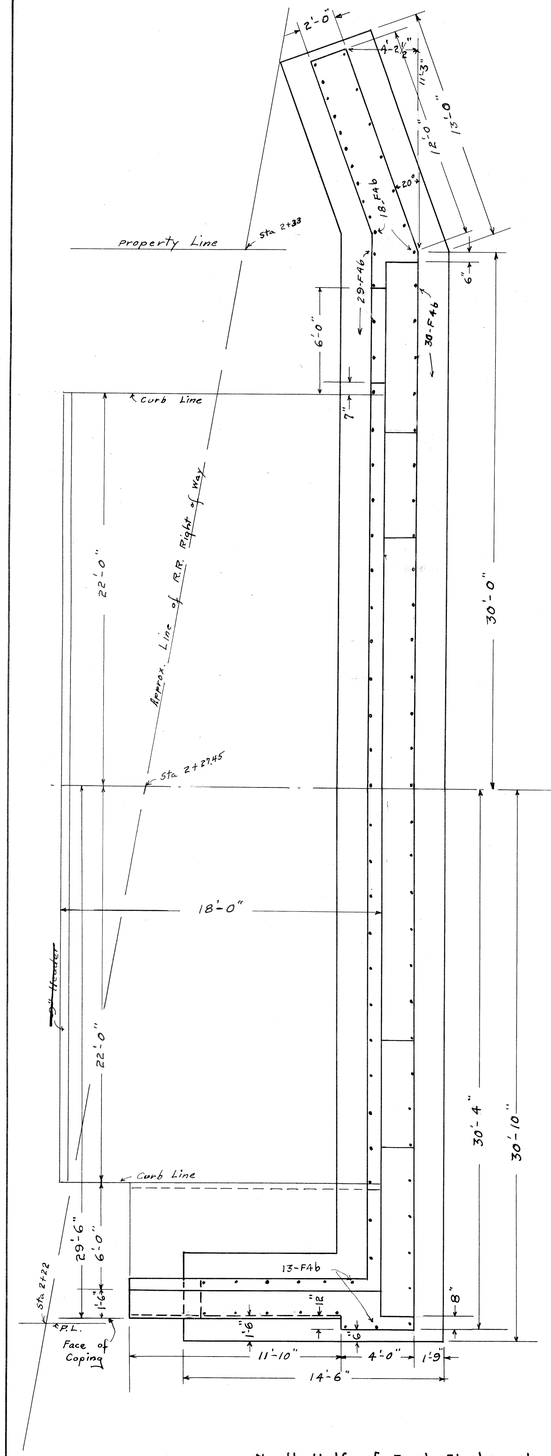

North Half of East Abutment same as North Half of West Abutment

PLAN OF EAST ABUTMENT

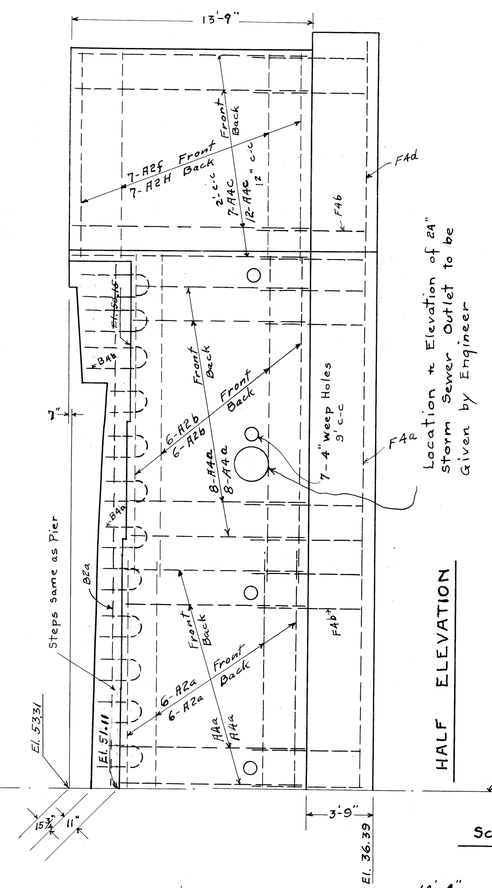

Location & Elevation of 24" Storm Sewer Outlet to be Given by Engineer

HALF ELEVATION

Scale 1/4" = 1'

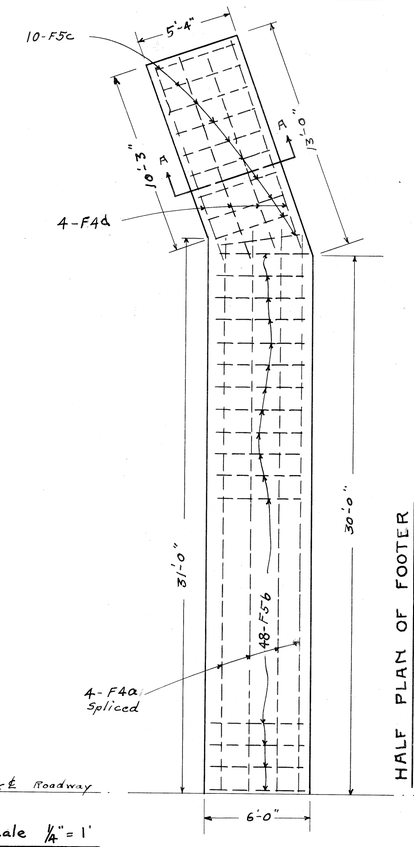

HALF PLAN OF FOOTER

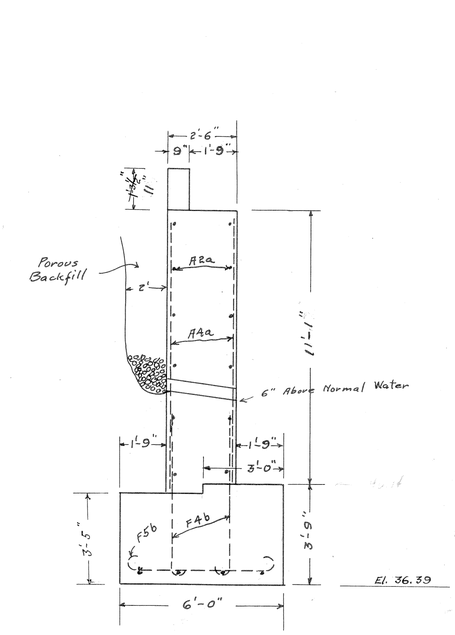

SECTION @ CENTER
EAST ABUTMENT

Scale 3/8" = 1'

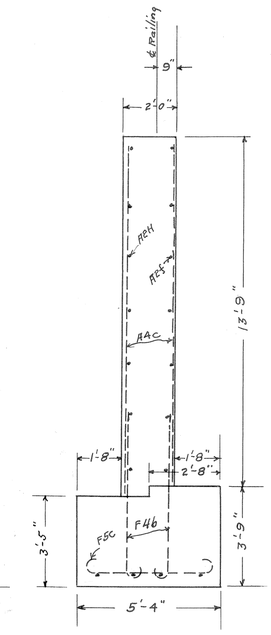

SECTION A-A

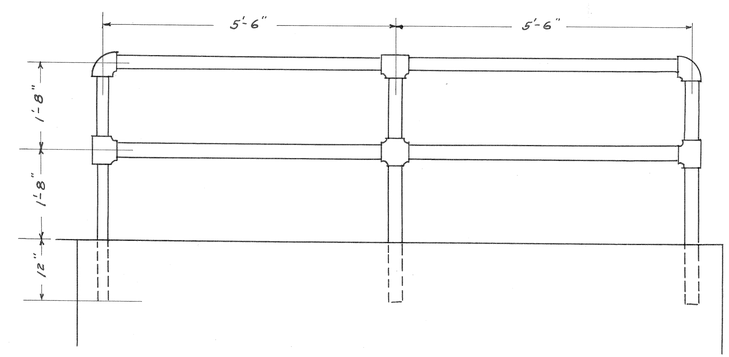

Prefabricated - welded - 2½" I.S.D. Pipe Railing
Set 12" in Concrete on S.E. Wing Wall
To be painted same as Structural Steel.

Scale 3/4" = 1'

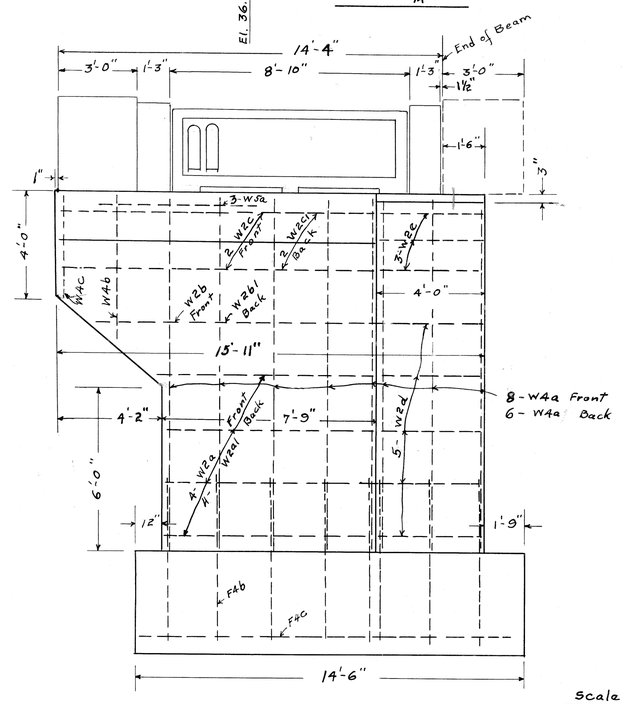

WING WALL

Scale 3/8" = 1'

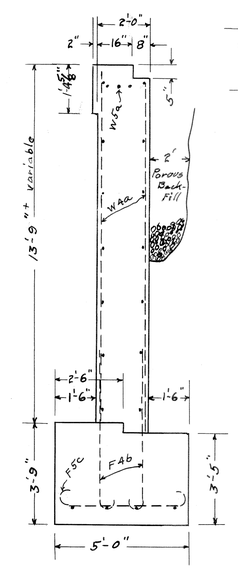

SECTION

64 Cu. Yd. Con. in Footer
91 " " " " Wall

CITY OF CANTON
DEP'T. OF
CITY CIVIL ENGINEER

BRIDGE
ON
15TH ST. S. W.
over
WEST BRANCH
OF
NIMISHILLEN CREEK

F.B. No	Drawn by: [illegible] 4/44	3889
Reported: June 18, '45	Checked by:	11~~80~~
GEN. PROJ. No 268	Revised: Jan. 1945	15

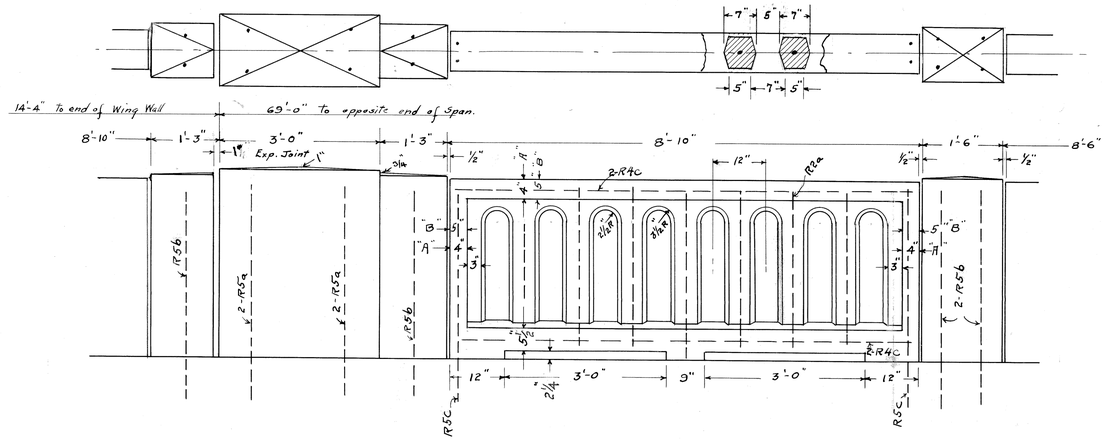

RAILING DETAIL

Scale 3/4" = 1'

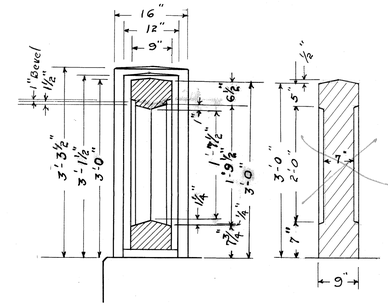

SECTIONS

RAILING "A" OPEN WINDOW

~~RAILING "B" CLOSED PANEL~~

Contractor used Railing "A"

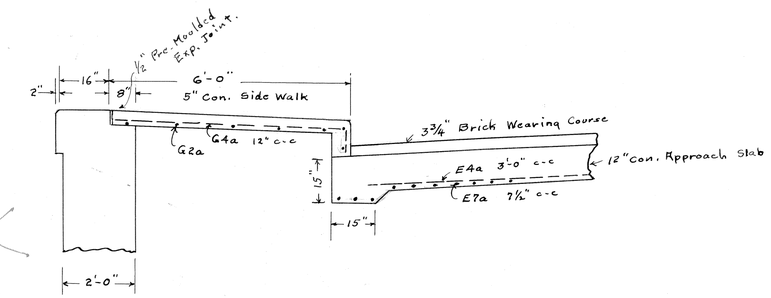

SECTION THRU WING WALL & APPROACH SLAB

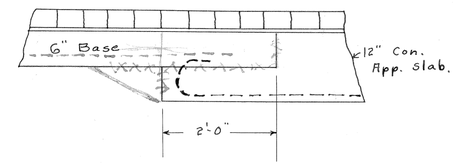

Pavement & Approach Slab Connection

Contractor poured App. slab & Base together. Reinforced as shown on West Side. On East side App. was extended to R.R. 10" Deep. Reinforcing staggered all over.

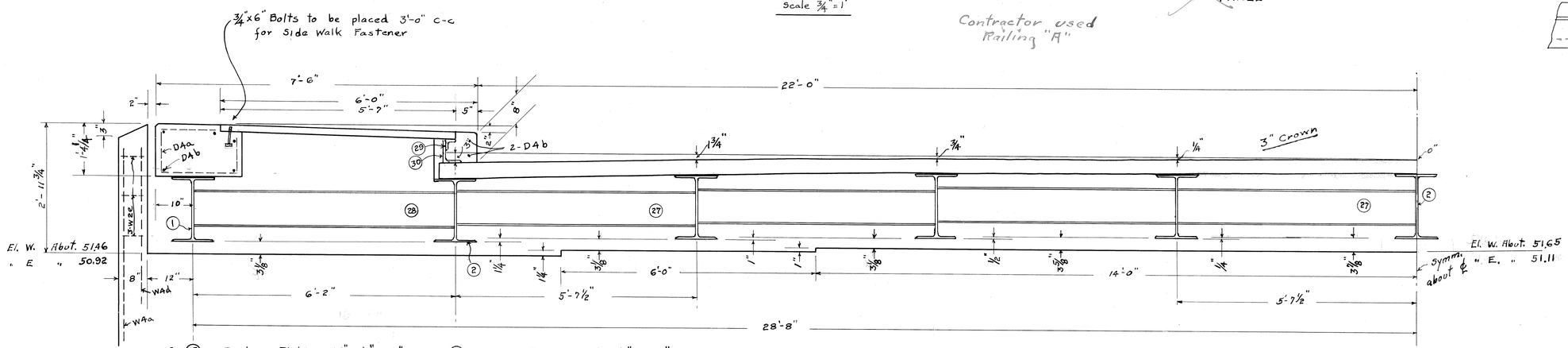

Abutments Exp. Ends.	13	Rocker Plate	8" x 1½" x 16"	12	Rocker Plate	8" x 1½" x 19½"	
	17	Bed Plate	8" x 1½" x 16"	14	Bed Plate	8" x 1½" x 19½"	
	23	Lead Plate	8" x ⅛" x 16"	22	Lead Plate	8" x ⅛" x 19½"	
Pier Fixed End	21	Bed Plate	12" x 1½" x 16"	18	Bed Plate	12" x 1½" x 19½"	
	25	Lead Plate	12" x ⅛" x 16"	24	Lead Plate	12" x ⅛" x 19½"	
	15	Bed Plate	8" x 2" x 19½"	12, 16, 22	Bed Plate	8" x 2¼" x 19½"	
	19	Bed Plate	12" x 2" x 19½"	20, 24	Bed Plate	12" x 2¼" x 19½"	

HALF-SECTION @ ABUTMENT

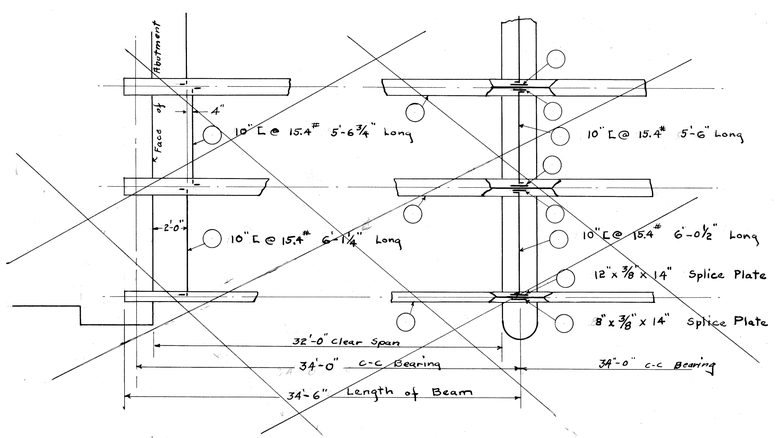

Scale 3/4" = 1'

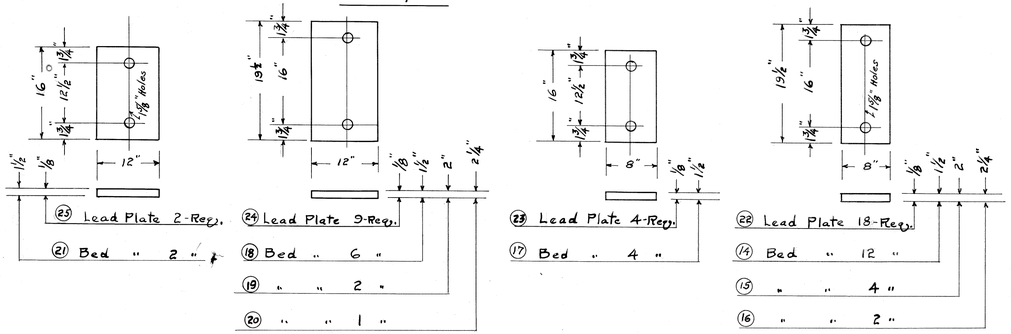

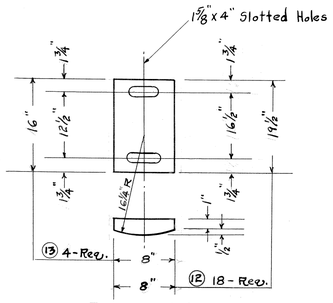

ROCKER PLATES

CITY OF CANTON
DEP'T. OF
CITY CIVIL ENGINEER

BRIDGE
AND
15TH ST. S.W. IMPROVEMENT
OVER
WEST BRANCH
OF
NIMISHILLEN CREEK

F. B. No	Drawn by:	3889
Reported: June 18, '45	Checked by:	1180
	Revised: Jan. 1946	15
GEN. PROJ. No 268		

MARK	SIZE	SPACING	SHAPE	No.	LENGTH	WEIGHT	REMARKS
PIER							
F5a	3/4"φ	15"	Bt.	50	6'-0"	450	
F4a	5/8"	–	St.	12	22'-6"	281	Spliced
F4b	"	2'-0"	Bt.	64	7'-0"	466	
P4a	"	"	St.	64	10'-8"	712	
P2a	1/2"	"	"	30	22'-0"	442	Spliced
P2b	"	"	Bt.	10	7'-6"	47	
ABUTMENTS							
F5b	3/4"	15"	Bt.	89	6'-6"	868	
F5c	"	"	"	34	5'-6"	280	
F4a	5/8"	2'-0"	St.	24	22'-6"	562	Spliced
F4b	"	"	Bt.	158	7'-0"	1150	
F4c	"	–	St.	8	14'-0"	116	
F4d	"	–	"	4	13'-0"	54	
R4a	"	2'-0"	"	111	10'-8"	1235	
R4c	"	"	"	19	13'-6"	266	
R2a	1/2"	"	"	20	25'-0"	334	
R2b	"	"	"	20	19'-0"	254	
R2c	"	"	"	10	15'-0"	200	
R2d	"	"	"	5	16'-0"	53	
R2e	"	"	"	5	13'-0"	43	
R2f	"	"	"	7	12'-0"	56	
R2h	"	"	"	7	10'-0"	47	
B5a	3/4"	2'-6"	Bt.	38	3'-6"	143	Back Wall
B5b	"	–	"	11	5'-6"	31	" "
B2a	1/2"	–	St.	9	20'-0"	120	" "
SIDE WALK BEAM & CURB							
D4a	5/8"	15"	Bt.	112	4'-8"	549	
D4b	"	–	St.	42	24'-0"	1050	

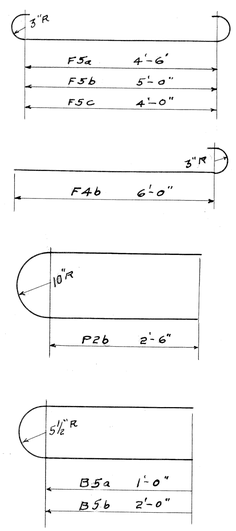

MARK	SIZE	SPACING	SHAPE	No.	LENGTH	WEIGHT	REMARKS
WING WALLS							
W4a	5/8"	2'-0"	St.	28	13'-6"	373	
W4b	"	"	"	4	5'-0"	21	
W4c	"	"	"	4	3'-6"	14	
W2a	1/2"	"	"	8	8'-0"	43	
W2a1	"	"	"	8	9'-0"	48	
W2b	"	"	"	2	10'-0"	13	
W2b1	"	"	"	2	11'-0"	13	
W2c	"	"	"	4	12'-0"	32	
W2c1	"	"	"	4	13'-0"	35	
W2d	"	"	Bt.	10	7'-0"	47	
W2e	"	"	"	6	7'-0"	28	
W4d	5/8"	–	St.	6	5'-0"	31	
W5a	3/4"	–	"	6	6'-0"	54	
APPROACH SLABS							
E7a	1"φ	7 1/2"	Bt.	140	19'-0"	7100	
E4a	5/8"	3'-0"	St.	28	23'-0"	670	
APPROACH SIDE WALK							
G4a	5/8"	12"	Bt.	30	6'-2"	192	
G2a	1/2"	–	St.	14	13'-6"	126	
RAILING							
R5a	3/4"	–	St.	24	4'-6"	162	
R5b	"	–	Bt.	28	8'-0"	336 ~~232~~	
R5c	"	–	"	28	7'-8"	324 ~~221~~	
R4c	5/8"	–	St.	56	8'-6"	493	
R2c	1/2"	–	"	98	2'-7"	186	
						~~18943~~	
						20,150	

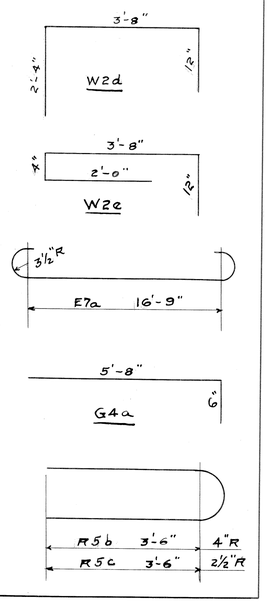

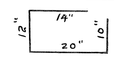

No.	DESCRIPTION	No.	LENGTH	WEIGHT	REMARKS
1	16" WF I-Beam @ 78#	4	34'-6"	10,764	Outside Beam
2	18" WF " @ 105#	18	"	65,205	
3	Plates 4" x 3/4"	18	4'-0"	734	
4	" 7" x 3/4"	2	4'-0"	143	" "
5	" 12" x 3/8"	9	1'-2"	161	
6	" 8" x 3/8"	9	"	107	
7	" 12" x 3/8"	2	1'-0"	31	" "
8	" 8" x 3/8"	2	"	20	" "
9	Bar 1" x 1/2"	2	43'-11 1/2"	150	
10	∠ 6" x 4" x 3/8"	2	"	1082	
11	U-Bolts 3/4" x 1'-6"	86		264	
12	Rocker Plates 8" x 1 1/2"	18	1'-7 1/2"	1197	
13	" " 8" x 1 1/2"	4	1'-4"	217	
14	Bed " 8" x 1 1/2"	12	1'-7 1/2"	798	
15	" " 8" x 2"	4	"	355	
16	" " 8" x 2 1/4"	2	"	200	
17	" " 8" x 1 1/2"	4	1'-4"	217	
18	" " 12" x 1 1/2"	6	1'-7 1/2"	596	Pier
19	" " 12" x 2"	2	1'-7 1/2"	266	"
20	" " 12" x 2 1/4"	1	"	149	"
21	" " 12" x 1 1/2"	2	1'-4"	163	"
22	Lead " 8" x 1/8"	18	1'-7 1/2"	200	
23	" " 8" x 1/8"	4	1'-4"	26	
24	" " 12" x 1/8"	9	1'-7 1/2"	110	"
25	" " 12" x 1/8"	2	1'-4"	20	"
26	Anchor Bolts 1 1/4" x 18"	66		476	
27	Channels 10" @ 15.4#	32	? (5'-6 3/4")	2740	
28	" 10" @ 15.4"	8	? (6'-1 1/4")	752	
29	∠ 3" x 3" x 3/8"	6	23'-0"	993	Outside Beam
30	∠ 6" x 4" x 1/2"	48	8"	518	3' c-c
31	Bar 1" x 3/8"	4	6'-7 1/2"	39	
32	∠ 4" x 3" x 3/8"	4	"	260	
33	Rivets 3/4" x 4"	40		30	
34	∠ 4" x 3" x 3/8"	4	1'-4"	44	
35	Bolts 3/4" x 6"	48		53	89080

		BRIDGE QUANTITIES
		Coffer Dam & Pumping
		Removal of old Bridge
1050	Cu. Yd	Structural Excavation
165	" "	Concrete Class 3 (Footers)
215	" "	" " 3 (Walls)
12	" "	" " 2 (Superstructure)
60	" "	" " 3 (Approach Slabs)
89,080	lbs.	Structural Steel
89,080	"	" " Painting
20150	"	Reinforcing Steel
160	Sq. Yd	3" Brick Pavement (3/4" oil-sand cushion)
158	" "	5" Concrete Side Walk (with Reinforcing)
28	Lin. ft.	12" Concrete Curb
	" "	~~9" x 3 3/4" Concrete Headers~~
167	" "	Concrete Railing
11	" "	3" Pipe Hand Railing
28	" "	1/2" Premoulded Exp. Joint
13	each	4" Weep Holes
100	Tons	#3 Slag or Gravel (Porous Backfill)
10	Lin. ft.	24" V.S.P. Storm Sewer Conections
43	" "	6" x 20" Stone Curb
198	Sq. Ft.	5" Con. Side Walk (No Reinforcing)
3207	Sq. ft.	4 1/4" I-Beam Lok (Transverse) or Equivalent
780	" "	2" Tee Type Side Walk " "

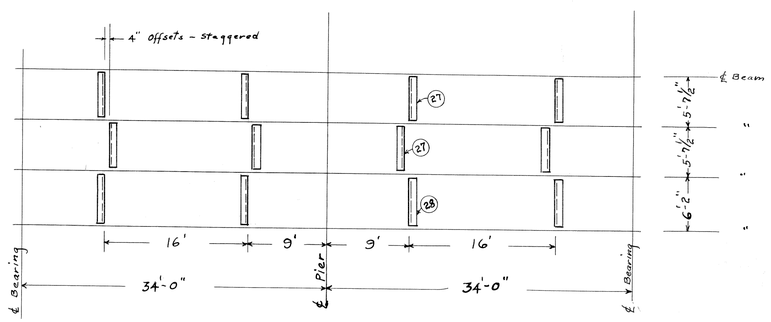

LOCATION OF CHANNEL BRACING

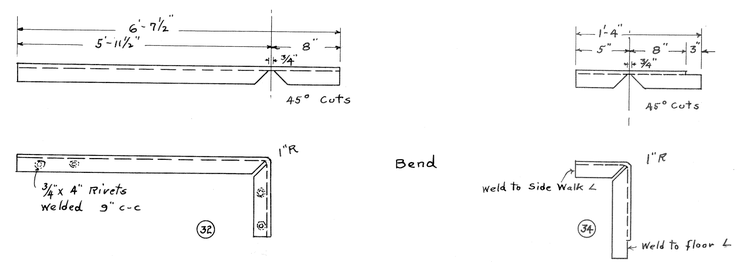

∠s 4" x 3" x 3/8"

2 - Rights & 2 Lefts Req. of each

SIDE WALK & CURB EXPANSION

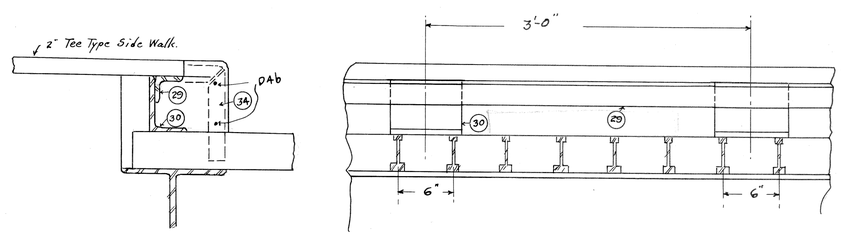

DETAIL OF SIDE WALK SUPPORT @ CURB

CITY OF CANTON
DEP'T. OF
CITY CIVIL ENGINEER

BRIDGE
AND
15TH ST. S.W. IMPROVEMENT
OVER
WEST BRANCH
OF
NIMISHILLEN CREEK

F.B. No	Drawn by: C.L.K. 5/44	3889
Reported: June 18 '45	Checked by:	11 ~~80~~
GEN. PROJ. No 268	Revised: Jan. 1945	15