ADDENDUM NO. 2

DATE:	November 15, 2018
TO:	All Proposers
FROM:	Julie Smith Maxwell, Procurement Specialist
SUBJECT:	Addendum No. 2 – Browser Based Transit Bus Fuel and Fluids Management System
PROPOSALS DUE:	November 29, 2018, at 11:00:00 a.m. Eastern Time

This addendum is being published to respond to questions asked by potential proposers regarding the above-referenced Request for Proposals. This addendum becomes a part of the Contract Document and modifies the original specifications as noted.

Question 1: What is the size and the distance of the conduit from building to building?

Response: One unused 2 ½ inch (OD) underground conduit exists between the maintenance shop and service building. Length of this conduit from daylight end to daylight end is approximately 146 feet.

Question 2: Does the City want to host in the cloud?

Response: The City has no preference for location of the host server. It may be either on premises or in the cloud. If self-hosted, provide within the proposal server specifications (OS, memory, disk space, database, etc.).

Question 3: Is there a Veeder Root report we can print?

Response: See attached report.

Question 4: Are there drawings that show what reels will be included and which are not?

Response: See attached drawings. Five hose reel stations exist within the maintenance shop. Each station contains up to seven hoses with hand dispensers, three of which are for antifreeze, motor oil and transmission fluid. These hose reel stations are located overhead in bays 2, 4, 8 and 10 plus one station within the bay 11 below ground pit. The proposed control console installed within the center of the shop shall enable mechanics to activate hose reels for specific products (antifreeze, motor oil and transmission fluid) and track how much product is dispensed from each station. The system shall also track which mechanic activated hose reel products by utilizing existing employee ID badges and shall allow for simultaneous dispensing

from multiple hose reel stations. No other products other than antifreeze, motor oil and transmission fluid are to be controlled or tracked by the fuel management system.

Question 5: What is the implementation timeline for this project?

Response: The project shall be completed within 120 days following issuance of purchase order unless otherwise agreed upon by both parties.

Additional information:

1. Each of the two Veedor-Root consoles within shop office have had Ethernet IP communication cards (TC/IP cards) installed to allow for future connectivity to the City network.
2. The City will provide internet connection.
3. The City requests that all proposals include a drawing illustrating where proposers plan to install equipment, as well as, the power and network requirements.
4. Vendor shall be responsible for the removal and disposal of old Gasboy equipment.

END OF ADDENDUM NO. 2

Bng Lot Vendor-Root Print Report

SYSTEM SETUP
NOV 13, 2018 2:28 PM

SYSTEM UNITS
U.S.
SYSTEM LANGUAGE
ENGLISH
SYSTEM DATE/TIME FORMAT
MON DD YYYY HH:MM:SS xM

KATTRANS WASH FAC
1222 5TH AVE
KNOXVILLE TN 37914
865-215-7385

SHIFT TIME 1 : 7:00 AM
SHIFT TIME 2 : 3:00 PM
SHIFT TIME 3 : 11:00 PM
SHIFT TIME 4 : DISABLED

TANK PER TST NEEDED WRN
DISABLED
TANK ANN TST NEEDED WRN
DISABLED

LINE RE-ENABLE METHOD
PASS LINE TEST

LINE PER TST NEEDED WRN
DISABLED
LINE ANN TST NEEDED WRN
DISABLED

PRINT TC VOLUMES
ENABLED

TEMP COMPENSATION
VALUE (DEG F): 60.0
STICK HEIGHT OFFSET
DISABLED
ULLAGE: 90%
DAYLIGHT SAVING TIME
ENABLED
START DATE
MAR WEEK 2 SUN
START TIME
2:00 AM
END DATE
NOV WEEK 1 SUN
END TIME
2:00 AM

SYSTEM SECURITY
CODE : 000000

TANK CHART SECURITY
DISABLED

CUSTOM ALARMS
DISABLED

SERVICE NOTICE
DISABLED

SYSTEM BEEPER
DISABLED

ISO 3166 COUNTRY
CODE:

MASS/DENSITY
DISABLED

FISCAL HEIGHT SECURITY
DISABLED

INVENTORY ALARMS UNITS

CONFIG: STANDARD
MAX OR LABEL: VOLUME
HIGH PRODUCT: % MAX
OVERFILL : % MAX
DELIV NEEDED: % MAX
LOW PRODUCT : VOLUME

ALARM REDUCTION
ENABLED

COMMUNICATIONS SETUP

PORT SETTINGS:

NONE FOUND

RS-232 END OF MESSAGE
DISABLED

IN-TANK SETUP

T 1:ATF
PRODUCT CODE : 1
THERMAL COEFF :.000470
TANK DIAMETER : 48.00
TANK PROFILE : 4 PTS
FULL VOL : 971
36.0 INCH VOL : 789
24.0 INCH VOL : 486
12.0 INCH VOL : 183

FLOAT SIZE: 3.0 IN.
WATER MINIMUM : 0.000

WATER WARNING : 2.5
HIGH WATER LIMIT: 2.5
WATER ALARM FILTER: LOW

MAX OR LABEL
VOLUME : 971

HIGH PRODUCT
% MAX : 95.0
(GALLONS) : 922

OVERFILL LIMIT
% MAX : 90.0
(GALLONS) : 874

DELIVERY LIMIT
% MAX : 15.0
(GALLONS) : 146

LOW PRODUCT
VOLUME : 150

LEAK ALARM LIMIT: 99
SUDDEN LOSS LIMIT: 99
TANK TILT : 0.00
PROBE OFFSET : 0.00

SIPHON MANIFOLDED TANKS
T#: NONE
LINE MANIFOLDED TANKS
T#: NONE

LEAK MIN PERIODIC: 0%
: 0

LEAK MIN ANNUAL : 0%
: 0

PERIODIC TEST TYPE
STANDARD

ANNUAL TEST FAIL
ALARM DISABLED

PERIODIC TEST FAIL
ALARM DISABLED

GROSS TEST FAIL
ALARM DISABLED

ANN TEST AVERAGING: OFF
PER TEST AVERAGING: OFF

TANK TEST NOTIFY: OFF

TNK TST SIPHON BREAK:OFF

DELIVERY DELAY : 5 MIN
PUMP THRESHOLD : 10.00%

T 2:MOTOR OIL2
PRODUCT CODE : 2
THERMAL COEFF :.000470
TANK DIAMETER : 71.25
TANK PROFILE : 4 PTS
FULL VOL : 3917
53.4 INCH VOL : 3151
35.6 INCH VOL : 1956
17.8 INCH VOL : 762

FLOAT SIZE: 4.0 IN.
WATER MINIMUM : 0.000

WATER WARNING : 2.5
HIGH WATER LIMIT: 2.5
WATER ALARM FILTER: LOW

MAX OR LABEL
VOLUME : 3917

HIGH PRODUCT
% MAX : 95.0
(GALLONS) : 3721

OVERFILL LIMIT
% MAX : 90.0
(GALLONS) : 3525

DELIVERY LIMIT
% MAX : 15.0
(GALLONS) : 588

LOW PRODUCT
VOLUME : 1000

LEAK ALARM LIMIT: 99
SUDDEN LOSS LIMIT: 99
TANK TILT : 0.00
PROBE OFFSET : -1.29

SIPHON MANIFOLDED TANKS
T#: NONE
LINE MANIFOLDED TANKS
T#: NONE

LEAK MIN PERIODIC: 0%
: 0

LEAK MIN ANNUAL : 0%
: 0

PERIODIC TEST TYPE
STANDARD

ANNUAL TEST FAIL
ALARM DISABLED

PERIODIC TEST FAIL
ALARM DISABLED

GROSS TEST FAIL
ALARM DISABLED

ANN TEST AVERAGING: OFF
PER TEST AVERAGING: OFF

TANK TEST NOTIFY: OFF

TNK TST SIPHON BREAK:OFF

DELIVERY DELAY : 5 MIN
PUMP THRESHOLD : 10.00%

T 3:MOTOR OIL
PRODUCT CODE : 3
THERMAL COEFF :.000470
TANK DIAMETER : 71.00
TANK PROFILE : 4 PTS
FULL VOL : 3914
53.3 INCH VOL : 3151
35.5 INCH VOL : 1947
17.8 INCH VOL : 762

FLOAT SIZE: 4.0 IN.
WATER MINIMUM : 0.000

WATER WARNING : 2.5
HIGH WATER LIMIT: 2.5
WATER ALARM FILTER: LOW

MAX OR LABEL
VOLUME : 3914

HIGH PRODUCT
% MAX : 95.0
(GALLONS) : 3718

OVERFILL LIMIT
% MAX : 90.0
(GALLONS) : 3523

DELIVERY LIMIT
% MAX : 15.0
(GALLONS) : 587

LOW PRODUCT
VOLUME : 900

LEAK ALARM LIMIT: 99
SUDDEN LOSS LIMIT: 99
TANK TILT : 0.00
PROBE OFFSET : 0.00

SIPHON MANIFOLDED TANKS
T#: NONE
LINE MANIFOLDED TANKS
T#: NONE

LEAK MIN PERIODIC: 0%
: 0

PERIODIC TEST TYPE
STANDARD

PERIODIC TEST FAIL
ALARM DISABLED

GROSS TEST FAIL
ALARM DISABLED

PER TEST AVERAGING: OFF

TANK TEST NOTIFY: OFF

TNK TST SIPHON BREAK:OFF

DELIVERY DELAY : 5 MIN
PUMP THRESHOLD : 10.00%

T 4:UNLEADED
PRODUCT CODE : 4
THERMAL COEFF : .000700
TANK DIAMETER : 92.00
TANK PROFILE : 4 PTS
FULL VOL : 5929
69.0 INCH VOL : 4854
46.0 INCH VOL : 2965
23.0 INCH VOL : 1076

FLOAT SIZE: 4.0 IN.
WATER MINIMUM : 0.000

WATER WARNING : 2.0
HIGH WATER LIMIT: 2.5
WATER ALARM FILTER: LOW

MAX OR LABEL
VOLUME : 5929

HIGH PRODUCT
% MAX : 95.0
(GALLONS) : 5633

OVERFILL LIMIT
% MAX : 90.0
(GALLONS) : 5336

DELIVERY LIMIT
% MAX : 15.0
(GALLONS) : 889

LOW PRODUCT
VOLUME : 900

LEAK ALARM LIMIT: 99
SUDDEN LOSS LIMIT: 99
TANK TILT : 0.00
PROBE OFFSET : -0.80

SIPHON MANIFOLDED TANKS
T#: NONE
LINE MANIFOLDED TANKS
T#: NONE

LEAK MIN PERIODIC: 0%
: 0

LEAK MIN ANNUAL : 0%
: 0

PERIODIC TEST TYPE
STANDARD

ANNUAL TEST FAIL
ALARM DISABLED

PERIODIC TEST FAIL
ALARM DISABLED

GROSS TEST FAIL
ALARM DISABLED

ANN TEST AVERAGING: OFF
PER TEST AVERAGING: OFF

TANK TEST NOTIFY: OFF

TNK TST SIPHON BREAK:OFF

DELIVERY DELAY : 5 MIN
PUMP THRESHOLD : 10.00%

T 5:DIESEL
PRODUCT CODE : 5
THERMAL COEFF : .000450
TANK DIAMETER : 119.50
TANK PROFILE : 4 PTS
FULL VOL : 20168
89.6 INCH VOL : 16370
59.8 INCH VOL : 10115
29.9 INCH VOL : 3832

FLOAT SIZE: 4.0 IN.
WATER MINIMUM : 0.000

WATER WARNING : 2.0
HIGH WATER LIMIT: 2.5
WATER ALARM FILTER: LOW

MAX OR LABEL
VOLUME : 20168

HIGH PRODUCT
% MAX : 95.0
(GALLONS) : 19160

OVERFILL LIMIT
% MAX : 90.0
(GALLONS) : 18151

DELIVERY LIMIT
% MAX : 15.0
(GALLONS) : 3025

LOW PRODUCT
VOLUME : 3000

LEAK ALARM LIMIT: 99
SUDDEN LOSS LIMIT: 99
TANK TILT : 0.00
PROBE OFFSET : -1.05

SIPHON MANIFOLDED TANKS
T#: NONE
LINE MANIFOLDED TANKS
T#: NONE

LEAK MIN PERIODIC: 0%
: 0

LEAK MIN ANNUAL : 0%
: 0

PERIODIC TEST TYPE
STANDARD

ANNUAL TEST FAIL
ALARM DISABLED

PERIODIC TEST FAIL
ALARM DISABLED

GROSS TEST FAIL
ALARM DISABLED

ANN TEST AVERAGING: OFF
PER TEST AVERAGING: OFF

TANK TEST NOTIFY: OFF

TNK TST SIPHON BREAK:OFF

DELIVERY DELAY : 5 MIN
PUMP THRESHOLD : 10.00%

T 6:DIESEL
PRODUCT CODE : 6
THERMAL COEFF : .000450
TANK DIAMETER : 119.50
TANK PROFILE : 4 PTS
FULL VOL : 20168
89.6 INCH VOL : 16370
59.8 INCH VOL : 10115
29.9 INCH VOL : 3832

FLOAT SIZE: 4.0 IN.
WATER MINIMUM : 0.000

WATER WARNING : 2.0
HIGH WATER LIMIT: 2.5
WATER ALARM FILTER: LOW

MAX OR LABEL
VOLUME : 20168

HIGH PRODUCT
% MAX : 95.0
(GALLONS) : 19160

OVERFILL LIMIT
% MAX : 90.0
(GALLONS) : 18151

DELIVERY LIMIT
% MAX : 15.0
(GALLONS) : 3025

LOW PRODUCT
VOLUME : 3000

LEAK ALARM LIMIT: 99
SUDDEN LOSS LIMIT: 99
TANK TILT : 0.00
PROBE OFFSET : 0.00

SIPHON MANIFOLDED TANKS
T#: NONE
LINE MANIFOLDED TANKS
T#: NONE

LEAK MIN PERIODIC: 0%
: 0

LEAK MIN ANNUAL : 0%
: 0

PERIODIC TEST TYPE
STANDARD

ANNUAL TEST FAIL
ALARM DISABLED

PERIODIC TEST FAIL
ALARM DISABLED

GROSS TEST FAIL
ALARM DISABLED

ANN TEST AVERAGING: OFF
PER TEST AVERAGING: OFF

TANK TEST NOTIFY: OFF

TNK TST SIPHON BREAK:OFF

DELIVERY DELAY : 5 MIN
PUMP THRESHOLD : 10.00%

T 7:DIESEL
PRODUCT CODE : 7
THERMAL COEFF :.000450
TANK DIAMETER : 119.50
TANK PROFILE : 4 PTS
FULL VOL : 20168
89.6 INCH VOL : 16370
59.8 INCH VOL : 10115
29.9 INCH VOL : 3832

FLOAT SIZE: 4.0 IN.
WATER MINIMUM : 0.000

WATER WARNING : 2.0
HIGH WATER LIMIT: 2.5
WATER ALARM FILTER: LOW

MAX OR LABEL
VOLUME : 20168

HIGH PRODUCT
% MAX : 95.0
(GALLONS) : 19160

OVERFILL LIMIT
% MAX : 90.0
(GALLONS) : 18151

DELIVERY LIMIT
% MAX : 15.0
(GALLONS) : 3025

LOW PRODUCT
VOLUME : 3000

LEAK ALARM LIMIT: 99
SUDDEN LOSS LIMIT: 99
TANK TILT : 0.00
PROBE OFFSET : -0.77

SIPHON MANIFOLDED TANKS
T#: NONE
LINE MANIFOLDED TANKS
T#: NONE

LEAK MIN PERIODIC: 0%
: 0

LEAK MIN ANNUAL : 0%
: 0

PERIODIC TEST TYPE
STANDARD

ANNUAL TEST FAIL
ALARM DISABLED

PERIODIC TEST FAIL
ALARM DISABLED

GROSS TEST FAIL
ALARM DISABLED

ANN TEST AVERAGING: OFF
PER TEST AVERAGING: OFF

TANK TEST NOTIFY: OFF

TNK TST SIPHON BREAK:OFF

DELIVERY DELAY : 5 MIN
PUMP THRESHOLD : 10.00%

LEAK TEST METHOD

TEST CSLD : ALL TANK
Pd = 95%
CLIMATE FACTOR:MODERATE

REPORT ONLY:
DISABLED

TST EARLY STOP:DISABLED

LEAK TEST REPORT FORMAT
NORMAL

LIQUID SENSOR SETUP

L 1:ATF
TRI-STATE (SINGLE FLOAT)
CATEGORY : ANNULAR SPACE

L 2:ANTIFREEZE
TRI-STATE (SINGLE FLOAT)
CATEGORY : ANNULAR SPACE

L 3:MOTOR OIL
TRI-STATE (SINGLE FLOAT)
CATEGORY : ANNULAR SPACE

L 4:UNLEADED
TRI-STATE (SINGLE FLOAT)
CATEGORY : ANNULAR SPACE

L 5:DIESEL NO.5
TRI-STATE (SINGLE FLOAT)
CATEGORY : ANNULAR SPACE

L 6:DIESEL NO.6
TRI-STATE (SINGLE FLOAT)
CATEGORY : ANNULAR SPACE

L 7:DIESEL NO.7
TRI-STATE (SINGLE FLOAT)
CATEGORY : ANNULAR SPACE

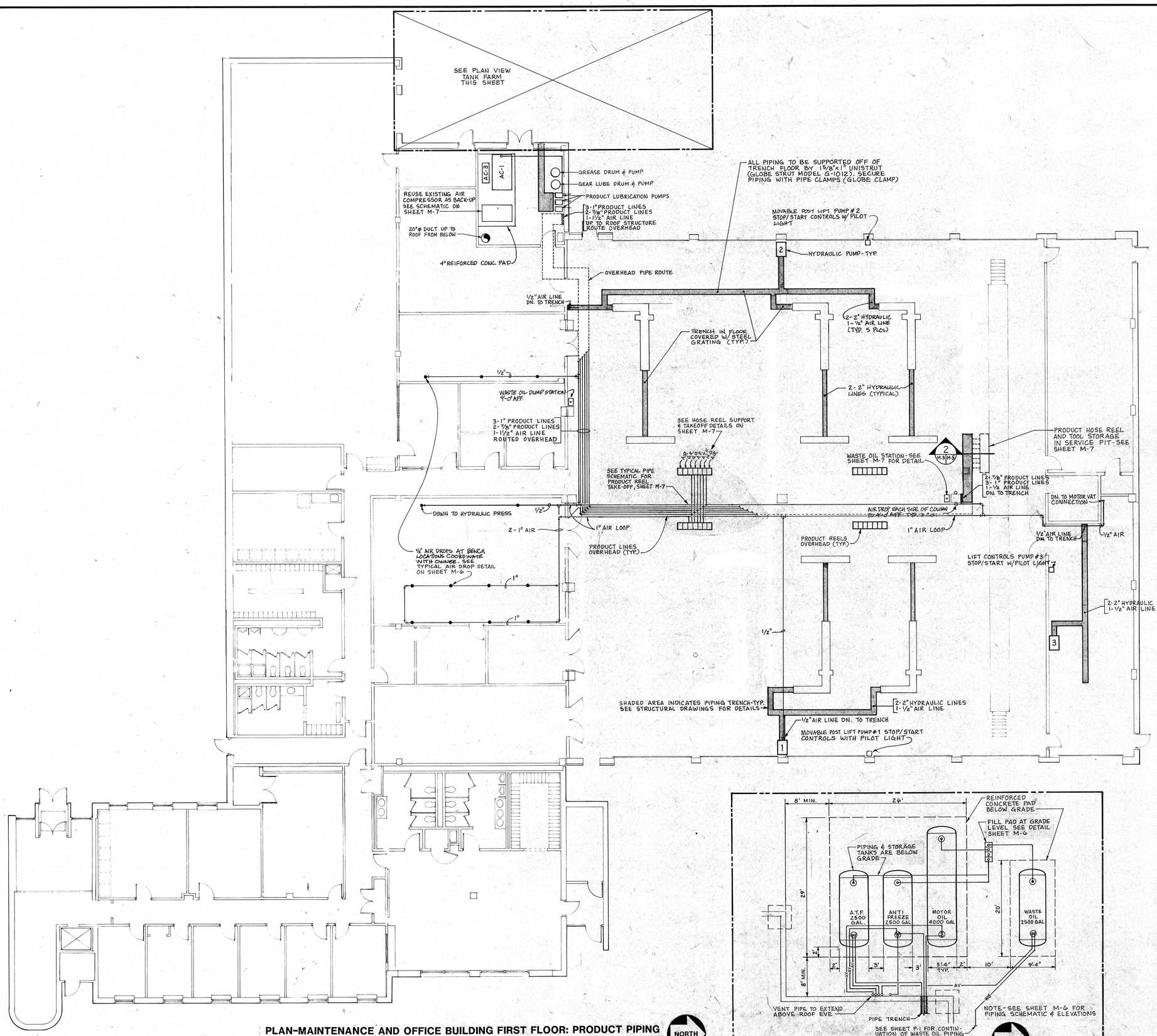

PLAN-MAINTENANCE AND OFFICE BUILDING FIRST FLOOR: PRODUCT PIPING

SCALE: 1/8"= 1'-0"

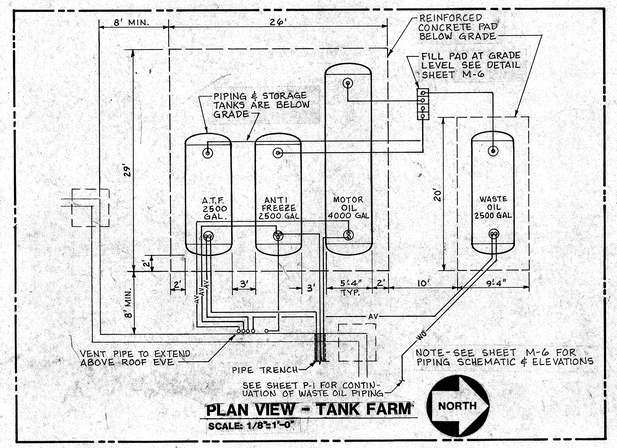

PLAN VIEW - TANK FARM

SCALE: 1/8"=1'-0"

Barge Waggoner Sumner and Cannon

Engineers, Architects, Planners, Landscape Architects and Surveyors

Duchscherer Oberst Design, P.C.
2320 Elmwood Avenue
Buffalo, N.Y. 14217
716-873-9334

PLAN-MAINTENANCE & OFFICE BLDG.: PRODUCT PIPING

K-TRANS MAINTENANCE AND OFFICE FACILITY
1135 MAGNOLIA AVENUE
KNOXVILLE, TENNESSEE

DR.	CHK.	DATE	DESCRIPTION
DAT	PBN	9-9-87	ORIGINAL ISSUE
DAT	PBN	12-8-87	REISSUED FOR BID

PHILIP B. NEWBY REGISTERED ENGINEER No. 14376 STATE OF TENNESSEE

M-3

FILE NO. 10195-15

10/7/87

BRUNING 65149

B.O.

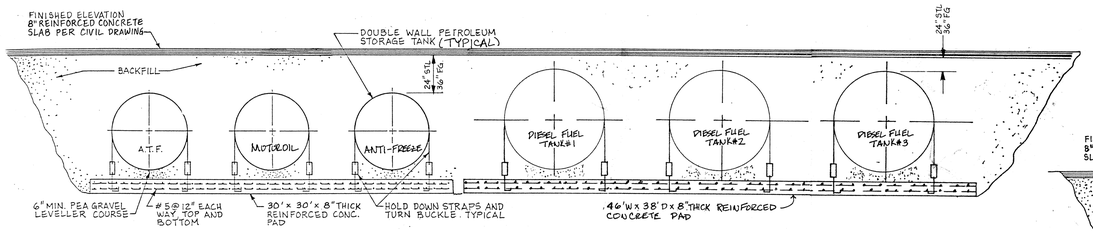

BUS WASH & REFUEL BUILDING TANK FARM EAST ELEVATION
NTS

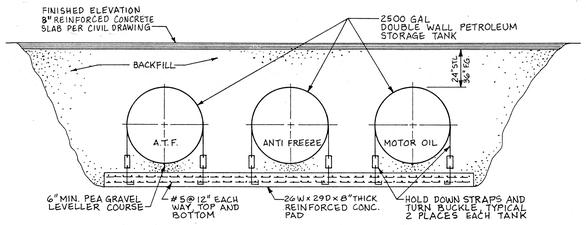

MAINTENANCE FACILITY TANK FARM NORTH ELEVATION
NTS

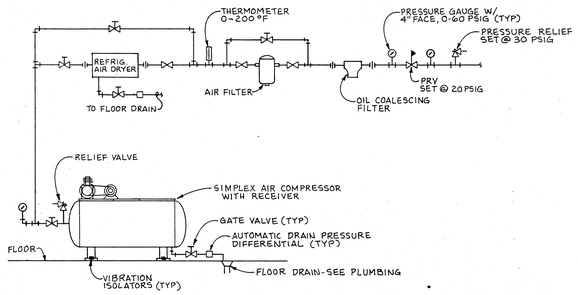

SCHEMATIC FOR INSTRUMENT AIR COMPRESSOR PIPING

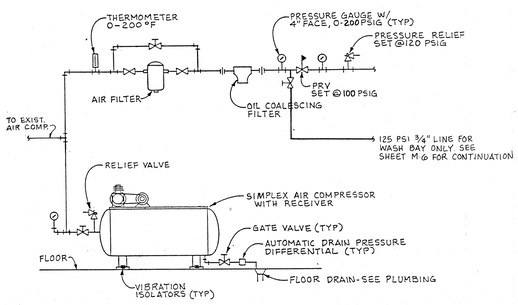

SCHEMATIC FOR PROCESS AIR COMPRESSOR PIPING

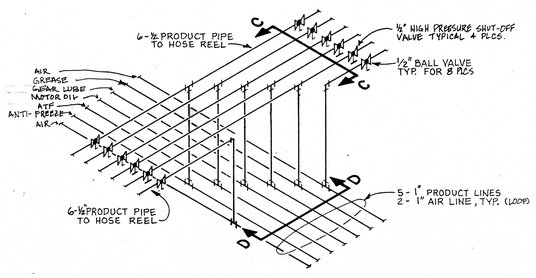

PIPE SCHEMATIC FOR PRODUCT REEL TAKE-OFF

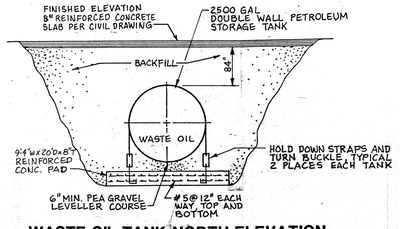

WASTE OIL TANK NORTH ELEVATION
NTS

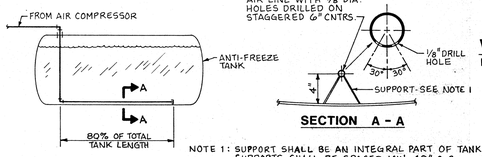

SECTION A - A

NOTE 1: SUPPORT SHALL BE AN INTEGRAL PART OF TANK SUPPORTS SHALL BE SPACED MIN. 48" O.C.

ANTI-FREEZE MIXER DETAIL
NTS

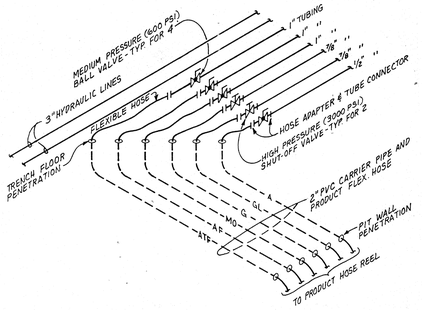

PIPING SCHEMATIC FOR PIT HOSE REEL SERVICE

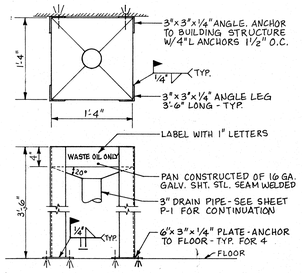

WASTE OIL DUMP DETAIL
NTS

PRODUCT PUMP SCHEDULE

IDENT	MANUFACTURER	SERIES/MODEL NO.	PUMP TUBE TYPE	AIR/PRESSURE RATIO	SUPPLY AIR PRESSURE PSIG	GPM	APPLICATION	REMARKS
P-1	LINCOLN	115/1910	SHOVEL	50:1	40	.5	DRUM/GREASE	1, 2
P-2	LINCOLN	115/1902	SHOVEL	24:1	35	1	DRUM/GEAR OIL	2, 3
P-3	LINCOLN	115/1914	BALL	12;1	34	5	BULK/MOTOR OIL	3, 5, 6
P-4	LINCOLN	115/1924	BALL	24:1	10	5	BULK/AF	4, 5, 6
P-5	LINCOLN	115/1924	BALL	24:1	10	5	BULK/ATF	4, 5, 6
P-6	LINCOLN	115/1924	BALL	24:1	10	5	BULK/AF	4, 5, 6
P-7	LINCOLN	115/1914	BALL	12:1	17	5	BULK/MOTOR OIL	3, 5, 6
P-8	LINCOLN	115/1921	BALL	24:1	10	5	BULK/ATF	4, 5, 6

REMARKS:
1. MAXIMUM SUPPLY AIR PRESSURE 150 PSIG.
2. MODEL 1716 AIR-OPERATED PUMP HOIST WITH FOLLOWER.
3. MAXIMUM SUPPLY AIR PRESSURE 200 PSIG.
4. MAXIMUM SUPPLY AIR PRESSURE 100 PSIG.
5. 2" MALE STAND PIPE.
6. WALL MOUNT BRACKET.

UNDERGROUND TANK SCHEDULE

DESCRIPTION	CAPACITY GALLONS	DIMENSIONS DIA. (I.D.)	DIMENSIONS LENGTH	FILL PIPE	CONNECTION SIZES SUCTION/ SUPPLY	CONNECTION SIZES RETURN	CONNECTION SIZES SOUNDING	VENT	REMARKS
DIESEL FUEL TANK 1 & 2 & 3	20,000	10'-5"	54'-8"	4"	2"	2"	2"	2"	1,2,3,4,5,6
MOTOR OIL(M)	4,000	5'-4"	24'-10"	4"	2"	--	2"	2"	1,2,3,4,6
MOTOR OIL(S)	4,000	7'-0"	14'-10"	4"	2"	--	2"	2"	1,2,3,4,6
AUTOMATIC TRANSMISSION FLUID	2,500	5'-4"	15'-10"	4"	2"	--	2"	2"	1,2,3,4,6
ANTIFREEZE	2,500	5'-4"	15'-10"	4"	2"	--	2"	2"	1,2,3,4,6
WASTE OIL	2,500	5'-4"	15'-10"	3"	2"	--	2"	2"	1,2,3,4,6
ANTIFREEZE	4,000	7'-0"	14'-10"	4"	2"	--	2"	2"	1,2,3,4,6
AUTOMATIC TRANSMISSION FLUID	1,000	5'-4"	6'-10"	4"	2"	--	2"	2"	1,2,3,4,6
UNLEADED FUEL	6,000	8'-0"	16'-10"	4"	2"	--	2"	2"	1,2,3,4,5,6

REMARKS:
1. ALL UNDERGROUND TANKS FOR PETROLEUM PRODUCT STORAGE SHALL BE OF DOUBLE WALL CONSTRUCTION. MEANS OF SENSING LEAKAGE IN THE ANNULAR SPACES SHALL BE PROVIDED.
2. ALL UNDERGROUND PIPING FOR PETROLEUM PRODUCT SERVICE SHALL BE OF FIBERGLAS REINFORCED PLASTIC CONSTRUCTION WITH RESINS AND JOINT ADHESIVES SELECTED FOR CHEMICAL RESISTANCE TO PETROLEUM PRODUCTS.
3. ALL RIGID PIPING SHALL TERMINATE 4" MINIMUM ABOVE BOTTOM OF TANK FOR ALL TANKS.
4. ALL ANCHORS FOR STRAPS SHALL BE HOOKED TO BOTTOM ROW OF REINFORCEMENT. THE NUMBER AND SIZE OF STRAPS AND ANCHORS SHALL BE PER MANUFACTURERS RECOMMENDATIONS.
5. U.L. APPROVED STANDARD MANWAY.
6. BURIAL DEPTH SHALL BE AS RECOMMENDED BY NFPA 30 AND/OR MANUFACTURERS RECOMMENDATION.

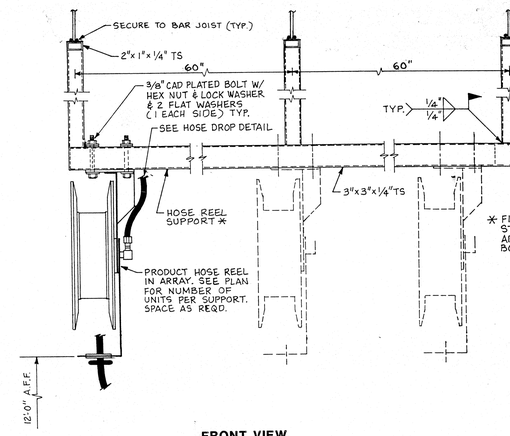

FRONT VIEW

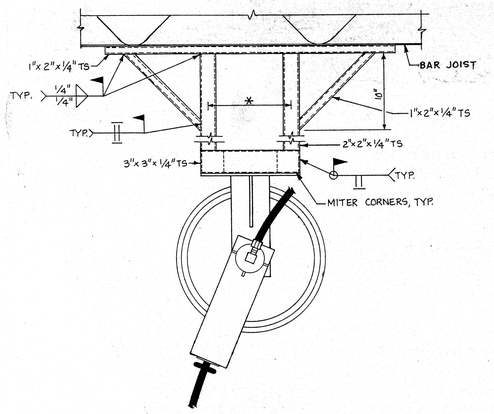

SIDE VIEW

HOSE REEL SUPPORT DETAIL
NTS

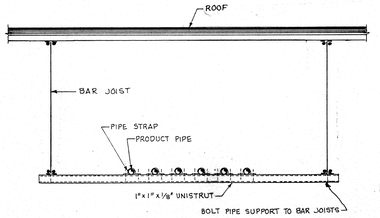

SECTION C
N.T.S. M-7 M7

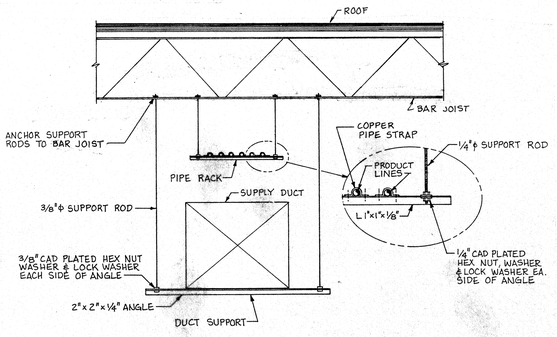

SECTION D
N.T.S. M-7 M7

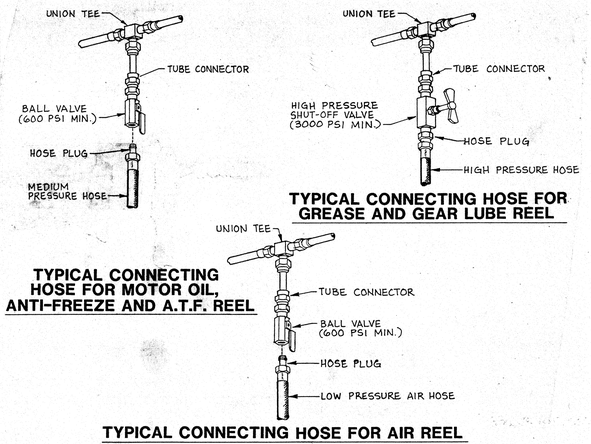

TYPICAL CONNECTING HOSE FOR GREASE AND GEAR LUBE REEL

TYPICAL CONNECTING HOSE FOR MOTOR OIL, ANTI-FREEZE AND A.T.F. REEL

TYPICAL CONNECTING HOSE FOR AIR REEL
NTS

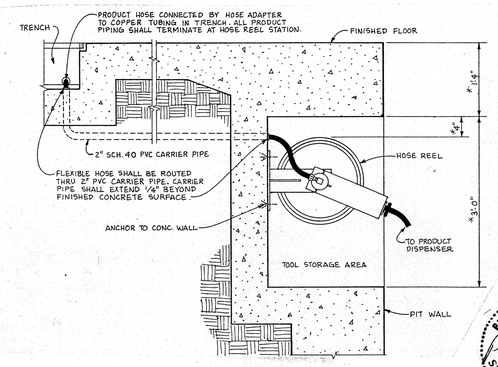

SECTION 2
NTS W-5 M-7

Barge Waggoner Sumner and Cannon
Engineers, Architects, Planners, Landscape Architects and Surveyors
Duchscherer Oberst Design, P.C.
2320 Elmwood Avenue
Buffalo, N.Y. 14217
716-873-9334

DETAIL & SCHEDULES

K-TRANS MAINTENANCE AND OFFICE FACILITY
1135 MAGNOLIA AVENUE
KNOXVILLE, TENNESSEE

K-TRANS

DR.	CHK	DATE	DESCRIPTION
DAT	PBN	4-9-87	ORIGINAL ISSUE
DAT	PBN	10-28-87	ADDENDUM 1 TO CONTRACT
DAT	PBN	11-6-87	ADDENDUM 2 TO CONTRACT

M-7

FILE NO. 10195-15

PHILIP B. BENDT LICENSED PROFESSIONAL ENGINEER NO. 14378 STATE OF TENNESSEE

10/7/87

65149

BRUNING

B.O.

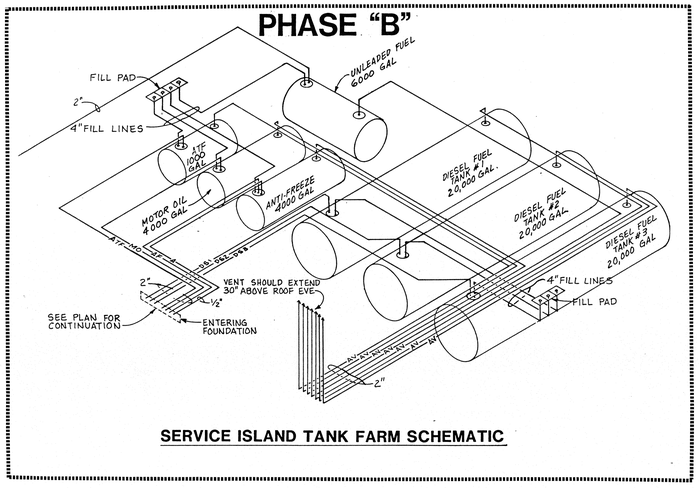

SERVICE ISLAND TANK FARM SCHEMATIC

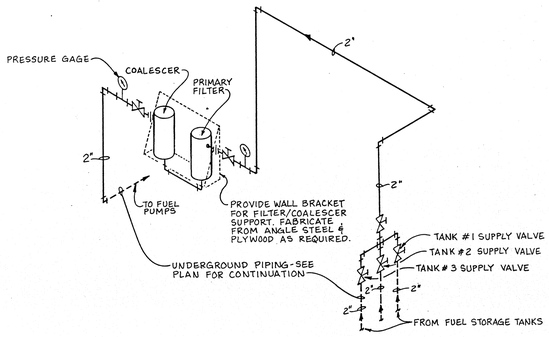

FUEL FILTERING STATION SCHEMATIC

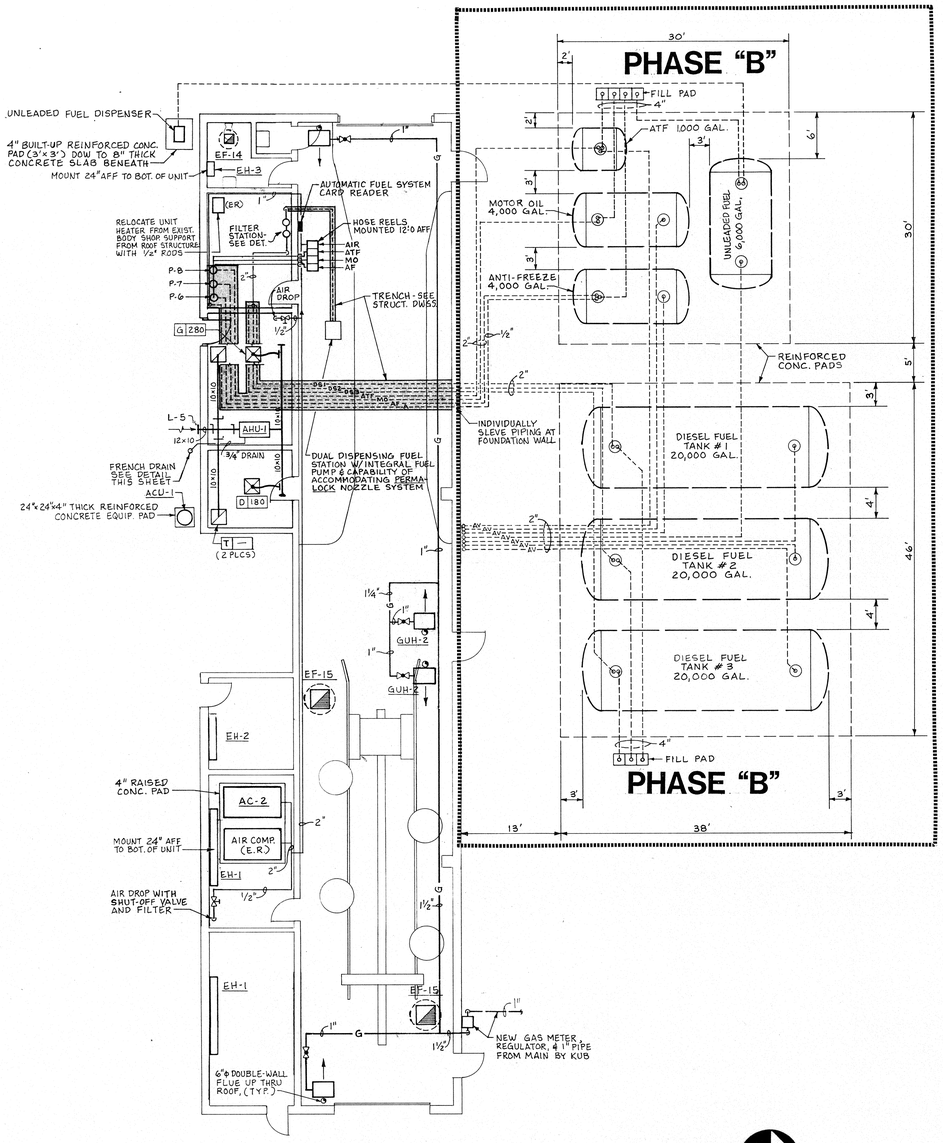

PLAN-SERVICE BUILDING: PRODUCT PIPING AND HVAC

SCALE: 1/8" =1'-0"

NORTH

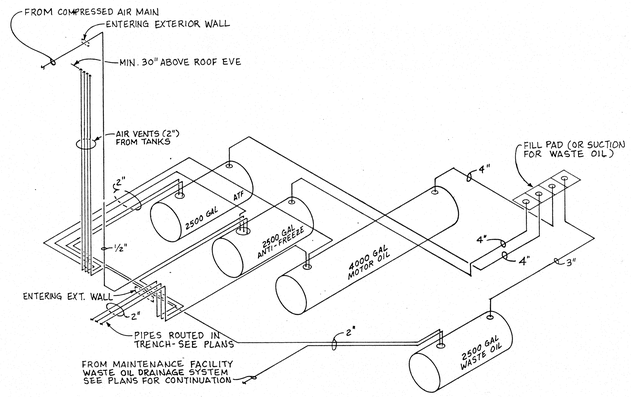

MAINTENANCE FACILITY TANK FARM - PIPING SCHEMATIC

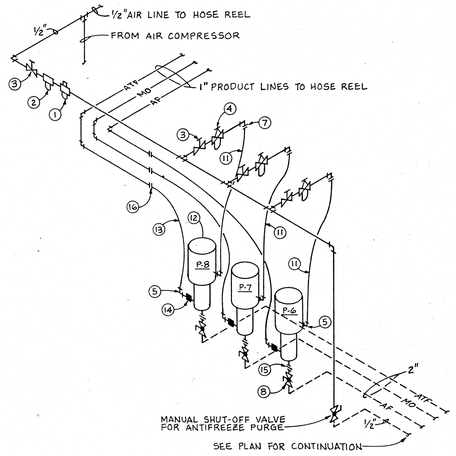

SERVICE ISLAND PUMP ROOM ELEVATION

NTS

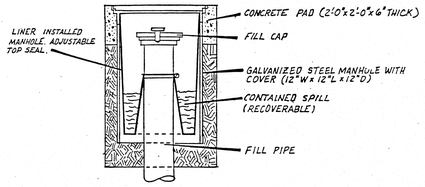

TYPICAL FILL PAD WITH SPILL CONTAINMENT

NTS

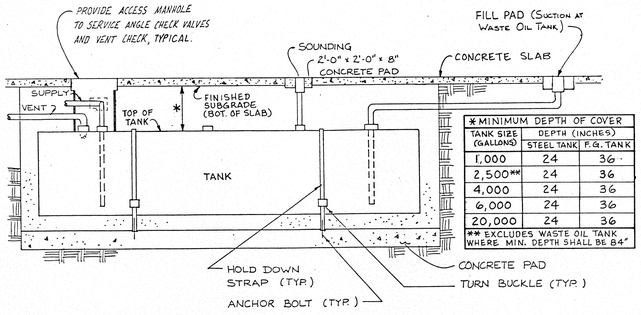

*MINIMUM DEPTH OF COVER		
TANK SIZE (GALLONS)	DEPTH (INCHES)	
	STEEL TANK	F.G. TANK
1,000	24	36
2,500**	24	36
4,000	24	36
6,000	24	36
20,000	24	36

** EXCLUDES WASTE OIL TANK WHERE MIN. DEPTH SHALL BE 84"

TYPICAL UNDERGROUND STORAGE TANK

NTS

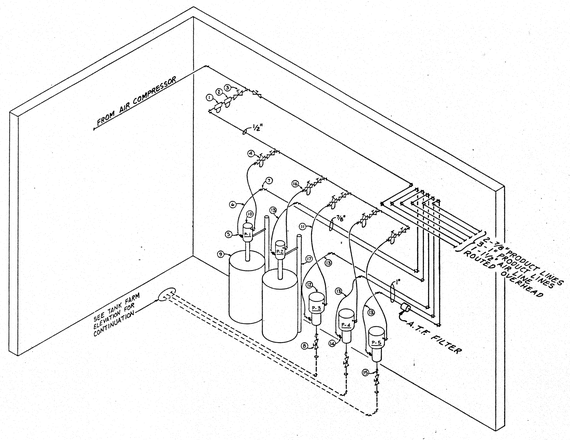

MAINTENANCE FACILITY PUMP ROOM - EAST ELEVATION

NTS

PUMP CONNECTION LEGEND

1	AIR LUBRICATOR
2	AIR LINE FILTER
3	GATE VALVE
4	AIR REGULATOR WITH PRESSURE GAUGE
5	90 SWIVEL ELBOW
6	HIGH - PRESSURE 1/2" HOSE
7	TUBE ELBOW
8	2" BALL VALVE
9	55 GALLON DRUM
10	DRUM PUMP WITH HOIST AND FOLLOWER
11	LOW PRESSURE AIR HOSE
12	STAND PIPE PUMP
13	MEDIUM PRESSURE 1/2" HOSE
14	QUICK DISCONNECT TUBE CONNECTOR
15	UNION
16	HOSE ADAPTER

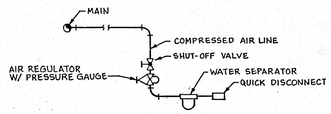

AIR DROP DETAIL

NTS

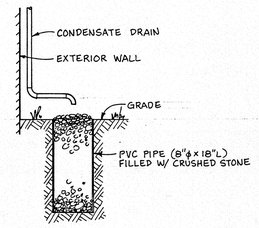

TYPICAL FRENCH DRAIN DETAIL

NTS

Barge Waggoner Summer and Cannon
Engineers, Architects, Planners
Landscape Architects and Surveyors

Duchscherer Oberst Design, P.C.
2320 Elmwood Avenue
Buffalo, N.Y. 14217
716-873-9334

SERVICE BLDG.: PRODUCT PIPING & HVAC, PLAN & DETAILS

K-TRANS MAINTENANCE AND OFFICE FACILITY
1135 MAGNOLIA AVENUE
KNOXVILLE, TENNESSEE

K-TRANS

DR.	CHK.	DATE	DESCRIPTION
DAT	PBN	6-8-87	ORIGINAL ISSUE
DAT	PBN	12-8-87	REISSUED FOR BID

PHILIP B. NEWBY REGISTERED ENGINEER No. 14553 STATE OF TENNESSEE

M-6

FILE NO. 10195-15

B.O.

12/14/87