CITY OF ALAMOGORDO
N. NEW YORK AVE BETWEEN 8TH ST AND 10TH ST
ALAMOGORDO GREAT BLOCKS

ALAMOGORDO, NM 88201
03/25/2022
FOR CONSTRUCTION

DRAWING INDEX:

1. G001 COVER SHEET
2. G002 GENERAL NOTES
3. C101 SITE PLAN
4. C102 SITE PLAN
5. C103 GRADING PLAN
6. C104 GRADING PLAN
7. C105 ENLARGED GRADING PLAN
8. C106 SIGNAGE & STRIPING PLAN
9. C107 SIGNAGE & STRIPING PLAN
10. C108 ROADWAY DEMOLITION PLAN
11. C109 ROADWAY DEMOLITION PLAN
12. LD101 SIDEWALK DEMOLITION PLAN
13. LD102 SIDEWALK DEMOLITION PLAN
14. LK101 DIMENSION & LAYOUT PLAN
15. LK102 DIMENSION & LAYOUT PLAN
16. LS101 CONSTRUCTION PLAN
17. LS102 CONSTRUCTION PLAN
18. LS501 CONSTRUCTION DETAILS
19. LS502 CONSTRUCTION DETAILS
20. LS503 CONSTRUCTION DETAILS
21. LS504 CONSTRUCTION DETAILS
22. LI101 IRRIGATION PLAN
23. LI102 IRRIGATION PLAN
24. LI501 IRRIGATION DETAILS
25. LI502 IRRIGATION DETAILS
26. LP101 PLANTING PLAN
27. LP102 PLANTING PLAN
28. E101 ELECTRICAL PLAN
29. E102 ELECTRICAL PLANS
30. E201 ELECTRICAL DIAGRAMS
31. E202 ELECT LEGEND & SPECIFICATIONS

DESIGN TEAM:

LANDSCAPE ARCHITECT

MRWM LANDSCAPE ARCHITECTS, LTD.
1102 MOUNTAIN RD NW, SUITE 201
ALBUQUERQUE, NM 87102
505-268-2266 PH
505-265-9637 FX
ATTN: JEFF STUART

CIVIL ENGINEER

SMITH ENGINEERING COMPANY
201 N. CHURCH ST #200A
LAS CRUCES, NM 88001
575-523-2395 PH
ATTN: RUSTY PAYNE

STRUCTURAL ENGINEER

UNITY ENGINEERING, PC
4 SNOWCAP COURT
CEDAR CREST, NM 87008
505-270-5047 PH
ATTN: TAMMI HEAD

ELECTRICAL ENGINEER

HUGHES DESIGN COMPANY
505-553-8210 PH
ATTN: TOM HUGHES

OWNER:

CITY OF ALAMOGORDO
ENGINEERING MANAGER
1376 EAST NINTH ST.
ALAMOGORDO, NM 88310

ATTN: BOB JOHNSON
575-439-4235 EX 3 PH

VICINITY MAP

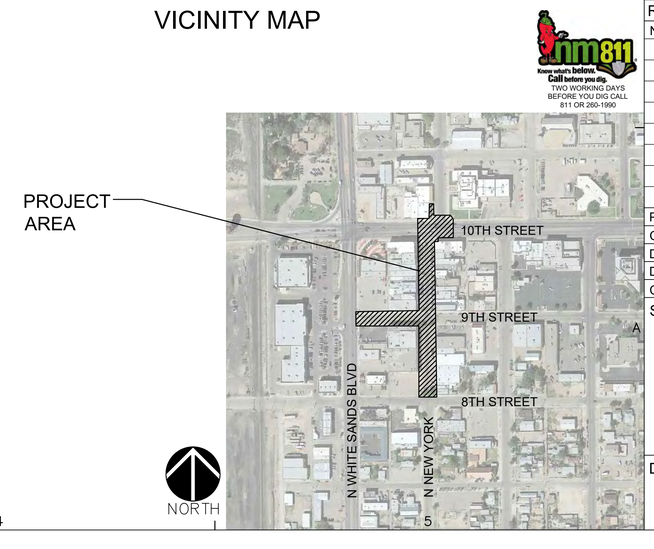

Know what's below. Call before you dig.
TWO WORKING DAYS BEFORE YOU DIG CALL 811 OR 260-1990

MRWM
LANDSCAPE ARCHITECTS
mrwmla.com 505 268 2266

CONSULTANTS

SMITH ENGINEERING COMPANY

UNITY ENGINEERING, PC
STRUCTURAL CONSULTANTS

HDC
HUGHES DESIGN COMPANY
505-553-8210
hdcllc@centurylink.net

STATE OF NEW MEXICO
KENNETH J. MATHIS
LANDSCAPE ARCHITECT
REGISTERED
3.25.22

ALAMOGORDO
GREAT BLOCKS
ALAMOGORDO, NM

MARCH 25, 2022

SUBMITTAL: FOR CONSTRUCTION

REVISIONS

NO.	DATE	DESCRIPTION

PROJECT NO: 20055
CAD DWG FILE:
DESIGNED BY: RDL/JS/KA DATE: 03/25/22
DRAWN BY: JS/KA DATE: 03/25/22
CHECKED BY: JS/RDL DATE: 03/25/22

SHEET TITLE

COVER SHEET

DRAWING SHEET

G001

GENERAL NOTES

1. CONTRACTOR SHALL APPLY FOR AND RECEIVE ALL REQUIRED PERMITS PRIOR TO CONSTRUCTION AT THE CONTRACTOR'S EXPENSE.
2. PRIOR TO CONSTRUCTION, THE CONTRACTOR SHALL EXCAVATE AND VERIFY THE HORIZONTAL AND VERTICAL LOCATIONS OF ALL OBSTRUCTIONS. SHOULD A CONFLICT EXIST, THE CONTRACTOR SHALL NOTIFY THE LANDSCAPE ARCHITECT IMMEDIATELY SO THAT THE CONFLICT CAN BE RESOLVED WITH A MINIMUM AMOUNT OF DELAY. THIS SITE INVESTIGATION IS INCIDENTAL TO ALL WORK.
3. TWO WORKING DAYS PRIOR TO ANY EXCAVATION, THE CONTRACTOR SHALL CONTACT NEW MEXICO ONE CALL SYSTEM (811) FOR LOCATION OF EXISTING UTILITIES. SEE DEMOLITION PLAN GENERAL NOTES FOR ADDITIONAL REQUIREMENTS.
4. CONTRACTOR SHALL RECORD DATA ON ALL UTILITY LINES AND ACCESSORIES FOR THE PREPARATION OF "AS-BUILT" DRAWINGS. CONTRACTOR SHALL NOT COVER UTILITY LINES AND ACCESSORIES UNTIL ALL DATA HAS BEEN RECORDED.
5. CONTRACTOR SHALL PROTECT EXISTING SIGNS, UTILITIES, ROADWAY, AND PAVEMENT MARKINGS FROM DAMAGE DUE TO CONSTRUCTION OPERATIONS. SIGNS, UTILITIES, ROADWAY, OR PAVEMENT MARKINGS DAMAGED BY CONSTRUCTION OPERATIONS SHALL BE REPAIRED OR REPLACED BY THE CONTRACTOR AT NO ADDITIONAL COST TO THE OWNER.
6. THE CONTRACTOR IS RESPONSIBLE FOR PROTECTING THE EXISTING UTILITY LINES WITHIN THE CONSTRUCTION AREA. ANY DAMAGE TO EXISTING UTILITIES CAUSED BY CONSTRUCTION ACTIVITY SHALL BE REPAIRED OR REPLACED AT THE CONTRACTOR'S EXPENSE AND APPROVED BY THE CONSTRUCTION ENGINEER. THIS WORK SHALL BE AT NO ADDITIONAL COST TO THE OWNER.
7. CONSTRUCTION ACTIVITY SHALL BE LIMITED TO THE PROPERTY AND/OR PROJECT LIMITS. ANY DAMAGE TO ADJACENT PROPERTIES RESULTING FROM THE CONSTRUCTION PROCESS IS THE RESPONSIBILITY OF THE CONTRACTOR. ANY COSTS INCURRED FOR REPAIRS SHALL BE THE COST OF THE CONTRACTOR.
8. THE CONTRACTOR SHALL ASSUME RESPONSIBILITY FOR ANY DAMAGE TO EXISTING PAVEMENTS, PAVEMENT MARKINGS, CURB & GUTTER, DRIVE PADS, WHEELCHAIR RAMPS, AND SIDEWALK DURING CONSTRUCTION, APART FROM THOSE SECTIONS INDICATED FOR REMOVAL ON THE PLANS AND SHALL REPAIR OR REPLACE AT HIS/HER OWN EXPENSE.
9. ANY EXISTING WATER LINE, SEWER LINE OR OTHER UTILITY OR UTILITY STRUCTURE DAMAGED BY CONSTRUCTION OPERATIONS SHALL BE REPAIRED OR REPLACED TO MATCH EXISTING.
10. THE CONTRACTOR WILL BE REQUIRED TO SUBMIT A TRAFFIC CONTROL PLAN THAT WILL REFLECT THE CONTRACTOR'S PROPOSED CONSTRUCTION PHASING. THE PLANS SHALL BE REVIEWED AND APPROVED BY THE CITY OF ALAMAGORDO.
11. THE TRAFFIC CONTROL PLANS SHALL BE SUBMITTED TO THE CITY OF ALAMOGORDO AT LEAST 10 WORKING DAYS PRIOR TO THE PRE-CONSTRUCTION MEETING. THE TRAFFIC CONTROL PLANS SHALL BE SUBMITTED ON 11X17 SHEETS. NO HAND DRAFTED TRAFFIC CONTROL PLANS WILL BE ACCEPTED.
12. ALL BARRICADES AND CONSTRUCTION SIGNING SHALL CONFORM TO APPLICABLE SECTIONS OF THE "MANUAL ON UNIFORM TRAFFIC CONTROL DEVICES" (MUTCD), U.S. DEPARTMENT OF TRANSPORTATION, LATEST EDITION.
13. THE CONTRACTOR SHALL MAINTAIN ALL CONSTRUCTION BARRICADES AND SIGNING AT ALL TIMES. THE CONTRACTOR SHALL VERIFY THE PROPER LOCATION OF ALL BARRICADING AT THE END AND BEGINNING OF EACH DAY.
14. THE CONTRACTOR SHALL PROVIDE INGRESS AND EGRESS TO LOCAL BUSINESSES AND RESIDENCIES FOR THE DURATION OF THE PROJECT. THE CONTRACTOR SHALL ADVISE OF AND SCHEDULE ACCESS CLOSURES, AT LEAST 72 HOURS IN ADVANCE, WITH PROPERTY OWNERS AND THE CITY OF ALAMOGORDO. INGRESS AND EGRESS CLOSURES SHALL NOT EXCEED 24 HOURS.
15. THE CONTRACTOR SHALL SUBMIT A PROPOSED WORK PLAN FOR PEDESTRIAN IMPROVEMENTS TO THE CITY OF ALAMOGORDO FOR REVIEW AND APPROVAL PRIOR TO INITIATING THIS WORK. THIS PLAN SHALL INCLUDE THE METHOD PROPOSED TO MAINTAIN PEDESTRIAN ACCESS TO BUSINESSES, SCHOOLS, HOSPITALS, BUILDINGS, ETC. THROUGHOUT THE PEDESTRIAN IMPROVEMENTS CONSTRUCTION IN PARTICULAR. THE CONTRACTOR, AT MINIMUM, SHALL MAINTAIN 48" CLEAR PATH FOR PEDESTRIANS SO AS TO MEET PROWAG AND ADA ACCESSIBILITY REQUIREMENTS. ALL TEMPORARY PEDESTRIAN FACILITIES IMPLEMENTED DURING CONSTRUCTION SHALL COMPLY WITH ADA AND PROWAG STANDARDS.
16. DISPOSAL SITE FOR ALL EXCESS EXCAVATION MATERIAL, AND UNSUITABLE MATERIAL SHALL BE OBTAINED BY THE CONTRACTOR IN COMPLIANCE WITH APPLICABLE ENVIRONMENTAL REGULATIONS AND APPROVED BY THE CITY OF ALAMAGORDO. ALL COSTS INCURRED IN OBTAINING A DISPOSAL SITE AND HAUL THERETO SHALL BE AT NO ADDITIONAL COST TO THE OWNER.
17. THE CONTRACTOR SHALL BE RESTRICTED TO THE USE OF A 35 TON MAXIMUM NON-VIBRATORY ROLLER TO OBTAIN THE REQUIRED COMPACTION IN PAVEMENT STRUCTURE, ROADWAY BACKFILL, EMBANKMENT, AND SUBGRADES IN URBAN AREAS WHERE THE USE OF HEAVIER EQUIPMENT COULD DAMAGE UNDERGROUND UTILITIES OR OTHER PERMANENT STRUCTURES.
18. THE CONTRACTOR SHALL TAKE PRECAUTIONS TO PROTECT HORIZONTAL AND VERTICAL CONTROL SURVEY MONUMENTS (BENCHMARKS) FROM DAMAGE PRIOR TO INITIATING CONSTRUCTION. IF DURING THE COURSE OF CONSTRUCTION OPERATIONS, THE CONTRACTOR DISTURBS OR DESTROYS A BENCHMARK, THE BENCHMARK SHALL BE RECONSTRUCTED PER THE STANDARDS AND PROCEDURES SET FOR IN THE "GEODETIC MARK PRESERVATION GUIDEBOOK", NATIONAL GEODETIC SURVEY, MARCH 1990, CONTACT NGS MARK PRESERVATION CENTER – NOAA, TELEPHONE (505) 798-6645.
19. IF A PAVEMENT DROP OFF IS CREATED DURING CONSTRUCTION, THE CONTRACTOR SHALL INITIATE PROTECTIVE ACTION IN ACCORDANCE WITH THE CITY OF ALAMAGORDO CURRENT "DROP OFF GUIDELINE". THIS WORK SHALL BE CONSIDERED INCIDENTAL TO THE COMPLETION OF THE PROJECT AND NO SEPARATE MEASUREMENT OR PAYMENT WILL BE MADE THEREFOR.
20. OVERNIGHT PARKING OF CONSTRUCTION EQUIPMENT SHALL NOT OBSTRUCT DRIVEWAYS OR DESIGNATED TRAFFIC LANES. THE CONTRACTOR SHALL NOT STORE ANY EQUIPMENT OR MATERIAL WITHIN THE PUBLIC RIGHT-OF-WAY.
21. WHEN ABUTTING NEW CURB AND GUTTER TO EXISTING PAVEMENT, A 2' WIDE SECTION OF EXISTING PAVEMENT ADJACENT TO THE CURB AND GUTTER SHALL BE SAWCUT, REMOVED, AND REPLACED AS PER THE STANDARD SPECIFICATIONS.
22. ALL EXCAVATION, TRENCHING, AND SHORING ACTIVITIES SHALL BE CARRIED-OUT IN ACCORDANCE WITH OSHA 29 CFR 1926.652.
23. CONTRACTOR SHALL ADJUST GRADE AT EXISTING MANHOLES, VALVE BOXES, PULLBOXES AND OTHER UTILITY STRUCTURES AS REQUIRED FOR TOP OF MULCH, PAVERS, AND PAVEMENT TO BE FLUSH WITH TOP OF UTILITY BOX.
24. WHEN REMOVAL OF EXISTING CURB AND GUTTER OR SIDEWALK IS REQUIRED, CONTRACTOR SHALL REMOVE TO THE NEAREST JOINT.
25. THE CONTRACTOR SHALL MAINTAIN AN UP-TO-DATE SET OF AS-BUILTS PLANS FOR THE PROJECT. THESE PLANS SHALL BE KEPT CURRENT, WITHIN TWO WEEKS, AT ALL TIMES AND SHALL BE SUBJECT TO REVIEW BY THE PROJECT ENGINEER THROUGHOUT THE PROJECT AND WILL BE REVIEWED BY THE PROJECT ENGINEER FOR ACCURACY AND COMPLETENESS AT LEAST ONCE EVERY 30 DAYS. THE FINAL STAMPED AS-BUILT PLANS SHALL BE SUBMITTED TO THE PROJECT MANAGER AND THE CITY. THIS WORK IS CONSIDERED INCIDENTAL TO THE PROJECT.
26. ALL CONSTRUCTION AND MATERIALS TESTING SHALL CONFORM TO THE NEW MEXICO STANDARD SPECIFICATIONS FOR PUBLIC WORKS CONSTRUCTION (NMAPWA), UNLESS OTHERWISE NOTED.
27. PROTECT AND MAINTAIN ALL ROADWAY TRAFFIC ADJACENT TO THE PROJECT. DURING CONSTRUCTION, BARRICADING AND PROJECT SIGNS SHALL CONFORM TO THE LATEST EDITION OF THE MANUAL ON UNIFORM TRAFFIC CONTROL DEVICES (MUTCD).
28. HANDICAP PARKING SHALL BE IN ACCORDANCE WITH THE LATEST EDITION OF AMERICANS WITH DISABILITIES ACT (ADA).
29. THE CONTRACTOR IS RESPONSIBLE FOR COMPLIANCE TO APPLICABLE PORTIONS OF THE EPA STORMWATER DISCHARGE REGULATIONS ESTABLISHED UNDER THE NATIONAL POLLUTANT DISCHARGE ELIMINATION SYSTEM (NPDES) PERMIT PROGRAM AND MAINTAINING THE STORMWATER PREVENTION POLLUTION PLAN (SWPPP).
30. SIDEWALKS AND HANDICAP ACCESSIBLE ROUTES SHALL HAVE A RUNNING SLOPE NO GREATER THAN 5% AND A CROSS FALL NO GREATER THAN 2% AND ALWAYS MEET CURRENT STANDARDS SET FORTH BY ADA (AMERICANS WITH DISABILITIES ACT).
31. THE CONTRACTOR SHALL MAINTAIN NORMAL PROJECT DRAINAGE UNTIL NEW DRAINAGE FACILITIES ARE FUNCTIONAL, INCLUDING ANY INTERIM REPLACEMENT OF EXISTING DRAINAGE STRUCTURES.
32. THE CONTRACTOR SHALL MAINTAIN ALL WORK AND MATERIAL STORAGE AREAS IN AN ORDERLY CONDITION, FREE OF DEBRIS AND WASTE. UPON COMPLETION OF CONSTRUCTION, CLEAN UP OF THE PROJECT AND ADJACENT AREAS AFFECTED ARE TO BE BROUGHT TO AN ACCEPTABLE CONDITION.
33. IT WILL BE THE RESPONSIBILITY OF THE CONTRACTOR TO PROTECT ALL MANHOLES, CLEANOUTS, VALVE BOXES, FIRE HYDRANTS, ETC. IF REQUIRED, ADJUSTED TO PROPER LINE AND GRADE BY THE CONTRACTOR PRIOR TO AND AFTER THE PLACEMENT OF PERMANENT PAVING AND GRADING.
34. CONTRACTOR SHALL NEATLINE SAWCUT EXISTING SIDEWALK SIX-INCHES (6") AWAY FROM BUILDING LINE TO AVOID DAMAGE TO BUILDINGS.
35. CONCRETE AND ASPHALT PAVEMENT SHALL BE NEATLINE SAWCUT AT PROPOSED TRANSITIONS TO SURFACE TREATMENTS TO REMAIN. THIS SHALL BE INCIDENTAL TO THE REMOVAL.
36. CONTRACTOR SHALL POT HOLE TO FIELD VERIFY LOCATION AND BURY DEPTH OF EXISTING UNDERGROUND UTILITIES. UTILITIES SHALL BE PROTECTED FROM DAMAGE BY CONSTRUCTION OPERATIONS.

Know what's below. Call before you dig.
TWO WORKING DAYS BEFORE YOU DIG CALL 811 OR 260-1990

MRWM
LANDSCAPE ARCHITECTS
mrwmla.com 505 268 2266

CONSULTANTS

SMITH ENGINEERING COMPANY

UNITY ENGINEERING, PC
STRUCTURAL CONSULTANTS

HDC
HUGHES DESIGN COMPANY
505-553-8210
hdcllc@centurylink.net

STATE OF NEW MEXICO
ROBERT DAVIS
INCF 406
REGISTERED LANDSCAPE ARCHITECT
3.25.22

ALAMOGORDO
GREAT BLOCKS
ALAMOGORDO, NM

MARCH 25, 2022

SUBMITTAL: FOR CONSTRUCTION

REVISIONS

NO.	DATE	DESCRIPTION

PROJECT NO: 20055
CAD DWG FILE:
DESIGNED BY: RDL/JS/KA DATE: 03/25/22
DRAWN BY: JS/KA DATE: 03/25/22
CHECKED BY: JS/RDL DATE: 03/25/22

SHEET TITLE

GENERAL NOTES

DRAWING SHEET

G002

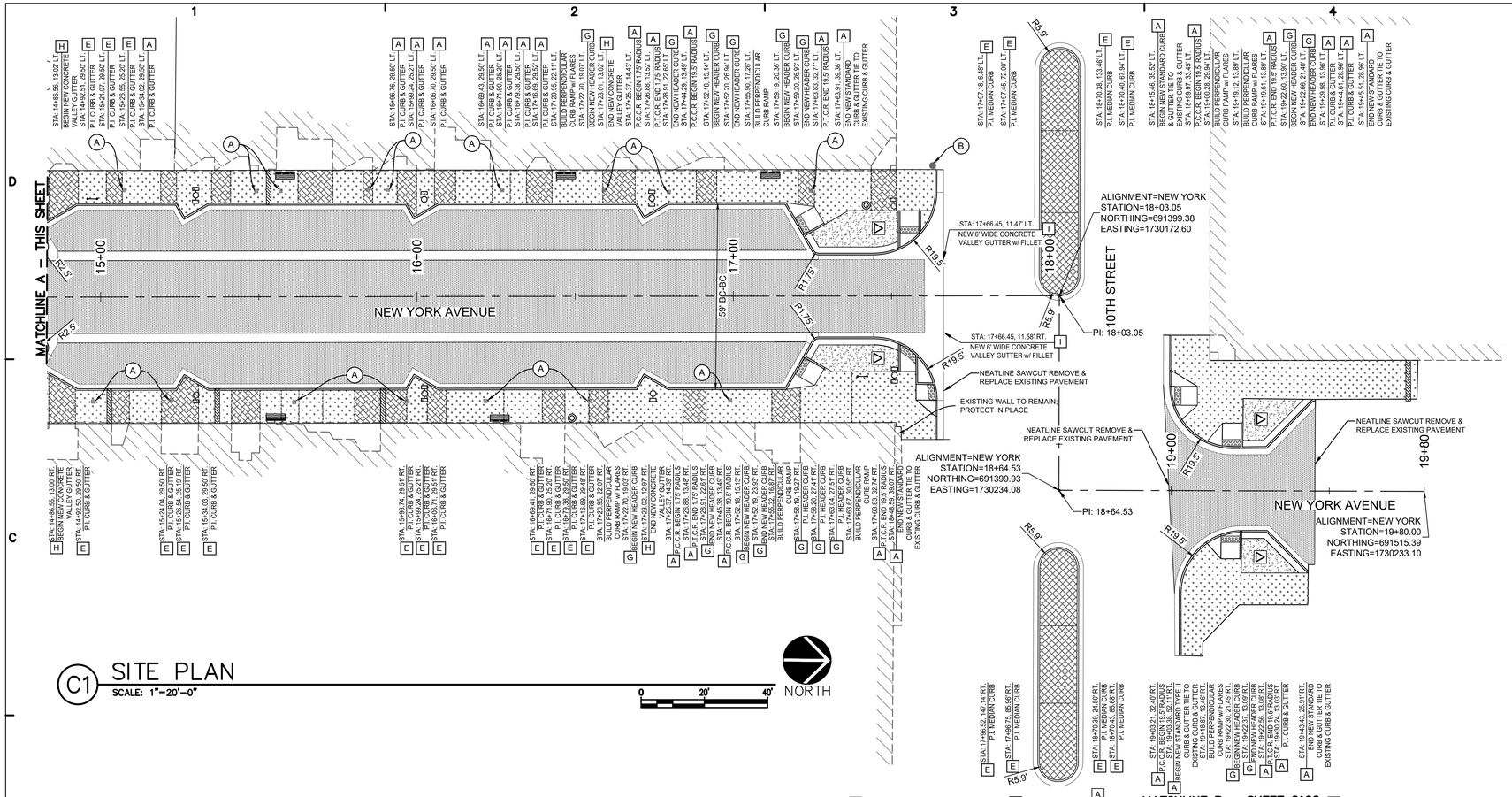

C1 SITE PLAN
SCALE: 1"=20'-0"

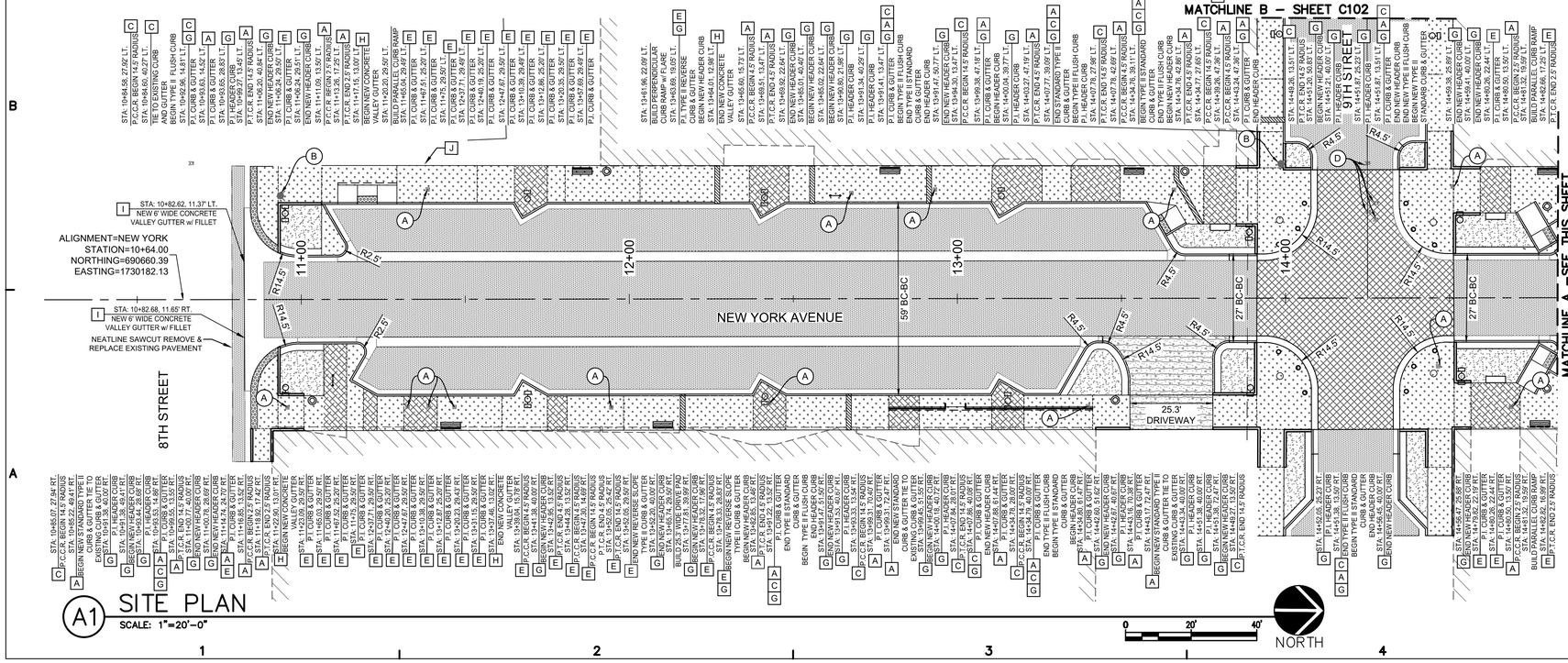

A1 SITE PLAN
SCALE: 1"=20'-0"

LEGEND

- GRAVEL MULCH
- ASPHALT PAVEMENT
- CONCRETE MEDIAN
- CONCRETE SIDEWALK
- CONCRETE SIDEWALK PATTERNED
- CONCRETE DRIVEWAY
- TRENCH DRAIN
- 36" WIDE VALLEY GUTTER
- 6' WIDE VALLEY GUTTER

GENERAL NOTES

1. ALL DIMENSIONS SHOWN ARE TO BACK OF CURB, UNLESS OTHERWISE SPECIFIED.
2. SIDEWALKS AND HANDICAP ACCESSIBLE ROUTES SHALL HAVE A RUNNING SLOPE NO GREATER THAN 8.33% AND A CROSS FALL NO GREATER THAN 2%.
3. ACCESS TO BUSINESSES SHALL BE KEPT OPEN INSOFAR AS POSSIBLE. ACCESS CLOSURES MUST BE SCHEDULED WITH PROPERTY OWNERS AND REVIEWED BY THE DESIGN ENGINEER. ACCESS FOR EMERGENCY VEHICLES AND FIRE PROTECTION MUST BE OPEN AT ALL TIMES.
4. FIRE HYDRANTS SHALL BE LOCATED IN ACCORDANCE WITH THE INTERNATIONAL FIRE CODE(IFC) FOR THE PROTECTION OF BUILDINGS, LATEST EDITION.

UTILITY KEYED NOTES

- (A) ADJUST EXISTING WATER METER BOX TO GRADE
- (B) PROTECT EXISTING FIRE HYDRANT IN PLACE
- (C) ADJUST EXISTING MANHOLE TO GRADE
- (D) ADJUST EXISTING VALVE BOX TO GRADE

SITE KEYED NOTES

- A TYPE II STANDARD CURB & GUTTER
- B TRANSITION FROM TYPE II STANDARD CURB TO FLUSH CURB
- C TYPE II FLUSH CURB
- D TRANSITION FROM FLUSH CURB TO TYPE II STANDARD CURB
- E TYPE II REVERSE SLOPE CURB &GUTTER
- F TYPE II MOUNTABLE CURB & GUTTER
- G 6" HIGH HEADER CURB
- H 36" WIDE VALLEY GUTTER
- I 6' WIDE VALLEY GUTTER
- J EXISTING HEADER CURB TO REMAIN; UNLESS BACK OF NEW SIDEWALK ELEVATION EXCEEDS TOP OF EXISTING HEADER CURB, IN THIS CASE REMOVE AND REPLACE TO THE NEW SIDEWALK AND EXISTING PARKING LOT BEHIND.

MRWM
LANDSCAPE ARCHITECTS
mrwmla.com 505 268 2266

CONSULTANTS

SMITH ENGINEERING COMPANY

UNITY ENGINEERING, PC
STRUCTURAL CONSULTANTS

HDC
HUGHES DESIGN COMPANY
505-553-8210
hdcllc@centurylink.net

RUSTY W. PAYNE
NEW MEXICO
23566
REGISTERED PROFESSIONAL ENGINEER
03/25/2022

ALAMOGORDO GREAT BLOCKS

ALAMOGORDO, NM

MARCH 25, 2022

SUBMITTAL: FOR CONSTRUCTION

REVISIONS

NO.	DATE	DESCRIPTION

PROJECT NO: 20055

CAD DWG FILE:

DESIGNED BY: SJJ/RWP DATE: 03/25/22

DRAWN BY: SJJ DATE: 03/25/22

CHECKED BY: RWP DATE: 03/25/22

SHEET TITLE

SITE PLAN

DRAWING SHEET

C101

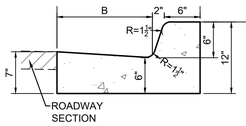

STANDARD CURB & GUTTER

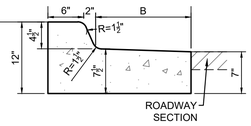

REVERSE SLOPE CURB & GUTTER

CURB AND GUTTER LEGEND			
TYPE	I	II	III
A	1'-6"	2'-0"	2'-6"
B	0'-10"	1'-4"	1'-10"
C	0'-5 5/8"	0'-5 5/8"	0'-5 5/8"
D	0'-5"	0'-7"	0'-7"
E	0'-7 3/8"	0'-11 3/8"	1'-5 3/8"

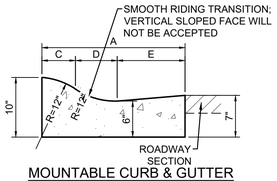

MOUNTABLE CURB & GUTTER

CURB & GUTTER NOTES:

1. NEW CURB & GUTTER PROFILE SHALL MATCH EXISTING ADJACENT CURB & GUTTER AND/OR STREET PROFILE.
2. NEW CURB & GUTTER SHALL INCLUDE EIGHT-INCH (8") SUBGRADE PREPARATION, INCIDENTAL TO CONSTRUCTION.
3. NEW CURB & GUTTER SHALL INCLUDE SIX-INCH (6") BASE COURSE, INCIDENTAL TO CONSTRUCTION.
4. EDGES OF CURB & GUTTER NOT SPECIFICALLY DIMENSIONS SHALL BE EDGED WITH A ⅜" EDGING TOOL.
5. DIMENSIONS AT ROUNDED CORNERS MEASURED TO INTERSECTION OF STRAIGHT LINES.
6. PROVIDE CONTROL JOINTS EVERY 5'-0". CONTROL JOINTS SHALL BE TOOL JOINTED WITH TOP ROUND EDGE OF ⅜" RADIUS, DEPTH OF ONE-INCH (1"). THE FINISHED JOINT OPENING EXCLUDING RADII SHALL NOT BE WIDER THAN ⅜".
7. PROVIDE ½" EXPANSION JOINTS EVERY 50'-0" ALONG CURB & GUTTER.
8. TACK COAT EDGE OF GUTTER PRIOR TO PLACEMENT OF NEW PAVEMENT OR PAVEMENT PATCH.
9. THE CONSTRUCTION OF CURB & GUTTER AND/OR PAVEMENT SHALL BE CONSTRUCTED SO THAT THE GUTTER FLOW WILL BE CONSTANT (NO PONDING AREAS WILL BE ACCEPTED).

CURB AND GUTTER DETAILS

NOT TO SCALE

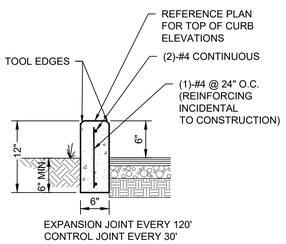

HEADER CURB

SCALE: 1" = 1'

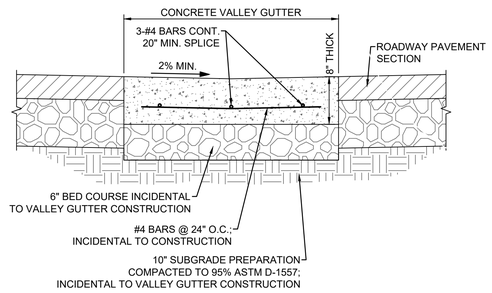

CONCRETE VALLEY GUTTER DETAIL

NOT TO SCALE

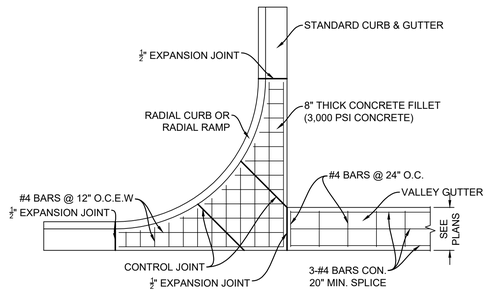

NOTE: SUBGRADE PREPARATION, SIX-INCH (6") BED COURSE, AND REINFORCING INCIDENTAL TO CONCRETE FILLET CONSTRUCTION.

CONCRETE RADIUS FILLET DETAIL

NOT TO SCALE

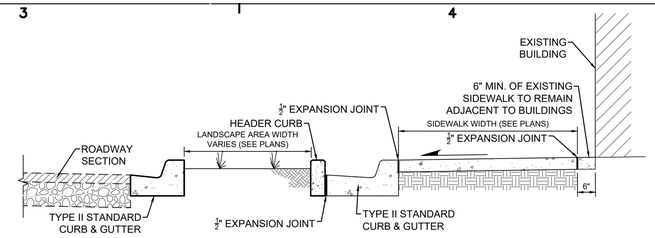

1 TYPICAL ISLAND DETAIL

NOT TO SCALE

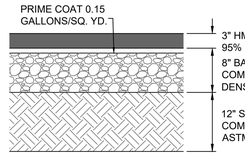

TYPICAL PAVEMENT SECTION

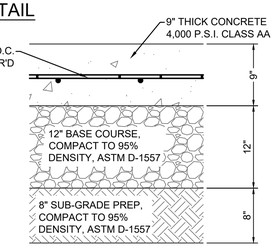

9" CONCRETE PAVEMENT SECTION

TYPICAL PAVEMENT SECTIONS

NOT TO SCALE

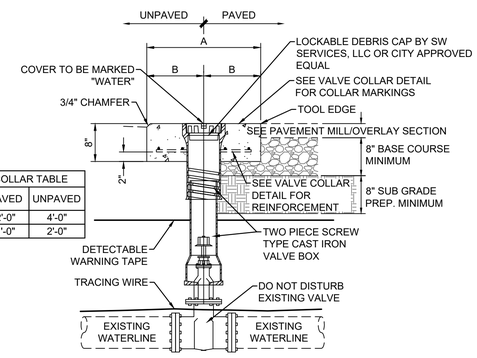

CONCRETE COLLAR TABLE		
DIMENSION	PAVED	UNPAVED
A	2'-0"	4'-0"
B	1'-0"	2'-0"

GENERAL NOTES:

1. SEE TECHNICAL SPECIFICATION FOR BACKFILL MATERIAL SPECIFICATIONS AND COMPACTION REQUIREMENTS.
2. SEE CHAPTER 5, STREET STANDARDS FOR PAVEMENT, BASE COURSE COURSE AND SUB-GRADE PREP. REQUIREMENTS.
3. SIDES OF CONCRETE COLLAR TOP SHALL BE PARALLEL AND PERPENDICULAR TO THE NORMAL STREET TRAFFIC FLOW.
4. VALVE BOX SHALL BE CENTERED ABOUT OPERATING NUT AND BE PLACED TRUE AND VERTICAL.

VALVE BOX ADJUSTMENT DETAIL

NOT TO SCALE

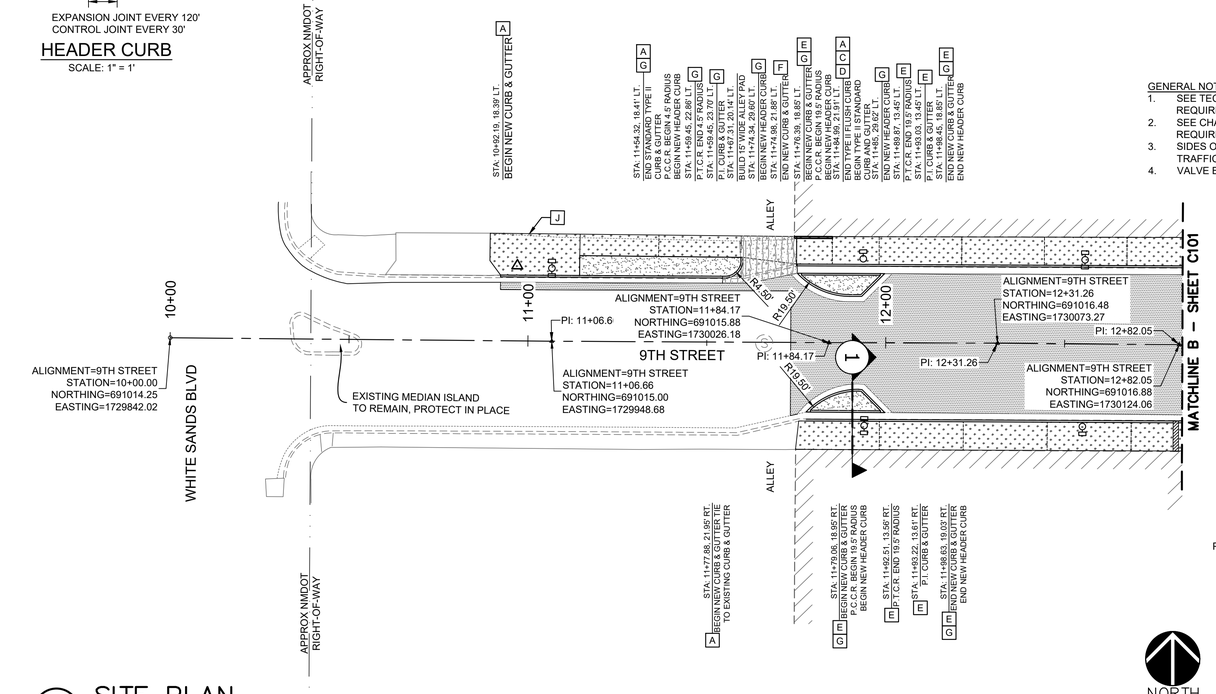

A1 SITE PLAN

SCALE: 1"=20'-0"

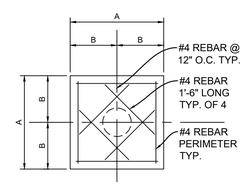

Valve Box Concrete Collar Detail

CONCRETE COLLAR TABLE		
TYPE	PAVED	UNPAVED
A	2'-0"	4'-0"
B	1'-0"	2'-0"

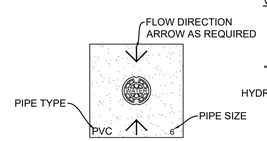

Valve Box Collar Marking Detail

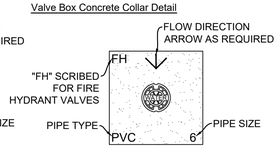

Valve Box Collar Marking Fire Hydrant Valve Detail

GENERAL NOTES:

1. SIDES OF CONCRETE COLLAR TOP SHALL BE PARALLEL AND PERPENDICULAR TO THE NORMAL STREET TRAFFIC FLOW.
2. SCRIBE CONCRETE WITH LINE DIRECTIONAL ARROWS, PIPE SIZE AND PIPE TYPE.
3. TEXT SIZE SHALL BE 4-INCHES TALL AND SCORED 3/8" DEEP IN A NEAT AND CONSISTENT MANNER, TYPICAL.

VALVE BOX CONCRETE COLLAR DETAILS

NOT TO SCALE

LEGEND

- GRAVEL MULCH
- ASPHALT PAVEMENT
- CONCRETE MEDIAN
- CONCRETE SIDEWALK
- CONCRETE SIDEWALK PATTERNED
- CONCRETE DRIVEWAY
- TRENCH DRAIN
- 36" WIDE VALLEY GUTTER
- 6' WIDE VALLEY GUTTER

GENERAL NOTES

1. ALL DIMENSIONS SHOWN ARE TO BACK OF CURB, UNLESS OTHERWISE SPECIFIED.
2. SIDEWALKS AND HANDICAP ACCESSIBLE ROUTES SHALL HAVE A RUNNING SLOPE NO GREATER THAN 8.33% AND A CROSS FALL NO GREATER THAN 2%.
3. ACCESS TO BUSINESSES SHALL BE KEPT OPEN INSOFAR AS POSSIBLE. ACCESS CLOSURES MUST BE SCHEDULED WITH PROPERTY OWNERS AND REVIEWED BY THE DESIGN ENGINEER. ACCESS FOR EMERGENCY VEHICLES AND FIRE PROTECTION MUST BE OPEN AT ALL TIMES.
4. FIRE HYDRANTS SHALL BE LOCATED IN ACCORDANCE WITH THE INTERNATIONAL FIRE CODE(IFC) FOR THE PROTECTION OF BUILDINGS, LATEST EDITION.

UTILITY KEYED NOTES

- (A) ADJUST EXISTING WATER METER BOX TO GRADE
- (B) PROTECT EXISTING FIRE HYDRANT IN PLACE
- (C) ADJUST EXISTING MANHOLE TO GRADE
- (D) ADJUST EXISTING VALVE BOX TO GRADE

SITE KEYED NOTES

- A TYPE II STANDARD CURB & GUTTER
- B TRANSITION FROM TYPE II STANDARD CURB TO FLUSH CURB
- C TYPE II FLUSH CURB
- D TRANSITION FROM FLUSH CURB TO TYPE II STANDARD CURB
- E TYPE II REVERSE SLOPE CURB &GUTTER
- F TYPE II MOUNTABLE CURB & GUTTER
- G 6" HIGH HEADER CURB
- H 36" WIDE VALLEY GUTTER
- I 6' WIDE VALLEY GUTTER
- J EXISTING HEADER CURB TO REMAIN; UNLESS BACK OF NEW SIDEWALK ELEVATION EXCEEDS TOP OF EXISTING HEADER CURB, IN THIS CASE REMOVE AND REPLACE TO THE NEW SIDEWALK AND EXISTING PARKING LOT BEHIND.

MRWM
LANDSCAPE ARCHITECTS
mrwmla.com 505 268 2266

CONSULTANTS

SMITH ENGINEERING COMPANY

UNITY ENGINEERING, PC
STRUCTURAL CONSULTANTS

HDC
HUGHES DESIGN COMPANY
505-553-8210
hdcllc@centurylink.net

RUSTY W. PAYNE
NEW MEXICO
23566
REGISTERED PROFESSIONAL ENGINEER
03/25/2022

ALAMOGORDO
GREAT BLOCKS
ALAMOGORDO, NM

MARCH 25, 2022

SUBMITTAL: FOR CONSTRUCTION

REVISIONS

NO.	DATE	DESCRIPTION

PROJECT NO: 20055

CAD DWG FILE:

DESIGNED BY: SJJ/RWP DATE: 03/25/22

DRAWN BY: SJJ DATE: 03/25/22

CHECKED BY: RWP DATE: 03/25/22

SHEET TITLE

SITE PLAN

DRAWING SHEET

C102

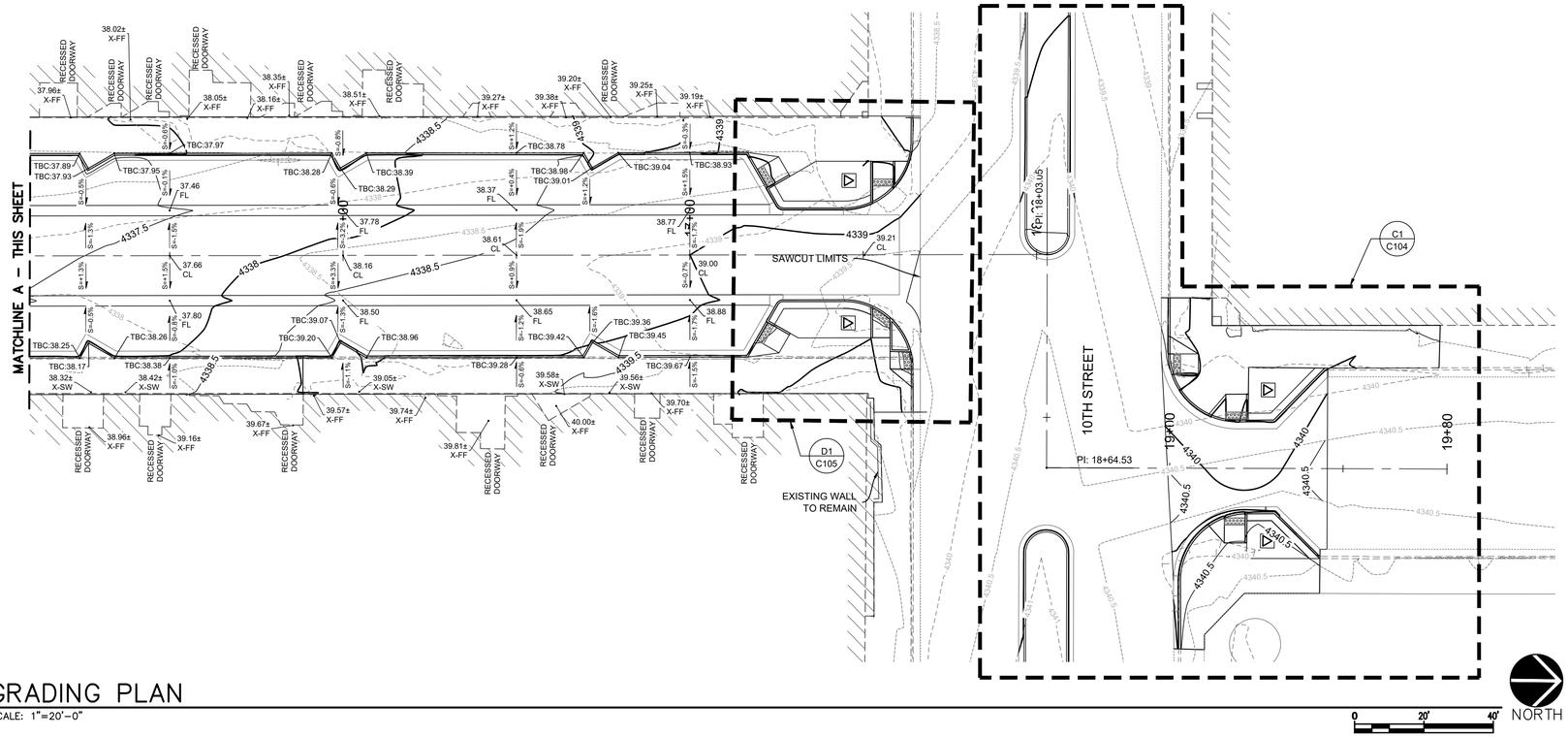

C1 GRADING PLAN

SCALE: 1"=20'-0"

NOTE TO CONTRACTORS:
EXISTING SPOT ELEVATIONS, AS NOTED HEREON, ARE FROM THE EXISTING CONDITIONS SURVEY COMPLETED BY CONSTRUCTION SURVEY TECHNOLOGIES, INC (CSTi) IN FEBRUARY 2021.

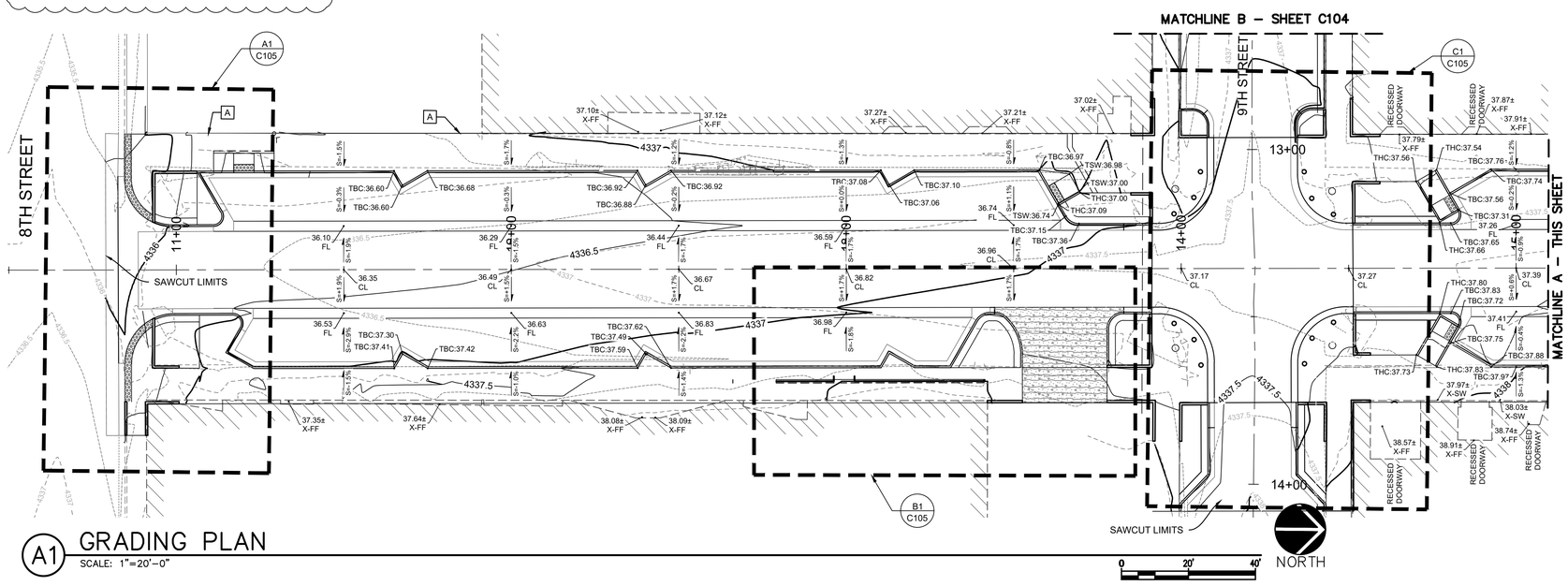

A1 GRADING PLAN

SCALE: 1"=20'-0"

LEGEND

1000	EXISTING INDEX CONTOUR
1000.5	EXISTING INTERMEDIATE CONTOUR
1000	PROPOSED INDEX CONTOUR
1000.5	PROPOSED INTERMEDIATE CONTOUR
XX.XX X-CL	EXISTING CENTERLINE ELEVATION
XX.XX X-EC	EXISTING EDGE CONCRETE ELEVATION
XX.XX X-TC	EXISTING TOP CONCRETE ELEVATION
XX.XX X-FL	EXISTING FLOWLINE ELEVATION
XX.XX X-SW	EXISTING SIDEWALK ELEVATION
XX.XX X-TBC	EXISTING TOP BACK OF CURB ELEVATION
XX.XX X-TP	EXISTING TOP PAVEMENT ELEVATION
XX.XX X-EP	EXISTING EDGE OF PAVEMENT ELEVATION
XX.XX X-FF	EXISTING FINISHED FLOOR ELEVATION
XX.XX X-TOW	EXISTING TOP OF WALL ELEVATION
XX.XX X-BOW	EXISTING BOTTOM OF WALL ELEVATION
XX.XX X-EG	EXISTING GRADE ELEVATION
XX.XX CL	PROPOSED CENTERLINE ELEVATION
XX.XX EC	PROPOSED EDGE CONCRETE ELEVATION
XX.XX TC	PROPOSED TOP CONCRETE ELEVATION
XX.XX FL	PROPOSED FLOWLINE ELEVATION
XX.XX SW	PROPOSED SIDEWALK ELEVATION
XX.XX TSW	PROPOSED TOP OF SIDEWALK
XX.XX TBC	PROPOSED TOP BACK OF CURB ELEVATION
XX.XX THC	PROPOSED TOP OF HEADER CURB ELEVATION
XX.XX TP	PROPOSED TOP PAVEMENT ELEVATION
XX.XX EP	PROPOSED EDGE OF PAVEMENT ELEVATION
XX.XX FG	PROPOSED FINISH GRADE ELEVATION

GENERAL NOTES

GRADING & DRAINAGE GENERAL NOTES:

1. FINAL PAVING, CURB & GUTTER, AND SIDEWALK ELEVATIONS WILL BE PLACED AT ±0.03 FEET.
2. CONTOUR INTERVAL AS SHOWN IS 0.5 FEET.

KEYED NOTES

A EXISTING HEADER CURB TO REMAIN; UNLESS BACK OF NEW SIDEWALK ELEVATION EXCEEDS TOP OF EXISTING HEADER CURB, IN THIS CASE REMOVE AND REPLACE TO SEPARATE THE NEW SIDEWALK AND EXISTING PARKING LOT BEHIND.

MRWM
LANDSCAPE ARCHITECTS
mrwmla.com 505 268 2266

CONSULTANTS

SMITH ENGINEERING COMPANY

UNITY ENGINEERING, PC
STRUCTURAL CONSULTANTS

HDC
HUGHES DESIGN COMPANY
505-553-8210
hdcllc@centurylink.net

RUSTY W. PAYNE
NEW MEXICO
23566
REGISTERED PROFESSIONAL ENGINEER
03/25/2022

ALAMOGORDO GREAT BLOCKS

ALAMOGORDO, NM

MARCH 25, 2022

SUBMITTAL: FOR CONSTRUCTION

REVISIONS

NO.	DATE	DESCRIPTION

PROJECT NO: 20055	
CAD DWG FILE:	
DESIGNED BY: SJJ/RWP	DATE: 03/25/22
DRAWN BY: SJJ	DATE: 03/25/22
CHECKED BY: RWP	DATE: 03/25/22

SHEET TITLE

GRADING PLAN

DRAWING SHEET

C103

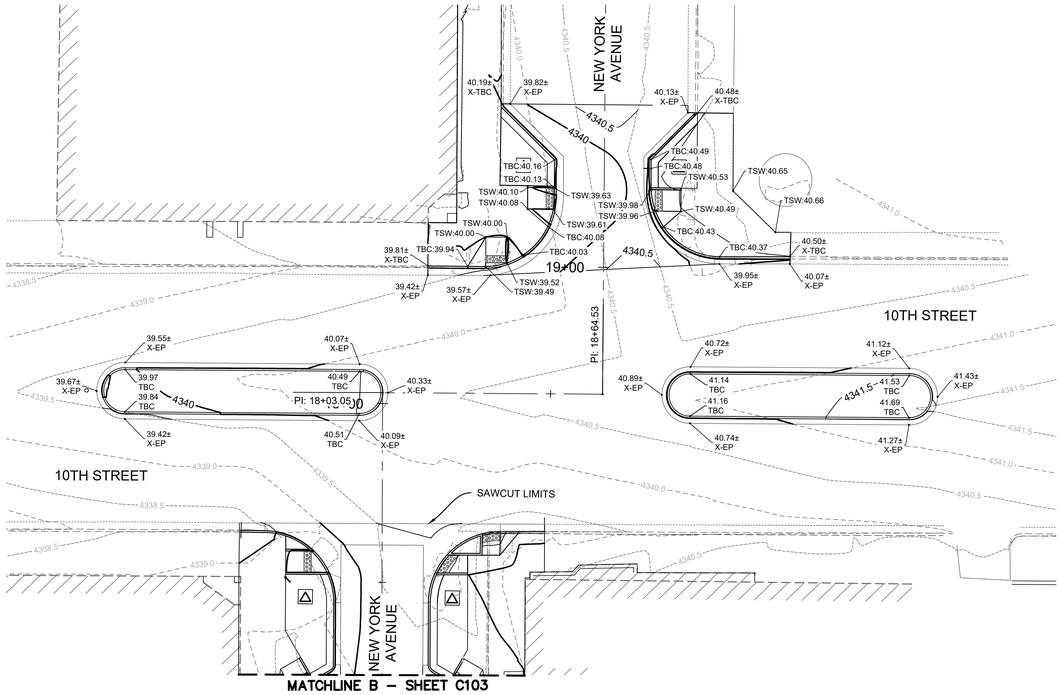

C1 GRADING PLAN

SCALE: 1"=20'–0"

NORTH

NOTE TO CONTRACTORS:
EXISTING SPOT ELEVATIONS, AS NOTED HEREON, ARE FROM THE EXISTING CONDITIONS SURVEY COMPLETED BY CONSTRUCTION SURVEY TECHNOLOGIES, INC (CSTi) IN FEBRUARY 2021.

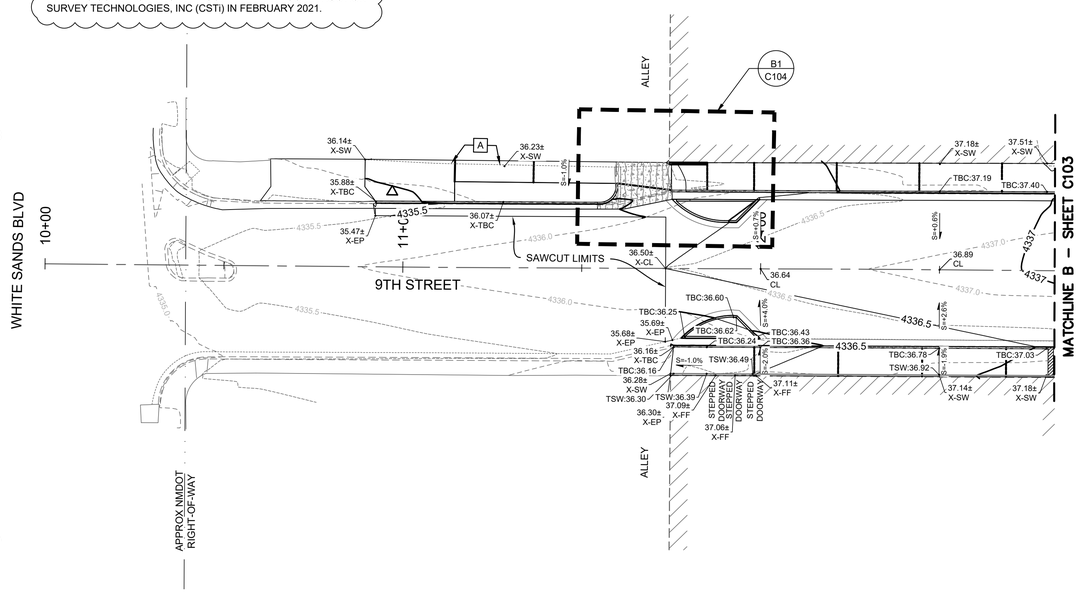

A1 GRADING PLAN

SCALE: 1"=20'–0"

NORTH

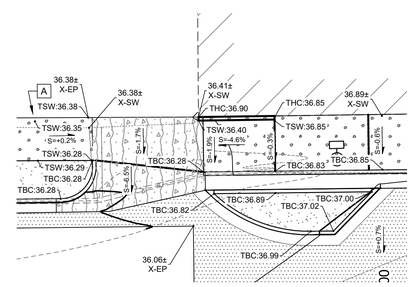

B1 ALLEY PAD GRADING

SCALE: 1"=10'–0"

LEGEND

1000	EXISTING INDEX CONTOUR
1000.5	EXISTING INTERMEDIATE CONTOUR
1000	PROPOSED INDEX CONTOUR
1000.5	PROPOSED INTERMEDIATE CONTOUR
XX.XX X-CL	EXISTING CENTERLINE ELEVATION
XX.XX X-EC	EXISTING EDGE CONCRETE ELEVATION
XX.XX X-TC	EXISTING TOP CONCRETE ELEVATION
XX.XX X-FL	EXISTING FLOWLINE ELEVATION
XX.XX X-SW	EXISTING SIDEWALK ELEVATION
XX.XX X-TBC	EXISTING TOP BACK OF CURB ELEVATION
XX.XX X-TP	EXISTING TOP PAVEMENT ELEVATION
XX.XX X-EP	EXISTING EDGE OF PAVEMENT ELEVATION
XX.XX X-FF	EXISTING FINISHED FLOOR ELEVATION
XX.XX X-TOW	EXISTING TOP OF WALL ELEVATION
XX.XX X-BOW	EXISTING BOTTOM OF WALL ELEVATION
XX.XX X-EG	EXISTING GRADE ELEVATION
XX.XX CL	PROPOSED CENTERLINE ELEVATION
XX.XX EC	PROPOSED EDGE CONCRETE ELEVATION
XX.XX TC	PROPOSED TOP CONCRETE ELEVATION
XX.XX FL	PROPOSED FLOWLINE ELEVATION
XX.XX SW	PROPOSED SIDEWALK ELEVATION
XX.XX TSW	PROPOSED TOP OF SIDEWALK
XX.XX TBC	PROPOSED TOP BACK OF CURB ELEVATION
XX.XX THC	PROPOSED TOP OF HEADER CURB ELEVATION
XX.XX TP	PROPOSED TOP PAVEMENT ELEVATION
XX.XX EP	PROPOSED EDGE OF PAVEMENT ELEVATION
XX.XX FG	PROPOSED FINISH GRADE ELEVATION

GENERAL NOTES

GRADING & DRAINAGE GENERAL NOTES:

1. FINAL PAVING, CURB & GUTTER, AND SIDEWALK ELEVATIONS WILL BE PLACED AT ±0.03 FEET.
2. CONTOUR INTERVAL AS SHOWN IS 0.5 FEET.

KEYED NOTES

A EXISTING HEADER CURB TO REMAIN; UNLESS BACK OF NEW SIDEWALK ELEVATION EXCEEDS TOP OF EXISTING HEADER CURB, IN THIS CASE REMOVE AND REPLACE TO SEPARATE THE NEW SIDEWALK AND EXISTING PARKING LOT BEHIND.

MRWM
LANDSCAPE ARCHITECTS
mrwmla.com 505 268 2266

CONSULTANTS

SMITH ENGINEERING COMPANY

UNITY ENGINEERING, PC
STRUCTURAL CONSULTANTS

HDC
HUGHES DESIGN COMPANY
505-553-8210
hdcllc@centurylink.net

RUSTY W. PAYNE
NEW MEXICO
23566
REGISTERED PROFESSIONAL ENGINEER
03/25/2022

ALAMOGORDO GREAT BLOCKS

ALAMOGORDO, NM

MARCH 25, 2022

SUBMITTAL: FOR CONSTRUCTION

REVISIONS

NO.	DATE	DESCRIPTION

PROJECT NO: 20055
CAD DWG FILE:
DESIGNED BY: SJJ/RWP DATE: 03/25/22
DRAWN BY: SJJ DATE: 03/25/22
CHECKED BY: RWP DATE: 03/25/22

SHEET TITLE

GRADING PLAN

DRAWING SHEET

C104

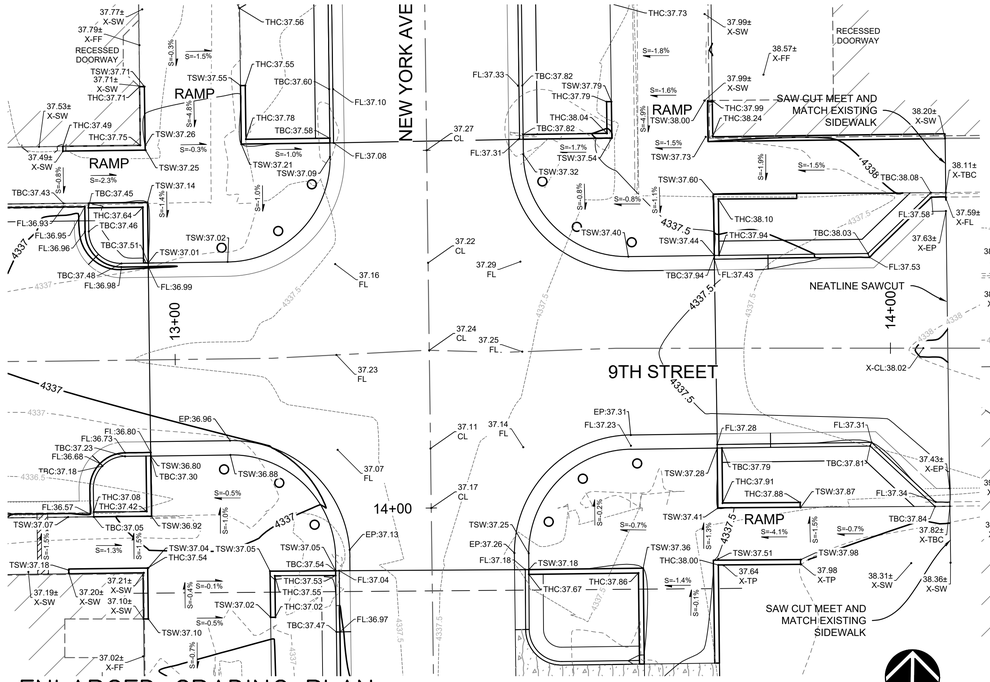

C1 ENLARGED GRADING PLAN
SCALE: 1"=10'-0"

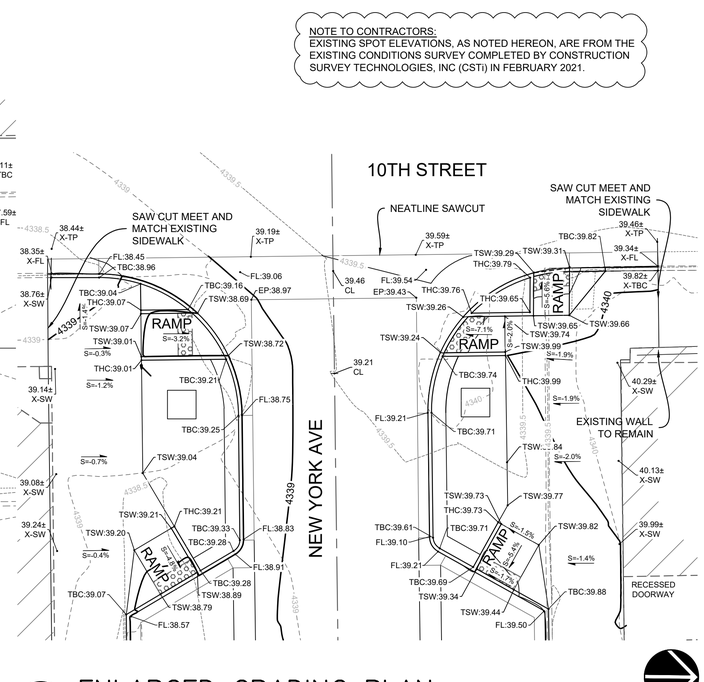

D1 ENLARGED GRADING PLAN
SCALE: 1"=10'-0"

NOTE TO CONTRACTORS:
EXISTING SPOT ELEVATIONS, AS NOTED HEREON, ARE FROM THE EXISTING CONDITIONS SURVEY COMPLETED BY CONSTRUCTION SURVEY TECHNOLOGIES, INC (CSTI) IN FEBRUARY 2021.

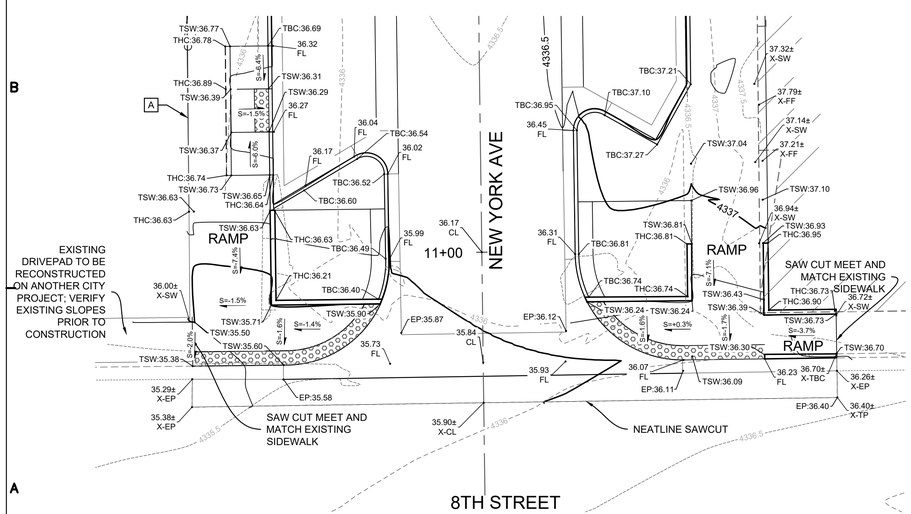

A1 ENLARGED GRADING PLAN
SCALE: 1"=10'-0"

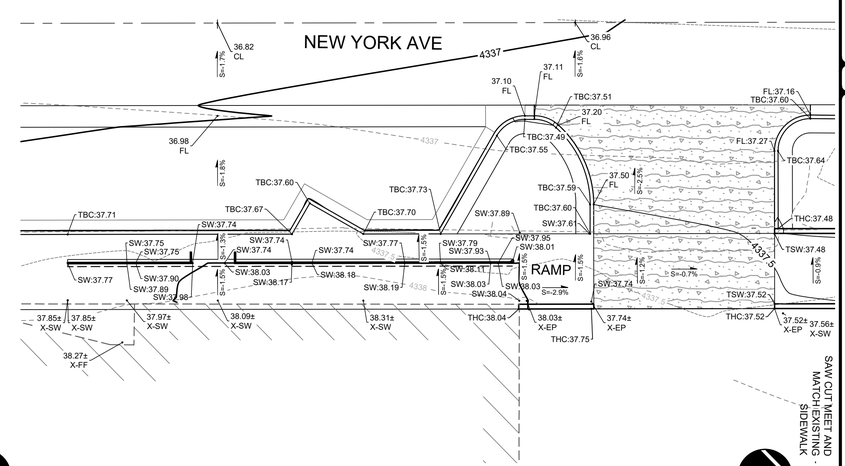

B1 ENLARGED GRADING PLAN
SCALE: 1"=10'-0"

LEGEND

1000	EXISTING INDEX CONTOUR
1000.5	EXISTING INTERMEDIATE CONTOUR
1000	PROPOSED INDEX CONTOUR
1000.5	PROPOSED INTERMEDIATE CONTOUR
XX.XX X-CL	EXISTING CENTERLINE ELEVATION
XX.XX X-EC	EXISTING EDGE CONCRETE ELEVATION
XX.XX X-TC	EXISTING TOP CONCRETE ELEVATION
XX.XX X-FL	EXISTING FLOWLINE ELEVATION
XX.XX X-SW	EXISTING SIDEWALK ELEVATION
XX.XX X-TBC	EXISTING TOP BACK OF CURB ELEVATION
XX.XX X-TP	EXISTING TOP PAVEMENT ELEVATION
XX.XX X-EP	EXISTING EDGE OF PAVEMENT ELEVATION
XX.XX X-FF	EXISTING FINISHED FLOOR ELEVATION
XX.XX X-TOW	EXISTING TOP OF WALL ELEVATION
XX.XX X-BOW	EXISTING BOTTOM OF WALL ELEVATION
XX.XX X-EG	EXISTING GRADE ELEVATION
XX.XX CL	PROPOSED CENTERLINE ELEVATION
XX.XX EC	PROPOSED EDGE CONCRETE ELEVATION
XX.XX TC	PROPOSED TOP CONCRETE ELEVATION
XX.XX FL	PROPOSED FLOWLINE ELEVATION
XX.XX SW	PROPOSED SIDEWALK ELEVATION
XX.XX TSW	PROPOSED TOP OF SIDEWALK
XX.XX TBC	PROPOSED TOP BACK OF CURB ELEVATION
XX.XX THC	PROPOSED TOP OF HEADER CURB ELEVATION
XX.XX TP	PROPOSED TOP PAVEMENT ELEVATION
XX.XX EP	PROPOSED EDGE OF PAVEMENT ELEVATION
XX.XX FG	PROPOSED FINISH GRADE ELEVATION

GENERAL NOTES

GRADING & DRAINAGE GENERAL NOTES:

1. FINAL PAVING, CURB & GUTTER, AND SIDEWALK ELEVATIONS WILL BE PLACED AT ±0.03 FEET.
2. CONTOUR INTERVAL AS SHOWN IS 0.5 FEET.

KEYED NOTES

A EXISTING HEADER CURB TO REMAIN; UNLESS BACK OF NEW SIDEWALK ELEVATION EXCEEDS TOP OF EXISTING HEADER CURB, IN THIS CASE REMOVE AND REPLACE TO SEPARATE THE NEW SIDEWALK AND EXISTING PARKING LOT BEHIND.

MRWM
LANDSCAPE ARCHITECTS
mrwmla.com 505 268 2266

CONSULTANTS

SMITH ENGINEERING COMPANY

UNITY ENGINEERING, PC
STRUCTURAL CONSULTANTS

HDC
HUGHES DESIGN COMPANY
505-553-8210
hdcllc@centurylink.net

RUSTY W. PAYNE
NEW MEXICO
23566
REGISTERED PROFESSIONAL ENGINEER
03/25/2022

ALAMOGORDO GREAT BLOCKS
ALAMOGORDO, NM

MARCH 25, 2022

SUBMITTAL: FOR CONSTRUCTION

REVISIONS

NO.	DATE	DESCRIPTION

PROJECT NO: 20055
CAD DWG FILE:
DESIGNED BY: SJJ/RWP DATE: 03/25/22
DRAWN BY: SJJ DATE: 03/25/22
CHECKED BY: RWP DATE: 03/25/22

SHEET TITLE
ENLARGED GRADING PLAN

DRAWING SHEET
C105

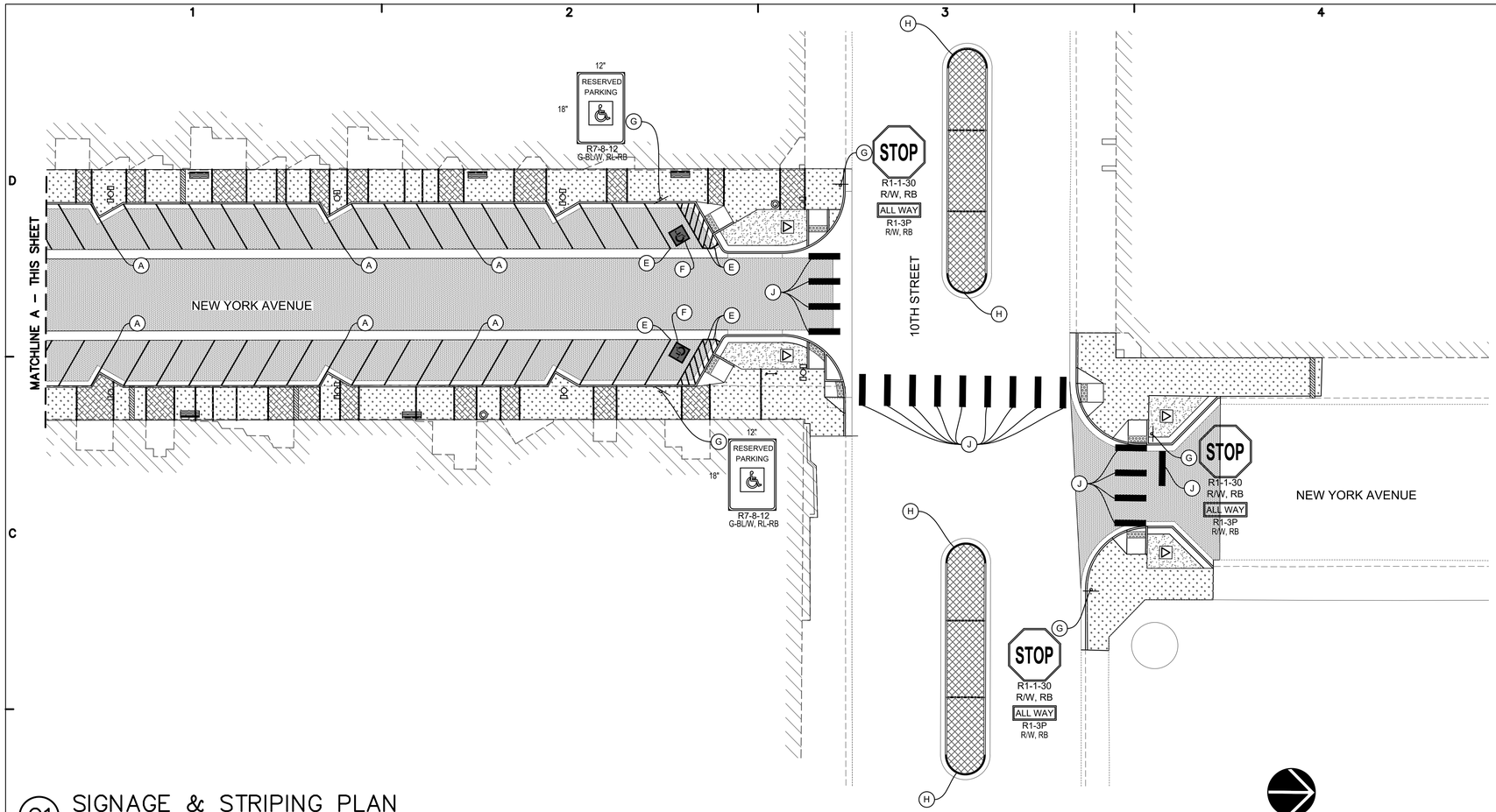

C1 SIGNAGE & STRIPING PLAN
SCALE: 1"=20'–0"

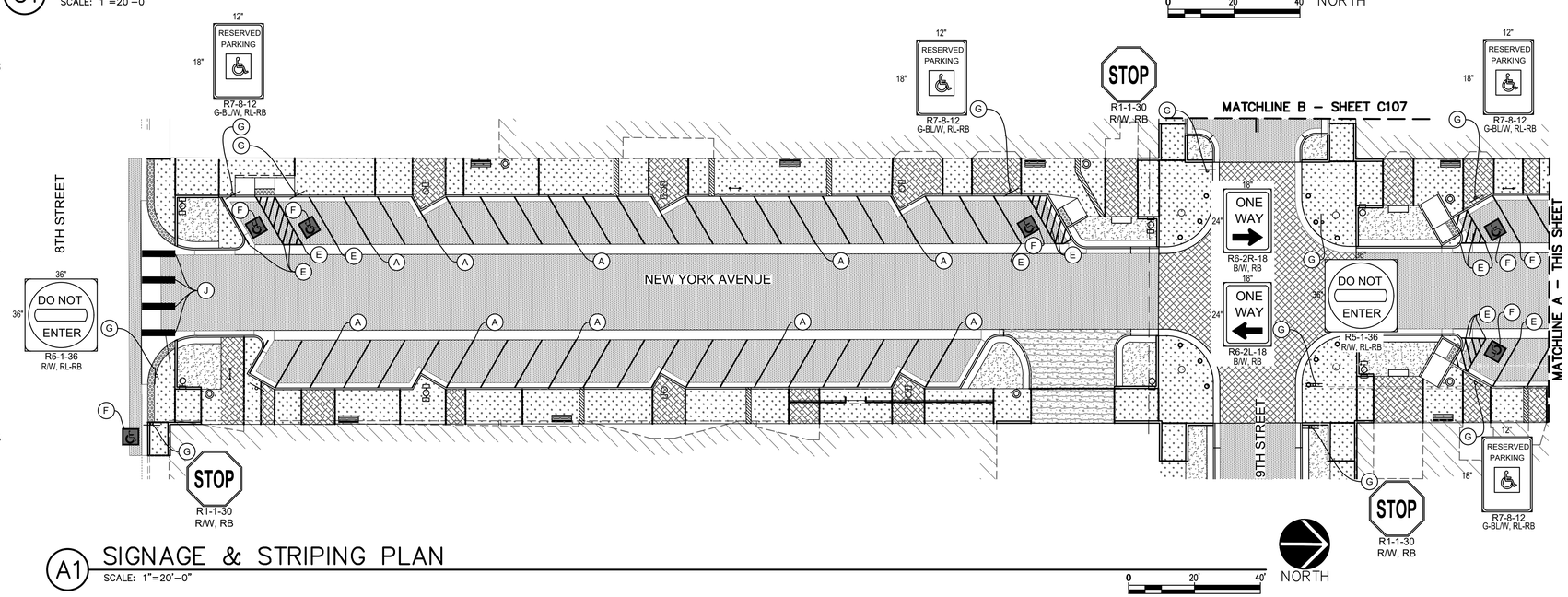

A1 SIGNAGE & STRIPING PLAN
SCALE: 1"=20'–0"

LEGEND

NEW SIGN AND SIGN POST

SHEET NOTES

1. ALL NEW WARNING AND REGULATORY SIGNS SHALL BE 0.125 INCH THICK ALUMINUM PANEL.
2. ANTI-GRAFFITI COATING SHALL BE APPLIED ON ALL REGULATORY, WARNING, GUIDE, AND OTHER SPECIAL SIGNS.
3. QUANTITIES MAY VARY AS FIELD CONDITIONS DICTATE. THE CONTRACTOR SHALL BE PAID FOR ACTUAL QUANTITIES INSTALLED.
4. EACH SIGN FACE SHOWN ON THE PLANS SHALL MEET THE REQUIREMENTS OF THE MANUAL OF UNIFORM TRAFFIC CONTROL DEVICES (LATEST EDITION) FOR PROPER ARRANGEMENT, SPACING OF LETTERS, LETTER HEIGHT, SYMBOLS AND BORDERS FOR THE SPECIFIED SIZE AND MESSAGE AS SHOWN PER PLANS. SUBMIT SHOP DRAWINGS FOR APPROVAL.
5. ALL SIGNING HARDWARE, INCLUDING BRACKETS (FOR MOUNTING ALL STREET NAME SIGNS, W1-8-18 BACK-TO-BACK MOUNTING, ETC.) ARE CONSIDERED INCIDENTAL TO SIGN INSTALLATION. NO ADDITIONAL PAYMENT SHALL BE MADE THEREFORE.
6. SIGN POSTS SHALL BE SQUARE TUBING AS APPROVED BY THE PROJECT MANAGER.
7. CONTRACTOR SHALL FIELD VERIFY ALL SIGNING INFORMATION, TEXT AND LOCATIONS PRIOR TO FABRICATION AND INSTALLATION. NEW SIGN LOCATIONS SHALL BE APPROVED BY THE PROJECT MANAGER.
8. PAVEMENT STRIPING SHALL BE HOT THERMOPLASTIC MARKINGS.
9. ALL SIGN SHEETING SHALL BE TYPE XI SHEETING.
10. HOT THERMOPLASTIC PAVEMENT MARKINGS SHALL BE USED FOR ARROWS, WORD "ONLY", STOP BARS, AND CROSS WALKS.

SIGNAGE & STRIPING KEYED NOTES

- (A) 4" SINGLE CONTINUOUS WHITE 90 MIL HOT THERMOPLASTIC PAVEMENT STRIPE
- (B) 4" DOUBLE CONTINUOUS YELLOW 90 MIL HOT THERMOPLASTIC PAVEMENT STRIPE
- (C) 3M-380 IES PREFORMED PATTERNED PAVEMENT MARKING LEFT ARROW
- (D) 3M-380 IES PREFORMED PATTERNED PAVEMENT MARKING WORD (ONLY)
- (E) 4" SINGLE CONTINUOUS BLUE 90 MIL HOT THERMOPLASTIC PAVEMENT STRIPE
- (F) 3M-380 IES PREFORMED PATTERNED PAVEMENT MARKING HANDICAP SYMBOL
- (G) NEW SINGLE POLE SIGN w/ POST AND BASE POST
- (H) MEDIAN NOSE PAINTED YELLOW
- (J) 24" WHITE 3M-N380 PREFORMED PATTERNED MARKING

MRWM
LANDSCAPE ARCHITECTS
mrwmla.com 505 268 2266

CONSULTANTS

SMITH ENGINEERING COMPANY

UNITY ENGINEERING, PC
STRUCTURAL CONSULTANTS

HDC
HUGHES DESIGN COMPANY
505-553-8210
hdcllc@centurylink.net

RUSTY W. PAYNE
NEW MEXICO
23566
REGISTERED PROFESSIONAL ENGINEER
03/25/2022

ALAMOGORDO
GREAT BLOCKS
ALAMOGORDO, NM

MARCH 25, 2022

SUBMITTAL: FOR CONSTRUCTION

REVISIONS

NO.	DATE	DESCRIPTION

PROJECT NO: 20055
CAD DWG FILE:
DESIGNED BY: SJJ/RWP DATE: 03/25/22
DRAWN BY: SJJ DATE: 03/25/22
CHECKED BY: RWP DATE: 03/25/22

SHEET TITLE

SIGNAGE & STRIPING PLAN

DRAWING SHEET

C106

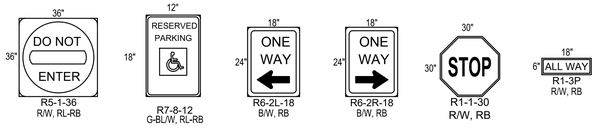

PERMANENT SIGN FACE DETAILS

SCALE: NONE

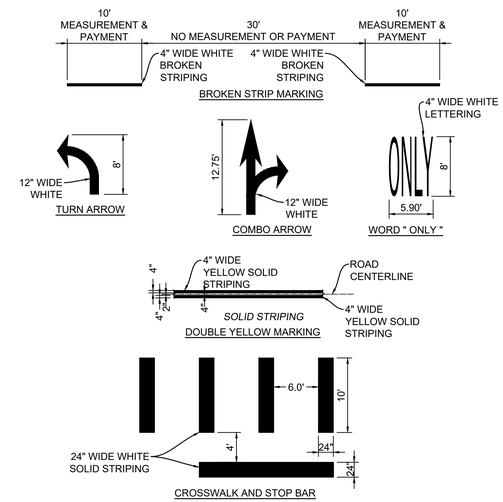

CONTRACTOR NOTE:

1. CROSSWALK AND STOP BARS SHALL BE 3M-N380 PREFORMED PATTERNED MARKING OR APPROVED EQUAL (O.A.E.).
2. ALIGN CROSSWALK WITH CENTERLINE OF WHEEL PATH, COORDINATE WITH OWNER PRIOR TO INSTALLATION.
3. SYMBOLS AND LEGENDS SHALL BE 3M-380IES PREFORMED PATTERNED MARKING O.A.E.
4. BROKEN STRIPING, DOUBLE STRIPING AND SINGLE STRIPING SHALL BE 90 MIL HOT THERMOPLASTIC PAVEMENT STRIPING.
5. MEASUREMENT AND PAYMENT FOR BROKEN STRIPING (10 LF) SHALL BE CALCULATED BY MATERIAL USED.

STRIPING DETAILS

NOT TO SCALE

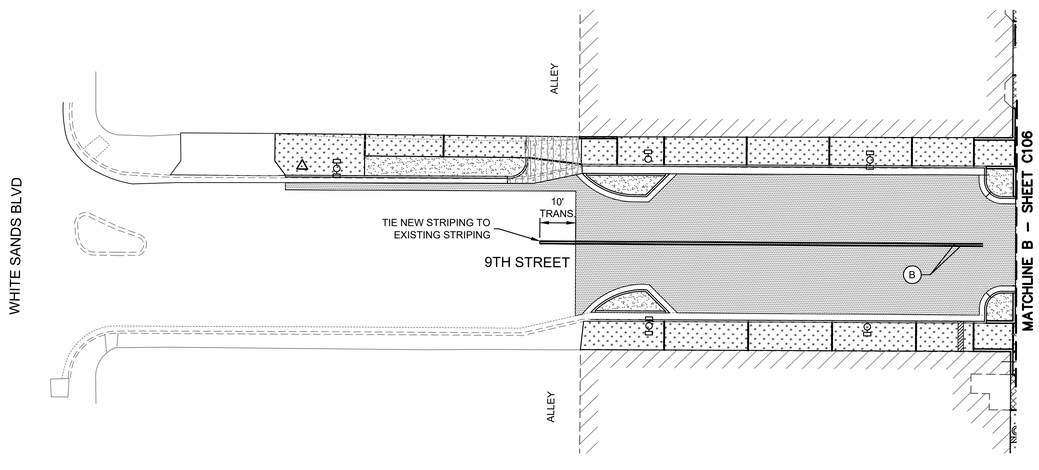

A1 SIGNAGE & STRIPING PLAN

SCALE: 1"=20'-0"

0 20' 40'

NORTH

LEGEND

NEW SIGN AND SIGN POST

SHEET NOTES

1. ALL NEW WARNING AND REGULATORY SIGNS SHALL BE 0.125 INCH THICK ALUMINUM PANEL.
2. ANTI-GRAFFITI COATING SHALL BE APPLIED ON ALL REGULATORY, WARNING, GUIDE, AND OTHER SPECIAL SIGNS.
3. QUANTITIES MAY VARY AS FIELD CONDITIONS DICTATE. THE CONTRACTOR SHALL BE PAID FOR ACTUAL QUANTITIES INSTALLED.
4. EACH SIGN FACE SHOWN ON THE PLANS SHALL MEET THE REQUIREMENTS OF THE MANUAL OF UNIFORM TRAFFIC CONTROL DEVICES (LATEST EDITION) FOR PROPER ARRANGEMENT, SPACING OF LETTERS, LETTER HEIGHT, SYMBOLS AND BORDERS FOR THE SPECIFIED SIZE AND MESSAGE AS SHOWN PER PLANS. SUBMIT SHOP DRAWINGS FOR APPROVAL.
5. ALL SIGNING HARDWARE, INCLUDING BRACKETS (FOR MOUNTING ALL STREET NAME SIGNS, W1-8-18 BACK-TO-BACK MOUNTING, ETC.) ARE CONSIDERED INCIDENTAL TO SIGN INSTALLATION. NO ADDITIONAL PAYMENT SHALL BE MADE THEREFORE.
6. SIGN POSTS SHALL BE SQUARE TUBING AS APPROVED BY THE PROJECT MANAGER.
7. CONTRACTOR SHALL FIELD VERIFY ALL SIGNING INFORMATION, TEXT AND LOCATIONS PRIOR TO FABRICATION AND INSTALLATION. NEW SIGN LOCATIONS SHALL BE APPROVED BY THE PROJECT MANAGER.
8. PAVEMENT STRIPING SHALL BE HOT THERMOPLASTIC MARKINGS.
9. ALL SIGN SHEETING SHALL BE TYPE XI SHEETING.
10. HOT THERMOPLASTIC PAVEMENT MARKINGS SHALL BE USED FOR ARROWS, WORD "ONLY", STOP BARS, AND CROSS WALKS.

SIGNAGE & STRIPING KEYED NOTES

- (A) 4" SINGLE CONTINUOUS WHITE 90 MIL HOT THERMOPLASTIC PAVEMENT STRIPE
- (B) 4" DOUBLE CONTINUOUS YELLOW 90 MIL HOT THERMOPLASTIC PAVEMENT STRIPE
- (C) 3M-380 IES PREFORMED PATTERNED PAVEMENT MARKING LEFT ARROW
- (D) 3M-380 IES PREFORMED PATTERNED PAVEMENT MARKING WORD (ONLY)
- (E) 4" SINGLE CONTINUOUS BLUE 90 MIL HOT THERMOPLASTIC PAVEMENT STRIPE
- (F) 3M-380 IES PREFORMED PATTERNED PAVEMENT MARKING HANDICAP SYMBOL
- (G) NEW SINGLE POLE SIGN w/ POST AND BASE POST
- (H) MEDIAN NOSE PAINTED YELLOW
- (J) 24" WHITE 3M-N380 PREFORMED PATTERNED MARKING

MRWM
LANDSCAPE ARCHITECTS
mrwmla.com 505 268 2266

CONSULTANTS

SMITH ENGINEERING COMPANY

UNITY ENGINEERING, PC
STRUCTURAL CONSULTANTS

HDC
HUGHES DESIGN COMPANY
505-553-8210
hdcllc@centurylink.net

RUSTY W. PAYNE
NEW MEXICO
23566
REGISTERED PROFESSIONAL ENGINEER
03/25/2022

ALAMOGORDO
GREAT BLOCKS
ALAMOGORDO, NM

MARCH 25, 2022

SUBMITTAL: FOR CONSTRUCTION

REVISIONS

NO.	DATE	DESCRIPTION

PROJECT NO: 20055
CAD DWG FILE:
DESIGNED BY: SJJ/RWP DATE: 03/25/22
DRAWN BY: SJJ DATE: 03/25/22
CHECKED BY: RWP DATE: 03/25/22

SHEET TITLE

SIGNAGE & STRIPING PLAN

DRAWING SHEET

C107

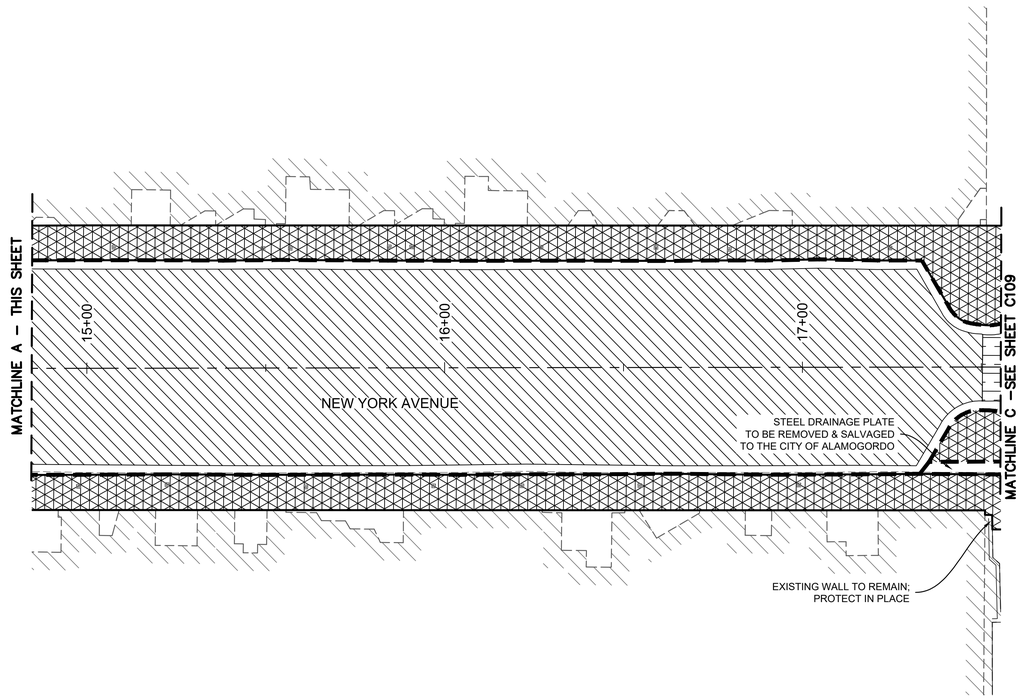

C1 DEMOLITION PLAN
SCALE: 1"=20'-0"

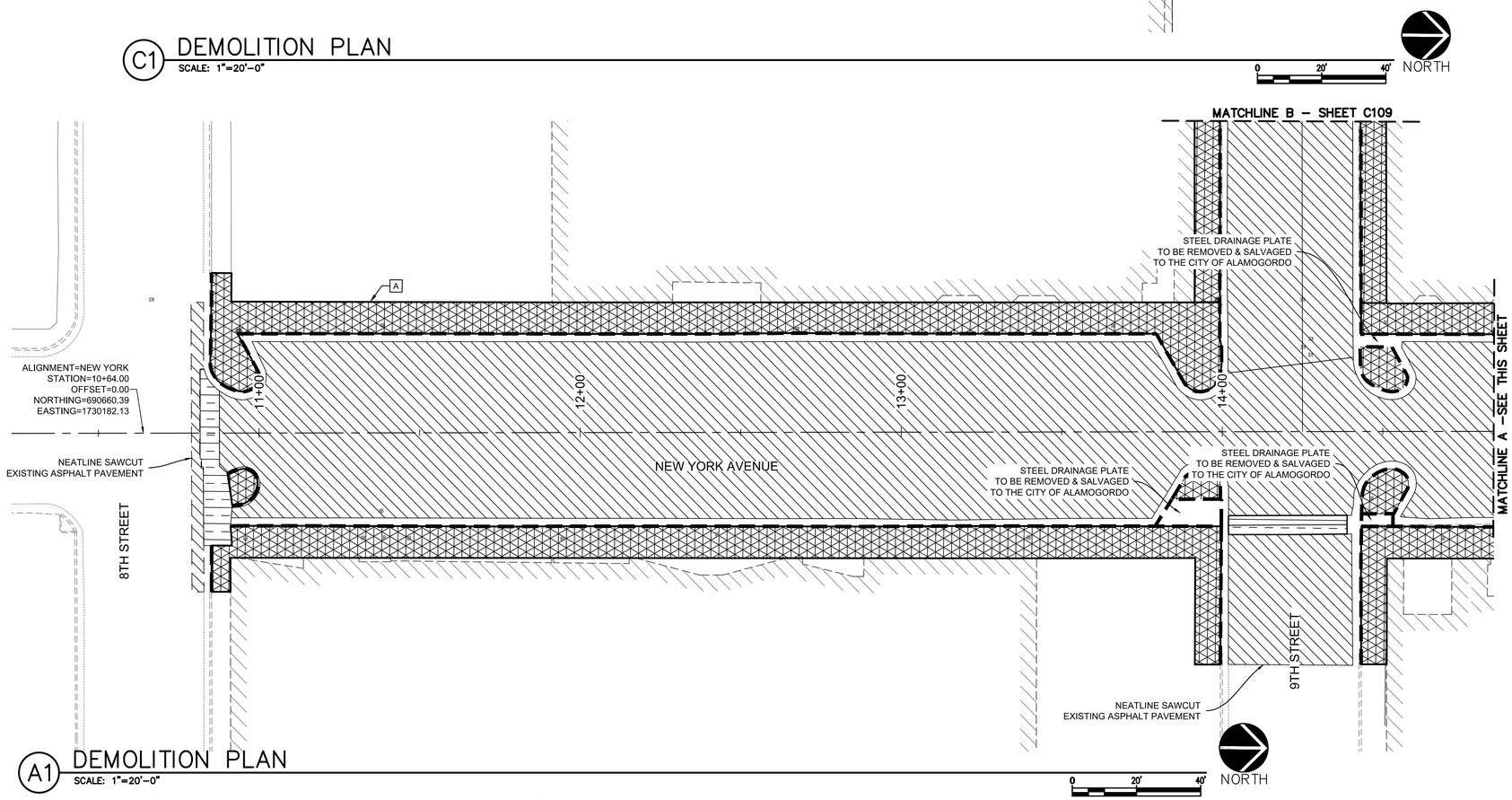

A1 DEMOLITION PLAN
SCALE: 1"=20'-0"

LEGEND

- ASPHALT PAVEMENT REMOVAL
- CONCRETE PAVEMENT REMOVAL
- CONCRETE SIDEWALK REMOVAL SEE LANDSCAPE SIDEWALK DEMOLITION PLAN, SHEETS LD101 & LD102
- CURB & GUTTER REMOVAL

GENERAL NOTES

1. CONTRACTOR SHALL MAKE EVERY EFFORT TO SALVAGE SITE MATERIALS, AND EQUIPMENT, SUCH AS LIGHT PEDESTALS, IRRIGATION CONTROL BOXES, ETC.

DEMOLITION KEYED NOTES

A EXISTING HEADER CURB TO REMAIN; UNLESS BACK OF NEW SIDEWALK ELEVATION EXCEEDS TOP OF EXISTING HEADER CURB, IN THIS CASE REMOVE AND REPLACE TO SEPARATE THE NEW SIDEWALK AND EXISTING PARKING LOT BEHIND.

MRWM
LANDSCAPE ARCHITECTS
mrwmla.com 505 268 2266

CONSULTANTS

SMITH ENGINEERING COMPANY

UNITY ENGINEERING, PC
STRUCTURAL CONSULTANTS

HDC
HUGHES DESIGN COMPANY
505-553-8210
hdcllc@centurylink.net

RUSTY W. PAYNE
NEW MEXICO
23566
REGISTERED PROFESSIONAL ENGINEER
03/25/2022

ALAMOGORDO GREAT BLOCKS
ALAMOGORDO, NM

MARCH 25, 2022

SUBMITTAL: FOR CONSTRUCTION

REVISIONS

NO.	DATE	DESCRIPTION

PROJECT NO: 20055
CAD DWG FILE:
DESIGNED BY: SJJ/RWP DATE: 03/25/22
DRAWN BY: SJJ DATE: 03/25/22
CHECKED BY: RWP DATE: 03/25/22

SHEET TITLE

ROADWAY DEMOLITION PLAN

DRAWING SHEET
C108

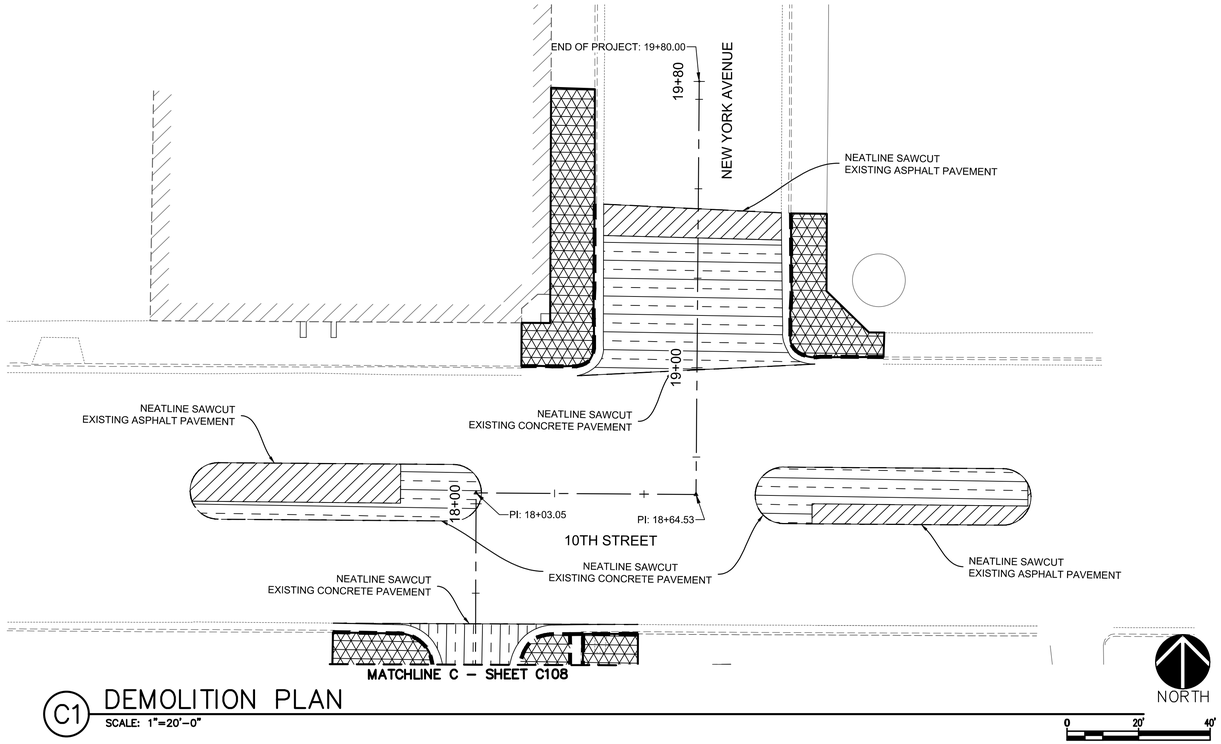

C1 DEMOLITION PLAN
SCALE: 1"=20'-0"

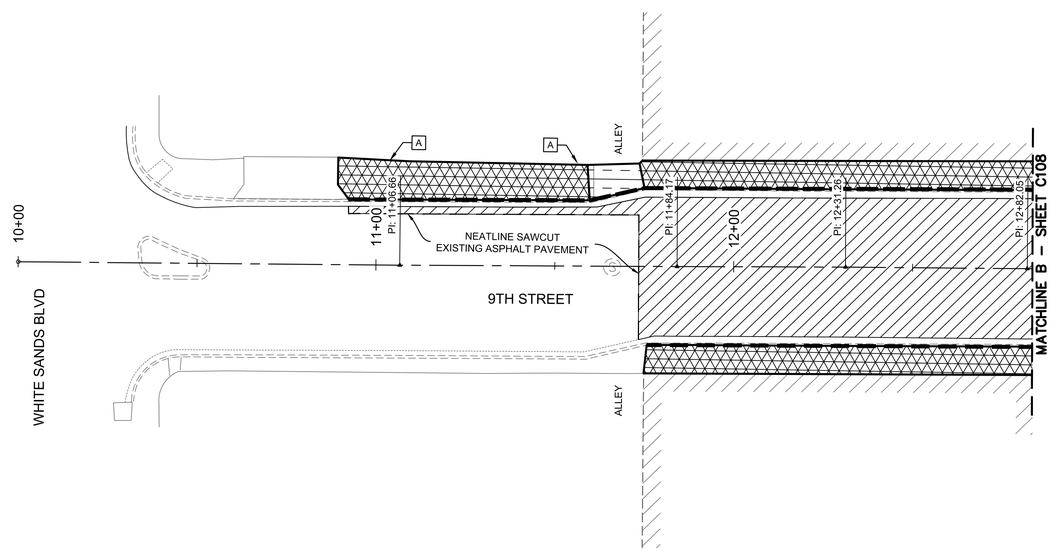

A1 DEMOLITION PLAN
SCALE: 1"=20'-0"

LEGEND

- ASPHALT PAVEMENT REMOVAL
- CONCRETE PAVEMENT REMOVAL
- CONCRETE SIDEWALK REMOVAL SEE LANDSCAPE SIDEWALK DEMOLITION PLAN, SHEETS LD101 & LD102
- CURB & GUTTER REMOVAL

GENERAL NOTES

1. CONTRACTOR SHALL MAKE EVERY EFFORT TO SALVAGE SITE MATERIALS, AND EQUIPMENT, SUCH AS LIGHT PEDESTALS, IRRIGATION CONTROL BOXES, ETC.

DEMOLITION KEYED NOTES

A EXISTING HEADER CURB TO REMAIN; UNLESS BACK OF NEW SIDEWALK ELEVATION EXCEEDS TOP OF EXISTING HEADER CURB, IN THIS CASE REMOVE AND REPLACE TO SEPARATE THE NEW SIDEWALK AND EXISTING PARKING LOT BEHIND.

MRWM
LANDSCAPE ARCHITECTS
mrwmla.com 505 268 2266

CONSULTANTS

SMITH ENGINEERING COMPANY

UNITY ENGINEERING, PC
STRUCTURAL CONSULTANTS

HDC
HUGHES DESIGN COMPANY
505-553-8210
hdcllc@centurylink.net

RUSTY W. PAYNE
NEW MEXICO
23566
REGISTERED PROFESSIONAL ENGINEER
03/25/2022

ALAMOGORDO
GREAT BLOCKS
ALAMOGORDO, NM

MARCH 25, 2022

SUBMITTAL: FOR CONSTRUCTION

REVISIONS

NO.	DATE	DESCRIPTION

PROJECT NO: 20055
CAD DWG FILE:
DESIGNED BY: SJJ/RWP DATE: 03/25/22
DRAWN BY: SJJ DATE: 03/25/22
CHECKED BY: RWP DATE: 03/25/22

SHEET TITLE

ROADWAY
DEMOLITION PLAN

DRAWING SHEET
C109

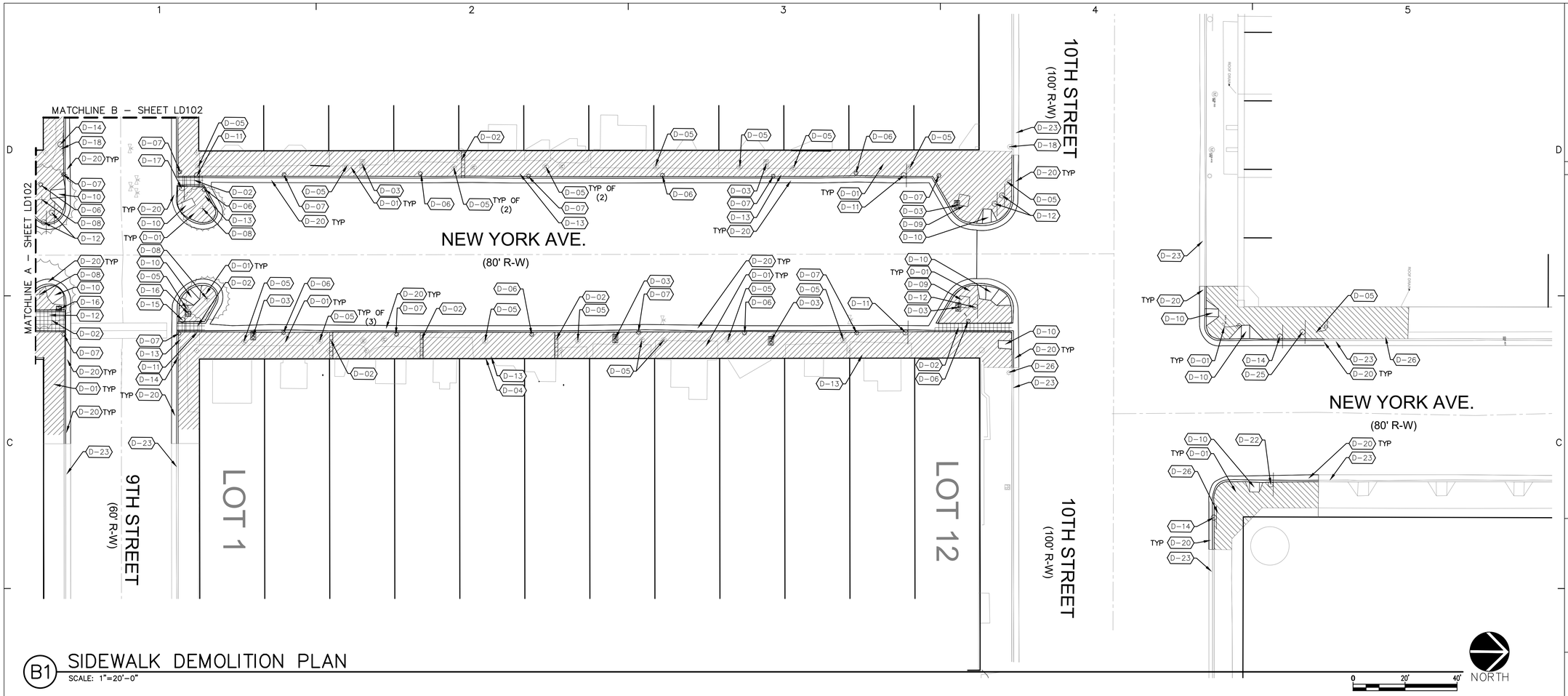

B1 SIDEWALK DEMOLITION PLAN

SCALE: 1"=20'-0"

DEMOLITION KEYED NOTES

CODE	DESCRIPTION
D-01	REMOVE AND DISPOSE OF EXISTING CONCRETE PAVEMENT TO EXTENTS SHOWN ON PLAN. SAW CUT OR REMOVE TO THE NEAREST JOINT.
D-02	REMOVE AND DISPOSE OF EXISTING METAL GRATE.
D-03	REMOVE EXISTING BENCH AND ASSOCIATED FOOTINGS. RETURN BENCH TO OWNER.
D-04	EXISTING HOSE BIBB TO REMAIN. CONTRACTOR SHALL PROTECT HOSE BIBB AND ANY ASSOCIATED PIPING DURING DEMOLITION AND CONSTRUCTION.
D-05	EXISTING WATER METER BOX TO BE ADJUSTED TO GRADE. CONTRACTOR SHALL PROTECT WATER METER AND ASSOCIATED PIPING DURING CONSTRUCTION.
D-06	REMOVE EXISTING DECORATIVE STREET LIGHT AND ASSOCIATED FOOTINGS, CONDUITS AND WIRING. RETURN POLES TO OWNER. CONTRACTOR SHALL COORDINATE WITH OWNER PRIOR TO DEMOLITION. ALL WORK SHALL BE DONE IN ACCORDANCE WITH N.E.C.
D-07	REMOVE EXISTING COBRA-HEAD POLE/ARM/FIXTURE AND ASSOCIATED FOOTING, CONDUIT AND WIRING. RETURN TO OWNER. CONTRACTOR TO COORDINATE WITH OWNER PRIOR TO DEMOLITION. ALL WORK SHALL BE DONE IN ACCORDANCE WITH N.E.C.
D-08	REMOVE AND DISPOSE OF EXISTING TREE. CONTRACTOR SHALL GRIND STUMP TO 24" BELOW FINISH GRADE. REMOVE GRINDINGS FROM SITE.
D-09	REMOVE AND DISPOSE OF EXISTING PLANTINGS, MULCH AND SOIL AS REQUIRED TO CONSTRUCT IMPROVEMENTS. SEE CONSTRUCTION AND PLANTING PLANS FOR LOCATIONS OF SITE IMPROVEMENTS.
D-10	REMOVE AND DISPOSE OF EXISTING CONCRETE ACCESSIBLE RAMP.
D-11	REMOVE AND DISPOSE OF EXISTING ACCESSIBLE PARKING SIGN AND ASSOCIATED FOOTINGS.
D-12	REMOVE EXISTING 'DOWNTOWN WELCOME' SIGN AND ASSOCIATED FOOTINGS. RETURN SIGN TO OWNER

DEMOLITION KEYED NOTES

CODE	DESCRIPTION
D-13	REMOVE EXISTING TRASH RECEPTACLE AND RETURN TO OWNER.
D-14	REMOVE EXISTING 'STOP' SIGN AND ASSOCIATED FOOTING. REFER TO CIVIL SIGNAGE PLAN FOR NEW SIGN INSTALLATION.
D-15	REMOVE EXISTING 'ONE WAY' SIGN AND ASSOCIATED FOOTING. REFER TO CIVIL SIGNAGE PLAN FOR NEW SIGN INSTALLATION.
D-16	REMOVE AND DISPOSE OF EXISTING ELECTRICAL PULL BOX, CONDUITS AND ASSOCIATED WIRING. COORDINATE DEMOLITION OPERATIONS WITH CITY AND PNM. SEE ALSO ELECTRICAL PLANS. ALL WORK SHALL BE DONE IN ACCORDANCE WITH N.E.C.
D-17	REMOVE EXISTING 'DO NOT ENTER' SIGN AND ASSOCIATED FOOTING. REFER TO CIVIL SIGNAGE PLANS FOR NEW SIGN INSTALLATION.
D-18	EXISTING FIRE HYDRANT TO REMAIN ACCESSIBLE THROUGHOUT CONSTRUCTION.
D-20	REMOVE AND DISPOSE OF EXISTING CURB & GUTTER. REFER TO CIVIL DEMOLITION PLAN FOR EXTENTS OF REMOVAL.
D-22	REMOVE EXISTING SPEED LIMIT SIGN AND ASSOCIATED FOOTING. REFER TO CIVIL SIGNAGE PLAN FOR NEW SIGN INSTALLATION.
D-23	EXISTING CURB AND GUTTER TO REMAIN.
D-25	REMOVE EXISTING "RESERVED PARKING" SIGN AS ASSOCIATED FOOTING. REFER TO CIVIL SIGNAGE PLAN FOR NEW SIGN INSTALLATION.
D-26	EXISTING LIGHT POLE TO REMAIN.

GENERAL DEMOLITION NOTES

CODE	DESCRIPTION
GD-01	REFER TO CIVIL DEMOLITION PLANS FOR ROADWAY DEMOLITION.
GD-02	ALL EXISTING IRRIGATION SYSTEM MAINLINE AND LATERAL PIPING SHALL BE CAPPED AND ABANDONED IN PLACE.
GD-03	ANY AND ALL GRADE LEVEL AND ABOVE GRADE LEVEL IRRIGATION EQUIPMENT (RISERS, FITTINGS, SPRINKLERS, VALVE BOXES, ETC.) SHALL BE REMOVED. WHERE SPECIFICALLY SHOWN ON THE PLAN, CAREFULLY REMOVE AND RETURN UNDAMAGED IRRIGATION EQUIPMENT TO OWNER.
GD-04	CONTRACTOR SHALL FILL AND COMPACT ALL VOIDS CREATED BY DEMOLITION WORK WITH CLEAN BACKFILL MATERIAL WHICH SHALL BE APPROVED BY OWNER PRIOR TO BACKFILL OPERATIONS.
GD-05	CONTRACTOR SHALL PROTECT EXISTING SIGNS AND UTILITIES TO REMAIN FROM DAMAGE WITHIN THE CONSTRUCTION AREA. ANY DAMAGE TO EXISTING UTILITIES CAUSED BY CONSTRUCTION ACTIVITY SHALL BE REPAIRED BY THE CONTRACTOR AND APPROVED BY THE CONSTRUCTION ENGINEER AT NO ADDITIONAL COST TO THE OWNER.
GD-06	TWO WORKING DAYS PRIOR TO ANY EXCAVATION, THE CONTRACTOR SHALL CONTACT NEW MEXICO ONE CALL SYSTEM (1-800-321-2537) FOR LOCATION OF EXISTING UTILITIES.
GD-07	CONTRACTOR SHALL TAKE ALL NECESSARY PRECAUTIONS TO ENSURE NO DAMAGE OCCURS TO EXISTING STRUCTURES AND PAVEMENT TO REMAIN AND ITEMS TO BE SALVAGED. ANY DAMAGE TO ITEMS TO REMAIN OR TO BE SALVAGED RESULTING FROM CONSTRUCTION OPERATIONS SHALL BE REPAIRED AND/OR REPLACED AT NO ADDITIONAL COST TO THE OWNER.
GD-08	ALL AREAS ADJACENT TO THE SITE SHALL BE MAINTAINED IN A CLEAN CONDITION, MUD AND DUST FREE AT ALL TIMES.
GD-09	ALL EXISTING TRASH RECEPTACLES AND RECYCLING STATIONS WITHIN PROJECT LIMITS (NOT SHOWN) SHALL BE SALVAGED AND RETURNED TO THE OWNER.
GD-10	PRIOR TO DEMOLITION OPERATIONS, THE CONTRACTOR SHALL BE REQUIRED TO DOCUMENT ALL EXISTING CONDITIONS DIRECTLY ADJACENT TO THE PROJECT AREA AND THE CONDITION OF ANY EXISTING ITEMS TO REMAIN WITHIN THE PROJECT AREA. CONTRACTOR SHALL PROVIDE DOCUMENTATION TO THE OWNER BEFORE PROCEEDING WITH ANY WORK.
GD-11	CONTRACTOR SHALL RETURN ALL REMOVED TRAFFIC SIGNAGE TO THE OWNER. NO TRAFFIC SIGNAGE SHALL BE REMOVED UNTIL APPROVED TRAFFIC CONTROL PLAN WITH TEMPORARY SIGNAGE AND BARRIERS ARE IN PLACE.
GD-12	CONTRACTOR SHALL REVIEW AND CONFIRM ALL ELECTRICAL ITEMS DESIGNATED TO BE REMOVED WITH THE CITY OF ALAMOGORDO AND PNM PRIOR TO PROCEEDING WITH DEMOLITION OPERATIONS.
GD-13	EXISTING UTILITIES WITHIN THE NEW STREET AND SIDEWALK SECTIONS SHALL BE ADJUSTED ACCURATELY TO MATCH THE GRADE AND ELEVATION OF THE FINAL PAVED SURFACE. THE CONTRACTOR IS RESPONSIBLE FOR COORDINATNIG WITH CITY OF ALAMOGORDO TO VERIFY LOCATIONS OF UTILITIES TO BE ADJUSTED TO MATCH GRADE.

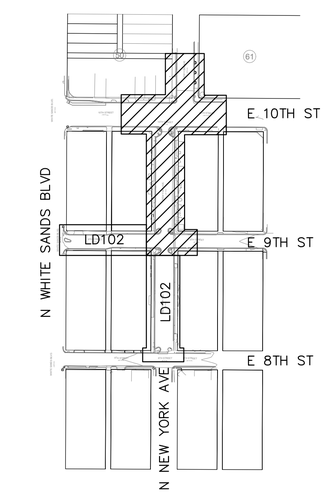

KEY MAP

MRWM
LANDSCAPE ARCHITECTS
mrwmla.com 505 268 2266

CONSULTANTS

SMITH ENGINEERING COMPANY

UNITY ENGINEERING, PC
STRUCTURAL CONSULTANTS

HDC
HUGHES DESIGN COMPANY
505-553-8210
hdcllc@centurylink.net

STATE OF NEW MEXICO
KENDRICK DEWITT HIS
NO. 406
REGISTERED LANDSCAPE ARCHITECT
3.25.22

ALAMOGORDO GREAT BLOCKS

ALAMOGORDO, NM

MARCH 25, 2022

SUBMITTAL: FOR CONSTRUCTION

REVISIONS

NO.	DATE	DESCRIPTION

PROJECT NO: 20055

CAD DWG FILE:

DESIGNED BY: RDL/JS/KA DATE: 03/25/22

DRAWN BY: JS/KA DATE: 03/25/22

CHECKED BY: JS/RDL DATE: 03/25/22

SHEET TITLE

SIDEWALK DEMOLITION PLAN

DRAWING SHEET

LD101

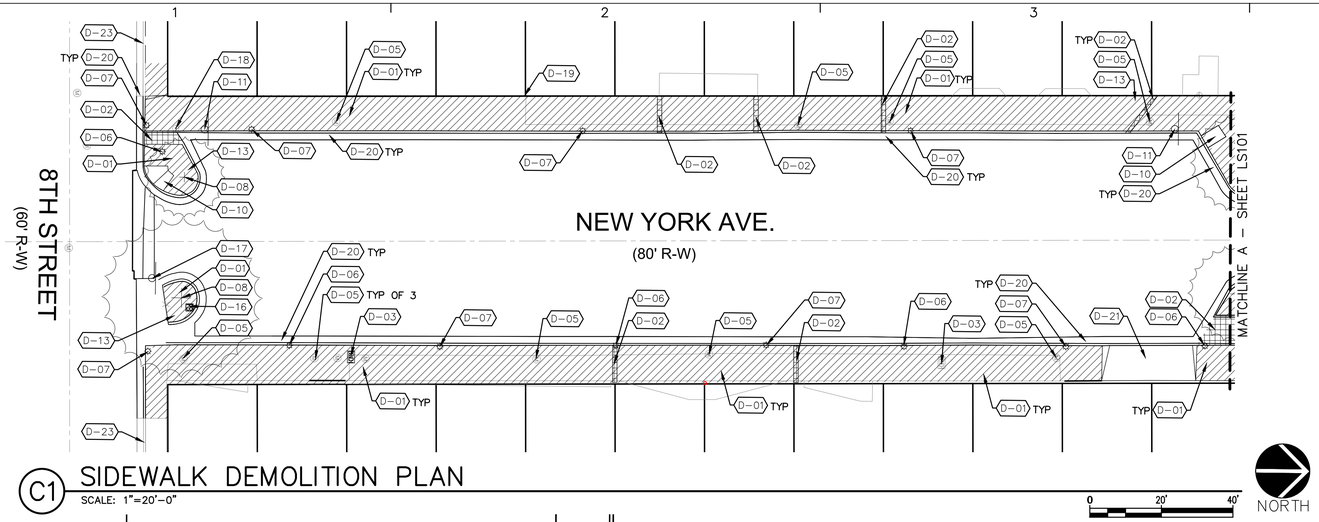

C1 SIDEWALK DEMOLITION PLAN
SCALE: 1"=20'-0"

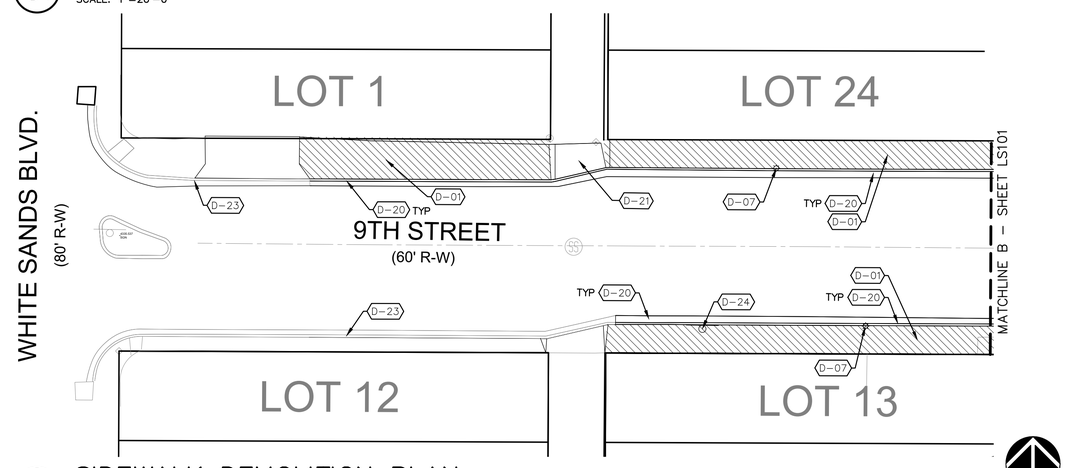

B1 SIDEWALK DEMOLITION PLAN
SCALE: 1"=20'-0"

DEMOLITION KEYED NOTES

CODE	DESCRIPTION
D-01	REMOVE AND DISPOSE OF EXISTING CONCRETE PAVEMENT TO EXTENTS SHOWN ON PLAN. SAW CUT OR REMOVE TO THE NEAREST JOINT.
D-02	REMOVE AND DISPOSE OF EXISTING METAL GRATE.
D-03	REMOVE EXISTING BENCH AND ASSOCIATED FOOTINGS. RETURN BENCH TO OWNER.
D-05	EXISTING WATER METER BOX TO BE ADJUSTED TO GRADE. CONTRACTOR SHALL PROTECT WATER METER AND ASSOCIATED PIPING DURING CONSTRUCTION.
D-06	REMOVE EXISTING DECORATIVE STREET LIGHT AND ASSOCIATED FOOTINGS, CONDUITS AND WIRING. RETURN POLES TO OWNER. CONTRACTOR SHALL COORDINATE WITH OWNER PRIOR TO DEMOLITION. ALL WORK SHALL BE DONE IN ACCORDANCE WITH N.E.C.
D-07	REMOVE EXISTING COBRA-HEAD POLE/ARM/FIXTURE AND ASSOCIATED FOOTING, CONDUIT AND WIRING. RETURN TO OWNER. CONTRACTOR TO COORDINATE WITH OWNER PRIOR TO DEMOLITION. ALL WORK SHALL BE DONE IN ACCORDANCE WITH N.E.C.
D-08	REMOVE AND DISPOSE OF EXISTING TREE. CONTRACTOR SHALL GRIND STUMP TO 24" BELOW FINISH GRADE. REMOVE GRINDINGS FROM SITE.
D-10	REMOVE AND DISPOSE OF EXISTING CONCRETE ACCESSIBLE RAMP.
D-11	REMOVE AND DISPOSE OF EXISTING ACCESSIBLE PARKING SIGN AND ASSOCIATED FOOTINGS.
D-13	REMOVE EXISTING TRASH RECEPTACLE AND RETURN TO OWNER.

DEMOLITION KEYED NOTES

CODE	DESCRIPTION
D-16	REMOVE AND DISPOSE OF EXISTING ELECTRICAL PULL BOX, CONDUITS AND ASSOCIATED WIRING. COORDINATE DEMOLITION OPERATIONS WITH CITY AND PNM. SEE ALSO ELECTRICAL PLANS. ALL WORK SHALL BE DONE IN ACCORDANCE WITH N.E.C.
D-17	REMOVE EXISTING `DO NOT ENTER` SIGN AND ASSOCIATED FOOTING. REFER TO CIVIL SIGNAGE PLANS FOR NEW SIGN INSTALLATION.
D-18	EXISTING FIRE HYDRANT TO REMAIN ACCESSIBLE THROUGHOUT CONSTRUCTION.
D-19	EXISTING 2" DRAIN PIPE/CLEAN OUT TO REMAIN.
D-20	REMOVE AND DISPOSE OF EXISTING CURB & GUTTER. REFER TO CIVIL DEMOLITION PLAN FOR EXTENTS OF REMOVAL.
D-21	REMOVE AND DISPOSE OF EXISTING CONCRETE DRIVE APRON.
D-23	EXISTING CURB AND GUTTER TO REMAIN.
D-24	REMOVE EXISTING "ONE HOUR PARKING" SIGN AND ASSOCIATED FOOTING. REFER TO CIVIL SIGNAGE PLAN FOR NEW SIGN INSTALLATION.

GENERAL DEMOLITION NOTES

CODE	DESCRIPTION
GD-01	REFER TO CIVIL DEMOLITION PLANS FOR ROADWAY DEMOLITION.
GD-02	ALL EXISTING IRRIGATION SYSTEM MAINLINE AND LATERAL PIPING SHALL BE CAPPED AND ABANDONED IN PLACE.
GD-03	ANY AND ALL GRADE LEVEL AND ABOVE GRADE LEVEL IRRIGATION EQUIPMENT (RISERS, FITTINGS, SPRINKLERS, VALVE BOXES, ETC.) SHALL BE REMOVED. WHERE SPECIFICALLY SHOWN ON THE PLAN, CAREFULLY REMOVE AND RETURN UNDAMAGED IRRIGATION EQUIPMENT TO OWNER.
GD-04	CONTRACTOR SHALL FILL AND COMPACT ALL VOIDS CREATED BY DEMOLITION WORK WITH CLEAN BACKFILL MATERIAL WHICH SHALL BE APPROVED BY OWNER PRIOR TO BACKFILL OPERATIONS.
GD-05	CONTRACTOR SHALL PROTECT EXISTING SIGNS AND UTILITIES TO REMAIN FROM DAMAGE WITHIN THE CONSTRUCTION AREA. ANY DAMAGE TO EXISTING UTILITIES CAUSED BY CONSTRUCTION ACTIVITY SHALL BE REPAIRED BY THE CONTRACTOR AND APPROVED BY THE CONSTRUCTION ENGINEER AT NO ADDITIONAL COST TO THE OWNER.
GD-06	TWO WORKING DAYS PRIOR TO ANY EXCAVATION, THE CONTRACTOR SHALL CONTACT NEW MEXICO ONE CALL SYSTEM (1-800-321-2537) FOR LOCATION OF EXISTING UTILITIES.
GD-07	CONTRACTOR SHALL TAKE ALL NECESSARY PRECAUTIONS TO ENSURE NO DAMAGE OCCURS TO EXISTING STRUCTURES AND PAVEMENT TO REMAIN AND ITEMS TO BE SALVAGED. ANY DAMAGE TO ITEMS TO REMAIN OR TO BE SALVAGED RESULTING FROM CONSTRUCTION OPERATIONS SHALL BE REPAIRED AND/OR REPLACED AT NO ADDITIONAL COST TO THE OWNER.
GD-08	ALL AREAS ADJACENT TO THE SITE SHALL BE MAINTAINED IN A CLEAN CONDITION, MUD AND DUST FREE AT ALL TIMES.
GD-09	ALL EXISTING TRASH RECEPTACLES AND RECYCLING STATIONS WITHIN PROJECT LIMITS (NOT SHOWN) SHALL BE SALVAGED AND RETURNED TO THE OWNER.
GD-10	PRIOR TO DEMOLITION OPERATIONS, THE CONTRACTOR SHALL BE REQUIRED TO DOCUMENT ALL EXISTING CONDITIONS DIRECTLY ADJACENT TO THE PROJECT AREA AND THE CONDITION OF ANY EXISTING ITEMS TO REMAIN WITHIN THE PROJECT AREA. CONTRACTOR SHALL PROVIDE DOCUMENTATION TO THE OWNER BEFORE PROCEEDING WITH ANY WORK.
GD-11	CONTRACTOR SHALL RETURN ALL REMOVED TRAFFIC SIGNAGE TO THE OWNER. NO TRAFFIC SIGNAGE SHALL BE REMOVED UNTIL APPROVED TRAFFIC CONTROL PLAN WITH TEMPORARY SIGNAGE AND BARRIERS ARE IN PLACE.
GD-12	CONTRACTOR SHALL REVIEW AND CONFIRM ALL ELECTRICAL ITEMS DESIGNATED TO BE REMOVED WITH THE CITY OF ALAMOGORDO AND PNM PRIOR TO PROCEEDING WITH DEMOLITION OPERATIONS.
GD-13	EXISTING UTILITIES WITHIN THE NEW STREET AND SIDEWALK SECTIONS SHALL BE ADJUSTED ACCURATELY TO MATCH THE GRADE AND ELEVATION OF THE FINAL PAVED SURFACE. THE CONTRACTOR IS RESPONSIBLE FOR COORDINATNIG WITH CITY OF ALAMOGORDO TO VERIFY LOCATIONS OF UTILITIES TO BE ADJUSTED TO MATCH GRADE.

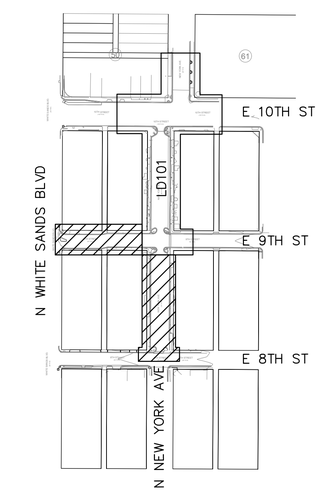

KEY MAP

NORTH

MRWM
LANDSCAPE ARCHITECTS
mrwmla.com 505 268 2266

CONSULTANTS

SMITH ENGINEERING COMPANY

UNITY ENGINEERING, PC
STRUCTURAL CONSULTANTS

HDC
HUGHES DESIGN COMPANY
505-553-8210
hdcllc@centurylink.net

STATE OF NEW MEXICO
ROBERT DUTTIS
UNIT 406
REGISTERED LANDSCAPE ARCHITECT
3.25.22

ALAMOGORDO GREAT BLOCKS
ALAMOGORDO, NM

MARCH 25, 2022

SUBMITTAL: FOR CONSTRUCTION

REVISIONS

NO.	DATE	DESCRIPTION

PROJECT NO: 20055
CAD DWG FILE:
DESIGNED BY: RDL/JS/KA DATE: 03/25/22
DRAWN BY: JS/KA DATE: 03/25/22
CHECKED BY: JS/RDL DATE: 03/25/22

SHEET TITLE

SIDEWALK DEMOLITION PLAN

DRAWING SHEET
LD102

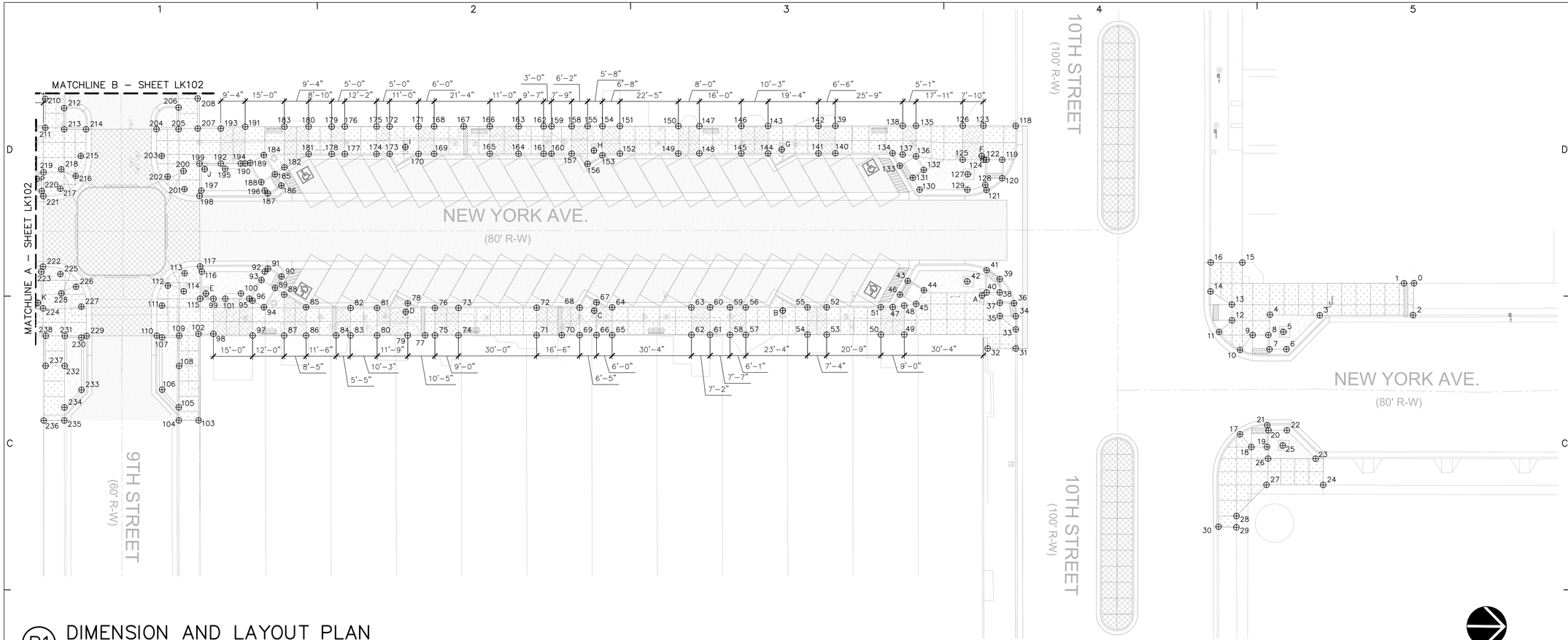

B1 DIMENSION AND LAYOUT PLAN

SCALE: 1"=20'–0"

LAYOUT GENERAL NOTES

A. LANDSCAPE ARCHITECT WILL PROVIDE ELECTRONIC VERSIONS OF THE PLAN FOR LAYOUT AND STAKING PURPOSES.
B. FINAL LAYOUT OF ALL IMPROVEMENTS SHALL BE APPROVED BY LANDSCAPE ARCHITECT IN FIELD PRIOR TO CONSTRUCTION.

⊕X COORDINATE POINTS – LIGHT POLES

X – EASTING Y – NORTHING

0	X=1730191.70	Y=691512.96
A	X=1730198.30	Y=691347.52
B	X=1730204.98	Y=691271.30
C	X=1730205.86	Y=691199.06
D	X=1730207.11	Y=691126.87
E	X=1730201.00	Y=691050.27
F	X=1730144.87	Y=691346.81
G	X=1730143.29	Y=691270.17
H	X=1730144.52	Y=691198.25
I	X=1730144.01	Y=691126.00
J	X=1730153.35	Y=691049.25
K	X=1730205.25	Y=690985.95
L	X=1730210.06	Y=690912.08
M	X=1730209.55	Y=690838.06
N	X=1730211.30	Y=690765.78
O	X=1730208.51	Y=690691.92
P	X=1730157.81	Y=690985.03
Q	X=1730147.67	Y=690909.41
R	X=1730149.00	Y=690837.19
S	X=1730150.17	Y=690764.99
T	X=1730155.48	Y=690691.21
U	X=1730097.35	Y=691040.16
V	X=1730035.36	Y=691039.45
W	X=1729948.38	Y=691035.40
X	X=1730097.35	Y=690993.54
Y	X=1730036.35	Y=690992.83

⊕X COORDINATE POINTS

X – EASTING Y – NORTHING

0	X=1730191.73	Y=691512.96
1	X=1730191.80	Y=691509.13
2	X=1730203.97	Y=691512.77
3	X=1730204.44	Y=691477.00
4	X=1730204.44	Y=691457.88
5	X=1730210.95	Y=691463.13
6	X=1730217.58	Y=691464.39
7	X=1730217.69	Y=691457.88
8	X=1730212.20	Y=691457.38
9	X=1730212.29	Y=691451.38
10	X=1730218.02	Y=691446.61
11	X=1730211.26	Y=691438.51
12	X=1730206.74	Y=691443.40
13	X=1730200.71	Y=691443.28
14	X=1730195.81	Y=691435.07
15	X=1730184.56	Y=691447.12
16	X=1730184.69	Y=691435.00
17	X=1730250.37	Y=691446.97
18	X=1730255.17	Y=691451.36
19	X=1730255.07	Y=691457.36
20	X=1730248.70	Y=691457.86
21	X=1730246.72	Y=691457.36
22	X=1730248.59	Y=691464.93
23	X=1730259.38	Y=691476.06
24	X=1730269.40	Y=691479.04
25	X=1730254.47	Y=691463.39
26	X=1730258.79	Y=691459.26
27	X=1730269.63	Y=691457.35
28	X=1730281.68	Y=691445.97
29	X=1730286.01	Y=691445.98
30	X=1730285.87	Y=691439.19
31	X=1730218.49	Y=691360.70
32	X=1730218.63	Y=691349.95
33	X=1730211.16	Y=691360.64
34	X=1730206.13	Y=691360.57
35	X=1730206.09	Y=691354.45
36	X=1730201.13	Y=691359.86
37	X=1730201.09	Y=691354.38
38	X=1730197.11	Y=691354.32
39	X=1730191.97	Y=691354.25
40	X=1730197.18	Y=691349.32
41	X=1730188.62	Y=691349.20
42	X=1730192.99	Y=691341.82
43	X=1730193.11	Y=691319.02
44	X=1730196.60	Y=691325.28
45	X=1730201.84	Y=691322.36
46	X=1730198.37	Y=691316.11
47	X=1730203.19	Y=691313.39
48	X=1730202.53	Y=691317.78
49	X=1730213.65	Y=691317.93
50	X=1730213.77	Y=691308.97
51	X=1730203.25	Y=691308.84
52	X=1730203.53	Y=691288.06
53	X=1730214.04	Y=691288.20
54	X=1730214.07	Y=691280.86
55	X=1730203.63	Y=691280.73
56	X=1730203.94	Y=691257.11
57	X=1730214.44	Y=691257.25
58	X=1730214.52	Y=691251.18
59	X=1730204.02	Y=691251.04
60	X=1730204.11	Y=691243.41
61	X=1730214.61	Y=691243.55
62	X=1730214.71	Y=691236.41
63	X=1730204.23	Y=691236.29
64	X=1730204.56	Y=691205.92
65	X=1730215.13	Y=691206.04
66	X=1730215.20	Y=691200.04
67	X=1730202.69	Y=691199.90
68	X=1730204.79	Y=691193.47
69	X=1730215.29	Y=691193.59
70	X=1730215.37	Y=691186.74
71	X=1730215.50	Y=691177.12
72	X=1730205.00	Y=691177.00
73	X=1730205.38	Y=691147.06
74	X=1730215.88	Y=691147.18
75	X=1730216.00	Y=691138.16
76	X=1730205.50	Y=691138.05
77	X=1730216.05	Y=691134.42
78	X=1730203.85	Y=691127.63
79	X=1730216.13	Y=691127.73
80	X=1730216.29	Y=691116.03
81	X=1730205.79	Y=691115.89
82	X=1730205.91	Y=691105.73
83	X=1730216.42	Y=691105.84
84	X=1730216.49	Y=691100.34
85	X=1730205.83	Y=691088.70
86	X=1730216.64	Y=691088.82
87	X=1730216.74	Y=691080.42
88	X=1730201.10	Y=691080.25
89	X=1730198.55	Y=691076.71
90	X=1730194.18	Y=691079.15
91	X=1730191.25	Y=691073.91
92	X=1730192.34	Y=691072.73
93	X=1730195.62	Y=691071.47
94	X=1730205.98	Y=691072.57
95	X=1730202.81	Y=691066.89
96	X=1730203.53	Y=691068.17
97	X=1730216.90	Y=691068.32
98	X=1730216.42	Y=691053.31
99	X=1730202.98	Y=691053.17
100	X=1730200.85	Y=691063.70
101	X=1730202.93	Y=691057.72
102	X=1730216.50	Y=691047.58
103	X=1730249.63	Y=691048.01
104	X=1730249.73	Y=691040.45
105	X=1730244.73	Y=691040.39
106	X=1730238.03	Y=691033.92
107	X=1730218.01	Y=691033.67
108	X=1730228.89	Y=691040.30
109	X=1730217.26	Y=691040.21
110	X=1730217.37	Y=691031.65
111	X=1730205.83	Y=691033.50
112	X=1730198.16	Y=691035.66
113	X=1730193.35	Y=691042.01
114	X=1730200.27	Y=691041.75
115	X=1730203.05	Y=691048.08
116	X=1730192.64	Y=691048.61
117	X=1730190.67	Y=691047.91
118	X=1730133.23	Y=691359.73
119	X=1730146.27	Y=691354.68
120	X=1730153.34	Y=691354.75
121	X=1730157.91	Y=691348.81
122	X=1730146.34	Y=691348.68
123	X=1730133.31	Y=691347.32
124	X=1730146.35	Y=691347.46
125	X=1730146.45	Y=691339.56
126	X=1730133.40	Y=691339.42
127	X=1730151.97	Y=691341.55
128	X=1730155.96	Y=691348.29
129	X=1730157.88	Y=691341.46
130	X=1730158.09	Y=691323.18
131	X=1730153.57	Y=691320.50
132	X=1730150.51	Y=691324.69
133	X=1730149.00	Y=691315.47
134	X=1730144.23	Y=691312.64
135	X=1730133.63	Y=691321.52
136	X=1730145.35	Y=691321.64
137	X=1730144.71	Y=691316.54
138	X=1730133.70	Y=691316.42
139	X=1730134.03	Y=691290.63
140	X=1730144.52	Y=691290.74
141	X=1730144.61	Y=691284.27
142	X=1730134.12	Y=691284.15
143	X=1730134.36	Y=691264.86
144	X=1730144.86	Y=691264.97
145	X=1730144.99	Y=691254.72
146	X=1730134.49	Y=691254.58
147	X=1730134.70	Y=691238.55
148	X=1730145.17	Y=691238.66
149	X=1730145.30	Y=691230.60
150	X=1730134.80	Y=691230.48
151	X=1730135.06	Y=691208.09
152	X=1730145.59	Y=691208.21
153	X=1730146.34	Y=691201.51
154	X=1730135.19	Y=691201.39
155	X=1730135.25	Y=691195.75
156	X=1730149.67	Y=691195.90
157	X=1730145.83	Y=691189.73
158	X=1730135.33	Y=691189.62
159	X=1730135.44	Y=691181.88
160	X=1730145.93	Y=691182.01
161	X=1730145.97	Y=691178.99
162	X=1730135.47	Y=691178.88
163	X=1730135.59	Y=691169.29
164	X=1730146.10	Y=691169.41
165	X=1730146.23	Y=691158.40
166	X=1730135.73	Y=691158.29
167	X=1730135.87	Y=691148.25
168	X=1730136.01	Y=691136.95
169	X=1730146.51	Y=691137.07
170	X=1730146.59	Y=691131.07
171	X=1730136.09	Y=691130.95
172	X=1730137.25	Y=691120.54
173	X=1730146.73	Y=691120.04
174	X=1730146.79	Y=691114.99
175	X=1730136.29	Y=691114.88
176	X=1730136.45	Y=691102.70
177	X=1730146.95	Y=691102.84
178	X=1730147.01	Y=691097.84
179	X=1730136.52	Y=691097.70
180	X=1730136.63	Y=691088.88
181	X=1730147.13	Y=691088.99
182	X=1730152.31	Y=691079.76
183	X=1730136.75	Y=691079.59
184	X=1730147.72	Y=691071.80
185	X=1730155.04	Y=691076.15
186	X=1730159.34	Y=691078.69
187	X=1730162.40	Y=691073.53
188	X=1730158.08	Y=691072.18
189	X=1730150.78	Y=691066.64
190	X=1730151.05	Y=691064.70
191	X=1730136.97	Y=691064.57
192	X=1730151.17	Y=691055.40
193	X=1730137.73	Y=691055.23
194	X=1730151.07	Y=691063.05
195	X=1730153.15	Y=691057.08
196	X=1730161.35	Y=691072.33
197	X=1730161.64	Y=691048.03
198	X=1730163.66	Y=691047.39
199	X=1730151.27	Y=691047.23
200	X=1730154.20	Y=691041.14
201	X=1730161.13	Y=691041.60
202	X=1730156.42	Y=691035.08
203	X=1730148.51	Y=691032.75
204	X=1730138.27	Y=691030.61
205	X=1730138.18	Y=691039.07
206	X=1730130.54	Y=691039.82
207	X=1730137.84	Y=691046.39
208	X=1730126.35	Y=691046.24
209	X=1730124.33	Y=690987.12
210	X=1730127.17	Y=690987.85
211	X=1730138.20	Y=690987.97
212	X=1730130.66	Y=690995.13
213	X=1730138.73	Y=690995.24
214	X=1730138.64	Y=691003.63
215	X=1730148.87	Y=691001.76
216	X=1730156.57	Y=690999.88
217	X=1730161.51	Y=690994.03
218	X=1730154.06	Y=690994.31
219	X=1730155.29	Y=690987.54
220	X=1730162.46	Y=690986.92
221	X=1730164.46	Y=690987.60
222	X=1730191.44	Y=690987.74
223	X=1730193.44	Y=690987.12
224	X=1730207.42	Y=690987.96
225	X=1730194.22	Y=690994.44
226	X=1730198.98	Y=691000.46
227	X=1730206.58	Y=691002.59
228	X=1730201.59	Y=690994.91
229	X=1730217.77	Y=691004.74
230	X=1730218.45	Y=691002.74
231	X=1730217.86	Y=690996.40
232	X=1730229.36	Y=690996.49
233	X=1730238.43	Y=691003.03
234	X=1730245.29	Y=690996.59
235	X=1730250.28	Y=690996.62
236	X=1730250.39	Y=690988.67
237	X=1730229.41	Y=690989.16
238	X=1730217.93	Y=690989.09

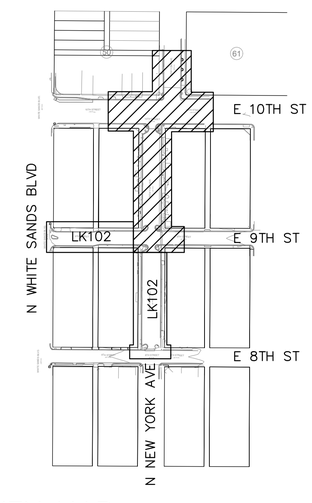

KEY MAP

NORTH

MRWM
LANDSCAPE ARCHITECTS
mrwmla.com 505 268 2266

CONSULTANTS

SMITH ENGINEERING COMPANY

UNITY ENGINEERING, PC
STRUCTURAL CONSULTANTS

HDC
HUGHES DESIGN COMPANY
505-553-8210
hdcllc@centurylink.net

STATE OF NEW MEXICO ROBERT CURTIS NO: 406 REGISTERED LANDSCAPE ARCHITECT 3.25.22

ALAMOGORDO GREAT BLOCKS

ALAMOGORDO, NM

MARCH 25, 2022

SUBMITTAL: FOR CONSTRUCTION

REVISIONS

NO.	DATE	DESCRIPTION

PROJECT NO: 20055
CAD DWG FILE:
DESIGNED BY: RDL/JS/KA DATE: 03/25/22
DRAWN BY: JS/KA DATE: 03/25/22
CHECKED BY: JS/RDL DATE: 03/25/22

SHEET TITLE

DIMENSION AND LAYOUT PLAN

DRAWING SHEET

LK101

C1 DIMENSION AND LAYOUT PLAN

SCALE: 1"=20'-0"

0 20' 40'

NORTH

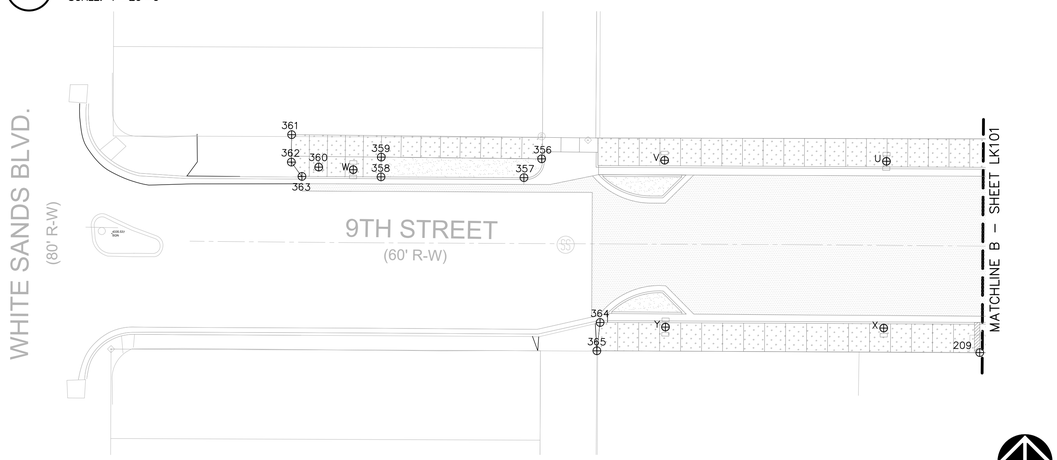

B1 DIMENSION AND LAYOUT PLAN

SCALE: 1"=20'-0"

0 20' 40'

NORTH

LAYOUT GENERAL NOTES

A. LANDSCAPE ARCHITECT WILL PROVIDE ELECTRONIC VERSIONS OF THE PLAN FOR LAYOUT AND STAKING PURPOSES.
B. FINAL LAYOUT OF ALL IMPROVEMENTS SHALL BE APPROVED BY LANDSCAPE ARCHITECT IN FIELD PRIOR TO CONSTRUCTION.

⊕X COORDINATE POINTS – LIGHT POLES

	X – EASTING	Y – NORTHING
0	X=1730191.70	Y=691512.96
A	X=1730198.30	Y=691347.52
B	X=1730204.98	Y=691271.30
C	X=1730205.86	Y=691199.06
D	X=1730207.11	Y=691126.87
E	X=1730201.00	Y=691050.27
F	X=1730144.87	Y=691346.81
G	X=1730143.29	Y=691270.17
H	X=1730144.52	Y=691198.25
I	X=1730144.01	Y=691126.00
J	X=1730153.35	Y=691049.25
K	X=1730205.25	Y=690985.95
L	X=1730210.06	Y=690912.08
M	X=1730209.55	Y=690838.06
N	X=1730211.30	Y=690765.78
O	X=1730208.51	Y=690691.92
P	X=1730157.81	Y=690985.03
Q	X=1730147.67	Y=690909.41
R	X=1730149.00	Y=690837.19
S	X=1730150.17	Y=690764.99
T	X=1730155.48	Y=690691.21
U	X=1730097.35	Y=691040.16
V	X=1730035.36	Y=691039.45
W	X=1729948.38	Y=691035.40
X	X=1730097.35	Y=690993.54
Y	X=1730036.35	Y=690992.83

⊕X COORDINATE POINTS

	X – EASTING	Y – NORTHING
240	X=1730196.03	Y=690976.92
241	X=1730206.89	Y=690977.06
242	X=1730207.59	Y=690974.57
243	X=1730218.10	Y=690974.69
244	X=1730217.75	Y=690949.43
245	X=1730207.92	Y=690949.30
246	X=1730207.95	Y=690946.80
247	X=1730203.87	Y=690946.75
248	X=1730194.67	Y=690942.54
249	X=1730194.05	Y=690940.88
250	X=1730194.06	Y=690939.52
251	X=1730195.34	Y=690937.36
252	X=1730208.17	Y=690930.21
253	X=1730217.89	Y=690938.93
254	X=1730208.30	Y=690917.04
255	X=1730218.83	Y=690917.12
256	X=1730218.96	Y=690907.27
257	X=1730208.46	Y=690907.13
258	X=1730208.75	Y=690885.11
259	X=1730219.25	Y=690885.24
260	X=1730219.33	Y=690875.91
261	X=1730208.86	Y=690875.79
262	X=1730211.57	Y=690937.97
263	X=1730212.09	Y=690937.97
264	X=1730212.58	Y=690899.23
265	X=1730211.07	Y=690899.20
266	X=1730211.14	Y=690893.04
267	X=1730212.65	Y=690893.06
268	X=1730212.87	Y=690875.84
269	X=1730212.37	Y=690875.82
270	X=1730219.51	Y=690864.50
271	X=1730209.26	Y=690844.41
272	X=1730219.78	Y=690844.55
273	X=1730219.90	Y=690834.59
274	X=1730209.40	Y=690834.46
275	X=1730220.17	Y=690813.87
276	X=1730210.13	Y=690777.74
277	X=1730220.63	Y=690777.88
278	X=1730220.71	Y=690771.88
279	X=1730210.21	Y=690771.76
280	X=1730210.64	Y=690738.15
281	X=1730221.14	Y=690738.29
282	X=1730221.27	Y=690728.12
283	X=1730210.77	Y=690727.98
284	X=1730210.88	Y=690719.86
285	X=1730221.38	Y=690719.91
286	X=1730221.43	Y=690715.79
287	X=1730208.57	Y=690715.71
288	X=1730195.04	Y=690710.42
289	X=1730221.50	Y=690710.65
290	X=1730221.59	Y=690703.74
291	X=1730195.12	Y=690703.46
292	X=1730210.95	Y=690703.62
293	X=1730211.15	Y=690697.55
294	X=1730211.04	Y=690689.61
295	X=1730197.09	Y=690703.48
296	X=1730197.23	Y=690696.16
297	X=1730198.87	Y=690690.13
298	X=1730196.39	Y=690689.46
299	X=1730221.00	Y=690697.66
300	X=1730221.13	Y=690687.62
301	X=1730231.20	Y=690687.74
302	X=1730231.28	Y=690682.25
303	X=1730221.21	Y=690682.11
304	X=1730138.29	Y=690980.85
305	X=1730155.38	Y=690981.09
306	X=1730155.53	Y=690969.71
307	X=1730137.74	Y=690970.96
308	X=1730155.40	Y=690979.14
309	X=1730157.48	Y=690973.17
310	X=1730162.74	Y=690965.67
311	X=1730161.52	Y=690963.48
312	X=1730158.80	Y=690959.56
313	X=1730158.23	Y=690961.52
314	X=1730155.57	Y=690965.99
315	X=1730149.97	Y=690962.67
316	X=1730153.63	Y=690956.51
317	X=1730148.86	Y=690953.68
318	X=1730141.93	Y=690961.96
319	X=1730137.84	Y=690961.92
320	X=1730138.01	Y=690945.45
321	X=1730148.97	Y=690945.62
322	X=1730149.16	Y=690930.70
323	X=1730138.22	Y=690930.56
324	X=1730138.33	Y=690921.70
325	X=1730148.03	Y=690922.93
326	X=1730149.47	Y=690906.37
327	X=1730138.52	Y=690906.57
328	X=1730138.77	Y=690886.50
329	X=1730139.20	Y=690850.89
330	X=1730139.30	Y=690844.52
331	X=1730150.26	Y=690844.66
332	X=1730150.42	Y=690832.61
333	X=1730139.43	Y=690832.52
334	X=1730139.55	Y=690821.94
335	X=1730139.99	Y=690770.86
336	X=1730151.21	Y=690771.00
337	X=1730151.34	Y=690761.04
338	X=1730140.10	Y=690760.91
339	X=1730151.80	Y=690725.23
340	X=1730151.89	Y=690719.23
341	X=1730151.97	Y=690713.19
342	X=1730152.04	Y=690707.19
343	X=1730146.50	Y=690725.16
344	X=1730146.56	Y=690719.16
345	X=1730146.62	Y=690713.12
346	X=1730146.68	Y=690707.12
347	X=1730141.03	Y=690702.17
348	X=1730152.10	Y=690702.25
349	X=1730166.12	Y=690702.41
350	X=1730166.24	Y=690695.35
351	X=1730164.99	Y=690689.80
352	X=1730167.51	Y=690689.17
353	X=1730152.27	Y=690689.00
354	X=1730141.21	Y=690687.33
355	X=1730141.29	Y=690680.46
356	X=1730001.02	Y=691039.30
357	X=1729996.15	Y=691033.95
358	X=1729956.21	Y=691033.52
359	X=1729956.19	Y=691039.05
360	X=1729938.75	Y=691035.96
361	X=1729931.05	Y=691044.91
362	X=1729931.08	Y=691037.25
363	X=1729934.11	Y=691033.28
364	X=1730018.09	Y=690993.81
365	X=1730017.31	Y=690985.88

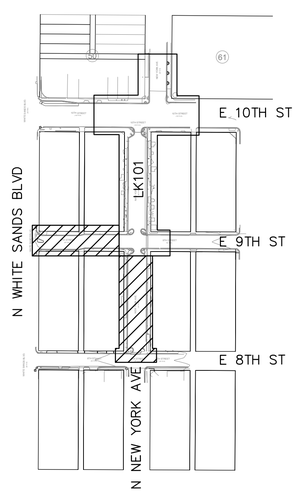

KEY MAP

NORTH

MRWM
LANDSCAPE ARCHITECTS
mrwmla.com 505 268 2266

CONSULTANTS

SMITH ENGINEERING COMPANY

UNITY ENGINEERING, PC
STRUCTURAL CONSULTANTS

HDC
HUGHES DESIGN COMPANY
505-553-8210
hdcllc@centurylink.net

STATE OF NEW MEXICO
KENDRA KATHIS
NO. 406
REGISTERED LANDSCAPE ARCHITECT
3.25.22

ALAMOGORDO GREAT BLOCKS

ALAMOGORDO, NM

MARCH 25, 2022

SUBMITTAL: FOR CONSTRUCTION

REVISIONS

NO.	DATE	DESCRIPTION

PROJECT NO: 20055
CAD DWG FILE:
DESIGNED BY: RDL/JS/KA DATE: 03/25/22
DRAWN BY: JS/KA DATE: 03/25/22
CHECKED BY: JS/RDL DATE: 03/25/22

SHEET TITLE

DIMENSION AND LAYOUT PLAN

DRAWING SHEET

LK102

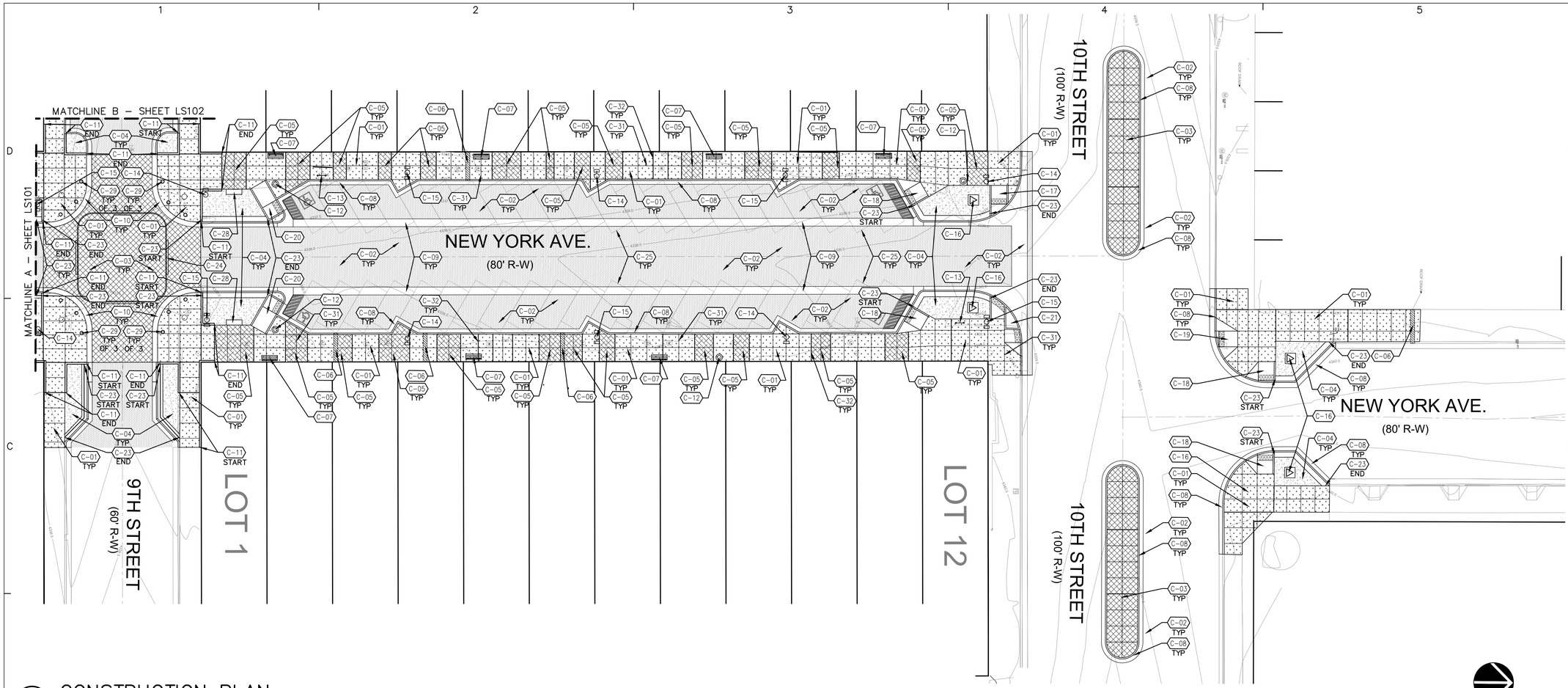

B1 CONSTRUCTION PLAN

SCALE: 1"=20'-0"

CONSTRUCTION KEYED NOTES

CODE	DESCRIPTION	DETAIL
C-01	CONSTRUCT 4" CONCRETE PAVING.	C4/LS501
C-02	CONSTRUCT ASPHALT PAVING – SEE CIVIL.	
C-03	CONSTRUCT 6" REINFORCED CONCRETE WITH INTEGRAL COLOR. COLOR SHALL BE ADOBE AS AVAILABLE FROM DAVIS COLOR (323-269-7311), OR APPROVED EQUAL – SEE CIVIL.	
C-04	LANDSCAPE AREA – SEE PLANTING PLAN.	
C-05	CONSTRUCT 4" CONCRETE PAVING WITH SANDBLAST FINISH AND INTEGRAL COLOR. COLOR SHALL BE PALOMINO AS AVAILABLE FROM DAVIS COLOR (323-269-7311), OR APPROVED EQUAL.	C4/LS501
C-06	FURNISH AND INSTALL TRENCH DRAIN.	A4/LS501
C-07	FURNISH AND INSTALL 6' BENCH. BENCH SHALL BE FM-324 WITH WOOD SLAT BACK AND SEAT AS AVAILABLE FROM VICTOR STANLEY (301-855-8300), OR APPROVED EQUAL. FRAME COLOR: BLACK. SURFACE MOUNT PER MANUFACTURER'S SPECIFICATIONS.	
C-08	CONSTRUCT CONCRETE CURB AND GUTTER – SEE CIVIL.	
C-09	CONSTRUCT CONCRETE VALLEY GUTTER– SEE CIVIL.	
C-10	CONSTRUCT CONCRETE RIBBON CURB – SEE CIVIL.	
C-11	CONSTRUCT 6" CONCRETE HEADER CURB.	C4/LS502
C-12	FURNISH AND INSTALL TRASH RECEPTACLE. TRASH RECEPTACLE SHALL BE REN-36TD WITH WOOD SLATS AS AVAILABLE FROM VICTOR STANLEY (301-855-8300), OR APPROVED EQUAL. FRAME COLOR: BLACK. SURFACE MOUNT PER MANUFACTURER'S SPECIFICATIONS.	

CONSTRUCTION KEYED NOTES

CODE	DESCRIPTION	DETAIL
C-13	FURNISH AND INSTALL BIKE RACK. BIKE RACK SHALL BE BRHS-101 AS AVAILABLE FROM VICTOR STANELY (301-855-8300), OR APPROVED EQUAL. COLOR: BLACK. SURFACE MOUNT PER MANUFACTURER'S SPECIFICATIONS.	
C-14	15' TALL PEDESTRIAN LIGHT POLE – SEE ELECTRICAL.	
C-15	30' TALL STREET LIGHT POLE – SEE ELECTRICAL.	
C-16	CONSTRUCT METAL MONUMENT PYLON.	B1/LS503
C-17	CONSTRUCT ADA RAMP TYPE 'A'.	B4/LS501
C-18	CONSTRUCT ADA RAMP TYPE 'B'.	C1/LS501
C-19	CONSTRUCT ADA RAMP TYPE 'C'.	C3/LS501
C-20	CONSTRUCT ADA RAMP TYPE 'D'.	A2/LS501
C-21	CONSTRUCT ADA RAMP TYPE 'E'.	A1/LS501
C-23	CONSTRUCT CONCRETE APRON.	C3/LS502
C-24	CONSTRUCT OVERHEAD FEATURE.	A4/LS503
C-25	STRIPING – SEE CIVIL.	
C-28	CONSTRUCT CONCRETE BENCH.	A4/LS502
C-29	FURNISH AND INSTALL DECORATIVE BOLLARD. BOLLARD SHALL BE MODEL R-7551 AS AVAILABLE FROM RELIANCE FOUNDRY (604-547-0460), OR APPROVED EQUAL. INSTALL PER MANUFACTURER'S SPECIFICATIONS.	
C-31	CONSTRUCT CONTROL JOINT, TYP.	C4/LS501
C-32	CONSTRUCT EXPANSION JOINT, TYP.	C4/LS501

CONSTRUCTION GENERAL NOTES

CODE	DESCRIPTION
GC-01	THE CONTRACTOR SHALL CONSTRUCT ONE (1) 6'X6' MOCK-UP EACH OF 4" THICK CONCRETE PAVING (KEYED NOTES 1 AND 5) AND 6" THICK REINFORCED CONCRETE PAVING (KEYED NOTE 3) FOR REVIEW AND APPROVAL PRIOR TO CONSTRUCTION OF THESE ITEMS WITHIN THE SITE. MOCK-UPS SHALL INCLUDE ONE (1) EXPANSION JOINT AND ONE (1) CONTROL JOINT.
GC-02	THE CONTRACTOR SHALL CONSTRUCT ONE (1) 6' LONG MOCK-UP OF CONCRETE BENCH (KEYED NOTE 28) FOR REVIEW AND APPROVAL PRIOR TO CONSTRUCTION OF THIS ITEM WITHIN THE SITE. MOCK-UP SHALL INCLUDE ONE (1) VERTICAL EXPANSION JOINT.
GC-03	WHERE EXISTING WATER METERS ARE LOCATED WITHIN NEW CONSTRUCTION, CONTRACTOR SHALL ADJUST WATER METER BOX TO MATCH NEW FINISH GRADE OF THE ADJACENT SURFACE. THE CONTRACTOR SHALL BE RESPONSIBLE FOR COORDINATING WITH CITY OF ALAMOGORDO TO VERIFY LOCATION OF THE WATER METER BOX LIDS TO BE RAISED TO GRADE. WATER METER BOX LIDS SHALL BE SET IN PLACE WITH A 24"24"6" REINFORCED CONCRETE COLLAR, INCLUDED IN THE UNIT PRICE. WORK UNDER THIS ITEM SHALL BE MEASURE AND PAID FOR AT THE CONTRACT UNIT PRICE PER EACH METER BOX COVER.

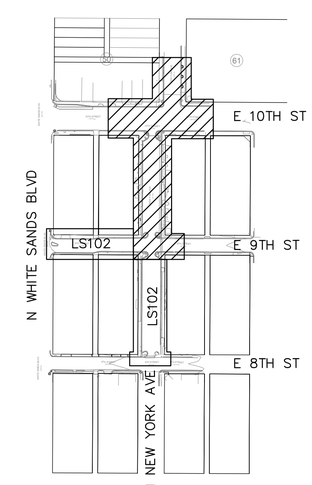

KEY MAP

MRWM
LANDSCAPE ARCHITECTS
mrwmla.com 505 268 2266

CONSULTANTS

SMITH ENGINEERING COMPANY

UNITY ENGINEERING, PC
STRUCTURAL CONSULTANTS

HDC
HUGHES DESIGN COMPANY
505-553-8210
hdcllc@centurylink.net

STATE OF NEW MEXICO
KENNETH J. JOHNSTON
NO. 406
REGISTERED LANDSCAPE ARCHITECT
3.25.22

ALAMOGORDO GREAT BLOCKS

ALAMOGORDO, NM

MARCH 25, 2022

SUBMITTAL: FOR CONSTRUCTION

REVISIONS

NO.	DATE	DESCRIPTION

PROJECT NO: 20055

CAD DWG FILE:

DESIGNED BY: RDL/JS/KA DATE: 03/25/22

DRAWN BY: JS/KA DATE: 03/25/22

CHECKED BY: JS/RDL DATE: 03/25/22

SHEET TITLE

CONSTRUCTION PLAN

DRAWING SHEET

LS101

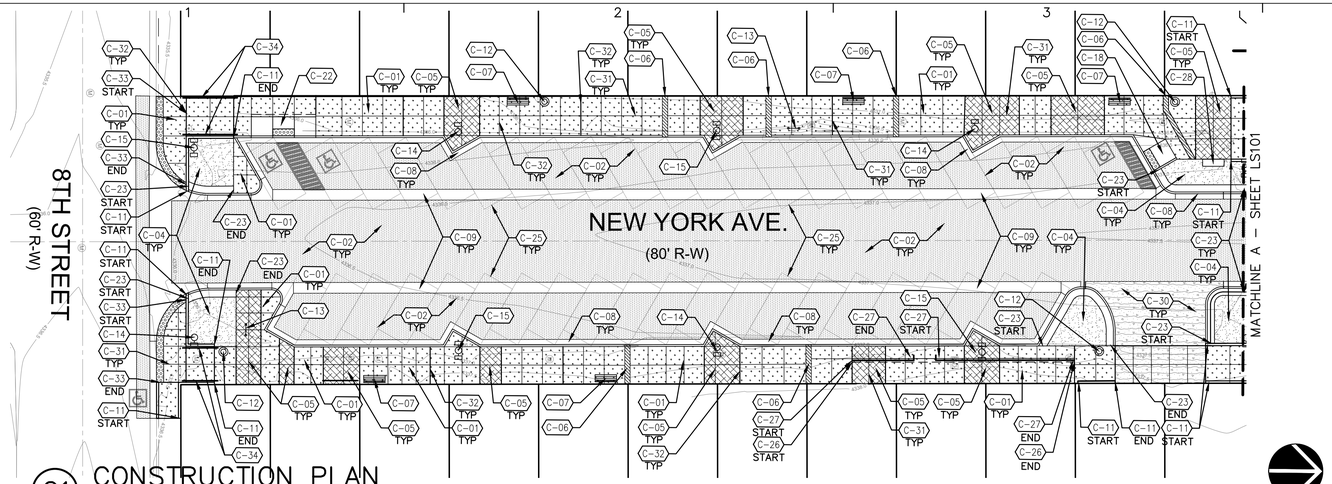

C1 CONSTRUCTION PLAN
SCALE: 1"=20'-0"

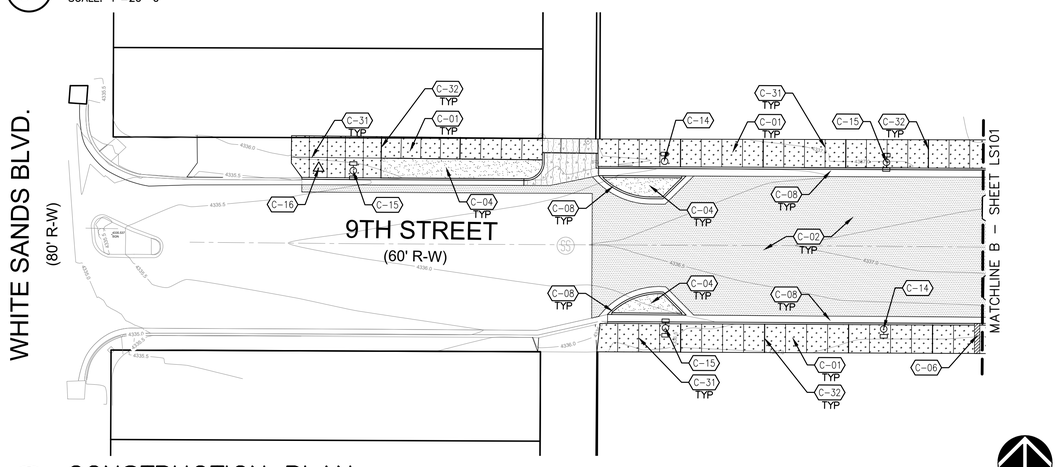

B1 CONSTRUCTION PLAN
SCALE: 1"=20'-0"

CONSTRUCTION KEYED NOTES

CODE	DESCRIPTION	DETAIL
C-01	CONSTRUCT 4" CONCRETE PAVING.	C4/LS501
C-02	CONSTRUCT ASPHALT PAVING – SEE CIVIL.	
C-04	LANDSCAPE AREA – SEE PLANTING PLAN.	
C-05	CONSTRUCT 4" CONCRETE PAVING WITH SANDBLAST FINISH AND INTEGRAL COLOR. COLOR SHALL BE PALOMINO AS AVAILABLE FROM DAVIS COLOR (323-269-7311), OR APPROVED EQUAL.	C4/LS501
C-06	FURNISH AND INSTALL TRENCH DRAIN.	A4/LS501
C-07	FURNISH AND INSTALL 6' BENCH. BENCH SHALL BE FM-324 WITH WOOD SLAT BACK AND SEAT AS AVAILABLE FROM VICTOR STANLEY (301-855-8300), OR APPROVED EQUAL. FRAME COLOR: BLACK. SURFACE MOUNT PER MANUFACTURER'S SPECIFICATIONS.	
C-08	CONSTRUCT CONCRETE CURB AND GUTTER – SEE CIVIL.	
C-09	CONSTRUCT CONCRETE VALLEY GUTTER– SEE CIVIL.	
C-11	CONSTRUCT 6" CONCRETE HEADER CURB.	C4/LS502
C-12	FURNISH AND INSTALL TRASH RECEPTACLE. TRASH RECEPTACLE SHALL BE REN-36TD WITH WOOD SLATS AS AVAILABLE FROM VICTOR STANLEY (301-855-8300), OR APPROVED EQUAL. FRAME COLOR: BLACK. SURFACE MOUNT PER MANUFACTURER'S SPECIFICATIONS.	
C-13	FURNISH AND INSTALL BIKE RACK. BIKE RACK SHALL BE BRHS-101 AS AVAILABLE FROM VICTOR STANELY (301-855-8300), OR APPROVED EQUAL. COLOR: BLACK. SURFACE MOUNT PER MANUFACTURER'S SPECIFICATIONS.	

CONSTRUCTION KEYED NOTES

CODE	DESCRIPTION	DETAIL
C-14	15' TALL PEDESTRIAN LIGHT POLE – SEE ELECTRICAL.	
C-15	30' TALL STREET LIGHT POLE – SEE ELECTRICAL.	
C-16	CONSTRUCT METAL MONUMENT PYLON.	B1/LS503
C-18	CONSTRUCT ADA RAMP TYPE 'B'.	C1/LS501
C-22	CONSTRUCT ADA RAMP TYPE 'F'.	A3/LS502
C-23	CONSTRUCT CONCRETE APRON.	C3/LS502
C-25	STRIPING – SEE CIVIL.	
C-26	CONSTRUCT CONCRETE TURNDOWN EDGE.	B3/LS502
C-27	FURNISH AND INSTALL HANDRAIL AT TURNDOWN EDGE.	A3/LS504
C-28	CONSTRUCT CONCRETE BENCH.	A4/LS502
C-30	CONSTRUCT 6" REINFORCED CONCRETE – SEE CIVIL.	
C-31	CONSTRUCT CONTROL JOINT, TYP.	C4/LS501
C-32	CONSTRUCT EXPANSION JOINT, TYP.	C4/LS501
C-33	FURNISH AND INSTALL DETECTABLE WARNING SURFACE TILES, ARMOR-TILE VITRIFIED POLYMER COMPOSITE (VPC) CAST IN PLACE, OR EQUAL. COLOR SHALL BE DARK GRAY CONFORMING TO FEDERAL COLOR NO. 36118.	
C-34	FURNISH AND INSTALL HANDRAIL AT RAMP.	A1/LS504

CONSTRUCTION GENERAL NOTES

CODE	DESCRIPTION
GC-01	THE CONTRACTOR SHALL CONSTRUCT ONE (1) 6'X6' MOCK-UP EACH OF 4" THICK CONCRETE PAVING (KEYED NOTES 1 AND 5) AND 6" THICK REINFORCED CONCRETE PAVING (KEYED NOTE 3) FOR REVIEW AND APPROVAL PRIOR TO CONSTRUCTION OF THESE ITEMS WITHIN THE SITE. MOCK-UPS SHALL INCLUDE ONE (1) EXPANSION JOINT AND ONE (1) CONTROL JOINT.
GC-02	THE CONTRACTOR SHALL CONSTRUCT ONE (1) 6' LONG MOCK-UP OF CONCRETE BENCH (KEYED NOTE 28) FOR REVIEW AND APPROVAL PRIOR TO CONSTRUCTION OF THIS ITEM WITHIN THE SITE. MOCK-UP SHALL INCLUDE ONE (1) VERTICAL EXPANSION JOINT.
GC-03	WHERE EXISTING WATER METERS ARE LOCATED WITHIN NEW CONSTRUCTION, CONTRACTOR SHALL ADJUST WATER METER BOX TO MATCH NEW FINISH GRADE OF THE ADJACENT SURFACE. THE CONTRACTOR SHALL BE RESPONSIBLE FOR COORDINATING WITH CITY OF ALAMOGORDO TO VERIFY LOCATION OF THE WATER METER BOX LIDS TO BE RAISED TO GRADE. WATER METER BOX LIDS SHALL BE SET IN PLACE WITH A 24"24"6" REINFORCED CONCRETE COLLAR, INCLUDED IN THE UNIT PRICE. WORK UNDER THIS ITEM SHALL BE MEASURE AND PAID FOR AT THE CONTRACT UNIT PRICE PER EACH METER BOX COVER.

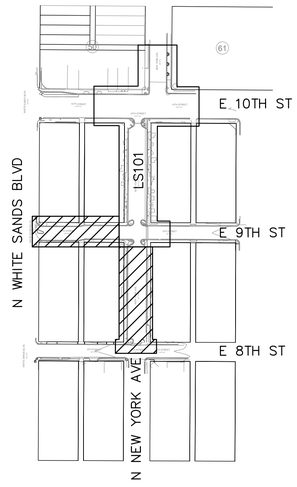

KEY MAP
NORTH

MRWM
LANDSCAPE ARCHITECTS
mrwmla.com 505 268 2266

CONSULTANTS

SMITH ENGINEERING COMPANY

UNITY ENGINEERING, PC
STRUCTURAL CONSULTANTS

HDC
HUGHES DESIGN COMPANY
505-553-8210
hdcllc@centurylink.net

STATE OF NEW MEXICO
KYLE A. SMITH
NM LA 406
REGISTERED LANDSCAPE ARCHITECT
3.25.22

ALAMOGORDO
GREAT BLOCKS
ALAMOGORDO, NM

MARCH 25, 2022

SUBMITTAL: FOR CONSTRUCTION

REVISIONS

NO.	DATE	DESCRIPTION

PROJECT NO: 20055
CAD DWG FILE:
DESIGNED BY: RDL/JS/KA DATE: 03/25/22
DRAWN BY: JS/KA DATE: 03/25/22
CHECKED BY: JS/RDL DATE: 03/25/22

SHEET TITLE

CONSTRUCTION PLAN

DRAWING SHEET

LS102

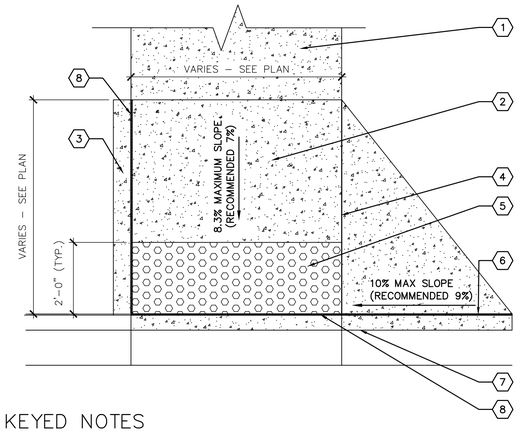

KEYED NOTES

1. CONCRETE PAVING – SEE PLAN.
2. ACCESSIBLE RAMP W/NON-SLIP BROOM FINISH.
3. 6" HEADER CURB PER DETAIL C4/LS502. SEE PLAN FOR LOCATION OF CURB IN RELATION TO RAMP.
4. CONTROL JOINT, TYPICAL.
5. CAST IN PLACE TRUNCATED DOME DETECTABLE WARNING SURFACE TILES.
6. BACK OF CURB.
7. FACE OF CURB.
8. EXPANSION JOINT.

GENERAL NOTES

A. CONCRETE SHALL BE 3000 PSI.
B. COMPACT SUBGRADE TO 95%.
C. DETECTABLE WARNING SURFACE TILES SHALL BE ARMOR-TILE VITRIFIED POLYMER COMPOSITE (VPC) CAST IN PLACE, OR EQUAL. COLOR SHALL BE DARK GRAY CONFORMING TO FEDERAL COLOR NO. 36118.

C1 ACCESSIBLE RAMP TYPE 'B'

1/2" = 1'-0"

0 2' 4'

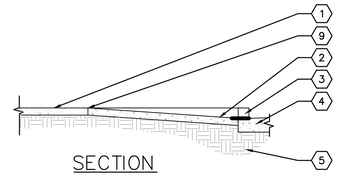

SECTION

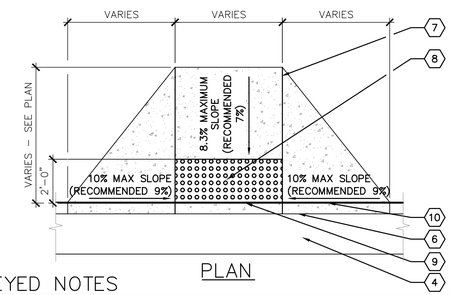

PLAN

KEYED NOTES

1. CONCRETE PAVING – SEE PLAN.
2. ACCESSIBLE RAMP W/NON-SLIP BROOM FINISH.
3. CURB BEYOND.
4. CONCRETE GUTTER.
5. 95% COMPACTED SUBGRADE.
6. FACE OF CURB.
7. CONTROL JOINT, TYPICAL.
8. CAST IN PLACE TRUNCATED DOME DETECTABLE WARNING SURFACE TILES.
9. EXPANSION JOINT.
10. BACK OF CURB.

GENERAL NOTES

A. CONCRETE SHALL BE 3000 PSI.
B. COMPACT SUBGRADE TO 95%.
C. DETECTABLE WARNING SURFACE TILES SHALL BE ARMOR – TILE VITRIFIED POLYMER COMPOSITE (VPC) CAST IN PLACE, OR EQUAL. COLOR SHALL BE DARK GRAY CONFORMING TO FEDERAL COLOR NO. 36118.

C3 ACCESSIBLE RAMP TYPE 'C'

3/8" = 1'-0"

0 2'-8" 5'-4"

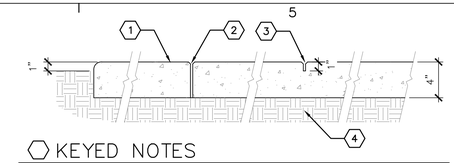

KEYED NOTES

1. 3000 PSI CONCRETE PAVING W/MEDIUM BROOM FINISH.
2. EXPANSION JOINT PER PLAN.
3. CONTROL JOINT PER PLAN.
4. SUBGRADE COMPACTED TO 95%.

GENERAL NOTES

A. CONTROL JOINTS AND EXPANSION JOINTS SHALL BE AS SHOWN ON PLAN. INSTALL EXPANSION JOINTS WHERE PAVING ABUTS EXISTING BUILDINGS, CURBS, SEATING WALLS, WALKS AND OTHER HARD CONSTRUCTION.
B. 1/2" WIDE EXPANSION JOINT WITH FELT EXPANSION MATERIAL. FELT EXPANSION MATERIAL SHALL BE RECESSED 1/2." OPPOSING CONCRETE EDGES OF JOINT SHALL HAVE 1/4" RADIUS TOOLED EDGE. EXPANSION JOINTS SHALL BE LOCATED EVERY 30'-0" O.C. MAXIMUM.
C. CONTROL JOINTS MAY BE TOOLED OR SAWCUT. SAWCUT JOINTS SHALL BE CUT WITHIN 4 HOURS OF FINISHING CONCRETE (OR AS REQUIRED BY WEATHER CONDITIONS). JOINTS SHALL BE CUT WITH AN EARLY ENTRY TYPE DRY CUT SAW. SPALLING OF CONCRETE AT EDGE OF CUT IS NOT ACCEPTABLE.

C4 4"-THICK CONCRETE PAVING

1 1/2" = 1'-0"

0 8" 1'-4"

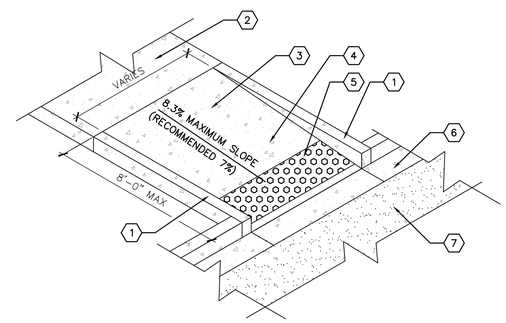

KEYED NOTES

1. 6" HEADER CURB.
2. CONCRETE PAVING – SEE PLAN.
3. 4"-DEPTH 3000 PSI CONCRETE PAVING.
4. ACCESSIBLE RAMP WITH NON-SLIP BROOM FINISH.
5. DETECTABLE WARNING SURFACE TILES.
6. CURB AND GUTTER – SEE CIVIL.
7. ASPHALT PAVEMENT – SEE CIVIL.

GENERAL NOTES

A. SUBGRADE SHALL BE COMPACTED TO 95%.
B. DETECTABLE WARNING SURFACE TILES SHALL BE ARMOR-TILE VITRIFIED POLYMER COMPOSITE (VPC) CAST IN PLACE, OR EQUAL. COLOR SHALL BE DARK GRAY CONFORMING TO FEDERAL COLOR NO. 36118.

B4 ACCESSIBLE RAMP TYPE 'A'

NOT TO SCALE

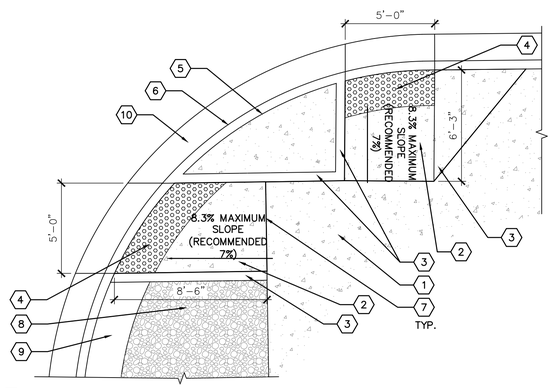

KEYED NOTES

1. CONCRETE PAVING – SEE PLAN.
2. ACCESSIBLE RAMP W/NON-SLIP BROOM FINISH.
3. 6" HEADER CURB. SEE PLAN FOR LOCATION OF CURB IN RELATION TO RAMP.
4. CAST IN PLACE TRUNCATED DOME DETECTABLE WARNING SURFACE TILES.
5. BACK OF CURB.
6. FACE OF CURB.
7. EXPANSION JOINT.
8. GRAVEL MULCH.
9. CONCRETE APRON.
10. CURB AND GUTTER.

GENERAL NOTES

A. CONCRETE SHALL BE 3000 PSI.
B. COMPACT SUBGRADE TO 95%.
C. DETECTABLE WARNING SURFACE TILES SHALL BE ARMOR-TILE VITRIFIED POLYMER COMPOSITE (VPC) CAST IN PLACE, OR EQUAL. COLOR SHALL BE DARK GRAY CONFORMING TO FEDERAL COLOR NO. 36118.

A1 ACCESSIBLE RAMP TYPE 'E'

1/4" = 1'-0"

0 4' 8'

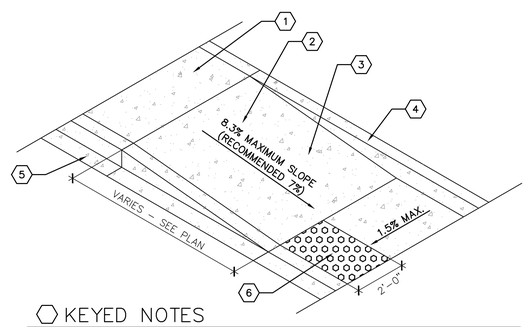

KEYED NOTES

1. NEW SIDEWALK.
2. 4" THICK CONCRETE PAVEMENT.
3. ACCESSIBLE RAMP WITH NON-SLIP BROOM FINISH.
4. 6" HEADER CURB PER DETAIL C4/LS502.
5. CURB AND GUTTER.
6. CAST IN PLACE TRUNCATED DOME DETECTABLE WARNING SURFACE TILES.

GENERAL NOTES

A. CONCRETE SHALL BE 3000 PSI.
B. COMPACT SUBGRADE TO 95%.
C. DETECTABLE WARNING SURFACE TILES SHALL BE ARMOR-TILE VITRIFIED POLYMER COMPOSITE (VPC) CAST IN PLACE, OR EQUAL. COLOR SHALL BE DARK GRAY CONFORMING TO FEDERAL COLOR NO. 36118.

A2 ACCESSIBLE RAMP TYPE 'D'

NOT TO SCALE

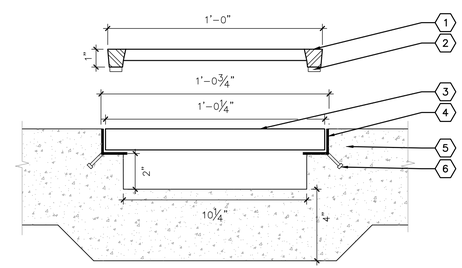

KEYED NOTES

1. TRENCH GRATE.
2. 1/4" X 1/2" X 1" GRINDING SPREADER PADS FOR FINAL LEVELING.
3. TEMPORARY SPREADER 1/4" X 12 1/4" X 4" (24" O.C. TYP.). NOTE: CONTRACTOR SHALL VERIFY REQUIRED DIMENSIONS OF TEMPORARY SPREADER.
4. 1 1/4" X 1 1/4" X 1/4" STEEL ANGLE.
5. CONCRETE.
6. 1/2" X 2" NELSON STUD SHOP WELDED TO FRAME. (24" O.C. TYP.)

A4 TRENCH DRAIN

3" = 1'-0"

0 4" 8"

CONSULTANTS

SMITH ENGINEERING COMPANY

UNITY ENGINEERING, PC
STRUCTURAL CONSULTANTS

HDC
HUGHES DESIGN COMPANY
505-553-8210
hdcllc@centurylink.net

STATE OF NEW MEXICO
KENDRA D. HUGHES
NM LIC. 406
REGISTERED LANDSCAPE ARCHITECT
3.25.22

ALAMOGORDO
GREAT BLOCKS
ALAMOGORDO, NM

MARCH 25, 2022

SUBMITTAL: FOR CONSTRUCTION

REVISIONS

NO.	DATE	DESCRIPTION

PROJECT NO: 20055
CAD DWG FILE:
DESIGNED BY: RDL/JS/KA DATE: 03/25/22
DRAWN BY: JS/KA DATE: 03/25/22
CHECKED BY: JS/RDL DATE: 03/25/22

SHEET TITLE

CONSTRUCTION DETAILS

DRAWING SHEET

LS501

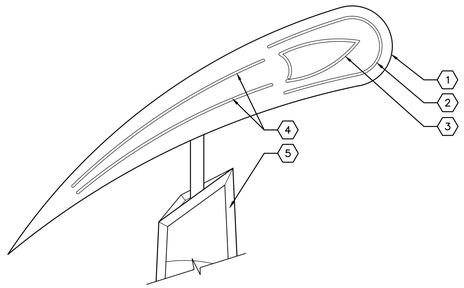

KEYED NOTES

1. 2-SIDED, 8" WIDE BOXED ALUMINUM CABINET: 1/8" THICK ALUMINUM PLATE WITH PAINTED FINISH. COLOR: RAL 1017 SAFFRON YELLOW
2. NEON TUBE LIGHT (BOTH SIDES), COLOR: BLUE.
3. NEON TUBE LIGHT (BOTH SIDES), COLOR: RED.
4. NEON TUBE LIGHT (BOTH SIDES), COLOR: YELLOW.
5. MONUMEMENT PYLON, SEE DETAIL A1/LS502.

GENERAL NOTES

A. CONTRACTOR SHALL PROVIDE SHOP DRAWINGS FOR CABINET, NEON TUBING AND POWER SUPPLY AND NEON TRANSFORMER TO LANDSCAPE ARCHITECT FOR APPROVAL PRIOR TO FABRICATION. CAD FILES WILL BE PROVIDED TO ASSIST IN PREPARATION OF SHOP DRAWINGS.
B. CONTRACTOR SHALL PROVIDE MATERIAL AND COLOR/FINISH SAMPLES TO LANDSCAPE ARCHITECT FOR APPROVAL PRIOR TO FABRICATION.

C1 ROCKET SIGN CABINET

3/4" = 1'-0" 0 1'-4" 2'-8"

KEYED NOTES

1. 1/8" THICK ALUMINUM SIGN CABINET WITH PAINTED FINISH, COLOR: RAL 1017 'SAFFRON YELLOW'. SEE DETAIL A1/LS503. CABINET SHALL BE INTERNALLY LIT WITH LED LIGHTING.
2. 1" WIDE CUT OUT BORDER WITH WHITE TRANSLUCENT ACRYLIC INFILL.
3. 23" HT. CUT OUT LETTERS WITH WHITE TRANSLUCENT ACRYLIC INFILL, FONT: BODONI MT CONDENSED.
4. 1/8" THICK ALUMINUM SIGN CABINET FACE PLATE WITH POWDER COATED FINISH, COLOR: RAL 1017 'SAFFRON YELLOW'.
5. 10" HT. CUT OUT LETTERS WITH WHITE TRANSLUCENT ACRYLIC INFIL. FONT: CEN MT CONDENSED.
6. 1" THICK ALUMINUM ROCKET CONTRAIL WITH POWDER COATED FINISH, COLOR: RAL 5003 'SAPPHIRE BLUE'.
7. 1 $\frac{1}{2}$" THICK ALUMINUM ROCKET WITH POWDER COATED FINISH, COLOR: RAL 3003 'RUBY RED'.

GENERAL NOTES

A. CONTRACTOR SHALL PROVIDE SHOP DRAWINGS FOR CABINET, LED LIGHTING MODULES AND POWER SUPPLY TO LANDSCAPE ARCHITECT FOR APPROVAL PRIOR TO FABRICATION. CAD FILES WILL BE PROVIDED TO ASSIST IN THE PREPARATION OF SHOP DRAWINGS.
B. CONTRACTOR SHALL PROVIDE MATERIAL AND COLOR/FINISH SAMPLES TO LANDSCAPE ARCHITECT FOR APPROVAL PRIOR TO FABRICATION.

A1 SIGN CABINET – ELEVATION

1/2" = 1'-0" 0 2' 4'

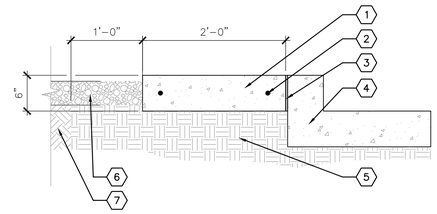

KEYED NOTES

1. 3000 PSI CONCRETE.
2. #4 REBAR HORIZONTAL AND CONTINUOUS AT 18" O.C.
3. 1/2" EXPANSION MATERIAL, RECESS 1/2" BELOW TOP OF CONCRETE.
4. CONCRETE CURB AND GUTTER.
5. 95% COMPACTED SUBGRADE.
6. GRAVEL MULCH.
7. UNCOMPACTED SUBGRADE.

C3 CONCRETE APRON

1" = 1'-0" 0 1" 2"

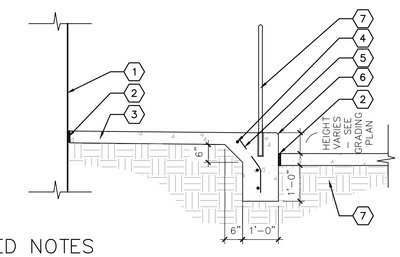

KEYED NOTES

1. FACE OF EXISTING BUILDING.
2. 1/2" EXPANSION MATERIAL.
3. CONCRETE PAVING – SEE PLAN.
4. #4 REBAR, HORIZONTAL AND CONTINUOUS @ 12" O.C.
5. #4 REBAR AT 48" O.C.
6. 1/2" RADIUS TOOLED EDGE, TYP.
7. HANDRAIL – SEE DETAIL A3/LS504.

B3 CONCRETE TURNDOWN EDGE

1/2" = 1'-0" 0 2' 4'

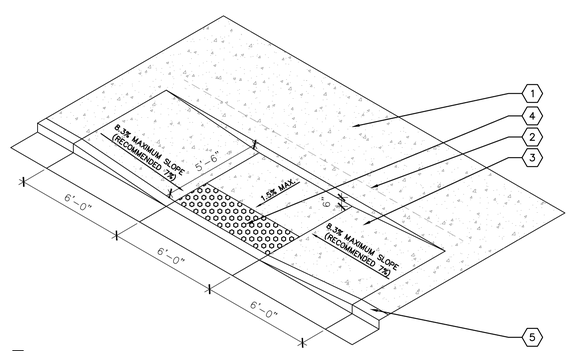

KEYED NOTES

1. CONCRETE PAVING – SEE PLAN.
2. CONCRETE TURNDOWN EDGE – SEE DETAIL B3/LS502.
3. ACCESSIBLE RAMP WITH NON-SLIP BROOM FINISH.
4. CAST IN PLACE TRUNCATED DOME DETECTABLE WARNING SURFACE TILES.
5. CURB AND GUTTER.

GENERAL NOTES

A. CONCRETE SHALL BE 3000 PSI.
B. COMPACTED SUBGRADE TO 95%.
C. DETECTABLE WARNING SURFACE TILES SHALL BE ARMOR-TILE VITRIFIED POLYMER COMPOSITE (VPC) CAST IN PLACE, OR EQUAL. COLOR SHALL BE DARK GRAY CONFORMING TO FEDERAL COLOR NO. 36118.

A3 ACCESSIBLE RAMP TYPE 'F'

1/4" = 1'-0" 0 4' 8'

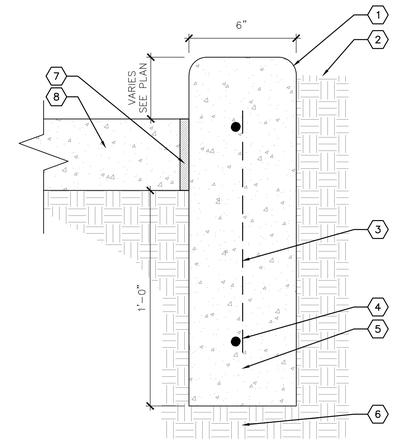

KEYED NOTES

1. 1/2" RADIUS TOOLED EDGE.
2. CONDITION VARIES – SEE PLAN.
3. #4 REBAR AT 48" O.C.
4. #4 REBAR, HORIZONTAL AND CONTINUOUS @ 12" O.C.
5. 3000 PSI CONCRETE EDGER.
6. 95% COMPACTED SUBGRADE.
7. 1/2" EXPANSION MATERIAL, RECESS 1/2" BELOW TOP OF CONCRETE.
8. CONCRETE PAVING – SEE PLAN.

GENERAL NOTES

A. TOP OF CONCRETE HEADER – SEE CIVIL.
B. WHERE HEADER CURB ABUTS FACE OF BUILDING OR OTHER HARD CONSTRUCTION, CONTRACTOR SHALL PLACE 1/2" EXPANSION MATERIAL BETWEEN HEADER CURB AND ADJACENT OBJECT.

C4 CONCRETE HEADER CURB

3" = 1'-0" 0 4" 8"

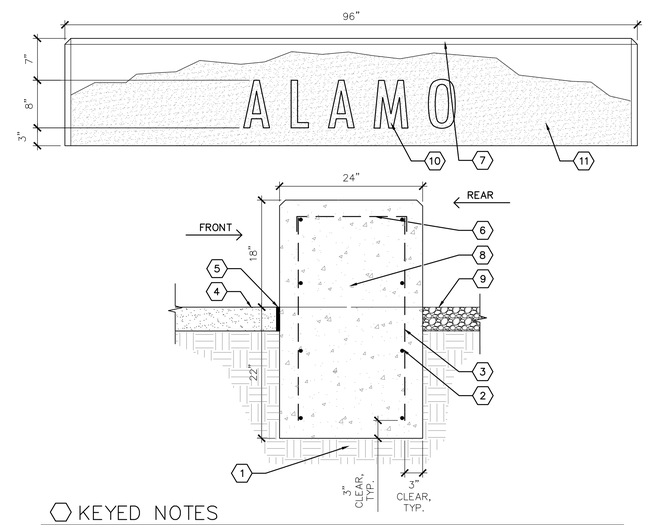

KEYED NOTES

1. SUBGRADE COMPACTED TO 95%.
2. #4 HORIZONTAL AND CONTINUOUS REBAR AT 12" O.C., TYP.
3. #4 VERTICAL REBAR AT 18" O.C., TYP.
4. PAVING. SEE PLANS.
5. 1/2" FELT EXPANSION JOINT, RECESS 1/2" BELOW TOP OF CONCRETE.
6. #4 U-BAR AT 48" O.C.
7. TOOLED EDGE. 1/2" CHAMFER.
8. 3000 PSI CAST-IN-PLACE CONCRETE.
9. GRAVEL MULCH BED, SEE PLANTING PLAN.
10. 8" HT. CAST LETTERS, FONT: CEN MT CONDENSED.
11. FORMLINER APPLIED TO FRONT AND REAR OF SEAT WALL, SEE GENERAL NOTE C.

GENERAL NOTES

A. THE FINISH SURFACES OF THE WALLS SHALL BE FREE OF HONEYCOMB PATTERNS AND SHARP OR ROUGH EDGES. EXPOSED, UNIFORMLY-SPACED, SNAP TIE INDENTIONS WILL BE ACCEPTABLE.
B. RUBBING OR PATCHING OF EXPOSED WALL SURFACES IS NOT ACCEPTABLE.
C. APPLY #8002 SANDBLAST COARSE FORMLINER SHALL BE APPLIED TO FACE OF WALL, AVAILABLE FROM CUSTOM ROCK FORMLINER (210) 910-5000 OR APPROVED EQUAL.

A4 CONCRETE BENCH

1" = 1'-0" 0 1' 2'

MRWM
LANDSCAPE ARCHITECTS
mrwmla.com 505 268 2266

CONSULTANTS

SMITH ENGINEERING COMPANY

UNITY ENGINEERING, PC
STRUCTURAL CONSULTANTS

HDC
HUGHES DESIGN COMPANY
505-553-8210
hdcllc@centurylink.net

STATE OF NEW MEXICO
ROBERT DEWITT LOVATO
NO. 406
REGISTERED LANDSCAPE ARCHITECT
3.25.22

ALAMOGORDO
GREAT BLOCKS
ALAMOGORDO, NM

MARCH 25, 2022

SUBMITTAL: FOR CONSTRUCTION

REVISIONS

NO.	DATE	DESCRIPTION

PROJECT NO: 20055
CAD DWG FILE:
DESIGNED BY: RDL/JS/KA DATE: 03/25/22
DRAWN BY: JS/KA DATE: 03/25/22
CHECKED BY: JS/RDL DATE: 03/25/22

SHEET TITLE

CONSTRUCTION DETAILS

DRAWING SHEET

LS502

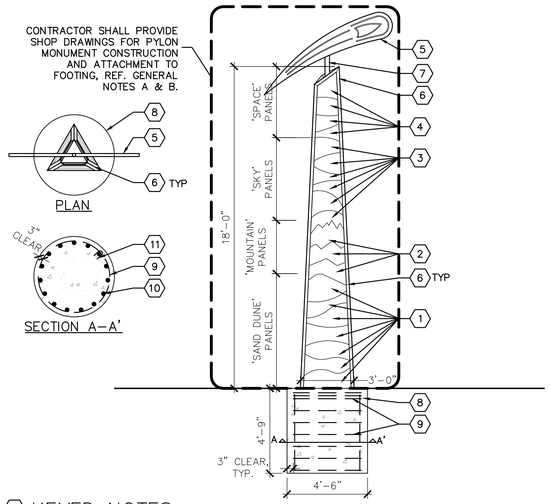

KEYED NOTES

1. 1/8" THICK, CNC–CUT STEEL 'SAND DUNE' PANELS WITH PAINTED FINISH IN ALTERNATING COLORS. COLORS: RAL 1013 OYSTER WHITE & RAL 1015 LIGHT IVORY.
2. 1/8" THICK, CNC–CUT STEEL 'MOUNTAIN' PANELS WITH PAINTED FINISH IN ALTERNATING COLORS. COLORS: RAL 1011 BROWN BEIGE & RAL 1001 BEIGE.
3. 1/8" THICK, CNC–CUT STEEL 'SKY' PANELS WITH PAINTED FINISH IN ALTERNATING COLORS. COLORS: RAL 5012 LIGHT BLUE RAL 5015 SKY BLUE.
4. 1/8" THICK, CNC–CUT STEEL 'SPACE' PANELS WITH PAINTED FINISH IN ALTERNATING COLORS. COLORS: RAL 5000 VIOLET BLUE & RAL 5003 SAPPHIRE BLUE.
5. INTERNALLY LIT ALUMINUM 'ROCKET' SIGN CABINET, SEE DETAIL C1/LS502.
6. 2" X 2 "X .250" STEEL ANGLE W/ WEATHERED FINISH.
7. 2 "X 2" X .250" STEEL TUBE SUPPORT POST FOR 'ROCKET' SIGN CABINET W/ WEATHERED FINISH.
8. 3,500 PSI CONCRETE FOOTING.
9. #3 REBAR HORIZONTAL AND CONTINUOUS, 8" O.C. THREE (3) #3 TIES IN TOP 5" OF FOOTING.
10. (15) #5 REBAR VERTICAL.
11. 180° HOOK – ALTERNATE LOCATIONS IN FOOTING.

GENERAL NOTES

A. CONTRACTOR SHALL PROVIDE SHOP DRAWINGS PYLON MONUMENT TO LANDSCAPE ARCHITECT FOR APPROVAL PRIOR TO FABRICATION. CAD FILES WILL BE PROVIDED TO ASSIST IN THE PREPARATION OF SHOP DRAWINGS.
B. CONTRACTOR SHALL PROVIDE MATERIAL AND COLOR/FINISH SAMPLES TO LANDSCAPE ARCHITECT FOR APPROVAL PRIOR TO FABRICATION.

B1 MONUMENT PYLON – ELEVATION

1/4" = 1'–0"

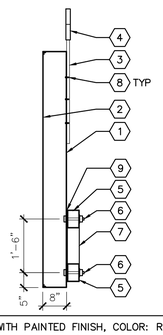

KEYED NOTES

1. 1/8" THICK ALUMINUM SIGN CABINET WITH PAINTED FINISH, COLOR: RAL 1017 'SAFFRON YELLOW'.
2. 1/8" THICK ALUMINUM SIGN CABINET FACE PLATE W/ PAINTED FINISH, COLOR: RAL 1017 'SAFFRON YELLOW'.
3. 1" THICK ALUMINUM ROCKET CONTRAIL WITH PAINTED FINISH, COLOR: RAL 5003 'SAPPHIRE BLUE'.
4. 1 $\frac{1}{2}$" THICK ALUMINUM ROCKET WITH PAINTED FINISH, COLOR: RAL 3003 'RUBY RED'.
5. 6"X4"X.250" TUBE STEEL SUPPORT STRUCTURE W/ WEATHERED FINISH..
6. $\frac{3}{8}$"X6" HEX BOLT AND WASHER ASSEMBLY W/ DIPPED GALVANIZED FINISH.
7. 4"X4"X.250" TUBE STEEL SUPPORT STRUCTURE W/ WEATHERED FINISH.
8. #12 X $\frac{3}{4}$" MACHINE THREAD SCREWS, THREAD INTO TAPPED HOLES IN ROCKET CONTRAIL.
9. 3/16" X 2'–0" X CONTINUOUS STEEL PLATE FASCIA W/ WEATHERED FINISH.

GENERAL NOTES

A. CONTRACTOR SHALL PROVIDE SHOP DRAWINGS TO LANDSCAPE ARCHITECT FOR APPROVAL PRIOR TO FABRICATION. CAD FILES WILL BE PROVIDED TO ASSIST IN THE PREPARATION OF SHOP DRAWINGS.
B. CONTRACTOR SHALL PROVIDE MATERIAL AND COLOR/FINISH SAMPLES TO LANDSCAPE ARCHITECT FOR APPROVAL PRIOR TO FABRICATION.

A1 SIGN CABINET – SECTION

1/2" = 1'–0"

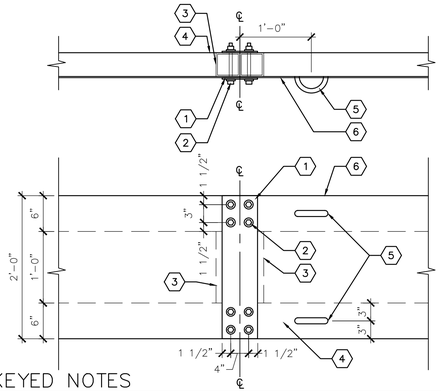

KEYED NOTES

1. 7" x 24" x 1/4" STEEL PLATE W/ WEATHERED FINISH.
2. 1/2" x 6"L HEX BOLT AND WASHER ASSEMBLY W/ DIPPED GALVANIZED FINISH.
3. 4"X4" x .250" SQUARE STEEL TUBE SUPPORT STRUCTURE W/ WEATHERED FINISH.
4. 6"X4" x .250" RECTANGULAR STEEL TUBE SUPPORT STRUCTURE W/ WEATHERED FINISHED.
5. 1 1/2" RADIUS 3/4" DIA. ROUND BAR EYELET W/ WEATHERED FINISH. ATTACHMENT MUST BE RATED FOR 7,000 LBS. MIN.
6. 3/16" x 2'–0" x CONTINUOUS STEEL PLATE FASCIA W/ WEATHERED FINISH.

GENERAL NOTES

A. CONTRACTOR SHALL PROVIDE MATERIAL AND COLOR/FINISH SAMPLES TO LANDSCAPE ARCHITECT FOR APPROVAL PRIOR TO FABRICATION.

C2 BOLT – PLATE ASSEMBLY

1" = 1'–0"

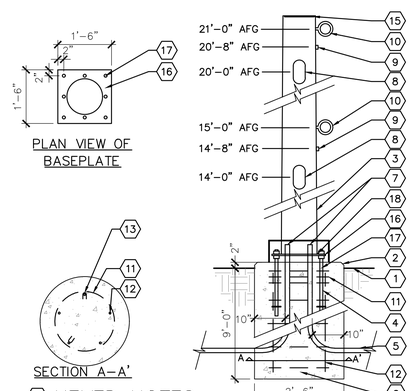

KEYED NOTES

1. FINISH GRADE
2. 1" CHAMFERED EDGE CONTINUOUS AROUND BASE. FINISH SIDE OF FOOTING TO 6" BELOW FINISH GRADE.
3. 12" DIA. STANDARD STEEL PIPE WITH PAINT FINISH, COLOR: GLOSS BLACK.
4. GALVANIZED J–BOLT ASSEMBLY, GENERAL NOTE B.
5. PVC CONDUIT FEED, SEE ELECTRICAL PLANS.
6. 3000 PSI CONCRETE FOOTING.
7. BUSH CONDUIT ENDS
8. HANDHOLE.
9. HUB.
10. EYELET.
11. #3 REBAR HORIZONTAL AND CONTINUOUS AT 8" O.C. THREE #3 TIES IN TOP 5" OF PEDESTAL.
12. (5) #5 REBAR, VERTICAL.
13. 180° HOOK – ALTERNATE LOCATIONS.
14. 14 GAUGE STEEL BASE PLATE COVER, PAINT TO MATCH.
15. WELDED STEEL PLATE COVER AT TOP OF POLE.
16. 1–1/4" X 18" X 18" STEEL BASE PLATE.
17. (8) 1" DIAMETER THREADED RODS WITH 1/4" X 3" SQUARE PLATE WASHERS AND DOUBLE NUTS (24" MIN. EMBEDMENT).
18. PROVIDE COMPLETE JOINT PENETRATION WELD AT PIPE TO BASE PLATE CONNECTION.

GENERAL NOTES

A. POLE BASES SHALL HAVE REINFORCING STEEL BONDED TOGETHER AND CONNECTED TO AN EQUIPMENT GROUNDING CONDUCTOR AT THE POLE ON A GROUNDING LUG INSIDE THE HANDHOLE. BOND GROUND TO THE BRANCH CIRCUIT EQUIPMENT GROUNDING CONDUCTOR AND TO A MINIMUM OF 3/4" X 10' COPPER PLATED, STEEL GROUND ROD AT THE BOTTOM OF EACH POLE.
B. CABLES, EYE BOLTS, TURNBUCKLES, WIRE ROPE CLIPS, THIMBLES, AND ALL OTHER COMPONENTS MUST HAVE A LOAD RATING OF 14,000 LBS. MIN.
C. CONTRACTOR SHALL SUBMIT SHOP DRAWINGS FOR POLE AND BASEPLATE COVER FOR REVIEW AND APPROVAL PRIOR TO FABRICATION.

A2 POLE BASE – OVERHEAD FEATURE

1/2" = 1'–0"

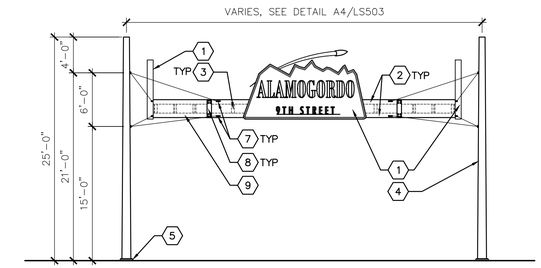

KEYED NOTES

1. INTERNALLY LIT ALUMINUM SIGN CABINET – SEE DETAIL B1/LS503.
2. 6"X4"X.250" STEEL TUBE SUPPORT STRUCTURE W/ WEATHERED FINISH.
3. 4"X4"X.250" STEEL TUBE SUPPORT STRUCTURE W/ WEATHERED FINISH AT 3'–0" O.C. MAXIMUM.
4. PRE–MANUFACTURED TAPERED STEEL POLE W/ POWDER COATED FINISH. COLOR: GLOSS BLACK. SEE GENERAL NOTE C.
5. CONCRETE POLE BASE, SEE DETAIL A2/LS503.
6. 1/2" DIA. STAINLESS STEEL CABLE W/ SWAGED CABLE CONNECTIONS.
7. 1 1/2 RADIUS, 1/2" ROUND BAR EYELETS, SEE DETAIL C2/LS503.
8. STEEL PLATE AND BOLT ASSEMBLY W/ WEATHERED FINISH. SEE DETAIL C2/LS503.
9. 3/16" x 2'–0" x CONTINUOUS STEEL PLATE FASCIA W/ WEATHERED FINISH.

GENERAL NOTES

A. CONTRACTOR SHALL PROVIDE SHOP DRAWINGS FOR SIGN CABINET TO LANDSCAPE ARCHITECT FOR APPROVAL PRIOR TO FABRICATION.
B. CONTRACTOR SHALL PROVIDE MATERIAL & COLOR/FINISH SAMPLES TO LANDSCAPE ARCHITECT FOR APPROVAL PRIOR TO FABRICATION.
C. TAPERED STEEL POLE SHALL BE XXXXXXXXX AS AVAILABLE FROM XXXXXXXXX.

C4 OVERHEAD FEATURE – ELEVATION

1/8" = 1'–0"

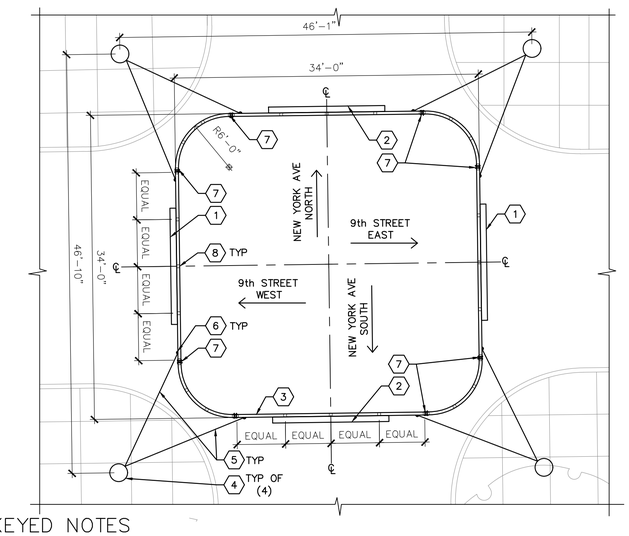

KEYED NOTES

1. INTERNALLY LIT ALUMINUM SIGN CABINET 'NEW YORK AVE.' CONDITION – SEE DETAIL A1/LS502 & A1/LS503.
2. INTERNALLY LIT ALUMINUM SIGN CABINET '9TH STREET' CONDITION – SEE DETAIL A1/LS502 & A1/LS503.
3. 6"X4"X.250" STEEL TUBE, PAINTED FINISH. COLOR: GLOSS BLACK. SEE DETAIL C4/LS503.
4. 12" DIA. STANDARD STEEL PIPE POLE W/ PAINTED FINISH. COLOR: GLOSS BLACK. SEE DETAIL A2/LS503 AND GENERAL NOTE C.
5. 1/2" DIA. STAINLESS STEEL CABLE W/ SWAGED CABLE CONNECTIONS.
6. 1 1/2" RADIUS, 1/2" DIA. STEEL ROUND BAR EYELET, WELDED TO RECTANGULAR STEEL TUBE ASSEMBLY. SEE DETAIL C2/LS503.
7. STEEL PLATE & BOLT ASSEMBLY, SEE DETAIL C2/LS503.
8. 4"X4"X.250" STEEL TUBE, PAINTED FINISH, COLOR: GLOSS BLACK. SEE DETAIL C4/LS503.

GENERAL NOTES

A. CONTRACTOR SHALL PROVIDE SHOP DRAWINGS FOR SIGN CABINET FOR APPROVAL BY LANDSCAPE ARCHITECT PRIOR TO FABRICATION.
B. CONTRACTOR SHALL PROVIDE MATERIAL, COLOR/FINISH SAMPLES FOR APPROVAL BY LANDSCAPE ARCHITECT PRIOR TO FABRICATION.
C. CONTRACTOR SHALL PROVIDE SHOP DRAWINGS FOR STEEL POLE AND BASE PLATE COVER TO LANDSCAPE ARCHITECT FOR REVIEW AND APPROVAL PRIOR TO FABRICATION.
D. CABLES, EYE BOLTS, TURNBUCKLES, WIRE ROPE CLIPS, THIMBLES AND ALL OTHER COMPONENTS SHALL HAVE A LOAD RATING OF 14,000 LBS. MIN.

A4 OVERHEAD FEATURE – PLAN

1/8" = 1'–0"

MRWM
LANDSCAPE ARCHITECTS
mrwmla.com 505 268 2266

CONSULTANTS

SMITH ENGINEERING COMPANY

UNITY ENGINEERING, PC
STRUCTURAL CONSULTANTS

HDC
HUGHES DESIGN COMPANY
505-553-8210
hdcllc@centurylink.net

ALAMOGORDO
GREAT BLOCKS
ALAMOGORDO, NM

MARCH 25, 2022

SUBMITTAL: FOR CONSTRUCTION

REVISIONS

NO.	DATE	DESCRIPTION

PROJECT NO: 20055
CAD DWG FILE:
DESIGNED BY: RDL/JS/KA DATE: 03/25/22
DRAWN BY: JS/KA DATE: 03/25/22
CHECKED BY: JS/RDL DATE: 03/25/22

SHEET TITLE

CONSTRUCTION DETAILS

DRAWING SHEET

LS503

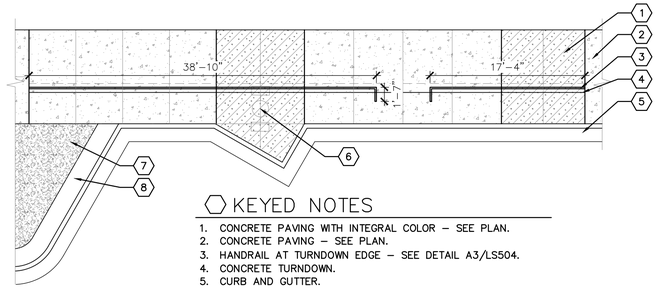

KEYED NOTES

1. CONCRETE PAVING WITH INTEGRAL COLOR – SEE PLAN.
2. CONCRETE PAVING – SEE PLAN.
3. HANDRAIL AT TURNDOWN EDGE – SEE DETAIL A3/LS504.
4. CONCRETE TURNDOWN.
5. CURB AND GUTTER.
6. LIGHT POLE.
7. LANDSCAPE AREA – SEE PLAN.
8. CONCRETE APRON.

C3 HANDRAIL AT CONCRETE TURNDOWN – ENLARGEMENT

1/8" = 1'-0"

0 1" 2"

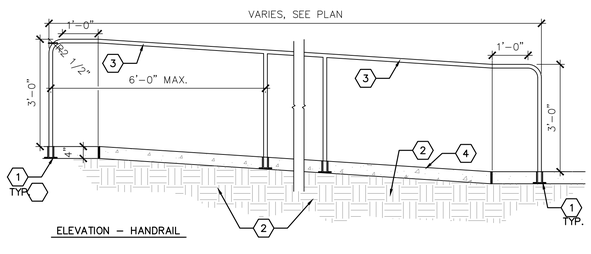

ELEVATION – HANDRAIL

KEYED NOTES

1. GROUT VERTICAL SUPPORT INTO 4" RECESSED PIPE SLEEVE WITH NON-SHRINK GROUT.
2. SUBGRADE COMPACTED TO 95%.
3. 1 1/4" DIA. SCH. 40 STEEL PIPE.
4. CONCRETE PAVING PER DETAIL C4/LS501.

GENERAL NOTES

A. WELD AND GRIND SMOOTH ALL JOINTS, PRIME PIPE COMPLETELY WITH RED OXIDE PRIMER AND FINISH WITH TWO COATS OF EXTERIOR GLOSS LATEX PAINT COLOR: BLACK.
B. POSTS SHALL BE EVENLY SPACED BETWEEN RUNS.
C. CONTRACTOR SHALL PROVIDE SHOP DRAWINGS FOR REVIEW PRIOR TO FABRICATION.

A2 HANDRAIL AT RAMP

1/2" = 1'-0"

0 2' 4'

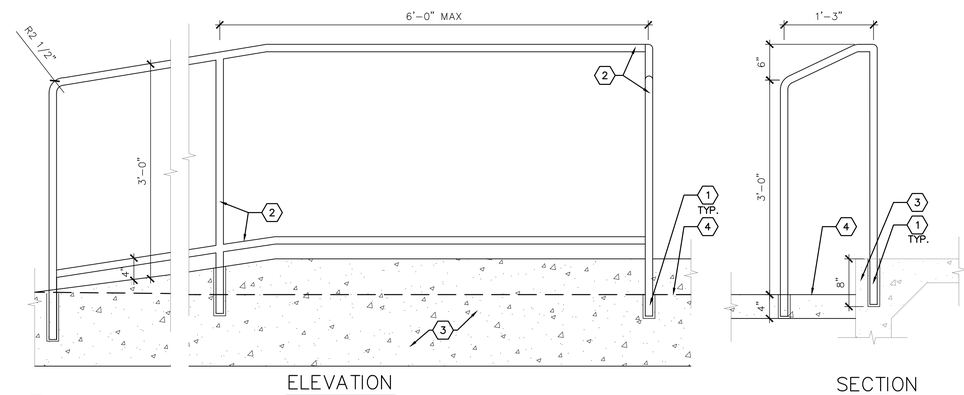

ELEVATION

SECTION

KEYED NOTES

1. SET POSTS INTO 2.5" DIAMETER CORED HOLE IN CONCRETE 8" DEEP AND FILL REMAINING VOID WITH A NON-SHRINKING, QUICK SETTING GROUT (SUCH AS BURKE STONE) TO 1/2" BELOW FINISHED SURFACE. FILL THE LAST 1/2" OF VOID WITH A POLYURETHANE SEALING MATERIAL. FOLLOW MANUFACTURER'S DIRECTIONS FOR ALL MATERIALS USED.
2. 1-1/4" DIA. SCH. 40 STEEL PIPE.
3. CONCRETE TURNDOWN EDGE – SEE DETAIL B3/LS502.
4. FINISH GRADE IN FRONT OF TURNDOWN EDGE – SEE PLAN.

GENERAL NOTES

A. WELD AND GRIND SMOOTH ALL JOINTS, PRIME PIPE COMPLETELY WITH RED OXIDE PRIMER AND FINISH WITH TWO COATS OF EXTERIOR GLOSS LATEX PAINT, COLOR: BLACK.
B. POSTS SHALL BE EVENLY SPACED BETWEEN RUNS.
C. CONTRACTOR SHALL PROVIDE SHOP DRAWINGS FOR REVIEW PRIOR TO FABRICATION.

A3 HANDRAIL AT TURNDOWN EDGE

1" = 1'-0"

0 1" 2"

CONSULTANTS

HDC
HUGHES DESIGN COMPANY
505-553-8210
hdcllc@centurylink.net

STATE OF NEW MEXICO
ROBERT DUTIS
LANDSCAPE ARCHITECT
REGISTERED
3.25.22

ALAMOGORDO
GREAT BLOCKS
ALAMOGORDO, NM

MARCH 25, 2022

SUBMITTAL: FOR CONSTRUCTION

REVISIONS

NO.	DATE	DESCRIPTION

PROJECT NO: 20055
CAD DWG FILE:
DESIGNED BY: RDL/JS/KA DATE: 03/25/22
DRAWN BY: JS/KA DATE: 03/25/22
CHECKED BY: JS/RDL DATE: 03/25/22

SHEET TITLE

CONSTRUCTION DETAILS

DRAWING SHEET

LS504

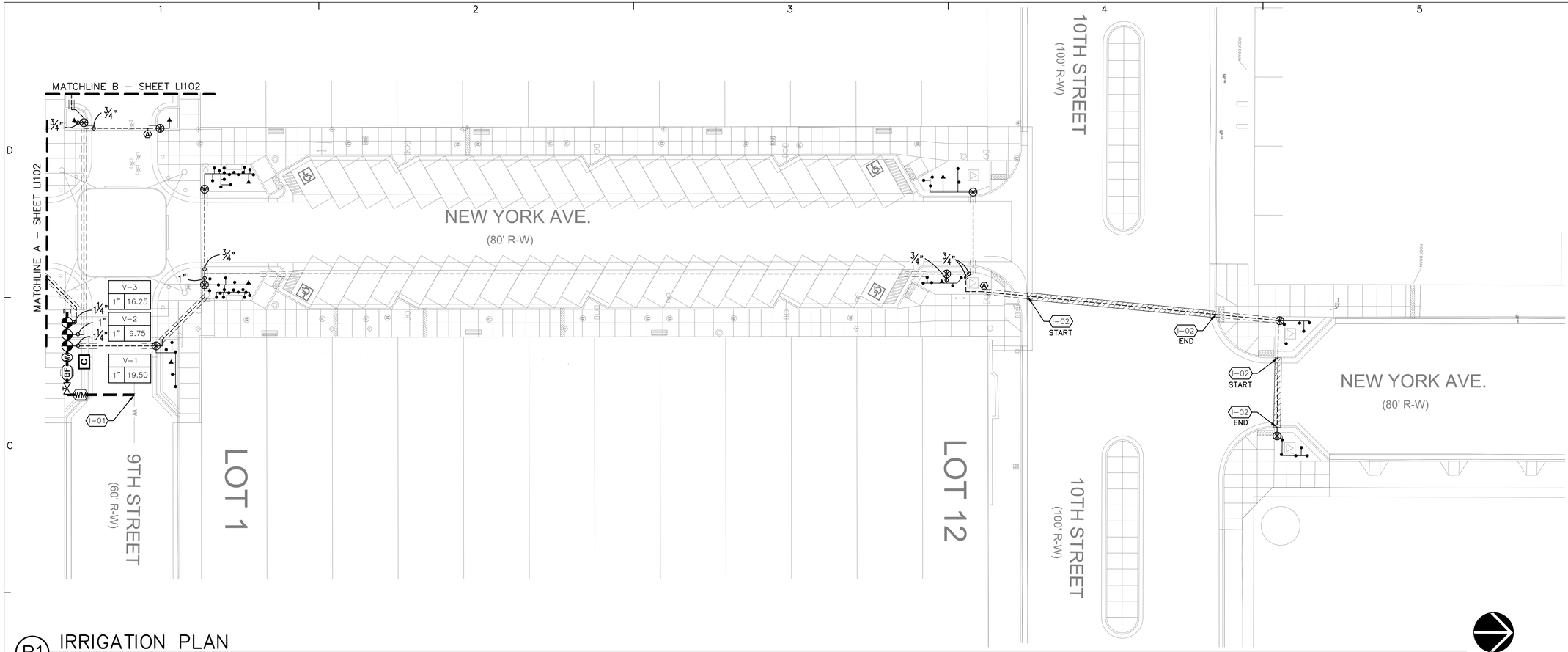

B1 IRRIGATION PLAN

SCALE: 1"=20'-0"

IRRIGATION SCHEDULE

SYMBOL	MANUFACTURER/MODEL/DESCRIPTION	GPM	PSI	DETAIL
•	SHRUB BUBBLER TORO 570 FLOOD BUBBLER ASSEMBLY (ADJUSTED TO 0.25 GPM) OR EQUAL. ONE PER SHRUB	0.25	45	C2/LI501
▲	TREE BUBBLER ASSEMBLY TORO 570 FLOOD BUBBLER ASSEMBLY (ADJUSTED TO 0.5 GPM) OR EQUAL, TWO PER TREE (1.0 GPM TOTAL).	1.00	45	C2/LI501 B3/LI502
SYMBOL	MANUFACTURER/MODEL/DESCRIPTION			DETAIL
	REMOTE CONTROL VALVE ASSEMBLY TORO 252 SERIES PEB, OR EQUAL, MODEL# 252-06-04 PLASTIC BODY 24-VOLT AUTOMATIC VALVE, SIZE AS SHOWN ON PLAN.			C1/LI501
	MANUAL ISOLATION VALVE ASSEMBLY SPEARS SCH. 80 PVC BALL VALVE WITH UNIONS, SAME SIZE AS LINE.			C4/LI502
MV	MASTER VALVE 1-1/2" RAIN BIRD PEB SERIES, OR EQUAL, 1-1/2" PLASTIC BODY 24-VOLT AUTOMATIC MASTER VALVE, IN VALVE BOX.			A4/LI501
	HDPE TO PVC PIPE CONNECTION			C3/LI502
A	AIR RELEASE VALVE ASSEMBLY CRISPIN AL10, OR EQUAL, SIZE 1". AIR RELEASE VALVE LOCATIONS ARE SHOWN SCHEMATICALLY ON THE PLAN AT HIGH POINTS IN ELEVATION. VERIFY FINAL LOCATIONS OF AIR RELEASE VALVES PRIOR TO INSTALLATION TO ENSURE THAT THEY ARE LOCATED AT ACTUAL HIGH POINTS.			A4/LI502
BF	BACKFLOW PREVENTER 1" FEBCO 825Y, OR EQUAL, 1" REDUCED PRESSURE BACKFLOW PREVENTER IN HEATED AND INSULATED BACKFLOW ENCLOSURE, HOT BOX MODEL HB1, OR EQUAL.			A4/LI501
C	IRRIGATION CONTROLLER TORO SENTINEL MODEL# SN12PS1U, OR EQUAL, 12 STATION CONTROLLER IN PEDESTAL, OR EQUAL. INSTALL PER MANUFACTURER'S SPECIFICATIONS.			A2/LI501 A1/LI501
	HDPE CAP BUTT FUSED OR SOCKET WELD HDPE CAP, SIZE PER LINE SIZE.			
WM	WATER METER BY OTHERS – SEE CIVIL.			

IRRIGATION SCHEDULE

SYMBOL	MANUFACTURER/MODEL/DESCRIPTION	GPM	PSI	DETAIL
————	IRRIGATION LATERAL LINE: LATERAL PIPING SCH. 40, BELL END, SOLVENT WELD PVC, SIZE AS SHOWN ON PLAN. DEPTH OF BURY, 18". LATERAL PIPE CONVEYING LESS THAN 5 GPM SHALL BE 3/4".			
- - - - - - - -	IRRIGATION LATERAL LINE: LATERAL PIPING HDPE WITH BUTT FUSED OR SOCKET WELD JOINTS. SIZE AS SHOWN ON PLAN. DEPTH OF BURY, 18".			
— — —	IRRIGATION MAINLINE: IRRIGATION MAIN LINE HDPE WITH BUTT FUSED OR SOCKET WELD JOINTS, SIZE: 1-1/2". DEPTH OF BURY, 28" FOR CONTINUOUS PRESSURE MAIN, 24" FOR NON-CONTINUOUS PRESSURE MAIN.			
- - - - - - - -	PIPE SLEEVE: LATERAL SLEEVE PIPING CLASS 200, SDR-21, BELL-END, SOLVENT WELD PVC.			

VALVE CALLOUT

- # — VALVE NUMBER
- X — VALVE FLOW
- # — VALVE SIZE

IRRIGATION KEYED NOTES

CODE	DESCRIPTION
I-01	IRRIGATION SYSTEM POINT OF CONNECTION.
I-02	CONTRACTOR SHALL BORE AND PULL A 2" HDPE SLEEVE FOR IRRIGATION LATERAL TO EXTENTS INDICATED ON PLAN. SEE IRRIGATION GENERAL NOTE GI-10.

IRRIGATION GENERAL NOTES SCHEDULE

CODE	DESCRIPTION
GI-01	WHERE SLEEVING IS SHOWN ON THE PLAN, INSTALLATION SHALL BE COORDINATED WITH ALL TRADES TO ENSURE THAT PIPE AND SLEEVES ARE INSTALLED AT PROPER DEPTHS AND PRIOR TO INSTALLATION OF CURB AND GUTTER, ASPHALT PAVEMENT, SIDEWALK, CONCRETE PADS, ETC. END OF SLEEVES SHALL EXTEND 2' BEYOND ENDS OF CONCRETE PAVING.
GI-02	CONTRACTOR SHALL FURNISH ALL LABOR, MATERIALS AND EQUIPMENT NECESSARY TO CONSTRUCT PROPOSED IRRIGATION SYSTEM IN ACCORDANCE WITH PLANS, WRITTEN SPECIFICATIONS AND DETAILS.
GI-03	FOR PVC IRRIGATION PIPING AND EQUIPMENT REFERENCE SPECIFICATION SECTION 328400 – LANDSCAPE IRRIGATION SYSTEM.
GI-04	THE LOCATION AND SIZE OF IRRIGATION EQUIPMENT ON THE PLAN IS SHOWN DIAGRAMMATICALLY FOR GRAPHIC CLARITY. THE LOCATION OF CONTROLLERS, BACKFLOW PREVENTERS, VALVES, ETC. SHALL BE APPROVED BY THE LANDSCAPE ARCHITECT IN THE FIELD.

IRRIGATION GENERAL NOTES SCHEDULE

CODE	DESCRIPTION
GI-05	THE LOCATION OF IRRIGATION MAIN AND LATERAL LINES ON THE PLAN IS SHOWN DIAGRAMMATICALLY FOR GRAPHIC CLARITY. UNLESS OTHERWISE NOTED ON THE PLAN, ANY IRRIGATION LINES SHOWN IN HARDSCAPE AREAS IS FOR GRAPHIC CLARITY ONLY. IRRIGATION LINES SHALL BE LOCATED IN IMMEDIATELY ADJACENT LANDSCAPE AREAS.
GI-06	VALVE BOXES IN MULCH AREAS SHALL BE TAN WITH TAN BOLT-DOWN LIDS.
GI-07	IRRIGATION SYSTEM WAS DESIGNED AT A MINIMUM STATIC PRESSURE OF 60 PSI AT THE POINT OF CONNECTION. CONTRACTOR SHALL VERIFY ACTUAL PSI AND DELIVER RESULTS TO LANDSCAPE ARCHITECT PRIOR TO CONSTRUCTION. IN THE EVENT THE ACTUAL PSI IS LESS THAN 60 PSI THE CONTRACTOR SHALL RECEIVE DIRECTION FROM LANDSCAPE ARCHITECT REGARDING DESIGN MODIFICATIONS IF NECESSARY.
GI-08	CONTRACTOR SHALL PROVIDE ONE (1) 120-VOLT, 20 AMP CIRCUIT FROM ELECTRICAL PANEL TO THE IRRIGATION CONTROLLER AND TO THE BACKFLOW PREVENTER ENCLOSURE (ONE TO EACH). ALL WORK AND MATERIALS SHALL MEET LOCAL CODES AND THE NATIONAL ELECTRIC CODE (N.E.C.). REFERENCE ELECTRICAL PLANS.
GI-09	ALL IRRIGATION PIPING UNDER CONCRETE OF ASPHALT PAVING SHALL BE CONTINUOUS HDPE PIPE WITH NO JOINTS LOCATED UNDER PAVEMENT.
GI-10	IN LOCATIONS WHERE IRRIGATION LINES ARE TO BE INSTALLED BY DIRECTIONAL BORING, CONTRACTOR SHALL EXPOSE EXISTING UTILITIES BY POTHOLING PRIOR TO COMMENCING BORING.

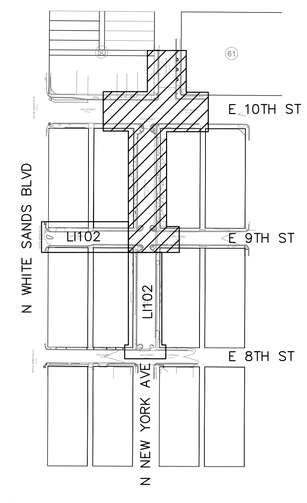

KEY MAP

NORTH

MRWM
LANDSCAPE ARCHITECTS
mrwmla.com 505 268 2266

CONSULTANTS

SMITH ENGINEERING COMPANY

UNITY ENGINEERING, PC
STRUCTURAL CONSULTANTS

HDC
HUGHES DESIGN COMPANY
505-553-8210
hdcllc@centurylink.net

STATE OF NEW MEXICO
ROBERT CURTIS JONES
NO. 406
REGISTERED LANDSCAPE ARCHITECT
3.25.22

ALAMOGORDO GREAT BLOCKS

ALAMOGORDO, NM

MARCH 25, 2022

SUBMITTAL: FOR CONSTRUCTION

REVISIONS

NO.	DATE	DESCRIPTION

PROJECT NO: 20055

CAD DWG FILE:

DESIGNED BY: RDL/JS/KA DATE: 03/25/22

DRAWN BY: JS/KA DATE: 03/25/22

CHECKED BY: JS/RDL DATE: 03/25/22

SHEET TITLE

IRRIGATION PLAN

DRAWING SHEET

LI101

C1 IRRIGATION PLAN

SCALE: 1"=20'-0"

0 20' 40'

NORTH

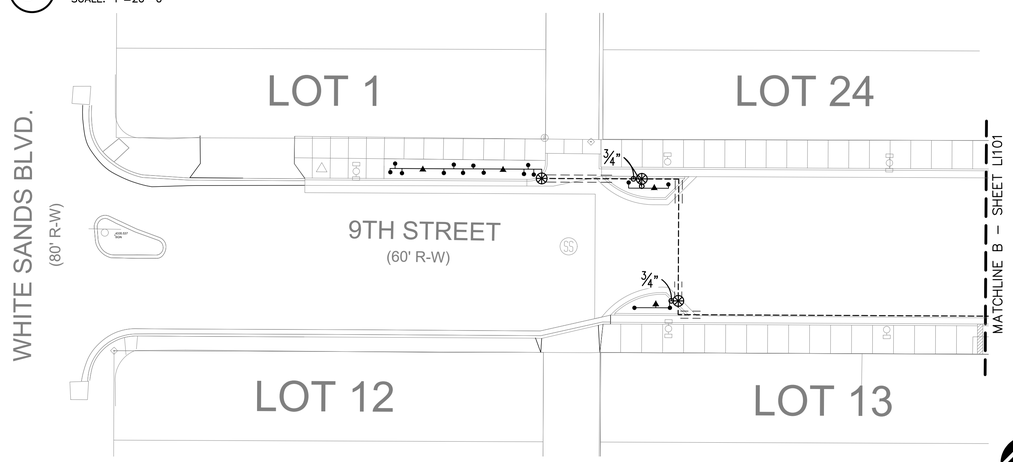

B1 IRRIGATION PLAN

SCALE: 1"=20'-0"

0 20' 40'

NORTH

IRRIGATION SCHEDULE

SYMBOL	MANUFACTURER/MODEL/DESCRIPTION	GPM	PSI	DETAIL
•	SHRUB BUBBLER TORO 570 FLOOD BUBBLER ASSEMBLY (ADJUSTED TO 0.25 GPM) OR EQUAL. ONE PER SHRUB	0.25	45	C2/LI501
▲	TREE BUBBLER ASSEMBLY TORO 570 FLOOD BUBBLER ASSEMBLY (ADJUSTED TO 0.5 GPM) OR EQUAL, TWO PER TREE (1.0 GPM TOTAL).	1.00	45	C2/LI501 B3/LI502
SYMBOL	MANUFACTURER/MODEL/DESCRIPTION			DETAIL
	REMOTE CONTROL VALVE ASSEMBLY TORO 252 SERIES PEB, OR EQUAL, MODEL# 252-06-04 PLASTIC BODY 24-VOLT AUTOMATIC VALVE, SIZE AS SHOWN ON PLAN.			C1/LI501
	MANUAL ISOLATION VALVE ASSEMBLY SPEARS SCH. 80 PVC BALL VALVE WITH UNIONS, SAME SIZE AS LINE.			C4/LI502
MV	MASTER VALVE 1-1/2" RAIN BIRD PEB SERIES, OR EQUAL, 1-1/2" PLASTIC BODY 24-VOLT AUTOMATIC MASTER VALVE, IN VALVE BOX.			A4/LI501
	HDPE TO PVC PIPE CONNECTION			C3/LI502
A	AIR RELEASE VALVE ASSEMBLY CRISPIN AL10, OR EQUAL, SIZE 1". AIR RELEASE VALVE LOCATIONS ARE SHOWN SCHEMATICALLY ON THE PLAN AT HIGH POINTS IN ELEVATION. VERIFY FINAL LOCATIONS OF AIR RELEASE VALVES PRIOR TO INSTALLATION TO ENSURE THAT THEY ARE LOCATED AT ACTUAL HIGH POINTS.			A4/LI502
BF	BACKFLOW PREVENTER 1" FEBCO 825Y, OR EQUAL, 1" REDUCED PRESSURE BACKFLOW PREVENTER IN HEATED AND INSULATED BACKFLOW ENCLOSURE, HOT BOX MODEL HB1, OR EQUAL.			A4/LI501
C	IRRIGATION CONTROLLER TORO SENTINEL MODEL# SN12PS1U, OR EQUAL, 12 STATION CONTROLLER IN PEDESTAL, OR EQUAL. INSTALL PER MANUFACTURER'S SPECIFICATIONS.			A2/LI501 A1/LI501
	HDPE CAP BUTT FUSED OR SOCKET WELD HDPE CAP, SIZE PER LINE SIZE.			
WM	WATER METER BY OTHERS – SEE CIVIL.			
————	IRRIGATION LATERAL LINE: LATERAL PIPING SCH. 40, BELL END, SOLVENT WELD PVC, SIZE AS SHOWN ON PLAN. DEPTH OF BURY, 18". LATERAL PIPE CONVEYING LESS THAN 5 GPM SHALL BE 3/4".			
- - - - - -	IRRIGATION LATERAL LINE: LATERAL PIPING HDPE WITH BUTT FUSED OR SOCKET WELD JOINTS. SIZE AS SHOWN ON PLAN. DEPTH OF BURY, 18".			
— — — —	IRRIGATION MAINLINE: IRRIGATION MAIN LINE HDPE WITH BUTT FUSED OR SOCKET WELD JOINTS, SIZE: 1-1/2". DEPTH OF BURY, 28" FOR CONTINUOUS PRESSURE MAIN, 24" FOR NON-CONTINUOUS PRESSURE MAIN.			
= = = = = =	PIPE SLEEVE: LATERAL SLEEVE PIPING CLASS 200, SDR-21, BELL-END, SOLVENT WELD PVC.			

VALVE CALLOUT

- # — VALVE NUMBER
- X — VALVE FLOW
- # — VALVE SIZE

IRRIGATION GENERAL NOTES SCHEDULE

CODE	DESCRIPTION
GI-01	WHERE SLEEVING IS SHOWN ON THE PLAN, INSTALLATION SHALL BE COORDINATED WITH ALL TRADES TO ENSURE THAT PIPE AND SLEEVES ARE INSTALLED AT PROPER DEPTHS AND PRIOR TO INSTALLATION OF CURB AND GUTTER, ASPHALT PAVEMENT, SIDEWALK, CONCRETE PADS, ETC. END OF SLEEVES SHALL EXTEND 2' BEYOND ENDS OF CONCRETE PAVING.
GI-02	CONTRACTOR SHALL FURNISH ALL LABOR, MATERIALS AND EQUIPMENT NECESSARY TO CONSTRUCT PROPOSED IRRIGATION SYSTEM IN ACCORDANCE WITH PLANS, WRITTEN SPECIFICATIONS AND DETAILS.
GI-03	FOR PVC IRRIGATION PIPING AND EQUIPMENT REFERENCE SPECIFICATION SECTION 328400 – LANDSCAPE IRRIGATION SYSTEM.
GI-04	THE LOCATION AND SIZE OF IRRIGATION EQUIPMENT ON THE PLAN IS SHOWN DIAGRAMMATICALLY FOR GRAPHIC CLARITY. THE LOCATION OF CONTROLLERS, BACKFLOW PREVENTERS, VALVES, ETC. SHALL BE APPROVED BY THE LANDSCAPE ARCHITECT IN THE FIELD.
GI-05	THE LOCATION OF IRRIGATION MAIN AND LATERAL LINES ON THE PLAN IS SHOWN DIAGRAMMATICALLY FOR GRAPHIC CLARITY. UNLESS OTHERWISE NOTED ON THE PLAN, ANY IRRIGATION LINES SHOWN IN HARDSCAPE AREAS IS FOR GRAPHIC CLARITY ONLY. IRRIGATION LINES SHALL BE LOCATED IN IMMEDIATELY ADJACENT LANDSCAPE AREAS.
GI-06	VALVE BOXES IN MULCH AREAS SHALL BE TAN WITH TAN BOLT-DOWN LIDS.
GI-07	IRRIGATION SYSTEM WAS DESIGNED AT A MINIMUM STATIC PRESSURE OF 60 PSI AT THE POINT OF CONNECTION. CONTRACTOR SHALL VERIFY ACTUAL PSI AND DELIVER RESULTS TO LANDSCAPE ARCHITECT PRIOR TO CONSTRUCTION. IN THE EVENT THE ACTUAL PSI IS LESS THAN 60 PSI THE CONTRACTOR SHALL RECEIVE DIRECTION FROM LANDSCAPE ARCHITECT REGARDING DESIGN MODIFICATIONS IF NECESSARY.
GI-08	CONTRACTOR SHALL PROVIDE ONE (1) 120-VOLT, 20 AMP CIRCUIT FROM ELECTRICAL PANEL TO THE IRRIGATION CONTROLLER AND TO THE BACKFLOW PREVENTER ENCLOSURE (ONE TO EACH). ALL WORK AND MATERIALS SHALL MEET LOCAL CODES AND THE NATIONAL ELECTRIC CODE (N.E.C.). REFERENCE ELECTRICAL PLANS.
GI-09	ALL IRRIGATION PIPING UNDER CONCRETE OF ASPHALT PAVING SHALL BE CONTINUOUS HDPE PIPE WITH NO JOINTS LOCATED UNDER PAVEMENT.
GI-10	IN LOCATIONS WHERE IRRIGATION LINES ARE TO BE INSTALLED BY DIRECTIONAL BORING, CONTRACTOR SHALL EXPOSE EXISTING UTILITIES BY POTHOLING PRIOR TO COMMENCING BORING.

IRRIGATION KEYED NOTES

CODE	DESCRIPTION
I-01	IRRIGATION SYSTEM POINT OF CONNECTION.
I-02	CONTRACTOR SHALL BORE AND PULL A 2" HDPE SLEEVE FOR IRRIGATION LATERAL TO EXTENTS INDICATED ON PLAN. SEE IRRIGATION GENERAL NOTE GI-10.

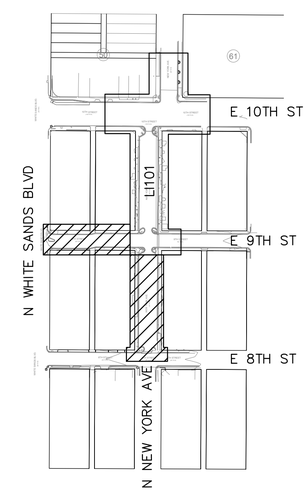

KEY MAP

NORTH

MRWM
LANDSCAPE ARCHITECTS
mrwmla.com 505 268 2266

CONSULTANTS

SMITH ENGINEERING COMPANY

UNITY ENGINEERING, PC
STRUCTURAL CONSULTANTS

HDC
HUGHES DESIGN COMPANY
505-553-8210
hdcllc@centurylink.net

STATE OF NEW MEXICO
KENNETH JOSEPH HUGHES
NO. 406
REGISTERED LANDSCAPE ARCHITECT
3.25.22

ALAMOGORDO GREAT BLOCKS

ALAMOGORDO, NM

MARCH 25, 2022

SUBMITTAL: FOR CONSTRUCTION

REVISIONS

NO.	DATE	DESCRIPTION

PROJECT NO: 20055

CAD DWG FILE:

DESIGNED BY: RDL/JS/KA DATE: 03/25/22

DRAWN BY: JS/KA DATE: 03/25/22

CHECKED BY: JS/RDL DATE: 03/25/22

SHEET TITLE

IRRIGATION PLAN

DRAWING SHEET

LI102

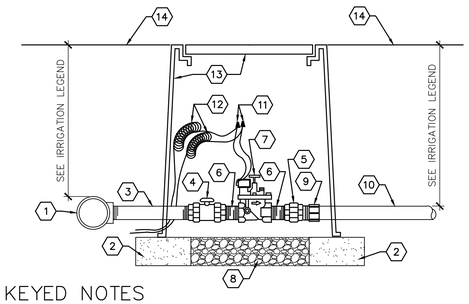

KEYED NOTES

1. PVC MAINLINE.
2. SOLID CMU BLOCK, FOUR PER BOX.
3. SCH. 80 PVC NIPPLE, LENGTH AS REQUIRED.
4. SPEARS TRUE UNION SCH. 80 PVC BALL VALVE WITH UNIONS.
5. SPEARS SCH. 80 PVC UNION.
6. SCH. 80 PVC NIPPLE – 3" LENGTH.
7. REMOTE CONTROL VALVE, SEE IRRIGATION LEGEND.
8. 6" DEPTH 1" WASHED GRAVEL, WITH 2" CLEARANCE TO BOTTOM OF VALVE ASSEMBLY.
9. SCH. 40 PVC MALE ADAPTER.
10. LATERAL PIPING (SEE LEGEND).
11. WATERPROOF WIRE CONNECTOR.
12. 36" WIRE EXPANSION LOOPS.
13. APPLIED ENGINEERING 1730–18P2P VALVE BOX W/ BOLT DOWN FLUSH COVER AND 8" EXTENSIONS (1730–XG) AS REQUIRED.
14. FINISH GRADE.

GENERAL NOTES

A. CONTRACTOR SHALL INSTALL ONE AUTOMATIC VALVE ASSEMBLY PER VALVE BOX.

C1 REMOTE CONTROL VALVE ASSEMBLY

SCALE: N.T.S.

M–77

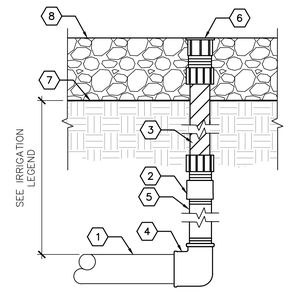

KEYED NOTES

1. IRRIGATION LATERAL PIPE
2. 1/2" X 1/2" PVC THREADED COUPLING.
3. 1/2" X 6" PVC FLEX RISER.
4. 3/4" SCH. 40 PVC SLIP TO THREAD ELBOW.
5. 1/2" X 18" SCH. 80 PVC THREADED NIPPLE.
6. PRESSURE COMPENSATING BUBBLER, SET TOP OF BUBBLER FLUSH WITH TOP OF MULCH – SEE IRRIGATION LEGEND.
7. TOP OF GRADE.
8. TOP OF MULCH, SEE PLANTING NOTES FOR DEPTH OF MULCH.

C2 BUBBLER ASSEMBLY

SCALE: N.T.S.

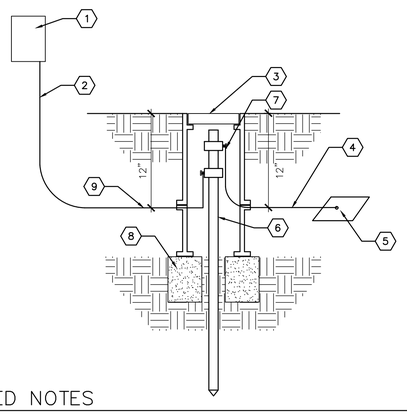

KEYED NOTES

1. IRRIGATION CONTROLLER AND/OR LINE SURGE PROTECTOR – SEE IRRIGATION LEGEND.
2. #10 BARE COPPER WIRE FROM IRRIGATION CONTROLLER TO GROUND ROD CLAMP. WIRE SHALL BE INSTALLED STRAIGHT AND TAUT. MIN. 10' FROM CONTROLLER.
3. CARSON 708 SERIES VALVE BOX WITH COVER.
4. #6 BARE COPPER WIRE.
5. 1/6" X 12" X 18" COPPER PLATE BURIED AT 12" DEPTH. SOLDER COPPER WIRE TO PLATE.
6. 5/8" X 10' LENGTH COPPER CLAD GROUND ROD, PLACE IN IRRIGATED AREA A MINIMUM OF 10' FROM CONTROLLER.
7. GROUND ROD CLAMP.
8. 8"X8"X16" SOLID CMU BLOCK.
9. DRILL A SMALL OPENING IN VALVE BOX TO MAINTAIN WIRE TAUTNESS.

A1 GROUNDING PROTECTION

NOT TO SCALE

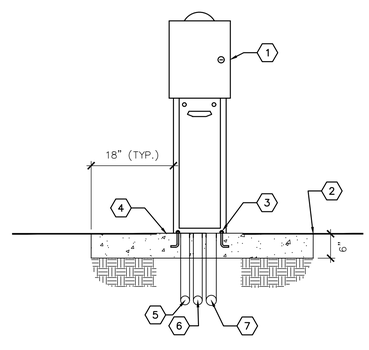

KEYED NOTES

1. IRRIGATION CONTROLLER ENCLOSURE WITH PEDESTAL – SEE IRRIGATION LEGEND. INSTALL PER MANUFACTURER'S SPECIFICATIONS.
2. TOOLED EDGE, TYP.
3. 1/2"X6" ANCHOR BOLTS, INSTALL WITH POUR.
4. 3500 PSI CONCRETE PAD, WITH MEDIUM BRUSH FINISH. PAD SHALL EXTEND 18" BEYOND EACH SIDE OF ENCLOSURE WITH 1/2% SLOPE FOR DRAINAGE.
5. 3/4" RIGID PVC SWEEP ELL (GROUNDING WIRE).
6. 3/4" RIGID PVC SWEEP ELL (24 VOLT WIRE).
7. 2" RIGID PVC SWEEP ELL (24 VOLT WIRE) EXTEND 12" PAST CONCRETE PAD.

A2 PEDESTAL MOUNT IRRIGATION CONTROLLER

SCALE: N.T.S.

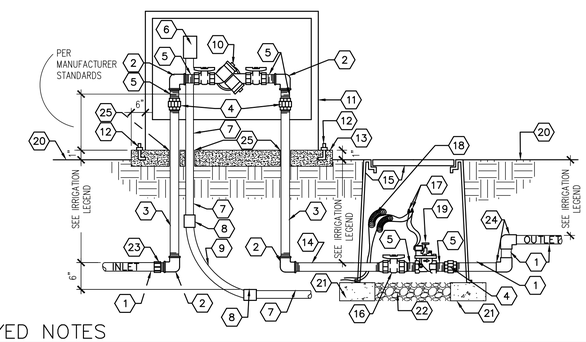

KEYED NOTES

1. PVC MAINLINE – SEE LEGEND.
2. GALVANIZED ELBOW.
3. GALVANIZED NIPPLE, LENGTH AS REQUIRED.
4. GALVANIZED UNION.
5. GALVANIZED NIPPLE– 3" LENGTH.
6. JUNCTION BOX FOR HEAT TAPE.
7. RIGID STEEL CONDUIT.
8. WATERTIGHT CONNECTOR.
9. RIGID STEEL CONDUIT.
10. REDUCED PRESSURE BACKFLOW PREVENTER, SEE IRRIGATION LEGEND.
11. INSULATED ENCLOSURE – SEE LEGEND.
12. 1/2"x6" ANCHOR BOLTS, FOUR PER BOX.
13. 3000 PSI CONCRETE PAD, 6" THICK WITH TOOLED EDGES.
14. GALVANIZED NIPPLE – 36" LENGTH.
15. APPLIED ENGINEERING PRODUCTS 1730–18P2P VALVE BOX W/ 8" EXTENSIONS (1730–XC) AS REQUIRED.
16. SPEARS TRUE UNION SCH. 80 PVC BALL VALVE.
17. WATERPROOF WIRE SPLICE.
18. 36" WIRE LOOPS.
19. MASTER VALVE – SEE IRRIGATION LEGEND.
20. FINISH GRADE.
21. SOLID CMU BLOCK, FOUR PER BOX.
22. 6" DEPTH OF 1" WASHED GRAVEL.
23. SCH 40 PVC MALE ADAPTER.
24. MAIN LINE ELL, 90 DEGREE.
25. PVC SLEEVE.

GENERAL NOTES

A. CONTRACTOR SHALL SUPPLY AND INSTALL WINTERGARD WET H612 HEAT CABLE AROUND EXPOSED PIPES AND BACKFLOW PREVENTER. MINIMUM 1:3 SPIRALING RATIO.

A4 BACKFLOW PREVENTER & MASTER VALVE ASSEMBLY

SCALE: N.T.S.

M–79

MRWM
LANDSCAPE ARCHITECTS
mrwmla.com 505 268 2266

CONSULTANTS

SMITH ENGINEERING COMPANY
UNITY ENGINEERING, PC
STRUCTURAL CONSULTANTS
HDC
HUGHES DESIGN COMPANY
505-553-8210
hdcllc@centurylink.net

STATE OF NEW MEXICO
KOMAN DAVIS
INC# 406
REGISTERED LANDSCAPE ARCHITECT
3.25.22

ALAMOGORDO GREAT BLOCKS

ALAMOGORDO, NM

MARCH 25, 2022

SUBMITTAL: FOR CONSTRUCTION

REVISIONS

NO.	DATE	DESCRIPTION

PROJECT NO: 20055

CAD DWG FILE:

DESIGNED BY: RDL/JS/KA DATE: 03/25/22

DRAWN BY: JS/KA DATE: 03/25/22

CHECKED BY: JS/RDL DATE: 03/25/22

SHEET TITLE

IRRIGATION DETAILS

DRAWING SHEET

LI501

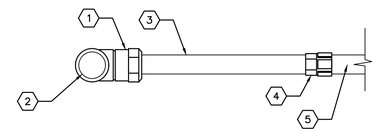

KEYED NOTES

1. SERVICE TEE. SERVICE TEE SHALL BE 2" X 2" X 1" PRESSURE RATED BRASS COMPRESSION CONNECTION, FORD BRASS 'GRIP JOINT' OR APPROVED EQUAL.
2. 2" HDPE LATERAL PIPE.
3. 1" HDPE NIPPLE.
4. HDPE TO PVC PRESSURE RATED BRASS COMPRESSION CONNECTION, FORD BRASS 'GRIP JOINT' OR APPROVED EQUAL. SIZE TO MATCH PIPE SIZE.
5. PVC PIPE TO BUBBLER. SEE PLAN FOR LINE SIZE.

C3 HPDE TO PVC TRANSITION

NOT TO SCALE

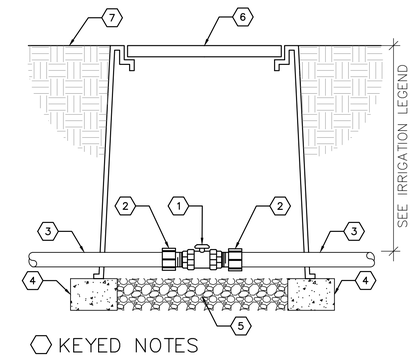

KEYED NOTES

1. MANUAL VALVE (SEE LEGEND).
2. SCH. 40 PVC MALE ADAPTER.
3. MAINLINE PIPE (SEE LEGEND).
4. SOLID CMU BLOCK, FOUR PER BOX.
5. 6" DEPTH OF 1" CRUSHED GRAVEL.
6. APPLIED ENGINEERING PRODUCTS 1015-1G2G 12" HEAVY DUTY VALVE BOX W/ EXTENSIONS AS REQUIRED.
7. FINISH GRADE.

C4 MANUAL ISOLATION VALVE

SCALE: N.T.S. **M-75**

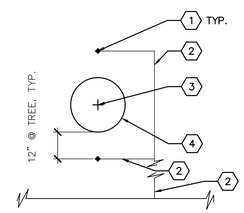

KEYED NOTES

1. BUBBLER (TYP.). SEE IRRIGATION LEGEND. 2 EACH PER TREE OR VERTICAL SHRUB.
2. LATERAL PIPE.
3. TREE OR SHRUB CENTER.
4. EDGE OF ROOT BALL.

B3 BUBBLER LAYOUT AT TREES

NOT TO SCALE

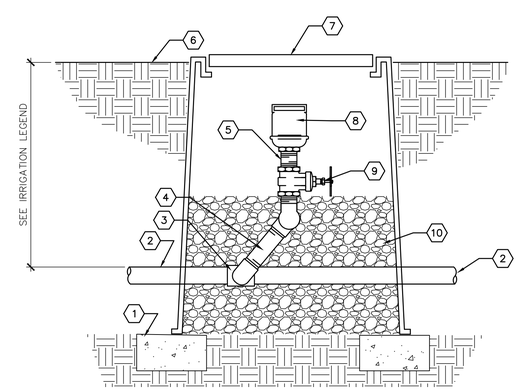

KEYED NOTES

1. 8"X8"X16" SOLID CMU BLOCK.
2. IRRIGATION MAIN LINE.
3. IRRIGATION MAINLINE TEE. SXSXT.
4. LASCO SWING JOINT, SIZE AS REQUIRED, OR EQUAL.
5. SCH. 80 PVC NIPPLE.
6. FINISH GRADE.
7. APPLIED ENGINEERING PRODUCTS 1730-18P2P VALVE BOX W/ 8" EXTENSIONS AS REQUIRED, OR EQUAL.
8. AIR RELIEF VALVE (SEE LEGEND).
9. BRASS GATE VALVE (SEE LEGEND).
10. 1" DIAMETER WASHED ROCK.

GENERAL NOTES

A. WASHED ROCK SHALL BE INSTALLED FLUSH WITH BOTTOM OF GATE VALVE.

A4 AIR RELIEF VALVE ASSEMBLY

NOT TO SCALE

MRWM
LANDSCAPE ARCHITECTS
mrwmla.com 505 268 2266

CONSULTANTS

SMITH ENGINEERING COMPANY

UNITY ENGINEERING, PC
STRUCTURAL CONSULTANTS

HDC
HUGHES DESIGN COMPANY
505-553-8210
hdcllc@centurylink.net

STATE OF NEW MEXICO
ROBERT DEVITIS
NO. 406
REGISTERED LANDSCAPE ARCHITECT
3.25.22

ALAMOGORDO GREAT BLOCKS

ALAMOGORDO, NM

MARCH 25, 2022

SUBMITTAL: FOR CONSTRUCTION

REVISIONS

NO.	DATE	DESCRIPTION

PROJECT NO: 20055

CAD DWG FILE:

DESIGNED BY: RDL/JS/KA DATE: 03/25/22

DRAWN BY: JS/KA DATE: 03/25/22

CHECKED BY: JS/RDL DATE: 03/25/22

SHEET TITLE

IRRIGATION DETAILS

DRAWING SHEET

LI502

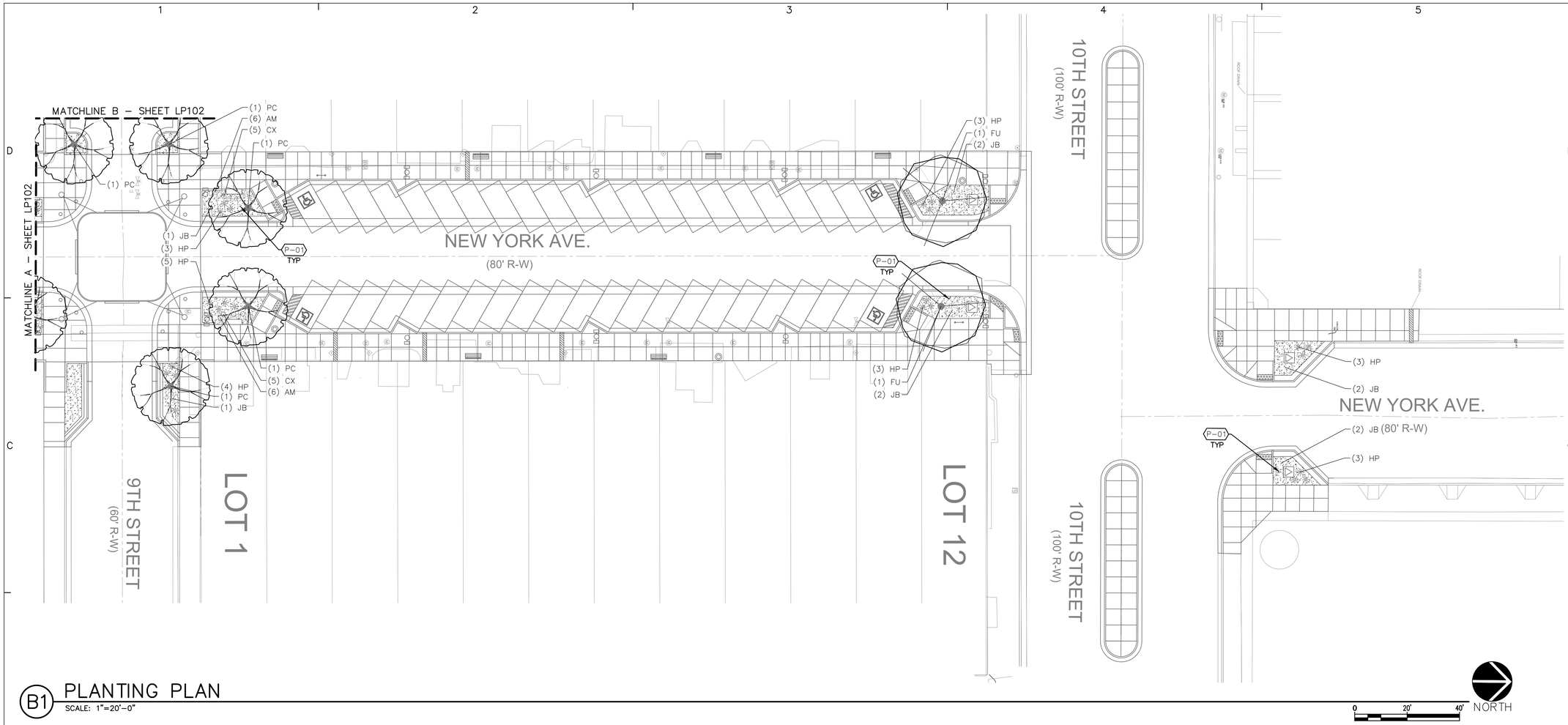

B1 PLANTING PLAN

SCALE: 1"=20'-0"

PLANT SCHEDULE

TREES	CODE	QTY	COMMON NAME	BOTANICAL NAME	REMARKS	HT.	SPD.	INSTALLED SIZE
	PC	7	CHINESE PISTACHE	PISTACIA CHINENSIS	24" BOX	30'	30'	2" CAL., 10'-12' HT.
	FU	9	URBANITE GREEN ASH	FRAXINUS PENNSYLVANICA 'URBANITE'	24" BOX	45'	35'	2" CAL., 10'-12' HT.
SHRUBS	**CODE**	**QTY**	**COMMON NAME**	**BOTANICAL NAME**	**REMARKS**	**HT.**	**SPD.**	**INSTALLED SIZE**
	JB	15	BUFFALO JUNIPER	JUNIPERUS SABINA 'BUFFALO'	MIN. 6" SPREAD	1'	5'	MIN. 6" SPD.
	AM	32	MOONSHINE YARROW	ACHILLEA X 'MOONSHINE'	1 GAL.	2'	2'	MIN. 12" HT.
	HP	48	RED YUCCA	HESPERALOE PARVIFLORA	MIN. 12" HT.	3'	3'	
GRASSES	**CODE**	**QTY**	**COMMON NAME**	**BOTANICAL NAME**	**REMARKS**	**HT.**	**SPD.**	**INSTALLED SIZE**
	CX	21	KARL FOERSTER FEATHER REED GRASS	CALAMAGROSTIS X ACUTIFLORA 'KARL FOERSTER'	5 GAL.	30"	2'	MIN. 12" HT.

PLANTING SCHEDULE

CODE	DESCRIPTION
P-01	GRAVEL MULCH SHALL BE 1" BROWN GRAVEL, OR APPROVED EQUAL, INSTALLED AT A 4" DEPTH OVER FILTER FABRIC.

GENERAL PLANTING NOTES SCHEDULE

CODE	DESCRIPTION
GP-01	IN CASE OF DISCREPANCY IN PLANT QUANTITIES SHOWN ON THE PLANT LEGEND AND THOSE SHOWN ON THE PLANTING PLAN, THE QUANTITIES SHOWN ON THE PLAN SHALL GOVERN. CONTRACTOR SHALL VERIFY ALL QUANTITIES PRIOR TO BID AND INSTALLATION. NO ADDITIONAL PAYMENT WILL BE MADE FOR ANY DISCREPANCIES IN QUANTITIES BETWEEN THE PLANTING PLAN AND THE PLANT LIST.
GP-02	FILTER FABRIC SHALL BE MIN. 4 OZ. NON-WOVEN NEEDLE-PUNCHED POLYPROPYLENE (MIRAFI OR EQUIVALENT). OVERLAP ENDS 3" AND TURN DOWN EDGES 6".
GP-03	TOP OF MULCH SHALL BE 1" BELOW TOP OF ADJACENT CONCRETE SURFACES.
GP-04	CONTRACTOR SHALL PRUNE LOWER BRANCHES OF DECIDUOUS TREES AS DIRECTED BY LANDSCAPE ARCHITECT IN THE FIELD.
GP-05	TREES SHALL BE INSTALLED PER DETAIL A3/LP102.
GP-06	SHRUBS SHALL BE INSTALLED PER DETAIL B4/LP102.
GP-07	IF THERE IS A DISCREPANCY IN THE FIELD OR NURSERY BETWEEN THE CONTAINER SIZE CALLED OUT UNDER "REMARKS" AND HEIGHT & SPREAD CALLED OUT UNDER "SIZE," THE SPECIFIED PLANT MUST MEET HEIGHT & SPREAD REQUIREMENTS SPECIFIED UNDER "SIZE", EVEN IF A LARGER CONTAINER SIZE IS REQUIRED TO MEET THESE SPECIFICATIONS, AT NO ADDITIONAL COST TO THE OWNER.
GP-08	TREES AND SHRUBS SHALL BE INSTALLED PER SPECIFICATION SECTION 329300 – PLANTS.

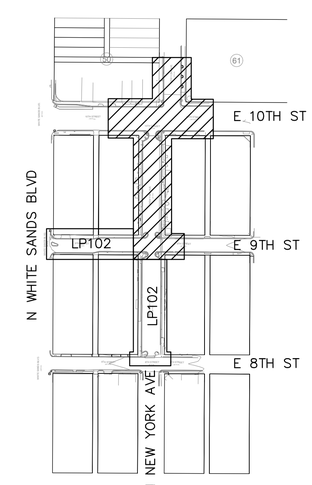

KEY MAP

NORTH

MRWM
LANDSCAPE ARCHITECTS
mrwmla.com 505 268 2266

CONSULTANTS

SMITH ENGINEERING COMPANY

UNITY ENGINEERING, PC
STRUCTURAL CONSULTANTS

HDC
HUGHES DESIGN COMPANY
505-553-8210
hdcllc@centurylink.net

STATE OF NEW MEXICO
RONALD DENNIS JONES
NO. 406
REGISTERED LANDSCAPE ARCHITECT
3.25.22

ALAMOGORDO
GREAT BLOCKS
ALAMOGORDO, NM

MARCH 25, 2022

SUBMITTAL: FOR CONSTRUCTION

REVISIONS

NO.	DATE	DESCRIPTION

PROJECT NO: 20055
CAD DWG FILE:
DESIGNED BY: RDL/JS/KA DATE: 03/25/22
DRAWN BY: JS/KA DATE: 03/25/22
CHECKED BY: JS/RDL DATE: 03/25/22

SHEET TITLE

PLANTING PLAN

DRAWING SHEET

LP101

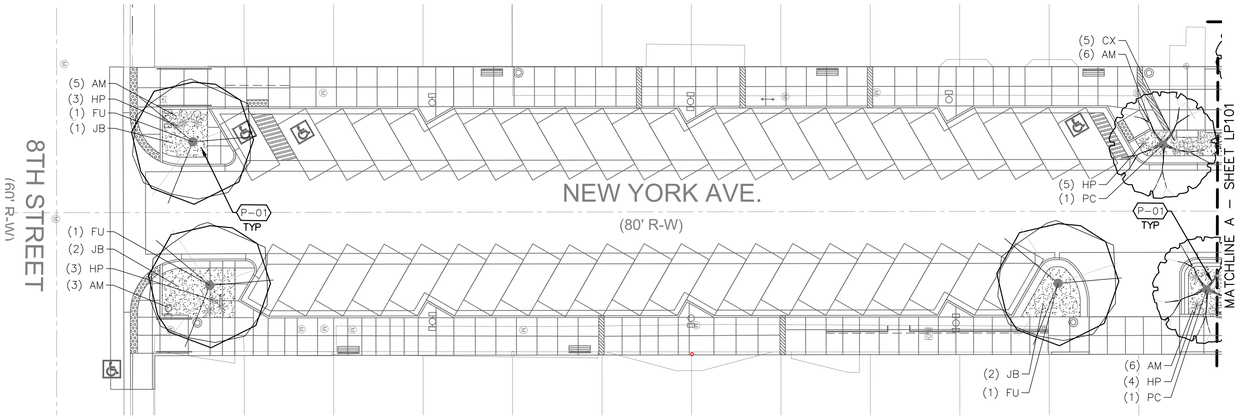

C1 PLANTING PLAN

SCALE: 1"=20'-0"

0 20' 40'

NORTH

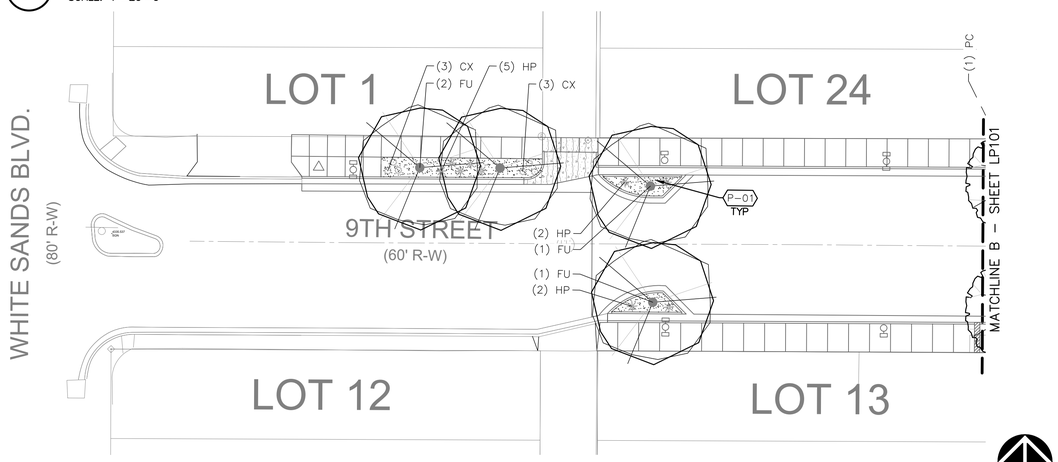

B1 PLANTING PLAN

SCALE: 1"=20'-0"

0 20' 40'

NORTH

PLANT SCHEDULE

TREES	CODE	QTY	COMMON NAME	BOTANICAL NAME	REMARKS	HT.	SPD.	INSTALLED SIZE
	PC	7	CHINESE PISTACHE	PISTACIA CHINENSIS	24" BOX	30'	30'	2" CAL., 10'-12' HT.
	FU	9	URBANITE GREEN ASH	FRAXINUS PENNSYLVANICA 'URBANITE'	24" BOX	45'	35'	2" CAL., 10'-12' HT.
SHRUBS	**CODE**	**QTY**	**COMMON NAME**	**BOTANICAL NAME**	**REMARKS**	**HT.**	**SPD.**	**INSTALLED SIZE**
	JB	15	BUFFALO JUNIPER	JUNIPERUS SABINA 'BUFFALO'	MIN. 6" SPREAD	1'	5'	MIN. 6" SPD.
	AM	32	MOONSHINE YARROW	ACHILLEA X 'MOONSHINE'	1 GAL.	2'	2'	MIN. 12" HT.
	HP	48	RED YUCCA	HESPERALOE PARVIFLORA	MIN. 12" HT.	3'	3'	
GRASSES	**CODE**	**QTY**	**COMMON NAME**	**BOTANICAL NAME**	**REMARKS**	**HT.**	**SPD.**	**INSTALLED SIZE**
	CX	21	KARL FOERSTER FEATHER REED GRASS	CALAMAGROSTIS X ACUTIFLORA 'KARL FOERSTER'	5 GAL.	30"	2'	MIN. 12" HT.

PLANTING SCHEDULE

CODE	DESCRIPTION
P-01	GRAVEL MULCH SHALL BE 1" BROWN GRAVEL, OR APPROVED EQUAL, INSTALLED AT A 4" DEPTH OVER FILTER FABRIC.

GENERAL PLANTING NOTES SCHEDULE

CODE	DESCRIPTION
GP-01	IN CASE OF DISCREPANCY IN PLANT QUANTITIES SHOWN ON THE PLANT LEGEND AND THOSE SHOWN ON THE PLANTING PLAN, THE QUANTITIES SHOWN ON THE PLAN SHALL GOVERN. CONTRACTOR SHALL VERIFY ALL QUANTITIES PRIOR TO BID AND INSTALLATION. NO ADDITIONAL PAYMENT WILL BE MADE FOR ANY DISCREPANCIES IN QUANTITIES BETWEEN THE PLANTING PLAN AND THE PLANT LIST.
GP-02	FILTER FABRIC SHALL BE MIN. 4 OZ. NON-WOVEN NEEDLE-PUNCHED POLYPROPYLENE (MIRAFI OR EQUIVALENT). OVERLAP ENDS 3" AND TURN DOWN EDGES 6".
GP-03	TOP OF MULCH SHALL BE 1" BELOW TOP OF ADJACENT CONCRETE SURFACES.
GP-04	CONTRACTOR SHALL PRUNE LOWER BRANCHES OF DECIDUOUS TREES AS DIRECTED BY LANDSCAPE ARCHITECT IN THE FIELD.
GP-05	TREES SHALL BE INSTALLED PER DETAIL A3/LP102.
GP-06	SHRUBS SHALL BE INSTALLED PER DETAIL B4/LP102.
GP-07	IF THERE IS A DISCREPANCY IN THE FIELD OR NURSERY BETWEEN THE CONTAINER SIZE CALLED OUT UNDER "REMARKS" AND HEIGHT & SPREAD CALLED OUT UNDER "SIZE," THE SPECIFIED PLANT MUST MEET HEIGHT & SPREAD REQUIREMENTS SPECIFIED UNDER "SIZE", EVEN IF A LARGER CONTAINER SIZE IS REQUIRED TO MEET THESE SPECIFICATIONS, AT NO ADDITIONAL COST TO THE OWNER.
GP-08	TREES AND SHRUBS SHALL BE INSTALLED PER SPECIFICATION SECTION 329300 – PLANTS.

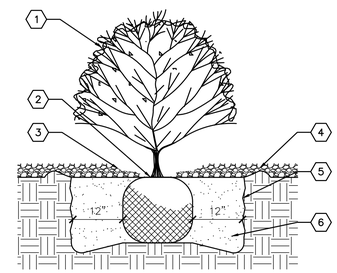

KEYED NOTES

1. SHRUB LOCATION AND SPECIES AS PER PLAN.
2. PLANT AT SAME DEPTH MAINTAINED AT NURSERY.
3. FEATHER MULCH TO A 2" DEPTH ON TOP OF ROOT BALL AND HOLD BACK 2" FROM SHRUB STEM(S).
4. 4" DEPTH MULCH THROUGHOUT SHRUB BED UNLESS OTHERWISE NOTED.
5. SCARIFY EDGE OF PLANTING HOLE, CONTINUOUS ALL SIDES.
6. BACKFILL AND SOIL AMENDMENTS (SEE SPECIFICATIONS).

B4 SHRUB PLANTING

SCALE: N.T.S.

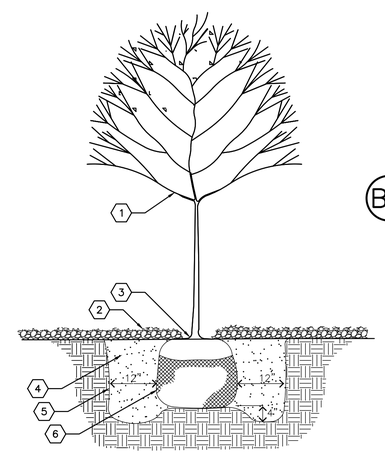

KEYED NOTES

1. TREE LOCATION AND SPECIES PER PLAN
2. GRAVEL MULCH. MULCH SHALL BE FEATHERED TO A 2" DEPTH ON TOP OF ROOT BALL AND SHALL BE HELD BACK 2" FROM TREE TRUNK.
3. REMOVE EXISTING SOIL (FROM NURSERY) AS NEEDED TO EXPOSE ROOT FLARE. INSTALL WITH ROOT FLARE FLUSH WITH SUB-GRADE (BOTTOM OF MULCH).
4. BACKFILL AND SOIL AMENDMENTS (SEE SPECIFICATIONS). THOROUGHLY MIX BACKFILL AND AMENDMENTS PRIOR TO INSTALLATION.
5. SCARIFY EDGE OF PLANTING HOLE, CONTINUOUS ALL SIDES.
6. REMOVE WIRE BASKET, WOOD BOX, PLASTIC TWINE, AND/OR ROPE PRIOR TO BACKFILL. REMOVE BURLAP EXCEPT FROM BOTTOM OF ROOT BALL.

A3 TREE PLANTING DETAIL

SCALE: N.T.S.

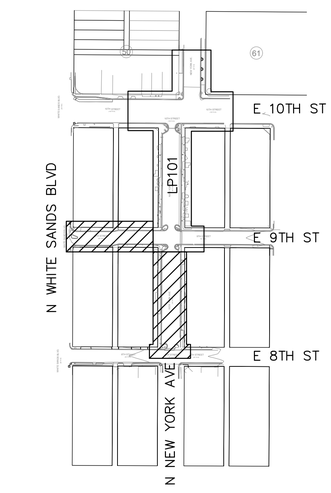

KEY MAP

NORTH

MRWM
LANDSCAPE ARCHITECTS
mrwmla.com 505 268 2266

CONSULTANTS

SMITH ENGINEERING COMPANY

UNITY ENGINEERING, PC
STRUCTURAL CONSULTANTS

HDC
HUGHES DESIGN COMPANY
505-553-8210
hdcllc@centurylink.net

STATE OF NEW MEXICO
ROBERT J. LOPTIS
NO. 406
REGISTERED LANDSCAPE ARCHITECT
3.25.22

ALAMOGORDO GREAT BLOCKS

ALAMOGORDO, NM

MARCH 25, 2022

SUBMITTAL: FOR CONSTRUCTION

REVISIONS

NO.	DATE	DESCRIPTION

PROJECT NO: 20055
CAD DWG FILE:
DESIGNED BY: RDL/JS/KA DATE: 03/25/22
DRAWN BY: JS/KA DATE: 03/25/22
CHECKED BY: JS/RDL DATE: 03/25/22

SHEET TITLE

PLANTING PLAN

DRAWING SHEET

LP102

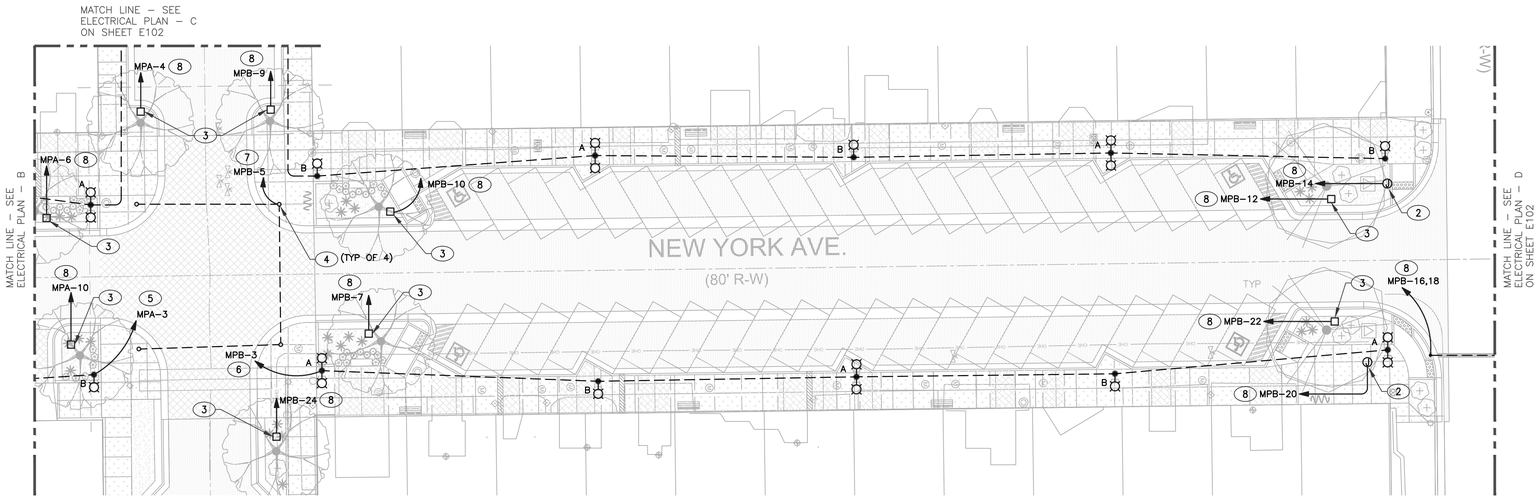

ELECTRICAL PLAN - A (1)

SCALE: 1" = 20'-0"

NORTH

0 20' 40'

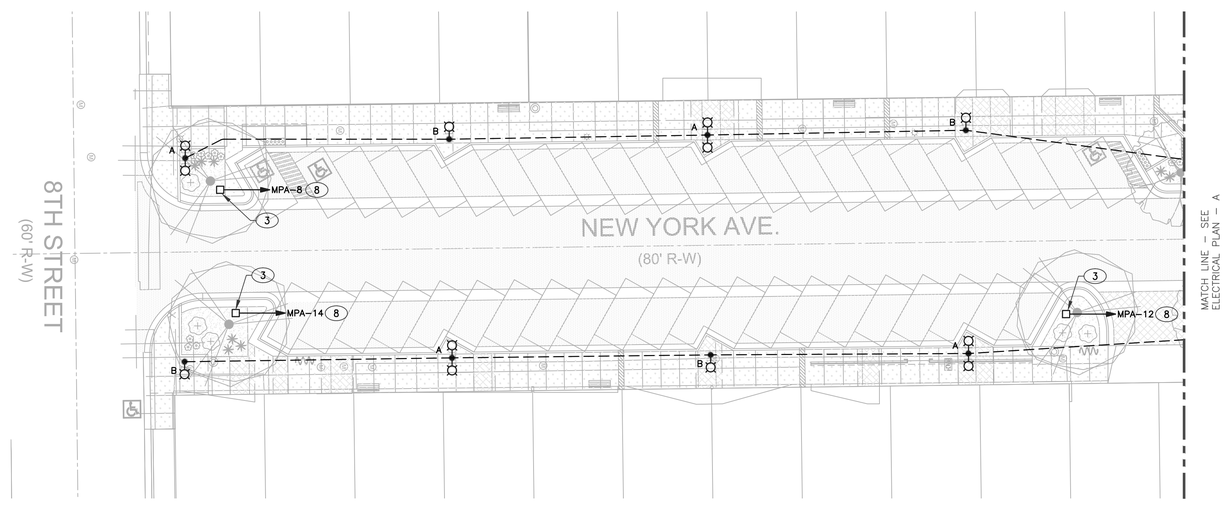

ELECTRICAL PLAN - B (1)

SCALE: 1" = 20'-0"

NORTH

0 20' 40'

KEYED NOTES

1. EXISTING STREET LIGHTING TO BE REMOVED BY PNM. EXISTING PEDESTRIAN LIGHTING (APPROX. 13 TOTAL) TO BE REMOVED BY THE ELECTRIC CONTRACTOR. COORDINATE WORK WITH PNM. COORDINATE REMOVAL AND RE-INSTALLATION OF EXISTING "STRING" LIGHTING WITH THE OWNER.
2. WEATHERPROOF JUNCTION BOX FOR POWER CONNECTION TO MONUMENT SIGN.
3. DUPLEX GFCI RECEPTACLE LOCATED IN PEDESTAL. PEDESTAL SHALL BE PEDOC #1P18-C-HT-BR. MOUNT SECURELY TO 10" DIAMETER BY 18" DEEP SONOTUBE FOOTING. REFER TO LANDSCAPE DRAWINGS FOR EXACT LOCATION OF PEDESTALS.
4. POLE (BY OTHERS) FOR SUPPORT / POWER CONNECTION TO OVERHEAD CIRCULAR SIGN (BY OTHERS). REFER TO LANDSCAPE DRAWINGS FOR ADDITIONAL INFORMATION.
5. EXTEND CIRCUIT INDICATED THROUGH CHANNEL #2 OF TIME CLOCK "TC1". UTILIZE #8 CU. CONDUCTORS IN 3/4" CONDUIT ENTIRE LENGTH OF CIRCUIT.
6. EXTEND CIRCUIT INDICATED THROUGH CHANNEL #2 OF TIME CLOCK "TC2". UTILIZE #8 CU. CONDUCTORS IN 3/4" CONDUIT ENTIRE LENGTH OF CIRCUIT.
7. EXTEND CIRCUIT INDICATED THROUGH CHANNEL #3 OF TIME CLOCK "TC2". UTILIZE #8 CU. CONDUCTORS IN 3/4" CONDUIT ENTIRE LENGTH OF CIRCUIT.
8. UTILIZE #8 CU. CONDUCTORS IN 3/4" CONDUIT ENTIRE LENGTH OF CIRCUIT.

GENERAL NOTES

A. ELECTRICAL CONTRACTOR SHALL FURNISH ALL REQUIRED PERMITS.

B. ELECTRICAL CONTRACTOR SHALL GUARANTEE ALL WORK FOR ONE YEAR FROM COMPLETION OF PROJECT.

C. ALL WORK PERFORMED UNDER THIS CONTRACT SHALL BE DONE IN STRICT ACCORDANCE WITH ALL STATE AND LOCAL CODES AND ORDINANCES, THE CURRENT EDITION OF THE NEC, THE RULES AND REGULATIONS OF THE LOCAL ELECTRICAL COMPANY AUTHORITY, AND OTHER AUTHORITIES HAVING JURISDICTION OVER THE SAME. WHETHER SHOWN ON THE DRAWINGS OR NOT, ALL MODIFICATIONS REQUIRED BY ANY OF THE ABOVE AUTHORITIES SHALL BE MADE BY THE CONTRACTOR AT NO ADDITIONAL COST TO THE OWNER.

EXCAVATION WARNING NOTES

IF ANY UTILITY LINES, PIPELINES, OR UNDERGROUND UTILITY LINES ARE SHOWN ON THESE DRAWINGS, THEY ARE SHOWN IN AN APPROXIMATE MANNER ONLY; AND SUCH LINES MAY EXIST WHERE NONE ARE SHOWN. IF ANY SUCH EXISTING LINES ARE SHOWN, THE LOCATION IS BASED UPON INFORMATION PROVIDED BY THE UTILITY OR PIPELINE COMPANY, THE OWNER OR BY OTHERS, AND THE INFORMATION MAY BE INCOMPLETE, OR MAY BE OBSOLETE BY THE TIME CONSTRUCTION COMMENCES.

THE ENGINEER HAS UNDERTAKEN NO FIELD VERIFICATION OF THE LOCATION, DEPTH, SIZE OR TYPE OF EXISTING UTILITY LINES, PIPELINES, OR UNDERGROUND UTILITY LINES, MAKES NO REPRESENTATION PERTAINING THERETO, AND ASSUMES NO RESPONSIBILITY OR LIABILITY THEREFOR. THE CONTRACTOR SHALL INFORM ITSELF TO THE LOCATION OF ANY UTILITY LINE, PIPELINE OR UNDERGROUND UTILITY LINE IN OR NEAR THE AREA OF THE WORK IN ADVANCE OF AND DURING EXCAVATION WORK. THE CONTRACTOR IS FULLY RESPONSIBLE FOR ANY AND ALL DAMAGE CAUSED BY ITS FAILURE TO LOCATE, IDENTIFY AND PRESERVE ANY AND ALL EXISTING UTILITIES, LINES, PIPELINES, OR UNDERGROUND UTILITY LINES. THE CONTRACTOR SHALL COMPLY WITH STATE STATUTES, MUNICIPAL AND LOCAL ORDINANCES, RULES, AND REGULATIONS, IF ANY, PERTAINING TO THE LOCATION OF THESE LINES AND FACILITIES IN PLANNING AND CONDUCTING EXCAVATION, WHETHER BY CALLING OR NOTIFYING THE UTILITIES, COMPLYING WITH "BLUE STAKES" PROCEDURES OR OTHERWISE.

MRWM
LANDSCAPE ARCHITECTS
mrwmla.com 505 268 2266

CONSULTANTS

SMITH ENGINEERING COMPANY

UNITY ENGINEERING, PC
STRUCTURAL CONSULTANTS

HDC
HUGHES DESIGN COMPANY
505-553-8210
hdcllc@centurylink.net

HARVEY A. PEEL
NEW MEXICO
8201
REGISTERED PROFESSIONAL ENGINEER
11/12/21

ALAMOGORDO
GREAT BLOCKS
ALAMOGORDO, NM

NOVEMBER 12, 2021

SUBMITTAL: 100% - FOR CONST.

REVISIONS

NO.	DATE	DESCRIPTION

PROJECT NO: 20055
CAD DWG FILE:
DESIGNED BY: HDC DATE: 11/12/21
DRAWN BY: HDC DATE: 11/12/21
CHECKED BY: ENG3 DATE: 11/12/21

SHEET TITLE

ELECTRICAL PLAN

DRAWING SHEET

E101

eng3 group ltd.

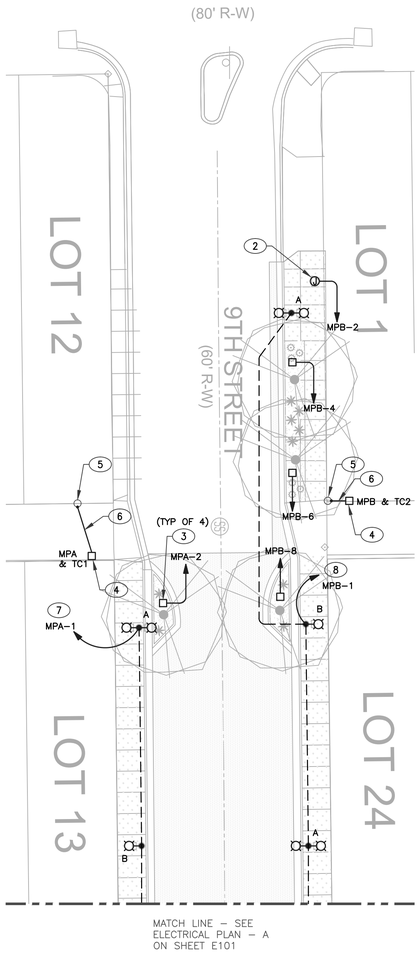

ELECTRICAL PLAN - C (1)

SCALE: 1" = 20'-0"

0 20' 40'

NORTH

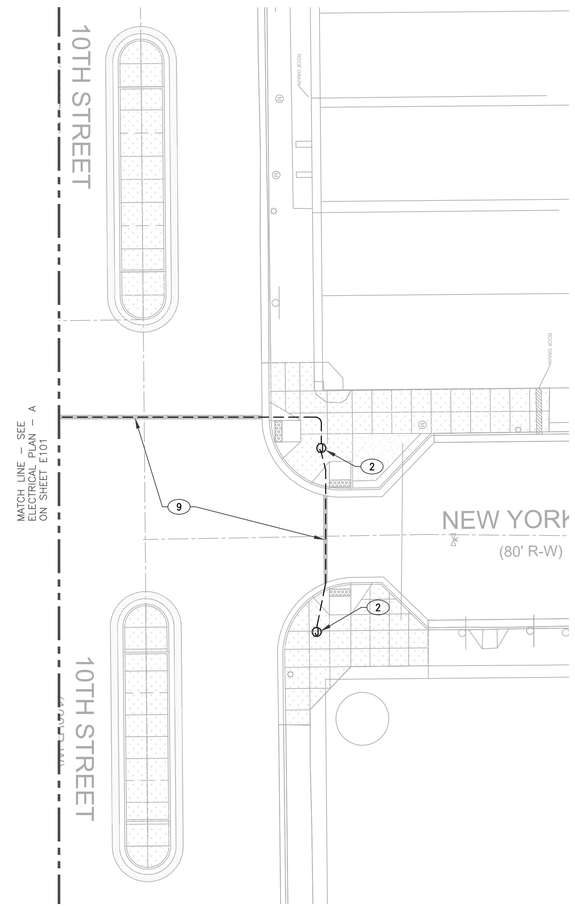

ELECTRICAL PLAN - D

SCALE: 1" = 20'-0"

0 20' 40'

NORTH

KEYED NOTES

1. EXISTING STREET LIGHTING TO BE REMOVED BY PNM. EXISTING PEDESTRIAN LIGHTING (APPROX. 13 TOTAL) TO BE REMOVED BY THE ELECTRIC CONTRACTOR. COORDINATE WORK WITH PNM.
2. WEATHERPROOF JUNCTION BOX FOR POWER CONNECTION TO MONUMENT SIGN.
3. DUPLEX GFCI RECEPTACLE LOCATED IN PEDESTAL. PEDESTAL SHALL BE PEDOC #1P18-C-HT-BR. MOUNT SECURELY TO 10" DIAMETER BY 18" DEEP SONOTUBE FOOTING. REFER TO LANDSCAPE DRAWINGS FOR EXACT LOCATION OF PEDESTALS.
4. NEW METERING PEDESTAL / LOAD CENTER FOR POWER CONNECTION TO NEW LIGHTING, RECEPTACLES AND MONUMENT SIGNS. REFER TO POWER RISER DIAGRAM ON SHEET E201 FOR ADDITIONAL INFORMATION.
5. APPROXIMATE LOCATION OF EXISTING PNM POLE.
6. SECONDARY FEEDER AND RISER UP POLE, REFER TO POWER RISER DIAGRAM ON SHEET E201 FOR ADDITIONAL INFORMATION.
7. EXTEND CIRCUIT INDICATED THROUGH CHANNEL #1 OF TIME CLOCK "TC1". UTILIZE #8 CU. CONDUCTORS IN 3/4" CONDUIT ENTIRE LENGTH OF CIRCUIT.
8. EXTEND CIRCUIT INDICATED THROUGH CHANNEL #1 OF TIME CLOCK "TC2". UTILIZE #8 CU. CONDUCTORS IN 3/4" CONDUIT ENTIRE LENGTH OF CIRCUIT.
9. DIRECTIONAL BORE UNDER EXISTING ROAD, FOR POWER FEEDS TO NEW MONUMENT SIGNS.

GENERAL NOTES

A. ELECTRICAL CONTRACTOR SHALL FURNISH ALL REQUIRED PERMITS.

B. ELECTRICAL CONTRACTOR SHALL GUARANTEE ALL WORK FOR ONE YEAR FROM COMPLETION OF PROJECT.

C. ALL WORK PERFORMED UNDER THIS CONTRACT SHALL BE DONE IN STRICT ACCORDANCE WITH ALL STATE AND LOCAL CODES AND ORDINANCES, THE CURRENT EDITION OF THE NEC, THE RULES AND REGULATIONS OF THE LOCAL ELECTRICAL COMPANY AUTHORITY, AND OTHER AUTHORITIES HAVING JURISDICTION OVER THE SAME. WHETHER SHOWN ON THE DRAWINGS OR NOT, ALL MODIFICATIONS REQUIRED BY ANY OF THE ABOVE AUTHORITIES SHALL BE MADE BY THE CONTRACTOR AT NO ADDITIONAL COST TO THE OWNER.

EXCAVATION WARNING NOTES

IF ANY UTILITY LINES, PIPELINES, OR UNDERGROUND UTILITY LINES ARE SHOWN ON THESE DRAWINGS, THEY ARE SHOWN IN AN APPROXIMATE MANNER ONLY, AND SUCH LINES MAY EXIST WHERE NONE ARE SHOWN. IF ANY SUCH EXISTING LINES ARE SHOWN, THE LOCATION IS BASED UPON INFORMATION PROVIDED BY THE UTILITY OR PIPELINE COMPANY, THE OWNER OR BY OTHERS, AND THE INFORMATION MAY BE INCOMPLETE, OR MAY BE OBSOLETE BY THE TIME CONSTRUCTION COMMENCES.

THE ENGINEER HAS UNDERTAKEN NO FIELD VERIFICATION OF THE LOCATION, DEPTH, SIZE OR TYPE OF EXISTING UTILITY LINES, PIPELINES, OR UNDERGROUND UTILITY LINES, MAKES NO REPRESENTATION PERTAINING THERETO, AND ASSUMES NO RESPONSIBILITY OR LIABILITY THEREFOR. THE CONTRACTOR SHALL INFORM ITSELF TO THE LOCATION OF ANY UTILITY LINE, PIPELINE OR UNDERGROUND UTILITY LINE IN OR NEAR THE AREA OF THE WORK IN ADVANCE OF AND DURING EXCAVATION WORK. THE CONTRACTOR IS FULLY RESPONSIBLE FOR ANY AND ALL DAMAGE CAUSED BY ITS FAILURE TO LOCATE, IDENTIFY AND PRESERVE ANY AND ALL EXISTING UTILITIES, LINES, PIPELINES, OR UNDERGROUND UTILITY LINES. THE CONTRACTOR SHALL COMPLY WITH STATE STATUTES, MUNICIPAL AND LOCAL ORDINANCES, RULES, AND REGULATIONS, IF ANY, PERTAINING TO THE LOCATION OF THESE LINES AND FACILITIES IN PLANNING AND CONDUCTING EXCAVATION, WHETHER BY CALLING OR NOTIFYING THE UTILITIES, COMPLYING WITH "BLUE STAKES" PROCEDURES OR OTHERWISE.

eng3 group llc

MRWM
LANDSCAPE ARCHITECTS
mrwmla.com 505 268 2266

CONSULTANTS

SMITH ENGINEERING COMPANY

UNITY ENGINEERING, PC
STRUCTURAL CONSULTANTS

HDC
HUGHES DESIGN COMPANY
505-553-8210
hdcllc@centurylink.net

HARVEY A. PEEL NEW MEXICO 8231 REGISTERED PROFESSIONAL ENGINEER
11/12/21

ALAMOGORDO GREAT BLOCKS
ALAMOGORDO, NM

NOVEMBER 12, 2021

SUBMITTAL: 100% - FOR CONST.

REVISIONS

NO.	DATE	DESCRIPTION

PROJECT NO: 20055
CAD DWG FILE:
DESIGNED BY: HDC DATE: 11/12/21
DRAWN BY: HDC DATE: 11/12/21
CHECKED BY: ENG3 DATE: 11/12/21

SHEET TITLE

ELECTRICAL PLANS

DRAWING SHEET

E102

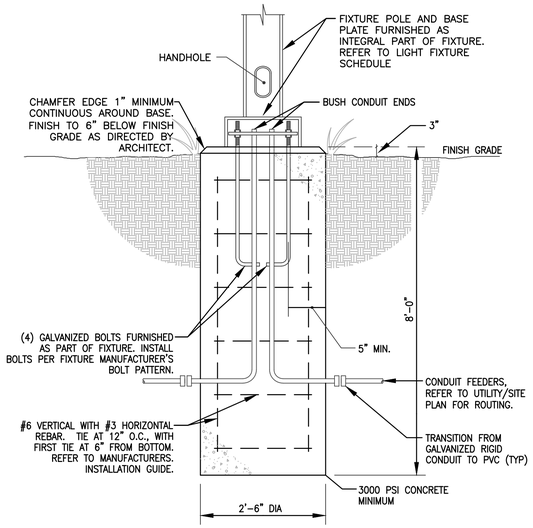

FIXTURE TYPE "A" MOUNTING DETAIL

SCALE: NONE

GROUNDING:
POLE BASES SHALL HAVE REINFORCING STEEL BONDED TOGETHER AND CONNECTED TO AN EQUIPMENT GROUNDING CONDUCTOR AT THE POLE ON A GROUNDING LUG INSIDE THE HANDHOLE. BOND GROUND TO THE BRANCH CIRCUIT EQUIPMENT GROUNDING CONDUCTOR AND TO A MINIMUM OF ¾" x 10' COPPER PLATED, STEEL GROUND ROD AT THE BOTTOM OF EACH POLE.

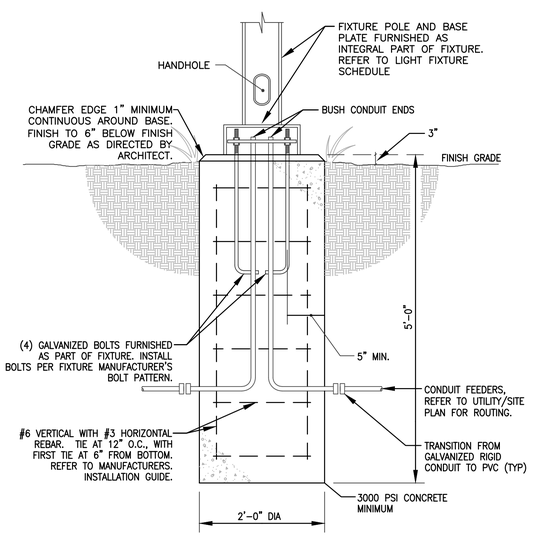

FIXTURE TYPE "B" MOUNTING DETAIL

SCALE: NONE

GROUNDING:
POLE BASES SHALL HAVE REINFORCING STEEL BONDED TOGETHER AND CONNECTED TO AN EQUIPMENT GROUNDING CONDUCTOR AT THE POLE ON A GROUNDING LUG INSIDE THE HANDHOLE. BOND GROUND TO THE BRANCH CIRCUIT EQUIPMENT GROUNDING CONDUCTOR AND TO A MINIMUM OF ¾" x 10' COPPER PLATED, STEEL GROUND ROD AT THE BOTTOM OF EACH POLE.

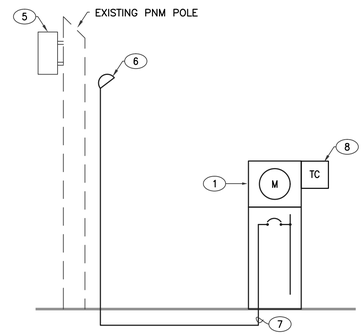

POWER RISER DIAGRAM - (TYP. FOR "MPA" AND "MPB")

SCALE: NONE

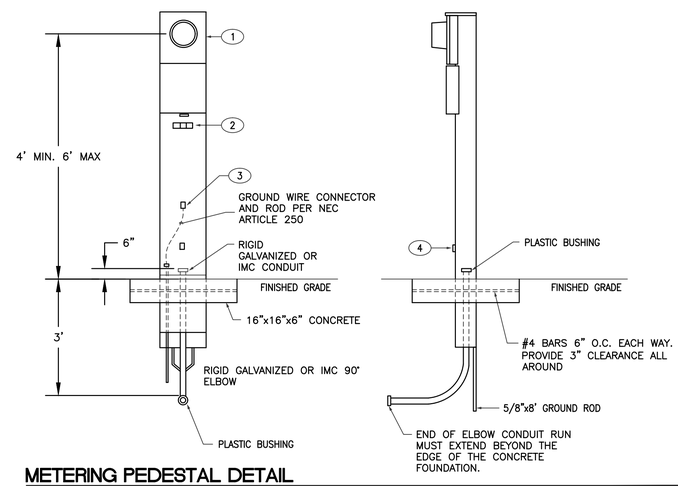

METERING PEDESTAL DETAIL

SCALE: NONE

KEYED NOTES

1. 120/240 VOLT 200 AMP, 22,000 AIC METERING PEDESTAL "MPA" AND "MPB" (COLOR TO BE APPROVED BY LANDSCAPE ARCHITECT) WITH A 200A/2P MAIN BREAKER AND A MINIMUM OF TWENTY FOUR SPACES, REFER TO PANEL SCHEDULES. PEDESTAL SHALL BE CONSTRUCTED FROM 14 GAUGE STEEL WITH CORROSION RESISTANT FINISH. METER SOCKET MINIMUM RATING 200 AMP FACTORY WIRED IN SEPARATE WIRE WAY FROM TERMINAL BLOCK TO METER SOCKET.
2. INSULATED STUD TERMINAL BLOCK OR BUS PADS TO ACCOMMODATE POWER COMPANY'S CONNECTIONS.
3. PEDESTAL BONDING LUG GROUNDING CONDUCTOR MUST BE CONTINUOUS TO BREAKER PANEL GROUNDING TERMINAL.
4. TERMINATION SECTION TO HAVE REMOVABLE RAIN TIGHT COVER WITH PROVISION FOR PADLOCKING. ALL OTHER REMOVABLE PORTIONS OF TERMINATION SECTION MUST BE SEAL-ABLE.
5. NEW PNM TRANSFORMER, COORDINATE WITH PNM. INCLUDE ALL PNM'S COSTS IN BID.
6. RISER UP POLE PER PNM STANDARDS. CONNECTION OF SECONDARY CONDUCTORS PER PNM STANDARDS. CONTRACTOR SHALL COORDINATE ALL WORK WITH PNM PRIOR TO SUBMITTING BID. CONTRACTOR SHALL INCLUDE IN THEIR BID ANY COST DUE TO REVISIONS REQUIRED BY PNM NOT INDICATED ON THESE DOCUMENTS. PNM CONTACT IS ISACC MUNCY 575-430-2171
7. 3 #4/0 THWN CU. AND 1 #4 THWN CU. GROUND IN 2-1/2" CONDUIT.
8. EIGHT CHANNEL ASTRONOMICAL TIME CLOCK IN LOCKABLE NEMA 3R ENCLOSURE. MOUNT SECURELY TO PEDESTAL. INTERMATIC ET90815CR OR EQUAL. "TC1" ON MPA, "TC2" ON MPB.

PANEL "MPA"

VOLTAGE:	MAINS:	MAIN BRKR:	AIC RATING:	MOUNTING:
120/240-1PH-3W	200A	200A/2P	22,000	SURFACE NEMA 3R

DESCRIPTION	BREAKER	LOAD	CCT NO	A	B	CCT NO	LOAD	BREAKER	DESCRIPTION
LIGHTING	20A/1P	750	1	1250		2	500	20A/1P	RECEPTACLES
LIGHTING	20A/1P	750	3		1250	4	500	20A/1P	RECEPTACLES
TIME CLOCK	20A/1P	500	5	1000		6	500	20A/1P	RECEPTACLES
SPACE	1P		7		500	8	500	20A/1P	RECEPTACLES
SPACE	1P		9	500		10	500	20A/1P	RECEPTACLES
SPACE	1P		11		500	12	500	20A/1P	RECEPTACLES
SPACE	1P		13	500		14	500	20A/1P	RECEPTACLES
SPACE	1P		15		0	16		20A/1P	SPARE
SPACE	1P		17	0		18		20A/1P	SPARE
SPACE	1P		19		0	20		20A/1P	SPARE
SPACE	1P		21	0		22		20A/1P	SPARE
SPACE	1P		23		0	24		20A/1P	SPARE
		TOTAL	LOAD	3250	2250				

TOTAL CONNECTED (KVA): 5.50 ESTIMATED DEMAND (KVA): 5.50 (AMPS): 22.92 NOTES:

PANEL "MPB"

VOLTAGE:	MAINS:	MAIN BRKR:	AIC RATING:	MOUNTING:
120/240-1PH-3W	200A	200A/2P	22,000	SURFACE NEMA 3R

DESCRIPTION	BREAKER	LOAD	CCT NO	A	B	CCT NO	LOAD	BREAKER	DESCRIPTION
LIGHTING	20A/1P	800	1	1300		2	500	20A/1P	MONUMENT SIGN
LIGHTING	20A/1P	550	3		1050	4	500	20A/1P	RECEPTACLES
LIGHTING	20A/1P	1000	5	1500		6	500	20A/1P	RECEPTACLES
RECEPTACLES	20A/1P	500	7		1000	8	500	20A/1P	RECEPTACLES
RECEPTACLES	20A/1P	500	9	1000		10	500	20A/1P	RECEPTACLES
TIME CLOCK	20A/1P	500	11		1000	12	500	20A/1P	RECEPTACLES
SPARE	20A/1P		13	500		14	500	20A/1P	MONUMENT SIGN
SPARE	20A/1P		15		500	16	500	20A/1P	MONUMENT SIGN
SPARE	20A/1P		17	500		18	500	20A/1P	MONUMENT SIGN
SPARE	20A/1P		19		500	20	500	20A/1P	MONUMENT SIGN
SPARE	20A/1P		21	500		22	500	20A/1P	RECEPTACLES
SPARE	20A/1P		23		500	24	500	20A/1P	RECEPTACLES
		TOTAL	LOAD	5300	4550				

TOTAL CONNECTED (KVA): 9.85 ESTIMATED DEMAND (KVA): 9.85 (AMPS): 41.04 NOTES:

engz group ltd.

MRWM
LANDSCAPE ARCHITECTS
mrwmla.com 505 268 2266

CONSULTANTS

SMITH ENGINEERING COMPANY

UNITY ENGINEERING, PC
STRUCTURAL CONSULTANTS

HDC
HUGHES DESIGN COMPANY
505-553-8210
hdcllc@centurylink.net

HARVEY A. PEEL NEW MEXICO 8231 REGISTERED PROFESSIONAL ENGINEER
11/12/21

ALAMOGORDO GREAT BLOCKS
ALAMOGORDO, NM

NOVEMBER 12, 2021

SUBMITTAL: 100% - FOR CONST.

REVISIONS

NO.	DATE	DESCRIPTION

PROJECT NO: 20055
CAD DWG FILE:
DESIGNED BY: HDC DATE: 11/12/21
DRAWN BY: HDC DATE: 11/12/21
CHECKED BY: ENG3 DATE: 11/12/21

SHEET TITLE
ELECTRICAL DIAGRAMS

DRAWING SHEET
E201

ELECTRICAL SPECIFICATIONS

PART 1 – GENERAL

1.1 The general provisions of the Contract, including General Conditions, Supplemental General Conditions (if any) and General Requirements apply to the work specified in this Section.

1.2 REQUIREMENTS
A. Furnish all labor, materials, service, equipment and appliances required to complete the installation of the complete Electrical System in accordance with the Specifications and Contract Drawings.

1.3 REQUIREMENTS OF REGULATORY AGENCIES AND STANDARDS
A. Regulatory Agencies: Installation, materials, equipment and workmanship shall conform to the applicable provisions of the National Electrical Code (NEC), the National Electrical Safety Code (NESC) and the terms and conditions of the electrical utility and other authorities having lawful jurisdiction pertaining to the work required. All modifications required by these codes, rules, regulations and authorities shall be made by the Contractor without additional charge.
B. Underwriters Laboratories (UL) or Factory Mutual (FM): All materials, appliances, equipment or devices shall conform to the applicable standards of Underwriters Laboratories, Inc. or Factory Mutual, Inc. The label of, or listing by, UL or FM is required.
C. Standards: Where referenced in these Specifications or on the Drawings, the publications and standards of the following organizations shall apply: American Society of Testing and Materials (ASTM), Insulated Power Cable Engineers Association (IPCEA), National Fire Protection Association (NFPA), American National Standards Institute (ANSI), and National Electrical Manufacturers Association (NEMA).
D. Conflicting code requirements shall be brought to the attention of the Architect. Where two or more codes apply, the most stringent of the codes shall govern.

1.4 SUBMITTALS AND SUBSTITUTIONS
A. Shop Drawings: Submit for approval all shop drawings. Show complete outlines, dimensions, electrical services, control diagrams, electrical characteristics of special nature or critical to the installation and pertinent data required for installation. Indicate in the transmittal that submittal has been reviewed and accepted and all Contract deviations identified. In addition to specific references or requests; submit shop drawings for the following applicable items: panelboards, lighting fixtures, transformers, gear, alarm systems and all special equipment.

PART 2 – EXECUTION

2.1 GENERAL
A. Fabrication, erection and installation of the complete Electrical System shall be done in a first class workmanlike manner by qualified personnel experienced in such work and shall proceed in an orderly manner so as not to hold up the progress of the Project. The Contractor shall check all areas and surface where electrical equipment or material is to be installed, removed or relocated and report any unsatisfactory conditions before starting work. Commencement of work signifies this Contractor's acceptance of the prevailing conditions.

2.2 PERFORMANCE TESTS
A. Thoroughly test all fixtures, services and all circuits for proper operating conditions and freedom from grounds and short circuits before acceptance is requested. All equipment appliances and devices shall be operated under load conditions.

2.3 OPERATING INSTRUCTIONS AND MANUALS
A. Instructions: Without additional charge to the Owner, the Contractor shall provide an experienced and competent representative to instruct the Owner or his representative fully in the concept, theory, operations, adjustment and maintenance of all equipment furnished for the Electrical System. Contractor shall provide at least two (2) weeks notice to the Architect in advance of this period.
B. Manuals: Upon completion of the work, prepare and deliver to the Owner two (2) sets of complete operating and maintenance manuals for the systems and major equipment installed. Include catalog data, shop drawings, wiring diagrams, performance curves and rating data, spare parts lists and manufacturer's operating and maintenance data. Operating and maintenance manuals as required herein shall be submitted to the Architect for review and distribution to the Owner not less than two (2) weeks prior to the scheduled final acceptance of the Project.
C. Other: The above requirements are in addition to specific instruction and manuals specified for individual systems or equipment.

2.4 DRAWINGS
A. General: The Electrical Drawings show the general arrangement of all conduit, equipment, etc. and shall be followed as closely as actual construction and the work of other trades will permit. The Landscape and Civil Drawings shall be considered as a part of the work insofar as these Drawings furnish the Contractor with information relating to the design and construction. Landscape Drawings shall take precedence over Electrical Drawings. The Contractor shall investigate the existing conditions affecting the work and shall arrange his work accordingly, providing such fittings, elbows, pullboxes and accessories as may be required to meet such conditions.
B. Field Measurements: The Contractor shall verify the dimensions governing the electrical work at the site. No extra compensation shall be claimed or allowed on account of differences between actual dimensions and those indicated on the Drawings.

2.5 LOCATION OF EQUIPMENT AND OUTLETS
A. The approximate locations of cabinets, panelboards, wiring gutters, light outlets, power outlets, etc., are indicated on the Drawings; however, the exact location shall be determined after thoroughly examining the general existing conditions and by actual measurements during construction to avoid conflicts with any other trades, with all locations subject to the approval of the Landscape Architect.
B. Verify with the Landscape Architect all locations of conduit, boxes, etc., stubbed above grade prior to installation.

2.6 IDENTIFICATION AND SIGNS
A. Mark each individual motor controller, disconnect switch, transformer and remote control device to identify each item with its respective service using engraved nameplates.
B. Identify panelboards, transformers and cabinets by engraved nameplates with descriptions indicated on the Drawings together with indication of the location of the feeder overcurrent protection. Install on inside of hinged doors or panelboards and cabinets.
Example: Panel "A"
120/208V, 3–phase, 4–wire
Fed from Panel MSB/cct. #1
C. Provide warning signs on all equipment or devices operating at 300 volts or more, reading "DANGER–480 VOLTS", etc. with white letters on red background of standard code size. Signs shall be decals.

2.7 WARRANTY
A. Deliver originals of all guarantees and warranties on this portion of the work to the Architect. Warrant all equipment, materials and workmanship for one year in accordance with the terms of the Contract.

2.8 PRODUCT HANDLING
A. Use all means necessary to protect electrical materials and equipment before, during and after installation and to protect the installed work of other trades.

2.9 RECORD DRAWINGS
A. As part of this Contract, the Contractor shall provide a complete marked–up set of Contract Documents indicating all changes to the documents during the Project construction phase to the Landscape Architect. Changes to the Electrical System shall be documented on a set of "Record Drawings" on a daily basis.

ELECTRICAL SYMBOL LEGEND

Symbol	Description
	POLE MOUNTED AREA LIGHTING FIXTURE, REFER TO LIGHTING FIXTURE SCHEDULE.
GFCI	DUPLEX CONVENIENCE OUTLET, GROUND FAULT CIRCUIT INTERRUPTER, 18" A.F.F.
GFCI	QUADPLEX CONVENIENCE OUTLET, GROUND FAULT CIRCUIT INTERRUPTER, 18" A.F.F.
J	JUNCTION BOX, AS INDICATED ON DRAWINGS, WITH CONNECTION TO EQUIPMENT
	CONCEALED BRANCH CIRCUIT CONDUIT / CONDUCTORS.
	HOMERUN TO PANELBOARD WITH BRANCH CIRCUIT NUMBERS INDICATED.

NOTES:
- LIGHTING FIXTURES ARE OF TYPE AS INDICATED ON LIGHT FIXTURE SCHEDULE UNLESS NOTED OTHERWISE.
- ALL MOUNTING HEIGHTS ARE TO CENTERLINE OF DEVICE UNLESS NOTED OTHERWISE. AND MUST COMPLY WITH CURRENT ADA STANDARDS.
- ANY SPECIFIC DETAILS ABOVE (MOUNTING HEIGHTS, PART NUMBERS, CONNECTION METHODS, ETC.) MAY BE MODIFIED OR REPLACED BY INFORMATION ON PLANS, SCHEDULES, DETAILS, RISERS, ETC. DETAILS NOT SPECIFICALLY MODIFIED REMAIN AS GIVEN ABOVE.

LIGHTING FIXTURE SCHEDULE

TYPE	MANUFACTURE	CATALOG # / DESCRIPTION	LAMP	MOUNTING
A	STREETWORKS	MEM-E01-LED-E1-T2-SR-SN-MSF MEM-E04-LED-E1-T3-SR-SW-MSF SA6114-MSF SSX-PM-MSF	2948 LUMEN 11745 LUMEN	POLE
A-POLE	VALMONT STEEL	800A300-SM150-P4-FP-MSF-FBC-AB 30FT POLE		REFER TO DETAIL ON SHEET E201
B	STREETWORKS	MEM-E01-LED-ES-T2-SR-SW-MSF SA6114-MSF	2948 LUMEN	POLE
B-POLE	VALMONT STEEL	400V150-PF-FP-MSF-FBC-AB 15FT POLE		REFER TO DETAIL ON SHEET E201

engz group ltd

MRWM
LANDSCAPE ARCHITECTS
mrwmla.com 505 268 2266

CONSULTANTS

SMITH ENGINEERING COMPANY
UNITY ENGINEERING, PC STRUCTURAL CONSULTANTS
HDC HUGHES DESIGN COMPANY 505-553-8210 hdcllc@centurylink.net

HARVEY A. PEEL NEW MEXICO 8251 LICENSED PROFESSIONAL ENGINEER
11/12/21

ALAMOGORDO
GREAT BLOCKS
ALAMOGORDO, NM

NOVEMBER 12, 2021

SUBMITTAL: 100% - FOR CONST.

REVISIONS

NO.	DATE	DESCRIPTION

PROJECT NO: 20055
CAD DWG FILE:
DESIGNED BY: HDC DATE: 11/12/21
DRAWN BY: HDC DATE: 11/12/21
CHECKED BY: ENG3 DATE: 11/12/21

SHEET TITLE

ELECT LEGEND & SPECIFICATIONS

DRAWING SHEET

E202