INDIAN RIVER COUNTY

BOARD OF COUNTY COMMISSIONERS

Department of Utility Services

Central Wastewater Treatment Facility
RAS/WAS Pump Replacements

Indian River County Bid No: 2021022

INDIAN RIVER COUNTY

Central Wastewater Treatment Facility
RAS/WAS Pump Replacements

INDEX

ADVERTISEMENT FOR BIDS
INDIAN RIVER COUNTY

Sealed bids will be received by Indian River County until **2:00 P.M.** on **Thursday**, **February 18, 2021**. Each bid shall be submitted in a sealed envelope and shall bear the name and address of the bidder on the outside and the words "**Bid 2021022 Central Wastewater Treatment Facility RAS/WAS Pump Replacements**" Bids should be addressed to Purchasing Division, 1800 27th Street, Vero Beach, Florida 32960. All bids will be opened publicly and read aloud at 2:00 P.M. All bids received after 2:00 P.M., on the day specified above, will not be opened or considered.

All material and equipment furnished and all work performed shall be in strict accordance with the plans, specifications, and contract documents pertaining thereto. Copies of the documents are available at: www.demandstar.com or by selecting "Current Solicitations" at http://www.ircgov.com/Departments/Budget/Purchasing. All other communications concerning this bid shall be directed to IRC Purchasing Division at purchasing@ircgov.com.

All bidders shall submit one (1) original and one (1) copy of the Bid Proposal forms provided within the specifications. Please note that the questionnaire must be filled out completely including the financial statement. BID SECURITY must accompany each Bid, and must be in the form of an AIA Document A310 Bid Bond, properly executed by the Bidder and by a qualified surety, or a certified check or a cashier's check, drawn on any bank authorized to do business in the State of Florida. Bid Security must be in the sum of not less than **Five Percent (5%)** of the total amount of the bid, made payable to Indian River County Board of County Commissioners. In the event the Contract is awarded to the Bidder, Bidder will enter in a Contract with the County and furnish the required 100% Public Construction Bond and certificates of insurance within the timeframe set by the County. If Bidder fails to do so, the Bid Security shall be retained by the County as liquidated damages and not as penalty.

The County reserves the right to delay awarding of the Contract for a period of **ninety (90)** days after the bid opening, to waive informalities in any bid, or reject any or all bids in whole or in part with or without cause/or to accept the bid that, in its judgement, will serve the best interest of Indian River County, Florida. The County will not reimburse any Bidder for bid preparation costs.

A ***NON-MANDATORY*** Pre-Bid Conference will be held on **Thursday, January 28, 2021** at **10:00 A.M.**, on site at 3550 49th Street, Vero Beach, Florida, 32967. ***ATTENDANCE AT THIS CONFERENCE IS ENCOURAGED.***

INDIAN RIVER COUNTY

By: Jennifer Hyde
Purchasing Manager

For Publication in the Indian River Press Journal (Bids and Proposals Section)
Date: Sunday, January 17, 2021

Please furnish tear sheet and Affidavit of Publication to:
INDIAN RIVER COUNTY
PURCHASING DIVISION
1800 27th Street
Building "B"
Vero Beach, FL 32960

*** * END OF SECTION * ***

SECTION 00100
INSTRUCTIONS TO BIDDERS
(Based Upon EJCDC No. C-700, 2002 Edition)

1.01 DEFINED TERMS

Terms used in these Instructions to Bidders, that are defined in the Standard General Conditions of the Construction Contract (No.C-700, 2002 edition), as may be amended by the Supplementary Conditions, have the meanings assigned to them in the General Conditions. The term "Bidder" means one who submits a bid directly to Owner, as distinct from a sub-bidder, who submits a bid to a Bidder. The term "Successful Bidder" means the lowest, responsible, and responsive Bidder to whom Owner (on the basis of Owner's evaluation as hereinafter provided) makes an award. The term "Bidding Documents" includes the Advertisement for Bids, Instructions to Bidders, Bid Form, Sworn Statement Under the Florida Trench Safety Act, Statement Under Section 105.08 and Certification Regarding Scrutinized Companies, General Information Required of Bidders, and the proposed Agreement.

1.02 COPIES OF BIDDING DOCUMENTS

A. Copies of the Bid Documents and specifications containing the necessary contract documents are available at: www.demandstar.com or by selecting “current solicitations” at http://www.ircgov.com/Departments/Budget/Purchasing/index.htm.

B. Complete sets of Bid Documents must be used in preparing Bids; neither Owner nor Engineer assumes any responsibility for errors or misinterpretations resulting from the use of incomplete sets of Bid Documents.

C. Owner and Engineer, in making copies of Bidding Documents available on the above terms, do so only for the purpose of obtaining Bids on the work and do not confer a license or grant for any other use of the Bidding Documents.

1.03 QUALIFICATIONS OF BIDDERS

To demonstrate qualifications to perform the work, each Bidder must be prepared to submit, within 5 days of Owner's request, written evidence, such as financial data, previous experience, present commitments, and other such data as may be necessary to prove to the satisfaction of the Owner that the Bidder is qualified by experience to do the work and is prepared to complete the work within the stated time period.

A. Bidder must have and demonstrate at least five years’ experience in the construction of similar projects of this size and larger.
B. Bidder must have successfully constructed, as prime CONTRACTOR, at least three projects similar in scope to this project.
C. Bidder must have good recommendations from at least three clients similar to the OWNER.
D. The Bidder’s superintendent and assistants must be qualified and experienced in similar projects in all categories.
E. Bidder must be able to provide evidence of authority to conduct business in the jurisdiction in which the project is located.
F. Bidder must be registered with and use, at their sole expense, the Department of Homeland Security’s E-Verify system (www.e-verify.gov) to confirm the employment eligibility of all newly hired employees, as required by Section 448.095, F.S. Owner, contractor, and subcontractors may not enter into a contract unless each party to the contract registers with and uses the E-Verify system. Contractor is responsible for obtaining proof of E-Verify

registration for all subcontractors. This requirement applies to any provider of services or goods. If Bidder is not listed as a participating employer at the time of bid opening, the bid will be declared non-responsive.

1.04 EXAMINATION OF CONTRACT DOCUMENTS AND SITE

A. It is the responsibility of each Bidder, before submitting a bid, to (a) examine the Contract Documents thoroughly, (b) visit the site to become familiar with local conditions that may affect cost, progress, performance, or furnishing of the work, (c) consider federal, state, and local laws and regulations that may affect costs, progress, performance, or furnishing of the work, (d) study and carefully correlate Bidder's observations with the Contract Documents, and (e) notify Engineer of all conflicts, errors, or discrepancies in the Contract Documents.

B. Any information or data reflected in the Contract Documents with respect to underground facilities at or contiguous to the site is based upon information or data furnished to Owner and Engineer by owners of such underground facilities or others, Owner does not assume responsibility for the accuracy or completeness thereof unless it is expressly provided otherwise in the Supplementary Conditions.

C. Before submitting a Bid, each Bidder will, at Bidder's own expense, make or obtain any examinations, investigations, explorations, tests, and studies, and obtain any additional information and data which pertain to the physical conditions (surface, subsurface and underground facilities) at or contiguous to the site or otherwise which may affect cost, progress, performance, or furnishing of the work and which Bidder deems necessary to determine its Bid for performing and furnishing the work in accordance with the time, price and other terms and conditions of the Contract Documents.

D. On request in advance, Owner will provide each Bidder access to the site to conduct such explorations and tests as each Bidder deems necessary for submission of a Bid. Bidder shall fill all holes, clean up, and restore the site to its former condition upon completion of such explorations.

E. The lands upon which the work is to be performed, right-of-way and easements for access thereto and other lands designed for use by the Contractor in performing the work are identified in the Contract Documents. All additional lands and access thereto required for temporary construction facilities or storage of materials and equipment are to be provided by and paid for by the Contractor. Easements for permanent structures or permanent changes in existing structures are to be obtained and paid for by the Owner unless otherwise provided in the Contract Documents.

F. The submission of a Bid will constitute an incontrovertible representation by Bidder that Bidder has complied with every requirement of the Instructions to Bidders, that without exception the Bid is premised upon performing and furnishing the work required by the Contract Documents and such means, methods, techniques, sequences or procedures of construction as may be indicated in or required by the Contract Documents, and that the Contract Documents are sufficient in scope and detail to indicate and convey understanding of all terms and conditions for performance and furnishing of the work.

1.05 PRE-BID CONFERENCE

The date, time, and location for a Pre-Bid conference, if any, are specified in the Advertisement for Bids. Representatives of OWNER and ENGINEER will be present to discuss the Project. Bidders are strongly encouraged to attend and participate in the conference and highly recommended to attend the subsequent site visit. OWNER will transmit to all prospective Bidders of record such Addenda as ENGINEER considers necessary in response to questions arising at the conference. Oral statements may not be relied upon and will not be binding or legally effective.

1.06 INTERPRETATIONS AND ADDENDA

A. **All questions about the meanings or intent of the Contract Documents are to be directed in writing to the Purchasing Department** by email to purchasing@ircgov.com. Interpretation or clarifications considered necessary by Owner in response to such questions will be issued by Addenda uploaded to Demandstar. Questions received less than **ten (10) days** prior to the date for the opening of Bids may not be answered. Only questions answered by formal written Addenda will be binding. Oral and other interpretations or clarifications will not be binding and will be without legal effect.

B. Addenda may also be issued to modify the Bidding Documents as deemed advisable by Owner or Engineer. Only the interpretation or correction issued by Owner or Engineer by Addendum shall be binding. Prospective Bidders are advised that no other source is authorized to give information concerning the documents or to explain or interpret the documents.

C. All Bidders will acknowledge in the space provided for in Section 00310 BID FORM, the receipt of all Addenda and will confirm that the Addenda have been considered in the preparations of their proposal.

1.07 BID SECURITY

A. Each Bid must be accompanied by Bid Security made payable to Owner in an amount of not less than five percent of the Bidder's total bid price and in the form of a certified check; cashier’s check drawn on any bank authorized to do business in the state of Florida; or an AIA Document A310 Bid Bond issued by a surety meeting the requirements of Paragraph 5.01B of the General Conditions as may be supplemented in the Supplementary Conditions.

B. The Bid Security of the Successful Bidder will be retained until such Bidder has executed the Agreement and furnished the required Public Construction Bond, and Insurance Certificates whereupon the Bid Security will be returned. If the Successful Bidder fails to execute and deliver the Agreement and furnish the required Public Construction Bond and required insurance certificates within fifteen calendar days after the Notice of Award, Owner may annul the Notice of Award, and the Bid Security of that Bidder will be retained by the County.

C. The Bid Security of other Bidders whom Owner believes to have a reasonable chance of receiving the award may be retained by the Owner until the earlier of the seventh (7th) day after the effective date of the Agreement or the ninety-first (91st) day after the Bid opening, whereupon Bid security furnished by such Bidders will be returned. Bid

security with bids which are not competitive may be returned before the end of the ninety-day (90) period.

1.08 CONTRACT TIME

The number of days within which, or dates by which, the work is to be substantially completed and also complete and ready for final payment (the Contract Time) are set forth in the Agreement (Section 00530).

1.09 LIQUIDATED DAMAGES

Provisions for liquidated damages, if any, are set forth in the Agreement (Section 00530).

1.10 SUBSTITUTE OR "OR EQUAL" ITEMS

The Agreement, if awarded, will be on the basis of materials and equipment described in the Drawings or specified in the Specifications without consideration of possible substitute or "or equal" items. Whenever it is indicated in the Drawings or specified in the Specifications that a substitute or "or equal" item of material or equipment may be furnished or used by Bidder if acceptable to Engineer, application for such acceptance will not be considered by Engineer until after the Effective Date of the Agreement. The procedure for submission of any such application by Bidder and consideration by Engineer is set forth in Paragraph 6.05 of the General Conditions as may be supplemented in the Supplementary Conditions.

1.11 BID FORM

A. The Bid Form is included with the Bidding Documents. Only the bid form provided by OWNER is acceptable (Bidders are not to recreate the bid form. **Altered or recreated bid forms will result in rejection of the bid.).**

B. All blanks on the Bid Form must be completed in ink or by typewriter. A Bid price shall be indicated for each section, Bid item, alternative, adjustment unit price item, and unit price item listed therein, or the words “No Bid,” “No Change,” or “Not Applicable” entered.

C. Bids by corporations must be executed in the corporate name by the president or a vice president (or other corporate officer accompanied by evidence of authority to sign) and the corporate seal must be affixed and attested by the secretary or an assistant secretary. The corporate address and state of incorporation must be shown below the signature. All names must be typed or printed below the signature.

D. The Bid shall contain an acknowledgment of receipt of all Addenda (the numbers of which must be filled in on the Bid Form).

E. Bids by partnership must be executed in the partnership name and signed by a partner, whose title must appear under the signature, and official address of the partnership must be shown below the signature.

F. All names must be typed or printed below the signature.

G. The address and telephone number for communications regarding the Bid must be shown.

H. The Bid shall contain evidence of Bidder's authority and qualification to do business in the state where the Project is located or covenant to obtain such qualification prior to award of the Contract. Bidder's state contractor license number or county registration number for the state or county of the Project, if any, shall also be shown on the Bid form.

I. Additional forms to be submitted with Bid Form include: Section 00410 – "AIA Document A310 Bid Bond"; Section 00452 – "Disclosure of Relationships"; Section 00456 – "General Information Required of Bidders"; Section 00454 - "Trench Safety Act Compliance Statement"; Section 00431 - Schedule of Subcontractors; and Section 00432- "Certification Regarding Prohibition against Contracting with Scrutinized Companies."

1.12 SUBMISSION OF BIDS

A. All Bids shall be submitted at the time and place indicated in the Advertisement for Bids and shall be enclosed in an opaque sealed envelope, clearly marked on the outside with the following information: Project Name/Title; Bid Number; and the name and address of the Bidder. If the Bid is sent through the mail, overnight delivery system, or courier, the sealed envelope, marked as set forth above, shall be enclosed in a separate outer envelope with the notation "BID ENCLOSED" on the outside.

B. The Bidder shall submit the Bid in duplicate (one original and one copy) on the Bid Forms furnished herewith. The blank spaces on the Bid Form shall be filled in correctly for each Bid Item for which a Bid is submitted. Bid form shall not be recreated by Bidders. Any recreation or modification to the Bid Form will result in disqualification. All Bids shall be accompanied by the Bid Security and other required documents.

1.13 MODIFICATION AND WITHDRAWAL OF BIDS

A. Bids may be modified or withdrawn by an appropriate document duly executed (in the manner that a Bid must be executed) and delivered to the place where Bids are to be submitted at any time prior to the opening of Bids.

B. If within 24 hours after Bids are opened any Bidder files a duly signed written notice with OWNER and promptly thereafter demonstrates to the reasonable satisfaction of OWNER that there was a material and substantial mistake in the preparation of its Bid, that Bidder may withdraw its Bid, and the Bid security will be returned. Thereafter, if the Work is rebid, that Bidder will be disqualified from further bidding on the Work.

1.14 OPENING OF BIDS

Bids will be opened and (unless obviously non-responsive) read aloud publicly. An abstract of the amounts of base Bids and major alternates (if any) will be made available after the opening of Bids.

1.15 BIDS TO REMAIN SUBJECT OF ACCEPTANCE

The County reserves the right to delay awarding of the Contract for a period of Ninety (90) days after the bid opening, to waive informalities in any bid, or reject any or all bids in whole or in part with or without cause/or to accept the bid that, in its judgement, will serve the best interest of Indian River County, Florida. The County will not reimburse any Bidder for bid preparation costs.

1.16 AWARD OF CONTRACT

A. Owner reserves the right: to reject any and all Bids in whole or in part with or without cause; to waive any and all technicalities and informalities not involving price, time, or changes in the work; to negotiate contract terms with the Successful Bidder; to disregard all non-conforming, non-responsive, unbalanced, or conditional Bids; and to accept the bid that, in its judgment, will serve the best interest of Indian River County. Discrepancies in the multiplication of units of work and unit prices will be resolved in favor of the unit prices. Discrepancies between the indicated sum of any column of figures and the correct sum thereof will be resolved in favor of the correct sum. Owner reserves the right to cancel the award of any Agreement at any time before the execution of such Agreement by all parties without any liability to the Owner. For and in consideration of the Owner considering Bids submitted, the Bidder, by submitting its Bid, expressly waives any claim to damages, of any kind whatsoever, in the event the Owner exercises its right to cancel the award in accordance herewith. The County will not reimburse any Bidder for bid preparation costs.

B. In evaluating Bids, Owner will consider the qualifications of the Bidder, whether or not the Bids comply with the prescribed requirements, and such alternates, unit prices, and other data, as may be requested in the Bid Form prior to the Notice of Award.

C. Owner may consider the qualifications and experience of subcontractors listed on the Schedule of Subcontractors (Section 00431), together with the qualifications and experience of other subcontractors, suppliers, and other persons and organizations proposed for the work that are required to be identified as provided in the Supplementary Conditions. Owner may consider the operating costs, maintenance requirements, performance data and guarantees of major items of materials and equipment proposed for incorporation in the work when such data is required to be submitted prior to the Notice of Award.

D. Owner may conduct such investigations as Owner deems necessary to assist in the evaluation of any Bid and establish the responsibility, qualifications, and financial ability of Bidders, proposed subcontractors, suppliers, and other persons and organizations to perform and furnish the work in accordance with the Contract Documents to Owner's satisfaction within the prescribed time.

E. If the Agreement is to be awarded, it will be awarded to the lowest, responsive, responsible Bidder whose evaluation by Owner indicates to Owner that the award will be in the best interests of the Owner.

F. If the Agreement is to be awarded, Owner will give the Successful Bidder a Notice of Award within ninety days after the day of the Bid opening.

G. More than one Bid from an individual, firm, partnership, corporation, or association under the same or different names will not be considered. Reasonable grounds for believing that one Bidder is financially interested in more than one bid for the same work will cause the rejection of all Bids in which such Bidders are believed to be interested. Any or all Bids will be rejected if there is reason to believe that collusion exists among the Bidders, and no participants in such collusion will be considered in future Bids for the same work.

H. Within fifteen (15) calendar days of the date of the Notice of Award of the Contract, the Bidder to whom the Contract is awarded shall execute and deliver two (2) original

Contracts to the Owner and all required insurance certificates and public construction bond, before the Contract will be executed by the Owner.

I. Failure upon the part of the Bidder to whom the Contract has been awarded to execute and deliver the required Public Construction Bond and insurance in the manner and within the time provided shall be just cause for cancellation of the award. It is understood and agreed by said Bidder, that if the award is cancelled for the above persons, the certified check, cashier's check or Bid Bond shall become the property of the Owner, not as a penalty, but as liquidated damages.

1.17 PUBLIC CONSTRUCTION BONDS

The successful Bidder as Contractor shall furnish the County immediately upon execution of the Contract a Public Construction Bond in an amount equal to 100-percent of the contract price. The Surety shall be authorized to issue surety bonds in Florida and be included in the most recent United States Department of Treasury List of Acceptable Sureties. The successful Bidder shall require the attorney-in-fact, who executed the Public Construction Bond, to affix to each a current certified copy of their Power of Attorney, reflecting such person's authority as Power of Attorney in the State of Florida. Further, at the time of execution of the Contract, the successful Bidder shall provide a copy of the Surety's current valid Certificate of Authority issued by the United States Department of the Treasury under 31 United States Code sections 9304-9308.

1.18 PUBLIC DISCLOSURE STATEMENT

Any entity entering into a contract with Indian River County as Owner shall disclose any relationship that may exist between the contracting entity and an Indian River County Commissioner or Indian River County employee. The relationship with either must be disclosed as follows: Father, mother, son, daughter, brother, sister, uncle, aunt, first cousin, nephew, niece, husband, wife, father-in-law, mother-in-law, daughter-in-law, son-in-law, brother-in-law, sister-in-law, stepfather, stepmother, stepson, stepdaughter, stepbrother, half brother, half sister, grandparent, or grandchild. The term "affiliate" includes those officers, directors, executives, partners, shareholders, employees, members, and agents who are active in the management of the entity.

1.19 FLORIDA PRODUCED LUMBER

The selected Bidder as Contractor agrees to comply with the provisions of Section 255.20, Florida Statutes, as such statute may be amended from time to time, wherein Indian River County as Owner must specify lumber, timber and other forest products produced and manufactured in Florida whenever such products are available and their price, fitness and quality are equal.

1.20 TRENCH SAFETY

Florida Statutes Section 553.60 through 553.64, known as the "Trench Safety Act" requires all contractors engaged by Indian River County, Florida to comply with Occupational Safety and Health Administration's excavation safety standard, found in 29 C.F.R. s. 1926.650 Subpart P. All prospective subcontractors are required to sign a Trench Safety Act Compliance Statement and provide compliance cost information where indicated. The costs for complying with the Trench Safety Act must be incorporated into the Bid.

1.21 PUBLIC ENTITY CRIME STATEMENT

Pursuant to Florida Statutes Section 287.133(2)(a), all Bidders are hereby notified that a person or affiliate who has been placed on the convicted vendor list following a conviction for a public entity crime may not submit a bid, proposal, or reply on a contract to provide any goods or services to a public entity (defined as the State of Florida, any of its departments or agencies, or any political subdivision); may not submit a bid, proposal, or reply on a contract with a public entity for the construction or repair of a public building or public work; may not submit bids, proposals, or replies on leases of real property to a public entity; may not be awarded or perform work as a contractor, supplier, subcontractor, or consultant under a contract with any public entity; and may not transact business with any public entity in excess of the threshold amount provided in Florida Statutes Section 287.017 for CATEGORY TWO [currently $35,000] for a period of 36 months from the date of being placed on the convicted vendor list. A "public entity crime" means a violation of any state or federal law by a person with respect to and directly related to the transaction of business with any public entity or with an agency or political subdivision of any other state or with the United States, including, but not limited to, any bid, proposal, reply, or contract for goods or services, any lease for real property, or any contract for the construction or repair of a public building or public work, involving antitrust, fraud, theft, bribery, collusion, racketeering, conspiracy, or material misrepresentation.

1.22 CERTIFICATION REGARDING SCRUTINIZED COMPANIES

“Contractor certifies that it and those related entities of respondent as defined above by Florida law above are not on the Scrutinized Companies that Boycott Israel List, created pursuant to s. 215.4725 of the Florida Statutes, and are not engaged in a boycott of Israel. In addition, if this agreement is for goods or services of one million dollars or more, Contractor certifies that it and those related entities of respondent as defined above by Florida law are not on the Scrutinized Companies with Activities in Sudan List or the Scrutinized Companies with Activities in the Iran Petroleum Energy Sector List, created pursuant to Section 215.473 of the Florida Statutes and are not engaged in business operations in Cuba or Syria.

County may terminate this Contract if Company is found to have submitted a false certification as provided under section 287.135(5), Florida Statutes, been placed on the Scrutinized Companies with Activities in Sudan List or the Scrutinized Companies with Activities in the Iran Petroleum Energy Sector List, or been engaged in business operations in Cuba or Syria, as defined by section 287.135, Florida Statutes.

County may terminate this Contract if Company, including all wholly owned subsidiaries, majority-owned subsidiaries, and parent companies, that exist for the purpose of making profit, is found to have been placed on the Scrutinized Companies that Boycott Israel List or is engaged in a boycott of Israel as set forth in section 215.4725, Florida Statutes.

Accordingly, firms responding to this solicitation shall return with their response an executed copy of the attached “Certification Regarding Prohibition Against Contracting with Scrutinized Companies.” Failure to return this executed form with submitted bid/proposal/statement of qualifications will result in the response being deemed non-responsive and eliminated from consideration.”

1.23 PERMITS, IMPACT, AND INSPECTION FEES.

In accordance with Florida Statutes Section 218.80, the "Public Bid Disclosure Act", Indian River County as OWNER is obligated to disclose all license, permit, impact, or inspection fees that are payable to Indian River County in connection with the construction of the Work

by the accepted bidder. ALL PERMIT, IMPACT, OR INSPECTION FEES PAYABLE TO INDIAN RIVER COUNTY IN CONNECTION WITH THE WORK ON THIS COUNTY PROJECT WILL BE PAID BY INDIAN RIVER COUNTY, WITH THE EXCEPTION OF RE-INSPECTION FEES AS SET FORTH IN THE CONTRACT. The Bidder shall not include ANY PERMIT, IMPACT, NOR INSPECTION FEES payable to Indian River County in the bid. No other permitting agencies are anticipated to be involved in this project.

1.24 NON-DISCRIMINATION

Indian River County will not knowingly do business with vendors or contractors who discriminate on the basis of race, color or national origin, sex, sexual orientation, gender identity, age and/or disability. Through the course of providing services to the County, Contractors shall affirmatively comply with all applicable provisions of Title VI of the Civil Rights Act of 1964, the Civil Rights Restoration Act of 1987 and the Florida Civil Rights Act of 1992, as well as all other applicable regulations, guidelines and standards. Any person who believes their rights have been violated should report such discrimination to the County's Title VI/Nondiscrimination Coordinator through the office of the County Attorney.

1.25 LOCAL PREFERENCE

OWNER has no local ordinance or preferences, as set forth in FS 255.0991(2) in place, therefore no preference prohibited by that section will be considered in the acceptance, review or award of this bid.

1.26 PROTEST PROCEDURE

Any actual or prospective bidder who is aggrieved in connection with a competitive selection process may protest to the Purchasing Manager. The protest shall be submitted to the Purchasing Manager in writing within seven (7) calendar days after the bidder knows or should have known of the facts giving rise to the protest. If the protest is not resolved by mutual agreement, the Purchasing Manager shall promptly issue a decision in writing, after consulting the applicable Department and the Office of the County Attorney.

1.27 CONE OF SILENCE

Potential bidders/respondents and their agents must not communicate in any way with the Board of County Commissioners, County Administrator, Engineer(s) or any County staff other than Purchasing personnel in reference or relation to this solicitation. This restriction is effective from the time of bid advertisement until the Board of County Commissioners meets to authorize award. Such communication may result in disqualification.

END OF SECTION

SECTION 00310
BID FORM
Central WWTF RAS/WAS Pump Replacements
Bid 2021022

THIS BID IS SUBMITTED TO: **Indian River County Purchasing Division**
1800 27th Street
Vero Beach, FL 32960

1. The undersigned Bidder proposes and agrees, if this Bid is accepted, to enter into an agreement with Owner in the form included in the Contract Documents to perform and furnish all work as specified or indicated in the Contract Documents for the Contract Price and within the Contract Time indicated in the Contract Documents and in accordance with the other terms and conditions of the Contract Documents.

2. Bidder accepts all of the terms and conditions of the Advertisement for Bids and Instructions to Bidders. This Bid will remain subject to acceptance for **sixty (60) days** after the day of Bid opening. Bidder will sign and submit the Agreement with the insurance and other documents required by the Owner within fifteen (15) days after the date of Owner's Notice of Award.

3. In submitting this Bid, Bidder represents, as more fully set forth in the Agreement, that:

   (a) Bidder has examined copies of all the Bidding Documents and of the following Addenda (receipt of all which is hereby acknowledged):

Date	Number
_____	_____
_____	_____
_____	_____

   (b) Bidder has familiarized itself with the nature and extent of the Contract Documents, the work, locality, and all local conditions and laws and regulations that in any manner may affect cost, progress, performance or finishing of the work.

   (c) Bidder acknowledges and agrees that it is bidding on construction of improvements at the Central WWTF. Please refer to the construction drawings labeled: Central Wastewater Treatment Facility RAS/WAS Pump Replacements.

   (d) Bidders are notified that the estimates of the quantities of the various items of Work and materials as set forth in the Bid Proposal (Schedule of Bid Items) are approximate only and are given solely to be used as a uniform basis for the comparison of Bids. The quantities actually required to complete the Project and Work may be less or more than so estimated, and, if so, no action for damages or for loss of profits shall accrue to the CONTRACTOR by reason thereof.

   (e) This Bid is genuine and not made in the interest of or on behalf of any undisclosed person, firm, or corporation and is not submitted in conformity with any agreement or rules of any group, association, organization or corporation; Bidder has not directly or indirectly induced or solicited any other Bidder to submit

a false or sham Bid; Bidder has not solicited or induced any person, firm or corporation to refrain from bidding; and Bidder has not sought by collusion to obtain for itself any advantage over any other Bidder or over Owner.

4. Bidder will complete and include with the bid the Bid Proposal (Schedule of Bid Items) attached to this Bid Form. The quantities shown on the Bid Proposal Schedule of Bid Items) are approximate quantities. The actual quantities may vary.

5. The following documents are attached to and made a part of this Bid:

   (a) Bid Form (Section 00310);
   (b) Schedule of Subcontractors (Section 00431);
   (c) Certification Regarding Prohibition Against Contracting with Scrutinized Companies (Section 00432)
   (d) Disclosure of Relationships (Section 00452);
   (e) Sworn Statement Under the Florida Trench Safety Act (Section 00454);
   (f) General Information Required of Bidders (Section 00456);
   (g) A current certificate of insurance evidencing coverages and limits in the amounts required by the Contract Documents.

SCHEDULE A SCHEDULE OF BID ITEMS

BID NUMBER 2021022 **Dated: 2/18/2021**

PROJECT IDENTIFICATION: **Central Wastewater Treatment Facility RAS/WAS Pump Replacements**

THIS BID IS SUBMITTED TO: **INDIAN RIVER COUNTY PURCHASING DIVISION**

1800 27th STREET

VERO BEACH, FLORIDA 32960

BY: _____

Company Name

Bid Item No.	Bid Item Description	Unit of Measure	Unit Price	Quantity	Bid Item Total (in figures)
1	Mobilization and Demobilization	LS	$	1	$
2	General Construction	LS	$	1	$
				Subtotal (Bid Items 1 and 2):	$
3	Contingency Allowance	ALLOW	$70,000.00	1	$70,000.00
				Total Bid Amount:	**$**

Total Bid Amount in words:_____

The undersigned hereby certifies that they have read and understand the contents of this solicitation and agrees to furnish at the prices shown any or all of the items above, subject to all instructions, conditions, specifications and attachments hereto. Failure to have read all the provisions of this solicitation shall not be cause to: 1) alter any resulting contract; or 2) request additional compensation.

SUBMITTED on _____, 20___.

_____ Name of Firm	_____ Address
_____ Authorized Signature	_____ City, State, Zip Code
_____ Title	(_____)_____-_____ Phone
_____ Date Signed	(Corporate Seal)

E-mail: _____

Business Tax Receipt No. _____

FEIN Number: _____

State Contractor License No. _____

SECTION 00410

AIA DOCUMENT A310 BID BOND

The Contractor shall use the document form entitled “AIA Document A310 Bid Bond”.

END OF SECTION

SECTION 00431

SCHEDULE OF SUBCONTRACTORS
(This form MUST be submitted with each bid)

PLEASE LIST ALL SUBCONTRACTORS ANTICIPATED TO RECEIVE $10,000 (TEN THOUSAND DOLLARS) OR MORE OF WORK UNDER THIS PROJECT, INCLUDING NAME; ADDRESS; SPECIALTY; AND LICENSE TYPE AND NUMBER. The following are the subcontractors to be used if the undersigned is awarded the contract for this project.

NAME & ADDRESS	TYPE OF WORK	LICENSE #

Total dollar amount that will be awarded to Sub-contractors AND INCLUDED IN THE TOTAL AMOUNT OF THE BID $_____

NOTE: The above Schedule of Subcontractors must be submitted with the Bid Form and will become a part of the Contract Documents.

END OF SECTION

SECTION 00432

CERTIFICATION REGARDING PROHIBITION AGAINST CONTRACTING WITH SCRUTINIZED COMPANIES

This form must be submitted with each bid.

I hereby certify that neither the undersigned entity, nor any of its wholly owned subsidiaries, majority-owned subsidiaries, parent companies, or affiliates of such entities or business associations, that exists for the purpose of making profit have been placed on the Scrutinized Companies that Boycott Israel List created pursuant to s. 215.4725 of the Florida Statutes, or are engaged in a boycott of Israel.

In addition, if this solicitation is for a contract for goods or services of one million dollars or more, I hereby certify that neither the undersigned entity, nor any of its wholly owned subsidiaries, majority-owned subsidiaries, parent companies, or affiliates of such entities or business associations, that exists for the purpose of making profit are on the Scrutinized Companies with Activities in Sudan List or the Scrutinized Companies with Activities in the Iran Petroleum Energy Sector List, created pursuant to s. 215.473 of the Florida Statutes, or are engaged in business operations in Cuba or Syria as defined in said statute.

I understand and agree that the County may immediately terminate any contract resulting from this solicitation upon written notice if the undersigned entity (or any of those related entities of respondent as defined above by Florida law) are found to have submitted a false certification or any of the following occur with respect to the company or a related entity: (i) it has been placed on the Scrutinized Companies that Boycott Israel List, or is engaged in a boycott of Israel, or (ii) for any contract for goods or services of one million dollars or more, it has been placed on the Scrutinized Companies with Activities in Sudan List or the Scrutinized Companies with Activities in the Iran Petroleum Energy Sector List, or it is found to have been engaged in business operations in Cuba or Syria.

Name of Respondent:_____

By:_____
(Authorized Signature)

Title:_____

Date:_____

SECTION 00452

SWORN STATEMENT UNDER SECTION 105.08, INDIAN RIVER COUNTY CODE, ON DISCLOSURE OF RELATIONSHIPS

THIS FORM MUST BE SIGNED IN THE PRESENCE OF A NOTARY PUBLIC OR OTHER OFFICER AUTHORIZED TO ADMINISTER OATHS.

1. This sworn statement MUST be submitted with Bid No. 2021022

for Central Wastewater Treatment Facility RAS/WAS Pump Replacements

This sworn statement is submitted by: _____

_____

(Name of entity submitting Statement)

whose business address is:

_____

3. My name is _____
(Please print name of individual signing)

and my relationship to the entity named above is _____

4. I understand that an "affiliate" as defined in Section 105.08, Indian River County Code, means:

The term "affiliate" includes those officers, directors, executives, partners, shareholders, employees, members, and agents who are active in the management of the entity.

5. I understand that the relationship with a County Commissioner or County employee that must be disclosed as follows:

Father, mother, son, daughter, brother, sister, uncle, aunt, first cousin, nephew, niece, husband, wife, father-in-law, mother-in-law, daughter-in-law, son-in-law, brother-in-law, sister-in-law, stepfather, stepmother, stepson, stepdaughter, stepbrother, stepsister, half brother, half sister, grandparent, or grandchild.

6. Based on information and belief, the statement, which I have marked below, is true in relation to the entity submitting this sworn statement. [Please indicate which statement applies.]

_____ Neither the entity submitting this sworn statement, nor any officers, directors, executives, partners, shareholders, employees, members, or agents who are active in management of the entity, have any relationships as defined in section 105.08, Indian River County Code, with any County Commissioner or County employee.

_____ The entity submitting this sworn statement, or one or more of the officers, directors, executives, partners, shareholders, employees, members, or agents, who are active in management of the entity have the following relationships with a County Commissioner or County employee:

Name of Affiliate or entity	Name of County Commissioner or employee	Relationship

_____
(Signature)

_____
(Date)

STATE OF _____

COUNTY OF _____

Sworn to (or affirmed) and subscribed before me by means of ☐ physical presence or ☐ online notarization, this _____ day of 20____, by _____ (name of person making statement).

_____
(Signature of Notary Public - State of Florida)
(Print, Type, or Stamp Commissioned Name of Notary Public)

☐ who is personally known to me or ☐ who has produced
_____ as identification.

END OF SECTION

SECTION 00454 - Sworn Statement Under the Florida Trench Safety Act

THIS FORM MUST BE SIGNED BY THE BIDDER WHO WILL BE RESPONSIBLE FOR THE EXCAVATION WORK ("BIDDER"), OR ITS AUTHORIZED REPRESENTATIVE, IN THE PRESENCE OF A NOTARY PUBLIC AUTHORIZED TO ADMINISTER OATHS.

1. This Sworn Statement is submitted with Bid No. 2021022 for
   Central Wastewater Treatment Facility RAS/WAS Pump Replacements
   (Name of Project)

2. This Sworn Statement is submitted by _____
   (Legal Name of Entity Submitting Sworn Statement)
   _____, hereinafter

   "BIDDER". The BIDDER's address is_____
   _____.

   BIDDER's Federal Employer Identification Number (FEIN) is _____.

3. My name is _____ and my relationship to the BIDDER
   (Print Name of Individual Signing)
   is _____.
   (Position or Title)
   I certify, through my signature at the end of this Sworn Statement, that I am an authorized representative of the BIDDER.

4. The Trench Safety Standards that will be in effect during the construction of this Project are contained within the Trench Safety Act, Section 553.60 et.seq. Florida Statutes and refer to the applicable Florida Statue(s) and/or OSHA Regulation(s) and include the "effective date" in the citation(s). Reference to and compliance with the applicable Florida Statute(s) and OSHA Regulation(s) is the complete and sole responsibility of the BIDDER. Such reference will not be checked by OWNER or ENGINEER and they shall have no responsibility to review or check the BIDDER's compliance with the Trench Safety Standards.

5. The BIDDER assures the OWNER that it will comply with the applicable Trench Safety Standards.

6. The BIDDER has allocated and included in its bid the total amount of _____, based on the linear feet of trench to be excavated over five (5) feet deep, for compliance with the applicable Trench Safety Standards, and intends to comply with said standards by instituting the following specific method(s) of compliance on this Project:
   _____
   _____
   _____
   _____.

   The determination of the appropriate method(s) of compliance is the complete and sole responsibility of the BIDDER. Such methods will not be checked by the OWNER or ENGINEER for accuracy, completeness, or any other purpose. The OWNER and ENGINEER shall have no responsibility to review or check the BIDDER's compliance with the Trench Safety Standards.

7. The BIDDER has allocated and included in its bid the total amount of $_____ based on the square feet of shoring to be used for compliance with shoring safety requirements and intends to comply with said shoring requirements by instituting the following specific method(s) of compliance on this Project: _____.

The determination of the appropriate method(s) of compliance is the complete and sole responsibility of the BIDDER. Such methods will not be checked by the OWNER or ENGINEER for accuracy, completeness or any other purpose. The OWNER and ENGINEER shall have no responsibility to review or check the BIDDER's compliance with the Trench Safety Standards.

8. The BIDDER, in submitting this bid, represents that it has obtained and considered all available geotechnical information, has utilized said geotechnical information and that, based on such information and the BIDDER's own information, the BIDDER has sufficient knowledge of the Project's surface and subsurface site conditions and characteristics to assure BIDDER's compliance with the applicable Trench Safety Standards in designing the trench safety system(s) for the Project.

BIDDER: _____

By: _____

Position or Title: _____
Date: _____

STATE OF _____

COUNTY OF _____

Sworn to (or affirmed) and subscribed before me by means of ☐ physical presence or ☐ online notarization, this _____ day of 20____, by _____ (name of person making statement).

_____
(Signature of Notary Public - State of Florida)
(Print, Type, or Stamp Commissioned Name of Notary Public)

☐ who is personally known to me or ☐ who has produced
_____ as identification.

*** * END OF SECTION * ***

SECTION 00456

GENERAL INFORMATION REQUIRED OF BIDDERS

The undersigned Bidder guarantees the truth and accuracy of all statements and answers herein contained. Failure to comply with these requirements may be considered sufficient justification to disqualify a Bidder. Additional sheets shall be attached as required.

Documentation Submitted with Indian River County Bid No: 2021022 for the **Central Wastewater Treatment Facility RAS/WAS Pump Replacements**

1. How many years has your organization been in business as a General Contractor?

   _____

2. Describe and give the date and owner of the last project that you have completed similar in type, size, and nature as the one proposed?

   _____

   _____

   _____

3. Have you ever failed to complete work awarded to you? If so, where and why?

   _____

4. Provide the name, title, and contact information, including email address and phone numbers, of three individuals or corporations for which you have performed similar work that Indian River County may contact for a reference:

   _____

   _____

   _____

5. Name of person who inspected site or proposed work for your firm:

   Name: _____ Date of Inspections: _____
   Describe any anticipated problems with the site and your proposed solutions:

   _____

   _____

   _____

6. Will you Subcontract any part of this Work? If so, describe which portions:

_____

_____

7. What equipment do you own that is available for the work?

_____

_____

_____

8. What equipment will you purchase for the work?

_____

_____

9. What equipment will you rent for the work?

_____

_____

10. Florida General Contractor's License No: _____

11. The following is given as a summary of the Financial Statement of the undersigned: (List Assets and Liabilities and use insert sheet if necessary.)

_____

_____

_____

12. List the names and titles of **ALL** officers of Contractor's firm:

_____ _____

_____ _____

_____ _____

_____ _____

13. State the true and exact, correct, and complete name under which you do business.

BIDDER is:

_____

14. State your total bonding capacity:

_____

15. State your bonding capacity per job.

_____

16. Please provide name, address, telephone number, and contact person of your bonding company.

_____

17. List all ligation cases during the past three (3) years in which the Contractor has been a named party. Use additional sheets, as necessary.

Year filed	Case number	Venue	Description

18. List five references from projects similar in size or larger.

Owner	Project Name	Contact name, phone and email	Description

END OF SECTION

SECTION 00530 – EJCDC STANDARD FORM OF AGREEMENT
BETWEEN OWNER AND CONTRACTOR ON THE BASIS OF A STIPULATED PRICE
Central Wastewater Treatment Facility RAS/WAS Pump Replacements

THIS AGREEMENT ("Agreement" or "Contract"), dated the _____day of _____in the year 2021 by and between Indian River County, a political subdivision of the State of Florida (hereinafter called OWNER) and _____.(hereinafter called CONTRACTOR).

OWNER and CONTRACTOR, in consideration of the mutual covenants hereinafter set forth, agree as follows:

ARTICLE 1 WORK

CONTRACTOR as an independent contractor and not as an employee shall furnish and complete all of the necessary labor, material, and equipment to perform the work as specified or indicated in the Contract Documents and per Indian County Department of Utility Services (IRCDUS) standards. The work is generally described as follows:

Demolition, cleanup, removal, and disposal of existing equipment and materials associated with the RAS and WAS pumping systems, including VFDs, rotary drum thickener equipment, and level instrumentation, to the limits indicated on the Drawings, and as specified herein. The work also includes the supply, installation, wiring, connection, testing and startup of proposed RAS and WAS pumping equipment including VFDs, rotary drum thickener equipment, level instrumentation, piping, fittings, valves, supports, and appurtenances as shown on the Drawings and specified herein

ARTICLE 2 ENGINEER

The Central WWTF RAS/WAS pump replacement project has been designed by Arcadis, hereinafter called ENGINEER, and who is to act as OWNER'S representative, assume all duties and responsibilities and have the rights and authority assigned to ENGINEER in the Contract Documents in connection with completion of the work in accordance with the Contract Documents.

ARTICLE 3 CONTRACT TIME

3.1 The CONTRACTOR shall be substantially completed with the following timeframe

(a) Within 30 calendar days from effective date of Notice to Proceed, Contractor shall complete the following tasks:

1. Obtain all necessary permits.
2. Submit shop drawings for all materials and equipment to be utilized on the job.
3. Perform all photographic recording and documentation of conditions prior to construction.
4. Locate all existing utilities in the area of work.
5. Secure approval of shop drawings.
6. Mobilize all labor, equipment, and materials and prepare the site.
7. Notify all utilities and other affected parties prior to initiating construction.

(b) From 31 calendar days to 250 calendar days from the effective date of Notice to Proceed, the CONTRACTOR shall complete the following tasks:

1. Install all mechanical and electrical equipment, pipe and appurtenant

items.

2. Perform all equipment start-ups and field testing.
3. Restore all disturbed areas to their pre-construction condition.
4. Correct all deficiencies noted by Engineer.

Completion of all tasks outlined above (i.e., Subparagraphs a) and b) constitutes Substantial Completion.

(c) From 251 calendar days to 280 calendar days from the effective date of Notice to Proceed, the CONTRACTOR shall complete the following tasks:

1. Clean up project area.
2. Remove all equipment and material from project site.
3. Perform contract closeout procedures.
4. Demobilize.

3.2 Completion of all tasks outlined above (i.e., Subparagraphs a, b, and c) constitute Final Completion.

3.3 Liquidated Damages. OWNER and CONTRACTOR recognize that time is of the essence of this Agreement and that OWNER will suffer financial loss if the work is not completed within the times specified in Paragraph 3.1 above, plus any extensions thereof allowed in accordance with Article 12 of the General Conditions. They also recognize the delays, expense and difficulties involved in proving in a legal proceeding the actual loss suffered by OWNER if the work is not completed on time. Accordingly, instead of requiring any such proof, OWNER and CONTRACTOR agree that as liquidated damages for delay (but not as a penalty) CONTRACTOR shall pay OWNER four-hundred and fifty dollars ($450.00) for each day that expires after the time specified in Paragraph 3.1 for Substantial Completion, if CONTRACTOR shall neglect, refuse or fail to complete the remaining work within the Contract Time or any proper extension thereof granted by OWNER, CONTRACTOR shall pay OWNER four-hundred and fifty dollars ($450.00) for each day that expires after the time specified in Paragraphs 3.1 and 3.2 for completion and readiness for final payment.

3.3.1 The CONTRACTOR and OWNER agree that OWNER is authorized to deduct all or any portion of the above-stated liquidated damages due to the Owner from payments due to the Contractor; or, in the alternative, all or any portion of the above-stated liquidated damages may be collected from the Contractor or its Surety or Sureties. These provisions for liquidated damages shall not prevent the OWNER, in case of the CONTRACTOR's default, from terminating the Contractor's right to proceed as provided in this AGREEMENT.

3.3.2 In addition to the above-stated liquidated damages, the CONTRACTOR shall be responsible for reimbursing OWNER to third party consultants in administering the Project beyond the Final Completion date specified in this Agreement, or beyond an approved extension of time granted to CONTRACTOR, whichever date is later.

ARTICLE 4 CONTRACT PRICE

4.1 OWNER shall pay CONTRACTOR for completion of the work in accordance with the Contract Documents in current funds in the amount of $_____.

ARTICLE 5 PAYMENT PROCEDURES

CONTRACTOR shall submit Applications for Payment in accordance with Article 14 of the General Conditions. Applications for Payment will be processed by ENGINEER as provided in the General Conditions and the Contract Documents.

5.1 The OWNER shall make progress payments to the CONTRACTOR on the basis of the approved partial payment request as recommended by ENGINEER in accordance with the provisions of the Local Government Prompt Payment Act, Florida Statutes section 218.70 et. seq. The OWNER shall retain five percent (5%) of the payment amount due to CONTRACTOR until final completion and acceptance of all work to be performed by CONTRACTOR under the Contract Documents.

5.2 Each request for a progress payment shall contain the CONTRACTOR'S certification. All progress payments will be on the basis of progress of the work measured by the schedule of values established, or in the case of unit price work based on the number of units completed.

5.3 Paragraphs 5.1 and 5.2 do not apply to construction services work purchased by the County as OWNER which are paid for, in whole or in part, with federal funds and are subject to federal grantor laws and regulations or requirements that are contrary to any provision of the Local Government Prompt Payment Act. In such event, payment and retainage provisions shall be governed by the applicable grant requirements and guidelines.

5.4 ACCEPTANCE AND FINAL PAYMENT: Upon receipt of written notice that the work is ready for final inspection and acceptance, the ENGINEER will promptly make such inspection and when the ENGINEER finds the work acceptable under the terms of the Contract and the Contract fully performed, the ENGINEER will promptly issue a final completion certificate stating that the work provided for in this Contract has been completed, and acceptance by the OWNER under the terms and the conditions thereof is recommended and the entire balance found to be due the CONTRACTOR, will be paid to the CONTRACTOR by the OWNER following County Commission approval of the final Contract payment.

5.5 Acceptance of Final Payment as Release. The acceptance by the CONTRACTOR of final payment shall be and shall operate as a release to the OWNER from all claims and all liability to the CONTRACTOR other than claims in stated amounts as may be specifically excepted by the CONTRACTOR for all things done or furnished in connection with the work under this Contract and for every act and neglect of the OWNER and others relating to or arising out of the work. Any payment, however, final or otherwise, shall not release the CONTRACTOR or its sureties from any obligations under the Contract Documents or the Payment and Performance Bonds.

ARTICLE 6 INTEREST

Not Applicable.

ARTICLE 7 CONTRACTOR'S REPRESENTATIONS

In order to induce OWNER to enter into this Agreement, CONTRACTOR makes the following representations:

7.1 CONTRACTOR has familiarized itself with the nature and extent of the Contract Documents, work, site, locality, and all local conditions and laws and regulations that in any manner may affect cost, progress, performance or furnishing of the work.

7.2 CONTRACTOR has studied carefully all reports of explorations and tests of subsurface conditions and drawings of physical conditions which are identified in the Supplementary Conditions as provided in Paragraph 4.02 of the General Conditions, and accepts the determination set forth in Paragraph SC-4.02 of the Supplementary Conditions of the extent of the technical data contained in such reports and drawings upon which CONTRACTOR is entitled to rely.

7.3 CONTRACTOR has obtained and carefully studied (or assumes responsibility for obtaining and carefully studying) all such examinations, investigations, explorations, tests, reports and studies (in addition to or to supplement those referred to in Paragraph 7.2 above) which pertain to the subsurface or physical conditions at or contiguous to the site or otherwise may affect the cost, progress, performance or furnishing of the work as CONTRACTOR considers necessary for the performance of furnishing of the work at the Contract Price, within the Contract Time and in accordance with the other terms and conditions of the Contract Documents, including specifically the provisions of Paragraph 4.02 of the General Conditions; and no additional examinations, investigations, explorations, tests, reports, studies or similar information or data are or will be required by CONTRACTOR for such purposes.

7.4 CONTRACTOR has reviewed and checked all information and data shown or indicated on the Contract Documents with respect to existing underground facilities at or contiguous to the site and assumes responsibility for the accurate location of said underground facilities. No additional examinations, investigations, explorations, tests, reports, studies or similar information or data in respect of said underground facilities are or will be required by CONTRACTOR in order to perform and furnish the work at the Contract Price, within the Contract Time and in accordance with the other terms and conditions of the Contract Documents, including specifically the provisions of Paragraph 4.04 of the General Conditions.

7.5 CONTRACTOR has correlated the results of all such observations, examinations, investigations, explorations, tests, reports and studies with the terms and conditions of the Contract Documents.

7.6 CONTRACTOR has given ENGINEER written notice of all conflicts, errors or discrepancies that he has discovered in the Contract Documents and the written resolution thereof by ENGINEER is acceptable to CONTRACTOR.

7.7 Contractor is registered with and will use the Department of Homeland Security's E-Verify system (www.e-verify.gov) to confirm the employment eligibility of all newly hired employees for the duration of this agreement, as required by Section 448.095, F.S. Contractor is also responsible for obtaining proof of E-Verify registration and utilization for all subcontractors.

ARTICLE 8 CONTRACT DOCUMENTS.

The Contract Documents which comprise the entire agreement between OWNER and CONTRACTOR concerning the work consist of the following:

8.1 This Agreement (Section 00530)
8.2 General Conditions (Section 00700).

8.3 Supplementary Conditions (Section 00800).
8.4 Notice to Proceed (Sample Provided in Section 00800)
8.5 Public Construction Bond (Section 00600)
8.6 Certificate(s) of Liability Insurance (Section 00620)
8.7 Contractor's Application for Payment (Sample Provided in Section 00800)
8.8 Certificate of Substantial Completion (Sample Provided in Section 00800)
8.9 Final Release of Lien (Sample Provided in Section 00800)
8.10 Technical Specifications bearing the title **"Central Wastewater Treatment Facility RAS/WAS Pump Replacements"**
8.11 Drawings Titled "Central Wastewater Treatment Facility RAS/WAS Pump Replacements
8.12 Addenda numbers_____ to _____, inclusive.
8.13 CONTRACTOR'S Bid (Section 00310).
8.14 Bid Bond (Section 00410)
8.15 Schedule of Subcontractors (Section 00431).
8.16 Certification Regarding Prohibition Against Contracting with Scrutinized Companies (Section 00432).
8.17 Disclosure of Relationships (Section 00452).
8.18 Sworn Statement under the Florida Trench Safety Act (Section 00454).
8.19 General Information Required of Bidders (Section 00456).
8.20 The following, which may be delivered or issued after the effective date of the Agreement and are not attached hereto: All written amendments and other documents amending, modifying, or supplementing the Contract Documents pursuant to Paragraphs 3.04 of the General Conditions (Samples provided in Section 00800).

There are no Contract Documents other than those listed above in this Article 8. The Contract Documents may only be amended, modified or supplemented as provided in Paragraphs 3.04 of the General Conditions.

ARTICLE 9 MISCELLANEOUS

9.1 Terms used in this Agreement which are defined in Article 1 of the General Conditions, as supplemented by the Supplementary Conditions, will have the meanings indicated in the General Conditions.

9.2 It is agreed that the CONTRACTOR shall not assign, transfer, convey, or otherwise dispose of the contract or its right, title, or interest in or to the same or any part thereof, or allow legal action to be brought in its name for the benefit of others, without previous consent of the OWNER and concurred to by the sureties. Any attempted assignment shall be void and may, at the option of the OWNER be deemed an event of default hereunder. Nothing herein shall be construed as creating any personal liability on the part of any officer or agent of the OWNER who may be a party hereto.

9.3 OWNER and CONTRACTOR each binds itself, its partners, successors, assigns and legal representatives to the other party hereto, its partners, successors, assigns and legal representatives in respect of all covenants, agreements and obligations contained in the Contract Documents.

9.4 The CONTRACTOR shall be properly licensed to practice its trade or trades which are involved in the completion of this Agreement and the work thereunder.

9.5 This Agreement shall be governed by the laws of the State of Florida. Venue for any lawsuit brought by either party against the other party or otherwise arising out of this agreement shall

be in Indian River County, Florida, or, in the event of federal jurisdiction, in the United States District Court for the Southern District of Florida.

9.6 The CONTRACTOR shall indemnify and hold harmless the County, and its officers and employees, from liabilities, damages, losses and costs, including, but not limited to, reasonable attorney's fees, to the extent caused by the negligence, recklessness, or intentional wrongful misconduct of the CONTRACTOR and persons employed or utilized by the CONTRACTOR in the performance of the construction contract.

9.7 Pledge of Credit. The CONTRACTOR shall not pledge the OWNER'S credit or make it a guarantor of payment or surety for any Agreement, debt, obligation, judgment, lien or any form of indebtedness. The CONTRACTOR further warrants and represents that it has no obligation of indebtedness that would impair its ability to fulfill the terms of this Agreement.

9.8. Counterparts. This Agreement may be executed in one or more counterparts, but all such counterparts, when duly executed, shall constitute one and the same Agreement.

9.9. Public Records. Indian River County is a public agency subject to Chapter 119, Florida Statutes. The Contractor shall comply with Florida's Public Records Law. Specifically, the Contractor shall:

A. Keep and maintain public records required by the County to perform the service.

B. Upon request from the County's Custodian of Public Records, provide the County with a copy of the requested records or allow the records to be inspected or copied within a reasonable time at a cost that does not exceed the cost provided in Chapter 119 or as otherwise provided by law.

C. Ensure that public records that are exempt or confidential and exempt from public records disclosure requirements are not disclosed except as authorized by law for the duration of the contract term and following completion of the contract if the contractor does not transfer the records to the County.

D. Upon completion of the contract, transfer, at no cost, to the County all public records in possession of the Contractor or keep and maintain public records required by the County to perform the service. If the Contractor transfers all public records to the County upon completion of the contract, the Contractor shall destroy any duplicate public records that are exempt or confidential and exempt from public records disclosure requirements. If the contractor keeps and maintains public records upon completion of the contract, the Contractor shall meet all applicable requirements for retaining public records. All records stored electronically must be provided to the County, upon request from the Custodian of Public Records, in a format that is compatible with the information technology systems of the County.

E. **IF THE CONTRACTOR HAS QUESTIONS REGARDING THE APPLICATION OF CHAPTER 119, FLORIDA STATUTES, TO THE CONTRACTOR'S DUTY TO PROVIDE PUBLIC RECORDS RELATING TO THIS CONTRACT, CONTACT THE CUSTODIAN OF PUBLIC RECORDS AT:**
(772) 226-1424
publicrecords@ircgov.com
Indian River County Office of the County Attorney
1801 27th Street

Vero Beach, FL 32960

F. Failure of the Contractor to comply with these requirements shall be a material breach of this Agreement.

This Agreement will be effective on _____, 2021 (the date the Contract is approved by the Indian River County Board of County Commissioners, which is the Effective Date of the Agreement).

OWNER:

INDIAN RIVER COUNTY

By:_____
Joseph E. Flescher, Chairman

By:_____
Jason E. Brown, County Administrator

APPROVED AS TO FORM AND LEGAL SUFFICIENCY:

By: _____
Dylan Reingold, County Attorney

Jeffrey R. Smith, Clerk of Court and Comptroller

Attest: _____
Clerk of Court and Comptroller
(SEAL)

Designated Representative:
Name: Terry Southard
Title: Utility Operations Manager
Contact Info: (772) 226-3404
terrysouthard@ircgov.com

CONTRACTOR:

_____

By: _____
(Contractor)

(CORPORATE SEAL)

Attest _____

Address for giving notices:
_____
_____
_____

License No. _____
(Where applicable)

Agent for service of process: _____

Designated Representative:
Name:_____
Title: _____
Address:
_____
_____
Phone: _____
Facsimile: _____
(If CONTRACTOR is a corporation or a partnership, attach evidence of authority to sign.)

SECTION 00600

PUBLIC CONSTRUCTION BOND

INSTRUCTION FOR PUBLIC CONSTRUCTION BOND

The front or cover page to the required public construction payment and performance bond shall contain the information required by Fla. Stat. 255.05(1)(a), and be substantially in the format shown on the first page following this instruction.

The Public Construction Bond shall be in the form suggested by Fla. Stat. 255.05(3) as shown on the second page following this instruction.

A Power of Attorney from a surety insurer authorized to do business in Florida, authorizing the signature of the Attorney in Fact who executes the Public Construction Bond shall accompany that Bond.

Public Work
F.S. Chapter 255.05 (1)(a)
Cover Page

THIS BOND IS GIVEN TO COMPLY WITH SECTION 255.05 OR SECTION 713.23 FLORIDA STATUTES, AND ANY ACTION INSTITUTED BY A CLAIMANT UNDER THIS BOND FOR PAYMENT MUST BE IN ACCORDANCE WITH THE NOTICE AND TIME LIMITATION PROVISIONS IN SECTION 255.05(2) OR SECTION 713.23 FLORIDA STATUTES.

BOND NO: _____

CONTRACTOR NAME: _____

CONTRACTOR ADDRESS: _____

_____

CONTRACTOR PHONE NO: _____

SURETY COMPANY NAME: _____

SURETY PRINCIPAL BUSINESS ADDRESS: _____

_____

SURETY PHONE NO: _____

OWNER NAME: _____

OWNER ADDRESS: _____

_____

OWNER PHONE NO: _____

OBLIGEE NAME: _____
(If contracting entity is different from the owner, the contracting public entity)

OBLIGEE ADDRESS: _____

_____

OBLIGEE PHONE NO: _____

BOND AMOUNT: _____

CONTRACT NO: _____
(If applicable)

DESCRIPTION OF WORK: _____

_____

PROJECT LOCATION: _____

_____

LEGAL DESCRIPTION: _____
(If applicable)

FRONT PAGE

All other bond page(s) are deemed subsequent to this page regardless of any page number(s) that may be printed thereon.

PUBLIC CONSTRUCTION BOND

Bond No._____
(enter bond number)

BY THIS BOND, We _____, as Principal and_____ , a corporation, as Surety, are bound to _____, herein called Owner, in the sum of $_____, for payment of which we bind ourselves, our heirs, personal representatives, successors, and assigns, jointly and severally.

THE CONDITION OF THIS BOND is that if Principal:

1. Performs the contract dated _____, _____, between Principal and Owner for construction of _____, the contract being made a part of this bond by reference, at the times and in the manner prescribed in the contract; and
2. Promptly makes payments to all claimants, as defined in Section 255.05(1), Florida Statutes, supplying Principal with labor, materials, or supplies, used directly or indirectly by Principal in the prosecution of the work provided for in the contract; and
3. Pays Owner all losses, damages, expenses, costs, and attorney's fees, including appellate proceedings, that Owner sustains because of a default by Principal under the contract; and
4. Performs the guarantee of all work and materials furnished under the contract for the time specified in the contract, then this bond is void; otherwise it remains in full force.

Any action instituted by a claimant under this bond for payment must be in accordance with the notice and time limitation provisions in Section 255.05(2), Florida Statutes.

Any changes in or under the contract documents and compliance or noncompliance with any formalities connected with the contract or the changes does not affect Surety's obligation under this bond.

DATED ON _____,

_____
(Name of Principal)

By _____
(As Attorney in Fact)

_____
(Name of Surety)

SECTION 00620 - Sample Certificate of Liability Insurance

CERTIFICATE OF LIABILITY INSURANCE

PRODUCER	THIS CERTIFICATE IS ISSUED AS A MATTER OF INFORMATION ONLY AND CONFERS NO RIGHTS UPON THE CERTIFICATE HOLDER. THIS CERTIFICATE DOES NOT AMEND, EXTEND OR ALTER THE COVERAGE AFFORDED BY THE POLICIES BELOW.
	COMPANIES AFFORDING COVERAGE
INSURED	COMPANY A -
	COMPANY B -
	COMPANY C -
	COMPANY D -
	COMPANY E -

COVERAGES

THIS IS TO CERTIFY THAT THE POLICIES OF INSURANCE LISTED BELOW HAVE BEEN ISSUED TO THE INSURED NAMED ABOVE FOR THE POLICY PERIOD INDICATED NOTWITHSTANDING ANY REQUIREMENT TERM OR CONDITION OF ANY CONTRACT OR OTHER DOCUMENT WITH RESPECT TO WHICH THIS CERTIFICATE MAY BE ISSUED OR MAY PERTAIN THE INSURANCE ACCORDED BY THE POLICIES DESCRIBED HEREIN IS SUBJECT TO ALL THE TERMS, EXCLUSIONS AND CONDITIONS OF SUCH POLICIES. LIMITS SHOWN MAY HAVE BEEN REDUCED BY PAID CLAIMS.

INSR LTR	TYPE OF INSURANCE	POLICY NUMBER	POLICY EFFECTIVE DATE (MM/DD/YY)	POLICY EXPIRATION DATE (MM/D/YY)	LIMITS	
A	GENERAL LIABILITY				EACH OCCURRENCE	$ 1,000,000
	☐ COMMERCIAL GENERAL LIABILITY				FIRE DAMAGE (Any One Fire)	$ 50,000
	☐ CLAIMS MADE - ☐OCCUR				MED. EXP. (Any One Person)	$ 5,000
	☐				PERSONAL & ADV INJURY	$ 1,000,000
	☐				GENERAL AGGREGATE	$ 1,000,000
	☐				PRODUCTS – COMP/OP AGG.	$ 1,000,000
	☐					$
A	AUTOMOBILE LIABILITY				COMBINED SINGLE LIMIT (Ea. Occurrence)	$ 1,000,000
	☐ ANY AUTO				BODILY INJURY (Per Person)	$
	☐ ALL OWNED AUTOS					
	☐ SCHEDULED AUTOS				BODILY INJURY (Per Accident)	$
	☐ HIRED AUTOS					
	☐ NON-OWNED AUTOS				PROPERTY DAMAGE	$
	☐					
	☐					
	GARAGE LIABILITY				AUTO ONLY – EA ACCIDENT	$
	☐				OTHER THAN EA ACC	$
	☐				AUTO ONLY AGG	$
A	EXCESS LIABILITY				EACH OCCURRENCE	
	☐ ☐ CLAIMS MADE					
	☐ DEDUCTIBLE				AGGREGATE	$
	☐ RETENTION $					$
						$
A	WORKER'S COMPENSATION AND EMPLOYER'S LIABILITY				☐WC STATUTORY LIMITS	
					E.L. EACH ACCIDENT	$ 100,000
	THE PROPRIETOR/PARTNERS/ EXECUTIVE OFFICERS ARE: ☐ INCL ☐ EXCL				E.L. DISEASE – EA	$ 500,000
					E.L. DISEASE-POLICY LIMIT	$ 100,000
	OTHER: BUILDER'S RISK				FULL REPLACEMENT COST OF THE WORK	

DESCRIPTION OF OPERATIONS/LOCATIONS VEHICLES/SPECIAL ITEMS

CERTIFICATE HOLDER	ADDITIONAL INSURED; INSURER LETTER:	CANCELLATION
		SHOULD ANY OF THE ABOVE DESCRIBED POLICIES BE CANCELLED BEFORE THE EXPIRATION DATE THEREOF, THE ISSUING COMPANY WILL ENDEAVOR TO MAIL 30 DAYS WRITTEN NOTICE TO THE CERTIFICATE HOLDER NAMED TO THE LEFT. FAILURE TO MAIL SUCH NOTICE SHALL IMPOSE NO OBLIGATION OR LIABILITY OF ANY KIND UPON THE COMPANY, ITS AGENTS OR REPRESENTATIVES.
ADDITIONAL INSURED: INDIAN RIVER COUNTY 1801 27TH STREET, VERO BEACH, FL 32960-3388		AUTHORIZED REPRESENTATIVE

This document has important legal consequences; consultation with an attorney is encouraged with respect to its use or modification. This document should be adapted to the particular circumstances of the contemplated Project and the Controlling Law.

STANDARD GENERAL CONDITIONS OF THE CONSTRUCTION CONTRACT

Prepared by

ENGINEERS JOINT CONTRACT DOCUMENTS COMMITTEE

and

Issued and Published Jointly By

PROFESSIONAL ENGINEERS IN PRIVATE PRACTICE
a practice division of the
NATIONAL SOCIETY OF PROFESSIONAL ENGINEERS

AMERICAN COUNCIL OF ENGINEERING COMPANIES

AMERICAN SOCIETY OF CIVIL ENGINEERS

This document has been approved and endorsed by

The Associated General Contractors of America

Construction Specifications Institute

These General Conditions have been prepared for use with the Suggested Forms of Agreement Between Owner and Contractor Nos. C-520 or C-525 (2002 Editions). Their provisions are interrelated and a change in one may necessitate a change in the other. Comments concerning their usage are contained in the EJCDC Construction Documents, General and Instructions (No. C-001) (2002 Edition). For guidance in the preparation of Supplementary Conditions, see Guide to the Preparation of Supplementary Conditions (No. C-800) (2002 Edition).

TABLE OF CONTENTS

Page

GENERAL CONDITIONS

ARTICLE 1 - DEFINITIONS AND TERMINOLOGY

1.01 *Defined Terms*

A. Wherever used in the Bidding Requirements or Contract Documents and printed with initial capital letters, the terms listed below will have the meanings indicated which are applicable to both the singular and plural thereof. In addition to terms specifically defined, terms with initial capital letters in the Contract Documents include references to identified articles and paragraphs, and the titles of other documents or forms.

1. *Addenda*--Written or graphic instruments issued prior to the opening of Bids which clarify, correct, or change the Bidding Requirements or the proposed Contract Documents.

2. *Agreement*--The written instrument which is evidence of the agreement between Owner and Contractor covering the Work.

3. *Application for Payment*--The form acceptable to Engineer which is to be used by Contractor during the course of the Work in requesting progress or final payments and which is to be accompanied by such supporting documentation as is required by the Contract Documents.

4. *Asbestos*--Any material that contains more than one percent asbestos and is friable or is releasing asbestos fibers into the air above current action levels established by the United States Occupational Safety and Health Administration.

5. *Bid*--The offer or proposal of a Bidder submitted on the prescribed form setting forth the prices for the Work to be performed.

6. *Bidder*--The individual or entity who submits a Bid directly to Owner.

7. *Bidding Documents*--The Bidding Requirements and the proposed Contract Documents (including all Addenda).

8. *Bidding Requirements*--The Advertisement or Invitation to Bid, Instructions to Bidders, bid security of acceptable form, if any, and the Bid Form with any supplements.

9. *Change Order*--A document recommended by Engineer which is signed by Contractor and Owner and authorizes an addition, deletion, or revision in the Work or an adjustment in the Contract Price or the Contract Times, issued on or after the Effective Date of the Agreement.

10. *Claim*--A demand or assertion by Owner or Contractor seeking an adjustment of Contract Price or Contract Times, or both, or other relief with respect to the terms of the Contract. A demand for money or services by a third party is not a Claim.

11. *Contract*--The entire and integrated written agreement between the Owner and Contractor concerning the Work. The Contract supersedes prior negotiations, representations, or agreements, whether written or oral.

12. *Contract Documents*-- Those items so designated in the Agreement. Only printed or hard copies of the items listed in the Agreement are Contract Documents. Approved Shop Drawings, other Contractor's submittals, and the reports and drawings of subsurface and physical conditions are not Contract Documents.

13. *Contract Price*--The moneys payable by Owner to Contractor for completion of the Work in accordance with the Contract Documents as stated in the Agreement (subject to the provisions of Paragraph 11.03 in the case of Unit Price Work).

14. *Contract Times*--The number of days or the dates stated in the Agreement to: (i) achieve Milestones, if any, (ii) achieve Substantial Completion; and (iii) complete the Work so that it is ready for final payment as evidenced by Engineer's written recommendation of final payment.

15. *Contractor*--The individual or entity with whom Owner has entered into the Agreement.

16. *Cost of the Work*--See Paragraph 11.01.A for definition.

17. *Drawings*--That part of the Contract Documents prepared or approved by Engineer which graphically shows the scope, extent, and character of the Work to be performed by Contractor. Shop Drawings and other Contractor submittals are not Drawings as so defined.

18. *Effective Date of the Agreement*--The date indicated in the Agreement on which it becomes effective, but if no such date is indicated, it means the date on which the Agreement is signed and delivered by the last of the two parties to sign and deliver.

19. *Engineer*--The individual or entity named as such in the Agreement.

20. *Field Order*--A written order issued by Engineer which requires minor changes in the Work but which does

not involve a change in the Contract Price or the Contract Times.

21. *General Requirements*--Sections of Division 1 of the Specifications. The General Requirements pertain to all sections of the Specifications.

22. *Hazardous Environmental Condition*--The presence at the Site of Asbestos, PCBs, Petroleum, Hazardous Waste, or Radioactive Material in such quantities or circumstances that may present a substantial danger to persons or property exposed thereto in connection with the Work.

23. *Hazardous Waste*--The term Hazardous Waste shall have the meaning provided in Section 1004 of the Solid Waste Disposal Act (42 USC Section 6903) as amended from time to time.

24. *Laws and Regulations; Laws or Regulations*--Any and all applicable laws, rules, regulations, ordinances, codes, and orders of any and all governmental bodies, agencies, authorities, and courts having jurisdiction.

25. *Liens*--Charges, security interests, or encumbrances upon Project funds, real property, or personal property.

26. *Milestone*--A principal event specified in the Contract Documents relating to an intermediate completion date or time prior to Substantial Completion of all the Work.

27. *Notice of Award*--The written notice by Owner to the Successful Bidder stating that upon timely compliance by the Successful Bidder with the conditions precedent listed therein, Owner will sign and deliver the Agreement.

28. *Notice to Proceed*--A written notice given by Owner to Contractor fixing the date on which the Contract Times will commence to run and on which Contractor shall start to perform the Work under the Contract Documents.

29. *Owner*--The individual or entity with whom Contractor has entered into the Agreement and for whom the Work is to be performed.

30. *PCBs*--Polychlorinated biphenyls.

31. *Petroleum*--Petroleum, including crude oil or any fraction thereof which is liquid at standard conditions of temperature and pressure (60 degrees Fahrenheit and 14.7 pounds per square inch absolute), such as oil, petroleum, fuel oil, oil sludge, oil refuse, gasoline, kerosene, and oil mixed with other non-Hazardous Waste and crude oils.

32. *Progress Schedule*--A schedule, prepared and maintained by Contractor, describing the sequence and duration of the activities comprising the Contractor's plan to accomplish the Work within the Contract Times.

33. *Project*--The total construction of which the Work to be performed under the Contract Documents may be the whole, or a part.

34. *Project Manual*--The bound documentary information prepared for bidding and constructing the Work. A listing of the contents of the Project Manual, which may be bound in one or more volumes, is contained in the table(s) of contents.

35. *Radioactive Material*--Source, special nuclear, or byproduct material as defined by the Atomic Energy Act of 1954 (42 USC Section 2011 et seq.) as amended from time to time.

36. *Related Entity* -- An officer, director, partner, employee, agent, consultant, or subcontractor.

37. *Resident Project Representative*--The authorized representative of Engineer who may be assigned to the Site or any part thereof.

38. *Samples*--Physical examples of materials, equipment, or workmanship that are representative of some portion of the Work and which establish the standards by which such portion of the Work will be judged.

39. *Schedule of Submittals*--A schedule, prepared and maintained by Contractor, of required submittals and the time requirements to support scheduled performance of related construction activities.

40. *Schedule of Values*--A schedule, prepared and maintained by Contractor, allocating portions of the Contract Price to various portions of the Work and used as the basis for reviewing Contractor's Applications for Payment.

41. *Shop Drawings*--All drawings, diagrams, illustrations, schedules, and other data or information which are specifically prepared or assembled by or for Contractor and submitted by Contractor to illustrate some portion of the Work.

42. *Site*--Lands or areas indicated in the Contract Documents as being furnished by Owner upon which the Work is to be performed, including rights-of-way and easements for access thereto, and such other lands furnished by Owner which are designated for the use of Contractor.

43. *Specifications*--That part of the Contract Documents consisting of written requirements for materials, equipment, systems, standards and workmanship as applied to the Work, and certain administrative requirements and procedural matters applicable thereto.

44. *Subcontractor*--An individual or entity having a direct contract with Contractor or with any other Subcontractor for the performance of a part of the Work at the Site.

45. *Substantial Completion*--The time at which the Work (or a specified part thereof) has progressed to the point where, in the opinion of Engineer, the Work (or a specified part thereof) is sufficiently complete, in accordance with the Contract Documents, so that the Work (or a specified part thereof) can be utilized for the purposes for which it is intended. The terms "substantially complete" and "substantially completed" as applied to all or part of the Work refer to Substantial Completion thereof.

46. *Successful Bidder*--The Bidder submitting a responsive Bid to whom Owner makes an award.

47. *Supplementary Conditions*--That part of the Contract Documents which amends or supplements these General Conditions.

48. *Supplier*--A manufacturer, fabricator, supplier, distributor, materialman, or vendor having a direct contract with Contractor or with any Subcontractor to furnish materials or equipment to be incorporated in the Work by Contractor or any Subcontractor.

49. *Underground Facilities*--All underground pipelines, conduits, ducts, cables, wires, manholes, vaults, tanks, tunnels, or other such facilities or attachments, and any encasements containing such facilities, including those that convey electricity, gases, steam, liquid petroleum products, telephone or other communications, cable television, water, wastewater, storm water, other liquids or chemicals, or traffic or other control systems.

50. *Unit Price Work*--Work to be paid for on the basis of unit prices.

51. *Work*--The entire construction or the various separately identifiable parts thereof required to be provided under the Contract Documents. Work includes and is the result of performing or providing all labor, services, and documentation necessary to produce such construction, and furnishing, installing, and incorporating all materials and equipment into such construction, all as required by the Contract Documents.

52. *Work Change Directive*--A written statement to Contractor issued on or after the Effective Date of the Agreement and signed by Owner and recommended by Engineer ordering an addition, deletion, or revision in the Work, or responding to differing or unforeseen subsurface or physical conditions under which the Work is to be performed or to emergencies. A Work Change Directive will not change the Contract Price or the Contract Times but is evidence that the parties expect that the change ordered or documented by a Work Change Directive will be incorporated in a subsequently issued Change Order following negotiations by the parties as to its effect, if any, on the Contract Price or Contract Times.

1.02 *Terminology*

A. The following words or terms are not defined but, when used in the Bidding Requirements or Contract Documents, have the following meaning.

B. Intent of Certain Terms or Adjectives

1. The Contract Documents include the terms "as allowed," "as approved," "as ordered", "as directed" or terms of like effect or import to authorize an exercise of professional judgment by Engineer. In addition, the adjectives "reasonable," "suitable," "acceptable," "proper," "satisfactory," or adjectives of like effect or import are used to describe an action or determination of Engineer as to the Work. It is intended that such exercise of professional judgment, action or determination will be solely to evaluate, in general, the Work for compliance with the requirements of and information in the Contract Documents and conformance with the design concept of the completed Project as a functioning whole as shown or indicated in the Contract Documents (unless there is a specific statement indicating otherwise). The use of any such term or adjective is not intended to and shall not be effective to assign to Engineer any duty or authority to supervise or direct the performance of the Work or any duty or authority to undertake responsibility contrary to the provisions of Paragraph 9.09 or any other provision of the Contract Documents.

C. *Day*

1. The word "day" means a calendar day of 24 hours measured from midnight to the next midnight.

D. *Defective*

1. The word "defective," when modifying the word "Work," refers to Work that is unsatisfactory, faulty, or deficient in that it:

a. does not conform to the Contract Documents, or

b. does not meet the requirements of any applicable inspection, reference standard, test, or

approval referred to in the Contract Documents, or

c. has been damaged prior to Engineer's recommendation of final payment (unless responsibility for the protection thereof has been assumed by Owner at Substantial Completion in accordance with Paragraph 14.04 or 14.05).

E. *Furnish, Install, Perform, Provide*

1. The word "furnish," when used in connection with services, materials, or equipment, shall mean to supply and deliver said services, materials, or equipment to the Site (or some other specified location) ready for use or installation and in usable or operable condition.

2. The word "install," when used in connection with services, materials, or equipment, shall mean to put into use or place in final position said services, materials, or equipment complete and ready for intended use.

3. The words "perform" or "provide," when used in connection with services, materials, or equipment, shall mean to furnish and install said services, materials, or equipment complete and ready for intended use.

4. When "furnish," "install," "perform," or "provide" is not used in connection with services, materials, or equipment in a context clearly requiring an obligation of Contractor, "provide" is implied.

F. Unless stated otherwise in the Contract Documents, words or phrases which have a well-known technical or construction industry or trade meaning are used in the Contract Documents in accordance with such recognized meaning.

ARTICLE 2 - PRELIMINARY MATTERS

2.01 *Delivery of Bonds and Evidence of Insurance*

A. When Contractor delivers the executed counterparts of the Agreement to Owner, Contractor shall also deliver to Owner such bonds as Contractor may be required to furnish.

B. *Evidence of Insurance:* Before any Work at the Site is started, Contractor and Owner shall each deliver to the other, with copies to each additional insured identified in the Supplementary Conditions, certificates of insurance (and other evidence of insurance which either of them or any additional insured may reasonably request) which Contractor and Owner respectively are required to purchase and maintain in accordance with Article 5.

2.02 *Copies of Documents*

A. Owner shall furnish to Contractor up to ten printed or hard copies of the Drawings and Project Manual. Additional copies will be furnished upon request at the cost of reproduction.

2.03 *Commencement of Contract Times; Notice to Proceed*

A. The Contract Times will commence to run on the thirtieth day after the Effective Date of the Agreement or, if a Notice to Proceed is given, on the day indicated in the Notice to Proceed. A Notice to Proceed may be given at any time within 30 days after the Effective Date of the Agreement. In no event will the Contract Times commence to run later than the sixtieth day after the day of Bid opening or the thirtieth day after the Effective Date of the Agreement, whichever date is earlier.

2.04 *Starting the Work*

A. Contractor shall start to perform the Work on the date when the Contract Times commence to run. No Work shall be done at the Site prior to the date on which the Contract Times commence to run.

2.05 *Before Starting Construction*

A. *Preliminary Schedules:* Within 10 days after the Effective Date of the Agreement (unless otherwise specified in the General Requirements), Contractor shall submit to Engineer for timely review**:**

1. a preliminary Progress Schedule; indicating the times (numbers of days or dates) for starting and completing the various stages of the Work, including any Milestones specified in the Contract Documents;

2. a preliminary Schedule of Submittals; and

3. a preliminary Schedule of Values for all of the Work which includes quantities and prices of items which when added together equal the Contract Price and subdivides the Work into component parts in sufficient detail to serve as the basis for progress payments during performance of the Work. Such prices will include an appropriate amount of overhead and profit applicable to each item of Work.

2.06 *Preconstruction Conference*

A. Before any Work at the Site is started, a conference attended by Owner, Contractor, Engineer, and others as appropriate will be held to establish a working understanding among the parties as to the Work and to discuss the schedules referred to in Paragraph 2.05.A, procedures for handling Shop Drawings and other

submittals, processing Applications for Payment, and maintaining required records.

2.07 *Initial Acceptance of Schedules*

A. At least 10 days before submission of the first Application for Payment a conference attended by Contractor, Engineer, and others as appropriate will be held to review for acceptability to Engineer as provided below the schedules submitted in accordance with Paragraph 2.05.A. Contractor shall have an additional 10 days to make corrections and adjustments and to complete and resubmit the schedules. No progress payment shall be made to Contractor until acceptable schedules are submitted to Engineer.

1. The Progress Schedule will be acceptable to Engineer if it provides an orderly progression of the Work to completion within the Contract Times. Such acceptance will not impose on Engineer responsibility for the Progress Schedule, for sequencing, scheduling, or progress of the Work nor interfere with or relieve Contractor from Contractor's full responsibility therefor.

2. Contractor's Schedule of Submittals will be acceptable to Engineer if it provides a workable arrangement for reviewing and processing the required submittals.

3. Contractor's Schedule of Values will be acceptable to Engineer as to form and substance if it provides a reasonable allocation of the Contract Price to component parts of the Work.

ARTICLE 3 - CONTRACT DOCUMENTS: INTENT, AMENDING, REUSE

3.01 *Intent*

A. The Contract Documents are complementary; what is required by one is as binding as if required by all.

B. It is the intent of the Contract Documents to describe a functionally complete Project (or part thereof) to be constructed in accordance with the Contract Documents. Any labor, documentation, services, materials, or equipment that may reasonably be inferred from the Contract Documents or from prevailing custom or trade usage as being required to produce the intended result will be provided whether or not specifically called for at no additional cost to Owner.

C. Clarifications and interpretations of the Contract Documents shall be issued by Engineer as provided in Article 9.

3.02 *Reference Standards*

A. Standards, Specifications, Codes, Laws, and Regulations

1. Reference to standards, specifications, manuals, or codes of any technical society, organization, or association, or to Laws or Regulations, whether such reference be specific or by implication, shall mean the standard, specification, manual, code, or Laws or Regulations in effect at the time of opening of Bids (or on the Effective Date of the Agreement if there were no Bids), except as may be otherwise specifically stated in the Contract Documents.

2. No provision of any such standard, specification, manual or code, or any instruction of a Supplier shall be effective to change the duties or responsibilities of Owner, Contractor, or Engineer, or any of their subcontractors, consultants, agents, or employees from those set forth in the Contract Documents. No such provision or instruction shall be effective to assign to Owner, or Engineer, or any of, their Related Entities, any duty or authority to supervise or direct the performance of the Work or any duty or authority to undertake responsibility inconsistent with the provisions of the Contract Documents.

3.03 *Reporting and Resolving Discrepancies*

A. Reporting Discrepancies

1. *Contractor's Review of Contract Documents Before Starting Work*: Before undertaking each part of the Work, Contractor shall carefully study and compare the Contract Documents and check and verify pertinent figures therein and all applicable field measurements. Contractor shall promptly report in writing to Engineer any conflict, error, ambiguity, or discrepancy which Contractor may discover and shall obtain a written interpretation or clarification from Engineer before proceeding with any Work affected thereby.

2. *Contractor's Review of Contract Documents During Performance of Work*: If, during the performance of the Work, Contractor discovers any conflict, error, ambiguity, or discrepancy within the Contract Documents or between the Contract Documents and any provision of any Law or Regulation applicable to the performance of the Work or of any standard, specification, manual or code, or of any instruction of any Supplier, Contractor shall promptly report it to Engineer in writing. Contractor shall not proceed with the Work affected thereby (except in an emergency as required by Paragraph 6.16.A) until an amendment or supplement to the Contract Documents has been issued by one of the methods indicated in Paragraph 3.04.

3. Contractor shall not be liable to Owner or Engineer for failure to report any conflict, error, ambiguity, or discrepancy in the Contract Documents unless Contractor knew or reasonably should have known thereof.

B. Resolving Discrepancies

1. Except as may be otherwise specifically stated in the Contract Documents, the provisions of the Contract Documents shall take precedence in resolving any conflict, error, ambiguity, or discrepancy between the provisions of the Contract Documents and:

a. the provisions of any standard, specification, manual, code, or instruction (whether or not specifically incorporated by reference in the Contract Documents); or

b. the provisions of any Laws or Regulations applicable to the performance of the Work (unless such an interpretation of the provisions of the Contract Documents would result in violation of such Law or Regulation).

3.04 *Amending and Supplementing Contract Documents*

A. The Contract Documents may be amended to provide for additions, deletions, and revisions in the Work or to modify the terms and conditions thereof by either a Change Order or a Work Change Directive.

B. The requirements of the Contract Documents may be supplemented and minor variations and deviations in the Work may be authorized, by one or more of the following ways:

1. A Field Order;

2. Engineer's approval of a Shop Drawing or Sample; (Subject to the provisions of Paragraph 6.17.D.3); or

3. Engineer's written interpretation or clarification.

3.05 *Reuse of Documents*

A. Contractor and any Subcontractor or Supplier or other individual or entity performing or furnishing all of the Work under a direct or indirect contract with Contractor, shall not:

1. have or acquire any title to or ownership rights in any of the Drawings, Specifications, or other documents (or copies of any thereof) prepared by or bearing the seal of Engineer or Engineer's consultants, including electronic media editions; or

2. reuse any of such Drawings, Specifications, other documents, or copies thereof on extensions of the Project or any other project without written consent of Owner and Engineer and specific written verification or adaption by Engineer.

B. The prohibition of this Paragraph 3.05 will survive final payment, or termination of the Contract. Nothing herein shall preclude Contractor from retaining copies of the Contract Documents for record purposes.

3.06 *Electronic Data*

A. Copies of data furnished by Owner or Engineer to Contractor or Contractor to Owner or Engineer that may be relied upon are limited to the printed copies (also known as hard copies). Files in electronic media format of text, data, graphics, or other types are furnished only for the convenience of the receiving party. Any conclusion or information obtained or derived from such electronic files will be at the user's sole risk. If there is a discrepancy between the electronic files and the hard copies, the hard copies govern.

B. Because data stored in electronic media format can deteriorate or be modified inadvertently or otherwise without authorization of the data's creator, the party receiving electronic files agrees that it will perform acceptance tests or procedures within 60 days, after which the receiving party shall be deemed to have accepted the data thus transferred. Any errors detected within the 60-day acceptance period will be corrected by the transferring party.

C. When transferring documents in electronic media format, the transferring party makes no representations as to long term compatibility, usability, or readability of documents resulting from the use of software application packages, operating systems, or computer hardware differing from those used by the data's creator.

ARTICLE 4 - AVAILABILITY OF LANDS; SUBSURFACE AND PHYSICAL CONDITIONS; HAZARDOUS ENVIRONMENTAL CONDITIONS; REFERENCE POINTS

4.01 *Availability of Lands*

A. Owner shall furnish the Site. Owner shall notify Contractor of any encumbrances or restrictions not of general application but specifically related to use of the Site with which Contractor must comply in performing the Work. Owner will obtain in a timely manner and pay for easements for permanent structures or permanent changes in existing facilities. If Contractor and Owner are unable to agree on entitlement to or on the amount or extent, if any, of any adjustment in the Contract Price or Contract Times, or both, as a result of any delay in Owner's furnishing the Site or a part thereof, Contractor

may make a Claim therefor as provided in Paragraph 10.05.

B. Upon reasonable written request, Owner shall furnish Contractor with a current statement of record legal title and legal description of the lands upon which the Work is to be performed and Owner's interest therein as necessary for giving notice of or filing a mechanic's or construction lien against such lands in accordance with applicable Laws and Regulations.

C. Contractor shall provide for all additional lands and access thereto that may be required for temporary construction facilities or storage of materials and equipment.

4.02 *Subsurface and Physical Conditions*

A. *Reports and Drawings:* The Supplementary Conditions identify:

1. those reports of explorations and tests of subsurface conditions at or contiguous to the Site that Engineer has used in preparing the Contract Documents; and

2. those drawings of physical conditions in or relating to existing surface or subsurface structures at or contiguous to the Site (except Underground Facilities) that Engineer has used in preparing the Contract Documents.

B. *Limited Reliance by Contractor on Technical Data Authorized:* Contractor may rely upon the general accuracy of the "technical data" contained in such reports and drawings, but such reports and drawings are not Contract Documents. Such "technical data" is identified in the Supplementary Conditions. Except for such reliance on such "technical data," Contractor may not rely upon or make any claim against Owner or Engineer, or any of their Related Entities with respect to:

1. the completeness of such reports and drawings for Contractor's purposes, including, but not limited to, any aspects of the means, methods, techniques, sequences, and procedures of construction to be employed by Contractor, and safety precautions and programs incident thereto; or

2. other data, interpretations, opinions, and information contained in such reports or shown or indicated in such drawings; or

3. any Contractor interpretation of or conclusion drawn from any "technical data" or any such other data, interpretations, opinions, or information.

4.03 *Differing Subsurface or Physical Conditions*

A. *Notice:* If Contractor believes that any subsurface or physical condition at or contiguous to the Site that is uncovered or revealed either:

1. is of such a nature as to establish that any "technical data" on which Contractor is entitled to rely as provided in Paragraph 4.02 is materially inaccurate; or

2. is of such a nature as to require a change in the Contract Documents; or

3. differs materially from that shown or indicated in the Contract Documents; or

4. is of an unusual nature, and differs materially from conditions ordinarily encountered and generally recognized as inherent in work of the character provided for in the Contract Documents;

then Contractor shall, promptly after becoming aware thereof and before further disturbing the subsurface or physical conditions or performing any Work in connection therewith (except in an emergency as required by Paragraph 6.16.A), notify Owner and Engineer in writing about such condition. Contractor shall not further disturb such condition or perform any Work in connection therewith (except as aforesaid) until receipt of written order to do so.

B. *Engineer's Review*: After receipt of written notice as required by Paragraph 4.03.A, Engineer will promptly review the pertinent condition, determine the necessity of Owner's obtaining additional exploration or tests with respect thereto, and advise Owner in writing (with a copy to Contractor) of Engineer's findings and conclusions.

C. Possible Price and Times Adjustments

1. The Contract Price or the Contract Times, or both, will be equitably adjusted to the extent that the existence of such differing subsurface or physical condition causes an increase or decrease in Contractor's cost of, or time required for, performance of the Work; subject, however, to the following:

a. such condition must meet any one or more of the categories described in Paragraph 4.03.A; and

b. with respect to Work that is paid for on a Unit Price Basis, any adjustment in Contract Price will be subject to the provisions of Paragraphs 9.07 and 11.03.

2. Contractor shall not be entitled to any adjustment in the Contract Price or Contract Times if:

a. Contractor knew of the existence of such conditions at the time Contractor made a final commitment to Owner with respect to Contract Price and Contract Times by the submission of a Bid or becoming bound under a negotiated contract; or

b. the existence of such condition could reasonably have been discovered or revealed as a result of any examination, investigation, exploration, test, or study of the Site and contiguous areas required by the Bidding Requirements or Contract Documents to be conducted by or for Contractor prior to Contractor's making such final commitment; or

c. Contractor failed to give the written notice as required by Paragraph 4.03.A.

3. If Owner and Contractor are unable to agree on entitlement to or on the amount or extent, if any, of any adjustment in the Contract Price or Contract Times, or both, a Claim may be made therefor as provided in Paragraph 10.05. However, Owner and Engineer, and any of their Related Entities shall not be liable to Contractor for any claims, costs, losses, or damages (including but not limited to all fees and charges of engineers, architects, attorneys, and other professionals and all court or arbitration or other dispute resolution costs) sustained by Contractor on or in connection with any other project or anticipated project.

4.04 *Underground Facilities*

A. *Shown or Indicated:* The information and data shown or indicated in the Contract Documents with respect to existing Underground Facilities at or contiguous to the Site is based on information and data furnished to Owner or Engineer by the owners of such Underground Facilities, including Owner, or by others. Unless it is otherwise expressly provided in the Supplementary Conditions:

1. Owner and Engineer shall not be responsible for the accuracy or completeness of any such information or data; and

2. the cost of all of the following will be included in the Contract Price, and Contractor shall have full responsibility for:

a. reviewing and checking all such information and data,

b. locating all Underground Facilities shown or indicated in the Contract Documents,

c. coordination of the Work with the owners of such Underground Facilities, including Owner, during construction, and

d. the safety and protection of all such Underground Facilities and repairing any damage thereto resulting from the Work.

B. *Not Shown or Indicated*

1. If an Underground Facility is uncovered or revealed at or contiguous to the Site which was not shown or indicated, or not shown or indicated with reasonable accuracy in the Contract Documents, Contractor shall, promptly after becoming aware thereof and before further disturbing conditions affected thereby or performing any Work in connection therewith (except in an emergency as required by Paragraph 6.16.A), identify the owner of such Underground Facility and give written notice to that owner and to Owner and Engineer. Engineer will promptly review the Underground Facility and determine the extent, if any, to which a change is required in the Contract Documents to reflect and document the consequences of the existence or location of the Underground Facility. During such time, Contractor shall be responsible for the safety and protection of such Underground Facility.

2. If Engineer concludes that a change in the Contract Documents is required, a Work Change Directive or a Change Order will be issued to reflect and document such consequences. An equitable adjustment shall be made in the Contract Price or Contract Times, or both, to the extent that they are attributable to the existence or location of any Underground Facility that was not shown or indicated or not shown or indicated with reasonable accuracy in the Contract Documents and that Contractor did not know of and could not reasonably have been expected to be aware of or to have anticipated. If Owner and Contractor are unable to agree on entitlement to or on the amount or extent, if any, of any such adjustment in Contract Price or Contract Times, Owner or Contractor may make a Claim therefor as provided in Paragraph 10.05.

4.05 *Reference Points*

A. Owner shall provide engineering surveys to establish reference points for construction which in Engineer's judgment are necessary to enable Contractor to proceed with the Work. Contractor shall be responsible for laying out the Work, shall protect and preserve the established reference points and property monuments, and shall make no changes or relocations without the prior written approval of Owner. Contractor shall report to Engineer whenever any reference point or property monument is lost or destroyed or requires relocation because of necessary changes in grades or locations, and shall be responsible for the accurate replacement or relocation of such reference points or property monuments by professionally qualified personnel.

4.06 *Hazardous Environmental Condition at Site*

A. *Reports and Drawings:* Reference is made to the Supplementary Conditions for the identification of those reports and drawings relating to a Hazardous Environmental Condition identified at the Site, if any, that have been utilized by the Engineer in the preparation of the Contract Documents.

B. *Limited Reliance by Contractor on Technical Data Authorized:* Contractor may rely upon the general accuracy of the "technical data" contained in such reports and drawings, but such reports and drawings are not Contract Documents. Such "technical data" is identified in the Supplementary Conditions. Except for such reliance on such "technical data," Contractor may not rely upon or make any claim against Owner or Engineer, or any of their Related Entities with respect to:

1. the completeness of such reports and drawings for Contractor's purposes, including, but not limited to, any aspects of the means, methods, techniques, sequences and procedures of construction to be employed by Contractor and safety precautions and programs incident thereto; or

2. other data, interpretations, opinions and information contained in such reports or shown or indicated in such drawings; or

3. any Contractor interpretation of or conclusion drawn from any "technical data" or any such other data, interpretations, opinions or information.

C. Contractor shall not be responsible for any Hazardous Environmental Condition uncovered or revealed at the Site which was not shown or indicated in Drawings or Specifications or identified in the Contract Documents to be within the scope of the Work. Contractor shall be responsible for a Hazardous Environmental Condition created with any materials brought to the Site by Contractor, Subcontractors, Suppliers, or anyone else for whom Contractor is responsible.

D. If Contractor encounters a Hazardous Environmental Condition or if Contractor or anyone for whom Contractor is responsible creates a Hazardous Environmental Condition, Contractor shall immediately: (i) secure or otherwise isolate such condition; (ii) stop all Work in connection with such condition and in any area affected thereby (except in an emergency as required by Paragraph 6.16.A); and (iii) notify Owner and Engineer (and promptly thereafter confirm such notice in writing). Owner shall promptly consult with Engineer concerning the necessity for Owner to retain a qualified expert to evaluate such condition or take corrective action, if any.

E. Contractor shall not be required to resume Work in connection with such condition or in any affected area until after Owner has obtained any required permits related thereto and delivered to Contractor written notice: (i) specifying that such condition and any affected area is or has been rendered safe for the resumption of Work; or (ii) specifying any special conditions under which such Work may be resumed safely. If Owner and Contractor cannot agree as to entitlement to or on the amount or extent, if any, of any adjustment in Contract Price or Contract Times, or both, as a result of such Work stoppage or such special conditions under which Work is agreed to be resumed by Contractor, either party may make a Claim therefor as provided in Paragraph 10.05.

F. If after receipt of such written notice Contractor does not agree to resume such Work based on a reasonable belief it is unsafe, or does not agree to resume such Work under such special conditions, then Owner may order the portion of the Work that is in the area affected by such condition to be deleted from the Work. If Owner and Contractor cannot agree as to entitlement to or on the amount or extent, if any, of an adjustment in Contract Price or Contract Times as a result of deleting such portion of the Work, then either party may make a Claim therefor as provided in Paragraph 10.05. Owner may have such deleted portion of the Work performed by Owner's own forces or others in accordance with Article 7.

G. To the fullest extent permitted by Laws and Regulations, Owner shall indemnify and hold harmless Contractor, Subcontractors, and Engineer, and the officers, directors, partners, employees, agents, consultants, and subcontractors of each and any of them from and against all claims, costs, losses, and damages (including but not limited to all fees and charges of engineers, architects, attorneys, and other professionals and all court or arbitration or other dispute resolution costs) arising out of or relating to a Hazardous Environmental Condition, provided that such Hazardous Environmental Condition: (i) was not shown or indicated in the Drawings or Specifications or identified in the Contract Documents to be included within the scope of the Work, and (ii) was not created by Contractor or by anyone for whom Contractor is responsible. Nothing in this Paragraph 4.06G shall obligate Owner to indemnify any individual or entity from and against the consequences of that individual's or entity's own negligence.

H. To the fullest extent permitted by Laws and Regulations, Contractor shall indemnify and hold harmless Owner and Engineer, and the officers, directors, partners, employees, agents, consultants, and subcontractors of each and any of them from and against all claims, costs, losses, and damages (including but not limited to all fees and charges of engineers, architects, attorneys, and other professionals and all court or arbitration or other dispute resolution costs) arising out of or relating to a Hazardous Environmental Condition created by Contractor or by anyone for whom Contractor is responsible. Nothing in this Paragraph 4.06.H shall obligate Contractor to indemnify any individual or entity from and against the consequences of that individual's or entity's own negligence.

I. The provisions of Paragraphs 4.02, 4.03, and 4.04 do not apply to a Hazardous Environmental Condition uncovered or revealed at the Site.

ARTICLE 5 - BONDS AND INSURANCE

5.01 *Performance, Payment, and Other Bonds*

A. Contractor shall furnish performance and payment bonds, each in an amount at least equal to the Contract Price as security for the faithful performance and payment of all of Contractor's obligations under the Contract Documents. These bonds shall remain in effect until one year after the date when final payment becomes due or until completion of the correction period specified in Paragraph 13.07, whichever is later, except as provided otherwise by Laws or Regulations or by the Contract Documents. Contractor shall also furnish such other bonds as are required by the Contract Documents.

B. All bonds shall be in the form prescribed by the Contract Documents except as provided otherwise by Laws or Regulations, and shall be executed by such sureties as are named in the current list of "Companies Holding Certificates of Authority as Acceptable Sureties on Federal Bonds and as Acceptable Reinsuring Companies" as published in Circular 570 (amended) by the Financial Management Service, Surety Bond Branch, U.S. Department of the Treasury. All bonds signed by an agent must be accompanied by a certified copy of the agent's authority to act.

C. If the surety on any bond furnished by Contractor is declared bankrupt or becomes insolvent or its right to do business is terminated in any state where any part of the Project is located or it ceases to meet the requirements of Paragraph 5.01.B, Contractor shall promptly notify Owner and Engineer and shall, within 20 days after the event giving rise to such notification, provide another bond and surety, both of which shall comply with the requirements of Paragraphs 5.01.B and 5.02.

5.02 *Licensed Sureties and Insurers*

A. All bonds and insurance required by the Contract Documents to be purchased and maintained by Owner or Contractor shall be obtained from surety or insurance companies that are duly licensed or authorized in the jurisdiction in which the Project is located to issue bonds or insurance policies for the limits and coverages so required. Such surety and insurance companies shall also meet such additional requirements and qualifications as may be provided in the Supplementary Conditions.

5.03 *Certificates of Insurance*

A. Contractor shall deliver to Owner, with copies to each additional insured identified in the Supplementary Conditions, certificates of insurance (and other evidence of insurance requested by Owner or any other additional insured) which Contractor is required to purchase and maintain.

B. Owner shall deliver to Contractor, with copies to each additional insured identified in the Supplementary Conditions, certificates of insurance (and other evidence of insurance requested by Contractor or any other additional insured) which Owner is required to purchase and maintain.

5.04 *Contractor's Liability Insurance*

A. Contractor shall purchase and maintain such liability and other insurance as is appropriate for the Work being performed and as will provide protection from claims set forth below which may arise out of or result from Contractor's performance of the Work and Contractor's other obligations under the Contract Documents, whether it is to be performed by Contractor, any Subcontractor or Supplier, or by anyone directly or indirectly employed by any of them to perform any of the Work, or by anyone for whose acts any of them may be liable:

1. claims under workers' compensation, disability benefits, and other similar employee benefit acts;

2. claims for damages because of bodily injury, occupational sickness or disease, or death of Contractor's employees;

3. claims for damages because of bodily injury, sickness or disease, or death of any person other than Contractor's employees;

4. claims for damages insured by reasonably available personal injury liability coverage which are sustained:

   a. by any person as a result of an offense directly or indirectly related to the employment of such person by Contractor, or

   b. by any other person for any other reason;

5. claims for damages, other than to the Work itself, because of injury to or destruction of tangible property wherever located, including loss of use resulting therefrom; and

6. claims for damages because of bodily injury or death of any person or property damage arising out of the ownership, maintenance or use of any motor vehicle.

B. The policies of insurance required by this Paragraph 5.04 shall:

1. with respect to insurance required by Paragraphs 5.04.A.3 through 5.04.A.6 inclusive, include as additional insured (subject to any customary exclu-

sion regarding professional liability) Owner and Engineer, and any other individuals or entities identified in the Supplementary Conditions, all of whom shall be listed as additional insureds, and include coverage for the respective officers, directors, partners, employees, agents, consultants and subcontractors of each and any of all such additional insureds, and the insurance afforded to these additional insureds shall provide primary coverage for all claims covered thereby;

2. include at least the specific coverages and be written for not less than the limits of liability provided in the Supplementary Conditions or required by Laws or Regulations, whichever is greater;

3. include completed operations insurance;

4. include contractual liability insurance covering Contractor's indemnity obligations under Paragraphs 6.11 and 6.20;

5. contain a provision or endorsement that the coverage afforded will not be canceled, materially changed or renewal refused until at least 30 days prior written notice has been given to Owner and Contractor and to each other additional insured identified in the Supplementary Conditions to whom a certificate of insurance has been issued (and the certificates of insurance furnished by the Contractor pursuant to Paragraph 5.03 will so provide);

6. remain in effect at least until final payment and at all times thereafter when Contractor may be correcting, removing, or replacing defective Work in accordance with Paragraph 13.07; and

7. with respect to completed operations insurance, and any insurance coverage written on a claims-made basis, remain in effect for at least two years after final payment.

a. Contractor shall furnish Owner and each other additional insured identified in the Supplementary Conditions, to whom a certificate of insurance has been issued, evidence satisfactory to Owner and any such additional insured of continuation of such insurance at final payment and one year thereafter.

5.05 *Owner's Liability Insurance*

A. In addition to the insurance required to be provided by Contractor under Paragraph 5.04, Owner, at Owner's option, may purchase and maintain at Owner's expense Owner's own liability insurance as will protect Owner against claims which may arise from operations under the Contract Documents.

5.06 *Property Insurance*

A. Unless otherwise provided in the Supplementary Conditions, Owner shall purchase and maintain property insurance upon the Work at the Site in the amount of the full replacement cost thereof (subject to such deductible amounts as may be provided in the Supplementary Conditions or required by Laws and Regulations). This insurance shall:

1. include the interests of Owner, Contractor, Subcontractors, and Engineer, and any other individuals or entities identified in the Supplementary Conditions, and the officers, directors, partners, employees, agents, consultants and subcontractors of each and any of them, each of whom is deemed to have an insurable interest and shall be listed as an insured or additional insured;

2. be written on a Builder's Risk "all-risk" or open peril or special causes of loss policy form that shall at least include insurance for physical loss or damage to the Work, temporary buildings, false work, and materials and equipment in transit, and shall insure against at least the following perils or causes of loss: fire, lightning, extended coverage, theft, vandalism and malicious mischief, earthquake, collapse, debris removal, demolition occasioned by enforcement of Laws and Regulations, water damage, (other than caused by flood) and such other perils or causes of loss as may be specifically required by the Supplementary Conditions;

3. include expenses incurred in the repair or replacement of any insured property (including but not limited to fees and charges of engineers and architects);

4. cover materials and equipment stored at the Site or at another location that was agreed to in writing by Owner prior to being incorporated in the Work, provided that such materials and equipment have been included in an Application for Payment recommended by Engineer;

5. allow for partial utilization of the Work by Owner;

6. include testing and startup; and

7. be maintained in effect until final payment is made unless otherwise agreed to in writing by Owner, Contractor, and Engineer with 30 days written notice to each other additional insured to whom a certificate of insurance has been issued.

B. Owner shall purchase and maintain such boiler and machinery insurance or additional property insurance as may be required by the Supplementary Conditions or Laws and Regulations which will include the interests of Owner, Contractor, Subcontractors, and Engineer, and

any other individuals or entities identified in the Supplementary Conditions, and the officers, directors, partners, employees, agents, consultants and subcontractors of each and any of them, each of whom is deemed to have an insurable interest and shall be listed as an insured or additional insured.

C. All the policies of insurance (and the certificates or other evidence thereof) required to be purchased and maintained in accordance with Paragraph 5.06 will contain a provision or endorsement that the coverage afforded will not be canceled or materially changed or renewal refused until at least 30 days prior written notice has been given to Owner and Contractor and to each other additional insured to whom a certificate of insurance has been issued and will contain waiver provisions in accordance with Paragraph 5.07.

D. Owner shall not be responsible for purchasing and maintaining any property insurance specified in this Paragraph 5.06 to protect the interests of Contractor, Subcontractors, or others in the Work to the extent of any deductible amounts that are identified in the Supplementary Conditions. The risk of loss within such identified deductible amount will be borne by Contractor, Subcontractors, or others suffering any such loss, and if any of them wishes property insurance coverage within the limits of such amounts, each may purchase and maintain it at the purchaser's own expense.

E. If Contractor requests in writing that other special insurance be included in the property insurance policies provided under Paragraph 5.06, Owner shall, if possible, include such insurance, and the cost thereof will be charged to Contractor by appropriate Change Order. Prior to commencement of the Work at the Site, Owner shall in writing advise Contractor whether or not such other insurance has been procured by Owner.

5.07 *Waiver of Rights*

A. Owner and Contractor intend that all policies purchased in accordance with Paragraph 5.06 will protect Owner, Contractor, Subcontractors, and Engineer, and all other individuals or entities identified in the Supplementary Conditions to be listed as insureds or additional insureds (and the officers, directors, partners, employees, agents, consultants and subcontractors of each and any of them) in such policies and will provide primary coverage for all losses and damages caused by the perils or causes of loss covered thereby. All such policies shall contain provisions to the effect that in the event of payment of any loss or damage the insurers will have no rights of recovery against any of the insureds or additional insureds thereunder. Owner and Contractor waive all rights against each other and their respective officers, directors, partners, employees, agents, consultants and subcontractors of each and any of them for all losses and damages caused by, arising out of or resulting from any of the perils or causes of loss covered by such policies and any other property insurance applicable to the Work; and, in addition, waive all such rights against Subcontractors, and Engineer, and all other individuals or entities identified in the Supplementary Conditions to be listed as insured or additional insured (and the officers, directors, partners, employees, agents, consultants and subcontractors of each and any of them) under such policies for losses and damages so caused. None of the above waivers shall extend to the rights that any party making such waiver may have to the proceeds of insurance held by Owner as trustee or otherwise payable under any policy so issued.

B. Owner waives all rights against Contractor, Subcontractors, and Engineer, and the officers, directors, partners, employees, agents, consultants and subcontractors of each and any of them for:

1. loss due to business interruption, loss of use, or other consequential loss extending beyond direct physical loss or damage to Owner's property or the Work caused by, arising out of, or resulting from fire or other perils whether or not insured by Owner; and

2. loss or damage to the completed Project or part thereof caused by, arising out of, or resulting from fire or other insured peril or cause of loss covered by any property insurance maintained on the completed Project or part thereof by Owner during partial utilization pursuant to Paragraph 14.05, after Substantial Completion pursuant to Paragraph 14.04, or after final payment pursuant to Paragraph 14.07.

C. Any insurance policy maintained by Owner covering any loss, damage or consequential loss referred to in Paragraph 5.07.B shall contain provisions to the effect that in the event of payment of any such loss, damage, or consequential loss, the insurers will have no rights of recovery against Contractor, Subcontractors, or Engineer, and the officers, directors, partners, employees, agents, consultants and subcontractors of each and any of them.

5.08 *Receipt and Application of Insurance Proceeds*

A. Any insured loss under the policies of insurance required by Paragraph 5.06 will be adjusted with Owner and made payable to Owner as fiduciary for the insureds, as their interests may appear, subject to the requirements of any applicable mortgage clause and of Paragraph 5.08.B. Owner shall deposit in a separate account any money so received and shall distribute it in accordance with such agreement as the parties in interest may reach. If no other special agreement is reached, the damaged Work shall be repaired or replaced, the moneys so received applied on account thereof, and the Work and the cost thereof covered by an appropriate Change Order.

B. Owner as fiduciary shall have power to adjust and settle any loss with the insurers unless one of the parties in interest shall object in writing within 15 days after the occurrence of loss to Owner's exercise of this power. If such objection be made, Owner as fiduciary shall make

settlement with the insurers in accordance with such agreement as the parties in interest may reach. If no such agreement among the parties in interest is reached, Owner as fiduciary shall adjust and settle the loss with the insurers and, if required in writing by any party in interest, Owner as fiduciary shall give bond for the proper performance of such duties.

5.09 *Acceptance of Bonds and Insurance; Option to Replace*

A. If either Owner or Contractor has any objection to the coverage afforded by or other provisions of the bonds or insurance required to be purchased and maintained by the other party in accordance with Article 5 on the basis of non-conformance with the Contract Documents, the objecting party shall so notify the other party in writing within 10 days after receipt of the certificates (or other evidence requested) required by Paragraph 2.01.B. Owner and Contractor shall each provide to the other such additional information in respect of insurance provided as the other may reasonably request. If either party does not purchase or maintain all of the bonds and insurance required of such party by the Contract Documents, such party shall notify the other party in writing of such failure to purchase prior to the start of the Work, or of such failure to maintain prior to any change in the required coverage. Without prejudice to any other right or remedy, the other party may elect to obtain equivalent bonds or insurance to protect such other party's interests at the expense of the party who was required to provide such coverage, and a Change Order shall be issued to adjust the Contract Price accordingly.

5.10 *Partial Utilization, Acknowledgment of Property Insurer*

A. If Owner finds it necessary to occupy or use a portion or portions of the Work prior to Substantial Completion of all the Work as provided in Paragraph 14.05, no such use or occupancy shall commence before the insurers providing the property insurance pursuant to Paragraph 5.06 have acknowledged notice thereof and in writing effected any changes in coverage necessitated thereby. The insurers providing the property insurance shall consent by endorsement on the policy or policies, but the property insurance shall not be canceled or permitted to lapse on account of any such partial use or occupancy.

ARTICLE 6 - CONTRACTOR'S RESPONSIBILITIES

6.01 *Supervision and Superintendence*

A. Contractor shall supervise, inspect, and direct the Work competently and efficiently, devoting such attention thereto and applying such skills and expertise as may be necessary to perform the Work in accordance with the Contract Documents. Contractor shall be solely responsible for the means, methods, techniques, sequences, and procedures of construction. Contractor shall not be responsible for the negligence of Owner or Engineer in the design or specification of a specific means, method, technique, sequence, or procedure of construction which is shown or indicated in and expressly required by the Contract Documents.

B. At all times during the progress of the Work, Contractor shall assign a competent resident superintendent who shall not be replaced without written notice to Owner and Engineer except under extraordinary circumstances. The superintendent will be Contractor's representative at the Site and shall have authority to act on behalf of Contractor. All communications given to or received from the superintendent shall be binding on Contractor.

6.02 *Labor; Working Hours*

A. Contractor shall provide competent, suitably qualified personnel to survey and lay out the Work and perform construction as required by the Contract Documents. Contractor shall at all times maintain good discipline and order at the Site.

B. Except as otherwise required for the safety or protection of persons or the Work or property at the Site or adjacent thereto, and except as otherwise stated in the Contract Documents, all Work at the Site shall be performed during regular working hours. Contractor will not permit the performance of Work on a Saturday, Sunday, or any legal holiday without Owner's written consent (which will not be unreasonably withheld) given after prior written notice to Engineer.

6.03 *Services, Materials, and Equipment*

A. Unless otherwise specified in the Contract Documents, Contractor shall provide and assume full responsibility for all services, materials, equipment, labor, transportation, construction equipment and machinery, tools, appliances, fuel, power, light, heat, telephone, water, sanitary facilities, temporary facilities, and all other facilities and incidentals necessary for the performance, testing, start-up, and completion of the Work.

B. All materials and equipment incorporated into the Work shall be as specified or, if not specified, shall be of good quality and new, except as otherwise provided in the Contract Documents. All special warranties and guarantees required by the Specifications shall expressly run to the benefit of Owner. If required by Engineer, Contractor shall furnish satisfactory evidence (including reports of required tests) as to the source, kind, and quality of materials and equipment.

C. All materials and equipment shall be stored, applied, installed, connected, erected, protected, used, cleaned, and conditioned in accordance with instructions of the applicable Supplier, except as otherwise may be provided in the Contract Documents.

6.04 *Progress Schedule*

A. Contractor shall adhere to the Progress Schedule established in accordance with Paragraph 2.07 as it may be adjusted from time to time as provided below.

1. Contractor shall submit to Engineer for acceptance (to the extent indicated in Paragraph 2.07) proposed adjustments in the Progress Schedule that will not result in changing the Contract Times. Such adjustments will comply with any provisions of the General Requirements applicable thereto.

2. Proposed adjustments in the Progress Schedule that will change the Contract Times shall be submitted in accordance with the requirements of Article 12. Adjustments in Contract Times may only be made by a Change Order.

6.05 *Substitutes and "Or-Equals"*

A. Whenever an item of material or equipment is specified or described in the Contract Documents by using the name of a proprietary item or the name of a particular Supplier, the specification or description is intended to establish the type, function, appearance, and quality required. Unless the specification or description contains or is followed by words reading that no like, equivalent, or "or-equal" item or no substitution is permitted, other items of material or equipment or material or equipment of other Suppliers may be submitted to Engineer for review under the circumstances described below.

1. *"Or-Equal" Items:* If in Engineer's sole discretion an item of material or equipment proposed by Contractor is functionally equal to that named and sufficiently similar so that no change in related Work will be required, it may be considered by Engineer as an "or-equal" item, in which case review and approval of the proposed item may, in Engineer's sole discretion, be accomplished without compliance with some or all of the requirements for approval of proposed substitute items. For the purposes of this Paragraph 6.05.A.1, a proposed item of material or equipment will be considered functionally equal to an item so named if:

a. in the exercise of reasonable judgment Engineer determines that:

1) it is at least equal in materials of construction, quality, durability, appearance, strength, and design characteristics;

2) it will reliably perform at least equally well the function and achieve the results imposed by the design concept of the completed Project as a functioning whole,

3) it has a proven record of performance and availability of responsive service; and

b. Contractor certifies that, if approved and incorporated into the Work:

1) there will be no increase in cost to the Owner or increase in Contract Times, and

2) it will conform substantially to the detailed requirements of the item named in the Contract Documents.

2. Substitute Items

a. If in Engineer's sole discretion an item of material or equipment proposed by Contractor does not qualify as an "or-equal" item under Paragraph 6.05.A.1, it will be considered a proposed substitute item.

b. Contractor shall submit sufficient information as provided below to allow Engineer to determine that the item of material or equipment proposed is essentially equivalent to that named and an acceptable substitute therefor. Requests for review of proposed substitute items of material or equipment will not be accepted by Engineer from anyone other than Contractor.

c. The requirements for review by Engineer will be as set forth in Paragraph 6.05.A.2.d, as supplemented in the General Requirements and as Engineer may decide is appropriate under the circumstances.

d. Contractor shall make written application to Engineer for review of a proposed substitute item of material or equipment that Contractor seeks to furnish or use. The application:

1) shall certify that the proposed substitute item will:

a) perform adequately the functions and achieve the results called for by the general design,

b) be similar in substance to that specified, and

c) be suited to the same use as that specified;

2) will state:

a) the extent, if any, to which the use of the proposed substitute item will prejudice Contractor's achievement of Substantial Completion on time;

b) whether or not use of the proposed substitute item in the Work will require a change in any of the Contract Documents (or in the provisions of any other direct contract with Owner for other work on the Project) to adapt the design to the proposed substitute item; and

c) whether or not incorporation or use of the proposed substitute item in connection with the Work is subject to payment of any license fee or royalty;

3) will identify:

a) all variations of the proposed substitute item from that specified , and

b) available engineering, sales, maintenance, repair, and replacement services;

4) and shall contain an itemized estimate of all costs or credits that will result directly or indirectly from use of such substitute item, including costs of redesign and claims of other contractors affected by any resulting change,

B. *Substitute Construction Methods or Procedures:* If a specific means, method, technique, sequence, or procedure of construction is expressly required by the Contract Documents, Contractor may furnish or utilize a substitute means, method, technique, sequence, or procedure of construction approved by Engineer. Contractor shall submit sufficient information to allow Engineer, in Engineer's sole discretion, to determine that the substitute proposed is equivalent to that expressly called for by the Contract Documents. The requirements for review by Engineer will be similar to those provided in Paragraph 6.05.A.2.

C. *Engineer's Evaluation:* Engineer will be allowed a reasonable time within which to evaluate each proposal or submittal made pursuant to Paragraphs 6.05.A and 6.05.B. Engineer may require Contractor to furnish additional data about the proposed substitute item. Engineer will be the sole judge of acceptability. No "or equal" or substitute will be ordered, installed or utilized until Engineer's review is complete, which will be evidenced by either a Change Order for a substitute or an approved Shop Drawing for an "or equal." Engineer will advise Contractor in writing of any negative determination.

D. *Special Guarantee:* Owner may require Contractor to furnish at Contractor's expense a special performance guarantee or other surety with respect to any substitute.

E. *Engineer's Cost Reimbursement*: Engineer will record Engineer's costs in evaluating a substitute proposed or submitted by Contractor pursuant to Paragraphs 6.05.A.2 and 6.05.B Whether or not Engineer approves a substitute item so proposed or submitted by Contractor, Contractor shall reimburse Owner for the charges of Engineer for evaluating each such proposed substitute. Contractor shall also reimburse Owner for the charges of Engineer for making changes in the Contract Documents (or in the provisions of any other direct contract with Owner) resulting from the acceptance of each proposed substitute.

F. *Contractor's Expense*: Contractor shall provide all data in support of any proposed substitute or "or-equal" at Contractor's expense.

6.06 *Concerning Subcontractors, Suppliers, and Others*

A. Contractor shall not employ any Subcontractor, Supplier, or other individual or entity (including those acceptable to Owner as indicated in Paragraph 6.06.B), whether initially or as a replacement, against whom Owner may have reasonable objection. Contractor shall not be required to employ any Subcontractor, Supplier, or other individual or entity to furnish or perform any of the Work against whom Contractor has reasonable objection.

B. If the Supplementary Conditions require the identity of certain Subcontractors, Suppliers, or other individuals or entities to be submitted to Owner in advance for acceptance by Owner by a specified date prior to the Effective Date of the Agreement, and if Contractor has submitted a list thereof in accordance with the Supplementary Conditions, Owner's acceptance (either in writing or by failing to make written objection thereto by the date indicated for acceptance or objection in the Bidding Documents or the Contract Documents) of any such Subcontractor, Supplier, or other individual or entity so identified may be revoked on the basis of reasonable objection after due investigation. Contractor shall submit an acceptable replacement for the rejected Subcontractor, Supplier, or other individual or entity, and the Contract Price will be adjusted by the difference in the cost occasioned by such replacement, and an appropriate Change Order will be issued . No acceptance by Owner of any such Subcontractor, Supplier, or other individual or entity, whether initially or as a replacement, shall constitute a waiver of any right of Owner or Engineer to reject defective Work.

C. Contractor shall be fully responsible to Owner and Engineer for all acts and omissions of the Subcontractors, Suppliers, and other individuals or entities performing or furnishing any of the Work just as Contractor is responsible for Contractor's own acts and omissions. Nothing in the Contract Documents:

1. shall create for the benefit of any such Subcontractor, Supplier, or other individual or entity any contractual relationship between Owner or Engineer and any such Subcontractor, Supplier or other individual or entity, nor

2. shall anything in the Contract Documents create any obligation on the part of Owner or Engineer to pay or to see to the payment of any moneys due any such Subcontractor, Supplier, or other individual or entity except as may otherwise be required by Laws and Regulations.

D. Contractor shall be solely responsible for scheduling and coordinating the Work of Subcontractors, Suppliers, and other individuals or entities performing or furnishing any of the Work under a direct or indirect contract with Contractor.

E. Contractor shall require all Subcontractors, Suppliers, and such other individuals or entities performing or furnishing any of the Work to communicate with Engineer through Contractor.

F. The divisions and sections of the Specifications and the identifications of any Drawings shall not control Contractor in dividing the Work among Subcontractors or Suppliers or delineating the Work to be performed by any specific trade.

G. All Work performed for Contractor by a Subcontractor or Supplier will be pursuant to an appropriate agreement between Contractor and the Subcontractor or Supplier which specifically binds the Subcontractor or Supplier to the applicable terms and conditions of the Contract Documents for the benefit of Owner and Engineer. Whenever any such agreement is with a Subcontractor or Supplier who is listed as an additional insured on the property insurance provided in Paragraph 5.06, the agreement between the Contractor and the Subcontractor or Supplier will contain provisions whereby the Subcontractor or Supplier waives all rights against Owner, Contractor, and Engineer,, and all other individuals or entities identified in the Supplementary Conditions to be listed as insureds or additional insureds (and the officers, directors, partners, employees, agents, consultants and subcontractors of each and any of them) for all losses and damages caused by, arising out of, relating to, or resulting from any of the perils or causes of loss covered by such policies and any other property insurance applicable to the Work. If the insurers on any such policies require separate waiver forms to be signed by any Subcontractor or Supplier, Contractor will obtain the same.

6.07 *Patent Fees and Royalties*

A. Contractor shall pay all license fees and royalties and assume all costs incident to the use in the performance of the Work or the incorporation in the Work of any invention, design, process, product, or device which is the subject of patent rights or copyrights held by others. If a particular invention, design, process, product, or device is specified in the Contract Documents for use in the performance of the Work and if to the actual knowledge of Owner or Engineer its use is subject to patent rights or copyrights calling for the payment of any license fee or royalty to others, the existence of such rights shall be disclosed by Owner in the Contract Documents.

B. To the fullest extent permitted by Laws and Regulations, Contractor shall indemnify and hold harmless Owner and Engineer, and the officers, directors, partners, employees, agents, consultants and subcontractors of each and any of them from and against all claims, costs, losses, and damages (including but not limited to all fees and charges of engineers, architects, attorneys, and other professionals and all court or arbitration or other dispute resolution costs) arising out of or relating to any infringement of patent rights or copyrights incident to the use in the performance of the Work or resulting from the incorporation in the Work of any invention, design, process, product, or device not specified in the Contract Documents.

6.08 *Permits*

A. Unless otherwise provided in the Supplementary Conditions, Contractor shall obtain and pay for all construction permits and licenses. Owner shall assist Contractor, when necessary, in obtaining such permits and licenses. Contractor shall pay all governmental charges and inspection fees necessary for the prosecution of the Work which are applicable at the time of opening of Bids, or, if there are no Bids, on the Effective Date of the Agreement. Owner shall pay all charges of utility owners for connections for providing permanent service to the Work.

6.09 *Laws and Regulations*

A. Contractor shall give all notices required by and shall comply with all Laws and Regulations applicable to the performance of the Work. Except where otherwise expressly required by applicable Laws and Regulations, neither Owner nor Engineer shall be responsible for monitoring Contractor's compliance with any Laws or Regulations.

B. If Contractor performs any Work knowing or having reason to know that it is contrary to Laws or Regulations, Contractor shall bear all claims, costs, losses, and damages (including but not limited to all fees and charges of engineers, architects, attorneys, and other professionals and all court or arbitration or other dispute resolution costs) arising out of or relating to such Work. However, it shall not be Contractor's primary responsibility to make certain that the Specifications and Drawings are in accordance with Laws and Regulations, but this shall not relieve Contractor of Contractor's obligations under Paragraph 3.03.

C. Changes in Laws or Regulations not known at the time of opening of Bids (or, on the Effective Date of the Agreement if there were no Bids) having an effect on the cost or time of performance of the Work shall be the subject of an adjustment in Contract Price or Contract Times. If Owner and Contractor are unable to agree on

entitlement to or on the amount or extent, if any, of any such adjustment, a Claim may be made therefor as provided in Paragraph 10.05.

6.10 *Taxes*

A. Contractor shall pay all sales, consumer, use, and other similar taxes required to be paid by Contractor in accordance with the Laws and Regulations of the place of the Project which are applicable during the performance of the Work.

6.11 *Use of Site and Other Areas*

A. Limitation on Use of Site and Other Areas

1. Contractor shall confine construction equipment, the storage of materials and equipment, and the operations of workers to the Site and other areas permitted by Laws and Regulations, and shall not unreasonably encumber the Site and other areas with construction equipment or other materials or equipment. Contractor shall assume full responsibility for any damage to any such land or area, or to the owner or occupant thereof, or of any adjacent land or areas resulting from the performance of the Work.

2. Should any claim be made by any such owner or occupant because of the performance of the Work, Contractor shall promptly settle with such other party by negotiation or otherwise resolve the claim by arbitration or other dispute resolution proceeding or at law.

3. To the fullest extent permitted by Laws and Regulations, Contractor shall indemnify and hold harmless Owner and Engineer, and the officers, directors, partners, employees, agents, consultants and subcontractors of each and any of them from and against all claims, costs, losses, and damages (including but not limited to all fees and charges of engineers, architects, attorneys, and other professionals and all court or arbitration or other dispute resolution costs) arising out of or relating to any claim or action, legal or equitable, brought by any such owner or occupant against Owner, Engineer, or any other party indemnified hereunder to the extent caused by or based upon Contractor's performance of the Work.

B. *Removal of Debris During Performance of the Work:* During the progress of the Work Contractor shall keep the Site and other areas free from accumulations of waste materials, rubbish, and other debris. Removal and disposal of such waste materials, rubbish, and other debris shall conform to applicable Laws and Regulations.

C. *Cleaning:* Prior to Substantial Completion of the Work Contractor shall clean the Site and the Work and make it ready for utilization by Owner. At the completion of the Work Contractor shall remove from the Site all tools, appliances, construction equipment and machinery, and surplus materials and shall restore to original condition all property not designated for alteration by the Contract Documents.

D. *Loading Structures:* Contractor shall not load nor permit any part of any structure to be loaded in any manner that will endanger the structure, nor shall Contractor subject any part of the Work or adjacent property to stresses or pressures that will endanger it.

6.12 *Record Documents*

A. Contractor shall maintain in a safe place at the Site one record copy of all Drawings, Specifications, Addenda, Change Orders, Work Change Directives, Field Orders, and written interpretations and clarifications in good order and annotated to show changes made during construction. These record documents together with all approved Samples and a counterpart of all approved Shop Drawings will be available to Engineer for reference. Upon completion of the Work, these record documents, Samples, and Shop Drawings will be delivered to Engineer for Owner.

6.13 *Safety and Protection*

A. Contractor shall be solely responsible for initiating, maintaining and supervising all safety precautions and programs in connection with the Work. Contractor shall take all necessary precautions for the safety of, and shall provide the necessary protection to prevent damage, injury or loss to:

1. all persons on the Site or who may be affected by the Work;

2. all the Work and materials and equipment to be incorporated therein, whether in storage on or off the Site; and

3. other property at the Site or adjacent thereto, including trees, shrubs, lawns, walks, pavements, roadways, structures, utilities, and Underground Facilities not designated for removal, relocation, or replacement in the course of construction.

B. Contractor shall comply with all applicable Laws and Regulations relating to the safety of persons or property, or to the protection of persons or property from damage, injury, or loss; and shall erect and maintain all necessary safeguards for such safety and protection. Contractor shall notify owners of adjacent property and of Underground Facilities and other utility owners when prosecution of the Work may affect them, and shall cooperate with them in the protection, removal, relocation, and replacement of their property.

C. All damage, injury, or loss to any property referred to in Paragraph 6.13.A.2 or 6.13.A.3 caused, directly or

indirectly, in whole or in part, by Contractor, any Subcontractor, Supplier, or any other individual or entity directly or indirectly employed by any of them to perform any of the Work, or anyone for whose acts any of them may be liable, shall be remedied by Contractor (except damage or loss attributable to the fault of Drawings or Specifications or to the acts or omissions of Owner or Engineer or , or anyone employed by any of them, or anyone for whose acts any of them may be liable, and not attributable, directly or indirectly, in whole or in part, to the fault or negligence of Contractor or any Subcontractor, Supplier, or other individual or entity directly or indirectly employed by any of them).

D. Contractor's duties and responsibilities for safety and for protection of the Work shall continue until such time as all the Work is completed and Engineer has issued a notice to Owner and Contractor in accordance with Paragraph 14.07.B that the Work is acceptable (except as otherwise expressly provided in connection with Substantial Completion).

6.14 *Safety Representative*

A. Contractor shall designate a qualified and experienced safety representative at the Site whose duties and responsibilities shall be the prevention of accidents and the maintaining and supervising of safety precautions and programs.

6.15 *Hazard Communication Programs*

A. Contractor shall be responsible for coordinating any exchange of material safety data sheets or other hazard communication information required to be made available to or exchanged between or among employers at the Site in accordance with Laws or Regulations.

6.16 *Emergencies*

A. In emergencies affecting the safety or protection of persons or the Work or property at the Site or adjacent thereto, Contractor is obligated to act to prevent threatened damage, injury, or loss. Contractor shall give Engineer prompt written notice if Contractor believes that any significant changes in the Work or variations from the Contract Documents have been caused thereby or are required as a result thereof. If Engineer determines that a change in the Contract Documents is required because of the action taken by Contractor in response to such an emergency, a Work Change Directive or Change Order will be issued.

6.17 *Shop Drawings and Samples*

A. Contractor shall submit Shop Drawings and Samples to Engineer for review and approval in accordance with the acceptable Schedule of Submittals (as required by Paragraph 2.07). Each submittal will be identified as Engineer may require.

1. Shop Drawings

a. Submit number of copies specified in the General Requirements.

b. Data shown on the Shop Drawings will be complete with respect to quantities, dimensions, specified performance and design criteria, materials, and similar data to show Engineer the services, materials, and equipment Contractor proposes to provide and to enable Engineer to review the information for the limited purposes required by Paragraph 6.17.D.

2. *Samples:* Contractor shall also submit Samples to Engineer for review and approval in accordance with the acceptable schedule of Shop Drawings and Sample submittals.

a. Submit number of Samples specified in the Specifications.

b. Clearly identify each Sample as to material, Supplier, pertinent data such as catalog numbers, the use for which intended and other data as Engineer may require to enable Engineer to review the submittal for the limited purposes required by Paragraph 6.17.D.

B. Where a Shop Drawing or Sample is required by the Contract Documents or the Schedule of Submittals, any related Work performed prior to Engineer's review and approval of the pertinent submittal will be at the sole expense and responsibility of Contractor.

C. Submittal Procedures

1. Before submitting each Shop Drawing or Sample, Contractor shall have determined and verified:

a. all field measurements, quantities, dimensions, specified performance and design criteria, installation requirements, materials, catalog numbers, and similar information with respect thereto;

b. the suitability of all materials with respect to intended use, fabrication, shipping, handling, storage, assembly, and installation pertaining to the performance of the Work;

c. all information relative to Contractor's responsibilities for means, methods, techniques, sequences, and procedures of construction, and safety precautions and programs incident thereto; and

d. shall also have reviewed and coordinated each Shop Drawing or Sample with other Shop Drawings and Samples and with the

requirements of the Work and the Contract Documents.

2. Each submittal shall bear a stamp or specific written certification that Contractor has satisfied Contractor's obligations under the Contract Documents with respect to Contractor's review and approval of that submittal.

3. With each submittal, Contractor shall give Engineer specific written notice of any variations, that the Shop Drawing or Sample may have from the requirements of the Contract Documents. This notice shall be both a written communication separate from the Shop Drawing's or Sample Submittal; and, in addition, by a specific notation made on each Shop Drawing or Sample submitted to Engineer for review and approval of each such variation.

D. Engineer's Review

1. Engineer will provide timely review of Shop Drawings and Samples in accordance with the Schedule of Submittals acceptable to Engineer. Engineer's review and approval will be only to determine if the items covered by the submittals will, after installation or incorporation in the Work, conform to the information given in the Contract Documents and be compatible with the design concept of the completed Project as a functioning whole as indicated by the Contract Documents.

2. Engineer's review and approval will not extend to means, methods, techniques, sequences, or procedures of construction (except where a particular means, method, technique, sequence, or procedure of construction is specifically and expressly called for by the Contract Documents) or to safety precautions or programs incident thereto. The review and approval of a separate item as such will not indicate approval of the assembly in which the item functions.

3. Engineer's review and approval shall not relieve Contractor from responsibility for any variation from the requirements of the Contract Documents unless Contractor has complied with the requirements of Paragraph 6.17.C.3 and Engineer has given written approval of each such variation by specific written notation thereof incorporated in or accompanying the Shop Drawing or Sample. Engineer's review and approval shall not relieve Contractor from responsibility for complying with the requirements of Paragraph 6.17.C.1.

E. Resubmittal Procedures

1. Contractor shall make corrections required by Engineer and shall return the required number of corrected copies of Shop Drawings and submit, as required, new Samples for review and approval. Contractor shall direct specific attention in writing to revisions other than the corrections called for by Engineer on previous submittals.

6.18 *Continuing the Work*

A. Contractor shall carry on the Work and adhere to the Progress Schedule during all disputes or disagreements with Owner. No Work shall be delayed or postponed pending resolution of any disputes or disagreements, except as permitted by Paragraph 15.04 or as Owner and Contractor may otherwise agree in writing.

6.19 *Contractor's General Warranty and Guarantee*

A. Contractor warrants and guarantees to Owner that all Work will be in accordance with the Contract Documents and will not be defective. Engineer and its Related Entities shall be entitled to rely on representation of Contractor's warranty and guarantee.

B. Contractor's warranty and guarantee hereunder excludes defects or damage caused by:

1. abuse, modification, or improper maintenance or operation by persons other than Contractor, Subcontractors, Suppliers, or any other individual or entity for whom Contractor is responsible; or

2. normal wear and tear under normal usage.

C. Contractor's obligation to perform and complete the Work in accordance with the Contract Documents shall be absolute. None of the following will constitute an acceptance of Work that is not in accordance with the Contract Documents or a release of Contractor's obligation to perform the Work in accordance with the Contract Documents:

1. observations by Engineer;

2. recommendation by Engineer or payment by Owner of any progress or final payment;

3. the issuance of a certificate of Substantial Completion by Engineer or any payment related thereto by Owner;

4. use or occupancy of the Work or any part thereof by Owner;

5. any review and approval of a Shop Drawing or Sample submittal or the issuance of a notice of acceptability by Engineer;

6. any inspection, test, or approval by others; or

7. any correction of defective Work by Owner.

6.20 *Indemnification*

A. To the fullest extent permitted by Laws and Regulations, Contractor shall indemnify and hold harmless Owner and Engineer, and the officers, directors, partners, employees, agents, consultants and subcontractors of each and any of them from and against all claims, costs, losses, and damages (including but not limited to all fees and charges of engineers, architects, attorneys, and other professionals and all court or arbitration or other dispute resolution costs) arising out of or relating to the performance of the Work, provided that any such claim, cost, loss, or damage is attributable to bodily injury, sickness, disease, or death, or to injury to or destruction of tangible property (other than the Work itself), including the loss of use resulting therefrom but only to the extent caused by any negligent act or omission of Contractor, any Subcontractor, any Supplier, or any individual or entity directly or indirectly employed by any of them to perform any of the Work or anyone for whose acts any of them may be liable .

B. In any and all claims against Owner or Engineer or any of their respective consultants, agents, officers, directors, partners, or employees by any employee (or the survivor or personal representative of such employee) of Contractor, any Subcontractor, any Supplier, or any individual or entity directly or indirectly employed by any of them to perform any of the Work, or anyone for whose acts any of them may be liable, the indemnification obligation under Paragraph 6.20.A shall not be limited in any way by any limitation on the amount or type of damages, compensation, or benefits payable by or for Contractor or any such Subcontractor, Supplier, or other individual or entity under workers' compensation acts, disability benefit acts, or other employee benefit acts.

C. The indemnification obligations of Contractor under Paragraph 6.20.A shall not extend to the liability of Engineer and Engineer's officers, directors, partners, employees, agents, consultants and subcontractors arising out of:

1. the preparation or approval of, or the failure to prepare or approve, maps, Drawings, opinions, reports, surveys, Change Orders, designs, or Specifications; or

2. giving directions or instructions, or failing to give them, if that is the primary cause of the injury or damage.

6.21 *Delegation of Professional Design Services*

A. Contractor will not be required to provide professional design services unless such services are specifically required by the Contract Documents for a portion of the Work or unless such services are required to carry out Contractor's responsibilities for construction means, methods, techniques, sequences and procedures. Contractor shall not be required to provide professional services in violation of applicable law.

B. If professional design services or certifications by a design professional related to systems, materials or equipment are specifically required of Contractor by the Contract Documents, Owner and Engineer will specify all performance and design criteria that such services must satisfy. Contractor shall cause such services or certifications to be provided by a properly licensed professional, whose signature and seal shall appear on all drawings, calculations, specifications, certifications, Shop Drawings and other submittals prepared by such professional. Shop Drawings and other submittals related to the Work designed or certified by such professional, if prepared by others, shall bear such professional's written approval when submitted to Engineer.

C. Owner and Engineer shall be entitled to rely upon the adequacy, accuracy and completeness of the services, certifications or approvals performed by such design professionals, provided Owner and Engineer have specified to Contractor all performance and design criteria that such services must satisfy.

D. Pursuant to this Paragraph 6.21, Engineer's review and approval of design calculations and design drawings will be only for the limited purpose of checking for conformance with performance and design criteria given and the design concept expressed in the Contract Documents. Engineer's review and approval of Shop Drawings and other submittals (except design calculations and design drawings) will be only for the purpose stated in Paragraph 6.17.D.1.

E. Contractor shall not be responsible for the adequacy of the performance or design criteria required by the Contract Documents.

ARTICLE 7 - OTHER WORK AT THE SITE

7.01 *Related Work at Site*

A. Owner may perform other work related to the Project at the Site with Owner's employees, or via other direct contracts therefor, or have other work performed by utility owners. If such other work is not noted in the Contract Documents, then:

1. written notice thereof will be given to Contractor prior to starting any such other work; and

2. if Owner and Contractor are unable to agree on entitlement to or on the amount or extent, if any, of any adjustment in the Contract Price or Contract Times that should be allowed as a result of such other work, a Claim may be made therefor as provided in Paragraph 10.05.

B. Contractor shall afford each other contractor who is a party to such a direct contract, each utility owner and Owner, if Owner is performing other work with Owner's employees, proper and safe access to the Site, a reasonable opportunity for the introduction and storage of materials and equipment and the execution of such other work, and shall properly coordinate the Work with theirs. Contractor shall do all cutting, fitting, and patching of the Work that may be required to properly connect or otherwise make its several parts come together and properly integrate with such other work. Contractor shall not endanger any work of others by cutting, excavating, or otherwise altering their work and will only cut or alter their work with the written consent of Engineer and the others whose work will be affected. The duties and responsibilities of Contractor under this Paragraph are for the benefit of such utility owners and other contractors to the extent that there are comparable provisions for the benefit of Contractor in said direct contracts between Owner and such utility owners and other contractors.

C. If the proper execution or results of any part of Contractor's Work depends upon work performed by others under this Article 7, Contractor shall inspect such other work and promptly report to Engineer in writing any delays, defects, or deficiencies in such other work that render it unavailable or unsuitable for the proper execution and results of Contractor's Work. Contractor's failure to so report will constitute an acceptance of such other work as fit and proper for integration with Contractor's Work except for latent defects and deficiencies in such other work.

7.02 *Coordination*

A. If Owner intends to contract with others for the performance of other work on the Project at the Site, the following will be set forth in Supplementary Conditions:

1. the individual or entity who will have authority and responsibility for coordination of the activities among the various contractors will be identified;

2. the specific matters to be covered by such authority and responsibility will be itemized; and

3. the extent of such authority and responsibilities will be provided.

B. Unless otherwise provided in the Supplementary Conditions, Owner shall have sole authority and responsibility for such coordination.

7.03 *Legal Relationships*

A. Paragraphs 7.01.A and 7.02 are not applicable for utilities not under the control of Owner.

B. Each other direct contract of Owner under Paragraph 7.01.A shall provide that the other contractor is liable to Owner and Contractor for the reasonable direct delay and disruption costs incurred by Contractor as a result of the other contractor's actions or inactions.

C. Contractor shall be liable to Owner and any other contractor for the reasonable direct delay and disruption costs incurred by such other contractor as a result of Contractor's action or inactions.

ARTICLE 8 - OWNER'S RESPONSIBILITIES

8.01 *Communications to Contractor*

A. Except as otherwise provided in these General Conditions, Owner shall issue all communications to Contractor through Engineer.

8.02 *Replacement of Engineer*

A. In case of termination of the employment of Engineer, Owner shall appoint an engineer to whom Contractor makes no reasonable objection, whose status under the Contract Documents shall be that of the former Engineer.

8.03 *Furnish Data*

A. Owner shall promptly furnish the data required of Owner under the Contract Documents.

8.04 *Pay When Due*

A. Owner shall make payments to Contractor when they are due as provided in Paragraphs 14.02.C and 14.07.C.

8.05 *Lands and Easements; Reports and Tests*

A. Owner's duties in respect of providing lands and easements and providing engineering surveys to establish reference points are set forth in Paragraphs 4.01 and 4.05. Paragraph 4.02 refers to Owner's identifying and making available to Contractor copies of reports of explorations and tests of subsurface conditions and drawings of physical conditions in or relating to existing surface or subsurface structures at or contiguous to the Site that have been utilized by Engineer in preparing the Contract Documents.

8.06 *Insurance*

A. Owner's responsibilities, if any, in respect to purchasing and maintaining liability and property insurance are set forth in Article 5.

8.07 *Change Orders*

A. Owner is obligated to execute Change Orders as indicated in Paragraph 10.03.

8.08 *Inspections, Tests, and Approvals*

A. Owner's responsibility in respect to certain inspections, tests, and approvals is set forth in Paragraph 13.03.B.

8.09 *Limitations on Owner's Responsibilities*

A. The Owner shall not supervise, direct, or have control or authority over, nor be responsible for, Contractor's means, methods, techniques, sequences, or procedures of construction, or the safety precautions and programs incident thereto, or for any failure of Contractor to comply with Laws and Regulations applicable to the performance of the Work. Owner will not be responsible for Contractor's failure to perform the Work in accordance with the Contract Documents.

8.10 *Undisclosed Hazardous Environmental Condition*

A. Owner's responsibility in respect to an undisclosed Hazardous Environmental Condition is set forth in Paragraph 4.06.

8.11 *Evidence of Financial Arrangements*

A. If and to the extent Owner has agreed to furnish Contractor reasonable evidence that financial arrangements have been made to satisfy Owner's obligations under the Contract Documents, Owner's responsibility in respect thereof will be as set forth in the Supplementary Conditions.

ARTICLE 9 - ENGINEER'S STATUS DURING CONSTRUCTION

9.01 *Owner's Representative*

A. Engineer will be Owner's representative during the construction period. The duties and responsibilities and the limitations of authority of Engineer as Owner's representative during construction are set forth in the Contract Documents and will not be changed without written consent of Owner and Engineer.

9.02 *Visits to Site*

A. Engineer will make visits to the Site at intervals appropriate to the various stages of construction as Engineer deems necessary in order to observe as an experienced and qualified design professional the progress that has been made and the quality of the various aspects of Contractor's executed Work. Based on information obtained during such visits and observations, Engineer, for the benefit of Owner, will determine, in general, if the Work is proceeding in accordance with the Contract Documents. Engineer will not be required to make exhaustive or continuous inspections on the Site to check the quality or quantity of the Work. Engineer's efforts will be directed toward providing for Owner a greater degree of confidence that the completed Work will conform generally to the Contract Documents. On the basis of such visits and observations, Engineer will keep Owner informed of the progress of the Work and will endeavor to guard Owner against defective Work.

B. Engineer's visits and observations are subject to all the limitations on Engineer's authority and responsibility set forth in Paragraph 9.09. Particularly, but without limitation, during or as a result of Engineer's visits or observations of Contractor's Work Engineer will not supervise, direct, control, or have authority over or be responsible for Contractor's means, methods, techniques, sequences, or procedures of construction, or the safety precautions and programs incident thereto, or for any failure of Contractor to comply with Laws and Regulations applicable to the performance of the Work.

9.03 *Project Representative*

A. If Owner and Engineer agree, Engineer will furnish a Resident Project Representative to assist Engineer in providing more extensive observation of the Work. The authority and responsibilities of any such Resident Project Representative and assistants will be as provided in the Supplementary Conditions, and limitations on the responsibilities thereof will be as provided in Paragraph 9.09. If Owner designates another representative or agent to represent Owner at the Site who is not Engineer's consultant, agent or employee, the responsibilities and authority and limitations thereon of such other individual or entity will be as provided in the Supplementary Conditions.

9.04 *Authorized Variations in Work*

A. Engineer may authorize minor variations in the Work from the requirements of the Contract Documents which do not involve an adjustment in the Contract Price or the Contract Times and are compatible with the design concept of the completed Project as a functioning whole as indicated by the Contract Documents. These may be accomplished by a Field Order and will be binding on Owner and also on Contractor, who shall perform the Work involved promptly. If Owner or Contractor believes that a Field Order justifies an adjustment in the Contract Price or Contract Times, or both, and the parties are unable to agree on entitlement to or on the amount or extent, if any, of any such adjustment, a Claim may be made therefor as provided in Paragraph 10.05.

9.05 *Rejecting Defective Work*

A. Engineer will have authority to reject Work which Engineer believes to be defective, or that Engineer believes will not produce a completed Project that conforms to the Contract Documents or that will prejudice the integrity of the design concept of the completed Project as a functioning whole as indicated by the

Contract Documents. Engineer will also have authority to require special inspection or testing of the Work as provided in Paragraph 13.04, whether or not the Work is fabricated, installed, or completed.

9.06 *Shop Drawings, Change Orders and Payments*

A. In connection with Engineer's authority, and limitations thereof, as to Shop Drawings and Samples, see Paragraph 6.17.

B. In connection with Engineer's authority, and limitations thereof, as to design calculations and design drawings submitted in response to a delegation of professional design services, if any, see Paragraph 6.21.

C. In connection with Engineer's authority as to Change Orders, see Articles 10, 11, and 12.

D. In connection with Engineer's authority as to Applications for Payment, see Article 14.

9.07 *Determinations for Unit Price Work*

A. Engineer will determine the actual quantities and classifications of Unit Price Work performed by Contractor. Engineer will review with Contractor the Engineer's preliminary determinations on such matters before rendering a written decision thereon (by recommendation of an Application for Payment or otherwise). Engineer's written decision thereon will be final and binding (except as modified by Engineer to reflect changed factual conditions or more accurate data) upon Owner and Contractor, subject to the provisions of Paragraph 10.05.

9.08 *Decisions on Requirements of Contract Documents and Acceptability of Work*

A. Engineer will be the initial interpreter of the requirements of the Contract Documents and judge of the acceptability of the Work thereunder. All matters in question and other matters between Owner and Contractor arising prior to the date final payment is due relating to the acceptability of the Work, and the interpretation of the requirements of the Contract Documents pertaining to the performance of the Work, will be referred initially to Engineer in writing within 30 days of the event giving rise to the question

B. Engineer will, with reasonable promptness, render a written decision on the issue referred. If Owner or Contractor believe that any such decision entitles them to an adjustment in the Contract Price or Contract Times or both, a Claim may be made under Paragraph 10.05. The date of Engineer's decision shall be the date of the event giving rise to the issues referenced for the purposes of Paragraph 10.05.B.

C. Engineer's written decision on the issue referred will be final and binding on Owner and Contractor, subject to the provisions of Paragraph 10.05.

D. When functioning as interpreter and judge under this Paragraph 9.08, Engineer will not show partiality to Owner or Contractor and will not be liable in connection with any interpretation or decision rendered in good faith in such capacity.

9.09 *Limitations on Engineer's Authority and Responsibilities*

A. Neither Engineer's authority or responsibility under this Article 9 or under any other provision of the Contract Documents nor any decision made by Engineer in good faith either to exercise or not exercise such authority or responsibility or the undertaking, exercise, or performance of any authority or responsibility by Engineer shall create, impose, or give rise to any duty in contract, tort, or otherwise owed by Engineer to Contractor, any Subcontractor, any Supplier, any other individual or entity, or to any surety for or employee or agent of any of them.

B. Engineer will not supervise, direct, control, or have authority over or be responsible for Contractor's means, methods, techniques, sequences, or procedures of construction, or the safety precautions and programs incident thereto, or for any failure of Contractor to comply with Laws and Regulations applicable to the performance of the Work. Engineer will not be responsible for Contractor's failure to perform the Work in accordance with the Contract Documents.

C. Engineer will not be responsible for the acts or omissions of Contractor or of any Subcontractor, any Supplier, or of any other individual or entity performing any of the Work.

D. Engineer's review of the final Application for Payment and accompanying documentation and all maintenance and operating instructions, schedules, guarantees, bonds, certificates of inspection, tests and approvals, and other documentation required to be delivered by Paragraph 14.07.A will only be to determine generally that their content complies with the requirements of, and in the case of certificates of inspections, tests, and approvals that the results certified indicate compliance with the Contract Documents.

E. The limitations upon authority and responsibility set forth in this Paragraph 9.09 shall also apply to, the Resident Project Representative, if any, and assistants, if any.

ARTICLE 10 - CHANGES IN THE WORK; CLAIMS

10.01 *Authorized Changes in the Work*

A. Without invalidating the Contract and without notice to any surety, Owner may, at any time or from time to time, order additions, deletions, or revisions in the Work by a Change Order, or a Work Change Directive. Upon receipt of any such document, Contractor shall promptly proceed with the Work involved which will be performed under the applicable conditions of the Contract Documents (except as otherwise specifically provided).

B. If Owner and Contractor are unable to agree on entitlement to, or on the amount or extent, if any, of an adjustment in the Contract Price or Contract Times, or both, that should be allowed as a result of a Work Change Directive, a Claim may be made therefor as provided in Paragraph 10.05.

10.02 *Unauthorized Changes in the Work*

A. Contractor shall not be entitled to an increase in the Contract Price or an extension of the Contract Times with respect to any work performed that is not required by the Contract Documents as amended, modified, or supplemented as provided in Paragraph 3.04, except in the case of an emergency as provided in Paragraph 6.16 or in the case of uncovering Work as provided in Paragraph 13.04.B.

10.03 *Execution of Change Orders*

A. Owner and Contractor shall execute appropriate Change Orders recommended by Engineer covering:

1. changes in the Work which are: (i) ordered by Owner pursuant to Paragraph 10.01.A, (ii) required because of acceptance of defective Work under Paragraph 13.08.A or Owner's correction of defective Work under Paragraph 13.09, or (iii) agreed to by the parties;

2. changes in the Contract Price or Contract Times which are agreed to by the parties, including any undisputed sum or amount of time for Work actually performed in accordance with a Work Change Directive; and

3. changes in the Contract Price or Contract Times which embody the substance of any written decision rendered by Engineer pursuant to Paragraph 10.05; provided that, in lieu of executing any such Change Order, an appeal may be taken from any such decision in accordance with the provisions of the Contract Documents and applicable Laws and Regulations, but during any such appeal, Contractor shall carry on the Work and adhere to the Progress Schedule as provided in Paragraph 6.18.A.

10.04 *Notification to Surety*

A. If notice of any change affecting the general scope of the Work or the provisions of the Contract Documents (including, but not limited to, Contract Price or Contract Times) is required by the provisions of any bond to be given to a surety, the giving of any such notice will be Contractor's responsibility. The amount of each applicable bond will be adjusted to reflect the effect of any such change.

10.05 *Claims*

A. *Engineer's Decision Required*: All Claims, except those waived pursuant to Paragraph 14.09, shall be referred to the Engineer for decision. A decision by Engineer shall be required as a condition precedent to any exercise by Owner or Contractor of any rights or remedies either may otherwise have under the Contract Documents or by Laws and Regulations in respect of such Claims.

B. *Notice:* Written notice stating the general nature of each Claim shall be delivered by the claimant to Engineer and the other party to the Contract promptly (but in no event later than 30 days) after the start of the event giving rise thereto. The responsibility to substantiate a Claim shall rest with the party making the Claim. Notice of the amount or extent of the Claim, with supporting data shall be delivered to the Engineer and the other party to the Contract within 60 days after the start of such event (unless Engineer allows additional time for claimant to submit additional or more accurate data in support of such Claim). A Claim for an adjustment in Contract Price shall be prepared in accordance with the provisions of Paragraph 12.01.B. A Claim for an adjustment in Contract Time shall be prepared in accordance with the provisions of Paragraph 12.02.B. Each Claim shall be accompanied by claimant's written statement that the adjustment claimed is the entire adjustment to which the claimant believes it is entitled as a result of said event. The opposing party shall submit any response to Engineer and the claimant within 30 days after receipt of the claimant's last submittal (unless Engineer allows additional time).

C. *Engineer's Action*: Engineer will review each Claim and, within 30 days after receipt of the last submittal of the claimant or the last submittal of the opposing party, if any, take one of the following actions in writing:

1. deny the Claim in whole or in part,

2. approve the Claim, or

3. notify the parties that the Engineer is unable to resolve the Claim if, in the Engineer's sole discretion, it would be inappropriate for the Engineer to do so. For purposes of further resolution of the Claim, such notice shall be deemed a denial.

D. In the event that Engineer does not take action on a Claim within said 30 days, the Claim shall be deemed denied.

E. Engineer's written action under Paragraph 10.05.C or denial pursuant to Paragraphs 10.05.C.3 or 10.05.D will be final and binding upon Owner and Contractor, unless Owner or Contractor invoke the dispute resolution procedure set forth in Article 16 within 30 days of such action or denial.

F. No Claim for an adjustment in Contract Price or Contract Times will be valid if not submitted in accordance with this Paragraph 10.05.

ARTICLE 11 - COST OF THE WORK; ALLOWANCES; UNIT PRICE WORK

11.01 *Cost of the Work*

A. *Costs Included:* The term Cost of the Work means the sum of all costs, except those excluded in Paragraph 11.01.B, necessarily incurred and paid by Contractor in the proper performance of the Work. When the value of any Work covered by a Change Order or when a Claim for an adjustment in Contract Price is determined on the basis of Cost of the Work, the costs to be reimbursed to Contractor will be only those additional or incremental costs required because of the change in the Work or because of the event giving rise to the Claim. Except as otherwise may be agreed to in writing by Owner, such costs shall be in amounts no higher than those prevailing in the locality of the Project, shall include only the following items, and shall not include any of the costs itemized in Paragraph 11.01.B.

1. Payroll costs for employees in the direct employ of Contractor in the performance of the Work under schedules of job classifications agreed upon by Owner and Contractor. Such employees shall include, without limitation, superintendents, foremen, and other personnel employed full time at the Site. Payroll costs for employees not employed full time on the Work shall be apportioned on the basis of their time spent on the Work. Payroll costs shall include, but not be limited to, salaries and wages plus the cost of fringe benefits, which shall include social security contributions, unemployment, excise, and payroll taxes, workers' compensation, health and retirement benefits, bonuses, sick leave, vacation and holiday pay applicable thereto. The expenses of performing Work outside of regular working hours, on Saturday, Sunday, or legal holidays, shall be included in the above to the extent authorized by Owner.

2. Cost of all materials and equipment furnished and incorporated in the Work, including costs of transportation and storage thereof, and Suppliers' field services required in connection therewith. All cash discounts shall accrue to Contractor unless Owner deposits funds with Contractor with which to make payments, in which case the cash discounts shall accrue to Owner. All trade discounts, rebates and refunds and returns from sale of surplus materials and equipment shall accrue to Owner, and Contractor shall make provisions so that they may be obtained.

3. Payments made by Contractor to Subcontractors for Work performed by Subcontractors. If required by Owner, Contractor shall obtain competitive bids from subcontractors acceptable to Owner and Contractor and shall deliver such bids to Owner, who will then determine, with the advice of Engineer, which bids, if any, will be acceptable. If any subcontract provides that the Subcontractor is to be paid on the basis of Cost of the Work plus a fee, the Subcontractor's Cost of the Work and fee shall be determined in the same manner as Contractor's Cost of the Work and fee as provided in this Paragraph 11.01.

4. Costs of special consultants (including but not limited to Engineers, architects, testing laboratories, surveyors, attorneys, and accountants) employed for services specifically related to the Work.

5. Supplemental costs including the following:

a. The proportion of necessary transportation, travel, and subsistence expenses of Contractor's employees incurred in discharge of duties connected with the Work.

b. Cost, including transportation and maintenance, of all materials, supplies, equipment, machinery, appliances, office, and temporary facilities at the Site, and hand tools not owned by the workers, which are consumed in the performance of the Work, and cost, less market value, of such items used but not consumed which remain the property of Contractor.

c. Rentals of all construction equipment and machinery, and the parts thereof whether rented from Contractor or others in accordance with rental agreements approved by Owner with the advice of Engineer, and the costs of transportation, loading, unloading, assembly, dismantling, and removal thereof. All such costs shall be in accordance with the terms of said rental agreements. The rental of any such equipment, machinery, or parts shall cease when the use thereof is no longer necessary for the Work.

d. Sales, consumer, use, and other similar taxes related to the Work, and for which Contractor is liable, imposed by Laws and Regulations.

e. Deposits lost for causes other than negligence of Contractor, any Subcontractor, or anyone

directly or indirectly employed by any of them or for whose acts any of them may be liable, and royalty payments and fees for permits and licenses.

f. Losses and damages (and related expenses) caused by damage to the Work, not compensated by insurance or otherwise, sustained by Contractor in connection with the performance of the Work (except losses and damages within the deductible amounts of property insurance established in accordance with Paragraph 5.06.D), provided such losses and damages have resulted from causes other than the negligence of Contractor, any Subcontractor, or anyone directly or indirectly employed by any of them or for whose acts any of them may be liable. Such losses shall include settlements made with the written consent and approval of Owner. No such losses, damages, and expenses shall be included in the Cost of the Work for the purpose of determining Contractor's fee.

g. The cost of utilities, fuel, and sanitary facilities at the Site.

h. Minor expenses such as telegrams, long distance telephone calls, telephone service at the Site, expresses, and similar petty cash items in connection with the Work.

i. The costs of premiums for all bonds and insurance Contractor is required by the Contract Documents to purchase and maintain.

B. *Costs Excluded:* The term Cost of the Work shall not include any of the following items:

1. Payroll costs and other compensation of Contractor's officers, executives, principals (of partnerships and sole proprietorships), general managers, safety managers, engineers, architects, estimators, attorneys, auditors, accountants, purchasing and contracting agents, expediters, timekeepers, clerks, and other personnel employed by Contractor, whether at the Site or in Contractor's principal or branch office for general administration of the Work and not specifically included in the agreed upon schedule of job classifications referred to in Paragraph 11.01.A.1 or specifically covered by Paragraph 11.01.A.4, all of which are to be considered administrative costs covered by the Contractor's fee.

2. Expenses of Contractor's principal and branch offices other than Contractor's office at the Site.

3. Any part of Contractor's capital expenses, including interest on Contractor's capital employed for the Work and charges against Contractor for delinquent payments.

4. Costs due to the negligence of Contractor, any Subcontractor, or anyone directly or indirectly employed by any of them or for whose acts any of them may be liable, including but not limited to, the correction of defective Work, disposal of materials or equipment wrongly supplied, and making good any damage to property.

5. Other overhead or general expense costs of any kind and the costs of any item not specifically and expressly included in Paragraphs 11.01.A and 11.01.B.

C. *Contractor's Fee:* When all the Work is performed on the basis of cost-plus, Contractor's fee shall be determined as set forth in the Agreement. When the value of any Work covered by a Change Order or when a Claim for an adjustment in Contract Price is determined on the basis of Cost of the Work, Contractor's fee shall be determined as set forth in Paragraph 12.01.C.

D. *Documentation:* Whenever the Cost of the Work for any purpose is to be determined pursuant to Paragraphs 11.01.A and 11.01.B, Contractor will establish and maintain records thereof in accordance with generally accepted accounting practices and submit in a form acceptable to Engineer an itemized cost breakdown together with supporting data.

11.02 *Allowances*

A. It is understood that Contractor has included in the Contract Price all allowances so named in the Contract Documents and shall cause the Work so covered to be performed for such sums and by such persons or entities as may be acceptable to Owner and Engineer.

B. Cash Allowances

1. Contractor agrees that:

a. the cash allowances include the cost to Contractor (less any applicable trade discounts) of materials and equipment required by the allowances to be delivered at the Site, and all applicable taxes; and

b. Contractor's costs for unloading and handling on the Site, labor, installation , overhead, profit, and other expenses contemplated for the cash allowances have been included in the Contract Price and not in the allowances, and no demand for additional payment on account of any of the foregoing will be valid.

C. Contingency Allowance

1. Contractor agrees that a contingency allowance, if any, is for the sole use of Owner to cover unanticipated costs.

D. Prior to final payment, an appropriate Change Order will be issued as recommended by Engineer to reflect actual amounts due Contractor on account of Work covered by allowances, and the Contract Price shall be correspondingly adjusted.

11.03 *Unit Price Work*

A. Where the Contract Documents provide that all or part of the Work is to be Unit Price Work, initially the Contract Price will be deemed to include for all Unit Price Work an amount equal to the sum of the unit price for each separately identified item of Unit Price Work times the estimated quantity of each item as indicated in the Agreement.

B. The estimated quantities of items of Unit Price Work are not guaranteed and are solely for the purpose of comparison of Bids and determining an initial Contract Price. Determinations of the actual quantities and classifications of Unit Price Work performed by Contractor will be made by Engineer subject to the provisions of Paragraph 9.07.

C. Each unit price will be deemed to include an amount considered by Contractor to be adequate to cover Contractor's overhead and profit for each separately identified item.

D. Owner or Contractor may make a Claim for an adjustment in the Contract Price in accordance with Paragraph 10.05 if:

1. the quantity of any item of Unit Price Work performed by Contractor differs materially and significantly from the estimated quantity of such item indicated in the Agreement; and

2. there is no corresponding adjustment with respect any other item of Work; and

3. Contractor believes that Contractor is entitled to an increase in Contract Price as a result of having incurred additional expense or Owner believes that Owner is entitled to a decrease in Contract Price and the parties are unable to agree as to the amount of any such increase or decrease.

ARTICLE 12 - CHANGE OF CONTRACT PRICE; CHANGE OF CONTRACT TIMES

12.01 *Change of Contract Price*

A. The Contract Price may only be changed by a Change Order. Any Claim for an adjustment in the Contract Price shall be based on written notice submitted by the party making the Claim to the Engineer and the other party to the Contract in accordance with the provisions of Paragraph 10.05.

B. The value of any Work covered by a Change Order or of any Claim for an adjustment in the Contract Price will be determined as follows:

1. where the Work involved is covered by unit prices contained in the Contract Documents, by application of such unit prices to the quantities of the items involved (subject to the provisions of Paragraph 11.03); or

2. where the Work involved is not covered by unit prices contained in the Contract Documents, by a mutually agreed lump sum (which may include an allowance for overhead and profit not necessarily in accordance with Paragraph 12.01.C.2); or

3. where the Work involved is not covered by unit prices contained in the Contract Documents and agreement to a lump sum is not reached under Paragraph 12.01.B.2, on the basis of the Cost of the Work (determined as provided in Paragraph 11.01) plus a Contractor's fee for overhead and profit (determined as provided in Paragraph 12.01.C).

C. *Contractor's Fee:* The Contractor's fee for overhead and profit shall be determined as follows:

1. a mutually acceptable fixed fee; or

2. if a fixed fee is not agreed upon, then a fee based on the following percentages of the various portions of the Cost of the Work:

a. for costs incurred under Paragraphs 11.01.A.1 and 11.01.A.2, the Contractor's fee shall be 15 percent;

b. for costs incurred under Paragraph 11.01.A.3, the Contractor's fee shall be five percent;

c. where one or more tiers of subcontracts are on the basis of Cost of the Work plus a fee and no fixed fee is agreed upon, the intent of Paragraph 12.01.C.2.a is that the Subcontractor who actually performs the Work, at whatever tier, will be paid a fee of 15 percent of the costs incurred by such Subcontractor under Paragraphs 11.01.A.1 and 11.01.A.2 and that any higher tier

Subcontractor and Contractor will each be paid a fee of five percent of the amount paid to the next lower tier Subcontractor;

d. no fee shall be payable on the basis of costs itemized under Paragraphs 11.01.A.4, 11.01.A.5, and 11.01.B;

e. the amount of credit to be allowed by Contractor to Owner for any change which results in a net decrease in cost will be the amount of the actual net decrease in cost plus a deduction in Contractor's fee by an amount equal to five percent of such net decrease; and

f. when both additions and credits are involved in any one change, the adjustment in Contractor's fee shall be computed on the basis of the net change in accordance with Paragraphs 12.01.C.2.a through 12.01.C.2.e, inclusive.

12.02 *Change of Contract Times*

A. The Contract Times may only be changed by a Change Order. Any Claim for an adjustment in the Contract Times shall be based on written notice submitted by the party making the Claim to the Engineer and the other party to the Contract in accordance with the provisions of Paragraph 10.05.

B. Any adjustment of the Contract Times covered by a Change Order or any Claim for an adjustment in the Contract Times will be determined in accordance with the provisions of this Article 12.

12.03 *Delays*

A. Where Contractor is prevented from completing any part of the Work within the Contract Times due to delay beyond the control of Contractor, the Contract Times will be extended in an amount equal to the time lost due to such delay if a Claim is made therefor as provided in Paragraph 12.02.A. Delays beyond the control of Contractor shall include, but not be limited to, acts or neglect by Owner, acts or neglect of utility owners or other contractors performing other work as contemplated by Article 7, fires, floods, epidemics, abnormal weather conditions, or acts of God.

B. If Owner, Engineer, or other contractors or utility owners performing other work for Owner as contemplated by Article 7, or anyone for whom Owner is responsible, delays, disrupts, or interferes with the performance or progress of the Work, then Contractor shall be entitled to an equitable adjustment in the Contract Price or the Contract Times , or both. Contractor's entitlement to an adjustment of the Contract Times is conditioned on such adjustment being essential to Contractor's ability to complete the Work within the Contract Times.

C. If Contractor is delayed in the performance or progress of the Work by fire, flood, epidemic, abnormal weather conditions, acts of God, acts or failures to act of utility owners not under the control of Owner, or other causes not the fault of and beyond control of Owner and Contractor, then Contractor shall be entitled to an equitable adjustment in Contract Times, if such adjustment is essential to Contractor's ability to complete the Work within the Contract Times. Such an adjustment shall be Contractor's sole and exclusive remedy for the delays described in this Paragraph 12.03.C.

D. Owner, Engineer and the Related Entities of each of them shall not be liable to Contractor for any claims, costs, losses, or damages (including but not limited to all fees and charges of Engineers, architects, attorneys, and other professionals and all court or arbitration or other dispute resolution costs) sustained by Contractor on or in connection with any other project or anticipated project.

E. Contractor shall not be entitled to an adjustment in Contract Price or Contract Times for delays within the control of Contractor. Delays attributable to and within the control of a Subcontractor or Supplier shall be deemed to be delays within the control of Contractor.

ARTICLE 13 - TESTS AND INSPECTIONS; CORRECTION, REMOVAL OR ACCEPTANCE OF DEFECTIVE WORK

13.01 *Notice of Defects*

A. Prompt notice of all defective Work of which Owner or Engineer has actual knowledge will be given to Contractor. All defective Work may be rejected, corrected, or accepted as provided in this Article 13.

13.02 *Access to Work*

A. Owner, Engineer, their consultants and other representatives and personnel of Owner, independent testing laboratories, and governmental agencies with jurisdictional interests will have access to the Site and the Work at reasonable times for their observation, inspecting, and testing. Contractor shall provide them proper and safe conditions for such access and advise them of Contractor's Site safety procedures and programs so that they may comply therewith as applicable.

13.03 *Tests and Inspections*

A. Contractor shall give Engineer timely notice of readiness of the Work for all required inspections, tests, or approvals and shall cooperate with inspection and testing personnel to facilitate required inspections or tests.

B. Owner shall employ and pay for the services of an independent testing laboratory to perform all inspections,

tests, or approvals required by the Contract Documents except:

1. for inspections, tests, or approvals covered by Paragraphs 13.03.C and 13.03.D below;

2. that costs incurred in connection with tests or inspections conducted pursuant to Paragraph 13.04.B shall be paid as provided in said Paragraph 13.04.C; and

3. as otherwise specifically provided in the Contract Documents.

C. If Laws or Regulations of any public body having jurisdiction require any Work (or part thereof) specifically to be inspected, tested, or approved by an employee or other representative of such public body, Contractor shall assume full responsibility for arranging and obtaining such inspections, tests, or approvals, pay all costs in connection therewith, and furnish Engineer the required certificates of inspection or approval.

D. Contractor shall be responsible for arranging and obtaining and shall pay all costs in connection with any inspections, tests, or approvals required for Owner's and Engineer's acceptance of materials or equipment to be incorporated in the Work; or acceptance of materials, mix designs, or equipment submitted for approval prior to Contractor's purchase thereof for incorporation in the Work. Such inspections, tests, or approvals shall be performed by organizations acceptable to Owner and Engineer.

E. If any Work (or the work of others) that is to be inspected, tested, or approved is covered by Contractor without written concurrence of Engineer, it must, if requested by Engineer, be uncovered for observation.

F. Uncovering Work as provided in Paragraph 13.03.E shall be at Contractor's expense unless Contractor has given Engineer timely notice of Contractor's intention to cover the same and Engineer has not acted with reasonable promptness in response to such notice.

13.04 *Uncovering Work*

A. If any Work is covered contrary to the written request of Engineer, it must, if requested by Engineer, be uncovered for Engineer's observation and replaced at Contractor's expense.

B. If Engineer considers it necessary or advisable that covered Work be observed by Engineer or inspected or tested by others, Contractor, at Engineer's request, shall uncover, expose, or otherwise make available for observation, inspection, or testing as Engineer may require, that portion of the Work in question, furnishing all necessary labor, material, and equipment.

C. If it is found that the uncovered Work is defective, Contractor shall pay all claims, costs, losses, and damages (including but not limited to all fees and charges of engineers, architects, attorneys, and other professionals and all court or arbitration or other dispute resolution costs) arising out of or relating to such uncovering, exposure, observation, inspection, and testing, and of satisfactory replacement or reconstruction (including but not limited to all costs of repair or replacement of work of others); and Owner shall be entitled to an appropriate decrease in the Contract Price. If the parties are unable to agree as to the amount thereof, Owner may make a Claim therefor as provided in Paragraph 10.05.

D. If, the uncovered Work is not found to be defective, Contractor shall be allowed an increase in the Contract Price or an extension of the Contract Times, or both, directly attributable to such uncovering, exposure, observation, inspection, testing, replacement, and reconstruction. If the parties are unable to agree as to the amount or extent thereof, Contractor may make a Claim therefor as provided in Paragraph 10.05.

13.05 *Owner May Stop the Work*

A. If the Work is defective, or Contractor fails to supply sufficient skilled workers or suitable materials or equipment, or fails to perform the Work in such a way that the completed Work will conform to the Contract Documents, Owner may order Contractor to stop the Work, or any portion thereof, until the cause for such order has been eliminated; however, this right of Owner to stop the Work shall not give rise to any duty on the part of Owner to exercise this right for the benefit of Contractor, any Subcontractor, any Supplier, any other individual or entity, or any surety for, or employee or agent of any of them.

13.06 *Correction or Removal of Defective Work*

A. Promptly after receipt of notice, Contractor shall correct all defective Work, whether or not fabricated, installed, or completed, or, if the Work has been rejected by Engineer, remove it from the Project and replace it with Work that is not defective. Contractor shall pay all claims, costs, losses, and damages (including but not limited to all fees and charges of engineers, architects, attorneys, and other professionals and all court or arbitration or other dispute resolution costs) arising out of or relating to such correction or removal (including but not limited to all costs of repair or replacement of work of others).

B. When correcting defective Work under the terms of this Paragraph 13.06 or Paragraph 13.07, Contractor shall take no action that would void or otherwise impair Owner's special warranty and guarantee, if any, on said Work.

13.07 *Correction Period*

A. If within one year after the date of Substantial Completion (or such longer period of time as may be prescribed by the terms of any applicable special guarantee required by the Contract Documents) or by any specific provision of the Contract Documents, any Work is found to be defective, or if the repair of any damages to the land or areas made available for Contractor's use by Owner or permitted by Laws and Regulations as contemplated in Paragraph 6.11.A is found to be defective, Contractor shall promptly, without cost to Owner and in accordance with Owner's written instructions:

1. repair such defective land or areas; or

2. correct such defective Work; or

3. if the defective Work has been rejected by Owner, remove it from the Project and replace it with Work that is not defective, and

4. satisfactorily correct or repair or remove and replace any damage to other Work, to the work of others or other land or areas resulting therefrom.

B. If Contractor does not promptly comply with the terms of Owner's written instructions, or in an emergency where delay would cause serious risk of loss or damage, Owner may have the defective Work corrected or repaired or may have the rejected Work removed and replaced. All claims, costs, losses, and damages (including but not limited to all fees and charges of engineers, architects, attorneys, and other professionals and all court or arbitration or other dispute resolution costs) arising out of or relating to such correction or repair or such removal and replacement (including but not limited to all costs of repair or replacement of work of others) will be paid by Contractor.

C. In special circumstances where a particular item of equipment is placed in continuous service before Substantial Completion of all the Work, the correction period for that item may start to run from an earlier date if so provided in the Specifications.

D. Where defective Work (and damage to other Work resulting therefrom) has been corrected or removed and replaced under this Paragraph 13.07, the correction period hereunder with respect to such Work will be extended for an additional period of one year after such correction or removal and replacement has been satisfactorily completed.

E. Contractor's obligations under this Paragraph 13.07 are in addition to any other obligation or warranty. The provisions of this Paragraph 13.07 shall not be construed as a substitute for or a waiver of the provisions of any applicable statute of limitation or repose.

13.08 *Acceptance of Defective Work*

A. If, instead of requiring correction or removal and replacement of defective Work, Owner (and, prior to Engineer's recommendation of final payment, Engineer) prefers to accept it, Owner may do so. Contractor shall pay all claims, costs, losses, and damages (including but not limited to all fees and charges of engineers, architects, attorneys, and other professionals and all court or arbitration or other dispute resolution costs) attributable to Owner's evaluation of and determination to accept such defective Work (such costs to be approved by Engineer as to reasonableness) and the diminished value of the Work to the extent not otherwise paid by Contractor pursuant to this sentence. If any such acceptance occurs prior to Engineer's recommendation of final payment, a Change Order will be issued incorporating the necessary revisions in the Contract Documents with respect to the Work, and Owner shall be entitled to an appropriate decrease in the Contract Price, reflecting the diminished value of Work so accepted. If the parties are unable to agree as to the amount thereof, Owner may make a Claim therefor as provided in Paragraph 10.05. If the acceptance occurs after such recommendation, an appropriate amount will be paid by Contractor to Owner.

13.09 *Owner May Correct Defective Work*

A. If Contractor fails within a reasonable time after written notice from Engineer to correct defective Work or to remove and replace rejected Work as required by Engineer in accordance with Paragraph 13.06.A, or if Contractor fails to perform the Work in accordance with the Contract Documents, or if Contractor fails to comply with any other provision of the Contract Documents, Owner may, after seven days written notice to Contractor, correct or remedy any such deficiency.

B. In exercising the rights and remedies under this Paragraph 13.09, Owner shall proceed expeditiously. In connection with such corrective or remedial action, Owner may exclude Contractor from all or part of the Site, take possession of all or part of the Work and suspend Contractor's services related thereto, take possession of Contractor's tools, appliances, construction equipment and machinery at the Site, and incorporate in the Work all materials and equipment stored at the Site or for which Owner has paid Contractor but which are stored elsewhere. Contractor shall allow Owner, Owner's representatives, agents and employees, Owner's other contractors, and Engineer and Engineer's consultants access to the Site to enable Owner to exercise the rights and remedies under this Paragraph.

C. All claims, costs, losses, and damages (including but not limited to all fees and charges of engineers, architects, attorneys, and other professionals and all court or arbitration or other dispute resolution costs) incurred or sustained by Owner in exercising the rights and remedies under this Paragraph 13.09 will be charged against Contractor, and a Change Order will be issued incorporating the necessary revisions in the Contract Documents with respect to the Work; and Owner shall be entitled to

an appropriate decrease in the Contract Price. If the parties are unable to agree as to the amount of the adjustment, Owner may make a Claim therefor as provided in Paragraph 10.05. Such claims, costs, losses and damages will include but not be limited to all costs of repair, or replacement of work of others destroyed or damaged by correction, removal, or replacement of Contractor's defective Work.

D. Contractor shall not be allowed an extension of the Contract Times because of any delay in the performance of the Work attributable to the exercise by Owner of Owner's rights and remedies under this Paragraph 13.09.

ARTICLE 14 - PAYMENTS TO CONTRACTOR AND COMPLETION

14.01 *Schedule of Values*

A. The Schedule of Values established as provided in Paragraph 2.07.A will serve as the basis for progress payments and will be incorporated into a form of Application for Payment acceptable to Engineer. Progress payments on account of Unit Price Work will be based on the number of units completed.

14.02 *Progress Payments*

A. Applications for Payments

1. At least 20 days before the date established in the Agreement for each progress payment (but not more often than once a month), Contractor shall submit to Engineer for review an Application for Payment filled out and signed by Contractor covering the Work completed as of the date of the Application and accompanied by such supporting documentation as is required by the Contract Documents. If payment is requested on the basis of materials and equipment not incorporated in the Work but delivered and suitably stored at the Site or at another location agreed to in writing, the Application for Payment shall also be accompanied by a bill of sale, invoice, or other documentation warranting that Owner has received the materials and equipment free and clear of all Liens and evidence that the materials and equipment are covered by appropriate property insurance or other arrangements to protect Owner's interest therein, all of which must be satisfactory to Owner.

2. Beginning with the second Application for Payment, each Application shall include an affidavit of Contractor stating that all previous progress payments received on account of the Work have been applied on account to discharge Contractor's legitimate obligations associated with prior Applications for Payment.

3. The amount of retainage with respect to progress payments will be as stipulated in the Agreement.

B. *Review of Applications*

1. Engineer will, within 10 days after receipt of each Application for Payment, either indicate in writing a recommendation of payment and present the Application to Owner or return the Application to Contractor indicating in writing Engineer's reasons for refusing to recommend payment. In the latter case, Contractor may make the necessary corrections and resubmit the Application.

2. Engineer's recommendation of any payment requested in an Application for Payment will constitute a representation by Engineer to Owner, based on Engineer's observations on the Site of the executed Work as an experienced and qualified design professional and on Engineer's review of the Application for Payment and the accompanying data and schedules, that to the best of Engineer's knowledge, information and belief:

a. the Work has progressed to the point indicated;

b. the quality of the Work is generally in accordance with the Contract Documents (subject to an evaluation of the Work as a functioning whole prior to or upon Substantial Completion, to the results of any subsequent tests called for in the Contract Documents, to a final determination of quantities and classifications for Unit Price Work under Paragraph 9.07, and to any other qualifications stated in the recommendation); and

c. the conditions precedent to Contractor's being entitled to such payment appear to have been fulfilled in so far as it is Engineer's responsibility to observe the Work.

3. By recommending any such payment Engineer will not thereby be deemed to have represented that:

a. inspections made to check the quality or the quantity of the Work as it has been performed have been exhaustive, extended to every aspect of the Work in progress, or involved detailed inspections of the Work beyond the responsibilities specifically assigned to Engineer in the Contract Documents; or

b. that there may not be other matters or issues between the parties that might entitle Contractor to be paid additionally by Owner or entitle Owner to withhold payment to Contractor.

4. Neither Engineer's review of Contractor's Work for the purposes of recommending payments nor Engineer's recommendation of any payment,

including final payment, will impose responsibility on Engineer:

a. to supervise, direct, or control the Work, or

b. for the means, methods, techniques, sequences, or procedures of construction, or the safety precautions and programs incident thereto, or

c. for Contractor's failure to comply with Laws and Regulations applicable to Contractor's performance of the Work, or

d. to make any examination to ascertain how or for what purposes Contractor has used the moneys paid on account of the Contract Price, or

e. to determine that title to any of the Work, materials, or equipment has passed to Owner free and clear of any Liens.

5. Engineer may refuse to recommend the whole or any part of any payment if, in Engineer's opinion, it would be incorrect to make the representations to Owner stated in Paragraph 14.02.B.2. Engineer may also refuse to recommend any such payment or, because of subsequently discovered evidence or the results of subsequent inspections or tests, revise or revoke any such payment recommendation previously made, to such extent as may be necessary in Engineer's opinion to protect Owner from loss because:

a. the Work is defective, or completed Work has been damaged, requiring correction or replacement;

b. the Contract Price has been reduced by Change Orders;

c. Owner has been required to correct defective Work or complete Work in accordance with Paragraph 13.09; or

d. Engineer has actual knowledge of the occurrence of any of the events enumerated in Paragraph 15.02.A.

C. *Payment Becomes Due*

1. Ten days after presentation of the Application for Payment to Owner with Engineer's recommendation, the amount recommended will (subject to the provisions of Paragraph 14.02.D) become due, and when due will be paid by Owner to Contractor.

D. *Reduction in Payment*

1. Owner may refuse to make payment of the full amount recommended by Engineer because:

a. claims have been made against Owner on account of Contractor's performance or furnishing of the Work;

b. Liens have been filed in connection with the Work, except where Contractor has delivered a specific bond satisfactory to Owner to secure the satisfaction and discharge of such Liens;

c. there are other items entitling Owner to a set-off against the amount recommended; or

d. Owner has actual knowledge of the occurrence of any of the events enumerated in Paragraphs 14.02.B.5.a through 14.02.B.5.c or Paragraph 15.02.A.

2. If Owner refuses to make payment of the full amount recommended by Engineer, Owner will give Contractor immediate written notice (with a copy to Engineer) stating the reasons for such action and promptly pay Contractor any amount remaining after deduction of the amount so withheld. Owner shall promptly pay Contractor the amount so withheld, or any adjustment thereto agreed to by Owner and Contractor, when Contractor corrects to Owner's satisfaction the reasons for such action.

3. If it is subsequently determined that Owner's refusal of payment was not justified, the amount wrongfully withheld shall be treated as an amount due as determined by Paragraph 14.02.C.1.

14.03 *Contractor's Warranty of Title*

A. Contractor warrants and guarantees that title to all Work, materials, and equipment covered by any Application for Payment, whether incorporated in the Project or not, will pass to Owner no later than the time of payment free and clear of all Liens.

14.04 *Substantial Completion*

A. When Contractor considers the entire Work ready for its intended use Contractor shall notify Owner and Engineer in writing that the entire Work is substantially complete (except for items specifically listed by Contractor as incomplete) and request that Engineer issue a certificate of Substantial Completion.

B. Promptly after Contractor's notification, , Owner, Contractor, and Engineer shall make an inspection of the Work to determine the status of completion. If Engineer does not consider the Work substantially complete, Engineer will notify Contractor in writing giving the reasons therefor.

C. If Engineer considers the Work substantially complete, Engineer will deliver to Owner a tentative certificate of Substantial Completion which shall fix the date of Substantial Completion. There shall be attached to the certificate a tentative list of items to be completed or corrected before final payment. Owner shall have seven days after receipt of the tentative certificate during which to make written objection to Engineer as to any provisions of the certificate or attached list. If, after considering such objections, Engineer concludes that the Work is not substantially complete, Engineer will within 14 days after submission of the tentative certificate to Owner notify Contractor in writing, stating the reasons therefor. If, after consideration of Owner's objections, Engineer considers the Work substantially complete, Engineer will within said 14 days execute and deliver to Owner and Contractor a definitive certificate of Substantial Completion (with a revised tentative list of items to be completed or corrected) reflecting such changes from the tentative certificate as Engineer believes justified after consideration of any objections from Owner.

D. At the time of delivery of the tentative certificate of Substantial Completion, Engineer will deliver to Owner and Contractor a written recommendation as to division of responsibilities pending final payment between Owner and Contractor with respect to security, operation, safety, and protection of the Work, maintenance, heat, utilities, insurance, and warranties and guarantees. Unless Owner and Contractor agree otherwise in writing and so inform Engineer in writing prior to Engineer's issuing the definitive certificate of Substantial Completion, Engineer's aforesaid recommendation will be binding on Owner and Contractor until final payment.

E. Owner shall have the right to exclude Contractor from the Site after the date of Substantial Completion subject to allowing Contractor reasonable access to complete or correct items on the tentative list.

14.05 *Partial Utilization*

A. Prior to Substantial Completion of all the Work, Owner may use or occupy any substantially completed part of the Work which has specifically been identified in the Contract Documents, or which Owner, Engineer, and Contractor agree constitutes a separately functioning and usable part of the Work that can be used by Owner for its intended purpose without significant interference with Contractor's performance of the remainder of the Work, subject to the following conditions.

1. Owner at any time may request Contractor in writing to permit Owner to use or occupy any such part of the Work which Owner believes to be ready for its intended use and substantially complete. If and when Contractor agrees that such part of the Work is substantially complete, Contractor will certify to Owner and Engineer that such part of the Work is substantially complete and request Engineer to issue a certificate of Substantial Completion for that part of the Work.

2. Contractor at any time may notify Owner and Engineer in writing that Contractor considers any such part of the Work ready for its intended use and substantially complete and request Engineer to issue a certificate of Substantial Completion for that part of the Work.

3. Within a reasonable time after either such request, Owner, Contractor, and Engineer shall make an inspection of that part of the Work to determine its status of completion. If Engineer does not consider that part of the Work to be substantially complete, Engineer will notify Owner and Contractor in writing giving the reasons therefor. If Engineer considers that part of the Work to be substantially complete, the provisions of Paragraph 14.04 will apply with respect to certification of Substantial Completion of that part of the Work and the division of responsibility in respect thereof and access thereto.

4. No use or occupancy or separate operation of part of the Work may occur prior to compliance with the requirements of Paragraph 5.10 regarding property insurance.

14.06 *Final Inspection*

A. Upon written notice from Contractor that the entire Work or an agreed portion thereof is complete, Engineer will promptly make a final inspection with Owner and Contractor and will notify Contractor in writing of all particulars in which this inspection reveals that the Work is incomplete or defective. Contractor shall immediately take such measures as are necessary to complete such Work or remedy such deficiencies.

14.07 *Final Payment*

A. Application for Payment

1. After Contractor has, in the opinion of Engineer, satisfactorily completed all corrections identified during the final inspection and has delivered, in accordance with the Contract Documents, all maintenance and operating instructions, schedules, guarantees, bonds, certificates or other evidence of insurance certificates of inspection, marked-up record documents (as provided in Paragraph 6.12), and other documents, Contractor may make application for final payment following the procedure for progress payments.

2. The final Application for Payment shall be accompanied (except as previously delivered) by:

a. all documentation called for in the Contract Documents, including but not limited to the

evidence of insurance required by Paragraph 5.04.B.7;

b. consent of the surety, if any, to final payment;

c. a list of all Claims against Owner that Contractor believes are unsettled; and

d. complete and legally effective releases or waivers (satisfactory to Owner) of all Lien rights arising out of or Liens filed in connection with the Work.

3. In lieu of the releases or waivers of Liens specified in Paragraph 14.07.A.2 and as approved by Owner, Contractor may furnish receipts or releases in full and an affidavit of Contractor that: (i) the releases and receipts include all labor, services, material, and equipment for which a Lien could be filed; and (ii) all payrolls, material and equipment bills, and other indebtedness connected with the Work for which Owner or Owner's property might in any way be responsible have been paid or otherwise satisfied. If any Subcontractor or Supplier fails to furnish such a release or receipt in full, Contractor may furnish a bond or other collateral satisfactory to Owner to indemnify Owner against any Lien.

B. Engineer's Review of Application and Acceptance

1. If, on the basis of Engineer's observation of the Work during construction and final inspection, and Engineer's review of the final Application for Payment and accompanying documentation as required by the Contract Documents, Engineer is satisfied that the Work has been completed and Contractor's other obligations under the Contract Documents have been fulfilled, Engineer will, within ten days after receipt of the final Application for Payment, indicate in writing Engineer's recommendation of payment and present the Application for Payment to Owner for payment. At the same time Engineer will also give written notice to Owner and Contractor that the Work is acceptable subject to the provisions of Paragraph 14.09. Otherwise, Engineer will return the Application for Payment to Contractor, indicating in writing the reasons for refusing to recommend final payment, in which case Contractor shall make the necessary corrections and resubmit the Application for Payment.

C. Payment Becomes Due

1. Thirty days after the presentation to Owner of the Application for Payment and accompanying documentation, the amount recommended by Engineer, less any sum Owner is entitled to set off against Engineer's recommendation, including but not limited to liquidated damages, will become due and , will be paid by Owner to Contractor.

14.08 *Final Completion Delayed*

A. If, through no fault of Contractor, final completion of the Work is significantly delayed, and if Engineer so confirms, Owner shall, upon receipt of Contractor's final Application for Payment (for Work fully completed and accepted) and recommendation of Engineer, and without terminating the Contract, make payment of the balance due for that portion of the Work fully completed and accepted. If the remaining balance to be held by Owner for Work not fully completed or corrected is less than the retainage stipulated in the Agreement, and if bonds have been furnished as required in Paragraph 5.01, the written consent of the surety to the payment of the balance due for that portion of the Work fully completed and accepted shall be submitted by Contractor to Engineer with the Application for such payment. Such payment shall be made under the terms and conditions governing final payment, except that it shall not constitute a waiver of Claims.

14.09 *Waiver of Claims*

A. The making and acceptance of final payment will constitute:

1. a waiver of all Claims by Owner against Contractor, except Claims arising from unsettled Liens, from defective Work appearing after final inspection pursuant to Paragraph 14.06, from failure to comply with the Contract Documents or the terms of any special guarantees specified therein, or from Contractor's continuing obligations under the Contract Documents; and

2. a waiver of all Claims by Contractor against Owner other than those previously made in accordance with the requirements herein and expressly acknowledged by Owner in writing as still unsettled.

ARTICLE 15 - SUSPENSION OF WORK AND TERMINATION

15.01 *Owner May Suspend Work*

A. At any time and without cause, Owner may suspend the Work or any portion thereof for a period of not more than 90 consecutive days by notice in writing to Contractor and Engineer which will fix the date on which Work will be resumed. Contractor shall resume the Work on the date so fixed. Contractor shall be granted an adjustment in the Contract Price or an extension of the Contract Times, or both, directly attributable to any such suspension if Contractor makes a Claim therefor as provided in Paragraph 10.05.

15.02 *Owner May Terminate for Cause*

A. The occurrence of any one or more of the following events will justify termination for cause:

1. Contractor's persistent failure to perform the Work in accordance with the Contract Documents (including, but not limited to, failure to supply sufficient skilled workers or suitable materials or equipment or failure to adhere to the Progress Schedule established under Paragraph 2.07 as adjusted from time to time pursuant to Paragraph 6.04);

2. Contractor's disregard of Laws or Regulations of any public body having jurisdiction;

3. Contractor's disregard of the authority of Engineer; or

4. Contractor's violation in any substantial way of any provisions of the Contract Documents.

B. If one or more of the events identified in Paragraph 15.02.A occur, Owner may, after giving Contractor (and surety) seven days written notice of its intent to terminate the services of Contractor:

1. exclude Contractor from the Site, and take possession of the Work and of all Contractor's tools, appliances, construction equipment, and machinery at the Site, and use the same to the full extent they could be used by Contractor (without liability to Contractor for trespass or conversion),

2. incorporate in the Work all materials and equipment stored at the Site or for which Owner has paid Contractor but which are stored elsewhere, and

3. complete the Work as Owner may deem expedient.

C. If Owner proceeds as provided in Paragraph 15.02.B, Contractor shall not be entitled to receive any further payment until the Work is completed. If the unpaid balance of the Contract Price exceeds all claims, costs, losses, and damages (including but not limited to all fees and charges of engineers, architects, attorneys, and other professionals and all court or arbitration or other dispute resolution costs) sustained by Owner arising out of or relating to completing the Work, such excess will be paid to Contractor. If such claims, costs, losses, and damages exceed such unpaid balance, Contractor shall pay the difference to Owner. Such claims, costs, losses, and damages incurred by Owner will be reviewed by Engineer as to their reasonableness and, when so approved by Engineer, incorporated in a Change Order. When exercising any rights or remedies under this Paragraph Owner shall not be required to obtain the lowest price for the Work performed.

D. Notwithstanding Paragraphs 15.02.B and 15.02.C, Contractor's services will not be terminated if Contractor begins within seven days of receipt of notice of intent to terminate to correct its failure to perform and proceeds diligently to cure such failure within no more than 30 days of receipt of said notice.

E. Where Contractor's services have been so terminated by Owner, the termination will not affect any rights or remedies of Owner against Contractor then existing or which may thereafter accrue. Any retention or payment of moneys due Contractor by Owner will not release Contractor from liability.

F. If and to the extent that Contractor has provided a performance bond under the provisions of Paragraph 5.01.A, the termination procedures of that bond shall supersede the provisions of Paragraphs 15.02.B, and 15.02.C.

15.03 *Owner May Terminate For Convenience*

A. Upon seven days written notice to Contractor and Engineer, Owner may, without cause and without prejudice to any other right or remedy of Owner, terminate the Contract. In such case, Contractor shall be paid for (without duplication of any items):

1. completed and acceptable Work executed in accordance with the Contract Documents prior to the effective date of termination, including fair and reasonable sums for overhead and profit on such Work;

2. expenses sustained prior to the effective date of termination in performing services and furnishing labor, materials, or equipment as required by the Contract Documents in connection with uncompleted Work, plus fair and reasonable sums for overhead and profit on such expenses;

3. all claims, costs, losses, and damages (including but not limited to all fees and charges of engineers, architects, attorneys, and other professionals and all court or arbitration or other dispute resolution costs) incurred in settlement of terminated contracts with Subcontractors, Suppliers, and others; and

4. reasonable expenses directly attributable to termination.

B. Contractor shall not be paid on account of loss of anticipated profits or revenue or other economic loss arising out of or resulting from such termination.

15.04 *Contractor May Stop Work or Terminate*

A. If, through no act or fault of Contractor, (i) the Work is suspended for more than 90 consecutive days by Owner or under an order of court or other public authority, or (ii) Engineer fails to act on any Application for Payment

within 30 days after it is submitted, or (iii) Owner fails for 30 days to pay Contractor any sum finally determined to be due, then Contractor may, upon seven days written notice to Owner and Engineer, and provided Owner or Engineer do not remedy such suspension or failure within that time, terminate the Contract and recover from Owner payment on the same terms as provided in Paragraph 15.03.

B. In lieu of terminating the Contract and without prejudice to any other right or remedy, if Engineer has failed to act on an Application for Payment within 30 days after it is submitted, or Owner has failed for 30 days to pay Contractor any sum finally determined to be due, Contractor may, seven days after written notice to Owner and Engineer, stop the Work until payment is made of all such amounts due Contractor, including interest thereon. The provisions of this Paragraph 15.04 are not intended to preclude Contractor from making a Claim under Paragraph 10.05 for an adjustment in Contract Price or Contract Times or otherwise for expenses or damage directly attributable to Contractor's stopping the Work as permitted by this Paragraph.

ARTICLE 16 - DISPUTE RESOLUTION

16.01 *Methods and Procedures*

A. Either Owner or Contractor may request mediation of any Claim submitted to Engineer for a decision under Paragraph 10.05 before such decision becomes final and binding. The mediation will be governed by the Construction Industry Mediation Rules of the American Arbitration Association in effect as of the Effective Date of the Agreement. The request for mediation shall be submitted in writing to the American Arbitration Association and the other party to the Contract. Timely submission of the request shall stay the effect of Paragraph 10.05.E.

B. Owner and Contractor shall participate in the mediation process in good faith. The process shall be concluded within 60 days of filing of the request. The date of termination of the mediation shall be determined by application of the mediation rules referenced above.

C. If the Claim is not resolved by mediation, Engineer's action under Paragraph 10.05.C or a denial pursuant to Paragraphs 10.05.C.3 or 10.05.D shall become final and binding 30 days after termination of the mediation unless, within that time period, Owner or Contractor:

1. elects in writing to invoke any dispute resolution process provided for in the Supplementary Conditions, or

2. agrees with the other party to submit the Claim to another dispute resolution process, or

3. gives written notice to the other party of their intent to submit the Claim to a court of competent jurisdiction.

ARTICLE 17 - MISCELLANEOUS

17.01 *Giving Notice*

A. Whenever any provision of the Contract Documents requires the giving of written notice, it will be deemed to have been validly given if:

1. delivered in person to the individual or to a member of the firm or to an officer of the corporation for whom it is intended, or

2. delivered at or sent by registered or certified mail, postage prepaid, to the last business address known to the giver of the notice.

17.02 *Computation of Times*

A. When any period of time is referred to in the Contract Documents by days, it will be computed to exclude the first and include the last day of such period. If the last day of any such period falls on a Saturday or Sunday or on a day made a legal holiday by the law of the applicable jurisdiction, such day will be omitted from the computation.

17.03 *Cumulative Remedies*

A. The duties and obligations imposed by these General Conditions and the rights and remedies available hereunder to the parties hereto are in addition to, and are not to be construed in any way as a limitation of, any rights and remedies available to any or all of them which are otherwise imposed or available by Laws or Regulations, by special warranty or guarantee, or by other provisions of the Contract Documents. The provisions of this Paragraph will be as effective as if repeated specifically in the Contract Documents in connection with each particular duty, obligation, right, and remedy to which they apply.

17.04 *Survival of Obligations*

A. All representations, indemnifications, warranties, and guarantees made in, required by, or given in accordance with the Contract Documents, as well as all continuing obligations indicated in the Contract Documents, will survive final payment, completion, and acceptance of the Work or termination or completion of the Contract or termination of the services of Contractor.

17.05 *Controlling Law*

A. This Contract is to be governed by the law of the state in which the Project is located.

17.06 *Headings*

A. Article and paragraph headings are inserted for convenience only and do not constitute parts of these General Conditions.

SECTION 00800

SUPPLEMENTARY CONDITIONS
BID NO. 2021022

Central WWTF RAS/WAS Pump and RDT Replacement

INDIAN RIVER COUNTY DEPARTMENT OF UTILITY SERVICES
BOARD OF COUNTY COMMISSIONERS
1801 27th Street, Vero Beach, Florida 32960

SUPPLEMENTARY CONDITIONS
TO THE
GENERAL CONDITIONS

PART I - AMENDMENTS TO GENERAL CONDITIONS

PART II – FORMS TO BE USED DURING PROJECT CONSTRUCTION

NOTICE OF AWARD – (Sample)
NOTICE TO PROCEED (Sample)
FIELD ORDER
WORK CHANGE DIRECTIVE
CHANGE ORDER
APPLICATION FOR PAYMENT
CERTIFICATE OF SUBSTANTIAL COMPLETION
FINAL RELEASE OF LIEN
DUTIES RESPONSIBILITIES AND LIMITATIONS OF AUTHORITY OF RESIDENT PROJECT REPRESENTATIVE

SUPPLEMENTARY CONDITIONS

PART I - AMENDMENTS TO GENERAL CONDITIONS

These Supplementary Conditions amend or supplement the Standard General Conditions of the Construction Contract (EJCDC Document No. C-700, 2002 edition) and other provisions of the Contract Documents as indicated below. All provisions which are not so amended or supplemented remain in full force and effect.

ARTICLE 1 – DEFINITIONS AND TERMINOLOGY

SC 1.01 A.53 Defined Terms

A Wherever used in the Bidding Requirements or Contract Documents and printed with initial capital letters, the terms listed below will have the meanings indicated which are applicable to both the singular and plural thereof. In addition to terms specifically defined, terms with initial capital letters in the Contract Documents include references to identified articles and paragraphs, and the titles of other documents or forms.

53. Modification--A change, revision or deviation in the Work as originally planned or designed as a result of unknown or unexpected field conditions, laws or rules revisions, or discovery of a more efficient or logical method or completion of the Work after Notice to Proceed.

ARTICLE 2 - PRELIMINARY MATTERS

SC-2.01. Delete paragraphs 2.01A and B of the General Conditions in its entirety.

SC 2.03A. Delete paragraph 2.03A of the General Conditions in its entirety, and replace with the following:

The Contract Times will commence to run on the day indicated in the Notice to Proceed. A Notice to Proceed may be given at any time within 60 days after the Effective Date of the Agreement.

SC 2.05A1. Add the following immediately at the end of subparagraph 2.05A1: using the Critical Path Method (CPM).

SC 2.05A.4 Add new subparagraph 4 after the existing text of 2.05 of the General Conditions:

4. If this Project is an addition to an existing working plant, then the Contractor shall coordinate with the Owner on tie-ins. The Owner shall have final say on plant shut down times and duration to make tie-ins.

ARTICLE 3 - CONTRACT DOCUMENTS: INTENT, AMENDING, REUSE

SC-3.01D. Add new paragraph D immediately after Paragraph 3.01C of the General Conditions:

D. Each and every provision of law and clause required by law to be inserted in these Contract Documents shall be deemed to be inserted herein, and they shall be read and enforced as though it were included herein.

SC3.03A.3. Delete existing subparagraph3.03A.3 of the General Conditions in its entirety and replace with the following:

Contractor shall not be liable to Owner or Engineer for failure to report any such conflict, error, ambiguity, or discrepancy in the Contract Documents unless Contractor knew or, in the exercise of ordinary care, reasonably should have recognized such conflict, error, ambiguity, or discrepancy and failed to report it in writing to the Owner and the Engineer.

SC 3.03B. Delete existing paragraph3.03B of the General Conditions in its entirety and replace with the following

B. Resolving Discrepancies. Except as may be otherwise specifically stated in the Contract Documents, the provisions of the Contract Documents shall be read together as a whole not in isolation so as to give meaning to each provision; however, to the extent there is a conflict or inconsistency between or among provisions, the strictest or most stringent standard shall apply.

ARTICLE 4 - AVAILABILITY OF LANDS; SUBSURFACE AND PHYSICAL CONDITIONS; HAZARDOUS ENVIRONMENTAL CONDITIONS; REFERENCE POINTS

SC 4.01A. Delete existing paragraph 4.01A of the General Conditions in its entirety and replace it with the following:

A. Owner shall furnish the Site.

SC 4.01B. Delete existing paragraph 4.01B of the General Conditions in its entirety.

SC 4.01D. Add the following after paragraph 4.01C of the General Conditions:

D. Contractor shall provide to the Owner written evidence of authorization to use any private land for staging or storage of material and equipment on the private land. Such written evidence of authorization must be provided to the Owner prior to use of the private land.

SC 4.02A. Delete paragraph 4.02 A. of the General Conditions in its entirety and replace it with the following:

Contractor shall have full responsibility for physical conditions, and Underground Facilities owned by Owner or others, shown or indicated in the Contract Documents.

SC-4.02B. Delete paragraph 4.02B in its entirety and replace with the following:

The information and data shown or indicated in the Contract Documents with respect to Underground Facilities owned by others or contiguous to the Site is based on information and data furnished to Owner or the Engineer by the owners of such Underground Facilities or by others. The Owner and Engineer shall not be responsible for the accuracy or completeness of any such information or data, and the Contractor shall have full responsibility for reviewing and checking all such information and data.

SC 4.02C, D, and E. Add new paragraphs C, D, and E immediately after Paragraph 4.02B of the General Conditions to read as follows:

C. Field Measurements: Before undertaking each part of the construction, Contractor shall carefully study and compare the Contract Documents and check and verify pertinent figures shown thereon

and all applicable field measurements. Contractor shall promptly report in writing to the Owner any conflict, error or discrepancy which Contractor or any of his Subcontractors or Suppliers may discover and shall obtain a written interpretation or clarification from Owner before proceeding with any aspect of the work affected thereby; provided, however, Contractor shall not be liable to the Owner for failure to report any conflict, error or discrepancy unless Contractor or any of his Subcontractors or Suppliers had actual knowledge thereof or should reasonably have known thereof.

D. Scheduling: Unless it prejudices Work already excavated and uncovered, Contractor shall schedule layout, excavating and uncovering of Work or Underground Facilities a sufficient time in advance to allow the Engineer's review, and the possible amending or supplementing of the Contract Documents via a Work Change Directive, Change Order, or Modification.

E. Utility Coordination.

1.Contractor's Responsibility: The Contractor shall be responsible for making all necessary arrangements with governmental departments, public utilities, public carriers, service companies and corporations owning or controlling roadways, railways, water, sewer, gas, electrical, cable television, telephone, and telegraph facilities such as pavements, tracks, piping, wires, cables, conduits, poles, guys, etc., including incidental structures connected therewith, that are encountered in the Work in order that such items may be properly shored, supported and protected, or the Contractor shall be solely responsible for coordinating their relocation. The Contractor shall give proper notices, shall comply with requirements of such parties in the performance of the Work, shall permit entrance of such parties on the Work controlled by the Contractor, and shall pay all charges and fees made by such parties for its Work. The Contractor's attention is called to the fact that there may be delays on the Project due to Work to be done by governmental departments, public utilities, and others in repairing poles, conduits, etc. The Contractor shall cooperate with the above parties, in every way possible, so that the construction can be completed in the least possible time.

2. Connection: At all points where the Work constructed by the Contractor connects to existing utilities and services, the actual Work of making the necessary connection to the existing service or utility shall be arranged for by Contractor at no additional expense to Owner (unless specifically indicated otherwise). Services and utilities included within (but not limited to) this responsibility are roads, ditches, electrical, sewer, mechanical, utilities, water, fencing, etc. Connections shall be made at a time that will result in the least possible interference with existing services.

SC 4.03A. Delete 4.03 A of the General Conditions in its entirety and replace with the following:

A. Notice. The Contractor shall promptly, and before conditions of an unusual nature or differing materially from those indicated in the Contract are disturbed, and in no event later than 10 days after first observance of the conditions, notify the Owner and Engineer in writing of: (1) subsurface or latent physical conditions at the Site differing materially from those indicated in this Contract Documents, or (2) unknown physical conditions at the site of an unusual nature, differing materially from those ordinarily encountered and generally recognized as inherent in Work of the character provided for in the Contract Documents. The Owner will promptly investigate the conditions, and if it finds that such conditions do materially so differ and cause an increase or decrease in the Contractor's cost of, or the time required for, performance of any part of the Work under the Contract Documents, unless the Contract is terminated a Change Order shall be issued accordingly based on the Schedule of Values and executed by the Owner and the Contractor. Contractor's failure to provide notice upon discovery of the unusual or differing site condition shall waive any entitlement to such an adjustment in the Contract Price or Contract Time. Further, no Claim of the Contractor under this paragraph 4.03A shall be allowed unless the Contractor has given the notice as required in this paragraph 4.03A.

SC 4.03B. Delete paragraph 4.03B of the General Conditions in its entirety.

SC 4.03C.1. Delete subparagraphs 4.03C1b. of the General Conditions in its entirety and replace with the following.

4.03.C. Possible Price and Times Adjustments

The Contract Price or the Contract Times, or both, will be equitably adjusted to the extent that the existence of such differing subsurface or physical condition causes an increase or decrease in Contractor's cost of, or time required for, performance of the Work; subject, however, such condition must meet any one or more of the categories described in Paragraph 4.03.A.

SC 4.03C3. Delete paragraph 4.03C3. of the General Conditions in its entirety.

SC-4.05B. Add the following new paragraph immediately after paragraph 4.05A of the General Conditions to read as follows:

The Contractor shall furnish all stakes, templates and other materials necessary for establishing and maintaining the lines and grades necessary for control and construction of the Work. Engineer may check the lines, elevations, reference marks, batter boards, etc., set by Contractor, and Contractor shall correct any errors disclosed by such check. Such a check shall not be considered as approval of Contractor's work and shall not relieve Contractor of the responsibility for accurate construction of the entire Work. Contractor shall furnish personnel to assist Engineer in checking lines and grades.

SC 4.06D. Delete the last sentence of paragraph 4.06D of the General Conditions in its entirety

SC 4.06G. Delete paragraph 4.06G of the General Conditions in its entirety.

SC 4.07. Add new paragraph 4.07 of the General Conditions to read as follows:

4.07. Archaeological or Historical Resources at Site. If Archaeological or Historical Resources are revealed, uncovered, or discovered at the Site, Contractor shall cease work immediately and promptly, and before such conditions are disturbed, and in no event later than 5 days after first observance of the conditions, notify the Owner and Engineer in writing of such conditions. Owner shall obtain the services of an Archaeologist registered with the State of Florida Register of Professional Archaeologists. Based on Archaeologist's determination, if Owner finds that such conditions cause an increase or decrease in the Contractor's cost of, or the time required for, performance of any part of the Work under this Contract, unless Contract is terminated a Change Order shall be entered accordingly. Contractor's failure to provide notice upon discovery of the Archaeological or Historical Resources shall waive any entitlement to Contractor for such an adjustment in the Contract Price or Contract Time.

ARTICLE 5 - BONDS AND INSURANCE

SC 5.01A. Delete existing paragraph 5.01A of the General Conditions in its entirety and replace with the following:

5.01A. Contractor shall furnish Public Construction Bond, in an amount equal to the Contract Price as security for the faithful performance and payment of all Contractor's obligations under the Contract Documents. The Bond shall remain in effect at least until one year after the date when final payment is made, except as provided otherwise by Laws and Regulations or by the Contract Documents. Pursuant to Florida Statutes section 255.05(1)(c), any claimant (as such term is defined

in Florida Statutes section 713.01) may apply to Indian River County as Owner for copies of the Agreement and the recorded payment and performance bonds and shall thereupon be furnished with certified copies of such documents.

SC 5.02A. Delete the words “Owner or” in line two.

SC 5.03B. Delete existing paragraph 5.03B of the General Conditions in its entirety.

SC 5.04B. Delete existing paragraph 5.04B of the General Conditions in its entirety and replace with the following:

B. The Contractor shall not commence Work under the Agreement until it has obtained all insurance required under the Contract Documents and the Indian River County Risk Manager has approved such insurance. The Contractor shall procure and maintain, as set forth herein, the minimum insurance coverage as set forth in the Contract Documents. The cost of such insurance shall be included in the Contract Price.

SC 5.04. Add Sections C, D, E, F and G

C. The insurance required by paragraph 5.04A of the General Conditions shall provide coverage for not less than the following amounts or greater where required by Laws and Regulations:

1. Workers’ Compensation: To meet statutory limits in compliance with the Workers’ Compensation Law of Florida. This policy must include employers’ liability with a limit $500,000 for each accident, $500,000 disease policy limit and $100,000 disease each employee. Such policy shall include a waiver of subrogation as against Owner on account of injury sustained by an employee(s) of the Contractor.
2. Commercial General Liability: A per occurrence form policy, including Premise Operations, Independent Contractors, Products and Completed Operations including X, C, U (Explosion, Collapse, Underground) Broad Form Property Damage, Broad Form Property Damage Endorsement, with a combined single limit of not less than $1,000,000 general aggregate to include products/completed operations, personal injury/advertising liability, fire damage /legal liability, and medical payments. Limits can be layered with an Excess Liability Policy (Umbrella).
3. Business Auto Liability: Business Auto Liability: Coverage shall include Owned vehicles and Hired/Non-Owned vehicles, for a combined single limit (bodily injury and property damage) of not less than $1,000,000/combined single limit (Bodily Injury/Property Damage); personal injury protection -- statutory limits; $300,000 uninsured/underinsured motorist; $300,000/hired/non-owned auto liability. Limits can be layered with Excess Liability Policy (Umbrella).
4. Contractor’s Builders’ Risk “All Risk” Insurance: – All risk coverage with limits equal to one hundred percent (100%) of the completed value of the Work. There shall be a waiver of occupancy endorsement to enable the Owner to occupy the facility under construction during such activity. The policy must be endorsed to provide machinery/equipment endorsement during transit and installation, and Owner direct purchase materials, if any. The maximum deductible under this coverage is $10,000 per claim, except Wind Storm coverage which will have a maximum deductible equal to 2 percent of the completed value of the work.

D. Insurance Requirements – Fifteen (15) days prior to the commencement of any Work under the Contract Documents, a certificate of insurance shall be provided to the Indian River County Risk Manager for review and approval. The certificate shall provide that: (a) Indian River County as Owner

and Kimley-Horn and Associates as Engineer be named as an additional insured on the commercial general liability, auto liability, and Contractor's Builders' Risk "All Risk" insurance policies; (b) the Contractor's insurance coverage shall be primary; and (c) Indian River County as Owner and will be given thirty (30) days' notice prior to cancellation or modification of any required insurance and such notice shall be in writing by registered mail, return receipt requested and addressed to the Indian River County Risk Manager. The Contractor shall be responsible to ensure that all subcontractors comply with all insurance requirements of the Contract Documents.

E. All coverage shall be maintained without interruption from the date of commencement of the Work and remain in effect at least until final payment and at all times thereafter when Contractor may be correcting, removing, or replacing defective Work in accordance with Paragraph 13.07. In addition, with respect to completed operations insurance, and any insurance coverage written on a claims-made basis, such insurance shall remain in effect for at least two years after final payment. Contractor shall furnish Owner and Engineer with evidence satisfactory to Owner of the continuation of such insurance at final payment and again one year thereafter, so that Owner is assured of such continuing coverage.

F. All insurers must be authorized to do business in Florida and have a Best Key Rating of A- VII.

G. The insurance companies selected shall send written verification to the Indian River County Risk Manager that they will provide 30 days prior written notice to the Indian River County Risk Manager of its intent to cancel or modify any required policies of insurance.

SC 5.05. Delete existing paragraph 5.05 of the General Conditions in its entirety.

SC-5.06. Delete existing paragraph 5.06 of the General Conditions in its entirety.

SC-5.07. Delete existing paragraph 5.07 of the General Conditions in its entirety and replace with the following.

5.07. All insurance policies provided by the Contractor shall contain provisions to the effect that the insurer waives all rights of subrogation against any of the insured, additional insured, (and the officers, directors, partners, employees, agents, consultants and subcontractors of each and any of them) Owner and the Engineer.

SC-5.08. Delete existing paragraph 5.08 of the General Conditions in its entirety.

SC-5.09. Delete existing paragraph 5.09 of the General Conditions in its entirety.

SC-5.10. Delete existing paragraph 5.10 of the General Conditions in its entirety.

ARTICLE 6 - CONTRACTOR'S RESPONSIBILITIES

SC 6.01B. Delete paragraph 6.01B of the General Conditions in its entirety, and replace with the following:

6.01B. Contractor shall employ a competent superintendent and necessary assistants who shall be assigned to, and in attendance at, the Project Site during performance of the Work. So long as the superintendent remains employed by the Contractor or any related entity, the superintendent shall not be replaced without the Owner's prior written consent, except under extraordinary circumstances. The superintendent shall represent the Contractor, and communications given to the superintendent shall be as binding as if given to the Contractor.

SC-6.02C and D. Add the following new paragraphs immediately after paragraph 6.02B. of the General Conditions which are to read as follows:

C. Regular working hours are defined as 8 hours per day, Monday through Friday, excluding holidays, between the hours of 7:00 AM and 6:00 PM. Requests to work other than regular working hours shall be submitted to Engineer not less than 48 hours prior to any proposed weekend work or scheduled extended work weeks. Occasional unscheduled overtime on weekdays may be permitted provided two hours notice is given to Engineer.

D. Contractor shall reimburse the Owner for additional engineering and/or inspection costs incurred as a result of overtime work in excess of the regular working hours stipulated in SC-6.02C. At Owner's option, overtime costs may either be deducted from the Contractor's monthly payment request or deducted from the retainage prior to release of final payment. Overtime costs for the Owner's personnel shall be based on the individual's current overtime wage rate. Overtime costs for personnel employed by the Engineer or Owner's independent testing laboratory shall be calculated in accordance with the terms of their respective contracts with the Owner.

SC 6.04A.1 Add the following sentence immediately after the existing text in paragraph 6.04 A.1 of the General Conditions:

Additionally, any and all changes to the Project’s critical path must be reflected in each Project schedule.

SC-6.04.A.3 Add the following paragraph immediately after paragraph GC-6.04.A.2 of the General Conditions:

6.04.A.3. Contractor shall give Owner full information in advance as to its plans for performing each part of the Work. If at any time during the progress of Work, Contractor's actual progress is inadequate to meet the requirements of the Contract Documents, Owner may, but is not obligated to, so notify Contractor. In such event, Contractor acknowledges and agrees that Contractor shall implement some or all of the following remedial actions at the sole cost and expense of Contractor: (a) Increase manpower in such quantities and crafts as necessary to eliminate the backlog of Work; (b) Increase the number of working hours per shift, shifts per working day, working days per week, the amount of construction equipment, or any combination of the foregoing to eliminate the backlog of Work; or (c) Reschedule the Work in conformance with the specifications. Neither such notice by Owner nor Owner's failure to issue such notice shall relieve Contractor of its obligation to achieve the quality of Work and rate of progress required by the Contract Documents. Failure of Contractor to implement some or all of the remedial actions may be grounds for determination by Owner that Contractor is not prosecuting its Work with such diligence as will assure completion within times specified. Upon such determination, Owner may terminate Contractor's right to proceed with the performance of the Contract Documents, or any separable part thereof, in accordance with the applicable provisions of this Contract Documents.

SC-6.06A. Delete Paragraph 6.06A of the General Conditions in its entirety and replace with the following:

A. Contractor shall not employ any Subcontractor, Supplier or other person or organization, (including those who are to furnish the principal items of materials or equipment), whether initially or as a substitute, against whom Owner may have reasonable objection. Acceptance of any Subcontractor, Supplier or other person or organization by Owner shall not constitute a waiver of any right of Owner

to reject defective Work. Contractor shall not be required to employ any Subcontractor, Supplier or other person or organization against whom Contractor has reasonable objection.

SC-6.06B. Delete Paragraph 6.06B of the General Conditions in its entirety.

SC-6.08. Delete Paragraph 6.08 of the General Conditions in its entirety and replace with the following:

ALL PERMIT, IMPACT, OR INSPECTION FEES APPLICABLE AT THE TIME OF OPENING OF BIDS THAT ARE PAYABLE TO INDIAN RIVER COUNTY IN CONNECTION WITH THE WORK ON THIS COUNTY PROJECT WILL BE PAID BY INDIAN RIVER COUNTY. Contractor acknowledges that the foregoing items are governed by the provisions of Florida Statutes section 218.80, Public Bid Disclosure Act. Further, Contractor shall pay the applicable business tax and obtain a business tax receipt from the Indian River County Tax Collector. Unless otherwise provided in the Contract Documents, Contractor shall obtain and pay for all applicable construction permits. Owner shall reimburse Contractor for the cost of such permits on the basis of actual cost. Owner shall assist Contractor, when necessary, in obtaining such permits and licenses. Any permits issued after issuance of bid documents will be provided as an Addendum. Contractor acknowledges that the foregoing items are governed by the provisions of Florida Statutes section 218.80, Public Bid Disclosure Act.

SC 6.11 A.3. Delete the words: “arbitration or” in line 9 of paragraph 6.11 A.3 of the General Conditions.

SC-6.20A. Delete paragraph 6.20A of the General Conditions in its entirety and replace with the following:

To the fullest extent permitted by Laws and Regulations, Contractor shall indemnify and hold harmless Owner and Engineer, and the commissioners, officers, directors, partners, employees, agents, consultants and subcontractors of each and any of them from and against all liability claims, costs, losses, and damages including but not limited to, reasonable attorney’s fees, to the context caused by the negligence, recklessness, or intentional wrongful misconduct of the Contractor and persons employed or utilized by the Contractor in the performance of the construction contract.

SC-6.21E. Delete paragraph 6.21E of the General Conditions in its entirety and replace with the following:

E. Contractor shall not be responsible for the adequacy of the performance criteria or design criteria required by or contained in the Contract Documents.

ARTICLE 7 OTHER WORK AT THE SITE

SC-7.01A. Delete paragraph 7.01A of the General Conditions in its entirety and replace with the following:

7.01A. Related Work at Site. Owner may perform other work related to the Project at the Site with Owner’s employees, or pursuant to direct contracts with others. If such other work is not noted in the Contract Documents, then written notice thereof will be given by Owner to Contractor prior to Owner starting any such other work; and Contractor shall perform in accordance with Article 7 of the General Conditions.

ARTICLE 8 OWNER'S RESPONSIBILITIES

SC-8.02. Delete paragraph 8.02 of the General Conditions in its entirety and replace with the following:

A. If Owner terminates the employment of Engineer, Owner may appoint another engineer whose status under the Contract Documents shall be that of the former Engineer.

SC-8.04. Delete paragraph 8.04 of the General Conditions in its entirety and replace with the following:

A. Payments under this contract are governed by the Local Government Prompt Payment Act, Florida Statutes section 218.70 et. seq.

SC-8.06. Delete paragraph 8.06 of the General Conditions in its entirety.

SC-8.11. Delete paragraph 8.11 of the General Conditions in its entirety.

ARTICLE 9 - ENGINEER'S STATUS DURING CONSTRUCTION

SC 9.02. Delete the first sentence of paragraph 9.02A of the General Conditions in its entirety and replace with the following:

A. Engineer will make visits to the Site at intervals appropriate to the various stages of construction as Engineer deems necessary in order to observe as an experienced and qualified Engineer the progress that has been made and the quality of the various aspects of Contractor's executed Work.

SC-9.03B. Add the following new paragraph immediately after paragraph 9.03A of the General Conditions which is to read as follows:

B. Engineer will furnish a part-time Resident Project Representative. Contractor is responsible to give 24-hour notice on all required inspections so that the Resident Project Representative may be present.

SC 9.04 A. Delete the third sentence of paragraph 9.04A of the General Conditions in its entirety and replace with the following:

However, if Contractor claims entitlement to additional time or money as a result of the Field Order, such entitlement is conditioned upon obtaining a Change Order authorized and executed by Owner after timely making a Claim as provided in the Contract Documents.

SC 9.08 A. Delete the second sentence of 9.08A of the General Conditions in its entirety and replace with the following:

Except for: (a) Claims for differing subsurface or physical conditions governed by paragraph 4.03; and (b) claims for time extensions governed by paragraph 12.03, all matters in question and other matters between Owner and Contractor arising prior to the date final payment is due, relating to the acceptability of the Work and the interpretation of the requirements of the Contract Documents pertaining to the performance of the Work, will be referred initially to Engineer in writing within 15 days after occurrence of the event giving rise to such Claim or within 15 days after the claimant first recognizes the condition giving rise to the Claim, whichever is later; provided, however, the Owner shall make all final determinations of such matters.

SC 9.08 C. Delete paragraph 9.08C of the General Conditions in its entirety

SC 9.08 D. Delete paragraph 9.08D of the General Conditions in its entirety

ARTICLE 10 - CHANGES IN THE WORK; CLAIMS

SC 10.03.A.1 Add “and” at the end of this paragraph.

SC 10.03.A.2 Delete “and” at the end of this paragraph.

SC 10.03 A.3. Delete subparagraph 10.03.A.3 of the General Conditions in its entirety

SC 10.05.A. Delete paragraph 10.05.A of the General Conditions in its entirety and replace with the following:

A. All Claims shall initially be referred to the Engineer for decision.

SC 10.05.B. Delete paragraph 10.05.B of the General Conditions in its entirety and replace with the following:

Notice: Except for: (a) Claims for differing subsurface or physical conditions governed by paragraph 4.03; and (b) claims for time extensions governed by paragraph 12.03, Claims by either party shall be initiated within 15 days after occurrence of the event giving rise to such Claim or within 15 days after the claimant first recognizes the condition giving rise to the Claim, whichever is later, by written notice of the amount or extent of the Claim, dispute, or other matter with supporting data to the Engineer and the other party by written notice stating the general nature of each Claim, dispute, or other matter delivered by the claimant to Engineer and the other party to the Contract. A Claim for an adjustment in Contract Price shall be prepared in accordance with the provisions of paragraph 12.01.B. A Claim for an adjustment in Contract Time shall be prepared in accordance with the provisions of paragraph 12.02.B. No claim by the Contractor for an equitable adjustment hereunder shall be allowed if asserted after final payment under the Contract Documents.

SC 10.05 C, D, and E. Delete paragraphs 10.05C, D, and E of the General Conditions in its entirety.

ARTICLE 11 - COST OF THE WORK; ALLOWANCES; UNIT PRICE WORK

SC 11.01A. Delete paragraph 11.01.A of the General Conditions in its entirety.

SC 11.01B. Delete paragraph 11.01B of the General Conditions in its entirety.

SC 11.02A. Delete paragraph 11.02.A of the General Conditions in its entirety and replace with the following:

It is understood that Contractor has included in the Contract Price all allowances so named in the Contract Documents and shall cause the Work so covered to be performed for such sums as may be acceptable to Owner.

SC 11.02 B, C, and D. Delete paragraphs 11.02B, C, and D of the General Conditions in their entirety.

ARTICLE 12 - CHANGE OF CONTRACT PRICE; CHANGE OF CONTRACT TIMES

SC 12.01A. Delete paragraph 12.01A of the General Conditions in its entirety and replace with the following:

The Contract Price may only be changed by a Change Order or by a Work Change Directive. Any Claim for an adjustment in the Contract Price shall be based on written notice in accordance with the provisions of paragraph 10.05.

SC 12.01B2. Delete paragraph 12.01B2 of the General Conditions in its entirety and replace with the following:

2. where the Work involved is not covered by unit prices contained in the Contract Documents, by a mutually agreed lump sum.

SC 12.01B3. Delete paragraph 12.01B3 of the General Conditions in its entirety.

SC12.01C. Delete paragraph 12.01C of the General Conditions in its entirety.

SC 12.03A and B. Delete paragraphs 12.03.A and 12.03B of the General Conditions in their entirety and replace with the following:

A. Where Contractor is delayed or prevented from completing any part of the Work within the Contract Times due to delay beyond the control of Contractor, the Contract Times (or Milestones) will be extended in an amount equal to the time lost due to such delay if (1) a Claim is made therefore as provided in paragraph 12.02.A and (2) Contractor provides evidence that the delay impacted the critical path of the Project. Delays beyond the control of Contractor shall include, but not be limited to, acts or neglect by Owner, acts or neglect of utility owners or other contractors performing other work as contemplated by Article 7, fires, floods, abnormal weather conditions or acts of God. The Contractor must request the extension of time in writing and must provide the following information within the time periods stated hereafter. Failure to submit such information and in compliance with the time requirements given in Section 00530 of the Contract Documents, shall constitute a waiver by the Contractor and a denial of the claim for extension of time:

1. Nature of the delay or change in the Work;
2. Dates of commencement and cessation of the delay or change in the Work;
3. Activities on the current progress schedule affected by the delay or change in the Work;
4. Identification and demonstration that the delay or change in Work affects the critical path;
5. Identification of the source of delay or change in the Work;
6. Anticipated extent of the delay or change in the Work; and
7. Recommended action to minimize the delay.

B. Contractor hereby affirms that the extension of time granted herein is the Contractor's sole and exclusive remedy. Apart from extension of time, no payment or claim for damages shall be made to the Contractor as compensation for damages for any delays or hindrances from any cause whatsoever in the progress of the Work whether such delay is avoidable or unavoidable.

SC 12.03C. Delete paragraph 12.03.C of the General Conditions in its entirety.

SC 12.03D. Delete paragraph 12.03D of the General Conditions in its entirety and replace with the following:

In no event shall Owner, Engineer, or the Related Entities of either of them be liable to Contractor, any Subcontractor, any Supplier, any other person or organization, or any surety for or employee or

agent of any of them, for any claim, cost, loss, or damages of any nature whatsoever arising out of or resulting from delays.

ARTICLE 13 - TESTS AND INSPECTIONS; CORRECTION, REMOVAL OR ACCEPTANCE OF DEFECTIVE WORK

SC 13.04C. Delete paragraph 13.04.C of the General Conditions in its entirety and replace with the following:

If it is found that the uncovered Work is defective, Contractor shall pay all claims, costs, losses, and damages (including but not limited to all fees and charges of engineers, architects, attorneys, and other professionals and all court or other dispute resolution costs) arising out of or relating to such uncovering, exposure, observation, inspection, and testing, and of satisfactory replacement or reconstruction (including but not limited to all costs of repair or replacement of work of others); and Owner shall be entitled to an appropriate decrease in the Contract Price.

SC 13.04D. Delete paragraph 13.04.D of the General Conditions in its entirety and replace with the following:

If, the uncovered Work is not found to be defective, Contractor shall be allowed an increase in the Contract Price or an extension of the Contract Times, or both, directly attributable to such uncovering, exposure, observation, inspection, testing, replacement, and reconstruction.

SC 13.06A. Delete the words: “arbitration or” in line 9 of paragraph 13.06.A of the General Conditions.

SC13.07A. Add the following sentence at the beginning of paragraph 13.07A of the General Conditions:

Owner and Contractor agree that a warranty inspection shall be scheduled no later than eleven (11) months after final payment under the Contract Documents so that Owner and Contractor may inspect and otherwise examine the Work prior to the expiration of the Performance Bond.

SC 13.07E. Delete paragraph 13.07E of the General Conditions in its entirety and replace with the following:

Contractor’s obligations under this paragraph 13.07 are in addition to any other obligation or warranty. The provisions of this paragraph 13.07 shall not be construed as a substitute for or a waiver of the provisions of any applicable statute of limitation or any way to limit the Contractor’s continued liability for defective Work, including but limited to latent defects.

SC 13.08A. TWO changes:

1. Delete the words: “arbitration or” in line 8 of paragraph 13.08.A of the General Conditions.
2. Delete the phrase “(such costs to be approved by Engineer as to reasonableness)” in lines 10 and 11 of paragraph 13.08.A of the General Conditions.

13.09C. Delete the words: “arbitration or” in line 4 of paragraph 13.09.C of the General Conditions.

ARTICLE 14 - PAYMENTS TO CONTRACTOR AND COMPLETION

SC 14.02A1. Delete the first sentence of paragraph 14.02.A.1 of the General Conditions in its entirety and replace with the following:

On or before the tenth (10th) day of each month, and not more often than once a month, the Contractor shall submit completed partial progress payment requests to the Engineer, as set forth herein. Contractor shall submit to Engineer for review an Application for Payment filled out and signed by Contractor covering the Work completed as of the date of the Application for Payment and accompanied by such supporting documentation as is required by the Contract Documents. Such supporting documents shall include but not be limited to, the required Contractor's certification; retainage as set forth in the Contract Documents; and a monthly dated CPM schedule for the Project. The Contractor shall make the following certification (Affidavit) on each Application for Payment: "I hereby certify that the labor and materials listed on this Application for Payment have been used in the construction of this Work and payment received from the last request for payment has been used to make payments to all subcontractors, laborers, material, men and suppliers except as listed below: All payments by Indian River County as Owner shall be made in accordance with the Local Government Prompt Payment Act, Florida Statutes section 218.70 et. seq.

SC 14.02A4. Add a new paragraph immediately after paragraph 14.02A.3 of the General Conditions, which is to read as follows:

4. Contractor shall furnish satisfactory proof to Owner and Engineer that payment received from Owner for materials and equipment not incorporated into the Work and suitably stored, has in fact been paid to the respective supplier(s) within ten (10) days of Contractor's receipt of payment from Owner. Failure to provide such evidence of payment shall result in the withdrawal of previous approval(s) and removal of the cost of related materials and equipment from the next submitted Application for Payment, and shall be deemed a default under the Contract.

SC 14.02C1. Delete paragraph 14.02.C1 of the General Conditions in its entirety and replace with the following: All payments by Indian River County as Owner shall be made in accordance with the Local Government Prompt Payment Act, Florida Statutes section 218.70 et. seq.

SC 14.02D1d. Delete paragraph 14.02D1d of the General Conditions in its entirety and replace with the following:
d. Owner has actual knowledge of the occurrence or probable occurrence of any of the events enumerated in paragraphs 14.02.B.5.a through 14.02.B.5.c or paragraph 15.02.A.

SC 14.02D2. Delete paragraph 14.02D2 of the General Conditions in its entirety and replace with the following:

If Owner refuses to make payment of the full amount recommended by Engineer, Owner shall provide notice to Contractor in accordance with the provisions of the Local Government Prompt Payment Act, Florida Statutes section 218.70 et. seq. and pay Contractor any amount remaining after deduction of the amount so withheld in accordance with the provisions of the Local Government Prompt Payment Act, Florida Statutes section 218.70 et. seq. Owner shall pay Contractor the amount so withheld, or any adjustment thereto agreed to by Owner and Contractor, in accordance with the provisions of the Local Government Prompt Payment Act, Florida Statutes section 218.70 et. seq.

SC 14.02D3. Delete paragraph 14.02D3 of the General Conditions in its entirety

SC 14.03A. Add the following sentences to the end of the existing paragraph 14.03A of the General Conditions as follows:

No materials or supplies for the Work shall be purchased by Contractor or his Subcontractors subject to any chattel mortgage or under a conditional sale contract or other agreement by which an interest is retained by the seller. Contractor warrants that Contractor has good title to all materials and supplies used by Contractor in the Work, free from all liens, claims or encumbrances.

SC 14.04C. Delete paragraph 14.04C of the General Conditions in its entirety and replace with the following:

If Engineer considers the Work substantially complete, Engineer will prepare and deliver to Owner a tentative certificate of Substantial Completion that shall fix the date of Substantial Completion. In accordance with the provisions of Florida Statutes section 218.735(7)(a), upon receipt of the tentative certificate of Substantial Completion from Engineer, the Owner, the Engineer, and the Contractor shall conduct a walk-through inspection of the Project to document a list of any items required to render the Work on the Project complete, satisfactory, and acceptable under the Contract Documents (herein the "Statutory List"). The Statutory List shall be reduced to writing and circulated among the Owner, the Engineer, and the Contractor by the Owner or the Engineer within 30 calendar days after Substantial Completion. The Owner and Contractor acknowledge and agree that: 1) the failure to include any corrective work, or pending items that are not yet completed, on the Statutory List does not alter the responsibility of the Contractor to complete all of the Work under the Contract Documents; 2) upon completion of all items on the Statutory List, the Contractor may submit a pay request for all remaining retainage except as otherwise set forth in the Contract Documents; and 3) any and all items that require correction under the Contract Documents and that are identified after the preparation of the Statutory List remain the obligation of the Contractor to complete to the Owner's satisfaction under this Agreement. After receipt of the Statutory List by the Contractor, the Contractor acknowledges and agrees that it will diligently proceed to complete all items on the Statutory List and schedule a final walk-through in anticipation of final completion on the Project.

SC 14.04D. Delete paragraph 14.04D of the General Conditions in its entirety and replace with the following:

At the time of delivery of the tentative certificate of Substantial Completion, Engineer will deliver to Owner and Contractor a written recommendation as to division of responsibilities pending final payment between Owner and Contractor with respect to security, operation, safety, and protection of the Work, maintenance, HVAC, utilities, insurance, and warranties and guarantees.

SC14.07A.3. Delete paragraph 14.07A.3 of the General Conditions in its entirety.

SC14.07B.1. Delete paragraph 14.07B.1 of the General Conditions in its entirety and replace with the following:

1. If, on the basis of Engineer's observation of the Work during construction and final inspection, and Engineer's review of the final Application for Payment and accompanying documentation, all as required by the Contract Documents, Engineer is satisfied that the Work has been completed and Contractor's other obligations under the Contract Documents have been fulfilled, Engineer will indicate, within twenty days after receipt of the final Application for Payment, in writing Engineer's recommendation of payment and present the Application for Payment to Owner for payment. Thereupon Engineer will give written notice to Owner and Contractor that the Work is acceptable. Otherwise, Engineer will return the Application for Payment to Contractor, indicating in writing the reasons for refusing to recommend payment, in which case Contractor shall make the necessary corrections and resubmit the Application for Payment.

SC-14.07.C.1. Delete paragraph GC-14.07.C.1 in its entirety and replace with the following:

Payment shall be made by Owner to Contractor according to the Local Government Prompt Payment Act, Florida Statutes section 218.70. et.seq.

SC 14.08. Delete paragraph 14.08 of the General Conditions in its entirety.

SC 14.09. Delete paragraph 14.09 of the General Conditions in its entirety.

ARTICLE 15 - SUSPENSION OF WORK AND TERMINATION

SC-15.02.A.1. Delete subparagraph 15.02.A1 of the General Conditions in its entirety, and replace with the following:

1. Contractor's persistent failure to perform the Work in accordance with the Contract Documents;

SC-15.02.A.4. Delete subparagraph 15.02.A 4 of the General Conditions in its entirety, and replace with the following:

4. Contractor's violation of any material provisions of the Contract Documents.

SC 15.02.A.5 and 6: Add the following new subparagraphs at the end of paragraph GC-15.02.A

5. Failure of Contractor to make proper payments to Subcontractors or others for labor, services, materials or equipment in connection with the Work;

6. If Contractor abandons the Work.

SC 15.02.C. Delete the words: "arbitration or" in line 7 of paragraph 15.02.C of the General Conditions.

SC 15.02.G. Add the following new paragraph immediately following paragraph 15.02.F of the General Conditions:

G. If, after termination of the Contract by the Owner for cause as set forth in paragraph 15.02, it is determined that the Contractor had not failed to fulfill its contractual obligations, the termination under paragraph 15.02 shall be deemed to have been for the convenience of the Owner. In such event, adjustment of the Contract Price shall be made as provided in paragraph 15.03

SC15.03.A.3 and 15.03 A 4. Delete subparagraphs 15.03.A3 and 15.03 A 4 of the General Conditions in its entirety.

ARTICLE 16 - DISPUTE RESOLUTION

SC16.01A. Delete paragraph 16.01A of the General Conditions in its entirety and replace with the following:

A. Prior to the filing of any suit or other legal proceedings, the parties shall endeavor to resolve claim disputes or other matters in question by mediation. Mediation shall be initiated by any party by serving a written request for same on the other party. The parties shall, by mutual agreement, select a circuit court mediator as certified by the Supreme Court of Florida within 15 days of the date of the request for mediation. If the parties cannot agree on the selection of a circuit court mediator as

certified by the Supreme Court of Florida, then the Owner shall select the mediator, who shall be a circuit court mediator as certified by the Supreme Court of Florida. The mediator's fee shall be paid in equal shares by Owner and Contractor.

SC 16.01C. Delete paragraph 16.01 C of the General Conditions in its entirety and replace with the following:

C. Contractor shall carry on the Work and maintain the Progress Schedule during the dispute resolution proceedings, unless otherwise agreed by Contractor and Owner in writing.

ARTICLE 17 - MISCELLANEOUS

SC 17.01A. Delete paragraph 17.01A of the General Conditions in its entirety and replace with the following

Notices: Any notice, request, demand, consent, approval, or other communication required or permitted by the Contract Documents shall be given or made in writing and shall be served, as elected by the party giving such notice, by any of the following methods: (a) Hand delivery to the other party; (b) Delivery by commercial overnight courier service; or (c) Mailed by registered or certified mail (postage prepaid), return receipt requested at the addresses of the parties shown in the Contract Documents. Notices shall be effective when received at the address as specified above. The original of the notice must additionally be mailed. Either party may change its address, for the purposes of this paragraph, by written notice to the other party given in accordance with the provisions of this paragraph.

SC 17.02 through and including 17.03. Replace Sections 17.02 and 17.03:

17.02. Utilities. The Contractor shall, at its expense, arrange for, develop and maintain all utilities in Work areas to meet the requirements of the Contract Documents. Such utilities shall be furnished by Contractor at no additional cost to the Owner, and shall include, but not be limited to the following: public telephone service for the Contractor's use; construction power as required at each point of construction; and water as required throughout the construction. Prior to final acceptance of the Work the Contractor shall, at its expense, satisfactorily remove and dispose of all temporary utilities developed to meet the requirements of the Contract.

17.03. Drainage. The Contractor shall so conduct its operations and maintain the Work in such condition that adequate drainage will be in effect at all times. Existing functioning storm sewers, gutters, ditches, and other run-off shall not be obstructed.

SC 17.07 through SC 17.12 Add the following paragraphs following SC 17.06.

17.07. Fire Hydrants. Fire hydrants on or adjacent to the highway shall be kept accessible to fire apparatus at all times and no material or obstruction shall be placed within fifteen feet (15') of any such hydrant.

17.08. Protection of Structures. Heavy equipment shall not be operated close enough to pipe headwalls or other structures to cause their displacement.

17.09. Fencing. On all Work which includes fencing and where the Engineer determines it to be necessary for maintaining the security of livestock or adjacent property, or for protection of pedestrians who are likely to gain access to the Site or Work area from adjacent property, the Contractor shall erect an appropriate temporary security fence as a first order of business.

Temporary fencing shall be installed at temporary construction easement areas on all commercial and residential properties appropriate to secure the Work area and protect persons and domestic animals. At all times, the Contractor shall conduct the Work under secure temporary fencing. Permanent fencing shall be addressed as required by the Plans and Specifications.

17.10. Record Drawings. The Contractor shall keep one record copy of all Specifications, Drawings, Addenda, Modifications, and Shop Drawings at the site in good order and annotated to show all changes made during the construction process. These items shall be available to the Engineer and shall be delivered to the Engineer for the Owner. Record Drawings shall be submitted with each pay request. Record Drawings shall be submitted with each pay request. Final acceptance of the Work will be withheld until the approval of such documents are made by the Owner.

17.11. Progress Videotapes. Contractor shall deliver to the Owner both prior to commencing the Project and before receipt of Final Payment, a DVD Type color videotape of the Project showing the Site before and after Work has been completed. Contractor shall audibly identify on the videotape the station numbers as those areas of the Project are taped. The cost of the videotaping is included in the bid submitted by the Contractor.

17.12. Commercial Activities. Contractor shall not establish any commercial activity or issue concessions or permits of any kind to third parties for establishing commercial activities on land owned or controlled by Owner. Contractor shall not allow its employees to engage in any commercial activities on the Project site.

PART II – FORMS TO BE USED DURING PROJECT CONSTRUCTION (Pages 20 through 32)

NOTICE OF AWARD – (Sample)
NOTICE TO PROCEED
FIELD ORDER
WORK CHANGE DIRECTIVE
CHANGE ORDER
APPLICATION FOR PAYMENT
CERTIFICATE OF SUBSTANTIAL COMPLETION
FINAL RELEASE OF LIEN
DUTIES RESPONSIBILITIES AND LIMITATIONS OF AUTHORITY OF RESIDENT PROJECT REPRESENTATIVE

BOARD OF COUNTY COMMISSIONERS

Date via Email

Company
Attn:
Address
Address
Email address

NOTICE OF AWARD

Reference: ***Indian River County Bid No. 2021022***
Central WWTF RAS/WAS Pump and RDT Replacement

Dear Mr./Ms. :

It is my pleasure to inform you that on [DATE] the Board of County Commissioners awarded the above-referenced project to your company. The following documents are required before the applicable County department can issue a "Notice to Proceed" letter.

1. Public Construction Bond (unrecorded) in the amount of **100%** of the award amount **($.....)**.
2. Two Signed Copies of Enclosed Agreement.
3. Certificate of Insurance indicating coverage required by Article 5 of the General Conditions (section 00700 of the bid documents) and Supplemental Conditions (Section 00800 of the bid documents). Certificate(s) **must name Indian River County as additional insured** and must provide for a 30 day Notice of Cancellation.
4. W-9.

The Public Construction Bond must be executed in accordance with section 255.05(1)(a), Florida Statutes. Please submit the Bond, W-9, the Certificate(s) of Insurance and two fully-executed copies of the enclosed agreement to this office at the address provided below no later than [Due **DATE (15 days from award)].** Failure to comply with the established deadline for submittal of required documents may be grounds for cancellation of award.

Thank you for your prompt attention and if you have any questions, please do not hesitate to contact our office.

Sincerely,

Jennifer Hyde
Purchasing Manager

cc: Department of Utility Services

NOTICE TO PROCEED

_____, 2021

CONTRACT FOR: **Central WWTF RAS/WAS Pump and RDT Replacement**

CONTRACTOR:

Atn:

Gentlemen:

You are hereby notified to commence work on the subject contract on or before _____, 2021 and are to fully complete the work within _____ calendar days. In accordance with the contract documents, the Substantial Completion date is _____, 2021, (____days) with the Final Completion date being _____, 2021 (_____days). Extension in time will be by written change order only.

The contract provides for assessment of liquidated damages for each consecutive calendar day that the work remains incomplete after the above established substantial completion date the sum of $450.00 and for each consecutive calendar day that the work remains incomplete after the above established final completion date the sum of $ 450.00.

Indian River County, Florida
(OWNER)

By: _____
(Authorized Signature)

Terry Southard, Operations Manager
(Printed Name & Title of Above Signer)

NOTE: Attach this notice to your contract making it a part thereof.

FIELD ORDER

PROJECT: Central WWTF RAS/WAS Pump and RDT Replacement

FIELD ORDER NO.: _____

DATE: _____

CONTRACT: 2021022

OWNER: Indian River County

OWNER'S PROJECT NO.: _____

TO: _____

CONTRACT DATE: _____

_____

_____

This Field Order is issued to interpret/clarify the Contract Documents, order minor changes in the work and/or memorialize trade-off agreements. Both parties hereby agree that the work described by this Field Order is to be accomplished without change in Contract Sum, Contract Time, and/or claims for other costs.

DESCRIPTION: (Here insert a written description of the interpretation, change or agreement.)

FIELD ENGINEER: _____

CONTRACTOR: _____

BY: _____

BY: _____

DATES: _____

DATE: _____

WORK CHANGE DIRECTIVE

No._____

PROJECT: Central WWTF RAS/WAS Pump and RDT Replacement
DATE OF ISSUANCE:
OWNER: Indian River County Utilities 1801 27th Street, Vero Beach, FL 32960
(Name, Address)

CONTRACTOR:

CONTRACT FOR:

OWNER's Project No.: 2021022
ENGINEER: Arcadis
ENGINEER's Project No.:

You are directed to proceed with the following change(s):

Description: _____

Purpose of Work Directive Change: _____

Attachment(s) (list documents supporting change):

If a claim is made that the above change(s) have affected Contract Price or Contract Time, any claim for a Change Order based thereon will involve one of the following methods of determining the effect of the change(s).

Method of determining change in Contract Price:

[ ] Time and Materials

[ ] Unit Prices

[ ] Cost plus fixed fee

Estimated increase (decrease) in Contract Price $_____. If the change involves an increase, the estimated amount is not to be exceeded without further authorization.

Method of determining change in Contract Time:

[ ] Contractor's records

[ ] Engineer's records

[ ] Other _____

Estimated increase (decrease) in Contract Time _____ days. If the change involves an increase, the estimated time is not to be exceed without further authorization.

Once the Work covered by the directive is completed or final cost and time determined, Contractor should submit documentation for inclusion in a change Order.

THIS IS A DIRECTIVE TO PROCEED WITH A CHANGE THAT MAY AFFECT THE CONTRACT PRICE OR THE CONTRACT TIME. A CHANGE ORDER, IF ANY, SHOULD BE CONSIDERED PROMPTLY.

RECOMMENDED:	APPROVED:	ACCEPTED:
By: _____	By: _____	By: _____
Engineer (Authorized Signature)	Owner (Authorized Signature)	Contractor (Authorized Signature)
Date: _____	Date: _____	Date: _____

CHANGE ORDER

No._____

PROJECT: Central WWTF RAS/WAS Pump and RDT Replacement

DATE OF ISSUANCE _____ EFFECTIVE DATE _____

OWNER Indian River County

OWNER's Contract No. 2021023 Project No. _____

CONTRACTOR _____ ENGINEER_____

You are directed to make the following changes in the Contract Documents:
Description:_____
Reason for change order:_____
Attachments: (List documents supporting change)_____

CHANGE IN CONTRACT PRICE	CHANGE IN CONTRACT TIME
Original Contract Price $_____	Original Contract Times Substantial Completion: _____ Ready for final payment: _____ Days or dates
Net changes from previous Change Orders No.___ to No._____ $_____	Net change from previous Change Orders No.___to No._____ _____days
Contract Price prior to this Change Order $_____	Contract Time prior to this Change Order Substantial Completion: _____ Ready for final payment: _____ Days or dates
Net Increase (decrease) in this Change Order $_____	Net Increase in this Change Order _____ days
Contract Price with all approved Change Orders $_____	Contract Time with all approved Change Orders Substantial Completion: _____ Ready for final payment: _____ Days or dates

RECOMMENDED:	APPROVED:	ACCEPTED:
By: _____	By: _____	By: _____
Engineer (Authorized Signature)	Owner (Authorized Signature)	Contractor (Authorized Signature)
Date: _____	Date: _____	Date: _____

EJCDC No. C-700 (2002 Edition)
Prepared by the Engineers Joint Contract Documents Committee and endorsed by The Associated General Contractors of America.

APPLICATION FOR PAYMENT NO._____

To: Indian River County (OWNER)
From: _____ (CONTRACTOR)
Contract: _____
PROJECT: Central WWTF RAS/WAS Pump and RDT Replacement
OWNER's Contract No. 2021022 ENGINEER's Project No.
For Work accomplished through the date of: _____.

1.	Original Contract Price:	$_____
2.	Net change by Change Orders and Written Amendments (+ or -):	$_____
3.	Current Contract Price (1 plus 2):	$_____
4.	Total completed and stored to date	$_____
5.	Retainage (per Agreement):	
	_____% of completed Work: $_____	
	_____% of retainage: _____	
	Total Retainage:	$_____
6.	Total completed and stored to date less retainage (4 minus 5):	$_____
7.	Less previous Application for Payments:	$_____
8.	**DUE THIS APPLICATION (6 MINUS 7):**	$_____

Accompanying Documentation:

CONTRACTOR'S Certification:

The undersigned CONTRACTOR certifies that (1) title to all Work, materials and equipment incorporated in said Work or otherwise listed in or covered by this Application for Payment will pass to OWNER at time of payment free and clear of all Liens, security interests and encumbrances; (2) all Work covered by this Application for Payment is in accordance with the Contract Documents and not defective; and (3) the labor and materials listed on this Application for Payment have been used in the construction of this Work and payment received from the last progress payment has been used to make payments to all subcontractors, laborers, materialmen and suppliers except as listed below:_____ "

Dated _____ _____
CONTRACTOR
By: _____

State of _____
County of _____
Sworn to (or affirmed) and subscribed before me by means of ☐ physical presence or ☐ online notarization, this ____day of 20____, by _____
(name of person making statement).

_____
(Signature of Notary Public - State of Florida)
(Print, Type, or Stamp Commissioned Name of Notary Public)

☐ who is personally known to me or ☐ who has produced _____ as identification.

Payment of the above AMOUNT DUE THIS APPLICATION is recommended.

Dated _____ _____

ENGINEER

By: _____

EJCDC No. C-700-E (2002 Edition)

Prepared by the Engineers Joint Contract Documents Committee and endorsed by The Associated General Contractors of America and the Construction Specification Institute.

CERTIFICATE OF SUBSTANTIAL COMPLETION

PROJECT: Central WWTF RAS/WAS Pump and RDT Replacement

DATE OF ISSUANCE

OWNER Indian River County Board of County Commissioners

OWNER's Contract No. 2021022 **ENGINEER's Project No.** _____

CONTRACTOR _____ **ENGINEER** Arcadis

This Certificate of Substantial Completion applies to all Work under the Contract Documents or to the following specified parts thereof:

To: Indian River County Department of Utilities Services
OWNER

And To _____
CONTRACTOR

The Work to which this Certificate applies has been inspected by authorized representatives of OWNER, CONTRACTOR and ENGINEER, and that Work is hereby declared to be substantially complete in accordance with the contract Documents on

_____
DATE OF SUBSTANTIAL COMPLETION

A tentative list of items to be completed or corrected is attached hereto. This list may not be all-inclusive, and the failure to include an item in it does not alter the responsibility of CONTRACTOR to complete all the Work in accordance with the contract Documents. The items in the tentative list shall be completed or corrected by CONTRACTOR within _____ Days of the above date of Substantial Completion.

EJCDC No. C-700 (2002 Edition)
Prepared by the Engineers Joint Contract Documents Committee and endorsed by The Associated General Contractors of America.

From the date of Substantial Completion, the responsibilities between OWNER and CONTRACTOR for security, operation, safety, maintenance, heat, utilities, insurance and warranties and guarantees shall be as follows:

RESPONSIBILITIES:

OWNER: _____

_____

_____

CONTRACTOR: _____

_____

_____

The following documents are attached to and made a part of this Certificate:

[For items to be attached see definition of Substantial Completion as supplemented and other specifically noted conditions precedent to achieving Substantial Completion as required by Contract Documents.]

This certificate does not constitute an acceptance of Work not in accordance with the Contract Documents nor is it a release of CONTRACTOR's obligation to complete the Work in accordance with the Contract
Documents.

Executed by ENGINEER on _____

_____

ENGINEER

By: _____

(Authorized Signature)

CONTRACTOR accepts this Certificate of Substantial Completion on _____, 20___

_____

CONTRACTOR

By: _____

OWNER accepts this Certificate of Substantial Completion on _____, 20___

INDIAN RIVER COUNTY DEPARTMENT OF UTILITIES SERVICES

OWNER

By: _____

(Authorized Signature)

FINAL RELEASE OF LIEN

KNOW ALL MEN BY THESE PRESENTS, that

_____
(Company Name)

The acceptance by the CONTRACTOR of final payment shall be and shall operate as a release to the OWNER from all claims and all liability to the CONTRACTOR other than claims in stated amounts as may be specifically excepted by the CONTRACTOR for all things done or furnished in connection with the work under this Contract and for every act and neglect of the OWNER and others relating to or arising out of the work.

For all in consideration of
_____dollars ($_____)
(Total Amount of Contract)

paid to _____ by receipt of which is hereby acknowledged,
(Contractor)
do _____ hereby release and quit claim to the OWNER, its successors
(I/We)
or assigns, all liens, lien rights, claims or demands of any kind whatsoever

which _____ now have or might have against the property, building, and/ or
(I/We)
for any incidental expense for the construction of

_____
(Project Number)

Central WWTF RAS/WAS Pump and RDT Replacement
(Project Name)

IN WITNESS WHEREOF I have hereunto set my hand and seal this _____ day of _____, 20___.

_____ (SEAL)

By _____

WITNESS:

_____

Title _____

DUTIES, RESPONSIBILITIES AND LIMITATIONS OF AUTHORITY
OF RESIDENT PROJECT REPRESENTATIVE

A. GENERAL

Resident Project Representative is ENGINEER'S Agent, will act as directed by and under the supervision of ENGINEER, and will confer with ENGINEER regarding his actions. Resident Project Representative's dealings in matters pertaining to the on-site Work shall in general be only with ENGINEER and CONTRACTOR, and dealings with Subcontractors shall only be through or with the full knowledge of CONTRACTOR. Written communication with OWNER will be only through or as directed by ENGINEER.

B. DUTIES AND RESPONSIBILITIES

Resident Project Representative will:

1. Schedules: Review the progress schedule, schedule of Shop Drawing submissions and schedule of values prepared by CONTRACTOR and consult with ENGINEER concerning their acceptability.
2. Conferences: Attend preconstruction conferences. Arrange a schedule of progress meetings and other job conferences as required in consultation with ENGINEER and notify those expected to attend in advance. Attend meetings, and maintain and circulate copies of minutes thereof.
3. Liaison:
4. Serve as ENGINEER'S liaison with CONTRACTOR, working principally through CONTRACTOR'S superintendent and assist him in understanding the intent of the Contract Documents. Assist ENGINEER in serving as OWNER'S liaison with CONTRACTOR when CONTRACTOR'S operations affect OWNER'S on-site operations.
5. As requested by ENGINEER, assist in obtaining from OWNER additional details or information, when required at the job site for proper execution of the Work.
6. Shop Drawings and Samples:
   a. Receive and record date of receipt of Shop Drawings and samples, receive samples which are furnished at the site by CONTRACTOR, and notify ENGINEER of their availability for examination.
   b. Advise ENGINEER and CONTRACTOR or his superintendent immediately of the commencement of any Work requiring a Shop Drawing or sample submission if the submission has not been approved by the ENGINEER.
7. Review of Work, Rejection of Defective Work, Inspections and Tests:
   a. Conduct on-site observations of the Work in progress to assist ENGINEER in determining if the Work is proceeding in accordance with the Contract Documents and that completed Work will conform to the Contract Documents.
   b. Report to ENGINEER whenever he believes that any Work is unsatisfactory, faulty or defective or does not conform to the Contract Documents, or does not meet the requirements of any inspections, tests or approval required to be made or has been damaged prior to final payment; and advise ENGINEER when he believes Work should be corrected or rejected or should be uncovered for observation, or requires special testing, inspection or approval.

c. Verify that tests, equipment and systems startups and operating and maintenance instructions are conducted as required by the Contract Documents and in presence of the required personnel, and that CONTRACTOR maintains adequate records thereof; observe, record and report to ENGINEER appropriate details relative to the test procedures and startups.

d. Accompany visiting inspectors representing public or other agencies having jurisdiction over the Project, record the outcome of these inspections and report to ENGINEER.

8. Interpretation of Contract Documents: Transmit to CONTRACTOR engineer's clarifications and interpretations of the Contract Documents.

9. Modifications: Consider and evaluate CONTRACTOR'S suggestions for modifications in Drawings or Specifications and report them with recommendations to ENGINEER.

10. Records:

a. Maintain at the job site orderly files for correspondence, reports of job conferences, Shop Drawings and samples submissions, reproductions of original Contract Documents including all Addenda, change orders, field orders, additional Drawings issued subsequent to the execution of the Contract, ENGINEER'S clarifications and interpretations of the Contract Documents, progress reports, and other Project related documents.

b. Keep a diary or log book, recording hours on the job site, weather conditions, data relative to questions of extras or deductions, list of visiting officials and representatives of manufacturers, fabricators, suppliers and distributors, daily activities, decisions, observations in general and specific observations in more detail as the case of observing test procedures. Send copies to ENGINEER.

c. Record names, addresses and telephone numbers of all contractors, Subcontractors and major suppliers of materials and equipment.

11. Reports:

a. Furnish ENGINEER periodic reports as required of progress of the Work and CONTRACTOR'S compliance with the approved progress schedule and schedule of Shop Drawing submissions.

b. Consult with ENGINEER in advance of scheduled major tests, inspections or start of important phases of the Work.

c. Report immediately to ENGINEER upon the occurrence of any accident.

12. Payment Requisitions: Review applications for payment with Contractor for compliance with the established procedure for their submission and forward them with recommendations to ENGINEER, noting particularly their relation to the schedule of values, Work completed and materials and equipment delivered at the site but not incorporated in the Work.

13. Certificates, Maintenance and Operation Manuals: During the course of the Work, verify that certificates, maintenance and operation manuals and other data required to be assembled and furnished by CONTRACTOR are applicable to the items actually installed; and deliver this material to ENGINEER for his review and forwarding to OWNER prior to final acceptance of the Work.

14. Completion:

a. Before ENGINEER issues a Certificate of Substantial Completion, submit to CONTRACTOR a list of observed items requiring completion or correction.

b. Conduct final inspection in the company of ENGINEER, OWNER and CONTRACTOR and prepare a final list of items to be completed or corrected.

c. Verify that all items on final list have been completed or corrected and make recommendations to ENGINEER concerning acceptance.

C. LIMITATIONS OF AUTHORITY

Except upon written instructions of ENGINEER, Resident Project Representative:

15. Shall not authorize any deviation from the Contract Documents or approve any substitute materials or equipment.
16. Shall not exceed limitations on ENGINEER'S authority as set forth in the Contract Documents.
17. Shall not undertake any of the responsibilities of CONTRACTOR, Subcontractors or CONTRACTOR'S superintendent, or expedite the Work.
18. Shall not advise on or issue directions relative to any aspect of the means, methods, techniques, sequences or procedures of construction unless such is specifically called for in the Contract Documents.
19. Shall not advise on or issue directions as to safety precautions and programs in connection with the Work.
20. Shall not authorize OWNER to occupy the Project in whole or in part.
21. Shall not participate in specialized field or laboratory tests.

END OF SECTION

Indian River County, Florida

1800 27th Street
Vero Beach, FL 32960

Set No. _____

Technical Specifications

Indian River County, Florida

Central Wastewater Treatment Facility

RAS / WAS Pump Replacements

100% Design Submittal

Indian River County Bid No.: 2021022

March 2020

Prepared By:

Arcadis U.S., Inc.

3109 W. Dr. Martin Luther King Jr. Blvd.
Suite 350
Tampa, FL 33607
Telephone: 813-903-3100

30002159

ARCADIS

** THIS PAGE INTENTIONALLY LEFT BLANK **

TABLE OF CONTENTS

DIVISION 07 – THERMAL AND MOISTURE PROTECTION

DIVISION 09 – FINISHES

DIVISION 26 – ELECTRICAL

DIVISION 40 – PROCESS INTEGRATION

DIVISION 43 – PROCESS GAS AND LIQUID HANDLING, PURIFICATION, AND STORAGE EQUIPMENT

DIVISION 46 – WATER AND WASTEWATER EQUIPMENT

+ + END OF TABLE OF CONTENTS + +

** THIS PAGE INTENTIONALLY LEFT BLANK **

INDIAN RIVER COUNTY
CENTRAL WASTEWATER TREATMENT FACILITY
RAS/WAS PUMP REPLACEMENTS

SEALS AND CERTIFICATIONS PAGE

ENGINEER:
Arcadis U.S., Inc.
3109 West Dr. Martin Luther King Jr. Blvd., Suite 350
Tampa, FL 33607

For General, Demolition, Mechanical: Timothy N. Ware, PE License No. 71716	For Structural: Housam Hobi, PE License No. 59360
For Electrical: Eric B. Battle II, PE License No. 81285	

+ + END OF SEALS AND CERTIFICATIONS PAGE + +

** THIS PAGE INTENTIONALLY LEFT BLANK **

SECTION 01 11 13

SUMMARY OF WORK

PART 1 – GENERAL

1.1 LOCATION AND DESCRIPTION OF WORK

A. The Work is located at the site of the Indian River County Central Wastewater Treatment Facility (WWTF) at 3550 49th Street, Vero Beach, Florida 32967.

B. The Work to be performed under this Contract includes, but is not limited to, constructing the Work described below and all related appurtenances, as follows:
   1. General Conditions
      a. Mobilization and demobilization
      b. Provisions of a complete project administration and management.
      c. Provisions for all applicable permits and inspections.
      d. Coordination, sequencing, and scheduling.
      e. Provisions for all bonding.
      f. Provisions for all construction facilities and temporary controls.
      g. Payment of all applicable fees associated with the Project.
      h. Provisions for all required shop drawings and submittals.
      i. Procurement and provisions for storage of all CONTRACTOR-supplied materials and equipment.
      j. Protection of existing facilities.
      k. Provisions for temporary lift and rigging equipment.
      l. Attendance of meetings.
      m. Provisions for construction of staging area and job trailer area, where applicable.
      n. Development of a Site-specific health and safety plan.
      o. Provision of all record documentation.
      p. Provision of all O&M manuals.
      q. Provision of all testing, start-ups, inspections, and training.
      r. Provision of an orderly Work closeout following Work acceptance by OWNER.
      s. Provision of Work guarantee and warranties.
   2. Demolition
      a. Removal and disposal of existing waste activated sludge (WAS) pumping equipment and piping to the limits indicated on the Drawings.
      b. Removal and disposal of existing return activated sludge (RAS) pumping equipment and piping to the limits indicated on the Drawings.
      c. Removal and disposal of existing rotary drum thickener (RDT) equipment to the limits indicated on the Drawings.
   3. Structural Improvements
      a. Supply and installation of proposed cast-in-place concrete equipment mounting piers and housekeeping pad(s), as indicated on Drawings.

4. Process/Mechanical Improvements
    a. Supply and installation of proposed WAS pumping equipment, including pumps and motors.
    b. Supply and installation of proposed RAS pumping equipment, including pumps and motors.
    c. Supply and installation of proposed rotary drum thickener (RDT) equipment.
    d. Supply and installation of proposed piping, fittings, valves, supports, and appurtenances.
    e. Supply and installation of proposed liquid level sensing instrumentation and transmitter equipment.
5. Electrical Improvements
    a. Electrical demolition and disconnections.
    b. Wiring and connection of proposed RAS, WAS, and RDT mechanical equipment.
    c. Supply, installation, wiring, and connection of proposed RAS and WAS variable frequency drives (VFDs).

C. Contracting Method: The Project shall be constructed under a single prime Contract.

1.2 OTHER CONSTRUCTION CONTRACTS

A. Other construction contracts have been or will be awarded by OWNER that are in close proximity to or border on the Work of this Contract.

1.3 WORK BY OWNER

A. OWNER will perform the following in connection with the Work:
    1. Operate all existing valves, gates, pumps, equipment, and appurtenances that will affect OWNER's operation, unless otherwise specified or indicated.

1.4 SEQUENCE AND PROGRESS OF WORK

A. Requirements for sequencing and coordinating with OWNER's operations, including maintenance of facility operations during construction, and requirements for tie-ins and shutdowns, are in Section 01 14 16, Coordination with Owner's Operations.

1.5 CONTRACTOR'S USE OF SITE

A. CONTRACTOR's use of the Site shall be confined to the areas shown.

B. Move stored materials and equipment that interfere with operations of OWNER, other contractors, and others performing work for OWNER.

1.6 SALVAGE OF MATERIALS AND EQUIPMENT

A. Existing materials and equipment removed in performing the Work shall become CONTRACTOR's property, except the following items that shall remain OWNER's property:
   1. Existing ultrasonic level instrumentation and transmitter equipment.
   2. Existing RAS and WAS VFD equipment from within existing enclosures to be demolished.

B. Existing materials and equipment removed by CONTRACTOR shall not be reused in the Work.

C. Removal, Storage, Handling, Reinstallation:
   1. Carefully remove in manner to prevent damage all materials and equipment shown or indicated to be salvaged and reused or to remain property of OWNER.
   2. Store and protect salvaged items shown or indicated to be used in the Work.
   3. Replace in-kind or with new items those items of materials and equipment damaged during removal, storage, or handling through CONTRACTOR's actions, negligence, or improper procedures.

PART 2 – PRODUCTS (NOT USED)

PART 3 – EXECUTION (NOT USED)

+ + END OF SECTION + +

** THIS PAGE INTENTIONALLY LEFT BLANK

SECTION 01 14 16

COORDINATION WITH OWNER'S OPERATIONS

PART 1 – GENERAL

1.1 DESCRIPTION

A. Scope:
   1. This Section includes requirements for coordinating with OWNER's operations during the Project and includes requirements for tie-ins and shutdowns necessary to complete the Work without impact on OWNER's operations except as allowed in this Section.
   2. CONTRACTOR shall provide all labor, materials, equipment, tools, and incidentals shown, specified, and required to coordinate with OWNER's operations during the Work in accordance with this Section.

B. Coordination:
   1. Review construction procedures under other Specifications sections and coordinate Work that will be performed with or before the Work specified in this Section.

C. Related Sections:
   1. Section 01 11 13, Summary of Work.
   2. Section 01 32 16, Progress Schedule.
   3. Section 01 73 24, Connections to Existing Facilities.
   4. Section 01 73 29, Cutting and Patching.
   5. Section 01 74 05, Cleaning.
   6. Section 02 41 00, Demolition.

D. Except for shutdowns specified in this Section, perform the Work such that OWNER's facilities remain in continuous satisfactory operation during the Project. Schedule and conduct the Work such that the Work does not: impede OWNER's production or processes, create potential hazards to operating equipment and personnel, reduce the quality of the facility's effluent, cause odors or other nuisances, or affect public health, safety, and convenience.

E. Work not specifically covered in this Section or in referenced Sections may, in general, be completed at any time during regular working hours in accordance with the Contract Documents, subject to the requirements in this Section.

F. Coordinate shutdowns with OWNER and ENGINEER. When possible, combine multiple tie-ins into a single shutdown to reduce impacts on OWNER's operations and processes.

G. Operation of Existing Systems and Equipment during the Work:

1. Do not shut off or disconnect existing operating systems or equipment, unless accepted by ENGINEER in writing.
2. Operation of existing systems and equipment will be by OWNER unless otherwise specified or indicated.
3. Where necessary for the Work, CONTRACTOR shall seal or bulkhead OWNER-operated gates and valves to prevent leakage that may affect the Work, OWNER's operations, or both.
4. Provide temporary watertight plugs and bulkheads, as required. After completing the Work, remove seals, plugs, and bulkheads to satisfaction of ENGINEER.

1.2 SUBMITTALS

A. Action Submittals: Submit the following:
   1. Substitute Sequence Submittal: When deviation from specified sequence or procedures is proposed, furnish submittal explaining in detail the proposed sequence or procedures and associated effects, including evidence that OWNER's operations will not be adversely affected, to an extent greater than originally contemplated in the Contract Documents, by proposed substitution. List benefits of proposed substitution, including benefits to Progress Schedule. Submit in accordance with Section 01 25 00, Substitution Procedures, and other requirements of the Contract Documents regarding substitution requests.

B. Informational Submittals: Submit the following:
   1. Shutdown Planning Submittal:
      a. For each shutdown, submit an inventory of labor, materials, and equipment required to perform the shutdown and tie-in tasks, an estimate of time required to accomplish the complete shutdown including time for OWNER to take down and start up existing equipment, systems, or conduits, and written description of steps required to complete the Work associated with the shutdown.
      b. Furnish submittal to ENGINEER not less than 30 days prior to proposed shutdown start date. Do not start shutdown until obtaining ENGINEER's acceptance of shutdown planning submittal.
   2. Shutdown Notification: After ENGINEER's acceptance of shutdown planning submittal and prior to starting the shutdown, submit written notification to OWNER and ENGINEER of date and time each shutdown is to start. Submit notification not less than seven (7) days in advance of each shutdown.

1.3 GENERAL CONSTRAINTS

A. Indicated in the Contract Documents are the sequence and shutdown durations, where applicable, for OWNER'S equipment and systems that are to be taken out of service temporarily for the Work. New materials, equipment, and systems may be used by OWNER after the specified field quality controls and testing are

successfully completed and the materials or equipment are Substantially Complete in accordance with the Contract Documents.

B. The following constraints apply to coordination with OWNER's operations:
   1. Operational Access: OWNER'S personnel shall have access to equipment and areas of the facility that remain in operation.
   2. Schedule and perform equipment and system start-ups for Monday through Thursday. Equipment and systems shall not be placed into operation on Friday, Saturday, and Sunday without prior approval of OWNER; unless specifically indicated otherwise in the Contract Documents.
   3. Dead End Valves or Conduits: Provide blind flanges, watertight bulkheads, or valve at temporary and permanent terminuses of conduits, including piping and ducting. Blind flanges and bulkheads shall be suitable for the service and braced and blocked, as required, or otherwise restrained as directed by ENGINEER. Temporary valves shall be suitable for their associated service. Where valve is provided at permanent terminus of conduit, including piping or ducting, also provide on downstream side of valve a blind flange with drain/flushing connection.
   4. OWNER will assist CONTRACTOR in dewatering piping and other work areas to be dewatered for shutdowns. Maintain clean and dry work area by pumping and properly disposing of fluid and other material that accumulates in work areas.
   5. Draining and Cleaning of Piping:
      a. Unless otherwise shown or indicated, CONTRACTOR shall dewater piping at beginning of each shutdown. Flush, wash down, and clean piping and other work areas.
      b. CONTRACTOR shall remove liquids and solids and dispose of them at appropriate location at the Site as directed by ENGINEER. Unless otherwise specified or indicated, contents of piping undergoing modifications shall be transferred to existing process tanks or conduits at the Site with capacity sufficient to accept such discharges, using hoses, temporary piping, temporary pumps, or other means provided by CONTRACTOR. Discharge of fluids across floors is not allowed.
      c. If drainage point is not available on the piping to be drained, provide a wet tap using tapping saddle and valve or other method approved by ENGINEER. Uncontrolled spillage of contents of piping is not allowed.
      d. Spillage shall be brought to ENGINEER's attention immediately, both verbally and in writing, and reported in accordance with Laws and Regulations. CONTRACTOR shall wash down spillage to floor drains or sumps or other appropriate location and flush the system to prevent clogging and odors. If spillage is not suitable for discharge to the drainage system, such as chemical or wastewater sludge spills, as determined by ENGINEER, CONTRACTOR shall remove spillage by other method, such as vactor truck, sorbents, or other method acceptable to ENGINEER.

1.4 SEQUENCE OF WORK

A. Perform the Work in the indicated sequence, unless otherwise approved. Certain phases or stages of the Work may require work during hours outside of regular working hours. Work may be accelerated from a later stage to an earlier stage if OWNER's operations are not adversely affected by proposed sequence change, with ENGINEER's acceptance.

B. CONTRACTOR shall minimize the disruption to wasting operations. Only one (1) WAS pump may be removed from operational service at any given time. All work associated with a pump pair (WAS Pump Nos. 1 and 2, or 3 and 4) must be completed before initiating work on a pump from the other pair.

C. Only three (3) RAS pumps may be removed from operational service at any given time.

D. RAS pump replacement work may be completed in parallel with rotary drum thickener and/or WAS work. WAS pump work shall be in series with and precede the rotary drum thickener work.

E. The polymer mixing valve, RDT/RST sludge feed line, and RDT/RST filtrate drain line replacement Work shall be coordinated with OWNER's thickening operations such that disruption to operations in minimized. WAS thickening operations occur on average six to nine hours per day, seven days per week. Advanced notice of the Work shall be provided. It shall be recognized that it may be necessary to perform the shutdown(s) necessary to accommodate these tie-ins at night, unless the OWNER determines otherwise.

F. The proposed Work sequence includes various stages and shutdowns.

G. Stage I:
   1. Mobilize and prepare the Site to receive the Work.
   2. Isolate and shutdown WAS Pump No. 1 (Shutdown A1).
   3. Demolish existing WAS Pump No. 1 piping and pumping equipment, including VFD.
   4. Install, start-up, test, and commission proposed WAS Pump No. 1, including pump, motor, VFD, and associated piping, fittings, valves, supports, and appurtenances.
   5. Repeat steps 2 through 4 above to replace WAS Pump No. 2 (Shutdown A2).
   6. Repeat steps 2 through 4 above to replace WAS Pump No. 3 (Shutdown B1).
   7. Repeat steps 2 through 4 above to replace WAS Pump No. 4 (Shutdown B2).

H. Stage II:

1. Demolish existing RAS splitter box level instrumentation.
2. Install, wire, and connect proposed RAS splitter box level instrumentation.
3. Isolate and shutdown RAS Pump Nos. 1, 2, and 3 (Shutdown C).
4. Demolish existing RAS Pump Nos. 1, 2, and 3 piping and pumping equipment, including VFDs.
5. Install proposed pumping equipment pads for RAS Pump Nos. 1, 2, and 3.
6. Install, start-up, test, and commission proposed RAS Pump Nos. 1, 2, and 3, including pumps, motors, VFDs, and associated piping, fittings, valves, supports, and appurtenances.
7. Isolate and shutdown RAS Pump Nos. 4, 5, and 6 (Shutdown D).
8. Demolish existing RAS Pump Nos. 4, 5, and 6 piping and pumping equipment, including VFDs.
9. Install proposed pumping equipment pads for RAS Pump Nos. 4, 5, and 6.
10. Install, start-up, test, and commission proposed RAS Pump Nos. 4, 5, and 6, including pumps, motors, VFDs, and associated piping, fittings, valves, supports, and appurtenances.

I. Stage III:
1. Isolate and shutdown existing rotary drum thickener (Shutdown E).
2. Demolish existing rotary drum thickener equipment.
3. Install, start-up, test, and commission proposed rotary drum thickener equipment, including vendor-supplied control panel.
4. Demolish existing thickened sludge holding tank level instrumentation.
5. Install, wire, and connect proposed thickened sludge holding tank level instrumentation.
6. Substantial Completion.
7. Final walkthrough and punch list.
8. Final Completion.

1.5 TIE-INS

A. CONTRACTOR shall perform tie-ins required to complete the Work as shown or indicated. Obtain requirements for connections by CONTRACTOR to existing facilities from ENGINEER.

1.6 SHUTDOWNS

A. General:
1. Terminology: A “shutdown” is when a portion of the normal operation of OWNER’s facility, whether equipment, systems, conduit (including piping and ducting), has to be temporarily suspended or taken out of service to perform the Work.
2. Work that may interrupt normal operations shall be accomplished at times convenient to OWNER unless otherwise indicated in the Contract Documents.
3. Furnish at the Site, in close proximity to the shutdown and tie-in work areas, tools, materials, equipment, spare parts, both temporary and permanent,

necessary to successfully perform the shutdown. Complete to the extent possible, prefabrication of piping and other assemblies prior to commencing the associated shutdown. Demonstrate to ENGINEER's satisfaction that CONTRACTOR has complied with such requirements before commencing the shutdown.

4. If CONTRACTOR's operations cause an unscheduled interruption of OWNER's operations, immediately re-establish satisfactory operation for OWNER.
5. Unscheduled shutdowns or interruptions of continued safe and satisfactory operation of OWNER's facilities that result in fines or penalties by authorities having jurisdiction shall be paid solely by CONTRACTOR if, in ENGINEER's opinion, CONTRACTOR did not comply with requirements of the Contract Documents, or was negligent in the Work, or did not exercise proper precautions in performing the Work and complying with applicable permits, Laws, and Regulations.
6. Shutdowns shall be in accordance with Table 01 14 16-A of this Section. Work requiring service interruptions for tie-ins shall be performed during scheduled shutdowns.
7. Temporary, short-term shutdowns of smaller conduits (including piping and ducting), equipment, and systems may not be included in Table 01 14 16-A. Coordinate requirements for such shutdowns with ENGINEER and OWNER. Where necessary, obtain ENGINEER's interpretation or clarification before proceeding.

B. Shutdowns of Electrical Systems:
   1. Comply with Laws and Regulations, including the National Electric Code.
   2. CONTRACTOR shall lock out and tag circuit breakers and switches operated by OWNER and shall verify that affected cables and wires are de-energized to ground potential before shutdown Work is started.
   3. Upon completion of shutdown Work, remove the locks and tags and notify ENGINEER that facilities are available for use.

PART 2 – PRODUCTS (NOT USED)

PART 3 – EXECUTION

3.1 GENERAL

A. In addition to requirements of this Section, comply with Section 01 73 29, Cutting and Patching, and Section 01 73 24, Connections to Existing Facilities, and other Contract Documents applicable to Work associated with shutdowns, tie-ins, and similar work.

3.2 DETAILED SHUTDOWN REQUIREMENTS

A. Shutdowns A through E:
   1. General:
      a. Complete shutdown in accordance with Table 01 14 16-A of this Section.
   2. Prior to Shutdown:
      a. Obtain ENGINEER's acceptance of proposed shutdown planning submittal and shutdown notification submittal.
      b. Bring necessary piping, couplings, valves, equipment, and appurtenances to the work areas.
      c. Assist OWNER in preparing to take equipment and piping temporarily out of service.
      d. Coordinate other Work to be performed simultaneously.
   3. During Shutdown:
      a. Dewater the piping.
      b. Remove and dispose of existing equipment as required.
      c. Provide new equipment and piping.
      d. With OWNER, return equipment and system to operation.
   4. Following Shutdown:
      a. Verify functionality of equipment and systems.
      b. Verify operation of new equipment and systems and verify that joints in piping are watertight.
      c. Repair joints that are not watertight.

3.3 SCHEDULES

A. The schedules indicated below, following this Section's "End of Section" designation, are part of this Specifications Section:
   1. Table 01 14 16-A, Schedule of Shutdowns.

+ + END OF SECTION + +

TABLE 01 14 16-A
SCHEDULE OF SHUTDOWNS

Shut-down	Process Equipment and Service Lines Out-of-Service During Shutdown	Process Equipment In Operation During Shutdown	Maximum Duration
A1, A2	WAS Pump Nos. 1 and 2 including VFDs	WAS Pump Nos. 3 and 4 including controls; Secondary Clarifier Nos. 1 through 4; sludge thickening equipment.	14 days
B1, B2	WAS Pump Nos. 3 and 4 including VFDs	WAS Pump Nos. 1 and 2 including controls; Secondary Clarifier Nos. 1 through 4; sludge thickening equipment.	14 days

TABLE 01 14 16-A SCHEDULE OF SHUTDOWNS			
C	RAS Pump Nos. 1, 2, and 3 including VFDs	RAS Pump Nos. 4, 5, and 6 including controls; Secondary Clarifier Nos. 1 through 4; east and west RAS splitter boxes.	30 days
D	RAS Pump Nos. 4, 5, and 6 including VFDs	RAS Pump Nos. 1, 2, and 3 including controls; Secondary Clarifier Nos. 1 through 4; east and west RAS splitter boxes.	30 days
E	Rotary Drum Thickener including controls	Rotary Screw Thickener; thickened sludge pumps; thickened sludge holding tanks; WAS Pump Nos. 1 through 4.	30 days

SECTION 01 22 13

MEASUREMENT AND PAYMENT

PART 1 – GENERAL

1.1 DESCRIPTION

A. Scope:
   1. Items listed starting in this Section refer to and are the same pay items listed in the 00310-3, Schedule of Bid Items, and constitute all pay items for completing the Work.
   2. No direct or separate payment will be made for providing miscellaneous temporary or accessory works, plant or facility services, CONTRACTOR's or ENGINEER's field offices, layout surveys, Project signs, sanitary requirements, testing, safety provisions and safety devices, submittals and record drawings, water supplies, power and fuel, maintenance of traffic, removal of waste, security, coordination with OWNER's operations, information technology (including hardware, software, and services) required during construction, commissioning where specified, bonds, insurance, or other requirements of the Contract Documents.
   3. Compensation for all services, items, materials, and equipment shall be included in prices stipulated for pay items listed in this Section and included in the Contract.

B. Each price, as bid, shall include an amount considered by CONTRACTOR to be adequate to cover CONTRACTOR's overhead and profit for each separately identified item.

1.2 RELATED PROVISIONS

A. Payments to CONTRACTOR: Refer to Section 01 29 76, Progress Payment Procedures.

B. Schedule of Values: Refer to Section 01 29 73, Schedule of Values.

1.3 BID ITEM DESCRIPTIONS

A. Item 1 – Mobilization and Demobilization:
   1. Measurement and Payment: Payment for mobilization and demobilization shall be made at the fixed contract lump sum price for this Bid Item. This price shall be full compensation for all costs incurred for preparatory work and operations including, but not limited to those necessary for the movement of personnel, equipment, supplies, construction signs, and incidentals to the project site; for the establishment of other facilities necessary for work on the project; fees for bonds and insurance; and for all other work and operations

including submittals and obtaining construction permits, which must be performed prior to beginning work on the various items. Payment for mobilization will be payable in the first partial payment at 75% of the contract lump sum price for mobilization and demobilization, and the balance payable in the final project close-out payment.

B. Item 2 – General Construction:
   1. Measurement and Payment: Payment for General Construction shall be made at the contract lump sum price for this Bid Item. This lump sum item shall include all necessary tools, labor, equipment and materials for providing the replacement of the equipment, piping, valves, electrical, controls, and appurtenances, as specified and shown on the Drawings. The lump sum price shall include the demolition, cleanup, removal, and disposal of existing equipment and materials associated with the RAS and WAS pumping systems, including VFDs, rotary drum thickener equipment, and level instrumentation, to the limits indicated on the Drawings, and as specified herein. The lump sum price shall also include the supply, installation, wiring, connection, testing and startup of proposed RAS and WAS pumping equipment including VFDs, rotary drum thickener equipment, level instrumentation, piping, fittings, valves, supports, and appurtenances as shown on the Drawings and specified herein. The lump sum price shall include provision of all training, manufacturer services, spare parts, record documents, as-builts, and all other work incidental to the installation of the Work complete in place. The quantity to be paid for under this item will be made on a lump sum basis in proportion to the amount of Work completed. The lump sum price for this Bid Item shall be full compensation, as shown and specified.

C. Item 3 – Contingency Allowance:
   1. Measurement: Item 3 is a stipulated amount available as reserve for sole use by OWNER to cover unanticipated costs.
   2. Payment: Payment for Work authorized under Item 3 will be full compensation for providing all Work authorized under the contingency allowance, complete as shown, indicated, or directed by ENGINEER. Work authorized under contingency allowance may be included in subsequent Application(s) for Payment, as applicable, following authorization of and performance of contingency allowance Work.

PART 2 – PRODUCTS (NOT USED)

PART 3 – EXECUTION (NOT USED)

+ + END OF SECTION + +

SECTION 01 25 00

SUBSTITUTION PROCEDURES

PART 1 – GENERAL

1.1 DESCRIPTION

A. Scope: Section includes:
   1. Administrative and procedural requirements for selecting materials and equipment for the Project.
   2. Procedural requirements for substitutions of materials and equipment.
   3. Procedural requirements for substitute construction methods or procedures, when construction methods or procedures are specified.

B. A proposed substitute will not be accepted for review if:
   1. Approval would require changes in design concept or a substantial revision of the Contract Documents.
   2. Approval would delay completion of the Work or the work of other contractors.
   3. Substitution request is indicated or implied on a Shop Drawing or other submittal, or on a request for interpretation or clarification, and is not accompanied by CONTRACTOR's formal and complete request for substitution.

C. If proposed substitute is not approved, CONTRACTOR shall provide the specified materials, equipment, method, or procedure, as applicable.

D. Approval of a substitute does not relieve CONTRACTOR from requirement for submitting Shop Drawings and other submittals in accordance with the Contract Documents.

E. ENGINEER and OWNER have the right to rely upon the completeness and accuracy of the information included in CONTRACTOR's request for approval of a substitute, and CONTRACTOR accepts full responsibility for the completeness and accuracy thereof.

F. When approved substitute is defective or fail to perform in accordance with the Contract Documents, responsibility for remedying the defect or failure resides solely with CONTRACTOR and Supplier.

1.2 SUBMITTAL OF LIST OF PROPOSED SUBSTITUTION (OR EQUAL) ITEMS

A. The Contract, if awarded, will be on the basis of materials and equipment described on the Drawings or specified in the Contract Documents without consideration of possible substitute or "or equal" items. The procedure for submission of any such

application by CONTRACTOR and consideration by ENGINEER is set forth in Paragraph 6.05 of the Standard General Conditions (Section 00700) and may be supplemented in the General Requirements (Section 00800).

1.3 SUBSTITUTE MATERIALS AND EQUIPMENT

A. Procedure:
   1. Submit requests for substitution in accordance with requirements for furnishing submittals, as indicated in Section 01 33 00, Submittal Procedures.
   2. Submit separate request for each proposed substitute.
   3. Submit request for substitution using forms attached to this Section. Complete all information requested on each form, and enclose with the forms supplementary information as required. In addition to requirements of the Standard General Conditions and information required on substitution request forms, include with each substitute request the following:
      a. Identification of the materials and equipment (as applicable), including manufacturer's name and address.
      b. Manufacturer's literature with description of the materials and equipment, performance and test data, and reference standards with which materials and equipment comply.
      c. Samples, when appropriate.
      d. Name and address of similar projects on which the materials and equipment were used, date of installation, and names and contact information (including telephone number) for the facility operations and maintenance manager.

1.4 SUBSTITUTE CONSTRUCTION METHODS OR PROCEDURES

A. The provisions of the Standard General Conditions, Section 00700, as may be modified by the Supplementary Conditions, Section 00800, regarding substitute items of materials and equipment are hereby extended to apply to substitute construction methods or procedures.

B. Procedure:
   1. Submit requests for substitution in accordance with requirements for furnishing submittals, as indicated in Section 01 33 00, Submittal Procedures.
   2. Submit separate request for each proposed substitute.
   3. Submit request for substitution using forms attached to this Section. Complete all information requested on each form, and enclose with the forms supplementary information as required. In addition to requirements of the Standard General Conditions and information required on substitution request forms, include with each substitute request the following:
      a. Detailed description of proposed method or procedure.
      b. Itemized comparison of the proposed substitution with the specified method or procedure.
      c. Drawings illustrating method or procedure.

d. Other data required by ENGINEER to establish that proposed substitution is equivalent to specified method or procedure.

1.5 CONTRACTOR'S REPRESENTATIONS

A. In submitting request for substitution, CONTRACTOR represents that:
   1. CONTRACTOR has read and fully understands the provisions regarding substitutes as indicated in the Standard General Conditions, as may be modified by the Supplementary Conditions.
   2. Substitution request is complete and includes all information required by the Contract Documents.
   3. CONTRACTOR certifications are valid and made with CONTRACTOR's full knowledge, information, and belief.
   4. CONTRACTOR will provide the same or better guarantees or warranties for proposed substitute as for the specified materials, equipment, methods, or procedures, as applicable.
   5. CONTRACTOR waives all Claims for additional costs or extension of time related to proposed substitute that subsequently may become apparent.

PART 2 – PRODUCTS (NOT USED)

PART 3 – EXECUTION

3.1 ATTACHMENTS

A. The documents listed below and attached following this Section's "End of Section" designation, are part of this Specification Section.
   1. Substitution Request Form (two pages).
   2. Product Substitution Checklist (one page).

+ + END OF SECTION + +

SUBSTITUTION REQUEST

Project: _____ Substitution Request Number: _____

_____ From: _____

To: _____ Date: _____

_____ Engineer Project. No._____

Re: _____ Contract For: _____

Specification Title: _____ Description: _____

Section: _____ Page: _____ Article/Paragraph: _____

Proposed Substitute: _____

Manufacturer: _____ Address: _____ Phone: _____

Trade Name: _____ Model No.: _____

Installer: _____ Address: _____ Phone: _____

History: ☐ New product ☐ 1 to 4 years old ☐ 5 to 10 years old ☐ More than 10 years old

Differences between proposed substitute and specified item: _____

_____

_____

☐ Point-by-point comparative data attached — REQUIRED BY THE CONTRACT DOCUMENTS

Reason for not providing specified item: _____

_____

Similar Installation:

Project: _____ Engineer: _____

Address: _____ Owner: _____

_____ Date Installed: _____

Proposed substitution affects other parts of Work: ☐ No ☐ Yes; explain _____

_____

Savings to Owner for accepting substitute: ($)
(attach detailed, itemized estimate)

_____ _____

Proposed substitute changes Contract Time: ☐ No ☐ Yes [Add] [Deduct] _____days.
(clarify whether change is to Substantial Completion, Milestone, or time for readiness for final payment)

Supporting Data Attached: ☐ Drawings ☐ Product Data ☐ Samples ☐ Tests ☐ Reports ☐ _____

SUBSTITUTION REQUEST
(Continued)

☐ Substitute product, method, or procedure is subject to payment of licensing fee or royalty (check if "yes" and attach information)

☐ Substitute product, method, or procedure is patented or copyrighted (check if "yes" and attach information)

The undersigned certifies:

- Representations in the Standard General Conditions and in Section 01 25 00, Substitution Procedures, regarding substitutions are valid.
- Same or better warranty and guarantee will be furnished for proposed substitution as for specified item.
- Same maintenance service and source of replacement parts, as applicable, is available.
- Proposed substitute will have no adverse effect on other trades and will not affect or delay Progress Schedule.
- Cost data as stated above is complete. Claims for additional costs or time related to accepted substitution which may subsequently become apparent are waived.
- Proposed substitute does not affect dimensions and functional clearances.
- Payment will be made for Engineer's review and changes, if any, to the design and Contract Documents, and construction costs caused by the substitute.
- Coordination, installation, and changes in the Work as necessary for accepted substitution will be complete in all respects.

Submitted by: _____

Signed by: _____

Firm: _____

Address: _____

_____

Telephone: _____

Attachments: ☐

ENGINEER'S REVIEW AND ACCEPTANCE (OR NON-ACCEPTANCE) WILL BE DOCUMENTED IN A FIELD ORDER OR CHANGE ORDER, AS APPROPRIATE. _____

Additional Comments: ☐ Contractor ☐ Subcontractor ☐ Supplier ☐ Manufacturer ☐ Engineer ☐ Other:

Adapted from CSI Form No. 13.0B, 2004 edition

PRODUCT SUBSTITUTION CHECKLIST

Date: _____ Re: _____

Engineer Project No.: _____ Manufacturer's Project No.: _____

Filing No.: _____ Contract For: _____

Item Equivalence:

☐ Is the submitted item equivalent to the specified item? _____

☐ Does it serve the same function? _____

☐ Does it have the same dimensions? _____

☐ Does it have the same appearance? _____

☐ Will it last as long? _____

☐ Does it comply with the same codes, and standards and performance requirements? _____

☐ Has the item been used locally, and where are the projects? _____

_____

☐ Has a problem occurred with the item, and what was the remedy? _____

_____

Effect on the Project:

☐ Will the substitute affect other aspects of the construction? _____

☐ Are any details affected and are changes required? _____

☐ What is the cost of the changes? _____

☐ Who pays for the required changes? _____

☐ Are Contract Times affected? _____

_____

Effect on the Warranty:

☐ How does the proposed warranty differ from the specified warranty? _____

_____

☐ Does the manufacturer have a track record of standing behind the warranty? _____

_____

Adapted from CSI Form No. 20.3, 1998 edition

SECTION 01 29 73

SCHEDULE OF VALUES

PART 1 – GENERAL

1.1 DESCRIPTION

A. Scope:
   1. CONTRACTOR shall prepare and submit to ENGINEER for acceptance a Schedule of Values that allocates cost to each item of the Work. Schedule of Value list of line items shall correspond to each aspect of the Work, establishing in detail the portion of the Contract Price allocated to each major component of the Work.
   2. Upon request of ENGINEER, support values with data that substantiate their correctness.
   3. Submit preliminary Schedule of Values to ENGINEER for initial review. CONTRACTOR shall incorporate ENGINEER's comments into the Schedule of Values and resubmit to ENGINEER. ENGINEER may require corrections and re-submittals until Schedule of Values is acceptable.
   4. Schedule of Values may be used as a basis for negotiating price of changes, if any, in the Work.
   5. Schedule of Values and the Progress Schedule updates specified in Section 01 32 16, Progress Schedule, will be basis for preparing each Application for Payment.
   6. This Section specifies the general Schedule of Values requirements. Additional general requirements are contained in Articles 2.07 and 14 of the Standard General Conditions.

1.2 SUBMITTALS

A. Informational Submittals: Submit the following:
   1. Submit to ENGINEER Schedule of Values in the form and quantity required in Section 01 33 00, Submittal Procedures, and in accordance with Standard General Conditions.
   2. Content of Schedule of Values submittals shall be in accordance with Article 1.3 of this Section.
   3. Timing of Submittals:
      a. Submit preliminary Schedule of Values within time limit indicated in Article 2.07 of the Standard General Conditions.
      b. Submittal of the Schedule of Values for acceptance by ENGINEER shall be in accordance with the Standard General Conditions. ENGINEER will not accept Applications for Payment without an acceptable Schedule of Values.
      c. When required by ENGINEER, promptly submit updated Schedule of Values to include cost breakdowns for changes in the Contract Price.

1.3 SCHEDULE OF VALUES FORMAT AND CONTENT

A. Organization and Major Elements of Schedule of Values
   1. Prepare Schedule of Values in a manner that aligns with presentation of the Application for Payment form indicated in Section 00800, Supplementary Conditions.
   2. Organization in Accordance with Specification Sections:
      a. Organize the Schedule of Values by the various Specifications Section numbers and titles included in the Contract Documents.
      b. Label each row in the Schedule of Values with the appropriate Specifications Section number. Include an amount for each row in the Schedule of Values.
      c. List sub-items of major products or systems, as appropriate or when requested by ENGINEER.
   3. Include in Schedule of Values unit price payment items with their associated quantity. Provide in the Schedule of Values detailed breakdown of unit prices when required by ENGINEER.

B. Requirements for preliminary Schedule of Values and Schedule of Values are:
   1. Subcontracted Work:
      a. Schedule of Values shall show division of Work between CONTRACTOR and Subcontractors.
      b. Line items for Work to be done by Subcontractor shall include the word, "(SUBCONTRACTED)".
   2. Apportionment between Materials and Equipment, and Installation:
      a. Schedule of Values shall include breakdown of costs for materials and equipment, installation, and other costs used in preparing the Bid by CONTRACTOR and each Subcontractor.
      b. List purchase and delivery costs for materials and equipment for which CONTRACTOR may apply for payment as stored materials.
   3. Sum of individual values shown on the Schedule of Values shall equal the total of associated payment item. Sum of payment item totals in the Schedule of Values shall equal the Contract Price.
   4. Overhead and Profit: Include in each line item a directly proportional amount of CONTRACTOR's overhead and profit. Do not include overhead and profit as separate item(s).
   5. Include separate line item for each allowance, and for each unit price item.
   6. Bonds and Insurance Costs: Include line item for bonds and insurance.
   7. Include relevant items for the Standard General Conditions, permits (when applicable), construction Progress Schedule, and other items required by ENGINEER. Include such items in Applications for Payment on payment schedule acceptable to ENGINEER
   8. Line items for construction photographic documentation; temporary utilities and temporary facilities, field offices, temporary controls, field engineering, and similar Work shall be included in the Schedule of Values and proportioned in Applications for Payment throughout duration of the Work.

9. Mobilization and Demobilization:
    a. Include separate line items under each appropriate payment item for mobilization and demobilization. Document for ENGINEER the activities included in mobilization and demobilization line items.
    b. Refer to Section 01 22 13, Measurement and Payment, for Mobilization and Demobilization payment procedures.
10. Include separate line item for costs for Shop Drawings, samples, and other submittals; operations and maintenance manuals; field testing; and training of operations and maintenance personnel.
11. Include in the Schedule of Values a line item with appropriate value for Project record documents.
12. Coordinate Schedule of Values with resource loading and cost-loading of the Progress Schedule, in accordance with Section 01 32 16, Progress Schedule.

PART 2 – PRODUCTS (NOT USED)

PART 3 – EXECUTION (NOT USED)

+ + END OF SECTION + +

** THIS PAGE INTENTIONALLY LEFT BLANK **

SECTION 01 29 76

PROGRESS PAYMENT PROCEDURES

PART 1 – GENERAL

1.1 PROGRESS PAYMENTS

A. Scope:
   1. CONTRACTOR's requests for payment shall be in accordance with the Agreement, Standard General Conditions, Supplementary Conditions, and the Specifications.
   2. Form: Applications for Payment shall be in the form of Engineers Joint Contract Documents Committee (EJCDC) document EJCDC® C-700-E, included in Section 00800, Supplementary Conditions.

B. Procedure:
   1. Review with ENGINEER quantities and the Work proposed for inclusion in each progress payment. Application for Payment shall cover only the actual Work and quantities.
   2. Submit to ENGINEER originals of each complete Application for Payment and other documents to accompany the Application for Payment.
   3. ENGINEER will act on request for payment in accordance with the Standard General Conditions and Supplementary Conditions.

C. Each request for progress payment shall include:
   1. Completed Application for Payment form, including summary/signature page, progress estimate sheets, and stored materials summary. Progress estimate sheets shall have the same level of detail as the Schedule of Values.
   2. Documentation for Stored Materials and Equipment:
      a. For materials and equipment not incorporated in the Work but suitably stored, submit documentation in accordance with the Standard General Conditions and Supplementary Conditions.
      b. Legibly indicate on invoice or bill of sale the specific stored materials or equipment included in the payment request and corresponding bid/payment item number for each and the Supplier price for each item.
   3. Listing of Subcontractors and Suppliers:
      a. Submit not less than monthly updated listing of all Subcontractors and Suppliers known to CONTRACTOR, whether or not such entities have a contract directly with CONTRACTOR.
      b. Submit complete information using the form attached to this Section.
   4. Allowance Work:
      a. For payment requests that include payment for Work under an allowance, include with the progress payment request copy of OWNER's authorization of the associated allowance Work.
   5. Partial Release or Reduction of Retainage:

a. For each Application for Payment where CONTRACTOR requests partial release or reduction of retainage in any amount (other than request for final payment), submit with associated progress payment request consent of surety to partial release or reduction of retainage, duly completed by CONTRACTOR and surety.
b. Acceptable form includes AIA® G707A™, "Consent of Surety to Reduction in or Partial Release of Retainage", 1994 or later edition, or other form acceptable to OWNER.
c. For payment requests that include reduction in or payment of retainage in an amount greater than that required by the Contract Documents, obtain OWNER's concurrence for partial release or reduction in retainage prior to submitting such Application for Payment.

D. Final Payment:
1. Requirements for request for final payment are outlined under Article 14.07 of the Standard General Conditions, as may be modified by the Supplementary Conditions, and Section 01 77 19, Closeout Requirements.

1.2 PAYMENT FOR STORED MATERIALS AND EQUIPMENT

A. Observation of Stored Materials and Equipment Prior to Application for Payment:
1. General:
a. Prior to materials or equipment suitably stored but not yet incorporated into the Work being eligible for payment, ENGINEER shall visit the storage location and verify the extent, condition, and storage environment of the stored items.
b. When the same material or equipment item is stored for more than two months, such visits to storage location shall be not less than once every two months.
2. Cost Responsibility for Observations:
a. When storage location is less than 20 miles from the Site or less than 20 miles from ENGINEER's office, CONTRACTOR is not responsible for reimbursing OWNER for cost of ENGINEER's time and expenses for observing stored materials and equipment.
b. When storage location is more than 20 miles from the Site and more than 20 miles from ENGINEER's office, CONTRACTOR shall reimburse OWNER, via a set-off under the Contract Documents, for cost of ENGINEER's time and expenses, including travel time, to visit the storage location and observe the stored materials and equipment.

B. Other Requirements for Stored Items: Regardless of storage location, perform the following for stored materials and equipment for which payment is sought:
1. Clearly mark each stored container, crate, or item as follows: "Property of Indian River County" using permanent marking. Such marking shall not blemish or deface the finish of items that will be exposed to view after installation at the Site.

PART 2 – PRODUCTS (NOT USED)

PART 3 – EXECUTION

3.1 ATTACHMENTS

A. The forms listed below, following this Section's "End of Section" designation, are part of this Specification Section:
   1. List of Subcontractors and Suppliers form (two pages).

+ + END OF SECTION + +

LIST OF SUBCONTRACTORS AND SUPPLIERS

Owner: _____
Project Name: _____

Contractor: _____ Date: _____
Contract Designation: _____

Indicate below complete information for each Subcontractor and Supplier known to Contractor, regardless of whether the firm has a direct contract with Contractor. Include all lower-tier Subcontractors and associated Suppliers. Copy and paste the paragraphs below as required to indicate all Subcontractors and Suppliers.

SUBCONTRACTORS

1. **Subcontractor Name**:
   - *Address*:
   - *Contact Person*:
   - *Telephone No.*:
   - *E-mail Address*:
   - *Work Under Specifications Section Nos.*:
   - *Brief Description of Work*:
   - *Current Subcontract Price*:
   - *Approximate Subcontract Start Date*:
   - *Approximate Subcontract End Date*:

2. **Subcontractor Name**:
   - *Address*:
   - *Contact Person*:
   - *Telephone No.*:
   - *E-mail Address*:
   - *Work Under Specifications Section Nos.*:
   - *Brief Description of Work*:
   - *Current Subcontract Price*:
   - *Approximate Subcontract Start Date*:
   - *Approximate Subcontract End Date*:

3. **Subcontractor Name**:
   - *Address*:
   - *Contact Person*:
   - *Telephone No.*:
   - *E-mail Address*:
   - *Work Under Specifications Section Nos.*:
   - *Brief Description of Work*:
   - *Current Subcontract Price*:
   - *Approximate Subcontract Start Date*:
   - *Approximate Subcontract End Date*:

Total of Subcontract Prices for all subcontracts equals approximately ___ percent of the Contract Price *(Contractor to fill in blank monthly)*

SUPPLIERS

1. **Supplier Name**:
   - *Address*:
   - *Contact Person*:
   - *Telephone No.*:
   - *E-mail Address*:
   - *Furnishing Items Under Specifications Section Nos.*:
   - *Brief Description of Items*:
   - *Current Purchase Order Amount*:
   - *Approximate Purchase Order Date*:
   - *Approximate Purchase Order End Date*:

2. **Supplier Name**:
   - *Address*:
   - *Contact Person*:
   - *Telephone No.*:
   - *E-mail Address*:
   - *Furnishing Items Under Specifications Section Nos.*:
   - *Brief Description of Items*:
   - *Current Purchase Order Amount*:
   - *Approximate Purchase Order Date*:
   - *Approximate Purchase Order End Date*:

3. **Supplier Name**:
   - *Address*:
   - *Contact Person*:
   - *Telephone No.*:
   - *E-mail Address*:
   - *Furnishing Items Under Specifications Section Nos.*:
   - *Brief Description of Items*:
   - *Current Purchase Order Amount*:
   - *Approximate Purchase Order Date*:
   - *Approximate Purchase Order End Date*:

** THIS PAGE INTENTIONALLY LEFT BLANK **

SECTION 01 31 13

PROJECT COORDINATION

PART 1 – GENERAL

1.1 DESCRIPTION

A. Scope:
   1. CONTRACTOR shall coordinate the Work, including testing agencies whether hired by CONTRACTOR, OWNER, or others; Subcontractors, Suppliers, and others with whom coordination is necessary, in accordance with the Standard General Conditions, Supplementary Conditions, and this Section, to perform the Work within the Contract Times and in accordance with the Contract Documents.

B. Coordination:
   1. In accordance with the Standard General Conditions as may be modified by the Supplementary Conditions, CONTRACTOR shall cooperate with and coordinate the Work with other contractors, utility owners, utility service companies, OWNER's and facility manager's employees working at the Site, and other entities working at the Site, in accordance with Section 01 11 13, Summary of Work.
   2. CONTRACTOR will not be responsible or liable for damage unless damage is through negligence of CONTRACTOR, or Subcontractors, Supplier, or other entity employed by CONTRACTOR.
   3. CONTRACTOR shall attend and participate in all project coordination and progress meetings, and report on the progress of the Work and compliance with the Progress Schedule.

PART 2 – PRODUCTS (NOT USED)

PART 3 – EXECUTION (NOT USED)

+ + END OF SECTION + +

** THIS PAGE INTENTIONALLY LEFT BLANK **

SECTION 01 31 19

PRE-CONSTRUCTION CONFERENCE

PART 1 – GENERAL

1.1 DESCRIPTION

A. Scope:
   1. A pre-construction conference will be held for the Project in accordance Article 2.06 of the Standard General Conditions.
   2. CONTRACTOR shall attend the conference prepared to discuss all items on the pre-construction conference agenda.
   3. ENGINEER will distribute an agenda, preside at conference, and prepare and distribute minutes to all conference participants and others as requested.

B. Purpose of Pre-construction Conference:
   1. Purpose of conference is to designate responsible personnel, establish working relationships, discuss preliminary schedules submitted by CONTRACTOR, and review administrative and procedural requirements for the Project.
   2. Matters requiring coordination will be discussed and procedures for handling such matters will be established.
   3. Unless otherwise indicated in the Contract Documents or otherwise agreed to by the entities involved, Site mobilization meeting will be part of the pre-construction conference.

1.2 PREPARATION FOR PRE-CONSTRUCTION CONFERENCE

A. Date, Time, and Location:
   1. Conference will be held after execution of the Contract and before Work starts at the Site.
   2. ENGINEER will establish the date, time, and location of conference and notify the interested and involved entities.

B. Submittals Required Prior to Pre-Construction Conference:
   1. Not less than three days prior to pre-construction conference, submit the following preliminary schedules in accordance with the Standard General Conditions, Section 01 33 00, and other requirements of the Contract Documents:
      a. Preliminary Progress Schedule.
      b. Preliminary Schedule of Submittals.
      c. Preliminary Schedule of Values.
      d. Listing of identity and general scope of Work or supply (as applicable) of planned Subcontractors and Suppliers. Indicate extent of each Subcontract proposed and overall percentage of Contract Price to be

subcontracted in accordance with Section 01 29 76, Progress Payment Procedures.

C. CONTRACTOR shall furnish information required and contribute appropriate items for discussion at the pre-construction conference.

D. Handouts for Pre-Construction Conference:
   1. CONTRACTOR shall bring to the conference the following, with sufficient number of copies for each attendee:
      a. Preliminary Progress Schedule, as submitted to ENGINEER.
      b. Preliminary Schedule of Submittals, as submitted to ENGINEER.
      c. Preliminary Schedule of Values, as submitted to ENGINEER.
      d. Listing of identity and general scope of Work or supply of planned Subcontractors and Suppliers.
      e. List of emergency contact information, in accordance with Article 1.4 of this Section.

1.3 REQUIRED ATTENDEES

A. Representative of each entity attending the conference shall be authorized to act on that entity's behalf.

B. Contractor Attendance: Conference shall be attended by CONTRACTOR's:
   1. Project manager.
   2. Site superintendent.
   3. Project managers for major Subcontractors.
   4. Major equipment Suppliers as CONTRACTOR deems appropriate.

C. Other attendees will be representatives of:
   1. OWNER.
   2. ENGINEER.
   3. Authorities having jurisdiction over the Work, if available.
   4. Utility owners, as applicable.
   5. Others as requested by OWNER, CONTRACTOR, or ENGINEER.

1.4 AGENDA

A. Preliminary Agenda: Be prepared to discuss in detail the topics indicated below. Revisions, if any, to the agenda below will be furnished to required attendees prior to the pre-construction conference.
   1. Procedural and Administrative:
      a. Personnel and Teams:
         1) Designation of roles and personnel.
         2) Limitations of authority of personnel, including personnel who will sign Contract modifications and make binding decisions.
         3) Subcontractors and Suppliers in attendance.
         4) Authorities having jurisdiction.

b. Procedures for communications and correspondence.
c. Copies of the Contract Documents and availability.
d. Subcontractors and Suppliers.
   1) Lists of proposed Subcontractors and Suppliers.
e. The Work and Scheduling:
   1) Scope of the Work.
   2) Contract Times, including Milestones (if any).
   3) Phasing and sequencing.
   4) Preliminary Progress Schedule.
   5) Critical path activities.
f. Safety:
   1) Responsibility for safety.
   2) Designation of CONTRACTOR's safety representative.
   3) Emergency procedures and accident reporting.
   4) Emergency contact information.
   5) Confined space entry permits.
   6) Hazardous materials communication program.
   7) Impact of Project on public safety.
g. Permits.
h. Review of insurance requirements and insurance claims.
i. Coordination:
   1) Project coordination, and coordination among contractors.
   2) Coordination with Owner's operations.
   3) Progress meetings.
j. Submittals:
   1) Preliminary Schedule of Submittals.
   2) Submittal procedures.
   3) Contractor coordination and approval stamp.
   4) Meaning of Engineer's actions/submittal disposition.
   5) Preliminary discussion of initial, critical submittals.
   6) Construction photographic documentation.
k. Substitutes and "Or-Equals":
   1) Product options.
   2) Procedures for proposing "or-equals".
   3) Procedures for proposing substitutes.
l. Contract Modification Procedures
   1) Requests for interpretation
   2) Written clarifications
   3) Field Orders
   4) Proposal Requests
   5) Change Proposals
   6) Work Change Directives.
   7) Change Orders.
   8) Procedure for Claims and dispute resolution
m. Payment:
   1) Owner's Project financing and funding, as applicable.
   2) Owner's tax-exempt status.

3) Preliminary Schedule of Values
4) Procedures for measuring for payment.
5) Retainage.
6) Progress payment procedures.
7) Payrolls.

n. Testing and inspections, including notification requirements.
o. Disposal of demolition materials.
p. Record documents.
q. Preliminary Discussion of Contract Closeout:
1) Procedures for Substantial Completion.
2) Contract closeout requirements.
3) Correction period.
4) Duration of bonds and insurance.

2. Site Mobilization (if not covered in a separate meeting):
a. Working hours and overtime.
b. Field offices, trailers, and staging areas.
c. Temporary facilities.
d. Temporary utilities and limitations on utility consumption (where applicable).
e. Utility company coordination (if not done as a separate meeting).
f. Access to Site, access roads, and parking for construction vehicles.
g. Maintenance and protection of traffic.
h. Use of Site and premises.
i. Protection of property.
j. Security and Hurricane Plans.
k. Temporary controls, such as sediment and erosion controls, noise controls, dust control, storm water controls, and other such measures.
l. Site barriers and temporary fencing.
m. Storage of materials and equipment.
n. Reference points and benchmarks; surveys and layouts.
o. Site maintenance during the Project.
p. Cleaning and removal of trash and debris.
q. Restoration.

3. General discussion and questions.
4. Next meeting.
5. Site visit, if required.

1.5 EMERGENCY CONTACT INFORMATION

A. CONTRACTOR shall provide list of emergency contact information for 24-hour use throughout the Project. Emergency contact information shall be updated and kept current throughout the Project. If personnel or contact information change, provide updated emergency contact information list at the next progress meeting.

B. CONTRACTOR’s list of emergency contact information shall include:
1. CONTRACTOR’s project manager’s office, field office, cellular, and home telephone numbers.

2. CONTRACTOR's Site superintendent's office, field office, cellular, and home telephone numbers.
3. CONTRACTOR's foreman's field office, cellular (if available), and home telephone numbers.
4. Major Subcontractors' and Suppliers' office, cellular, and home telephone numbers of project manager and foreman (when applicable).

C. Additional Emergency Contact Information:
1. OWNER's office and cellular telephone numbers.
2. OWNER's central 24-hour emergency telephone number.
3. ENGINEER's project manager's office and cellular telephone numbers.
4. Emergency telephone numbers, including: "Emergency: Dial 911", and seven-digit telephone numbers for the hospital, ambulance, police, and fire department nearest to the Site. Provide names of each of these institutions.
5. Other involved entities as applicable.

PART 2 – PRODUCTS (NOT USED)

PART 3 – EXECUTION (NOT USED)

+ + END OF SECTION + +

** THIS PAGE INTENTIONALLY LEFT BLANK **

SECTION 01 31 20

PROGRESS MEETINGS

PART 1 – GENERAL

1.1 DESCRIPTION

A. Scope:
   1. Progress meetings will be held throughout the Project. CONTRACTOR shall attend each progress meeting prepared to discuss in detail all items on the agenda.
   2. ENGINEER will preside at progress meetings and will prepare and distribute minutes of progress meetings to all meeting participants and others as requested.

1.2 PREPARATION FOR PROGRESS MEETINGS

A. Date and Time:
   1. Regular Meetings: Every 30 days on a day and time agreeable to OWNER, ENGINEER, and CONTRACTOR. The first meeting shall be scheduled approximately 30 days after the pre-construction conference, outlined under Section 01 31 19.
   2. Other Meetings: As required.

B. Location:
   1. CONTRACTOR's field office at the Site or other location mutually agreed upon by OWNER, CONTRACTOR, and ENGINEER.

C. Handouts:
   1. CONTRACTOR shall bring to each progress meeting a sufficient number of copies of each of the following for all attendees:
      a. List of Work accomplished since the previous progress meeting.
      b. Up-to-date Progress Schedule.
      c. Up-to-date Schedule of Submittals.
      d. Detailed "look-ahead" schedule of Work planned through the next progress meeting, with specific starting and ending dates for each activity, including shutdowns, deliveries of important materials and equipment, Milestones (if any), and important activities affecting the OWNER, Project, and Site.
      e. When applicable, list of upcoming, planned time off (with dates) for personnel with significant roles on the Project, and the designated contact person in their absence.

1.3 REQUIRED ATTENDANCE

A. Representatives present for each entity shall be authorized to act on that entity's behalf.

B. Required Attendees:
   1. CONTRACTOR:
      a. Project manager.
      b. Site superintendent.
      c. Safety representative.
      d. When needed for the discussion of a particular agenda item, representatives of Subcontractors and Suppliers shall attend meetings.
   2. ENGINEER:
      a. Project manager or designated representative
      b. Resident Project Representative (if any).
      c. Others as required by ENGINEER.
   3. OWNER's representative(s), as required.
   4. Others, as appropriate.

1.4 AGENDA

A. Preliminary Agenda: Be prepared to discuss in detail the topics listed below. Revised agenda, if any, will be furnished to CONTRACTOR prior to first progress meeting. Progress meeting agenda may be modified by ENGINEER during the Project as required.
   1. Review, comment, and amendment (if required) of minutes of previous progress meeting.
   2. Review of progress since the previous progress meeting.
   3. Planned progress through next progress meeting.
   4. Review of Progress Schedule
      a. Contract Times, including Milestones (if any).
      b. Critical path.
      c. Schedules for fabrication and delivery of materials and equipment.
      d. Corrective measures, if required.
   5. Submittals:
      a. Review status of critical submittals.
      b. Review revisions to Schedule of Submittals.
   6. Contract Modifications
      a. Requests for interpretation.
      b. Written clarifications.
      c. Field Orders.
      d. Proposal Requests.
      e. Change Proposals.
      f. Work Change Directives.
      g. Change Orders.
      h. Claims.

7. Applications for progress payments.
8. Problems, conflicts, and observations.
9. Quality standards, testing, and inspections.
10. Coordination between parties.
11. Site management issues, including access, security, maintenance and protection of traffic, maintenance, cleaning, and other Site issues.
12. Safety.
13. Permits.
14. Construction photographic documentation.
15. Record documents status.
16. Punch list status, as applicable.
17. Other business.

PART 2 – PRODUCTS (NOT USED)

PART 3 – EXECUTION (NOT USED)

+ + END OF SECTION + +

** THIS PAGE INTENTIONALLY LEFT BLANK **

SECTION 01 32 16

PROGRESS SCHEDULE

PART 1 – GENERAL

1.1 DESCRIPTION

A. Scope:
   1. CONTRACTOR shall prepare and submit Progress Schedules and related documents in accordance with the Standard General Conditions Articles 2.07, 6.04, and 17 as may be modified by the Supplementary Conditions, and this Section, unless otherwise accepted by ENGINEER.
   2. CONTRACTOR shall maintain and update Progress Schedules and related documents.
   3. Progress Schedule shall be a CPM Progress Schedule.
   4. ENGINEER's acceptance of the Progress Schedule or related documents, and comments or opinions concerning activities in the Progress Schedule and related documents shall not control CONTRACTOR's independent judgment concerning means, methods, techniques, sequences and procedures of construction, unless the associated means, method, technique, sequence, or procedure is directed by the Contract Documents. CONTRACTOR is solely responsible for complying with the Contract Times.

B. Use of Float:
   1. Float belongs to the Project and may be used by OWNER or CONTRACTOR to accommodate changes in the Work, or to mitigate the effect of events that delay performance or compliance with the Contract Times.
   2. Changes or delays that influence Activities that have float and that do not extend the Critical Path are not justification for an extension of the Contract Times.

C. Factors Affecting the Progress Schedule:
   1. In preparing the Progress Schedule, CONTRACTOR shall take into consideration submittal requirements and submittal review times, time for fabricating and delivering materials and equipment, source quality control (including shop testing) and field quality control (including testing at the Site), Subcontractors' work, availability and abilities of workers, availability of construction equipment, weather conditions, restrictions in operations at the Site and coordination with OWNER's operations, and other factors that have the potential to affect completion of the Work within the Contract Times.
   2. Comply with sequencing requirements indicated in the following:
      a. Section 01 11 13, Summary of Work.
      b. Section 01 14 16, Coordination with Owner's Operations.

1.2 DEFINITIONS

A. The following terms are defined for this Section and supplement the terms defined in the Standard General Conditions and Supplementary Conditions:
   1. Activity: An element of the construction work that has the following specific characteristics: consumes time, consumes resources, has a definable start and finish, is assignable, and is measurable.
   2. Constraint: An imposed date on the Progress Schedule or an imposed time between Activities. The Contract Times are Constraints.
   3. CPM Progress Schedule: Computerized Progress Schedule in Critical Path Method (CPM) format which accounts for the entire Work, defines the interrelationships between elements of the Work, reflects the uncompleted Work, and indicates the sequence with which the Work has been completed, indicates the sequence in which uncompleted Work will be completed, and indicates the duration of each Activity.
   4. Critical Path: The continuous chain of Activities with the longest duration for completion within the Contract Times.
   5. Early Start: The earliest possible date an Activity can start according to the assigned relationships among Activities.
   6. Early Finish: The earliest date an Activity can finish according to the assigned relationships among the Activities.
   7. Late Finish: The latest date an Activity can finish without extending the Contract Times.
   8. Late Start: The latest date an Activity can start without extending the Contract Times.
   9. Float: The time difference between the calculated duration of the Activity chain and the Critical Path.
   10. Total Float: The total number of days that an Activity (or chain of Activities) can be delayed without affecting the Contract Times.
   11. Work Areas, Area, or System: A logical breakdown of the Project elements or a group of Activities which, when collectively assembled, are readily identifiable on the Project (for example: yard piping, a structure or building, a treatment process, or other logical grouping).

1.3 QUALITY ASSURANCE

A. Qualifications:
   1. Progress Schedule Preparer:
      a. CONTRACTOR shall retain services of a scheduling consultant or shall self-prepare and maintain the Progress Schedule using qualified employee with experience in scheduling, and experienced with the scheduling software required for the Project, and experience serving as Progress Schedule preparer on construction projects of similar type, size, and scope to this Project.

1.4 SUBMITTALS

A. Quantity of each submittal required and timing of submittals are in this Section.

B. Informational Submittals: Submit the following:
   1. Initial Progress Schedules:
      a. Preliminary Progress Schedule with associated narrative report.
      b. Acceptable Progress Schedule with associated narrative report.
      c. Submit each Progress Schedule submittal with letter of transmittal complying with requirements of Section 01 33 00, Submittal Procedures.
   2. Progress Schedule Updates.
      a. Progress Schedule updates shall comply with requirements of this Section and shall include updated Progress Schedule and narrative report.
      b. Submit updated Progress Schedule prior to each progress meeting. When a Progress Schedule remains unchanged from one progress meeting to the next, submit a written statement to that effect. In addition to monthly Progress Schedule submittals, also bring to progress meeting the number of printed copies of the updated Progress Schedule indicated in Section 01 31 20, Progress Meetings.
   3. Look-Ahead Schedules
      a. Furnish 30-day look-ahead schedule at each progress meeting.
   4. Time Impact Analysis: Submit in accordance with this Section.
   5. Qualifications:
      a. Submit qualifications of Progress Schedule preparer, and other personnel that will assist Progress Schedule preparer in preparing and maintaining the Progress Schedule.

1.5 INITIAL PROGRESS SCHEDULES

A. Type and Organization of Progress Schedules:
   1. Prepare Progress Schedule using scheduling software acceptable to ENGINEER.
   2. Sheet Size: 11 inches by 17 inches, unless otherwise accepted by ENGINEER.
   3. Time Scale: Indicate first date of each work week.
   4. Activity Designations: Indicate title and related Specifications Section number.
   5. Progress Schedules shall be CPM Progress Schedules.
   6. Organization:
      a. Indicate on the separate Schedule of Submittals dates for submitting and reviewing Shop Drawings, Samples, and other submittals.
      b. Group deliveries of materials and equipment into a separate sub-schedule that is part of the Progress Schedule.
      c. Group construction into Work Area sub-schedules (that are part of the Progress Schedule) by Activity.
      d. Clearly indicate the Critical Path on the Progress Schedule.
      e. Organize each Work Area sub-schedule by Specifications Section number.

B. Preliminary Progress Schedule:
   1. Within ten (10) days after the Contract Times commence running, CONTRACTOR shall submit to ENGINEER the preliminary Progress Schedule covering the entire Project.
   2. Submit preliminary Progress Schedule in accordance with Standard General Conditions and Section 01 33 00, Submittal Procedures.
   3. ENGINEER will conduct a timely review of the preliminary Progress Schedule.
   4. Preliminary Progress Schedule shall comply with the Contract Documents relative to Progress Schedules but need not be resource-loaded.

C. Initial Acceptance of Progress Schedule:
   1. Not less than 30 days before submission of the first Application for Payment, a scheduling conference attended by CONTRACTOR, Progress Schedule preparer, ENGINEER, and others as appropriate will be held at the Site to review for acceptability to ENGINEER the preliminary Progress Schedule and other reports and schedule-related documents required. Following the scheduling conference, CONTRACTOR shall have 15 days to make corrections and adjustments and to complete and resubmit the Progress Schedule. No progress payment will be made to CONTRACTOR until acceptable Progress Schedule and other reports and schedule-related documents required are submitted to ENGINEER.
   2. Submit four (4) copies each of acceptable Progress Schedule with reports and other schedule-related documents required to accompany the initial acceptable Progress Schedule, in accordance with the Submittals Article of this Section. Submit in accordance with Section 01 33 00, Submittal Procedures.
   3. The Progress Schedule will be acceptable to ENGINEER if it provides an orderly progression of the Work to completion within the Contract Times, in accordance with the Contract Documents. Such acceptance will not impose on ENGINEER responsibility for the Progress Schedule, for sequencing, scheduling, or progress of the Work nor interfere with or relieve CONTRACTOR from CONTRACTOR's full responsibility thereof.
   4. Initially-accepted Progress Schedule shall be identified as the baseline Progress Schedule.

D. If the Progress Schedule reflects completion date(s) different than the Contract Times, the Contract Times are not thereby voided, nullified, or affected. The Contract Times govern. Where the Progress Schedule reflects completion date(s) that are earlier than the Contract Times, ENGINEER may accept such Progress Schedule with CONTRACTOR to specifically understand that no Change Request or Claim for additional Contract Times or additions to the Contract Price shall be brought against OWNER resulting from CONTRACTOR's failure to complete the Work by the earlier date(s) indicated on the accepted Progress Schedule.

1.6 PROGRESS SCHEDULE UPDATES

A. Updates:
   1. Update the Progress Schedule not less-often than once per month. If during progress of the Work events develop that necessitate changes in the initially accepted Progress Schedule (e.g., baseline Progress Schedule), identify updated Progress Schedules sequentially as "Progress Schedule Revision 1", "2", "3", and continuing in sequence as required. Number the Progress Schedule submittals in accordance with Section 01 33 00, Submittal Procedures.
   2. CONTRACTOR's Progress Schedule update shall include a narrative report in accordance with this Section. Narrative report shall include description of current progress and status of each Area of the Project, a description of progress for the period, a description of the Critical Path, a discussion of current or potential delays, Change Orders (pending and approved in since the previous Progress Schedule update), and other problems associated with maintaining the Work on schedule.
   3. The update to the Progress Schedule shall be based on retained logic. Progress override logic is not allowed.
   4. Required scheduling software, and schedule organization, format, and content for updated Progress Schedules are identical to that required in this Section for initial Progress Schedules.
   5. Submit to ENGINEER four (4) copies of the updated Progress Schedule, narrative report, and other schedule-related reports and documents required, and two compact discs (CD) each with a complete software backup copy of the updated Progress Schedule.

B. Monthly Schedule Meeting:
   1. During the month, utilizing the previous month's 30-day look-ahead schedule. CONTRACTOR shall record the percent complete, start and finish dates of each scheduled Activity with the remaining duration for each Activity started but not completed, including Activities associated with procurement of materials and equipment.
   2. On the same day each month, not less than one week prior to a progress meeting, CONTRACTOR, Progress Schedule preparer, ENGINEER, and others as appropriate shall meet at the Site and tour the Work to review and update the schedule and progress information gathered by CONTRACTOR during the month. After acceptance of CONTRACTOR's updated data, Progress Schedule preparer shall use this information to update the Progress Schedule.

1.7 NARRATIVE REPORT

A. Prepare and include with the preliminary Progress Schedule and each subsequent Progress Schedule submittal, written narrative report describing the schedule-related requirements of the Contract Documents and CONTRACTOR's plan and schedule for complying with such requirements. Narrative report shall describe the methods of sequencing and operation, resources to be employed, time frames for the

construction of each of the major Systems on the Project, and time frames for complying with the Contract Times and CONTRACTOR's interim schedule milestones.

1.8 TIME IMPACT ANALYSIS

A. Time Impact Analyses – General:
   1. Prepare and submit a time impact analysis when one or more of the following occurs: A Change Proposal is prepared, a Work Change Directive is issued that will affect the Progress Schedule, or when delays are experienced. Time impact analysis shall illustrate the influence of each Change Order, Work Change Directive, allowance authorization, or delay, as applicable, on the Contract Times and schedule milestones.
   2. Time impact analysis shall demonstrate the time impact, based on date the Change Order, Work Change Directive, or allowance authorization was given to CONTRACTOR, or as applicable the date the delay was implemented; the status of the Work at that point in time; and the Activity duration of affected Activities. Activity duration used in the time impact analysis shall be those included in the latest update of the Progress Schedule accepted by ENGINEER, closest to the time of the start of the delay or start of the Change Order, Work Change Directive, or allowance authorization as adjusted by mutual, written agreement of the parties and ENGINEER.
   3. Timing of Time Impact Analysis:
      a. Submit each time impact analysis within 7 days after the following, as applicable:
         1) Start of the delay.
         2) After the submittal of Change Proposal.
         3) After CONTRACTOR receipt of Work Change Directive.
      b. When CONTRACTOR does not submit time impact analysis for a specific change or delay, within the specified period of time for such submittal, such non-submittal shall be construed that no extension of the Contract Times is required.

B. Evaluation by Engineer and Acceptance:
   1. ENGINEER's evaluation of each time impact analysis comprised of complete information will be completed in timely manner after ENGINEER's receipt. Changes in the Contract Times will be made only by Change Order.
   2. When mutual agreement is reached between the parties on effect of the change or delay in the Project, incorporate into the next Progress Schedule to illustrate the influence of changes and delays.

PART 2 – PRODUCTS (NOT USED)

PART 3 – EXECUTION (NOT USED)

+ + END OF SECTION + +

SECTION 01 33 00

SUBMITTAL PROCEDURES

PART 1 – GENERAL

1.1 DESCRIPTION

A. Scope:
   1. CONTRACTOR shall prepare and furnish submittals in accordance with the requirements contained in Articles 6.17 and 9.06 of the Standard General Conditions, as may be modified by the Supplementary Conditions, and this Section.
   2. Provide submittals well in advance of need for the material or equipment, or procedure (as applicable), in the Work and with ample time required for delivery of materials and equipment and to implement procedures following ENGINEER's approval or acceptance of the associated submittal. Work covered by a submittal will not be included in progress payments until approval or acceptance of related submittals has been obtained in accordance with the Contract Documents.
   3. CONTRACTOR is responsible for dimensions to be confirmed and corrected at the Site; quantities; information pertaining solely to fabrication processes; means, methods, sequences, procedures, and techniques of construction; safety precautions and programs incident thereto; and for coordinating the work of all trades.
   4. CONTRACTOR's signature of submittal's stamp and letter of transmittal shall be CONTRACTOR's representation that CONTRACTOR has complied with his obligations under the Contract Documents relative to that submittal.
   5. Provisions of the General Conditions, as may be modified by the Supplementary Conditions, apply to all CONTRACTOR-furnished submittals required by the Contract Documents, regardless of whether such submittals are other than Shop Drawings or Samples.

B. Samples:
   1. Submittal of Samples shall comply with this Section, and the Specifications Section in which the Sample is specified.
   2. Furnish at the same time those Samples and submittals that are related to the same element of the Work or Specifications Section. ENGINEER will not review submittals without associated Samples and will not review Samples without associated submittals.
   3. Samples shall clearly illustrate functional characteristics of materials, all related parts and attachments, and full range of color, texture, pattern, and materials.

1.2 TYPES OF SUBMITTALS

A. Submittal types are classified as follows: 1) Action Submittals, 2) Informational Submittals, 3) Closeout Submittals, and 4) Maintenance Material submittals. Type of each required submittal is designated in the respective Specifications Sections; when type of submittal is not designated in the associated Specification Section, submittal will be classified as follows:

1. Action Submittals include:
   a. Shop Drawings.
   b. Product data.
   c. Delegated design submittals, which include documents prepared, sealed, and signed by a design professional retained by CONTRACTOR, Subcontractor, or Supplier for materials and equipment to be incorporated into the completed Work. Delegated design submittals do not include submittals related to temporary construction unless specified otherwise in the related Specifications Section. Delegated design submittals include: design drawings, design data including calculations, specifications, certifications, and other submittals prepared by such design professional.
   d. Samples.
   e. Testing plans, procedures, and testing limitations.
2. Informational Submittals include:
   a. Certificates.
   b. Design data not sealed and signed by a design professional retained by CONTRACTOR, Subcontractor, or Supplier.
   c. Pre-construction test and evaluation reports, such as reports on pilot testing, subsurface investigations, testing for a potentially Hazardous Environmental Condition, and similar reports.
   d. Supplier instructions, including installation data, and instructions for handling, starting-up, and troubleshooting.
   e. Source quality control submittals (other than testing plans, procedures, and testing limitations), including results of shop testing.
   f. Field or Site quality control submittals (other than testing plans, procedures, and testing limitations), including results of operating and acceptability tests at the Site.
   g. Supplier reports.
   h. Sustainable design submittals (other than sustainable design closeout documentation).
   i. Special procedure submittals, including plans for shutdowns and tie-ins and other procedural submittals.
   j. Qualifications statements.
   k. Administrative submittals including:
      1) Progress Schedules.
      2) Schedules of Submittals.
      3) Schedules of Values.
      4) Photographic documentation.
      5) Coordination drawings, when submittal of such is required.

6) Copies of permits obtained by CONTRACTOR.
7) Field engineering reports, survey data, and similar information.

3. Closeout Submittals include:
   a. Maintenance contracts.
   b. Operations and maintenance data.
   c. Bonds, such as special maintenance bonds and bonds for a specific material, equipment item, or system.
   d. Warranty documentation.
   e. Record documentation.
4. Maintenance Material Submittals include:
   a. Spare parts.
   b. Extra stock materials.
   c. Tools.
5. When type of submittal is not specified and is not included in the list above, request an interpretation from ENGINEER and ENGINEER will determine the type of submittal.

B. Not Included in this Section: Administrative and procedural requirements for following are covered elsewhere in the Contract Documents:
   1. Requests for interpretations of the Contract Documents.
   2. Change Orders, Work Change Directives, and Field Orders.
   3. Applications for Payment
   4. Reports, documentation, and permit applications required to be furnished by CONTRACTOR to authorities having jurisdiction.

1.3 REQUIREMENTS FOR SCHEDULE OF SUBMITTALS

A. Informational Submittals: Submit the following:
   1. Schedule of Submittals:
      a. Timing:
         1) Furnish submittal within time frames indicated in the Contract Documents.
         2) Submit updated Schedule of Submittals with each submittal of the updated Progress Schedule.
      b. Content: In accordance with the Standard General Conditions, as may be modified by the Supplementary Conditions, and this Section. Requirements for content of preliminary Schedule of Submittals and subsequent submittals of the Schedule of Submittals are identical. Identify on Schedule of Submittals all submittals required in the Contract Documents. Updates of Schedule of Submittals shall show scheduled dates and actual dates for completed tasks. Indicate submittals that are on the Project's critical path. Indicate the following for each submittal:
         1) Date by which submittal will be received by ENGINEER.
         2) Whether submittal will be for a substitution or "or-equal". Procedures for requesting approval of substitutes and "or-equals" are specified in the Standard General Conditions and Section 01 25 00, Substitution Procedures.

3) Date by which ENGINEER's response is required. Not less than 14 days shall be allowed for ENGINEER's review, starting upon ENGINEER's actual receipt of each submittal. Allow increased time for large or complex submittals.
4) For submittals for materials or equipment, date by which material or equipment must be at the Site to avoid delaying the Work and to avoid delaying the work of other contractors, if any.

c. Prepare Schedule of Submittals using same software, and in same format, specified for Progress Schedules in Section 01 32 16, Progress Schedule.

d. Coordinate Schedule of Submittals with the Progress Schedule.

e. Schedule of Submittals that is not compatible with the Progress Schedule, or that does not indicate submittals on the Project's critical path, or that that places extraordinary demands on ENGINEER for time and resources, is unacceptable. Do not include submittals not required by the Contract Documents.

f. In preparing Schedule of Submittals:
1) Considering the nature and complexity of each submittal, allow sufficient time for review and revision.
2) Reasonable time shall be allowed for: ENGINEER's review and processing of submittals, for submittals to be revised and resubmitted, and for returning submittals to CONTRACTOR.
3) Identify and accordingly schedule submittals that are expected to have long anticipated review times.

1.4 PROCEDURE FOR SUBMITTALS

A. Submittal Identification System: Use the following submittal identification system, consisting of submittal number and review cycle number.

1. Submittal Number: Shall be separate and unique number correlating to each individual submittal required. Assign submittal numbers as follows:
   a. First part of submittal number shall be the applicable Specifications Section number, followed by a hyphen.
   b. Second part of submittal number shall be a three-digit number (sequentially numbered from 001 through 999) assigned to each separate and unique submittal furnished under the associated Specifications Section.
   c. Typical submittal number for the third submittal furnished for Section 40 05 19, Ductile Iron Process Pipe, would be "40 05 19-003".
2. Review Cycle Number: Shall be a letter designation indicating the initial submittal or re-submittal associated with each submittal number:
   a. "A" = Initial (first) submittal.
   b. "B" = Second submittal (e.g., first re-submittal).
   c. "C" = Third submittal (e.g., second re-submittal).

3. Examples:

Example Description	Submittal Identification	
	Submittal No.	Review Cycle
Initial (first) review cycle of the third submittal provided under Section 40 05 19, Ductile Iron Process Pipe	40 05 19-003-	A
Second review cycle (first re-submittal) of third submittal provided under Section 40 05 19, Ductile Iron Process Pipe	40 05 19-003-	B

B. Letter of Transmittal for Submittals:
   1. Furnish separate letter of transmittal with each submittal. Each submittal shall be for one Specifications Section.
   2. At beginning of each letter of transmittal, include a reference heading indicating: CONTRACTOR's name, OWNER's name, Project name, Contract designation, transmittal number, and submittal number.
   3. For submittals with proposed deviations from requirements of the Contract Documents, letter of transmittal shall specifically describe each proposed variation.

C. Contractor's Review and Stamp:
   1. Contractor's Review: Before transmitting submittals to ENGINEER, review submittals to:
      a. ensure proper coordination of the Work;
      b. determine that each submittal is in accordance with CONTRACTOR's desires;
      c. verify that submittal contains sufficient information for ENGINEER to determine compliance with the Contract Documents.
   2. Incomplete or inadequate submittals will be returned without review.
   3. Contractor's Stamp and Signature:
      a. Each submittal furnished shall bear CONTRACTOR's stamp of approval and signature, as evidence that submittal has been reviewed by CONTRACTOR and verified as complete and in accordance with the Contract Documents.
      b. Submittals without CONTRACTOR's stamp and signature will be returned without review. Signatures that appear to be computer-generated will be regarded as unsigned and the associated submittal will be returned without review.
      c. CONTRACTOR's stamp shall contain the following:

"Project Name: _____

Contractor's Name: _____

Contract Designation: _____

Date: _____

---------- *Reference* ----------

Submittal Title: _____

Specifications:

Section: _____

Page No.: _____

Paragraph No.: _____

Drawing No.: _____ of _____

Location of Work: _____

Submittal No. and Review Cycle: _____

Coordinated by Contractor with Submittal Nos.: _____

_____

I hereby certify that the Contractor has satisfied Contractor's obligations under the Contract Documents relative to Contractor's review and approval of this submittal.

Approved for Contractor by: _____"

D. Submittal Marking and Organization:
   1. Mark on each page of submittal and each individual component submitted with submittal number and applicable Specifications paragraph. Mark each page of each submittal with the submittal page number.
   2. Arrange submittal information in same order as requirements are written in the associated Specifications Section.
   3. Each Shop Drawing sheet shall have title block with complete identifying information satisfactory to ENGINEER.
   4. Package together submittals for the same Specifications Section. Do not furnish required information piecemeal.

E. Format of Submittal and Recipients:
   1. Action Submittals and Informational Submittals: Furnish in accordance with Table 01 33 00-A, except that submittals of Samples shall be as specified elsewhere in this Section:

TABLE 01 33 00-A: SUBMITTAL CONTACTS AND REQUIRED FORMAT

	Address for Deliveries	**Contact Person**	**E-mail Address**	**Format***	**No. of Printed Copies**
a.	Engineer: Arcadis U.S., Inc., 3109 West Dr. Martin Luther King Jr. Boulevard, Suite 350, Tampa, FL 33607	Jeffrey P. Rosman, P.E.	jeffrey.rosman@arcadis.com	E	Zero
b.	Owner: Indian River County Department of Utility Services, 1801 27th Street, Building A, Vero Beach, FL 32960	Arjuna Weragoda, P.E.	aweragoda@ircgov.com	E	Zero
* **Format**: E = Electronic files; P = Printed copies. TBD = To Be Determined					

2. Samples:
    a. Securely label or tag Samples with submittal identification number. Label or tag shall include clear space at least four inches by four inches in size for affixing ENGINEER's review stamp. Label or tag shall not cover, conceal, or alter appearance or features of Sample. Label or tag shall not be separated from the Sample.
    b. Submit quantity of Samples required in Specifications. If quantity of Samples is not indicated in the associated Specifications Section, furnish not less than three (3) identical Samples of each item required for ENGINEER's approval. Samples will not be returned to CONTRACTOR. If CONTRACTOR requires Sample(s) for CONTRACTOR's use, so advise ENGINEER in writing and furnish additional Sample(s). CONTRACTOR is responsible for furnishing, shipping, and transporting additional Samples.
    c Deliver one Sample to the Central WWTF. Deliver balance of Samples to ENGINEER at address indicated in Table 01 33 00-A, unless otherwise directed by ENGINEER.
3. Closeout Submittals:
    a. Furnish the following Closeout Submittals in accordance with Table 01 33 00-A: maintenance contracts; bonds for specific materials, equipment, or systems; warranty documentation; and sustainable design closeout documentation. On documents such as maintenance contracts and bonds, include on each document furnished original ("wet") signature of entity issuing said document. When original "wet" signatures are required, furnish such submittals in printed form and electronic form to ENGINEER, and to other entities furnish as indicated in Table 01 33 00-A.
    b. Operations and Maintenance Data: Submit in accordance with Section 01 78 23, Operation and Maintenance Data.
    c. Record Documentation: Submit in accordance with Section 01 78 39, Project Record Documentation.
    d. Software: Submit number of copies required in Specifications Section where the software is specified. If number of copies is not specified, provide two copies on compact disc in addition to software loaded on OWNER's computer(s) or microprocessor(s).
4. Maintenance Material Submittals: For spare parts, extra stock materials, and tools, furnish quantity of items specified in individual Specifications Sections.

F. Electronic Submittals:
1. Format: Electronic files shall be in "portable document format" (.PDF). Files shall be electronically searchable.
2. Organization and Content:
    a. Each electronic submittal shall be one file; do not divide individual submittals into multiple files each.
    b. When submittal is large or contains multiple parts, furnish PDF file with bookmark for each section of submittal.

c. Content shall be identical to printed submittal. First page of electronic submittal shall be CONTRACTOR's letter of transmittal.

3. Quality and Legibility: Electronic submittal files shall be made from the original and shall be clear and legible. Do not submit scans of faxed copies. Electronic file shall be full size of original, printed documents. Properly orient all pages for reading on a computer screen.

4. Provide sufficient Internet service and e-mail capability for CONTRACTOR's use in transferring electronic submittals, receiving responses to electronic submittals, and associated electronic correspondence. Check not less than once per day for distribution of electronic submittals, electronic responses of submittal, and electronic correspondence related to submittals.

5. Submitting Electronic Files:

a. Transmit electronic submittals files via e-mail in accordance with Table 01 33 00-A.

G. Distribution:

1. Distribution of ENGINEER's Response via Electronic Files: Upon completion of ENGINEER's review, electronic submittal response will be distributed by ENGINEER to:

a. CONTRACTOR.

b. OWNER.

c. ENGINEER's file.

H. Resubmittals: Refer to the Standard General Conditions for requirements regarding resubmitting required submittals.

1.5 ENGINEER'S REVIEW

A. Timing: ENGINEER's review will conform with timing indicated in the Schedule of Submittals accepted by ENGINEER.

B. Submittals not required by the Contract Documents will not be reviewed by ENGINEER and will not be recorded in ENGINEER's submittal log. All printed copies of such submittals will be returned to CONTRACTOR. Electronic copies of such submittals, if any, will not be retained by ENGINEER.

C. Action Submittals, Results of ENGINEER's Review: Each submittal will be given one of the following dispositions by ENGINEER:

1. Approved: Upon return of submittal marked "Approved", order, ship, or fabricate materials and equipment included in the submittal (pending ENGINEER's approval or acceptance, as applicable, of source quality control submittals) or otherwise proceed with the Work in accordance with the submittal and the Contract Documents.

2. Approved as Corrected: Upon return of submittal marked "Approved as Corrected", order, ship, or fabricate materials and equipment included in the submittal (pending ENGINEER's approval or acceptance, as applicable, of source quality control submittals) or otherwise proceed with the Work in

accordance with the submittal and the Contract Documents, and in accordance with the corrections indicated in the ENGINEER's submittal response.

3. Approved as Corrected – Resubmit: Upon return of submittal marked "Approved as Corrected – Resubmit", order, ship, or fabricate materials and equipment included in the submittal (pending ENGINEER's approval or acceptance, as applicable, of source quality control submittals) or otherwise proceed with the Work in accordance with the submittal and the Contract Documents, and in accordance with corrections indicated in ENGINEER's submittal response. Furnish to ENGINEER record re-submittal with all corrections made. Receipt of corrected re-submittal is required before materials or equipment covered in the submittal will be eligible for payment.
4. Revise and Resubmit: Upon return of submittal marked "Revise and Resubmit", make the corrections indicated and re-submit to ENGINEER for approval.
5. Not Approved: This disposition indicates material or equipment that cannot be approved. "Not Approved" disposition may also be applied to submittals that are incomplete. Upon return of submittal marked "Not Approved", repeat initial submittal procedure utilizing approvable material or equipment, with a complete submittal clearly indicating all information required.

D. Informational Submittals, Results of ENGINEER's Review:
1. Each submittal will be given one of the following dispositions:
   a. Accepted: Information included in submittal complies with the applicable requirements of the Contract Documents and is acceptable. No further action by CONTRACTOR is required relative to this submittal, and the Work covered by the submittal may proceed, and materials and equipment with submittals with this disposition may be shipped or operated, as applicable.
   b. Not Accepted: Submittal does not indicate compliance with applicable requirements of the Contract Documents and is not acceptable. Revise submittal and re-submit to indicate acceptability and compliance with the Contract Documents.

E. Closeout Submittals, Results of ENGINEER's Review: Dispositions and meanings are the same as specified for Informational Submittals. When acceptable, Closeout Submittals will not receive a written response from ENGINEER. Disposition as "accepted" will be recorded in ENGINEER's submittal log. When Closeout Submittal is not acceptable, ENGINEER will provide written response to CONTRACTOR.

F. Maintenance Material Submittals, Results of ENGINEER's Review: Dispositions and meanings are the same as specified for Informational Submittals. When acceptable, Maintenance Material Submittals will not receive a written response from ENGINEER. Disposition as "accepted" will be recorded in ENGINEER's submittal log. When Maintenance Material Submittal is not acceptable, ENGINEER will provide written response to CONTRACTOR, and CONTRACTOR is responsible for

costs associated with transporting and handling of maintenance materials until compliance with the Contract Documents is achieved.

PART 2 – PRODUCTS (NOT USED)

PART 3 – EXECUTION (NOT USED)

+ + END OF SECTION + +

SECTION 01 42 00

REFERENCES

PART 1 – GENERAL

1.1 DESCRIPTION

A. Scope:
   1. Section includes the following:
      a. Definitions and terminology in general use in the Contract Documents.
      b. Applicable codes.
      c. Abbreviations in general use throughout the Contract Documents.
      d. General requirements regarding reference standards, including a listing of standard-issuing organizations (and their acronyms) used in the Contract Documents.

1.2 DEFINITIONS AND TERMINOLOGY

A. Definitions and terminology applicable to all the Contract Documents are included in the Standard General Conditions, as may be modified by the Supplementary Conditions.

B. Additional terminology used in the Contract Documents includes the following:
   1. "Indicated" refers to graphic representations, notes, or schedules on the Drawings, or to other paragraphs, provisions, tables, or schedules in the Specifications and similar locations in the other Contract Documents. Terminology such as "shown", "noted", "scheduled", and "specified" are used to help the user locate the reference without limitation on the location.
   2. "Installer", "applicator", or "erector" is CONTRACTOR or another person or entity engaged by CONTRACTOR, either as an employee or Subcontractor, to perform a particular construction activity, including installation, erection, application, or similar Work. Installers shall be experienced in the Work that installer is engaged to perform.
      a. The term "experienced", when used in conjunction with the term "installer", means having successfully completed not less than five previous projects similar in size and scope to this Project; being familiar with the special requirements indicated and required; being familiar with Laws and Regulations; and having complied with requirements of authorities having jurisdiction, and complying with requirements of the Supplier of the material or equipment being installed, unless other experience requirements specific to that element of the Work are indicated elsewhere in the Contract Documents.
   3. Trades: Use of terms such as "carpentry" does not imply that certain construction activities must be performed by accredited or unionized individuals of a corresponding generic name, such as "carpenter", unless

otherwise indicated in the Contract Documents or required by Laws or Regulations. Such terminology also does not imply that specified requirements apply exclusively to trade personnel of the corresponding generic name.

1.3 APPLICABLE CODES

A. References in the Contract Documents to local code(s) shall mean the following:
   1. State of Florida.
   2. Indian River County Code of Ordinances.
   3. NFPA 70, National Electrical Code in effect at the location of the Project.
   4. NFPA 101, Life Safety Code.
   5. NFPA 820, Standard for Fire Protection in Wastewater Treatment and Collection Facilities

1.4 OWNER'S REFERENCED SPECIFICATIONS

A. Except as otherwise specified, the Work shall comply with the Contract Documents and the following referenced specifications that can be reviewed and obtained from the official government website of Indian River County, Florida:
   1. Department of Utility Services Water, Wastewater, and Reclaimed Water Utility Construction Standards, March 13, 2018 or latest version.

1.5 ABBREVIATIONS

A. Common abbreviations that may be found in the Contract Documents are indicated below, alphabetically by their written-out meaning:

alternating current	a-c
ampere	A
antemeridian	a.m.
Architectural Barriers Act	ABA
Americans with Disabilities Act	ADA
Americans with Disabilities Act Accessibility Guidelines	ADAAG
ante meridian	a.m.
average	avg
biochemical oxygen demand	BOD
five-day biochemical oxygen demand	BOD_5
brake horsepower	bhp
British thermal unit	Btu
building information model	BIM
carbonaceous biochemical oxygen demand	CBOD
five-day carbonaceous biochemical oxygen demand	$CBOD_5$

chemical oxygen demand		COD
Centigrade (or Celsius)		C
chlorinated polyvinyl chloride		CPVC
chlorofluorocarbons		CFC
Code of Federal Regulations		CFR
computer-aided drafting and design		CADD, or CAD
cubic inch		cu in
cubic foot		cu ft
cubic yard		cu yd, or CY
cubic feet per minute		cfm
cubic feet per second		cfs
decibel		db
degree Centigrade (or Celsius)	(Write)	degrees C, °C, or deg C
degrees Fahrenheit		degrees F, °F, or deg F
diameter		dia
direct current		d-c
dollars		$
each		ea
efficiency		eff
Fahrenheit		F
feet		ft
feet per hour		fph, or ft/hr
feet per minute		fpm
feet per second		fps, or ft/min
figure		fig
flange		flg
foot-pound		ft-lb
gallon		gal
gallons per hour		gph, or gal/hr
gallons per minute		gpm
gallons per second		gps
gram		g
grams per liter		g/L
Hertz		Hz
horsepower		hp or HP
hour		hr

human-machine interface	HMI
inch	in.
inches of mercury	in. Hg
inches water gage	in. w.g.
inch-pound	in.-lb
inside diameter	ID
iron pipe size	IPS
thousand pounds	kips
thousand pounds per square inch	ksi
kilovolt-ampere	kva
kilowatt	kw
kilowatt-hour	kwhr or kwh
linear foot	lin ft or LF
liter	L
Leadership in Energy and Environmental Design (USGBC)	LEED
maximum	max
mercury	Hg
milligram	mg
milligrams per liter	mg/l or mg/L
milliliter	ml
millimeter	mm
million gallons per day	mgd or MGD
million gallons	MG
minimum	min
national pipe threads	NPT
net positive suction head	NPSH
net positive suction head available	NPSHA
net positive suction head required	NPSHR
nitrogen oxide (total concentration of mono-nitrogen oxides such as nitric oxide [NO] and nitrogen dioxide [NO_2])	NOx
nominal pipe size	NPS
number	no.
operator interface terminal	OIT
ounce	oz
ounce-force	ozf
outside diameter	OD

parts per hundred	pph
parts per million	ppm
parts per billion	ppb
polyvinyl chloride	PVC
post meridian	p.m.
pound	lb
pounds per square inch	psi
pounds per square inch absolute	psia
pounds per square inch gauge	psig
pounds per square foot	psf
process control system	PCS
programmable logic controller	PLC
revolutions per minute	rpm
second	sec
specific gravity	sp gr, or SG
square	sq
square foot	sq ft, sf, or ft^2
square inch	sq in., or in^2
square yard	sq yd, or SY
standard	std
standard cubic feet per minute	scfm
total dynamic head	TDH
totally-enclosed fan-cooled	TEFC
volt	V
volts alternating current	vac
volts direct current	vdc
volatile organic compounds	VOC

1.6 REFERENCE STANDARDS

A. Refer to Article 3.02 of the Standard General Conditions, as may be modified by the Supplementary Conditions, relative to reference standards and resolving discrepancies between reference standards and the Contract Documents. Provisions of reference standards are in effect in accordance with the Specifications.

B. Copies of Standards: Each entity engaged in the Work shall be familiar with reference standards applicable to its construction activity. Copies of applicable reference standards are not bound with the Contract Documents. Where reference

standards are needed for a construction activity, obtain copies of standards from the publication source.

C. Abbreviations and Names: Where reference standards, specifications, codes, manuals, Laws or Regulations, or other published data of international, national, regional or local organizations are referred to in the Contract Documents, the organization issuing the standard may be referred to by their acronym or abbreviation only. The following acronyms or abbreviations that may appear in the Contract Documents shall have the meanings indicated below. Listing is alphabetical by acronym.

AA	Aluminum Association
AABC	Associated Air Balance Council
AAMA	American Architectural Manufacturers Association
AASHTO	American Association of State Highway and Transportation Officials
ACI	American Concrete Institute
ACS	American Chemical Society
ADSC-IAFD	International Association of Foundation Drilling.
AEIC	Association of Edison Illuminating Companies
AF&PA	American Forest and Paper Association
ABMA	American Bearing Manufacturers Association (formerly Anti-Friction Bearing Manufacturers Association [AFBMA])
AGMA	American Gear Manufacturers Association
AI	Asphalt Institute
AIA	American Institute of Architects
AIChE	American Institute of Chemical Engineers
AISC	American Institute of Steel Construction
AISI	American Iron and Steel Institute
AITC	American Institute of Timber Construction
ALSC	American Lumber Standards Committee
AMA	Acoustical Materials Association
AMCA	Air Movement and Control Association
AMP	National Association of Architectural Metal Manufacturers, Architectural Metal Products Division
ANSI	American National Standards Institute
APA	The Engineered Wood Association
APHA	American Public Health Association
API	American Petroleum Institute
AREA	American Railway Engineering Association
ARI	Air Conditioning and Refrigeration Institute

ASAE	American Society of Agricultural Engineers
ASCE	American Society of Civil Engineers
ASHRAE	American Society of Heating, Refrigerating and Air Conditioning Engineers
ASME	American Society of Mechanical Engineers
ASNT	American Society for Non-Destructive Testing
ASQ	American Society for Quality
ASSE	American Society of Safety Engineers
ASTM	American Society for Testing and Materials
AWCI	Association of the Wall and Ceiling Industry
AWI	Architectural Woodwork Institute
AWPA	American Wood Protection Association
AWPI	American Wood Preservers Institute
AWS	American Welding Society
AWWA	American Water Works Association
BAAQMD	Bay Area Air Quality Management District
BHMA	Builders Hardware Manufacturers Association
BIA	Brick Industry Association
CBMA	Certified Ballast Manufacturers Association
CDA	Copper Development Association
CEMA	Conveyor Equipment Manufacturers Association
CGA	Compressed Gas Association
CISCA	Ceilings and Interior Systems Construction Association
CISPI	Cast Iron Soil Pipe Institute
CLFMI	Chain Link Fence Manufacturers Institute
CMAA	Crane Manufacturers Association of America
CRSI	Concrete Reinforcing Steel Institute
CSI	Construction Specifications Institute
DIN	Deutsches Institut fur Normung eV (German Institute for Standardization)
DIPRA	Ductile Iron Pipe Research Association
EJCDC	Engineers Joint Contract Documents Committee
EJMA	Expansion Joint Manufacturers Association, Inc.
ETL	Intertek Testing Services, Inc. (formerly ETL Testing Laboratories, Inc.)
FCC	Federal Communications Commission
FEMA	Federal Emergency Management Agency
FHWA	Federal Highway Administration
FM	Factory Mutual (FM Global)

FRPI	Fiberglass Reinforced Plastics Institute
FS	Federal Specification
GA	Gypsum Association
GANA	Glass Association of North America
HEW	United States Department of Health, Education and Welfare
HI	Hydraulic Institute
HMI	Hoist Manufacturers Institute
HUD	United States Department of Housing and Urban Development
IBC	International Building Code
ICC	International Code Council
ICEA	Insulated Cable Engineers Association
IEEE	Institute of Electrical and Electronics Engineers
IESNA	Illuminating Engineering Society of North America
IFI	Industrial Fasteners Institute
IRI	Industrial Risk Insurers
ISA	Instrumentation, Systems, and Automation Society (formerly Instrument Society of America)
ISO	Insurance Services Office
ISO	International Organization for Standardization
LPI	Lightning Protection Institute
MIA	Marble Institute of America
ML/SFA	Metal Lath/Steel Framing Association
MS	Military Specifications
MSS	Manufacturers' Standardization Society
MMA	Monorail Manufacturers Association
NAAMM	National Association of Architectural Metal Manufacturers
NACE	National Association of Corrosion Engineers
NAPF	National Association of Pipe Fabricators, Inc.
NARUC	National Association of Regulatory Utilities Commissioners
NBHA	National Builders Hardware Association
NBS	United States Department of Commerce, National Bureau of Standards
NCMA	National Concrete Masonry Association
NEC	National Electrical Code
NELMA	Northeastern Lumber Manufacturers' Association
NEMA	National Electrical Manufacturers Association
NESC	National Electrical Safety Code
NETA	International Electrical Testing Association
NFPA	National Fire Protection Association

NFRC	National Fenestration Rating Council
NGA	National Glass Association
NHLA	National Hardwood Lumber Association
NHPMA	Northern Hardwood and Pine Manufacturers Association
NIST	United States Department of Commerce, National Institute of Standards and Technology
NLGA	National Lumber Grades Authority
NRCA	National Roofing Contractors Association
NRMCA	National Ready Mixed Concrete Association
NSF	National Sanitation Foundation
NSSGA	National Stone, Sand, and Gravel Association
NTMA	National Terrazzo and Mosaic Association
OSHA	Occupational Safety and Health Administration
PCA	Portland Cement Association
PCI	Precast/Prestressed Concrete Institute
PEI	Porcelain Enamel Institute
PFI	Pipe Fabrication Institute
PPI	Plastics Pipe Institute
PGMC	Primary Glass Manufacturers Council
PS	Product Standards Section, United States Department of Commerce
RCSC	Research Council on Structural Connections (part of AISC)
RMA	Rubber Manufacturers Association
SAE	Society of Automotive Engineers
SCAQMD	Southern California Air Quality Management District
SCPRF	Structural Clay Products Research Foundation
SCTE	Society of Cable Telecommunications Engineers
SDI	Steel Deck Institute
SDI	Steel Door Institute
SIGMA	Sealed Insulating Glass Manufacturing Association
SJI	Steel Joist Institute
SMACNA	Sheet Metal and Air Conditioning Contractor’s National Association
SPI	Society of the Plastics Industry
SPIB	Southern Pine Inspection Bureau
SSPC	Society for Protective Coatings
SWI	Steel Window Institute
TCNA	Tile Council of North America
TEMA	Tubular Exchanger Manufacturers Association

TIA/EIA	Telecommunications Industry Association/Electronic Industries Alliance
UL	Underwriters Laboratories, Inc.
USAB	United States Access Board
USDOE	United States Department of Energy
USEPA	United States Environmental Protection Agency
USGBC	United States Green Building Council
USGS	United States Geological Survey
USPHS	United States Public Health Service
WCLIB	West Coast Lumber Inspection Bureau
WCMA	Window Covering Manufacturers Association
WCMA	Wood Component Manufacturers Association
WDMA	Window and Door Manufacturers Association
WEF	Water Environment Federation
WWEMA	Water and Wastewater Equipment Manufacturers Association
WWPA	Western Wood Products Association

PART 2 – PRODUCTS (NOT USED)

PART 3 – EXECUTION (NOT USED)

+ + END OF SECTION + +

SECTION 01 45 29

TESTING LABORATORY SERVICES FURNISHED BY CONTRACTOR

PART 1 – GENERAL

1.1 DESCRIPTION

A. Scope:
   1. CONTRACTOR shall employ and pay for services of independent testing laboratory to perform specified services.
   2. Inspection, sampling, and testing shall be as specified in the Specifications including but not limited to:
      a. Section 03 30 05, Concrete.
      b. Section 05 05 33, Anchor Systems.
      c. Section 09 91 00, Painting.
      d. Section 40 05 05, Exposed Piping Installation.
      e. Other tests indicated in the Contract Documents that are not specifically assigned to others.
   3. CONTRACTOR shall pay for:
      a. Tests not specifically indicated in the Contract Documents as being OWNER's responsibility.
      b. Tests made for CONTRACTOR's convenience.
      c. Repeat tests required because of CONTRACTOR's negligence or defective Work, and retesting after failure of test for the same item to comply with the Contract Documents.
   4. Testing laboratory is not authorized to approve or accept any portion of the Work or defective Work; rescind, alter, or augment requirements of Contract Documents; and perform duties of CONTRACTOR.

1.2 REFERENCES

A. Standards referenced in this Section are:
   1. ASTM E329, Specification for Agencies Engaged in Construction Inspection, Testing, or Special Inspection.
   2. ISO/IEC 17025, General Requirements for the Competence of Testing and Calibration Laboratories.
   3. NIST SRM, Standard Reference Materials.

1.3 QUALITY ASSURANCE

A. Qualifications:
   1. Testing Laboratory:
      a. Comply with applicable requirements of ASTM E329.

b. Testing laboratory shall be licensed to operate in the same jurisdiction as the Site. Where applicable, laboratory shall be certified by the authority having jurisdiction for the types of testing required.

c. Testing equipment used by laboratory shall be calibrated at intervals of not more than twelve months by devices of accuracy traceable to one of the following: NIST SRM, ISO/IEC 17025, certified by state or local bureau of weights and measures, or values of natural physical constants generally accepted in the engineering and scientific community.

1.4 SUBMITTALS

A. Informational Submittals: Submit the following:

1. Quality Control Submittals and Test Reports: Testing laboratory shall promptly submit to CONTRACTOR results of testing and inspections, including:
   a. Date issued.
   b. Project title, number, and name of the Site.
   c. Testing laboratory name and address.
   d. Name and signature of inspector or person obtaining samples.
   e. Date of inspection or sampling.
   f. Record of temperature and weather conditions.
   g. Date of test.
   h. Identification of material or item tested, and associated Specifications Section.
   i. Location in the Project.
   j. Type of inspection or test.
   k. Results of tests and observations regarding compliance with the Contract Documents. Results shall be stamped and signed by a registered Professional Engineer licensed in the state of Florida.
2. Qualifications Statements:
   a. Testing Laboratory:
      1) Qualifications statement indicating experience and facilities for tests required under the Contract Documents.
      2) Copy of report of inspection of facilities during most recent NIST inspection tour. Include memorandum of remedies of deficiencies reported during inspection.
      3) Copy of certificate of calibration for each instrument or measuring device proposed for use, by accredited calibration agency.

1.5 TESTING LABORATORY DUTIES

A. Testing laboratory shall:

1. Cooperate with CONTRACTOR and provide qualified personnel promptly on notice.
2. Perform required inspections, sampling, and testing of materials and methods of construction; comply with applicable reference standards and the Contract Documents; and ascertain compliance with requirements of the Contract Documents.

3. Promptly notify ENGINEER and CONTRACTOR of irregularities or deficiencies in the Work that are observed during performance of services.
4. Promptly submit to CONTRACTOR reports of inspections and tests.
5. Perform additional tests and services, as required by CONTRACTOR.

1.6 CONTRACTOR'S RESPONSIBILITIES

A. CONTRACTOR shall:
   1. Cooperate with testing laboratory personnel.
   2. Provide to testing laboratory preliminary representative samples of materials and items to be tested, in required quantities.
   3. Promptly submit to ENGINEER results of tests and inspections received from testing laboratory.
   4. Furnish to laboratory the preliminary design mix proposed for concrete and other material mixes to be tested by testing laboratory.
   5. Provide labor and facilities:
      a. For access to the Work to be tested, and where required, to Suppliers' operations.
      b. For obtaining and handling samples at the Site.
      c. For facilitating inspections and tests.
      d. For testing laboratory's exclusive use for storing and curing of test samples.
      e. Forms for preparing concrete test beams and cylinders.
   6. Notify laboratory and ENGINEER sufficiently in advance of operations to allow assignment of personnel and scheduling of tests.
   7. Arrange with laboratory and pay for additional services, sampling, and testing required for CONTRACTOR's convenience.

PART 2 – PRODUCTS (NOT USED)

PART 3 – EXECUTION (NOT USED)

+ + END OF SECTION + +

** THIS PAGE INTENTIONALLY LEFT BLANK **

SECTION 01 65 00

PRODUCT DELIVERY REQUIREMENTS

PART 1 - GENERAL

1.1 DESCRIPTION

A. Scope:
   1. This Section includes general requirements for preparing for shipping, delivering, and handling materials and equipment to be incorporated into the Work.
   2. CONTRACTOR shall make all arrangements for transporting, delivering, and handling of materials and equipment required for prosecution and completion of the Work.
   3. When required, move stored materials and equipment without changes to the Contract Price or Contract Times.

1.2 SUBMITTALS

A. Refer to individual Specifications Sections for submittal requirements relative to delivering and handling materials and equipment.

1.3 PREPARING FOR SHIPMENT

A. When practical, factory-assemble materials and equipment. Mark or tag separate parts and assemblies to facilitate field-assembly. Cover machined and unpainted parts that may be damaged by the elements or climate with strippable, protective coating.

B. Package materials and equipment to facilitate handling, and protect materials and equipment from damage during shipping, handling, and storage. Mark or tag outside of each package and crate to indicate the associated purchase order number, bill of lading number, contents by name, OWNER's contract designation, CONTRACTOR name, equipment number, and approximate weight. Include complete packing lists and bills of materials with each shipment.

C. Protect materials and equipment from exposure to the elements and damage by climate, and keep thoroughly dry and dust-free at all times. Protect painted surfaces against impact, abrasion, discoloration, and other damage. Lubricate bearings and other items requiring lubrication in accordance with manufacturer's instructions.

D. Do not ship materials and equipment until:
   1. Related Shop Drawings, Samples, and other submittals required by the Contract Documents have been approved or accepted (as applicable) by

ENGINEER, including, but not necessarily limited to, all Action Submittals associated with the materials and equipment being delivered.

2. Manufacturer's instructions for handling, storing, and installing the associated materials and equipment have been submitted to and accepted by ENGINEER in accordance with the Specifications.
3. Results of source quality control testing (factory testing), when required by the Contract Documents for the associated materials or equipment, have been submitted to and accepted by ENGINEER.
4. Facilities required for handling materials and equipment in accordance with the Contract Documents and manufacturer's instructions are in place and available.
5. Required storage facilities have been provided.

1.4 DELIVERY

A. Scheduling and Timing of Deliveries:
   1. Arrange deliveries of materials and equipment in accordance with the Progress Schedule accepted by ENGINEER and in ample time to facilitate inspection and observation prior to installation.
   2. Schedule deliveries to minimize space required for and duration of storage of materials and equipment at the Site or other delivery location, as applicable.
   3. Coordinate deliveries to avoid conflicting with the Work and conditions at Site, and to accommodate the following:
      a. Work of other contractors and OWNER.
      b. Storage space limitations.
      c. Availability of equipment and personnel for handling materials and equipment.
      d. OWNER's use of premises.
   4. Deliver materials and equipment to the Site during regular working hours.
   5. Deliver materials and equipment to avoid delaying the Work and the Project, including work of other contractors, as applicable. Deliver anchor system materials, including anchor bolts to be embedded in concrete or masonry, in ample time to avoid delaying the Work.

B. Deliveries:
   1. Shipments shall be delivered with CONTRACTOR's name, Subcontractor's name (if applicable), Site name, Project name, and Bid number (example: "ABC Construction Co., Indian River County Central WWTF, Florida, RAS and WAS Improvements, Bid No. 2019-123") clearly marked.
   2. Site may be listed as the "ship to" or "delivery" address; but OWNER shall not be listed as recipient of shipment unless otherwise directed in writing by ENGINEER.
   3. Provide CONTRACTOR's telephone number to shipper; do not provide OWNER's telephone number.
   4. Arrange for deliveries while CONTRACTOR's personnel are at the Site. CONTRACTOR shall receive and coordinate shipments upon delivery.

Shipments delivered to the Site when CONTRACTOR is not present will be refused by OWNER, and CONTRACTOR shall be responsible for the associated delays and additional costs, if incurred.

C. Containers and Marking:
   1. Have materials and equipment delivered in manufacturer's original, unopened, labeled containers.
   2. Clearly mark partial deliveries of component parts of materials and equipment to identify materials and equipment, to allow easy accumulation of parts, and to facilitate assembly.

D. Inspection of Deliveries:
   1. Immediately upon delivery, inspect shipment to verify that:
      a. Materials and equipment comply with the Contract Documents and approved or accepted (as applicable) submittals.
      b. Quantities are correct.
      c. Materials and equipment are undamaged and of the required quality.
      d. Containers and packages are intact and labels are legible.
      e. Materials and equipment are properly protected.
   2. Promptly remove damaged materials and equipment from the Site and expedite delivery of new, undamaged materials and equipment, and remedy incomplete or lost materials and equipment. Furnish materials and equipment in accordance with the Contract Documents, to avoid delaying progress of the Work.
   3. Advise ENGINEER in writing when damaged, incomplete, or defective materials and equipment are delivered, and advise ENGINEER of the associated impact on the Progress Schedule.

1.5 HANDLING OF MATERIALS AND EQUIPMENT

A. Provide equipment and personnel necessary to handle materials and equipment, including those furnished by OWNER, by methods that prevent soiling or damaging materials and equipment and packaging.

B. Provide additional protection during handling as necessary to prevent scraping, marring, and otherwise damaging materials and equipment and surrounding surfaces.

C. Handle materials and equipment by methods that prevent bending and overstressing.

D. Lift heavy components only at designated lifting points.

E. Handle materials and equipment in safe manner and as recommended by the manufacturer to prevent damage. Do not drop, roll, or skid materials and equipment off delivery vehicles or at other times during handling. Hand-carry or use suitable handling equipment.

PART 2 – PRODUCTS (NOT USED)

PART 3 – EXECUTION (NOT USED)

+ + END OF SECTION + +

SECTION 01 66 00

PRODUCT STORAGE AND HANDLING REQUIREMENTS

PART 1 – GENERAL

1.1 DESCRIPTION

A. Scope:
   1. This Section includes general requirements for storing and protecting materials and equipment.
   2. CONTRACTOR shall provide all labor, materials, tools, equipment, and incidentals to store and handle materials and equipment to be incorporated into the Work, and other materials and equipment at the Site.

1.2 STORAGE

A. Store and protect materials and equipment in accordance with manufacturer's recommendations and the Contract Documents.

B. General:
   1. CONTRACTOR shall make all arrangements and provisions necessary for, and pay all costs for, storing materials and equipment.
   2. Excavated materials, construction equipment, and materials and equipment to be incorporated into the Work shall be placed to avoid injuring the Work and existing facilities and property, and so that free access is maintained at all times to all parts of the Work and to public utility installations in vicinity of the Work.
   3. Store materials and equipment neatly and compactly in locations that cause minimum inconvenience to OWNER, facility manager, other contractors, public travel, and owners, tenants, and occupants of adjoining property.
   4. Arrange storage in manner to allow easy access for inspection by ENGINEER.

C. Storage Location:
   1. Areas available at the Site for storing materials and equipment are shown or indicated in the Contract Documents, or as acceptable to ENGINEER.
   2. Restrictions:
      a. Do not store materials or equipment in structures being constructed unless approved by ENGINEER in writing.
      b. Do not use lawns or other private property for storage without written permission of the owner or other person in possession or control of such premises.

D. Protection of Stored Materials:
   1. Store materials and equipment to become OWNER's property to ensure preservation of quality and fitness of the Work, including proper protection

against damage by freezing, moisture, and with outdoor ambient air high temperatures as high as 100 degrees F; temperature and humidity inside crates, containers, storage sheds, and packaging may be significantly higher than the outdoor ambient air temperature.

2. Store in indoor, climate-controlled storage areas all materials and equipment subject to damage by moisture, humidity, heat, cold, and other elements, unless otherwise acceptable to OWNER.
3. When placing orders to Suppliers for equipment and controls containing computer chips, electronics, and solid-state devices, CONTRACTOR shall obtain, coordinate, and comply with specific temperature and humidity limitations on materials and equipment, because temperature inside cabinets and components stored in warm temperatures can approach 200 degrees F.
4. CONTRACTOR shall be fully responsible for loss or damage (including theft) to stored materials and equipment.
5. Do not open manufacturer's containers until time of installation, unless recommended by the manufacturer or otherwise specified in the Contract Documents.

1.3 PROTECTION – GENERAL

A. Equipment to be incorporated into the Work shall be boxed, crated, or otherwise completely enclosed and protected during shipping, handling, and storage, in accordance with Section 01 65 00, Product Delivery Requirements.

B. Store all materials and equipment off the ground (or floor) on raised supports such as skids or pallets.

C. Protect painted surfaces against impact, abrasion, discoloration, and other damage. Painted equipment surfaces that are damaged or marred shall be repainted in their entirety in accordance with equipment manufacturer and paint manufacturer requirements, to the satisfaction of ENGINEER.

D. Protect electrical equipment, controls, and instrumentation against moisture, water damage, humidity, heat, cold, and dust. Space heaters provided in equipment shall be connected and operating at all times until equipment is placed in operation and permanently connected.

E. Store electric motors, pumps, and rotary drum thickener equipment in accordance with manufacturer's recommendations. Provide temporary power to motor space heater, if applicable.

1.4 UNCOVERED STORAGE

A. The following types of materials may be stored outdoors without cover on supports so there is no contact with the ground:
   1. Reinforcing steel.
   2. Structural steel.

3. Rigid electrical conduit, except PVC-coated conduit.
4. Piping, except PVC or chlorinated PVC (CPVC) pipe.

1.5 COVERED STORAGE

A. The following materials and equipment may be stored outdoors on supports and completely covered with covering impervious to water:
   1. Grout.
   2. Soil materials and granular materials such as aggregate.
   3. PVC and CPVC pipe.
   4. PVC-coated electrical conduit.

B. Tie down covers with rope and install covering properly sloped to prevent accumulation of water.

C. Store loose granular materials, with covering impervious to water, in well-drained area or on solid surfaces to prevent mixing with foreign matter.

1.6 FULLY PROTECTED STORAGE

A. Store all material and equipment not indicated in Articles 1.4 and 1.5 of this Section on supports in buildings or trailers that have concrete or wooden flooring, roof, and fully-closed walls on all sides. Covering with visquine plastic sheeting or similar material in space without floor, roof, and walls is unacceptable. Comply with the following:
   1. Provide heated storage for materials and equipment that could be damaged by low temperatures or freezing.
   2. Provide air-conditioned storage for materials and equipment that could be damaged by high temperatures or humidity.
   3. Protect mechanical and electrical equipment from being contaminated by dust, dirt, and moisture.
   4. Maintain humidity at levels recommended by manufacturers for electrical and electronic equipment.

1.7 HAZARDOUS MATERIALS AND EQUIPMENT

A. Prevent contamination of personnel, storage areas, and the Site. Comply with Laws and Regulations, manufacturer's instructions, and other provisions of the Contract Documents.

1.8 MAINTENANCE OF STORAGE

A. On a scheduled basis, periodically inspect stored materials and equipment to ensure that:
   1. Condition and status of storage facilities is adequate to provide required storage conditions.
   2. Required environmental conditions are maintained on continuing basis.

3. Materials and equipment exposed to elements are not adversely affected.

B. Mechanical and Electrical Equipment in Long-Term Storage:
   1. Mechanical and electrical equipment requiring long-term storage shall have complete manufacturer's instructions for servicing each item, with notice of enclosed instructions shown on exterior of container or packaging.
   2. Comply with manufacturer's instructions on scheduled basis.
   3. Space heaters that are part of electrical equipment shall be connected and operated continuously until equipment is placed in service and permanently connected.

1.9 MICROPROCESSORS, PANELS, AND INSTRUMENTATION STORAGE

A. Store control panels, microprocessor-based equipment, electronics, and other devices subject to damage or decreased useful life because of temperatures below 40 degrees F or above 100 degrees F, relative humidity above 90 percent, or exposure to rain or exposure to blowing dust in climate-controlled storage space.

B. General:
   1. OWNER and ENGINEER have the right to observe or inspect materials and equipment during normal working hours.
   2. Place inside each control panel or device a desiccant, volatile corrosion inhibitor blocks (VCI), moisture indicator, and maximum-minimum indicating thermometer.
   3. Check panels and equipment not less than once per month. Replace desiccant, VCI, and moisture indicator as often as required, or every six months, whichever occurs first.
   4. Certified record of daily maximum and minimum temperature and humidity in storage facility shall be available for inspection by OWNER and ENGINEER. Certified record of monthly inspection, noting maximum and minimum temperature for month, condition of desiccant, VCI, and moisture indicator, shall be made available to OWNER and ENGINEER upon request.

C. Costs for storing climate-sensitive materials and equipment shall be paid by CONTRACTOR. Replace panels and devices damaged during storage, or for which storage temperatures or humidity range has been exceeded, at no additional cost to OWNER. Delays resulting from such replacement are causes within CONTRACTOR's control.

D. Do not ship control panels and equipment to the Site until conditions at the Site are suitable for installation, including slabs and floors, walls, roofs, and environmental controls. Failure to have the Site ready for installation shall not relieve CONTRACTOR from complying with the Contract Documents.

1.10 RECORDS

A. Keep up-to-date account of materials and equipment in storage to facilitate

preparation of Applications for Payment, if the Contract Documents provide for payment for materials and equipment not incorporated in the Work but delivered and suitably stored at the Site or at another location agreed to in writing.

PART 2 – PRODUCTS (NOT USED)

PART 3 – EXECUTION (NOT USED)

+ + END OF SECTION + +

** THIS PAGE INTENTIONALLY LEFT BLANK **

SECTION 01 71 33

PROTECTION OF THE WORK AND PROPERTY

PART 1 – GENERAL

1.1 DESCRIPTION

A. Scope:
   1. This Section includes general requirements for safety and protection that augment the requirements of the Standard General Conditions, as may be modified by the Supplementary Conditions.
   2. CONTRACTOR shall be responsible for taking all precautions, providing all programs, and taking all actions necessary to protect personnel health and safety, and to protect the Work and all public and private property and facilities from damage, as specified in the Standard General Conditions, Supplementary Conditions, and the Specifications.
   3. To prevent damage, injury, or loss, CONTRACTOR's actions shall include the following:
      a. Provide measures for safety of personnel at the Site, including workers engaged in the Work, delivery personnel, testing and inspection personnel, personnel of authorities having jurisdiction, other visitors to the Site, the public, OWNER's personnel, facility manager's personnel (if different from OWNER), ENGINEER, and Resident Project Representative (if any).
      b. Storing apparatus, materials, supplies, and equipment in an orderly, safe manner that does not unduly interfere with progress of the Work or work of other contractors, utility owners, and owners of transportation rights-of-way.
      c. Providing suitable storage facilities for materials and equipment subject to damage or degradation by exposure to climate, temperature, theft, breakage, or other cause.
      d. Placing upon the Work or any part thereof only loads consistent with the safety and integrity of that portion of the Work and existing construction.
      e. Frequently removing and disposing of refuse, rubbish, scrap materials, and debris caused by CONTRACTOR's operations so that, at all times, the Site is safe, orderly, and workmanlike in appearance.
      f. Providing temporary barricades, fencing, and guard rails around the following: openings, scaffolding, temporary stairs and ramps, around excavations, for elevated walkways, and other areas that may present a fall-hazard or hazard to vehicles.
   4. Do not, except after written consent from proper parties, enter or occupy privately-owned property or premises with personnel, tools, materials or equipment, except on lands and easements provided by OWNER.
   5. CONTRACTOR has full responsibility for preserving public and private property and facilities on and adjacent to the Site. Direct or indirect damage

done by, or on account of, any act, omission, neglect, or misconduct by CONTRACTOR in executing the Work, shall be remedied by CONTRACTOR, at his expense, to condition equal to that existing before damage was done.

PART 2 – PRODUCTS (NOT USED)

PART 3 – EXECUTION

3.1 PROTECTION OF EXISTING STRUCTURES

A. Surface Structures:
   1. Surface structures are existing buildings, structures, and other facilities at or above ground surface, including their foundations and any extension below ground surface. Surface structures include, but are not limited to, buildings, tanks, walls, bridges, roads, dams, channels, open drainage routes, exposed piping and utilities, poles, exposed wires, posts, signs, markers, curbs, walks, fencing, and other facilities visible at or above ground surface.
   2. Existing surface facilities, including but not limited to guard rails, posts, guard cables, signs, poles, markers, curbs, and fencing, that are temporarily removed to facilitate the Work shall be replaced and restored to their pre-construction condition at CONTRACTOR's expense.

B. Protection of Surface Structures:
   1. CONTRACTOR shall sustain in their places and protect from direct or indirect injury all and surface structures located within or adjacent to the limits of the Work. Such sustaining and supporting shall be done carefully and as required by the party owning or controlling such structure or facility.
   2. Before proceeding with the Work of sustaining and supporting such structure or facility, CONTRACTOR shall satisfy ENGINEER that methods and procedures to be used have been approved by party owning same.
   3. CONTRACTOR shall bear all risks attending the presence or proximity of all surface structures within or adjacent to limits of the Work, in accordance with the Contract Documents.
   4. CONTRACTOR shall be responsible for damage and expense for direct or indirect injury, caused by CONTRACTOR's activities, to structures and facilities. CONTRACTOR shall promptly repair damage caused by CONTRACTOR's activities, to the satisfaction of owner of damaged structure or facility.

3.2 PROTECTION OF FLOORS AND ROOFS

A. Protection of Floors and Roofs – General:

1. Use proper protective covering when moving equipment, handling materials or other loads, when painting, handling mortar or grout, and when cleaning walls, ceilings, or structure contents.
2. Use metal pans to collect oil and cuttings from piping, conduits, and rod threading machines, and under metal cutting machines.
3. Do not load concrete floors less than 28 days old without written permission of ENGINEER. Do not load floors, roofs, or slabs in excess of design loading.
4. Do not load roofs without written permission of ENGINEER.
5. Restrict access to roofs, and keep CONTRACTOR personnel off existing roofs, except as required for the Work.
6. If access to roofs is required, roofing, parapets, openings, and all other construction on or adjacent to roof shall be protected with suitable plywood or other acceptable means.

3.3 PROTECTION OF INSTALLED MATERIALS, EQUIPMENT, AND LANDSCAPING

A. Protect installed Work to prevent damage from subsequent operations. Remove protective items when no longer needed, prior to Substantial Completion of the Work.

B. Control traffic to prevent damage to equipment, materials, and surfaces.

C. Coverings:
   1. Provide temporary coverings to protect materials and equipment from damage.
   2. Cover projections, wall corners and jambs, sills, and soffits of openings, in areas used for traffic and for passage of materials and equipment in subsequent work.

+ + END OF SECTION + +

** THIS PAGE INTENTIONALLY LEFT BLANK **

SECTION 01 73 19

INSTALLATION

PART 1 – GENERAL

1.1 DESCRIPTION

A. Scope:
   1. This Section describes general requirements for installing materials and equipment. Additional installation requirements are included in the various Specifications Sections in Divisions 02 through 49 and elsewhere in the Contract Documents.
   2. CONTRACTOR shall provide all labor, materials, equipment, services, tools, and incidentals required to install materials and equipment.

1.2 QUALITY ASSURANCE

A. General:
   1. Provide appropriate quality assurance for installing materials and equipment, and provide quality control over Suppliers, materials and equipment, services, Site conditions, and workmanship, to provide Work of the required quality.

B. Qualifications:
   1. Installer:
      a. Installers shall be experienced in the types of Work required, including, but not limited to, the requirements of Section 01 42 00, References, and the Division 02 through 49 Specifications where the particular element of the Work is specified.

C. Regulatory Requirements: Comply with the following:
   1. 29 CFR 1910, OSHA.

PART 2 – PRODUCTS (NOT USED)

PART 3 – EXECUTION

3.1 INSTALLATION

A. General:
   1. Installation Instructions and Requirements:
      a. Install materials and equipment in accordance with approved Shop Drawings and CONTRACTOR's other submittals approved by ENGINEER, the Contract Documents, and manufacturer's installation instructions. When manufacturer's installation instructions conflict with

the Contract Documents, obtain interpretation or clarification from ENGINEER before proceeding.

b. Manufacturer's installation instructions include manufacturer's written instructions; drawings; illustrative, wiring and schematic diagrams; diagrams identifying external connections, terminal block numbers and internal wiring; and other such information pertaining to installation of materials and equipment. Included are all of manufacturer's printed installation instructions, including those that may be attached to equipment upon delivery.

2. Prior to installing materials and equipment, complete preparation of surfaces on which materials and equipment are to be installed. Prior to installing materials and equipment on new concrete, concrete shall achieve sufficient compressive strength to support the materials and equipment.
3. Maintain the work area in a broom-clean condition while installing materials and equipment.
4. Use proper tools to assemble materials and equipment. Do not deform or mar surface of shafts, nuts, and other parts.
5. Do not support rigging from building or structure without written permission of ENGINEER. CONTRACTOR is responsible for and shall repair damage to building or structure resulting from CONTRACTOR's operations, in accordance with Section 01 71 33, Protection of the Work and Property.
6. During installation, maintain materials and equipment in neutral position and do not exert undue stress on materials and equipment.
7. Tighten connections requiring gaskets evenly all around to ensure uniform stress over entire gasket.
8. Use only an oil bath heater to expand couplings, gears, and other mechanical components to be expanded for installation. Do not force or drive couplings, gears, and other mechanical components onto equipment shafts, or subject such items to open flame or torch.
9. Do not alter or repair materials and equipment and do not burn or weld materials and equipment unless required in the Contract Documents or allowed by ENGINEER.
10. Provide plugs in lubrication holes to prevent entry of foreign matter.

B. Setting and Erection:

1. Install materials and equipment plumb, level, true, and free of rack unless otherwise shown or indicated, and demonstrate plumbness and level to ENGINEER. Bring parts to proper bearing after installation and erection.
2. Anchorages:

a. Provide anchorage setting drawings in time to coordinate with fabrication of materials and equipment and the Work.

b. Anchorages shall comply with Section 05 05 33, Anchor Systems. Requests for approval of substitute materials or methods of anchorage shall be in accordance with the Standard General Conditions, Supplementary Conditions, and Section 01 25 00, Substitution Procedures.

3. Shimming:
    a. Wedging is not allowed.
    b. During installation, use the minimum number of shims required for leveling the equipment.
    c. Provide shims, filling pieces, keys, packing, grouting of the type required by the Contract Documents, and other materials and equipment necessary to properly align, level, and secure apparatus in place.
4. Installing Equipment onto Foundations:
    a. Using experienced millwrights, carefully set and align equipment on foundations, after equipment soleplates or baseplates (as applicable) have been shimmed to true alignment at anchorages.
    b. Set anchorages in place and tighten nuts against shims.
    c. Check bedplates or wing feet of equipment after securing to foundations and, after confirming alignments, grout soleplates or baseplates (as applicable) in place in accordance with the Contract Documents.
5. Ream misaligned holes. Do not "force" bolts or keys.
6. Where applicable, properly align equipment with associated piping and utility connections, without exerting undue stress on connecting piping and utilities.

C. Alignment and Leveling:
1. Verify that all shafts, couplings, and sheaves are properly aligned and adjust to required tolerances.
2. Align couplings while equipment is free of external loads.
3. Check angular and parallel alignment and record actual alignment and submit to ENGINEER. Alignment shall be within tolerances specified in Contract Documents and as recommended by Supplier of the material or equipment item.
4. Use laser indicators or dial indicators for checking angular and parallel alignment. Using dial indicators requires that, during rotation of half-couplings in performing testing, dial indicator shall be maintained in same relative position, and dial indicator readings taken at same place on circumference of coupling.

D. Threaded Connections:
1. Apply a molybdenum disulfide, anti-seize compound to threads in mechanical connections such as bolts, studs, cap screws, tubing, and other threads, unless otherwise shown or indicated.

3.2 FIELD QUALITY CONTROL

A. Supplier's Services:
1. When specified, provide competent, qualified representatives of material or equipment Supplier to perform services required, including: supervising installation, checking the completed installation, adjusting, testing of materials and equipment, and where required instructing operations and maintenance personnel in the use and care of materials and equipment.

+ + END OF SECTION + +

** THIS PAGE INTENTIONALLY LEFT BLANK **

SECTION 01 73 24

CONNECTIONS TO EXISTING FACILITIES

PART 1 – GENERAL

1.1 DESCRIPTION

A. Scope:
   1. This Section includes requirements for connections to existing facilities. Requirements for tie-ins and shutdowns necessary to complete the Work are in Section 01 14 16, Coordination with Owner's Operations.
   2. CONTRACTOR shall provide labor, materials, tools, equipment, and incidentals shown, specified, and required for performing connections to existing facilities.

B. Coordination:
   1. Review installation procedures under other Sections and coordinate Work that will be performed with or before the Work specified in this Section.

C. Related Sections:
   1. Section 01 14 16, Coordination with Owner's Operations.
   2. Section 01 73 29, Cutting and Patching.

D. General:
   1. Requirements for shutdowns, tie-ins, and other provisions on connections to existing facilities, are indicated in Section 01 14 16, Coordination with Owner's Operations.
   2. Requirements for cutting and patching are in Section 01 73 29, Cutting and Patching.
   3. To extent possible, materials, equipment, systems, piping, and appurtenances that will be placed into service upon completion of connection to existing facilities shall be checked, successfully tested, and in condition for operation prior to making connections to existing facilities, if valves, gates, or similar watertight and gastight isolation devices are not provided at the connection point.

PART 2 – PRODUCTS (NOT USED)

PART 3 – EXECUTION (NOT USED)

+ + END OF SECTION + +

** THIS PAGE INTENTIONALLY LEFT BLANK **

SECTION 01 73 29

CUTTING AND PATCHING

PART 1 – GENERAL

1.1 DESCRIPTION

A. Scope:
   1. This Section includes general requirements for cutting and patching Work.
   2. CONTRACTOR shall perform cutting and coring, and rough and finish patching of holes and openings in existing construction.
   3. Provide cutting, coring, fitting and patching, including attendant excavation and fill, required to complete the Work, and to:
      a. remove and replace defective Work;
      b. remove samples of installed Work as specified or required for testing;
      c. remove construction required to perform required alterations or additions to existing construction;
      d. uncover the Work for ENGINEER's observation of covered Work, testing or inspection by testing entities, or observation by authorities having jurisdiction;
      e. connect to completed Work not performed in proper sequence;
      f. remove or relocate existing utilities and piping that obstruct the Work in locations where connections are to be made;
      g. make connections or alterations to existing or new facilities.

1.2 SUBMITTALS

A. Action Submittals: Submit the following:
   1. Cutting and Patching Request:
      a. Submit written request to ENGINEER, well in advance of executing cutting or alteration that affects one or more of the following:
         1) Design function or intent of Project.
         2) Work of OWNER or other contractors.
         3) Structural value or integrity of an element of the Project.
         4) Integrity or effectiveness of weather-exposed or moisture-resistant elements or systems.
         5) Efficiency, operational life, maintenance, or safety of operational elements.
         6) Visual qualities of sight-exposed elements.
      b. Request shall include:
         1) Identification of Project and Contract designation.
         2) Description of affected Work of CONTRACTOR and work of others (if any).
         3) Necessity for cutting.

4) Effect on work or operations of OWNER, other contractors (if any), and on structural or weatherproof integrity of Project.
5) Description of proposed Work, describing: scope of cutting and patching; trades who will be executing the Work; materials and equipment to be used; extent of refinishing; schedule of operations; alternatives to cutting and patching, if any, and net effect on aesthetics following completion of finishing Work.
6) Designation of entity responsible for cost of cutting and patching, when applicable.
7) Written permission of other prime contractors (if any) whose work will or may be affected.

2. Recommendation Regarding Cutting and Patching:
   a. Should conditions of work or schedule indicate a change of materials or methods, submit written recommendation to ENGINEER including:
      1) Conditions indicating change.
      2) Recommendations for alternative materials or methods.
      3) Items required with request for approval of substitute, in accordance with the substitution request requirements of the Contract Documents.
3. Product Data:
   a. Submit manufacturer's data for the protective compound to be applied to core-drilled surfaces and cut concrete surfaces.
   b. When not required under other Sections, submit manufacturer's data on materials to be used for finishing around the cut or patched area.
   c. Furnish submittals for patching materials under the associated Specifications Section.

B. Informational Submittals: Submit the following:
   1. Written Notification of Cutting and Patching:
      a. Submit written indication designating the day and time that the construction associated with cutting and patching will be uncovered to allow for observation. Do not begin cutting or patching operations until submittal is accepted by ENGINEER.

PART 2 – PRODUCTS

2.1 MATERIALS

A. Materials - General:
   1. Use materials that comply with the Contract Documents.
   2. If not shown or indicated in the Contract Documents, use materials that are identical to existing materials affected by cutting and patching Work.
   3. For exposed surfaces, use materials that visually match existing adjacent surfaces to fullest extent possible. If identical materials are unavailable or cannot be used, use materials whose installed performance will equal or surpass that of existing materials.

4. Replace, patch, and repair materials and surfaces cut or damaged during cutting and patching operations, using materials that do not void required or existing warranties.

B. Compound Applied to Core-Drilled Surfaces and Cut Concrete Surfaces:
   1. After core-drilling and before installing the utility or equipment through the penetration, coat exposed concrete and steel with solvent-free, two-component, protective, epoxy resin coating.
   2. Color shall approximate the finish color of the existing surface to be coated.
   3. Product and Manufacturer: Provide one of the following:
      a. Sikagard 62, by Sika Corporation.
      b. Or equal.

PART 3 – EXECUTION

3.1 GENERAL

A. Perform cutting and coring in such manner that limits extent of patching required.

B. Structural Elements:
   1. Do not cut or patch structural elements in manner that would change the element's structural load-carrying capacity as load deflection ratio.

C. Operating Elements:
   1. Do not cut or patch operating elements in manner that would reduce their capacity to perform as intended.
   2. Do not cut or patch operating elements or related components in manner that would increase maintenance requirements or decrease operational life or safety.

D. Replace, patch, and repair materials and surfaces cut or damaged during cutting and patching operations, using methods that do not void required or existing warranties.

3.2 INSPECTION

A. Examine surfaces to be cut or patched, and conditions under which cutting or patching will be performed before starting cutting or patching Work.

B. Report unsatisfactory or questionable conditions to ENGINEER in writing. Do not proceed with cutting or patching Work until unsatisfactory conditions are corrected.

3.3 PREPARATION

A. Provide temporary support required to maintain structural integrity of facilities, to protect adjacent work from damage during cutting, and to support the element(s) to be cut.

B. Protection of Existing Construction during Cutting and Patching:
   1. Protect existing construction during cutting and patching to prevent damage. Provide protection from adverse weather conditions for portions of the Project and facility that will be exposed during cutting and patching operations.
   2. Avoid interference with use of adjoining areas or interruption of free passage to adjoining areas.
   3. Do not cut existing pipe, conduit, ductwork, or other utilities serving facilities scheduled to be removed or relocated until provisions have been made to bypass them.

3.4 CORING

A. Use core-drilling to make penetrations through concrete and masonry walls, slabs, or arches, unless otherwise accepted by ENGINEER in writing.

B. Coring:
   1. Perform coring with non-impact rotary tool using diamond core-drills. Size holes for pipe, conduit, sleeves, equipment or mechanical seals, as required, to be installed through the penetration.
   2. Do not core-drill through electrical conduit or other utilities embedded in walls or slabs without approval of ENGINEER. To extent possible, avoid cutting reinforcing steel in slabs and walls.

C. Protection:
   1. Protect existing equipment, utilities, and adjacent areas from water and other damage caused by or resulting from core-drilling operations.
   2. After core-drilling and before installing the utility or equipment through the penetration, coat exposed concrete and steel with protective coating material indicated in this Section. Apply protective coating in accordance with manufacturer's instructions.

D. Cleaning:
   1. After core-drilling, vacuum or otherwise remove slurry and tailings from the work area.

3.5 CUTTING

A. Cutting – General:
   1. Cut existing construction using methods least-likely to damage elements retained and adjoining construction and that provide proper surfaces to receive subsequent installation or repair.
   2. In general, use hand tools or small power tools suitable for sawing or grinding. When possible, avoid using hammering and avoid chopping.
   3. Cut holes and slots as small as possible, neatly to the size required, and with minimum disturbance of adjacent surfaces.
   4. Prior to starting to cut, provide adequate bracing of area to be cut.

5. To avoid marring existing finished surfaces, cut or drill from exposed or finished side into concealed side.
6. Provide equipment of adequate size to remove the cut panel or "coupon".
7. Provide temporary covering over cut openings where not in use.

B. Cutting – Concrete and Masonry:
1. Cut through concrete and masonry using concrete wall saw with diamond saw blades.
2. On both of the element being cut, provide for control of slurry generated during sawing.
3. After cutting concrete and before installing subsequent construction on or through the opening, coat exposed concrete and steel with protective coating material indicated in this Section. Apply protective coating in accordance with manufacturer's instructions.

3.6 PATCHING

A. Patching – General:
1. Patch construction by filling, repairing, refinishing, closing-up, and similar operations following performance of other Work.
2. Patch with durable seams that are as inconspicuous as possible. Provide materials and comply with installation requirements indicated in the Contract Documents.
3. Patch to provide airtight and watertight connections to pipes, sleeves, ducts, conduit, and other penetrations through surfaces.
4. Where feasible, test patched areas to demonstrate integrity of installation.

B. Restoration:
1. Restore exposed finishes of patched areas and extend finish restoration into retained adjoining construction in manner that eliminates evidence of patching and refinishing.
2. For continuous surfaces, refinish to nearest intersection.
3. For an assembly, refinish the entire unit that was patched.
4. Patch, repair, or rehang existing ceilings as necessary to provide an even-plane surface of uniform appearance.

3.7 CLEANING

A. Cleaning and Restoration:
1. Clean areas and spaces where cutting, coring, or patching were performed.
2. Clean piping, conduit, and similar constructions before applying paint or other finishing materials.
3. Restore damaged coverings of pipe and other utilities to original condition.

+ + END OF SECTION + +

** THIS PAGE INTENTIONALLY LEFT BLANK **

SECTION 01 74 05

CLEANING

PART 1 – GENERAL

1.1 DESCRIPTION

A. Scope:
   1. This Section includes requirements for keeping the Site free of accumulations of waste materials during construction ("progress cleaning") and cleaning for Substantial Completion and prior to final inspection (collectively, "closeout cleaning").
   2. CONTRACTOR shall perform cleaning during the Project, including progress cleaning, upon completion of the Work, and as required by the Standard General Conditions, as may be modified by the Supplementary Conditions, and this Section.
   3. Maintain in a clean manner the Site, the Work, and areas adjacent to or affected by the Work.

1.2 REFERENCES

A. Standards referenced in this Section are:
   1. NFPA 241, Safeguarding Construction, Alteration, and Demolition Operations.

PART 2 – PRODUCTS (NOT USED)

PART 3 – EXECUTION

3.1 PROGRESS CLEANING

A. General:
   1. Clean the Site, work areas, and other areas occupied by CONTRACTOR not less than weekly. Dispose of materials in accordance with the Standard General Conditions, as may be modified by the Supplementary Conditions, and the following:
      a. Comply with NFPA 241 for removing combustible waste materials and debris.
      b. Do not hold non-combustible materials at the Site more than three days if the temperature is expected to rise above 80 degrees F. When temperature is less than 80 degrees F, dispose of non-combustible materials within seven days of their generation.
      c. Provide suitable containers for storage of waste materials and debris.
      d. Containerize hazardous and unsanitary waste materials separately from other waste. Mark containers appropriately.

B. Site:
   1. Keep outdoor, dust-generating areas wetted down or otherwise control dust emissions.
   2. Brush-sweep roadways and paved areas at the Site that are used by construction vehicles or otherwise affected by construction activities. Frequency shall be as needed or as directed by ENGINEER.

C. Work Areas:
   1. Clean areas where the Work is in progress to maintain the extent of cleanliness necessary for proper execution of the Work.
   2. Remove liquid spills promptly. Immediately report spills to OWNER, ENGINEER, and authorities having jurisdiction, in accordance with the Contract Documents and Laws and Regulations.
   3. Where dust would impair proper execution of the Work, broom-clean or vacuum entire work area, as appropriate.
   4. Concealed Spaces: Remove debris from concealed spaces before enclosing the space.

D. Installed Work:
   1. Keep installed Work clean. Clean installed surfaces according to written instructions of manufacturer or fabricator of material or equipment installed, using only cleaning agents and methods specifically recommended by material or equipment manufacturer. If manufacturer does not recommend specific cleaning agents or methods, use cleaning agents and methods that are not hazardous to health and property and that will not damage exposed surfaces.

E. Exposed Surfaces: Clean exposed surfaces and protect as necessary to ensure freedom from damage and deterioration until Substantial Completion.

F. Cutting and Patching:
   1. Clean areas and spaces where cutting and patching are performed. Completely remove paint, mortar, oils, putty, trailings and cuttings, and similar materials.
   2. Thoroughly clean piping, conduits, and similar features before applying patching material, paint, or other finishing materials. Restore damaged coverings on piping, ducting, and similar items to its pre-construction condition.

G. Waste Disposal:
   1. Properly dispose of waste materials, surplus materials, debris, and rubbish off the Site.
   2. Do not burn or bury rubbish and waste materials at the Site.
   3. Do not discharge volatile or hazardous substances, such as mineral spirits, oil, or paint thinner, into storm sewers or sanitary sewers.
   4. Do not discharge wastes into surface waters or drainage routes.
   5. CONTRACTOR is solely responsible for complying with Laws and Regulations regarding storing, transporting, and disposing of waste generated by CONTRACTOR's operations or brought to the Site by CONTRACTOR.

H. During handling and installation of materials and equipment, clean and protect construction in progress and adjoining materials and equipment already in place. Apply protective covering where required for protection from damage or deterioration, until Substantial Completion.

I. Clean completed construction as frequently as necessary throughout the construction period.

3.2 CLOSEOUT CLEANING

A. Complete the following prior to requesting inspection for Substantial Completion:
   1. Clean and remove from the Site rubbish, waste material, debris, and other foreign substances.
   2. Sweep paved areas broom-clean. Remove petrochemical spills, stains, and other foreign deposits.
   3. Hose-clean sidewalks and loading areas.
   4. Repair pavement, roads, sod, and other areas affected by construction operations and restore to specified condition; if condition is not specified, restore to pre-construction condition.
   5. Clean exposed exterior and interior hard-surfaced finishes to dirt-free condition, free of spatter, grease, stains, fingerprints, films, and similar foreign substances.
   6. In unoccupied spaces, sweep concrete floors broom-clean.
   7. Remove non-permanent tags and labels.
   8. Surface Finishes:
      a. Touch-up and otherwise repair and restore chipped, scratched, dented or otherwise marred surfaces to specified finish and match adjacent surfaces.
      b. Do not paint over “UL” or similar labels, including mechanical and electrical nameplates.
   9. Wipe surfaces of mechanical and electrical equipment, and similar equipment. Remove excess lubrication, paint, and mortar droppings, and other foreign substances.
   10. Clean plumbing fixtures to sanitary condition, free of stains, including stains resulting from water exposure.
   11. Leave the Site clean, and in neat, orderly condition, satisfactory to OWNER and ENGINEER.

B. Complete the following prior to requesting final inspection:
   1. Following completion of the Work on the “punch list” of Work uncompleted at Substantial Completion, clean in accordance with Paragraph 3.2.A of this Section.

+ + END OF SECTION + +

** THIS PAGE INTENTIONALLY LEFT BLANK **

SECTION 01 75 11

CHECKOUT AND STARTUP PROCEDURES

PART 1 – GENERAL

1.1 DESCRIPTION

A. Scope:
   1. CONTRACTOR shall initially start up and place equipment and systems installed under the Contract into successful operation, in accordance with the equipment manufacturer's written instructions and as instructed by Supplier at the Site.
   2. Provide all material, labor, tools, and equipment required to complete equipment checkout and start-up.
   3. Provide chemicals, lubricants, and other required operating fluids.
   4. Provide fuel, electricity, water, filters, and other expendables required for start-up of equipment, unless otherwise specified.
   5. General activities by CONTRACTOR include the following:
      a. Cleaning, as required under other provisions of the Contract Documents.
      b. Removing temporary protective coatings.
      c. Flushing and replacing lubricants, where required by manufacturer.
      d. Lubrication.
      e. Checking shaft and coupling alignments and resetting where required.
      f. Checking and setting motor, pump, and other equipment rotation, safety interlocks, and belt tensions.
      g. Checking and correcting (as necessary) leveling plates, grout, bearing plates, anchorage devices, fasteners, and alignment of piping, conduits, and ducts that may place stress on the connected equipment.
      h. Performing all adjustments required.

B. Coordination:
   1. Coordinate checkout and start-up with other contractors, as necessary.
   2. Do not start up system or subsystem for continuous operation until all components of that system or subsystem, including instrumentation and controls, have been tested to the extent practicable and proven to be operable as intended by the Contract Documents.
   3. OWNER will furnish sufficient personnel to assist CONTRACTOR in starting up equipment, but responsibility for proper operation is CONTRACTOR's.
   4. Supplier shall be present during checkout, startup, and initial operation, unless otherwise acceptable to ENGINEER.
   5. Do not start up system, unit process, or equipment without submitting acceptable preliminary operations and maintenance manuals by CONTRACTOR in accordance with Section 01 78 23, Operations and Maintenance Data.

C. OWNER's Assumption of Responsibility for Equipment and Systems:
   1. OWNER will assume responsibility for the equipment upon Substantial Completion, unless otherwise mutually agreed upon by OWNER and CONTRACTOR or as documented in the certificate of Substantial Completion.
   2. Before turning over to OWNER responsibility for operating and maintaining system or equipment CONTRACTOR shall:
      a. Provide training of operations and maintenance personnel in accordance with individual Specifications.
      b. Complete performance of equipment and system field quality control testing in accordance with the Contract Documents, to the extent possible.
      c. Submit acceptable final operations and maintenance manuals in accordance with Section 01 78 23, Operations and Maintenance Data.
      d. Obtain from ENGINEER final certificate of Substantial Completion for either entire Work or the portion being turned over to OWNER.

1.2 SUBMITTALS

A. Closeout Submittals: Submit the following:
   1. Certifications:
      a. Supplier's certification of installation in accordance with Paragraph 3.1.B of this Section.

PART 2 – PRODUCTS (NOT USED)

PART 3 – EXECUTION

3.1 SERVICES OF SUPPLIER

A. When specified, furnish services of competent, qualified representatives of material and equipment manufacturers, including supervising installation, adjusting, checkout, startup, and testing of materials and equipment.

B. Certification:
   1. When services by Supplier are required at the Site, within 14 days after first test operation of equipment, submit to ENGINEER a letter from Supplier, on Supplier's letterhead, stating that materials and equipment are installed in accordance with Supplier's requirements and installation instructions, and in accordance with the Contract Documents.
   2. In lieu of Supplier letter, submit completed form attached to this Section.
   3. Include in the final operations and maintenance manual for the associated equipment a copy of the letter or completed form, as applicable.

3.2 MINIMUM STARTUP REQUIREMENTS

A. Bearings and Shafting:
   1. Inspect for cleanliness, and clean and remove foreign matter.
   2. Verify alignment.
   3. Replace defective bearings and those that operate in a rough or noisy manner.
   4. Grease as necessary, in accordance with manufacturer's recommendations.

B. Drives:
   1. Adjust tension in V-belt drives and adjust vari-pitch sheaves and drives for proper equipment speed.
   2. Adjust drives for alignment of sheaves and V-belts.
   3. Clean and remove foreign matter before starting operation.

C. Motors:
   1. Check each motor for comparison to amperage nameplate value.
   2. Correct conditions that produce excessive current flow and conditions that exist due to equipment malfunction.

D. Pumps:
   1. Check glands and seals for cleanliness and adjustment before running pump.
   2. Inspect shaft sleeves for scoring.
   3. Inspect mechanical faces, chambers, and seal rings, and replace if defective.
   4. Verify that piping system is free of dirt and scale before circulating liquid through pump.

E. Valves:
   1. Inspect manual and automatic control valves, and clean bonnets and stems.
   2. Tighten packing glands to ensure no leakage, but allow valve stems to operate without galling.
   3. Replace packing in valves to retain maximum adjustment after system is determined to be complete.
   4. Replace packing on valves that continue to leak.
   5. Remove, correct, and replace bonnets that leak.
   6. After cleaning, coat packing gland threads and valve stems with surface preparation of "Molycote" or "Fel-Pro".

F. Verify that control valve seats are free of foreign matter and are properly positioned for intended service.

G. Pipe Joints and Other Connections:
   1. Tighten flanges and other pipe joints after system has been placed in operation.
   2. Replace gaskets that show signs of leakage after tightening.
   3. Inspect all joints for leakage.
   4. Promptly remake each joint that appears to be faulty; do not wait for rust other corrosion to form.
   5. Clean threads on both parts and apply compound and remake joints.

H. After system has been placed in operation, clean strainers, drives, pockets, orifices, valve seats, and headers in fluid system to ensure freedom from foreign matter.

I. Remove rust, scale, and foreign matter from equipment and renew defaced surfaces.

J. Check each electrical control circuit to verify that operation complies with the Contract Documents.

K. Inspect each pressure gauge, thermometer, and other instruments for calibration. Replace items that are defaced, broken, or that read incorrectly.

L. Excess Gasses and Fluids:
   1. Vent gasses trapped in systems.
   2. Verify that liquids are drained from all parts of gas or air systems.

3.3 ATTACHMENTS

A. The attachment listed below, following this Section's "End of Section" designation, is a part of this Specification Section.
   1. Supplier's Installation Certification Form (one page).

+ + END OF SECTION + +

SUPPLIER'S INSTALLATION CERTIFICATION

Contract No. and Name: _____

Equipment Specification Section: _____

Equipment Name: _____

Contractor: _____

Manufacturer of Equipment: _____

The undersigned Supplier of the equipment or system described above hereby certifies that Supplier has checked the installation of the equipment or system and that the equipment or system, as specified in the Contract Documents, has been provided in accordance with the manufacturer's recommendations and the Contract Documents, and that the trial operation of the equipment or system has been satisfactory.

Comments: _____

_____	_____
Date	Supplier Name (print)
	_____
	Signature of Supplier
_____	_____
Date	Contractor Name (print)
	_____
	Signature of Contractor

** THIS PAGE INTENTIONALLY LEFT BLANK **

SECTION 01 77 19

CLOSEOUT REQUIREMENTS

PART 1 – GENERAL

1.1 GENERAL

A. Scope:
   1. Section Includes.
      a. Substantial Completion.
      b. Final inspection.
      c. Request for final payment and acceptance of the Work.

B. CONTRACTOR shall closeout project in accordance with the requirements contained in Article 14 of the Standard General Conditions, as may be modified by the Supplementary Conditions, and this Section.

1.2 SUBSTANTIAL COMPLETION

A. Substantial Completion – General:
   1. Prior to requesting Substantial Completion, perform the following for the substantially completed Work:
      a. Materials and equipment for which Substantial Completion is requested shall be fully ready for their intended use, including full operating and monitoring capability in automatic and manual modes.
      b. Complete field quality control Work, including testing at the Site, indicated in Specifications Sections for individual materials and equipment items. Submit results of, and obtain ENGINEER's acceptance of, field quality control tests required by the Contract Documents.
      c. Startup and checkout shall be completed in accordance with Section 01 75 11, Checkout and Startup Procedures, and requirements of the Specifications for the various materials and equipment in the substantially completed Work.
      d. Cleaning for Substantial Completion shall be completed in accordance with Section 01 74 05, Cleaning.
      e. Spare parts, extra stock materials, and tools shall be delivered and accepted in accordance with the individual Specifications for the various materials and equipment.
      f. Training shall be completed in accordance with the individual Specifications for the various equipment.
      g. Submit and obtain ENGINEER's acceptance of final operations and maintenance manuals.
      h. Obtain and submit to ENGINEER all required permits, inspections, and approvals of authorities having jurisdiction for the substantially completed Work to be occupied and used by Owner.

i. Complete other tasks that the Contract require be completed prior to Substantial Completion.

2. Procedures for requesting and documenting Substantial Completion are in the Standard General Conditions, as may be modified by the Supplementary Conditions.
3. Sample letter for CONTRACTOR to request inspection for Substantial Completion is attached to this Specifications Section. Use the model language of the sample letter, modified to suit the Project.
4. Form of certificate of Substantial Completion will be the same as sample included in Supplementary Conditions.
5. Refer to the Agreement and Section 01 29 76, Progress Payment Procedures, for requirements regarding consent of surety to partial release of or reduction in retainage.

1.3 FINAL INSPECTION

A. Final Inspection – General:
1. Prior to requesting final inspection, verify that all the Work is fully complete and ready for final payment. Partial checklist for this purpose is attached to this Specifications Section.
2. Sample letter for CONTRACTOR to request final inspection is attached to this Specifications Section. Use the model language of the sample letter, modified to suit the Project.
3. Procedures for requesting and documenting the final inspection are in the Standard General Conditions, as may be modified by the Supplementary Conditions, and as augmented in this Section.

1.4 REQUEST FOR FINAL PAYMENT AND ACCEPTANCE OF THE WORK

A. Procedure:
1. Submit request for final payment in accordance with the Agreement and Standard General Conditions, as may be modified by the Supplementary Conditions, and using procedure specified in Section 01 29 76, Progress Payment Procedures, and this Section.
2. Acceptance of the Work:
   a. Upon ENGINEER's receipt of the final Application for Payment, accompanied by other required Contract closeout documentation in accordance with the Contract Documents, ENGINEER will issue to OWNER and CONTRACTOR a notice of acceptability of the Work, in accordance with the General Conditions, as may be modified by the Supplementary Conditions.
   b. Nothing other than receipt of such notice of acceptability from ENGINEER constitutes acceptance of the Work.
   c. Unless decided otherwise by OWNER and ENGINEER, form of acceptance will be EJCDC® C-626, "Notice of Acceptability of Work", (2014 edition).

B. Request for final payment shall include:
   1. Documents required for progress payments in Section 01 29 76, Progress Payment Procedures.
   2. Documents required in the Standard General Conditions, as may be modified by the Supplementary Conditions.
   3. List of all disputes that Contractor believes are unsettled, presented on CONTRACTOR's letterhead. If there are no such disputes or Claims, so indicate in writing.
   4. Consent of Surety to Final Payment:
      a. Acceptable form includes AIA® G707™, "Consent of Surety to Final Payment" (1994 or later edition), or other form acceptable to OWNER.
   5. Releases of Liens:
      a. Submit "complete and legally effective releases (satisfactory to OWNER) of all Liens filed in connection with the Work, regardless of whether such Lien was filed by CONTRACTOR or any Subcontractor or Supplier.
      b. Each release of Lien shall be signed by an authorized representative of the entity submitting the release of Lien, and shall include CONTRACTOR's, Subcontractor's, or Supplier's (as applicable) corporate seal, when applicable.
   6. Waivers of Lien Rights:
      a. Submit legally-binding waivers of rights to file Liens on the form included in the Supplementary Conditions, from CONTRACTOR and each Subcontractor and Supplier that provided CONTRACTOR, Subcontractor, or Supplier with labor, material, or equipment totaling $1,000 or more for the Work.
      b. Furnish final list of Subcontractors and Suppliers, using the form included in Section 01 29 76, Progress Payment Procedures, indicating final amount of the associated subcontract or purchase order for each. Include on the list all lower-tier Subcontractors and Suppliers retained by higher-tier Subcontractors and Suppliers.
      c. Each waiver of Lien rights shall be signed by an authorized representative of the entity submitting waiver of Lien rights, and shall include CONTRACTOR's, Subcontractor's, or Supplier's (as applicable) corporate seal, when applicable.
      d. Waiver of Lien rights may be conditional upon receipt of final payment.
      e. Required Affidavits: Submit the following:
         1) Affidavit of payment of debts and claims submitted by CONTRACTOR. Acceptable form includes AIA® G706™, "Contractor's Affidavit of Payment of Debts and Claims" (1994 or later edition), or other form acceptable to OWNER, and;
         2) Affidavit of release of Liens, submitted by CONTRACTOR. Acceptable form includes AIA® G706A™, "Affidavit of Release of Liens" (1994 or later edition).
      f. Waivers of Lien rights and affidavits and supporting documents furnished under this Paragraph 1.4.B.6 shall comply with the requirements of the Standard General Conditions, as may be modified by the Supplementary Conditions.

g. Each affidavit furnished shall be signed by an authorized representative of the entity furnishing the affidavit, and shall include issuing entity's corporate seal, when applicable.

h. Where all required waivers of Lien rights and affidavits are not submitted:

1) Submit letter on CONTRACTOR's letterhead indicating the Subcontractor(s) and Suppliers for whom such waivers or releases were not obtained, amount owed to such entity, reason(s) why such amount was not previously paid, and indicate how CONTRACTOR intends to fulfill its obligations and assure OWNER that associated debts and claims are paid.

2) In lieu of the releases or waivers of Liens specified in Paragraphs 1.4.B.5 and 1.4.B.6 of this section, and as approved by OWNER, CONTRACTOR may furnish receipts or releases in full and an affidavit of CONTACTOR that: (a) the releases and receipts include all labor, services, material, and equipment for which a Lien could be filed; and (b) all payrolls, material and equipment bills, and other indebtedness connected with the Work for which OWNER might in any way be responsible, or which might in any way result in liens or other burdens on OWNER's property, have been paid or otherwise satisfied.

3) If any Subcontractor or Supplier fails to furnish such a release or receipt in full, CONTRACTOR may furnish a bond or other collateral satisfactory to OWNER to indemnify OWNER against any Lien, or OWNER at its option may issue joint checks payable to CONTRACTOR and specified Subcontractors and Suppliers.

i. Evidence satisfactory to OWNER that all title issues (not otherwise addressed by releases of Liens, waivers of Lien rights, and related documentation required in Paragraphs 1.4.B.5 and 1.4.B.6 of this section) have been resolved and that title will pass to OWNER free and clear of other title defects, or will so pass upon final payment.

PART 2 – PRODUCTS (NOT USED)

PART 3 – EXECUTION

3.1 ATTACHMENTS

A. The documents listed below, following this Section's "End of Section" designation, are part of this Specifications Section:

1. Sample letter for CONTRACTOR's use in requesting inspection for Substantial Completion (two pages).
2. Sample partial checklist to identify readiness for final inspection (four pages).
3. Sample letter for CONTRACTOR's use in requesting final inspection (one page).

B. In the model language of the attached sample letters for the CONTRACTOR to request inspection for Substantial Completion and the final inspection, italicized language in brackets, e.g., "[*insert date*]" indicates instructions to the drafter of the letter and often indicates specific information to be inserted by CONTRACTOR; do not include bracketed, italicized text in the final version of the letter(s) prepared for the Project. Non-italicized language in brackets is optional language; use the appropriate language to complete the actual letter for the Project and edit where required to suit the specific circumstances.

+ + END OF SECTION + +

SAMPLE LETTER FOR CONTRACTOR'S USE IN REQUESTING INSPECTION FOR SUBSTANTIAL COMPLETION

SENT VIA E-MAIL AND U.S. CERTIFIED MAIL/RETURN RECEIPT REQUESTED

[*Date*]

[*Name of Engineer's contact person*]
Arcadis U.S., Inc.
[*Street address*]
[*City, state, postal code*]

Subject:
[*Project name, Contract designation*]
Request for Inspection for Substantial Completion

Dear [*addressee*]:

In our opinion, [all of] [*or*] [a portion of] the Work under the above-referenced Contract is substantially complete as of [*insert month, day, year on which Substantial Completion was achieved*]. [The specific portion of the Work that we believe is substantially complete is [*insert identification of that portion of the Work that is substantially complete*].]

Enclosed is our listing of uncompleted Work items ("punch list"). In accordance with the Standard General Conditions, we hereby request: 1) That the Engineer schedule and perform the inspection for Substantial Completion as soon as possible, and 2) Issuance of the certificate of Substantial Completion.

Upon Substantial Completion, we propose the following relative to apportionment of responsibilities between the Owner and the Contractor:

1. Security, Protection, Insurance:
    a. Site Security: [*insert proposal; address whether Owner or Contractor will be responsible for security of the Site*].
    b. Protection of the Substantially Completed Work: [*insert proposal; address whether Owner or Contractor will be responsible for protection*].
    c. Property Insurance: [*insert proposal; typically Owner assumes responsibility for property insurance upon Substantial Completion*]
2. Operation and Maintenance:
    a. Operation: [*insert proposal; address whether Owner or Contractor will be responsible for operating the substantially completed Work*].

b. Maintenance: [*insert proposal; address whether Owner or Contractor will be responsible for maintaining the substantially completed Work*].

3. Utilities: [*for each of the following, indicate whether Owner or Contractor will be responsible for utilities and services, or whether responsibility will be shared; if shared, indicate proposed cost-sharing*]

   a. Electricity: [*insert proposal*].

   b. Natural Gas/Fuel/Heating: [*insert proposal*].

   c. Water Supply: [*insert proposal*].

   d. Wastewater: [*insert proposal*].

   e. Communications (Telephone, Internet, Video): [*insert proposal*].

In accordance with the Standard General Conditions, we understand that the Contract's correction period for the Work covered by the certificate of Substantial Completion commences on the Substantial Completion date documented in said certificate. [*Drafter: Also see Paragraph 15.08.C of the General Conditions and, where necessary, edit this paragraph of the letter accordingly.*]

Should you have questions or comments regarding this notice, please contact [the undersigned] [*or*] [*insert other contact person's name*], at [*insert telephone number and e-mail address*].

Sincerely,

[*Contractor's company name*]

[*Signatory name*]
[*Signatory's title*]

Attachments:
Preliminary list of uncompleted Work items ("punch list"; [*##*] pages)

Copies:
[*Owner's project manager*]

SAMPLE PARTIAL CHECKLIST TO IDENTIFY READINESS FOR FINAL INSPECTION

Project: _____
Contract: _____
Contractor: _____

Item No./Description	Completed/Date		In Progress	Not Started	Not Applicable	Target Date	Responsible Entity/Person
1. All Shop Drawings, Samples, and Submittals approved by Engineer	☐		☐	☐	☐		
Remarks:							
2. Final services completed by Suppliers, including submittal of "Supplier Installation Certification" in Section 01 75 11, Checkout and Startup Procedures	☐		☐	☐	☐		
Remarks:							
3. Final Work completed by Subcontractors	☐		☐	☐	☐		
Remarks:							
4. Permits closed out and regulatory compliance transitioned from construction to operations	☐		☐	☐	☐		
Remarks:							
5. All outstanding change issues are addressed and all Change Proposals submitted	☐		☐	☐	☐		

Item No./Description	Completed/Date		In Progress	Not Started	Not Applicable	Target Date	Responsible Entity/Person
Remarks:							
6. All Claims are resolved	☐		☐	☐	☐		
Remarks:							
7. All defective Work of which Contractor is aware has been corrected in accordance with the Contract Documents	☐		☐	☐	☐		
Remarks:							
8. Issues related to Constituents of Concern and potentially Hazardous Environmental Condition have been fully addressed	☐		☐	☐	☐		
Remarks:							
9. All spare parts, tools, and extra stock materials have been furnished in accordance with the Contract Documents, and documentation thereof submitted to Engineer	☐		☐	☐	☐		
Remarks:							
10. All final Operations & Maintenance manuals have been submitted and accepted by Engineer	☐		☐	☐	☐		
Remarks:							

Item No./Description	Completed/Date		In Progress	Not Started	Not Applicable	Target Date	Responsible Entity/Person
11. Manufacturer warranties and software license(s) furnished	☐		☐	☐	☐		
Remarks:							
12. Instruction and training of operations and maintenance personnel is complete and records of training submitted	☐		☐	☐	☐		
Remarks:							
13. MBE/WBE/DBE compliance report(s) submitted (when applicable)	☐		☐	☐	☐		
Remarks:							
14. All field engineering submittals, including survey data, furnished	☐		☐	☐	☐		
Remarks:							
15. All Work on “punch list” is complete in accordance with the Contract Documents	☐		☐	☐	☐		
Remarks:							
16. All record documents submitted to and accepted by Engineer	☐		☐	☐	☐		
Remarks:							
17. Contractor is fully demobilized from Site	☐		☐	☐	☐		
Remarks:							

Item No./Description	Completed/Date		In Progress	Not Started	Not Applicable	Target Date	Responsible Entity/Person
18. All Site restoration is complete	☐		☐	☐	☐		
Remarks:							
19. Final cleaning of all work areas is complete	☐		☐	☐	☐		
Remarks:							
20. Lien waivers or affidavits of payment obtained from Subcontractors and Suppliers	☐		☐	☐	☐		
Remarks:							
21. Evidence of Contractor liability insurance furnished for correction period	☐		☐	☐	☐		
Remarks:							
22. All other required Contract closeout documents obtained	☐		☐	☐	☐		
Remarks:							

SAMPLE LETTER FOR CONTRACTOR'S USE IN REQUESTING FINAL INSPECTION

SENT VIA E-MAIL AND U.S. CERTIFIED MAIL/RETURN RECEIPT REQUESTED

[*Date*]

[*Name of Engineer's contact person*]
Arcadis U.S., Inc.
[*Street address*]
[*City, state, postal code*]

Subject:
[*Project name, Contract designation*]
Request for Final Inspection

Dear [*addressee*]:

In our opinion, all of the Work under the above-referenced Contract is complete and ready for final payment as of [*insert month, day, year on which final completion was achieved*]. In accordance with the Standard General Conditions, we hereby request that the Engineer schedule and perform the final inspection as soon as possible. Upon successful completion of the final inspection, we will submit our final Application for Payment accompanied by the required Contract closeout documentation in accordance with the Contract Documents.

Should you have questions or comments regarding this notice, please contact [the undersigned] [*or*] [*insert other contact person's name*], at [*insert telephone number and e-mail address*].

Sincerely,

[*Contractor's company name*]

[*Signatory name*]
[*Signatory's title*]

Attachments:
None

Copies:
[*Owner's project manager*]

SECTION 01 78 23

OPERATIONS AND MAINTENANCE DATA

PART 1 – GENERAL

1.1 DESCRIPTION

A. Scope:
   1. This Section includes requirements for manufacturers' operations and maintenance manuals and related data to be furnished by CONTRACTOR.
   2. CONTRACTOR shall submit operation and maintenance data, in accordance with this Section and in accordance with requirements elsewhere in the Contract Documents, as instructional and reference manuals by operations and maintenance personnel at the Site.
   3. Required operation and maintenance data groupings are listed in table(s) in Article 1.2 of this Section. At minimum, submit operation and maintenance data for:
      a. All equipment and systems.
      b. Valves, gates, actuators, and related accessories.
      c. Instrumentation and control devices.
      d. Electrical equipment.
   4. For each operation and maintenance manual, submit the following:
      a. Preliminary Submittal: Printed and bound copy of entire operation and maintenance manual, except for test data, service reports by Supplier, and submit electronic copies.
      b. Final Submittal: Printed and bound copy of complete operations and maintenance manual, including test data and service reports by Supplier, and submit electronic copies.

1.2 SUBMITTALS

A. Closeout Submittals: Submit the following:
   1. Operation and Maintenance Data:
      a. Submit the operations and maintenance data indicated in the Contract Documents, grouped into submittals as indicated in Table 01 78 23-A:

TABLE 01 78 23-A, REQUIRED OPERATIONS AND MAINTENANCE DATA

Name of O&M Manual/Data	For Materials or Equipment Specified in Section(s)
Electrical System	Division 26
Low-voltage Variable Frequency Drives	26 29 23
Process Valves	40 05 53
Air Valves Wastewater Service	40 05 86
Primary Sensors and Field Instruments	40 70 05
RAS and WAS Pumping Equipment	43 21 13
Rotary Drum Thickening Equipment	46 71 33

B. Quantity Required and Timing of Submittals:
   1. Preliminary Submittal:
      a. Electronic Copies: One (1) copy.
      b. Submit to ENGINEER by the earlier of: 90 days following approval of Shop Drawings and product data submittals, or 10 days prior to starting training of operations and maintenance personnel, or 10 days prior to field quality control testing at the Site.
      c. Furnish preliminary operation and maintenance data submittal in acceptable form and content, as determined by ENGINEER, before associated materials and equipment will be eligible for payment.
   2. Final Submittal: Furnish final submittal prior to Substantial Completion, unless submittal is specified as required prior to an interim Milestone.
      a. Printed Copies: Three (3) copies.
      b. Electronic Copies: Three (3) copies.

1.3 FORMAT OF PRINTED COPIES

A. Binding and Cover:
   1. Bind each operation and maintenance manual in durable, permanent, stiff-cover binder(s), comprising one or more volumes per copy as required. Binders shall be not less than one inch wide and maximum of three inches wide. Binders for each copy of each volume shall be identical.
   2. Binders shall be locking three-ring/"D"-ring type, or three-post type. Three-ring binders shall be riveted to back cover and include plastic sheet lifter (page guard) at front of each volume.
   3. Do not overfill binders.
   4. Covers shall be oil-, moisture-, and wear-resistant, including identifying information on cover and spine of each volume.
   5 Provide the following information on cover of each volume:
      a. Title: "OPERATING AND MAINTENANCE INSTRUCTIONS".
      b. Name or type of material or equipment covered in the manual.
      c. Volume number, if more than one volume is required, listed as "Volume __ of __", with appropriate volume-designating numbers filled in.
      d. Name of Project and, if applicable, Contract name and number.
      e. Name of building or structure, as applicable.
   6 Provide the following information on spine of each volume:
      a. Title: "OPERATING AND MAINTENANCE INSTRUCTIONS".
      b. Name or type of material or equipment covered in the manual.
      c. Volume number, if more than one volume is required, listed as "Volume __ of __", with appropriate volume-designating numbers filled in.
      d. Project name and building or structure name.

B. Pages:
   1. Print pages in operations and maintenance manual on 30-pound (minimum) paper, 8.5 inches by 11 inches in size.
   2. Reinforce binding holes in each individual sheet with plastic, cloth, or metal. When published, separately-bound booklets or pamphlets are part of the

manual, reinforcing of pages within booklet or pamphlet is not required.

3. Furnish each page with binding margin not less than one inch wide. Punch each page with holes suitable for the associated binding.

C. Drawings:

1. Bind into the operation and maintenance manual drawings, diagrams, and illustrations up to and including 11 inches by 17 inches in size, with reinforcing specified for pages.
2. Documents larger than 11 inches by 17 inches shall be folded and inserted into clear plastic pockets bound into the manual. Mark pockets with printed text indicating content and drawing numbers. Include not more than three drawing sheets per pocket.

D. Copy Quality and Document Clarity:

1. Contents shall be original-quality copies. Documents in the operations and maintenance manual shall be either original manufacturer-printed documents or first-generation photocopies indistinguishable from originals. If original is in color, copies shall be in color. Manuals that contain copies that are unclear, not completely legible, off-center, skewed, or where text or drawings are cut by binding holes, are unacceptable. Pages that contain approval or date stamps, comments, or other markings that cover text or drawing are unacceptable. Faxed copies are unacceptable.
2. Clearly mark in ink to indicate all components of materials and equipment on catalog pages for ease of identification. In standard or pre-printed documents, indicate options furnished or cross out inapplicable content. Using highlighters to so indicate options furnished is unacceptable.

E. Organization:

1. Coordinate with ENGINEER and OWNER to develop comprehensive, practical, and consistent indexing system for operations and maintenance data. ENGINEER will review indexing system before operations and maintenance data is submitted.
2. Table of Contents:
   a. Provide table of contents in each volume of each operations and maintenance manual.
   b. In table of contents and not less than once in each chapter or section, identify materials and equipment by their functional names. Thereafter, abbreviations and acronyms may be used if their meaning is clearly indicated in a table bound at or near beginning of each volume. Using material or equipment model or catalog designations for identification is unacceptable.
3. Use dividers and indexed tabs between major categories of information, such as operating instructions, preventive maintenance instructions, and other major subdivisions of data in each manual.

1.4 FORMAT OF ELECTRONIC COPIES

A. Electronic Copies of Operation and Maintenance Manuals:
   1. Each electronic copy shall include all information included in the corresponding printed copy.
   2. Submit each electronic copy on a separate compact disc (CD), unless another electronic data transfer method or format is acceptable to ENGINEER.
   3. File Format:
      a. Files shall be in "portable document format" (PDF). Files shall be electronically searchable.
      b. Submit separate file for each separate document in the printed copy.
      c. Within each file, provide bookmarks for the following:
         1) Each chapter and subsection listed in the corresponding printed copy document's table of contents.
         2) Each figure.
         3) Each table.
         4) Each appendix.
   4. Also submit drawings and figures in one of the following formats: ".bmp", ".tif", ".jpg", or ".gif". When files are submitted on CD, submit such files in a separate directory on the CD. When such files are submitted via other means, appropriately transmit them to avoid confusing with other files transmitted.

B. Copies of Programming and Configuration Files:
   1. Furnish on CD or portable USB "thumb drive" copy of all software programming, such as programmable logic controller programs, prepared specifically for the Project. Third-party, licensed, commercially available software is excluded from requirements of this Article; submit copies of commercially-available, licensed, third-party software, where required, in accordance with the Contract Documents.
   2. Submit on CD or portable USB "thumb drive" copies of system configuration prepared specifically for the Project, such as plant monitoring system and SCADA display configurations.
   3. Submit programming and configuration files concurrently with electronic copies of operation and maintenance data.

1.5 CONTENT

A. General:
   1. Prepare each operations and maintenance manual specifically for the Project. Include in each manual all pertinent instructions, as-built drawings as applicable, bills of materials, technical bulletins, installation and handling requirements, maintenance and repair instructions, and other information required for complete, accurate, and comprehensive data for safe and proper operation, maintenance, and repair of materials and equipment furnished for the Project. Include in manuals specific information required in the Specification Section for the material or equipment, data required by Laws and Regulations, and data required by authorities having jurisdiction.

2. Completeness and Accuracy:
   a. Operation and maintenance manuals that include language stating or implying that the manual's content may be insufficient or stating that the manual's content is not guaranteed to be complete and accurate are unacceptable.
   b. Operations and maintenance manuals shall be complete and accurate.
   c. Operation and maintenance manuals shall indicate the specific alternatives and features furnished, and the specific operation and maintenance provisions for the material or equipment furnished.
3. Submit complete, detailed written operating instructions for each material or equipment item including: function; operating characteristics; limiting conditions; operating instructions for start-up, normal and emergency conditions; regulation and control; operational troubleshooting; and shutdown. Also include, as applicable, written descriptions of alarms generated by equipment and proper responses to such alarm conditions.

B. Submit written explanations of safety considerations relating to operation and maintenance procedures.

C. Submit complete, detailed, written preventive maintenance instructions including all information and instructions to keep materials, equipment, and systems properly lubricated, adjusted, and maintained so that materials, equipment, and systems function economically throughout their expected service life. Instructions shall include:
   1. Written explanations with illustrations for each preventive maintenance task such as inspection, adjustment, lubrication, calibration, and cleaning. Include pre-startup checklists for each equipment item and maintenance requirements for long-term shutdowns.
   2. Recommended schedule for each preventive maintenance task.
   3. Lubrication charts indicating recommended types of lubricants, frequency of application or change, and where each lubricant is to be used or applied.
   4. Table of alternative lubricants.
   5. Troubleshooting instructions.
   6. List of required maintenance tools and equipment.

D. Submit complete bills of material or parts lists for materials and equipment furnished. Lists or bills of material may be furnished on a per-drawing or per-equipment assembly basis. Bills of material shall indicate:
   1. Manufacturer's name, address, telephone number, fax number, and Internet website address.
   2. Manufacturer's local service representative's or local parts supplier's name, address, telephone number, fax number, Internet website address, and e-mail addresses, when applicable.
   3. Manufacturer's shop order and serial number(s) for materials, equipment or assembly furnished.
   4. For each part or piece include the following information:

a. Parts cross-reference number. Cross-reference number shall be used to identify the part on assembly drawings, Shop Drawings, or other type of graphic illustration where the part is clearly shown or indicated.
b. Part name or description.
c. Manufacturer's part number.
d. Quantity of each part used in each assembly.
e. Current unit price of the part at the time the operations and maintenance manual is submitted. Price list shall be dated.

E. Submit complete instructions for ordering replaceable parts, including reference numbers (such as shop order number or serial number) that will expedite the ordering process.

F. Submit manufacturer's recommended inventory levels for spare parts, extra stock materials, and consumable supplies for the initial two years of operation. Consumable supplies are items consumed or worn by operation of materials or equipment, and items used in maintaining the operation of material or equipment, including items such as lubricants, seals, reagents, and testing chemicals used for calibrating or operating the equipment. Include estimated delivery times, shelf life limitations, and special storage requirements.

G. Submit manufacturer's installation and operation bulletins, diagrams, schematics, and equipment cutaways. Avoid submitting catalog excerpts unless they are the only document available showing identification or description of particular component of the equipment. Where materials pertain to multiple models or types, mark the literature to indicate specific material or equipment supplied. Marking may be in the form of checking, arrows, or underlining to indicate pertinent information, or by crossing out or other means of obliterating information that does not apply to the materials and equipment furnished.

H. Submit original-quality copies of each approved and accepted Shop Drawing, product data, and other submittal, updated to indicate as-installed condition. Reduced drawings are acceptable only if reduction is to not less than one-half original size and all lines, dimensions, lettering, and text are completely legible on the reduction.

I. Submit complete electrical schematics and wiring diagrams, including complete point-to-point wiring and wiring numbers or colors between all terminal points.

J. Programmable Logic Controllers: If programmable logic controllers are furnished under the Contract:
1. Submit complete logic listings in ladder diagram format.
2. Format Requirements:
a. For ladder diagram logic, include complete cross-referencing of all logic elements. Annotate all elements with clearly understandable tags or descriptive labels.

3. Submit complete programmable logic controller listing of all input/output address assignments, tag assignments, and pre-set constant values, with functional point descriptions.
4. Submit complete manufacturer's programming manuals.

K. Submit copy of warranty bond and service contract as applicable.

L. When copyrighted material is used in operations and maintenance manuals, obtain copyright holder's written permission to use such material in the operation and maintenance manual.

PART 2 – PRODUCTS (NOT USED)

PART 3 – EXECUTION (NOT USED)

+ + END OF SECTION + +

** THIS PAGE INTENTIONALLY LEFT BLANK **

SECTION 01 78 39

PROJECT RECORD DOCUMENTS

PART 1 – GENERAL

1.1 DESCRIPTION

A. Scope:
   1. This Section includes requirements for Project record documents, to supplement the requirements of the General Conditions, as may be modified by the Supplementary Conditions.
   2. CONTRACTOR shall provide all labor, materials, equipment, and services to maintain and submit to ENGINEER Project record documents in accordance with the Contract Documents.

B. Maintenance of Record Documents:
   1. Maintain in CONTRACTOR's field office, in clean, dry, legible condition, complete sets of the following record documents: Drawings, Specifications, and Addenda; Shop Drawings, Samples, and other CONTRACTOR submittals, including records of test results, approved or accepted as applicable, by ENGINEER; Change Orders, Work Change Directives, Field Orders, copies of all interpretations and clarifications issued, photographic documentation, survey data, and all other documents pertinent to the Work.
   2. Provide files and racks for proper storage and easy access to record documents. File record documents in accordance with the edition of the Construction Specification Institute's *MasterFormat*™ used for organizing the Project Manual, unless otherwise accepted by ENGINEER.
   3. Promptly make record documents available for observation and review upon request of ENGINEER or OWNER. Requirements for review of record documents status as a condition precedent to progress payments is in Section 01 29 73, Schedule of Values, and Section 01 29 76, Progress Payment Procedures.
   4. Do not use record documents for any purpose other than serving as Project record. Do not remove record documents from CONTRACTOR's field office without ENGINEER's approval.

1.2 SUBMITTALS

A. Closeout Submittals: Submit the following:
   1. Record Documents:
      a. Submit the following Project record documents:
         1) Drawings.
         2) Project Manual including Specifications and Addenda (bound).
      b. Prior to readiness for final payment, submit to ENGINEER one copy of Project's final record documents and obtain ENGINEER's acceptance of

same. Submit complete record documents; do not make partial submittals.

c. Submit record documents with transmittal letter on CONTRACTOR letterhead in accordance with requirements in Section 01 33 00, Submittal Procedures.

2. Certifications:

a. Record documents submittal shall include certification, with original signature of official authorized to execute legal agreements on behalf of CONTRACTOR, reading as follows:

"[*Insert Contractor's corporate name*] has maintained and submitted Project record documentation in accordance with the General Conditions and Supplementary Conditions, Section 01 78 39, Project Record Documents, and other elements of Contract Documents, for the Indian River County Central Wastewater Treatment Facility. We certify that each record document submitted is complete, accurate, and legible relative to the Work performed under our Contract, and that the record documents comply with the requirements of the Contract Documents.

[*Provide signature, print name, print signing party's corporate title, and date*]"

1.3 RECORDING CHANGES

A. Recording Changes – General:

1. At the start of the Project, label each record document to be submitted as, "PROJECT RECORD" using legible, printed letters. Letters on record copy of the Drawings shall be two inches high.
2. Keep record documents current consistent with the progress of the Work. Make entries on record documents within two working days of receipt of information required to record the change.
3. Do not permanently conceal the Work until required information has been recorded for Project record documents.
4. Accuracy of record documents shall be such that future searches for items shown on the record documents may rely reasonably on information obtained from ENGINEER-accepted record documents.
5. Marking of Entries:

a. Use erasable, colored pencils (not ink or indelible pencil) for marking changes, revisions, additions, and deletions to record documents.

b. Clearly describe the change by graphic line and make notations as required. Use straight-edge to mark straight lines. Writing shall be legible and sufficiently dark to allow scanning of record documents into legible electronic files in portable document format (".PDF").

c. Date each entry on record documents.

d. Indicate changes by drawing a "cloud" around the change(s) indicated.

e. Mark initial revisions in red. In the event of overlapping changes, use different colors for subsequent changes.

B. Drawings:

1. Record changes on copy of the Drawings. Submittal of CONTRACTOR-originated or -produced drawings as a substitute for recording changes on a copy of the Drawings is unacceptable.
2. Record changes on plans, sections, elevations, schematics, schedules, and details as required for clarity, making reference dimensions and elevations (to Project datum) for complete record documentation.
3. Record actual construction including:
   a. Depths of various elements of foundation relative to Project datum.
   b. Horizontal and vertical location of Underground Facilities referenced to permanent surface improvements and project elevation datum. For each Underground Facility, including pipe fittings, show and indicate dimensions to not less than two permanent, visible surface improvements.
   c. Location of exposed utilities and appurtenances concealed in construction, referenced to visible and accessible features of structure and, where applicable, to Project elevation datum.
   d. Changes in structural and architectural elements of the Work, including changes in reinforcing.
   e. Field changes of dimensions, arrangements, and details.
   f. Changes made in accordance with Addenda, Change Orders, Work Change Directives, and Field Orders.
   g. Changes in details on the Drawings. Submit additional details prepared by CONTRACTOR when required to document such changes.
4. Recording Changes for Schematic Layouts:
   a. In some cases, on the Drawings, arrangements of conduits, circuits, piping, ducts, and similar items are shown schematically and are not intended to portray physical layout. For such cases, the final physical arrangement shall be determined by CONTRACTOR subject to acceptance by ENGINEER.
   b. Record on the Project record documents all revisions to schematics on the Drawings, including: piping schematics, ducting schematics, process and instrumentation diagrams, control and circuitry diagrams, electrical one-line diagrams, motor control center layouts, and other schematics when included in the Drawings. Show and indicate actual locations of equipment, lighting fixtures, in-place grounding system, and other pertinent data.
   c. When dimensioned plans and dimensioned sections or elevations on the Drawings show the Work schematically, indicate on the record documents, by dimensions accurate to within one inch in the field, centerline location of items of Work such as conduit, piping, ducts, and similar items
      1) Clearly identify each item of the Work by accurate notations such as “cast iron drain”, “rigid electrical conduit”, “copper waterline”, and similar descriptions.
      2) Show by symbol or by note the vertical location of each item of the Work; for example, “embedded in slab”, “under slab”, “in ceiling

plenum", "exposed", and similar designations. For piping not embedded, also indicate elevation dimension relative to Project elevation datum.

3) Descriptions shall be sufficiently detailed to be related to the Specifications.

d. ENGINEER may furnish written waiver of requirements relative to schematic layouts shown on plans, sections, and elevations when, in ENGINEER's judgment, dimensioned layouts of Work shown schematically will serve no useful purpose. Do not rely on such waiver(s) being issued.

5. Supplemental Drawings:

a. In some cases, drawings produced during construction by ENGINEER or CONTRACTOR supplement the Drawings and shall be included with Project record documents submitted by CONTRACTOR. Supplemental record drawings shall include drawings or sketches that are part of Change Orders, Work Change Directives, and Field Orders and that cannot be incorporated into the Drawings because of space limitations.

b. Supplemental drawings submitted with record drawings shall be integrated with the Drawings and include necessary cross-references between drawings. Supplemental record drawings shall be on sheets the same size as the Drawings.

c. When supplemental drawings developed by CONTRACTOR using computer-aided drafting/design (CADD) software are to be included in record drawings, submit electronic files for such drawings in AutoCAD 2018 format as part of record drawing submittal. Submit electronic files on compact disc labeled, "Supplemental Record Drawings", including CONTRACTOR's name, Project name, and Contract designation.

C. Specifications and Addenda:

1. Mark each Specifications Section to record:

a. Manufacturer, trade name, catalog number, and Supplier of each material and equipment item actually provided.

b. Changes made by Addendum, Change Orders, Work Change Directives, and Field Orders.

1.4 ELECTRONIC FILES FURNISHED BY ENGINEER

A. CADD files of the Drawings will be furnished by ENGINEER upon the following conditions:

1. CONTRACTOR shall submit to ENGINEER a letter on CONTRACTOR letterhead requesting CADD files of the Drawings and indicating specific definition(s) or description(s) of how such files will be used, and specific description of benefits to OWNER (including credit proposal, if applicable) if the request is granted.

2. CONTRACTOR shall execute ENGINEER's standard agreement for release of electronic files and shall abide by the provisions of such agreement for release of electronic files.

3. Layering system incorporated in CADD files shall be maintained as transmitted by ENGINEER. CADD files transmitted by ENGINEER containing cross-referenced files shall not be bound by CONTRACTOR. Drawing cross-references and paths shall be maintained. If CONTRACTOR alters layers or cross-reference files, CONTRACTOR shall restore all layers and cross-references prior to submitting record documents to ENGINEER.
4. CONTRACTOR shall submit record drawings to ENGINEER in same CADD format that files were furnished to CONTRACTOR.

PART 2 – PRODUCTS (NOT USED)

PART 3 – EXECUTION (NOT USED)

+ + END OF SECTION + +

** THIS PAGE INTENTIONALLY LEFT BLANK **

SECTION 02 41 00

DEMOLITION

PART 1 – GENERAL

1.1 DESCRIPTION

A. Scope:
   1. CONTRACTOR shall provide all labor, materials, equipment, and incidentals as shown, specified and required for demolition, removal, and disposal Work.
   2. The Work under this Section includes, but is not necessarily limited to:
      a. Demolition and removal of existing materials and equipment as shown or indicated in the Contract Documents. The Work includes selective demolition of pumping equipment, piping, fittings, and valves, electrical equipment, and similar existing facilities.
      b. Demolition and removal of above-grade piping and utilities in, the building(s) and structures shown or indicated for demolition, unless the above-grade facilities are shown or indicated as to remain.
   3. Demolitions and removals specified under other Sections shall comply with requirements of this Section.
   4. Perform demolition Work within areas shown or indicated.
   5. Pay all costs associated with transporting and, as applicable, disposing of materials and equipment resulting from demolition.

B. Coordination:
   1. Comply with Section 01 14 16, Coordination with Owner's Operations.
   2. Review procedures under this and other Sections and coordinate the Work that will be performed with or before demolition and removals.

1.2 QUALITY ASSURANCE

A. Qualifications:
   1. Electrical Removals: Entity and personnel performing electrical removals shall be electrician legally qualified to perform electrical construction and electrical work in the jurisdiction where the Site is located.
   2. Plumbing Removals: Entity and personnel performing plumbing removals shall be plumber legally qualified to perform plumbing construction and plumbing work in the jurisdiction where the Site is located.

B. Regulatory Requirements:
   1. Demolition, removal, and disposal Work shall be in accordance with 29 CFR 1926.850 through 29 CFR 1926.860 (Subpart T - Demolition), and all other Laws and Regulations.
   2. Comply with requirements of authorities having jurisdiction.

1.3 SUBMITTALS

A. Informational Submittals: Submit the following:
   1. Procedure Submittals:
      a. Demolition and Removal Plan: Not less than ten days prior to starting demolition Work, submit acceptable plan for demolition and removal Work, including:
         1) Plan for coordinating shut-offs, capping, temporary services, and continuing utility services.
         2) Other proposed procedures as applicable.
         3) Equipment proposed for use in demolition operations.
         4) Recycling/disposal facility(ies) proposed, including facility owner, facility name, location, and processes. Include copy of appropriate permits and licenses, and compliance status.
         5) Planned demolition operating sequences.
         6) Detailed schedule of demolition Work in accordance with the accepted Process Schedule.
   2. Notification of Intended Demolition Start: Submit in accordance with Paragraph 3.1.A of this Section.
   3. Qualifications Statements:
      a. Name and qualifications of entity performing electrical removals, including copy of licenses required by authorities having jurisdiction.
      b. Name and qualifications of entity performing plumbing removals, including copy of licenses required by authorities having jurisdiction.

PART 2 – PRODUCTS (NOT USED)

PART 3 – EXECUTION

3.1 PREPARATION

A. Notification:
   1. At least 48 hours prior to commencing demolition or removal, notify ENGINEER in writing of planned start of demolition Work. Do not start removals without permission of ENGINEER.

B. Protection of Surrounding Areas and Facilities:
   1. Perform demolition and removal Work in manner that prevents damage and injury to property, structures, occupants, the public, and facilities. Do not interfere with use of, and free and safe access to and from, structures and properties.
   2. Closing or obstructing of roads, drives, sidewalks, and passageways adjacent to the Work is not allowed unless indicated otherwise in the Contract Documents. Conduct the Work with minimum interference to vehicular and pedestrian traffic.

3. Provide temporary barriers, lighting, sidewalk sheds, and other necessary protection.
4. Repair damage to facilities that are to remain.

3.2 DEMOLITION – GENERAL

A. Locate construction equipment used for demolition Work and remove demolished materials and equipment to avoid imposing excessive loading on supporting and adjacent walls, floors, framing, facilities, and Underground Facilities.

B. Pollution Controls:
   1. Use water sprinkling, temporary enclosures, and other suitable methods to limit emissions of dust and dirt to lowest practical level. Comply with Laws and Regulations.
   2. Do not use water when water may create hazardous or objectionable conditions such as icing, flooding, or pollution.
   3. Clean adjacent structures, facilities, properties, and improvements of dust, dirt, and debris caused by demolition Work, in accordance with the General Conditions and Section 01 74 05, Cleaning.

C. Salvage and Ownership:
   1. Refer to Section 01 11 13, Summary of Work, for requirements on salvage, ownership, and handling of equipment and materials removed during demolition and removal Work.
   2. Materials and equipment to remain OWNER's property shall be carefully removed and appropriately handled by CONTRACTOR to avoid damage and invalidation of warranties in effect, and shall be cleaned and stored at the Site (or other site specified in the Contract Documents) at place designated by ENGINEER or OWNER.

D. Finishing of Surfaces Exposed by Removals: Unless otherwise shown or indicated in the Contract Documents, surfaces of walls, floors, ceilings, and other areas exposed by removals, and that will remain as finished surfaces, shall be repaired and re-finished with materials that match existing adjacent surface, or as otherwise approved by ENGINEER.

3.3 MECHANICAL REMOVALS

A. Mechanical demolition and removal Work includes dismantling and removing existing piping, ductwork, pumps, equipment, tanks, and appurtenances as shown, indicated, and required for completion of the Work. Mechanical removals include cutting and capping as required, except that cutting of existing piping and ductwork to make connections is included under Section 01 14 16, Coordination with Owner's Operations; Section 01 73 29, Cutting and Patching; and applicable Sections of Division 40, Process Integration.

B. Demolition and Removals of Piping, Ductwork, and Similar Items:

1. Purge piping and tanks (as applicable) of chemicals or fuel (as applicable) and make safe for removal and capping. Remove to the extent shown or indicated existing process, water, waste and vent, chemical, gas, fuel, and other piping. Remove piping to the nearest solid piping support and provide caps on ends of remaining piping. Where piping to be demolished passes through existing walls to remain, cut off and cap pipe on each side of the wall.
2. Caps, Closures, Blind Flanges, and Plugs:
   a. Provide closure pieces, such as blind flanges and caps, where shown or required to complete the Work.
   b. Where used in this Section, the term "cap" means the appropriate type closure for the piping or ductwork being closed, including caps, blind flanges, and other closures.
   c. Caps shall be compatible with the piping or ductwork to which the cap is attached, fluid-tight and gastight, and appropriate for the fluid or gas conveyed in the pipe or duct.
   d. Unless otherwise shown or indicated, caps shall be mechanically fastened, fused, or welded to pipe or duct. Plug piping with means other than specified in this Section only when so shown or indicated in the Contractor Documents or when allowed by ENGINEER.
3. When Underground Facilities are altered or removed, properly cut and cap piping left in place, unless otherwise shown or indicated.
4. Remove waste and vent piping, and ductwork to extent shown and cap as required. Where demolished vent piping, stacks, and ductwork passes through existing roofing, patch the roof with the same or similar materials. Completed patch shall be watertight and comply with roofing manufacturer's recommendations.
5. Modifications to potable water piping and other plumbing and heating system work shall comply with Laws and Regulations. All portions of potable water system that have been modified or opened shall be hydrostatically tested and disinfected in accordance with the Contract Documents, and Laws and Regulations. Hydrostatically test other, normally-pressurized, plumbing piping and heating piping.

C. Equipment Demolition and Removals:

1. To the extent shown or indicated, remove existing process equipment; pumps; storage tanks; hoisting and conveying equipment; heating, ventilating, and air conditioning equipment; generators; and other equipment.
2. Where required, disassemble equipment to avoid imposing excessive loading on supporting walls, floors, framing, facilities, and Underground Facilities. Disassemble equipment as required for access through and egress from building or structure. Disassembly shall comply with Laws and Regulations. Provide required means to remove equipment from building or structure.
3. Remove control panels, operator stations, and instruments associated with equipment being removed, unless shown or indicated otherwise.
4. Remove fuel appurtenances as applicable, including fuel storage tanks. Dispose of tank contents in accordance with Laws and Regulations.

5. Remove equipment supports as applicable, anchorages, base, grout, and piping. Remove anchorage systems in accordance with the "Structural Removals" Article in this Section. Remove small-diameter piping back to header unless otherwise indicated.
6. Remove access platforms, ladders, and stairs related to equipment being removed, unless otherwise shown or indicated.

3.5 ELECTRICAL REMOVALS

A. Electrical demolition Work includes removing existing transformers, distribution switchboards, control panels, motors, starters, conduit and raceways, cabling, poles and overhead cabling, panelboards, lighting fixtures, switches, and miscellaneous electrical equipment, as shown, specified, or required.

B. Remove existing electrical equipment and fixtures to avoid damaging systems to remain, to keep existing systems in operation, and to maintain integrity of grounding systems.

C. Remove or modify motor control centers and switchgear as shown or indicated. Modified openings shall be cut square and dressed smooth to dimensions required for installation of equipment.

D. Disconnect and remove motors, control panels, and other electrical gear where shown or indicated. Motors, microprocessors and electronics, other electrical gear to be reused shall be stored in accordance with Section 01 66 00, Product Storage and Handling Requirements.

E. Cables in conduits to be removed shall be removed back to the power source or control panel, unless otherwise shown or indicated. Verify the function of each cable before disconnecting and removing.

F. Conduits, raceways, and cabling shall be removed where shown or indicated. Abandoned conduits concealed in floor, ceiling slabs, or in walls shall be cut flush with the slab or wall (as applicable) at point of entrance, suitably capped, and the area repaired in a flush, smooth manner acceptable to ENGINEER. Exposed conduits, junction boxes, other electrical appurtenances, and their supports shall be disassembled and removed. Repair all areas of the Work to prevent rusting on exposed surfaces.

G. Conduits in Underground Facilities not scheduled for reuse shall be suitably capped watertight where each enters building or structure to remain.

H. Where shown or indicated, remove direct burial cable. Openings in buildings for entrance of direct burial cable shall be patched with repair mortar or other material approved by ENGINEER for this purpose and made watertight.

I. Existing poles and overhead cables shall be removed or abandoned as shown and specified. Existing substation(s) and poles owned by electric utility will be removed by the electric utility. Completely remove from the Site poles not owned by electric utility and shown or indicated for removal. Make necessary arrangements with electric utility for removal of utility company's transformers and metering equipment after new electrical system has been installed and energized.

J. Lighting fixtures, wall switches, receptacles, starters, and other miscellaneous electrical equipment, not designated as remaining as OWNER's property, shall be removed and properly disposed off-Site as required.

3.6 DISPOSAL OF DEMOLITION DEBRIS

A. Remove from the Site all debris, waste, rubbish, and material resulting from demolition operations and equipment used in demolition Work. Comply with the General Conditions, Supplementary Conditions, and Section 01 74 05, Cleaning.

B. Transportation and Disposal:
   1. Non-hazardous Material: Properly transport and dispose of non-hazardous demolition debris at appropriate landfill or other suitable location, in accordance with Laws and Regulations. Non-hazardous material does not contain Asbestos, PCBs, Petroleum, Hazardous Waste, Radioactive Material, or other material designated as hazardous in Laws and Regulations.
   2. Hazardous Material: When handling and disposal of hazardous materials is included in the Work, properly transport and dispose of hazardous materials in accordance with the Contract Documents and Laws and Regulations.

C. Submit to ENGINEER information required in this Section on proposed facility(ies) where demolition material will be recycled. Upon request, ENGINEER or OWNER, shall be allowed to visit recycling facility(ies) to verify adequacy and compliance status. During such visits, recycling facility operator shall cooperate and assist ENGINEER and OWNER.

+ + END OF SECTION + +

SECTION 03 00 05

CONCRETE

PART 1 – GENERAL

1.1 DESCRIPTION

A. Scope:
   1. CONTRACTOR shall provide all labor, materials, equipment, and incidentals as shown, specified, and required to furnish and install concrete, reinforcing, and related materials.
   2. The Work includes:
      a. Providing concrete consisting of portland cement, fine and coarse aggregates, water, and approved admixtures; combined, mixed, transported, placed, finished, and cured.
      b. Fabricating and placing reinforcing, including ties and supports.
      c. Design, erection, and removal of formwork.
      d. Building into the concrete all sleeves, frames, anchorage devices, inserts, and other items required to be embedded in concrete.
      e. Providing openings in concrete as required to accommodate Work under this and other Sections.

B. Coordination:
   1. Review installation procedures under other Sections and coordinate installation of items to be installed in the concrete Work.

C. Classifications of Concrete:
   1. Class “A” concrete shall be steel-reinforced and includes all concrete unless otherwise shown or indicated.
   2. Class “B” concrete shall be placed without forms or with simple forms, with little or no reinforcing and includes the following:
      a. Concrete fill.
      b. Duct banks.
      c. Unreinforced encasements.
      d. Curbs and gutters.
      e. Sidewalks.
      f. Thrust blocks.

D. Related Sections:
   1. Section 05 05 33, Anchor Systems.
   2. Section 07 92 00, Joint Sealants.

1.2 REFERENCES

A. Standards referenced in this Section are:
   1. ACI 224R, Control of Cracking in Concrete Structures.
   2. ACI 301, Specifications for Structural Concrete for Buildings.
   3. ACI 304R, Guide for Measuring, Mixing, Transporting and Placing Concrete.
   4. ACI 305R, Specification for Hot Weather Concreting.
   5. ACI 306R, Cold Weather Concreting.
   6. ACI 309R, Guide for Consolidation of Concrete.
   7. ACI 318, Building Code Requirements for Structural Concrete and Commentary.
   8. ACI 347, Guide to Formwork for Concrete.
   9. ACI SP-66, ACI Detailing Manual.
   10. ASTM A82/A82M, Specification for Steel Wire, Plain, for Concrete Reinforcement.
   11. ASTM A185/A185M, Specification for Steel Welded Wire Reinforcement, Plain, for Concrete.
   12. ASTM A615/A615M, Specification for Deformed and Plain Carbon-Steel Bars for Concrete Reinforcement.
   13. ASTM C31/C31M, Practice for Making and Curing Concrete Test Specimens in the Field.
   14. ASTM C33/C33M, Specification for Concrete Aggregates.
   15. ASTM C39/C39M, Test Method for Compressive Strength of Cylindrical Concrete Specimens.
   16. ASTM C42/C42M, Test Method for Obtaining and Testing Drilled Cores and Sawed Beams of Concrete.
   17. ASTM C94/C94M, Specification for Ready-Mixed Concrete.
   18. ASTM C138/C138M, Test Method for Density (Unit Weight), Yield, and Air Content (Gravimetric) of Concrete.
   19. ASTM C143/C143M, Test Method for Slump of Hydraulic-Cement Concrete.
   20. ASTM C150/C150M, Specification for Portland Cement.
   21. ASTM C172, Practice for Sampling Freshly Mixed Concrete.
   22. ASTM C231, Test Method for Air Content of Freshly Mixed Concrete by the Pressure Method.
   23. ASTM C260, Specification for Air-Entraining Admixtures for Concrete.
   24. ASTM C309, Specification for Liquid Membrane-Forming Compounds for Curing Concrete.
   25. ASTM C494/C494M, Specification for Chemical Admixtures for Concrete.
   26. ASTM C579, Methods for Compressive Strength of Chemical-Resistant Mortars, Grouts, Monolithic Surfacings, and Polymer Concretes.
   27. ASTM C1064/C1064M, Standard Test Method for Temperature of Freshly Mixed Hydraulic-Cement Concrete.
   28. ASTM D1752, Specification for Preformed Sponge Rubber Cork and Recycled PVC Expansion Joint Fillers for Concrete Paving and Structural Construction.
   29. ASTM E96/E96M, Test Methods for Water Vapor Transmission of Materials
   30. ASTM E154, Test Methods for Water Vapor Retarders Used in Contact with Earth Under Concrete Slabs, on Walls, or as Ground Cover.

31. CRD-C 572, U. S. Army Corps of Engineers Specification for Polyvinylchloride Waterstops.
32. CRSI 1MSP, Manual of Standard Practice.

1.3 QUALITY ASSURANCE

A. Laboratory Trial Batch:
   1. Employ independent testing laboratory experienced in design and testing of concrete materials and mixes to perform material evaluation tests and to design concrete mixes.
   2. Each concrete mix design specified shall be verified by laboratory trial batch, unless indicated otherwise.
   3. Perform the following testing on each trial batch:
      a. Aggregate gradation for fine and coarse aggregates.
      b. Slump.
      c. Air content.
      d. Compressive strength based on three cylinders each tested at seven days and at 28 days.
   4. Submit for each trial batch the following information:
      a. Project identification name and number (if applicable).
      b. Date of test report.
      c. Complete identification of aggregate source of supply.
      d. Tests of aggregates for compliance with the Contract Documents.
      e. Scale weight of each aggregate.
      f. Absorbed water in each aggregate.
      g. Brand, type, and composition of cementitious materials.
      h. Brand, type, and amount of each admixture.
      i. Amounts of water used in trial mixes.
      j. Proportions of each material per cubic yard.
      k. Gross weight and yield per cubic yard of trial mixtures.
      l. Measured slump.
      m. Measured air content.
      n. Compressive strength developed at seven days and 28 days, from not less than three test cylinders cast for each seven day and 28-day test, and for each design mix.

1.4 SUBMITTALS

A. Action Submittals: Submit the following:
   1. Shop Drawings:
      a. List of concrete materials and concrete mix designs proposed for use. Include results of tests performed to qualify the materials and to establish the mix designs. Do not start laboratory trial batch testing until this submittal is approved by ENGINEER.
      b. Laboratory Trial Batch Reports: Submit laboratory test reports for concrete cylinders, materials, and mix design tests.
      c. Concrete placement drawings showing the location and type of all joints.

d. Drawings for fabricating, bending, and placing concrete reinforcing. Comply with ACI SP-66. For walls and masonry construction, provide elevations to a minimum scale of 1/4-inch to one foot. Show bar schedules, stirrup spacing, adhesive dowels, splice lengths, diagrams of bent bars, arrangements, and assemblies, as required for fabricating and placing concrete reinforcing.

2. Product Data:
   a. Manufacturer's specifications with application and installation instructions for proprietary materials and items, including admixtures and bonding agents.
3. Samples:
   a. Samples: Submit samples of materials as specified and as otherwise requested by ENGINEER, including names, sources, and descriptions.

B. Informational Submittals: Submit the following:
   1. Delivery Tickets: Copies of all delivery tickets for each load of concrete delivered to or mixed at the Site. Each delivery tickets shall contain the information in accordance with ASTM C94/C94M along with project identification name and number (if any), date, mix type, mix time, quantity and amount of water introduced.
   2. Site Quality Control Submittals:
      a. Report of testing results for testing of field concrete cylinders for each required time period. Submit within 24 hours after completion of associated test. Test report shall include results of all testing required at time of sampling.

1.5 PRODUCT DELIVERY, STORAGE AND HANDLING

A. Transportation, Delivery, and Handling:
   1. Deliver concrete reinforcing products to Site bundled, tagged, and marked. Use metal tags indicating bar size, lengths, and other information corresponding to markings on approved Shop Drawings.
   2. Materials used for concrete shall be clean and free from foreign matter during transportation and handling, and kept separate until measured and placed into concrete mixer.
   3. Implement suitable measures during hauling, piling, and handling to ensure that segregation of coarse and fine aggregate particles does not occur and grading is not affected.
   4. Deliver grout materials from manufacturers in unopened containers that bear intact manufacturer labeling.

B. Storage:
   1. Store formwork materials above ground on framework or blocking. Cover wood for forms and other accessory materials with protective, waterproof covering. Provide for adequate air circulation or ventilation under cover.

2. Store concrete reinforcing materials to prevent damage and accumulation of dirt and excessive rust. Store on heavy wood blocking so that reinforcing does not come into contact with the ground. Space framework or blocking supports to prevent excessive deformation of stored materials.
3. Store concrete joint materials on platforms or in enclosures or covered to prevent contact with ground and exposure to weather and direct sunlight.
4. For storage of concrete materials, provide bins or platforms with hard, clean surfaces.

PART 2 – PRODUCTS

2.1 CONCRETE MATERIALS

A. Portland Cement: ASTM C150/C150M, Type II. Use only ASTM C150/C150M cement. Fly Ash ASTM C618, Class F or Slag ASTM C989, Grade 120 can be added to the cement as cementitious material at up to 20% of the total weight.

B. Aggregates: ASTM C33/C33M.
   1. Fine Aggregate: Clean, sharp, natural sand free of loam, clay, lumps, and other deleterious substances. Dune sand, bank run sand, and manufactured sand are unacceptable.
   2. Coarse Aggregate:
      a. Clean, uncoated, processed aggregate containing no clay, mud, loam, or foreign matter.
      b. Coarse aggregate shall comply with the following:
         1) Crushed stone processed from natural rock or stone.
         2) Washed gravel, either natural or crushed. Slag, pit gravel, and bank-run gravel are not allowed.
      c. Coarse Aggregate Size: ASTM C33/C33M, Nos. 57 or 67, unless otherwise approved by ENGINEER.

C. Water: Clean, potable.

D. Admixtures:
   1. Air-Entraining Admixture: ASTM C260.
   2. Water-Reducing Admixture: ASTM C494/C494M, Type A.
   3. Water Reducing and Set-Adjusting Admixtures: ASTM C494/C494M, Types D and E.
   4. High Range Water-Reducing Admixture: ASTM C494/C494M, Type F/G.
   5. Use only admixtures that have been tested and approved in the mix designs.
   6. Do not use calcium chloride or admixtures containing chloride ions.

2.2 CONCRETE MIX

A. General:
   1. Normal weight: 145 pounds per cubic foot.

2. Use air-entraining admixture in all concrete. Provide not less than four percent, nor more than eight percent, entrained air for concrete exposed to freezing and thawing, and provide from three to five percent entrained air for other concrete.

B. Proportioning and Design of Class "A" Concrete Mix:
   1. Minimum compressive strength at 28 days: 4,500 psi.
   2. Maximum water-cement ratio by weight: 0.42.
   3. Minimum cement content: 564 pounds per cubic yard.

C. Proportioning and Design of Class "B" Concrete Mix:
   1. Minimum compressive strength at 28 days: 3,000 psi.
   2. Maximum water-cement ratio by weight: 0.50.
   3. Minimum cement content: 517 pounds per cubic yard.

D. Slump Limits:
   1. Proportion and design mixes to result in concrete slump at point of placement of not less than one inch and not more than four inches.
   2. When using high-range water reducers, slump prior to addition of admixture shall not exceed three inches. Slump after adding admixture shall not exceed eight inches at point of placement.

E. Adjustment of Concrete Mixes:
   1. Concrete mix design adjustments may be requested by CONTRACTOR when warranted by characteristics of materials, Site conditions, weather, test results, or other, similar circumstances.
   2. Submit for ENGINEER's approval laboratory test data for adjusted concrete mix designs, including compressive strength test results.
   3. Implement adjusted mix designs only after ENGINEER's approval.
   4. Adjustments to concrete mix designs shall not result in additional costs to OWNER.

2.3 FORM MATERIALS

A. Provide form materials with sufficient stability to withstand pressure of placed concrete without bow or deflection. CONTRACTOR shall be responsible for designing the formwork system to resist all applied loads including pressures from fluid concrete and construction loads.

B. Smooth Form Surfaces: Acceptable panel-type to provide continuous, straight, smooth, as-cast surfaces in accordance with ACI 301.

C. Unexposed Concrete Surfaces: Material to suit project conditions.

D. Provide 3/4-inch chamfer at all external corners. Chamfer is not required at re-entrant corners unless otherwise shown or indicated.

E. Form Ties:
   1. Provide factory-fabricated, removable, or snap-off metal form ties, that prevent form deflection and prevent spalling of concrete surfaces upon removal. Materials used for tying forms are subject to approval of ENGINEER.
   2. Unless otherwise shown or indicated, provide ties so that portion remaining within concrete after removal of exterior parts is at least 1.5 inches from outer surface of concrete. Unless otherwise shown or indicated, provide form ties that, upon removal, will leave a uniform, circular hole not larger than one-inch diameter in the concrete surface.
   3. Ties for exterior walls, below-grade walls, and walls subject to hydrostatic pressure shall be provided with waterstops.
   4. Wire ties are unacceptable.

2.4 REINFORCING MATERIALS

A. Reinforcing Bars: ASTM A615/A615M, Grade 60 deformed bars.

B. Welded Wire Fabric: ASTM A185/A185M.

C. Steel Wire: ASTM A82/A82M.

D. Provide supports for reinforcing including bolsters, chairs, spacers, and other devices for spacing, supporting, and fastening reinforcing in place.
   1. Use wire bar-type supports complying with CRSI MSP1 recommendations, except as specified in this Section. Do not use wood, brick, or other unacceptable materials.
   2. For slabs on grade, use precast concrete blocks, four inches square minimum with compressive strength equal to or greater than the surrounding concrete, or supports with sand plates or horizontal runners where base materials will not support chair legs.
   3. For all concrete surfaces where legs of supports are in contact with forms, provide supports having either hot-dip galvanized, plastic-protected, or stainless steel legs in accordance with CRSI MSP1.
   4. Provide precast concrete supports over waterproof membranes.

E. Adhesive Dowels:
   1. Dowels:
      a. Dowel reinforcing bars shall comply with ASTM A615, Grade 60.
   2. Adhesive:
      a. For requirements for adhesive, refer to Section 05 05 33, Anchor Systems.

2.5 RELATED MATERIALS

A. Waterstops:
   1. PVC Waterstops:
      a. Manufacturers: Provide products of one of the following:

1) W.R. Meadows, Inc.
2) Greenstreak Plastic Products Company.
3) Or equal.

b. Waterstops shall comply with CRD-C 572. Do not use reclaimed or scrap material.

c. Minimum Thickness: 3/8-inch.

d. Provide waterstops with minimum of seven ribs equally spaced at each end on each side with the first rib located at the edge. Each rib shall be minimum 1/8-inch in height.

e. Construction Joints: Waterstops shall be six-inch wide flat-strip type.

f. Expansion Joints: Waterstops shall be nine-inch wide centerbulb type.

2. Hydrophilic Waterstops:

a. Products and Manufacturers: Provide one of the following:
1) Duroseal Gasket, by BBZ USA, Inc.
2) Adeka Ultraseal MC-2010M, by Asahi Denka Kogyo K.K.
3) Hydrotite, by Greenstreak Plastic Products Company.
4) Or equal.

b. Hydrophilic waterstop materials shall be bentonite-free and shall expand by minimum of 80 percent of dry volume in the presence of water to form a watertight joint seal without damaging the concrete in which it is cast.

c. Waterstop material shall be composed of resins and polymers that absorb water and cause a completely reversible and repeatable increase in volume.

d. Waterstop material shall be dimensionally stable after repeated wet-dry cycles with no deterioration of swelling potential.

e. Select material in accordance with manufacturer's recommendations for type of liquid to be contained.

f. Minimum cross-sectional dimensions: 3/16-inch by 3/4-inch.

g. Location of hydrophilic waterstops shall be as shown or indicated on the Drawings, or where approved by ENGINEER.

h. Hydrophilic Sealant: Shall adhere firmly to concrete, metal, and PVC in dry or damp condition and be indefinitely elastic when cured.
1) Products and Manufacturers: Provide one of the following:
a) Duroseal Paste, by BBZ USA, Inc.
b) Adeka Ultraseal P-201, by Asahi Denka Kogyo K.K.
c) Hydrotite, by Greenstreak Plastic Products Company.
d) Or equal.

B. Vapor Retarder:

1. Products and Manufacturers: Provide one of the following:

a. Stego Wrap 10-mil Vapor Retarder, by Stego Industries LLC.

b. Griffolyn 10-mil, by Reef Industries.

c. Moistop Ultra, by Fortifiber Industries.

d. Or equal.

2. Vapor retarder membrane shall comply with the following.

a. Water Vapor Transmission Rate, ASTM E96/E96M: 0.04 perms or lower.

b. Water Vapor Retarder, ASTM E1745: Meets or exceeds Class C.

c. Thickness of Retarder (plastic), ACI 302 1R: Not less than 10 mils.
d. Provide accessories by same manufacturer as vapor retarder.

C. Membrane-Forming Curing Compound: ASTM C309, Type I.

D. Epoxy Bonding Agent:
1. Two-component epoxy resin bonding agent.
2. Products and Manufacturers: Provide one of the following:
a. Sikadur 32, Hi-Mod LPL, by Sika Corporation.
b. Eucopoxy LPL, by the Euclid Chemical Company.
c. Or equal.

E. Epoxy-Cement Bonding Agent:
1. Three-component blended epoxy resin-cement bonding agent.
2. Products and Manufacturers: Provide one of the following:
a. Sika Armatec 110 EpoCem, by Sika Corporation.
b. Duralprep A.C., by Euclid Chemical Company.
c. Or equal.

F. Preformed Expansion Joint Filler:
1. Provide preformed expansion joint filler complying with ASTM D1752, Type I (sponge rubber) or Type II (cork).

G. Joint Sealant and Accessories:
1. For joint sealants and accessories used on isolation joints, control joints, and expansion joints, refer to Section 07 92 00, Joint Sealants.

2.6 GROUT

A. Non-shrink Grout:
1. Pre-packaged, non-metallic, cementitious grout requiring only the addition of water at the Site.
2. Minimum 28-day Compressive Strength: 7,000 psi.
3. Products and Manufacturers: Provide one of the following:
a. NS Grout by Euclid Chemical Company.
b. Set Grout by Master Builders, Inc.
c. NBEC Grout by Five Star Products, Inc.
d. Or equal.

B. Epoxy Grout:
1. Pre-packaged, non-shrink, non-metallic, 100 percent solids, solvent-free, moisture-insensitive, three-component epoxy grouting system.
2. Minimum Seven-day Compressive Strength: 14,000 psi, when tested in accordance with ASTM C579.
3. Products and Manufacturers: Provide one of the following:
a. Euco High Strength Grout, by Euclid Chemical Company.
b. Sikadur 42, Grout Pak, by Sika Corporation.

c. Five Star Epoxy Grout, by Five Star Products, Inc.
d. Or equal.

C. Grout Fill:
1. Grout mix shall consist of cement, fine and coarse aggregates, water, and admixtures complying with requirements specified in this Section for similar materials in concrete.
2. Proportion and mix grout fill as follows:
a. Minimum Cement Content: 564 pounds per cubic yard.
b. Maximum Water-Cement Ratio: 0.45.
c. Maximum Coarse Aggregate size: 1/2-inch, unless otherwise indicated.
d. Minimum 28-day Compressive Strength: 4,000 psi.

PART 3 – EXECUTION

3.1 INSPECTION

A. CONTRACTOR shall examine the substrate and the conditions under which the Work will be performed and notify ENGINEER in writing of unsatisfactory conditions. Do not proceed with the Work until unsatisfactory conditions are corrected.

3.2 FORMWORK

A. Construct formwork in accordance with ACI 347 such that concrete members and structures are of correct size, shape, alignment, elevation, and position.

B. Provide openings in formwork to accommodate the Work of other trades. Accurately place and securely support items required to be built into formwork.

C. Clean and adjust forms prior to placing concrete. Apply form release agents or wet forms as required. Re-tighten forms during and after concrete placing, when required, to eliminate cement paste leaks.

D. Removing Formwork:
1. Comply with ACI 301 and ACI 347, except as otherwise indicated in the Contract Documents.
2. Do not remove formwork and shoring until supported concrete members have acquired minimum of 90 percent of specified compressive strength. Results of suitable quality control tests of field-cured specimens may be submitted to ENGINEER for review as evidence that concrete has attained sufficient strength for removal of supporting formwork and shoring prior to removal times indicated in the Contract Documents.
3. Removal time for formwork is subject to ENGINEER's acceptance.
4. Repair form tie-holes following in accordance with ACI 301.

3.3 REINFORCING, JOINTS, AND EMBEDDED ITEMS

A. Comply with the applicable recommendations of Laws and Regulations and standards referenced in this Section, including CRSI MSP1, for details and methods of placing and supporting reinforcing.

B. Clean reinforcing to remove loose rust and mill scale, earth, ice, and other materials which act to reduce or destroy bond between reinforcing material and concrete.

C. Position, support, and secure reinforcing against displacement during formwork construction and concrete placing. Locate and support reinforcing by means of metal chairs, runners, bolsters, spacers, and hangers, as required.
   1. Place reinforcing to obtain minimum concrete coverages as shown on the Drawings and as required in ACI 318. Arrange, space, and securely tie bars and bar supports together with 16-gage wire to hold reinforcing accurately in position during concrete placing. Set with ties so that twisted ends are directed away from exposed concrete surfaces.
   2. Do not secure reinforcing to formwork using wire, nails or other ferrous metal. Metal supports subject to corrosion shall not be in contact with formed or exposed concrete surfaces.

D. Provide sufficient quantity of supports of strength required to carry reinforcing. Do not place reinforcing more than two inches beyond the last leg of continuous bar support. Do not use supports as bases for runways for concrete conveying equipment and similar construction loads.

E. Splices: Provide standard reinforcing splices by lapping ends, placing bars in contact, and tying tightly with wire. Comply with requirements shown or indicated for minimum lap of spliced bars, as shown on the Drawings.

F. Install welded wire fabric in lengths as long as practical, lapping adjoining sections a minimum of one full mesh.

G. Do not place concrete until reinforcing is inspected, and ENGINEER indicates that conditions are acceptable for placing concrete. Concrete placed in violation of this paragraph will be rejected. Notify ENGINEER in writing at least two working days prior to proposed concrete placement.

H. Joints:
   1. Provide construction, isolation, expansion, and control joints as indicated or required. Locate construction joints so as to not impair the strength and appearance of the structure. Place isolation and control joints in slabs-on-grade to stabilize differential settlement and random cracking.
   2. In walls, locate joints at a maximum spacing of 40 feet and approximately 12 feet from corners.
   3. In foundation slabs and slabs-on-grade, locate joints at intervals of approximately 40 feet.

4. In mats and structural slabs and beams, locate joints in compliance with ACI 224R.
5. Locations of joints shall be in accordance with the Contract Documents and as approved by ENGINEER in the Shop Drawings.
6. Where construction joints are indicated to be roughened, intentionally roughen surfaces of previously-placed concrete to amplitude of 1/4-inch.

I. Installation of Embedded Items: Set and build into the Work anchorage devices and embedded items required for other Work that is attached to, or supported by, cast-in-place concrete. Use setting diagrams, templates, and instructions provided under other Sections for locating and setting. Refer to Paragraph 1.1.B of this Section. Do not embed in concrete uncoated aluminum items. Where aluminum items are in contact with concrete surfaces, coat aluminum to prevent direct contact with concrete.

J. Adhesive Dowels:
1. Adhesive dowels shall be reinforcing bar dowels set in an adhesive in hole drilled into hardened concrete. Comply with adhesive system manufacturer's installation instructions regarding hole diameter, drilling method, embedment depth required to fully develop required tensile strength, and hole cleaning and preparation instructions. Unless more-stringent standards are required by adhesive system manufacturer, comply with the following.
2. Drill holes to adhesive system manufacturer's recommended diameter and depth to develop required tensile strength. Holes shall not be more than 1/4-inch greater than nominal bar diameter, and hole depth shall not be less than twelve times nominal bar diameter. Hammer-drill holes. Cored holes are not allowed.
3. Embedment depths shall be based on concrete compressive strength of 2,000 psi when embedded in existing concrete, and 4,000 psi when embedded in new concrete.
4. Determine location of existing reinforcing steel in vicinity of proposed holes prior to drilling. Adjust location of holes to be drilled to avoid drilling through or damaging existing reinforcing bars only when approved by ENGINEER.
5. Before setting adhesive dowel, hole shall be free of dust and debris using method recommended by adhesive system manufacturer. Hole shall be brushed, with manufacturer-approved brush and blown clean with clean, dry, oil-free compressed air to remove dust and loose particles. Hole shall be dry as defined by adhesive system manufacturer.
6. Inject adhesive into hole through injection system mixing nozzle and necessary extension tubes, placed to bottom of hole. Withdraw discharge end as adhesive is placed, but keep end of tube immersed to prevent forming air pockets. Fill hole to depth that ensures that excess material is expelled from hole during dowel placement.
7. Twist dowels during insertion into partially-filled hole to guarantee full wetting of bar surface with adhesive. Insert bar slowly to avoid developing air pockets.

3.4 CONCRETE PLACING

A. Site Mixing: Use drum-type batch machine mixer, mixing not less than 1.5 minutes for one cubic yard or smaller capacity. Increase required mixing time by minimum of 15 seconds for each additional cubic yard or fraction thereof.

B. Ready-Mixed Concrete: Comply with ASTM C94/C94M.

C. Concrete Placing:
   1. Place concrete in a continuous operation within planned joints or sections in accordance with ACI 304R.
   2. Do not begin placing concrete until work of other trades affecting concrete is completed.
   3. Wet concrete and subgrade surfaces to saturated surface dry condition immediately prior to placing concrete.
   4. Deposit concrete as near its final location as practical to avoid segregation due to re-handling or flowing.
   5. Avoid separation of the concrete mixture during transportation and placing. Concrete shall not free-fall for distance greater than four feet during placing.
   6. Complete concrete placing within 90 minutes of addition of water to the dry ingredients.

D. Consolidate placed concrete in accordance with ACI 309R using mechanical vibrating equipment supplemented with hand rodding and tamping, such that concrete is worked around placing and other embedded items and into all parts of formwork. Insert and withdraw vibrators vertically at uniformly-spaced locations. Do not use vibrators to transport concrete within the formwork. Vibration of formwork or placing is not allowed.

E. Protect concrete from physical damage or reduced strength due to weather extremes during mixing, placing, and curing.
   1. In hot weather comply with ACI 305R.
   2. In cold weather comply with ACI 306R.

3.5 QUALITY OF CONCRETE WORK

A. Make concrete solid, compact, smooth, and free of laitance, cracks, and cold joints.

B. Concrete for liquid-retaining structures and concrete in contact with earth, water, or exposed directly to the elements shall be watertight.

C. Cut out and properly replace to extent directed by ENGINEER, or repair to satisfaction of ENGINEER, surfaces that contain cracks or voids, are unduly rough, or are in defective in any way. Patches or plastering are unacceptable.

D. Repair, removal and replacement of defective concrete directed by ENGINEER shall be at no additional cost to OWNER.

3.6 CURING

A. Begin initial curing as soon as free water has disappeared from exposed surfaces. Where possible, keep continuously moist for not less than 72 hours. Continue curing by using moisture-retaining cover or membrane-forming curing compound. Cure formed surfaces by moist curing until formwork is removed. Provide protection, as required, to prevent damage to exposed concrete surfaces. Total curing period shall not be less than seven days. Curing methods and materials shall be compatible with scheduled finishes.

3.7 FINISHING

A. Slab Finish:
   1. After placing concrete slabs, do not work the surface further until ready for floating. Begin floating when surface water has disappeared or when concrete has stiffened sufficiently. Use a wood float only. Check and level surface plane to a tolerance not exceeding 1/4-inch in ten feet when tested with a ten foot straightedge placed on the surface at not less than two different angles. Cut down high spots and fill low spots. Uniformly slope surfaces to drains. Immediately after leveling, re-float the surface to a uniform, smooth, granular texture. Slab surfaces shall receive a float finish. Provide additional trowel finishing as required in this Section.
   2. After floating, begin first trowel finish operation using power-driven trowel. Begin final troweling when surface produces a ringing sound as trowel is moved over the surface.
   3. Consolidate concrete surface by the final hand troweling operation. Finish shall be free of trowel marks, uniform in texture and appearance, and with a surface plane tolerance not exceeding 1/8-inch in ten feet when tested with a ten-foot straightedge. Grind smooth surface defects that would telegraph through applied floor covering system.
   4. Use trowel finish for the following:
      a. Interior exposed slabs, unless otherwise shown or indicated.
      b. Apply non-slip broom finish, after troweling, to exterior concrete slab and elsewhere as shown.

B. Apply chemical floor hardener to exposed interior concrete floor areas when cured and dry, in accordance with hardener manufacturer's instructions.

C. Formed Finish:
   1. Provide smooth form concrete finish at exposed surfaces. Use largest practical form panel sizes to minimize form joints. Exposed surfaces include interior water-contacting surfaces of tanks, whether or not directly visible. All surfaces shall be considered as exposed, unless buried or covered with permanent structural or architectural material. After removing forms, patch form tie holes and defects in accordance with ACI 301. Remove fins exceeding 1/8-inch in height. Where surface will be coated or will receive further treatment, remove all fins flush with concrete surface.

2. Provide rough form finish at all unexposed surfaces. After removing forms, patch form tie holes and defects in accordance with ACI 301. Remove fins exceeding 1/2-inch in height.

3.8 GROUT PLACING

A. Place grout as shown and indicated, and in accordance with grout manufacturer's instructions and recommendations. If grout manufacturer's instructions conflict with the Contract Documents, notify ENGINEER and not proceed until obtaining ENGINEER's clarification.

B. Dry-packing is not allowed, unless otherwise indicated.

C. Manufacturers of proprietary grout materials shall make available upon 72 hours' notice the services of qualified, full-time, factory-trained employee to aid in ensuring proper use of grout materials at the Site.

D. Placing grout shall comply with temperature and weather limitations described in Article 3.4 of this Section.

3.9 FIELD QUALITY CONTROL

A. Site Testing Services:
   1. CONTRACTOR shall employ independent testing laboratory to perform field quality control testing for concrete. ENGINEER will direct where samples are obtained.
   2. Testing laboratory will provide all labor, material, and equipment required for sampling and testing concrete, including: scale, glass tray, cones, rods, molds, air tester, thermometer, and other incidentals required.
   3. CONTRACTOR shall provide curing and necessary cylinder storage.

B. Quality Control Testing During Construction:
   1. Perform sampling and testing for field quality control during concrete placing, as follows:
      a. Sampling Fresh Concrete: ASTM C172.
      b. Slump: ASTM C143/C143M; one test for each concrete load at point of discharge.
      c. Concrete Temperature: ASTM C1064/C1064M; one for every two concrete loads at point of discharge, and when a change in the concrete is observed. Test each load when time from batching to placement exceeds 75 minutes.
      d. Air Content: ASTM C231; one for every two concrete loads at point of discharge, and when a change in the concrete is observed.
      e. Unit Weight: ASTM C138/C138M; one for every two concrete loads at point of discharge, and when a change in the concrete is observed.
      f. Compression Test Specimens:

1) In accordance with ASTM C31/C31M, make one set of compression cylinders for each 50 cubic yards of concrete, or fraction thereof, of each mix design placed each day. Each set shall be four standard cylinders, unless otherwise directed by ENGINEER.
2) Cast, store, and cure specimens in accordance with ASTM C31/C31M.

g. Compressive Strength Tests:
1) In accordance with ASTM C39/C39M; one specimen tested at seven days, and three specimens tested at 28 days.
2) Concrete that does not comply with strength requirements will be considered as defective Work.

h. Submit test results from certified by testing laboratory to ENGINEER within 24 hours of completion of test.

i. When there is evidence that strength of in-place concrete does not comply with the Contract Documents, CONTRACTOR shall employ the services of concrete testing laboratory to obtain cores from hardened concrete for compressive strength determination. Cores and tests shall comply with ASTM C42/C42M and the following:
1) Testing of Adhesive Dowels: CONTRACTOR will employ testing agency to perform field quality control testing of drilled dowel installations. After adhesive system manufacturer's recommended curing period and prior to placing connecting reinforcing, proof-test for pullout ten percent of adhesive dowels installed. Adhesive dowels shall be tensioned to 60 percent of specified yield strength. Where dowels are located less than six bar diameters from edge of concrete, ENGINEER will determine tensile load required for test. If one or more dowels fail, retest all dowels installed for the Work. Dowels that fail shall be reinstalled and retested at CONTRACTOR's expense.

+ + END OF SECTION + +

SECTION 05 05 33

ANCHOR SYSTEMS

PART 1 – GENERAL

1.1 DESCRIPTION

A. Scope:
   1. CONTRACTOR shall provide all labor, materials, equipment, and incidentals as shown, specified, and required to furnish and install anchor systems.
   2. This Section includes all anchor systems required for the Work, but not specified under other Sections.

B. Coordination:
   1. Review installation procedures under this and other Sections and coordinate installation of items to be installed with or before anchor systems Work.

1.2 REFERENCES

A. Standards referenced in this Section are:
   1. ACI 318, Building Code Requirements for Structural Concrete.
   2. ACI 350, Code Requirements for Environmental Engineering Concrete Structures.
   3. ACI 355.2, Qualification of Post-Installed Mechanical Anchors in Concrete.
   4. ANSI B212.15, Cutting Tools - Carbide-tipped Masonry Drills and Blanks For Carbide-tipped Masonry Drills.
   5. ANSI/MSS SP-58, Pipe Hangers and Supports – Materials, Design, Manufacture, Selection, Application, and Installation.
   6. ASTM A194/A194M, Specification for Carbon and Alloy Steel Nuts for Bolts for High Pressure or High Temperature Service, or Both.
   7. ASTM A276, Specification for Stainless Steel Bars and Shapes.
   8. ASTM A493, Specification for Stainless Steel Wire and Wire Rods for Cold Heading and Cold Forging.
   9. ASTM A563, Specification for Carbon and Alloy Steel Nuts.
   10. ASTM A1011/A1011M, Specification for Steel, Sheet and Strip, Hot-Rolled, Carbon, Structural, High-Strength Low-Alloy, High-Strength Low-Alloy with Improved Formability, and Ultra-High Strength.
   11. ASTM B633, Specification for Electrodeposited Coatings of Zinc on Iron and Steel.
   12. ASTM C307, Test Method for Tensile Strength of Chemical-Resistant Mortar, Grouts, and Monolithic Surfacings.
   13. ASTM C881/C881M, Specification for Epoxy-Resin-Base Bonding Systems for Concrete.
   14. ASTM D695, Test Method for Compressive Properties of Rigid Plastics.

15. ASTM D790, Test Methods for Flexural Properties of Unreinforced and Reinforced Plastics and Electrical Insulating Materials.
16. ASTM E329, Specification for Agencies Engaged in Construction Inspection, Testing, or Special Inspection.
17. ASTM E488, Test Methods for Strength of Anchors in Concrete and Masonry Elements.
18. ASTM F593, Specification for Stainless Steel Bolts, Hex Cap Screws, and Studs.
19. ASTM F594, Specification for Stainless Steel Bolts, Hex Cap Screws, and Studs.
20. ASTM F1554, Specification for Anchor Bolts, Steel, 36, 55 and 105-ksi Yield Strength.
21. FS A-A-1922A, Shield, Expansion (Caulking Anchors, Single Lead).
22. FS A-A-1923A, Concrete Expansion Anchors.
23. FS A-A-1925A, Shield, Expansion (Nail Anchors).
24. FS A-A-55614, Shield, Expansion (non-drilling expansion anchors).
25. ICC-ES AC01, Acceptance Criteria for Expansion Anchors in Masonry Elements.
26. ICC-ES AC58, Acceptance Criteria for Adhesive Anchors in Masonry Elements.
27. ICC-ES AC60, Acceptance Criteria for Anchors in Unreinforced Masonry Elements.
28. ICC-ES AC193, Acceptance Criteria for Mechanical Anchors in Concrete Elements.
29. ICC-ES AC308, Acceptance Criteria for Post-Installed Adhesive Anchors in Concrete Elements.
30. ISO 3506-1, Mechanical Properties of Corrosion-Resistant Stainless Steel Fasteners -- Part 1: Bolts, Screws and Studs.
31. NSF/ANSI 61, Drinking Water System Components – Health Effects.

1.3 QUALITY ASSURANCE

A. Qualifications:
   1. Testing Laboratory: Shall comply with ASTM E329 and shall be experienced in tension testing of post-installed anchoring systems.
   2. Post-installed Anchor Installer: Shall be experienced and trained by post-installed anchor system manufacturer in proper installation of manufacturer's products. Product installation training by distributors or manufacturer's representatives is unacceptable unless the person furnishing the training is qualified as a trainer by the anchor manufacturer.

1.4 SUBMITTALS

A. Action Submittals: Submit the following:
   1. Shop Drawings:

a. Listing of all anchor systems products intended for use in the Work including product type, intended location in the Project, and embedded lengths.

2. Product Data:
   a. Manufacturer's specifications, load tables, dimension diagrams, acceptable base material conditions, acceptable drilling methods, and acceptable bored hole conditions.
   b. When required by ENGINEER, copies of valid ICC ES reports that presents load-carrying capacities and installation requirements for anchor systems.

B. Informational Submittals: Submit the following:
   1. Certificates:
      a. For each type of anchor bolt or threaded rod, submit copies of laboratory test reports and other data required to demonstrate compliance with the Contract Documents.
      b. Post-installed anchor system manufacturer's certification that installer received training in the proper installation of manufacturer's products required for the Work.
   2. Manufacturer's Instructions:
      a. Installation instructions for each anchor system product proposed for use, including bore hole cleaning procedures and adhesive injection, cure and gel timetables, and temperature ranges (storage, installation and in-service).

1.5 DELIVERY, STORAGE AND HANDLING

A. Storage and Protection:
   1. Keep materials dry during delivery and storage.
   2. Store adhesive materials within manufacturer's recommended storage temperature range.
   3. Protect anchor systems from damage at the Site. Protect products from corrosion and deterioration.

PART 2 – PRODUCTS

2.1 SYSTEM PERFORMANCE

A. General:
   1. At locations where conditions dictate that Work specified in other Sections is to be of corrosion resistant materials, provide associated anchor systems of stainless steel materials, unless other corrosion-resistant anchor system material is specified. Provide anchor systems of stainless steel materials where stainless steel materials are required in the Contract Documents.

2. Stainless Steel Nuts:
   a. For anchor bolts and adhesive anchors, provide ASTM A194/A194M, Grade 8S (Nitronic 60) stainless steel nuts for stainless steel anchors used for anchoring equipment, gates, and weirs, and other locations, if any, where the attachment will require future removal for operation or maintenance. Provide lock washer or double nuts on each anchorage device provided for equipment, as required by equipment manufacturer.
   b. For other locations, provide for each anchorage device a nut as specified or as required by anchor manufacturer. When ASTM A194/A194M, Grade 8S (Nitronic 60) nuts are not required for anchor bolts and adhesive anchors as specified in this Section, provide anti-seizing compound where stainless steel rods are used with stainless steel nuts of the same type.
3. Materials that can contact potable water or water that will be treated to become potable shall be listed in NSF/ANSI 61.

B. Design Criteria
1. Size, Length, and Load-carrying Capacity: Comply with the Contract Documents. When size, length or load-carrying capacity of anchor system is not otherwise shown or indicated, provide the following:
   a. Anchor Bolts: Provide size, length, and capacity required to carry design load based on values and requirements of Paragraph 3.2.A of this Section. For conditions outside limits of critical edge distance and spacing in Paragraph 3.2.A of this Section, minimum anchor bolt embedment as shown or indicated in Paragraph 3.2.A of this Section apply and capacity shall be based on requirements of Laws and Regulations, including applicable building codes.
   b. Adhesive Anchors, Expansion Anchors, or Concrete Inserts: Provide size, length, type, and capacity required to carry design load. Anchor capacity shall be based on the procedures required by the building code in effect at the Site. Where Evaluation Service Reports issued by the ICC Evaluation Service are required in this Section, anchor capacities shall be based on design procedure required in the applicable ICC Evaluation Service Report.
      1) General: Determine capacity considering reductions due to installation and inspection procedures, embedment length, strength of base fastening materials, spacing, and edge distance, as indicated in the manufacturer's design guidelines. For capacity determination, concrete shall be assumed to be in the cracked condition, unless calculations demonstrate that the anchor system will be installed in an area that is not expected to crack under any and all conditions of design loading.
      2) Concrete Adhesive Anchors: Unless otherwise shown or indicated in the Contract Documents or approved by ENGINEER, provide minimum embedment depth of the greater of the following: required to develop tensile strength of anchor, or a minimum

embedment of 10 anchor diameters; and minimum anchor spacing and edge distance of 12 anchor diameters.

3) Concrete Masonry Adhesive Anchors: Unless otherwise shown or indicated in the Contract Documents or approved by ENGINEER, provide minimum anchor spacing and edge distance as indicated in anchor manufacturer's instructions.

4) Concrete Expansion Anchors: Unless otherwise shown or indicated in the Contract Documents or approved by ENGINEER, provide minimum embedment depth of six anchor diameters, and minimum anchor spacing and edge distance of seven anchor diameters.

5) Concrete Masonry Expansion Anchors: Unless otherwise shown or indicated in the Contract Documents or approved by ENGINEER, provide minimum anchor spacing and edge distance as indicated in anchor manufacturer's instructions.

6) Concrete Undercut Anchors: Unless otherwise shown or indicated in the Contract Documents, or approved by ENGINEER, provide minimum anchor spacing and edge distance as tabulated in anchor manufacturer's instructions.

2. Design Loads. Comply with the Contract Documents. When design load of supported material, equipment, or system is not otherwise shown or indicated, provide the following:

a. Equipment Anchors: Use design load recommended by equipment manufacturer. When equipment can be filled with fluid, use loads that incorporate equipment load and load imposed by fluid.

b. Pipe Hangers and Supports: Use full weight of pipe, and fluid contained in pipe that are tributary to the support plus the full weight of valves and accessories located between the hanger or support being anchored and the next hanger or support.

c. Hangers and Supports for Electrical Systems, and HVAC, Plumbing, and Fire Suppression Systems and Piping: Use the full weight of supported system that is tributary to the support plus the full weight of accessories located between the hanger or support being anchored and the next hanger or support. When piping or equipment is to be filled with fluid, anchor systems shall be sized to support such loads in addition to the weight of the equipment, piping, or system, as applicable.

d. Delegated Design: When anchor systems are used for supporting materials, equipment, or systems delegated to a design professional retained by CONTRACTOR, Subcontractor, or Supplier, provide anchor system suitable for loads indicated in delegated design documents and consistent with the design intent expressed in the Contract Documents.

C. Application:

1. Anchor Bolts:

a. Where anchor bolt is shown or indicated, use cast-in-place anchor bolt unless another anchor type is approved by ENGINEER.

b. Provide anchor bolts as shown or indicated, or as required to secure structural element to appropriate anchor surface.

2. Concrete Adhesive Anchors:
   a. Use where adhesive anchors are shown or indicated for installation in concrete.
   b. Suitable for use where subject to vibration.
   c. Suitable for use in exterior locations or locations subject to freezing.
   d. Suitable for use in submerged, intermittently submerged, or buried locations.
   e. Do not use in overhead applications, unless otherwise shown or approved by ENGINEER.
   f. Do not use for pipe hangers, unless otherwise shown or approved by ENGINEER.
3. Concrete Masonry Adhesive Anchors:
   a. Use where adhesive anchors are shown or indicated for installation in grout-filled or hollow masonry units.
   b. Suitable for use where subject to vibration.
   c. Suitable for use in exterior locations or locations subject to freezing.
   d. Do not use for pipe hangers, unless otherwise shown or approved by ENGINEER.
4. Concrete Wedge Expansion Anchors:
   a. Use where expansion anchors are shown or indicated for installation in concrete.
   b. Do not use where subject to vibration.
   c. Do not use in exterior locations or locations subject to freezing.
   d. Do not use in submerged, intermittently submerged, or buried locations.
   e. Suitable for use in overhead applications.
5. Grout-filled Concrete Masonry Wedge Expansion Anchors:
   a. Use where expansion anchors are shown or indicated for installation on the interior face of grout-filled unit masonry.
   b. Do not use where subject to vibration.
   c. Do not use in exterior locations or locations subject to freezing.
6. Hollow Concrete Masonry Sleeve Expansion Anchors:
   a. Use where expansion anchors are shown or indicated for installation in hollow concrete unit masonry or solid brick.
   b. Do not use for attaching safety-related systems, such as piping conveying hazardous or potentially hazardous materials, or fire suppression systems.
   c. Do not use where subject to vibration.
   d. Do not use in exterior locations or locations subject to freezing.
7. Drop-in Expansion Anchors:
   a. Use drop-in expansion anchors installed in concrete where light-duty anchors are required to support piping or conduit two-inch diameter or smaller.

b. Do not use for attaching safety-related systems, such as piping conveying hazardous or potentially hazardous materials, or fire suppression systems.
c. Do not use where subject to vibration.
d. Do not use at submerged, intermittently submerged, or buried locations.
e. Do not use in exterior locations or locations subject to freezing.
f. Suitable for use in overhead applications.

8. Concrete Undercut Anchors:
   a. Use where undercut anchors are shown or indicated for installation in concrete.
   b. Suitable for use where subject to vibration.
   c. Do not use in submerged, intermittently submerged, or buried locations.
   d. Do not use in exterior locations or locations subject to freezing.
   e. Suitable for use in overhead applications.
9. Concrete Inserts:
   a. Use only where shown or indicated in the Contract Documents.
   b. Allowed for use to support pipe hangers and pipe supports for pipe size and loading recommended by the concrete insert manufacturer.
10. Drive-In Expansion Anchors:
    a. Use drive-in expansion anchors installed in concrete, precast concrete, grouted masonry units, or brick, where light-duty anchors are required to support piping or conduit one-inch diameter and smaller.
    b. Do not use for attaching safety-related systems, such as piping conveying hazardous or potentially hazardous materials, or fire suppression systems.
    c. Do not use in overhead applications.
11. For Use in Precast Concrete Planks:
    a. To support piping or conduit six-inch diameter and smaller, use low-profile drop-in anchors, hollow concrete masonry adhesive anchors, or through-bolts.
    b. For piping greater than six-inch diameter, or to support safety-related systems, use through-bolts. Each through-bolt shall consist of threaded rod, nuts, washers, and bearing plate.

2.2 MATERIALS

A. Anchor Bolts:
   1. Interior Dry Non-Corrosive Locations: Provide straight threaded carbon steel rods complying with ASTM F1554, Grade 36, with heavy hex nuts complying with ASTM A563 Grade A, unless otherwise shown or indicated on the Drawings. Hooked anchor bolts are unacceptable.
   2. Exterior, Buried, Submerged Locations, or When Exposed to Wastewater: Provide stainless steel straight threaded rods complying with ASTM F593, AISI Type 316, Condition A, with ASTM F594, AISI Type 316, stainless steel nuts. Provide ASTM A194/A194M, Grade 8S (Nitronic 60) stainless

steel nuts where required. Other AISI types may be used when approved by ENGINEER. Hooked bolts are unacceptable.

3. Equipment: Provide anchor bolts complying with material requirements of this Section and equipment manufacturer's requirements relative to size, embedment length, and anchor bolt projection. Anchor bolts shall be straight threaded rods with washers and nuts as specified in this Section. Hooked bolts are unacceptable.
4. Anchoring of Structural Elements: Provide anchor bolts of size, material, and strength shown or indicated in the Contract Documents.

B. Concrete Adhesive Anchors:
1. General:
   a. Adhesive anchors shall consist of threaded rods anchored into hardened concrete using an adhesive system.
2. Products and Manufacturers: Provide one of the following:
   a. HIT-RE 500-V3 Injection Epoxy Adhesive Anchoring System, by Hilti Fastening Systems, Inc.
   b. HIT-HY 200-A and HIT-HY 200-R Adhesive Anchoring System, by Hilti Fastening Systems, Inc
   c. SET-XP Epoxy-Tie Adhesive, by Simpson Strong-Tie Company, Inc.
   d. Or equal.
3. Adhesive:
   a. Adhesive system shall use two-component adhesive mix.
   b. Epoxy adhesives shall comply with physical requirements of ASTM C881/C881M, Type IV, Grade 2 and 3, Class A, B, and C, except gel times.
   c. Adhesives shall have a current evaluation report by ICC Evaluation Service for use in both cracked and uncracked concrete with seismic recognition for SDC A through F as tested and assessed in accordance with ICC-ES AC308.
   d. Adhesives shall have minimum bond strength and minimum design bond strength (bond strength multiplied by strength reduction factor) in accordance with Table 05 05 33-A:

TABLE 05 05 33-A:
ADHESIVE BOND STRENGTH [1,2]

Anchor	Uncracked Concrete		Cracked Concrete	
Rod Diameter / Dowel Size	**Bond Strength (psi)**	**Design Bond Strength (psi)**	**Bond Strength (psi)**	**Design Bond Strength (psi)**
3/8-inch / #3	2040	1300	1090	700
1/2-inch / #4	1920	1200	920	560
5/8-inch / #5	1830	1150	710	390
3/4-inch / #6	1760	1050	710	460
7/8inch / #7	1670	900	610	340
1-inch / #8	1650	1050	850	460
- / #9	1900	1000	800	400
1.25-inch/ #10	1580	1000	730	400

Table Notes:

1. Bond strengths listed for hammer-drilled, dry hole.
2. Bond strengths listed for maximum short term concrete temperature of 110 degrees F and maximum long term concrete temperature of 75 degrees F.

4. Anchor:
   a. Provide continuously-threaded, AISI Type 316 stainless steel adhesive anchor rod. Threaded rods shall comply with the concrete adhesive anchor manufacturer's specifications as included in the ICC Service Evaluation Report for the anchor submitted. Nuts shall have specified proof load stresses equal to or greater than the minimum tensile strength of the stainless steel threaded rod used. Provide ASTM A194/A194M, Grade 8S (Nitronic 60) stainless steel nuts where required.

C. Concrete Masonry Adhesive Anchors:
   1. General:
      a. Grout-filled concrete masonry adhesive anchors shall consist of threaded rods anchored into grout-filled concrete block masonry using an adhesive system.
      b. Hollow concrete masonry adhesive anchors shall consist of threaded rods with a cylindrical mesh steel or plastic screen tube anchored into hollow concrete block masonry using an adhesive system.
   2. Products and Manufacturers: Provide one of the following:
      a. HIT-HY 70 Hybrid Adhesive Anchor System, by Hilti Fastening Systems, Inc.
      b. Acrylic-Tie Adhesive, by Simpson Strong-Tie Company, Inc.
      c. Or equal.
   3. Adhesive:
      a. Adhesive system shall use two-component adhesive mix.
      b. Hybrid adhesives shall comply with the following:
         1) ASTM D695 compressive yield strength greater than 7,200 psi on a seven-day cure.
      c. Adhesives shall have current ICC Evaluation Service Report for use in grout-filled concrete masonry, tested and assessed in accordance with ICC-ES AC 58 and ICC-ES AC 60.
   4. Anchor:
      a. Provide stainless steel adhesive anchor rod complying with ASTM F593, AISI Type 316, Condition CW, with ASTM F594, AISI Type 316 stainless steel nuts. Provide ASTM A194/A194M, Grade 8S (Nitronic 60) stainless steel nuts where required.
   5. Mesh Screen Tube (for hollow masonry applications):
      a. Provide with mesh size, length, and diameter as specified by adhesive anchor manufacturer.

D. Concrete Wedge Expansion Anchors:
   1. General:
      a. Concrete wedge expansion anchors shall consist of stud, wedge, nut, and washer.

2. Products and Manufacturers: Provide one of the following:
    a. Kwik Bolt TZ Wedge Anchor, by Hilti Fastening Systems, Inc.
    b. Strong Bolt 2 Wedge Anchor, by Simpson Strong-Tie Company, Inc.
    c. Or equal.
3. Anchors shall comply with physical requirements of FS A-A-1923A, Type 4. Provide concrete wedge expansion anchors suitable for use in cracked and uncracked concrete in accordance with ACI 318 and ACI 350, Appendix D. Demonstrate suitability of cracked concrete wedge anchors in accordance with ACI 355.2 prequalification tests.
4. Interior Dry Non-Corrosive Locations: Provide carbon steel anchors complete with nuts and washers, zinc plated, in accordance with ASTM B633.
5. Other Locations: Provide expansion anchors complete with nuts and washers, AISI Type 304 stainless steel anchor body, in accordance with ASTM A276 or ASTM A493.
6. Concrete wedge expansion anchors shall have a current ICC Evaluation Service Report for use in both cracked and uncracked concrete with seismic recognition in seismic design Categories A through F when tested and assessed in accordance with ICC-ES AC193.

E. Grout-filled Masonry Wedge Expansion Anchors:
1. General:
    a. Grout-filled masonry wedge expansion anchors shall each consist of stud, wedge, nut, and washer.
2. Product and Manufacturers: Provide one of the following:
    a. Kwik-Bolt 3 Expansion Anchors, by Hilti Fastening Systems, Inc.
    b. Wedge-All Wedge Anchors, by Simpson Strong-Tie Company, Inc.
    c. Or equal.
3. Anchors shall comply with physical requirements of FS A-A-1923A, Type 4. Anchors shall be non-bottom bearing type with single-piece steel expansion clip providing 360-degree contact with base material and shall not require oversized holes for installation.
4. Interior Dry Non-Corrosive Locations: Provide carbon steel anchors complete with nuts and washers, zinc plated, in accordance with ASTM B633.
5. Other Locations: Provide AISI Type 316 stainless steel anchor, complete with nut and washer, in accordance with ASTM A276 or ASTM A493.
6. Grout-filled masonry wedge expansion anchors shall have a current ICC Evaluation Service report for use in fully-grouted concrete masonry construction when tested and assessed in accordance with ICC-ES AC01.

F. Hollow Concrete Masonry Sleeve Expansion Anchors:
1. General:
    a. Sleeve expansion anchors shall each consist of an externally threaded stud with full length expanding sleeve.
2. Products and Manufacturers: Provide one of the following:
    a. HLC Sleeve Anchors, by Hilti Fastening Systems, Inc.

b. Dynabolt Sleeve Anchors, by ITW Red Head.
c. Or equal.

3. Anchors shall comply with physical requirements of FS A-A-1922A. Anchors shall be non-bottom bearing type with single-piece steel expansion sleeve providing 360-degree contact with base material, and shall not require oversized holes for installation.
4. Interior Dry Non-Corrosive Locations: Provide carbon steel anchors complete with nuts and washers, zinc plated, in accordance with ASTM B633.
5. Other Locations: Provide expansion anchors complete with nuts and washers, Type 304 stainless steel, in accordance with ASTM A276 or ASTM A493.

G. Drop-in Expansion Anchors:
1. General:
a. Drop-in expansion anchors shall each consist of an internally threaded, deformation-controlled expansion anchor with pre-assembled expander plug.
2. Products and Manufacturers: Provide one of the following:
a. HDI Drop-In Anchors, by Hilti Fastening Systems, Inc.
b. Drop-In Anchor, by Simpson Strong-Tie Company, Inc.
c. Or equal.
3. Provide carbon steel anchors complete with nuts and washers, zinc plated, in accordance with ASTM B633, complying with physical requirements of FS A-A-55614, Type I. Anchors shall be flush or shell type. Provide low-profile anchors for use in precast concrete planks.

H. Concrete Undercut Anchors:
1. General:
a. Each concrete undercut anchor shall consist of threaded stud, thick-walled expansion sleeve, expander coupler, and nut and washer. Anchors shall be pre-set type or through-set type, as shown on the Drawings.
2. Products and Manufacturers: Provide one of the following:
a. HDA Undercut Anchor, by Hilti Fastening Systems, Inc.
b. DUC Ductile Undercut Anchor, by USP Structural Connectors.
c. Or equal
3. Provide concrete undercut expansion anchors in accordance with ACI 318 and ACI 350, Appendix D. Demonstrate suitability of cracked concrete undercut anchors in accordance with ACI 355.2 prequalification tests.
4. Installed anchor shall exhibit form fit between bearing elements and the undercut in the concrete.
5. Interior Dry Non-Corrosive Locations: Provide carbon steel anchors, complete with nuts and washers, zinc plated, in accordance with ASTM B633.

6. Other Locations: Provide stainless steel anchors, complete with nuts and washers, manufactured of AISI Type 316 stainless steel or materials complying with ISO 3506-1 and having corrosion resistance equivalent to AISI Type 316 stainless steel.
7. Concrete undercut anchors shall have a current ICC Evaluation Service Report for use in both cracked and uncracked concrete for seismic recognition for seismic design Categories A through F when tested and assessed in accordance with ICC-ES AC193.

I. Concrete Inserts:
1. Manufacturers: Provide products of one of the following:
   a. Unistrut Corporation.
   b. Cooper B-Line, Inc.
   c. Anvil International, Inc.
   d. Or equal.
2. Spot Concrete Inserts:
   a. Provide inserts recommended by insert manufacturer for required loading. Inserts shall comply with ANSI/MSS SP-58, malleable iron, Type 18. Spot inserts shall allow for lateral adjustment and have means for attachment to forms. Provide nuts compatible with insert and to suit threaded hanger rod sizes.
3. Continuous Concrete Inserts:
   a. Provide inserts recommended by insert manufacturer for required loading. Inserts shall be continuous type and shall be manufactured from minimum 12-gage cold-formed channel sections, complying with ASTM A1011/A1011M, stainless steel, Grade 33, complete with styrofoam inserts, end caps, and means for attaching to forms. Provide channel nuts compatible with insert suitable for threaded hanger rod sizes.
4. Provide inserts with plain finish.

J. Drive-In Expansion Anchors:
1. General:
   a. Drive-In expansion anchors shall each consist of stainless steel drive pin and expanding alloy body.
2. Products and Manufacturers: Provide one of the following:
   a. Metal HIT Anchor, by Hilti Fastening Systems, Inc.
   b. Zinc Nailon Anchor, by Simpson Strong-Tie Company, Inc.
   c. Or equal.
3. Provide Type 304 stainless steel drive pin with zinc alloy body. Anchor shall comply with physical requirements of FS A-A-1925A, Type 1.

K. Unless approved by ENGINEER, do not use power-actuated fasteners or other types of bolts and fasteners not specified in this Section.

L. Anti-Seizing Compound:
1. Products and Manufacturers: Provide one of the following:

a. Pure Nickel Never-Seez, by Bostik.
b. Nickel-Graf, by Anti-Seize Technology.
c. Or equal.

2. Provide pure nickel anti-seizing compound.

PART 3 – EXECUTION

3.1 INSPECTION

A. Examine conditions under which materials will be installed and advise ENGINEER in writing of conditions detrimental to proper and timely completion of the Work. Do not proceed with the Work until unsatisfactory conditions are corrected.

3.2 INSTALLATION

A. Anchor Bolts:
1. Provide anchor bolts as shown or indicated in the Contract Documents, or as required to secure structural element to the appropriate anchor surface.
2. Locate and accurately set anchor bolts using templates or other devices as required, prior to placing concrete. Wet setting of anchor bolts is unacceptable.
3. Protect threads and shank from damage during installation and subsequent construction operations.
4. Unless otherwise shown or approved by ENGINEER anchor bolts shall comply with Table 05 05 33-B:

TABLE 05 05 33-B:
SINGLE ANCHOR ALLOWABLE LOADS ON ANCHOR BOLTS [1]

Bolt Diameter (inch)	F1554 Grade 36 F593 Type 316, Condition A				F1554 Grade 55			
	Minimum Embedment (inch)	Minimum Edge Distance and Spacing[2] (inch)	Shear[3,4] (lb)	Tension[3] (lb)	Minimum Embedment (inch)	Minimum Edge Distance and Spacing[2] (inch)	Shear[3] (lb)	Tension[3] (lb)
1/2	6	9	1,262	2,420	8.5	12.75	1,660	3,190
5/8	7.5	11.25	2,010	3,860	10.5	15.75	2,640	5,080
3/4	9	13.5	2,974	5,720	13	19.5	3,910	7,520
7/8	10.5	15.75	4,106	7,890	15	22.5	5,400	10,390
1	12	18	5,386	10,360	17	25.5	7,090	13,450
1 1/8	13.5	20.25	6,787	13,052	19	28.5	8,930	16,580
1 1/4	15	22.5	8,617	16,572	21	31.5	11,340	20,040

Table Notes:
1. Table is based on ACI 318 and ACI 350, Appendix D, f'_c = 4000 psi. Table 05 05 33-B is not applicable to anchor bolts embedded in grouted masonry.

2. Critical edge distance and spacing are indicated in the table. Capacity of anchor bolts for other combination of edge distances and spacing shall be evaluated in accordance with ACI 318 and ACI 350, Appendix D.
3. Values for shear and tension listed are not considered to act concurrently. Interaction of tension and shear will be evaluated by ENGINEER in accordance with ACI 318 and ACI 350, Appendix D.

B. Adhesive Anchors, Undercut Anchors, and Expansion Anchors – General:
1. Prior to drilling, locate existing reinforcing steel in vicinity of proposed holes. If reinforcing conflicts with proposed hole location, obtain ENGINEER's approval of alternate hole locations to avoid drilling through or damaging existing reinforcing bars.

C. Adhesive Anchors:
1. Comply with manufacturer's written installation instructions and the following.
2. Drill holes to adhesive system manufacturer's recommended drill bit diameter to the specified depth. Drill holes in hammering and rotation mode with carbide-tipped drill bits that comply with the tolerances of ANSI B212.15. Core-drilled holes are unacceptable.
3. Before setting adhesive anchor, hole shall be made free of dust and debris by method recommended by adhesive anchor system manufacturer. Hole shall be brushed with adhesive system manufacturer-approved brush and blown clean with clean, dry, oil-free compressed air to remove all dust and loose particles. Hole shall be dry as defined by adhesive system manufacturer.
4. Before injecting adhesive, obtain ENGINEER's concurrence that hole is dry and free of oil and other contaminants.
5. Prior to injecting adhesive into the drilled hole, dispense, to a location appropriate for such waste, an initial amount of adhesive from the mixing nozzle, until adhesive is uniform color.
6. Inject adhesive into hole through injection system-mixing nozzle and necessary extension tubes, placed to bottom of hole. Discharge end shall be withdrawn as adhesive is placed but kept immersed to prevent formation of air pockets. Fill hole to depth that ensures that excess material is expelled from hole during anchor placement.
7. Twist anchors during insertion into partially-filled hole to guarantee full wetting of rod surface with adhesive. Insert rod slowly to avoid developing air pockets.
8. Provide adequate curing in accordance to adhesive system manufacturer's requirements prior to continuing with adjoining Work that could place load on installed adhesive anchors. Do not begin adjoining Work until adhesive anchors are successfully tested or when allowed by ENGINEER.
9. Limitations:
   a. At time of anchor installation, concrete shall have compressive strength (f'c) of not less than 2,500 psi.
   b. At time of anchor installation, concrete shall have age of not less than 21 days.

c. Installation Temperature: Comply with manufacturer's instructions for installation temperature requirements. Provide temporary protection and other measures, such as heated enclosures, necessary to ensure that base material temperature complies with anchor systems manufacturer's requirements during installation and curing of adhesive anchor system.

d. Oversized Holes: Advise ENGINEER immediately if size of drilled hole is larger than recommended by anchor system manufacturer. Cost of corrective measures, including but not limited to redesign of anchors due to decreased anchor capacities, shall be paid by CONTRACTOR.

e. Embedment depths shall be based on installation in normal-weight concrete with compressive strength of 2,500 psi when embedded in existing concrete, and 4,000 psi when embedded in new concrete.

D. Expansion Anchors:

1. Comply with expansion anchor manufacturer's written installation instructions and the following:
2. Drill holes using anchor system manufacturer's recommended drill bit diameter and to the specified depth. Drill holes in hammering and rotation mode with carbide-tipped drill bits complying with tolerances of ANSI B212.15. Core drilled holes are unacceptable.
3. Before installing anchor, hole shall be made free of dust and debris by method recommended by anchor system manufacturer. Hole shall be brushed with anchor system manufacturer-approved brush and blown clean with clean, dry, oil-free compressed air to remove all dust and loose particles.
4. Before installing anchor, obtain ENGINEER's concurrence that hole is dry and free of oil and other contaminants.
5. Protect threads from damage during anchor installation. Drive anchors not less than four threads below surface of the attachment. Set anchors to anchor manufacturer's recommended torque using a torque wrench.

E. Concrete Undercut Anchors:

1. Comply with undercut anchor manufacturer's written installation instructions and the following.
2. Protect threads from damage during anchor installation.
3. Drill hole to anchor manufacturer's specified depth and diameter using a drill bit matched to the specific anchor.
4. Before setting the undercut anchor, hole shall be free of dust and debris using method recommended by undercut anchor system manufacturer. Hole shall be blown clean with clean, dry, oil-free compressed air to remove all dust and loose particles.
5. Insert the anchor by hand until anchor reaches bottom of hole.
6. Set anchor in accordance with manufacturer's instructions using anchor manufacturer's specified setting tool.
7. Verify that the setting mark is visible on the threaded rod above the sleeve.

8. Anchor shall be set to manufacturer's recommended torque, using a torque wrench.

F. Concrete Inserts:
   1. Comply with concrete insert manufacturer's installation instructions.
   2. Inserts shall be flush with slab bottom surface.
   3. Protect embedded items from damage during concrete placing. Ensure that embedded items are securely fastened to prevent movement during concrete placing, and ensure that embedded items do fill with concrete during concrete placing.
   4. Inserts intended for piping greater than four-inch diameter shall be provided with hooked rods attached to concrete reinforcing.

G. Anti-Seizing Compound:
   1. Provide anti-seizing compound in accordance with anti-seizing compound manufacturer's installation instructions, at locations indicated in Paragraph 2.1.B of this Section.
   2. Do not use anti-seizing compound at locations where anchor bolt or adhesive anchor will contact potable water or water that will be treated to become potable.

3.3 CLEANING

A. After embedding concrete is placed, remove protection and clean bolts and inserts.

3.4 FIELD QUALITY CONTROL

A. Site Tests:
   1. Furnish services of independent testing laboratory to perform field quality tensile testing of production adhesive anchors at the Site, unless otherwise specified.
      a. Testing shall comply with ASTM E488.
      b. Test at least ten percent of all types of adhesive anchors. If one or more adhesive anchors fail the test, CONTRACTOR shall pay cost of testing, or at ENGINEER's option CONTRACTOR may arrange for testing paid by CONTRACTOR, for all adhesive anchors of same diameter and type installed on the same day as the failed anchor. If anchors installed on the same day as the failed anchor also fail the test, ENGINEER may require retesting of all anchors of the same diameter and type installed in the Work. CONTRACTOR shall be responsible for retesting costs.
      c. ENGINEER will direct which adhesive anchors are to be tested and indicate test load to be used
      d. Apply test loads with hydraulic ram.
      e. Displacement of post-installed anchors shall not exceed D/10, where D is nominal diameter of anchor being tested.

2. Mechanical Anchors:
   a. Responsibility:
      1) OWNER will employ testing agency to perform field quality control tensile testing of mechanical anchors at the Site.
      2) CONTRACTOR shall demonstrate competence in installing mechanical anchors by performing field quality control tests.
   b. Perform field quality control tests on test anchors at location directed by ENGINEER. Test anchors shall not be part of the finished Work.
   c. Test not less than one installation of each type of mechanical anchor used in the Work.
      1) Load each test anchor to failure.
      2) Testing shall comply with ASTM E488.
      3) Apply test loads with hydraulic ram.
   d. Anchors that fail to reach the specified test load shall be considered as not passing the test and shall be re-tested at no additional cost to OWNER.
   e. Testing agency shall submit test results to CONTRACTOR and ENGINEER within 24 hours of completion of test.
3. Correct defective Work by removing and replacing or correcting, as directed by ENGINEER.
4. CONTRACTOR shall pay for all corrections and subsequent testing required to confirm competence in the installation of post-installed mechanical anchors.
5. Testing agency shall submit test results to CONTRACTOR and ENGINEER within 24 hours of completion of test.

B. Manufacturer's Services:
   1. Provide at the Site services of qualified adhesive manufacturer's representative during initial installation of adhesive anchor systems to train CONTRACTOR's personnel in proper installation procedures. Manufacturer's representative shall observe to confirm that installer demonstrates proper installation procedures for adhesive anchors and adhesive material.

+ + END OF SECTION + +

** THIS PAGE INTENTIONALLY LEFT BLANK **

SECTION 05 50 13

MISCELLANEOUS METAL FABRICATIONS

PART 1 – GENERAL

1.1 DESCRIPTION

A. Scope:
   1. CONTRACTOR shall provide all labor, materials, equipment, and incidentals as shown, specified, and required to furnish miscellaneous metal fabrications including surface preparation and shop priming.
   2. The Work also includes:
      a. Providing openings in miscellaneous metal fabrications to accommodate the Work under this and other Sections, and attaching to miscellaneous metal fabrications all items such as sleeves, bands, studs, fasteners, and all items required for which provision is not specifically included under other Sections.

B. Coordination:
   1. Review installation procedures under this and other Sections and coordinate the Work to be installed with, or attached to, miscellaneous metal fabrications Work.
   2. Hot-dip Galvanizing: Coordinate with steel fabricator detailing for and fabrication of assemblies to be hot-dip galvanized, to minimize distortion during galvanizing process.

C. Related Sections:
   1. Section 03 00 05, Concrete.
   2. Section 05 05 33, Anchor Systems.

1.2 REFERENCES

A. Standards referenced in this Section are:
   1. ANSI A14.3, Ladders – Fixed –Safety Requirements.
   2. ANSI Z359.1, Safety Requirements for Personal Fall Arrest Systems, Subsystems, and Components.
   3. ASTM A36/A36M, Specification for Carbon Structural Steel.
   4. ASTM A53/A53M, Specification for Pipe Steel, Black and Hot-Dipped, Zinc-Coated, Welded and Seamless.
   5. ASTM A123/A123M, Specification for Zinc (Hot-Dip Galvanized) Coatings on Iron and Steel Products.
   6. ASTM A153/A153M, Specification for Zinc Coating (Hot-Dip) on Iron and Steel Hardware.

7. ASTM A240/A240M, Specification for Chromium and Chromium-Nickel Stainless Steel Plate, Sheet and Strip for Pressure Vessels and for General Applications.
8. ASTM A320/A320M, Specification for Alloy-Steel and Stainless Steel Bolting Materials for Low-Temperature Service.
9. ASTM A384/A384M-02 Standard Practice for Safeguarding Against Warpage and Distortion During Hot-Dip Galvanizing of Steel Assemblies.
10. ASTM A500, Specification for Cold-Formed Welded and Seamless Carbon Steel Structural Tubing in Rounds and Shapes.
11. ASTM A572/A572M, Specification for High-Strength Low-Alloy Columbium-Vanadium Structural Steel.
12. ASTM A793, Specification for Rolled Floor Plate, Stainless Steel.
13. ASTM A992/A992M, Specification for Structural Steel Shapes.
14. ASTM B209, Specification for Aluminum and Aluminum-Alloy Sheet and Plate.
15. ASTM B211, Specification for Aluminum and Aluminum-Alloy Bar, Rod and Wire.
16. ASTM B221, Specification for Aluminum and Aluminum-Alloy Extruded Bars, Rods, Wire, Profiles, and Tubes.
17. ASTM B308/B308M, Specification for Aluminum-Alloy 6061-T6 Standard Structural Profiles.
18. ASTM B429, Specification for Aluminum-Alloy Extruded Structural Pipe and Tube.
19. ASTM B632/B632M, Specification for Aluminum-Alloy Rolled Tread Plate.
20. AWS D1.1/D1.1M, Structural Welding Code – Steel.
21. AWS D1.2/D1.2M, Structural Welding Code – Aluminum.
22. AWS D1.6, Structural Welding Code – Stainless Steel.
23. NAAMM, Metal Finishes Manual.

1.3 QUALITY ASSURANCE

A. Qualifications:
   1. Welding:
      a. Qualify welding processes and welding operators in accordance with AWS D1.1/D1.1M, D1.2/D1.2M, or D1.6, as applicable.
      b. When requested by ENGINEER, provide certification that each welder employed on or to be employed for the Work have satisfactorily passed AWS qualification tests within previous 12 months. Ensure that all certifications are current.

B. Regulatory Requirements: Conform to the following:
   1. 29 CFR 1910, Occupational Health and Safety Standards.

1.4 SUBMITTALS

A. Action Submittals: Submit the following:
   1. Shop Drawings:

a. Fabrication and erection details for assemblies of miscellaneous metal Work. Include plans, elevations, and details of sections and connections. Show anchorage and accessory items. Include setting drawings and templates for locating and installing miscellaneous metal items and anchorage devices.

2. Product Data:
   a. Copies of manufacturer's specifications, load tables, dimension diagrams, anchor details, and installation instructions for products to be used in miscellaneous metal Work.

B. Informational Submittals: Submit the following:
   1. Test and Evaluation Reports:
      a. Mill test report that indicate chemical and physical properties of each type of material, when requested by ENGINEER.
   2. Qualifications Statements:
      a. Copies of welder's certifications, when requested by ENGINEER.

1.5 DELIVERY, STORAGE, AND HANDLING

A. Packing, Shipping, Handling and Unloading:
   1. Deliver products to Site to ensure uninterrupted progress of the Work. Deliver anchorage materials to be embedded in other construction in ample time to prevent delaying the Work.

PART 2 – PRODUCTS

2.1 MATERIALS

A. Steel:
   1. W-Shapes and WT-Shapes: ASTM A992/A992M.
   2. S-Shapes and Channels: ASTM A572/A572M, Grade 50.
   3. Hollow Structural Sections: ASTM A500, Grade B.
   4. Angles, Plates, Bars: ASTM A36/A36M.
   5. Steel Pipe: ASTM A53/A53M, Grade B.

B. Aluminum:
   1. Aluminum Shapes: ASTM B308/B308M, Alloy 6061-T6, ASTM B 221, Alloy 6061-T6.
   2. Aluminum Tubes and Pipes: ASTM B429, Alloy 6061-T6.
   3. Aluminum Bars and Rod: ASTM B211, Alloy 6061-T6.
   4. Aluminum Plates: ASTM B209, Alloy 6061-T6.

C. Stainless Steel:
   1. Plates and Sheets: ASTM A240/A240M, Type 316 stainless steel.
   2. Submerged or Intermittently Submerged: Type 316 stainless steel.
   3. Non-submerged: Type 316 stainless steel.

D. Stainless Steel Fasteners and Fittings: ASTM A 320/A 320M, Type 316 Stainless Steel.

E. Zinc-coated Hardware: ASTM A153/A153M.

2.2 MISCELLANEOUS METAL ITEMS

A. Shop Assembly:
   1. Pre-assemble items in the shop to the greatest extent possible to minimize field-splicing and field-assembly of units at the Site. Disassemble units only to extent necessary for shipping and handling limitations. Clearly mark units for reassembly and coordinated installation.

B. Miscellaneous Framing and Supports:
   1. Provide miscellaneous metal framing and supports that are not part of structural steel framework and are required to complete the Work.
   2. Fabricate miscellaneous units to sizes, shapes, and profiles shown on the Drawings or, if not shown, of required dimensions to receive adjacent grating, plates, tanks, doors, and other work to be retained by the framing.
   3. Except as otherwise shown, fabricate from structural shapes, plates, and bars, of all-welded construction using mitered corners, welded brackets, and splice plates and minimum number of joints for field connection.
   4. Cut, drill, and tap units to receive hardware and similar items to be anchored to the Work.
   5. Furnish units with integrally welded anchors for casting into concrete or building into masonry. Furnish inserts if units are to be installed after concrete is placed.
      a. Except as otherwise shown, space anchors, 2.0 feet on centers, and provide units the equivalent of 1.25-inch by 1/4-inch by eight-inch strips.
      b. Galvanize exterior miscellaneous frames and supports.
      c. Where shown or indicated, galvanize miscellaneous frames and supports that are not to be installed outdoors.
   6. Miscellaneous steel framing and supports shall be hot-dip galvanized and finish-painted, unless otherwise shown or indicated.

C. Fasteners and Hardware: Provide Type 316 stainless steel fasteners for aluminum fabrications and zinc-coated hardware for galvanized fabrications, unless otherwise shown or specified.

D. Anchors and Expansion Anchors: Refer to Section 05 05 33, Anchor Systems.

2.3 FINISHING

A. Surface Preparation and Shop Priming: Perform surface preparation and apply primer coat to miscellaneous metal fabrications in the shop. Conform to surface preparation and shop priming requirements.

B. Galvanizing:
   1. Galvanizing of fabricated steel items shall comply with ASTM A123/A123M.
   2. Details of fabrication of steel items and assemblies to be hot-dip galvanized shall conform to recommendations of ASTM A384/A384M to minimize the potential for distortion.

C. Aluminum Finish: Provide natural mill finish for aluminum Work unless otherwise shown or specified.

2.4 SOURCE QUALITY CONTROL

A. Tests and Inspections:
   1. Materials and fabrication procedures shall be subject to inspection and tests in the mill, shop, and field, conducted by a qualified inspection agency. Such inspections and tests will not relieve CONTRACTOR of responsibility for providing materials and fabrication procedures complying with the Contract Documents.

PART 3 – EXECUTION

3.1 EXAMINATION

A. Examine conditions under which the Work is to be performed and notify ENGINEER in writing of conditions detrimental to the proper and timely completion of the Work. Do not proceed with the Work until unsatisfactory conditions are corrected.

3.2 INSTALLATION

A. Install miscellaneous metal fabrications accurately in location, alignment, and elevation, plumb, level, true, and free of rack, measured from established lines and levels. Brace temporarily or anchor temporarily in formwork where fabrications are to be built into concrete, masonry, or other construction.

B. Anchor securely as shown and as required for the intended use, using concealed anchors where possible.

C. Fit exposed connections accurately together to form tight, hairline joints. Field-weld steel connections that are not to be exposed joints and cannot be shop-welded because of shipping size limitations. Comply with AWS D1.1/D1.1M, D1.2/D1.2M and D1.6, as applicable to the material being welded. Grind steel joints smooth and touch-up shop paint coat. Do not weld, cut, or abrade surfaces of exterior units that have been hot-dip galvanized after fabrication, and are intended for bolted or screwed field connections.

D. Protection of Aluminum from Dissimilar Materials:
   1. Coat surfaces of aluminum that will contact dissimilar materials such as concrete, masonry, and steel.

+ + END OF SECTION + +

SECTION 07 92 00

JOINT SEALANTS

PART 1 – GENERAL

1.1 APPLICABLE PUBLICATIONS

A. The publications listed below form a part of this specification to the extent referenced. The publications are referred to in the text by the basic designation only.
   1. American Society for Testing and Materials (ASTM) Publications C 920-79 Elastomeric Joint Sealants

1.2 SUBMITTALS

A. Certificates of Conformance or Compliance: Submit certificates from the manufacturers attesting that materials meet the specified requirements.

B. Manufacturer's Descriptive Data: Submit complete descriptive data for each type of material. Clearly mark data to indicate the type the Contractor intends to provide. Data shall state conformance to specified requirements. Data for sealant and calking shall include application instructions, shelf life, mixing instructions for multi-component sealants, and recommend cleaning solvents.

1.3 DELIVERY AND STORAGE

A. Deliver materials to the job site in the manufacturers' external shipping containers, unopened, with brand names, date of manufacture, and material designation clearly marked thereon. Containers of elastomeric sealant shall be labeled as to type, class, grade, and use. Carefully handle and store all materials to prevent inclusion of foreign materials or subjection to sustained temperatures exceeding 100°F or less than 40°F.

PART 2 - PRODUCTS

2.1 MATERIALS

Products shall conform to the reference documents listed for each use. Color of sealant and calking shall match adjacent surface color unless specified otherwise. For ASTM C 920 sealants, use a sealant that has been tested on the type(s) of substrate to which it will be applied.

A. Floor Joints Sealant: Provide ASTM C-920, Type S or M, Grade P, Class 25, Use T. Color of sealant shall be gray.

B. Primer for Sealant: Use a non-staining, quick-drying type and consistency recommended by the sealant manufacturer for the particular application.

C. Bond Breakers: Use the type of consistency recommended by the sealant manufacturer for the particular application.

D. Backstops: Use glass fiber roping or neoprene, butyl, polyurethane, or polyethylene foams free from oil or other staining elements as recommended by the sealant manufacturer. Backstop material shall be compatible with the sealant. Do not use oakum and other types of absorptive materials as backstops.

E. Interior Caulking: Vertical and horizontal surfaces for dry, non-traffic installations provide single part water based VOC free siliconized acrylic latex sealant complying with ASTM C834. Siliconized color to be selected from manufacturer's standard offering.

F. Exterior Sealant: For vertical and horizontal joints provide one-part polyurethane material complying with ASTM C920-87, Type S, Grade NS, Class 25. Use NT for metal, use M for mortar, and use A for aluminum contact. Color to be selected from manufacturers standard offering.

G. Below Sill Sealant: Single part Butyl Sealant conforming to Fed Spec TT-S-001652. Color aluminum.

PART 3 - EXECUTION

3.1 SURFACE PREPARATION

A. Surfaces shall be clean, dry to the touch, and free from frost, moisture, grease, oil, wax, lacquer, paint, or other foreign matter that would tend to destroy or impair adhesion. Where adequate grooves have not been provided, clean out grooves to a depth of ½" and grind to a minimum width of ¼" without damage to the adjoining work. No grinding shall be required on metal surfaces.

3.2 SEALANT PREPARATION

A. Do not modify the sealant by addition of liquids, solvents, or powders. Mix multi-component elastomeric sealants in accordance with manufacturer's printed instructions.

3.3 APPLICATION

A. Backstops: Where joint cavities are constructed deeper than indicated, tightly pack the back or bottom with backstop material to provide a joint of the depth indicated. Install backstops dry and free of tears or holes.

B. Primer: Just prior to application of the sealant or calking compound, clean out all loose particles from joints. Apply primer in accordance with compound manufacturer's directions. Do not apply primer to exposed finish surfaces.

C. Bond Breaker: Provide bond breakers as recommended by the sealant manufacturer for each type of joint and sealant used.

D. Sealant and Caulking Compounds: Use a compound that is compatible with the material to and against which it is applied. Do not use a compound that has exceeded its shelf life or has become too jelled to be discharged in a continuous flow from the gun. Apply the compound in accordance with the manufacturer's printed instructions. Force the compound into the joints with sufficient pressure to fill the joints solidly. Compound shall be uniformly smooth and free from wrinkles.
   1. Interior Sealant and Caulking: Provide sealant or caulking at all exposed joints in the building and at all joints indicated to receive sealant or caulking.
   2. Exterior Sealant: Provide sealant at all joints around the perimeter of openings and at all exposed joints on the building and at all joints indicated to receive sealant.
   3. Floor Joints Sealants: Provide sealant in all control joints and in other floor joints indicated or specified.

3.4 PROTECTION AND CLEANING

A. Protection: Protect areas adjacent to joints from compound smears. Masking tape may be used for this purpose if removed 5 to 10 minutes after the joint is filled.

B. Cleaning: Immediately scrape off fresh compound that has been smeared on masonry and rub clean with a solvent as recommended by the compound manufacturer. Upon completion of compound application, remove all remaining smears and stains resulting there from and leave the work in a clean and neat condition.

+ + END OF SECTION + +

** THIS PAGE INTENTIONALLY LEFT BLANK **

SECTION 09 91 00

PAINTING

PART 1 - GENERAL

1.1 DESCRIPTION

A. Scope:
   1. CONTRACTOR shall provide all labor, materials, tools, equipment, and incidentals as shown, specified, and required to furnish and apply paint systems.
      a. CONTRACTOR is responsible for surface preparation and painting of all new and existing interior and exterior items and surfaces throughout the Project areas included under this and other Sections.
   2. Extent of painting includes the Work specified below. Painting shown on Drawings or described in this Section may not provide CONTRACTOR with complete indication of all painting Work. Refer to Article 2.2 of this Section where all surfaces of generic types specified are specified for preparation and painting according to their status, intended function, and location, using the painting system for that surface, function, and location as specified, unless specifically identified on the Drawings as a surface not to receive specified painting system.
      a. All new and specifically identified existing surfaces and items except where natural finish of material is specified as a corrosion-resistant material not requiring paint; or is specifically shown as indicated by written note or specified as a surface not to be painted. Where items or surfaces are not specifically mentioned, paint them the same as adjacent similar materials or areas.
      b. Surface preparation and painting of all new and specifically identified existing items, both interior and exterior, and other surfaces, including items furnished by OWNER, are included in the Work, except as otherwise shown or specified.
      c. Removal of all substances, topcoats, primers and all intermediate coats of paint and other protective or decorative coatings on those items and surfaces to remain that are identified to receive a painting system under this Section, to provide surfaces acceptable for application of painting specified.

B. Coordination:
   1. Review installation, removal, and demolition procedures under other Sections and coordinate them with the Work specified in this Section.
   2. Coordinate painting of areas that will become inaccessible once equipment and similar fixed items have been installed.
   3. Furnish information to ENGINEER on characteristics of finish materials proposed for use and ensure compatibility with prime coats used. Provide

barrier coats over incompatible primers or remove and repaint as required. Notify ENGINEER in writing of anticipated problems using specified painting systems with surfaces primed by others. Reprime equipment primed in factory and other factory-primed items that are damaged or scratched.

C. Related Sections:
   1. Section 40 05 19, Ductile Iron Process Pipe.

D. Work Not Included: The following Work is not included as painting Work, or are included under other Sections:
   1. Shop Priming: Shop priming of structural metal, miscellaneous metal fabrications, other metal items and fabricated components such as shop-fabricated or factory-painted process equipment, plumbing equipment, heating and ventilating equipment, electrical equipment, and accessories shall conform to applicable requirements of this Section but are included under other Sections.
   2. Pre-finished Items:
      a. Items furnished with such finishes as baked-on enamel, porcelain, and polyvinylidene fluoride shall only be touched up at Site by CONTRACTOR using manufacturer's recommended compatible field-applied touchup paint.
      b. Items furnished with finishes such as chrome plating or anodizing.
   3. Concealed Surfaces: Non-metallic wall or ceiling surfaces in areas not exposed to view, and generally inaccessible areas, such as furred spaces, pipe chases, duct shafts, and elevator shafts.
   4. Concrete floors, unless specifically shown as a surface to be painted.
   5. Face-brick, glazed structural tile, and prefaced, ground-faced or split-faced concrete unit masonry.
   6. Exterior face of architectural precast concrete.
   7. Collector bearings, shafts and chains, wood flights, wood stop logs, and wood or fiberglass baffles.
   8. Corrosion-Resistant Metal Surfaces: Where the natural oxide of item forms a barrier to corrosion, whether factory- or Site-formed, including such materials as copper, bronze, muntz metal, terne metal, and stainless steel.
   9. Operating Parts and Labels:
      a. Do not paint moving parts of operating units, mechanical and electrical parts such as valve and damper operators, linkages, sensing devices, interior of motors, and fan shafts.
      b. Do not paint over labels required by governing authorities having jurisdiction at Site, or equipment identification, performance rating, nameplates, and nomenclature plates.
      c. Cover moving parts and labels during the painting with protective masking. Remove all protective masking upon completion of Work. Remove all paint, coatings, and splatter that comes in contact with such labels.

10. Structural and miscellaneous metals covered with concrete need not receive primers, intermediate, or finish coats of paint.

E. Description of Colors and Finishes:
   1. Color Selection:
      a. OWNER reserves the right to select non-standard colors for paint systems specified within ability of paint manufacturer to produce such non-standard colors. Provide such colors at no additional expense to OWNER.
   2. Color Coding of Pipelines, Valves, Equipment, and Ducts:
      a. Color-coding of pipelines, valves, equipment and ducts shall comply with applicable standards of ANSI A13.1, ANSI Z535.1, CFR 1910.144, Recommended Standards for Water Works, and Recommended Standards for Wastewater Facilities. For piping and equipment not covered by the above standards, conform to OWNER's painting color, system, and thickness standards included under the Indian River County Department of Utility Services Water, Wastewater, and Reclaimed Water Utility Construction Standards, Paragraph 16.4.
      b. For equipment located on roofs and equipment that is exposed-to-view, color will be selected by OWNER.

1.2 REFERENCES

A. Referenced Standards: Standards referenced in this Section are:
   1. ANSI A13.1, Scheme for Identification of Piping Systems.
   2. ANSI Z535.1, Safety Color Code.
   3. ASTM D16, Terminology for Paint, Related Coatings, Materials and Applications.
   4. ASTM D2200, Pictoral Surface Preparation Standards for Painting Steel Surfaces.
   5. ASTM D4262, Testing Method for pH of Chemically Cleaned or Etched Concrete Surfaces.
   6. ASTM D4263, Test Method for Indicating Moisture in Concrete by the Plastic Sheet Method.
   7. ASTM D4541, Test Methods for Pull-Off Strength of Coatings Using Portable Adhesion-Testers.
   8. ASTM E329, Specification for Agencies Engaged in the Testing and/or Inspection of Materials Used in Construction.
   9. Great Lakes Upper Mississippi River Board of Public Health and Environmental Managers (GLUMRB) Recommended Standards for Water Works.
   10. GLUMRB, Recommended Standards for Wastewater Facilities.
   11. Ozone Transport Commission, (OTC), OTC Model Rule for Architectural and Industrial Maintenance Coatings.
   12. SSPC PA 2, Measurement of Dry Coating Thickness with Magnetic Gages.
   13. SSPC VIS 1, Visual Standard for Abrasive Blast Cleaned Steel.

14. SSPC VIS 2, Method of Evaluating Degree of Rusting/Painted Steel Surfaces.
15. SSPC Volume 2, Systems and Specifications.

1.3 DEFINITIONS

A. Coating terms defined in ASTM D16 apply to this Section.

1.4 QUALITY ASSURANCE

A. Applicator Qualifications:
   1. Engage a single applicator regularly performing installation of painting systems, with documented skill and successful experience in installing types of products required and agrees to employ only tradesmen trained, skilled, and with successful experience in installing types of products specified.

B. Testing Agency Qualifications: Provide independent testing agency with experience and capability to satisfactorily conduct testing specified in accordance with ASTM E329. Testing agency shall be selected by OWNER and paid for by CONTRACTOR.

C. Source Quality Control:
   1. Obtain products from manufacturers that will provide services of a qualified manufacturer's representative at Site at commencement of painting Work to advise on products, mock-ups, installation, and finishing techniques, at completion of the Work to advise ENGINEER on acceptability of completed Work, and during course of Work as requested by ENGINEER.
   2. Submit "or equal" products, when proposed, with direct comparison to products specified, including information on durability, adhesion, color and gloss retention, percent solids, VOC's grams per liter, and re-coatability after curing.
   3. "Or equal" manufacturers shall furnish same color selection as manufacturers specified, including intense chroma and custom pigmented colors in painting systems.
   4. Color Pigments: Provide pure, non-fading, applicable types to suit surfaces and services indicated. Comply with the following:
      a. Lead and Chromate: Lead and chromate content shall not exceed amount allowed by authorities having jurisdiction.
      b. Through CONTRACTOR, paint manufacturer shall notify ENGINEER of colors that are not suitable for long-term color retention in areas subject to hydrogen sulfide fume exposure.
      c. Manufacturer shall identify colors that meet requirements of authorities having jurisdiction at Site for use in locations subject to contact with potable water or water that will be treated to become potable.
      d. Comply with paint manufacturers' recommendations on preventing coating contact with levels of carbon dioxide and carbon monoxide

that may cause yellowing during application and initial stages of curing of paint coatings.

D. Regulatory Requirements:
   1. Comply with VOC content limits of Ozone Transport Commission (OTC), Model Rule for Architectural and Industrial Maintenance Coatings.

1.5 SUBMITTALS

A. Action Submittals: Submit the following:
   1. Product Data:
      a. Copies of manufacturer's technical data sheets, including surface preparation, number of coats, dry film thickness, test performance data including paint analysis, VOC and chemical component content in comparison to maximum allowed by the Contact Documents, and application instructions for each product proposed for use
      b. Submit proof of acceptability of proposed application techniques by paint manufacturer selected.
      c. Copies of CONTRACTOR's proposed protection procedures in each area of the Work explaining methods of protecting adjacent surfaces from splatter, for confining application procedures in a manner that allows other work adjacent to surface preparation and painting Work to proceed safely and without interruption, and for maintaining acceptable application, curing, and environmental conditions during and after painting systems application.
      d. List each material and cross-reference to the specific painting system and application, including a list of site-specific surfaces to which painting system will be applied. Identify by manufacturer's catalog number and general classification. State number of gallons of each product being purchased for delivery to Site and square foot area calculated to be covered by each painting system specified based on theoretical loss of 20 percent. Where actual area to be covered by paint system exceeds area submitted to ENGINEER for that system, proof of additional material purchase shall be provided to ENGINEER. Calculated coverage shall be as specified for each component of each painting system specified. This requirement does not take precedence over CONTRACTOR's responsibility to provide dry film thickness required for each component of each painting system.
      e. Identify maximum exposure times allowable for each paint system component before next coat of paint can be applied. Submit proposed methods for preparing surfaces for subsequent coats if maximum exposure times are exceeded.
      f. Information on curing times and environmental conditions that affect curing time of each paint system component and proposed methods for accommodating variations in curing time. Identify this information for each painting system in the Work.

g. Specification for spray equipment with cross-reference to paint manufacturer’s recommended equipment requirements.

2. Samples:
   a. Copies of manufacturer's complete color charts for each coating system.

B. Informational Submittals: Submit the following:
   1. Certificates:
      a. Certificate from paint manufacturer stating that materials meet or exceed Contract Documents requirements.
      b. CONTRACTOR shall provide notarized statement verifying that all painting systems are compatible with surfaces specified. All painting systems components shall be reviewed by an authorized technical representative of paint manufacturer for use as a compatible system. Verify that all painting systems are acceptable for exposures specified and that paint manufacturer is in agreement that selected systems are proper, compatible, and are not in conflict with paint manufacturer’s recommended specifications. Show by copy of transmittal form that a copy of letter has been transmitted to paint applicator.
   2. Test Reports:
      a. Certified laboratory test reports for required performance and analysis testing in compliance with ASTM E329.
      b. Adhesion testing plan and procedures.
      c. Results of adhesion testing on existing surfaces containing paints or other coatings to be top coated with paint systems specified. Prior to adhesion testing, submit a testing plan establishing methods, procedures and number of tests in each area where existing coatings are to remain and become substrate for painting Work. Based on results of adhesion testing, recommend methods, procedures, and painting system modifications, if necessary, for proceeding with Work.
      d. Locations of and test methods for soil sampling before beginning Work and after Substantial Completion.
      e. Proposed methods for testing, handling, and disposal of waste generated during Work.
      f. Results of alkalinity and moisture content tests performed per ASTM D4262 and ASTM D4263.
      g. Results of film thickness, holidays, and imperfections tests.
   3. Manufacturer’s Instructions: Provide paint manufacturer’s storage, handling, and application instructions prior to commencing painting Work at Site.
   4. Manufacturer’s Site Reports: Provide report of paint manufacturer’s representative for each visit to Site by paint manufacturer’s representative.
   5. Special Procedure Submittals:
      a. Proposed protection procedures for each area of Work, explaining methods of protecting adjacent surfaces from splatter, for confining application procedures in a manner that allows other work adjacent to surface preparation and painting Work to proceed safely and without interruption.

b. Site-specific health and safety plan.
c. Procedures for maintaining acceptable application, curing and environmental conditions during and after painting systems application.
d. Procedures for providing adequate lighting, ventilation, and personal protection equipment relative to painting Work.

6. Qualifications:
   a. Applicator.
   b. Testing laboratory

C. Closeout Submittals: Submit the following:
1. Maintenance Manual: Upon completion of the painting Work, furnish ENGINEER five copies of detailed maintenance manual including the following information:
   a. Complete and updated product catalog of paint manufacturer's currently available products including complete technical information on each product. Identify product names and numbers of each product used in the painting Work.
   b. Name, address, e-mail address and telephone number of manufacturer, local distributor, applicator and technical representative.
   c. Detailed procedures for routine maintenance and cleaning.
   d. Detailed procedures for light repairs such as dents, scratches and staining.
2. Statement of Application: Upon completion of the painting Work, submit a notarized statement to ENGINEER signed by CONTRACTOR and painting applicator stating that Work complies with requirements of the Contract Documents and that application methods, equipment, and environmental conditions were proper and adequate for conditions of installation and use.

1.6 DELIVERY, STORAGE AND HANDLING

A. Product Delivery Requirements: Deliver products to Site in original, new, and unopened packages and containers, accurately and legibly and accurately labeled with the following:
1. Container contents, including name and generic description of product.
2. Manufacturer's stock number and date of manufacture.
3. Manufacturer's name.
4. Contents by volume, for major pigment and vehicle constituents.
5. Grams per liter of volatile organic compounds.
6. Thinning instructions, where recommended.
7. Application instructions.
8. Color name and number.

B. Product Storage Requirements:
1. Store acceptable materials at Site.

2. Store in an environmentally controlled location as recommended in paint manufacturer's written product information. Keep area clean and accessible. Prevent freezing of products.
3. Store products that are not in actual use in tightly covered containers.
4. Comply with health and fire regulations of authorities having jurisdiction at Site.

C. Product Handling Requirements:
1. Handle products in a manner that minimizes the potential for contamination, or incorrect product catalyzation.
2. Do not open containers or mix components until necessary preparatory work has been completed and approved by ENGINEER and painting Work will start immediately.
3. Maintain containers used in storing, mixing, and applying paint in a clean condition, free of foreign materials and residue.

1.7 SITE CONDITIONS

A. Site Facilities:
1. Supplemental heat sources, as required to maintain both ambient and surface temperatures within range recommended by paint manufacturer for paint system applications, are not available at the Site.
2. Provision of supplemental heat energy sources, power, equipment, and operating, maintenance, and temperature-monitoring personnel is CONTRACTOR's responsibility.
3. Do not use heat sources that emit carbon dioxide or carbon monoxide into areas being painted. Properly locate and vent heat sources to exterior so that paint systems and personnel are unaffected by exhaust products.

B. Existing Conditions:
1. Existing surfaces to receive painting Work shall have their surfaces prepared to meet requirements of painting systems specified. Prior to initiating painting Work, perform adhesion tests on existing surfaces to be painted. Perform testing per ASTM D4541 or other method acceptable to ENGINEER. Number and location of tests shall be sufficient to determine the condition of existing coatings and suitability of existing coatings to remain to provide an acceptable substrate for new coatings. Submit testing plan prior to testing and provide ENGINEER the adhesion test results.
2. Provide abrasive blasting, scraping, or other abrading or surface film removal, or preparatory techniques accepted by ENGINEER.
3. Before commencing painting in an area, surfaces to be painted and floors shall be cleaned of dust using commercial vacuum cleaning equipment equipped with high-efficiency particulate air (HEPA) filters and dust containment systems.
4. After painting operations have started in a given area, cleaning only with commercial vacuum cleaning equipment with high-efficiency particulate air (HEPA) filters and dust containment systems.

C. Environmental Requirements:
   1. Comply with manufacturer's published requirements.

D. Protection:
   1. Cover or otherwise protect finished Work of other trades and those surfaces not being painted concurrently and not to be painted.
   2. During surface preparation and painting, facility shall remain in operation. Use procedures that prevent contamination of process or cause or require facility shutdown.
   3. Coordinate and schedule surface preparation and painting to avoid exposing personnel to hazards associated with painting Work. Provide required personnel safety equipment per requirements of authorities having jurisdiction at Site.
   4. Submit protection procedures to be employed. Do not begin surface preparation and painting Work until ENGINEER accepts protection techniques proposed by CONTRACTOR.
   5. When working with flammable materials, provide fire extinguishers and post temporary signs warning against smoking and open flame.

1.8 COMPONENTS REQUIRING COATING:

A. The CONTRACTOR shall coat all the components described below. The list attempts to generally identify key components to be coated and the applicable coating system, but shall not be utilized as a basis for concluding that common sense extension of the overall intent is not applicable because an item is not specifically named. In general, exclusive of items identified herein not to be coated, all new facilities, equipment, ferrous metal shall be coated.

B. New Non-Submerged Metals and Miscellaneous Non-Metallic, Non-submerged Items (i.e., non-buried pipe, fittings, valves, supports, conduit (excluding aluminum), brackets, metal fabrications, etc.). All 304 SS, galvanized, aluminum, FRP, PVC, CPVC and copper surfaces shall be scarified and solvent cleaned per SSPC SP-1.
   1. Above grade pipe, fittings, valves of all materials except 316 SS.
   2. Above grade PVC pipe, fitting, valves.
   3. Pipe supports, excluding 316 SS or aluminum.
   4. Structural members, including brackets and supports.
   5. All nuts, bolts and washers excluding 316 SS except on piping.
   6. Electric pull box covers.
   7. All new non-buried, non-submerged ferrous, PVC, FRP, galvanized, 304 SS and aluminum surfaces not specifically excluded or named elsewhere.

C. New Motors, Pumps, other Mechanical Equipment: This shall apply to all new pumps, motors and miscellaneous mechanical equipment.
   1. RAS pumps and motors.
   2. WAS pumps and motors.

3. Rotary drum thickener equipment.
4. Other miscellaneous equipment.

D. Existing Concrete Unit Masonry Walls: This shall apply to walls in the electrical rooms. For those walls faces against which existing equipment resides that is scheduled for demolition, the entire wall face(s) shall be prepared, primed, and painted after demolition and before new equipment installation so as to provide a uniform wall appearance that does not show former equipment outlines.

E. Existing Exposed RAS and WAS Piping, Fittings, Valves, and Supports: Existing exposed RAS and WAS pump suction, discharge, and header piping that will be reused shall receive surface preparation and the same coating system as the sections of new replacement piping are scheduled to receive.

PART 2 - PRODUCTS

2.1 PAINTING SYSTEM MANUFACTURERS

A. Products and Manufacturers: Where referenced under painting systems, provide painting systems manufactured by the following:
   1. Tnemec Company, Incorporated (TCI).
   2. The Carboline Company, subsidiary of RPM International Inc (TCC).
   3. Sherwin-Williams Company (SWC).
   4. Or approved equal.

2.2 PAINTING SYSTEMS

A. Existing Concrete Unit Masonry Walls; Moderate Corrosion and Abrasion Resistant, Non-submerged, Interior:
   1. Surface Preparation: Surface Preparation: Refer to section 3.2.
   2. Filler, Surfacer and Patching Compound:
      a. Generic Components:
         1) Minimum 68 percent volume solids, high-build, three-component, waterborne cementitious acrylic block filler; 75 grams per liter VOC, maximum.
      b. Products and Manufacturers: Provide one of the following:
         1) Series 1254 Epoxoblock (TCI); Sanitile 600 TG (TCC); Cement-Plex 875 (SWC): One coat, minimum 80 sq. ft./gal depending on a field determination of the substrate’s porosity.
   3. Intermediate/Finish:
      a. Generic Components:
         1) Minimum 80 percent volume solids, high-build, chemical-resistant, high-gloss, modified, polyamine or polyamido-amine catalyzed epoxy finish; 180 grams per liter VOC, maximum.
      b. Products and Manufacturers: Provide one of the following:

1) Series 280 Tneme-Glaze (TCI); Carboguard 890 LT (TCC); Cor-Cote HP (SWC): Two coats, 4.0 to 8.0 dry mils, per coat.

B. New Ferrous Metals, Structural Steel, Miscellaneous Ferrous Metals, Exterior Surfaces of Valves, Pumps, Exterior Surfaces of Ferrous Piping, and Exterior Surfaces of All Ferrous Metal; Non-submerged, Interior:
   1. Surface Preparation: Refer to section 3.2.
   2. Shop Primer:
      a. Generic Components:
         1) Minimum 67 percent volume solids, build, two-component, cycloaliphatic amine-catalyzed epoxy or polyamido-amine epoxy coating; 250 grams per liter VOC, maximum.
      b. Products and Manufacturers: Provide one of the following:
         1) Series N69 Hi-Build Epoxoline (TCI); Carboguard 954 HB (TCC): One coat, 4.0 to 6.0 dry mils.
   3. Field Primer and Touch-Up:
      a. Generic Components:
         1) Minimum 67 percent volume solids, build, two-component, cycloaliphatic amine-catalyzed epoxy or polyamido-amine epoxy coating; 250 grams per liter VOC, maximum
      b. Products and Manufacturers: Provide one of the following:
         1) Series N69 Hi-Build Epoxoline (TCI); Carboguard 954 HB (TCC); One coat, 4.0 to 6.0 dry mils.
   4. Finish: High-Gloss:
      a. Generic Components:
         1) Minimum 67 percent volume solids, build, two-component, cycloaliphatic amine-catalyzed epoxy or polyamido-amine epoxy coating; 250 grams per liter VOC, maximum.
      b. Products and Manufacturers: Provide one of the following:
         1) Series N69 Hi-Build Epoxoline (TCI); Carboguard 954 HB (TCC): One coat, 4.0 to 6.0 dry mils.

C. New and Existing Ferrous Metals, Non-Ferrous Metals, and Galvanized Metals; Low VOC Content, Non-Submerged, Exterior:
   1. Surface Preparation: Refer to section 3.2.
   2. Ferrous Metal Primer:
      a. Generic Components:
         1) Minimum 67 percent volume solids, build, two-component, cycloaliphatic amine-catalyzed epoxy coating; 250 grams per liter VOC, maximum.
      b. Products and Manufacturers: Provide one of the following:
         1) Series N69 Hi-Build Epoxoline II (TCI); Carboguard 890 LT (TCC); Macropoxy HS (SWC): One coat, 4.0 to 6.0 dry mils.
   3. Ferrous Metal Touch-Up:
      a. Generic Components:
         1) Minimum 80 percent volume solids, modified polyamido-amine or polyamine epoxy; 296 grams per liter VOC, maximum.

b. Products and Manufacturers: Provide one of the following:
1) Series N69 Hi-Build Epoxoline II (TCI); Carboguard 1207 HB (TCC); Macropoxy HS Epoxy (SWC): One coat, 6.0 dry mils.

4. Galvanized and Non-Ferrous Primer.
a. Generic Components:
1) Minimum 67 percent volume solids, build, two-component, cycloaliphatic amine-catalyzed epoxy coating; 250 grams per liter VOC, maximum .
b. Products and Manufacturers: Provide one of the following:
1) Series N69 Hi-Build Epoxoline (TCI); Carboguard 890 LT (TCC); Macropoxy HS (SWC): One coat, 4.0 to 6.0 dry mils.

5. Intermediate – Ferrous Metals Only:
a. Generic Components:
1) Minimum 80 percent volume solids, modified polyamido-amine or polyamine epoxy; 296 grams per liter VOC, maximum .
b. Products and Manufacturers: Provide one of the following:
1) Series N69 Hi-Build Epoxoline (TCI); Carboguard 1207 HB (TCC); Macropoxy HS Epoxy (SWC): One coat, 6.0 dry mils .

6. Finish: Gloss:
a. Generic Components:
1) Minimum 49 percent volume solids, two-component, waterborne acrylic polyurethane or aliphatic acrylic polyurethane coating; 247 grams per liter VOC, maximum.
b. Products and Manufacturers: Provide one of the following:
1) Series 1074 EnduraShield (TCI); Carbothane 134 VOC (TCC); Centurion WB Urethane (SWC): Two coats, 2.0 to 3.0 dry mils.

D. New and Existing Galvanized Metal, Non-Ferrous Metal, and Fiberglass; Non-submerged, Interior:
1. Surface Preparation: Refer to section 3.2.
2. Primer:
a. Generic Components:
1) Minimum, 39 percent volume solids single-component, self-cross linking acrylic primer-sealer, 140 grams per liter VOC, maximum.
b. Products and Manufacturers: Provide one of the following:
1) Series 1026 Enduratone (TCI); Galoseal Wash Primer (TCC); Pro-Cryl Universal Primer (SWC): One coat, 2.0 to 4.0 dry mils.

3. Finish: Satin:
a. Generic Components:
1) Minimum, 41 percent volume solids, single component, self-cross linking acrylic; 208 grams per liter VOC, maximum.
b. Products and Manufacturers: Provide one of the following:
1) Series 1026 Enduratone (TCI); Carbocrylic 3359 (TCC); DTM Acrylic Coating (SWC): One coat, 2.0 to 4.0 dry mils.

E. New and Existing Aluminum in Contact with Dissimilar Materials:
1. Surface Preparation: Comply with paint manufacturer’s published recommendations for products, surface condition, and surface preparation.

2. Primer/Finish:
    a. Generic Components:
        1) Minimum 100 percent volume solids, high-build, two-component, polyamido-amine or polyamine epoxy; 49 grams per gallon VOC, maximum.
    b. Products and Manufacturers: Provide one of the following:
        1) Series N69 Hi-Build Epoxoline (TCI); Carboguard 954 HB (TCC); Dura-Plate UHS (SWC): Two coats, 8.0 to 15.0 dry mils, per coat.

F. New and Existing PVC and CPVC Piping and Fiberglass Insulation Covering; Non-submerged, Interior:
    1. Surface Preparation: Refer to section 3.2.
    2. Primer:
        a. Generic Components:
            1) Minimum 37 percent volume solids single-component, self-cross linking acrylic primer-sealer; 226 grams per liter VOC, maximum.
        b. Products and Manufacturers: Provide one of the following:
            1) Series 1026 Enduratone DF (TCI); Carbocrylic 3358 (TCC); DTM Acrylic Primer/Finish (SWC): One coat, 2.0 to 4.0 dry mils.
    3. Finish: Satin:
        a. Generic Components:
            1) Minimum 37 percent volume solids, single component, self-cross linking acrylic; 226 grams per liter VOC, maximum.
        b. Products and Manufacturers: Provide one of the following:
            1) Series 1026 Enduratone (TCI); Carbocrylic 3358 (TCC); DTM Acrylic Primer/Finish (SWC): Two coats, 2.0 to 4.0 dry mils.

2.3 CAULKING AND SEALANTS

A. Refer to Section 07 92 00, Joint Sealants.

2.4 INSTRUMENTS

A. Instruments:
    1. Provide one new dry-film thickness gauge for checking film thickness, one holiday detector to detect holidays or holes in the coating, and one set of visual standards to check surface preparation. Calibrate dry film thickness gauge at Site using Bureau of Standards standard shim blocks.

PART 3 - EXECUTION

3.1 INSPECTION

A. Examine areas and conditions under which painting Work is to be performed and notify ENGINEER in writing of conditions detrimental to proper and timely

completion of Work. Do not proceed with Work until unsatisfactory conditions have been corrected in a manner acceptable to ENGINEER.

B. Do not paint over existing paint where there is no assurance that existing paint will provide an acceptable surface for long-term adherence and durability of painting systems specified, or where paint manufacturer requires removal of all existing paint to recommend use of specified painting system.

3.2 SURFACE PREPARATION

A. General:
   1. Perform preparation and cleaning procedures in strict accordance with the paint manufacturer's instructions and as herein specified, for each particular substrate condition. When the specified and recommended manufacturer's surface preparation system differ, use the system which in the Engineer's opinion is the more restrictive (conservative). Do not apply any primer, first coat or subsequent coats until the ENGINEER has approved the surface preparation.

B. Preparation:
   1. Carefully remove all hardware, hardware accessories, machine surfaces, plates, lighting fixtures, and similar items in place and not to be finish-painted or provide surface-applied protection prior to surface preparation and painting operations. Remove if necessary, for the complete painting of the items and adjacent surfaces. Following completion of painting of each space or area, reinstall the removed items by workmen skilled in the trades involved.

C. Cleaning:
   1. Clean surfaces to be painted before applying paint or surface treatments. Remove oil and grease prior to mechanical cleaning. Program the cleaning and painting so that contaminants from the cleaning process will not fall onto wet, newly-painted surfaces.

D. Compatibility:
   1. Confirm compatibility with substrates where existing facilities are to be recoated as part of this project. Scarify or otherwise prepare existing coated surfaces as recommended by the manufacturer and to the satisfaction of the ENGINEER.

E. Ferrous Metals:
   1. All new ferrous surfaces shall be sand blasted to a "Near White, SSPC-SP10" condition as specified by the Steel Structures Painting Council. Coatings shall be applied to all blasted surfaces before surface oxidation appears, but in any case, prior to the end of the same workday on which the blasting occurred.

2. New pumps, motors, or similar equipment shall be shop primed only using the specified system. Intermediate and finish coats shall be field applied. The manufacturer of all pumps, motors, and similar mechanical equipment shall submit a written certification to the ENGINEER that the surface preparation and prime coats satisfy the specification requirements. This certification shall be submitted and accepted prior to release for shipment. Touch up shall be applied as required. The equipment manufacturer shall submit written documentation confirming the surface preparation and coating is per specification. The CONTRACTOR is specifically advised that the dry film thickness of all factory applied coatings will be field confirmed by the ENGINEER. Any coating not meeting the requirements of the specifications, in the sole opinion of the ENGINEER, shall be removed, surface preparation repeated and the coating re-applied in the field to the satisfaction of the ENGINEER.
3. All existing ferrous surfaces to be recoated shall be high pressure washed to achieve complete removal of all stains, dirt, grime, mold, mildew, etc. The pressure shall be as required to achieve the desired result without damage to the existing coating. Subsequently, any areas with remaining contamination with oils or greases shall be solvent cleaned. Rust shall be removed by hand-tool cleaning and existing coatings scarified, if recommended by the coating manufacturer for proper adhesion. Particular care shall be taken during the surface preparation to protect the functional integrity of all mechanical equipment during the surface preparation procedure. Non-coated items such as nameplates, rotating shafts, non-painted valves and couplings shall be masked or otherwise protected during the surface preparation and coating operations.
4. Except as noted in item 2 above, all surface preparation and coating work shall be performed in the field, unless otherwise specifically identified in the specification or on the drawings.

F. Cementitious Materials:
1. Prepare cementitious surfaces of concrete, concrete block, to be painted by removing all efflorescence, chalk, dust, dirt, grease, oils, and by roughening as required to remove glaze. Concrete surfaces, other than concrete block, shall be brush blasted per SSPC SP-13 to open bug holes.
2. Determine the alkalinity and moisture content of the surfaces to be painted by performing appropriate tests. If the surfaces are found to be sufficiently alkaline to cause blistering and burning of the finish paint, correct this condition before application of paint. Do not paint over surfaces where the moisture content exceeds that permitted in the manufacturer's printed directions. The CONTRACTOR shall provide written documentation to the ENGINEER that the alkalinity and moisture content of any cementitious surface is acceptable and within the coating manufacturer's recommended limits for application of the coating.
3. All existing cementitious surfaces to be recoated shall be pressure washed to completely remove all stains, chemicals, dust, grime, mold, mildew, etc. The pressure shall be as required to achieve the desired result without

damage to the existing coating. Solvent cleaning shall be used to remove any oils or greases remaining after the pressure washing. Pressure washing and water blasting shall be performed in a fashion that does not cause physical damage to the substrate. Care shall be taken to not damage caulking attachments, openings, fascia, architectural items, screens, etc. during the surface preparation procedures. The application of the coating to existing facilities shall occur as soon after the completion of surface preparation as practical, before re-contamination of the substrate and in no case more than 45 days after completion of the surface preparation.

4. Repair all cracks to the satisfaction of the ENGINEER on cementitious structures prior to the application of coating systems. Repair of cracks shall be considered to include restoration of surface profile to a condition consistent with adjacent similar structures where the surface preparation work has inadvertently or intentionally caused damage.
5. Unless otherwise noted, all surface preparation and coating work shall be performed in the field.

G. PVC, FRP, PE, Aluminum, Stainless Steel, Copper Surfaces, Not Previously Painted:
   1. Clean free of oil and surface contaminants with an acceptable non-petroleum based solvent. All surfaces shall be prepared according to SSPC SP-2 Hand Tool Cleaning or SSPC-SP3 Power Tool Cleaning, to scarify prior to applying coatings.

3.3 PROTECTION OF PROPERTY AND STRUCTURES

A. Protect property and structures adjacent to the Work from waste residues resulting from cleaning, surface preparation, and painting Work.

B. Use shrouding, vacuum blasting, or other acceptable methods for cleaning and surface preparation of exterior surfaces.

C. During blast cleaning and surface preparation of interior and exterior surfaces, control exhausting of dust and grit using shrouding, negative-pressure containment/dust collection systems, or other means to protect adjacent property and structures and prevent dust and grit from escaping. Similarly, control removal and temporarily store residues to protect adjacent property and structures.

D. For painting of exterior surfaces, use rollers, shrouding, or other acceptable methods as required to protect adjacent property and structures from wind-blown paint residues.

E. Submit proposed procedures for cleaning, surface preparation, and paint application that describe in detail methods to be used to protect adjacent property and structures from residues. Do not proceed with cleaning, surface preparation, or painting until proposed procedures are accepted by ENGINEER.

3.4 MATERIALS PREPARATION

A. General: Mix and prepare painting products in strict accordance with paint manufacturer's product data sheets.

3.5 APPLICATION

A. General:
   1. Apply paint systems by brush, roller, or airless spray per paint manufacturer's recommendations and in compliance with Paint Application Specifications No. 1 in SSPC Volume 2, where applicable, and in strict accordance with paint manufacturer's product data sheets.
   2. Surfaces of items not normally exposed-to-view require same painting system specified for exposed surfaces of system.
   3. Paint interior surfaces of ducts, where visible through registers or grilles, with a flat, non-specular black paint before final installation of registers or grilles.
   4. Paint backs of access panels and removable or hinged covers to match exposed surfaces.
   5. Omit field-applied primer on metal surfaces that have been primed in the shop. Touch-up paint to shop-primed coats and pre-finished items only when approved by ENGINEER using compatible primers and paint manufacturer’s recommended compatible field-applied finishes.
   6. Welds shall be stripe-coated with intermediate or finish coat of paint after application of prime coat.

B. Minimum/Maximum Paint Film Thickness:
   1. Comply with manufacturer’s published recommendations for coating type and surface.
   2. Comply with minimum dry film thickness requirements of Indian River County Department of Utility Services Water, Wastewater, and Reclaimed Water Utility Construction Standards, Paragraph 16.4.

C. Scheduling Surface Preparation and Painting: Comply with manufacturer’s published recommendations for coating type and surface.

D. Prime Coats: Recoat primed and sealed walls and ceilings where there is evidence of suction spots or unsealed areas in first coat, to result in a finish coat with no burn-through or other defects caused by insufficient sealing.

E. Pigmented (Opaque) Finishes: Completely cover to provide an opaque, smooth surface of uniform finish, color, appearance, and coverage.

F. Brush Application:
   1. Brush-out and work all brush coats onto the surfaces in an even film. Cloudiness, spotting, holidays, laps, brush marks, runs, sags, ropiness, or

other surface imperfections are unacceptable. Neatly draw all glass and color break lines.

2. Brush-apply all primer or first coats, unless otherwise allowed to use mechanical applicators.

G. Mechanical Applicators:
   1. Use mechanical methods for applying paint when allowed by applicable ordinances, paint manufacturer, and approved by ENGINEER.
   2. Limit roller applications, if approved by ENGINEER, to interior wall finishes for second and third coats. Apply each roller coat to provide equivalent hiding as brush-applied coats.
   3. Where spray application is used, apply each coat to provide equivalent hiding of brush-applied coats. Do not double back with spray equipment for purpose of building up film thickness of two coats in one pass.

H. Completed Work: Match approved samples for color, texture, and coverage. Remove, refinish, or repaint Work not in compliance with specified requirements as required by ENGINEER.

3.6 FIELD QUALITY CONTROL

A. Notify ENGINEER after completing each coat of paint. After inspection and checking of film thickness, holidays, and imperfections, and after acceptance by ENGINEER, proceed with succeeding coat. Perform testing using approved testing instruments.
   1. ENGINEER will witness all testing and shall be notified of scheduled testing at least twenty-four hours in advance.
   2. Apply additional coats, if required, to produce specified film thickness and to correct holidays and to completely fill all surface air holes.

B. For magnetic substrates, measure thickness of dry film nonmagnetic coatings following recommendations of SSPC PA-2. These procedures supplement manufacturers' approved instructions for manual operation of measurement gauges and do not replace such instructions.

C. Record time, location, number of coats, dry film thickness, holidays, and other imperfections and submit testing results to ENGINEER.

3.7 PROTECTION

A. Provide "Wet Paint" signs as required to protect newly painted finishes. After completing painting Work, remove temporary protective wrappings provided for protection of the Work and work of other contractors.

3.8 ADJUSTMENT AND CLEAN-UP

A. Correct damage to work of other trades by cleaning, repairing or replacing, and repainting, as acceptable to ENGINEER.

B. During progress of the Work, remove from Site all discarded paint products, rubbish, cans, and rags at end of each workday.

C. Upon completion of painting, clean paint-spattered surfaces. Remove spattered paint by proper methods of washing and scraping, using care not to scratch or otherwise damage finished surfaces.

D. At completion of Work of other trades, touch-up and restore all damaged or defaced painted surfaces as determined by ENGINEER.

+ + END OF SECTION + +

** THIS PAGE INTENTIONALLY LEFT BLANK **

SECTION 26 05 05

GENERAL PROVISIONS FOR ELECTRICAL SYSTEMS

PART 1 – GENERAL

1.1 DESCRIPTION

A. Scope:
   1. CONTRACTOR shall provide all labor, materials, equipment, and incidentals shown, specified, and required to complete the electrical Work.
   2. Demolition: Electrical demolition shall be in accordance with Section 02 41 00, Demolition.

B. Coordination:
   1. Review installation procedures and schedules under other Specification Sections and coordinate with other trades the installation of electrical items that will be installed with or within formwork, walls, partitions, ceilings, and panels.
   2. Coordination and Intent of Electrical Drawings:
      a. Dimensions on Drawings related to equipment are based on equipment of certain manufacturers. Verify the dimensions of equipment furnished to space available at the Site and allocated to the equipment.
      b. Drawings show the principal elements of the electrical Work and are not intended as detailed working drawings for the electrical Work. Drawings supplement and complement the Specifications and other Contract Documents relative to principal features of electrical systems.
      c. Equipment and devices provided under this Contract shall be properly connected and interconnected with other equipment and devices for successful operation of complete systems, whether or not all connections and interconnections are specifically mentioned or shown in the Contract Documents.
      d. Drawings are provided for CONTRACTOR's guidance in fulfilling the intent of the Contract Documents CONTRACTOR shall comply with Laws and Regulations, including safety and electrical codes, and provide materials, equipment, appurtenances, and specialty items necessary for complete and operable systems.
   3. Obtain from OWNER record drawings required to execute the Work.
   4. Field Coordination:
      a. Provide materials, equipment, and services to interface with existing circuits. Field-verify system and equipment requirements prior to modifying existing systems.
      b. Coordinate the interface of equipment with OWNER's personnel and field conditions.

c. Field-compare existing starter, drive and panel control circuit terminations from record documents with existing circuits.
d. Field-trace existing circuits as required to interface the equipment provided.
e. Field-identify terminations for starters, drives and panel controls for follow function for re-connection.

C. Related Sections:
1. Section 02 41 00, Demolition.
2. Section 05 05 33, Anchor Systems.
3. Section 09 91 00, Painting.
4. Section 46 71 33, Rotary Drum Thickening Equipment.

D. Work Included in This Contract but Specified Elsewhere:
1. Anchorage systems shall comply with Section 05 05 33, Anchor Systems.
2. Shop painting and surface preparation shall comply with Section 09 91 00, Painting, unless otherwise specified in Division 26 Sections.

E. Materials and Equipment Installed by CONTRACTOR but Furnished by equipment Supplier:
1. Rotary Drum Thickener Vendor Supplied Control Panel. Reference Section 46 71 33, Rotary Drum Thickening Equipment.

F. Area Classifications:
1. Materials, equipment, and incidentals shall be suitable for the area classification(s) shown, specified, and required.
2. Wet Locations: Comply with NEC and NEMA requirements for wet locations. Enclosures in wet locations shall comply with NEMA 4X unless specified otherwise.
3. Corrosive Locations: Comply with NEC and NEMA requirements for corrosive locations. Enclosures in corrosive locations shall conform to NEMA 4X requirements unless specified otherwise.
4. Hazardous Locations: Comply with NEC requirements for the Class and Division designated.
5. Dusty Locations: Indoor areas not designated as hazardous, corrosive, or wet are dusty locations. Comply with NEC and NEMA 12 requirements unless specified otherwise.

1.2 QUALITY ASSURANCE

A. Qualifications:
1. Electrical Subcontractor:
a. Electrical Subcontractor shall have not less than five years' experience installing electrical systems of the types required for the Project.
b. Electrical Subcontractor shall possess a valid electricians' and contractors' license in the jurisdiction where the Site is located.

c. Submit the following information for not less than three similar successful, completed projects: project name and location; year completed; name and contact information for: prime contractor for whom electrical Subcontractor worked, project owner, and project engineer or architect, including addresses and telephone numbers.

B. Component Supply and Compatibility:
1. Materials and equipment similar to each other shall be from the same manufacturer for uniformity.

C. Regulatory Requirements:
1. Permits: Refer to the General Conditions, Supplementary Conditions, and other parts of the Contract Documents for responsibilities relative to obtaining and paying for permits, licenses, and inspection fees.
2. Codes: Refer to Section 01 42 00, References, for indication of applicable codes.

1.3 SUBMITTALS

A. General:
1. To the extent practical, submit Shop Drawings and other CONTRACTOR submittals for each Specification Section into the smallest number of submittals possible. Do not furnish partial submittals.
2. Review of equipment submittals does not relieve CONTRACTOR of responsibility for providing complete and successfully operating systems.

B. Action Submittals: Submit the following:
1. Shop Drawings:
a. Internal wiring diagram and drawings indicating all connections to components and numbered terminals for external connections.
b. Dimensioned plan, section, elevations, and panel layouts showing means for mounting, conduit connection, and grounding.
c. List of components including manufacturer’s name and catalog number (or part number) for each.
d. Point-to point interconnection wiring diagrams.
2. Product Data:
a. Manufacturer's name and product designation or catalog number.
b. Electrical ratings.
c. Manufacturer’s technical data and specifications.
d. Manufacturer’s indication of compliance with applicable reference standards.
e. Painting and coating systems proposed.
3. Test Procedures: Proposed testing procedures and testing limitations for source quality control testing and field quality control testing.

C. Informational Submittals: Submit the following:
1. Manufacturer’s Instructions:

a. Installation data and instructions.
b. Instructions for handling, starting-up, and troubleshooting.

2. Source Quality Control Submittals: Results for required shop testing.
3. Field Quality Control Submittals: Results for required field testing.
4. Qualifications:
   a. Electrical Subcontractor.

D. Closeout Submittals: Submit the following:
1. Record Documentation:
   a. System Record Drawings: Include the following:
      1) One-line wiring diagram of the electrical distribution system.
      2) Actual, in-place conduit and cable layouts with schedule of conduit sizes and number, and size of conductors.
      3) Layouts of the power and lighting arrangements and the grounding system.
      4) Control schematic diagrams, with terminal numbers and control devices identified, for all equipment.
   b. Point-to-Point Interconnection Wiring Diagram Drawings: Include the following:
      1) External wiring for each piece of equipment, panel, instrument, and other devices and wiring to control stations, lighting panels, and motor controllers.
      2) Numbered terminal block identification for each wire termination.
      3) Identification of the assigned wire numbers for all interconnections.
      4) Identification of wiring by the conduit tag in which the wire is installed.
      5) Terminal, junction, and pull boxes through which wiring is routed.
      6) Identification of equipment and the submittal transmittal number for equipment from which wiring requirements and termination information was obtained.
   c. Record documents shall indicate final equipment and field installation information.

PART 2 – PRODUCTS

A. Performance Criteria:
1. Electrical equipment shall be capable of operating successfully at full-rated load, without failure, with ambient outside air temperature of 30 degrees F to 104 degrees F and an elevation of 20 feet above mean sea level.
2. Unless specified otherwise, electrical equipment shall have ratings based on 75 degrees C terminations.

B. Testing Laboratory Labels: Electrical material and equipment shall bear the label of Underwriters' Laboratories, Inc. or other nationally recognized, independent testing laboratory, where standards have been established and label service applies.

PART 3 – EXECUTION

3.1 INSPECTION

A. Examine conditions under which Work will be performed and notify ENGINEER in writing of conditions detrimental to the proper and timely completion of the Work. Do not proceed with Work until unsatisfactory conditions are corrected.

3.2 INSTALLATION

A. General:
   1. Install materials and equipment in accordance with the Contract Documents, Laws and Regulations, approved (and accepted, as applicable) Shop Drawings and other CONTRACTOR submittals, and manufacturer's recommendations.
   2. Provide tools and equipment required to trace circuits necessary for proper execution of the Work.
   3. Define and identify all wiring, circuit terminations, and equipment to be modified to ensure proper interface of components. The Contract Price includes all costs associated with field services specified for a complete and functional system.

B. Staging, Sequencing, and Coordination with Existing Facilities:
   1. Schedule, sequence, and install materials and equipment in accordance with Section 01 14 16, Coordination with Owner's Operations
   2. Perform the Work in a manner that will not interfere with the existing equipment and facilities or cause interruption of the functions of the Site, unless specified otherwise or otherwise allowed by OWNER.
   3. When operation of existing facilities and Site is disrupted due to CONTRACTOR's operations, comply with Section 01 14 16, Coordination with Owner's Operations, unless otherwise allowed by OWNER.
   4. Where the Work ties in with existing installations, take precautions and provide safeguards in connecting the Work to existing operating circuits to prevent interruption to existing circuits. Connection of Work to existing circuits shall be performed in the presence of OWNER and ENGINEER.
   5. Interruptions of existing circuits, not addressed in Section 01 14 16, Coordination with Owner's Operations, shall be coordinated with the OWNER who will determine the length of time a circuit may be de-energized to maintain the OWNER's processes in dependable and safe operation.

3.3 FIELD QUALITY CONTROL

A. Field Quality Control – General:
   1. Perform field quality control for electrical Work in accordance with the Contract Documents.

B. Site Tests:

1. Prior to requesting certificate of Substantial Completion, demonstrate to ENGINEER that electrical systems and electrically-operated equipment installed or modified under the Contract operates in accordance with the Contract Documents and operates as required
2. Perform the following operational tests on electrical systems:
   a. Operate power circuits to verify proper operation and connection to electrical systems materials and equipment, including mechanical key-interlocks for circuit breakers.
   b. Operate control circuits, including pushbuttons, indicating lights, and similar devices, to verify proper connection and function. Operate all devices, such as pressure switches, flow switches, and similar devices, to verify that shutdowns and control sequences operate as required.
3. Prepare and submit report on the equipment demonstration and operating field quality control tests. Report shall include complete information on the tests performed and results.

C. Manufacturer's Services:

1. Furnish at the Site qualified, factory-trained representative(s) of equipment manufacturers for the services indicated in the Contract Documents.

+ + END OF SECTION + +

SECTION 26 05 19

LOW-VOLTAGE ELECTRICAL POWER CONDUCTORS AND CABLES

PART 1 – GENERAL

1.1 DESCRIPTION

A. Scope:
   1. CONTRACTOR shall provide all labor, materials, equipment, and incidentals shown, specified, and required to furnish and install low-voltage conductors and cabling.
   2. Types of cabling required include:
      a. Insulated cable for installation in raceways.

B. Related Sections:
   1. Section 26 05 53, Identification for Electrical Systems.

1.2 REFERENCES

A. Standards referenced in this Section are:
   1. ANSI/NETA ATS, Acceptance Testing Specifications for Electrical Power Equipment and Systems.
   2. ASTM B3, Specification for Soft or Annealed Copper Wire.
   3. ASTM B8, Specification for Concentric-Lay-Stranded Copper Conductors, Hard, Medium-Hard or Soft.
   4. ASTM D3485, Specification for Smooth-Wall Coilable Polyethylene (PE) Conduit (Duct) for Preassembled Wire and Cable.
   5. ASTM F2160, Solid Wall High Density Polyethylene (HDPE) Conduit Based on Controlled Outside Diameter (OD).
   6. NEMA TC 7, Smooth Wall Coilable Electrical Polyethylene Conduit.
   7. UL 44, Thermoset-Insulated Wires and Cables.
   8. UL 1277, Electrical Power and Control Tray Cables with Optional Optical-Fiber Members.

1.3 QUALITY ASSURANCE

A. Regulatory Requirements: Comply with the following:
   1. NEC Article 300, Wiring Methods.
   2. NEC Article 310, Conductors for General Wiring.

1.4 SUBMITTALS

A. Action Submittals: Submit the following:
   1. Product Data:

a. Manufacturer's literature, specifications, and engineering data for low volt insulated cable proposed for use.

B. Informational Submittals: Submit the following:
1. Field Quality Control Submittals:
a. Written results of field insulation resistance tests.

PART 2 – PRODUCTS

2.1 MATERIALS

A. Insulated Cable In Raceways:
1. Application: Use for circuits located indoors and outdoors.
2. Manufacturers: Provide products of one of the following:
a. Southwire.
b. The Okonite Company.
c. American Insulated Wire
d. General Cable
e. Or equal.
3. Material: Single conductor copper cable complying with ASTM B3 and ASTM B8 with flame-retardant, moisture- and heat-resistant insulation rated for 90 degrees C in dry or wet locations, listed by UL as Type XHHW-2 or RHW-2 complying with UL 44.
4. Wire Sizes: Not smaller than No. 12 AWG for power and lighting and No. 14 AWG for 120-volt control circuits.
5. Stranding: 600-volt cable shall be stranded, except that solid cable, No. 10 and smaller may be used for lighting circuits.

B. Fire-Rated Cable: NOT USED.

C. Cable for Installation in Trays:
1. Manufacturers: Provide products of one of the following:
a. Southwire.
b. The Okonite Company.
c. Prysmian Cables & Systems.
d. General Cable.
e. Or equal.
2. Material: Factory-assembled single- or multi-conductor control, signal, or power cable that bears UL label Type TC and are specifically approved for installation in cable trays. Overall jacket shall be sunlight-resistant PVC. Cable shall be rated for 90 degrees C wet or dry, complying with UL 44 and UL 1277.

D. Direct-Burial Cable: NOT USED.

E. Direct-Burial Cable Duct: NOT USED.

F. Cable Connectors, Solderless Type:
   1. Products and Manufacturers: Provide products of one of the following:
      a. T&B Sta-Kon.
      b. Burndy Hylug.
      c. Or equal.
   2. For wire sizes No. 4 AWG and above, use either compression type or bolted type with silver-plated contact faces.
   3. For wire sizes up to and including No. 6 AWG, use compression type. Alarm and control wire shall be terminated using forked type connectors at terminal boards.
   4. For wire sizes No. 250 KCMIL and larger, use connectors with at least two cable clamping elements or compression indents and provision for at least two bolts for joining to apparatus terminal.
   5. Properly size connectors to fit fastening device and wire size. Connectors shall be rated for 90 degree C, 600 volts.

G. Cable Splices: NOT USED.

H. Wire and Cable Markers:
   1. Provide wire and cable markers in accordance with Section 26 05 53, Identification for Electrical Systems.

2.2 SOURCE QUALITY CONTROL

A. Factory Tests:
   1. Factory-test wire and cable in accordance with UL standards

PART 3 – EXECUTION

3.1 INSTALLATION

A. Install cables complete with proper terminations at both ends. Check and correct for proper phase sequence and proper motor rotation.

B. Pulling:
   1. Use insulating types of pulling compounds containing no mineral oil.
   2. Pulling tension shall be within limits recommended by wire and cable manufacturer.
   3. Use dynamometer where mechanical means are used.
   4. Cut off section subject to mechanical means.

C. Bending Radius: Limit to minimum of six times cable overall diameter.

D. Slack: Provide maximum slack at all terminal points.

E. Splices: NOT USED.

F. Identification:
   1. Identify conductors in accordance with Section 26 05 53, Identification for Electrical Systems.
   2. Identify power conductors by circuit number and phase at each terminal or splice location.
   3. Identify control and status wiring using numeral tagging system.

G. Color-code power cables as follows:
   1. No. 8 AWG and Smaller: Provide colored conductors.
   2. No. 6 AWG and Larger: Apply general purpose, flame retardant tape at each end, wrapped in overlapping turns to cover an area of at least two inches.
   3. Colors: Match color scheme in use at the Site. If the Site does not have an existing color scheme, use the following colors:

System	Conductor	Color
All Systems	Equipment Grounding	Green
240/120 Volts Single-Phase, Three-Wire	Grounded Neutral One Hot Leg Other Hot Leg	White Black Red
208Y/120 Volts Three-Phase, Four-Wire	Grounded Neutral Phase A Phase B Phase C	White Black Red Blue
240/120 Volts Three-Phase, Four-Wire Delta, Center Tap Ground on Single-Phase	Grounded Neutral Phase A High (wild) Leg Phase C	White Black Orange Blue
480Y/277 Volts Three-Phase, Four-Wire	rounded Neutral Phase A Phase B Phase C	Gray Brown Orange Yellow

3.2 FIELD QUALITY CONTROL

A. Site Tests:
   1. Test each electrical circuit after permanent cables are in place, to demonstrate that circuit and equipment are connected properly and will perform satisfactorily, free from improper grounds and short circuits.
   2. Individually test 600-volt cable mechanical connections after installation and before they are put in service, with calibrated torque wrench. Values shall be in accordance with manufacturer's recommendations.
   3. Individually test 600-volt cables for insulation resistance between phases and from each phase to ground. Test after cables are installed and before they are put in service, with Megger for one minute at voltage rating recommended by cable manufacturer or in accordance with ANSI/NETA ATS recommendations.

4. Insulation resistance for each conductor shall not be less than value recommended by cable manufacturer. Cables not meeting recommended value or that fail when tested under full load conditions shall be replaced with a new cable for full length.

+ + END OF SECTION + +

** THIS PAGE INTENTIONALLY LEFT BLANK **

SECTION 26 05 23

INSTRUMENTATION AND COMMUNICATION CABLES

PART 1 – GENERAL

1.1 DESCRIPTION

A. Scope:
   1. CONTRACTOR shall provide all labor, materials, equipment, and incidentals shown, specified, and required to furnish and install instrumentation and communication cables.
   2. Types of cables include the following:
      a. Shielded instrumentation cables.

B. Related Sections:
   1. Section 26 05 33.13, Rigid Conduits.
   2. Section 26 05 53, Identification for Electrical Systems.

1.2 TERMINOLOGY

A. The following words or terms are not defined but, when used in this Section, have the following meaning:
   1. “CPE” means chlorinated polyethylene.
   2. “XLPE” means cross-linked polyethylene.

1.3 REFERENCES

A. Standards referenced in this Section are:
   1. UL 13, Power-Limited Circuit Cables.
   2. UL 1581, Electrical Wires, Cables and Flexible Cords.

1.4 QUALITY ASSURANCE

A. Regulatory Requirements:
   1. NEC 725, Class 1, Class 2, and Class 3 Remote-Control, Signaling and Power-Limited Circuits.
   2. NEC 727, Instrumentation Tray Cable.
   3. NEC 800, Communications Circuits.

1.5 SUBMITTALS

A. Action Submittals: Submit the following:
   1. Product Data: Manufacturer’s technical information for instrumentation cables and communications cables proposed.

B. Informational Submittals: Submit the following:
   1. Field Quality Control Submittals: Written report of results of field quality control testing specified in this Section.

PART 2 – PRODUCTS

2.1 MATERIALS

A. General:
   1. Cables shall bear the UL label.

B. Single Shielded Pair Instrument Cables:
   1. Manufacturers: Provide products of one of the following:
      a. Belden Company.
      b. Okonite Company.
      c. Dekoron Wire and Cable Company.
      d. Or equal.
   2. Tinned copper, XLPE-insulated, stranded conductors, not less than no. 16 AWG, twisted pair, with overall shield, stranded tinned no. 18 AWG copper drain wire and overall PVC or CPE jacket. Rated for not less than 600 volts and complying with UL 1581.

C. Multi-Paired Shielded Instrument Cables:
   1. Manufacturers: Provide products of one of the following:
      a. Belden Company.
      b. Okonite Company.
      c. Dekoron Wire and Cable Company.
      d. Or equal.
   2. Tinned copper, XLPE-insulated stranded conductors, not less than no. 16 AWG, twisted pairs with shield over each pair, stranded tinned no. 18 AWG copper drain wire, and overall PVC or CPE outer jacket. Rated for not less than 600 volts and complying with either UL 1581 or UL 13.

D. Multi-Conductor Shielded Instrument Cables: NOT USED.

E. Multi-Conductor Shielded High-Temperature Instrument Cables: NOT USED.

F. Multi-Conductor Shielded Plenum-Rated Instrument Cables: NOT USED.

G. Multi-Conductor Telephone Cables: NOT USED.

H. Cable Terminals:
   1. Manufacturers: Provide products of one of the following:
      a. T&B Sta-Kon.
      b. Burndy Insulug.
      c. Or equal.

2. Fork type copper compression terminals with nylon insulation for termination of cable at terminal blocks.

I. Horizontal Unshielded Twisted Pair (UTP) Cables: NOT USED.

J. Patch Cords: NOT USED.

K. Connecting Hardware for Unshielded Twisted Pair (UTP) Cables: NOT USED.

L. Patch Panels: NOT USED.

M. Cable Support Hardware:
1. Wire Basket: NOT USED.
2. Conduit:
   a. Where conduit is shown or indicated on the Drawings, comply with Section 26 05 33.13, Rigid Conduits.

N. Modbus Cables (RS-232): NOT USED.

O. Modbus-Plus Cables: NOT USED.

P. Modbus RIO Cables: NOT USED.

Q. Fieldbus Type A Cables: NOT USED.

R. Fieldbus Type B Cables: NOT USED.

S. Cutler-Hammer IMPACC Cables: NOT USED.

T. Cutler-Hammer I/Q System Cables: NOT USED.

U. Rotork Pakscan IIE Cables: NOT USED.

V. Limitorque Actuator Bus Cables: NOT USED.

W. Allen Bradley DH (Blue Hose) Cables: NOT USED.

X. ControlNet Cables: NOT USED.

Y. Devicenet (Thick) Cables: NOT USED.

Z. Devicenet (Thin) Cables: NOT USED.

AA. Profibus DP Cables: NOT USED.

BB. Profibus PA Cables: NOT USED.

CC. RS-485 Half Duplex Cables: NOT USED.

DD. RS-485 Full Duplex Cables: NOT USED.

PART 3 – EXECUTION

3.1 INSPECTION

A. Examine conditions under which materials and equipment will be installed and notify ENGINEER in writing of conditions detrimental to proper and timely completion of the Work. Do not proceed with the Work until unsatisfactory conditions are corrected.

3.2 INSTALLATION

A. General:
   1. Install cables complete with proper terminations at both ends.
   2. Install in conduit separate from power cables, unless shown or indicated otherwise.
   3. Ground shield on shielded cables at one end only and as recommended by instrument manufacturer.
   4. Identify conductors in accordance with Section 26 05 53, Identification for Electrical Systems.
   5. Install and terminate Supplier-furnished cable in accordance with equipment manufacturer requirements and cable manufacturer's recommendations.
   6. Install in accordance with Laws and Regulations, including NEC.

3.3 FIELD QUALITY CONTROL

A. Site Tests:
   1. Test shielded instrumentation cable shields with ohmmeter for continuity along full length of cables, and for shield continuity to ground.
   2. Connect shielded instrumentation cables to calibrated 4 to 20 mA dc signal transmitter and receiver. Test at 4 and 20 mA transmitter settings.
   3. Replace with new cables the full length of cables that fail test.
   4. Test equipment shall be provided by CONTRACTOR.
   5. For testing of communications cables, test equipment used shall comply with the following:
      a. Equipment shall consist of a "master" and a "remote" unit.
      b. Test of all aspects of cables shall be automatic and initiated with a single command. Test over entire frequency range. Test unit shall be capable of accepting cable identification tag for reporting. Test unit shall return "pass/fail" status for cables and, if "fail", shall indicate reason for failure.
      c. Test unit shall be capable of storing all test results internally and printing the results later.

d. For unshielded twisted pair cables, test unit shall be specifically designed and manufactured to certify cabling relative to Category 6 compliant.

+ + END OF SECTION + +

** THIS PAGE INTENTIONALLY LEFT BLANK **

SECTION 26 05 26

GROUNDING AND BONDING FOR ELECTRICAL SYSTEMS

PART 1 – GENERAL

1.1 DESCRIPTION

A. Scope:
   1. CONTRACTOR shall provide labor, materials, equipment, and incidentals as shown, specified, and required to furnish and install complete grounding for electrical systems, structures, and equipment.

1.2 REFERENCES

A. Standards referenced in this Section are:
   1. ASTM B8, Specification for Concentric-Lay-Stranded Copper Conductors, Hard, Medium-Hard or Soft.
   2. UL 467, Grounding and Bonding Equipment.

1.3 QUALITY ASSURANCE

A. Regulatory Requirements
   1. National Electrical Code, (NEC).
      a. NEC Article 250, Grounding and Bonding.

1.4 SUBMITTALS

A. Action Submittals: Submit the following:
   1. Shop Drawings:
      a. Listing of grounding connector types identifying where each will be used.
      b. Layouts of each structure's ground grid.
      c. Test point construction details.
   2. Product Data:
      a. Manufacturer's technical information for grounding materials proposed for use.
   3. Testing Plans:
      a. Ground resistance test procedure.

B. Informational Submittals: Submit the following:
   1. Field Quality Control Submittals
      a. Results of ground resistance tests at each test point.

PART 2 – PRODUCTS

2.1 MATERIALS

A. Bare Ground Cable:
   1. Manufacturers: Provide products of one of the following:
      a. Cablec Corporation.
      b. General Cable Corporation.
      c. Southwire Cable Company.
      d. Or equal.
   2. Material: Soft-drawn, bare copper stranded cable complying with ASTM B8. No. 4/0 AWG minimum size unless otherwise shown or indicated on the Drawings.

B. Ground Rods:
   1. Manufacturers: Provide products of one of the following:
      a. Copperweld, Bimetallics Division.
      b. ITT Blackburn Company.
      c. Or equal.
   2. Material: Copper-clad rigid steel rods, 3/4-inch diameter, ten feet long.

C. Grounding Connectors:
   1. Products and Manufacturers: Provide one of the following:
      a. Pressure Connectors:
         1) O.Z./Gedney, Division of General Signal Corporation.
         2) Burndy Corporation.
         3) Or equal.
      b. Welded Connections:
         1) Cadweld by Erico Products, Incorporated.
         2) Therm-O-Weld by Burndy Corporation.
         3) Or equal.
   2. Material: Pressure connectors shall be copper alloy castings, designed and fabricated specifically for items to be connected and assembled with Durium or silicone bronze bolts, nuts, and washers. Welded connections shall be by exothermic process utilizing molds, cartridges, and hardware designed specifically for connection to be made.

D. Grounding Additive: NOT USED.

E. Ground Test Well: NOT USED.

F. Ground system components shall comply with UL 467.

PART 3 – EXECUTION

3.1 INSPECTION

A. Examine conditions for the Work and notify ENGINEER in writing of conditions detrimental to proper and timely completion of the Work. Do not proceed with Work until unsatisfactory conditions are corrected.

3.2 STRUCTURE GROUND SYSTEM

A. Provide ground grids as shown and indicated on the Drawings.

B. Weld all buried connections except for test points.

3.3 EQUIPMENT GROUNDING

A. Ground electrical equipment in compliance with Laws and Regulations and the Contract Documents.

B. Equipment grounding conductors shall be bare stranded copper cable of adequate size installed in PVC conduit where required for mechanical protection. Ground conductors, pulled into conduits with non-grounded conductors, shall be insulated. Insulation shall be green.

C. Control panels grounding conductors shall be bare stranded copper cable of adequate size to ground grid from AC ground bus, and an insulated stranded copper cable of adequate size to ground grid from DC ground bus.

D. Connect ground conductors to conduit with copper clamps, straps, or with grounding bushings.

E. Connect to piping by welding or brazing. Use copper bonding jumpers on gasketed joints.

F. Connect to equipment by means of lug compressed on cable end. Bolt lug to equipment frame using holes or terminals provided on equipment specifically for grounding. Do not use hold-down bolts. Where grounding provisions are not included, drill suitable holes in locations recommended by equipment manufacturer or designated by ENGINEER.

G. Connect to motors by bolting directly to motor frames, not to soleplates or supporting structures.

H. Connect to service water piping by means of copper clamps. Use copper bonding jumpers on gasketed joints.

I. Scrape bolted surfaces clean and coat with conductive oxide-resistant compound.

3.4 FIELD QUALITY CONTROL

A. Site Tests:
   1. Test completed grounding systems for resistance to ground using an electrical three-terminal ground resistance tester. Test all grounded cables and metal parts for continuity of connection. ENGINEER and OWNER will witness the testing.
   2. Grounding system maximum resistance shall not exceed five ohms under normally dry conditions when measured by resistance tester. Resistance values above five ohms shall be brought to ENGINEER's attention. Provide additional ground rods as required to attain a resistance to ground of less than five ohms for each ground grid. Add grounding additive installing additional ground rods to increase their effectiveness.

+ + END OF SECTION + +

SECTION 26 05 29

HANGERS AND SUPPORTS FOR ELECTRICAL SYSTEMS

PART 1 – GENERAL

1.1 DESCRIPTION

A. Scope:
   1. CONTRACTOR shall provide all labor, materials, equipment, and incidentals as shown, specified, and required to furnish and install hangers and supports for electrical systems.
   2. Area Classifications: Materials shall by suitable for the area classification(s) shown or indicated on the Drawings, and specified in Section 26 05 05, General Provisions for Electrical Systems.

B. Related Sections:
   1. Section 05 05 33, Anchor Systems.
   2. Section 26 05 05, General Provisions for Electrical Systems.
   3. Section 26 05 33.13, Rigid Conduits.

1.2 REFERENCES

A. Standards referenced in this section are:
   1. ASTM A123/A123M, Specification for Zinc (Hot-Dip Galvanized) Coatings on Iron and Steel Products.

1.3 SUBMITTALS

A. Action Submittals: Submit the following:
   1. Shop Drawings:
      a. Detailed installation drawings showing dimensions and compatibility with proposed layout.
   2. Product Data:
      a. Manufacturer’s name, product designation, and catalog number of each material item proposed for use.
      b. Manufacturer’s specifications including material, dimensional and weight data, and load capacity for each supporting system component proposed for use.
      c. Pictorial views and corresponding identifying text of each component proposed for installation.
      d. Documentation that confirms product compatibility with Laws and Regulations.

B. Informational Submittals: Submit the following:
   1. Certifications:
      a. Submit certifications required under this Section.
   2. Manufacturer's Instructions:
      a. Manufacturer's installation instructions, including recommended tightening torque values for all nuts and bolts.

PART 2 – PRODUCTS

2.1 MANUFACTURERS

A. Manufacturers: Provide products of one of the following:
   1. B-Line.
   2. Kindorf.
   3. Unistrut
   4. Or equal.

2.2 MATERIALS

A. Strut, Fittings, and Accessories:
   1. General
      a. Unless otherwise shown or indicated, strut shall be 1-5/8 inches by 1-5/8 inches. Double struts shall be two pieces of the same strut, welded back-to-back at the factory.
      b. Attachment holes, when required, shall be factory-punched on hole centers approximately equal to the cross-sectional width and shall be 9/16-inch diameter.
      c. Fittings, braces, brackets, hardware, and accessories shall be Type 316 stainless steel.
      d. Strut nuts shall be spring captured Type 316 stainless steel.
      e. Square and round washers shall be Type 316 stainless steel.
   2. Strut materials shall be suitable for area classifications indicated in Section 26 05 05, General Provisions for Electrical Systems, and shown or indicated on the Drawings.
      a. Dusty Locations:
         1) Strut shall be 12-gage carbon steel, hot-dip galvanized after fabrication, complying with ASTM A123/A123M.
      b. Wet Locations:
         1) Strut shall be 12-gage Type 316 stainless steel.
      c. Corrosive Locations:
         1) Strut shall be 12-gage Type 316 stainless steel.

B. Hanger Rods:
   1. Material:
      a. Dry Locations: All-thread, zinc-coated
      b. Wet, Corrosive, or Hazardous Areas: Stainless steel.

2. Size: Not less than 3/8-inch diameter, unless otherwise shown on the Drawings or specified.

C. Beam Clamps for Attaching Threaded Rods or Bolts to Beam Flanges for Hanging Struts or Conduit Hangers:
   1. Beam clamps shall be stainless steel, equipped with stainless steel square-head set screw, and shall include threaded hole sized for attaching the all-thread rod or threaded bolt.

D. Miscellaneous Hardware:
   1. Bolts, screws, and washers shall be stainless steel.
   2. Hex Nuts: Shall be stainless steel and include nylon inserts.

PART 3 – EXECUTION

3.1 INSPECTION

A. Examine conditions under which the Work will be installed and notify ENGINEER in writing of conditions detrimental to the proper and timely completion of the Work. Do not proceed with the Work until unsatisfactory conditions are corrected.

3.2 INSTALLATION

A. Provide hangers and supports for electrical systems with necessary channels, fittings, brackets, and related hardware for mounting and supporting materials and equipment. Provide anchor systems, concrete inserts, and associated hardware for proper support of electrical systems.

B. Install equipment and devices on hangers and supports as shown on the Drawings, as specified, and as required.

C. Install hangers and supports level, true, free of rack, and parallel and perpendicular to building walls and floors, so that the hangers and supports are installed in a neat, professional, workmanlike manner.

D. Holes in suspended ceilings for rods for hangers and supports and other equipment shall be provided adjacent to bars, where possible, to facilitate removal of ceiling panels.

E. Coordinate installation of hangers and supports with equipment, cabinets, consoles, panels, enclosures, boxes, conduit, cable tray, wireway, busway, cablebus, piping, ductwork, lighting fixtures, and other systems and equipment. Locate hangers and supports clear of interferences and access ways.

F. Anchor Bolts, Expansion Anchors, and Concrete Inserts: Shall be in accordance with Section 05 05 33, Anchor Systems, and requirements of this Section.

G. Mounting of Conduit:
   1. Provide space of not less than 1/4-inch between conduit surfaces and abutting or near surfaces except struts, cable trays, steel beams, and columns.
   2. Fasten conduit to struts, cable trays, steel beams, and columns using specified clamps and straps as shown, specified, and required.
   3. Devices shall be compatible with size of conduit and type of support. Following installation, size identification shall be visible and legible.
   4. Install conduit supports and fasteners in accordance with Section, 26 05 33.13, Rigid Conduits.

H. Supports for Cabinets, Consoles, Panels, Enclosures, and Boxes:
   1. Freestanding: Unless otherwise specified or shown on the Drawings, provide supports for floor-mounted equipment, cabinets, consoles, panels, enclosures, and boxes. Such supports shall be 3.5-inch high concrete equipment base with a 45 degree chamfered edge. Base shall extend two inches beyond outside dimensions of equipment on all sides.
   2. Wall-Mounted:
      a. Provide space not less than 1/4-inch between cabinets, consoles, panels, enclosures, and boxes and the surface on which each is mounted. Provide non-metallic or stainless steel spacers as required.
      b. Do not mount equipment, enclosures, panels, and boxes directly to beams or columns. Mount struts to beams or columns using beam clamps, and mount equipment, enclosures, panels, and boxes to the struts.
   3. Floor Stand Rack:
      a. Where equipment, cabinets, consoles, panels, enclosures, and boxes cannot be wall-mounted, provide an independent floor stand rack.
      b. Floor stand rack shall consist of struts, plates, brackets, connection fittings, braces, accessories, and hardware assembled in a rigid framework suitable for mounting of intended materials and equipment.
      c. Equip floor stand racks with brackets and bases for rigidly mounting the framework to the ceiling or floor, as applicable; or equip floor stand racks with beam clamps, angle plates, washers, and bolts for fastening to beam flanges, as applicable.
      d. When equipment, cabinets, consoles, panels, enclosures, and boxes weigh more than 100 pounds:
         1) Main vertical supports of floor stand rack assemblies shall be back-to-back struts.
         2) Bracing, clamping and anchoring of each floor stand rack shall be sufficient to ensure rigidity of the floor stand rack with the intended equipment, enclosures, conduit, cable tray, busway, cablebus, and wireway installed. Floor stand racks shall not be deflected more

than 1/8-inch by a 100-pound force applied at any point on the floor stand rack in any direction.

I. Drilling into beams or columns is not allowed unless authorized by ENGINEER.

J. Tighten nuts and bolts to the manufacturer's recommended torque values.

K. Field Cutting:
   1. Cut edges of strut and hanger rod shall have rounded corners, edges beveled, and burrs removed. If field cutting the strut is required, use clean, sharp, dedicated tools. Remove oil, shavings, and other residue of cuttings prior to installation.

+ + END OF SECTION + +

** THIS PAGE INTENTIONALLY LEFT BLANK **

SECTION 26 05 33.13

RIGID CONDUITS

PART 1 – GENERAL

1.1 DESCRIPTION

A. Scope:
   1. CONTRACTOR shall provide all labor, materials, equipment, and incidentals shown, specified, and required to furnish and install conduit and fittings to form complete, coordinated and grounded raceway systems.
   2. When specific, detailed conduit routings for various systems within buildings and other areas are not be shown on the Drawings, CONTRACTOR shall establish routings based on single-line, riser, and interconnection diagrams and other information on the Drawings. CONTRACTOR shall provide for the proper installation of conduits in each system.
   3. Conduit types and the installation methods shall comply with the following, unless otherwise shown or indicated in the Contract Documents:
      a. Use rigid steel conduit for exposed indoor conduit runs in non-corrosive areas.
      b. Use aluminum conduit for exposed interior or exterior conduit runs in hazardous, wet, and corrosive locations.
      c. Use steel conduit for plant monitoring and control (PMCS) systems, system control and data acquisition (SCADA) systems, and communication systems, regardless of the installation. Conduit shall be aluminum in hazardous, wet, and corrosive locations.

B. Coordination:
   1. Conduit runs shown are diagrammatic. Coordinate conduit installation with piping, ductwork, light fixtures, and other systems and equipment and locate to avoid interferences.
   2. For conduits to be embedded in concrete slabs, confirm adequate slab thickness and coordinate location of conduits with placement of reinforcing steel, waterstops, expansion joints, and other features of the concrete slab.

C. Related Sections:
   1. Section 05 05 33, Anchor Systems.
   2. Section 26 05 29, Hangers and Supports for Electrical Systems.
   3. Section 26 05 53, Identification for Electrical Systems.

1.2 REFERENCES

A. Standards referenced in this Section are:

1. ANSI/NEMA FB1, Fittings, Cast Metal Boxes, and Conduit Bodies for Conduit, Electrical Metallic Tubing and Cable.
2. UL 6, Electrical Rigid Metal Conduit – Steel.
3. UL 514B, Conduit, Tubing, and Cable Fittings.
4. UL 651, Safety Schedule 40 and 80 Rigid PVC Conduit and Fittings.
5. UL 886, Outlet Boxes and Fittings for Use in Hazardous (Classified) Locations.

1.3 QUALITY ASSURANCE

A. Regulatory Requirements: Comply with the following:
   1. NEC Article 344, Rigid Metal Conduit.

1.4 SUBMITTALS

A. Action Submittals: Submit the following:
   1. Shop Drawings:
      a. Assembly details of conduit racks and other conduit support systems.
      b. Layout drawings showing proposed routing of exposed conduits, conduits embedded in structural concrete, and conduits directly buried in the ground. Shop Drawings shall show locations of pull and junction boxes and penetrations in walls and floors. Shop Drawings of embedded conduits shall include cross-sections showing thickness of concrete slabs and locations of conduits relative to reinforcing steel, waterstops, and other features of the slab.
   2. Product Data:
      a. Manufacturer's catalog cuts and product data for conduit, fittings, and appurtenances.

B. Informational Submittals: Submit the following:
   1. Manufacturer's Instructions:
      a. When requested by ENGINEER, provide copies of manufacturer's recommendations for handling and installing products.
   2. Site Quality Control Submittals:
      a. When requested by ENGINEER, provide copies of results of specified Site quality control testing.

C. Closeout Submittals: Submit the following:
   1. Record Drawings:
      a. Show actual routing of exposed and concealed conduit runs in record documents in accordance with Section 01 78 39, Project Record Documents.

PART 2 – PRODUCTS

2.1 MATERIALS

A. Rigid Steel Conduit, Elbows, and Couplings:
   1. Manufacturers: Provide products of one of the following:
      a. Allied Tube and Conduit.
      b. Wheatland Tube Company.
      c. Western Tube and Conduit Corporation.
      d. Or equal.
   2. Material: Rigid, heavy-wall, mild steel, hot-dip galvanized, smooth interior, tapered threads and carefully reamed ends; 3/4-inch NPS minimum size.

B. PVC-coated Rigid Steel Conduit, Elbows, and Couplings: NOT USED.

C. Intermediate Metallic Conduit, Elbows, and Couplings: NOT USED.

D. Aluminum Conduit, Elbows, and Couplings:
   1. Manufacturers: Provide products of one of the following:
      a. Allied Tube and Conduit.
      b. Wheatland Tube Company.
      c. Or equal.
   2. Material: Rigid, heavy-wall aluminum, smooth interior, tapered threads and carefully reamed ends; 3/4-inch NPS minimum size.

E. Metallic Conduit Fittings, and Outlet Bodies:
   1. Manufacturers: Provide products of one of the following:
      a. Crouse-Hinds Company.
      b. Appleton Electric Company.
      c. Or equal.
   2. Material and Construction: Cast gray iron alloy, cast malleable iron or aluminum bodies and covers consistent with conduit material. Units shall be threaded type with five full threads. Materials shall comply with ANSI/NEMA FB1 and be listed by UL. Do not use “LB” fittings. Use type “LBD” fittings where use of fittings is unavoidable.
   3. Use: Conduits shall be gasketed and watertight in hazardous, wet, and corrosive locations.

F. PVC-coated Conduit Fittings, and Outlet Bodies:
   1. Manufacturers: Provide products of one of the following:
      a. Robroy Industries.
      b. Perma-Cote Industries.
      c. OCAL, Inc.
      d. Or equal.
   2. Material and Construction: Cast gray iron alloy, cast malleable iron bodies and covers with factory coating of 40-mil thick PVC and smooth urethane interior coating. Units shall be threaded type with five full threads.

Material shall comply with ANSI/NEMA FB1 and be listed by UL. Do not use "LB" fittings. Use type "LBD" fittings where use of fittings is unavoidable.

3. Use: Provide PVC-coated or aluminum conduit fittings and outlet bodies in hazardous, wet, and corrosive locations. Fitting material shall be consistent with conduit material.

G. Non-metallic Conduit and Fittings: NOT USED.

H. Conduit Hubs:
   1. Manufacturers: Provide products one of the following.
      a. Myers Electrical Products Company.
      b. Or equal.
   2. Material: Threaded conduit hub, vibration-proof, weatherproof, with captive O-ring seal, zinc metal with insulated throat and bonding screw.
   3. Use: Provide for all conduit terminations to boxes, cabinets, and other enclosures in areas designated as wet locations.

I. PVC-coated Conduit Hubs:
   1. Manufacturers: Provide products one of the following:
      a. Robroy Industries.
      b. Perma-Cote Industries.
      c. OCAL, Inc.
      d. Or equal.
   2. Material: Threaded conduit hub, vibration-proof, weatherproof, with captive O-ring seal, zinc metal with insulated throat and bonding screw, and factory coating of 40-mil thick PVC and smooth urethane interior coating.
   3. Use: Provide for PVC-coated steel or aluminum conduit terminations to boxes, cabinets, and other enclosures in areas designated as corrosive location.

J. Conduit Bushings and Locknuts:
   1. Manufacturers: Provide products one of the following:
      a. O-Z/Gedney.
      b. Appleton Electric Company.
      c. Or equal.
   2. Insulated Bushings: Malleable iron body with plastic liner. Threaded type with steel clamping screw. Provide with bronze grounding lug, as required.
   3. Locknuts: Steel for sizes 3/4-inch through two-inch diameter and malleable iron for sizes 2.5-inch through four-inch diameter.
   4. Use: Provide for all conduit terminations to boxes, cabinets and other enclosures except threaded type in areas designated as dusty locations.

K. Thruwall Seals
   1. For new construction through exterior subsurface walls and exterior concrete walls.
      a. Manufacturer: Provide one of the following:

1) Type WSK and WSCS by O-Z/Gedney.
2) Or equal.

2. For new construction passing through concrete floors and floor slabs.
   a. Manufacturer: Provide one of the following:
      1) Type FSK and FSCS floor seals by O-Z/Gedney.
      2) Or equal.
3. For conduits passing through new exterior masonry block walls or through core-drilled holes in existing exterior subsurface walls, exterior concrete walls, floor slabs, and roof slabs, and for conduits passing through existing interior concrete walls or floors and interior masonry block walls.
   a. Manufacturer: Provide one of the following:
      1) Type CSMI sealing bushing at the inside of the structure and Type CSMC sealing bushing at the outside of the structure by O-Z/Gedney.
      2) Or equal.

2.2 ACCESSORIES

A. Fasteners: To the extent possible, fastener material shall be consistent with conduit material. For PVC-coated rigid steel conduit runs, fasteners shall have factory applied PVC coating or be stainless steel. Fasten raceway systems to supporting structures using the following:
   1. To Wood: Wood screws.
   2. To Hollow Masonry Units: Toggle bolts, in accordance with Section 05 05 33, Anchor Systems.
   3. To Brick Masonry: Expansion bolts by Price, or equal.
   4. To Concrete: Anchors in accordance with Section 05 05 33, Anchor Systems.
   5. To Steel: Beam clamps in accordance with Section 26 05 29, Hangers and Supports for Electrical Systems.

B. Duct Sealing Compound
   1. Soft, fibrous, slightly tacky, non-hardening sealing compound.
   2. Remains workable at all temperatures.
   3. Manufacturer:
      a. Type DUX by O-Z/Gedney.
      b. Or equal.

2.3 IDENTIFICATION

A. Conduit Labels:
   1. Provide conduit labels in accordance with Section 26 05 53, Identification for Electrical Systems.

B. Warning Tape:
   1. Provide warning tape in accordance with Section 26 05 53, Identification for Electrical Systems.

PART 3 – EXECUTION

3.1 INSPECTION

A. Examine conditions under which the Work will be performed and notify ENGINEER in writing of conditions detrimental to proper and timely completion of the Work. Do not proceed with installation until unsatisfactory conditions are corrected.

3.2 INSTALLATION

A. Install in accordance with Laws and Regulations.

B. Supports:
   1. Rigidly support conduits by clamps, hangers, or Unistrut-type channels. Conduit supports and accessories shall be in accordance with Section 26 05 29, Hangers and Supports for Electrical Systems.
   2. Support single conduits by means of one-hole pipe clamps in combination with one-screw back plates, to raise conduits from the support surface. Support multiple runs of conduits on trapeze type hangers.

C. Fastenings: Fasten raceway systems rigidly and neatly to supporting structures using specified materials.

D. Exposed Conduit:
   1. Install parallel or perpendicular to structural members or walls.
   2. Where possible, run in groups. Provide conduit racks of suitable width, length, and height, arranged to suit field conditions. Provide support every ten feet, minimum.
   3. Install on structural members in protected locations.
   4. Locate clear of interferences.
   5. Provide six inches of clearance from hot fluid lines and 1/4-inch from walls.
   6. Install vertical runs plumb. Unsecured drop length shall not exceed 12 feet.

E. Conduit Embedded in Structural Concrete: NOT USED.

F. Underground Conduits: NOT USED.

G. Empty Conduits:
   1. Install nylon pull wire in each empty conduit and cap conduits not terminating in boxes with permanent fittings designed for the purpose.

H. Field Bends: No indentations. Diameter of conduit shall not vary more than 15 percent at bends.

I. Joints:
   1. Apply conductive compound to joints before assembly.

2. Make up joints tight and ground thoroughly.
3. Use standard tapered pipe threads for conduit and fittings.
4. Cut conduit ends square and ream to prevent damaging wire and cable.
5. Use full threaded couplings. Split couplings are not allowed.
6. Use strap wrenches and vises to install conduit. Replace conduit with wrench marks.
7. Apply zinc-rich paint to exposed threads and other areas of galvanized conduit system where base metal is exposed.

J. Terminations:
1. Install insulated bushings on conduits entering boxes or cabinets, except when threaded hubs are used.
2. Provide locknuts on both inside and outside of enclosure, except when threaded hubs are used.
3. Use of bushings in lieu of locknuts is not allowed.
4. Install conduit hubs on conduits entering boxes or cabinets in wet and corrosive areas.

K. Moisture Protection:
1. Plug or cap conduit ends at time of installation to prevent entrance of moisture and foreign materials.
2. Underground and embedded conduit connections shall be watertight.
3. Thruwall Seals and Conduit Sealing Bushings: Install for conduits passing through concrete slabs, floors, walls, or concrete block walls.
4. Drainage: Conduit runs shall be fully drainable. Where possible install conduit runs to drain to one end and away from building. Avoid pockets or depressions in conduit runs.
5. Seal conduit openings within control and instrumentation panels and distribution equipment with duct sealing compound to provide watertight seal.

L. Corrosion Protection:
1. Conduit Curb: NOT USED.
2. Dissimilar Metals:
   a. Prevent occurrence of electrolytic action between dissimilar metals.
   b. Do not use copper products in connection with aluminum, and do not use aluminum in locations subject to drainage of copper compounds on bare aluminum.
   c. Back paint aluminum in contact with masonry or concrete with two coats of aluminum-pigmented bituminous paint.

M. Reused Existing Conduits:
1. Pull rag swab through conduits to remove water and to clean conduit prior to installing new cable.
2. Repeat swabbing until all foreign material is removed.
3. Pull mandrel through conduit, if necessary, to remove obstructions.

N. Core drill for individual conduits passing through existing concrete slabs and walls. Notify ENGINEER in writing in advance of core drilling. Prior to core drilling, drill sufficient number of small exploratory holes to establish that the area to be core drilled is free of existing embedded conduits. Seal spaces around conduit as indicated in Paragraph 3.2.K.3 of this Section.

O. Non-metallic Conduit: NOT USED.

P. PVC-coated Rigid Steel Conduit:
   1. Install in accordance with manufacturer's recommendations.
   2. Install with manufacturer's installation tools to avoid damage to PVC coating.
   3. Repair damaged PVC coating with manufacturer's recommended touch-up compound.

Q. Identify conduits, including spares, in accordance with Section 26 05 53, Identification for Electrical Systems.

3.3 FIELD QUALITY CONTROL

A. Site Tests:
   1. Test conduits by pulling through each conduit a cylindrical mandrel with length not less than two pipe inside diameters, having an outside diameter equal to 90 percent of conduit's inside diameter.
   2. Maintain a record, by number, of all conduits successfully tested.
   3. Repair or replace conduits that do not successfully pass testing, and re-test.

+ + END OF SECTION + +

SECTION 26 05 33.16

FLEXIBLE CONDUITS

PART 1 – GENERAL

1.1 DESCRIPTION

A. Scope:
   1. CONTRACTOR shall provide all labor, materials, equipment, and incidentals shown, specified, and required to furnish and install flexible metallic conduit and fittings.

1.2 REFERENCES

A. Standards referenced in this Section are:
   1. UL 360, Liquid-Tight Flexible Steel Conduit.

1.3 QUALITY ASSURANCE

A. Regulatory Requirements: Comply with the following:
   1. NEC Article 350, Liquid-Tight Flexible Metal Conduit.

1.4 SUBMITTALS

A. Action Submittals: Submit the following:
   1. Product Data:
      a. Manufacturer's literature and technical information for flexible conduit and fittings proposed for use.

PART 2 – PRODUCTS

2.1 MATERIALS

A. Flexible Conduit (Non-hazardous Areas and Class 1, Division 2, Hazardous Areas):
   1. Material: Flexible galvanized steel core with smooth, abrasion-resistant, liquid-tight, polyvinyl chloride cover. Continuous copper ground built in for sizes 3/4-inch through 1.25-inch. Material shall be UL-listed.
   2. Products and Manufacturers: Provide one of the following:
      a. Anaconda Sealtite Type UA by Anamet Electrical, Inc.
      b. Liquatite Type L.A. by Electric-Flex Company.
      c. Or equal.

B. Flexible Conduit (Class 1, Group D, Division 1, Hazardous Areas):
   1. Material: Flexible brass inner core with bronze outer braid and protective neoprene plastic coating. Steel, brass, or bronze end fittings. Minimum of 12 inches long.
   2. Products and Manufacturers: Provide one of the following:
      a. Type ECGJH or ECLK by Crouse Hinds Company.
      b. Type EXGJH or EXLK by Appleton Electric Company.
      c. Or equal.

C. Flexible Conduit Fittings:
   1. Material and Construction: Malleable iron with cadmium finish. Fittings shall adapt the conduit to standard threaded connections, shall have an inside diameter not less than that of the corresponding standard conduit size and shall be UL listed.
   2. Manufacturers: Provide products of one of the following:
      a. Crouse-Hinds Company.
      b. Appleton Electric Company.
      c. Or equal.
   3. Use: Provide on flexible conduit in non-hazardous and Class 1, Division 2 hazardous areas.

D. PVC-Coated Conduit Fittings:
   1. Material and Construction: Malleable iron with standard finish and 40-mil PVC exterior coating. Fittings shall adapt the conduit to standard threaded connections and shall have an inside diameter not less than that of the corresponding standard conduit size.
   2. Manufacturers: Provide products of one of the following:
      a. Robroy Industries.
      b. Permacote Industries.
      c. OCAL, Inc.
      d. Or equal.
   3. Use: Provide on flexible conduit in areas designated as corrosive locations.

PART 3 – EXECUTION

3.1 INSPECTION

A. Examine conditions under which the Work will be installed and notify ENGINEER in writing of conditions detrimental to proper and timely completion of the Work. Do not proceed with the Work until unsatisfactory conditions are corrected.

3.2 INSTALLATION

A. Install at motors, transformers, field instruments, and equipment subject to vibration or require movement for maintenance purposes. Provide necessary reducer where

equipment furnished cannot accept 3/4-inch diameter flexible conduit. Limit flexible conduit length to three feet maximum.

B. Install in conformance with the Laws and Regulations.

+ + END OF SECTION + +

** THIS PAGE INTENTIONALLY LEFT BLANK **

SECTION 26 05 33.23

SEALED FITTINGS

PART 1 – GENERAL

1.1 DESCRIPTION

A. Scope:
   1. CONTRACTOR shall provide all labor, materials, equipment, and incidentals as shown, specified, and required to furnish and install conduit sealing fittings with sealing fiber and sealing compound.

1.2 REFERENCES

A. Standards referenced in this Section are:
   1. UL 886, Outlet Boxes and Fittings for Use in Hazardous (Classified) Locations, Class 1, Groups A, B, C and D and Class II, Groups E, F and G.

1.3 QUALITY ASSURANCE

A. Regulatory Requirements: Comply with the following:
   1. NEC Article 500, Hazardous (Classified) Locations.

1.4 SUBMITTALS

A. Action Submittals: Submit the following:
   1. Shop Drawings:
      a. Listing of locations where fittings are to be used.
   2. Product Data:
      a. Manufacturer's literature and technical information for sealing fittings, sealing fiber, and sealing compound proposed for use.

PART 2 – PRODUCTS

2.1 MATERIALS

A. Manufacturers: Provide products of one of the following:
   1. Crouse Hinds Company.
   2. Appleton Electric Company.
   3. Or equal.

B. Materials and Construction:
   1. Cast gray iron alloy, or cast malleable iron, or copper free aluminum bodies with zinc electroplate and lacquer or enamel finish.

2. Ample opening with threaded closure for access to conduit hub for making dam.
3. In corrosive locations, fittings shall include factory-applied 40-mil PVC coating.
4. Construct fitting to allow 40 percent cross-sectional fill.

C. Sealing fiber for forming the dam within the hub and sealing compound shall be suitable for use with fittings furnished and shall be products of fitting manufacturer.

D. Sealing fitting, fiber, and sealing compound shall conform to UL 886.

PART 3 - EXECUTION

3.1 INSPECTION

A. Examine conditions under which the Work is to be installed and notify ENGINEER in writing of conditions detrimental to the proper and timely completion of the Work. Do not proceed with the Work until unsatisfactory conditions are corrected.

3.2 INSTALLATION

A. Install for hazardous locations as required by Laws and Regulations and as shown.

B. Provide fittings for proper use relative to mounting position.

C. Use oversized fittings with reducing bushings when necessary to maintain cable fill requirements of the conduit system.

+ + END OF SECTION + +

SECTION 26 05 33.33

PULL, JUNCTION, AND TERMINAL BOXES

PART 1 – GENERAL

1.1 DESCRIPTION

A. Scope:
   1. CONTRACTOR shall provide all labor, materials, equipment, and incidentals as shown, specified, and required to furnish and install pull, junction, and terminal boxes.

B. Related Sections:
   1. Section 26 05 05, General Provisions for Electrical Systems.
   2. Section 26 05 29, Hangers and Supports for Electrical Systems.
   3. Section 26 05 53, Identification for Electrical Systems.

1.2 REFERENCES

A. Standards referenced in this Section are.
   1. AASHTO, Standard Specifications for Highway Bridges.
   2. UL 886, Outlet Boxes and Fittings for Use in Hazardous (Classified) Locations.

1.3 QUALITY ASSURANCE

A. Regulatory Requirements:
   1. NEC Article 314, Outlet, Device, Pull and Junction Boxes; Conduit Bodies; Fittings; and Handhole Enclosures.

1.4 SUBMITTALS

A. Action Submittals: Submit the following:
   1. Product Data:
      a. Manufacturer’s technical information for pull, junction, and terminal boxes proposed for use.

PART 2 – PRODUCTS

2.1 MATERIALS

A. Pull, Junction, and Terminal Boxes:
   1. General – Applicable to All Boxes:
      a. Description and Performance Criteria:

1) Provide pull, junction, and terminal boxes rated at not less than NEMA 12. Boxes shall be appropriate for each location in accordance with NEMA requirements and as required for area classifications specified in Section 26 05 05, General Provisions for Electrical Systems.

b. Manufacturers: Provide products of one of the following:
   1) Appleton Electric Company.
   2) Crouse-Hinds Company.
   3) Hoffman Engineering Company.
   4) Or equal.

c. Terminal strips and terminal blocks in terminal boxes shall be mounted on terminal box sub-panels.

d. Identification: Boxes shall be identified in accordance with Section 26 05 53, Identification for Electrical Systems.

2. Materials and Construction – Dusty Locations:
   a. Material: Welded and galvanized sheet steel of USS gage.
   b. Gasket: Oil-resistant gasket.
   c. Access: Lift-off hinges and quick-release latches.
   d. Material Thickness:
      1) Boxes with dimension two feet and smaller shall be 14-gage.
      2) Boxes with dimension between two and three feet shall be 12-gage.
      3) Boxes with dimension of three feet or more in any direction shall be 10-gage.

3. Materials and Construction - Wet, Corrosive, or Hazardous Locations:
   a. Rating:
      1) Pull boxes in wet, corrosive, or outdoor areas shall be NEMA 4X.
      2) Boxes for areas classified as hazardous locations, where required by NEC, shall be explosion-proof and comply with UL 886.
   b. Material:
      1) Cast gray iron alloy with hot-dip galvanized finish or cast malleable iron bodies and covers.
      2) Large boxes not generally available in cast iron construction shall be copper-free aluminum alloy or Type 316 stainless steel, as required by location.
      3) In corrosive locations, where the conduit system is PVC-coated, boxes shall be cast metal with factory-applied 40-mil PVC coating, Type 316 stainless steel, or non-metallic thermoplastic or fiberglass reinforced plastic material.
   c. Gasket:
      1) Provide neoprene gaskets for wet and corrosive locations.
      2) Gaskets shall be an approved type designed for the purpose. Improvised gaskets are not acceptable.
   d. Access: Stainless steel cover bolts.
   e. Features:
      1) External mounting lugs.
      2) Drilled and tapped conduit holes.
      3) Boxes where conduits enter building or structure below grade shall

have 1/4-inch drain hole at bottom of the box.

4) Provide threaded connections for explosion proof boxes.

B. Terminal Blocks:
   1. Products and Manufacturers: Provide one of the following:
      a. Allen-Bradley Company, Bulletin, Model 1492.
      b. General Electric Company, Model CR151K.
      c. Or equal.
   2. Material and Construction:
      a. NEMA-rated nylon modular terminal blocks.
      b. 600-volt rated.
      c. Control and alarm circuit terminals shall be screwed type with permanently affixed numeric identifiers beside each connection.
      d. Power terminals shall be copper and rated for the circuit ampacity.

PART 3 – EXECUTION

3.1 INSPECTION

A. Examine conditions under which the Work will be installed and notify ENGINEER in writing of conditions detrimental to proper and timely completion of the Work. Do not proceed with the Work until unsatisfactory conditions are corrected.

3.2 INSTALLATION

A. Mount boxes so that sufficient access and working space is provided and maintain clearance of not less than 1/4-inch from walls.

B. Securely fasten boxes to walls or other structural surfaces on which boxes are mounted. Provide independent supports that comply with Section 26 05 29, Hangers and Supports for Electrical Systems, where boxes will not be mounted on walls or other structural surfaces.

C. Install pull boxes where shown or indicated, and provide pull boxes where one or more of the following conditions exist:
   1. Conduit runs containing more than three 90-degree bends.
   2. Conduit runs exceeding 200 feet in length.

D. Provide removable, flame-retardant, insulating cable supports in boxes with any dimension exceeding three feet.

E. Field-apply PVC touch-up to scratched PVC boxes damaged during installation. Touch-up work shall be in accordance with manufacturer’s recommendations and instructions.

F. Size junction, pull, and terminal boxes in accordance with NEC Article 314 and other Laws and Regulations.

G. Provide terminal blocks in boxes where shown and where cable terminations or splices are required.

+ + END OF SECTION + +

SECTION 26 05 53

IDENTIFICATION FOR ELECTRICAL SYSTEMS

PART 1 – GENERAL

1.1 DESCRIPTION

A. Scope:
   1. CONTRACTOR shall provide all labor, materials, equipment, and incidentals shown, specified, and required to furnish and install identification for electrical apparatus and electrical Work.

B. Related Sections:
   1. Section 26 05 19, Low Voltage Electrical Power Conductors and Cables.

1.2 QUALITY ASSURANCE

A. Regulatory Requirements: Comply with the following:
   1. NEC Article 110, Requirements for Electrical Installation.
   2. NEC Article 210, Branch Circuits.
   3. NEC Article 215, Feeders.
   4. NEC Article 504, Intrinsically Safe Systems.
   5. NEC Article 700, Emergency Systems.
   6. NEC Article 701, Legally Required Standby Systems.
   7. NEC Article 702, Optional Standby Systems.
   8. 40 CFR 1910.145 (OSHA) – Specification for Accident Prevention Signs and Tags.
   9. NFPA 70E, Electrical Safety in the Workplace.

1.3 SUBMITTALS

A. Action Submittals: Submit the following:
   1. Shop Drawings: Submit the following:
      a. Complete description and listing of proposed electrical identification and electrical identification devices for associated equipment or systems.
      b. Conduit and wire identification numbering system and equipment signage.
   2. Product Data:
      a. Manufacturer’s literature, cut sheets, specifications, dimensions and technical data for all products proposed under this Section.

PART 2 – PRODUCTS

2.1 MANUFACTURED UNITS

A. Engraved Identification Devices (Nameplates and Legend Plates):
   1. Nameplates:
      a. Laminated thermoset plastic, 1/16-inch thick, engraved condensed block black lettering on white background, square corners, and beveled front edges, or match existing.
      b. Size: As required.
      c. Letter Size: Minimum 3/16-inch.
      d. Nameplates one-inch or less in height shall have one mounting hole at each end. Nameplates greater than one-inch in height shall have mounting holes in the four corners.
   2. Legend Plates:
      a. Legend plates for pushbuttons, pilot lights, selector switches, and other panel-mounted devices shall be large size with dimensions of approximately 2-7/16 inches wide by 2-13/32 inches tall (Allen Bradley large automotive size), plastic, custom engraved with black letters on white background.
         1) Provide standard-size legend plates where devices are mounted on motor control centers and spacing of devices precludes using automotive-size legend plates.
      b. Lettering size and line weight shall be the same for all legend plates on the same panel or enclosure. Maximum size shall be 1/4-inch and minimum size shall be 1/8-inch.

B. Safety Signs and Voltage Markers:
   1. High-Voltage Safety Signs for Outdoor Applications: NOT USED.
   2. High-Voltage Safety Signs for Indoor Applications: NOT USED.
   3. Cable Tray Safety Signs: NOT USED.
   4. Low-Voltage Safety Signs:
      a. Products and Manufacturers: Provide one of the following:
         1) B-302-86060 by Brady.
         2) Or equal.
      b. Low voltage safety signs shall be pressure-sensitive vinyl complying with 40 CFR 1910.145, five inches by 3.5 inches in size, and shall read, “DANGER – 480 VOLTS”.
   5. Low-Voltage Markers:
      a. Products and Manufacturers: Provide one of the following:
         1) CV442xx by Brady.
         2) Or equal.
      b. Low voltage markers shall be either pressure-sensitive vinyl or vinyl cloth with black lettering on orange background and shall read, “120 VOLTS”, “208 VOLTS”, “120/208 VOLTS”, or “240 VOLTS” as required.

C. Arc-flash Safety Signs:
   1. Products and Manufacturers: Provide one of the following:
      a. Brady.
      b. Or equal.
   2. Warning signs shall be adhesive-backed polyester.
   3. Warning signs shall read, “Warning – Arc Flash and Shock Hazard. Appropriate PPE Required. Arc flash warning signs shall indicate the flash protection boundary, incident energy in calories per square centimeter, hazard level, description of required protective clothing, shock hazard, limited approach boundary, restricted approach boundary, prohibited approach boundary, and equipment name.

D. Voltage System Identification Directories: NOT USED.

E. Conduit Labels:
   1. Products and Manufacturers: Provide one of the following:
      a. B-915-xxxxx by Brady.
      b. Or equal.
   2. Shall be pre-tensioned acrylic/vinyl construction coiled to completely encircle conduit for conduit up through five-inch diameter, or pre-molded to conform to circumference of conduit six-inch diameter and larger.
   3. Attach strap-on style for six-inch diameter conduit with stainless steel springs.
   4. Shall be blank for use with custom printed labels.
   5. Custom Labels:
      a. Shall have black lettering on yellow background.
      b. Shall not contain abbreviations in legend.
      c. Shall be custom printed on continuous tape with permanent adhesive using thermal printer specified below.

F. Wire Identification:
   1. Heat Shrinkable Wire and Cable Labeling System:
      a. Products and Manufacturers: Provide one of the following:
         1) B-341 PS-xxx-2W by Brady.
         2) Or equal.
      b. White heat-shrinkable irradiated polyolefin shrink-on sleeves. Labels shall be thermal printed. Labels shall be not less than two inches wide.
   2. Wrap-Around Wire and Cable Labeling System:
      a. Products and Manufacturers: Provide one of the following:
         1) THT-XX-427 by Brady.
         2) Or equal.
      b. Self-laminating white/transparent self-extinguishing vinyl strips. Length shall be sufficient to provide at least 2.5 wraps. Labels shall be thermally printed and not less than two inches wide.

G. Detectable Underground Warning Tape: NOT USED.

H. Thermal Printing System:
   1. Utilize thermal transfer process to provide non-smearing labels and markers.
   2. Wire and Cable Markers:
      a. Portable, Products and Manufacturers: Provide one of the following:
         1) TLS2200 by Brady.
         2) Or equal.
      b. Desktop, Products and Manufacturers: Provide one of the following:
         1) 200M by Brady.
         2) Or equal.
   3. Cable Markers:
      a. Portable, Products and Manufacturers: Provide one of the following:
         1) Handimark by Brady.
         2) Or equal.
      b. Desktop, Products and Manufacturers: Provide one of the following:
         1) Labelizer PLUS by Brady.
         2) Or equal.

I. Generator System Warning Signs: NOT USED.

2.2 FABRICATION

A. Engraved Identification Devices (Nameplates and Legend Plates):
   1. Nameplate and legend plate text is preliminary and subject to change pending final review and approval of nomenclature by ENGINEER after start-up and testing.

PART 3 – EXECUTION

3.1 INSTALLATION

A. Provide electrical identification in accordance with manufacturer recommendations and as required for proper identification of equipment and materials.

B. Engraved Identification Devices (Nameplates and Legend Plates):
   1. Unless otherwise indicated in the Contract Documents, attach permanent nameplates with permanent adhesive and with 3/16-inch diameter, round head, stainless steel machine screws into drilled and tapped holes.
   2. Provide nameplate with 1.5-inch high letters to identify each console, cabinet, panel, or enclosure as shown or indicated.
   3. Provide nameplates for field-mounted motor starters, disconnect switches, manual starter switches, pushbutton stations, and similar equipment operating components, which shall describe motor or equipment function and circuit number.
   4. Provide nameplates with 1/2-inch high letters to identify each junction and terminal box shown or indicated.

5. On switchgear, provide nameplates for each main and feeder circuit including control fuses, and for each indicating light and instrument.
   a. Provide nameplate with 1.5-inch high letters giving switchgear designation, voltage rating, ampere rating, short circuit rating, manufacturer's name, general order number, and item number.
   b. Identify individual door for each compartment with nameplate giving item designation and circuit number.
6. Motor Control Centers:
   a. Provide nameplate with 1.5-inch letters with motor control center designation.
   b. Identify individual door for each unit compartment with nameplate identifying controlled equipment.
7. Except conduit, all electrical appurtenances including lighting panels, convenience outlets, fixtures, and lighting switches, shall be provided with nameplates indicating appropriate circuit breaker number(s).
8. Push Buttons:
   a. Provide legend plates for identification of functions.
   b. Provide nameplates for identification of controlled equipment.
   c. Provide red buttons for stop function.
   d. Provide black buttons for other functions.
9. Pilot Lights:
   a. Provide legend plates for identification of functions.
   b. Provide nameplates for identification of controlled equipment.
   c. Shall have lens colors as shown or indicated. Where no color is indicated, provide the following lens colors:

Color	**Legend**
Green	Running, Open
Red	Stopped, Closed
Amber	Alarm
Blue	Power
White	Status

10. Selector Switches:
    a. Provide legend plates for identification of functions.
    b. Provide nameplates for identification of controlled equipment.
11. Panel Mounted Instruments:
    a. Provide nameplates for identification of function.
12. Interiors of Cabinets, Consoles, Panels, Terminal Boxes, and Other Enclosures:
    a. Provide nameplates for identification.
    b. Provide each item inside cabinet, console, panel, terminal box, or enclosure with laminated plastic nameplate as shown on approved Shop Drawings and CONTRACTOR's other submittals. Install nameplates with adhesive.

c. Interior items requiring nameplates include:
   1) Terminal blocks and strips.
   2) Bus bars.
   3) Relays.
   4) Rear of face-mounted items.
   5) Rear of door-mounted items.
   6) Interior mounted items that require identification when mounted externally.
d. Circuit Breaker Directory:
   1) Provide engraved laminated plastic directory listing function and load controlled for each circuit breaker within panel used for power distribution.

13. Re-label existing equipment whose designation have changed.

C. Safety Signs and Voltage Markers:
1. Provide safety signs and voltage markers on and around electrical equipment as shown or indicated.
   a. Install rigid safety signs using stainless steel fasteners.
   b. Clean surfaces before applying pressure-sensitive signs and markers.
2. Install low voltage safety signs on equipment doors that provide access to uninsulated 480-volt conductors, including terminal devices.
3. Install low voltage markers on each terminal box, safety disconnect switch, and panelboard installed, modified, or relocated as part of the Work and containing 120/208-volt conductors.

D. Arc-flash Safety Signs:
1. Provide arc-flash safety signs as required by NEC Article 110.
2. Provide signs for switchboards, panelboards, motor control centers, and industrial control panels. Provide signs for control panels that contain 480-volt equipment. Provide arc flash warning signs on other equipment where the incident energy is greater than 1.2 calories per square centimeter.

E. Conduit Labels:
1. Provide conduits with conduit labels unless otherwise shown or indicated.
2. Do not label flexible conduit.
3. Do not label exposed single conduit runs of less than 25 feet between local disconnect switches and their associated equipment.
4. Conduit labels shall indicate the following information:
   a. System Voltage Rating
      1) 480 VAC
      2) 120 VAC
      3) 24 VDC
   b. System Identification
      1) Power
      2) Control
      3) Analog

c. Contract Number: Alphanumeric, as shown on the Drawings, as assigned by CONTRACTOR for unlabeled conduits, and in accordance with approved submittals.

5. Conduits that contain intrinsically safe wiring shall have an additional pipe marker provided that has blue letters on white background and reads, “INTRINSICALLY SAFE WIRING”.
   a. Install intrinsically safe pipe markers in accordance with NEC Article 504 along entire installation. Spacing between labels shall not exceed 25 feet.
6. Provide conduit labels at the following locations:
   a. Where each conduit enters and exits walls, ceilings, floors, or slabs.
   b. Where conduit enters or exits boxes, cabinets, consoles, panels, or enclosures, except pull boxes and conduit bodies used for pull boxes.
   c. At maximum intervals of 50 feet along length of conduit.
7. Orient conduit labels to be readable.

F. Wire and Cable Identification:
1. Color-coding of insulated conductors shall comply with Section 26 05 19, Low Voltage Electrical Power Conductors and Cables.
2. Use heat-shrinkable wire labels where wire or cable is terminated. Use wrap-around labels where wire or cable is to be labeled but is not terminated.
3. Do not provide labels for the following:
   a. Bare (uninsulated) conductors, unless otherwise shown or indicated as labeled.
4. Provide wire and cable labels for the following:
   a. New, rerouted, or revised wire or cable.
   b. Insulated conductors.
   c. Wire and cable terminations:
      1) Wire labels shall be applied between 1/2-inch and one inch of completed termination
      2) Apply cable labels between 1/2-inch and one inch of cable breakout into individual conductors.
         a) Label individual conductors in a cable after breakout as specified for wires.
   d. Wire or cable exiting cabinets, consoles, panels, terminal boxes, and enclosures.
      1) Label wires or cables within two inches of entrance to conduit.
   e. Wire or cable in junction boxes and pull boxes
      1) Label wires or cables within two inches of entrance to conduit.
   f. Wire and cable installed in cable tray.
      1) Wire and cable shall have labels at maximum intervals of 20 feet.
   g. Wire and cable installed without termination in electrical manholes.
      1) Wire and cable shall have wrap-around labels applied within one foot of exiting manhole.

5. Wire and Cable Identification System:
   a. Wire and cable labels shall be imprinted with an identifying designator.
      1) Wire and cable extending between two devices or items and that does not undergo a change of function shall be identified by a single unique designator as specified below.
   b. Field Wiring:
      1) Wire or cable designator shall consist of:
         a) Three left-most characters shall consist of the Contract number under which wiring or cable was installed.
         b) Fourth character from the left shall be an asterisk (*), a plus sign (+) or a hyphen (-). Do not use other punctuation symbols in a wire designator.
         c) Remaining characters shall be alphanumeric and make wire designator unique.
         d) Numbering shall reflect actual designations used in the Work and shall be documented in record documents.
6. Modified Cabinets, Consoles, Panels, and Enclosures:
   a. New or rerouted wire or cable in existing cabinets, consoles, panels, and enclosures shall be labeled as shown on the Drawings or be assigned a ten-character designator equivalent to field wire designator.

H. Terminal Strip Labeling:
   1. Label panel side of terminal to match panel wire number.
   2. Label field side of terminal to match field wire number. Terminal number shall not include the Contract number.

I. Generator System Warning Signs: NOT USED.

+ + END OF SECTION + +

SECTION 26 28 16.33

DISCONNECT SWITCHES

PART 1 – GENERAL

1.1 DESCRIPTION

A. Scope:
   1. CONTRACTOR shall provide all labor, materials, equipment, and incidentals as shown, specified, and required to furnish and install disconnect switches.

B. Related Sections:
   1. Section 26 05 05, General Provisions for Electrical Systems.
   2. Section 26 05 53, Identification for Electrical Systems.

1.2 REFERENCES

A. Standards referenced in this Section are:
   1. UL 98, Enclosed and Dead-Front Switches.
   2. NEMA KS 1, Enclosed and Miscellaneous Distribution Equipment Switches (600 Volts Maximum).
   3. NEMA 250, Enclosures for Electrical Equipment (1000 Volts Maximum).

1.3 QUALITY ASSURANCE

A. Regulatory Requirements:
   1. NEC Article 404, Switches.
   2. Disconnect switches shall bear the UL label.

1.4 SUBMITTALS

A. Action Submittals: Submit the following:
   1. Shop Drawings:
      a. Listing of each switch to be furnished, including location, rating, and NEMA enclosure type for each.
   2. Product Data:
      a. Manufacturer's technical information for disconnect switches proposed for use.

PART 2 – PRODUCTS

2.1 MANUFACTURERS

A. Manufacturers: Provide products of one of the following:

1. Square-D Company.
2. Cutler-Hammer.
3. General Electric Company.
4. Siemens.
5. Or equal.

2.2 MATERIALS

A. Service Disconnect Switches: NOT USED.

B. Single Throw, Circuit Disconnect Switches:
   1. Type: Fused or unfused, horsepower rated, heavy-duty, single throw, quick-make, quick-break mechanism, visible blades in the "OFF" position and safety handle.
   2. Rating: Voltage and current ratings and number of poles as required for motor or equipment circuits being disconnected. Switches shall bear a UL label and shall comply with the requirements of UL 98, NEMA KS 1 and NEMA 250.
   3. Provide auxiliary dry contacts to indicate switch position.

C. Double Throw Safety Switches: NOT USED.

D. Disconnect Switches for 120-volt, Single-phase Circuits: NOT USED.

E. Enclosures: NEMA rating shall be as required for area classifications specified in Section 26 05 05, General Provisions for Electrical Systems.

F. Identification:
   1. Identify enclosures in accordance with Section 26 05 53, Identification for Electrical Systems.
   2. Provide nameplate to identify the equipment served by disconnect switch and associated source of power.

PART 3 – EXECUTION

3.1 INSPECTION

A. Examine conditions under which the Work will be installed and notify ENGINEER in writing of conditions detrimental to proper and timely completion of the Work. Do not proceed with the Work until unsatisfactory conditions are corrected.

3.2 INSTALLATION

A. Install equipment so that sufficient access and working space is provided for ready and safe operation and maintenance.

B. Securely fasten equipment to walls or other structural supports on which they are mounted. Provide independent stainless-steel supports where no wall or other structural surface exists. Mount disconnect enclosures at a height not exceeding six feet.

C. Provide suitable 1/4-inch spacers to prevent mounting enclosure directly against walls.

+ + END OF SECTION + +

** THIS PAGE INTENTIONALLY LEFT BLANK **

SECTION 26 29 23

LOW-VOLTAGE VARIABLE FREQUENCY DRIVES

PART 1 – GENERAL

1.1 DESCRIPTION

A. Scope:
   1. CONTRACTOR shall provide all labor, materials, equipment, services, and incidentals as shown, specified, and required to furnish and install low-voltage variable frequency drives, complete and operational.
   2. Variable frequency drives required under this Section are low-voltage, voltage source inverter, pulse width modulated. Variable frequency drives shall be customized.
   3. Low-voltage variable frequency drives included in this Section are associated with the following equipment:
      a. Section 43 21 13, RAS and WAS Pumping Equipment
         (1) Qty of 6 RAS Pumps
         (2) Qty of 4 WAS Pumps
   4. Low-voltage Variable Frequency Drives, specified under this Section, shall be supplied by pumping equipment manufacturer. Refer to Section 43 21 13.

B. Related Sections:
   1. Section 26 05 29, Hangers and Supports for Electrical Systems.
   2. Section 26 05 53, Identification for Electrical Systems.
   3. Section 43 21 13, RAS and WAS Pumping Equipment

1.2 REFERENCES

A. Standards referenced in this Section are:
   1. IEEE 519, Recommended Practices and Requirements for Harmonic Control in Electrical Power Systems.
   2. ISO 9000, Quality Management Systems, Fundamentals and Vocabulary.
   3. ISO 9001, Quality Management Systems, Requirements.
   4. ISO 9002, Quality Systems, Model for Quality Assurance in Production, Installation and Servicing.
   5. NEMA ICS 2, Controllers, Contactors and Overload Relays Rated 600 Volts.
   6. NEMA ICS 7, Industrial Control and Systems Adjustable Speed Drives.
   7. NEMA MG 1, Motor and Generators.
   8. UL 489, Molded-Case Circuit Breakers, Molded-Case Switches and Circuit-Breaker Enclosures.
   9. UL 508, Industrial Control Equipment.

1.3 QUALITY ASSURANCE

A. Qualifications:
   1. Manufacturer:
      a. Low-voltage variable frequency drive manufacturer shall have not less than five years of experience designing and regularly manufacturing and servicing substantially similar equipment to that required, and upon ENGINEER's request shall submit documentation of not less than five installations in satisfactory operation for not less than five years each.
      b. Manufacturer shall be certified under ISO 9000, ISO 9001, or ISO 9002 for materials and equipment specified.
      c. For all required factory tests, low-voltage variable frequency drive manufacturer shall use a factory test facility that has calibrated its testing apparatus in the previous twelve months, and is staffed by qualified, experienced technicians.

B. Component Supply and Compatibility:
   1. Drives specified under this Section employ a low switching frequency or pattern to minimize instantaneous rate of voltage change over time (dv/dt), and the adverse effects of potential bearing currents. Where alternate manufacturers are proposed, obtain manufacturer recommendations regarding bearing currents and provide equipment required at no additional cost to OWNER.
   2. Each low-voltage variable frequency drive shall be fully compatible with associated driven equipment and motors. Variable frequency drives shall be matched to specific load requirements for each system. Operation of variable frequency drive shall not overstress motor insulation.
   3. To centralize responsibility and to ensure that all equipment is properly coordinated, variable drives specified under this Section shall be obtained from the Supplier of the associated driven equipment.
   4. Similar components of drives associated with each system shall be products of a single manufacturer.

1.4 SUBMITTALS

A. Action Submittals: Submit the following:
   1. Shop Drawings:
      a. Dimensional information and construction details of enclosures. Enclosure details shall consist of exterior and interior front door with nameplate legends, interior door front and rear views, and terminal block layout.
      b. Three-line power and control schematic diagrams.
      c. Wiring diagrams showing the interconnection of conductors to all devices with terminal assignments for remote devices.
      d. Functional description of system operation.

e. VFD heat dissipation at full load, including heat rejection/cooling system.

2. Product Data:
   a. Manufacturer's technical specifications.
   b. Manufacturer's catalog cuts and product literature.
3. Testing Plans:
   a. Not less than thirty days prior to source quality control testing, submit descriptions of proposed shop testing methods, procedures, apparatus, and limitations.
   b. Not less than thirty days prior to field quality control testing, submit descriptions of proposed field-testing methods, procedures, and apparatus.

B. Informational Submittals: Submit the following:
1. Certificates:
   a. Certification letters from low-voltage variable frequency drive manufacturer and motor manufacturer that the approved driven equipment has been reviewed and that variable frequency drive units and motors are compatible and shall be provided in accordance with the Contract Documents and requirements of the driven equipment.
2. Source Quality Control Submittals:
   a. Within five days of completing source quality control tests and inspections, submit test results with indication of whether all criteria of the Contract Documents for the specified equipment were met.
3. Field Quality Control Submittals:
   a. Within five days of completing field quality control tests and inspections, submit test results with indication of whether all criteria of the Contract Documents for the specified equipment were met.
4. Manufacturer Reports:
   a. Within five days of each visit to the Site by manufacturer's representative, submit written report of reason for visit, problems encountered, solutions implemented, and remaining work.
5. Qualifications Statements:
   a. Manufacturer, when requested by ENGINEER.

C. Closeout Submittals: Submit the following:
1. Operation and Maintenance Data:
   a. Submit complete installation, operation and maintenance manuals including test reports, maintenance data and schedules, description of operation, list of recommended spare parts, and spare parts ordering information.
   b. Manuals shall include record drawings of control schematics, including point-to-point wiring diagrams.
   c. Include a listing of all programmable drive parameters and their settings at Substantial Completion. Submit parameters as both printed pages in the operations and maintenance manual and in electronic

format on compact disc that can be directly uploaded to the drive-in event of drive replacement or repair.

d. Comply with Section 01 78 23, Operations and Maintenance Data.

D. Maintenance Materials Submittals: Submit the following:

1. Spare Parts and Extra Stock Materials:

a. Furnish, tag, and box for shipment and long-term storage spare parts and special tools for low-voltage variable frequency drives. Each set of spare parts and tools shall include manufacturer's recommended spare parts inventory for one year and include, at minimum, the following:

Item	**Quantity per HP Rating**
1) Spare Controller	One of each size and type used
2) Fans	One set
3) Power fuses	One set of each size and type used
4) Control power fuses	Two sets of each size and type used
5) Pilot lights	Two per ten of each type used

b. Furnish a list of recommended spare parts for an operating period of one year. Describe each part, the quantity recommended, and current unit price.

1.5 DELIVERY, STORAGE, AND HANDLING

A. Packing, Shipping, Handling, and Unloading:

1. Packing:

a. Inspect prior to packing to ensure that assemblies and components are complete and undamaged.

b. Protect mating connections.

c. Cover all openings into enclosures with-vapor inhibiting, water-repellent material.

d. Indoor containers shall be bolted to skids.

2. Upon delivery, check materials and equipment for evidence of water that may have entered equipment during transit.

3. Handling:

a. Lift roll or jack low-voltage variable frequency drive equipment into locations shown.

b. Variable frequency drives shall be equipped for handling required for installation. Handle equipment in accordance with manufacturer’s requirements.

B. Storage and Protection:

1. Store low-voltage variable frequency drive equipment in a clean, dry location with controls for uniform temperature and humidity. Protect equipment with coverings and maintain environmental controls.

PART 2 – PRODUCTS

2.1 EQUIPMENT PERFORMANCE

A. System Performance:
   1. Driven equipment to be controlled by a low-voltage variable frequency drive shall be provided with a customized variable frequency drive. Each drive unit shall include an adjustable frequency controller with associated controls for continuous speed adjustment and protection of the driven equipment. Output speed control of motor shall be continuous throughout speed range of two to 60 Hertz under variable torque load or constant torque as specified for the driven equipment.
   2. Low-voltage variable frequency drives associated with each set of driven equipment shall be similar to each other.
   3. Variable frequency drives shall be UL-listed or ETL-listed and designed, built, and tested in accordance with UL 489, NEMA ICS 2, NEMA ICS 7, and UL 508.

2.2 MANUFACTURERS

A. Provide low-voltage variable frequency drives by one of the following:
   1. Yaskawa Model iQ1000 by Icon Technologies
   2. No equal.

2.3 ENCLOSURE

A. Provide each low-voltage variable frequency drive with wall-mounted, front-access, NEMA 12, filtered and gasketed enclosure. Enclosure shall house all components required for the associated variable frequency drive.

B. Enclosure shall provide adequate cooling for components within and include positive ventilation.

C. Enclosure shall include circuit breaker disconnect switch. Circuit breakers shall be in accordance with UL 489. Switch handle shall be suitable for padlocking and be through-the-door type with handle height not exceeding six feet. Operation of switch shall remove the service supply from all internal components. Power devices shall be suitable for interrupting capacity of 65,000 RMS symmetrical amperes. Include current limiting semi-conductor fuses where required for protection of solid-state components.

D. Enclosure door shall include an operator interface for access to controller's digital keypad and display.

E. Equip enclosure front with nameplates for identification of equipment and operating functions. Nameplates shall be in accordance with Section 26 05 53, Identification for Electrical Systems.

F. Equip enclosure with phenolic type terminal blocks suitably labeled for all internal and remote wiring requirements, plus twenty percent spare.

2.4 ADJUSTABLE FREQUENCY CONTROLLER

A. General:
   1. Adjustable frequency controller shall be microprocessor-based, pulse width modulated design, suitable for operation on a 480-volt, three-phase supply. Controller shall produce an adjustable AC voltage/frequency output to vary speed of driven equipment. Controller shall consist of the following sections:
      a. Six-pulse diode bridge converter input section.
      b. Fixed DC bus section.
      c. Six-step power transistor inverter output section.
   2. Controller switching frequency shall be adjustable and allow operation at 5,000 Hertz or less. Controller technology shall include a switching scheme that reduces the dv/dt of output supply.
   3. Equip controller with a five-percent DC bus reactor or input line reactor.
   4. Controller's solid-state converter input section switching devices shall have 1600-volt PIV rating.
   5. Overload rating of 110 percent variable torque, 150 percent constant torque for one minute.
   6. Able to withstand output terminal line-to-line short circuits without component failure.

B. Operating Criteria:
   1. Operating criteria shall be in accordance with the following:
      a. Ambient temperature range of zero to 40 degrees C.
      b. Operational humidity of up to 90 percent non-condensing.
      c. Altitude up to 3,300 feet above sea level.
      d. Nominal voltage of 480-volts plus or minus ten percent, three-phase, three-wire. Include an under-voltage feature to allow trip-free operation down to 35 percent undervoltage.
      e. Nominal frequency of 60 Hertz plus or minus three Hertz.
      f. Input power factor of 95 percent displacement power factor at all operating speeds.
      g. Efficiency of 96 percent at full speed and full load.

C. Features:
   1. Controller shall have the following features:
      a. Digital keypad and display module shall provide parameter setting, adjustments, and monitoring of control functions and faults. Display messages shall be in English.
      b. Serial communication port shall allow connecting to programmable controller interface using manufacturer standard protocol.

c. Independent acceleration/deceleration rates shall provide two to 600 seconds minimum. When called to stop, motor shall decelerate to minimum speed before stopping.
d. Power loss feature shall allow five cycle ride through capability for input supply interruptions.
e. Time delay automatic restart shall allow restart after controller fault conditions with programmable attempts.
f. Coasting motor restart shall allow controller to restart into a coasting motor without damage or tripping. Coasting motor restart feature shall allow switching from bypass mode to low-voltage variable frequency drive mode while operating, without shutdown.
g. Isolated control inputs and outputs.

D. Protection:
1. Controller shall have protective functions as follows:
a. Input line metal oxide varistor transient protection.
b. Electronic over-current trip instantaneous and inverse time overload protection with thermal memory retention.
c. Over-temperature trip temperature protection.
d. Current limit trip protection.
e. Input line over- and under-voltage trip protection.
f. Ground fault trip protection.

2.5 OUTPUT FILTER

A. General:
1. Provide output filter to prevent overstressing motor insulation system. Provide output filter with each low-voltage variable frequency drive, when cable length between motor and variable frequency drive exceeds the following based on noted switching frequencies.
a. One KHZ switching frequency, 200 feet cable length.
b. Three KHZ switching frequency, 175 feet cable length.
2. Provide output filters in all other cases, based on recommendations of low-voltage variable frequency drive and motor manufacturers, when actual voltage peaks at motor terminals exceed NEMA MG 1 limits.

B. Features and Criteria:
1. Filter shall be three-phase, 600-volt class motor-protecting type consisting of suitable values of inductance, capacitance and resistance to form a damped, low pass filter.
2. Filter shall be low-loss type specifically designed to reduce voltage wave form dv/dt. Filter shall allow cable lengths at minimum exceeding actual application distances with waveform resulting in voltage spikes at motor terminal that are within NEMA MG 1 Part 31 voltage stress levels.
3. Filter shall be suitable for mounting within low-voltage variable frequency drive enclosure.

2.6 BYPASS CIRCUIT: NOT USED.

2.7 CONTROLS

A. General:
   1. Equip each low-voltage variable frequency drive control system with relays, switches, fuses, indicating lights, and components required for a complete, functional system.
   2. Variable frequency drive control shall be powered from a suitably sized and protected control power transformer.
   3. Variable frequency drive control shall include status indicators, controller, and system fault condition displays and operating controls. Provide status indicators and operating controls associated with drive control on front door of enclosure.
   4. Control arrangement shall be such that variable frequency drive internal electronic supply voltage is isolated from field wiring.

B. Control and Pilot Devices:
   1. Relays shall be standard, latching type, and pneumatic or solid-state time delay type. Provide relays with contacts rated ten amps, quantity as required.
   2. Pilot devices shall be heavy duty type, rated 10 amps continuous. Indicating lights shall be push-to-test transformer type with 12-volt secondaries.

C. Operation:
   1. Controls for each low-voltage variable frequency drive shall consist of all devices necessary for the following:
      a. Stop/Start and Speed Control: Stop/start and speed control shall respond to drive-mounted selector switch. With switch in “REMOTE” position, stop/start and speed control shall be based on a stop/start contact and four- to 20-mADC speed signal from remote process control panel. With switch in “LOCAL” position, stop/start control shall be based on remote HOA switch located adjacent to driven equipment, and speed control shall be based on drive-mounted speed potentiometer.
      b. Emergency Stop Control: NOT USED.
      c. Motor Over-temperature Shutdown: Motor over-temperature control shall respond to thermostats that activate on motor over-temperature. When over-temperature is detected, driven equipment shall stop.
      d. Discharge Pressure Shutdown: Pressure control shall respond to a remote discharge pressure switch. When high pressure is detected, driven equipment shall stop after an adjustable time delay.
      e. Seal water control: NOT USED.
      f. Motor Space Heater Control: Motor space heater control shall energize remote motor’s internal heater when driven equipment is stopped. Include provisions to supply 120-volt power to heater.

D. Auxiliary Features:
   1. Provide each low-voltage variable frequency drive with the following:
      a. Status Indicators: Status indicators shall include separate pilot lights for indication of motor run (red).
      b. Shutdown Indicators: Shutdown indicators shall include separate pilot lights (amber) for each shutdown condition. Arrange shutdown indication circuitry so that, when activated, indicator requires manual reset.
      c. Contact Outputs: Contact outputs shall include separate dry contacts for remote indication of motor run, each shutdown condition, and controller faults.
      d. Speed Output: Speed output shall include four- to 20-mADC signal for remote indication of motor speed.

E. Wiring and Device Identification:
   1. Provide control wiring and device identification for each low-voltage variable frequency drive:
      a. Identify all control conductors with permanent type wire markers. Each wire shall be identified by a unique number and shall be attached to wire at each termination point.
      b. Identify each control device with permanent type marker. Each device shall be identified by a unique number and shall be attached to each device.
      c. Numbering system for each wire and control device shall be identified on wiring diagrams and shall reflect actual designations used in the Work.

2.8 SOURCE QUALITY CONTROL

A. Tests:
   1. Perform factory tests on each low-voltage variable frequency drive prior to shipping. Tests shall consist of simulating expected load to be driven by operating load through speed ranges specified for driven equipment, for minimum of two hours per drive unit.
   2. Provide factory control and alarm tests on each drive unit by simulating each control signal and each alarm function to verify proper and correct drive unit action.
   3. Perform specified tests in addition to standard factory tests typically performed.

PART 3 – EXECUTION

3.1 INSPECTION

A. Examine conditions under which the Work will be installed and notify ENGINEER in writing of conditions detrimental to proper and timely completion

of the Work. Do not proceed with the Work until unsatisfactory conditions are corrected.

3.2 INSTALLATION

A. Install equipment in accordance with manufacturer's recommendations and instructions and in conformance with Laws and Regulations, and the Contract Documents.

B. Unless otherwise shown or indicated, install equipment on concrete bases per Section 26 05 29, Hangers and Supports for Electrical Systems.

C. Install equipment with sufficient access and working space provided for ready and safe operation and maintenance.

D. For installations against masonry walls, provide an insulation board, 1/4-inch minimum thickness, between equipment and wall for corrosion protection. Trim board neatly within outline of equipment.

E. Install all terminations, lugs, and required appurtenances necessary to properly terminate power supplies.

F. Install control wiring terminations and appurtenances necessary to complete installing control and monitoring devices.

G. Immediately prior to Substantial Completion, replace all enclosure filters and frames provided under this Contract with new filters and frames, except expanded metal filter types. Immediately prior to Substantial Completion, clean expanded metal filters.

3.3 FIELD QUALITY CONTROL

A. Site Tests:
   1. After installation, inspect, adjust, and test each low-voltage variable frequency drive at the Site. Testing and inspection shall be in accordance with manufacturer's recommendations and be performed by manufacturer's factory-trained representative. Through CONTRACTOR, manufacturer's factory-trained representative shall inform OWNER and ENGINEER when equipment is correctly installed and ready to be energized. Do not energize equipment without permission of OWNER.
   2. Perform the following equipment inspection and testing and provide reports documenting procedures and results.
      a. Verify all device settings and drive adjustments.
      b. Inspect all mechanical and electrical interlocks and controls for proper operation.
      c. Test each drive through specified speed ranges and loads for a minimum of two hours per drive unit.

d. Test each drive by using actual control signal for remote and local operation.
e. Test each drive alarm function.
f. Perform other tests recommended by equipment manufacturer.

B. Manufacturer Services:
1. Unloading and Installation: Manufacturer's factory-trained representative shall be present during unloading of equipment and installation at equipment's final location. Representative shall train installing personnel in advance in the proper handling and rigging of equipment. Services by manufacturer's representative under this paragraph shall be at least 1 eight-hour day at the Site.
2. Post-installation Check: Manufacturer's factory-trained representative shall check and approve the installed equipment before initial operation. Manufacturer shall calibrate, set and program low-voltage variable frequency drives provided. Services by manufacturer's representative under this paragraph shall be at least 1 eight-hour day at the Site.
3. Manufacturer's factory-trained representative shall adjust the system to final settings as specified in Article 3.5 of this Section.
4. Manufacturer's factory-trained representative shall test the system as specified in Paragraph 3.3.A of this Section. Representative shall operate and test the system in presence of ENGINEER and verify that equipment is in conformance with the Contract Documents. Services by manufacturer's representative under this paragraph shall be at least 1 eight-hour day at the Site.
5. Representative shall revisit the Site as often as necessary until all deficiencies are corrected, prior to readiness for final payment.
6. Provide services of manufacturer's factory-trained representatives to correct defective Work within 72 hours of notification by OWNER during the correction period specified in the General Conditions as may be amended by the Supplementary Conditions.
7. Replacement parts or equipment provided during the correction period shall be equal to or better than original.
8. Training: Provide services of qualified factory trained specialists from manufacturer to instruct OWNER's operations and maintenance personnel in recommended operation and maintenance of equipment.

3.4 ADJUSTING

A. Immediately prior to Substantial Completion, when testing is acceptably completed and low-voltage variable frequency drives are operating, manufacturer's representative shall return to the Site and make final adjustments as required to each variable frequency drive furnished under this Section.

+ + END OF SECTION + +

** THIS PAGE INTENTIONALLY LEFT BLANK **

SECTION 40 05 05

EXPOSED PIPING INSTALLATION

PART 1 - GENERAL

1.1 DESCRIPTION

A. Scope:
   1. CONTRACTOR shall provide all labor, materials, equipment and incidentals as shown, specified, and required to install and test all exposed piping, fittings, and specials. The Work includes the following:
      a. All types and sizes of exposed piping, except where exposed piping installations are specified under other Sections.
      b. Unless otherwise shown or specified, this Section includes all piping beginning at the outside face of structures or structure foundations and extending into the structure. Piping embedded in concrete within a structure or foundation shall be considered as exposed and is included herein. Piping that is permanently or intermittently submerged, or installed in sub-aqueous environments, is considered as exposed and is included in this Section.
      c. Work on or affecting existing exposed piping.
      d. Installation of all jointing and gasket materials, specials, flexible couplings, mechanical couplings, harnessed and flanged adapters, sleeves, tie rods, and all Work required for a complete exposed piping installation.
      e. Supports, restraints, and other anchors.
      f. Field quality control, including testing.
      g. Cleaning.
      h. Incorporation of valves, meters, and special items shown or specified into the piping systems per the Contract Documents and as required

B. Coordination:
   1. Review installation procedures under this and other Sections and coordinate installation of items that must be installed with or before exposed piping Work.
   2. Coordinate with appropriate piping Sections of Division 40, Mechanical.

C. Related Sections:
   1. Section 09 91 00, Painting.
   2. Section 40 05 07, Pipe Hangers and Supports.
   3. Section 40 05 06, Couplings, Adapters, and Specials for Process Piping.
   4. Section 40 05 53, Process Valves.
   5. Section 40 05 86, Air Valves Wastewater Service.

1.2 REFERENCES

A. Standards referenced in this Section are:
   1. ANSI B16.1, Cast Iron Pipe Flanges and Flanged Fittings
   2. ASME Boiler and Pressure Vessel Code.
   3. ASME B31.3, Process Piping.
   4. American Society for Non-Destructive Testing (ASNT), ASNT-TC-1A, Recommended Practice, Personnel Qualification, and Certification in Non-destructive Testing.
   5. ASTM A380, Standard Practice for Cleaning, Descaling, and Passivation of Stainless Steel Parts, Equipment, and Systems
   6. ASTM B32, Specification for Solder Metal.
   7. ASTM D4161, Standard Specification for Fiberglass (Glass-Fiber-Reinforced Thermosetting-Resin) Pipe Joints Using Flexible Elastomeric Seals
   8. ASTM D4174, Standard Practice for Cleaning, Flushing, and Purification of Petroleum Fluid Hydraulic Systems
   9. ASTM F2164, Standard Practice for Field Leak Testing of Polyethylene (PE) Pressure Piping Systems Using Hydrostatic Pressure
   10. AWS D1.1/D1.1M, Structural Welding Code-Steel.
   11. ANSI/AWWA C111, Rubber-Gasket Joints for Ductile-Iron Pressure Pipe and Fittings.
   12. ANSI/AWWA C206, Field Welding of Steel Water Pipe.
   13. ANSI/AWWA C600, Installation of Ductile Iron Water Mains and Their Appurtenances.
   14. ANSI/AWWA C606, Grooved and Shouldered Joints.
   15. ANSI/AWWA C651, Disinfecting Water Mains.
   16. AWWA M9, Concrete Pressure Pipe.
   17. AWWA M11, Steel Pipe - A Guide for Design and Installation.
   18. AWWA M23, PVC Piping - Design and Installation.
   19. AWWA M41, Ductile-Iron Pipe and Fittings.
   20. AWWA M45, Fiberglass Pipe Design.
   21. AWWA M55, PE Pipe - Design and Installation.
   22. SAE J1227, Method for Assessing the Cleanliness Level of New Hydraulic Fluid.

1.3 QUALITY ASSURANCE

A. Regulatory Requirements:
   1. Comply with requirements and recommendations of authorities having jurisdiction over the Work, including:

1.4 SUBMITTALS

A. Action Submittals: Submit the following:
   1. Shop Drawings:
      a. Detailed drawings in plan and, as applicable, section.

b. Details of piping, valves, supports, accessories, specials, joints, harnessing, and main anchor supports, and connections to existing piping, structures, equipment, and appurtenances.

2. Testing Plans, Procedures, and Testing Limitations
   a. Submit description of proposed testing methods, procedures, and apparatus, and obtain ENGINEER's approval prior to testing.

B. Informational Submittals: Submit the following:
   1. Certificates:
      a. Submit a certificate, signed by manufacturer of each product, certifying that product complies with applicable referenced standards.
   2. Source Quality Control Submittals:
      a. Submit copies of testing report for each test.
   3. Site Quality Control Reports:
      a. Submit copies of testing report for each test.

C. Closeout Submittals: Submit the following:
   1. Record Documentation:
      a. Maintain accurate and up-to-date record documents showing field and Shop Drawing modifications. Record documents for exposed piping Work shall show actual location of all piping and appurtenances on a copy of the Drawings, unless otherwise approved by ENGINEER.
      b. Record documents shall show piping with elevations referenced to the project datum and dimensions from permanent structures. For straight runs of pipe provide offset dimensions as required to document pipe location.
      c. Include section drawings with exposed piping record documents when the Contract Documents include section Drawings.
      d. Conform to Section 01 78 39, Project Record Documents.

1.5 DELIVERY, STORAGE AND HANDLING

A. Delivery:
   1. Deliver products to Site to ensure uninterrupted progress of the Work.
   2. Upon delivery, inspect pipe and appurtenances for cracked, gouged, chipped, dented, and other damage and immediately remove damaged products from Site.
   3. Conform to requirements of Section 01 65 00, Product Delivery Requirements.

B. Storage:
   1. Store products for convenient access for inspection and identification. Store products off the ground using pallets, platforms, or other supports. Protect packaged products from corrosion and deterioration.
   2. Pipe and fittings other than thermoplastic materials may be stored outdoors without cover. Thermoplastic pipe and fittings stored outdoors shall be covered.

3. Conform to requirements of Section 01 66 00, Product Storage and Handling Requirements.

C. Handling:
1. Handle pipe, fittings, specials, and accessories carefully with approved handling devices. Do not drop or roll material of delivery vehicles. Do not otherwise drop, roll, or skid piping.
2. Avoid unnecessary handling of pipe.
3. Keep pipe interiors free of dirt and foreign matter.
4. Protect interior linings and exterior coatings of pipe and fittings from damage. Replace pipe and fittings with damaged lining regardless of cause of damage. Repair damaged coatings.
5. Conform to requirements of Section 01 65 00, Product Delivery Requirements.

PART 2 - PRODUCTS

2.1 MATERIALS

A. Piping materials are specified in the Exposed Piping Schedule at the end of this Section. Piping materials shall conform to Specification for each type of pipe and piping appurtenances in applicable sections of Division 40, Process Integration.

B. Markings and Identification:
1. Pipe Markings:
a. Clearly mark each piece of pipe or fitting with a designation conforming to that shown on the approved Shop Drawings.
b. Manufacturer shall cast or paint on each length of pipe and each fitting the pipe material, diameter, and pressure or thickness class.

C. Appurtenances: Provide products that comply with:
1. Section 40 05 06, Couplings, Adapters, and Specials for Process Piping.
2. Section 40 05 07, Pipe Hangers and Supports.

PART 3 - EXECUTION

3.1 INSPECTION

A. Examine conditions under which the Work is to be installed and notify ENGINEER in writing of conditions detrimental to the proper and timely completion of the Work. Do not proceed with the Work until unsatisfactory conditions have been corrected.

3.2 INSTALLATION

A. General:

1. Install piping as shown, specified and as recommended by the pipe and fittings manufacturer.
2. If there is a conflict between manufacturer's recommendations and the Contract Documents, request in writing instructions from ENGINEER before proceeding.
3. Provide pipe manufacturer’s installation specialist at Site as specified on this Section.

B. Temporary Blind Flanges, Plugs, Caps, and Bulkheads:
1. Temporarily plug installed pipe at the end of each day of work or other interruption of pipe installation to prevent entry of animals, liquids, and persons into pipe, and entrance or insertion of deleterious materials into pipe.
2. Install standard plugs in all bells at dead ends, tees, and crosses. Cap all spigot and plain ends.
3. Fully secure and block blind flanges, plugs, caps, and bulkheads installed for testing, designed to withstand specified test pressure.
4. Where plugging is required for phasing of Work or subsequent connection of piping, install watertight, permanent type blind flanges, plugs, caps, or bulkhead acceptable to ENGINEER.

C. Piping Installation:
1. Conform to manufacturer’s instructions and requirements of standards and manuals listed in this Section, as applicable:
   a. Ductile Iron Pipe: ANSI/AWWA C600, AWWA M41.
   b. Thermoplastic Pipe: AWWA M23
2. Install straight runs true to line and elevation.
3. Install vertical pipe truly plumb in all directions.
4. Install piping parallel or perpendicular to walls of structures. Piping at angles and 45 degree runs across corners of structures will not be accepted unless specifically shown on the Contract Documents or approved by the ENGINEER.
5. Install small diameter piping generally as shown when specific locations and elevations are not indicated. Locate such piping as required to avoid ducts, equipment, beams, and other obstructions.
6. Install piping to leave all corridors, walkways, work areas, and similar spaces unobstructed. Unless otherwise approved by ENGINEER provide a minimum headroom clearance under piping and pipe supports of 7.5 feet. Clearances beneath piping shall be measured from the outermost edge of piping, flanges or other type of joint that extends beyond the nominal outside diameter of piping.
7. Protect and keep clean interiors, fittings, and valves of pipe that will convey potable water, chemicals, and other pipe designated by ENGINEER.
8. Cutting: Cut pipe from measurements verified at Site. Field cut pipe, where required, with a machine specially designed for cutting type of pipe being installed. Make cuts carefully without damage to pipe, coating, or lining, and with a smooth end at right angles to axis of pipe. Cut ends of push-on joint type pipe shall be tapered and sharp edges filed off smooth. Do not flame-cut pipe.

9. Additional General Requirements for Thermoplastic Piping:
    a. Utilize wide band supports as recommended by pipe manufacturer and approved by ENGINEER to minimize localized stresses.
    b. Provide piping passing through walls with a sleeve of wearing material to prevent abrasion damage to piping.
    c. Provide anchored supports at elbows, valves, bends in piping, and at connections to equipment and tanks.
    d. Spacing of supports shall be in accordance with the manufacturer's published recommendations at maximum design operating temperature of pipe.
    e. Provide U-clamps with wide band circumferential contact.
    f. Provide guides on long runs of piping to maintain alignment and reduce chance of elastic failure of pipe. Space guides as recommended by pipe manufacturer.
    g. Provide anchored supports to restrain joints that allow expansion. Minimize use of bellows style joints. Where required and approved by the ENGINEER provide bellows style joints with low axial force to take up pipe expansion. Flexible connectors may be used to absorb thermal movement when approved in writing by ENGINEER.

D. Jointing Pipe:
1. General:
    a. Make joints in accordance with pipe manufacturer’s recommendations and Contract Documents.
    b. Cut piping accurately and squarely and install without forcing or springing.
    c. Ream out pipes and tubing to full inside diameter after cutting. Remove all sharp edges on end cuts.
    d. Remove all cuttings and foreign matter from inside of pipe and tubing before installation. Thoroughly clean all pipe, fittings, valves, specials, and accessories before installing.
2. Ductile Iron Flanged Joints:
    a. Assemble flanged joints using ring-type gaskets, with thickness as recommended by pipe manufacturer but not less than 1/8-inch thick, for raised-face flanges. Use full-face gaskets for flat-face flanges, unless otherwise approved by ENGINEER or recommended by pipe manufacturer. Gaskets shall be suitable for the service intended in accordance with the manufacturer's ratings and instructions. Gaskets shall be properly centered.
    b. Tighten bolts in a sequence that provides equal distribution of bolt loads.
    c. Length of bolts shall be uniform. Bolts shall not project beyond the nut more than 1/4-inch or fall short of the nut when fully taken up. Machine-cut ends of bolts to be neatly rounded. Do not use washers.
    d. Prior to assembly of flanged joints, lubricate bolt threads and gasket faces.
    e. Alternately tighten bolts 180 degrees apart to compress the gasket evenly.

f. After assembly, coat all bolts and nuts, except stainless steel bolts and nuts, with same coating specified in Section 09 91 00, Painting, for material of pipe and fittings being joined.

3. Thermoplastic Pipe Joints:
   a. Solvent Cement Welded Joints:
      1) Bevel pipe ends and remove all burrs before making joint. Clean pipe and fittings thoroughly. Do not make solvent cement joints if temperature is below 40 degrees F. Do not make solvent cement welded joints in wet conditions.
      2) Use solvent cement supplied or recommended by pipe manufacturer.
      3) Apply joint primer and solvent cement and assemble joints in accordance with recommendations and instructions of manufacturer of joint materials and pipe manufacturer.
      4) Implement appropriate safety precautions when using joint primers and solvent cements. Allow air to circulate freely through pipelines to allow solvent vapors to escape. Slowly admit fluid when flushing or filling pipelines to prevent compression of gases within pipes.
   b. Threaded Joints:
      1) Cut pipe square and smooth and remove burrs or raised edges with a knife or file.
      2) Hold pipe firmly in a pipe vise. Protect pipe at the point of grip by inserting a rubber sheet or other material between pipe and vise.
      3) Thread pipe in accordance with pipe manufacturer's recommendations. Brush threads clean of chips and ribbons.
      4) After threading pipe, starting with second full thread, and continuing over thread length, wrap 100-percent virgin TFE (Teflon) thread tape in direction of threads. Overlap each wrap by one-half width of tape.
      5) After application of the TFE thread tape, screw fitting or coupling onto the pipe end to be joined and tighten by hand. Using a strap wrench only, further tighten connection an additional one to two threads past hand tightness.
   c. Bell and Spigot Joints:
      1) Bevel pipe ends, remove all burrs, and provide a reference mark at correct distance from pipe end before making joint.
      2) Clean spigot end and bell thoroughly before making the joint. Insert O-ring gasket while ensuring that gasket is properly oriented. Lubricate spigot with manufacturer’s recommended lubricant. Do not lubricate bell and O-ring. Insert spigot end of pipe carefully into bell until reference mark on spigot is flush with bell.
4. Mechanical Coupling Joints:
   a. Mechanical couplings include: sleeve-type flexible couplings, ANSI/AWWA C606 grooved or shouldered end couplings, plasticized PVC couplings, and other mechanical couplings used.
   b. Prior to installing and assembling mechanical couplings, thoroughly clean joint ends with a wire brush to remove foreign matter.
   c. For mechanical couplings that incorporate gaskets, after cleaning apply lubricant to rubber gasket or inside of coupling housing and to joint ends.

After lubrication, install gasket around joint end of previously installed piece and mate joint end of subsequent piece to installed piece. Position gasket and place coupling housing around gasket and over grooved or shouldered joint ends. Insert bolts and install nuts tightly by hand. Tighten bolts uniformly to produce an equal pressure on all parts of housing. When housing clamps meet metal to metal, joint is complete and further tightening is not required.

d. For plasticized PVC couplings, loosen the stainless steel clamping bands and remove the clamps from the coupling. Slide the coupling over the plain ends of the pipes to be joined without using lubricants. Place clamps over each end of coupling at grooved section and tighten with a torque wrench to torque recommended by manufacturer.

E. Installing Valves and Accessories:
   1. Provide supports for large valves, flow meters, and other heavy items as shown or required to prevent strain on adjoining piping.
   2. Position flow measuring devices in pipelines so that they have the amount of straight upstream and downstream runs recommended by the flow measuring device manufacturer, unless specific location dimensions are shown.
   3. Position swing check valves and butterfly valves so that they do not conflict with upstream and downstream elements of the piping system.

F. Unions:
   1. Install dielectric unions as specified in Section 40 05 06, Couplings, Adapters, and Specials for Process Piping**,** where dissimilar metals are connected, except for bronze or brass valves in ferrous piping.
   2. Provide a union downstream of each valve with screwed connections.
   3. Provide screwed or flanged unions at each piece of equipment, where shown, and where necessary to install or dismantle piping.

G. Transitions from One Type of Pipe to Another:
   1. Provide all necessary adapters, specials, and connection pieces required when connecting different types and sizes of pipe or connecting pipe made by different manufacturers.

H. Closures:
   1. Provide closure pieces, such as blind flanges and caps, shown or required to complete the Work.

3.3 THRUST RESTRAINT

A. Provide thrust restraint on all pressure piping systems and where otherwise shown or specified.

B. Thrust restraints shall be designed for axial thrust exerted by test pressure specified in the Exposed Piping Schedule at end of this Section.

C. Restrained Pipe Joints:
   1. Pipe joints shall be restrained by means suitable for the type of pipe being installed.
      a. Ductile Iron, Push-on Joints and Mechanical Joints: Restrain with a proprietary restrained joint system as specified in Section 40 05 19. Ductile iron pipe, lugs, and tie rods, or other joint restraint systems approved by ENGINEER. Restrain ductile iron pipe connected by flexible couplings or flanged coupling adapters by harnessing across the coupling or adapter using tie rods or extended bolts connecting between flanges.

3.4 WORK AFFECTING EXISTING PIPING

A. Location of Existing Piping:
   1. Locations of existing piping shown on Drawings is approximate.
   2. Determine the true location of existing piping to which connections are to be made, crossed, and that could be disturbed, and determine location of other facilities that could be affected by the Work.

B. Taking Existing Pipelines Out of Service:
   1. Conform to Section 01 14 16, Coordination with Owner's Operations.

C. Work on Existing Pipelines:
   1. Cut or tap pipes as shown or required with machines and tools specifically designed for cutting or tapping pipelines.
   2. Install temporary plugs to prevent entry of mud, dirt, water, and debris into pipe.
   3. Provide necessary adapters, sleeves, fittings, pipe, and appurtenances required to complete the Work.
   4. Conform to applicable requirements of Section 01 14 16, Coordination with Owner's Operations and Section 01 73 24, Connections to Existing Facilities.

3.5 PAINTING

A. Field painting shall conform to Section 09 91 00, Painting.

3.6 FIELD QUALITY CONTROL

A. Testing, General:
   1. Test all piping, except as exempted in the Exposed Piping Schedule.
   2. Notification:
      a. Notify ENGINEER at least 48 hours prior to testing.
      b. When authorities having jurisdiction are to witness tests, notify ENGINEER and authorities having jurisdiction in writing at least 48 hours in advance of testing.
   3. Conduct all tests in presence of ENGINEER.
   4. Remove or protect pipeline-mounted devices that could be damaged by testing.

5. Provide all apparatus and services required for testing, including:
    a. Test pumps, compressors, hoses, calibrated gages, meters, test containers, valves, fittings, and temporary pumping systems required to maintain OWNER's operations.
    b. Temporary bulkheads, bracing, blocking, and thrust restraints.
6. Provide air if an air test is required, power if pumping is required, and gases if gases are required.
7. Unless otherwise specified, OWNER will provide fluid required for hydrostatic testing. CONTRACTOR shall provide means to convey fluid for hydrostatic testing into the pipe being tested. CONTRACTOR shall provide fluid for other types of testing required.
8. Repair observed leaks and repair pipe that fails to meet acceptance criteria. Retest after repair.
9. Unless otherwise specified, testing shall include existing piping systems that connect with new piping system. Test existing pipe to nearest valve. Piping not installed by CONTRACTOR and that fails the test shall be repaired upon authorization of ENGINEER or OWNER. Repair of existing piping will be paid as extra work unless otherwise specified.

B. Test Schedule:
1. Refer to the Exposed Piping Schedule for type of test required and required test pressure.
2. Unless otherwise specified, the required test pressures are at lowest elevation of pipeline segment being tested.
3. For piping not listed in Exposed Piping Schedule:
    a. Hydrostatically test pipe that will convey liquid at a pressure greater than five psig. Provide process air pipe test for pipe that will convey air or gas under pressure or vacuum, except chlorine gas, which requires a separate test.
4. Test Pressure:
    a. Use test pressures listed in Exposed Piping Schedule.
    b. If test pressure is not listed in Exposed Piping Schedule, or if a test is required for piping not listed in the Exposed Piping Schedule, test pressure will be determined by the ENGINEER based on the maximum anticipated sustained operating pressure and the methods described in the applicable ANSI/AWWA manual or standard that applies to the piping system.

C. Hydrostatic Testing:
1. Preparation for Testing:
    a. For other piping follow procedures described in AWWA Manual M9. A wetting period is not required for pipe that is not cement mortar-lined.
    b. Prior to testing, ensure that adequate thrust protection is in place and all joints are properly installed.

2. Test Procedure:
   a. Fill pipeline slowly to minimize air entrapment and surge pressures. Fill rate shall not exceed one foot of pipe length per second in the pipe being tested.
   b. Expel air from pipe as required. Obtain approval of ENGINEER prior to tapping pipe for expelling air.
   c. Examine joints and valves and make repairs to eliminate visible leakage.
   d. After specified wetting period, add fluid as required to pressurize line to required test pressure. Maintain test pressure for a stabilization period of ten minutes before beginning test.
   e. Timed test period shall not begin until after the pipe has been filled, exposed to the required wetting period, air has been expelled, and pressure stabilized.
   f. Timed Test Period: After the stabilization period, maintain test pressure for at least two hours. During timed testing period, add fluid as required to maintain pressure within five psig of required test pressure. The test pressure shall then remain steady for one hour, indicating no leakage.
   g. Pump from a test container to maintain test pressure. Measure volume of fluid pumped from test container and record on test report. Record pressure at test pump at fifteen minute intervals for duration of test.
3. Allowable Leakage Rates: Leakage is defined as the quantity of fluid supplied to pipe segment being tested to maintain pressure within five psi of the test pressure during timed test period. Allowable leakage rates for piping are:
   a. No Leakage: Pipe with flanged, welded, fused, threaded, soldered, or brazed joints.

3.7 CLEANING

A. Cleaning, General: Clean pipe systems as follows:
   1. Thoroughly clean all piping, including flushing with water, dry air, or inert gas as required, in a manner approved by ENGINEER, prior to placing in service.

3.8 EXPOSED PIPING SCHEDULE

A. The schedules listed below, following the “End of Section” designation, are a part of this Specification section.
   1. Table 40 05 05-A, Exposed Piping Schedule.

+ + END OF SECTION + +

TABLE
40 05 05-A, EXPOSED PIPING SCHEDULE

Service	Diameter (inch)	Material	Interior Lining	Exterior Coating	Pressure Class/ Thickness	Joint	Test	Remarks
RAS and WAS Suction and Discharge	4 to 12	DI	CE	P	See Section 40 05 19	Flg	HYD (100)	N/A
RDT Washwater Booster Pump Suction and Discharge Piping	1-2	PVC	-	-	See Section 40 05 31	SW	HYD (150)	N/A
RDT Sludge Influent Piping	6	PVC	-	P	See Section 40 05 31	Flg	HYD (100)	N/A
RDT Gravity Filtrate Drain	8	PVC	-	P	See Section 40 05 31	SW	NR	N/A
RAS and WAS Air Release Valve Drain	1.5	PVC	-	P	See Section 40 05 31	SW	NR	N/A

The following abbreviations are used in the Exposed Piping Schedule.

A. Service Abbreviations

Service	Abbrev.
Return Activated Sludge	RAS
Rotary Drum Thickener	RDT
Waste Activate Sludge	WAS

B. Material Abbreviations

Material	Abbrev
Ductile Iron	DI
Polyvinyl Chloride	PVC
Stainless Steel	SS

C. Lining/Coating Abbreviations

Lining/Coating	Abbrev
Ceramic Epoxy Lined	CE
Painted	P

D. Joint Abbreviations

Joint Type	Abbrev
Flanged	Flg
Solvent Weld	SW

E. Test Abbreviations

Test	Abbrev
Hydrostatic Test (test pressure in psig)	HYD ( )
No Test Required	NR

** THIS PAGE INTENTIONALLY LEFT BLANK **

SECTION 40 05 06

COUPLINGS, ADAPTERS, AND SPECIALS FOR PROCESS PIPING

PART 1 - GENERAL

1.1 DESCRIPTION

A. Scope:
   1. CONTRACTOR shall provide all labor, materials, equipment, and incidentals as shown, specified, and required to furnish and install all couplings, adapters, and specials for process piping.

B. Coordination:
   1. Review installation procedures under this and other Sections and coordinate installation of items that must be installed with or before couplings, adapters, and specials for process piping Work.

C. Related Sections:
   1. Section 09 91 00, Painting.
   2. Section 40 05 05, Exposed Piping Installation.

1.2 REFERENCES

A. Standards referenced in this Section are:
   1. ANSI B16.1, Cast-Iron Pipe Flanges and Flanged Fittings.
   2. ANSI B16.39, Malleable Iron Threaded Pipe Unions.
   3. ASME B31, Standards of Pressure Piping.
   4. ASTM A53/A53M, Specification for Pipe, Steel, Black and Hot-dipped, Zinc-Coated, Welded and Seamless.
   5. ASTM A105/A105M, Specification for Carbon Steel Forgings and Piping Applications.
   6. ASTM B169/B169M Specification for Aluminum Bronze Sheet, Strip, and Rolled Bar.
   7. ASTM B650, Specification for Electro-Deposited Engineering Chromium Coatings of Ferrous Substrates.
   8. ASTM F593, Specification for Stainless Steel Bolts, Hex Cap Screws, and Studs
   9. AWWA C606, Grooved and Shouldered Joints.

1.3 QUALITY ASSURANCE

A. Qualifications:
   1. Manufacturer shall have at least five years experience producing substantial similar products to those specified and shall be able to provide documentation of at least five installations in satisfactory operation for at least five years each.

B. Component Supply and Compatibility:
   1. Obtain each type of coupling, adapter, and special for process piping product included in this Section, regardless of component manufacturer, from a single couplings, adapters, and specials manufacturer.
   2. Supplier shall prepare, or review, and approve all submittals for components furnished under this Section.
   3. Components shall be suitable for specified service conditions and be integrated into overall assembly by the Supplier.

1.4 SUBMITTALS

A. Action Submittals: Submit the following:
   1. Product Data:
      a. Submit product data on each type of coupling, expansion joint, and other piping specialties and accessories, including gaskets, hardware, and appurtenances sufficient to demonstrate compliance with the Contract Documents.

B. Informational Submittals: Submit the following:
   1. Certificates:
      a. When requested by ENGINEER submit certificate attesting to compliance with standards referenced in this Section, signed by manufacturer.
   2. Manufacturer's Instructions:
      a. Provide instructions for handling, storing, installing, and adjusting of products.
   3. Source Quality Control:
      a. When requested by ENGINEER, submit results of source quality control tests.
   4. Qualifications Statements:
      a. Submit qualifications of manufacturer when requested by ENGINEER.

1.5 DELIVERY, STORAGE AND HANDLING

A. Refer to Section 40 05 05, Exposed Piping Installation.

PART 2 – PRODUCTS

2.1 COUPLINGS

A. Sleeve-type, Flexible Couplings:
   1. Pressure and Service: Same as connected piping.
   2. Products and Manufacturers: Provide products of one of the following:
      a. Style 253, as manufactured by Dresser Piping Specialties, part of Dresser, Inc.
      b. Style 441, by Smith Blair, Inc.

c. Or equal.

3. Material: Ductile Iron.
4. Gaskets: Suitable for specified service, as recommended by manufacturer.
5. Bolts and Nuts: Alloy steel, corrosion-resistant, primer-coated
6. Harnessing:
   a. Harness couplings to restrain pressure piping. For pipelines that will be under pressure, test pressures are specified in piping schedules in Section 40 05 05, Exposed Piping Installation.
   b. Tie adjacent flanges with bolts of corrosion-resistant alloy steel. Provide flange-mounted stretcher bolt plates to be designed by manufacturer, unless otherwise approved.
   c. On plain-end piping, for harnessing couplings, provide anchor restraint system such as Dresser Piping Specialties STAR Anchor Style 443, or equal.
   d. Conform to dimensions, size, spacing, and materials for lugs, bolts, washers, and nuts as recommended by manufacturer and approved by ENGINEER for pipe size, wall thickness, and test pressure required. Provide minimum 5/8-inch diameter bolts.
7. Remove pipe stop(s) if used, unless otherwise shown or specified.

B. Dismantling Joints:
1. Description: One end of adapter shall be flanged and opposite end shall have sleeve-type flexible coupling with a flanged outlet.
2. Products and Manufacturers: Provide one of the following:
   a. Romac Industries, Style DJ400 - Dismantling Joint.
   b. Or equal.
3. Pressure and Service: Same as connected piping.
4. Material: ASTM A36 Carbon Steel with AWWA C207 Class D flanges. 3" – 72" meet the dimensional requirements of ANSI Class 125 and 150 bolt circles
5. Gasket: EPDM.
6. Bolts and Nuts: Provide stainless steel bolts complete with washers complying with ASTM F593, AISI Type 316 and nitrided stainless nuts.
7. Harnessing:
   a. Harness couplings to restrain pressure piping. For pressure pipelines, test pressures are included in piping schedules in Section 40 05 05, Exposed Piping Installation.
   b. Harnessing shall conform to details shown. Provide external bolting and other hardware of Type 316 stainless steel, including tie bolts, bolt plates, lugs, nuts, and washers.

C. Flanged Coupling Adapters:
1. Description: One end of adapter shall be flanged and opposite end shall have sleeve-type flexible coupling.
2. Products and Manufacturers: Provide one of the following:
   a. Style 227, as manufactured by Dresser Piping Specialties, part of Dresser, Inc.
   b. Style 912, by Smith Blair, Inc.

c. Or equal.

3. Pressure and Service: Same as connected piping.
4. Material: Ductile iron.
5. Gasket: Recommended by the manufacturer.
6. Bolts and Nuts: Alloy steel, corrosion-resistant, primer-coated.
7. Harnessing:
   a. Harness adapters to restrain pressure piping. For pressure pipelines, test pressures are included in piping schedules in Section 40 05 05, Exposed Piping Installation.
   b. For flanged adapters 12-inch diameter and smaller, provide 1/2-inch diameter (minimum) Type 316 stainless steel anchor studs installed in pressure-tight anchor boss. Provide number of studs required to restrain test pressure and service conditions. Harness shall be as designed and recommended by flanged adapter manufacturer. Provide the following minimum anchor studs unless otherwise approved by ENGINEER. For flanged adapters on pump discharge outlets, provide anchor studs in accordance with Hydraulic Institute Standards for allowance nozzle loads.
      1) Six-inch Diameter and Smaller: Two
      2) Eight-inch Diameter and Smaller: Four
      3) Ten-inch Diameter and Smaller: Six
      4) Twelve-inch Diameter and Smaller: Eight
   c. For adapters larger than 12-inch diameter, provide split-ring harness clamps with minimum of four corrosion-resistant alloy steel bolts. For buried or submerged applications, provide external bolting and other hardware of Type 316 stainless steel, including tie bolts, bolt plates, lugs, nuts, and washers. Harness assembly shall be as designed and recommended by flanged adapter manufacturer. Dimensions, sizes, spacing and materials shall be suitable for service and conditions encountered and shall be approved by ENGINEER.

D. Restrained Flanged Coupling Adapters:
1. Description: Wedge style restrained flanging system for adapting and restraining plain end pipe to flanged pipe or fitting.
2. Products and Manufacturers: Provide one of the following:
   a. Series 2100, as manufactured by EBAA.
   c. Or equal.
3. Pressure and Service: Same as connected piping.
4. Material: Ductile iron.
5. Gasket: Recommended by the manufacturer.
6. Bolts and Nuts: Alloy steel, corrosion-resistant, primer-coated.

2.2 PAINTING

A. Shop Painting:

1. Clean and prime-coat ferrous metal surfaces of products in the manufacturer's shop in accordance with Section 09 91 00, Painting, unless otherwise specified in this Section
2. Coat machined, polished and non-ferrous surfaces bearing surfaces and similar unpainted surfaces with corrosion prevention compound that shall be maintained during storage and until products are placed into operation.

B. Field painting shall conform to Section 09 91 00, Painting.

PART 3 - EXECUTION

3.1 INSPECTION

A. Inspect materials for defects in material and workmanship. Verify compatibility of products with pipe, fittings, valves, and appurtenances.

3.2 INSTALLATION

A. Installation:
1. Install piping specialties in accordance with the Contract Documents and manufacturer's instructions.
2. For exposed installations, refer to Section 40 05 05, Exposed Piping Installation.

B. Adjust expansion joints as required to ensure that expansion joints will be fully extended when ambient temperature is at minimum operating temperature, and fully compressed at maximum operating temperature for the system in which expansion joints are installed.

+ + END OF SECTION + +

** THIS PAGE INTENTIONALLY LEFT BLANK **

SECTION 40 05 07

PIPE HANGERS AND SUPPORTS

PART 1 - GENERAL

1.1 DESCRIPTION

A. Scope:
   1. CONTRACTOR shall provide all labor, materials, equipment, and incidentals as shown, specified and required to design, furnish, and install all hangers, supports and appurtenances necessary to complete the Work.

B. Coordination:
   1. Review installation procedures under other Sections and coordinate the installation of items that must be installed with the pipe hangers and supports Work.

C. Related Sections:
   1. Section 03 30 00, Cast-In-Place Concrete.
   2. Section 03 60 00, Grouting.
   3. Section 05 05 33, Anchor Systems.
   4. Section 05 50 13, Miscellaneous Metal Fabrications.
   5. Section 09 91 00, Painting.

1.2 REFERENCES

A. Standards referenced in this Section are listed below:
   1. American Society for Testing and Materials, (ASTM).
      a. ASTM A 575, Specification for Steel Bars Carbon, Merchant Quality, M-Grades.
      b. ASTM E 84, Test Method for Surface Burning Characteristics of Building Materials.
   2. Federal Specification, (FS).
      a. FS A-A-1192, Hangers, Pipe.
   3. Manufacturers Standardization Society of the Valve and Fittings Industry, (MSS).
      a. MSS SP 58, Pipe Hangers and Supports-Materials, Design and Manufacture.
      b. MSS SP 69, Pipe Hangers and Supports - Selection and Application.
   4. Underwriters' Laboratories, Inc., (UL).
      a. UL 203, Pipe Hanger Equipment for Fire Protection Service.

1.3 QUALITY ASSURANCE

A. Each type of pipe hanger or support shall be the product of one manufacturer.

B. Component Supply and Compatibility:
   1. Obtain all equipment included in this Section, regardless of the component manufacturer, from a single pipe hanger and supports manufacturer.
   2. The pipe hangers and supports equipment manufacturer to review and approve or to prepare all Shop Drawings and other submittals for all components furnished under this Section.
   3. All components shall be specifically constructed for the specified service conditions and shall be integrated into the overall assembly by the pipe hangers and supports equipment manufacturer.

1.4 SUBMITTALS

A. Action Submittals: Submit the following:
   1. Shop Drawings:
      a. Detailed drawings showing all hangers and supports for each piping system specified. Shop Drawings shall show location, installation, material, loads or forces, and deflection of all hangers and supports.
      b. Each pipe system shall be analyzed for all loads and forces on the hangers and supports. Provide confirmation that hanger systems comply with support requirements and codes.
      c. Submit and coordinate these with Shop Drawings required for all piping systems.
   2. Product Data:
      a. Submit manufacturers' catalogs, literature, and engineering data on all hangers and supports. Load ratings, materials and installation shall be consistent with the recommendations of the MSS SP 58, MSS SP 69 and Federal Specification A-A-1192.

1.5 DELIVERY, STORAGE AND HANDLING

A. Packing, Shipping, Handling and Unloading:
   1. Deliver materials to the Site to ensure uninterrupted progress of the Work. Deliver anchor bolts and anchorage devices which are to be embedded in cast-in-place concrete in ample time to prevent delay of that Work.

B. Storage and Protection:
   1. Store materials to permit easy access for inspection and identification. Keep all material off the ground, using pallets, platforms, or other supports. Protect steel members and packaged materials from corrosion and deterioration.
   2. Store materials in covered storage off the ground and prevent condensation.

C. Acceptance at Site:
   1. All boxes, crates and packages shall be inspected by CONTRACTOR upon delivery to the Site. CONTRACTOR shall notify ENGINEER, in writing, if any loss or damage exists to equipment or components. Replace loss and repair damage to new condition in accordance with manufacturer's instructions.

PART 2 - PRODUCTS

2.1 GENERAL

A. Hangers and supports shall meet with the following requirements:
   1. Standard and fabricated hangers and supports shall be furnished complete with necessary inserts, bolts, nuts, rods, washers, and other accessories.
   2. Generally, run piping in groups where practicable and parallel to building wall. Provide minimum clearance of 1-inch between pipe and other work.
   3. Install hangers or supports at all locations where pipe changes direction.
   4. All hangers and supports shall be capable of adjustment after placement of piping.
   5. Different types of hangers or supports shall be kept to a minimum.
   6. All suspended or supported ductile iron pipe shall have a hanger or support adjacent to each hub.
   7. Support vertical piping at each floor and between floors by stays or braces to prevent rattling and vibration.
   8. Hanger rods shall be straight and vertical. Chain, wire, strap or perforated bar hangers shall not be used. Hangers shall not be suspended from piping.
   9. Maximum support spacing unless otherwise shown or approved for standard weight steel pipe shall be as follows:

Pipe Size (inches)	Maximum Pipe Span [1] (feet)			
	Steel	Copper	Plastic [2]	Cast/Ductile Iron [4]
3/8 to 3/4	5	6	Cont. [3]	-
1	6	6	5	-
1-1/4	6	6	5	-
1-1/2	6	6	5	-
2	10	10	5	-
2-1/2	10	10	5	-
3	10	10	5	-
4	12	12	5	12 feet for pressure pipe
6	12	12	5	
8	12	12	5	
10	12	-	5	
12	12	-	10	
14	12	-	-	
16	12	-	-	
18	12	-	-	
20	12	-	-	10 feet for soil pipe
24	12	-	-	

[1]Pipe shall not have pockets formed in the span due to sagging of the pipe between supports caused by the weight of the pipe, medium in the pipe, insulation, valves and fittings.

[2]Span shown is for Schedule 80 CPVC pipe at 100°F. Spans for other plastics, other CPVC pipe Schedules and pipes at higher temperatures shall be shortened in accordance with the pipe manufacturer's recommendations.

[3]Continuous means pipe shall be in unistrut or similar channel.

[4] Pipe hanger and support selection shall be as shown and in this Section.

10. Maximum support spacing, unless otherwise shown for plastic pipe at ambient temperature, shall be one-half of the values specified for steel pipe.
11. Plastic pipe at temperature greater than 130ºF shall be continuously supported in a metal cradle or tray.
12. Where proper hanger or support spacing does not correspond with joist or rib spacing, structural steel channels may be attached to joists or ribs and pipes suspended there from.
13. Prevent contact between dissimilar metals when supporting copper tubing, by use of copper plated, rubber or vinyl coated, or stainless steel hangers or supports.
14. Isolate thin walled stainless steel piping from carbon steel by use of plastic coated hangers or supports or by taping at points of contact with PVC or vinyl.
15. Supports and hangers shall be of a material that is compatible with the fluid being conveyed in such pipe being supported.
16. Anchors for pipe support systems shall be compatible or protected by a coating system which is compatible with the fluid being conveyed in such pipe being supported.

B. Expansion compensation shall be designed for individual exposed piping systems with the following Design Criteria:
   1. $\Delta L = L \times \Delta T \times \alpha$
      a. Where ΔL = pipe length change (inches).
      b. L = pipe length between anchors (inches).
      c. ΔT = 100 (F).
      d. α = coefficient of thermal expansion (inches/inches/F).
   2. Expansion compensation shall be designed as an integral part of the piping hanger, support and anchorage system.
   3. Expansion compensation shall be achieved via expansion joints specified in Section 40 05 06, Couplers, Adapters, and Specials for Process Piping.

2.2 HANGERS AND SUPPORTS

A. Hangers and supports where shown shall be in accordance with detail drawings. Hangers and supports not shown shall be in accordance with MSS SP 58.

B. Products and Manufacturers: Provide one of the following:

   Manufacturers
   1. Anvil International, Inc.
   2. Elcen.
   3. B-Line.

4. Unistrut Corporation.
5. Or equal.

C. Pipe supports and fasteners shall be type 316 stainless steel.

2.3 ACCESSORIES

A. Hanger rods shall be made from ASTM A 575, with square head nut on top and running thread on bottom end.

B. Concrete Inserts:
1. Concrete inserts shall be MSS SP 58 malleable Type 18, 316 stainless steel.
2. Manufacturers: Provide products of one of the following:
   a. Unistrut Corporation, Wayne, Michigan.
   b. Elcan Metal Products, Company, Franklin Park, Illinois.
   c. B-Line.
   d. Anvil International, Inc.
   e. Or equal.

C. Steel Beam Clamps:
1. Steel beam clamps shall be type 316 stainless steel and conform to MSS SP 58.

D. Brackets:
1. Brackets for wall mounting shall be type 316 stainless steel and conform to MSS SP 58.

E. Fabricated Pipe Rack:
1. Pipes shall be supported and anchored to the fabricated pipe rack as shown. Clamps, rollers, and supports for piping shall conform to the general requirements of MSS SP 69.

2.4 PAINTING

A. Clean and prime ferrous metal surfaces in the shop in accordance with the requirements of Section 09 91 00, Painting.

B. Field painting shall conform to the requirements of Section 09 91 00, Painting.

PART 3 - EXECUTION

3.1 INSTALLATION

A. Locate hangers, supports, and accessories to support piping, valves, and at all concentrated loads.

B. Locate hangers, supports, and accessories within maximum span lengths specified to support continuous pipeline runs unaffected by concentrated loadings.

C. Locate hanger, supports to prevent vibration or swaying and to provide for expansion and contraction.
   1. Temperature differential specified in this Section.
   2. Support piping independently so that equipment is not stressed by piping weight or expansion.
   3. For Uninsulated Copper Pipe or Tubing: Clamps and supports, electroplated copper finish. Instrumentation tubing shall be supported in steel or aluminum troughs with covers. All tubing layout and connections shall be as approved by the manufacturer of the equipment.
   4. Uncoated Hangers, Rods and Supports: Dip in zinc chromate primer before installation.
   5. Maximum spacing for horizontal piping:
      a. Steel 1-Inch and Smaller: Seven feet.
      b. Steel 1-1/2-Inch and Larger: Ten feet.
      c. Brass or Copper 3-Inch and Smaller: Seven feet.
      d. Brass or Copper 4-Inch and Larger: Ten feet.
      e. Additional supports at:
         1) Change in direction.
         2) Branch piping and runouts over five feet.
         3) Concentrated loads due to valves, strainers or other similar items.
      f. Maximum support spacing for plastic pipe at ambient temperature shall be one-half the above values.
   6. Hanger types for horizontal piping, except as noted and shown:
      a. Forged steel adjustable clevis type, rod support for all services.
      b. Slide Bases:
         1) Pipe stand, brackets, trapeze or other equivalent structural support.
         2) For piping 2-inches or larger.
      c. For pipe and covering provide:
         1) Saddles for rollers or slide bases.
         2) Protective shields or saddles for all other types of supports.
      d. Threaded Steel Rods:
         1) Two inch vertical adjustment with two nuts each end for positioning and locking.
         2) Size hanger rods according to the schedule below, unless otherwise noted:

Nominal Pipe (Inches)	Rod Diameter (Inches)
2 and less	3/8
2-1/2 to 3-1/2	1/2
4	5/8
6	3/4
8 through 12	7/8
14 through 18	1
20 through 30	1-1/4

3) For Double Rod Hangers: One size smaller than above.
4) Connection to Structure for Piping to 2-Inches: Concrete inserts, or expansion shields in shear into sides of beams.
5) Connection to Structure for Piping 2-1/2-Inch or Larger: Concrete inserts, beam clamps or suitable bridging.

7. Vertical Piping:
   a. Base Support: Base elbow or welded equivalent.
      1) Bearing plate on structural support.
   b. Guides not to exceed:
      1) 25 feet for piping to 2-inches.
      2) 36 feet for piping 2-1/2-inches or larger.
   c. Top Support:
      1) Special hanger or saddle in horizontal connection.
      2) Provisions for expansion.
   d. Intermediate Supports: Steel pipe clamp at floor.
      1) Bolted and welded to pipe.
      2) Extension ends bearing on structural steel or bearing plates.
   e. For Multiple Pipes: Coordinate guides, bearing plates and accessory steel.

D. Install items to be embedded before concrete placement.

E. Fasten embedded items securely to prevent movement during concrete placement.

F. Install hangers and support units on piping systems in accordance with manufacturer's recommendations.

G. Adjust hangers and supports and place grout for concrete supports to bring pipelines to specified elevations.

H. Bring all pipe systems up to operating pressures and temperatures. Cycle systems to duplicate operating conditions. Correct all support malfunctions.

+ + END OF SECTION + +

** THIS PAGE INTENTIONALLY LEFT BLANK **

SECTION 40 05 19

DUCTILE IRON PROCESS PIPE

PART 1 – GENERAL

1.1 DESCRIPTION

A. Scope:
   1. CONTRACTOR shall provide all labor, materials, equipment, and incidentals as shown, specified, and required to furnish ductile iron pipe and fittings.
   2. Extent of piping is shown on the Drawings. Piping schedules in Section 40 05 05, Exposed Piping Installation, specify pipe service, diameter, material, lining, coating, pressure rating, joint type, and testing required.

B. Coordination:
   1. Review installation procedures under this and other Sections and coordinate installation of items to be installed with or before ductile iron pipe Work.

C. Related Sections:
   1. Section 09 91 00, Painting.
   2. Section 40 05 05, Exposed Piping Installation.

1.2 REFERENCES

A. Standards referenced in this Section are:
   1. ANSI B18.2.1, Square and Hex Bolts and Screws Inch Series.
   2. ANSI B18.2.2, Square and Hex Nuts. (Inch Series).
   3. ASTM A193, Alloy Steel and Stainless Steel Bolting Materials for High-Temperature Service.
   4. ASTM A194, Specification for Carbon Steel and Alloy Steel Nuts for Bolts for High-Pressure or High-Temperature Service, or Both.
   5. ASTM A307, Specification for Carbon Steel Bolts and Studs, 60,000 psi Tensile Strength.
   6. ASTM A354, Specification for Quenched and Tempered Alloy Steel Bolts, Studs and Other Externally Threaded Fasteners.
   7. ASTM A563, Specification for Carbon and Alloy Steel Nuts.
   8. ASTM B117, Practice for Operating Salt Spray (Fog) Apparatus.
   9. ASTM C283, Test Methods for Resistance of Porcelain Enameled Utensils to Boiling Acid.
   10. ASTM D714, Test Method for Evaluating Degree of Blistering of Paints.
   11. ASTM D792, Test Methods for Density and Specific Gravity (Relative Density) of Plastics by Displacement.
   12. ASTM D5162, Discontinuity (Holiday) Testing of Non-Conductive Protective Coating on Metallic Substrates.
   13. ASTM E96, Test Methods for Water Vapor Transmission of Materials.

14. ASTM G14, Test Method for Impact Resistance of Pipeline Coatings (Falling Weight Test).
15. ASTM G62, Test Methods for Holiday Detection in Pipeline Coatings.
16. ASTM G95, Test Methods for Cathodic Disbondment Test of Pipeline Coatings (Attached Cell Method).
17. ANSI/AWWA C104, Cement-Mortar Lining for Ductile Iron Pipe and Fittings for Water.
18. ANSI/AWWA C110, Ductile Iron and Gray Iron Fittings for Water.
19. ANSI/AWWA C111, Rubber-Gasket Joints for Ductile Iron Pressure Pipe and Fittings.
20. ANSI/AWWA C115, Flanged Ductile Iron Pipe with Ductile Iron or Gray Iron Threaded Flanges.
21. ANSI/AWWA C116, Protective Fusion-Bonded Epoxy Coatings for the Interior and Exterior Surfaces of Ductile Iron and Gray Iron Fittings for Water Service.
22. ANSI/AWWA C151, Ductile Iron Pipe, Centrifugally Cast, for Water.
23. ANSI/AWWA C153, Ductile Iron Compact Fittings, 3 inch through 24 inch and 54 inch through 64 inch for Water Service.
24. ANSI/AWWA C606, Grooved and Shouldered Type Joints.
25. European Standard (EN), EN 598: Ductile Iron Pipe, Fittings, Accessories and Their Joints for Sewerage Applications.
26. MSS-SP 60, Connecting Flange Joint Between Tapping Sleeves and Tapping Valves.
27. NACE RP0188, Discontinuity (Holiday) Testing of New Protective Coatings on Conductive Substrates.
28. NAPF 500-03, Surface Preparation Standard for Ductile Iron Pipe and Fittings Receiving Special External Coatings and/or Special Internal Linings.
29. NSF/ANSI 61, Drinking Water System Components - Health Effects.
30. SSPC PA 2, Measurement of Dry Coating Thickness with Magnetic Gages.
31. SSPC Painting Manual, Volume 1, Para. XIV.

1.3 QUALITY ASSURANCE

A. Qualifications:
   1. Manufacturer:
      a. Manufacturer shall have a minimum of five years successful experience producing ductile iron pipe and fittings and shall be able to show evidence of at least five installations in satisfactory operation in the United States that are similar applications to the specified service.
      b. Lining and coating products shall be manufactured by a firm with a minimum of five years successful experience in protecting pipelines exposed to the specified service conditions , and shall be able to show evidence of at least five installations in satisfactory operation in the United States that are similar applications to the specified service.
      c. When not applied by the manufacturer, lining and coating Subcontractor shall have a minimum of five years successful experience in the application of the specified linings and coatings for similar applications

for the specified service, and shall be able to show evidence of at least five installations in satisfactory operation in the United States.

B. Supply and Compatibility:
   1. Unless otherwise approved, obtain all pipe, fittings, and appurtenances included in this Section from a single ductile iron pipe manufacturer.
   2. Ductile iron pipe manufacturer shall review and approve or prepare all Shop Drawings and other submittals for pipe, fittings, and appurtenances furnished under this Section.
   3. Pipe, fittings, and appurtenances shall be suitable for the specified service and shall be integrated into overall piping system by ductile iron pipe manufacturer.
   4. Ductile iron pipe manufacturer shall be responsible for all products and all factory-applied linings and coatings, whether installed at pipe manufacturer's facility or at manufacturer's Supplier's facility.

1.4 SUBMITTALS

A. Action Submittals: Submit the following with Shop Drawings required under Section 40 05 05, Exposed Piping Installation:
   1. Shop Drawings:
      a. Detailed drawings and data for pipe, fittings, gaskets, appurtenances, linings, and coatings.
   2. Product Data:
      a. Surface preparation and application reports and procedures as required for lining and coating of pipe and fittings. Ductile iron pipe and fitting manufacturer and manufacturer and applicator of lining and coating, as specified, shall mutually determine recommended surface preparation and application methods, and provide written verification of mutually selected method in the submittals.
   3. Test Procedures: For linings and coatings in pipe and fittings.

B. Informational Submittals: Submit the following:
   1. Certificates:
      a. Submit certificate signed by manufacturer of each product that product conforms to applicable referenced standards and the Contract Documents.
      b. Submit certificate signed by applicator of the linings and coatings stating that product to be applied conforms to applicable referenced standards and that the applicator shall conform to the Contract Documents.
   2. Source Quality Control Submittals:
      a. Submit results of specified shop tests for pipe, fittings, linings, and coatings.

1.5 DELIVERY, STORAGE, AND HANDLING

A. Refer to Section 40 05 05, Exposed Piping Installation.

B. Handling of Pipe and Fittings Lined with Ceramic Epoxy, Fusion Bonded Epoxy, or Glass: Lifting devices shall not come into contact with lined surfaces. Use hooks, forks, chains, straps, and other lifting devices only on exterior of pipe and fittings. Pipe and fittings with damaged lining shall be replaced regardless of cause of damage.

C. Handling of Fittings Coated with Fusion Bonded Epoxy: Hooks, forks, chains, straps, and other lifting devices shall be rubber-coated and be used only on exterior of fittings in manner to avoid damaging coating. If coating becomes damaged, notify pipe and coating manufacturer to determine if repair of damaged area or re-coating is required. Perform repairs using recommended procedures and materials provided by manufacturer, as accepted by ENGINEER. Pipe and fittings requiring re-coating shall be removed from Site and returned to manufacturer's facility. Repaired or re-coated pipe and fittings shall comply with requirements of this Section.

PART 2 – PRODUCTS

2.1 MATERIALS

A. General:
   1. Piping systems shall be suitable for their intended use.
   2. Joints shall be as specified in Section 40 05 05, Exposed Piping Installation. If not specified, provide flanged joints for exposed piping. Provide couplings on pipe with plain or grooved ends where shown or where approved by ENGINEER.

B. Ductile Iron Pipe, Joints, and Fittings:
   1. Flanged Pipe: Fabricate in accordance with ANSI/AWWA C115.
      a. Pressure Rating: As specified in piping schedule in Section 40 05 05, Exposed Piping Installation. If not otherwise specified, use Special Thickness Class 53 for three-inch to 54-inch diameter pipe and Pressure Class 350 for 60-inch and 64-inch diameter pipe.
   2. Pipe Joints:
      a. Flanged Joints: Conform to ANSI/AWWA C110 and ANSI/AWWA C111 capable of meeting the pressure rating or special thickness class, and test pressure specified in piping schedule in Section 40 05 05, Exposed Piping Installation.
         1) Gaskets: Unless otherwise specified, gaskets shall be at least 1/8-inch thick, ring or full-face as required for the pipe, of synthetic rubber compound containing not less than 50 percent by volume nitrile or neoprene, and shall be free from factice, reclaimed rubber, and other deleterious substances. Gaskets shall be suitable for the service conditions specified, specifically designed for use with ductile iron pipe and fittings.
         2) Bolts: Comply with ANSI B18.2.1.
            a) Exposed: ASTM A307, Grade B.

3) Nuts: Comply with ANSI B18.2.2.
   a) Exposed: ASTM A563, Grade A, Heavy hex.

C. Lining, General:
   1. Typical Service Conditions:

Property	RAS/WAS
Fluid(s) Conveyed Through Pipe	Secondary Sludge
Solids content (%)	0.5-1.5
pH range	4 - 7
Temperature Range (degrees F)	60 – 100
Maximum Fluid Velocity (fps)	8
Lining Type	Ceramic Epoxy

   2. Surface Preparation:
      a. Initial Surface Inspection: Surface to be lined shall be inspected by pipe and fitting manufacturer and applicator, if applicator is other than pipe and fitting manufacturer. Inspecting parties shall inspect surface to be coated and mutually determine recommended surface preparation method.
      b. Surface Preparation: Prepare surface in accordance with recommended method.
      c. Finished Surface Inspection: Lining applicator shall inspect finished surface prior to application to determine acceptability. If surface is unacceptable, repeat surface preparation as necessary.

D. Ceramic Quartz-Filled, Amine-Cured Novalac Epoxy Lining:
   1. Where specified in piping schedules included with Section 40 05 05, Exposed Piping Installation, pipe and fittings shall be factory lined with a quartz-filled, amine-cured, novalac, epoxy containing at least twenty percent by volume of ceramic quartz pigment.
   2. Ceramic epoxy lining shall have a permeability rating of zero when tested according to Method A of ASTM E96, Procedure A, with a test duration of thirty days.
   3. Conduct the following tests on coupons from factory lined ductile iron pipe:
      a. ASTM B117 Salt Spray (scribed panel): Results to equal zero undercutting after two years.
      b. ASTM G95 Cathodic Disbondment 1.5 volts at 77 degrees F: Results to equal no more than 0.5 mm undercutting after thirty days.
      c. Immersion Testing rated using ASTM D714.
         1) Twenty Percent Sulfuric Acid: No effect after two years.
         2) Twenty-five Percent Sodium Hydroxide at 140 degrees F: No effect after two years.
         3) Distilled Water at 160 degrees F: No effect after two years.
         4) Tap Water at 120 degrees F (scribed panel): Zero undercutting after two years, with no effect.

4. Ceramic epoxy lining shall have abrasion resistance of no more than four mils loss after one million cycles, in accordance with ES EN 598, Section 7.8, Abrasion Resistance.
5. Within eight hours of surface preparation, interior of pipe and fittings shall receive 40 mils dry film thickness, utilizing method recommended by lining manufacturer that will comply with requirements of this Section. Number of coats applied shall be as recommended by lining manufacturer. Minimum substrate and ambient temperature for lining application shall be 40 degrees F.
6. Inspection and Certification:
   a. Check all ductile iron pipe and fitting linings for thickness using magnetic film thickness gage in accordance with method in SSPC PA 2 Film Thickness Rating.
   b. Test interior lining of pipe barrels and fittings for pinholes with non-destructive, 2,500-volt test. Defects found shall be repaired in accordance with lining manufacturer's recommendations prior to shipment from lining applicator's factory.
   c. Mark each pipe and fitting with date of application and its numerical sequence of application.
7. Products and Manufacturers: Provide one of the following:
   a. Protecto 401 Ceramic Epoxy.
   b. Or equal.

E. Couplings:
   1. Refer to Section 40 05 06, Couplings, Adapters, and Specials for Process Piping.

2.2 MARKING FOR IDENTIFICATION

A. In addition to identification markings specified in Section 40 05 05, Exposed Piping Installation, also stamp, mark, and identify flanged pipe with:
   1. Flange manufacturer's mark, size, and letters "DI" cast or stamped on the flanges.
   2. Fabricator's mark if other than flange manufacturer.
   3. Length and weight.

B. In addition to identification markings specified in Section 40 05 05, Exposed Piping Installation, also stamp, mark, and identify fittings with:
   1. Manufacturer's identification.
   2. Pressure rating.
   3. Nominal diameters of openings.
   4. Country where cast.
   5. Number of degrees or fraction of the circle on bends.
   6. Letters "DI" or "Ductile" cast on them.

2.3 EXTERIOR SURFACE PREPARATION AND COATINGS

A. General Coating Requirements:

1. Coating types are specified in piping schedules in Section 40 05 05, Exposed Piping Installation.

B. Exposed Pipe and Fittings:

1. Surface Preparation:

a. Initial Surface Inspection: Exposed piping to be field finish coated shall be supplied with factory prime coat, in lieu of asphaltic coating. Pipe and fitting manufacturer and coating applicator shall inspect surface to be coated and mutually determine recommended NAPF 500-03 surface preparation method, where applicable.

b. Surface Preparation: Prepare surface in accordance with recommended NAPF 500-03 method.

c. Finished Surface Inspection: Prepared surfaces shall be inspected by coating applicator prior to application to determine acceptability of finished surface. If surface is unacceptable, repeat surface preparation and re-application as necessary.

2. After recommended surface preparation, prime coat exterior ferrous metal surfaces of pipe and fittings in the shop in accordance with Section 09 91 00, Painting.

3. Field painting shall comply with Section 09 91 00, Painting.

PART 3 – EXECUTION

3.1 INSPECTION

A. Inspect piping to assure that piping is free from defects in material and workmanship. Verify compatibility of pipe, fittings, gaskets, linings, and coatings.

3.2 INSTALLATION AND FIELD QUALITY CONTROL

A. For exposed piping installation and testing, refer to Section 40 05 05, Exposed Piping Installation.

+ + END OF SECTION + +

** THIS PAGE INTENTIONALLY LEFT BLANK **

SECTION 40 05 31

THERMOPLASTIC PROCESS PIPE

PART 1 – GENERAL

1.1 DESCRIPTION

A. Scope:
   1. CONTRACTOR shall provide all labor, materials, equipment, and incidentals as shown, specified, and required to furnish and install thermoplastic piping and fittings.
   2. Extent of piping is shown and shall be in accordance with piping schedules in Section 40 05 05, Exposed Piping Installation.

B. Coordination:
   1. Review installation procedures under this and other Sections and coordinate installation of items to be installed with or before thermoplastic piping Work.

C. Related Sections:
   1. Section 40 05 05, Exposed Piping Installation.

1.2 REFERENCES

A. Standards referenced in this Section are:
   1. AASHTO, Standard Specifications for Highway Bridges.
   2. ASTM D1784, Specification for Rigid Poly (Vinyl Chloride) (PVC) Compounds and Chlorinated Poly (Vinyl Chloride) (CPVC) Compounds.
   3. ASTM D1785, Specification for Poly (Vinyl Chloride) (PVC) Plastic Pipe, Schedules 40, 80 and 120.
   4. ASTM D2464, Specification for Threaded Poly (Vinyl Chlorinated) (PVC) Plastic Pipe Fittings, Schedule 80.
   5. ASTM D2466, Specification for Poly (Vinyl Chloride) (PVC) Plastic Pipe Fittings, Schedule 40.
   6. ASTM D2467, Specification for Poly (Vinyl Chloride) (PVC) Plastic Pipe Fittings, Schedule 80.
   7. ASTM D2513, Specification for Thermoplastic Gas Pressure Pipe, Tubing, and Fittings.
   8. ASTM D2564, Specification for Solvent Cements for Poly (Vinyl Chloride) (PVC) Plastic Piping Systems.
   9. ASTM D2665, Specification for Poly (Vinyl Chloride) (PVC) Plastic Drain, Waste, and Vent Pipe and Fittings.
   10. ASTM D683, Specification for Socket-Type Polyethylene Fittings for Outside Diameter-Controlled Polyethylene Pipe and Tubing.
   11. ASTM D3034, Specification for Type PSM Poly (Vinyl Chloride) (PVC) Sewer Pipe and Fittings.

12. ASTM D3139, Specification for Joints for Plastic Pressure Pipes Using Flexible Elastomeric Seals.
13. ASTM D3212, Specification for Joints for Drain and Sewer Plastic Pipes Using Flexible Elastomeric Seals.
14. ASTM D3222, Unmodified Poly (Vinylidene Fluoride) (PVDF) Molding Extrusion and Coating Materials.
15. ASTM D3311, Specification for Drain, Waste and Vent (DWV) Plastic Fittings Patterns.
16. ASTM D3350, Specification for Polyethylene Plastic Pipe and Fittings Materials.
17. ASTM D4101, Specification for Polypropylene Injection and Extrusion Materials.
18. ASTM F437, Specification for Threaded Chlorinated Poly (Vinyl Chloride) (CPVC) Plastic Pipe Fittings, Schedule 80.
19. ASTM F438, Specification for Socket-Type Chlorinated Poly (Vinyl Chloride) (CPVC) Plastic Pipe Fittings, Schedule 40.
20. ASTM F439, Specification for Chlorinated Poly (Vinyl Chloride) (CPVC) Plastic Pipe Fittings, Schedule 80.
21. ASTM F441/F441M, Specification for Chlorinated Poly (Vinyl Chloride) (CPVC) Plastic Pipe, Schedules 40 and 80.
22. ASTM F442/F442M, Specification for Chlorinated Poly (Vinyl Chloride) (CPVC) Plastic Pipe (SDR-PR).
23. ASTM F477, Specification for Elastomeric Seals (Gaskets) for Joining Plastic Pipe.
24. ASTM F656, Specification for Primers for Use in Solvent Cement Joints of Poly (Vinyl Chloride) (PVC) Plastic Pipe and Fittings.
25. ASTM F1336, Specification for Poly (Vinyl Chloride) (PVC) Gasketed Sewer Fittings.
26. ASTM F1674, Standard Test Method for Joint Restraint Products for Use with PVC Pipe.
27. AWWA C900, Polyvinyl Chloride (PVC) Pressure Pipe and Fabricated Fittings, 4 In.-12 In. (100 mm-300 mm), for Water Transmission and Distribution
28. AWWA C907, Injection-Molded Polyvinyl Chloride (PVC) Pressure Fittings, 4 In. Through 12 In. (100 mm Through 300 mm).

1.3 QUALITY ASSURANCE

A. Qualifications:
   1. Manufacturer: Shall have a minimum of five years experience producing thermoplastic pipe and fittings substantively similar to the materials specified and shall be able to submit documentation of satisfactory service in at least five completed installations in operation for at least five years each.
   2. Installer:
      a. Engage a single pipe installer who shall be responsible for all thermoplastic pipe Work, and who shall employ only tradesmen with specific skills and experience in the type of Work required.

b. Installer shall have a minimum of five years experience installing thermoplastic pipe and fittings substantively similar to the materials specified and substantively similar to or larger than the scope of thermoplastic piping Work on the Project, and shall be able to submit documentation of satisfactory experience in at least five completed installations in operation for at least five years each.

B. Component Supply and Compatibility:
   1. Obtain all materials included in this Section, regardless of component Supplier, from a single thermoplastic pipe Supplier. All pipe of each material type shall be furnished by the same manufacturer.
   2. Thermoplastic pipe Supplier shall review and approve to prepare all Shop Drawings and other submittals for all materials furnished under this Section.
   3. Materials shall be suitable for specified service conditions and shall be integrated into overall assembly by thermoplastic pipe Supplier.

1.4 SUBMITTALS

A. Action Submittals: Submit the following:
   1. Shop Drawings:
      a. Submit piping layout Shop Drawings in accordance with Section 40 05 05, Exposed Piping Installation.
   2. Product Data:
      a. Submit product data on pipe, fittings, gaskets, hardware, and appurtenances sufficient to demonstrate compliance with the Contract Documents.

B. Informational Submittals: Submit the following:
   1. Certificates:
      a. Submit manufacturer's certificate of compliance standards referenced in this Section.
   2. Source Quality Control Submittals:
      a. When requested by ENGINEER, submit results of source quality control tests.
   3. Qualifications Statements:
      a. Submit qualifications of manufacturer when requested by ENGINEER.
      b. Submit qualifications of installer when requested by ENGINEER.

1.5 DELIVERY, STORAGE AND HANDLING

A. Refer to Section 40 05 05, Exposed Piping Installation.

PART 2 – PRODUCTS

2.1 SERVICE CONDITIONS

A. General:

1. Pipe materials shall be suitable for services intended. Refer to piping schedules in Section 40 05 05, Exposed Piping Installation.
2. Pipe shall be homogeneous throughout and free of visible cracks, holes, foreign inclusions, and other defects. Unless otherwise shown or indicated, pipe shall be uniform in color, opacity, density, and other physical properties.

2.2 POLYVINYL CHLORIDE (PVC) PIPING

A. PVC Pipe – Pressure Application: Unless otherwise shown or indicated, PVC pipe up to 4-inch in diameter shall comply with the following:
   1. Manufacturers: Provide products of one of the following:
      a. Ipex, Inc.
      b. Spears Manufacturing Company.
      c. Or equal.
   2. Material: Unless otherwise specified, comply with the following:
      a. Type and Grade: Type 1, Grade 1.
      b. Wall Thickness: Schedule 80 complying with ASTM D1784 and ASTM D1785, and US Product Service PS 21-70 as having same outside diameter dimension as cast-iron pipe.
      c. Temperature Rating: Rated for temperature to 140 degrees F.
      d. Color: Gray.
   3. Fittings: Type, grade, schedule, and color of fitting shall match the associated pipe.
      a. Solvent Weld: Comply with ASTM D2467 for schedule 80 pipe.
      b. Flanged: Provide flanged fittings with EPDM gaskets.
   4. Joints:
      a. Solvent Weld: Use primer and solvent cement recommended by PVC pipe manufacturer for the application. Primer shall be in accordance with ASTM F656, and solvent cement shall be in accordance with ASTM D2564.
      b. Flanged: Provide with backup flange minimum 1/8-inch thick. Backup flanges and connecting bolts shall be Type 304 stainless steel.

B. PVC – Gravity Application, Drain, Waste, and Vent (PVC-DWV) Pipe.
   1. Manufacturers: Provide products of one of the following:
      a. Chemtrol, manufactured by Nibco, Inc.
      b. Spears Manufacturing Company.
      c. Or equal.
   2. Material: In accordance with ASTM D1784. Unless otherwise shown or indicated, PVC-DWV pipe shall be:
      a. Type and Grade: Type 1, Grade 1.
      b. Wall Thickness: Schedule 40.
      c. Color: White.
   3. Fittings: Manufactured in accordance with ASTM D2665 and ASTM D3311.
      a. Solvent weld.
      b. Spigot.

4. Joints:
   a. Solvent weld.

C. PVC Pipe – Pressure Application: Unless otherwise shown or indicated, PVC pipe 4-inch in diameter through 12-inch shall comply with the following:
   1. Manufacturers:
   2. Material: In accordance with ANSI/AWWA C900-16, with outside diameter dimensions of ductile iron pipe.
   3. All 4-inch through 12-inch PVC pressure pipe shall be Class 150 and DR18 with a pressure rating of 235 psi.
   4. Molded PVC Pressure Fittings: Fittings for 4-inch pressure pipe shall be molded PVC pressure fittings. Molded PVC fittings shall meet the requirements of ANSI/AWWA C900, and shall be Harco Class 150 as manufactured by the Harrington Corporation, or approved equal. Fittings shall be restrained.
   5. DI Fittings: Fittings for pressure pipe larger than 4-inch shall be DI and shall conform to ANSI/AWWA C110 or C153.
   6. For flanged fittings, adapter flanges shall be used on plain end PVC pipe. Adapter flanges shall be Uni Flange Series 900 as manufactured by Ford/Uni Flange, or approved equal.

2.3 IDENTIFICATION

A. Pipe material identification requirements are in Section 40 05 05, Exposed Piping Installation.

2.4 SOURCE QUALITY CONTROL

A. Shop Tests:
   1. Pipe manufacturer shall maintain continuous quality control program.
   2. Where applicable and when requested by ENGINEER, submit results of source quality control tests specified in reference standards.

PART 3 - EXECUTION

3.1 INSPECTION

A. Inspect pipe materials for defects in material and workmanship. Verify compatibility of pipe and fittings.

3.2 INSTALLATION

A. For exposed piping installation, refer to Section 40 05 05, Exposed Piping Installation.

+ + END OF SECTION + +

** THIS PAGE INTENTIONALLY LEFT BLANK **

SECTION 40 05 53

PROCESS VALVES

PART 1 - GENERAL

1.1 DESCRIPTION

A. Scope:
   1. CONTRACTOR shall provide all labor, materials, equipment, and incidentals as shown, specified, and required to furnish and install process valves, four-inch diameter and larger, and appurtenances, complete and operational.

B. Coordination:
   1. Review installation procedures under this and other Sections and coordinate installation of items that must be installed with or before process valves Work.

C. Related Sections:
   1. Section 09 91 00, Painting.
   2. Section 40 05 05, Exposed Piping Installation.
   3. Section 40 05 07, Pipe Hangers and Supports.

1.2 REFERENCES

A. Standards referenced in this Section are listed below:
   1. American Bearing Manufacturers Association (ABMA).
   2. ANSI B16.1, Cast-Iron Pipe Flanges and Flanged Fittings.
   3. ANSI B16.34, Valves-Flanged, Threaded and Welding end. (ASME B16.34).
   4. ANSI/NSF 61 Drinking Water Components – Health Effects.
   5. API STD 594, Check Valves, Flanged Lug, Wafer and Butt-Welding.
   6. API STD 598, Valve Inspection and Testing.
   7. API STD 609, Butterfly Valves: Double Flanged, Lug-Type and Wafer-Type.
   8. ASTM A126, Specification for Gray Iron Castings for Valves, Flanges and Pipe Fittings.
   9. ASTM A193/A193M, Specification for Alloy-Steel and Stainless Steel Bolting Materials for High-Temperature Service.
   10. ASTM A194/A194M, Specification for Carbon and Alloy Steel Nuts for Bolts for High Pressure and High Temperature Service, or Both.
   11. ASTM A240/A240M, Specification for Chromium and Chromium-Nickel Stainless Steel Plate, Sheet, and Strip for Pressure Vessels and for General Applications.
   12. ASTM A276, Specification for Stainless Steel Bars and Shapes.

13. ASTM A307, Specification for Carbon Steel Bolts and Studs, 60,000 psi Tensile Strength.
14. ASTM A351/A351M, Specification for Castings, Austenitic, Austenitic-Ferritic (Duplex), for Pressure-Containing Parts.
15. ASTM A380, Practice for Cleaning, Descaling and Passivation of Stainless Steel Parts, Equipment and Systems.
16. ASTM A536, Specification for Ductile Iron Castings.
17. ASTM A564/A564M, Specification for Hot-Rolled and Cold-Finished Age-Hardening Stainless Steel Bars and Shapes.
18. ASTM A743/A743 M, Specification for Castings, Iron-Chromium, Iron-Chromium-Nickel, Corrosion Resistant, for General Application.
19. ASTM B62, Specification for Composition Bronze or Ounce Metal Castings.
20. ASTM B98/B98M, Specification for Copper-Silicon Alloy Rod, Bar, and Shapes.
21. ASTM B138/B138M, Specification for Manganese Bronze Rod, Bar and Shapes.
22. ASTM B265, Specification for Titanium and Titanium Alloy Strip, Sheet and Plate.
23. ASTM B584, Specification for Copper Alloy Sand Castings for General Applications.
24. ASTM D429, Test Methods for Rubber Property - Adhesion to Rigid Substrates.
25. AWWA C500, Metal-Seated Gate Valves for Water Supply Service.
26. AWWA C501, Cast-Iron Sluice Gates.
27. AWWA C502, Dry-Barrel Fire Hydrants.
28. AWWA C504, Rubber-Seated Butterfly Valves.
29. AWWA C507, Ball Valves, 6-inch through 48-inch.
30. AWWA C508, Swing-Check Valves for Waterworks Service, 2-inch through 24-inch NPS.
31. AWWA C509, Resilient-Seated Gate Valves for Water Supply Service.
32. AWWA C540, Power-Actuating Devices for Valve and Slide Gates.
33. AWWA C550, Protective Interior Coatings for Valves and Hydrants.
34. AWWA Manual M49, Butterfly Valves: Torque, Head Loss, and Cavitation Analysis.
35. FS TT-C-494, Coating Compound, Bituminous, Solvent Type, Acid-Resistant.
36. NEMA MG 1, Motors and Generators.

1.3 QUALITY ASSURANCE

A. Manufacturer's Qualifications:
   1. Manufacturer shall have minimum of five years of experience producing substantially similar materials and equipment to that required and be able to provide evidence of at least five installations in satisfactory operation for at least five years.

B. Component Supply and Compatibility:
   1. Obtain each type of equipment and appurtenances included in this Section, regardless of the component manufacturer, from a single manufacturer of the type of process valve. For each type of valve, do not furnish valves of more than one manufacturer.
   2. Supplier of each type of equipment specified shall review and approve or prepare all Shop Drawings and other submittals for all components associated with the type of process valve Supplier is furnishing.
   3. Components shall be suitable for use in the specified service conditions. Components shall be integrated into the overall assembly by the process valve manufacturer.

1.4 SUBMITTALS

A. Action Submittals: Submit the following:
   1. Product Data:
      a. Product data sheets.
      b. Complete catalog information, including dimensions, weight, specifications, and identification of materials of construction of all parts.
      c. Corrosion resistance information to confirm suitability of valve materials for the application. Furnish information on chemical resistance of elastomers from elastomer manufacturer.
      d. Cv values and hydraulic headloss curves.
   2. Testing Plans:
      a. Submit plan for shop testing of each valve for which shop testing is specified, including testing plan's and test facility's limitations proposed.

B. Informational Submittals: Submit the following:
   1. Certificates:
      a. Certificates of compliance with referenced standards, where applicable.
   2. Manufacturer Instructions:
      a. Submit manufacturer's instructions for handling, storing, and installing valves and appurtenances. Provide templates and setting drawings for valves and appurtenances that require anchor bolts or similar anchorages.
   3. Source Quality Control Submittals:
      a. Submit copies of shop test results and inspection data, certified by manufacturer.
   4. Field Quality Control Submittals:
      a. Submit results of field tests required.
   5. Supplier's Reports:
      a. When requested by ENGINEER, submit written report of results of each visit to Site by Supplier's serviceman, including purpose and time of visit, tasks performed and results obtained.

6. Qualifications Statements:
    a. When requested by ENGINEER, submit manufacturer's qualifications demonstrating compliance with the Specifications, including list of existing installations with contact names and telephone number(s) for each.

C. Closeout Submittals: Submit the following:
    1. Operations and Maintenance Data:
        a. Furnish operation and maintenance manuals in accordance with Section 01 78 23, Operations and Maintenance Data.
        b. Furnish in operations and maintenance manuals complete nameplate data for each valve and electric actuator.

D. Maintenance Material Submittals: Submit the following:
    1. Spare Parts, Extra Stock Materials, and Tools:
        a. Spare Parts and Extra Stock Materials: Furnish as specified for each valve type.
        b. Tools: Furnish two sets of special tools (excluding metric tools, if applicable) for each size and type of valve furnished.

1.5 DELIVERY, STORAGE AND HANDLING

A. Packing, Shipping, Handling, and Unloading:
    1. Deliver materials and equipment to Site to ensure uninterrupted progress of the Work. Deliver anchorage products that are to be embedded in concrete in ample time to prevent delaying the Work.
    2. Inspect boxes, crates, and packages upon delivery to Site and notify ENGINEER in writing of loss or damage to materials and equipment. Promptly remedy loss and damage to new condition in accordance with manufacturer's instructions.
    3. Conform to Section 01 65 00, Product Delivery Requirements.

B. Storage and Protection:
    1. Keep products off ground using pallets, platforms, or other supports. Store equipment in covered storage and prevent condensation and damage by extreme temperatures. Store in accordance with manufacturer's recommendations. Protect steel, packaged materials, and electronics from corrosion and deterioration.
    2. Conform to Section 01 66 00, Product Storage and Handling Requirements.

PART 2 - PRODUCTS

2.1 GENERAL

A. Valves, General:

1. Provide each valve with manufacturer's name and rated pressure cast in raised letters on valve body.
2. Provide valves with brass or Type 316 stainless steel nameplate attached with Type 316 stainless steel screws. Nameplates shall have engraved letters displaying the following minimum information:
   a. Valve size.
   b. Pressure and temperature ratings.
   c. Application (other than water and wastewater).
   d. Date of manufacture.
   e. Manufacturer's name.
3. Provide valves to turn clockwise to close, unless otherwise specified.
4. Provide valves with permanent markings for direction to open.
5. Manually operated valves, with or without extension stems, shall require not more than 40-pound pull on manual operator to open or close valve against specified criteria. Gear actuator and valve components shall be able to withstand minimum pull of 200 pounds on manual operator and input torque of 300-foot pounds to actuator nut. Manual operators include handwheel, chainwheel, crank, lever, and T-handle wrench.

B. Valve Materials:
1. Valve materials shall be suitable for the associated valve's service or application, as shown.
2. Protect wetted parts from galvanic corrosion caused by contact of different metals.
3. Wetted components and wetted surfaces of valves used with potable water or water that will be treated to become potable shall conform to ANSI/NSF 61.
4. Clean and descale fabricated stainless steel items in accordance with ASTM A380 and the following:
   a. Passivate all stainless steel welded fabricated items after manufacture by immersing in pickling solution of six percent nitric acid and three percent hydrofluoric acid. Temperature and detention time shall be sufficient for removing oxidation and ferrous contamination without etching surface. Perform complete neutralizing operation by immersing in trisodium phosphate rinse followed by clean water wash.
   b. Scrub welds with same pickling solution or pickling paste and clean with stainless steel wire brushes or by grinding with non-metallic abrasive tools to remove weld discoloration, and then neutralize and wash clean.

C. Valve Joints:
1. Exposed Valves: Unless otherwise specified, provide with flanged ends conforming to ANSI B16.1. Pressure class of flanges shall be equal to or greater than specified pressure rating of the associated valve.
2. For stainless steel bolting, except where nitrided nuts are required, use graphite-free anti-seize compound to prevent galling. Strength of joint shall not be affected by using anti-seize compound.

2.2 ECCENTRIC PLUG VALVES

A. Manufacturers: Provide products of one of the following:
   1. DeZurik.
   2. Or equal.

B. General:
   1. Provide eccentric-type plug valves each with rectangular ports.
   2. Minimum Rated Working Pressure: 175 psig.
   3. Maximum Fluid Temperature: 180 degrees F.
   4. Minimum Port Area: Full port (100 percent of nominal pipe area).
   5. Packing and packing gland shall be externally adjustable and accessible without disassembling valve and without removing the actuator.
   6. Valves shall provide drip-tight, bi-directional shutoff at rated pressures.
   7. Plug shall have cylindrical seating surface eccentrically offset from center of plug shaft. Interface between plug face and body seat, with plug in closed position, shall be externally adjustable in the field with valve in the line while under pressure.
   8. Plug shall be supported to top bearing by using spring that is externally adjustable.
   9. For sludge service, plug valves shall allow pigging of the piping with line-size pigs.

C. Materials of Construction:
   1. Body: Cast Iron ASTM A126 Class B, or Ductile-iron ASTM A536 Grade 65-45-12.
   2. Plug:
      a. Core: Cast Iron ASTM A126 Class B, or Ductile-iron, ASTM A536 Grade 65-45-12.
      b. Plug Facing: Neoprene.
      c. For valves up to eight-inch diameter, plugs shall be fully encapsulated with rubber. For valves larger than eight-inch diameter, provide plugs with rubber facing. Minimum thickness of rubber lining shall be 1/8-inch. Rubber hardness shall be a minimum of 70 (Shore A) durometer. Rubber-to-metal bond shall withstand minimum 75-pound pull conforming to ASTM D429 Method B.
   3. Seats: Minimum 1/8-inch welded overlay of minimum 90 percent pure nickel on surfaces contacting plug face. Seats shall provide contact area of at least 1/2-inch width all around.
   4. Stem Bearings: Sintered, oil impregnated, permanently lubricated of Type 316 stainless steel.
   5. Stem Seal: Multiple neoprene V-ring type.
   6. All internal and external bolting and other hardware including pins, set screws, plug, studs, bolts, nuts and washers shall be Type 316 stainless steel.

D. Interior Coating and Lining:
   1. Valves shall be coated inside. Steel, cast-iron, and ductile iron surfaces, except machined surfaces, shall be epoxy-coated in accordance with AWWA C550.

E. Shop Testing:
   1. Operational Tests:
      a. To demonstrate that complete assembly is workable, successfully operate each valve (with actuator mounted directly on valve) three times from fully closed to fully open position and reverse under no-flow condition.
   2. Leakage Tests:
      a. Test each valve for leaks while valve is in closed position.
      b. Test valves at rated pressures. During test, valves shall be drip-tight. Test duration shall be at least five minutes for valves up to 20-inch diameter and ten minutes for valves larger than 20-inch diameter. Tests shall be repeated successfully with pressure in the unseating direction.
   3. Hydrostatic Test: Test valves to an internal hydrostatic pressure equivalent to twice rated pressure of valve. During hydrostatic test, there shall be no leakage through metal, end joints, and shaft seal, nor shall any part be permanently deformed. Duration of hydrostatic test shall be sufficient to allow visual examination for leakage. Test duration shall be at least one minute for valves eight-inch diameter and smaller, three minutes for valves 10-inch through 20-inch diameter, and ten minutes for valves 24-inch diameter and larger.

2.3 FLEXIBLE DISC CHECK VALVES

A. Manufacturers: Provide products of one of the following:
   1. Dezurik (APCO).
   2. VAG (G.A. Industries).
   3. ValMatic.
   4. Or approved equal.

B. General:
   1. Provide valves conforming to AWWA C508 and as specified herein.
   2. Rated Working Pressure: 175 psig.
   3. Provide valves suitable for horizontal or vertical mounting.
   4. Check valves shall be the full body type, with domed access cover and only one movable part, the flexible disc.
   5. Valve shall be flanged in accordance with ANSI B16.1, Class 125.
   6. The valve body shall be full flow equal to nominal pipe diameter at all points through the valve.
   7. The seating surface shall be on a 45 degree angle to minimize disc travel. A threaded port with pipe plug shall be provided on the bottom of the valve to

allow for field installation of an attachment without special tools or removing the valve from the line.

8. The top access port shall be full size, allowing removal of the disc without removing the valve from the line. The access cover shall be domed in shape to provide flushing action over the disc for operating in lines containing high solids content. A threaded port with pipe plug shall be provided in the access cover to allow for field installation of a mechanical, disc position indicator.
9. The disc shall be of one-piece construction, precision molded with an integral O-ring type sealing surface, and contain alloy steel and nylon reinforcement in the flexible hinge area.
10. Non-Slam closing characteristics shall be provided through a short 35-degree disc stroke and a memory disc return action to provide a cracking pressure of 0.25 psig.
11. The disc shall be precision molded Buna-N (NBR), ASTM D2000-BG.
12. The valve shall be provided with an inductive type proximity switch that can be connected to transmit electrical signal to provide proof of closure.
13. Provide a hold open device to support the backflushing of the valve without removal of the pump from service

C. Materials of Construction: All materials of construction shall conform to AWWA C508 and shall be as follows:
   1. Body: Cast-iron or ductile iron.
   2. Access Port Hardware: Type 316 stainless steel.
   3. Disc: Buna-N (NBR), ASTM D2000-BG.
   4. Hold Open Device: Bronze, ASTM B-584.
   5. Rubber Items:
      a. Applications Up to 180-degree F Fluid Temperature: Buna-N or other synthetic rubber suitable for the application.
   6. Internal and external bolting and other hardware; including pins, set screws, studs, bolts, nuts, and washers shall be Type 316 stainless steel.

D. Interior Coating:
   1. Valves including flapper shall be coated inside. Steel, cast-iron and ductile iron surfaces, except machined surfaces, shall be epoxy coated in accordance with AWWA C550.

E. Testing:
   1. Test each valve in manufacturer’s shop in accordance with AWWA C508.
   2. Allowable Leakage at Rated Pressures: Zero.
   3. The valve disc shall be cycle tested 1,000,000 times in accordance with ANSI/AWWA C508 and show no signs of wear, cracking, or distortion to the valve disc or seat and shall remain drop tight at both high and low pressures.

2.4 APPURTENANCES FOR EXPOSED METALLIC VALVES

A. General:
   1. For valves located less than five feet above operating floor, provide levers on four-inch diameter quarter-turn valves, and provide handwheels on all other valves, unless otherwise shown or specified.

B. Handwheels:
   1. Conform to applicable AWWA standards.
   2. Material of Construction: Ductile iron or cast aluminum.
   3. Arrow indicating direction of opening and word "OPEN" shall be cast on trim of handwheel.
   4. Maximum Handwheel Diameter: 2.5 feet.

2.5 ANCHORAGES AND MOUNTING HARDWARE

A. General:
   1. Comply with Section 05 05 33, Anchor Systems, except as modified in this Section.
   2. Obtain bolts, nuts, and washers for connection of valve and appurtenances to concrete structure or other structural members from valve Supplier.
   3. Bolts, nuts, and washers shall be of ample size and strength for purpose intended. Anchorages in concrete shall be at least 5/8-inch diameter.
   4. Provide stem guide anchorages of required strength to prevent twisting and sagging of guides under load.
   5. Materials: Provide bolts and washers of Type 316 stainless steel and nitrided nuts. Bolts shall have rolled threads. Bolts and nuts shall be electropolished to remove burrs.

2.6 PAINTING OF EXPOSED VALVES AND APPURTENANCES

A. Exterior steel, cast-iron, and ductile iron surfaces, except machined surfaces of exposed valves and appurtenances, shall be supplied shop primed for field finish painting. Surface preparation, priming, finish painting, and field touch-up painting shall conform to Section 09 91 00, Painting.

PART 3 - EXECUTION

3.1 INSPECTION

A. Examine conditions under which materials and equipment are to be installed and notify ENGINEER in writing of conditions detrimental to proper and timely completion of the Work. Do not proceed with the Work until unsatisfactory conditions have been corrected.

3.2 INSTALLATION

A. General:
   1. Install valves and appurtenances in accordance with:
      a. Supplier's instructions and the Contract Documents.
      b. Requirements of applicable AWWA standards.
      c. Applicable requirements of Section 40 05 05, Exposed Piping Installation.
   2. Install valves plumb and level. Install all valves to be free from distortion and strain caused by misaligned piping, equipment, and other causes.
   3. Position swing check valves so that, when valve is fully open, valve disc does not conflict with piping system elements upstream and downstream of valve.

B. Exposed Valves:
   1. Provide supports for large or heavy valves and appurtenances as shown or required to prevent strain on adjoining piping.
   2. Operators:
      a. Install valves so that operating handwheels or levers can be conveniently turned from operating floor without interfering with access to other valves, piping, structure, and equipment, and as approved by ENGINEER.
      b. Avoid placing operators at angles to floors or walls.
      c. Install valves so that indicator arrows are visible from floor level.

C. Plug Valves:
   1. Install plug valves that are in horizontal liquid piping with stem horizontal and plugs on top when valve is open. Plug shall be on upstream end when valve is closed.
   2. Install plug valves that are in vertical liquid piping with plug at top when closed or as recommended by valve Supplier.
   3. Supplier shall tag or mark plug valves to indicate proper mounting position.

3.3 FIELD QUALITY CONTROL

A. Field Tests:
   1. Adjust all parts and components as required to provide correct operation of valves.
   2. Conduct functional field test on each valve in presence of ENGINEER to demonstrate that each valve operates correctly.
   3. Demonstrate satisfactory opening and closing of valves at specified criteria requiring not more than 40 pounds effort on manual actuators.

+ + END OF SECTION + +

SECTION 40 05 86

AIR VALVES FOR WASTEWATER SERVICE

PART 1 – GENERAL

1.1 DESCRIPTION

A. Scope:
   1. CONTRACTOR shall provide all labor, materials, equipment, and incidentals as shown, specified, and required to furnish, install, and test air release valves for wastewater service complete with appurtenances.

B. Coordination:
   1. Review installation procedures for this and other Specification sections and coordinate Work that must be installed with or before Work under this Section.

C. Related Sections:
   1. Section 40 05 53, Process Valves.

1.2 REFERENCES

A. Standards referenced in this Section are:
   1. ANSI/AWWA C512, Air Release, Air Vacuum and Combination Air Valves for Waterworks Service

1.3 DEFINITIONS

A. The following definitions apply to this Section.
   1. Air Release Valve: A hydromechanical device designed to automatically release to atmosphere small pockets of air as they accumulate in a pipeline when pipeline system is full and operating under pressure.
   2. Air/Vacuum Valve: Direct-acting, float-operated, hydromechanical device designed to automatically release or admit large volumes of air during filling or draining of a pipeline or piping system. Valve will open to relieve negative pressures and will not reopen to vent air when system is full and under pressure.
   3. Air Valve: Valve of one of the following types: Air Release Valve, Air/Vacuum Valve, or Combination Air Valve.
   4. Combination Air Valve: Device having features of an Air Release Valve and Air/Vacuum Valve.
   5. Maximum and Minimum Working Pressure: Pressure range at which valve is designed to function.
   6. Orifice: Opening in valve mechanism through which air is expelled from or admitted into pipeline or piping system.

7. Valve Design Pressure: Maximum pressure to which a valve may be subjected without exceeding allowable stress of its components.

1.4 QUALITY ASSURANCE

A. Manufacturer's Qualifications:
   1. Manufacturer shall be able to provide documentation of at least five installations of substantially similar equipment to that specified, in satisfactory operation for at least five years.

B. Component Supply and Compatibility:
   1. Valves of the same type, including specified accessories, shall be products of or furnished by a single air valve manufacturer.

1.5 SUBMITTALS

A. Action Submittals.
   1. Product Data: Submit the following for each type and size of valve specified:
      a. Product data sheet.
      b. Complete catalog information, including dimensions, weight, performance data, Orifice size, specifications, and identification of materials of each part.

B. Informational Submittals:
   1. Certifications:
      a. Submit a certificate signed by manufacturer of each product stating that product conforms to applicable referenced standards and specified requirements.
   2. Test Reports:
      a. Provide results of successful factory tests prior to shipping products to the Site.
   3. Manufacturer's Reports:
      a. Submit written report of results of each visit to Site by a manufacturer's serviceman, including purpose and time of visit, tasks performed, and results obtained.

C. Closeout Submittals.
   1. Operation and Maintenance Data:
      a. Submit complete operation and maintenance manual for all air valves in the Contract, including maintenance data and schedules in sufficient detail for disassembly and assembly of valve, and identifying parts that can be replaced.
      b. Furnish operation and maintenance manuals per Section 01 78 23, Operations and Maintenance Data.

2. Spare Parts:
    a. Provide spare parts and list of recommended spare parts as specified in this Section:

1.6 DELIVERY, STORAGE, AND HANDING

A. Packing, Shipping, Handling, and Unloading:
    1. Prepare valves for shipping per Section 6.2 of ANSI/AWWA C512.
    2. Conform to Section 01 65 00, Product Delivery Requirements.

B. Acceptance at Site:
    1. Inspect all boxes, crates, and packages upon delivery to Site and notify ENGINEER in writing of loss or damage to products. Promptly remedy loss and damage to new condition per manufacturer's instructions.

C. Storage and Protection:
    1. Keep all products off ground using pallets, platforms, or other supports. Protect products from corrosion and deterioration.
    2. Conform to Section 01 66 00, Product Storage and Handling Requirements.

1.7 MAINTENANCE

A. Extra Materials
    1. Furnish one (1) complete valve, tagged and boxed for long-term storage.

PART 2 – PRODUCTS

2.1 GENERAL

A. Manufacturer
    1. Valve shall be:
        a. Model D-025L, as manufactured by ARI Flow Control Accessories, Ltd.
        b. Or approved equal.

B. Design Criteria:
    1. Provide valves included in this Section and as shown on the Drawings.
    2. Design Criteria:
        a. Quantity: As indicated on the Drawings.
        b. Type: Combination air release valve.
        c. Service: Wastewater sludge with solids content of 1-2%.
        d. Location: Outside.
        e. Inlet Connection Size and Type: 2-inch NPT, male, threaded.
        f. Inlet Orifice Size: 1.25-inch.
        g. Discharge Connection Size: 1.5-inch NPT, female, threaded.
        h. Discharge Orifice Size: 1.25-inch.
        i. Minimum Pressure Rating: 150 psig.

C. Materials of Construction:
   1. Air release outlet, floats, stopper, and clamping stem shall be polypropylene of fiber-reinforced nylon.
   2. The rolling seal and upper body shall be reinforced nylon.
   3. O-rings shall be EPDM.
   4. All other wetted and unwetted materials including valve body shall be Type 316 stainless steel.
   5. Valve shall be conical long body design to maximize the distance between the liquid and rolling seal mechanism; and shall be specifically designed for applications involving liquids carrying solid particles.

D. Markings:
   1. Mark valves per Section 6.1 of ANSI/AWWA C512.

2.2 ACCESSORIES

A. Isolating Valves:
   1. Provide stainless steel, full port, isolating valve for each air valve.
   2. Valve design pressure of isolating valve shall equal or exceed design pressure of the connected air valve.
   3. Valves shall comply with Section 40 05 53, Process Valves.

B. Back-flush Attachments:
   1. Provide back-flush attachment for air valves in sewage service.
   2. Back-flush attachments shall be as normally furnished by manufacturer. Provide ports in the air valve body for flushing and discharge, each with an isolating valve and quick-connect for attaching hoses.
   3. Provide five-foot length of rubber hose with quick-connect for connecting to flushing discharge port.
   4. Provide a plugged 2-inch diameter NPT port at bottom of air valve body for removal of solids.

2.3 SOURCE QUALITY CONTROL

A. Test and inspect air valves per Section 5 of ANSI/AWWA C512. Do not ship valves that are not successfully tested.

PART 3- EXECUTION

3.1 INSPECTION

A. Examine conditions under which Work is to be installed and notify ENGINEER in writing of conditions detrimental to proper and timely completion of Work. Do not proceed with Work until unsatisfactory conditions have been corrected.

B. Examine valves and remove packing and foreign materials from interior of valve. Report defects to ENGINEER

3.2 INSTALLATION

A. Install valves and appurtenances as shown on the Drawings and per air valve manufacturer's recommendations, approved Shop Drawings, and applicable codes and standards.

B. Install valves plumb and vertical.

C. Install with an isolating valve.

+ + END OF SECTION + +

** THIS PAGE INTENTIONALLY LEFT BLANK **

SECTION 40 05 93

COMMON MOTOR REQUIREMENTS FOR PROCESS EQUIPMENT

PART 1 – GENERAL

1.1 DESCRIPTION

A. Scope:
   1. Electric motors and accessories to be furnished under other equipment Sections shall comply with this Section, unless specified otherwise in the Section for the associated driven equipment.
   2. Motor horsepower and voltage ratings, speed, enclosure type, and unusual service conditions (such as ambient temperatures above 40 degrees C, corrosive areas requiring severe duty motors, and variable frequency drive applications requiring inverter duty motors), and requirements for witnessing shop tests shall be as specified in the Sections for the associated driven equipment. Specific accessories and construction features may also be required by the Sections on the associated driven equipment.

1.2 REFERENCES

A. Standards referenced in this Section are:
   1. ASTM A48/A48M, Specification for Gray Iron Castings.
   2. ASTM B117, Practice for Operating Salt Spray (Fog) Apparatus.
   3. IEEE 112, Test Procedure for Polyphase Induction Motors and Generators.
   4. IEEE 522, Guide for Testing Turn-to-Turn Insulation on Form-Wound Stator Coils for Alternating Current Electric Machines.
   5. IEEE 841, Petroleum and Chemical Industry - Premium-Efficiency, Severe-Duty, Totally Enclosed Fan-Cooled (TEFC) Squirrel Cage Induction Motors – Up to and Including 370 KW (500 HP).
   6. IEEE 1043, Recommended Practice for Voltage Endurance Testing of Form-Wound Bars and Coils.
   7. NEMA MG 1, Motors and Generators. (This Section's references to NEMA MG 1 followed by a hyphen and number, such as “NEMA MG 1-20.14”, indicate the associated NEMA MG 1 paragraph reference.)
   8. ANSI/NETA ATS, Acceptance Testing Specifications for Electrical Power Equipment and Systems
   9. UL 674, Electric Motors and Generators, for Use in Division 1 Hazardous (Classified) Locations.
   10. UL 1004, Electric Motors.

1.3 QUALITY ASSURANCE

A. Qualifications:

1. Manufacturer:
    a. Manufacturer shall have not less than five years' experience producing equipment substantially similar to that required and shall be able to submit documentation of at least five installations in satisfactory operation for at least five years each.

1.4 SUBMITTALS

A. Action Submittals: Submit the following:
    1. Shop Drawings:
        a. Data sheets indicating nameplate data for fractional-horsepower motors.
        b. Outline drawing or data sheet indicating complete motor dimensions for motors rated greater than 1/3-hp. Several motors of the same type and rating for the same application may be covered by an appropriate single drawing or data sheet. Drawings and data sheets shall have complete identifying data including frame size, speed, horsepower ratings, and application for each particular motor.
        c. Details of motor heaters, winding thermal protection, and other accessories.
        d. Copies of motor characteristic curves and data inputs when required for programming motor protection and management relays.
    2. Product Data:
        a. Submit motor test data sheets for each motor rated one horsepower or greater. Values indicated on test data sheets shall be from tests of a previously manufactured, electrically duplicate motor or calculated data. Mark each test data sheet to indicate the Project motor application location, manufacturer, type, frame size, horsepower, voltage, speed, bearing type, lubrication medium and enclosure type. Test data sheet shall also include:
            1) Winding resistances.
            2) Torques.
            3) Efficiencies.
            4) Power factors.
            5) Slip.
            6) Full load amperes.
            7) Locked rotor and no load amperes.
            8) Nameplate temperature and results of dielectric tests.
    3. Testing Plans and Procedures:
        a. When witnessed source quality control testing is required in the Section for associated driven equipment, submit description of proposed shop testing methods, procedures, and testing apparatus with calibration dates, together with proposed testing schedule and proposed travel and logistical plans for testing.

B. Informational Submittals: Submit the following:
    1. Manufacturer's Instructions:

a. Instructions and recommendations for handling, storing, protecting the motors.
b. Installation data for motors, including setting drawings, templates, and directions and tolerances for installing anchorage devices.

2. Source Quality Control Submittals:
   a. Written reports presenting results of required shop testing. Shop test reports shall be dated and signed by motor manufacturer.
   b. When witnessed shop tests are required, shop test results shall be signed by and shall bear the seal of registered professional engineer. Name on seal, registration or license number, and jurisdiction or registration of license shall be legible.
3. Field Quality Control Submittals:
   a. Written reports presenting results of required field testing and inspections. Field testing reports shall be dated and signed by CONTRACTOR.
4. Supplier Reports:
   a. Submit written report of results of each visit to Site by Supplier's service personnel, including purpose and time of visit, persons contacted, problems encountered and resolved, tasks performed, results obtained, and other pertinent information. Submit within two days of completion of visit to the Site.
5. Qualifications Statements:
   a. Submit manufacturer's qualifications data when requested by ENGINEER.

C. Closeout Submittals: Submit the following:
1. Operation and Maintenance Data:
   a. Furnish operation and maintenance data for motors as part of the operations and maintenance data for the associated driven equipment.
   b. Comply with Section 01 78 23, Operations and Maintenance Data.

D. Maintenance Material Submittals: Submit the following:
1. Spare Parts and Extra Stock Materials: For each motor size and type, furnish spare parts in accordance with motor manufacturer's recommendations, including the following for three-phase motors:
   a. One set of fans and guards for each set of three or fewer motors, for each size of totally-enclosed fan-cooled motor.
   b. One set of bearing liners, or renewable ball or roller bearings, for each set of three or fewer motors, for each type and size of motor.
   c. One set of oil rings, for each sleeve bearing motor.

1.5 DELIVERY, STORAGE AND HANDLING

A. Packing, Shipping, Handling, and Unloading:
1. Ship motors with openings sealed.

B. Storage and Protection:
   1. Protect materials and equipment from corrosion and deterioration.

PART 2 – PRODUCTS

2.1 EQUIPMENT PERFORMANCE

A. Equipment Description:
   1. Comply with motor requirements specified in the Sections for the associated driven equipment.
   2. Motors shall be suitable for continuous operation at an elevation of up to 3,300 feet above mean sea level, at ambient temperatures ranging from -25 degrees C to 40 degrees C, unless specified otherwise in the Section for the associated driven equipment.

2.2 CONSTRUCTION – GENERAL

A. Unless specified otherwise in Sections on the associated driven equipment, motors shall have the following features of construction and operation:
   1. Successfully operate under power supply variations in accordance with NEMA MG 1-14.30 and NEMA MG 1-20.14.
   2. NEMA Design B with torque and starting currents in accordance with NEMA MG 1, except in special high-torque applications, as specified in the Section for the associated driven equipment, which may require NEMA Design C.
   3. Motors shall operate within their full load rating without applying the service factor, unless specified otherwise in Section for the associated driven equipment.
   4. Speed and horsepower specified or required to properly operate the associated driven equipment and torque characteristics required by the drive load and suitable for direct coupling or V-belt drive, as specified in the Section for the associated driven equipment.
   5. Constructed for full-voltage starting.
   6. Fabricated steel or cast-iron frames with integrally cast feet or bases, cast-iron end bells, cast iron or steel conduit boxes and covers and bases with precision machined bearing fits, ASTM A48/A48M, Class 25 or better. For each TEFC motor, provide UL-approved automatic stainless-steel breather drains in lowest part of front and back brackets to allow drainage of condensation.
   7. Stator core assembly shall consist of stacked lamination made from specially selected electrical sheet silicon steel.
   8. Rotor cages shall be die-cast or fabricated aluminum or fabricated copper or copper alloy. Shafts shall be carbon steel unless specified otherwise in this Section or in the Section on the associated driven equipment.
   9. Rotors on frames 213T and larger shall be keyed shrunk or welded to shaft and rotating assembly, dynamically balanced to NEMA limits. Use rivets to secure balance weights, if required, to rotor resistance ring or fan blades. Machine

screws and nuts are unacceptable. Coat entire rotating assembly between bearing inner caps with corrosion-resistant epoxy.

10. Bolt and cap screws shall be high-strength, SAE Grade 5 zinc-plated and chromatic steel. Screwdriver slot fasteners are unacceptable.
11. Motors shall be shop-painted at the motor fabrication facility. Finish coat shall be the same color as the associated driven equipment. Final paint finish shall be corrosive resistant and capable of passing ASTM B117 250-hour salt spray test. Motors that will be located outdoors shall have coating resistant to degradation or chalking in sunlight.

2.3 SINGLE-PHASE AC MOTORS: NOT USED.

2.4 THREE-PHASE AC MOTORS

A. General: Unless specified otherwise in the Sections for the associated driven equipment, provide three-phase motors with the following features:
   1. Premium, energy-efficient construction complying with NEMA MG 1.
   2. Motor efficiency determined in accordance with NEMA MG 1-12.58.
   3. Minimum and nominal full-load efficiencies not less than those listed in: NEMA MG 1 Table 12-12 for motors rated 600 volts and smaller, and NEMA MG 1 Table 12-13 for motors rated larger than 600 volts and equal to or less than 5,000 volts.
   4. Motors shall be constructed for operation on three-phase, 60 Hertz, alternating current system. Motor voltage and variable frequency operation, where required, shall be as specified in the Sections for the associated driven equipment. Voltage ratings shall be 460 volts for 480-volt systems.
   5. Unless otherwise required by the load, motors shall be NEMA Design B, normal starting torque. Locked rotor KVA/HP shall not exceed NEMA Code Letter G for motors 20 hp and larger.
   6. Motor frame shall be a rigid structure, constructed to maintain the lamination in correct alignment, and shall not depend on lamination or bolts for rigidity.
   7. Severe-duty totally-enclosed motors shall comply with IEEE 841.

B. Bearings:
   1. Provide horizontal motors with rolling element (anti-friction) or sliding element (sleeve) type bearings. Use anti-friction type bearings for NEMA frame motors. Use sleeve type bearings when specified in the Section for the associated driven equipment.
   2. Insulate the bearings for motors larger than 200 hp and for inverter-duty motors 100 hp and larger, to prevent shaft currents and related bearing damage.
   3. Bearings for open drip-proof, TEFC, and explosion-proof motors shall be grease lubricated, ball type, unless specified otherwise in the Section for the associated driven equipment. Bearings shall have inlet fittings and outlet plugs. Protect bearings and grease reservoirs from entry of contaminants. Provide suitable fittings to allow convenient positive purging of old grease during re-greasing.

4. For horizontal motors with ratings up to and including 500 hp, or for motors with speeds up to and including 3600 rpm, and where both conditions apply, anti-friction bearings furnished shall have a minimum L-10 bearing life of 100,000 hours, as defined by the ABMA, for direct-connected motors, and L-10 bearing life of 50,000 hours for belted motors.
5. Sleeve bearings shall be ring-oiled with adequate, integral self-cooled oil reservoir. Bearing sleeves shall be lined with high tin content babbitt to minimize oil contamination. Close running shaft seals shall prevent oil leakage as well as prevent entrance of foreign material such as water and dirt into the bearing area. Provide oil level sight gauges with permanently-marked easily-discernible oil level. Provide inspection openings to observe the oil rings.
6. When specified in Section for the associated driven equipment or required by motor speed and bearing size, provision shall be made for forced lubrication. Provide oil rings and an adequate oil reservoir in bearing housings to allow orderly shutdown of motor in the event of failure of forced feed lubrication system.
7. Provide vertical motors with thrust bearings adequate for all thrusts to which motor can be subjected. Rated minimum L-10 life of the thrust bearings shall be at least 15,000 hours when operated at rated speed and full load thrust. Manufacturers of the associated driven equipment shall furnish motor manufacturer with speed and thrust conditions required by the associated driven equipment.

C. Insulation:
1. Insulation systems shall be rated Class F, with a service factor of 1.15 times motor's nameplate horsepower rating when operated on a sine wave power supply, and a service factor of 1.00 on an adjustable frequency power supply. Temperature rise shall be limited to Class B insulation system when motor is operated continuously at rated horsepower with ambient temperature not exceeding 40 degrees C, unless specified otherwise in the Section for the associated driven equipment.
2. Windings shall be epoxy-coated. Treat windings with insulating compound suitable for protecting against moisture, salt air, and slightly acidic and alkaline conditions. Insulation system for enclosed motors shall be upgraded to increase moisture resistance.
3. Motors for outdoor service and all motors larger than 200 hp shall have vacuum/pressure-impregnated epoxy insulation (VPI) for moisture resistance. Motors shall be preheated before VPI and baked in temperature-controlled oven.
4. Stator windings and end turn connections shall be fully brazed to withstand full voltage starting, regardless of the starting method indicated in the Section for the associated driven equipment. Bracing system shall essentially eliminate coil vibration under the high-current conditions of starting as well as during normal operation. When a tied system is used, system shall be such that no tie depends on the integrity of another tie within the system.
5. Motors larger than 200 hp shall be form wound. Form wound coils with micaceous ground wall insulation shall have additional insulation and hot-

pressed to provide sealed system. Complete stator shall be vacuum/ pressure-impregnated.

D. Enclosures:
   1. Motor enclosure type shall be as specified in the Section for the associated driven equipment. Enclosure types shall comply with the following:
      a. Open Drip Proof: NOT USED.
      b. Weather Protected Type I and Type II: NOT USED.
      c. Totally enclosed fan cooled, and non-ventilated motors shall have cast-iron frame, cast-iron end brackets, and cast-iron conduit box. Provide drain holes on each end of motor.
      d. Explosion-proof motors shall comply with NEMA MG 1-1.26.10 and UL 674.
   2. Motor conduit box shall be split from top to bottom, shall be capable of being rotated to four positions 90 degrees apart, and shall comply with the following:
      a. Box shall be gasketed with rubber-like gaskets between frame and conduit box and between conduit box and conduit box cover.
      b. Provide box or opening in motor housing with conduit hub type fitting to allow threaded conduit connections.
      c. Box sizes shall be in accordance with code requirements and shall accommodate medium-voltage terminations or stress cones, when required.
      d. Protective and auxiliary devices shall terminate in auxiliary conduit boxes.
      e. Terminal leads shall be flexible and of sufficient length to extend for distance of not less than ten inches beyond face of terminal box. Terminal leads shall be fitted with solderless lugs suitable for attachment to lugs installed on external wiring. Leads shall be sealed with non-wicking, non-hygroscopic insulating material, or insulating “wrap-cap” as manufactured by Ideal Industries, or equal.
      f. Provisions for terminal box size, length of leads, size of conduit openings, and type of terminal lugs shall be complied with irrespective of other standards or practice.
      g. Provide motor frame grounding stud inside conduit box. Stud shall include a drilled and tapped hole.

E. Motors for Use with Variable Frequency Drives:
   1. Motors shall be compatible with characteristics of the intended variable frequency inverters.
   2. Motors shall comply with the performance standards of NEMA MG 1-31.

F. Vertical Motors: NOT USED.

G. Lifting Eyes: Motors weighing more than 50 pounds shall include at least one lifting eye or lifting lug. Construct motor and lifting eyes or lifting lugs to bear motor's full weight.

2.5 ACCESSORIES

A. General:
   1. Provide motor accessories in accordance with this Section unless specified otherwise in the Section for the associated driven equipment.
   2. Provide space heaters in motors five horsepower and larger installed outdoors, and in enclosed motors five horsepower and larger installed indoors in unheated spaces.
   3. Provide thermostat type winding thermal protection for motors in accordance with the following:
      a. Variable speed motors up to and including 25 hp.
      b. Constant speed motors when specified in Section for the associated driven equipment.

B. Space Heaters:
   1. Space heaters for condensation prevention shall operate at 120 volts and shall be sized to provide approximately 10 degrees C temperature rise above ambient.
   2. Heaters shall be low-density type for low surface temperature and long life.

C. Winding Thermal Protection:
   1. Thermostats shall be bi-metal disk or rod type embedded in the stator windings. Thermostat contacts shall be normally-closed, automatic-reset type, rated 120 vac, five amps minimum, opening on excessive temperature. Provide three thermostats, one in each phase, wired to motor junction box.

D. Bearing Temperature Protection: NOT USED.

E. Vibration Protection: NOT USED.

F. Medium-Voltage Auxiliary Devices: NOT USED.

G. Single-Phase Motors: NOT USED.

2.6 IDENTIFICATION

A. Nameplates:
   1. Nameplates shall be Type 316 stainless steel with embossed or pre-printed lettering and fastened to the motor frame with Type 316 stainless steel pins.
   2. Nameplates shall have stamped on them the motor manufacturer's name, voltage, number of Hertz and phases, horsepower rating, amperes and temperature rise at rated load, full load speed, locked rotor amperes or code letter, service factor, NEMA nominal efficiency, model number, insulation class, bearing number, serial number and maintenance manual number.
   3. Name plates for explosion proof motors shall indicate the Division, Class and Group of the hazardous location in which the motor is intended for use.
   4. Dual-voltage motor nameplates shall include connection diagrams.

5. Nameplate markings shall be in accordance with NEMA MG 1-10.

2.7 SOURCE QUALITY CONTROL

A. Shop Tests:
   1. Perform shop testing on the motors at the manufacturer's facility. Shop test shall be in accordance with NEMA MG 1, UL 674, and UL 1004 and shall demonstrate that the motors tested comply with the Contract Documents.
   2. Submit shop test reports identifying tests performed and results obtained.
   3. Motors shall be given Routine Test in accordance with NEMA MG 1-12.55 and IEEE 112. Test shall include the following:
      a. Measurement of winding resistance.
      b. No-load readings of current and speed at normal voltage and frequency.
      c. Current input at rated frequency with rotor at standstill for squirrel-cage motors (locked rotor amperes).
      d. High-potential test.
      e. Bearing inspection.

PART 3 – EXECUTION

3.1 INSTALLATION

A. General:
   1. Install motors in accordance with the Contract Documents and manufacturer's instructions and recommendations. Obtain written interpretation from ENGINEER in the event of conflict between manufacturer's instructions and recommendations and the Contract Documents.
   2. Install in accordance with Laws and Regulations.
   3. Do not modify structures to facilitate installation of motors, unless approved in writing by ENGINEER.
   4. Carefully and properly align motors with the driven equipment.
   5. Secure motors to mounting surfaces with anchorage devices complying with manufacturer's recommendations that are of sufficient size and quantity to secure motor to equipment.
   6. Until start-up and operation, tightly cover and protect motors from dirt, water, and chemical and mechanical damage.

3.2 FIELD QUALITY CONTROL

A. Site Tests:
   1. Inspect motors prior to supplying electricity to (energizing) equipment. Do not energize equipment without ENGINEER's permission. Inspections shall include the following:
      a. Inspect motor and equipment for physical damage.
      b. Inspect motor for proper anchorage, mounting, grounding, connection, and lubrication.

c. Check for unusual noise and indications of overheating during initial or test operation.

B. Manufacturer's Services:

1. Preparing and submitting manufacturer's field report for each visit to the Site.

+ + END OF SECTION + +

SECTION 40 70 05

PRIMARY SENSORS AND FIELD INSTRUMENTS

PART 1 - GENERAL

1.1 DESCRIPTION

A. Scope:
   1. CONTRACTOR shall provide all labor, materials, equipment and incidentals as shown, specified and required to furnish, install, calibrate, test, adjust and place into satisfactory operation all primary sensors and field instruments shown and specified herein.
   2. Contract Documents illustrate and specify functional and general construction requirements of the sensors and field instruments and do not necessarily show or specify all components, wiring, piping and accessories required to make a completely integrated system. CONTRACTOR shall provide all components, piping, wiring, accessories and labor required for a complete, workable, and integrated system.
   3. CONTRACTOR shall be responsible for installing in-line flow elements (magnetic flow meter flow tubes, insert flow tubes, propeller flow meters) and for providing taps in the process piping systems for installation of other flow, pressure, and temperature sensing instrumentation.

B. Coordination: Coordinate with other suppliers for installation of all items specified herein and required to ensure the complete and proper interfacing of all components and systems.

C. Related Sections:
   1. Section 05 50 13, Miscellaneous Metal Fabrications.

1.2 QUALITY ASSURANCE

A. Acceptable Manufacturers:
   1. Furnish primary process measurement devices by the named manufacturers or equal equipment by other manufacturers.
   2. The named manufacturers have been specified to establish the standard of quality and performance of the equipment to be supplied.
   3. Obtain all sensors and field instruments of a given type from the same manufacturer.

B. Manufacturers' Responsibilities and Services:
   1. Design and manufacture the primary process measurement devices in accordance with the detailed Specifications herein.

1.3 PRODUCT DELIVERY, STORAGE AND HANDLING

A. Primary process measurement devices shall not be delivered to the Site until all product information and system Shop Drawings for the sensors and instruments have been approved by the ENGINEER.

1.4 SUBMITTALS

A. Comply with the requirements specified in Section 01 33 00, Submittal Procedures.

1.5 MATERIALS OF CONSTRUCTION FOR WETTABLE PARTS

A. Provide compatible materials of construction for primary sensors and field instrument (wetted) parts that come in contact with the process fluids listed.

1.6 IDENTIFICATION TAGS

A. Performance Requirements:
   1. Tag numbers of sensors and field instruments shall be as shown and as specified. For items not shown or specifically tagged, the item tag number shall be established by the system supplier. All instruments, whether field or panel mounted, shall have an identification tag.
   2. Information to be permanently engraved onto the tag shall include the identifying tag number, manufacturer, model number, service, and range.
   3. The tags shall be fastened to the device with self-tapping stainless steel screws. Where fastening with screws cannot be accomplished the tags shall be permanently attached to the device by a circlet of stranded stainless steel wire rope and clamp.
   4. All sensors and field instruments mounted on or within control panels and enclosures shall have the identification tag installed so that the engravings are easily visible to service personnel. Panel mounted devices shall have the tag attached to the rear of the device.

B. Construction Features:
   1. Tags shall be engraved with 3/16-inch letters and constructed as follows.
      a. 3/32-inch thick laminated phenolic for engraving composed of core, laminated on both sides with a matte (non-glare) finish cover sheet.
      b. Core to be black; cover sheet to be white.
      c. Mounting holes to be centered on width and 1/4-inch from each end.

PART 2 - PRODUCTS

2.1 LEVEL TRANSMITTER - ULTRASONIC TYPE INTEGRAL TRANSMITTER

A. Type: Microprocessor based, non-contacting, single point, ultrasonic type continuous liquid level measuring system consisting of a transducer and integral transmitter.

B. Location and Service: Ultrasonic level transmitters with integral type transmitter shall be installed at each of two (2) thickened sludge holding tank locations and at each of two (2) additional RAS splitter box locations, as indicated on the Drawings.

C. Performance Requirements:
   1. Accuracy: 0.25 percent of maximum range with temperature compensation.
   2. Resolution: 0.1 percent of range or 3 mm, whichever is greater.
   3. Range: 1 to 20 feet.
   4. Damping: Adjustable damping rate.
   5. Ambient Temperature:
      a. Electronics: -40 degrees F to 175 degrees F.
      b. Transducer: -40 degrees F to 175 degrees F.
   6. Analog Output: One isolated 4 to 20 mADC into 0 to 550 ohms.
   7. Power: Loop powered.
   8. Filter: Electronic filter to smooth the small variations in the level signal that result from surface waves or minor disturbances.

D. Construction Features:
   1. Transmitter:
      a. Microprocessor based control circuitry.
      b. Keypad for system programming and configuration. Programming and configuration values shall be stored in EEPROM memory that does not require battery back-up.
      c. NEMA 4X polycarbonate enclosure. Provide Type 316 stainless steel hardware for mounting at the location shown on the Electrical Drawings.
      d. Mounting:
         1) Thickened sludge holding tank: Flange mounted at operating floor as detailed on Drawings.
         2) Ras splitter box: Wall mounted angle or box bracket.
      e. Display: multi-field backlit LCD.
         1) For RAS splitter box transmitters, connect to loop powered display with polycarbonate NEMA 4X enclosure mounted on 316 stainless steel backplate with sun shield, as detailed on Drawings. Display shall be Precision Digital PD6604 Series with Model PDA2801 plastic enclosure or approved equal.
      f. Units of Measure: Feet.
      g. Front panel indication of loss of echo and temperature.
      h. Adjustable blanking distance.
   2. Transducer:
      a. PVDF with 2-inch NPT threaded process connection.
      b. Integral temperature sensor for temperature compensation.

c. Piezoelectric barium titanite crystal.
d. Beam angle:
1) Thickened sludge holding tank: Not to exceed 10 degrees.
2) RAS splitter box: Not to exceed 10 degrees.
e. Transducer/transmitter shall be intrinsically safe with FM approval for Class 1, Division 2 electrical area installation.

E. Products and Manufacturers: Provide one of the following:
1. Siemens Sitrans LU240.
2. Or equal.

2.2 PRESSURE GAUGE – BOURDON TUBE

A. Type: Bourdon Tube Pressure Element Type, Liquid Filled Gauge (for pressure ranges of 15 psi and greater and vacuum ranges to 30-inches Hg):

B. Performance Requirements:
1. Range: As specified in the Instrument Index.
2. Accuracy: ±0.5 percent of span (ANSI B40.1 Grade 2A).

C. Construction Features:
1. Case:
a. Solid front design constructed of glass filled polyester.
b. Color: Black.
2. Size: 4-1/2-inch.
3. Ring: Threaded, glass filled polyester.
4. Window: Glass.
5. Dial: White with black markings.
6. Filling Liquid: Silicone.
7. Overpressure protection: Full blowout back.
8. Bourdon Tube and Socket:
a. Type 316 stainless steel.
b. Heliarc welded, unless otherwise specified.
9. Movement:
a. Type 300 series stainless steel.
b. Rotary geared with Teflon S coating, or cam and roller type.
c. Built-in overload and underload movement stops.
10. Connection: 1/4-inch male NPT, bottom.
11. Mounting: Stem Mount.
12. Calibration:
a. Adjustable pointer.
b. Externally accessible zero adjustment.

D. Accessories:
1. Pressure Snubber: Sintered stainless steel snubber threaded into gauge socket or in external stainless steel housing with 1/4-inch NPT male and female connections.

2. Process Isolation: Provide stainless steel ball valves for process isolation.

E. Products and Manufacturers: Provide one of the following:
1. Ashcroft, Duragage 1279 Series.
2. Helicoid, Series 900.
3. Wika EN 837.
4. Or equal.

2.3 PRESSURE GAUGES - BELLOWS

A. Type: Bellows Pressure Element Type Gauges (for low pressure ranges in inches of water up to ten psi).

B. Performance Requirements:
1. Range: As specified in the Instrument Index.
2. Accuracy: ± One percent of span (ANSI B40.1 Grade A).

C. Construction Features:
1. Case and Ring:
   a. Flush Panel Mounted Gauges: Aluminum case with back blowout disc and steel ring hinged at top and retained by a clamp screw at the bottom. Case and ring shall be black epoxy coated.
   b. Stem and Surface Mounted Gauges: Black phenol turret type case with stainless steel snap ring and back blowout disc.
2. Size: 4-1/2-inch.
3. Window: Glass.
4. Dial: White with black markings.
5. Bellows Element and Socket: Type 316 stainless steel.
6. Movement: Stainless steel with Teflon coated pinion gear and segment shaft.
7. Connection: 1/4-inch male NPT, back or bottom.
8. Mounting: Flush, stem, or surface as specified in the Instrument Index.
9. Calibration:
   a. Pointer: Adjustable.
   b. Stops: Built in overload and underload movement.

D. Accessories:
1. Pressure Snubber: Stainless steel or brass (for copper pipe) throttle screw threaded into gauge socket or external stainless steel housing with 1/4-inch NPT male and female connections.

E. Products and Manufacturers: Provide one of the following:
1. Ashcroft, Types 1187 and 1188.
2. Or equal.

2.4 DIAPHRAGM SEAL

A. General:

1. Furnish diaphragm seals for pressure gauges and switches at locations shown and as specified.
2. The complete diaphragm seal assembly, including gage, switch or transmitter, shall be factory assembled, filled and calibrated to the ranges and switch setpoints specified prior to shipment.
3. System Supplier Manufacturer shall be responsible for assuring that fill volumes and sensitivities of the supplied seals and diaphragms are suitable to provide the required gage, switch or transmitter accuracy over the specified measurement range or at switch setpoints.
4. Location and orientation of the gauges, switches and seal assemblies shall be coordinated with the actual piping and equipment installations so that gages and indicators shall be easily read and accessed for maintenance by plant personnel.
5. Where field mounting and orientation conflicts arise due to incomplete coordination with field changes in the process piping and equipment installation, assemblies shall be relocated, re-oriented, re-assembled and re-calibrated as directed by the ENGINEER.

B. Construction Features:
1. Instrument Connection: 1/4-inch NPT.
2. Process Connection: 1/2-inch NPT.
3. Flushing Connection: 1/4-inch NPT.
4. Top Housing Materials: Type 316 stainless steel.
5. Process Side Housing Materials:
   a. Type 316L stainless steel for metallic piping.
   b. PVC or CPVC to match non-metallic piping.
6. Bolting Materials: Type 316 stainless steel.
7. Diaphragm, O-Rings, and Gasket Materials:

Process Fluid	Diaphragm	O-Ring	Gasket
Wastewater/Sludge	316 SS	Buna-N	Buna-S

8. Filling Liquid: Silicone.
9. Working Pressure Rating: Equal to or greater than the attached gage or switch operating pressure specified in Exposed Piping Schedule in Section 40 05 05, Exposed Piping Installation, whichever is greater.

C. Accessories:
1. Provide fill/bleed screw to permit filling of instrument and diaphragm seal.
2. Provide a clean-out ring which holds the diaphragm captive in the upper housing to allow the upper housing assembly to be removed for recalibration or cleaning of the process side housing without the loss of filling liquid or change in calibration.

D. Products and Manufacturers: Provide one of the following:
1. Helicoid, Type 100 HAC.
2. Or equal.

2.5 ACCESSORIES

A. Mounting Hardware – Provide stainless steel mounting hardware as necessary to mount equipment in locations as described in the Contract Documents.

B. Special Tools – Provide one set of any special, non-standard tools required to operation and maintain the equipment.

2.6 SPARE PARTS

A. Provide one (1) spare ultrasonic transducer with integral transducer. Provide one (1) spare clear lid, one (1) blind lid, and one (1) lid O-ring.

PART 3 - EXECUTION

3.1 INSTALLATION

A. CONTRACTOR shall require the system supplier to furnish the services of qualified factory-trained servicemen to assist in the installation of the instrumentation and control system equipment.

B. Install each item in accordance with manufacturer's recommendations and in accordance with the Contract Documents. Transmitters and instruments, which require access for periodic calibration or maintenance, shall be mounted so they are accessible while standing on the floor. Care shall be taken in the installation to ensure sufficient space is provided between instruments and other equipment or piping to allow for easy removal and servicing.

C. All items shall be mounted and anchored using stainless steel hardware, unless otherwise noted.

D. All field instruments shall be rigidly secured to walls, stands or brackets as required by the manufacturer and as shown.

E. Conform to all applicable provisions of the NEMA standards, NEC and local, State and Federal codes when installing the equipment and interconnecting wiring.

F. Calibrate, test, and complete final adjustments to all field instruments.

+ + END OF SECTION + +

** THIS PAGE INTENTIONALLY LEFT BLANK **

SECTION 43 21 13

RAS AND WAS PUMPING EQUIPMENT

PART 1 - GENERAL

1.1 DESCRIPTION

A. Scope:
   1. CONTRACTOR shall provide all labor, materials, equipment and incidentals as shown, specified and required to furnish and install end suction, dry pit, screw centrifugal pumps complete and operational with motors and accessories as shown and specified.
   2. VFDs specified under Section 26 29 23, Low-voltage Variable Frequency Drives, shall be supplied by pumping equipment manufacturer.

B. Coordination:
   1. Review installation procedures under this and other Sections and coordinate the installation of items that must be installed with, or before the pumping equipment Work.

C. Related Sections:
   1. Section 05 05 33, Anchor Systems.
   2. Section 26 29 23, Low-voltage Variable Frequency Drives.
   3. Section 40 05 93, Common Motor Requirements for Process Equipment.

1.2 REFERENCES

A. Standards referenced in this Section are listed below:
   1. American Gear Manufacturers' Association, (AGMA).
   2. American National Standards Institute, (ANSI).
   3. American Society for Testing Materials, (ASTM).
   4. Standards of American Water Works Association, (AWWA).
   5. Institute of Electrical and Electronic Engineers, (IEEE).
   6. American National Standards Institute (ANSI)/Hydraulic Institute (HI):
      a. 14.6 – Rotodynamic Pumps for Hydraulic Performance Acceptance Tests
   7. National Electrical Code, (NEC).
   8. Standards of the National Electrical Manufacturers Association, (NEMA).
   9. National Sanitation Foundation, (NSF).

1.3 QUALITY ASSURANCE

A. Manufacturer's Qualifications:
   1. Manufacturer shall have a minimum of five years experience producing substantially similar equipment and shall be able to show evidence of at least five installations in satisfactory operation for at least five years.

B. Component Supply and Compatibility:
   1. Obtain all equipment included in this Section regardless of the component manufacturer from a single pump manufacturer.
   2. The pump equipment manufacturer to review and approve or to prepare all Shop Drawings and other submittals for all components furnished under this Section.
   3. All components shall be specifically constructed for the specified service conditions and shall be integrated into the overall assembly by the pump equipment manufacturer.

1.4 SUBMITTALS

A. Action Submittals: Submit the following:
   1. Product Data:
      a. Documents showing and describing the complete pump-motor assembly and its individual components. At a minimum, the documents shall include general arrangements (plans and vertical elevations), dimensions, weights of a complete assembly and individual components, bill of materials, materials of construction, mechanical and electrical sizes and ratings, and other information pertaining to the equipment supply.
      b. Manufacturer's literature, illustrations, specifications and engineering data including: dimensions, materials, size, weight, performance data and curves showing overall pump efficiencies, required net positive suction head, flow rate, head, brake horsepower, motor horsepower, speed and shut-off head. Where variable speed units are specified, curves shall have at least five speeds plotted between maximum and minimum rpm.
      c. Motor documents including a complete motor parameter data sheet, nameplate data, torque and performance curves, winding and auxiliaries wiring diagram, motor dimensional outline drawing, production test report, installation and O&M manual, and any other motor-related documentation demonstrating that the pump-motor system has been coordinated and will function properly as a unit.
      d. Motor tests and data as described in Part 2.
      e. Pump manufacturer’s standard performance curves showing, head-capacity relationship, brake horsepower, NPSH, overall pump efficiency, and speed. The curves shall be complete for the entire range of operation from shutoff to minimum head conditions.
      f. Certified bearing life calculations prior to manufacturing the pump.
      g. Static and dynamic loads of the pump and motor assembly to be used for design of the pump foundation.
      h. Complete installation drawings and instructions including anchor bolt location, arrangement and size required for a complete pump-motor assembly as well as base plate installation and fabrication details. Pump manufacturer's representative shall review the conditions of installation including pump locations and arrangements and approve such prior to submittal.

2. Shop Drawings:
    a. Fabrication, assembly, installation and wiring diagrams.

B. Informational Submittals: Submit the following:
1. Source Quality Control:
    a. Guarantee with proof of ability to maintain efficiency.
    b. Original certified pump performance curves of the actual pumps being supplied as specified herein stamped by a professional engineer. Do not deliver the pumps to the Site until the Engineer has approved the test results.
    c. Startup testing instructions and final startup test report.
    d. Vibrational field testing reports.
    e. Field alignment report including, but not limited to, angular alignment, axial or parallel alignment, and coupling gap.
    f. Name, address and phone number of manufacturer and manufacturer's local OEM service facility.
    g. Manufacturer’s installation certificate.
    h. Manufacturer’s equipment warranty.
    i. Shop test results.
    j. Field test results.

C. Closeout Submittals: Submit the following:
1. Operation and Maintenance Data:
    a. Submit complete installation, operation and maintenance manuals including test reports, maintenance data and schedules, description of operation and spare parts information.
    b. Furnish Operation and Maintenance Manuals in conformance with the requirements of Section 01 78 23, Operations and Maintenance Data.

1.5 DELIVERY, STORAGE AND HANDLING

A. Packing, Shipping, Handling and Unloading:
1. Deliver materials to the Site to ensure uninterrupted progress of the Work.

B. Storage and Protection:
1. Store materials to permit easy access for inspection and identification. Keep all material off the ground, using pallets, platforms, or other supports. Protect steel members and packaged materials from corrosion and deterioration.

C. Acceptance at Site:
1. All boxes, crates and packages shall be inspected by CONTRACTOR upon delivery to the Site. CONTRACTOR shall notify ENGINEER, in writing, if any loss or damage exists to equipment or components. Replace loss and repair damage to new condition in accordance with manufacturer’s instructions.

PART 2 - PRODUCTS

2.1 EQUIPMENT PERFORMANCE

A. Description:
   1. Pumps shall be horizontal, single passage, end suction, side discharge, non-clog, dry pit, solids handling, mixed flow, screw centrifugal type.
   2. The overall pump design shall combine high efficiency, low required NPSH, a large solid passage, and the ability to handle rags or other fibrous material without plugging.
   3. The hydraulic design of the impeller shall combine the action of a positive displacement screw with the action of a single vane centrifugal impeller.
   4. The impeller flange or impeller shall contain a spiral groove on the rear face so that any solids in the pumped media are discharged from the space between the backplate and the rear of the impeller.
   5. In order to maintain optimum running clearances along the entire length of the impeller to maintain design hydraulic efficiencies, the geometry of the impeller and suction liner shall be conical, so any axial adjustment of the liner will cause the clearance between the impeller and suction piece to change uniformly along the entire length of the impeller.

B. Performance Criteria:
   1. Pumps shall comply with the minimum design conditions specified below and shall be specially designed, constructed, and installed for the service intended:

(The remainder of this page was left blank intentionally)

Design Conditions	RAS Pumps	WAS Pumps
Location:	Outdoors	Outdoors
Duty:	Continuous	Continuous
Number required:	6 ea.	4 ea.
Normally Operate:	3 ea.	4 ea.
Design Point With 1 Pump Running:	2,150 gpm at 18 ft.	380 gpm at 15.5 ft.
Min. Efficiency at Design Point:	68%	60%
Pump Operating Point With 3 Pumps Running	1,200 gpm at 30 ft.	-
Pump Operating Point With 4 Pumps Running	-	150 gpm at 26 ft.
Shut off Head, (ft):	43	33
Motor, (Hp):	25 (maximum)	5 (maximum)
Maximum Speed, (rpm):	1,200	900
Suction Size, (in.):	10	6
Discharge Size, (in.):	10	4
Liquid Pumped:	Secondary clarifier return activated sludge	Secondary clarifier waste activated sludge
Solids, (percent):	1-2	1-2
Temperature, (ºF):	68	68
Control:	VFD	VFD

2.2 MANUFACTURERS

A. Products and Manufacturers: Provide one of the following:
   1. WEMCO, as manufactured by Trillium Pumps USA-SLC.
   2. Or approved equal.

B. CONTRACTOR shall be responsible for all design modifications and alterations in the Work necessary to accommodate substitutions differing in dimensions or other characteristics from those contemplated in the Contract Drawings or Specifications.

2.3 DETAILS OF CONSTRUCTION

A. Pump Materials and Construction:
   1. The pump volute, backplate, and impeller flange shall be of close grained cast iron, ASTM A 48.
   2. Replaceable suction liner shall be made of materials of ASTM A 532 High Chrome Iron, minimum 450 Brinell hardness.
   3. Impeller Type: Screw centrifugal, dynamically balanced.
   4. Impeller Material: ASTM A 532 high chrome iron, minimum 450 Brinell hardness.
   5. Shaft: AISI 1045 steel.
   6. Furnish with 125 pound ANSI connection flanges and handhole.

7. Anchor bolts and inserts shall be furnished by CONTRACTOR under Section 05 05 33, Anchor Systems, and shall be sized and installed in accordance with the manufacturer's recommendations.
8. All bolts, nuts and cap screws shall have either hexagon heads or be socket head cap screws.
9. Brass or stainless steel nameplates giving the manufacturer's model and serial number, rated capacity, head, speed and all other pertinent data shall be attached to the pump.

B. Bearing Housing
1. The bearing housing shall be of cast iron, ASTM A48 and shall be of the back pull out design so that the bearing housing and impeller can be removed without disconnecting the casing from the suction and discharge piping.
2. The shaft shall be AISI 1045 steel and provided with suitable bearings capable of taking all mechanical and hydraulic loads.
3. Bearings shall be anti-friction, grease or oil lubricated with a minimum L 10 life of 50,000 hours.
4. The stuffing box shall be isolated from contaminants in the pumped media by pump-out grooves machined into the impeller back shroud and into the volute backplate, to prevent debris from reaching the shaft seal.

C. Flushless Shaft Sealing
1. Shaft sealing system shall include tandem mechanical seal arrangement requiring no external flush. Shaft sealing shall be by independently-mounted, tandem mechanical seals contained in an oil chamber that is formed as an intrinsic part of the bearing frame and allows the seals to be completely submerged in and lubricated by the oil bath.
2. The mechanical seal nearest the bearing shall utilize carbon/ceramic face and shall isolate the seal cooling oil from the bearing frame. When mounted in a vertical configuration, this shall allow the pump to operate continuously when submerged within 4" of the upper bearing cap.
3. To prevent fouling from hair and other fibers, the mechanical seal nearest the impeller shall shield the stainless steel spring which loads the seal face from the pumped fluid. The seal faces shall be a solid tungsten carbide rotating face running against a solid silicon carbide stationary face. Seals with both faces of similar materials, or seals with bonded, soldered, or converted face surfaces are not equal or acceptable.
4. The mechanical seal nearest the impeller shall be contained in a seal chamber formed by the impeller flange and a recess cast into the bearing frame. To prevent debris from entering the chamber and to prolong the mechanical seal life, a flush port shall be provided so that an optional external water flush can be supplied directly into the seal chamber.
5. Single cassette mechanical seal may be furnished in lieu of tandem mechanical seal arrangement, provided that no external flush is required. Single cassette mechanical seal shall be S10, as manufactured by Chesterton, or approved equal.

D. Mounting

1. Pump assembly shall be horizontally mounted with the motor flexibly coupled to pump.
2. The pump manufacturer shall provide a common pump and motor base constructed of a minimum of 3/8 inch thick fabricated steel, suitably reinforced to support the full weight of the pump, motor, coupling and guard. Base shall be of structural steel or cast-iron and provided with a means for collecting and draining oil and water.
3. The pump manufacturer shall furnish and install a flexible spacer coupling between the motor shaft and the pump shaft. Coupling shall have a minimum 1.5 service factor based on the drive rated horsepower.
4. An OSHA-approved 316 stainless steel coupling guard shall be furnished and installed to safely enclose the coupling.

E. Motors

1. Motors shall conform to the requirements of Section 40 05 93, Common Motor Requirements for Process Equipment.
2. Drip-proof, 480 VAC, 3 phase, 60 Hz, TEFC, horizontal, solid shaft, ball bearing type.
3. Motors shall be inverter duty rated for VFD operation in accordance with NEMA MG 1 Part 31.4.4.2.
4. Motors shall be in accordance with all current applicable standards of NEMA, IEEE, AFBMA, NEC, and ANSI.
5. Motors shall be normal starting torque, normal slip, squirrel cage induction type.
6. Motors shall be capable of carrying full load current continuously without injurious temperature rise in an ambient temperature of 40°C.
7. Motors shall be provided with a service factor of 1.15 on sine-wave power and 1.0 on inverter power.
8. Motors shall be of sufficient size so that there will be no overload on the motor above rated nameplate horsepower under any condition of operation from shut-off to zero head, unless otherwise specifically permitted in this Section.
9. Motor thrust bearings shall be adequate to carry continuous thrust loads under all conditions of pump operation from zero head to shut-off.
10. Locked rotor currents shall be as specified in NEMA standards.
11. Lubrication may be grease or oil type.
12. Motor Tests and Data:
    a. For each motor from one to ten horsepower in size, furnish an inspection report for the motor or for a previously manufactured electrically duplicate motor which was tested. Provide the following minimum data:
        1) Running light current.
        2) Locked rotor current.
        3) Winding resistance measurement.
        4) High potential test.
        5) Bearing inspection.

b. For each motor larger than ten horsepower, furnish a certified motor data sheet for the actual motor or for a previously manufactured electrically duplicate motor which was tested. Provide the following minimum data:
   1) Starting torque.
   2) Efficiency at 1/2, 3/4 and full load.
   3) Power factor at 1/2, 3/4 and full load.
   4) Percent slip.
   5) Running light, full load and locked rotor current.
   6) Current balance check.
   7) Vibration check.
   8) Temperature rises and results of dielectric tests.
   9) Motor type and frame size.
   10) Bearing type and lubrication medium.
   11) Insulation and enclosure type.

2.4 CONTROLS AND ACCESSORIES

A. Pump motors shall be controlled using a variable frequency drive. Pumping equipment supplier shall provide VFDs specified under Section 26 29 23, Low-voltage Variable Frequency Drives.

2.5 TOOLS AND SPARE PARTS

A. The following spare parts shall be furnished:
   1. One mechanical seal for RAS pump.
   2. One mechanical seal for WAS pump.
   3. One set of gaskets for two RAS pumps and one WAS pump.
   4. Two sets of special tools required for normal maintenance or operation.

B. Spare parts shall be packed in sturdy containers with clear indelible identification markings and shall be stored in a dry, warm location until transferred to the OWNER at the conclusion of the project.

2.6 PAINTING

A. Pumps, motors, drives, frames, baseplates, appurtenances, etc., shall receive manufacturer's standard epoxy finish paint system prior to shipment.

B. Machined, polished, and non-ferrous surfaces shall be coated with corrosion prevention compound.

C. Field painting shall conform to the requirements of Section 09 91 00, Painting.

2.7 SOURCE QUALITY CONTROL

A. Shop Tests:

1. Pump casings shall be hydrostatically tested to twice the discharge head or 1-1/2 times the shutoff head, whichever is greater.
2. Running Test: Pump assembly shall be operated from zero to maximum capacity as shown on the approved curve. Results of the test shall be shown in a plot of test curves showing head, flow, horsepower, efficiency, and current. Readings shall be taken at a minimum of five evenly spaced capacity points including shut-off, design point and minimum head for which pump is designed to operate.
3. Each test shall be witnessed by a Registered Professional Engineer, who may be an employee of the manufacturer. The Registered Professional Engineer shall sign and seal all copies of curves and shall certify that hydrostatic tests were performed. Tests shall be conducted in conformance with applicable methods described in HI 14.6. A pump performance test acceptance grade of 1U shall apply.
4. Pumps shall not be shipped until the ENGINEER has approved the test reports.

2.8 ANCHORAGE

A. Anchor rods (bolts) shall be provided by CONTRACTOR. Refer to Section 05 05 33, Anchor Systems.

PART 3 - EXECUTION

3.1 INSPECTION

A. CONTRACTOR shall verify that structures, pipes and equipment are compatible.

B. Make adjustments required to place system in proper operating condition.

3.2 INSTALLATION

A. Manufacturer’s representative shall check and approve the installation prior to operation. Manufacturer’s representative shall field test and calibrate the equipment to assure that the system operates to the OWNER’S satisfaction.

B. All pumping units shall be installed on concrete bases and secured with anchor bolts in accordance with the manufacturer's recommendations and as shown. Where new concrete bases are called for, the concrete bases shall be poured up to 1-inch below the metal bases or soleplates. Concrete work and grout shall be in accordance with Division 03, Concrete. The base with the equipment mounted thereon, or the soleplate, shall then be accurately shimmed to grade and the spaces between filled with an approved non-shrink grout. After the grout has reached its initial set, exposed edges shall be cut back 1/2-inch and the edges neatly finished with 1 to 2 cement mortar. Where channel baseplates are used, the void inside the channel shall be filled with non-shrink grout and the open ends plastered with 1 to 2 cement mortar.

C. Neatly placed 1-inch type 316 stainless steel tubing shall be provided for each pump to convey leakage to nearest drainage inlet.

D. Installation shall include furnishing and applying an initial supply of grease and oil, recommended by the manufacturer.

E. Support piping independent of pumping equipment.

F. Check and align all pump, motor and flexible shafting.

3.3 START-UP AND FIELD TEST

A. CONTRACTOR shall verify that structures, pipes and equipment are compatible.

B. Make adjustments required to place system in proper operating condition.

C. All testing shall be done in the presence of the ENGINEER and the equipment manufacturer or their approved representative. Testing performed upon the pump and motor shall include the following inspections:
   1. Motor shall be tested in accordance with Section 40 05 93, Common Motor Requirements for Process Equipment.
   2. Pump shall be tested for conformance with this specification at the following flow points:
      a. Rated flow conditions.
      b. Shut off (zero flow) condition.
      c. Midway between shut off and minimum stable flow.
      d. Minimum stable flow.
      e. Midway between minimum stable flow and rated.
      f. 120 percent of the rated flow.
      g. Runout (maximum) head condition.
   3. Before operating with power, equipment shall be turned over by hand in order to ascertain that free rotation exists.
   4. Conduct pre-operation checkout per manufacturer's installation and operations manual.
   5. Perform vibration testing of pump throughout entire range of speed in accordance with HI Standards to verify that they are within specified tolerances.
   6. Verify speed of operation of pump. This shall be completed using a temporary handheld tachometer to be furnished by the CONTRACTOR.
   7. Electrical connections shall be checked for compliance with this specification.

3.4 FIELD QUALITY CONTROL

A. All equipment will be given running tests by CONTRACTOR at the job Site following installation of the equipment and controls. Should the tests indicate any malfunction, CONTRACTOR shall make any necessary repairs and adjustments. Such tests and adjustments shall be repeated until, in the opinion of the ENGINEER,

the installation is complete and the equipment is functioning properly and accurately and is ready for permanent operation.

B. A factory trained representative of the manufacturer shall be provided for installation supervision, start-up and test services and operation and maintenance personnel training services. The representative shall make a minimum of 5 visits, minimum 8 hours on-Site for each visit, to the Site. The first visit shall be for assistance in the installation of equipment. Subsequent visits shall be for checking the completed installation, start-up and training of the system. Manufacturer's representative shall test operate the system in the presence of the ENGINEER and verify that the equipment conforms to the requirements. Representative shall revisit the Site as often as necessary until all trouble is corrected and the installation is entirely satisfactory.

C. All costs, including travel, lodging, meals and incidentals, shall be considered as included in CONTRACTOR'S bid price.

+ + END OF SECTION + +

** THIS PAGE INTENTIONALLY LEFT BLANK **

SECTION 46 71 33

ROTARY DRUM THICKENING EQUIPMENT

PART 1 - GENERAL

1.1 DESCRIPTION

A. Scope:
   1. CONTRACTOR shall provide all labor, materials, equipment and incidentals as shown, specified and required to furnish and install one rotary drum thickener sludge dewatering system complete and operational to dewater secondary clarifier waste activated sludge.
   2. The equipment to be provided for each drum thickener shall include, but not be limited to:
      a. A drum thickener, pre-assembled complete with woven wire mesh drum, frame support structure, trunnion wheels, drainage pans, discharge assembly, drum drive, flocculation tank, mixer and mixer drive, spray bars, removable spray shield and enclosed discharge chute
      b. Rotary Drum Thickener Control Panel.

B. Coordination:
   1. Review installation procedures under this and other Sections and coordinate the installation of items that must be installed with, or before the rotary drum thickening equipment Work.

C. Related Sections:
   1. Section 05 05 33, Anchor Systems.
   2. Section 05 50 13, Miscellaneous Metal Fabrications.
   3. Section 09 91 00, Painting.

1.2 REFERENCES

A. Standards referenced in this Section are listed below:
   1. American Bearing Manufacturers Association, (ABMA).
   2. American Gear Manufacturers' Association, (AGMA).
   3. American National Standards Institute, (ANSI).
   4. American Society for Testing and Materials, (ASTM).
   5. American Welding Society, (AWS).
   6. National Electrical Code, (NEC).
   7. National Electrical Manufacturers' Association, (NEMA).
   8. The Society for Protective Coatings, (SSPC).
   9. Underwriters’ Laboratories, Inc., (UL).
      a. UL 508, Industrial Control Equipment.

1.3 QUALITY ASSURANCE

A. Manufacturer's Qualifications:
   1. Manufacturer shall have a minimum of five years experience producing substantially similar equipment and shall be able to show evidence of at least five installations in satisfactory operation for at least five years.

B. Component Supply and Compatibility:
   1. Obtain all equipment included in this Section regardless of the component manufacturer from a single drum thickener manufacturer.
   2. The drum thickener equipment manufacturer to review and approve or to prepare all Shop Drawings and other submittals for all components furnished under this Section.
   3. All components shall be specifically constructed for the specified service conditions and shall be integrated into the overall assembly by the drum thickener equipment manufacturer.

1.4 SUBMITTALS

A. Action Submittals: Submit the following:
   1. Shop Drawings:
      a. Manufacturer's literature, illustrations, specifications and engineering data including: general arrangement, outline drawings, dimensions, materials, size, weight, performance data, and motor horsepower.
      b. Drawings showing fabrication methods, assembly, and installation details.
      c. Setting drawings, templates, and directions for the installation of anchor bolts and other anchorages.
      d. Motor data including type, size and model number; assembly drawings, rated size of the motors with calculations supporting the selected motor size; temperature rating.
      e. Complete control panel details, wiring diagrams, logic diagrams and detailed submittals.
      f. Electrical Information:
         1) Wiring diagrams showing all electrical connections to motors and variable speed controls.
         2) Drawings of control panels.
      g. Mixing valve shop drawings.

B. Informational Submittals: Submit the following:
   1. Source Quality Control Submittals:
      a. Submit results of control panel shop tests, as required.
   2. Site Quality Control Submittals:
      a. Submit a written report of the results of the field tests, as required.
      b. Submit process performance test results.
      c. Submit written report of the results of each visit by a manufacturer's serviceman, including purpose and time of visit, tasks performed and results obtained.

3. Certificates:
    a. Letters from the equipment manufacturers stating that the rotary drum thickening equipment specified herein are totally compatible and will successfully operate under the operating load conditions and all other operating characteristics provided by the control package specified and as shown.
    b. A statement from CONTRACTOR stating that the all components are totally compatible with the rotary drum thickening equipment specified herein and that CONTRACTOR has fully coordinated all of the efforts and requirements for complete and operable rotary drum thickening equipment.
4. Name, address and phone number of manufacturer and manufacturer's local OEM service facility.
5. Manufacturer’s installation certificate.
6. Manufacturer’s equipment warranty.
7. Shop test results.
8. Field test results.

C. Closeout Submittals: Submit the following:
    1. Operation and Maintenance Manuals:
        a. Submit complete Installation, Operation and Maintenance Manuals, including, test reports, maintenance data and schedules, description of operation, and spare parts information.
        b. Furnish Operation and Maintenance Manuals in conformance with the requirements of Section 01 78 23, Operations and Maintenance Data.

1.5 DELIVERY, STORAGE AND HANDLING

A. Packing, Shipping, Handling and Unloading:
    1. Deliver materials to the Site to ensure uninterrupted progress of the Work.

B. Storage and Protection:
    1. Store materials to permit easy access for inspection and identification. Keep all material off the ground, using pallets, platforms, or other supports. Protect steel members and packaged materials from corrosion and deterioration.

C. Acceptance at Site:
    1. All boxes, crates and packages shall be inspected by CONTRACTOR upon delivery to the Site. CONTRACTOR shall notify ENGINEER, in writing, if any loss or damage exists to equipment or components. Replace loss and repair damage to new condition in accordance with manufacturer's instructions.

PART 2 - PRODUCTS

2.1 GENERAL

A. The rotary drum thickener furnished shall thicken and remove sludge by means of a rotating woven wire mesh drum. The rotary drum thickener shall continuously receive, dewater and thicken sludge from the incoming wastewater, allowing filtrate to pass through the openings in the drum. Angled flights on the inside of the drum shall be provided to direct the thickened sludge towards the discharge end of the drum. The thickened sludge shall exit the drum and be directed into a thickened sludge holding tank. The rotary drum thickener shall be installed as shown on the Drawings and per the manufacturer's recommendations.

2.2 DESIGN CRITERIA

A. Design Parameters and Conditions:
   1. Type of Sludge: Waste activated sludge.
   2. Number of Rotary Drum Thickeners: 1 each.
   3. Maximum Hours of Operation: 9 hours/day, 7 days/week.
   4. Maximum Hydraulic Throughput/Feed Rate: 300 gpm per thickener.
   5. Sludge Feed Solids Concentration: 0.5 to 1.5%.
   6. Thickened Sludge Dry Solids Concentration: 3.0 to 5.0%.
   7. Minimum Solids Capture Efficiency: 95%.
   8. Maximum Polymer Consumption: 6.0 to 12.0 active lbs./ ton of feed sludge dry solids.
   9. Polymer Type: Existing polymer type and injection ring location to be reused.
   10. Nominal Sludge Inlet Pipe Diameter: 6-inch.
   11. Nominal Filtrate Drain Pipe Diameter: 8-inch.
   12. Source Spray Water Pressure: 40 psig.
   13. Minimum Spray Wash Requirements: 18 gpm at 120 psig.
   14. Maximum Drum Drive Motor Power: 2 hp.
   15. Maximum Floc Tank Drive Motor Power: 1 hp.
   16. Maximum Booster Pump Motor Power: 5 hp.

2.3 MANUFACTURERS

A. Manufacturers: Provide equipment of one of the following:
   1. Parkson.
   2. Andritz.
   3. Or approved equal.

2.4 DETAILS OF CONSTRUCTION

A. General:
   1. All wetted and non-wetted components shall be fabricated from type 316 stainless steel. This includes the floc development tank, input connection, discharge assembly, and driven impeller; the rotary element composed of the

input assembly, the multiple stages of the rotary element, the discharge assembly, the filtration media covering the various stages and all fasteners; the supporting frame assembly, the shower deflection covering and all fasteners; the washing header and fasteners; and the return water collection tank.

2. Rotary drum thickener equipment shall be designed for continuous operation.
3. The entire process shall be monitored and controlled from a manufacturer-supplied Rotary Drum Thickener Control Panel.
4. Design requirements of the unit specified shall be understood to establish minimum requirements only. The equipment, when installed and operating, shall meet or exceed the specified minimum performance requirements.
5. Machine shall be completely factory assembled and tested, unless otherwise specified herein. The main frame assembly shall require only bolting to the floor and connection of external piping and electrical wiring. Ancillary equipment may be shipped loose.
6. Machine shall be designed and constructed in such a manner so as to be suitable for continuous heavy-duty use in a humid and corrosive atmospheric environment.
7. Motors: All motors and drives shall be TEFC for corrosive duty and shall be sized to be non-overloading over the full range of operating conditions specified herein.
8. Flanged connections shall be provided for the influent connection, filtrate water connection, and the end enclosure discharge chute connection. Flanged connections shall be equipped with 316L SS face rings and 316SS loose back-up flanges. The flanges will be drilled to 125/150 lb. pattern.

2.5 ROTARY DRUM SCREEN

A. The drum shall have a maximum nominal diameter of 44-inches and a maximum nominal length of 172-inches.

B. The cylinder housing surrounding each stage shall be a perforated drum.

C. The rotary system shall be comprised of several dewatering stages.

D. Each stage shall be covered with woven wire mesh consisting of V-shaped wires continuous welded together and mechanically secured to the drum.

E. The woven wire meshes covering each stage shall be easily changed with simple tools.

F. The mesh opening shall be selected based on the open area suitable to achieve the desired performance.

G. Delivery of thickened solids shall be by gravity resulting from a series of detention rings and angled flights welded to the interior of the drum, which direct the thickened sludge to the discharge end of the cylinder as the cylinder rotates.

2.6 EQUIPMENT FRAME

A. The equipment frame shall consist of a welded structural assembly, properly sized to withstand the maximum load conditions associated with operation of all equipment including the flocculation tank, drum screen, drive systems, splash guard assemblies, and accessories, as shown on Drawings or specified herein.

B. The frame shall be equipped with forklift channels and lifting lugs at a minimum of four locations, or as otherwise recommended by the manufacturer.

C. The frame shall provide for mounting of the trunnion wheels.

D. All structural components shall be a minimum 1/4-inch thick.

E. The equipment shall include a base frame, skid, or mounting legs.

F. The frame shall include grounding lugs. Ground shall be terminated on frame anchorage.

2.7 TRUNNION WHEELS

A. Each screen assembly shall be provided with trunnion wheels and trunnion wheel mounting assemblies. Trunnion wheel assemblies shall be mounted to the base frame to provide positive horizontal placement of the rotary drum screen assembly.

B. The trunnion wheels shall be constructed of a cast, high-density polymer or copolymer with an aluminum hub and deal sealed.

C. Trunnion wheels shall have a minimum outside diameter of 8 inches.

D. The unit shall be equipped with a minimum of four trunnion wheels.

E. Bearings shall be press fit steel tapered roller bearings. The bearings shall remain sealed on the outer face by way of lubrication seals. Bearing shall receive lubrication through an internal grease cavity located in the trunnion wheel support shaft.

F. The support shaft shall provide center lubrication to the bearing and trunnion wheels. Each shaft shall be provided with an external grease fitting for ease of lubrication.

G. The trunnion wheel support bracket will be fabricated of type 316 stainless steel. The bracket assembly will be formed, stiffener reinforced, accurately fabricated and positioned on the drum frame to support the loads imposed by the rotary drum assembly.

H. The trunnion wheels shall be removable without the need for the drum to be removed from the unit.

2.8 SPRAY SHIELDS/COVER HOOD

A. The rotary element shall be fully enclosed on the outside with removable spray shield panels designed to contain and fugitive spray and minimize mist emissions. The panels shall overlap and shall be fastened to the framing members of the rotary element. The panels shall be limited in dimension to facilitate removal.

B. Lift-off panels shall be included on the sides of the rotary drum thickener to support access to the trunnion wheel grease fittings.

C. The spray shields and cover hood shall be a minimum 14-gauge and shall be constructed of Type 316 stainless steel.

2.9 DRUM DRIVE ASSEMBLY

A. The drive assembly shall be complete with inverter-duty motor, gear reducer and drive. The TEFC inverter duty motor input power shall be 3 phase, 60 Hz, 460 volts.

B. Drum drive will be accomplished by the engagement of the drive sprocket with NH78, heavy-duty, bi-directional plastic chain or belt.

C. The drive assembly will be mounted on a rigid base with provisions for adjustment of the drive, sprocket, and chain/belt interface.

E. The motor shall be suitable for severe service with a minimum service factor of 1.15. The motor shall be close-coupled to a parallel-helical type gear reducer.

F. The drum speed shall be controlled by means of an electronic variable frequency drive.

G. Gear reducers shall have ball or roller bearings throughout with all moving parts immersed in oil. Shafts shall be of high strength alloy steel ground to required tolerances. All ball or roller bearings shall be B-10 rated and manufactured by a member of the American Bearing Manufacturers Association for 100,000-hour life (minimum). At least one bearing on each shaft shall be of the combined radial and thrust type.

H. Gear reducer units shall meet the standards of the American Gear Manufacturers Association for such equipment. The output capacity of the gear reducer shall be equal to the motor horsepower less reducer losses at the rated service factor.

2.10 FLOCCULE CONDITIONING CHAMBER

A. A flanged inlet shall be fitted to a floccule conditioning chamber that includes an integral rotating paddle-type flocculator and drive assembly. The conditioning chamber shall sufficiently dissipate the incoming velocity and provide even flow to a

distribution tray. The conditioning chamber shall allow for a minimum retention time of 60-seconds at maximum flow.

B. The floccule conditioning chamber shall have a minimum wall thickness of 10 gauge and shall be constructed of Type 316 stainless steel. The conditioning chamber shall include a 3-inch NPT drain and PVC pipe plug.

C. The flocculator shall be fitted with two adjustable paddles. The flocculator drive assembly shall include a TEFC inverter duty motor with 3 Phase, 60 Hz, 460 volt input power. The motor shall be close-coupled to a gear reducer.

2.11 DISTRIBUTION TRAY

A. A distribution tray shall extend from the floccule conditioning chamber over the drum. The distribution tray shall distribute flow evenly at right angles to the screen surface.

B. The distribution tray shall have a flat bottom designed to direct flow to the first 1/3 of the screen surface. The distribution tray shall have staged flow diversion vanes positioned to divert the flow evenly to the horizontal screen approach wings on both sides of the channel. The screen approach wings shall be properly sized and positioned to gently introduce the flow onto the screening surface.

C. The distribution tray shall be a minimum of 12-gauge thick and shall be constructed of Type 316 stainless steel.

2.12 SPRAY SYSTEM

A. A self-cleaning washing header shall be oriented in a horizontal position the length of the rotary system.

B. The washing header shall contain high capacity flat-fan spray nozzles of varying orifice size to emit a progressively reduced flow of high pressure washing water in the direction of the rotary system delivery end.

C. The washing header shall be mounted with U-bolts permitting the adjustment of the angle of impact of the water, from tangential to square, permitting the restriction of water re-entering the stages to only that quantity required to maintain openness of the filtration woven wire mesh.

D. Spray header to be fitted with an Ashcroft stainless steel pressure gauge, liquid filled type 1008S with a 1/4 inch NPT back connection, 2-1/2 inches dial scaled at 0/160 psi.

E. Spray header shall be Schedule 40, Type 316 stainless steel pipe

F. Spray nozzles shall be on 4-inch centers, maximum.

G. An internal deflector plate shall be provided to prevent the deposit of solids on the spray bar.

H. The spray bar shall be fitted with two manual ball valves for isolation.

I. Solenoid valve shall be provided as part of the spray wash system. The solenoid valve shall be a 2-way, pilot operated, ASCO 8210 series brass body valve with NBR seals and discs, and a Red Hat II 120 VAC watertight NEMA 4X solenoid enclosure or approved equal.

2.13 END ENCLOSURE AND DISCHARGE CHUTE

A. Provide with an end enclosure to contain discharge sludge mist or spatter. The enclosure shall be fabricated of 14 gauge minimum, 316 stainless steel and fitted with doors to allow access for thickened sludge inspection and sampling.

B. The end enclosure shall be fitted with a discharge chute for directing the thickened sludge to the floor opening.

C. Provide end enclosure to include a flanged pipe connection with blind flange to support future connection to an odor system (by others).

D. Discharge chute shall include a custom extension, as depicted on the Drawings. The extension shall be flanged by plain end. Plain end shall be mitered. Custom discharge chute extension shall be provided my manufacturer and shall serve to direct thickened sludge to the center of the existing floor access door opening.

2.14 FILTRATE DRAIN PAN

A. A filtrate drain pan shall be mounted to the base frame underneath the drum to capture and direct filtrate away from the unit. A flanged drainpipe shall be provided as part of the drain pan. All structural components shall be of a minimum 12-gauge and shall be manufactured of Type 316 stainless steel.

2.15 WASHWATER BOOSTER PUMP

A. The washwater booster pump shall be a single-stage, regenerative type turbine, self-priming, horizontal, in-line pumping unit.

B. The pumping unit shall be provided with 1 1/4-inch NPT end suction and 1-inch NPT top discharge connections.

C. The pump will be driven by a constant speed, 460 Volts, 3 Phase, 60 Hertz, 3500 RPM, TEFC, premium efficient, severe duty rated motor with a 1.15 service factor.

D. Pump shall be direct coupled to an electric motor by means of a spacer type flexible coupling with coupling guard

E. Pumping unit shall be securely supported and shall be complete with pump, electric motor, and all other appurtenances that are specified or required for proper operation. Pump performance shall be stable and free from cavitation and noise throughout the operating head range at design suction pressures.

F. The pump shall be all stainless steel construction.

G. Pump shall feature carbon-ceramic mechanical shaft seal.

H. Pump shall be mounted on a type 316 stainless steel baseplate extending under both the pump and driving motor.

I. The pump shall be factory tested.

J. Provide with a 20 mesh strainer shipped loose for installation on the suction side of the pump connection.

K. Booster pump shall be Model ES as manufactured by Burks or approved equal.

L. Provide minimum of 8 feet of rubber hose for connection of booster pump discharge and drum thickener spray header.

2.16 VORTEX MIXING VALVE AND POLYMER INJECTION RING

A. Rotary drum thickener shall be supplied with a sludge conditioning system designed to efficiently mix polymer with the sludge and to adequately condition the sludge for optimum dewatering.

B. The system shall consist of an in-line vortex mixer with a variable orifice, polymer injection ring, and polymer solution distribution manifold supplied by the equipment manufacturer and shipped loose for field installation on the inlet piping upstream of the thickener by the installing CONTRACTOR.

C. The mixing valve shall have a flanged type 316 stainless steel housing, and adjustable orifice connected to an externally mounted lever and counterweight, and a removable side plate to allow inspection and cleaning.

D. The open throat shall be fully adjustable downward and shall open automatically to prevent clogging. The position of the counterweight on the externally mounted orifice plate lever shall be fully adjustable to allow for adjustment of the mixing energy, regardless of the mounting angle, while the unit is in operation.

E. The position of the counterweight on the externally mounted orifice plate lever shall be fully adjustable, within a 360 degree circle, to allow for adjustment of the mixing energy, regardless of the mounting angle, while the unit is in operation.

F. The system shall include an inline, UHMW polyethylene polymer injection ring and manifold block. The polymer injection ring shall inject polymer at a minimum of four points evenly spaced along the circumference of the ring. The inside diameter of the ring shall not be less than the inside diameter of the sludge feed piping. The manifold block shall divide the single polymer solution feed line into separate flows for connection to the polymer injection ring.

G. Transparent tubing shall be supplied which shall connect from the ports on the injection ring to the flow spitting manifold. Tubing shall be chemically compatible with polymer solution service and rated for exterior an exterior application and UV exposure.

H. The mixing valve and polymer injection ring shall be field installed on the inlet piping by the CONTRACTOR. The location of the assembly should be adjustable to a minimum of three separate locations upstream of the drum thickener to allow adjustment of the mixing time prior to reaching the thickener unit. Pipe spools of the proper size supplied by the CONTRACTOR shall be installed in the installation locations not occupied by the mixing valve and injection ring assemblies. The sludge conditioning system will be installed at one of the three locations 15 ft, 20 ft, or 25 ft. Pipe spools of proper size will occupy the remaining two (2) locations.

2.17 CONTROLS

A. The control panel shall be designed and manufactured by the same company that furnishes the rotary drum thickener.

B. The vendor-supplied control panel shall be a totally enclosed, front access type with top/side/bottom entry. The panel shall be manufactured by a UL listed control panel facility and shall bear a UL 508 label. Construction of the control panel enclosure shall be NEMA 4X, Type 316 stainless steel with indicating devices and switches mounted on the front door.

C. Main control panel wiring shall be color-coded, labeled, neatly cabled and supported in non-flammable wiring raceways. Wiring shall be minimum 16-gauge MTW stranded wire.

D. All selector switches, pushbuttons, and pilot lights shall be NEMA rated components.

E. The control panel shall contain all power and control devices as shown, which shall include, but not be limited to, the following:
   1. Main disconnect switch.
   2. Step down control transformer.
   3. Branch circuit protection.
   4. Control power and run indicating lights.
   5. Alarm light indicating overcurrent and starter overload conditions.
   6. Alarm reset pushbutton.
   7. HOA selector switches.

a. Drum drive.
b. Floc tank agitator drive.
c. Booster pump.
d. Spray wash solenoid.

8. Emergency stop pushbutton.
9. VFDs with overload protection. VFDs shall be designed for reliable control of the 3-phase inverter duty motors. The drives shall produce a 3-phase adjustable frequency output to vary the motor speed. The drives output voltage shall be a function of output frequency and shall be adjustable to meet motor parameters so that optimum motor performance can be obtained. The variable frequency drive shall be as manufactured by Yaskawa.
   a. Drum drive with 10:1 speed potentiometer.
   b. Floc drive with 10:1 speed potentiometer.
10. Washwater booster pump motor starter.
11. Spray water solenoid valve contacts.
12. Adjustable timer for operation of the spray bar(s).
13. Pull cord emergency stop switch contacts.
14. Air conditioner/fan.
15. Run time hour meter for each motor.
16. PLC hardware. PLC shall be Allen Bradley CompactLogix or approved equal.
17. Run and alarm auxiliary contacts.

F. Solenoid Valve: One (1) normally closed solenoid valve shall be provided to control flow to the spray wash assembly. The brass body valve shall be 120 Volt, single phase, 60 Hz with a NEMA 4X housing.

G. Internals, including variable frequency drives, to accommodate 460V, 3 Phase, 60 Hz incoming power.

2.18 SEQUENCE OF OPERATION

A. Thickener Hand Operation: When the selector switch is in the Hand position, the drum screen will run continuously. Turning the screen selector switch to Off will stop the unit. The drum speed is set by the potentiometer at the control panel.

B. Thickener Automatic Operation: When the selector switch is in the Auto position, the drum screen shall have the capability of being started based on an external dry contact (future, by others). After the external contact has opened, the screen shall continue to run for an off delay time to clear the screen of any residual solids. The drum speed is set by the potentiometer at the control panel. Thickener shall not start unless booster pump is running.

C. Polymer Feed System Operation: This existing system shall be reused and shall operate independently of the rotary drum thickener controls. The polymer feed system shall be manually started after the WAS pump(s) (sludge feed) are running.

C. Flocculation Tank Mixer Hand Operation: When the selector switch is in the Hand position, the mixer will run continuously. Turning the selector switch to Off will stop the unit. The mixer speed is set by the potentiometer at the control panel.

D. Flocculation Tank Mixer Automatic Operation: When the selector switch is in the Auto position, the mixer will run continuously while the screen drum is operating. The mixer speed is set by the potentiometer at the control panel.

E. External Spray Wash Hand Operation: When the selector switch is in the Hand position, the spray wash will run continuously. Turning the selector switch to Off will stop the spray wash.

F. External Spray Wash Automatic Operation: When the selector switch is in the Auto position, the spray wash will run continuously while the screen drum is operating. A timer shall allow for user adjustment of the time delay between screen drum motor start and stop and spray wash start and stop. Initially the booster pump shall be configured to start and run for 5 minutes prior to

G. Fault Conditions:
   1. Excessive motor current will trip the starter overload relays, immediately stop the drive motor, and illuminate the alarm indicating light. This fault must be reset by depressing the motor starter overload reset internal to the control panel.
   2. Momentary motor over current will trip the current monitor, immediately stop the drive motor, and illuminate the alarm indicating light. Pushing the reset pushbutton will reset this fault.

2.19 FASTENERS AND ANCHOR BOLTS

A. All fasteners and anchor bolts shall be Type 316 stainless steel.

B. The equipment manufacturer shall furnish all fasteners required for the assembly of the equipment.

C. The CONTRACTOR shall provide all equipment anchors per manufacturer's recommendations. Equipment manufacturer shall determine quantity, diameter, length, embedment, and spacing.

D. Anchor bolts shall conform to the requirements of Section 05 05 33, Anchor Systems.

E. All anchor bolts shall be a minimum of 1/2 inch diameter.

2.20 SURFACE PREPARATION AND PAINTING

A. Motors, frames, ferrous metals, appurtenances, etc., shall receive shop primer and finish coating conforming to the requirements of Section 09 91 00, Painting. If any

damage to the paint system occurs, the equipment shall be repainted as directed by the ENGINEER.

B. Surface preparation and painting shall conform to the requirements of Section 09 91 00, Painting.

C. All gears, bearing surfaces, machined surfaces and other surfaces which are to remain unpainted shall receive a heavy application of grease or other rust-resistant coating. This coating shall be maintained during storage and until the equipment is placed into operation.

2.21 SPARE PARTS

A. Furnish and deliver the following spare parts carefully boxed or packaged and plainly marked for reordering:
   1. One (1) complete set of trunnion wheels.
   2. One (1) driven sprocket.
   3. One (1) drive sprocket.
   4. One (1) idler sprocket.
   5. One (1) drive chain
   6. A one-year supply of all recommended lubricants.

B. Spare parts shall be packed in sturdy containers with clear indelible identification markings and shall be stored in a dry, warm location until transferred to the OWNER at the conclusion of the Project.

PART 3 - EXECUTION

3.1 INSPECTION

A. CONTRACTOR shall verify that structures, pipes, and equipment are compatible.

B. Make adjustments required to place system in proper operating condition.

3.2 INSTALLATION

A. Manufacturer's representative shall check and approve the installation prior to operation. Manufacturer's representative shall field test and the equipment to assure that the system operates to the OWNER'S satisfaction.

3.3 FIELD PAINTING

A. Field painting shall conform to the requirements of Section 09 91 00, Painting.

3.4 FIELD QUALITY CONTROL

A. All equipment will be given running tests by CONTRACTOR at the Site following installation of the equipment and controls. Should the tests indicate any malfunction, CONTRACTOR shall make any necessary repairs and adjustments. Such tests and adjustments shall be repeated until, in the opinion of the ENGINEER, the installation is complete and the equipment is functioning properly and accurately and is ready for permanent operation.

3.5 PROCESS PERFORMANCE TEST

A. The process performance test period shall be conducted on weekdays and will consist of one day for polymer dosage and operational optimization and 5 days of testing. At least three test runs shall be conducted during the 5-day test period, the results of which will be used by ENGINEER for performance evaluation. A continuous 4-hour test run will be conducted each day during the test period.

B. Samples of the sludge feed, sludge cake, and filtrate/liquid waste shall be taken at the end of each hour of the test runs. Manufacturer may request that two additional sets of samples be taken at any time during the last two hours of a test run. Average results of the samples taken during each test run will be used to represent the performance during the run.

C. Test information required for each test run is as follows:
   1. Test run number.
   2. Sludge feed rate in gpm.
   3. Percent dry solids of feed sludge.
   4. Percent dry solids of thickened sludge.
   5. Percent water removed.
   6. Percent solids capture.
   7. Liquid waste dry solids in mg/l.
   8. Spray water flow rate in gpm.
   9. Spray water dry solids in mg/l.
   10. Liquid waste discharge rate in gpm.
   11. Polymer feed rate in gpm.
   12. Polymer type and feed concentration.
   13. Polymer consumption in pounds/ton of feed sludge dry solids.
   14. Flow rate of the filtrate and spray water leaving the machine (to be measured by determining the time required to fill a predetermined volume, by actual measurement of flow in the drain line, or by any other method approved by OWNER'S personnel or ENGINEER).

D. CONTRACTOR shall utilize the services of a commercial laboratory acceptable to OWNER for obtaining all test results. OWNER will have access to the tabulated test results within three days of the end of CONTRACTOR'S scheduled testing period.

E. CONTRACTOR shall use the average feed sludge consistency during a run for reporting purposes. CONTRACTOR shall construct curves representing the feed sludge percent dry solids versus cake percent dry solids and the feed sludge percent dry solids versus polymer dosage for each throughput rate. The average values of percent dry solids and polymer dosage for each of the test runs shall be used to plot points to construct the curves.

F. The rates of unconditioned sludge feed to the drum thickener, polymer solution added to the feed sludge, water used by the spray wash system, and liquid waste discharged from the drum filter shall be measured and recorded during the test runs, whenever samples are taken.

G. Upon completion of the testing, the ENGINEER will tabulate the test results in terms of machine throughput rate, polymer usage, solids capture, and thickened sludge dry solids and make a determination as to the conformance of each thickener with the process performance requirements. ENGINEER'S determination will be based on the average performance of each machine over the test period. The average process performance for each machine will be calculated on the basis of the total quantities of water and solids processed by each machine during the test period. If ENGINEER determines that the thickening equipment meets the process performance, the equipment will be acceptable and CONTRACTOR and OWNER will be notified accordingly.

H. ENGINEER will notify CONTRACTOR and OWNER if the thickener fails to meet the guaranteed performance. A second test may be allowed. The second test shall be conducted within 30 days of the initial acceptance test and in accordance with the procedure described above for the initial test.

I. Upon completion of the second test, ENGINEER will tabulate the test results and will notify CONTRACTOR and OWNER as to equipment conformance with guaranteed performance. If the equipment does not meet the performance requirement from the second test, the unit shall be modified. Additional testing of any equipment that has been repaired, modified, or replaced shall be conducted in accordance with the procedure for the initial acceptance test described above. Conformance with the performance requirements must be achieved before the equipment will be acceptable.

J. Satisfactory completion of the process performance test does not release CONTRACTOR from the guarantee of satisfactory mechanical operation.

3.6 MANUFACTURER’S SERVICES

A. A factory trained representative shall be provided for installation supervision, start-up and test services and operation and maintenance personnel training services. The representative shall make a minimum of 3 visits, minimum 8 hours on-Site for each visit, to the Site. The first visit shall be for assistance in the installation of equipment. Subsequent visits shall be for checking the completed installation, start-up and

training of the system. Manufacturer's representative shall test operate the system in the presence of the ENGINEER and verify that the equipment conforms to the requirements. Representative shall revisit the Site as often as necessary until all trouble is corrected and the installation is entirely satisfactory.

B. All costs, including travel, lodging, meals and incidentals, for additional visits as may be required to provide a satisfactory installation shall be at no additional cost to the OWNER.

+ + END OF SECTION + +

** THIS PAGE INTENTIONALLY LEFT BLANK **

INDIAN RIVER COUNTY, FL

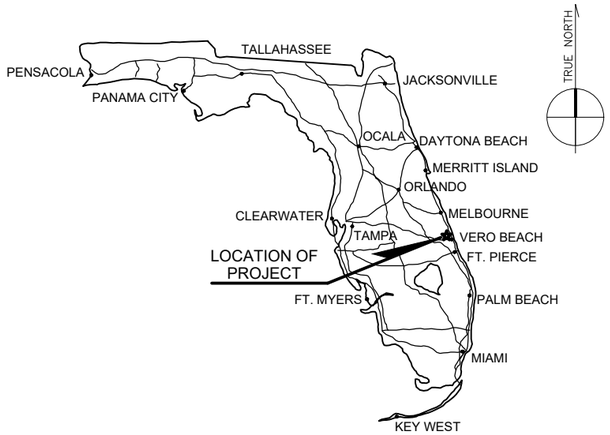

CENTRAL WASTEWATER TREATMENT FACILITY RAS/WAS PUMP REPLACEMENTS 100% DESIGN MARCH 2020

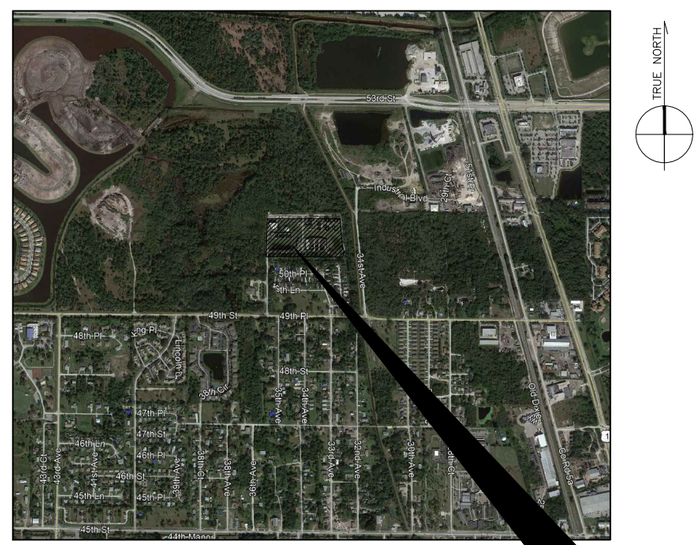

LOCATION MAP
NOT TO SCALE

INDEX

KEY CONTACTS

OWNER:
INDIAN RIVER COUNTY
DEPARTMENT OF UTILITY SERVICES
1801 27TH STREET
VERO BEACH, FL 32960

TELEPHONE: 727-567-8600
CONTACT: ARJUNA WERAGODA , P.E.

Call 48 hours before you dig in Florida

It's the Law!
1-800-432-4770
Sunshine State One Call of Florida, Inc.

ARCADIS

ARCADIS-US, INC.
CERTIFICATE OF AUTHORIZATION NO. 7917
3109 W DR. MARTIN LUTHER KING JR. BLVD. SUITE, 350 TAMPA, FL 33607

REGISTERED ENGINEERS/ STATE OF FLORIDA

GENERAL DEMOLITION MECHANICAL	TIM WARE NO. 71716	_____
STRUCTURAL	HOUSAM HOBI NO. 59360	_____
ELECTRICAL	ERIC B. BATTLE II NO. 81285	_____

GENERAL NOTES:

1. PLANT OPERATIONS SHALL NOT BE INTERRUPTED BY CONSTRUCTION ACTIVITIES. CONTRACTOR SHALL COORDINATE HIS WORK WITH OWNER'S OPERATIONS PERSONNEL TO PREVENT FACILITY DISRUPTION. CONTRACTOR SHALL MAINTAIN ACCESS TO THE PLANT AND SHALL NOT IMPEDE VEHICLE TRAFFIC, OPERATIONS, OR MAINTENANCE.
2. APPROXIMATE LIMITS OF CONTRACTOR STAGING/LAYDOWN AREA ARE SHOWN. CONTRACTOR SHALL COORDINATE EXACT FOOTPRINT WITH OWNER PRIOR TO MOBILIZATION. CONTRACTOR SHALL SUBMIT A CONSTRUCTION STAGING PLAN FOR APPROVAL PRIOR TO INITIATION OF THE WORK.
3. THE INFORMATION PROVIDED IN THESE DRAWINGS IS SOLELY TO ASSIST THE CONTRACTOR IN ASSESSING THE NATURE AND EXTENT OF CONDITIONS THAT MIGHT BE ENCOUNTERED DURING THE COURSE OF THE WORK. THE BIDDERS ARE DIRECTED, PRIOR TO BIDDING, TO CONDUCT WHATEVER INVESTIGATIONS THEY DEEM NECESSARY TO ARRIVE AT THEIR OWN CONCLUSIONS REGARDING THE ACTUAL CONDITIONS THAT WILL BE ENCOUNTERED, AND UPON WHICH THEIR BIDS WILL BE BASED.
4. ALL WORK SHALL BE IN ACCORDANCE WITH THE LATEST APPLICABLE FEDERAL, STATE AND LOCAL AGENCY'S REGULATIONS AND STANDARDS. WHEN CONFLICTS OCCUR BETWEEN REQUIREMENTS SHOWN ON THESE DRAWINGS AND SPECIFICATIONS AND REGULATORY CRITERIA, THE MORE STRINGENT REQUIREMENT SHALL PREVAIL. THE CONTRACTOR SHALL VERBALLY BRING ANY CONFLICT TO THE ATTENTION OF THE ENGINEER IMMEDIATELY FOLLOWED BY AN OFFICIAL WRITTEN NOTIFICATION WITHIN 24 HOURS.
5. THE CONTRACTOR IS RESPONSIBLE FOR OBTAINING PERMITS THAT MAY BE REQUIRED THAT PERTAIN TO HIS CONTRACTED WORK. SUCH PERMITS SHALL BE OBTAINED BY THE CONTRACTOR PRIOR TO THE CONTRACTOR BEGINNING WORK ON THE PORTION OF THE PROJECT REQUIRING SAID PERMITS. ALL PERMIT FEES SHALL BE PAID BY THE COUNTY.
6. THE CONTRACTOR SHALL REPLACE ALL EXISTING PIPING, CONDUITS, SUPPORTS, SPRINKLERS, AND OTHER ITEMS DISTURBED OR DAMAGED BY CONSTRUCTION TO A CONDITION EQUAL TO OR BETTER THAN PRE-CONSTRUCTION CONDITIONS AT NO ADDITIONAL COST TO THE OWNER.
7. CONTRACTOR SHALL USE EXTREME CAUTION AROUND ALL BUIRED AND OVERHEAD ELECTRICAL UTILITIES.
8. THESE DRAWINGS MAY BE ALTERED IN SIZE BY REPRODUCTION. THIS MUST BE CONSIDERED WHEN OBTAINING SCALED DATA.
9. THE CONTRACTOR SHALL FIELD VERIFY ANY AND ALL EXISTING CONDITIONS PRIOR TO COMMENCING CONSTRUCTION AND SHALL NOTIFY THE ENGINEER PROMPTLY OF ANY DISCREPANCIES.
10. THE PIPE LENGTHS INDICATED IN THESE PLANS ARE APPROXIMATE. ACTUAL LIMITS MAY BE SET IN THE FIELD AS DIRECTED BY THE ENGINEER. THE CONTRACTOR SHALL VERIFY IN THE FIELD ALL CONNECTING POINTS FOR ALL PIPING PRIOR TO COMMENCING CONSTRUCTION AND SHALL IMMEDIATELY NOTIFY ENGINEER OF ANY DISCREPANCIES.
11. LOCATIONS, ELEVATIONS, AND DIMENSIONS OF EXISTING PIPING, UTILITIES, STRUCTURES, AND OTHER FEATURES ARE SHOWN ACCORDING TO THE BEST INFORMATION AVAILABLE AT THE TIME THESE DRAWINGS WERE PREPARED, BUT MAY NOT BE ABSOLUTELY CORRECT. THE INDICATED LOCATION OF UTILITIES, PIPING, STRUCTURES AND OTHER FEATURES IS APPROXIMATE. THE CONTRACTOR SHALL BE RESPONSIBLE FOR CONFIRMING EXACT LOCATIONS PRIOR TO BEGINNING CONSTRUCTION.
12. THE CONTRACTOR SHALL HAVE A FOREMAN, OR RESPONSIBLE PARTY, ON SITE AT ALL TIMES WHEN WORK IS BEING PERFORMED. THE FOREMAN SHALL BE AVAILABLE AT ALL TIMES FOR TIMELY RESOLUTION OF PROJECT RELATED ISSUES. THE CONTRACTOR MUST PROVIDE 24 HOUR EMERGENCY PHONE NUMBERS TO THE ENGINEER AND COUNTY.
13. THE CONTRACTOR IS RESPONSIBLE TO PRACTICE AND ENFORCE ALL LOCAL AND STATE JOB AND CONSTRUCTION SAFETY LAWS AND REGULATIONS WITH REGARDS TO CONSTRUCTION PRACTICES AND PROCEDURES. ANY VIOLATION OF THESE LAWS WILL BE REPORTED TO THE APPROPRIATE AUTHORITIES.
14. ALL MATERIALS NOT CLAIMED BY THE COUNTY SHALL BECOME PROPERTY OF THE CONTRACTOR AND SHALL BE DISPOSED BY THE CONTRACTOR IN AREAS PROVIDED BY THE CONTRACTOR.
15. FIELD CONDITIONS MAY NECESSITATE ALIGNMENT AND GRADE DEVIATION OF THE PROPOSED UTILITIES TO AVOID OBSTACLES, AS DIRECTED BY THE ENGINEER OR COUNTY REPRESENTATIVE.
16. THE SYMBOLS AND ABBREVIATIONS LIST IS A STANDARD GUIDE INTENDED FOR GENERAL USE. THEREFORE, NOT ALL SYMBOLS AND ABBREVIATIONS CONTAINED ARE NECESSARILY USED ON THIS PARTICULAR PROJECT AND SHOULD BE USED FOR CLARIFICATION ONLY.
17. THE CONTRACTOR SHALL READ AND UNDERSTAND THE ENTIRE SET OF CONTRACT DOCUMENTS TO ENSURE HE UNDERSTANDS THE FULL SCOPE OF THE PROJECT AND CAN CONVEY THE REQUIRED MATERIALS AND METHODS OF INSTALLATION TO THE CONTRACTORS, SUPPLIERS AND INSTALLERS.
18. ALL EXISTING DIMENSIONS AND ELEVATIONS ARE ± (APPROXIMATE).
19. IT IS THE CONTRACTOR'S RESPONSIBILITY TO BLIND FLANGE OR OTHERWISE PLUG EXISTING AND PROPOSED WORK AS REQUIRED TO MAINTAIN THE FACILITY IN OPERATION AND ISOLATE PIPING CONNECTED TO OPERATING SYSTEMS.
20. IF A CONFLICT IS FOUND BETWEEN DIFFERENT PORTIONS OF THE CONTRACT DOCUMENTS THE CONTRACTOR SHALL NOTIFY THE ENGINEER IMMEDIATELY. CONTINUED CONSTRUCTION OF THE AREA IN CONFLICT SHALL BE AT THE CONTRACTOR'S OWN RISK UNTIL THE CONFLICT IS RESOLVED.

ABBREVIATIONS

AFF	ABOVE FINISHED FLOOR
ALT	ALTERNATE
ARV	AIR RELEASE VALVE
℄	CENTERLINE
CLR	CLEAR
CONC	CONCRETE
CPVC	CHLORINATED POLYVINYL CHLORIDE
DIP or DI	DUCTILE IRON PIPE
DIA or Ø	DIAMETER
DISCH	DISCHARGE
D/S	DISCONNECT SWITCH
DN	DOWN
EA	EACH
EFF	EFFLUENT
EL or ELEV	ELEVATION
EX	EXISTING
FG	FINISHED GRADE
FDTN	FOUNDATION
FIN	FINISHED
FLEX	FLEXIBLE
FLG	FLANGE
FCA	FLANGED COUPLING ADAPTER
FLR	FLOOR
FM	FORCEMAIN
FSU	FLAT SIDE UP
HP	HIGH POINT
ID	INSIDE DIAMETER
INV	INVERT
JT	JOINT
MAX	MAXIMUM
MIN	MINIMUM
M	MOTOR
NTS	NOT TO SCALE
o.c.	ON CENTER
OP	OPERATING
OD	OUTSIDE DIAMETER
PE	PLAIN END
PT	POINT
PVC	POLYVINYL CHLORIDE
RED	REDUCER
RAS	RETURN ACTIVATED SLUDGE
SCH	SCHEDULE
SHT	SHEET
SS	STAINLESS STEEL
THK	THICK / THICKNESS
TYP	TYPICAL
UON	UNLESS OTHERWISE NOTED
WAS	WASTE ACTIVATED SLUDGE
WM	WATERMAIN
W/	WITH
W.S.	WATER SURFACE

LEGEND

- NEW EQUIPMENT, PIPING, STRUCTURE, ETC.
- NEW BURIED EQUIPMENT, PIPING, STRUCTURE, ETC.
- EXIST. EQUIPMENT, PIPING, STRUCTURE, ETC.
- EXIST. BURIED EQUIPMENT, PIPING, STRUCTURE, ETC.
- CENTERLINE
- EXISTING FENCE
- PROPOSED PIPING WITH DIRECTION OF FLOW
- UNDISTURBED SOIL
- GROUND SURFACE
- CONCRETE
- DEMOLITION
- CONSTRUCTION STAGING

SYMBOLS

- AIR RELEASE VALVE (ARV)
- BALL VALVE (BA)
- CHECK VALVE
- GATE VALVE (GV)
- PLUG VALVE (PV)
- PVC BALL VALVE

PHOTO MARKER

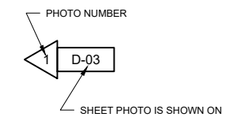

TITLE MARKERS

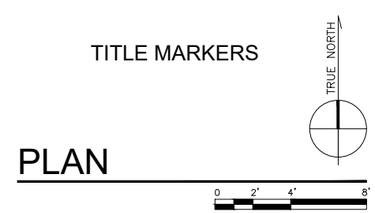

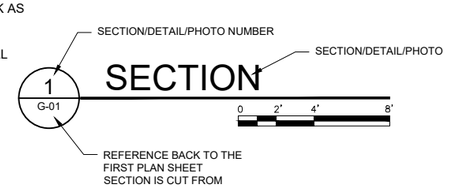

SECTION MARKERS

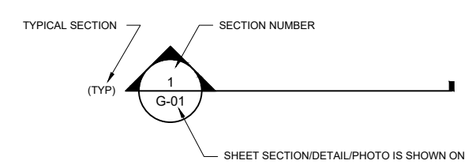

SHEET NUMBER IDENTIFICATION

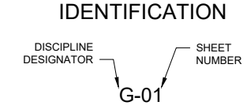

DETAIL MARKERS

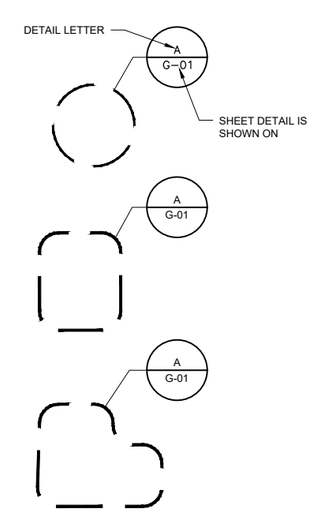

ARCADIS

CERTIFICATE OF AUTHORIZATION 7917
3109 W DR MARTIN LUTHER KING JR BLVD
TAMPA, FL 33607, SUITE 350

CONSULTANTS

SEALS

TIM WARE PE.
FL LIC. No. 71716

VERO BEACH, FL
INDIAN RIVER COUNTY

CENTRAL WASTEWATER TREATMENT FACILITY RAS/WAS PUMP REPLACEMENTS

NO.	DATE	ISSUED FOR	BY
2	3/30/2020	100% DESIGN	JR
1	11/15/2019	90% DESIGN	JR

DATE:	MARCH 2020
PROJECT NO.:	30002159.0000
FILE NAME:	G-02
DESIGNED BY:	J. ROSMAN
DRAWN BY:	A. GUZMAN
CHECKED BY:	T. WARE

SHEET TITLE

GENERAL

ABBREVIATIONS, LEGENDS, SYMBOLS, AND GENERAL NOTES

SCALE: NONE

G-02

SHEET 2 OF 26

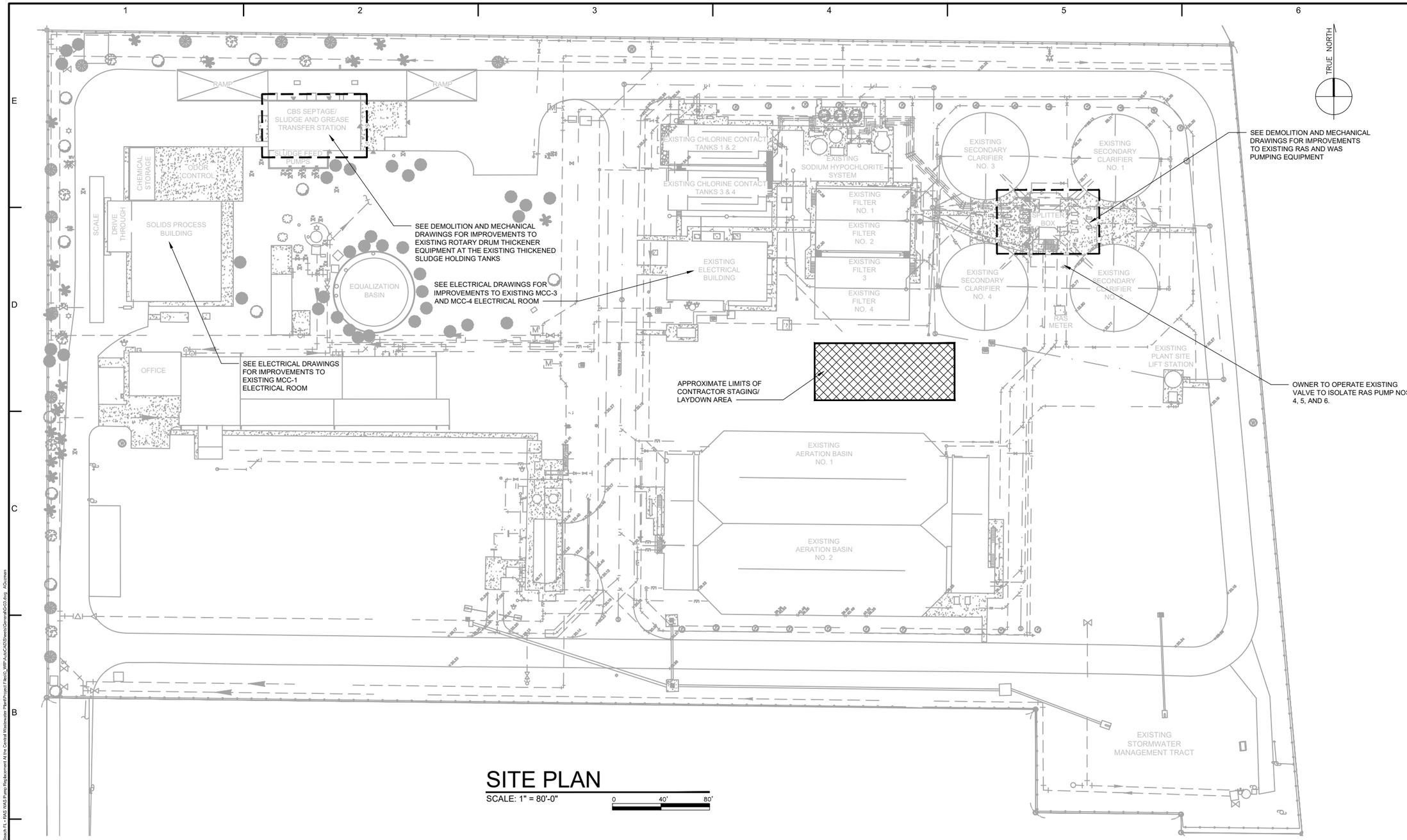

SITE PLAN

SCALE: 1" = 80'-0"

0 40' 80'

NOTES:

1. BACKGROUND FOR DRAWINGS SOURCED FROM SLUDGE HANDLING FACILITY MODIFICATIONS RECORD DRAWINGS, 2012, MASTELLER & MOLER, INC. AND WASTEWATER TREATMENT PLANT EXPANSION 2.0 MGD TO 4.0 MGD RECORD DRAWINGS, 2007, MASTELLER & MOLER, INC.

2. ELEVATIONS SHOWN ARE BASED ON NORTH AMERICAN VERTICAL DATUM 1988 (NAVD88). SITE BM IS SET NAIL AND DISC MMR LB 4644 EL. 22.80. THE ESTABLISHED BM IS INDIAN RIVER COUNTY BM046080 EL. 21.54. CONVERSION FACTOR FROM NAVD88 TO NGVD29 IS +1.43.

ARCADIS
CERTIFICATE OF AUTHORIZATION 7917
3109 W DR MARTIN LUTHER KING JR BLVD
TAMPA, FL 33607, SUITE 350

CONSULTANTS

SEALS

TIM WARE PE.
FL LIC. No. 71716

VERO BEACH, FL
INDIAN RIVER COUNTY

CENTRAL WASTEWATER TREATMENT FACILITY RAS/WAS PUMP REPLACEMENTS

NO.	DATE	ISSUED FOR	BY
2	3/30/2020	100% DESIGN	JR
1	11/15/2019	90% DESIGN	JR

DATE: MARCH 2020
PROJECT NO.: 30002159.0000
FILE NAME: G-03
DESIGNED BY: J. ROSMAN
DRAWN BY: A. GUZMAN
CHECKED BY: T. WARE

SHEET TITLE
GENERAL

SITE PLAN

SCALE: AS NOTED

G-03

SHEET 3 OF 26

Sat, 28 Mar 2020 - 4:43pm C:\Users\agusman\IBM 360\Arcadis\ANA - 23\30021000 - Vero Beach FL - RAS WAS Pump Replacement At the Central Wastewater Plant\Project Files\0_WIP\Auto\CAD\Sheets\General\G-03.dwg AGusman

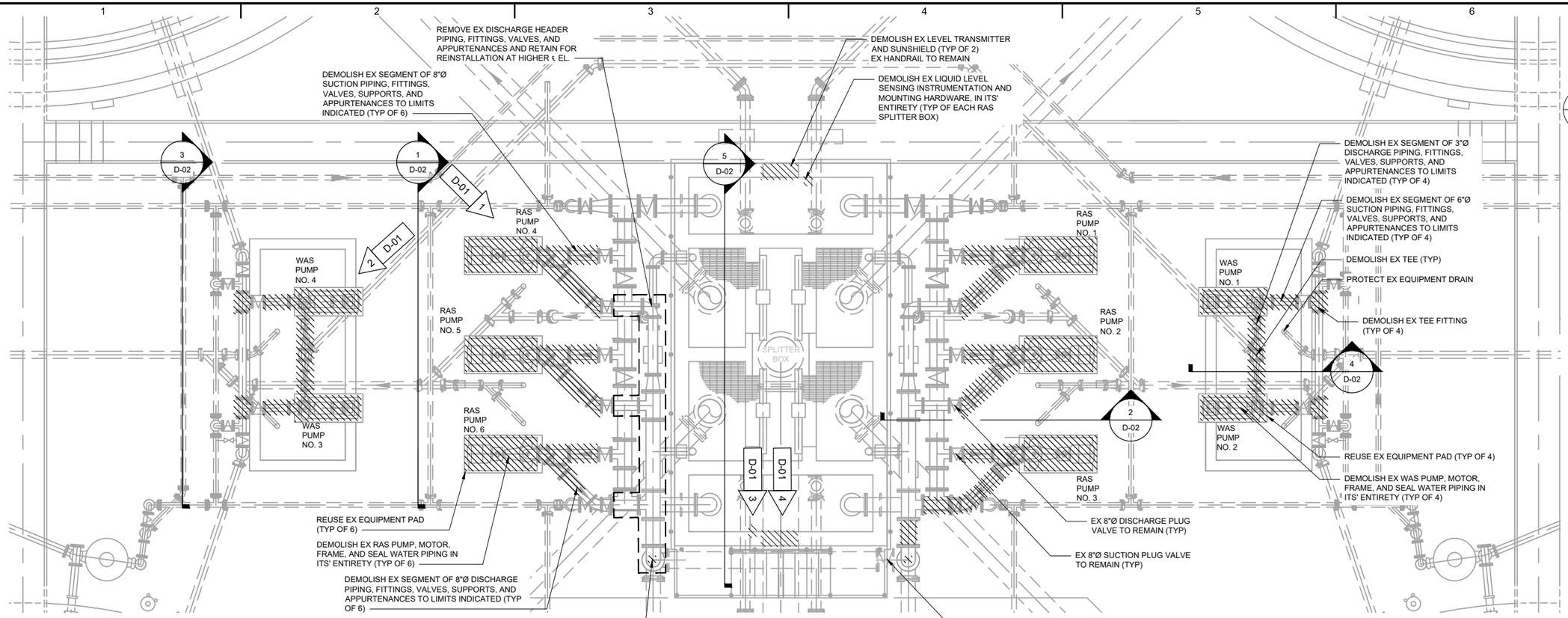

DEMOLITION PLAN

SCALE: 1/8" = 1'-0"

1 D-01 FACING SOUTHEAST

N.T.S.

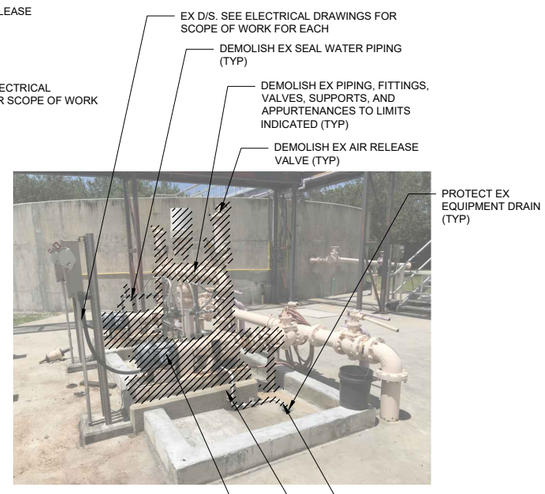

2 D-01 FACING SOUTHWEST

N.T.S.

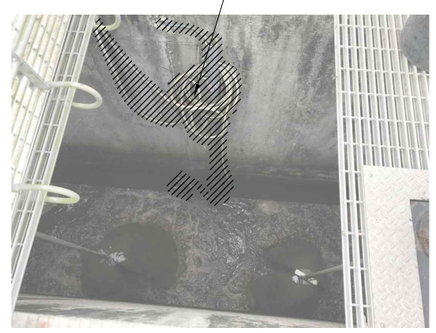

3 D-01 FACING SOUTH

N.T.S.

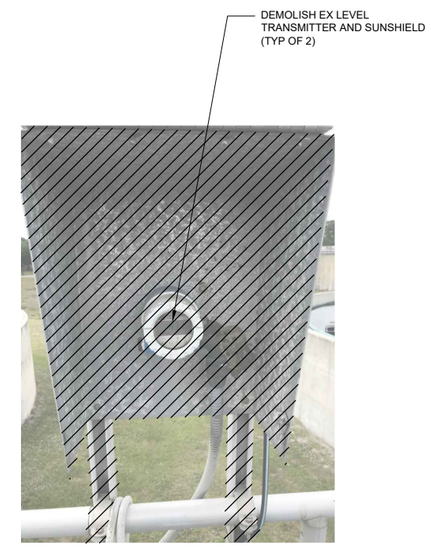

4 D-01 FACING SOUTH

N.T.S.

NOTES:

1. ALL ANCHORAGE FOR REMOVED ITEMS SHALL BE CUT APPROXIMATELY 1.5 INCHES BELOW EXISTING CONCRETE SURFACE. LEVEL CONCRETE SURFACE WITH NON-SHRINK GROUT. SEAL WITH CORROSION INHIBITING SEALANT.
2. FILL AND PATCH PENETRATIONS, HOLES, AND DAMAGED SURFACES TO RESTORE A SMOOTH FINISH TO EXISTING CONCRETE SURFACES SCHEDULED TO RECEIVE NEW WORK.
3. CUT BACK EXISTING REUSE PIPING TO POINT THAT IS CONVENIENT FOR CONNECTION TO PROPOSED HOSE BIBB AT EACH PUMP. PROVIDE PIPE SUPPORT AS REQUIRED.
4. THE EXISTING ARVS SCHEDULED FOR DEMOLITION ARE LOCATED AT EACH OF 2 RAS DISCHARGE HEADERS, AT EACH OF 6 RAS PUMP DISCHARGES AND AT EACH PAIR OF WAS PUMPS (3 PER EACH WAS PUMP PAIR).

ARCADIS
CERTIFICATE OF AUTHORIZATION 7917
3109 W DR MARTIN LUTHER KING JR BLVD
TAMPA, FL 33607, SUITE 350

CONSULTANTS

SEALS

TIM WARE PE.
FL LIC. No. 71716

VERO BEACH, FL
INDIAN RIVER COUNTY

CENTRAL WASTEWATER TREATMENT FACILITY
RAS/WAS PUMP REPLACEMENTS

NO.	DATE	ISSUED FOR	BY
2	3/30/2020	100% DESIGN	JR
1	11/15/2019	90% DESIGN	JR

DATE: MARCH 2020
PROJECT NO.: 30002159.0000
FILE NAME: D-01
DESIGNED BY: J. ROSMAN
DRAWN BY: A. GUZMAN
CHECKED BY: T. WARE

SHEET TITLE
DEMOLITION

RAS AND WAS DEMOLITION PLAN

SCALE: AS NOTED

D-01

SHEET 4 OF 26

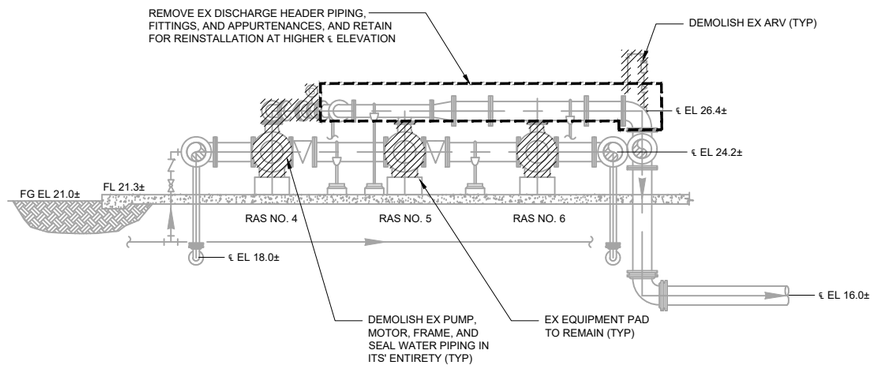

1 D-01 SECTION
SCALE: 1/8" = 1'-0"

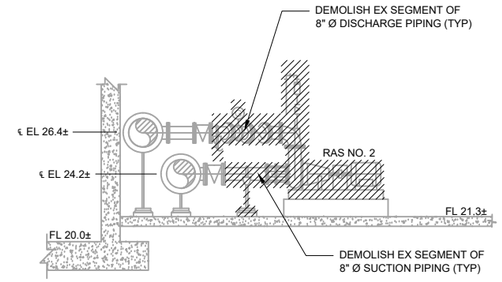

2 D-01 SECTION
SCALE: 1/8" = 1'-0"

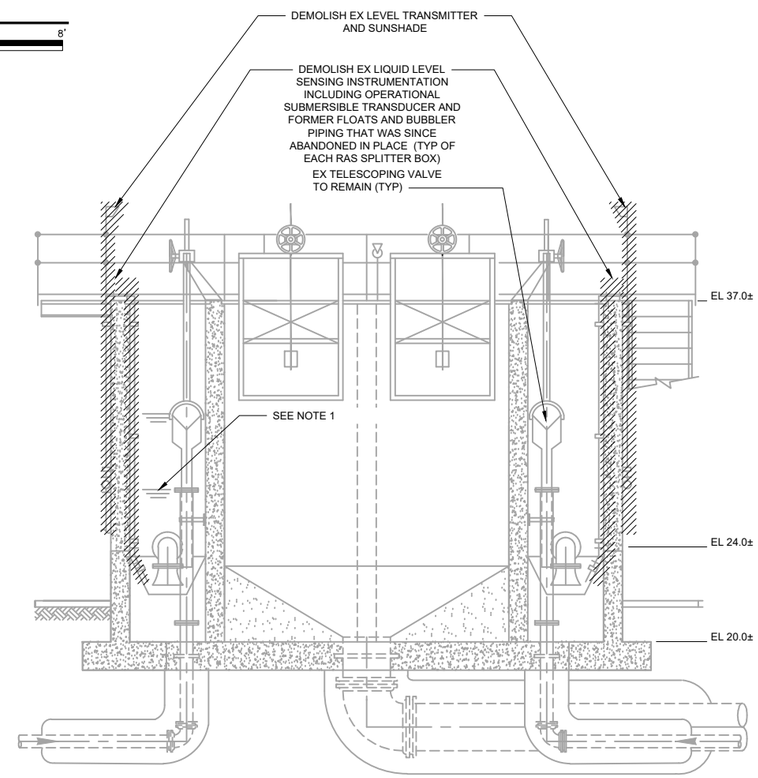

5 D-01 SECTION
SCALE: 1/8" = 1'-0"

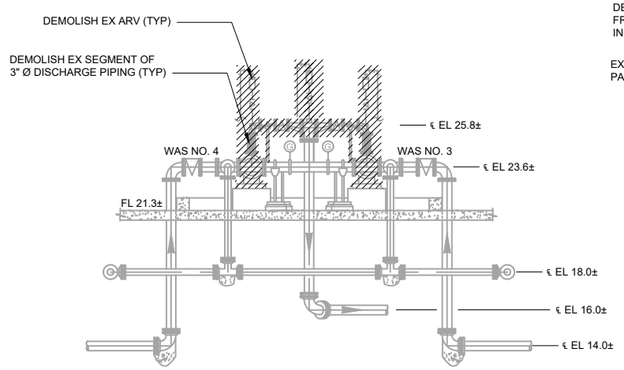

3 D-01 SECTION
SCALE: 1/8" = 1'-0"

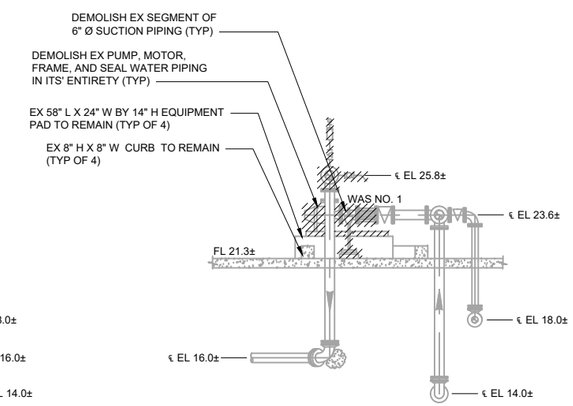

4 D-01 SECTION
SCALE: 1/8" = 1'-0"

NOTES:

1. OWNER SHALL PUMP DOWN RAS SPLITTER BOXES TO EL 27± AND SHALL OPERATE EX ISOLATION VALVES AND TELESCOPING VALVES TO ISOLATE. OWNER DOES NOT GUARANTEE WATER TIGHT SHUT OFF UPON VALVE CLOSURE. CONTRACTOR SHALL BE RESPONSIBLE FOR PUMPING DOWN RESERVOIR WASTEWATER AND CLEANING RAS SPLITTER BOXES OF SETTLED SOLIDS AS REQUIRED TO PERFORM THE SCHEDULED DEMOLITION AND THE NEW WORK.

ARCADIS
CERTIFICATE OF AUTHORIZATION 7917
3109 W DR MARTIN LUTHER KING JR BLVD
TAMPA, FL 33607, SUITE 350

CONSULTANTS

SEALS

TIM WARE PE.
FL LIC. No. 71716

VERO BEACH, FL
INDIAN RIVER COUNTY

CENTRAL WASTEWATER TREATMENT FACILITY RAS/WAS PUMP REPLACEMENTS

NO.	DATE	ISSUED FOR	BY
2	3/30/2020	100% DESIGN	JR
1	11/15/2019	90% DESIGN	JR

DATE: MARCH 2020
PROJECT NO.: 30002159.0000
FILE NAME: D-02
DESIGNED BY: J. ROSMAN
DRAWN BY: A. GUZMAN
CHECKED BY: T. WARE

SHEET TITLE
DEMOLITION

RAS AND WAS DEMOLITION SECTIONS

SCALE: AS NOTED

D-02

SHEET 5 OF 26

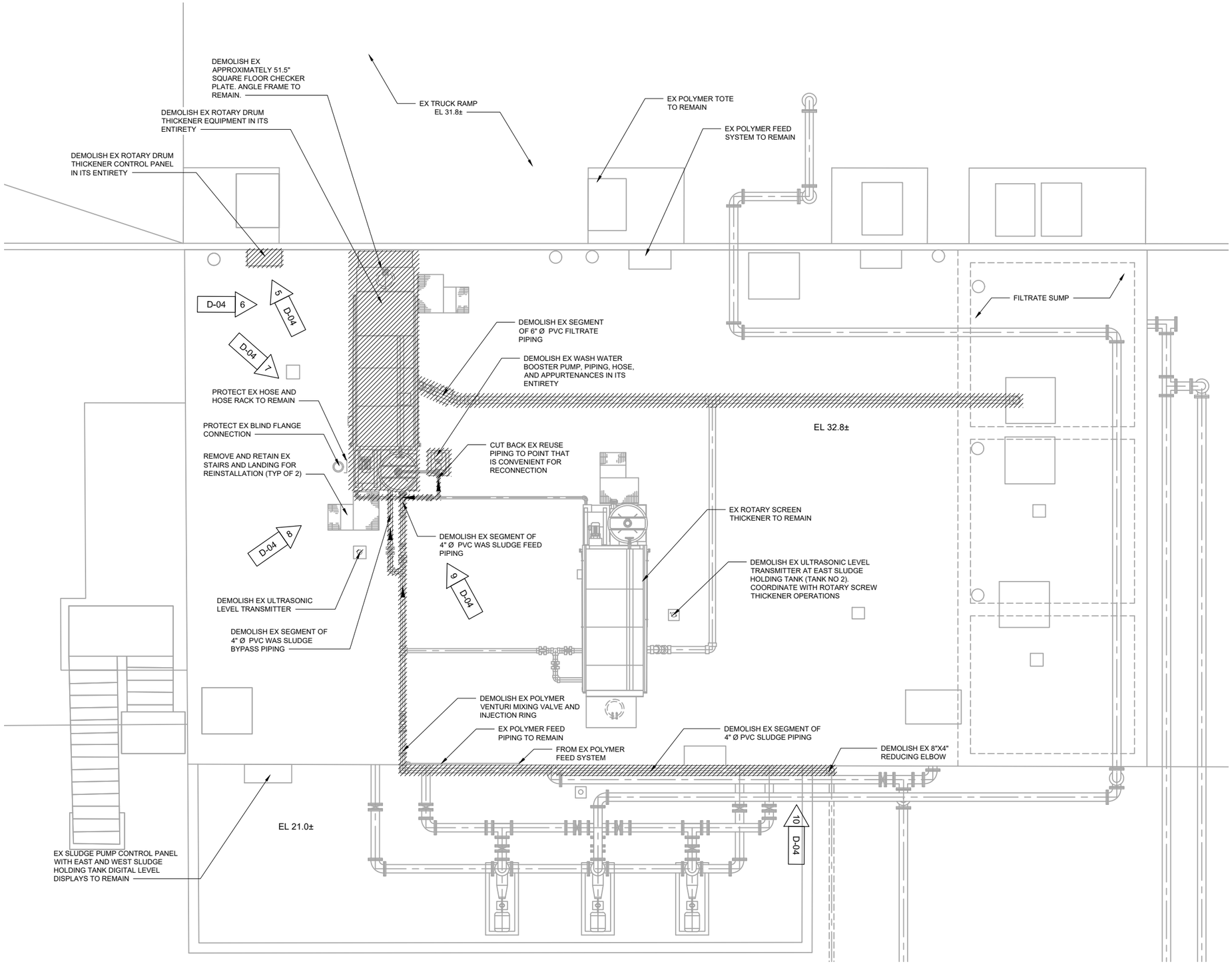

DEMOLITION PLAN AT T/TANK EL 32.8±

SCALE: 1/8" = 1'-0"

0 2' 4' 8'

ARCADIS

CERTIFICATE OF AUTHORIZATION 7917
3109 W DR MARTIN LUTHER KING JR BLVD
TAMPA, FL 33607, SUITE 350

CONSULTANTS

SEALS

TIM WARE PE.
FL LIC. No. 71716

VERO BEACH, FL
INDIAN RIVER COUNTY

CENTRAL WASTEWATER TREATMENT FACILITY RAS/WAS PUMP REPLACEMENTS

NO.	DATE	ISSUED FOR	BY
2	3/30/2020	100% DESIGN	JR
1	11/15/2019	90% DESIGN	JR

DATE: MARCH 2020
PROJECT NO.: 30002159.0000
FILE NAME: D-03
DESIGNED BY: J. ROSMAN
DRAWN BY: A. GUZMAN
CHECKED BY: T. WARE

SHEET TITLE

DEMOLITION

ROTARY DRUM THICKENER DEMOLITION PLAN

SCALE: AS NOTED

D-03

SHEET 6 OF 26

5 D-03 FACING NORTH
N.T.S.

6 D-03 FACING EAST
N.T.S.

7 D-03 FACING SOUTHEAST
N.T.S.

8 D-03 FACING NORTHEAST
N.T.S.

9 D-03 FACING NORTHWEST
N.T.S.

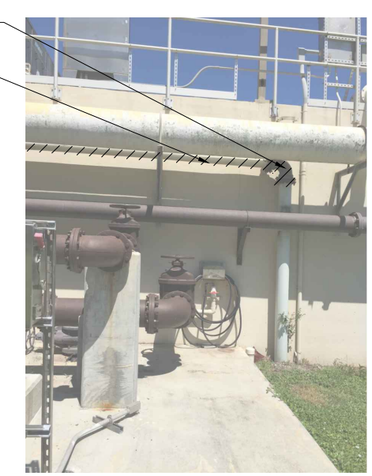

10 D-03 FACING NORTH
N.T.S.

ARCADIS
CERTIFICATE OF AUTHORIZATION 7917
3109 W DR MARTIN LUTHER KING JR BLVD
TAMPA, FL 33607, SUITE 350

CONSULTANTS

SEALS

TIM WARE PE.
FL LIC. No. 71716

VERO BEACH, FL
INDIAN RIVER COUNTY

CENTRAL WASTEWATER TREATMENT FACILITY RAS/WAS PUMP REPLACEMENTS

NO.	DATE	ISSUED FOR	BY
2	3/30/2020	100% DESIGN	JR
1	11/15/2019	90% DESIGN	JR

DATE: MARCH 2020
PROJECT NO.: 30002159.0000
FILE NAME: D-04
DESIGNED BY: J. ROSMAN
DRAWN BY: A. GUZMAN
CHECKED BY: T. WARE

SHEET TITLE
DEMOLITION

ROTARY DRUM THICKENER DEMOLITION PHOTOS

SCALE: AS NOTED

D-04
SHEET 7 OF 26

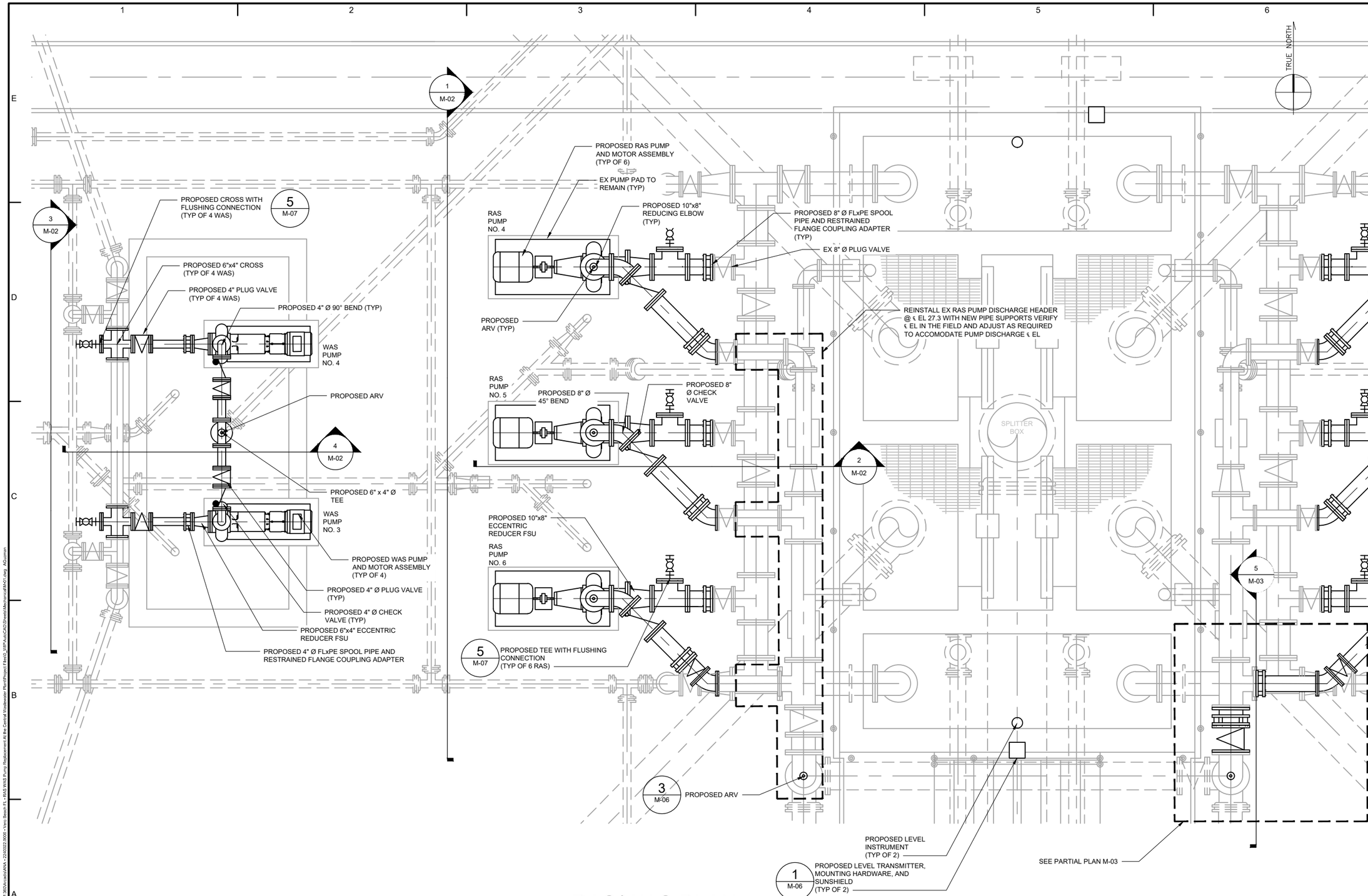

RAS/WAS PLAN

SCALE: 1/4" = 1'-0"

0 2' 4' 8'

NOTES:

1. WORK SHOWN ON THIS SHEET IS TYPICAL OF RAS PUMP No'S 1, 2, AND 3 AND WAS PUMP No'S 1 AND 2, EXCEPT WITH REVERSE HAND ORIENTATION. REFER TO SHEET D-01 FOR EXISTING CONDITIONS.
2. ALL EXPOSED RAS AND WAS PUMP SUCTION, DISCHARGE, AND HEADER PIPING, FITTINGS, VALVES, SUPPORTS, AND APPURTANANCES SHALL RECEIVE SURFACE PREPARATION AND COATING SYSTEM APPLICATION. THIS INCLUDES BOTH PROPOSED RAS AND WAS PIPING AND EXISTING CONNECTED PIPING IN THE VICINITY OF THE WORK. THE EXTENT OF THE PAINTING WORK OF NEW AND EXISTING PIPING SHALL BE UP TO TRANSITIONS FROM EXPOSED TO BURIED/EMBEDDED.

ARCADIS
CERTIFICATE OF AUTHORIZATION 7917
3109 W DR MARTIN LUTHER KING JR BLVD
TAMPA, FL 33607, SUITE 350

CONSULTANTS

SEALS

TIM WARE PE.
FL LIC. No. 71716

VERO BEACH, FL
INDIAN RIVER COUNTY

CENTRAL WASTEWATER TREATMENT FACILITY RAS/WAS PUMP REPLACEMENTS

NO.	DATE	ISSUED FOR	BY
2	3/30/2020	100% DESIGN	JR
1	11/15/2019	90% DESIGN	JR

DATE: MARCH 2020
PROJECT NO.: 30002159.0000
FILE NAME: M-01
DESIGNED BY: J. ROSMAN
DRAWN BY: A. GUZMAN
CHECKED BY: T. WARE

SHEET TITLE
MECHANICAL

RAS AND WAS PLAN

SCALE: AS NOTED

M-01

SHEET 8 OF 26

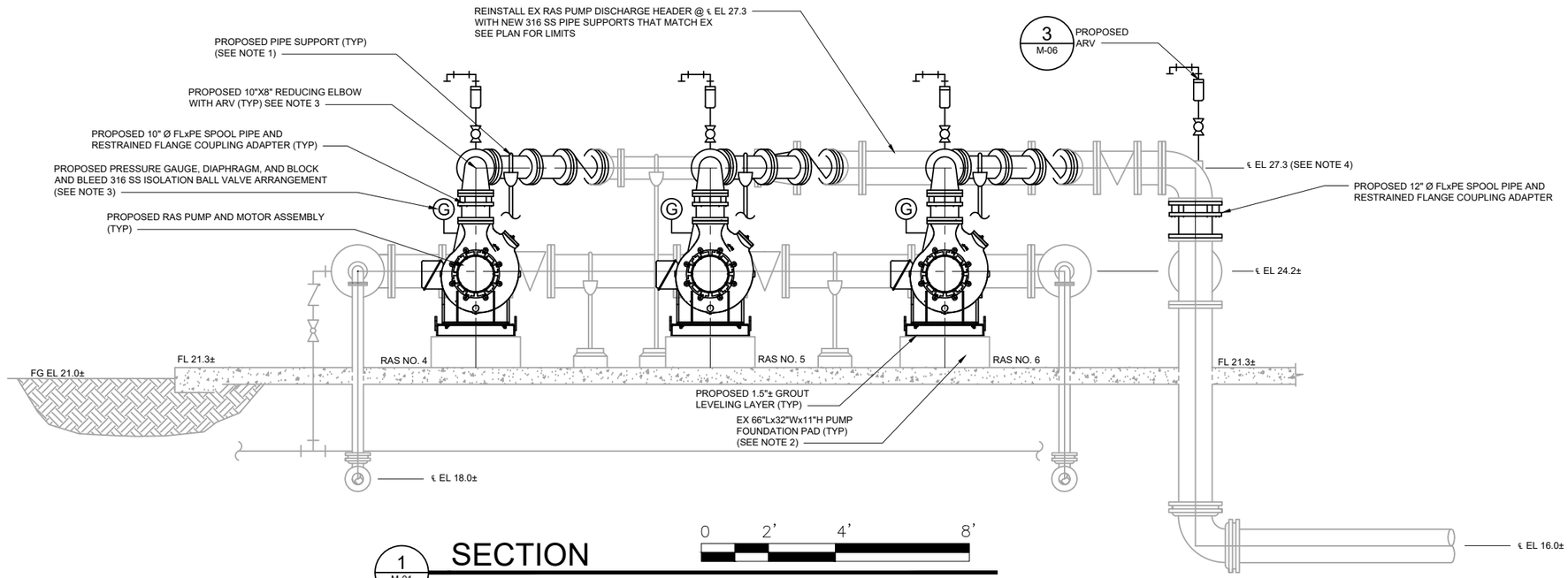

1 M-01 SECTION

SCALE: ¼" = 1'-0"

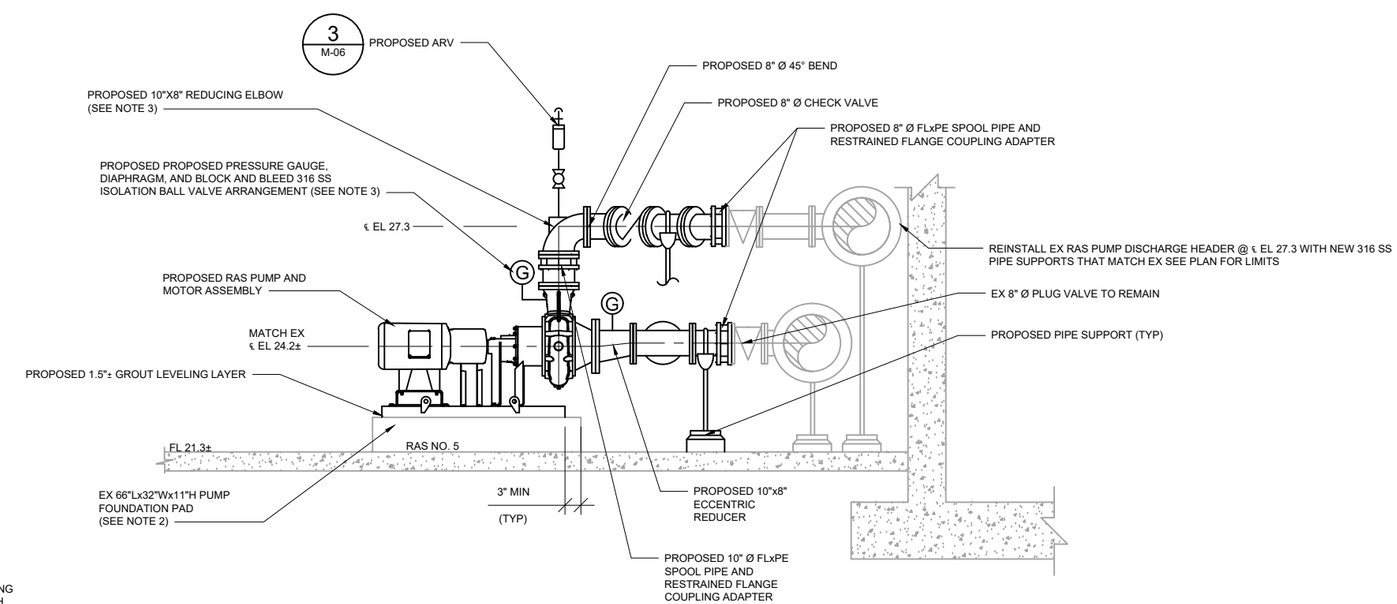

2 M-01 SECTION

SCALE: ¼" = 1'-0"

NOTES:

1. NOT ALL PIPE SUPPORTS SHOWN FOR CLARITY. PROVIDE NEW PIPE SUPPORTS AS REQUIRED AND AS SPECIFIED.
2. PROVIDE EPOXY SET ANCHOR BOLTS FOR MOUNTING OF PUMPING EQUIPMENT TO EX PUMP FOUNDATION PADS. COORDINATE WITH PUMP MANUFACTURER TO DETERMINE SIZE, SPACING, QUANTITY, AND EMBEDMENT.
3. PROVIDE BOSSED FITTING.
4. COORDINATE WITH PUMP DIMENSIONS.

ARCADIS

CERTIFICATE OF AUTHORIZATION 7917
3109 W DR MARTIN LUTHER KING JR BLVD
TAMPA, FL 33607, SUITE 350

CONSULTANTS

SEALS

TIM WARE PE.
FL LIC. No. 71716

VERO BEACH, FL
INDIAN RIVER COUNTY

CENTRAL WASTEWATER
TREATMENT FACILITY
RAS/WAS PUMP
REPLACEMENTS

NO.	DATE	ISSUED FOR	BY
2	3/30/2020	100% DESIGN	JR
1	11/15/2019	90% DESIGN	JR

DATE:	MARCH 2020
PROJECT NO.:	30002159.0000
FILE NAME:	M-02
DESIGNED BY:	J. ROSMAN
DRAWN BY:	A. GUZMAN
CHECKED BY:	T. WARE

SHEET TITLE

MECHANICAL

RAS
SECTIONS

SCALE: AS NOTED

M-02

SHEET 9 OF 26

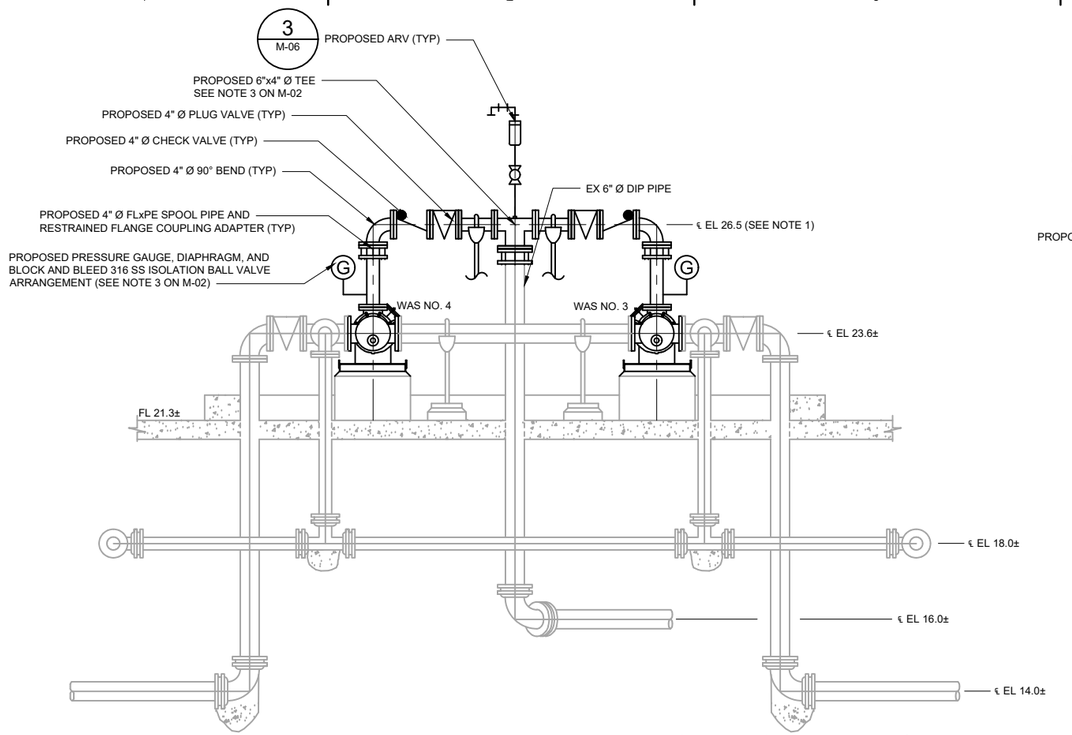

SECTION

3 M-01 SCALE: ¼" = 1'-0"

0 2' 4' 8'

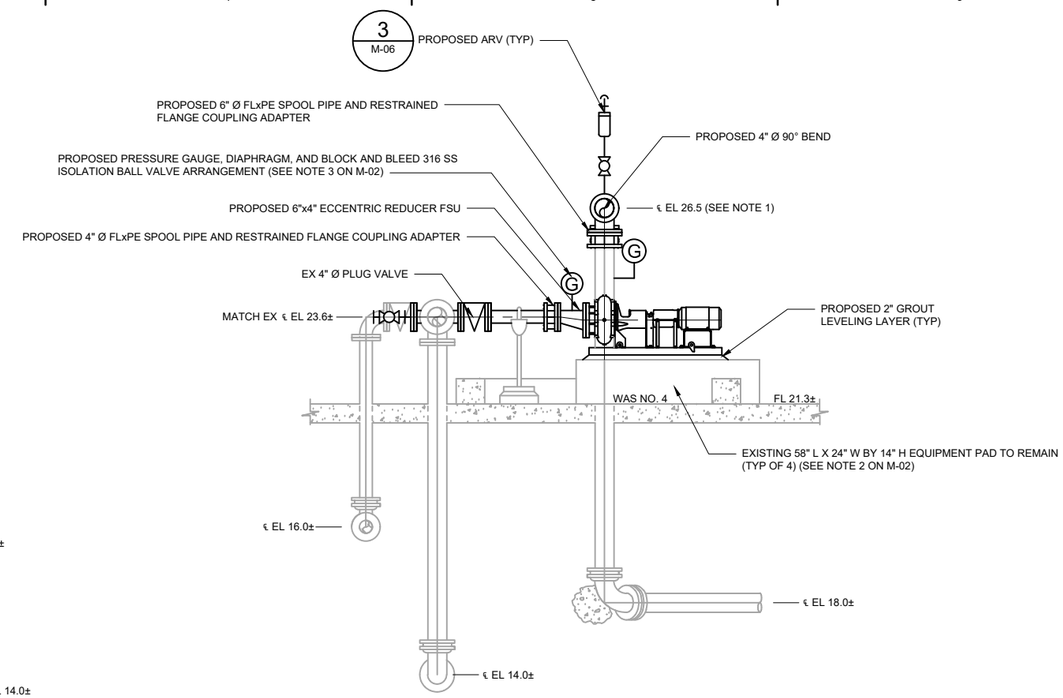

SECTION

4 M-01 SCALE: ¼" = 1'-0"

0 2' 4' 8'

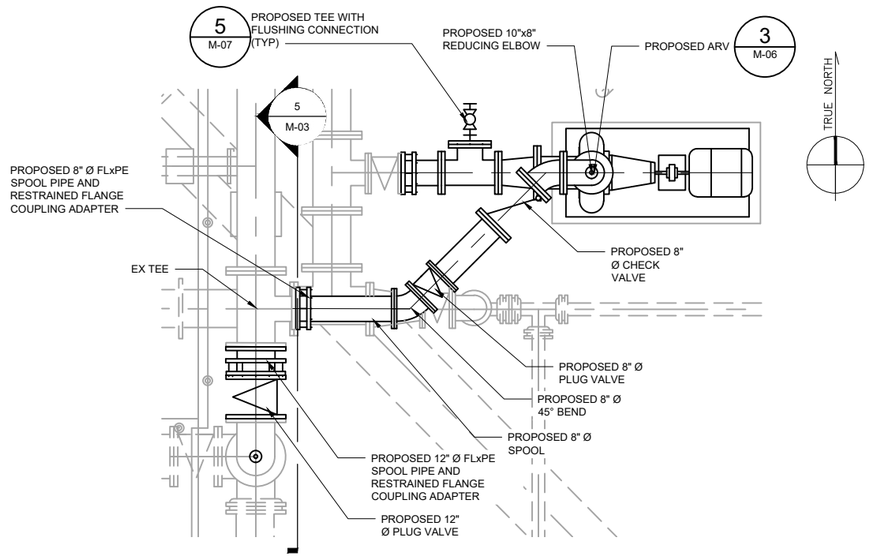

RAS PUMP No. 3 PARTIAL PLAN

SCALE: 1/4" = 1'-0"

0 2' 4' 8'

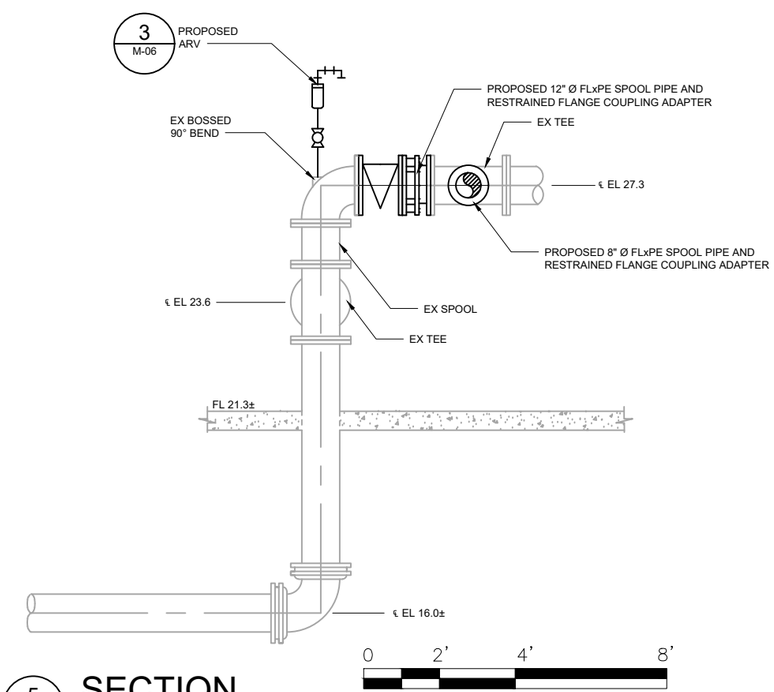

SECTION

5 M-01 SCALE: ¼" = 1'-0"

0 2' 4' 8'

NOTES:

1. PROPOSEDOVIDE NEW PIPE SUPPORTS TO INDEPENDENTLY SUPPORT HEADER AT ℄ EL. 26.5 ON BOTH SIDES OF EX 6" Ø DIP VERTICAL HEADER PIPE. TYP. OF EACH WAS PUMP PAIR.

ARCADIS
CERTIFICATE OF AUTHORIZATION 7917
3109 W DR MARTIN LUTHER KING JR BLVD
TAMPA, FL 33607, SUITE 350

CONSULTANTS

SEALS

TIM WARE PE.
FL LIC. No. 71716

VERO BEACH, FL
INDIAN RIVER COUNTY

CENTRAL WASTEWATER TREATMENT FACILITY RAS/WAS PUMP REPLACEMENTS

NO.	DATE	ISSUED FOR	BY
2	3/30/2020	100% DESIGN	JR
1	11/15/2019	90% DESIGN	JR

DATE:	MARCH 2020
PROJECT NO.:	30002159.0000
FILE NAME:	M-03
DESIGNED BY:	J. ROSMAN
DRAWN BY:	A. GUZMAN
CHECKED BY:	T. WARE

SHEET TITLE

MECHANICAL

RAS AND WAS SECTIONS

SCALE: AS NOTED

M-03

SHEET 10 OF 26

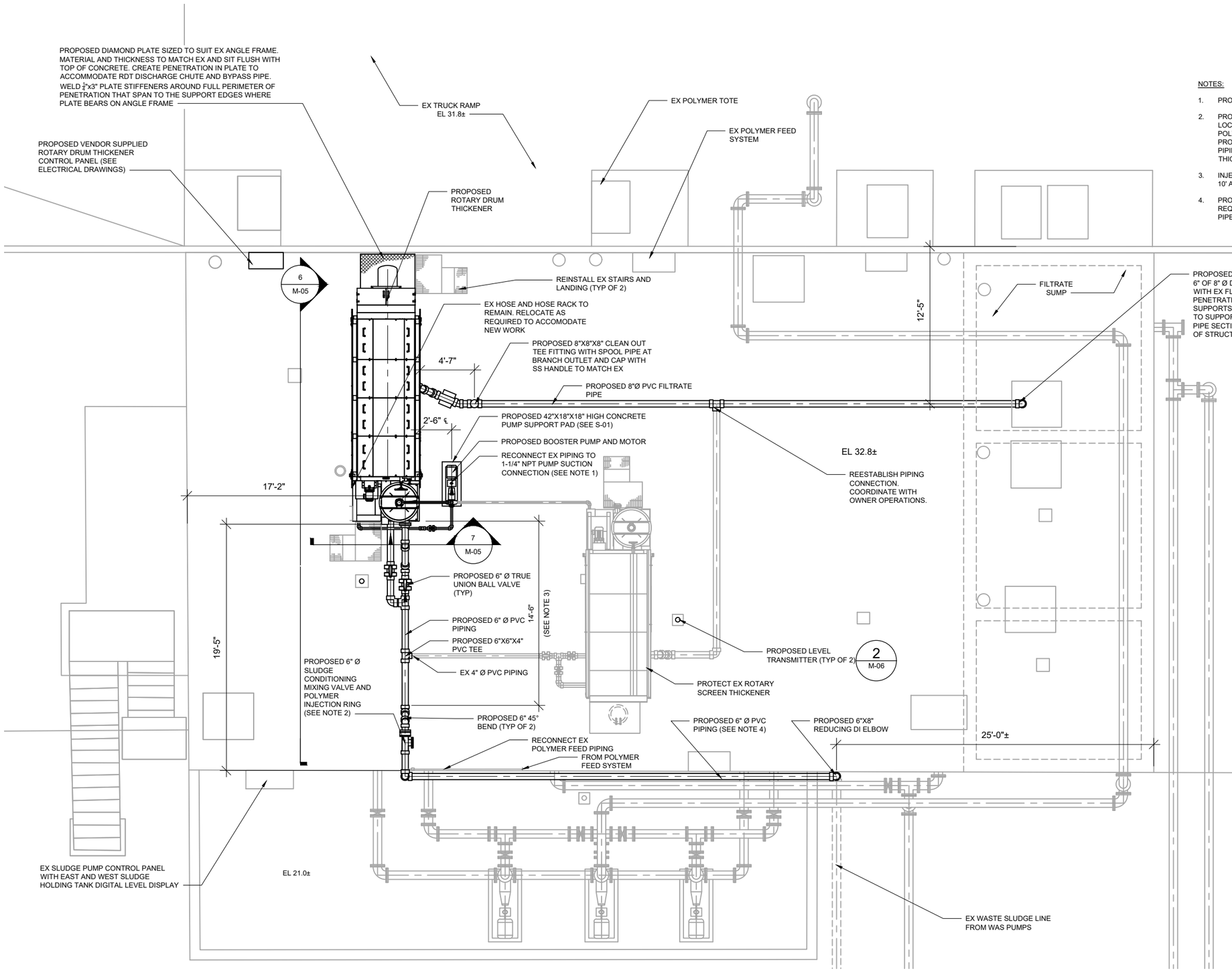

NOTES:

1. PROVIDE STRAINER IN SUCTION LINE
2. PROVIDE 19.25" FL TO FL PVC SPOOL. LOCATE IN FIELD TO PROVIDE SPARE POLYMER FEED POINT. 2' TO 5' CLOSER TO PROPOSED RDT. REWORK 4" Ø IN SLUDGE FEED PIPING TO EX ROTARY SCREEN THICKENER AS REQUIRED
3. INJECTION POINTS SHALL BE BETWEEN 10' AND 20' FROM RDT INLET CONNECTION
4. PROVIDE NEW PIPE SUPPORTS AS REQUIRED AND AS SPECIFIED, TO MOUNT PIPE TO TANK WALL.

PROPOSED PLAN AT T/TANK EL 32.8±

SCALE: 1/8" = 1'-0"

0 2' 4' 8'

ARCADIS

CERTIFICATE OF AUTHORIZATION 7917
3109 W DR MARTIN LUTHER KING JR BLVD
TAMPA, FL 33607, SUITE 350

CONSULTANTS

SEALS

TIM WARE PE.
FL LIC. No. 71716

VERO BEACH, FL
INDIAN RIVER COUNTY

CENTRAL WASTEWATER TREATMENT FACILITY RAS/WAS PUMP REPLACEMENTS

NO.	DATE	ISSUED FOR	BY
2	3/30/2020	100% DESIGN	JR
1	11/15/2019	90% DESIGN	JR

DATE: MARCH 2020
PROJECT NO.: 30002159.0000
FILE NAME: M-04
DESIGNED BY: J. ROSMAN
DRAWN BY: A. GUZMAN
CHECKED BY: T. WARE

SHEET TITLE
MECHANICAL

ROTARY DRUM THICKENER PLAN

SCALE: AS NOTED

M-04

SHEET 11 OF 26

Sat, 28 Mar 2020 - 6:44pm C:\Users\aguzman\BIM 360\Arcadis\IANA - 224002.2000 - Vero Beach FL - RAS WAS Pump Replacement At the Central Wastewater Plant\Project Files\Q_WIP-AutoCAD\Sheets\Mechanical\M-04.dwg AGuzman

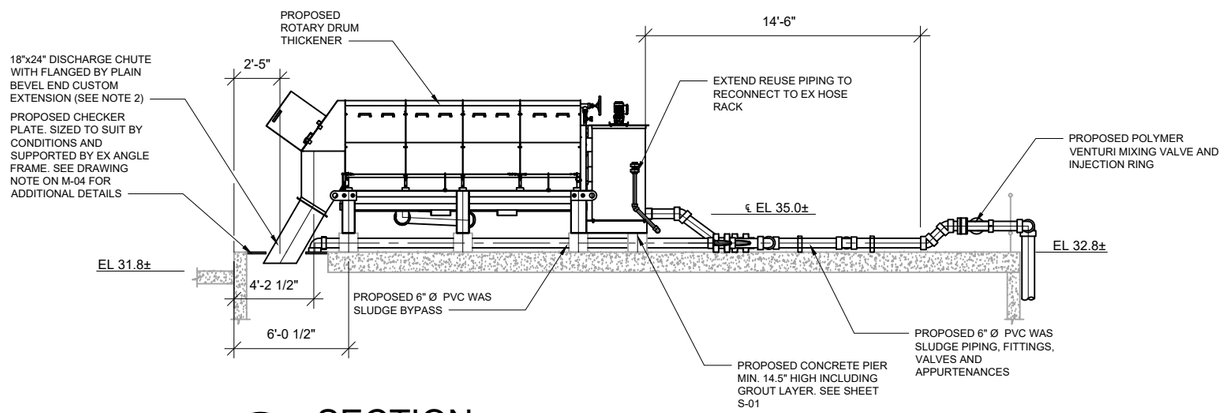

6 M-04 SECTION

SCALE: 1/8" = 1'-0"

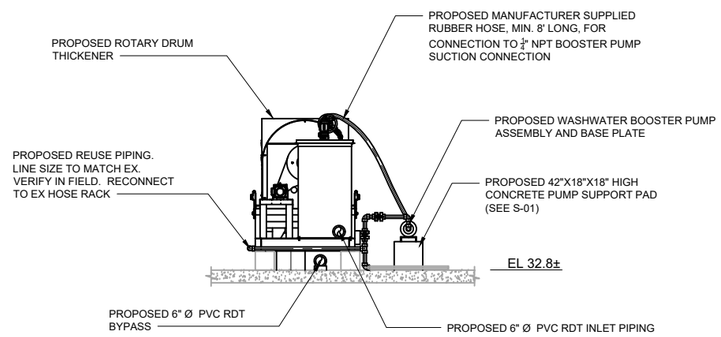

7 M-04 SECTION

SCALE: 1/8" = 1'-0"

NOTES:

1. STAIRS AND LANDING NOT SHOWN FOR CLARITY ON THIS SHEET.
2. CUSTOM CHUTE EXTENSION SHALL BE 60° ANGLE FROM THE HORIZONTAL AND SHALL PROJECT MIN. 6" BELOW TOP OF CONCRETE. SUPPORT CHUTE AS REQUIRED. CHUTE SHALL DISCHARGE AS CLOSE TO ℄ OF EX OPENING AS POSSIBLE.

ARCADIS
CERTIFICATE OF AUTHORIZATION 7917
3109 W DR MARTIN LUTHER KING JR BLVD
TAMPA, FL 33607, SUITE 350

CONSULTANTS

SEALS

TIM WARE PE.
FL LIC. No. 71716

VERO BEACH, FL
INDIAN RIVER COUNTY

CENTRAL WASTEWATER TREATMENT FACILITY RAS/WAS PUMP REPLACEMENTS

NO.	DATE	ISSUED FOR	BY
2	3/30/2020	100% DESIGN	JR
1	11/15/2019	90% DESIGN	JR

DATE: MARCH 2020
PROJECT NO.: 30002159.0000
FILE NAME: M-05
DESIGNED BY: J. ROSMAN
DRAWN BY: A. GUZMAN
CHECKED BY: T. WARE

SHEET TITLE

MECHANICAL

ROTARY DRUM THICKENER SECTION AND DETAILS

SCALE: AS NOTED

M-05

SHEET 12 OF 26

NOTES:

1. TYPICAL OF NORTH AND SOUTH RAS SPLITTER BOX, WITH REVERSE HAND ORIENTATION.
2. PER NFPA 820. TABLE 6.2.2(a), ROW 10a., SLUDGE STORAGE PIT IS CONSIDERED CLASS I, DIVISION II HAZARDOUS AREA 18 INCHES ABOVE WATER SURFACE AND 10 FEET HORIZONTALLY FROM WETTED WALLS. INSTRUMENT SHALL BE PROVIDED, APPROPRIATELY RATED FOR THE ENVIRONMENT.
3. LOCATE SENSOR CENTERLINE TO AVOID CONFLICT BETWEEN BEAM ANGLE AND SURFACE TURBULENCE FROM EX TELESCOPING VALVES AND FOAM, IF PRESENT.
4. SUPPORT SUNSHIELD/BACKPLATE INDEPENDENT OF EX HANDRAIL.
5. DETAIL TYPICAL OF 2 LOCATIONS. SEE MECHANICAL PLANS.

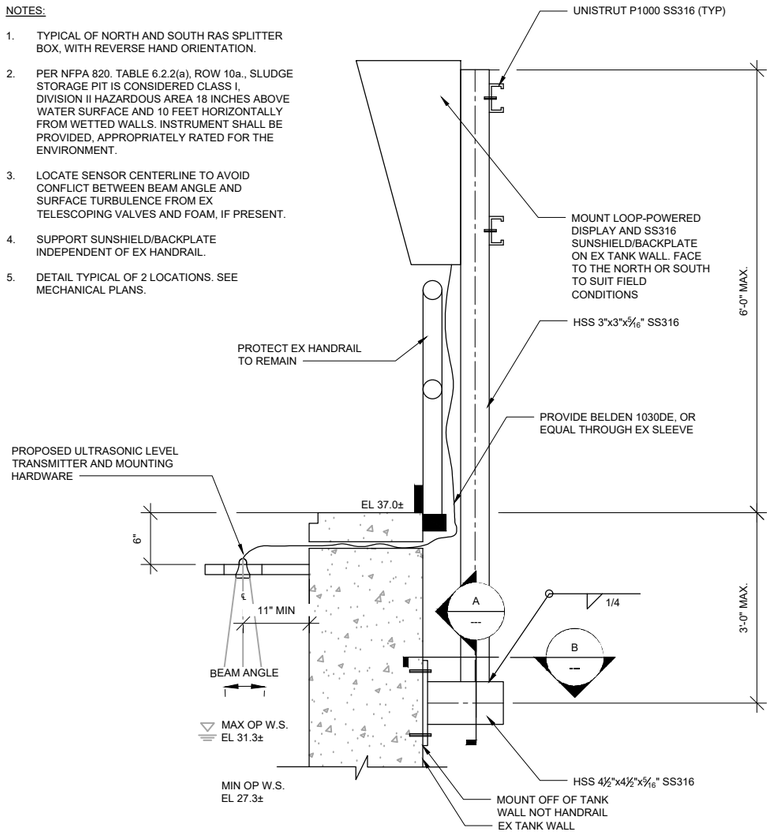

SIDE VIEW

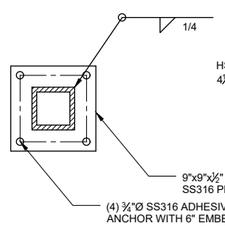

A --- SECTION A
NTS

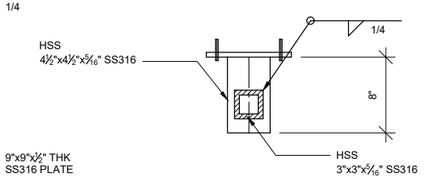

B --- SECTION B
NTS

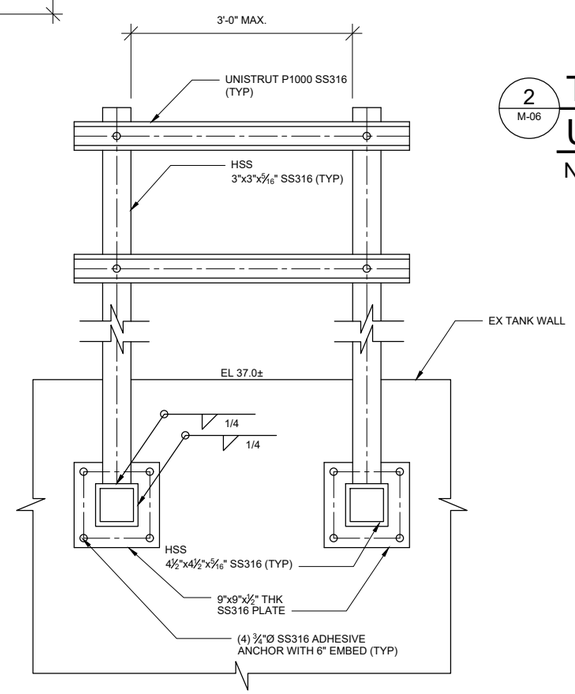

BACK ELEVATION

1 / M-01 RAS SPLITTER BOX ULTRASONIC LEVEL SENSOR MOUNTING DETAIL
NTS

NOTES:

1. MIN. OP. W.S. EL. (PUMPS OFF) AT EL. 24.55±.
2. MAX. OP. W.S. EL. SHALL NOT EXCEED EL. 32.00±.
3. CENTERLINE OF TRANSDUCER SHALL BE NO LESS THAN 15.5" OFF INTERIOR FACE OF TANK WALL. VERIFY IN FIELD.
4. 18" ENVELOPE ABOVE TOP OF TANK AT CORE IN ROOF SLAB IS CLASS 1, DIVISION 2.
5. BEAM ANGLE SHALL NOT EXCEED 10 DEGREES.
6. DETAIL TYPICAL OF 2 LOCATIONS. SEE MECHANICAL PLANS.

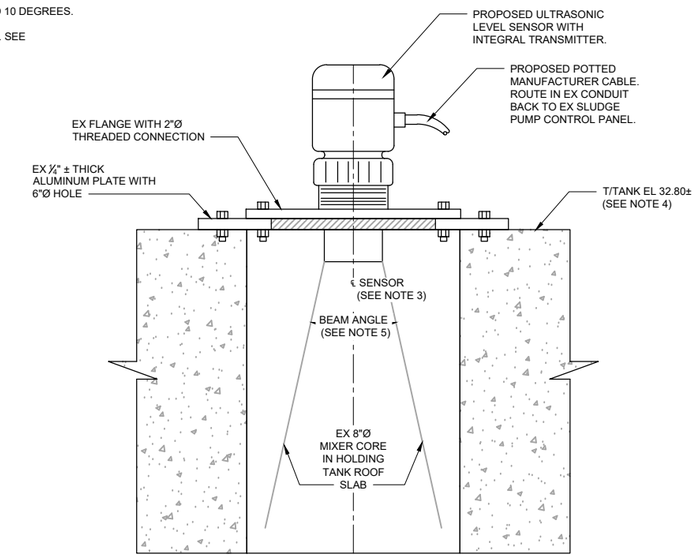

2 / M-06 THICKENED SLUDGE HOLDING TANK ULTRASONIC LEVEL SENSOR MOUNTING DETAIL
NTS

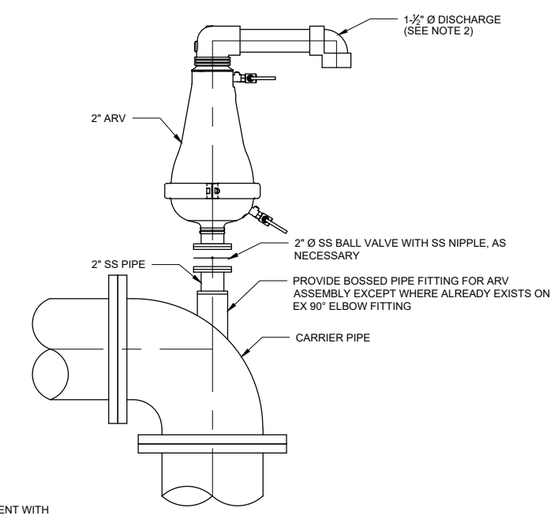

NOTE:

1. PROVIDE BACKFLUSH ATTACHMENT WITH ISOLATING VALVE.
2. PROVIDE DISCHARGE DROP PIPE TO DIRECT DISCHARGE TO 6" A.F.F.. INSTALL TO SUIT FIELD CONDITIONS AND IN COORDINATION WITH OWNER.

3 / M-01 AIR RELEASE AIR VACUUM VALVE
NTS

ARCADIS
CERTIFICATE OF AUTHORIZATION 7917
3109 W DR MARTIN LUTHER KING JR BLVD
TAMPA, FL 33607, SUITE 350

CONSULTANTS

SEALS

TIM WARE PE.
FL LIC. No. 71716

VERO BEACH, FL
INDIAN RIVER COUNTY

CENTRAL WASTEWATER TREATMENT FACILITY RAS/WAS PUMP REPLACEMENTS

NO.	DATE	ISSUED FOR	BY
2	3/30/2020	100% DESIGN	JR
1	11/15/2019	90% DESIGN	JR

DATE: MARCH 2020
PROJECT NO.: 30002159.0000
FILE NAME: M-06
DESIGNED BY: J. ROSMAN
DRAWN BY: A. GUZMAN
CHECKED BY: T. WARE

SHEET TITLE
MECHANICAL

MECHANICAL DETAILS SHEET (1 OF 2)

SCALE: AS NOTED

M-06

SHEET 13 OF 26

ADJUSTABLE PIPE SADDLE SUPPORT SCHEDULE (INCHES)					
SIZE OF SUPPORTED PIPE **	PIPE SIZE "A"	PIPE SIZE "B"	"C"	"D"	
				MINIMUM	MAXIMUM
2 1/2 *	2 1/2	1 1/2	12	8	13
3	2 1/2	1 1/2	12	8 1/2	13 1/2
3 1/2	2 1/2	1 1/2	12	8 1/2	13 1/2
4	3	2 1/2	12	9 1/2	14
6	3	2 1/2	12	10 1/2	15 1/2
8	3	2 1/2	12	11 1/2	16 1/2
10	3	2 1/2	12	13 1/2	18 1/2
12	3	2 1/2	12	15	19 1/2
14	4	3	12	16 1/2	20 1/2
16	4	3	12	17 1/2	22 1/2
18	6	3 1/2	14	19 1/2	24
20	6	3 1/2	14	21	25 1/2
24	6	4	14	23 1/2	28 1/2
30	6	4	14	27	31 1/2
32	6	4	14	28 1/2	32 1/2
36	6	4	14	30 1/2	34 1/2

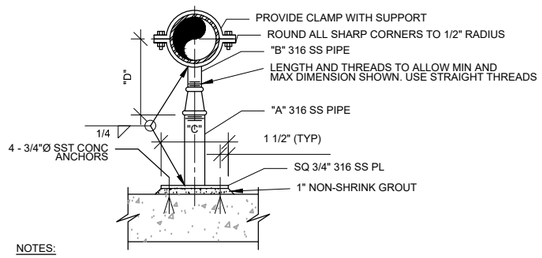

NOTES:

1. PIPE SUPPORTS AND FASTENERS SHALL BE TYPE 316 OR 316L.
2. * = USE 2 1/2" SUPPORTS FOR PIPES LESS THEN 2 1/2"Ø.
3. ** = NOMINAL PIPE SIZE.

4 STANCHION PIPE SUPPORT

NTS

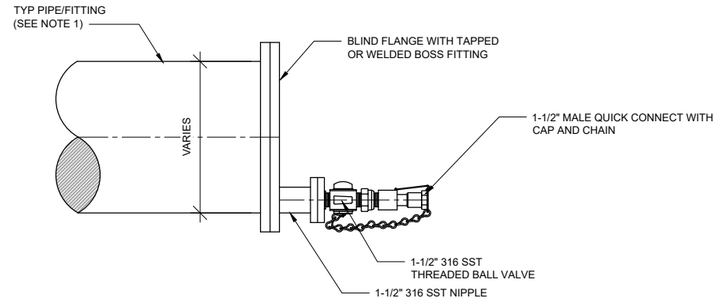

NOTES:

1. REFER TO PLAN ON M-01 FOR QUANTITY LOCATION OF FLUSHING CONNECTIONS AND WHETHER CONNECTION IS AT A TEE OR CROSS FLANGED FITTING.

5 M-01 FLUSHING CONNECTION

NTS

ARCADIS

CERTIFICATE OF AUTHORIZATION 7917
3109 W DR MARTIN LUTHER KING JR BLVD
TAMPA, FL 33607, SUITE 350

CONSULTANTS

SEALS

TIM WARE PE.
FL LIC. No. 71716

VERO BEACH, FL
INDIAN RIVER COUNTY

CENTRAL WASTEWATER TREATMENT FACILITY RAS/WAS PUMP REPLACEMENTS

NO.	DATE	ISSUED FOR	BY
2	3/30/2020	100% DESIGN	JR
1	11/15/2019	90% DESIGN	JR

DATE: MARCH 2020
PROJECT NO.: 30002159.0000
FILE NAME: M-07
DESIGNED BY: J. ROSMAN
DRAWN BY: A. GUZMAN
CHECKED BY: T. WARE

SHEET TITLE

MECHANICAL

MECHANICAL DETAILS SHEET (2 OF 2)

SCALE: AS NOTED

M-07

SHEET 14 OF 26

STRUCTURAL NOTES

1. GENERAL
   1.1. THE CONTRACTOR SHALL VERIFY ALL EXISTING DIMENSIONS PRIOR TO FABRICATION OF ANY STRUCTURAL COMPONENTS. NOTIFY ENGINEER IMMEDIATELY IF DIMENSIONAL CONFLICTS EXIST.
   1.2. CONSTRUCTION METHODS, MEANS, TECHNIQUES, SEQUENCES, PROCEDURES, AND SAFETY ARE THE SOLE RESPONSIBILITY OF THE CONTRACTOR.

2. SUBMITTALS AND SHOP DRAWINGS
   THE FOLLOWING SUBMITTALS AND SHOP DRAWINGS ARE REQUIRED TO BE SUBMITTED:
   CONCRETE MIX DESIGN.
   2.1. SUBMIT SHOP DRAWINGS FOR REVIEW BY ENGINEER.
   2.2. ALL SUBMITTALS TO ENGINEER FOR REVIEW SHALL BE PREVIOUSLY REVIEWED BY THE CONTRACTOR, WITH HIS APPROVAL STAMPED ON THE DRAWINGS.

3. CONCRETE REINFORCING STEEL
   3.1. ALL CONCRETE WORK SHALL CONFORM TO ACI 301, ACI 318, ACI 315, ACI 315R DETAILING MANUAL, AND AWS D1.4.
   3.2. MATERIALS SHALL CONFORM TO THE FOLLOWING STANDARDS:
   ASTM C 33 - STANDARD SPECIFICATION FOR CONCRETE AGGREGATE
   ASTM C 150 - STANDARD SPECIFICATION FOR PORTLAND CEMENT ASTM C 618 - CLASS F FLY ASH, 20% CONTENT BY WEIGHT.
   ASTM C 260 - STANDARD SPECIFICATION FOR AIR-ENTRAINING ADMIXTURES FOR CONCRETE
   ASTM C 309 - STANDARD SPECIFICATION FOR LIQUID MEMBRANE-FORMING COMPOUNDS FOR CURING CONCRETE
   ASTM C 494 - STANDARD SPECIFICATION FOR CHEMICAL ADMIXTURES FOR CONCRETE
   3.3. MINIMUM 28-DAY SPECIFIED COMPRESSIVE STRENGTH F'C AND MAXIMUM SLUMP REQUIREMENTS:

DESCRIPTION	STRENGTH
CONCRETE PEDESTALS AND EQUIPMENT SUPPORT PADS	4500 PSI

   3.4. CONCRETE MIX DESIGN:
   WATER CEMENT RATIO 0.42 AIR ENTRAINMENT OF NOT LESS THAN OR EQUAL TO 3% AND NO GREATER THAN OR EQUAL TO 5% CONCRETE MATERIAL REQUIREMENTS.
   PORTLAND CEMENT: ASTM C150/C150M, TYPE II.
   AGGREGATES: ASTM C33/C33M
   FINE AGGREGATE: CLEAN, SHARP, NATURAL SILICA SAND FREE OF LOAM, CLAY, LUMPS, AND OTHER DELETERIOUS SUBSTANCES ARE UNACCEPTABLE.
   COARSE AGGREGATE: CLEAN, UNCOATED, PROCESSED AGGREGATE CONTAINING NO CLAY, MUD, LOAM, OR FOREIGN MATTER.
   COARSE AGGREGATE SIZE: ASTM C33/C33M, NOS. 57, UNLESS OTHERWISE APPROVED BY ENGINEER.
   WATER: CLEAN, POTABLE.
   ADMIXTURES:
   AIR-ENTRAINING ADMIXTURE:ASTM C260. USE ONLY ADMIXTURES THAT HAVE BEEN TESTED AND APPROVED IN THE MIX DESIGNS. DO NOT USE CALCIUM CHLORIDE OR ADMIXTURES CONTAINING CHLORIDE IONS.
   3.5. ALL CONCRETE IS NORMAL WEIGHT CONCRETE UNLESS NOTED OTHERWISE.
   3.6. ALL CONCRETE SURFACES SHALL BE A BROOM FINISH UNLESS OTHERWISE NOTED.
   3.7. UNLESS NOTED OTHERWISE, ALL REINFORCING STEEL SHALL BE NEW BILLET STEEL, CONFORMING TO ASTM A-615, DEFORMED GRADE 60 (FY=60,000 PSI). DO NOT TACK WELD REINFORCING STEEL UNLESS NOTED OTHERWISE. SUPPORT REINFORCING STEEL 4'-0" ON CENTER.
   3.8. UNLESS NOTED OTHERWISE, ALL DETAILING, FABRICATION, AND PLACING OF REINFORCING STEEL SHALL CONFORM TO THE MANUAL OF STANDARD PRACTICE FOR DETAILING REINFORCED CONCRETE STRUCTURES (ACI 315).
   3.9. ALL BAR SPLICES SHALL BE CLASS "B" TENSION SPLICES PER ACI 318, UNLESS NOTED OTHERWISE.
   3.10. THE CONTRACTOR TO INVESTIGATE ACTUAL LOCATIONS OF UNDERGROUND UTILITIES AND LINES BEFORE EXCAVATING AND ADVISE THE ARCHITECT/ENGINEER OF ANY VARIATIONS. ALL EXCAVATIONS NEAR THESE LINES MUST BE CARRIED OUT WITH EXTREME CAUTION.

STRUCTURAL DESIGN CRITERIA: EQUIPMENT SUPPORT

THE EQUIPMENT PEDESTALS ARE DESIGNED TO SUPPORT THE ROTARY DRUM THICKENING AND MEET THE 2017 FLORIDA BUILDING CODE AND ASCE 7-10.

WIND RISK CATEGORY:	III
EXPOSURE CATEGORY:	C
BASIC WIND SPEED (3-s gust) :	167 mph

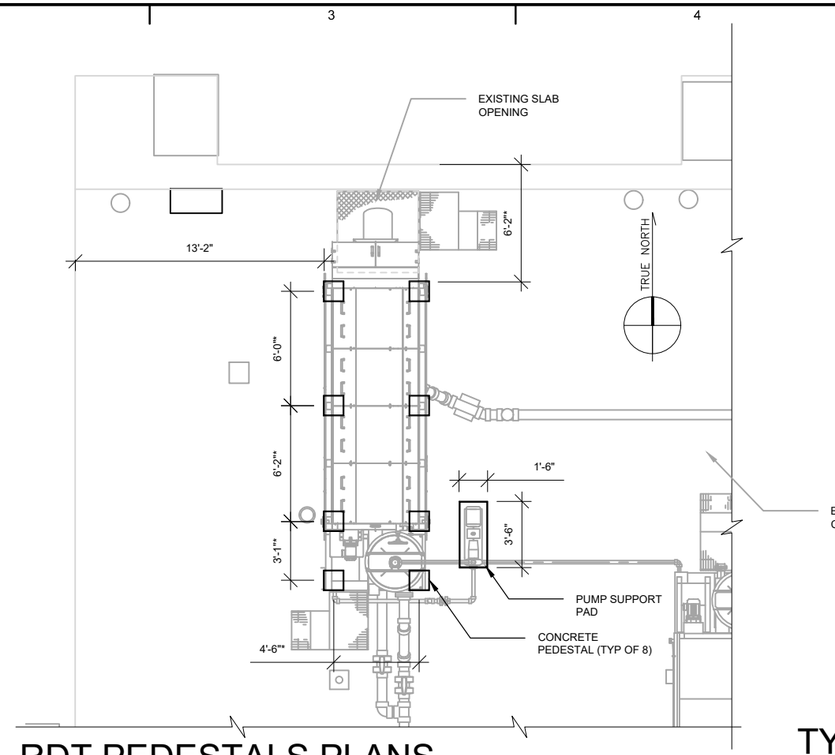

RDT PEDESTALS PLANS

SCALE: $\frac{3}{8}$" = 1'-0"

0 2' 4' 8'

NOTES:

* COORDINATE PEDESTALS LOCATION WITH MECHANICAL DRAWINGS AND EQUIPMENT MANUFACTURER. SEE MECHANICAL DRAWING FOR HEIGHT AND DIMENSIONS.

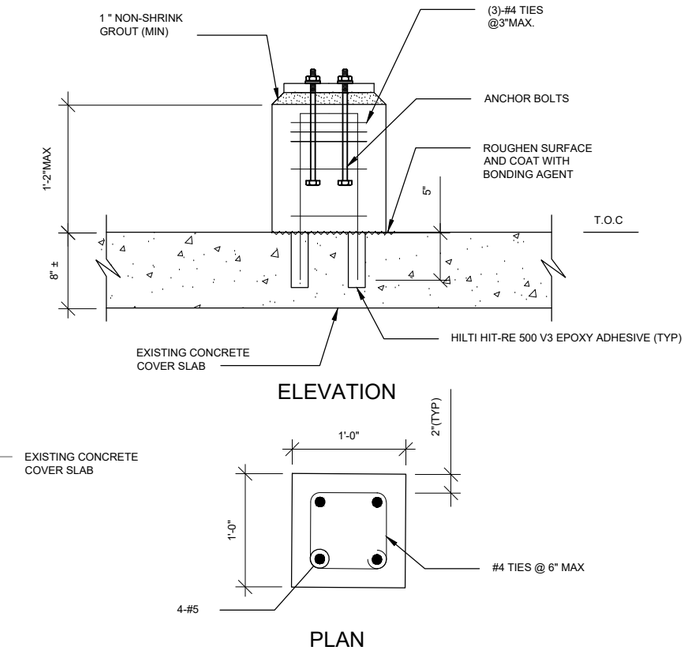

TYPICAL CONCRETE PEDESTALS

SCALE: $\frac{3}{4}$" = 1'-0"

0 1' 2' 3'

NOTES:

1. ANCHOR BOLT SIZE AND EMBEDMENT PER MANUFACTURER.
2. FOR ADHESIVE DOWELS DO NOT DRILL ON THROUGH THE EXISTING REINFORCING. SHIFT SLIGHTLY TO AVOID DAMAGING EXISTING REBAR

LAP SPLICE AND EMBEDMENT LENGTH TABLE

REINFORCEMENT LAP SPLICE, EMBEDMENT LENGTH AND STANDARD HOOKS

BAR SIZE	MIN LAP LENGTHS FOR BEAMS AND COLUMNS* CLASS B		MIN LAP LENGTHS FOR SLABS AND WALLS ** CLASS B		MIN EMBEDMENT LENGTHS FOR BEAMS AND COLUMNS *		MIN EMBEDMENT LENGTHS FOR SLABS AND WALLS **		MIN STD. HOOKS WITH STD HOOKS	MIN STD. HOOKS 90° A OR G	MIN STD. HOOKS 135° A OR G	MIN STD. HOOKS 135° H
	TOP***	OTHERS	TOP***	OTHERS	TOP***	OTHERS	TOP***	OTHERS				
#3	25	19	16	16	19	15	12	12	5	6	4	2.5
#4	33	25	20	16	25	19	15	12	7	8	4.5	3
#5	41	31	25	19	31	24	19	15	9	10	5.5	3.75
#6	49	37	29	23	37	29	23	18	10	12	8	4.5
#7	71	54	43	33	54	42	33	25	12	14	9	5.25
#8	81	62	49	37	62	48	37	29	14	16	10.5	6
#9	91	70	60	46	70	54	46	36	15	19	-	-
#10	102	79	74	57	79	61	57	44	17	22	-	-
#11	114	87	89	69	87	67	68	53	19	24	-	-

REINFORCEMENT LAP SPLICE, EMBEDMENT LENGTH AND STANDARD HOOKS TABLE IS BASED ON A MINIMUM CONCRETE COMPRESSIVE STRENGTH OF 4000 PSI AND 60000 PSI REINFORCEMENT (WITH NO EPOXY COATING).

ALL LAPS SPLICES SHALL BE CLASS B SPLICES.

* THE MINIMUM LAP LENGTH FOR BEAMS, COLUMNS, AND STRAIGHT EMBEDMENTS ARE BASED ON A 3 BAR DIAMETER MINIMUM CENTER TO CENTER BAR SPACING AND A 2 INCH BAR COVER. IF THE SPLICE AND/OR EMBEDMENT DOES NOT CONFORM TO THESE REQUIREMENTS, THEN CONTRACTOR SHALL APPLY APPROPRIATE FACTORS IN COMPLIANCE WITH ACI 318 WITH APPROVAL BY ENGINEER.

** THE MINIMUM LAP LENGTH FOR SLABS, WALLS, AND STRAIGHT EMBEDMENTS ARE BASED ON A 6 INCH BAR SPACING AND A 2 INCH BAR COVER. IF THE LAP CONDITION DOES NOTE CONFORM TO THESE REQUIREMENTS, THEN USE BEAM LAP LENGTHS; OR COMPLY WITH LAP REQUIREMENTS OF ACI 318 WITH APPROVAL BY ENGINEER.

*** TOP BARS ARE DEFINED AS ALL HORIZONTAL BARS WITH 12" OR MORE FRESH CONCRETE BENEATH.

WHERE SPLICES ARE REQUIRED BETWEEN BARS OF DIFFERENT SIZES, THE LAP LENGTH SHALL BE NO LESS THAN THE EMBEDMENT LENGTH OF THE LARGER BAR OR THE LAP LENGTH OF THE SMALLER BAR, WHICHEVER IS GREATER.

IN CIRCULAR TANKS DESIGNED FOR RING TENSION, THE LOCATION OF SPLICES SHOULD BE STAGGERED. ADJACENT HOOP REINFORCING SPLICES SHOULD BE STAGGERED HORIZONTALLY (CENTER OF LAP TO CENTER OF LAP) BY NOT LESS THAN ONE LAP LENGTH NOR 3 FEET AND SHOULD NOT COINCIDE IN VERTICAL ARRAYS MORE FREQUENTLY THAN EVERY THIRD BAR.

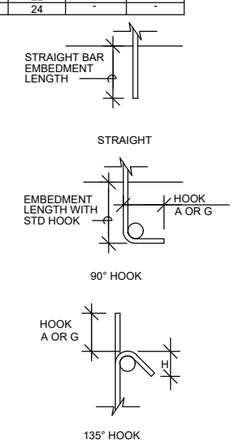

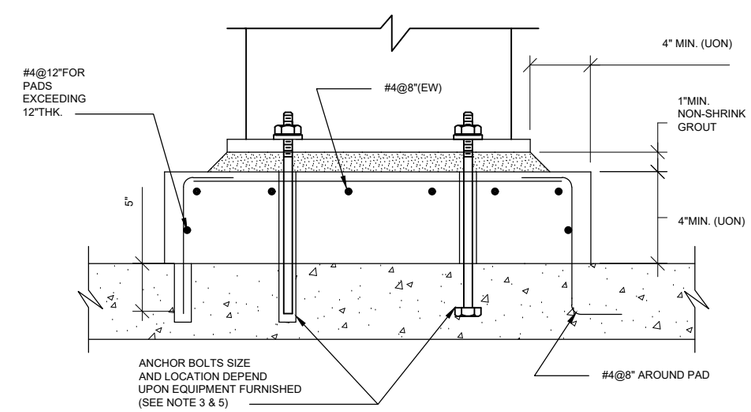

TYPICAL EQUIPMENT SUPPORT PAD DETAIL

NO SCALE

NOTES:

1. PROVIDE TYP. 4" MINIMUM CONCRETE SUPPORT PAD FOR ALL EQUIPMENT UNLESS OTHERWISE NOTED.
2. COORDINATE LOCATION AND SIZE OF PADS WITH OTHER DRAWINGS AND MANUFACTURER'S CERTIFIED DRAWINGS.
3. FOR EXISTING SLABS, DRILL HOLE DIAMETER AND DEPTH IN EXISTING SLAB PER MANUFACTURER'S REQUIREMENTS FOR ADHESIVE ANCHORAGE SYSTEM USED.
4. SEE ELECTRICAL SHEETS FOR OTHER SPECIFIC ELECTRICAL EQUIPMENT PAD REQUIREMENTS AND EMBEDDED ITEMS.
5. USE ADHESIVE ANCHOR BOLTS FOR EXISTING CONCRETE AND CAST-IN ANCHOR BOLTS FOR NEW CONCRETE.

ARCADIS
CERTIFICATE OF AUTHORIZATION 7917
3109 W DR MARTIN LUTHER KING JR BLVD
TAMPA, FL 33607, SUITE 350

CONSULTANTS

SEALS

H.A.HOBI PE.

FL LIC. No. 59360

VERO BEACH, FL
INDIAN RIVER COUNTY

CENTRAL WASTEWATER TREATMENT FACILITY RAS/WAS PUMP REPLACEMENTS

NO.	DATE	ISSUED FOR	BY
2	3/30/2020	100% DESIGN	JR
1	11/15/2019	90% DESIGN	JR

DATE:	MARCH 2020
PROJECT NO.:	30002159.0000
FILE NAME:	S-01
DESIGNED BY:	S. HOBI
DRAWN BY:	J. SAIRE
CHECKED BY:	S. HOBI

SHEET TITLE

STRUCTURAL

RDT SUPPORT PLAN AND DETAILS

SCALE: AS NOTED

S-01

SHEET 15 OF 26

DIAGRAMS:

S — POWER ON-OFF SNAP SWITCH, 1PH, 120V AC, 20A
S2-DENOTES, 2 POLE, 240 VOLTS, 20A

MS — 20A TWO OR THREE POLE MANUAL STARTER,

PUSH-BUTTON STATION

PUSH-BUTTON STATION WITH LOCK-OUT FEATURE

SELECTOR SWITCH

INDICATING LIGHT

CS — CONTROL STATION

HOA — HAND-OFF-AUTO SELECTOR SWITCH CONTROL STATION

VCS — CONTROL STATION FURNISHED BY EQUIPMENT VENDOR

A AS — AMMETER - AMMETER SWITCH

V VS — VOLTMETER - VOLTMETER SWITCH

F 60/40 — DISCONNECT SWITCH - 480V 3POLE UNFUSED OR FUSED
F DENOTES FUSING, ONLY WHERE INDICATED, OTHERWISE DS.
FIRST NUMBER DENOTES SWITCH AMP RATING.
SECOND NUMBER DENOTES FUSE SIZE WHEN PROVIDED.

COMBINATION STARTER - 480V, 3 POLE

VFD — VARIABLE FREQUENCY DRIVE - VFD

JB — JUNCTION BOX; SIZE AS REQUIRED BY N.E.C.

TB — TERMINAL BOX; SIZE AS REQUIRED BY N.E.C.
AND TO ACCOMODATE ALL TERMINATIONS ON
TERMINAL BLOCKS. TERMINATIONS TO INCLUDE
SPARE WIRING.

PB — PULL BOX; SIZE AS REQUIRED BY N.E.C.

M 5 — ELECTRIC MOTOR (NUMBER INDICATES HORSEPOWER).

MSH — MOTOR SPACE HEATER

MV — MOTORIZED VALVE WITH CONTROLLER BY VENDOR

MG — MOTORIZED GATE WITH CONTROLLER BY VENDOR

SV — SOLENOID VALVE

PFD — PFD DENOTES PULL FUSE
DISCONNECT TYPE

600/5 3 — CURRENT TRANSFORMER, RATIO AND QUANTITY DENOTED

POTENTIAL TRANSFORMER

3200AF / 3000AT — DRAWOUT TYPE, ELECTRICALLY OPERATED CIRCUIT BREAKER
WITH SOLID STATE TRIP PROGRAMMER.

EO (400P) — DENOTES PLUG RATING WHEN LESS THAN SENSOR RATING
IS REQUIRED

100 / 30 2P — THERMAL-MAGNETIC CIRCUIT BREAKER
2P WHEN NOTED DENOTES 2 POLE
(FRAME SIZE)
(TRIP SIZE)

7A / MCP — AC COMBINATION
FULL VOLTAGE NON-REVERSING STARTER
(CONTINUOUS AMP RATING)
(MOTOR CIRCUIT PROTECTOR)
MAGNETIC BREAKER

MAGNETIC MOTOR STARTER

OVERLOAD RELAY

FUSE - SIZE AS NOTED

REDUCED VOLTAGE SOLID STATE STARTER

TRANSFORMER- SIZE AS NOTED ON THE DRAWINGS

DISCONNECT SWITCH
WITH FUSING WHERE NOTED

SUBMERSIBLE CABLES
BY VENDOR

SPD — SURGE PROTECTIVE DEVICE

PLANS:

I-2 / GF/SS — DUPLEX CONVENIENCE RECEPTACLE, 2 POLE, 3 WIRE, 120
VOLTS A.C. 20 AMP RECEPTACLE DESIGNATIONS, FIRST
NUMBER DENOTES PANEL, SECOND NUMBER DENOTES
CIRCUIT NUMBER. GF-DENOTES GROUND FAULT TYPE.
SS-DENOTES SURGE SUPPRESSION TYPE WP-DENOTES
WHILE IN USE WEATHERPROOF ENCLOSURE

SINGLE CONVENIENCE RECEPTACLE, 2 POLE,
3 WIRE; 120 VOLTS AC. 20 AMP UNLESS
NOTED OTHERWISE ON DRAWINGS.

POWER RECEPTACLE, 2 POLE, 3 WIRE
250 VOLTS A.C. 20 AMP UNLESS
NOTED OTHERWISE ON DRAWINGS.

S^a — SINGLE POLE SWITCH - LOWER CASE
LETTER DENOTES SWITCHING.

S_2 — TWO POLE SWITCH

S_3 — THREE-WAY SWITCH

S_4 — FOUR-WAY SWITCH

INDICATES NEW EQUIPMENT/EXPOSED CONDUIT

INDICATES EXISTING EQUIPMENT/CONDUIT

INDICATES CONCEALED OR UNDERGROUND
EQUIPMENT/CONDUIT

CONDUIT TURN DOWN

CONDUIT TURN UP

CONDUIT CAPPED

EQUIPMENT PROVIDED BY OTHERS

SPACE HEATER

LP1-2 / JB / 10 — LETTERS AND NUMBERS INDICATE PANEL AND CIRCUIT NUMBER
(LP1-2). CROSS LINES INDICATE NUMBER OF CONDUCTORS. HALF
HASH MARKS INDICATES NEUTRAL. NUMBER (10) DENOTES WIRE
SIZE WHEN NOT #12 AWG. CONTINUE CONDUIT AND WIRE RUN
FROM BOX TO DEVICE IN ROOM OR AREA AS NOTED BY BRANCH
CIRCUIT NUMBER. #10 AWG WIRING SHALL BE USED FOR RUNS
BETWEEN PANEL AND FIRST LIGHTING FIXTURE OR RECEPTACLE
EXCEEDING 50 FEET, UNLESS OTHERWISE NOTED ON DRAWING.

INDICATES GROUND CONDUCTOR

C12 — INDICATES HOMERUN AND CONDUIT TAG

EMH — ELECTRICAL MANHOLE

EHH — ELECTRICAL HANDHOLE

TMH — TELEPHONE MANHOLE

THH — TELEPHONE HANDHOLE

PC — PHOTOCELL

FLUORESCENT LIGHTING FIXTURE - SURFACE OR PENDANT
MOUNTED. FIRST NUMERAL DENOTES LIGHTING PANEL (HW-LP),
SECOND NUMBER DENOTES BRANCH CIRCUIT NUMBER.
LOWER CASE LETTER DENOTES SWITCHED CIRCUIT.

LED WALL MOUNTED LIGHTING FIXTURE.

FLUORESCENT LIGHTING FIXTURE - SURFACE OR PENDANT
MOUNTED. FIRST NUMERAL DENOTES LIGHTING PANEL (HW-LP),
SECOND NUMBER DENOTES BRANCH CIRCUIT NUMBER.
LOWER CASE LETTER DENOTES SWITCHED CIRCUIT.

FLUORESCENT LIGHTING FIXTURE WITH BATTERY PACK -
SURFACE OR PENDANT MOUNTED.

WALL MOUNTED LIGHTING FIXTURE.

POLE OR STANCHION MOUNTED LIGHTING FIXTURE.

TWO (2) POLE OR STANCHION MOUNTED LIGHTING FIXTURES

GF — POLE MOUNTED FIXTURE WITH GF RECEPTACLE

LED SELF CONTAINED DC EMERGENCY LIGHTING UNIT.
LETTER DENOTES FIXTURE TYPE.

LED SELF CONTAINED DC EMERGENCY LIGHTING UNIT.
LETTER DENOTES FIXTURE TYPE.

D / 150 / 10'-0" AFF — FIXTURE DESIGNATION SYMBOL. SEE LIGHTING FIXTURE
SCHEDULE FOR DESCRIPTION AND TYPE. ALL FIXTURES
SHOWN IN A ROOM WITH THIS SYMBOL SHALL BE OF TYPE
INDICATED BY LETTER; NUMBER IN SYMBOL INDICATES
LAMP WATTAGE AND NUMBER OF LAMPS WHERE MORE THAN
ONE (UNLESS OTHERWISE NOTED). NUMBER BELOW
SYMBOL INDICATES MOUNTING HEIGHT ABOVE FINISHED
FLOOR OR AS NOTED.

M 1-24 / UH 1-24 OR 1-24 / M — MOTOR, UNIT HEATER-NUMERAL DENOTES
LIGHTING PANEL AND BRANCH CIRCUIT
NUMBER. MOTOR SYMBOL SHOWN DASHED
DENOTES EQUIPMENT LOCATED ON ROOF.

T — THERMOSTAT

GROUND ROD

GROUND TEST POINT

GROUND GRID CABLE CONNECTION

GROUND

#4/0 GROUND CABLE BURIED 2'-6" BELOW
GRADE, UNLESS NOTED OTHERWISE

INSTRUMENTS:

PS 123 — INSTRUMENT DEVICE: LETTERS IDENTIFY
DEVICE FUNCTION, NUMBERS WHERE INDICATED
DENOTE LOOP NUMBER

PC — PRESSURE CONTROLLER

PS — PRESSURE SWITCH (PSH DENOTES PRESSURE SWITCH HIGH
AND PSL DENOTES PRESSURE LOW)

ABBREVIATIONS:

A	AMPERES
AC	ALTERNATING CURRENT
AFF	ABOVE FINISHED FLOOR
AFG	ABOVE FINISHED GRADE
AHU	AIR HANDLING UNIT
AL	ALUMINUM
ATS	AUTOMATIC TRANSFER SWITCH
AWG	AMERICAN WIRE GAUGE
BKR	BREAKER
BLDG	BUILDING
C, CND	CONDUIT
CB	CIRCUIT BREAKER
CBV	CABLE BY VENDOR, INSTALLED BY CONTRACTOR
CKT	CIRCUIT
CNTRL	CONTROL
CP	CONTROL PANEL
CPT	CONTROL POWER TRANSFORMER
CS	CONTROL STATION
CT	CURRENT TRANSFORMER
DB	DECIBEL
DC	DIRECT CURRENT
DN	DOWN
DISC	DISCONNECT
DPDT	DOUBLE POLE DOUBLE THROW
DS	DISCONNECT SWITCH
EC	EMPTY CONDUIT
EHH	ELECTRICAL HANDHOLE
EL, ELEV	ELEVATION
EMH	ELECTRICAL MANHOLE
EMT	ELECTRICAL METALLIC TUBING
EP	EXPLOSION PROOF
EXIST	EXISTING
FACP	FIRE ALARM CONTROL PANEL
FDR	FEEDER
FIXT	FIXTURE
FT	FEET OR FOOT
FVNR	FULL VOLTAGE NON-REVERSING
GALV	GALVANIZED
GEC	GROUNDING ELECTRODE CONDUCTOR
G, GND	GROUND
GFI	GROUND FAULT INTERRUPTOR
HH	HAND HOLE
HOA	HAND/OFF/AUTO
HZ	HERTZ
ISO	ISOLATION
JB	JUNCTION BOX, CONDUIT, FITTING AS REQUIRED BY NEC, UNLESS OTHERWISE NOTED
KAIC	THOUSAND AMPERES INTERRUPTING CURRENT
KCMIL	THOUSAND CIRCULAR MILS
KVA	THOUSAND VOLT AMPERES
KW	KILOWATTS
LA	LIGHTNING ARRESTOR
LCP	LOCAL CONTROL PANEL
LS	LEVEL SWITCH
LTG	LIGHTING
LB	LINE BOX
M	MOTOR
MCC	MOTOR CONTROL CENTER
MCP	MOTOR CIRCUIT PROTECTOR
MFR	MANUFACTURER
MIN	MINIMUM
MTG	MOUNTING
MTS	MANUAL TRANSFER SWITCH
NA	NON-AUTOMATIC
N/A	NOT APPLICABLE
NCTC	NORMALLY CLOSED, TIME CLOSE
NCTO	NORMALLY OPEN, TIME OPEN
NEC	NATIONAL ELECTRIC CODE
NIC	NOT IN CONTRACT
NTS	NOT TO SCALE
OFCI	OWNER FURNISHED, CONTRACTOR INSTALLED
OL	OVERLOAD RELAY
PB	PULL BOX
PFC	POWER FACTOR CORRECTION CAPACITORS
PFD	PULL FUSE DISCONNECT
PLC	PROGRAMMABLE LOGIC CONTROLLER
PNL	PANEL
PT	POTENTIAL TRANSFORMER
PVC	POLYVINYL CHLORIDE
RECEP	RECEPTACLE
RGS	RIGID GALVANIZED STEEL
SL	SECTION LENGTH
SP	SPARE
SPD	SURGE PROTECTION DEVICE
SST	STAINLESS STEEL
SWB,SWBD	SWITCHBOARD
SWGR	SWITCHGEAR
TEW	THERMOCOUPLE EXTENSION WIRE
TPS	TWISTED PAIR, SHIELDED
TYP	TYPICAL
UG	UNDERGROUND
UON	UNLESS OTHERWISE NOTED
UPS	UNINTERRUPTIBLE POWER SUPPLY
V	VOLTS
VAC	VOLTS ALTERNATING CURRENT
VFD	VARIABLE FREQUENCY DRIVE
WP	WEATHERPROOF
XFMR	TRANSFORMER

GENERAL NOTES:

1. THE SYMBOLS AND ABBREVIATIONS LIST ON THIS SHEET IS A COMPREHENSIVE STANDARD GUIDE INTENDED FOR GENERAL USE ON ALL PROJECTS. THEREFORE NOT ALL THE SYMBOLS AND ABBREVIATIONS CONTAINED IN THIS LIST ARE NECESSARILY USED ON THIS PARTICULAR PROJECT AND SHOULD BE USED FOR CLARIFICATION ONLY.
2. THE CONTRACTOR SHALL READ AND UNDERSTAND THE ENTIRE SET OF CONSTRUCTION DOCUMENTS. THIS INCLUDES BUT IS NOT LIMITED TO THE PLANS AND SPECIFICATIONS FOR ALL DISCIPLINES. THIS WILL ENSURE THAT HE UNDERSTANDS THE FULL SCOPE OF WORK AND IS ABLE TO CONVEY THE REQUIRED MATERIALS AND METHODS OF INSTALLATION TO THE HIS ESTIMATORS, SUPPLIERS AND INSTALLERS.
3. THE CONTRACTOR SHALL VISIT THE SITE AND FAMILIARIZE HIMSELF WITH THE EXISTING CONDITIONS.
4. PROVIDE MEANS TO FURNISH AND INSTALL.
5. COORDINATE ANY AND ALL WORK WITH OTHER TRADES PRIOR TO INSTALLATION IN ORDER TO AVOID CONFLICTS DURING CONSTRUCTION.
6. THESE DRAWINGS ARE DIAGRAMMATIC IN NATURE. DO NOT SCALE FROM THESE DRAWINGS.
7. WHERE JOB CONDITIONS REQUIRE CHANGES FROM THE CONTRACT DOCUMENTS THAT DO NOT CHANGE THE SCOPE OF INSTALLATION OR NATURE OF THE WORK REQUIRED, THE CONTRACTOR SHALL MAKE SUCH CHANGES WITHOUT ANY ADDITIONAL COST TO THE OWNER. NO OTHER CHANGES MAY BE MADE WITHOUT WRITTEN CONSENT FROM THE ENGINEER AND OWNER.
8. ALL WORK SHALL BE DONE IN ACCORDANCE WITH THE REQUIREMENTS OF THE ENFORCED EDITION OF THE NATIONAL ELECTRIC CODE, NATIONAL ELECTRIC SAFETY CODE, LIFE SAFETY CODE, FLORIDA BUILDING CODE AND ALL LOCAL AND STATE CODES AND REGULATIONS. THE CONTRACTOR SHALL OBTAIN AND PAY FOR ALL PERMITS AND INSPECTIONS REQUIRED BY THE AUTHORITY HAVING JURISDICTION.
9. MOUNTING HEIGHTS INDICATED ARE TO THE CENTER OF THE DEVICE U.O.N.

* PROVIDED BY OTHERS AS PART OF PACKAGED EDR SYSTEM

ARCADIS

CERTIFICATE OF AUTHORIZATION 7917
3109 W DR MARTIN LUTHER KING JR BLVD
TAMPA, FL 33607, SUITE 350

CONSULTANTS

SEALS

ERIC B. BATTLE II PE.
FL LIC. No. 81285

VERO BEACH, FL
INDIAN RIVER COUNTY

CENTRAL WASTEWATER TREATMENT FACILITY RAS/WAS PUMP REPLACEMENTS

NO.	DATE	ISSUED FOR	BY
2	3/30/2020	100% DESIGN	JR
1	11/15/2019	90% DESIGN	JR

DATE: MARCH 2020
PROJECT NO.: 30002159.0000
FILE NAME: E-01
DESIGNED BY: E. BATTLE
DRAWN BY: V. NGUYEN
CHECKED BY: E. BATTLE

SHEET TITLE

ELECTRICAL

ELECTRICAL NOTES, LEGEND AND ABBREVIATIONS

SCALE: AS NOTED

E-01

SHEET 16 OF 26

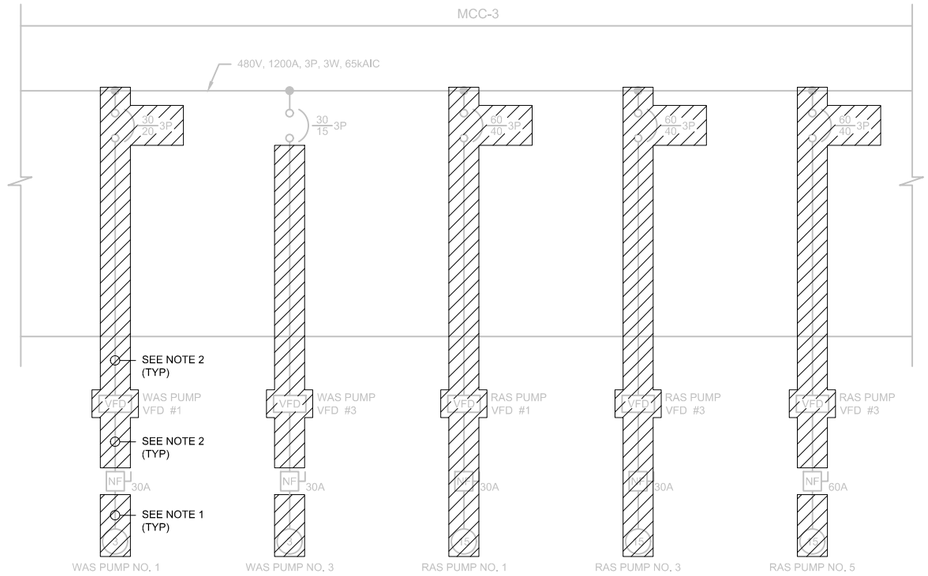

PARTIAL EXISTING MCC-3 ONE-LINE DIAGRAM DEMOLITION

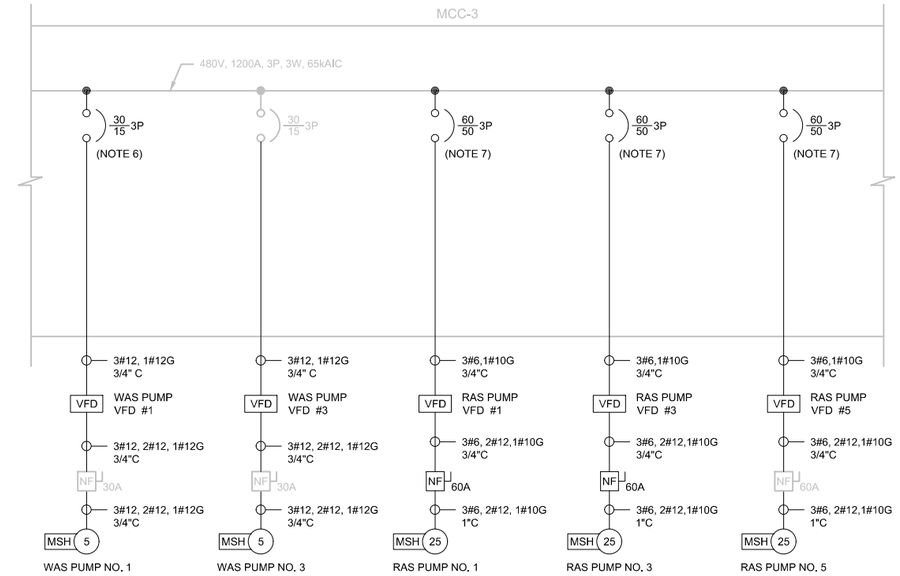

PARTIAL EXISTING MCC-3 ONE-LINE DIAGRAM PROPOSED

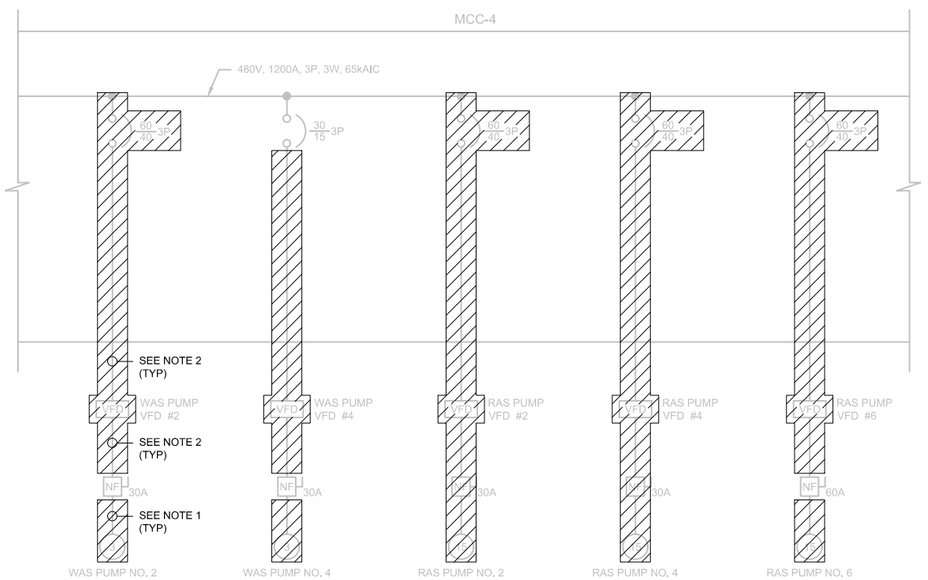

PARTIAL EXISTING MCC-4 ONE-LINE DIAGRAM DEMOLITION

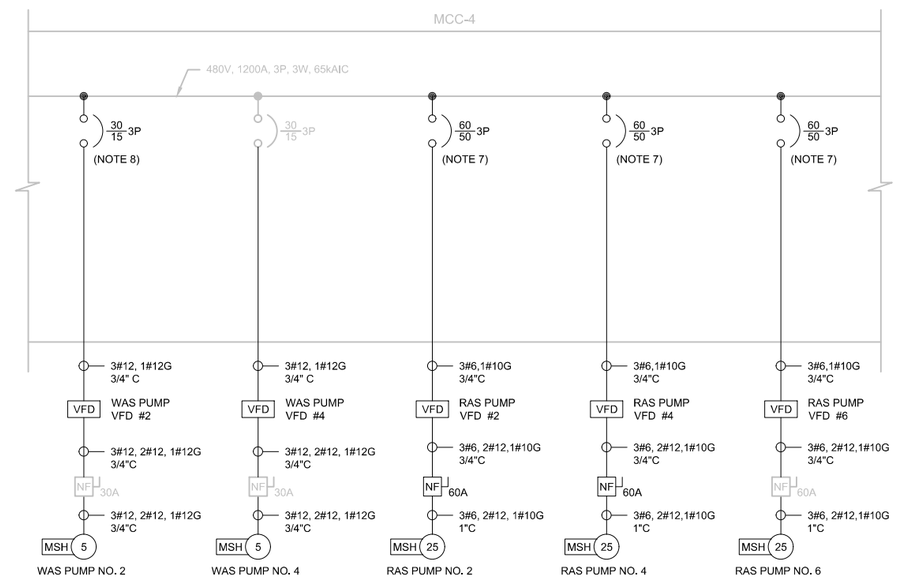

PARTIAL EXISTING MCC-4 ONE-LINE DIAGRAM PROPOSED

LEGEND:

DEMOLITION

NOTES:

1. CONTRACTOR SHALL REMOVE ALL WIRING AND EXPOSED FLEXIBLE CONDUIT SHOWN FOR DEMOLITION.
2. THE CONTRACTOR SHALL REMOVE ALL ASSOCIATED WIRING AND EXPOSED CONDUIT FOR DEVICES/EQUIPMENT THAT ARE SCHEDULED FOR DEMOLITION. EXISTING EMBEDDED CONDUIT SHALL REMAIN TO BE RE-USED.
3. THE CONTRACTOR SHALL PROTECT ALL EXISTING CONSTRUCTION THAT IS TO REMAIN.
4. IT IS THE CONTRACTOR'S RESPONSIBILITY TO MAINTAIN CIRCUIT CONTINUITY TO ALL DEVICES AND EQUIPMENT THAT ARE TO REMAIN. THIS INCLUDES ANY EXTENSION OR RE-ROUTING OF EXISTING CIRCUITING AFFECTED BY DEMOLITION. NO EQUIPMENT MARKED FOR DEMOLITION SHALL BE DAMAGED OR DISCARDED WITHOUT PREVIOUS COORDINATION WITH AND APPROVAL BY THE OWNER.
5. REMOVE ALL WIRING, CONDUIT, OUTLET BOXES, SUPPORTS AND FASTENERS AS NECESSARY TO AVOID ANY CONFLICTS WITH THE NEW INSTALLATION.
6. CONTRACTOR SHALL REPLACE EXISTING 480V, 3P, 20A BREAKER WITH 480V, 3P, 15A BREAKER FOR NEW EQUIPMENT. PROVIDE GE RATING PLUG PRODUCT NUMBER SRPE30A15.
7. CONTRACTOR SHALL REPLACE EXISTING 480V, 3P, 40A BREAKER WITH 480V, 3P, 50A BREAKER FOR NEW EQUIPMENT. PROVIDE GE RATING PLUG PRODUCT NUMBER SRPE60A50.
8. CONTRACTOR SHALL REPLACE EXISTING 480V, 3P, 40A BREAKER WITH 480V, 3P, 15A BREAKER FOR NEW EQUIPMENT. CONTRACTOR SHALL FIELD VERIFY AND PROVIDE GE SERIES MOLDED CASE CIRCUIT BREAKER SAME AS THE EXISTING GE SERIES MOLDED CASE CIRCUIT BREAKER OF WAS PUMP NO. 4 OR EQUAL.

ARCADIS
CERTIFICATE OF AUTHORIZATION 7917
3109 W DR MARTIN LUTHER KING JR BLVD
TAMPA, FL 33607, SUITE 350

CONSULTANTS

SEALS

ERIC B. BATTLE II PE.
FL LIC. No. 81285

VERO BEACH, FL
INDIAN RIVER COUNTY

CENTRAL WASTEWATER TREATMENT FACILITY RAS/WAS PUMP REPLACEMENTS

NO.	DATE	ISSUED FOR	BY
2	3/30/2020	100% DESIGN	JR
1	11/15/2019	90% DESIGN	JR

DATE: MARCH 2020
PROJECT NO.: 30002159.0000
FILE NAME: E-02
DESIGNED BY: E. BATTLE
DRAWN BY: V. NGUYEN
CHECKED BY: E. BATTLE

SHEET TITLE

ELECTRICAL

PARTIAL MCC-3 & MCC-4 ONE-LINE DIAGRAM

SCALE: AS NOTED

E-02

SHEET 17 OF 26

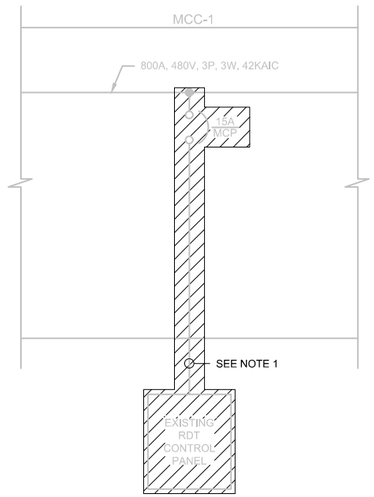

PARTIAL EXISTING MCC-1 ONE-LINE DIAGRAM DEMOLITION

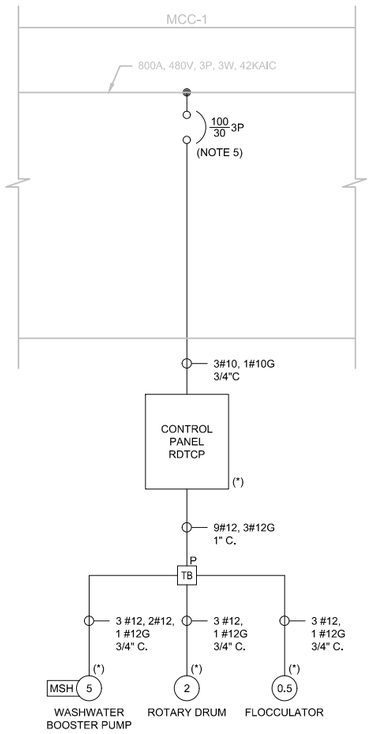

PARTIAL EXISTING MCC-1 ONE-LINE DIAGRAM PROPOSED

NOTES:

1. THE CONTRACTOR SHALL REMOVE ALL ASSOCIATED WIRING AND EXPOSED CONDUIT FOR DEVICES/EQUIPMENT THAT ARE SCHEDULED FOR DEMOLITION. EXISTING EMBEDDED CONDUIT SHALL REMAIN TO BE RE-USED.
2. THE CONTRACTOR SHALL PROTECT ALL EXISTING CONSTRUCTION THAT IS TO REMAIN.
3. IT IS THE CONTRACTOR'S RESPONSIBILITY TO MAINTAIN CIRCUIT CONTINUITY TO ALL DEVICES AND EQUIPMENT THAT ARE TO REMAIN. THIS INCLUDES ANY EXTENSION OR RE-ROUTING OF EXISTING CIRCUITING AFFECTED BY DEMOLITION. NO EQUIPMENT MARKED FOR DEMOLITION SHALL BE DAMAGED OR DISCARDED WITHOUT PREVIOUS COORDINATION WITH AND APPROVAL BY THE OWNER.
4. REMOVE ALL WIRING, CONDUIT, OUTLET BOXES, SUPPORTS AND FASTENERS AS NECESSARY TO AVOID ANY CONFLICTS WITH THE NEW INSTALLATION.
5. CONTRACTOR SHALL REPLACE EXISTING 480V, 3P, 15A, 65KAIC BREAKER WITH 480V, 3P, 30A, 65KAIC BREAKER FOR NEW EQUIPMENT. PROVIDE GE SERIES 2100 , CAT. NO. FS F 1 D.

LEGEND:

DEMOLITION
(*) PROVIDED BY VENDOR

ARCADIS
CERTIFICATE OF AUTHORIZATION 7917
3109 W DR MARTIN LUTHER KING JR BLVD
TAMPA, FL 33607, SUITE 350

CONSULTANTS

SEALS

ERIC B. BATTLE II PE.
FL LIC. No. 81285

VERO BEACH, FL
INDIAN RIVER COUNTY

CENTRAL WASTEWATER
TREATMENT FACILITY
RAS/WAS PUMP
REPLACEMENTS

NO.	DATE	ISSUED FOR	BY
2	3/30/2020	100% DESIGN	JR
1	11/15/2019	90% DESIGN	JR

DATE: MARCH 2020
PROJECT NO.: 30002159.0000
FILE NAME: E-03
DESIGNED BY: E. BATTLE
DRAWN BY: V. NGUYEN
CHECKED BY: E. BATTLE

SHEET TITLE

ELECTRICAL

PARTIAL MCC-1
ONE-LINE DIAGRAM

SCALE: AS NOTED

E-03

SHEET 18 OF 26

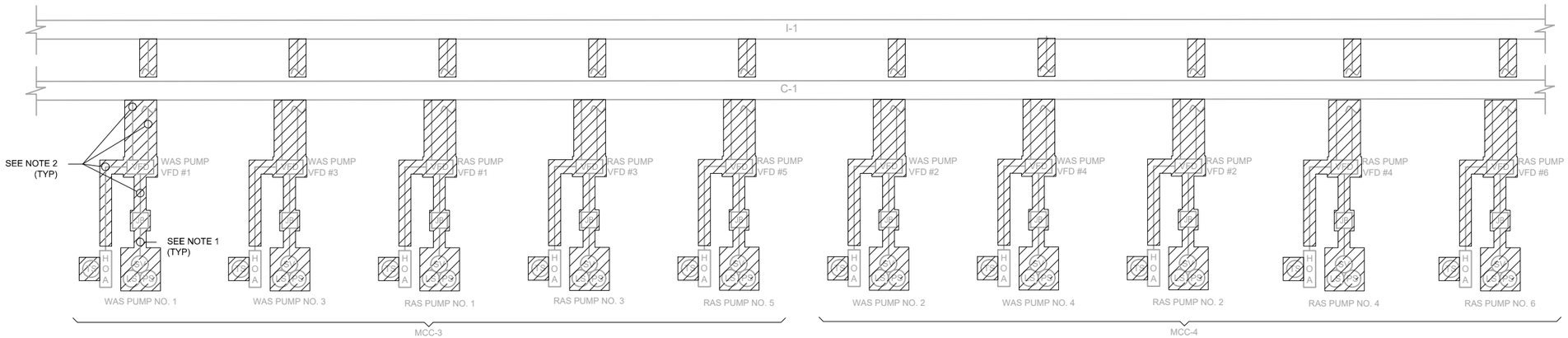

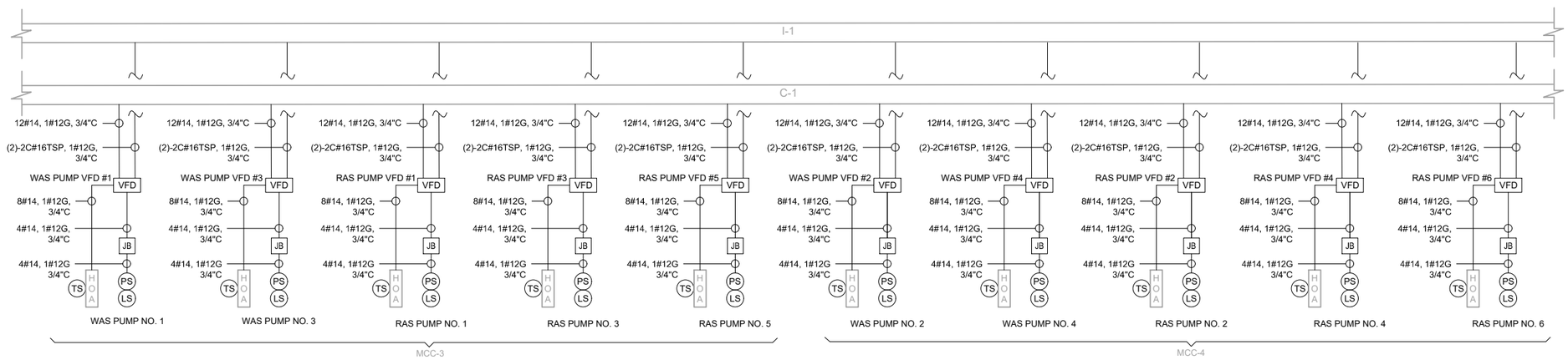

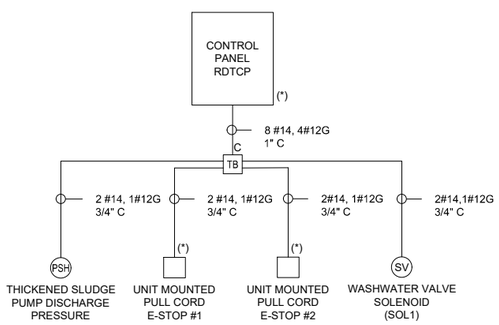

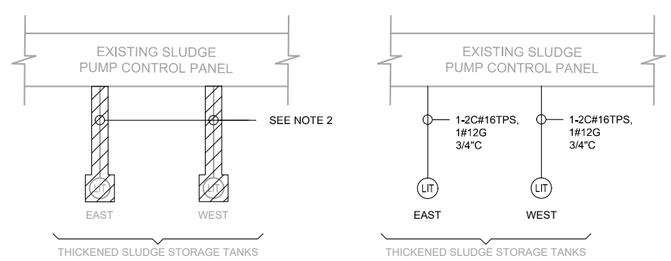

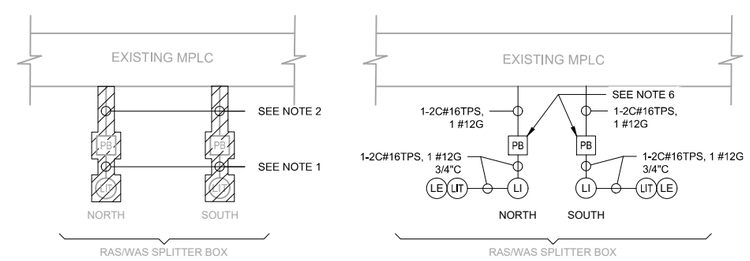

LEGEND:

DEMOLITION

(*) PROVIDED BY VENDOR

NOTES:

1. CONTRACTOR SHALL REMOVE ALL WIRING AND EXPOSED FLEXIBLE CONDUIT SHOWN FOR DEMOLITION.
2. CONTRACTOR SHALL REMOVE ALL ASSOCIATED WIRING AND EXPOSED CONDUIT FOR DEVICES/EQUIPMENT THAT ARE SCHEDULED FOR DEMOLITION. EXISTING EMBEDDED CONDUIT SHALL REMAIN TO BE RE-USED.
3. CONTRACTOR SHALL PROTECT ALL EXISTING CONSTRUCTION THAT IS TO REMAIN.
4. IT IS THE CONTRACTOR'S RESPONSIBILITY TO MAINTAIN CIRCUIT CONTINUITY TO ALL DEVICES AND EQUIPMENT THAT ARE TO REMAIN. THIS INCLUDES ANY EXTENSION OR RE-ROUTING OF EXISTING CIRCUITING AFFECTED BY DEMOLITION. NO EQUIPMENT MARKED FOR DEMOLITION SHALL BE DAMAGED OR DISCARDED WITHOUT PREVIOUS COORDINATION WITH AND APPROVAL BY THE OWNER.
5. REMOVE ALL WIRING, CONDUIT, OUTLET BOXES, SUPPORTS AND FASTENERS AS NECESSARY TO AVOID ANY CONFLICTS WITH THE NEW INSTALLATION.
6. PROVIDE LOCAL SURGE PROTECTION DEVICE. SPD SHALL BE CROUSE-HINDS SERIES MTL TP48, OR EQUAL.

ARCADIS

CERTIFICATE OF AUTHORIZATION 7917
3109 W DR MARTIN LUTHER KING JR BLVD
TAMPA, FL 33607, SUITE 350

CONSULTANTS

SEALS

ERIC B. BATTLE II PE.
FL LIC. No. 81285

VERO BEACH, FL
INDIAN RIVER COUNTY

CENTRAL WASTEWATER TREATMENT FACILITY RAS/WAS PUMP REPLACEMENTS

NO.	DATE	ISSUED FOR	BY
2	3/30/2020	100% DESIGN	JR
1	11/15/2019	90% DESIGN	JR

DATE: MARCH 2020
PROJECT NO.: 30002159.0000
FILE NAME: E-04
DESIGNED BY: E. BATTLE
DRAWN BY: V. NGUYEN
CHECKED BY: E. BATTLE

SHEET TITLE

ELECTRICAL

INTERCONNECT RISER DIAGRAM

SCALE: AS NOTED

E-04

SHEET 19 OF 26

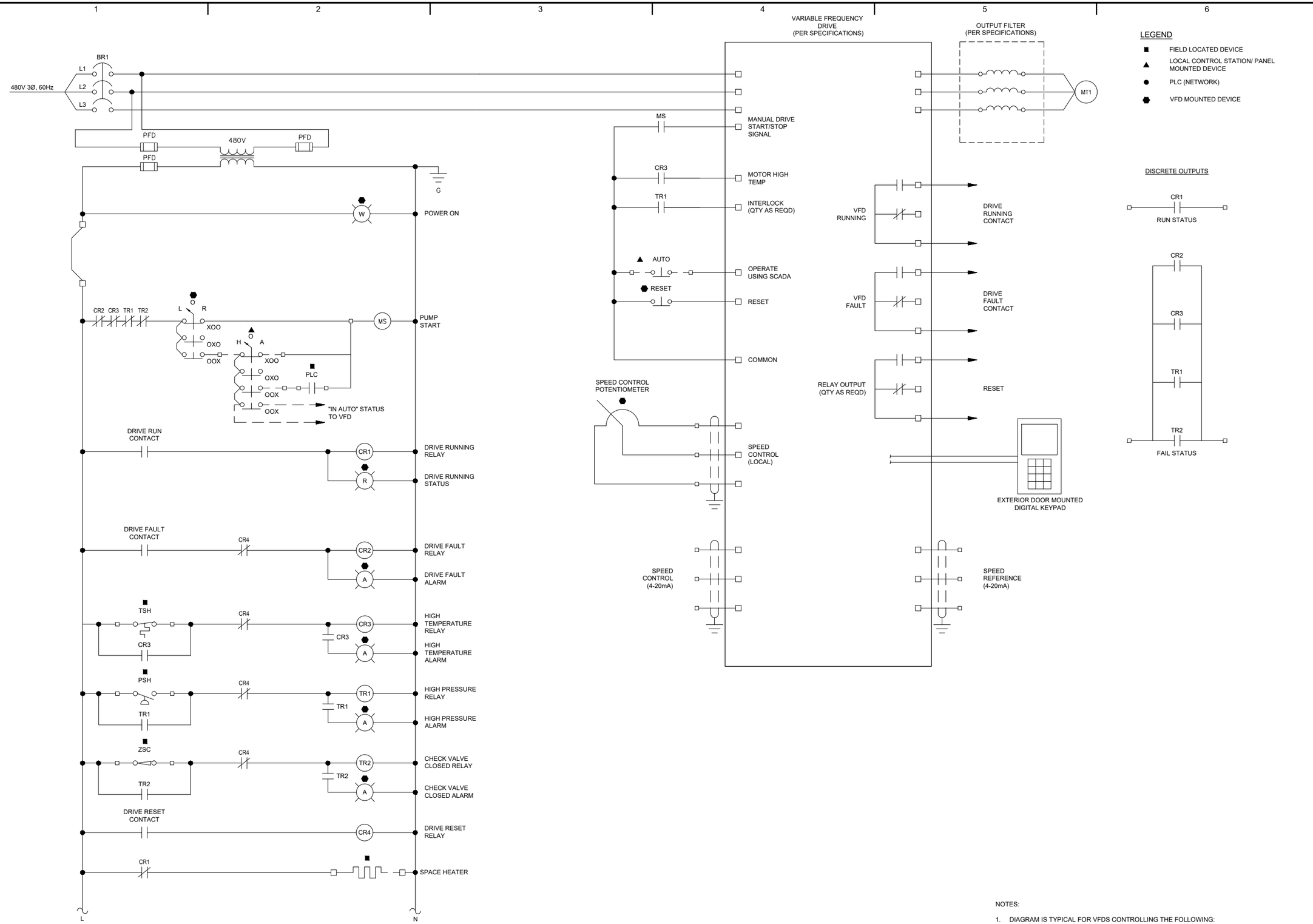

TYPICAL 480V VFD MOTOR SCHEMATIC

NOTES:

1. DIAGRAM IS TYPICAL FOR VFDS CONTROLLING THE FOLLOWING:
   1.1. RAS PUMP MOTORS 1 THROUGH 6.
   1.2. WAS PUMP MOTORS 1 THROUGH 4.

ARCADIS

CERTIFICATE OF AUTHORIZATION 7917
3109 W DR MARTIN LUTHER KING JR BLVD
TAMPA, FL 33607, SUITE 350

CONSULTANTS

SEALS

ERIC B. BATTLE II PE.
FL LIC. No. 81285

VERO BEACH, FL
INDIAN RIVER COUNTY

CENTRAL WASTEWATER TREATMENT FACILITY
RAS/WAS PUMP REPLACEMENTS

NO.	DATE	ISSUED FOR	BY
2	3/30/2020	100% DESIGN	JR
1	11/15/2019	90% DESIGN	JR

DATE: MARCH 2020
PROJECT NO.: 30002159.0000
FILE NAME: E-05
DESIGNED BY: E. BATTLE
DRAWN BY: V. NGUYEN
CHECKED BY: E. BATTLE

SHEET TITLE

ELECTRICAL

VFD ELEMENTARY WIRING SCHEMATIC

SCALE: AS NOTED

E-05

SHEET 20 OF 26

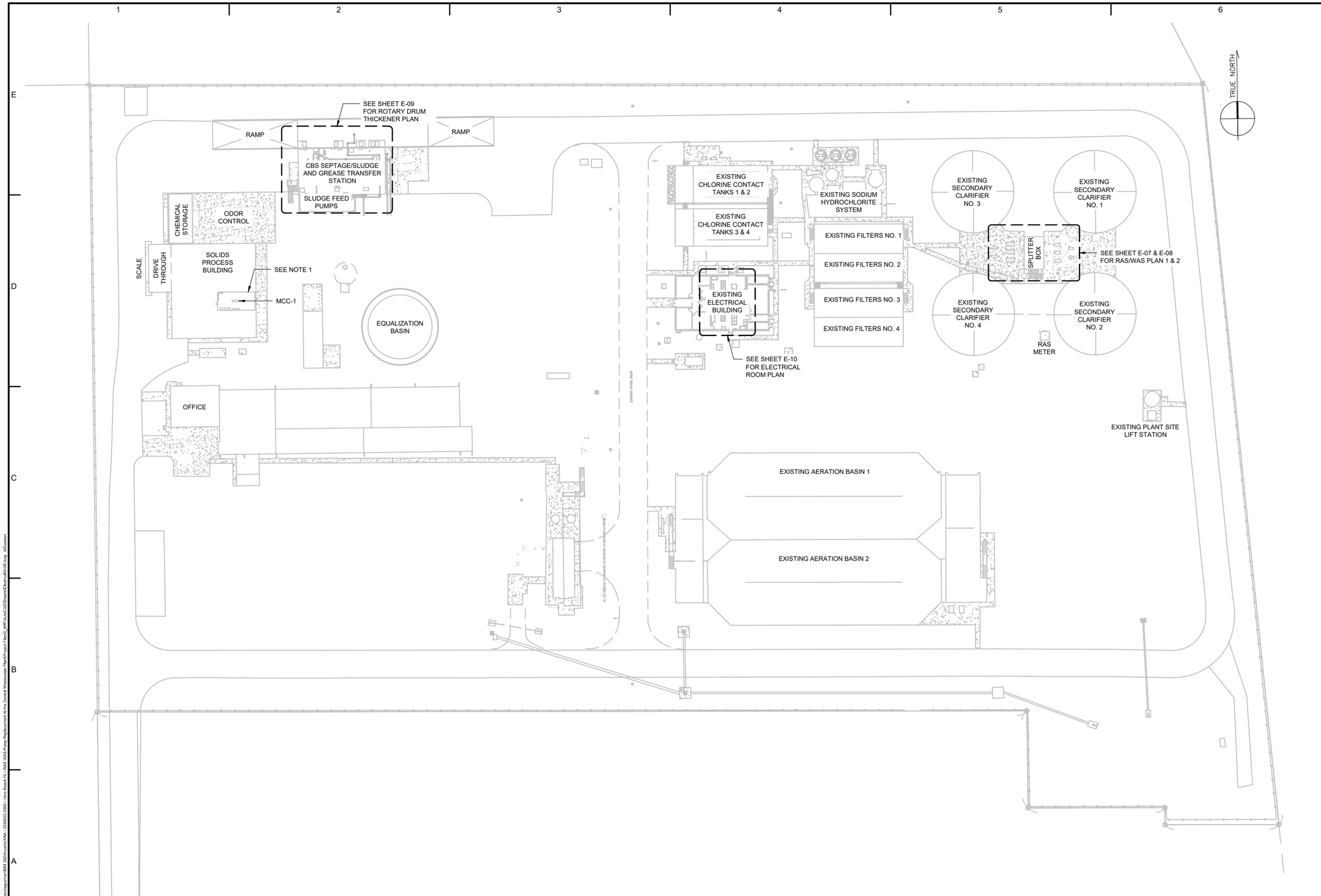

SITE PLAN

SCALE: 1" = 80'-0" 0 20' 40' 80'

NOTE:

1. ELECTRICAL ROOM WITHIN SOLIDS PROCESS BUILDING. REFERENCE CONSTRUCTION PLAN FOR INDIAN RIVER COUNTY CENTRAL WASTEWATER TREATMENT FACILITY SLUDGE HANDLING FACILITY MODIFICATIONS FOR LOCATION OF EQUIPMENT WITHIN ELECTRICAL ROOM.

ARCADIS
CERTIFICATE OF AUTHORIZATION 7917
3109 W DR MARTIN LUTHER KING JR BLVD
TAMPA, FL 33607, SUITE 350

CONSULTANTS

SEALS

ERIC B. BATTLE II PE.
FL LIC. No. 81285

VERO BEACH, FL
INDIAN RIVER COUNTY

CENTRAL WASTEWATER TREATMENT FACILITY RAS/WAS PUMP REPLACEMENTS

NO.	DATE	ISSUED FOR	BY
2	3/30/2020	100% DESIGN	JR
1	11/15/2019	90% DESIGN	JR

DATE: MARCH 2020
PROJECT NO.: 30002159.0000
FILE NAME: E-06
DESIGNED BY: E. BATTLE
DRAWN BY: V. NGUYEN
CHECKED BY: E. BATTLE

SHEET TITLE

ELECTRICAL

OVERALL SITE PLAN

SCALE: AS NOTED

E-06

SHEET 21 OF 26

Sat, 28 Mar 2020 - 8:33pm C:\Users\aguyen\AIBM 365\Arcadis\ANA - 2240022.0000 - Vero Beach FL - RAS WAS Pump Replacement At the Central Wastewater Plant\Project Files_WIP\AutoCAD\Sheets\Electrical\E-06.dwg AGuyen

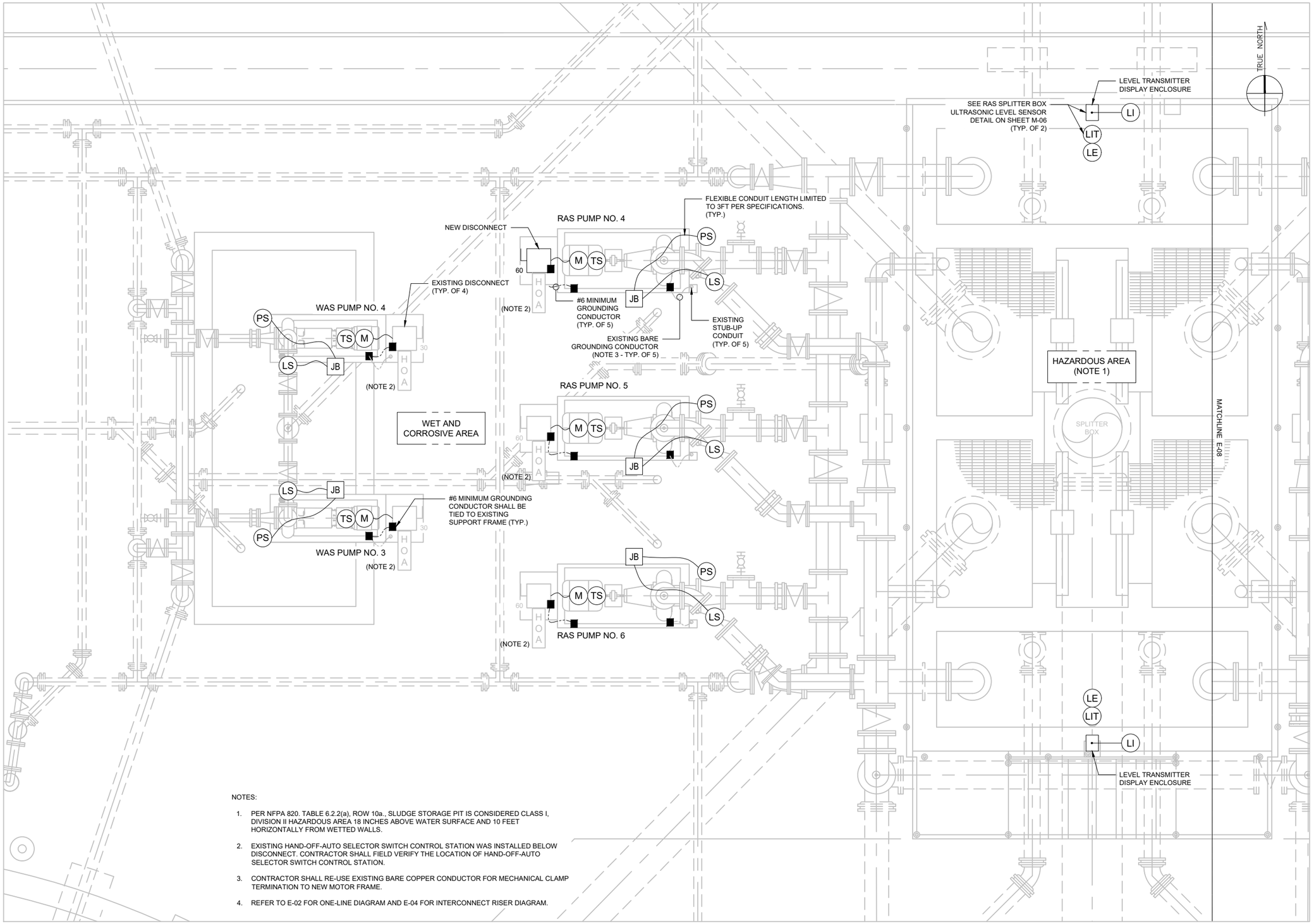

NOTES:

1. PER NFPA 820. TABLE 6.2.2(a), ROW 10a., SLUDGE STORAGE PIT IS CONSIDERED CLASS I, DIVISION II HAZARDOUS AREA 18 INCHES ABOVE WATER SURFACE AND 10 FEET HORIZONTALLY FROM WETTED WALLS.
2. EXISTING HAND-OFF-AUTO SELECTOR SWITCH CONTROL STATION WAS INSTALLED BELOW DISCONNECT. CONTRACTOR SHALL FIELD VERIFY THE LOCATION OF HAND-OFF-AUTO SELECTOR SWITCH CONTROL STATION.
3. CONTRACTOR SHALL RE-USE EXISTING BARE COPPER CONDUCTOR FOR MECHANICAL CLAMP TERMINATION TO NEW MOTOR FRAME.
4. REFER TO E-02 FOR ONE-LINE DIAGRAM AND E-04 FOR INTERCONNECT RISER DIAGRAM.

RAS/WAS PARTIAL PLAN

SCALE: 1/4" = 1'-0"

0 2' 4' 8'

ARCADIS
CERTIFICATE OF AUTHORIZATION 7917
3109 W DR MARTIN LUTHER KING JR BLVD
TAMPA, FL 33607, SUITE 350

CONSULTANTS

SEALS

ERIC B. BATTLE II PE.
FL LIC. No. 81285

VERO BEACH, FL
INDIAN RIVER COUNTY

CENTRAL WASTEWATER TREATMENT FACILITY
RAS/WAS PUMP REPLACEMENTS

NO.	DATE	ISSUED FOR	BY
2	3/30/2020	100% DESIGN	JR
1	11/15/2019	90% DESIGN	JR

DATE: MARCH 2020
PROJECT NO.: 30002159.0000
FILE NAME: E-07
DESIGNED BY: E. BATTLE
DRAWN BY: V. NGUYEN
CHECKED BY: E. BATTLE

SHEET TITLE
ELECTRICAL

RAS/WAS PLAN
(SHEET 1 OF 2)

SCALE: AS NOTED

E-07

SHEET 22 OF 26

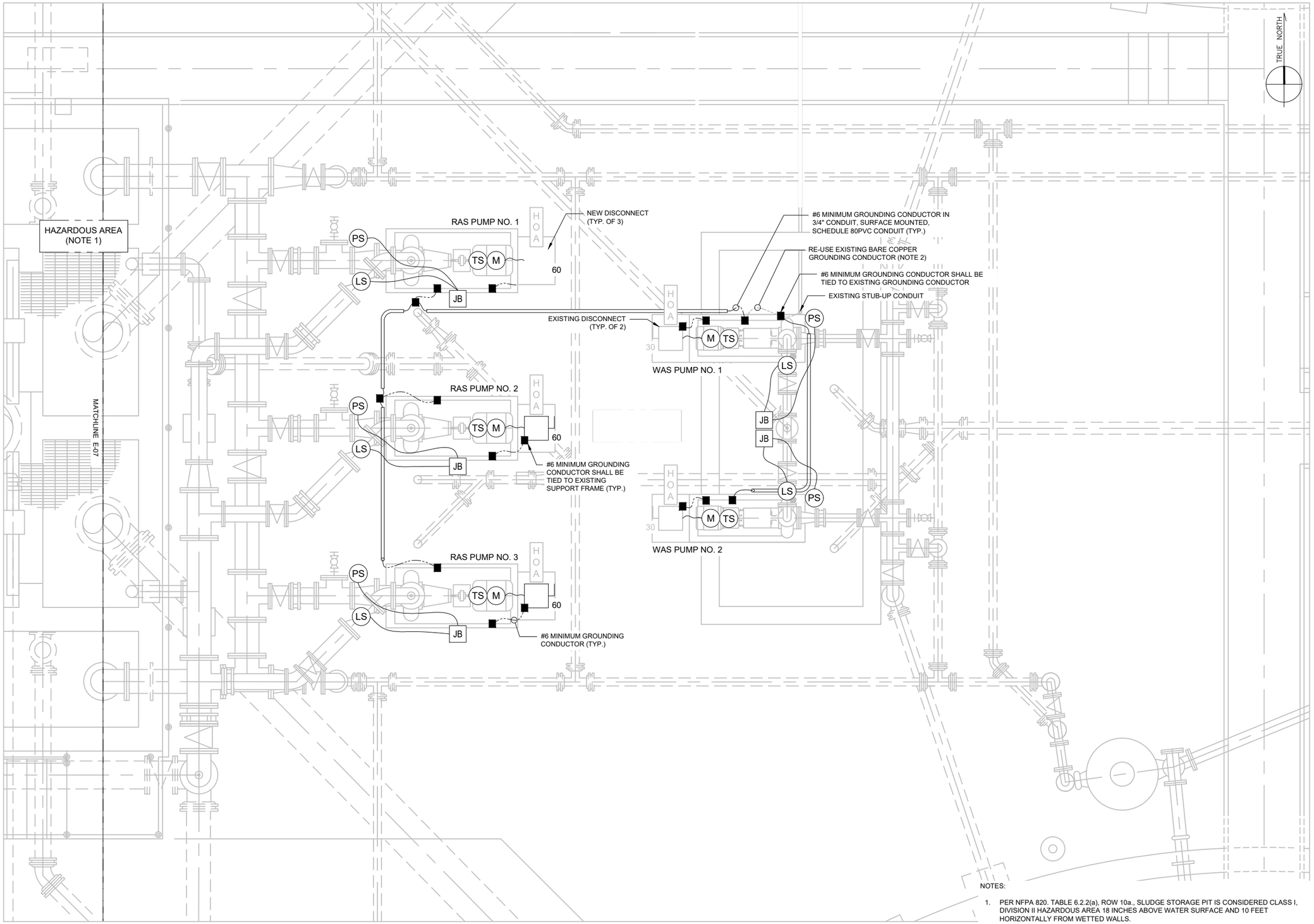

RAS/WAS PARTIAL PLAN

SCALE: 1/4" = 1'-0"

0 2' 4' 8'

NOTES:

1. PER NFPA 820. TABLE 6.2.2(a), ROW 10a., SLUDGE STORAGE PIT IS CONSIDERED CLASS I, DIVISION II HAZARDOUS AREA 18 INCHES ABOVE WATER SURFACE AND 10 FEET HORIZONTALLY FROM WETTED WALLS.
2. CONTRACTOR SHALL RE-USE EXISTING BARE COPPER CONDUCTOR FOR MECHANICAL CLAMP TERMINATION TO NEW MOTOR FRAME.
3. REFER TO E-02 FOR ONE-LINE DIAGRAM AND E-04 FOR INTERCONNECT RISER DIAGRAM.

ARCADIS
CERTIFICATE OF AUTHORIZATION 7917
3109 W DR MARTIN LUTHER KING JR BLVD
TAMPA, FL 33607, SUITE 350

CONSULTANTS

SEALS

ERIC B. BATTLE II PE.
FL LIC. No. 81285

VERO BEACH, FL
INDIAN RIVER COUNTY

CENTRAL WASTEWATER TREATMENT FACILITY RAS/WAS PUMP REPLACEMENTS

NO.	DATE	ISSUED FOR	BY
2	3/30/2020	100% DESIGN	JR
1	11/15/2019	90% DESIGN	JR

DATE: MARCH 2020
PROJECT NO.: 30002159.0000
FILE NAME: E-08
DESIGNED BY: E. BATTLE
DRAWN BY: V. NGUYEN
CHECKED BY: E. BATTLE

SHEET TITLE

ELECTRICAL

RAS/WAS PLAN
(SHEET 2 OF 2)

SCALE: AS NOTED

E-08

SHEET 23 OF 26

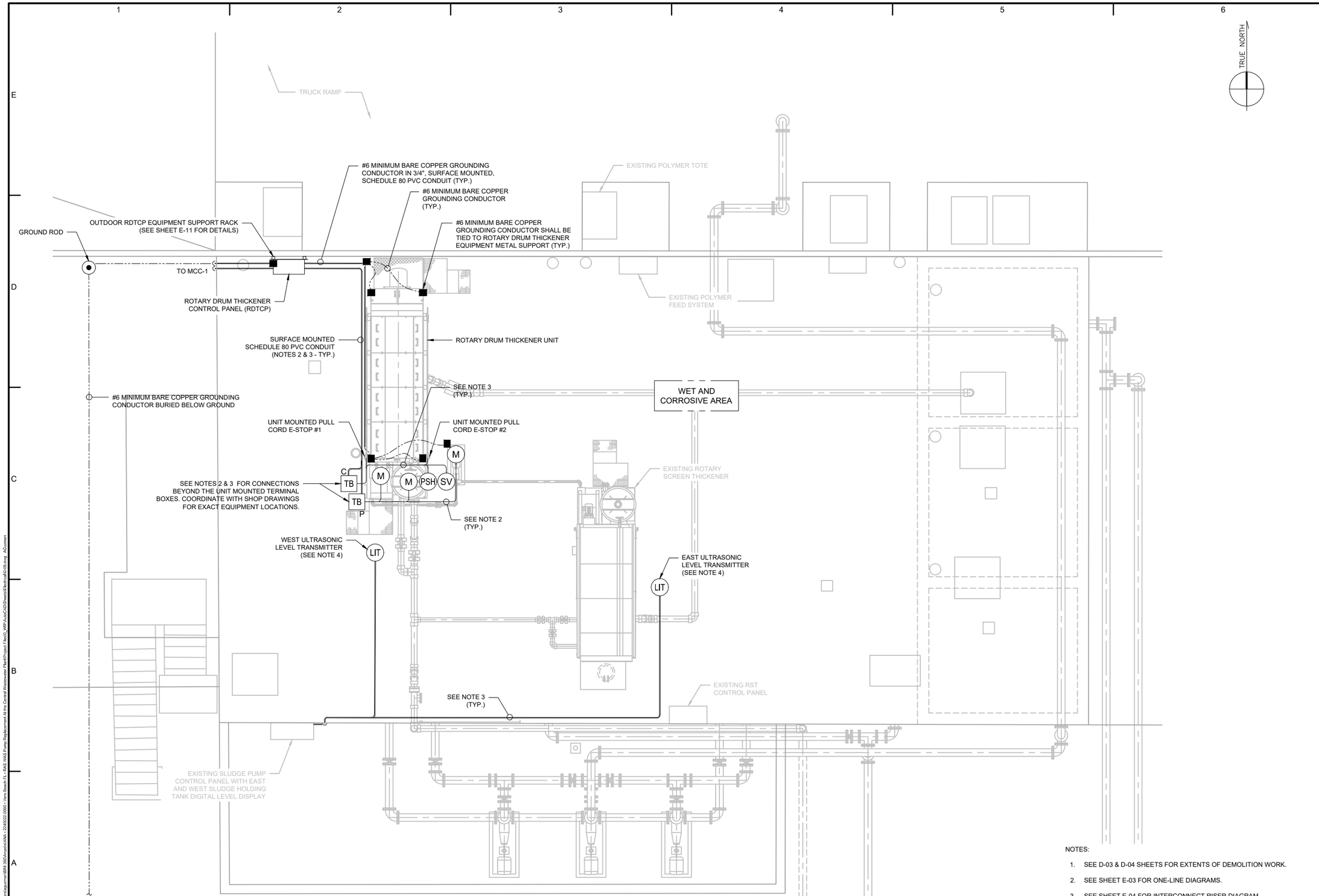

ROTARY DRUM THICKENER PLAN

SCALE: 1/8" = 1'-0"

NOTES:

1. SEE D-03 & D-04 SHEETS FOR EXTENTS OF DEMOLITION WORK.
2. SEE SHEET E-03 FOR ONE-LINE DIAGRAMS.
3. SEE SHEET E-04 FOR INTERCONNECT RISER DIAGRAM.
4. PER NFPA 820. TABLE 6.2.2(a), ROW 10a., THE HEADSPACE UNDER CONCRETE SLAB IS ENCLOSED SLUDGE HOLDING TANK WITHOUT VENTILATION IS CONSIDERED CLASS I, DIVISION I HAZARDOUS AREA.
5. REFER SHEET E-11 FOR ELECTRICAL DETAILS.

ARCADIS
CERTIFICATE OF AUTHORIZATION 7917
3109 W DR MARTIN LUTHER KING JR BLVD
TAMPA, FL 33607, SUITE 350

CONSULTANTS

SEALS

ERIC B. BATTLE II PE.
FL LIC. No. 81285

VERO BEACH, FL
INDIAN RIVER COUNTY

CENTRAL WASTEWATER TREATMENT FACILITY RAS/WAS PUMP REPLACEMENTS

NO.	DATE	ISSUED FOR	BY
2	3/30/2020	100% DESIGN	JR
1	11/15/2019	90% DESIGN	JR

DATE: MARCH 2020
PROJECT NO.: 30002159.0000
FILE NAME: E-09
DESIGNED BY: E. BATTLE
DRAWN BY: V. NGUYEN
CHECKED BY: E. BATTLE

SHEET TITLE

ELECTRICAL

ROTARY DRUM THICKENER PLAN

SCALE: AS NOTED

E-09

SHEET 24 OF 26

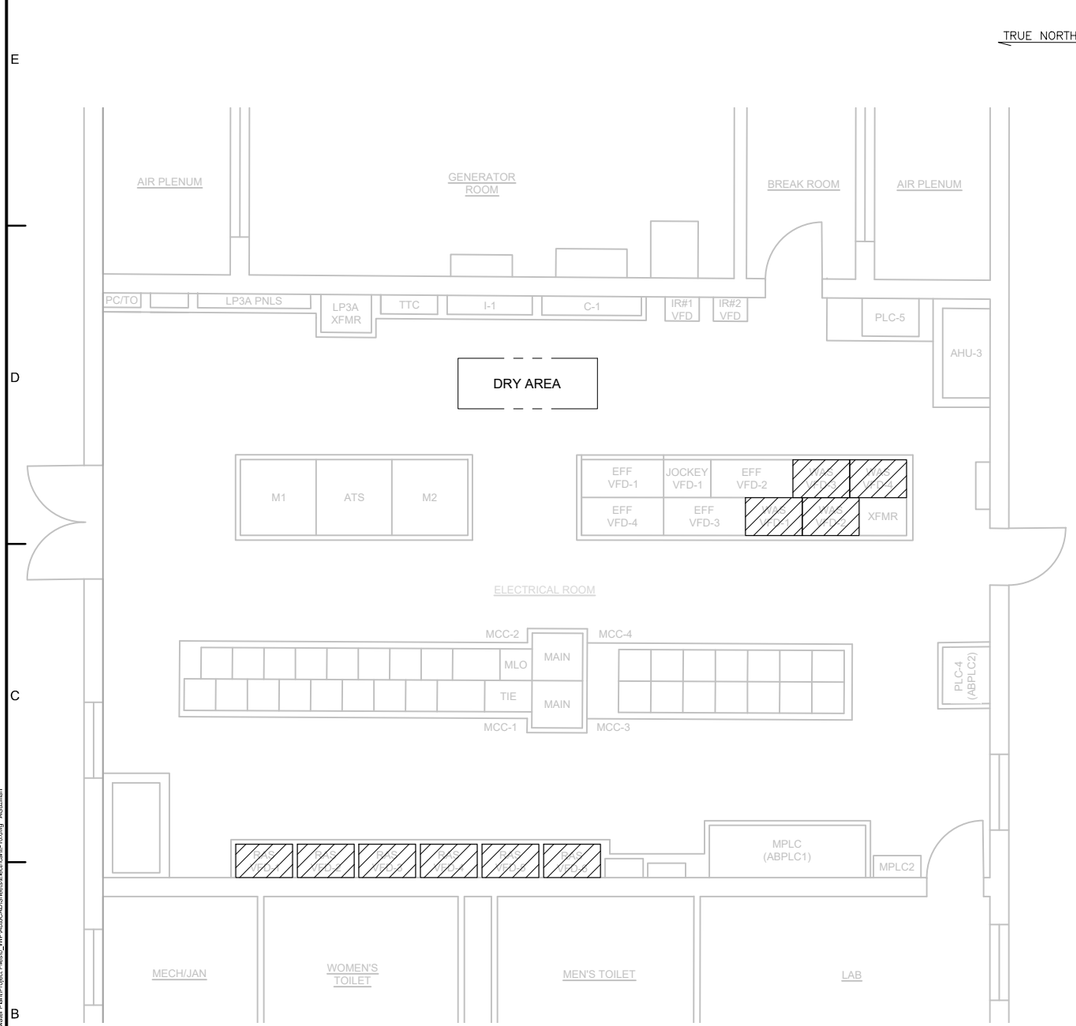

EXISTING ELECTRICAL BUILDING - DEMOLITION

SCALE: 1/8" = 1'-0"

0 4' 8' 16'

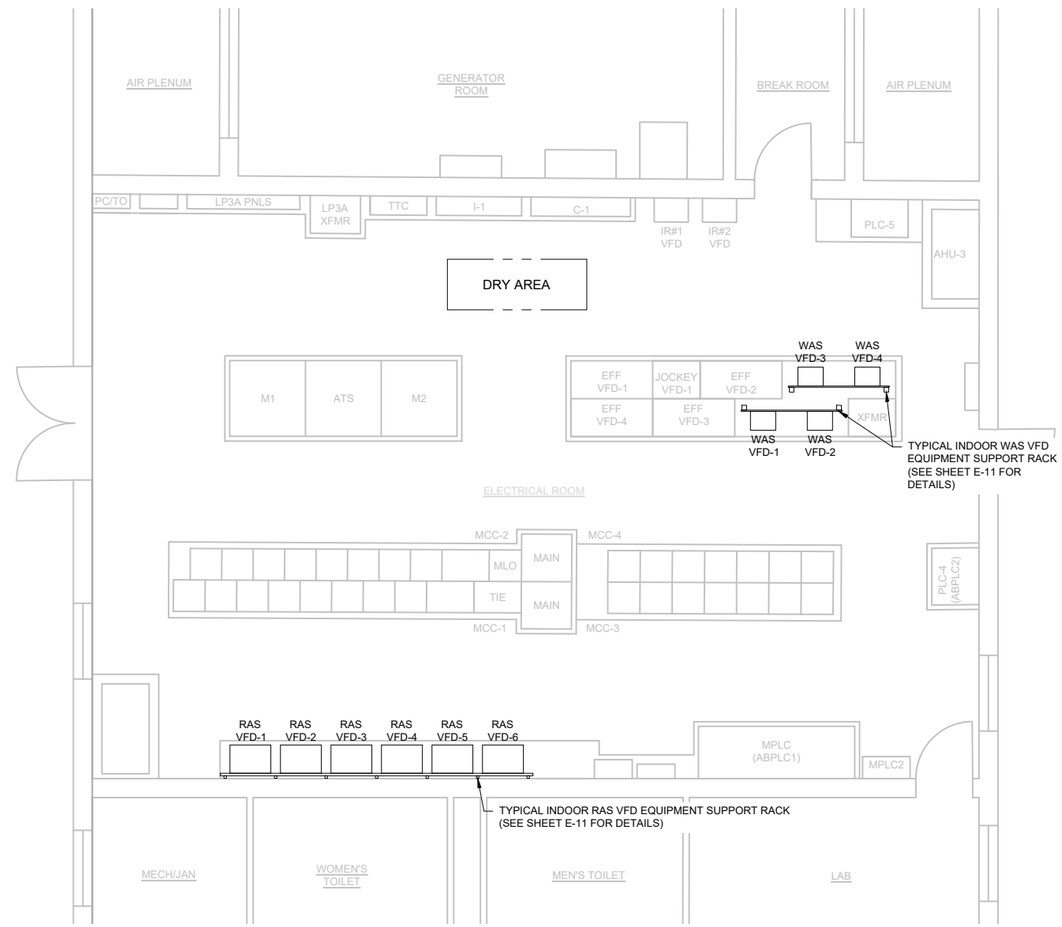

EXISTING ELECTRICAL BUILDING - PROPOSED

SCALE: 1/8" = 1'-0"

0 4' 8' 16'

NOTES:

1. HATCHED ITEMS INDICATE DEVICES AND/OR MAJOR EQUIPMENT SCHEDULED FOR DEMOLITION.
2. THE CONTRACTOR SHALL REMOVE ALL ASSOCIATED WIRING FOR DEVICES/EQUIPMENT THAT ARE SCHEDULED FOR DEMOLITION. ALL EXISTING CONDUITS SHALL BE REUSED WHERE FEASIBLE.
3. THE CONTRACTOR SHALL PROTECT ALL EXISTING CONSTRUCTION THAT IS TO REMAIN.
4. IT IS THE CONTRACTOR'S RESPONSIBILITY TO MAINTAIN CIRCUIT CONTINUITY TO ALL DEVICES AND EQUIPMENT THAT ARE TO REMAIN. THIS INCLUDES ANY EXTENSION OR RE-ROUTING OF EXISTING CIRCUITING AFFECTED BY DEMOLITION. NO EQUIPMENT MARKED FOR DEMOLITION SHALL BE DAMAGED OR DISCARDED WITHOUT PREVIOUS COORDINATION WITH AND APPROVAL BY THE OWNER.
5. REMOVE ALL WIRING, CONDUIT, OUTLET BOXES, SUPPORTS AND FASTENERS AS NECESSARY TO AVOID ANY CONFLICTS WITH THE NEW INSTALLATION.

ARCADIS
CERTIFICATE OF AUTHORIZATION 7917
3109 W DR MARTIN LUTHER KING JR BLVD
TAMPA, FL 33607, SUITE 350

CONSULTANTS

SEALS

ERIC B. BATTLE II PE.
FL LIC. No. 81285

VERO BEACH, FL
INDIAN RIVER COUNTY

CENTRAL WASTEWATER TREATMENT FACILITY RAS/WAS PUMP REPLACEMENTS

NO.	DATE	ISSUED FOR	BY
2	3/30/2020	100% DESIGN	JR
1	11/15/2019	90% DESIGN	JR

DATE: MARCH 2020
PROJECT NO.: 30002159.0000
FILE NAME: E-10
DESIGNED BY: E. BATTLE
DRAWN BY: V. NGUYEN
CHECKED BY: E. BATTLE

SHEET TITLE

ELECTRICAL

ELECTRICAL ROOM PLAN

SCALE: AS NOTED

E-10

SHEET 25 OF 26

TYPE OF CONNECTION	BOLTED OR COMPRESSION		WELDED
	BURNDY CAT#	T&B CAT#	CADWELL CAT#
CABLE TO LUG (LUG, CABLE)	YA	54000 SERIES	LA
CABLE TO ROD (ROD, CABLE)	-	53000 SERIES	GT
(ROD)	GAR	-	GR
CABLE TO CABLE (CABLE)	GX	53000 SERIES	TV OR TA
CABLE TO PIPE (CABLE, PIPE OR CONDUIT)	-	-	HA OR VS
	GAR OR GD	3900 SERIES	-
CABLE TO FLAT SURFACE (CABLE)	GB	-	HA OR HS
BRAID TO PIPE	GG	-	-

GROUNDING CONNECTIONS

NOT TO SCALE

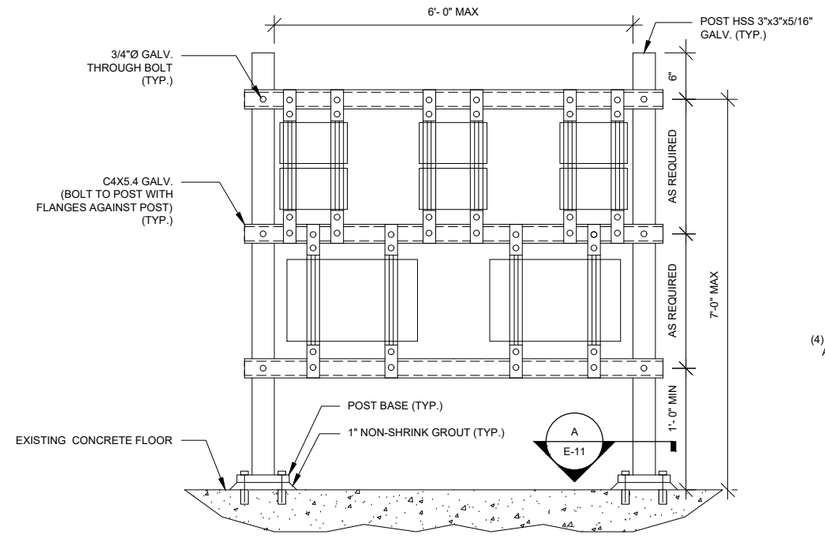

TYPICAL INDOOR WAS VFD EQUIPMENT SUPPORT RACK

NOT TO SCALE

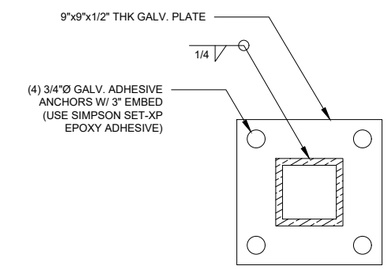

A / E-11 **SECTION**

NOT TO SCALE

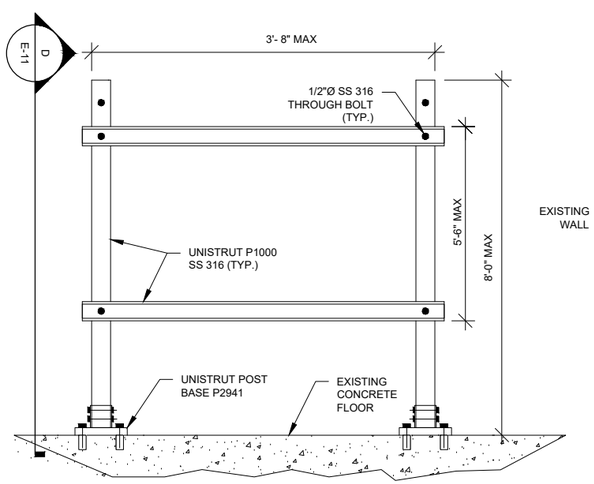

TYPICAL INDOOR RAS VFD EQUIPMENT SUPPORT RACK

NOT TO SCALE

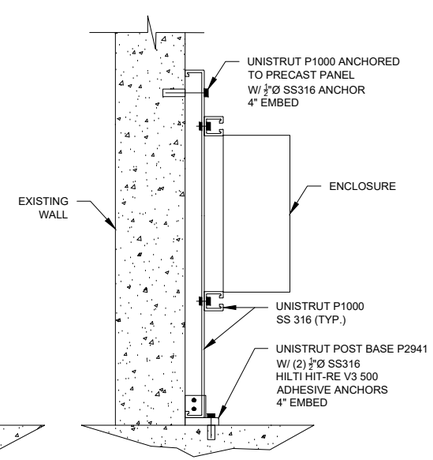

D / E-11 **SECTION**

NOT TO SCALE

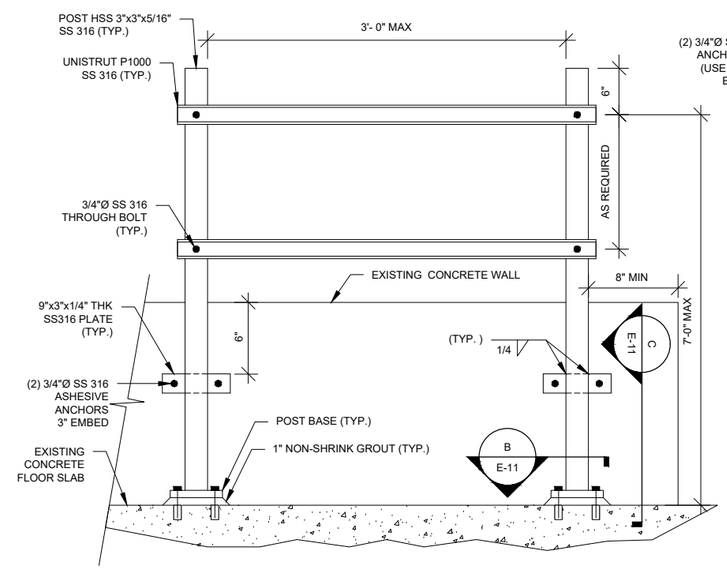

OUTDOOR RDTCP EQUIPMENT SUPPORT RACK

NOT TO SCALE

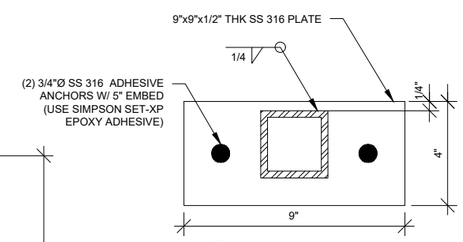

B / E-11 **SECTION**

NOT TO SCALE

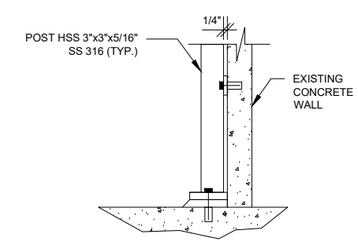

C / E-11 **SECTION**

NOT TO SCALE

ARCADIS
CERTIFICATE OF AUTHORIZATION 7917
3109 W DR MARTIN LUTHER KING JR BLVD
TAMPA, FL 33607, SUITE 350

CONSULTANTS

SEALS

ERIC B. BATTLE II PE.
FL LIC. No. 81285

VERO BEACH, FL
INDIAN RIVER COUNTY

CENTRAL WASTEWATER TREATMENT FACILITY RAS/WAS PUMP REPLACEMENTS

NO.	DATE	ISSUED FOR	BY
2	3/30/2020	100% DESIGN	JR
1	11/15/2019	90% DESIGN	JR

DATE:	MARCH 2020
PROJECT NO.:	30002159.0000
FILE NAME:	E-11
DESIGNED BY:	E. BATTLE
DRAWN BY:	V. NGUYEN
CHECKED BY:	E. BATTLE

SHEET TITLE

ELECTRICAL

ELECTRICAL DETAILS

SCALE: AS NOTED

E-11

SHEET 26 OF 26