MERWIN ELEMENTARY SCHOOL

16125 CYPRESS STREET. COVINA, CA 91722

COVID 19- COVINA VALLEY DISTRICT HVAC REPLACEMENT

100% CONSTRUCTION DOCUMENT

11/04/2022

DLR GROUP PROJECT NUMBER: 75-22605-00

DSA APPLICATION #

A# 03-122235

SHEET INDEX

.GENERAL.

G0.1	COVER SHEET
G1.1	GENERAL NOTES, SYMBOLS AND ABBREVIATIONS

.ARCHITECTURAL.

A1.1	ARCHITECTURAL SITE PLAN
A1.1B	BUILDING B - FLOOR PLAN
A1.1C	BUILDING C - FLOOR PLAN
A1.1E	BUILDING E - FLOOR PLAN
A1.2B	BUILDING B ROOF PLAN
A1.2C	BUILDING C ROOF PLAN
A1.2E	BUILDING E ROOF PLAN
A3.1B	BUILDING B REFLECTED CEILING PLAN
A3.1C	BUILDING C REFLECTED CEILING PLAN
A3.1E	BUILDING E REFLECTED CEILING PLAN

STRUCTURAL.

S0.1	GENERAL STRUCTURAL NOTES
S0.2	GENERAL STRUCTURAL NOTES & SPECIAL INSPECTIONS
S1.0	ISOMETRIC VIEW
S1.1	ROOF FRAMING PLAN - UNIT A&B
S1.2	ROOF FRAMING PLAN - UNIT C
S1.3	ROOF FRAMING PLAN - UNIT D&E
S1.4	ROOF FRAMING DETAILS

MECHANICAL.

M0.1	MECHANICAL SYMBOLS, ABBREVIATIONS & NOTES
M0.2	TITLE 24 COMPLIANCE
M0.3	TITLE 24 COMPLIANCE
M0.4	TITLE 24 COMPLIANCE
M0.5	TITLE 24 COMPLIANCE
M0.6	TITLE 24 COMPLIANCE
M1.1	OVERALL MECHANICAL SITE PLAN
M1.1C	BUILDING C - MECHANICAL FLOOR PLAN
M1.1E	BUILDING E - MECHANICAL FLOOR PLAN
M2.1B	BUILDING B - MECHANICAL ROOF PLAN
M2.1C	BUILDING C - MECHANICAL ROOF PLAN
M2.1E	BUILDING E - MECHANICAL ROOF PLAN
M5.1	CONTROLS DIAGRAMS
M5.2	CONTROLS DIAGRAMS
M7.1	MECHANICAL DETAILS
M7.2	MECHANICAL DETAILS
M7.3	MECHANICAL DETAILS
M7.4	MECHANICAL DETAILS
M8.1	MECHANICAL SCHEDULES
MP1.1	MECHANICAL PLUMBING SITE PLAN

ELECTRICAL.

E0.1	ELECTRICAL SYMBOLS, ABBREVIATIONS & NOTES
E2.1	BUILDING ELECTRICAL ROOF PLAN

TOTAL: 41 SHEETS

Statement of General Conformance

FOR ARCHITECTS/ENGINEERS WHO UTILIZE PLANS,

INCLUDING BUT NOT LIMITED TO SHOP DRAWINGS, PREPARED BY OTHER LICENSED DESIGN PROFESSIONALS AND/OR CONSULTANTS

(Application No. 03-122235 **File No.** 19-25 **)**

HAVE BEEN PREPARED BY OTHER DESIGN PROFESSIONALS OR CONSULTANTS WHO ARE LICENSED AND/OR AUTHORIZED TO PREPARE SUCH DRAWINGS IN THIS STATE. IT HAS BEEN EXAMINED BY ME FOR:

1) DESIGN INTENT AND APPEARS TO MEET THE APPROPRIATE REQUIREMENTS OF TITLE 24, CALIFORNIA CODE OF REGULATIONS, AND THE PROJECT SPECIFICATIONS PREPARED BY ME, AND

2) COORDINATION WITH MY PLANS AND SPECIFICATIONS, AND IS ACCEPTABLE FOR INCORPORATION INTO THE CONSTRUCTION OF THIS PROJECT.

THE STATEMENT OF GENERAL CONFORMANCE "SHALL NOT BE CONSTRUED AS RELIEVING ME OF MY RIGHTS, DUTIES, AND RESPONSIBILITIES UNDER SECTIONS 17302 AND 81138 OF THE EDUCATION CODE AND SECTIONS 4-336, 4-341 AND 4-344" OF TITLE 24, PART 1. (TITLE 24, PART 1, SECTION 4-317(b))

I FIND THAT:

☒ ALL DRAWINGS OR SHEETS LISTED ON THE COVER OR INDEX SHEET FOR EACH DISCIPLINE (SEE SHEET INDEX FOR LIST OF DISCIPLINES)

☐ THIS DRAWING OR PAGE

☒ ARE IN GENERAL CONFORMANCE WITH THE PROJECT DESIGN, AND

☒ HAVE BEEN COORDINATED WITH THE PROJECT PLANS AND SPECIFICATIONS.

SIGNATURE	DATE 05/05/2022
ARCHITECT OR ENGINEER DESIGNATED TO BE IN GENERAL RESPONSIBLE CHARGE	
JESSE MILLER	
PRINT NAME	
C-32306	10/31/2023
LICENSE NUMBER	EXPIRATION DATE

ARE IN GENERAL CONFORMANCE WITH THE PROJECT DESIGN INTENT, AND

HAVE BEEN COORDINATED WITH THE PROJECT PLANS AND SPECIFICATIONS.

SIGNATURE	DATE
ARCHITECT OR ENGINEER DELEGATED RESPONSIBILITY FOR THIS PORTION OF THE WORK	
PRINT NAME	
LICENSE NUMBER	EXPIRATION DATE

SCOPE OF WORK

SCOPE OF WORK SHALL BE AS FOLLOWS:

EXISTING HVAC SYSTEM REPLACEMENT TO BUILDINGS B, C, AND E

APPLICABLE CODES

2019 CALIFORNIA ADMINISTRATIVE CODE (CAC), PART 1, TITLE 24 CCR
2019 CAFILORNIA BUILDING CODE (CBC), PART 2, TITLE 24 CCR
(2018 INTERNATIONAL BUILDING CODE, VOL. 1 & 2, AND 2019 CALIFORNIA AMENDMENTS)
2019 CALIFORNIA ELECTRICAL CODE (CEC), PART 3, TITLE 24 CCR
(2017 NATIONAL ELECTRICAL CODE AND 2019 CALIFORNIA AMENDMENTS)
2019 CALIFORNIA MECHANICAL CODE (CMC), PART 4, TITLE 24 CCR
(2018 IAPMO UNIFORM MECHANICAL CODE AND 2019 CALIFORNIA AMENDMENTS)
2019 CALIFORNIA PLUMBING CODE (CPC) , PART 5, TITLE 24 TITLE CCR
(2018 IAPMO UNIFORM PLUMBING CODE AND 2019 CALIFORNIA AMENDMENTS)
2019 CALIFORNIA ENERGY CODE (CEC), PART 6, TITLE 24 CCR
2019 CALIFORNIA FIRE CODE (CFC), PART 9, TITLE 24 CCR
(2018 INTERNATIONAL FIRE CODE AND 2019 CALIFORNIA AMENDMENTS)
2019 CALIFORNIA EXISTING BUILDING CODE (CEBC), PART 10, TITLE 24 CCR
(2018 INTERNATIONAL EXISTING BUILDING CODE AND 2019 CALIFORNIA AMENDMENTS)
2019 CALIFORNIA GREEN BUILDING STANDARDS CODE (CAL GREEN), PART 11, TITLE 24 CCR
2019 CALIFORNIA REFERENCED STANDARDS CODE (CEBC), PART 12, TITLE 24 CCR
TITLE 19 CCR, PUBLIC SAFETY, STATE FIR MARSHAL REGULATIONS
2016 ASME A17.1/CSA B44-13 SAFETY CODE FOR ELEVATORS AND ESCALATORS
(PER 2019 CBC PART 2 CH 35)
NOTE: CAL/OSHA ELEVATOR UNIT ENFORCES CCR TITLE 8 AND USES THE 2004 ASME A17.1 BY ADOPTION
2010 ADA STANDARDS FOR ACCESSIBLE DESIGN

NFPA 13	-	STANDARD FOR INSTALLATION OF SPRINKLERS SYSTEMS (CA AMENDED)	2016 ADDITION
NFPA 14	-	STANDARD FOR INSTALLATION OF SAND PIPE AND HOSE SYSTEMS (CA AMENDED)	2013 ADDITION
NFPA 17	-	STANDARD FOR DRY CHEMICAL EXTINGUISHING SYSTEMS	2016 ADDITION
NFPA 17A	-	STANDARD FOR WET CHEMICAL EXTINGUISHING SYSTEMS	2017 ADDITION
NFPA 20	-	STANDARD FOR INSTALLATION OF STATIONARY PUMPS FOR FIRE PROTECTION	2017 ADDITION
NFPA 22	-	STANDARD FOR WATER TANKS FOR PRIVATE FIRE PROTECTION	2013 ADDITION
NFPA 24	-	STANDARD FOR THE INSTALLATION OF PRIVATE FIRE SERVICE MAINS AND THEIR APPURTENANCES	(CA AMENDED) 2016 ADDITION
NFPA 72	-	NATIONAL FIRE ALARM AND SIGNALING CODE (CA AMENDED)	2016 ADDITION
NFPA 80	-	STANDARD FOR FIRE DOORS AND OTHER OPENINGS PROTECTIVE	2016 ADDITION
NFPA 2001	-	STANDARD ON CLEAN AGENT FIRE EXTINGUISHING SYSTEMS (CA AMENDED)	2015 ADDITION
UL 300	-	STANDARD FOR FIRE TESTING OF FIRE EXTINGUISHING SYSTEMS FOR PROTECTION OF COMMERCIAL COOKING EQUIPMENT	2005 (R2010)
UL 464	-	AUDIBLE SIGNALING DEVICES FOR FIRE ALARM AND SIGNALING SISTEMS, INCLUDING ACCESSORIES	2003 ADDITION
UL 521	-	STANDARD FOR HEAT DETECTORS FOR FIRE PROTECTIVE SIGNALING SYSTEMS	1999 ADDITION
UL 1971	-	STANDARD FOR SIGNALING DEVICES FOR THE HEARING IMPAIRED	2002 (R2010)
ICC 300	-	STANDARD FOR BLEACHERS, FOLDING AND TELESCOPIC SEATING, AND GRANDSTANDS	2017 ADDITION

DESIGN ANALYSIS DATA

1. WIND DESIGN CRITERIA (CBC 1603A.1.4) - STRUCTURAL DESIGN PARAMETERS
   - RISK CATEGORY: III
   - WIND DESIGN SPEED: V;115 MPH
   - WIND EXPOSURE CATEGORY: C (PER ASCE 7-16)
2. EARTHQUAKE DESIGN CRITERIA (CBC 1603A1.5)
   - SEISMIC DESIGN CATEGORY: D
   - SITE CLASS: D
   - S_S = 1.653
   - S_1 = 0.609
   - S_{MS} = 1.984
   - S_{M1} = 1.039
   - S_{DS} = 1.322
   - S_{D1} = 0.690
   - I_P (IMPORTANCE FACTOR) = 1.25
   - F_P (CONTROLLING HOR. SEISMIC FORCE) = 1,130lbs
   - F_P (CONTROLLING HOR. SEISMIC FORCE) = 420lbs
3. DESIGN LOAD BEARING VALUES OF SOILS (CBC 1603A1.6)
   - ALLOWABLE SOIL BEARING PRESSURE: 1,500 PSF
   - ALLOWABLE LATERAL BEARING PRESSURE: 100 PSF MIN.

DSA GENERAL NOTES

1. CHANGES TO THE APPROVED DRAWINGS AND SPECIFICATIONS SHALL BE MADE BY AN ADDENDUM OR A CONSTRUCTION CHANGE DOCUMENT APPROVED BY THE DIVISION OF THE STATE ARCHITECT (DSA), AS REQUIRED BY SECTION 4-338(b), PART 1, TITLE 24, CALIFORNIA CODE OF REGULATIONS (CCR), NOT WITH STANDING OTHER PROVISIONS OF THE PROJECT SPECIFICATIONS, COMPLY WITH ALL PROVISIONS OF THE CALIFORNIA BUILDING STANDARDS ADMINISTRATIVE CODE (PART 1, TITLE 24, CCR), SECTION 4-338, FOR ALL ADDENDUM AND CONSTRUCTION CHANGE DOCUMENTS.
2. CONSTRUCTION CHANGE DOCUMENTS MUST BE SIGNED BY ALL THE FOLLOWING: ARCHITECT OR ENGINEER HAVING GENERAL RESPONSIBLE CHARGE OF THE PROJECT, AND STRUCTURAL ENGINEER OF RECORD OR DELEGATED PROFESSIONAL ENGINEER (WHEN APPLICABLE).
3. SUBSTITUTIONS AFFECTING DSA REGULATED ITEMS (ACCESSIBILITY, STRUCTURAL ENGINEER, AND FIRE/LIFE/SAFETY) SHALL BE CONSIDERED AS A CONSTRUCTION CHANGE DOCUMENT, AND SHALL BE APPROVED BY DSA PRIOR TO FABRICATION AND INSTALLATION IN ACCORDANCE WITH DSA IR A-6 AND SECTION 4-338(b), PART 1, TITLE 24, CCR. SUBSTITUTIONS SHALL BE FOR ANY MATERIALS, SYSTEMS OR PRODUCT THAT WOULD OTHERWISE BE REGULATED BY DSA.
4. A DSA-CERTIFIED PROJECT INSPECTOR WITH CLASS 3 CERTIFICATION, EMPLOYED BY THE DISTRICT (OWNER) AND APPROVED BY THE ARCHITECT AND BY THE DIVISION OF THE STATE ARCHITECT, SHALL PROVIDE CONTINIOUS INSPECTION OF THE WORK. THE DUTIES OF THE PROJECT INSPECTOR ARE DEFINED IN SECTION 4-342, CALIFORNIA BUILDING ADMINISTRATIVE CODE (PART 1, TITLE 24, CCR).
5. A DSA-ACCEPTED TESTING LAB, EMPLOYED BY THE DISTRICT (OWNER), SHALL CONDUCT ALL REQUIRED TESTS AND INSPECTIONS OF THE WORK.
6. THE DSA-CERTIFIED PROJECT INSPECTOR AND DSA-ACCEPTED TESTING LAB SHALL BE EMPLOYED AND PAID BYTHE OWNER (DISTRICT) AND APPROVED BY ALL OF THE FOLLOWING: ARCHITEC OR ENGINEER HAVING GENERAL RESPONSIBLE CHARGE OF THE PROJECT; STRUCTURAL ENGINEER OF RECORD; AND DIVISION OF THE STATE ARCHITECT (DSA). THE INSPECTOR OF RECORD FOR THIS PROJECT SHALL BE CLASS 3 OR BETTER
7. ALL WORK SHALL CONFORM TO 2019 TITLE 24, CALIFORNIA CODE OF REGULATIONS (CCR).
8. A DSA ACCEPTED TESTING LABORATORY DIRECTLY EMPLOYED BY THE DISTRICT (OWNER) SHALL CONDUCT ALL THE REQUIRED TESTS AND INSPECTIONS FOR THE PROJECT.
9. THE INTENT OF THESE DRAWINGS AND SPECIFICATIONS IS THAT THE WORK OF THE ALTERATION, REHABILITATION OR RECONSTRUCTION IS TO BE IN ACCORDANCE WITH TITLE 24, CCR. SHOULD ANY EXISTING CONDITIONS SUCH AS DETERIORATION OR NON-COMPLYING CONSTRUCTION BE DISCOVERED WHICH IS NOT COVERED BY THE CONTRACT DOCUMENTS WHEREIN THE FINISHED WORK WILL NOT COMPLY WITH TITLE 24, CCR, A CONSTRUCTION CHANGE DOCUMENT (CCD), OR A SEPARATE SET OF PLANS AND SPECIFICATIONS, DETAILING AND SPECIFYING THE REQUIRED WORK SHALL BE SUBMITTED TO AND APPROVED BY DSA BEFORE PROCEEDING WITH THE WORK. (SECTION 4-317(C), PART 1, TITLE 24, CCR
10. FABRICATION AND INSTALLATION OF DEFFERED SUBMITTAL ITEMS SHALL NOT BE STARTED UNTIL CONTRACTOR'S DRAWINGS, SPECIFICATIONS, AND ENGINEERING CALCULATIONS FOR THE ACTURAL SYSTEMS TO BE INSTALLED HAVE ACCEPTED AND SIGNED BY THE ARCHITECT OR STRUCTURAL ENGINEER AND APPROVED BY DSA. LIST DEFFERED SUBMITTAL ITEMS FOR THIS PROJECT. (IF THIS PROJECT HAS NO DEFFERED SUBMITTAL ITEMS, PLEASE INDICATE AS SUCH.
11. GRADING PLANS, DRAINAGE IMPROVEMENTS, ROAD AND ACCESS REQUIREMENTS AND ENVIRONMENTAL HEALTH CONSIDERATIONS SHALL COMPLY WITH ALL LOCAL ORDINANCES.
12. THE CALIFORNIA ENERGY CODE SECTION 10-103 REQUIRES ACCEPTANCE TESTING ON ALL NEWLY INSTALLED LIGHTING CONTROLS, MECHANICAL SYSTEMS, ENVELOPES, AND PROCESS EQUIPMENT AFTER INSTALLATION AND BEFORE PROJECT COMPLETION. AN ACCEPTANCE TEST IS A FUNCTIONAL PERFORMANCE TEST TO HELP ENSURE THAT NEWLY INSTALLED EQUIPMENT IS OPERATING AND IN COMPLIANCE WITH THE ENERGY CODE.
13. LIGHTING CONTROLS ACCEPTANCE TESTS MUST BE PERFORMED BY CERTIFIED LIGHTING CONTROLS ACCEPTANCE TEST TECHNICIAN (ATT).
14. MECHANICAL SYSTEM ACCEPTANCE TEST MUST BE PERFORMED BY A CERTIFIED MECHANICAL ATT FOR PROJECTS SUBMITTED ON OR AFTER OCTOBER 1, 2021.
15. ENVELOPE AND PROCESS EQUIPMENT ACCEPTANCE TESTS SHALL BE PERFORMED BY THE INSTALLING CONTRACTOR, ENGINEER/ARCHITECT OR RECORD OR THE OWNER'S AGENT.
16. A LISTING OF CERTIFIED ATT CAN BE FOUND AT HTTPS://WWW.ENERGY.CA.GOV/PROGRAMS-AND-TOPICS/PROGRAMS/ACCEPTANCE-TESTING-TECHNICIAN-CERTIFICATION-PROVIDER-PROGRAM/ACCEPTANCE.COM
17. THE ACCEPTANCE TESTING PROCEDURES MUST BE REPEATED, AND DEFICIENCIES MUST BE CORRECTED BY THE BUILDER OR INSTALLING CONTRACTOR UNTIL THE CONSTRUCTION/INSTALLATION OF THE SPECIFICED SYSTEMS CONFORM AND PASS THE REQUIRED ACCEPTANCE CRITERIA.
18. PROJECT INSPECTORS WILL COLLECT THE FORMS TO CONFIRM THAT THE REQUIRED ACCEPTANCE TESTS HAVE BEEN COMPLETED.
19. FABRICATION AND INSTALLATION OF DEFFERED SUBMITTAL ITEMS SHALL NOT BE STARTED UNTIL CONTRACTOR'S DRAWINGS, SPECIFICATIONS, AND ENGINEERING CALCULATIONS FOR THE ACTUAL SYSTEMS TO BE INSTALLED HAVE BEEN ACCEPTED AND SIGNED BY THE ARCHITECT OR STRUCTURAL ENGINEER AND APPROVED BY THE DSA. LIST DEFERRED SUBMITTAL ITEMS FOR THIS PROJECT. (IF THIS PROJECT HAS NO DEFERRED SUBMITTAL ITEMS, PLEASE INDICATE AS SUCH)
20. GRADING PLANS, DRAINAGE IMPROVEMENTS, ROAD AND ACCESS REQUIREMENTS AND ENVIRONMENTAL HEALTH CONSIDERATIONS SHALL COMPLY WITH ALL LOCAL ORDINANCES.

VICINITY MAP

PROJECT DIRECTORY

OWNER
COVINA VALLEY UNIFIED SCHOOL DISTRICT
519 E. BADILLO ST.
COVINA, CA 91723
CONTACT: BRIAN JOHNSON
PH: 626.974.7000
BJOHNSON@CVUSD.ORG

ARCHITECT
DLR GROUP
1650 SPRUCE ST, #300
RIVERSIDE, CA 92507
CONTACT: JESSE MILLER
PH: 951.682.0470
JMILLER@DLRGROUP.COM

STRUCTURAL ENGINEER
DLR GROUP
700 FLOWER ST 22ND FLOOR
LOS ANGELES, CA 90017
CONTACT: DANNY AHKIAM
PH: 213.800.9400
DAHKIAM@DLRGROUP.COM

ELECTRICAL ENGINEER
DLR GROUP
700 FLOWER ST 22ND FLOOR
LOS ANGELES, CA 90017
CONTACT: NORMAN PATENA
PH: 213.800.9400
NPATENA@DLRGROUP.COM

MECHANICAL ENGINEER
DLR GROUP
700 FLOWER ST 22ND FLOOR
LOS ANGELES, CA 90017
CONTACT: TONG FANG (DONNA) ZHAO
PH: 213.444.0610
DZHAO@DLRGROUP.COM

DLR Group
© DLR Group

LICENSED ARCHITECT
JESSE MILLER
No. C-32306
10/31/2023
REGISTRATION EXPIRATION DATE
STATE OF CALIFORNIA

MERWIN ELEMENTARY SCHOOL
COVID 19- COVINA VALLEY DISTRICT HVAC REPLACEMENT
16125 CYPRESS STREET. COVINA, CA 91722

100% CONSTRUCTION DOCUMENTS
11/04/2022
REVISIONS

75-22605-00
DSA A#03-122235
DSA File #: 19-25

COVER SHEET

G0.1

Autodesk Docs://75-22605-00 CVUSD - District Wide HVAC Replacement/75-22605-00_CVUSD_Merwin ES_AR_2020.rvt
11/4/2022 10:08:24 AM

GENERAL ABBREVIATIONS

#	NUMBER
&	AND
@	AT
ADA	AMERICANS WITH DISABILITY ACT
ADDN	ADDITION OR ADDITIONAL
AFF	ABOVE FINISHED FLOOR
AFG	ABOVE FINISHED GRADE
AHJ	AUTHORITY HAVING JURISDICTION
ALT	ALTERNATE
ANSI	AMERICAN NATIONAL STANDARDS INSTITUTE
APPROX	APPROXIMATE
ARCH	ARCHITECTURAL
BLDG	BUILDING
BSMT	BASEMENT
CL	CENTER LINE
CLG	CEILING
CM	CENTIMETER
CONC	CONCRETE
CONN(S)	CONNECTION(S)
CONST	CONSTRUCTION
CONT	CONTINUOUS
CONTR	CONTRACT(OR)
CTR	CENTER
D	DEPTH
DEG	DEGREE
DEMO	DEMOLISH OR DEMOLITION
DIA	DIAMETER
DIM	DIMENSION
DIV	SPECIFICATION DIVISION
DN	DOWN
DTL	DETAIL
DWG(S)	DRAWING(S)
E	EAST
EA	EACH
EC	ELECTRICAL CONTRACTOR
EL	ELEVATION
ELEC	ELECTRICAL
ENG	ENGINEER
EQ	EQUAL
EQUIP	EQUIPMENT
EQUIV	EQUIVALENT
EXST	EXISTING
EXT	EXTERIOR
FIN	FINISHED
FL	FLOOR
FT	FEET
FUT	FUTURE
GC	GENERAL CONTRACTOR
GOVT	GOVERNMENT
H	HEIGHT
HORIZ	HORIZONTAL
HT	HEIGHT
i.e.	THAT IS
IBC	INTERNATIONAL BUILDING CODE
IN	INCH
INT	INTERIOR
LB(S)	POUND(S)
M	THOUSAND
M	METER
MAX	MAXIMUM
MC	MECHANICAL CONTRACTOR
MECH	MECHANICAL
MEZZ	MEZZANINE
MFR	MANUFACTURER
MIN	MINIMUM
MISC	MISCELLANEOUS
MM	MILLIMETER
N	NORTH
N/A	NOT APPLICABLE
NIC	NOT IN CONTRACT
NTS	NOT TO SCALE
OC	ON CENTER
OPP	OPPOSITE
OVHD	OVERHEAD
PAR	PARALLEL
PENT	PENTHOUSE
PLYWD	PLYWOOD
QTY	QUANTITY
REQ(D)	REQUIRE(D)
REV	REVISION(S)
RM	ROOM
RND	ROUND
S	SOUTH
SCHED	SCHEDULE
SECT	SECTION
SHT	SHEET
SIM	SIMILAR
SPEC	SPECIFICATION(S)
STD	STANDARD
STL	STEEL
STOR	STORAGE
STRUCT	STRUCTURAL
SYM	SYMETRICAL
TEMP	TEMPORARY
TYP	TYPICAL
UNEX	UNEXCAVATED
UNFIN	UNFINISHED
UNO	UNLESS NOTED OTHERWISE
VERT	VERTICAL
VEST	VESTIBULE
VIF	VERIFY IN FIELD
W	WEST
W/	WITH
W/O	WITHOUT

ARCHITECTURAL ABBREVIATIONS

A/E	ARCHITECT/ENGINEER
AB	AIR BARRIER
ABS	ASBESTOS
ACC	ADA ACCESSIBLE
ACR	ACRYLIC
ACT	ACOUSTIC CEILING TILE
AD	ACCESS DOOR
ADJ	ADJUSTABLE
ADJT	ADJACENT
ADMIN	ADMINISTRATION
AED	AUTOMATED EXTERNAL DEFIBRILLATORS
AL	ALUMINUM
ALUM	ALUMINUM
AP	ACCESS PANEL
APC	ACOUSTIC PANEL CEILING
ASPH	ASPHALT
AUTO	AUTOMATIC
AVG	AVERAGE
AWP	ACOUSTIC WALL PANEL
B.O.	BOTTOM OF
BCS	BABY CHANGING STATION
BD	BOARD
BLK	BLOCK
BLKG	BLOCKING
BLKHD	BULKHEAD
BM(S)	BEAM(S)
BOT	BOTTOM
BRDG	BRIDGING
BRG	BEARING
BRKT	BRACKET
BT	BATHTUB
BTWN	BETWEEN
CAB	CABINET
CBD	CHALKBOARD
CER	CERAMIC
CF	CUBIC FEET
CFCI	CONTRACTOR FURNISHED CONTRACTOR INSTALLED
CFMF	COLD-FORMED METAL FRAMING
CG	CLEAR FLOAT GLASS
CI	CAST IRON
CIG	CLEAR INSULATING GLASS
CIP	CAST IN PLACE
CJ	CONTROL JOINT
CJA	CONTROL JOINT ABOVE
CLO	CLOSET
CLR	CLEAR
CMU	CONCRETE MASONRY UNIT
COL	COLUMN
COM	COMMON
COMB	COMBINATION
COMM	COMMUNICATIONS
COMPR	COMPRESSIBLE
CONF	CONFERENCE
CONFIG	CONFIGURATION
CORR	CORRIDOR
CP	COVER PLATE
CPT	CARPET
CR	CHAIR RAIL
CS	COUNTERSINK
CSTJ	CONSTRUCTION JOINT
CSWK	CASEWORK
CT	CERAMIC TILE
CTG	CLEAR TEMPERED FLOAT GLASS
CTIG	CLEAR TEMPERED INSULATING GLASS
CU	COPPER
CU	COMBINATION UNIT
CV	CONDOM VENDOR
CY	CUBIC YARD
CYL	CYLINDER
DB	DECIBEL
DBL	DOUBLE
DC	DUST COLLECTOR
DEPR	DEPRESS(ION)(ED)
DEPT	DEPARTMENT
DET	DETENTION
DF	DRINKING FOUNTAIN
DG	DOOR GRILLE
DIAG	DIAGONAL
DPFG	DAMPROOFING
DR	DOOR
DSN	DOWNSPOUT NOZZLE
DW	DISHWASHER
DWL(S)	DOWEL(S)
DWR	DRAWER
EB	EXPANSION BOLT
EE	EACH END
EEW	EMERGENCY EYE WASH
EEWS	EMERGENCY EYE WASH SHOWER
EFF	EFFICIENCY
EJ	EXPANSION JOINT
ELAS	ELASTOMERIC
ELEV	ELEVATOR
EMER	EMERGENCY
ENCL	ENCLOSURE
ENTR	ENTRANCE
ERF	EPOXY RESIN FLOORING
EUI	ENERGY USE INTENSITY
EW	EACH WAY
EWC	ELECTRIC WATER COOLER
EXP	EXPANSION
EXP	EXPOSED
F	FABRIC
F.O.	FACE OF
FAB	FABRICATE(D)
FB	FACE BRICK
FD	FLOOR DRAIN
FDN	FOUNDATION
FE	FIRE EXTINGUISHER
FEC	FIRE EXTINGUISHER CABINET
FF	FINISH FLOOR
FH	FIRE HYDRANT
FHC	FIRE HOSE CABINET
FIG	FIGURE
FIX	FIXTURE
FLASH	FLASHING
FLEX	FLEXIBLE
FLG	FLOORING
FLM	FULL LENGTH MIRROR
FLUOR	FLUORESCENT
FO	FINISH OPENING
FOC	FACE OF CONCRETE
FOF	FACE OF FINISH
FOM	FACE OF MASONRY
FOS	FACE OF STUD
FOW	FACE OF WALL
FP	FIREPROOFING
FR	FIRE RESISTANT
FRP	FIBERGLASS REINFORCED PANEL
FRT	FIRE RESISTANCE TREATED
FS	FLOOR SINK
FSS	FOLDING SHOWER SEAT
FTG	FOOTING
FVC	FIRE VALVE CABINET
FWC	FABRIC WALL COVERING
G	GROUT
GA	GAUGE
GAL	GALLON
GALV	GALVANIZED
GB	GRAB BAR
GD	GARBAGE DISPOSAL
GEN	GENERAL
GFA	GROSS FLOOR AREA
GL	GLUE LAMINATED
GL	GLASS
GMP	GUARANTEED MAXIMUM PRICE
GR	GUARD RAIL
GR	GRADE
GRS	GALVANIZED RIGID STEEL
GWB	GYPSUM WALL BOARD
GYP	GYPSUM
HC	HOLLOW CORE
HD	HAND DRYER
HDF	HIGH DENSITY FIBERBOARD
HDR	HEADER
HDWD	HARDWOOD
HDWR	HARDWARE
HM	HOLLOW METAL
HR	HOUR
HR	HANDRAIL
HS	HARDWARE SET
HSS	HOLLOW STRUCTURAL SHAPE
HVAC	HEATING VENTILATING AND AIR CONDITIONING
IAW	IN ACCORDANCE WITH
ID	INSIDE DIAMETER
IF	INSIDE FACE
IIP	INSULATED INFILL PANEL GLASS
IJ	ISOLATION JOINT
IJS	IN JOIST SPACE
INC	INCLUDE(ING)
INSUL	INSULATION
JAN	JANITOR
JBE	JOIST BEARING ELEVATION
JCT	JUNCTION
JFB	JOINT FILLER BOARD
JST	JOIST
JT	JOINT
KCJ	KEYED CONSTRUCTION JOINT
KD	KNOCKDOWN
KH	KITCHEN HOOD
KIT	KITCHEN
L	ANGLE
LAB	LABORATORY
LAM	LAMINATED
LAV	LAVATORY
LBR	LUMBER
LDG	LOADING
LF	LINEAR FOOT
LG	LENGTH (LONG)
LG	LAMINATED GLASS
LIN	LINEAR
LINO	LINOLEUM
LKR	LOCKER
LOC	LOCATION
LONG	LONGITUDINAL
LSC	LIFE SAFETY CODE
LTG	LIGHTING
LV	LOUVER
LVT	LUXURY VINYL TILE
MAG	MAGNETIC
MAINT	MAINTENANCE
MAN	MANUAL
MAS	MASONRY
MATL	MATERIAL
MB	MOP BASIN
MBD	MARKER BOARD
MBH	MOP/BROOM HOLDER
MC	MEDICINE CABINET
MEMB	MEMBRANE
MH	MANHOLE
MR/S	MIRROR WITH SHELF
MTD	MOUNTED
MTG	MOUNTING
MUL	MULLION
NC	NOISE CRITERIA
NFPA	NATIONAL FIRE PROTECTION ASSOCIATION
NOM	NOMINAL
O to O	OUT TO OUT
OA	OVERALL
OFCI	OWNER FURNISHED CONTRACTOR INSTALLED
OFF	OFFICE
OFOI	OWNER FURNISHED OWNER INSTALLED
OH	OPPOSITE HAND
OPG(S)	OPENING(S)
OSHA	OPERATIONAL SAFETY AND HEALTH ADMINISTRATION
OTB	OPEN TO BELOW
OVFL	OVERFLOW
P	PAINT
PAN B	PANIC BOLT
PB	PARTICLE BOARD
PC	PRECAST CONCRETE
PCD	PAPER CUP DISPENSER
PCT	PORCELAIN CERAMIC TILE
PD	PANIC DEVICE
PERF	PERFORATED
PERP	PERPENDICULAR
PG	PATTERN GLASS
PIC	PORTABLE INSTRUMENT CONNECTION
PIG	PATTERN INSULATING GLASS
PL	PLATE
PL	PROPERTY LINE
PL	PLASTIC LAMINATE
PLAM	PLASTIC LAMINATE
PLBG	PLUMBING
PR	PAIR
PREFAB	PREFABRICATED
PROJ	PROJECT(OR) (ION)
PS	PROJECTION SCREEN
PT	POINT
PT	POINT OF TANGENCY
PTD	PAPER TOWEL DISPENSER
PTD/R	COMBINATION TOWEL DISPENSER/RECEPTACLE
PTN	PARTITION
PVC	POLYVINYL CHLORIDE
PWL	SOUND POWER LEVEL
QT	QUARRY TILE
QTR RND	QUARTER ROUND
R	RISER
RAD	RADIUS
RB	RUBBER BASE
RC	REMOTE CONTROL
RCP	REFLECTED CEILING PLAN
RD	ROOF DRAIN
REF	REFERENCE
REFL	REFLECTED
REM	REMOVABLE
RESIL	RESILIENT
RF	RESILIENT FLOORING
RF	RUBBER FLOOR
RFM	RECESSED FLOOR MAT
RH	ROBE HOOK
RI&C	ROUGH IN AND CONNECT
S	SINK
SAT	SPRAYED ACOUSTIC TREATMENT
SAW	SOUND ABSORBING WALL UNITS
SB	SPLASH BLOCK
SC	SOLID CORE
SC	SHOWER CURTAIN
SCD	SEAT COVER DISPENSER
SCH	SHOWER CURTAIN HOOK
SCR	SHOWER CURTAIN ROD
SCT	STRUCTURAL CLAY TILE
SD	SOAP DISPENSER
SECY	SECRETARY
SF	SQUARE FEET
SG	SPANDREL GLASS
SGL	SINGLE
SH	SHOWER
SHM	SECURITY HOLLOW METAL
SLNT	SEALANT
SM	SHEET METAL
SND	SANITARY NAPKIN DISPOSAL
SNV	SANITARY NAPKIN VENDOR
SPL	SOUND PRESSURE LEVEL
SQ	SQUARE
SS	SOLID SURFACE
SSA	STORM SHELTER AREA
SSS	STAINLESS STEEL SHELF
SST	STAINLESS STEEL
ST	STONE
ST	STAIR
STAG'D	STAGGERED
STC	SOUND TRANSMISSION CLASS
STGR	STRINGER
SUBFL	SUBFLOOR
SURF	SURFACE
SUSP	SUSPENDED
SVF	SHEET VINYL FLOORING
T	TREAD
T&G	TONGUE AND GROOVE
T.O.	TOP OF
TAN	TANGENT
TB	TOWEL BAR
TBD	TACK BOARD
TCP	TOILET COMPARTMENT PARTITION
TERR	TERRAZZO
TFG	TINTED FLOAT GLASS
TG	TEMPERED GLASS
TH	THRESHOLD
THK	THICK(NESS)
TI	TENANT IMPROVEMENT
TIG	TINTED INSULATING GLASS
TMR	TILT MIRROR UNIT
TOIL	TOILET
TOP	TOP OF PAVING
TRANS	TRANSVERSE
TT	TERRAZZO TILE
TTD	TOILET TISSUE DISPENSER
TTG	TINTED TEMPERED FLOAT GLASS
TTIG	TINTED TEMPERED INSULATING GLASS
TW	TACK WALL
UL	UNDERWRITERS LABORATORIES
UR	URINAL
US	UTILITY SHELF
UTIL	UTILITY
VB	VAPOR BARRIER
VB	VINYL BASE
VCB	VENTED COVE BASE
VF	VINYL FLOOR
VOC	VOLITILE ORGANIC COMPOUND
VOL	VOLUME
VP	VENEER PLASTER
VT	VINYL TILE
VWC	VINYL WALL COVERING
W	WIDE
WB	WALL BASE
WC	WATER CLOSET
WC	WALL COVERING
WCL	WATER CLOSET/LAVATORY COMBINATION
WD	WOOD
WDF	WOOD FLOORING
WDW	WINDOW
WG	POLISHED WIRE GLASS
WI	WROUGHT IRON
WOM	WALK OFF MAT
WR	WASTE RECEPTACLE
WRB	WEATHER RESISTANT BARRIER
WW	WARM WHITE
WWF	WELDED WIRE FABRIC
YD	YARD

GENERAL SYMBOLS

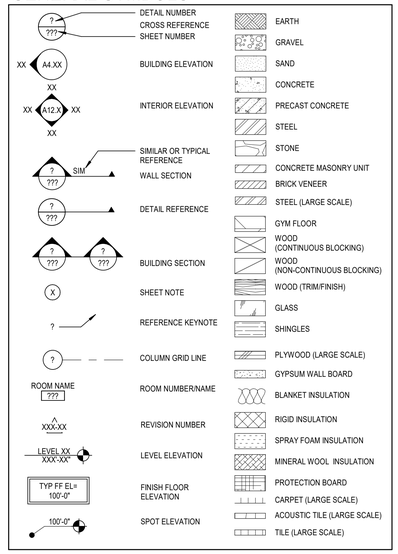

SITE SYMBOLS

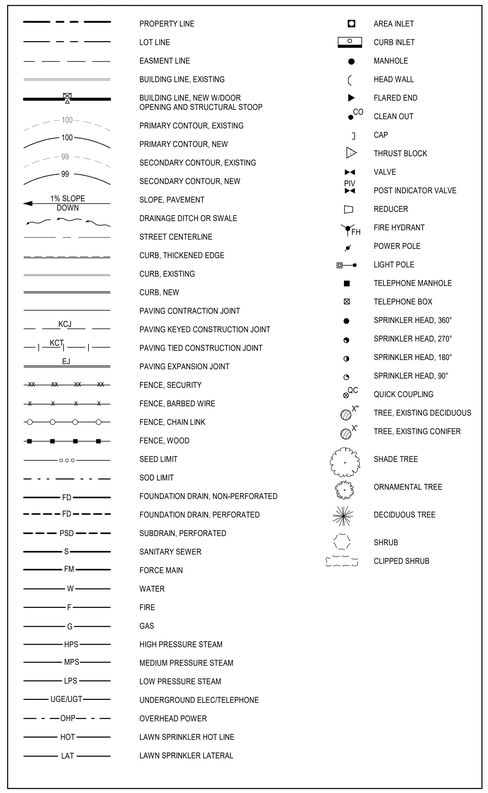

ARCHITECTURAL SYMBOLS

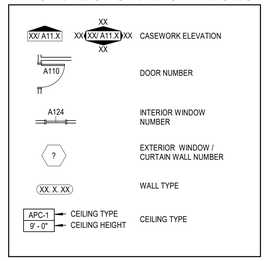

GENERAL NOTES

A. GENERAL NOTES APPLY TO ALL SHEETS.
B. DIMENSIONS ARE ACTUAL AND ARE TO FACE OF STUDS, FACE OF CONCRETE WALLS, FACE OF CMU WALLS, FACE OF FRAMES, OR CENTERLINE OF COLUMNS, UNLESS NOTED OTHERWISE.
C. INCLUDE ALL OWNER-FURNISHED AND INSTALLED ITEMS AND OWNER-FURNISHED AND CONTRACTOR-INSTALLED ITEMS IN THE CONSTRUCTION SCHEDULE, AND SHALL COORDINATE WITH THE OWNER TO ACCOMMODATE THESE ITEMS.
D. COORDINATE ALL MECHANICAL CHASE SIZES WITH THE MECHANICAL CONTRACTOR.
E. SEE FLOOR PLANS FOR LOCATION OF (E) WALLS OF FIRE-RESISTANCE-RATED CONSTRUCTION. ALL WALLS OF FIRE-RESISTANCE-RATED CONSTRUCTION SHALL EXTEND TO UNDERSIDE OF FLOOR OR ROOF DECK ABOVE.
F. ALL PENETRATIONS THROUGH WALLS SHALL BE SEALED WITH PENETRATION FIRE STOPPING MATERIAL AS REQUIRED TO ACHIEVE THE RESPECTIVE FIRE-RESISTANCE RATING AND SMOKE STOPPAGE. SEE SPECIFICATION SECTION 078413.
G. COORDINATE WITH MECHANICAL AND ELECTRICAL CONTRACTORS THE SIZE AND LOCATION OF EQUIPMENT PADS SHOWN ON PLANS.
H. CONSTRUCTION DOCUMENTS ARE COMPLEMENTARY. SEE DRAWING FOR QUANTITIES AND LOCATION OF WORK. SEE SPECIFICATIONS FOR QUALITIES AND CONDITIONS OF WORK.
I. WORK: ALL ASPECTS OF THE WORK AND ITEMS NOT SPECIFICALLY MENTIONED, BUT NECESSARY TO MAKE A COMPLETE WORKING INSTALLATION, SHALL BE INCLUDED AND INDICATED IN THE CONTRACTOR'S BID.
J. GENERAL SHEET NOTES ONLY APPLY TO PARTICULAR DRAWING OR SERIES OF DRAWINGS.
K. NO ASBESTOS OR PCB CONTAINING MATERIALS SHALL BE USED ON THIS PROJECT.
L. DO NOT SCALE DRAWINGS. DIMENSIONS NOTED PREVAIL. NOTIFY ARCHITECT IN CASE OF DISCREPANCY.
M. HORIZONTAL AND VERTICAL DIMENSIONS ARE MINIMUM DIMENSIONS. CLEARANCES ARE GIVEN TO FINISH SURFACES. GC TO VERIFY ALL CLEARANCES. NOTIFY ARCHITECT IN CASE OF DISCREPANCY.

DLR Group
© DLR Group

LICENSED ARCHITECT
JESSE MILLER
No. C-22306
10/31/2023
STATE OF CALIFORNIA

MERWIN ELEMENTARY SCHOOL
COVID 19- COVINA VALLEY DISTRICT HVAC REPLACEMENT
16125 CYPRESS STREET, COVINA, CA 91722

100% CONSTRUCTION DOCUMENTS
11/04/2022
REVISIONS

75-22605-00
DSA A#03-122235
DSA File #: 19-25

GENERAL NOTES, SYMBOLS AND ABBREVIATIONS

G1.1

Autodesk Docs://75-22605-00 CVUSD - District Wide HVAC Replacement/75-22605-00_CVUSD_Merwin ES_AR_2020.rvt
11/4/2022 10:08:25 AM

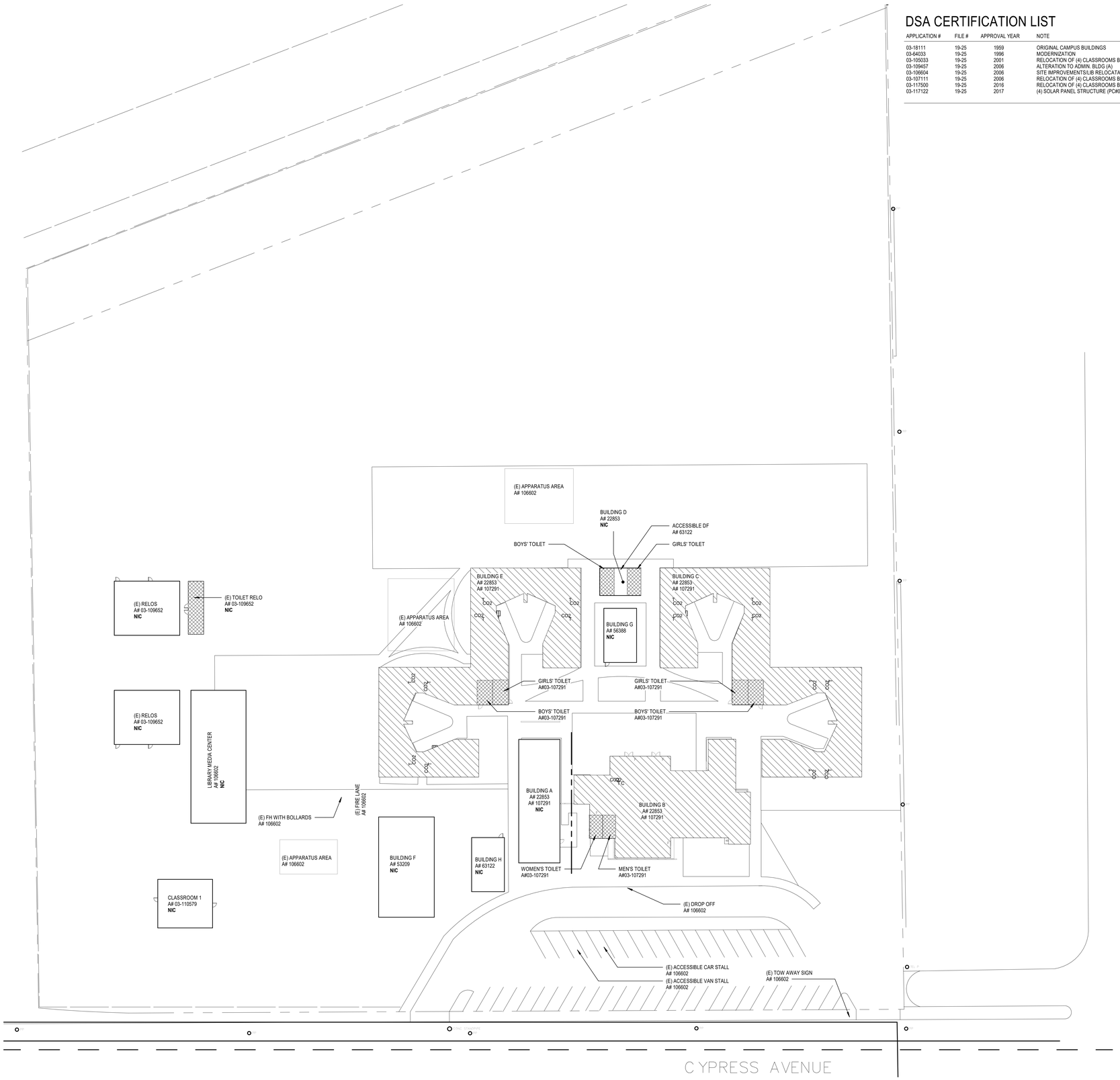

ARCHITECTURAL SITE PLAN

SCALE: 1" = 30'-0"

NORTH

DSA CERTIFICATION LIST

APPLICATION #	FILE #	APPROVAL YEAR	NOTE
03-18111	19-25	1959	ORIGINAL CAMPUS BUILDINGS
03-64033	19-25	1996	MODERNIZATION
03-105033	19-25	2001	RELOCATION OF (4) CLASSROOMS BULDINGS (A#04-102490)
03-109457	19-25	2006	ALTERATION TO ADMIN. BLDG (A)
03-106604	19-25	2006	SITE IMPROVEMENTS/LIB RELOCATABLE BUILDING
03-107111	19-25	2006	RELOCATION OF (4) CLASSROOMS BULDINGS (PC#04-104801)
03-117500	19-25	2016	RELOCATION OF (4) CLASSROOMS BULDINGS STOCKPILE
03-117122	19-25	2017	(4) SOLAR PANEL STRUCTURE (PC#02-113544)

SITE LEGEND

- EXISTING BUILDING NOT IN SCOPE
- EXISTING BUILDING - SCOPE OF WORK UNDER THIS DSA APPLICATION
- (E) RESTROOMS - NOT IN SCOPE

DLR Group

© DLR Group

LICENSED ARCHITECT
JESSE MILLER
No. C-32306
10/31/2023
REGISTRATION EXPIRES
STATE OF CALIFORNIA

MERWIN ELEMENTARY SCHOOL

COVID 19- COVINA VALLEY DISTRICT HVAC REPLACEMENT

16125 CYPRESS STREET, COVINA, CA 91722

100% CONSTRUCTION DOCUMENTS

11/04/2022

REVISIONS

75-22605-00
DSA A#03-122235
DSA File #: 19-25

ARCHITECTURAL SITE PLAN

A1.1

Autodesk Docs://75-22605-00 CVUSD - District Wide HVAC Replacement/75-22605-00_CVUSD_Merwin ES_AR_2020.rvt
11/4/2022 10:08:17 AM

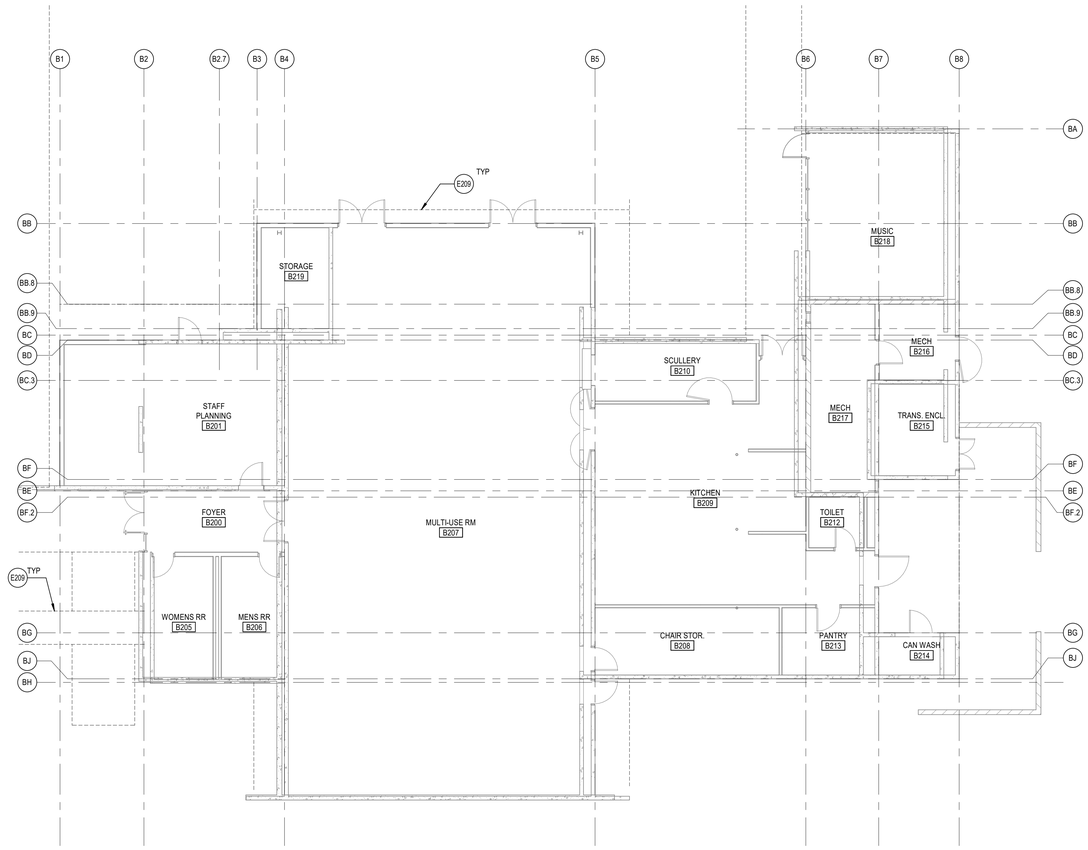

BUILDING B FLOOR PLAN

SCALE: 1/8" = 1'-0"

NORTH

REFERENCE KEYNOTES

GENERAL ARCHITECTURAL NOTES

1. ALL INTERIOR CMU WALLS SHALL ARE TO REMAIN U.N.O.
2. SCRIBE (E) GYPSUM WALL BOARD OF WALLS AND PARTITIONS TO IRREGULARITIES OF DECK ABOVE. SEAL TIGHTLY AROUND ALL PENETRATIONS.

DEMOLITION GENERAL NOTES

DEMOLITION NOTES APPLY TO ALL DEMOLITION SHEETS.

THE CONTRACTOR SHALL:

A. COORDINATE ALL DEMOLITION AND PHASING EFFORTS WITH THE ARCHITECT AND OWNER'S REPRESENTATIVE. EVERY EFFORT SHALL BE MADE TO MINIMIZE DISRUPTION OF OWNER'S OPERATIONS. EXCESSIVE NOISE OR VIBRATION SHALL BE PRE-APPROVED AND COORDINATED WITH THE OWNER'S REPRESENTATIVE. IN ALL CASES, PROVISIONS SHALL BE MADE FOR USER'S SAFETY.
B. COORDINATE ANY DISRUPTION OF UTILITY SERVICES WITH THE OWNER AND AS SPECIFIED.
C. CONSTRUCT TEMPORARY CONSTRUCTION PARTITIONS WITHIN THE EXISTING BUILDING WHICH OFFER A ONE-HOUR ENCLOSURE TO ISOLATE ANY DEMOLITION/CONSTRUCTION WORK FROM THE GENERAL PUBLIC AND AS DEEMED NECESSARY BY THE OWNER AND CODE OFFICIAL HAVING JURISDICTION. COORDINATE LOCATIONS WITH THE OWNER AND MAINTAIN MEANS OF EGRESS THROUGHOUT THE WORK.
D. MAINTAIN A SECURE, WEATHER-TIGHT ENCLOSURE AT ALL TIMES.
E. VERIFY ALL EXISTING CONDITIONS, DIMENSIONS AND ELEVATIONS AND NOTIFY THE ARCHITECT OF ANY DISCREPANCIES.
F. REMOVE IN THEIR ENTIRETY ALL EXISTING WALLS, DOORS, MILLWORK, PLUMBING FIXTURES, CEILINGS, SOFFITS, MARKERBOARDS, AND OTHER ITEMS, AS REQUIRED TO EXECUTE THE DEMOLITION/CONSTRUCTION WORK DESCRIBED BY THE DRAWINGS.
G. THE OWNER SHALL RESERVE THE RIGHT TO SALVAGE ANY MATERIALS.
H. PROVIDE PROTECTION FOR ALL EXISTING BUILDING MATERIALS AND EQUIPMENT FROM DAMAGE DUE TO ANY DEMOLITION OR CONSTRUCTION-RELATED INCIDENT PERFORMED UNDER THIS CONTRACT.
I. REPAIR OR REPLACE ITEMS THAT ARE DAMAGED AS A RESULT OF DEMOLITION OR CONSTRUCTION TO MATCH EXISTING FINISH AND/OR CONDITION.
J. EXISTING MATERIALS SHALL NOT BE REUSED UNLESS NOTED OTHERWISE OR AS AUTHORIZED BY ARCHITECT.
K. VERIFY AND MAINTAIN THE LOCATION OF EXISTING POWER, COMMUNICATION AND DATA CABLES TO PREVENT INTERRUPTION OF THEIR SERVICE.
L. PATCH FLOOR, WALL AND CEILING PENETRATIONS RESULTING FROM REMOVAL OR RE-ROUTING OF NEW OR EXISTING PIPING, DUCTWORK, CONDUIT, AND OTHER ITEMS, AS REQUIRED TO MAINTAIN FIRE-RESISTANCE-RATED SEPARATIONS. FINISH AS REQUIRED FOR NEW OR EXISTING ADJACENT SURFACES.
M. CAP ALL DISCONNECTED MECHANICAL PIPING LINES WITHIN THE WALL OR FLOOR. PATCH AND FINISH AS REQUIRED TO MATCH NEW OR EXISTING ADJACENT SURFACES.
N. SEE MECHANICAL AND ELECTRICAL DRAWINGS AND NOTES FOR FURTHER SEQUENCING AND SCOPE OF WORK.
O. AVOID ANY DISTURBANCE OF SOILS WITHIN THE ZONE OF INFLUENCE AROUND EXISTING FOOTINGS AND FLOOR SLABS AS DIRECTED BY GEOTECHNICAL ENGINEER.
P. WHERE CMU WALLS ARE INDICATED TO BE REMOVED, PREPARE ADJACENT WALLS TO RECEIVE NEW PATCH/FINISH BY REMOVING CMU IN TOOTH-IN PATTERN BOTH SIDES OF DEMOLITION FOR CONTRACTOR TO TOOTH-IN NEW CMU PATCHES.
Q. WHERE PLASTER/STUD WALLS ARE INDICATED TO BE REMOVED, PREPARE ADJACENT WALLS TO RECEIVE NEW PATCH/FINISH BY SAWCUTTING ADJACENT PLASTER FINISH A MINIMUM OF 1'-0" BEYOND DEMOLITION.

DLR Group

© DLR Group

LICENSED ARCHITECT
JESSE MILLER
No. C-22306
10/31/2023
REGISTRATION EXPIRES
STATE OF CALIFORNIA

MERWIN ELEMENTARY SCHOOL

COVID 19- COVINA VALLEY DISTRICT HVAC REPLACEMENT

16125 CYPRESS STREET, COVINA, CA 91722

100% CONSTRUCTION DOCUMENTS

11/04/2022

REVISIONS

75-22605-00
DSA A#03-122235
DSA File #: 19-25

BUILDING B - FLOOR PLAN

A1.1B

Autodesk Docs://75-22605-00 CVUSD - District Wide HVAC Replacement/75-22605-00_CVUSD_Merwin ES_AR_2020.rvt
11/4/2022 10:08:18 AM

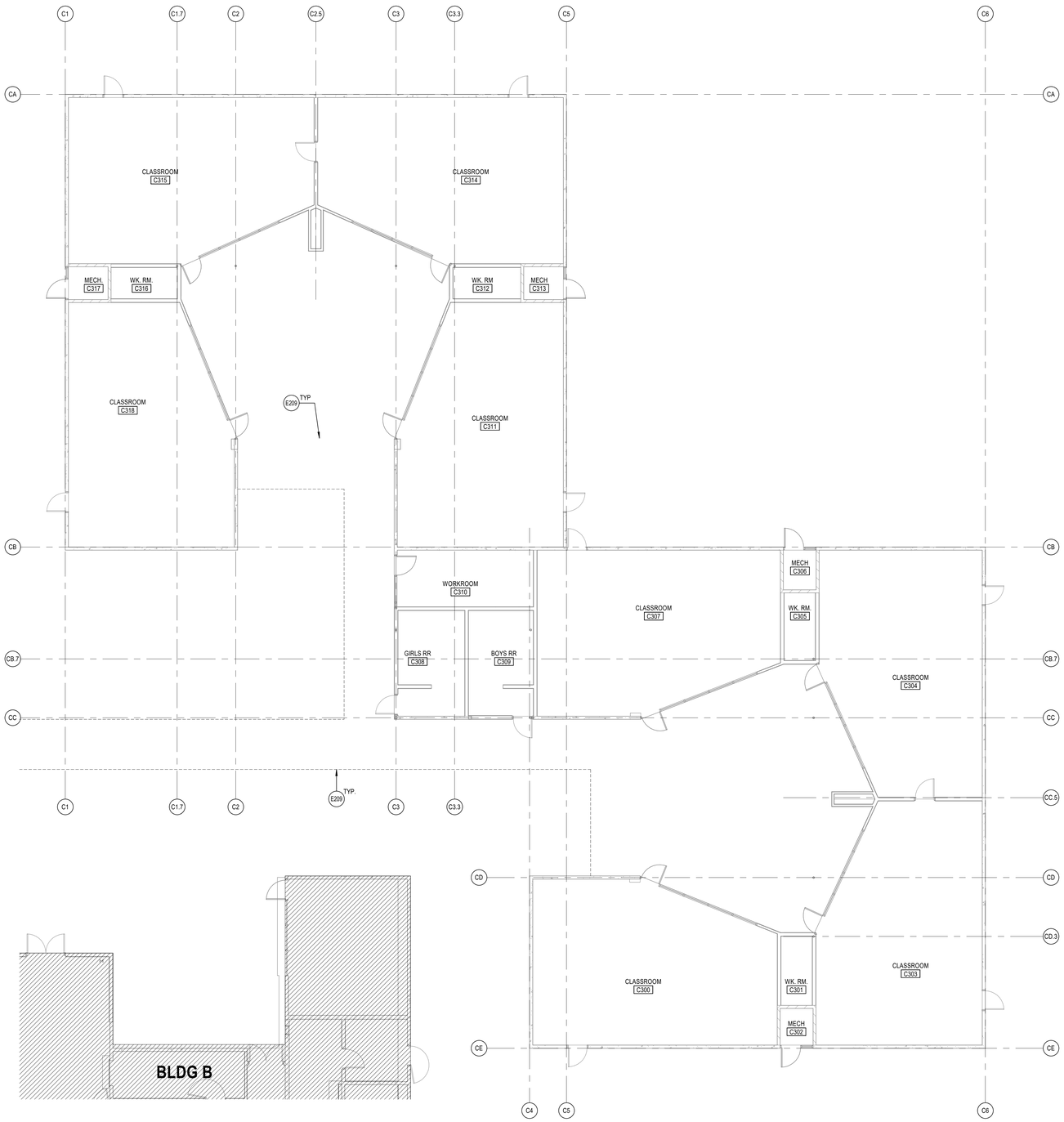

BUILDING C FLOOR PLAN

SCALE: 1/8" = 1'-0"

NORTH

REFERENCE KEYNOTES

GENERAL ARCHITECTURAL NOTES

1. ALL INTERIOR CMU WALLS SHALL ARE TO REMAIN U.N.O.
2. SCRIBE (E) GYPSUM WALL BOARD OF WALLS AND PARTITIONS TO IRREGULARITIES OF DECK ABOVE. SEAL TIGHTLY AROUND ALL PENETRATIONS.

DEMOLITION GENERAL NOTES

DEMOLITION NOTES APPLY TO ALL DEMOLITION SHEETS.

THE CONTRACTOR SHALL:

A. COORDINATE ALL DEMOLITION AND PHASING EFFORTS WITH THE ARCHITECT AND OWNER'S REPRESENTATIVE. EVERY EFFORT SHALL BE MADE TO MINIMIZE DISRUPTION OF OWNER'S OPERATIONS. EXCESSIVE NOISE OR VIBRATION SHALL BE PRE-APPROVED AND COORDINATED WITH THE OWNER'S REPRESENTATIVE. IN ALL CASES, PROVISIONS SHALL BE MADE FOR USER'S SAFETY.
B. COORDINATE ANY DISRUPTION OF UTILITY SERVICES WITH THE OWNER AND AS SPECIFIED.
C. CONSTRUCT TEMPORARY CONSTRUCTION PARTITIONS WITHIN THE EXISTING BUILDING WHICH OFFER A ONE-HOUR ENCLOSURE TO ISOLATE ANY DEMOLITION/CONSTRUCTION WORK FROM THE GENERAL PUBLIC AND AS DEEMED NECESSARY BY THE OWNER AND CODE OFFICIAL HAVING JURISDICTION. COORDINATE LOCATIONS WITH THE OWNER AND MAINTAIN MEANS OF EGRESS THROUGHOUT THE WORK.
D. MAINTAIN A SECURE, WEATHER-TIGHT ENCLOSURE AT ALL TIMES.
E. VERIFY ALL EXISTING CONDITIONS, DIMENSIONS AND ELEVATIONS AND NOTIFY THE ARCHITECT OF ANY DISCREPANCIES.
F. REMOVE IN THEIR ENTIRETY ALL EXISTING WALLS, DOORS, MILLWORK, PLUMBING FIXTURES, CEILINGS, SOFFITS, MARKERBOARDS, AND OTHER ITEMS, AS REQUIRED TO EXECUTE THE DEMOLITION/CONSTRUCTION WORK DESCRIBED BY THE DRAWINGS.
G. THE OWNER SHALL RESERVE THE RIGHT TO SALVAGE ANY MATERIALS.
H. PROVIDE PROTECTION FOR ALL EXISTING BUILDING MATERIALS AND EQUIPMENT FROM DAMAGE DUE TO ANY DEMOLITION OR CONSTRUCTION-RELATED INCIDENT PERFORMED UNDER THIS CONTRACT.
I. REPAIR OR REPLACE ITEMS THAT ARE DAMAGED AS A RESULT OF DEMOLITION OR CONSTRUCTION TO MATCH EXISTING FINISH AND/OR CONDITION.
J. EXISTING MATERIALS SHALL NOT BE REUSED UNLESS NOTED OTHERWISE OR AS AUTHORIZED BY ARCHITECT.
K. VERIFY AND MAINTAIN THE LOCATION OF EXISTING POWER, COMMUNICATION AND DATA CABLES TO PREVENT INTERRUPTION OF THEIR SERVICE.
L. PATCH FLOOR, WALL AND CEILING PENETRATIONS RESULTING FROM REMOVAL OR RE-ROUTING OF NEW OR EXISTING PIPING, DUCTWORK, CONDUIT, AND OTHER ITEMS, AS REQUIRED TO MAINTAIN FIRE-RESISTANCE-RATED SEPARATIONS. FINISH AS REQUIRED FOR NEW OR EXISTING ADJACENT SURFACES.
M. CAP ALL DISCONNECTED MECHANICAL PIPING LINES WITHIN THE WALL OR FLOOR. PATCH AND FINISH AS REQUIRED TO MATCH NEW OR EXISTING ADJACENT SURFACES.
N. SEE MECHANICAL AND ELECTRICAL DRAWINGS AND NOTES FOR FURTHER SEQUENCING AND SCOPE OF WORK.
O. AVOID ANY DISTURBANCE OF SOILS WITHIN THE ZONE OF INFLUENCE AROUND EXISTING FOOTINGS AND FLOOR SLABS AS DIRECTED BY GEOTECHNICAL ENGINEER.
P. WHERE CMU WALLS ARE INDICATED TO BE REMOVED, PREPARE ADJACENT WALLS TO RECEIVE NEW PATCH/FINISH BY REMOVING CMU IN TOOTH-IN PATTERN BOTH SIDES OF DEMOLITION FOR CONTRACTOR TO TOOTH-IN NEW CMU PATCHES.
Q. WHERE PLASTER/STUD WALLS ARE INDICATED TO BE REMOVED, PREPARE ADJACENT WALLS TO RECEIVE NEW PATCH/FINISH BY SAWCUTTING ADJACENT PLASTER FINISH A MINIMUM OF 1'-0" BEYOND DEMOLITION.

DLR Group

© DLR Group

LICENSED ARCHITECT
JESSE MILLER
No. C-32306
10/31/2023
REGISTRATION EXPIRES
STATE OF CALIFORNIA

MERWIN ELEMENTARY SCHOOL

COVID 19- COVINA VALLEY DISTRICT HVAC REPLACEMENT

16125 CYPRESS STREET, COVINA, CA 91722

100% CONSTRUCTION DOCUMENTS

11/04/2022

REVISIONS

75-22605-00
DSA A#03-122235
DSA File #: 19-25

BUILDING C - FLOOR PLAN

A1.1C

Autodesk Docs://75-22605-00 CVUSD - District Wide HVAC Replacement/75-22605-00_CVUSD_Merwin ES_AR_2020.rvt
11/4/2022 10:08:18 AM

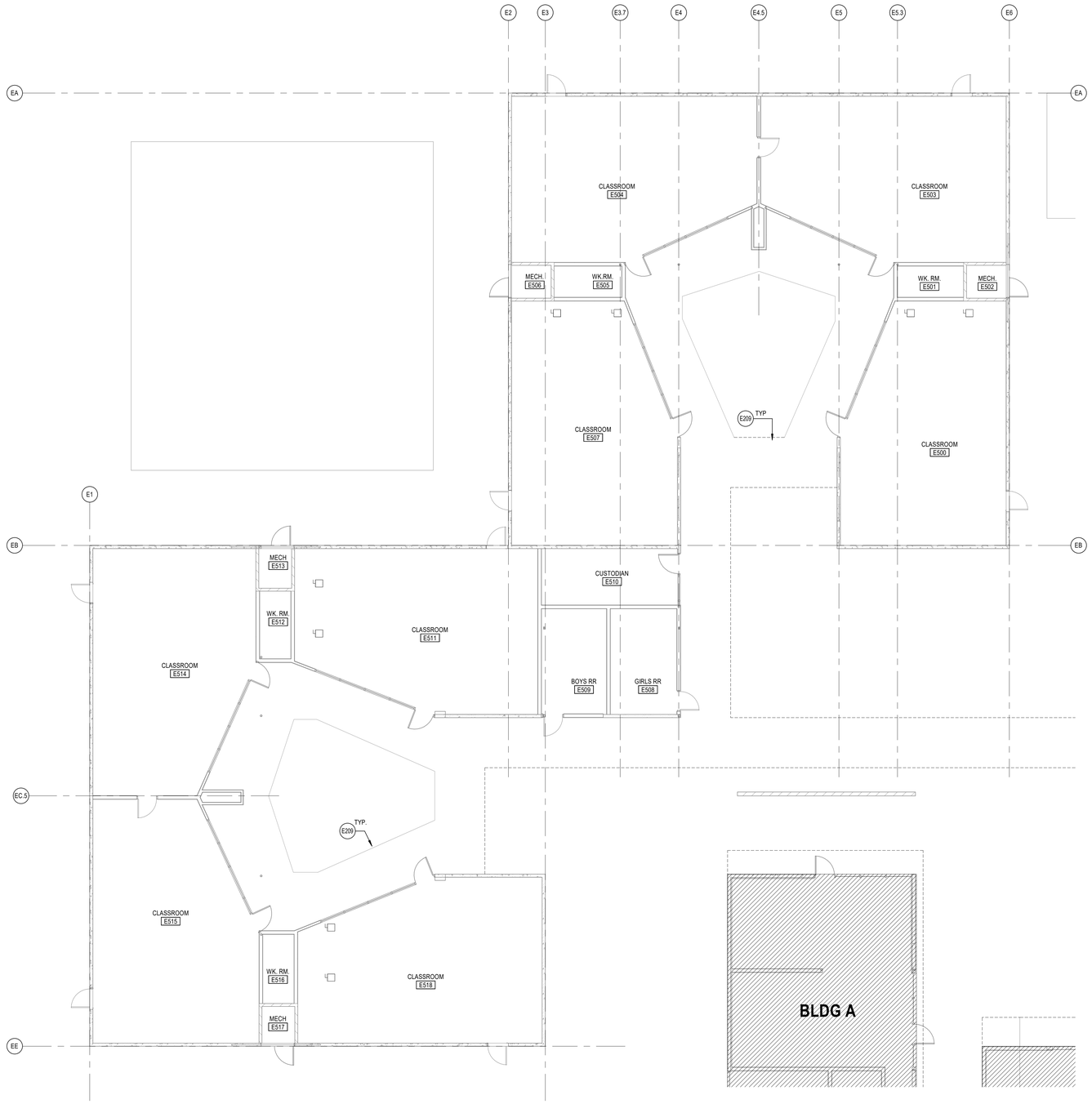

BUILDING E FLOOR PLAN

SCALE: 1/8" = 1'-0"

NORTH

REFERENCE KEYNOTES

GENERAL ARCHITECTURAL NOTES

1. ALL INTERIOR CMU WALLS SHALL ARE TO REMAIN U.N.O.
2. SCRIBE (E) GYPSUM WALL BOARD OF WALLS AND PARTITIONS TO IRREGULARITIES OF DECK ABOVE. SEAL TIGHTLY AROUND ALL PENETRATIONS.

DEMOLITION GENERAL NOTES

DEMOLITION NOTES APPLY TO ALL DEMOLITION SHEETS.

THE CONTRACTOR SHALL:

A. COORDINATE ALL DEMOLITION AND PHASING EFFORTS WITH THE ARCHITECT AND OWNER'S REPRESENTATIVE. EVERY EFFORT SHALL BE MADE TO MINIMIZE DISRUPTION OF OWNER'S OPERATIONS. EXCESSIVE NOISE OR VIBRATION SHALL BE PRE-APPROVED AND COORDINATED WITH THE OWNER'S REPRESENTATIVE. IN ALL CASES, PROVISIONS SHALL BE MADE FOR USER'S SAFETY.
B. COORDINATE ANY DISRUPTION OF UTILITY SERVICES WITH THE OWNER AND AS SPECIFIED.
C. CONSTRUCT TEMPORARY CONSTRUCTION PARTITIONS WITHIN THE EXISTING BUILDING WHICH OFFER A ONE-HOUR ENCLOSURE TO ISOLATE ANY DEMOLITION/CONSTRUCTION WORK FROM THE GENERAL PUBLIC AND AS DEEMED NECESSARY BY THE OWNER AND CODE OFFICIAL HAVING JURISDICTION. COORDINATE LOCATIONS WITH THE OWNER AND MAINTAIN MEANS OF EGRESS THROUGHOUT THE WORK.
D. MAINTAIN A SECURE, WEATHER-TIGHT ENCLOSURE AT ALL TIMES.
E. VERIFY ALL EXISTING CONDITIONS, DIMENSIONS AND ELEVATIONS AND NOTIFY THE ARCHITECT OF ANY DISCREPANCIES.
F. REMOVE IN THEIR ENTIRETY ALL EXISTING WALLS, DOORS, MILLWORK, PLUMBING FIXTURES, CEILINGS, SOFFITS, MARKERBOARDS, AND OTHER ITEMS, AS REQUIRED TO EXECUTE THE DEMOLITION/CONSTRUCTION WORK DESCRIBED BY THE DRAWINGS.
G. THE OWNER SHALL RESERVE THE RIGHT TO SALVAGE ANY MATERIALS.
H. PROVIDE PROTECTION FOR ALL EXISTING BUILDING MATERIALS AND EQUIPMENT FROM DAMAGE DUE TO ANY DEMOLITION OR CONSTRUCTION-RELATED INCIDENT PERFORMED UNDER THIS CONTRACT.
I. REPAIR OR REPLACE ITEMS THAT ARE DAMAGED AS A RESULT OF DEMOLITION OR CONSTRUCTION TO MATCH EXISTING FINISH AND/OR CONDITION.
J. EXISTING MATERIALS SHALL NOT BE REUSED UNLESS NOTED OTHERWISE OR AS AUTHORIZED BY ARCHITECT.
K. VERIFY AND MAINTAIN THE LOCATION OF EXISTING POWER, COMMUNICATION AND DATA CABLES TO PREVENT INTERRUPTION OF THEIR SERVICE.
L. PATCH FLOOR, WALL AND CEILING PENETRATIONS RESULTING FROM REMOVAL OR RE-ROUTING OF NEW OR EXISTING PIPING, DUCTWORK, CONDUIT, AND OTHER ITEMS, AS REQUIRED TO MAINTAIN FIRE-RESISTANCE-RATED SEPARATIONS. FINISH AS REQUIRED FOR NEW OR EXISTING ADJACENT SURFACES.
M. CAP ALL DISCONNECTED MECHANICAL PIPING LINES WITHIN THE WALL OR FLOOR. PATCH AND FINISH AS REQUIRED TO MATCH NEW OR EXISTING ADJACENT SURFACES.
N. SEE MECHANICAL AND ELECTRICAL DRAWINGS AND NOTES FOR FURTHER SEQUENCING AND SCOPE OF WORK.
O. AVOID ANY DISTURBANCE OF SOILS WITHIN THE ZONE OF INFLUENCE AROUND EXISTING FOOTINGS AND FLOOR SLABS AS DIRECTED BY GEOTECHNICAL ENGINEER.
P. WHERE CMU WALLS ARE INDICATED TO BE REMOVED, PREPARE ADJACENT WALLS TO RECEIVE NEW PATCH/FINISH BY REMOVING CMU IN TOOTH-IN PATTERN BOTH SIDES OF DEMOLITION FOR CONTRACTOR TO TOOTH-IN NEW CMU PATCHES.
Q. WHERE PLASTER/STUD WALLS ARE INDICATED TO BE REMOVED, PREPARE ADJACENT WALLS TO RECEIVE NEW PATCH/FINISH BY SAWCUTTING ADJACENT PLASTER FINISH A MINIMUM OF 1'-0" BEYOND DEMOLITION.

DLR Group

© DLR Group

LICENSED ARCHITECT
JESSE MILLER
No. C-22306
10/31/2023
REGISTRATION EXPIRES
STATE OF CALIFORNIA

MERWIN ELEMENTARY SCHOOL

COVID 19- COVINA VALLEY DISTRICT HVAC REPLACEMENT

16125 CYPRESS STREET, COVINA, CA 91722

100% CONSTRUCTION DOCUMENTS

11/04/2022

REVISIONS

75-22605-00
DSA A#03-122235
DSA File #: 19-25

BUILDING E - FLOOR PLAN

A1.1E

Autodesk Docs://75-22605-00 CVUSD - District Wide HVAC Replacement/75-22605-00_CVUSD_Merwin ES_AR_2020.rvt
11/4/2022 10:08:19 AM

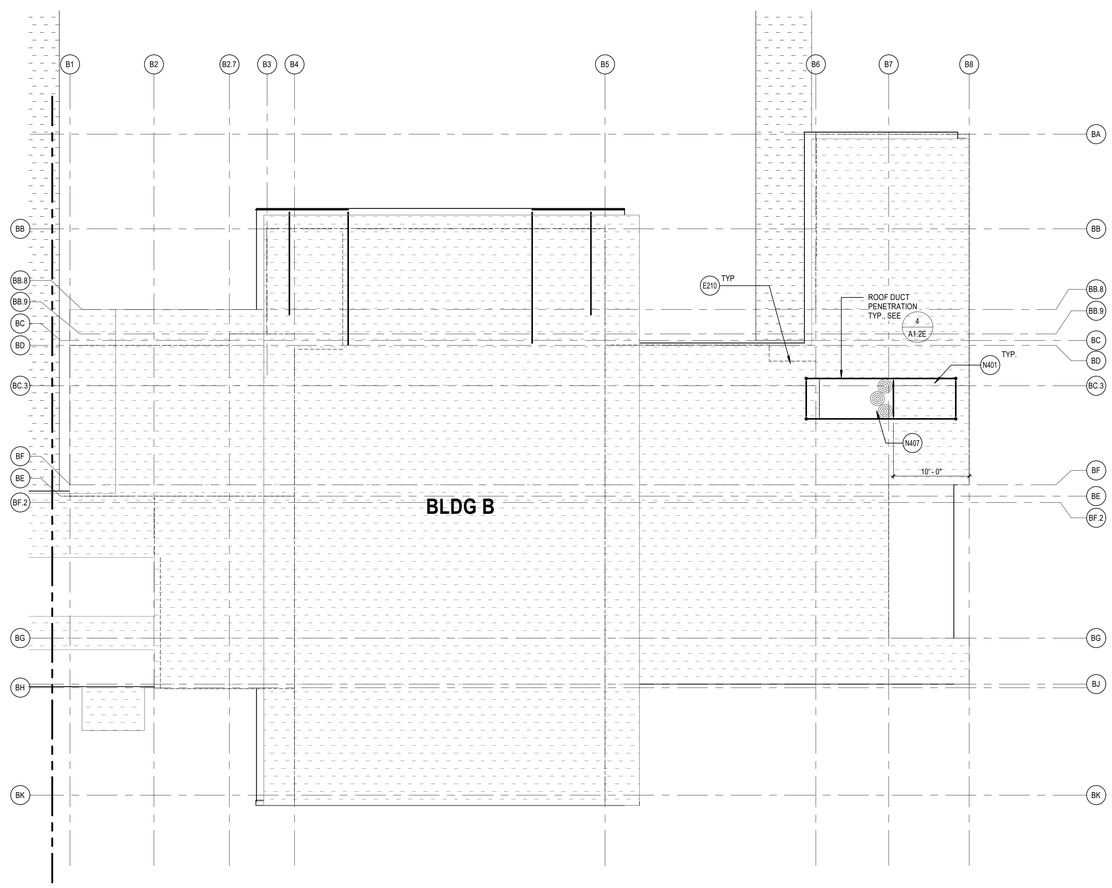

BUILDING B ROOF PLAN

SCALE: 1/8" = 1'-0"

NORTH

REFERENCE KEYNOTES

E210	LINE OF (E) BLDG BELOW SHOWN DASHED
N401	NEW STRUCTURAL POST AND BEAM SUPPORT FRAMING, SEE STRUCTURAL DRAWINGS FOR ADDITIONAL INFORMATION
N407	(N) MECHANICAL UNITS ATTACHED TO STRUCTURAL SUPPORTS, SEE MECHANICAL AND STRUCTURAL FOR (N) ROOF DUCT PENETRATION LOCATION

ROOF PLAN GENERAL NOTES

A. (E) ROOF CURBS TO REMAIN U.N.O., SEE MECHANICAL DRAWINGS SHEET M1.3B AND M1.3D FOR ADDITIONAL INFORMATION.
B. COORDINATE THE SIZE AND LOCATION OF WALL PENETRATIONS FOR MECHANICAL AND ELECTRICAL EQUIPMENT. REFER TO MECHANICAL AND ELECTRICAL DRAWINGS FOR PENETRATIONS NOT SHOWN ON THIS DRAWING.
C. (E) DRAINS, CURBS, VENTS AND STACKS TO REMAINS.

DEMOLITION GENERAL NOTES

DEMOLITION NOTES APPLY TO ALL DEMOLITION SHEETS.

THE CONTRACTOR SHALL:

A. COORDINATE ALL DEMOLITION AND PHASING EFFORTS WITH THE ARCHITECT AND OWNER'S REPRESENTATIVE. EVERY EFFORT SHALL BE MADE TO MINIMIZE DISRUPTION OF OWNER'S OPERATIONS. EXCESSIVE NOISE OR VIBRATION SHALL BE PRE-APPROVED AND COORDINATED WITH THE OWNER'S REPRESENTATIVE. IN ALL CASES, PROVISIONS SHALL BE MADE FOR USER'S SAFETY.
B. COORDINATE ANY DISRUPTION OF UTILITY SERVICES WITH THE OWNER AND AS SPECIFIED.
C. CONSTRUCT TEMPORARY CONSTRUCTION PARTITIONS WITHIN THE EXISTING BUILDING WHICH OFFER A ONE-HOUR ENCLOSURE TO ISOLATE ANY DEMOLITION/CONSTRUCTION WORK FROM THE GENERAL PUBLIC AND AS DEEMED NECESSARY BY THE OWNER AND CODE OFFICIAL HAVING JURISDICTION. COORDINATE LOCATIONS WITH THE OWNER AND MAINTAIN MEANS OF EGRESS THROUGHOUT THE WORK.
D. MAINTAIN A SECURE, WEATHER-TIGHT ENCLOSURE AT ALL TIMES.
E. VERIFY ALL EXISTING CONDITIONS, DIMENSIONS AND ELEVATIONS AND NOTIFY THE ARCHITECT OF ANY DISCREPANCIES.
F. REMOVE IN THEIR ENTIRETY ALL EXISTING WALLS, DOORS, MILLWORK, PLUMBING FIXTURES, CEILINGS, SOFFITS, MARKERBOARDS, AND OTHER ITEMS, AS REQUIRED TO EXECUTE THE DEMOLITION/CONSTRUCTION WORK DESCRIBED BY THE DRAWINGS.
G. THE OWNER SHALL RESERVE THE RIGHT TO SALVAGE ANY MATERIALS.
H. PROVIDE PROTECTION FOR ALL EXISTING BUILDING MATERIALS AND EQUIPMENT FROM DAMAGE DUE TO ANY DEMOLITION OR CONSTRUCTION-RELATED INCIDENT PERFORMED UNDER THIS CONTRACT.
I. REPAIR OR REPLACE ITEMS THAT ARE DAMAGED AS A RESULT OF DEMOLITION OR CONSTRUCTION TO MATCH EXISTING FINISH AND/OR CONDITION.
J. EXISTING MATERIALS SHALL NOT BE REUSED UNLESS NOTED OTHERWISE OR AS AUTHORIZED BY ARCHITECT.
K. VERIFY AND MAINTAIN THE LOCATION OF EXISTING POWER, COMMUNICATION AND DATA CABLES TO PREVENT INTERRUPTION OF THEIR SERVICE.
L. PATCH FLOOR, WALL AND CEILING PENETRATIONS RESULTING FROM REMOVAL OR RE-ROUTING OF NEW OR EXISTING PIPING, DUCTWORK, CONDUIT, AND OTHER ITEMS, AS REQUIRED TO MAINTAIN FIRE-RESISTANCE-RATED SEPARATIONS. FINISH AS REQUIRED FOR NEW OR EXISTING ADJACENT SURFACES.
M. CAP ALL DISCONNECTED MECHANICAL PIPING LINES WITHIN THE WALL OR FLOOR. PATCH AND FINISH AS REQUIRED TO MATCH NEW OR EXISTING ADJACENT SURFACES.
N. SEE MECHANICAL AND ELECTRICAL DRAWINGS AND NOTES FOR FURTHER SEQUENCING AND SCOPE OF WORK.
O. AVOID ANY DISTURBANCE OF SOILS WITHIN THE ZONE OF INFLUENCE AROUND EXISTING FOOTINGS AND FLOOR SLABS AS DIRECTED BY GEOTECHNICAL ENGINEER.
P. WHERE CMU WALLS ARE INDICATED TO BE REMOVED, PREPARE ADJACENT WALLS TO RECEIVE NEW PATCH/FINISH BY REMOVING CMU IN TOOTH-IN PATTERN BOTH SIDES OF DEMOLITION FOR CONTRACTOR TO TOOTH-IN NEW CMU PATCHES.
Q. WHERE PLASTER/STUD WALLS ARE INDICATED TO BE REMOVED, PREPARE ADJACENT WALLS TO RECEIVE NEW PATCH/FINISH BY SAWCUTTING ADJACENT PLASTER FINISH A MINIMUM OF 1'-0" BEYOND DEMOLITION.

DLR Group

© DLR Group

LICENSED ARCHITECT
JESSE MILLER
No. C-22306
10/31/2023
REGISTRATION EXPIRES
STATE OF CALIFORNIA

MERWIN ELEMENTARY SCHOOL
COVID 19- COVINA VALLEY DISTRICT HVAC REPLACEMENT
16125 CYPRESS STREET, COVINA, CA 91722

100% CONSTRUCTION DOCUMENTS
11/04/2022
REVISIONS

75-22605-00
DSA A#03-122235
DSA File #: 19-25

BUILDING B ROOF PLAN

A1.2B

Autodesk Docs://75-22605-00 CVUSD - District Wide HVAC Replacement/75-22605-00_CVUSD_Merwin ES_AR_2020.rvt
11/4/2022 10:08:20 AM

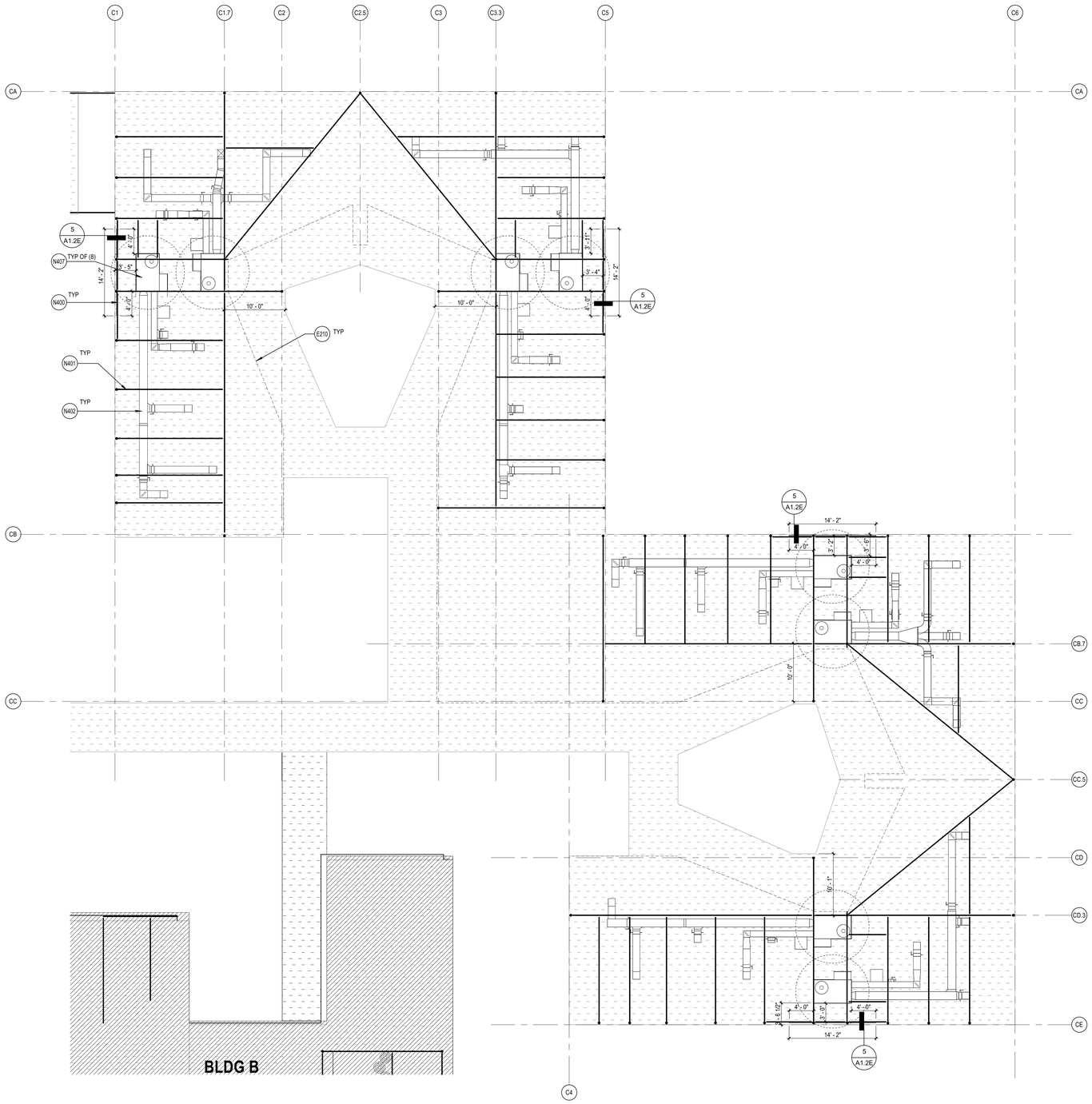

BUILDING C ROOF PLAN

SCALE: 1/8" = 1'-0"

NORTH

REFERENCE KEYNOTES

E210	LINE OF (E) BLDG BELOW SHOWN DASHED
N400	NEW FREESTANDING METAL GUARDRAIL SYSTEM, SEE SUPPLIER FOR ANCHORAGE AND SPEC SECTION 07 72 00
N401	NEW STRUCTURAL POST AND BEAM SUPPORT FRAMING, SEE STRUCTURAL DRAWINGS FOR ADDITIONAL INFORMATION
N402	NEW DUCTWORK, SEE MECHANICAL DRAWINGS FOR ADDITIONAL INFORMATION
N407	(N) MECHANICAL UNITS ATTACHED TO STRUCTURAL SUPPORTS, SEE MECHANICAL AND STRUCTURAL FOR (N) ROOF DUCT PENETRATION LOCATION

ROOF PLAN GENERAL NOTES

A. (E) ROOF CURBS TO REMAIN U.N.O., SEE MECHANICAL DRAWINGS SHEET M1.3B AND M1.3D FOR ADDITIONAL INFORMATION.
B. COORDINATE THE SIZE AND LOCATION OF WALL PENETRATIONS FOR MECHANICAL AND ELECTRICAL EQUIPMENT. REFER TO MECHANICAL AND ELECTRICAL DRAWINGS FOR PENETRATIONS NOT SHOWN ON THIS DRAWING.
C. (E) DRAINS, CURBS, VENTS AND STACKS TO REMAINS.

DEMOLITION GENERAL NOTES

DEMOLITION NOTES APPLY TO ALL DEMOLITION SHEETS.

THE CONTRACTOR SHALL:

A. COORDINATE ALL DEMOLITION AND PHASING EFFORTS WITH THE ARCHITECT AND OWNER'S REPRESENTATIVE. EVERY EFFORT SHALL BE MADE TO MINIMIZE DISRUPTION OF OWNER'S OPERATIONS. EXCESSIVE NOISE OR VIBRATION SHALL BE PRE-APPROVED AND COORDINATED WITH THE OWNER'S REPRESENTATIVE. IN ALL CASES, PROVISIONS SHALL BE MADE FOR USER'S SAFETY.
B. COORDINATE ANY DISRUPTION OF UTILITY SERVICES WITH THE OWNER AND AS SPECIFIED.
C. CONSTRUCT TEMPORARY CONSTRUCTION PARTITIONS WITHIN THE EXISTING BUILDING WHICH OFFER A ONE-HOUR ENCLOSURE TO ISOLATE ANY DEMOLITION/CONSTRUCTION WORK FROM THE GENERAL PUBLIC AND AS DEEMED NECESSARY BY THE OWNER AND CODE OFFICIAL HAVING JURISDICTION. COORDINATE LOCATIONS WITH THE OWNER AND MAINTAIN MEANS OF EGRESS THROUGHOUT THE WORK.
D. MAINTAIN A SECURE, WEATHER-TIGHT ENCLOSURE AT ALL TIMES.
E. VERIFY ALL EXISTING CONDITIONS, DIMENSIONS AND ELEVATIONS AND NOTIFY THE ARCHITECT OF ANY DISCREPANCIES.
F. REMOVE IN THEIR ENTIRETY ALL EXISTING WALLS, DOORS, MILLWORK, PLUMBING FIXTURES, CEILINGS, SOFFITS, MARKERBOARDS, AND OTHER ITEMS, AS REQUIRED TO EXECUTE THE DEMOLITION/CONSTRUCTION WORK DESCRIBED BY THE DRAWINGS.
G. THE OWNER SHALL RESERVE THE RIGHT TO SALVAGE ANY MATERIALS.
H. PROVIDE PROTECTION FOR ALL EXISTING BUILDING MATERIALS AND EQUIPMENT FROM DAMAGE DUE TO ANY DEMOLITION OR CONSTRUCTION-RELATED INCIDENT PERFORMED UNDER THIS CONTRACT.
I. REPAIR OR REPLACE ITEMS THAT ARE DAMAGED AS A RESULT OF DEMOLITION OR CONSTRUCTION TO MATCH EXISTING FINISH AND/OR CONDITION.
J. EXISTING MATERIALS SHALL NOT BE REUSED UNLESS NOTED OTHERWISE OR AS AUTHORIZED BY ARCHITECT.
K. VERIFY AND MAINTAIN THE LOCATION OF EXISTING POWER, COMMUNICATION AND DATA CABLES TO PREVENT INTERRUPTION OF THEIR SERVICE.
L. PATCH FLOOR, WALL AND CEILING PENETRATIONS RESULTING FROM REMOVAL OR RE-ROUTING OF NEW OR EXISTING PIPING, DUCTWORK, CONDUIT, AND OTHER ITEMS, AS REQUIRED TO MAINTAIN FIRE-RESISTANCE-RATED SEPARATIONS. FINISH AS REQUIRED FOR NEW OR EXISTING ADJACENT SURFACES.
M. CAP ALL DISCONNECTED MECHANICAL PIPING LINES WITHIN THE WALL OR FLOOR. PATCH AND FINISH AS REQUIRED TO MATCH NEW OR EXISTING ADJACENT SURFACES.
N. SEE MECHANICAL AND ELECTRICAL DRAWINGS AND NOTES FOR FURTHER SEQUENCING AND SCOPE OF WORK.
O. AVOID ANY DISTURBANCE OF SOILS WITHIN THE ZONE OF INFLUENCE AROUND EXISTING FOOTINGS AND FLOOR SLABS AS DIRECTED BY GEOTECHNICAL ENGINEER.
P. WHERE CMU WALLS ARE INDICATED TO BE REMOVED, PREPARE ADJACENT WALLS TO RECEIVE NEW PATCH/FINISH BY REMOVING CMU IN TOOTH-IN PATTERN BOTH SIDES OF DEMOLITION FOR CONTRACTOR TO TOOTH-IN NEW CMU PATCHES.
Q. WHERE PLASTER/STUD WALLS ARE INDICATED TO BE REMOVED, PREPARE ADJACENT WALLS TO RECEIVE NEW PATCH/FINISH BY SAWCUTTING ADJACENT PLASTER FINISH A MINIMUM OF 1'-0" BEYOND DEMOLITION.

DLR Group

© DLR Group

LICENSED ARCHITECT
JESSE MILLER
No. C-22306
10/31/2023
REGISTRATION EXPIRES
STATE OF CALIFORNIA

MERWIN ELEMENTARY SCHOOL

COVID 19- COVINA VALLEY DISTRICT HVAC REPLACEMENT

16125 CYPRESS STREET, COVINA, CA 91722

100% CONSTRUCTION DOCUMENTS

11/04/2022

REVISIONS

75-22605-00
DSA A#03-122235
DSA File #: 19-25

BUILDING C ROOF PLAN

A1.2C

Autodesk Docs://75-22605-00 CVUSD - District Wide HVAC Replacement/75-22605-00_CVUSD_Merwin ES_AR_2020.rvt
11/4/2022 10:08:20 AM

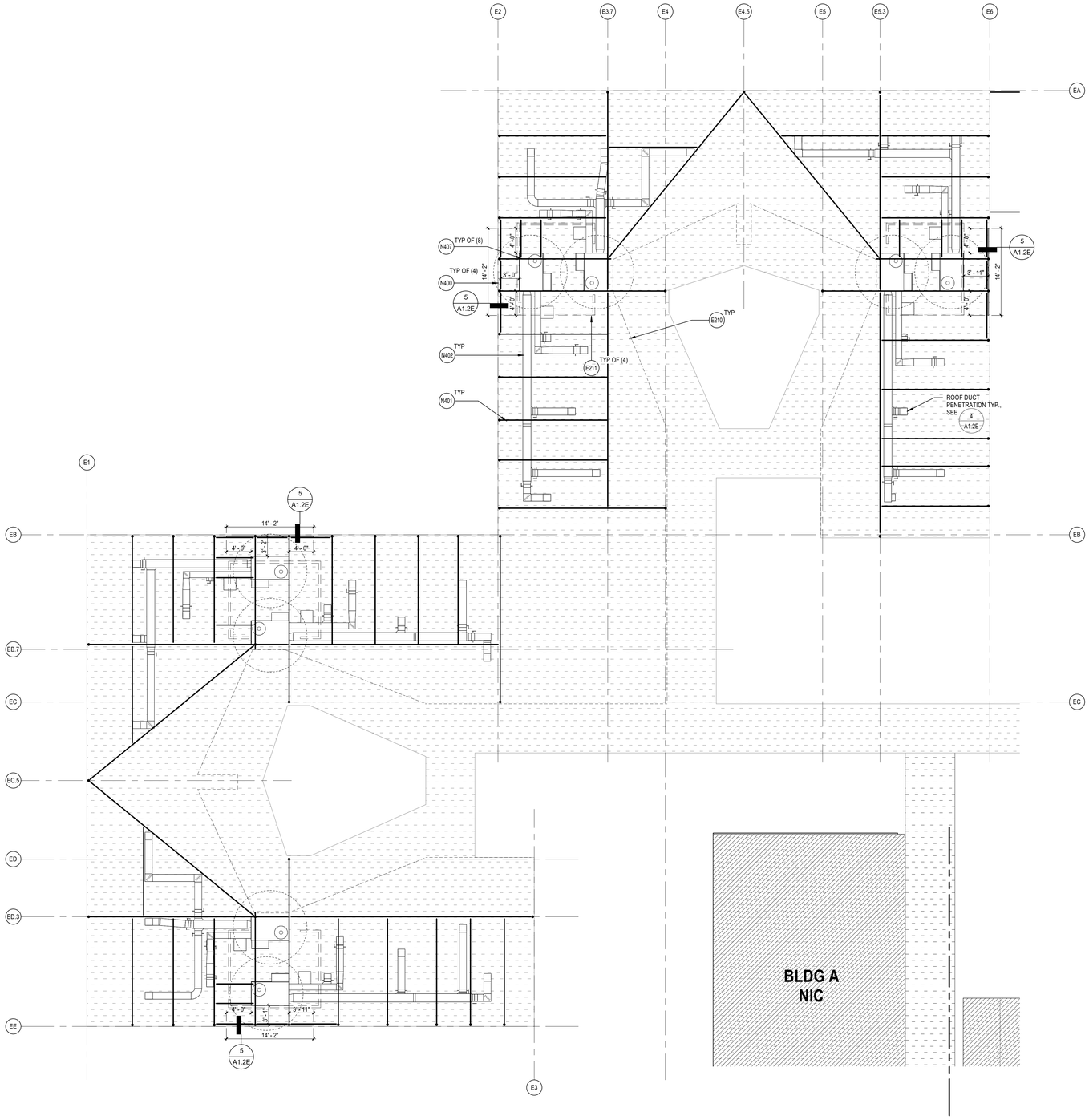

BUILDING E ROOF PLAN

SCALE: 1/8" = 1'-0"

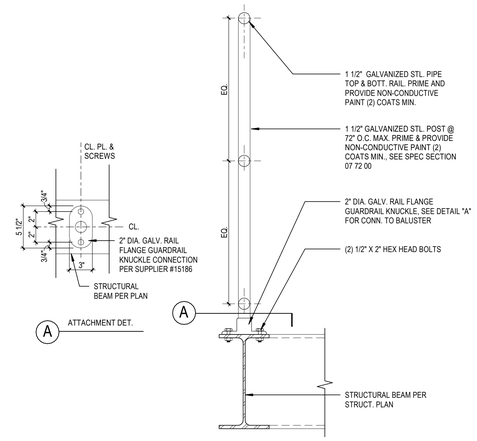

5 A1.2E HVAC ROOF GUARDRAIL - STL. FRAMING

SCALE: 1 1/2" = 1'-0"

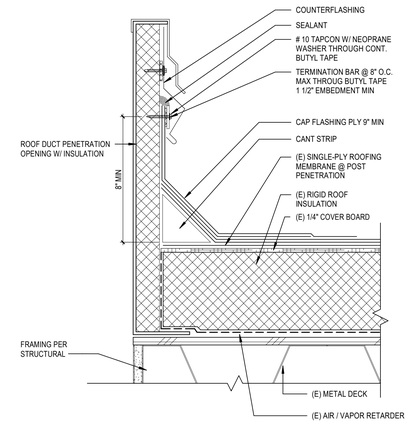

4 A1.2E TYPICAL MECH. DUCT PENETRTION DETAIL

SCALE: 3" = 1'-0"

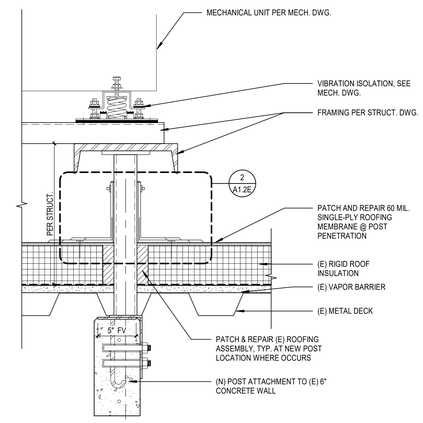

3 A1.2E MECH UNIT/DUCT ATTACHMENT TO (E) STRUCTURE

SCALE: 1 1/2" = 1'-0"

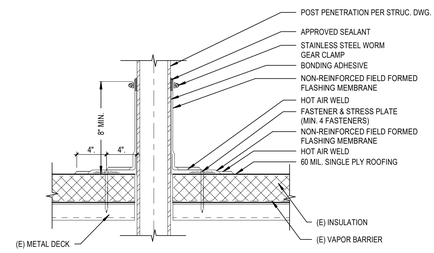

2 A1.2E FIELD FABRICATED PIPE FLASHING

SCALE: 6" = 1'-0"

REFERENCE KEYNOTES

E210	LINE OF (E) BLDG BELOW SHOWN DASHED
E211	DEMO (E) MECHANICAL SCREEN AND CAP ANY EXPOSED PIPES AND ACCESSORY ITEMS
N400	NEW FREESTANDING METAL GUARDRAIL SYSTEM. SEE SUPPLIER FOR ANCHORAGE AND SPEC SECTION 07 72 00
N401	NEW STRUCTURAL POST AND BEAM SUPPORT FRAMING, SEE STRUCTURAL DRAWINGS FOR ADDITIONAL INFORMATION
N402	NEW DUCTWORK, SEE MECHANICAL DRAWINGS FOR ADDITIONAL INFORMATION
N407	(N) MECHANICAL UNITS ATTACHED TO STRUCTURAL SUPPORTS, SEE MECHANICAL AND STRUCTURAL FOR (N) ROOF DUCT PENETRATION LOCATION

ROOF PLAN GENERAL NOTES

A. (E) ROOF CURBS TO REMAIN U.N.O., SEE MECHANICAL DRAWINGS SHEET M1.3B AND M1.3D FOR ADDITIONAL INFORMATION.
B. COORDINATE THE SIZE AND LOCATION OF WALL PENETRATIONS FOR MECHANICAL AND ELECTRICAL EQUIPMENT. REFER TO MECHANICAL AND ELECTRICAL DRAWINGS FOR PENETRATIONS NOT SHOWN ON THIS DRAWING.
C. (E) DRAINS, CURBS, VENTS AND STACKS TO REMAINS.

DEMOLITION GENERAL NOTES

DEMOLITION NOTES APPLY TO ALL DEMOLITION SHEETS.

THE CONTRACTOR SHALL:

A. COORDINATE ALL DEMOLITION AND PHASING EFFORTS WITH THE ARCHITECT AND OWNER'S REPRESENTATIVE. EVERY EFFORT SHALL BE MADE TO MINIMIZE DISRUPTION OF OWNER'S OPERATIONS. EXCESSIVE NOISE OR VIBRATION SHALL BE PRE-APPROVED AND COORDINATED WITH THE OWNER'S REPRESENTATIVE. IN ALL CASES, PROVISIONS SHALL BE MADE FOR USER'S SAFETY.
B. COORDINATE ANY DISRUPTION OF UTILITY SERVICES WITH THE OWNER AND AS SPECIFIED.
C. CONSTRUCT TEMPORARY CONSTRUCTION PARTITIONS WITHIN THE EXISTING BUILDING WHICH OFFER A ONE-HOUR ENCLOSURE TO ISOLATE ANY DEMOLITION/CONSTRUCTION WORK FROM THE GENERAL PUBLIC AND AS DEEMED NECESSARY BY THE OWNER AND CODE OFFICIAL HAVING JURISDICTION. COORDINATE LOCATIONS WITH THE OWNER AND MAINTAIN MEANS OF EGRESS THROUGHOUT THE WORK.
D. MAINTAIN A SECURE, WEATHER-TIGHT ENCLOSURE AT ALL TIMES.
E. VERIFY ALL EXISTING CONDITIONS, DIMENSIONS AND ELEVATIONS AND NOTIFY THE ARCHITECT OF ANY DISCREPANCIES.
F. REMOVE IN THEIR ENTIRETY ALL EXISTING WALLS, DOORS, MILLWORK, PLUMBING FIXTURES, CEILINGS, SOFFITS, MARKERBOARDS, AND OTHER ITEMS, AS REQUIRED TO EXECUTE THE DEMOLITION/CONSTRUCTION WORK DESCRIBED BY THE DRAWINGS.
G. THE OWNER SHALL RESERVE THE RIGHT TO SALVAGE ANY MATERIALS.
H. PROVIDE PROTECTION FOR ALL EXISTING BUILDING MATERIALS AND EQUIPMENT FROM DAMAGE DUE TO ANY DEMOLITION OR CONSTRUCTION-RELATED INCIDENT PERFORMED UNDER THIS CONTRACT.
I. REPAIR OR REPLACE ITEMS THAT ARE DAMAGED AS A RESULT OF DEMOLITION OR CONSTRUCTION TO MATCH EXISTING FINISH AND/OR CONDITION.
J. EXISTING MATERIALS SHALL NOT BE REUSED UNLESS NOTED OTHERWISE OR AS AUTHORIZED BY ARCHITECT.
K. VERIFY AND MAINTAIN THE LOCATION OF EXISTING POWER, COMMUNICATION AND DATA CABLES TO PREVENT INTERRUPTION OF THEIR SERVICE.
L. PATCH FLOOR, WALL AND CEILING PENETRATIONS RESULTING FROM REMOVAL OR RE-ROUTING OF NEW OR EXISTING PIPING, DUCTWORK, CONDUIT, AND OTHER ITEMS. AS REQUIRED TO MAINTAIN FIRE-RESISTANCE-RATED SEPARATIONS. FINISH AS REQUIRED FOR NEW OR EXISTING ADJACENT SURFACES.
M. CAP ALL DISCONNECTED MECHANICAL PIPING LINES WITHIN THE WALL OR FLOOR. PATCH AND FINISH AS REQUIRED TO MATCH NEW OR EXISTING ADJACENT SURFACES.
N. SEE MECHANICAL AND ELECTRICAL DRAWINGS AND NOTES FOR FURTHER SEQUENCING AND SCOPE OF WORK.
O. AVOID ANY DISTURBANCE OF SOILS WITHIN THE ZONE OF INFLUENCE AROUND EXISTING FOOTINGS AND FLOOR SLABS AS DIRECTED BY GEOTECHNICAL ENGINEER.
P. WHERE CMU WALLS ARE INDICATED TO BE REMOVED, PREPARE ADJACENT WALLS TO RECEIVE NEW PATCH/FINISH BY REMOVING CMU IN TOOTH-IN PATTERN BOTH SIDES OF DEMOLITION FOR CONTRACTOR TO TOOTH-IN NEW CMU PATCHES.
Q. WHERE PLASTER/STUD WALLS ARE INDICATED TO BE REMOVED, PREPARE ADJACENT WALLS TO RECEIVE NEW PATCH/FINISH BY SAWCUTTING ADJACENT PLASTER FINISH A MINIMUM OF 1'-0" BEYOND DEMOLITION.

DLR Group
© DLR Group

LICENSED ARCHITECT
JESSE MILLER
No. C-22306
10/31/2023
STATE OF CALIFORNIA

MERWIN ELEMENTARY SCHOOL

COVID 19- COVINA VALLEY DISTRICT HVAC REPLACEMENT

16125 CYPRESS STREET, COVINA, CA 91722

100% CONSTRUCTION DOCUMENTS

11/04/2022

REVISIONS

75-22605-00
DSA A#03-122235
DSA File #: 19-25

BUILDING E ROOF PLAN

A1.2E

Autodesk Docs://75-22605-00 CVUSD - District Wide HVAC Replacement/75-22605-00_CVUSD_Merwin ES_AR_2020.rvt
11/4/2022 10:08:21 AM

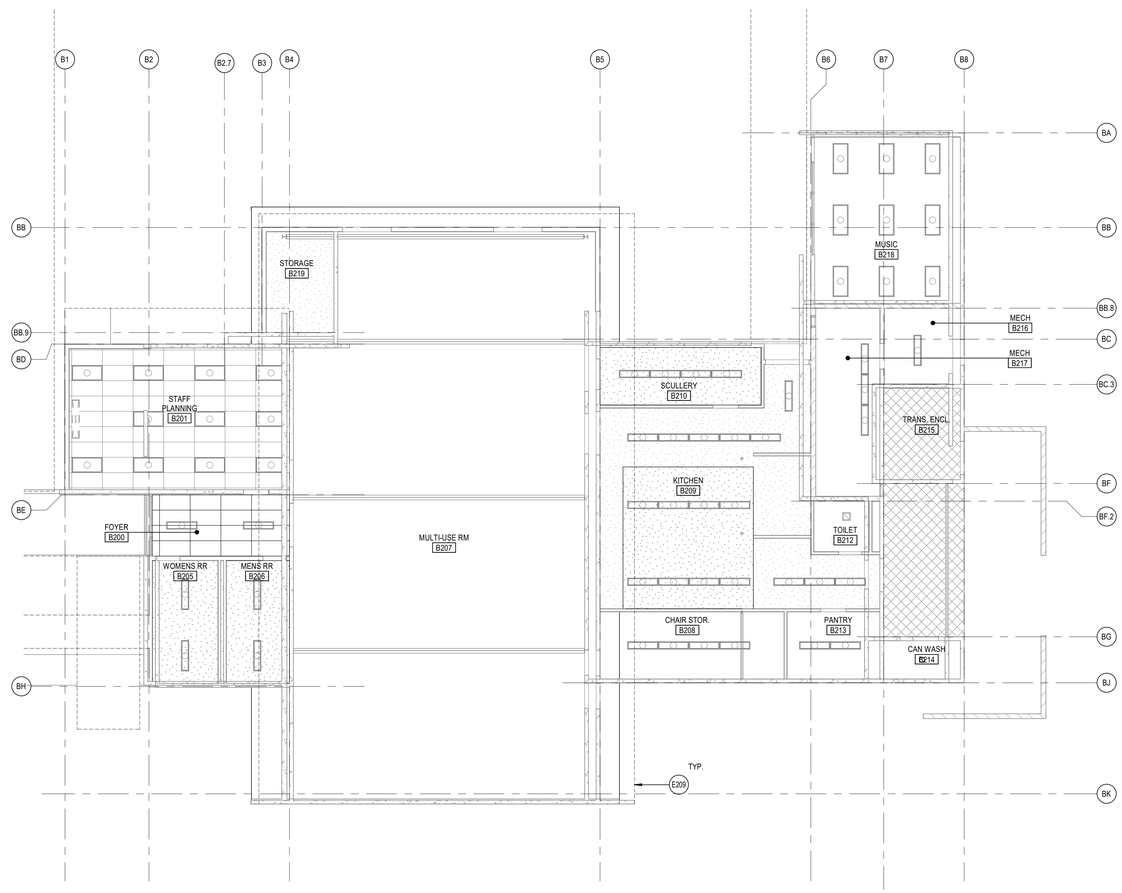

BUILDING B REFLECTED CEILING PLAN

SCALE: 1/8" = 1'-0"

NORTH

REFERENCE KEYNOTES

E209 LINE OF (E) ROOF ABOVE SHOWN DASHED

REFLECTED CEILING PLAN GENERAL NOTES

A. REFLECTED CEILING PLAN GENERAL NOTES APPLY TO ALL REFLECTED CEILING PLAN SHEETS.
B. ALL CEILING GRIDS/PANELS SHALL BE CENTERED IN EACH ROOM UNLESS NOTED OTHERWISE.
C. (E) CEILING HEIGHTS ARE TO REMAIN U.N.O. REFLECTED CEILING PLANS ARE MEASURED FROM THE FINISH FLOOR OF THE ROOM.
D. IN ACOUSTICAL CEILING PANELS WITH SCORE IN THE CENTER, CENTER DEVICES IN ONE HALF OF THE TILE. DO NOT LOCATE ON THE SCORE. FOR ACP WITH MULTIPLE SCORED PATTERNS, COORDINATE LOCATION WITH THE ARCHITECT.
E. PROVIDE SUSPENSION SYSTEM AROUND ELECTRICAL FIXTURES, MECHANICAL GRILLES, DIFFUSERS, AND OTHER CEILING MOUNTED DEVICES. AT ACOUSTICAL PANEL CEILINGS.
F. ALL DIMENSIONS ON REFLECTED CEILING PLANS ARE ACTUAL AND ARE TO THE FOLLOWING UNLESS NOTED OTHERWISE:
   a. FACE OF FINISHED WALL
   b. FACE OF FINISHED BULKHEADS
   c. CENTERLINE OF COLUMNS
   d. CENTERLINE OF TEES
G. IN AREAS WITH EXPOSED STRUCTURE CEILINGS, COORDINATE EXACT LOCATIONS OF MECHANICAL GRILLES, DIFFUSERS, DUCTWORK AND ELECTRICAL FIXTURES WITH EACH REPRESENTATIVE SUBCONTRACTOR.

DEMOLITION GENERAL NOTES

DEMOLITION NOTES APPLY TO ALL DEMOLITION SHEETS.

THE CONTRACTOR SHALL:

A. COORDINATE ALL DEMOLITION AND PHASING EFFORTS WITH THE ARCHITECT AND OWNER'S REPRESENTATIVE. EVERY EFFORT SHALL BE MADE TO MINIMIZE DISRUPTION OF OWNER'S OPERATIONS. EXCESSIVE NOISE OR VIBRATION SHALL BE PRE-APPROVED AND COORDINATED WITH THE OWNER'S REPRESENTATIVE. IN ALL CASES, PROVISIONS SHALL BE MADE FOR USER'S SAFETY.
B. COORDINATE ANY DISRUPTION OF UTILITY SERVICES WITH THE OWNER AND AS SPECIFIED.
C. CONSTRUCT TEMPORARY CONSTRUCTION PARTITIONS WITHIN THE EXISTING BUILDING WHICH OFFER A ONE-HOUR ENCLOSURE TO ISOLATE ANY DEMOLITION/CONSTRUCTION WORK FROM THE GENERAL PUBLIC AND AS DEEMED NECESSARY BY THE OWNER AND CODE OFFICIAL HAVING JURISDICTION. COORDINATE LOCATIONS WITH THE OWNER AND MAINTAIN MEANS OF EGRESS THROUGHOUT THE WORK.
D. MAINTAIN A SECURE, WEATHER-TIGHT ENCLOSURE AT ALL TIMES.
E. VERIFY ALL EXISTING CONDITIONS, DIMENSIONS AND ELEVATIONS AND NOTIFY THE ARCHITECT OF ANY DISCREPANCIES.
F. REMOVE IN THEIR ENTIRETY ALL EXISTING WALLS, DOORS, MILLWORK, PLUMBING FIXTURES, CEILINGS, SOFFITS, MARKERBOARDS, AND OTHER ITEMS, AS REQUIRED TO EXECUTE THE DEMOLITION/CONSTRUCTION WORK DESCRIBED BY THE DRAWINGS.
G. THE OWNER SHALL RESERVE THE RIGHT TO SALVAGE ANY MATERIALS.
H. PROVIDE PROTECTION FOR ALL EXISTING BUILDING MATERIALS AND EQUIPMENT FROM DAMAGE DUE TO ANY DEMOLITION OR CONSTRUCTION-RELATED INCIDENT PERFORMED UNDER THIS CONTRACT.
I. REPAIR OR REPLACE ITEMS THAT ARE DAMAGED AS A RESULT OF DEMOLITION OR CONSTRUCTION TO MATCH EXISTING FINISH AND/OR CONDITION.
J. EXISTING MATERIALS SHALL NOT BE REUSED UNLESS NOTED OTHERWISE OR AS AUTHORIZED BY ARCHITECT.
K. VERIFY AND MAINTAIN THE LOCATION OF EXISTING POWER, COMMUNICATION AND DATA CABLES TO PREVENT INTERRUPTION OF THEIR SERVICE.
L. PATCH FLOOR, WALL AND CEILING PENETRATIONS RESULTING FROM REMOVAL OR RE-ROUTING OF NEW OR EXISTING PIPING, DUCTWORK, CONDUIT, AND OTHER ITEMS, AS REQUIRED TO MAINTAIN FIRE-RESISTANCE-RATED SEPARATIONS. FINISH AS REQUIRED FOR NEW OR EXISTING ADJACENT SURFACES.
M. CAP ALL DISCONNECTED MECHANICAL PIPING LINES WITHIN THE WALL OR FLOOR. PATCH AND FINISH AS REQUIRED TO MATCH NEW OR EXISTING ADJACENT SURFACES.
N. SEE MECHANICAL AND ELECTRICAL DRAWINGS AND NOTES FOR FURTHER SEQUENCING AND SCOPE OF WORK.
O. AVOID ANY DISTURBANCE OF SOILS WITHIN THE ZONE OF INFLUENCE AROUND EXISTING FOOTINGS AND FLOOR SLABS AS DIRECTED BY GEOTECHNICAL ENGINEER.
P. WHERE CMU WALLS ARE INDICATED TO BE REMOVED, PREPARE ADJACENT WALLS TO RECEIVE NEW PATCH/FINISH BY REMOVING CMU IN TOOTH-IN PATTERN BOTH SIDES OF DEMOLITION FOR CONTRACTOR TO TOOTH-IN NEW CMU PATCHES.
Q. WHERE PLASTER/STUD WALLS ARE INDICATED TO BE REMOVED, PREPARE ADJACENT WALLS TO RECEIVE NEW PATCH/FINISH BY SAWCUTTING ADJACENT PLASTER FINISH A MINIMUM OF 1'-0" BEYOND DEMOLITION.

DLR Group

© DLR Group

LICENSED ARCHITECT
JESSE MILLER
No. C-22306
10/31/2023
PROFESSIONAL ENGINEER
STATE OF CALIFORNIA

MERWIN ELEMENTARY SCHOOL
COVID 19- COVINA VALLEY DISTRICT HVAC REPLACEMENT
16125 CYPRESS STREET, COVINA, CA 91722

100% CONSTRUCTION DOCUMENTS
11/04/2022
REVISIONS

75-22605-00
DSA A#03-122235
DSA File #: 19-25

BUILDING B REFLECTED CEILING PLAN

A3.1B

Autodesk Docs://75-22605-00 CVUSD - District Wide HVAC Replacement/75-22605-00_CVUSD_Merwin ES_AR_2020.rvt
11/4/2022 10:08:22 AM

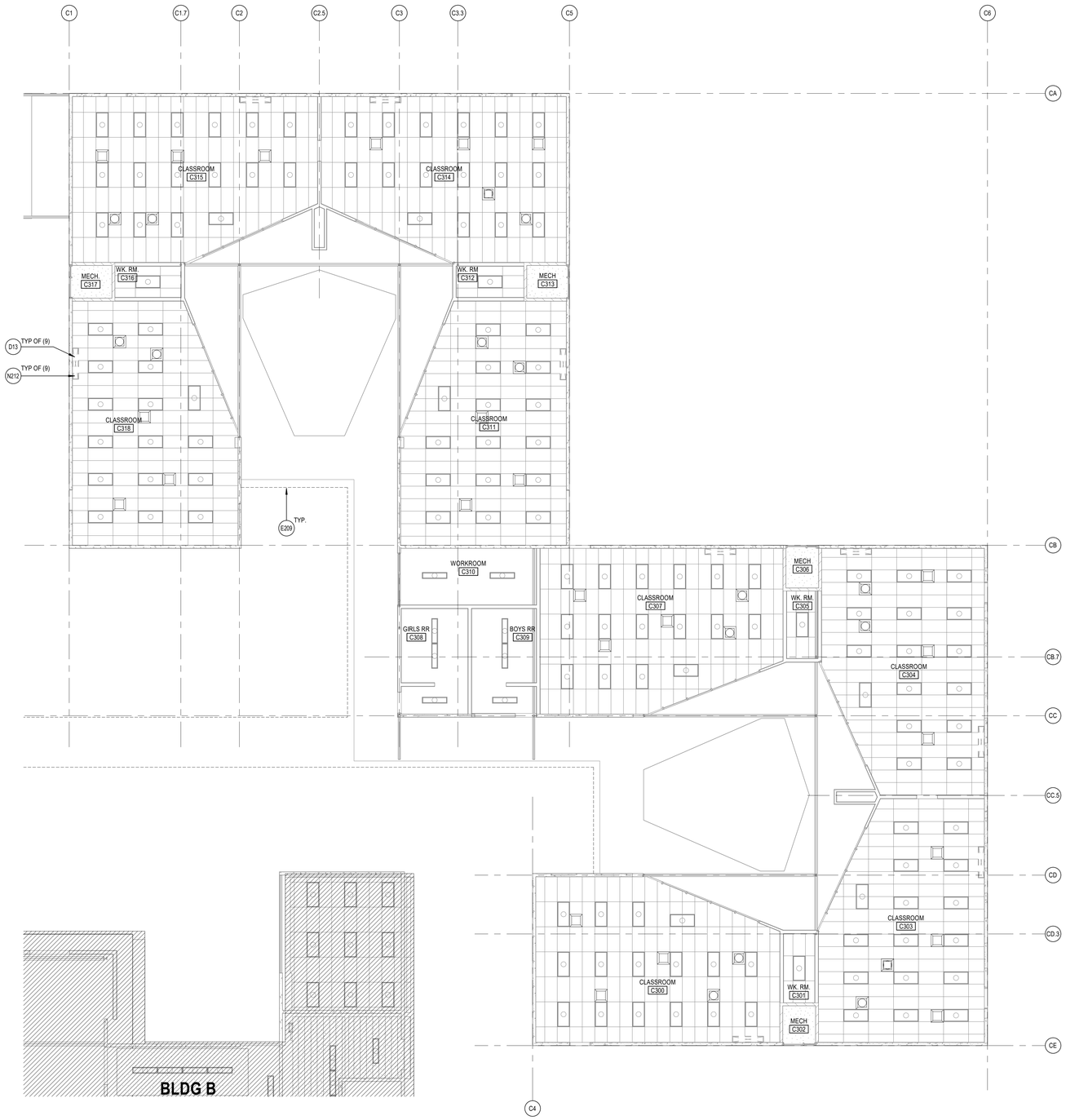

BUILDING C REFLECTED CEILING PLAN

SCALE: 1/8" = 1'-0"

NORTH

REFERENCE KEYNOTES

D13	REMOVE (E) CEILING MOUNTED FAN COIL UNIT - SEE MECHANICAL DRAWINGS
E209	LINE OF (E) ROOF ABOVE SHOWN DASHED
N212	REPLACE (E) INFILL PANEL AT CONDENSER UNIT PENETRATIONS WITH GLAZING TO MATCH ADJACENT. PAINT FRAME TO MATCH ADJACENT

REFLECTED CEILING PLAN GENERAL NOTES

A. REFLECTED CEILING PLAN GENERAL NOTES APPLY TO ALL REFLECTED CEILING PLAN SHEETS.
B. ALL CEILING GRIDS/PANELS SHALL BE CENTERED IN EACH ROOM UNLESS NOTED OTHERWISE.
C. (E) CEILING HEIGHTS ARE TO REMAIN U.N.O. REFLECTED CEILING PLANS ARE MEASURED FROM THE FINISH FLOOR OF THE ROOM.
D. IN ACOUSTICAL CEILING PANELS WITH SCORE IN THE CENTER, CENTER DEVICES IN ONE HALF OF THE TILE. DO NOT LOCATE ON THE SCORE. FOR ACP WITH MULTIPLE SCORED PATTERNS, COORDINATE LOCATION WITH THE ARCHITECT.
E. PROVIDE SUSPENSION SYSTEM AROUND ELECTRICAL FIXTURES, MECHANICAL GRILLES, DIFFUSERS, AND OTHER CEILING MOUNTED DEVICES. AT ACOUSTICAL PANEL CEILINGS.
F. ALL DIMENSIONS ON REFLECTED CEILING PLANS ARE ACTUAL AND ARE TO THE FOLLOWING UNLESS NOTED OTHERWISE:
   a. FACE OF FINISHED WALL
   b. FACE OF FINISHED BULKHEADS
   c. CENTERLINE OF COLUMNS
   d. CENTERLINE OF TEES
G. IN AREAS WITH EXPOSED STRUCTURE CEILINGS, COORDINATE EXACT LOCATIONS OF MECHANICAL GRILLES, DIFFUSERS, DUCTWORK AND ELECTRICAL FIXTURES WITH EACH REPRESENTATIVE SUBCONTRACTOR.

DEMOLITION GENERAL NOTES

DEMOLITION NOTES APPLY TO ALL DEMOLITION SHEETS.

THE CONTRACTOR SHALL:

A. COORDINATE ALL DEMOLITION AND PHASING EFFORTS WITH THE ARCHITECT AND OWNER'S REPRESENTATIVE. EVERY EFFORT SHALL BE MADE TO MINIMIZE DISRUPTION OF OWNER'S OPERATIONS. EXCESSIVE NOISE OR VIBRATION SHALL BE PRE-APPROVED AND COORDINATED WITH THE OWNER'S REPRESENTATIVE. IN ALL CASES, PROVISIONS SHALL BE MADE FOR USER'S SAFETY.
B. COORDINATE ANY DISRUPTION OF UTILITY SERVICES WITH THE OWNER AND AS SPECIFIED.
C. CONSTRUCT TEMPORARY CONSTRUCTION PARTITIONS WITHIN THE EXISTING BUILDING WHICH OFFER A ONE-HOUR ENCLOSURE TO ISOLATE ANY DEMOLITION/CONSTRUCTION WORK FROM THE GENERAL PUBLIC AND AS DEEMED NECESSARY BY THE OWNER AND CODE OFFICIAL HAVING JURISDICTION. COORDINATE LOCATIONS WITH THE OWNER AND MAINTAIN MEANS OF EGRESS THROUGHOUT THE WORK.
D. MAINTAIN A SECURE, WEATHER-TIGHT ENCLOSURE AT ALL TIMES.
E. VERIFY ALL EXISTING CONDITIONS, DIMENSIONS AND ELEVATIONS AND NOTIFY THE ARCHITECT OF ANY DISCREPANCIES.
F. REMOVE IN THEIR ENTIRETY ALL EXISTING WALLS, DOORS, MILLWORK, PLUMBING FIXTURES, CEILINGS, SOFFITS, MARKERBOARDS, AND OTHER ITEMS, AS REQUIRED TO EXECUTE THE DEMOLITION/CONSTRUCTION WORK DESCRIBED BY THE DRAWINGS.
G. THE OWNER SHALL RESERVE THE RIGHT TO SALVAGE ANY MATERIALS.
H. PROVIDE PROTECTION FOR ALL EXISTING BUILDING MATERIALS AND EQUIPMENT FROM DAMAGE DUE TO ANY DEMOLITION OR CONSTRUCTION-RELATED INCIDENT PERFORMED UNDER THIS CONTRACT.
I. REPAIR OR REPLACE ITEMS THAT ARE DAMAGED AS A RESULT OF DEMOLITION OR CONSTRUCTION TO MATCH EXISTING FINISH AND/OR CONDITION.
J. EXISTING MATERIALS SHALL NOT BE REUSED UNLESS NOTED OTHERWISE OR AS AUTHORIZED BY ARCHITECT.
K. VERIFY AND MAINTAIN THE LOCATION OF EXISTING POWER, COMMUNICATION AND DATA CABLES TO PREVENT INTERRUPTION OF THEIR SERVICE.
L. PATCH FLOOR, WALL AND CEILING PENETRATIONS RESULTING FROM REMOVAL OR RE-ROUTING OF NEW OR EXISTING PIPING, DUCTWORK, CONDUIT, AND OTHER ITEMS, AS REQUIRED TO MAINTAIN FIRE-RESISTANCE-RATED SEPARATIONS. FINISH AS REQUIRED FOR NEW OR EXISTING ADJACENT SURFACES.
M. CAP ALL DISCONNECTED MECHANICAL PIPING LINES WITHIN THE WALL OR FLOOR. PATCH AND FINISH AS REQUIRED TO MATCH NEW OR EXISTING ADJACENT SURFACES.
N. SEE MECHANICAL AND ELECTRICAL DRAWINGS AND NOTES FOR FURTHER SEQUENCING AND SCOPE OF WORK.
O. AVOID ANY DISTURBANCE OF SOILS WITHIN THE ZONE OF INFLUENCE AROUND EXISTING FOOTINGS AND FLOOR SLABS AS DIRECTED BY GEOTECHNICAL ENGINEER.
P. WHERE CMU WALLS ARE INDICATED TO BE REMOVED, PREPARE ADJACENT WALLS TO RECEIVE NEW PATCH/FINISH BY REMOVING CMU IN TOOTH-IN PATTERN BOTH SIDES OF DEMOLITION FOR CONTRACTOR TO TOOTH-IN NEW CMU PATCHES.
Q. WHERE PLASTER/STUD WALLS ARE INDICATED TO BE REMOVED, PREPARE ADJACENT WALLS TO RECEIVE NEW PATCH/FINISH BY SAWCUTTING ADJACENT PLASTER FINISH A MINIMUM OF 1'-0" BEYOND DEMOLITION.

DLR Group

© DLR Group

LICENSED ARCHITECT
JESSE MILLER
No. C-22306
10/31/2023
REGISTRATION EXPIRES
STATE OF CALIFORNIA

MERWIN ELEMENTARY SCHOOL
COVID 19- COVINA VALLEY DISTRICT HVAC REPLACEMENT
16125 CYPRESS STREET COVINA, CA 91722

100% CONSTRUCTION DOCUMENTS
11/04/2022
REVISIONS

75-22605-00
DSA A#03-122235
DSA File #: 19-25

BUILDING C REFLECTED CEILING PLAN

A3.1C

Autodesk Docs://75-22605-00 CVUSD - District Wide HVAC Replacement/75-22605-00_CVUSD_Merwin ES_AR_2020.rvt
11/4/2022 10:08:23 AM

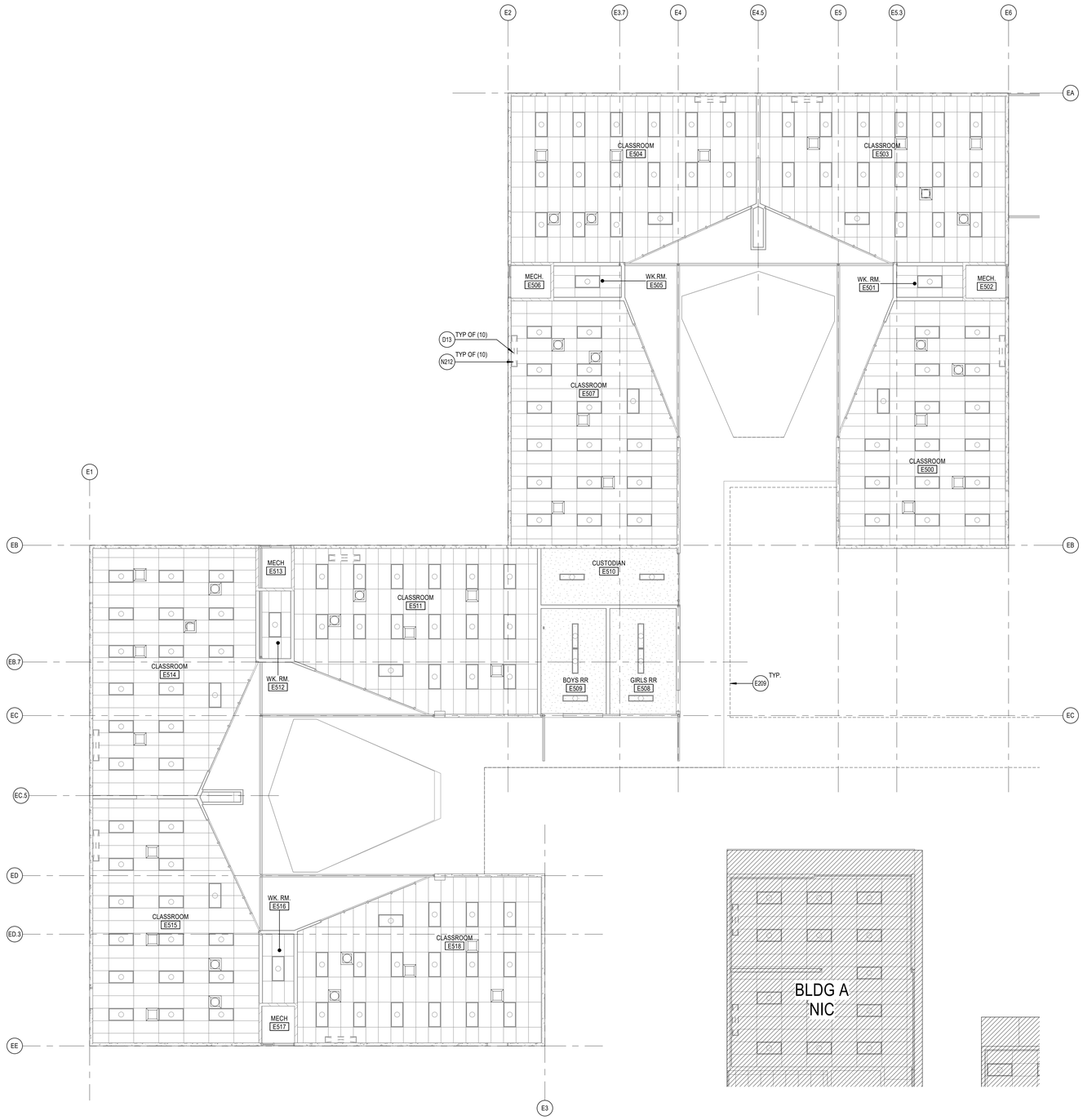

BUILDING E REFLECTED CEILING PLAN

SCALE: 1/8" = 1'-0"

NORTH

REFERENCE KEYNOTES

D13	REMOVE (E) CEILING MOUNTED FAN COIL UNIT - SEE MECHANICAL DRAWINGS
E209	LINE OF (E) ROOF ABOVE SHOWN DASHED
N212	REPLACE (E) INFILL PANEL AT CONDENSER UNIT PENETRATIONS WITH GLAZING TO MATCH ADJACENT. PAINT FRAME TO MATCH ADJACENT

REFLECTED CEILING PLAN GENERAL NOTES

A. REFLECTED CEILING PLAN GENERAL NOTES APPLY TO ALL REFLECTED CEILING PLAN SHEETS.
B. ALL CEILING GRIDS/PANELS SHALL BE CENTERED IN EACH ROOM UNLESS NOTED OTHERWISE.
C. (E) CEILING HEIGHTS ARE TO REMAIN U.N.O. REFLECTED CEILING PLANS ARE MEASURED FROM THE FINISH FLOOR OF THE ROOM.
D. IN ACOUSTICAL CEILING PANELS WITH SCORE IN THE CENTER, CENTER DEVICES IN ONE HALF OF THE TILE. DO NOT LOCATE ON THE SCORE. FOR ACP WITH MULTIPLE SCORED PATTERNS, COORDINATE LOCATION WITH THE ARCHITECT.
E. PROVIDE SUSPENSION SYSTEM AROUND ELECTRICAL FIXTURES, MECHANICAL GRILLES, DIFFUSERS, AND OTHER CEILING MOUNTED DEVICES. AT ACOUSTICAL PANEL CEILINGS.
F. ALL DIMENSIONS ON REFLECTED CEILING PLANS ARE ACTUAL AND ARE TO THE FOLLOWING UNLESS NOTED OTHERWISE:
   a. FACE OF FINISHED WALL
   b. FACE OF FINISHED BULKHEADS
   c. CENTERLINE OF COLUMNS
   d. CENTERLINE OF TEES
G. IN AREAS WITH EXPOSED STRUCTURE CEILINGS, COORDINATE EXACT LOCATIONS OF MECHANICAL GRILLES, DIFFUSERS, DUCTWORK AND ELECTRICAL FIXTURES WITH EACH REPRESENTATIVE SUBCONTRACTOR.

DEMOLITION GENERAL NOTES

DEMOLITION NOTES APPLY TO ALL DEMOLITION SHEETS.

THE CONTRACTOR SHALL:

A. COORDINATE ALL DEMOLITION AND PHASING EFFORTS WITH THE ARCHITECT AND OWNER'S REPRESENTATIVE. EVERY EFFORT SHALL BE MADE TO MINIMIZE DISRUPTION OF OWNER'S OPERATIONS. EXCESSIVE NOISE OR VIBRATION SHALL BE PRE-APPROVED AND COORDINATED WITH THE OWNER'S REPRESENTATIVE. IN ALL CASES, PROVISIONS SHALL BE MADE FOR USER'S SAFETY.
B. COORDINATE ANY DISRUPTION OF UTILITY SERVICES WITH THE OWNER AND AS SPECIFIED.
C. CONSTRUCT TEMPORARY CONSTRUCTION PARTITIONS WITHIN THE EXISTING BUILDING WHICH OFFER A ONE-HOUR ENCLOSURE TO ISOLATE ANY DEMOLITION/CONSTRUCTION WORK FROM THE GENERAL PUBLIC AND AS DEEMED NECESSARY BY THE OWNER AND CODE OFFICIAL HAVING JURISDICTION. COORDINATE LOCATIONS WITH THE OWNER AND MAINTAIN MEANS OF EGRESS THROUGHOUT THE WORK.
D. MAINTAIN A SECURE, WEATHER-TIGHT ENCLOSURE AT ALL TIMES.
E. VERIFY ALL EXISTING CONDITIONS, DIMENSIONS AND ELEVATIONS AND NOTIFY THE ARCHITECT OF ANY DISCREPANCIES.
F. REMOVE IN THEIR ENTIRETY ALL EXISTING WALLS, DOORS, MILLWORK, PLUMBING FIXTURES, CEILINGS, SOFFITS, MARKERBOARDS, AND OTHER ITEMS, AS REQUIRED TO EXECUTE THE DEMOLITION/CONSTRUCTION WORK DESCRIBED BY THE DRAWINGS.
G. THE OWNER SHALL RESERVE THE RIGHT TO SALVAGE ANY MATERIALS.
H. PROVIDE PROTECTION FOR ALL EXISTING BUILDING MATERIALS AND EQUIPMENT FROM DAMAGE DUE TO ANY DEMOLITION OR CONSTRUCTION-RELATED INCIDENT PERFORMED UNDER THIS CONTRACT.
I. REPAIR OR REPLACE ITEMS THAT ARE DAMAGED AS A RESULT OF DEMOLITION OR CONSTRUCTION TO MATCH EXISTING FINISH AND/OR CONDITION.
J. EXISTING MATERIALS SHALL NOT BE REUSED UNLESS NOTED OTHERWISE OR AS AUTHORIZED BY ARCHITECT.
K. VERIFY AND MAINTAIN THE LOCATION OF EXISTING POWER, COMMUNICATION AND DATA CABLES TO PREVENT INTERRUPTION OF THEIR SERVICE.
L. PATCH FLOOR, WALL AND CEILING PENETRATIONS RESULTING FROM REMOVAL OR RE-ROUTING OF NEW OR EXISTING PIPING, DUCTWORK, CONDUIT, AND OTHER ITEMS, AS REQUIRED TO MAINTAIN FIRE-RESISTANCE-RATED SEPARATIONS. FINISH AS REQUIRED FOR NEW OR EXISTING ADJACENT SURFACES.
M. CAP ALL DISCONNECTED MECHANICAL PIPING LINES WITHIN THE WALL OR FLOOR. PATCH AND FINISH AS REQUIRED TO MATCH NEW OR EXISTING ADJACENT SURFACES.
N. SEE MECHANICAL AND ELECTRICAL DRAWINGS AND NOTES FOR FURTHER SEQUENCING AND SCOPE OF WORK.
O. AVOID ANY DISTURBANCE OF SOILS WITHIN THE ZONE OF INFLUENCE AROUND EXISTING FOOTINGS AND FLOOR SLABS AS DIRECTED BY GEOTECHNICAL ENGINEER.
P. WHERE CMU WALLS ARE INDICATED TO BE REMOVED, PREPARE ADJACENT WALLS TO RECEIVE NEW PATCH/FINISH BY REMOVING CMU IN TOOTH-IN PATTERN BOTH SIDES OF DEMOLITION FOR CONTRACTOR TO TOOTH-IN NEW CMU PATCHES.
Q. WHERE PLASTER/STUD WALLS ARE INDICATED TO BE REMOVED, PREPARE ADJACENT WALLS TO RECEIVE NEW PATCH/FINISH BY SAWCUTTING ADJACENT PLASTER FINISH A MINIMUM OF 1'-0" BEYOND DEMOLITION.

DLR Group

© DLR Group

LICENSED ARCHITECT
JESSE MILLER
No. C-22306
10/31/2023
REGISTRATION EXPIRES
STATE OF CALIFORNIA

MERWIN ELEMENTARY SCHOOL

COVID 19- COVINA VALLEY DISTRICT HVAC REPLACEMENT

16123 CYPRESS STREET, COVINA, CA 91722

100% CONSTRUCTION DOCUMENTS

11/04/2022

REVISIONS

75-22605-00
DSA A#03-122235
DSA File #: 19-25

BUILDING E REFLECTED CEILING PLAN

A3.1E

Autodesk Docs://75-22605-00 CVUSD - District Wide HVAC Replacement/75-22605-00_CVUSD_Merwin ES_AR_2020.rvt
11/4/2022 10:08:24 AM

A B C D E F

1 2 3 4 5

GENERAL

1. THE DRAWINGS REPRESENT THE FINISHED STRUCTURE, NOT THE METHOD OF CONSTRUCTION. THE CONTRACTOR SHALL PROVIDE ALL TEMPORARY GUYING AND BRACING REQUIRED TO ERECT AND HOLD THE STRUCTURE IN PROPER ALIGNMENT UNTIL ALL STRUCTURAL WORK AND CONNECTIONS HAVE BEEN COMPLETED. THE RESEARCH, DESIGN, SAFETY, ADEQUACY, AND INSPECTION OF ERECTION BRACING, SHORING, GUYING, TEMPORARY SUPPORTS, ETC, IS THE RESPONSIBILITY OF THE CONTRACTOR.

2. THE ENGINEER SHALL NOT BE RESPONSIBLE FOR THE CONTRACTOR'S MEANS AND METHODS, SEQUENCES OF CONSTRUCTION, OR CONSTRUCTION TECHNIQUES USED TO PERFORM THE WORK. OBSERVATION VISITS TO THE SITE WILL NOT INVOLVE REVIEW OF THESE ITEMS.

3. THE ENGINEER SHALL NOT BE RESPONSIBLE FOR THE CONTRACTOR'S SAFETY PROGRAM. THE CONTRACTOR SHALL BE RESPONSIBLE FOR COMPLYING WITH ALL SAFETY PRECAUTIONS AND REGULATIONS DURING THE WORK. THE ENGINEER WILL NOT ADVISE ON, NOR ISSUE DIRECTION, AS TO SAFETY PRECAUTIONS AND PROGRAMS. OBSERVATION VISITS TO THE SITE WILL NOT INVOLVE REVIEW OF THESE ITEMS.

4. CONTRACTOR IS TO ESTABLISH AND VERIFY OPENINGS AND INSERTS FOR ITEMS TO BE INSTALLED BY OTHER TRADES PRIOR TO SUBMITTAL OF SHOP DRAWINGS AND CONSTRUCTION.

5. CONSTRUCTION MATERIAL AND EQUIPMENT LOADS PLACED ON THE STRUCTURE DURING THE CONSTRUCTION PROCESS SHALL NOT EXCEED THE DESIGN LIVE LOAD OF THE STRUCTURE NOTED IN THESE DRAWINGS. THE ENGINEER SHALL NOT BE RESPONSIBLE TO INVESTIGATE, NOR APPROVE, THE STRUCTURE FOR CONSTRUCTION MATERIAL OR EQUIPMENT LOADING. ERECTION OR CONSTRUCTION LOADS ARE NOT TO BE APPLIED UNTIL PROPER STRUCTURAL FRAMING CONNECTIONS ARE MADE, AND ALL TEMPORARY BRACING IS IN PLACE. THE CONTRACTOR SHALL DESIGN AND PROVIDE TEMPORARY BRACING OF THE STRUCTURE WHERE NECESSARY FOR CONSTRUCTION LOADS.

6. DETAILS THAT ARE NOTED AS "TYPICAL OR TYP" ON DETAIL TITLES ARE TO BE APPLIED TO THE PROJECT CONSTRUCTION AS GENERAL CONSTRUCTION METHODS UNLESS NOTED OTHERWISE. THESE DETAILS ARE NOT CUT AT ALL LOCATIONS WHERE THEY OCCUR, AND THEY MAY NOT BE CUT AT ALL. WHERE NO SPECIFIC DETAILS ARE SHOWN, CONSTRUCTION SHALL CONFORM TO SIMILAR CONDITIONS ELSEWHERE ON THE PROJECT, SUBJECT TO APPROVAL OF THE ENGINEER.

7. DO NOT SCALE DRAWINGS. CONTRACTOR IS TO VERIFY ALL DIMENSIONS RELATIVE TO ARCHITECTURAL OR OTHER DISCIPLINE DRAWINGS PRIOR TO CONSTRUCTION. ANY DISCREPANCIES MUST BE REPORTED TO THE ENGINEER PRIOR TO CONSTRUCTION.

8. WHERE DISCREPANCIES OCCUR BETWEEN GENERAL NOTES, PLANS, DETAILS, AND SPECIFICATIONS, THE MOST STRINGENT REQUIREMENTS SHALL GOVERN, UNLESS APPROVED OTHERWISE BY THE ENGINEER IN WRITING PRIOR TO CONSTRUCTION.

9. THE STRUCTURAL DRAWINGS SHALL BE USED IN CONJUNCTION WITH THE DRAWINGS OF ALL OTHER DISCIPLINES AND SPECIFICATIONS. THE CONTRACTOR SHALL ESTABLISH AND VERIFY THE REQUIREMENTS OF OTHER TRADES AS TO SLEEVES, CHASES, HANGERS, INSERT ANCHORS, HOLES, AND OTHER ITEMS TO BE PLACED OR SET IN THE STRUCTURAL WORK. DO NOT PENETRATE ANY STRUCTURAL ELEMENTS (BEAMS, COLUMNS, WALLS, SLABS, STEEL DECKS, ETC) WITHOUT PRIOR WRITTEN APPROVAL OF THE ENGINEER.

10. IF THE ENGINEER'S SEAL AND SIGNATURE IS NOT AFFIXED TO THESE DRAWINGS, THESE DRAWINGS ARE INTENDED FOR PRELIMINARY PURPOSES ONLY AND SHALL NOT BE USED FOR CONSTRUCTION.

11. STRUCTURAL JOINT DIMENSIONS SHOWN ON PLANS AND DETAILS (EXPANSION, SEISMIC, SEPARATION, ETC) INDICATE THE MINIMUM CLEAR DISTANCE REQUIRED. SEE ARCHITECTURAL DRAWINGS FOR ADDITIONAL REQUIREMENTS AND INFORMATION.

DESIGN CRITERIA

1. ALL CONSTRUCTION, MATERIALS, AND WORKMANSHIP SHALL CONFORM TO THE REQUIREMENTS OF THESE DRAWINGS, SPECIFICATIONS, AND THE CODES, RULES AND REGULATIONS OF THE 2019 CALIFORNIA BUILDING CODE (CBC), AS ADOPTED AND AMENDED BY THE CITY OF COVINA, CA HEREAFTER REFFERED TO AS THE BUILDING CODE.

2. MATERIAL SPECIFIC DESIGN STANDARDS LISTED IN THESE GENERAL NOTES ARE THE VERSION REFERENCED BY THE BUILDING CODE. IF NOT REFERENCED BY THE BUILDING CODE, USE THE LATEST EDITION APPROVED BY THE AUTHORITY HAVING JURISDICTION ON THE DATE OF THE PERMIT ISSUANCE.

3. RISK CATEGORY — III

4. EXISTING DEAD LOADS
   - ROOF - TOTAL — 18 PSF (INCLUDES STRUCTURE SELF WEIGHT)

5. EXISTING LIVE LOADS
   - ROOF LIVE LOAD — 20 PSF

7. WIND LOADS
   - BASIC WIND SPEED (3 SECOND GUST), V — 102 MPH
   - NOMINAL WIND SPEED, Vasd — 79 MPH
   - EXPOSURE CATEGORY — C
   - TOPOGRAPHIC FACTOR, Kzt — 1.0
   - AIR DENSITY FACTOR, Ke — 1.0
   - INTERNAL PRESSURE COEFFICIENT, GC_{pi} — +/- 0.18

8. SEISMIC LOADS
   - SITE LATITUDE — 34.0963
   - SITE LONGITUDE — -117.9309
   - SITE CLASS — D
   - IMPORTANCE FACTOR, I_e — 1.25
   - MAPPED SPECTRAL REPONSE ACCELERATIONS — S_S = 1.653, S_1 = 0.609
   - DESIGN SPECTRAL RESPONSE ACCELERATIONS — S_{DS} = 1.322, S_{D1} = 0.690
   - SEISMIC DESIGN CATEGORY — D

   EXISTING SEISMIC FORCE RESISTING SYSTEM:
   ORDINARY PLAIN CONCRETE SHEAR WALLS (REMAIN UNALTERED)

STRUCTURAL SHEET LIST

SHEET NUMBER	SHEET NAME
S0.1	GENERAL STRUCTURAL NOTES
S0.2	GENERAL STRUCTURAL NOTES & SPECIAL INSPECTIONS
S1.0	ISOMETRIC VIEW
S1.1	ROOF FRAMING PLAN - UNIT B
S1.2	ROOF FRAMING PLAN - UNIT C
S1.3	ROOF FRAMING PLAN - UNIT D&E
S1.4	ROOF FRAMING DETAILS

POST-INSTALLED ANCHORS

1. UNO, THE FOLLOWING APPLIES TO ALL POST-INSTALLED ANCHORAGE INTO HARDENED CONCRETE OR MASONRY WHICH INCLUDES TYPES SUCH AS EXPANSION, WEDGE, SLEEVE, ADHESIVE / EPOXY, SHOT-PIN, SCREW AND UNDERCUT.

2. POST-INSTALLED ANCHORS SHALL ONLY BE USED WHERE SPECIFIED.

3. CONTRACTOR SHALL OBTAIN APPROVAL FROM ENGINEER OF RECORD PRIOR TO USING POST-INSTALLED ANCHORS FOR MISSING, DAMAGED OR MISPLACED CAST-IN-PLACE ANCHORS.

4. CARE SHALL BE GIVEN TO AVOID CONFLICTS WITH EXISTING REBAR WHEN DRILLING HOLES. HOLES SHALL BE DRILLED AND CLEANED PER THE MANUFACTURER'S INSTRUCTIONS.

5. MAINTAIN A MINIMUM OF 2 INCHES FROM EXISTING REINFORCEMENT, CONDUIT, POST-TENSIONING (WHERE OCCURS), ETC. USE NON-DESTRUCTIVE TESTING TO LOCATE PRIOR TO DRILLING, CORING OR SHOOTING PINS INTO THE EXISTING CONCRETE OR MASONRY. FOR INSTALLATION DEEPER THAN 3 INCHES USE GROUND PENETRATING RADAR OR X-RAY METHODS.

6. ALL ANCHORS SHALL BE INSTALLED IN ACCORDANCE WITH THE BUILDING CODE REQUIREMENTS, MANUFACTURER'S RECOMMENDATIONS AND ALL APPLICABLE ICC-ES REPORTS, INCLUDING, BUT NOT LIMITED TO, ALL ANCHOR SPACINGS, EMBEDMENTS AND EDGE DISTANCES.

7. SUBSTITUTION REQUESTS FOR ALTERNATE PRODUCTS MUST BE APPROVED IN WRITING BY THE ENGINEER PRIOR TO USE. CONTRACTOR SHALL PROVIDE CALCULATIONS DEMONSTRATING THAT THE SUBSTITUTED PRODUCT IS CAPABLE OF ACHIEVING THE PERFORMANCE VALUES OF THE SPECIFIED PRODUCT. SUBSTITUTIONS WILL BE EVALUATED BY HAVING AN ICC ESR SHOWING COMPLIANCE WITH THE BUILDING CODE FOR SEISMIC USES, LOAD RESISTANCE, INSTALLATION CATEGORY, AND AVAILABILITY OF COMPREHENSIVE INSTALLATION INSTRUCTIONS. ADHESIVE ANCHOR EVALUATION WILL ALSO CONSIDER CREEP, IN-SERVICE AND INSTALLATION TEMPERATURES.

8. EMBEDMENT REFERS TO THE FINAL INSTALLED EFFECTIVE DEPTH "Hef". ALL ANCHORS SHALL HAVE EMBEDMENT NOTED OR EMBEDMENT AS RECOMMENDED BY MANUFACTURER WHERE NO EMBEDMENT IS SHOWN. REQUIRED ANCHOR HOLE DEPTH FOR INSTALLATION MAY BE DEEPER.

9. IF THE FULL ANCHOR EMBEDMENT DEPTH, SPACING OR EDGE DISTANCE CANNOT BE ACHIEVED, NOTIFY THE ENGINEER.

10. ALL PERSONNEL INSTALLING POST-INSTALLED ANCHORS SHALL BE TRAINED BY THE MANUFACTURER ON PROPER INSTALLATION TECHNIQUE. TRAINING DOCUMENTATION FROM THE MANUFACTURER SHALL BE AVAILABLE UPON REQUEST.

11. INSTALLATION OF ADHESIVE ANCHORS IN HORIZONTAL TO VERTICALLY OVERHEAD ORIENTATION SHALL BE DONE BY A CERTIFIED ADHESIVE ANCHOR INSTALLER (AAI) AS CERTIFIED THROUGH ACI AND IN ACCORDANCE WITH ACI 318. PROOF OF CURRENT CERTIFICATION SHALL BE SUBMITTED TO THE ENGINEER FOR APPROVAL PRIOR TO COMMENCEMENT OF INSTALLATION.

12. EXPANSION BOLTS IN CONCRETE SHALL BE ONE OF THE FOLLOWING:
    a. HILTI KWIK BOLT TZ2 CONCRETE ANCHORS (ICC ESR-4266)
    b. DEWALT POWER-STUD+SD1 (ICC ESR-2818), POWER STUD +SD2 (ICC ESR-2502)
    c. SIMPSON STRONG-TIE STRONG-BOLT 2 WEDGE ANCHORS (ICC ESR-3037)

13. SCREW ANCHORS IN CONCRETE SHALL BE ONE OF THE FOLLOWING:
    a. HILTI HUS-EZ SCREW ANCHOR (ICC ESR-3027)
    b. DEWALT SCREW BOLT+, SCREW ANCHOR (ICC ESR-3889)
    c. SIMPSON STRONG-TIE TITEN HD SCREW ANCHORS (ICC ESR-2713)

14. ADHESIVE ANCHORS IN CONCRETE SHALL BE ONE OF THE FOLLOWING:
    a. HILTI HY-200 SAFE SET SYSTEM ADHESIVE ANCHORS (ESR-3187) (FAST CURE APPLICATIONS)
    b. HILTI RE-500 V3 ADHESIVE ANCHORS (ESR-3814)
    c. HILTI RE-100 ADHESIVE ANCHORS (ICC ESR-3829) (STANDARD CURE APPLICATIONS)
    d. DEWALT AC200+ ADHESIVE ANCHORS (ICC ESR-4027) (FAST CURE APPLICATIONS)
    e. DEWALT PURE 110+ ADHESIVE ANCHORS (ICC ESR-3298) (STANDARD CURE APPLICATIONS)
    f. SIMPSON STRONG-TIE SET-3G ADHESIVE ANCHORING SYSTEM (ESR-4057)
    g. SIMPSON STRONG-TIE AT-XP ADHESIVE ANCHORING SYSTEM (IAPMO UES ER-263)
    h. SIMPSON STRONG-TIE SET-XP ADHESIVE ANCHORING SYSTEM (ESR-2508) (STANDARD CURE APPLICATIONS)

15. ANCHORS ARE NOT TO BE INSTALLED UNTIL CONCRETE OR GROUT HAS REACHED IT'S DESIGN STRENGTH. ADHESIVE ANCHORS SHALL BE INSTALLED IN CONCRETE WITH A MIN. AGE OF 21 DAYS.

16. MASONRY CELLS SHALL BE FULLY GROUTED AND CURED FOR INSTALLATION OF POST-INSTALLED ANCHORS.

17. USE INSTALLATION PROCEDURES FOR CRACKED CONCRETE CONDITIONS. DO NOT CORE DRILL FOR ANCHOR HOLES WITHOUT ENGINEER APPROVAL.

18. PROVIDE GALVANIZED CARBON STEEL ANCHORS AT DRY INTERIOR LOCATIONS AND STAINLESS-STEEL TYPE 304 OR 316 AT EXTERIOR / DAMP INTERIOR LOCATIONS. ANCHORS SHALL BE CLEAN AND FREE OF DEBONDING SUBSTANCES.

19. PATCH ABANDONED HOLES AND SPALLS USING NON-SHRINK GROUT AND REPAIR FINISHES AS REQUIRED. ANCHORS PENETRATING THROUGH WATERPROOFING OR VAPOR MEMBRANES SHALL BE SEALED OR FLASHED.

20. ADHESIVE / EPOXY ANCHORS ON THIS PROJECT ARE NOT DESIGNED TO SUPPORT OR INTENDED TO RESIST SUSTAINED TENSION LOADS.

STRUCTURAL STEEL

1. FABRICATOR QUALIFICATIONS: FABRICATOR SHALL BE AISC CERTIFIED OR AN "APPROVED FABRICATOR" IN ACCORDANCE WITH THE BUILDING CODE AND APPROVED BY THE AHJ. IN LIEU OF THE PREVIOUS, FABRICATOR SHALL INCLUDE IN THEIR BID THE SERVICES OF A SPECIAL INSPECTOR TO PROVIDE INSPECTION/TESTING SERVICES FOR WORK COMPLETED ON THE FABRICATOR'S PREMISES TO MEET BUILDING CODE REQUIREMENTS. AT THE COMPLETION OF WORK, FABRICATOR SHALL SUBMIT A "CERTIFICATE OF COMPLIANCE" TO THE ARCHITECT AND AHJ STATING THAT THE WORK WAS PERFORMED IN ACCORDANCE WITH APPROVED CONSTRUCTION DOCUMENTS.

2. STRUCTURAL STEEL SHAPES AND CONNECTING COMPONENTS SHALL CONFORM TO THE FOLLOWING MATERIAL SPECIFICATIONS UNO:
   FOLLOWING MATERIAL SPECIFICATIONS:

WIDE FLANGE SHAPES	ASTM A992, Fy = 50 KSI
HOLLOW STRUCTURAL SECTIONS (HSS)	
RECTANGULAR & SQUARE	ASTM A500, GRADE C, Fy = 50 KSI
ROUND	ASTM A500, GRADE C, Fy = 46 KSI
STEEL PIPE	ASTM A53, GRADE B, Fy = 35 KSI
OTHER STEEL SHAPES AND PLATES	ASTM A36, Fy = 36 KSI
HIGH STRENGTH STRUCTURAL BOLTS	ASTM F3125, GRADE A325N
COLUMN ANCHOR RODS	ASTM F1554, GRADE 55 WELDABLE (S1)
MACHINE BOLTS	ASTM A307
THREADED RODS	ASTM A36
WELDING ELECTRODES	E70XX
DEFORMED BAR ANCHORS (DBA)	ASTM A496, Fy = 70 KSI
WELDED HEADED STUDS (WHS)	ASTM A108, Fu = 65 KSI
WELDED THREADED STUDS (WTS)	ASTM A108, Fu = 65 KSI

3. CONTRACTOR IS RESPONSIBLE FOR THE STABILITY OF THE BUILDING SYSTEM AT ALL TIMES DURING THE ERECTION PROCESS. ELEMENTS HAVE BEEN DESIGNED FOR THE FINAL COMPLETED CONDITION AND HAVE NOT BEEN INVESTIGATED FOR TEMPORARY LOADING DURING CONSTRUCTION. INVESTIGATION OF THE STRUCTURAL ELEMENTS FOR ADEQUACY DURING THE STEEL ERECTION AND CONSTRUCTION PROCESS IS THE SOLE RESPONSIBILITY OF THE CONTRACTOR. CONTRACTOR TO PROVIDE TEMPORARY SUPPORTS AS REQUIRED TO MAINTAIN STABILITY.

4. COLUMNS AND BEAMS WITH BASE, CAP OR END PLATES SHALL HAVE SQUARE CUT OR MILLED ENDS.

5. NON-METALLIC, NON-SHRINK, CHLORIDE FREE GROUT UNDER ALL COLUMN BASE PLATES AND BEAM BEARING PLATES SHALL CONSIST OF A PRE-MIXED PRODUCT COMPLYING WITH ALL REQUIREMENTS OF ASTM C1107. THE 28-DAY COMPRESSIVE STRENGTH OF THE GROUT SHALL BE TWICE THE FOUNDATION REQUIRED CONCRETE COMPRESSIVE STRENGTH, 5,000 PSI MINIMUM.

6. UNO, ALL STRUCTURAL STEEL PERMANENTLY EXPOSED TO THE WEATHER, SHALL BE HOT DIP GALVANIZED AFTER FABRICATION IN ACCORDANCE WITH ASTM A123. ALL DAMAGED GALVANIZING SHALL BE REPAIRED IN ACCORDANCE WITH ASTM A780. STAINLESS AND WEATHERING STEELS, WHERE SPECIFIED, ARE EXEMPT FROM THIS REQUIREMENT.

7. COAT STEEL BELOW GRADE WITH COLD-APPLIED ASPHALT EMULSION PER ASTM D1187.

8. ALL ARCHITECTURALLY EXPOSED STRUCTURAL STEEL (AESS) SHALL COMPLY WITH AISC CODE OF STANDARD PRACTICE, SECTION 10. REFER TO DRAWINGS FOR LOCATIONS OF AESS.

9. WHERE CONNECTIONS ARE NOTED TO BE SLIP CRITICAL (EXAMPLE: A325-SC), BOLTS SHALL BE TIGHTENED TO THE MINIMUM PRETENSION FOR FULLY TIGHTENED BOLTS BY ONE OF THE AISC APPROVED METHODS. SLIP-CRITICAL BOLTS SHALL HAVE CLASS "A" FAYING SURFACES.

10. ALL BOLTS (HIGH STRENGTH, ANCHOR BOLTS, EXPANSION BOLTS, ADHESIVE ANCHORS, ETC.) SHALL BE INSTALLED WITH STEEL NUTS AND WASHERS. NUTS AND WASHERS FOR HIGH STRENGTH BOLTS SHALL CONFORM TO ASTM A563 AND TO ASTM F436, RESPECTIVELY.

11. WELDING PROCEDURES, ELECTRODES, AND WELDER QUALIFICATIONS SHALL CONFORM TO THE AMERICAN WELDING SOCIETY CODE D1.1, AISC STANDARDS, AND LOCAL CODE REQUIREMENTS.

12. ALL WELDS SHOWN ON THE DRAWINGS SHALL BE SHOP WELDS, UNO. WHERE SHOWN, FIELD WELDING SHALL BE USED. CONTRACTOR MAY SUBSTITUTE FIELD WELDS FOR SHOP WELDS AT THEIR DISCRETION. SHOP DRAWINGS SHALL CLEARLY NOTE ALL WELDING USING AWS A2.4 SYMBOLS.

13. WHERE CONTINUOUS ANGLES OR BENT PLATES ARE INDICATED, PROVIDE A CONTINUOUS BUTT WELD OR FULL PENETRATION WELD AT THE SPLICE POINTS, UNO. THE STEEL FABRICATOR MAY SUBMIT AN ALTERNATE BOLTED CONNECTION DETAIL FOR APPROVAL.

14. COORDINATE WITH ALL OTHER TRADES WHICH STEEL INTERACTS. THIS INCLUDES BUT IS NOT LIMITED TO COORDINATING WITH MASONRY, PRECAST CONCRETE, CAST-IN-PLACE CONCRETE, JOIST, AND METAL DECK SUPPLIERS.

SUBMITTALS

1. THE FOLLOWING ITEMS SHALL BE SUBMITTED TO THE STRUCTURAL ENGINEER FOR REVIEW AND APPROVAL PRIOR TO FABRICATION/ERECTIONS/INSTALLATION. THESE ITEMS ARE IN ADDITION TO ANY SUBMITTAL REQUIREMENTS SPECIFIED ON THESE PLANS OR IN THE PROJECT SPECIFICATIONS.

STRUCTURAL SUBMITTALS					
ITEM	PROD DATA	SHOP DWGS	TEST RESULTS	CALCS	DEFERRED SUBMITTAL
STRUCTURAL STEEL	-	YES	-	-	-
CONCRETE MATERIALS	YES	-	YES	-	-
GROUT	YES	-	-	-	-
STEEL DECK	YES	YES	-	-	-
COLD FORMED STEEL	YES	YES	-	-	-
EPOXY AND EXP ANCHORS	YES	-	-	-	-
WELD FILLER MATERIAL	YES	-	YES	-	-
ANCHORAGE FOR MECH/ELEC EQUIPMENT	-	YES	-	-	-

2. "PROD DATA" - SUBMIT ADEQUATE DOCUMENTATION THAT THE PRODUCT PROPOSED TO BE USED MEETS THE REQUIREMENTS ON THESE PLANS AND THE PROJECT SPECIFICATIONS.
3. "SHOP DWGS" - SUBMIT COMPLETE SHOP DRAWINGS SUFFICIENT TO SHOW QUANTITIES AND KINDS OF MATERIALS, METHODS OF ASSEMBLY, AND ALL DATA REQUIRED FOR FABRICATION, ERECTION, AND INSTALLATION. THE PURPOSE OF THESE DRAWINGS IS TO DEMONSTRATE THAT THE CONTRACTOR UNDERSTANDS THE DESIGN CONCEPT DOCUMENTED HEREIN. SUBMITTALS CONSISTING OF DRAWINGS TAKEN DIRECTLY FROM THESE PLANS WILL NOT BE APPROVED.
4. "TEST RESULTS" - SUBMIT RESULTS FOR ANY TESTING REQUIRED BY BUILDING CODE OR THESE PLANS.
5. "CALCS" - SUBMIT CALCULATIONS AND THE CORRESPONDING SHOP OR ERECTION DRAWINGS SIGNED AND SEALED BY A DESIGN PROFESSIONAL AUTHORIZED TO PERFORM WORK IN THE PROJECT JURISDICTION.
6. "DEFERRED SUBMITTAL" - SUBMITTAL ITEMS SHALL BE SUBMITTED TO THE ENGINEER FOR REVIEW. ONCE REVIEWED, CONTRACTOR SHALL FORWARD TO THE PLAN CHECK AUTHORITY (DIVISION OF STATE ARCHITECTS) FOR REVIEW AND APPROVAL. FABRICATION AND/OR INSTALLATION OF DEFERRED SUBMITTAL ITEMS SHALL NOT OCCUR UNTIL APPROVAL OF THE PLAN CHECK AUTHORTIY IS RECEIVED.

STRUCTURAL RENOVATION SCOPE

1. PROJECT STRUCTURAL SCOPE IS LIMITED TO THE FOLLOWING:
   a. SEOR TO ITEMIZE ELEMENTS WITHIN THE STRUCTURAL SCOPE HERE.

EXISTING CONDITIONS

1. CONTRACTOR IS TO FIELD VERIFY EXISTING CONDITIONS PRIOR TO BIDDING. ALL WORK AND MATERIALS NECESSARY TO INSTALL NEW WORK IN EXISTING BUILDING(S) SHALL BE INCLUDED.

2. CONTRACTOR SHALL VERIFY ALL DIMENSIONS AND EXISTING CONDITIONS AND SHALL CONTACT THE ENGINEER IF ANY DISCREPANCIES ARE FOUND BEFORE PROCEEDING. NOTIFY ENGINEER IMMEDIATELY IF EXISTING CONDITIONS DO NOT MATCH, OR SEEM IN CONFLICT WITH, INFORMATION SHOWN ON DRAWINGS.

3. DIMENSIONS INDICATED ON PLAN AS FIELD VERIFY, OR "FV", ARE DIMENSIONS THAT MAY BE REQUIRED FOR FABRICATION. THE CONTRACTOR SHALL BE RESPONSIBLE FOR VERIFICATION OF DIMENSIONS IN THE FIELD NECESSARY FOR FABRICATION OF MEMBERS AND PRIOR TO SUBMISSION OF SHOP DRAWINGS.

4. CONTRACTOR TO PROVIDE PROTECTION FOR ALL EXISTING BUILDING MATERIALS AND EQUIPMENT TO REMAIN FROM DAMAGE DUE TO DEMOLITION OR CONSTRUCTION OPERATIONS PERFORMED UNDER THIS CONTRACT.

5. THE SEQUENCE OF CONSTRUCTION SHALL BE THE RESPONSIBILITY THE CONTRACTOR. THE CONTRACTOR SHALL BE RESPONSIBLE FOR PROVIDING ALL TEMPORARY GUYS, BRACING, AND OTHER SUPPORTS AS NEEDED TO SAFELY RESIST ALL GRAVITY AND LATERAL LOADS TO WHICH THE EXISTING OR PROPOSED STRUCTURE MAY BE SUBJECTED, INCLUDING LOADS FROM ERECTION EQUIPMENT AND ERECTION OPERATIONS, AND WIND OR SEISMIC FORCES COMPARABLE IN INTENSITY FOR WHICH THE STRUCTURE IS DESIGNED. LOAD VERIFICATION OF EXISTING MEMBERS TO RECEIVE TEMPORARY SHORING SHALL BE THE RESPONSIBILITY OF THE CONTRACTOR'S ENGINEER.

6. ALL ERECTION AND CONSTRUCTION PROCEDURES SHALL MEET THE REQUIREMENTS OF ALL APPLICABLE CODES AND ORDINANCES.

7. ALL FRAMING CONNECTIONS TO EXISTING STRUCTURE SHALL BE FIELD VERIFIED PRIOR TO SHOP DRAWING PRODUCTION AND FABRICATION. FIELD VERIFIED DIMENSIONS SHALL BE INCLUDED ON FIRST SHOP DRAWING SUBMITTAL AND NOTED AS SUCH.

8. EXISTING UTILITY LINES SHALL BE PROBED PRIOR TO CONSTRUCTION OF FOUNDATIONS. NOTIFY ENGINEER IF THE TOP OF ANY UTILITY PIPE COMES WITHIN 3'-0" OF THE BOTTOM OF ANY FOUNDATION. DETERMINE THE LOCATION OF ALL NEW AND EXISTING UNDERGROUND UTILITIES IN AND ADJACENT TO THE AREA OF WORK PRIOR TO EXCAVATION. THE CONTRACTOR SHALL BE RESPONSIBLE FOR ANY DAMAGES WHICH MAY RESULT FROM FAILURE TO EXACTLY LOCATE, PROTECT, AND PRESERVE ALL EXISTING UNDERGROUND UTILITIES.

9. EXCAVATION UNDER OR NEAR IN-PLACE FOOTINGS WHICH DISTURBS THE COMPACTED SOIL BENEATH THE FOOTINGS IS NOT PERMITTED.

10. CONTRACTOR SHALL LOCATE REBAR IN EXIST. CONSTRUCTION PRIOR TO DRILLING OF HOLES AND SHALL TAKE CARE NOT TO DAMAGE EXIST. BARS. IF DAMAGE TO EXIST. REBAR OCCURS DURING CONSTRUCTION, THE CONTRACTOR IS RESPONSIBLE FOR REPAIRING THE DAMAGE. REPAIR PROCEDURES NOT DETAILED IN THE CONTRACT DOCUMENTS WILL REQUIRE PREPARATION BY A QUALIFIED PROFESSIONAL ENGINEER REGISTERED IN THE STATE IN WHICH THE PROJECT IS LOCATED AND MUST BE APPROVED BY THE ENGINEER.

EXISTING DOCUMENTATION

1. THE FOLLOWING DOCUMENTS WERE USED TO REPRESENT EXISTING STRUCTURE IN THE CONSTRUCTION DOCUMENTS. NOT ALL ELEMENTS AND INFORMATION HAS BEEN PROVIDED. COPIES OF THE EXISTING DRAWINGS MAY BE AVAILABLE AT THE CONTRACTOR'S REQUEST.
   - ARCHITECTURAL DRAWINGS DATED AUGUST 22, 1962 BY MAUL AND PULVER ARCHITECTS, INC.
   - STRUCTURAL DRAWINGS DATED AUGUST 22, 1962 BY JAMES D. SCHWEICKERT AND ASSOCIATES CONSULTING ENGINEERS, INC.

DEMOLITION

1. DEMOLITION OF EXISTING STRUCTURE TO BE REMOVED SHALL BE PERFORMED BY THE CONTRACTOR USING MEANS NECESSARY TO PREVENT DAMAGE TO THE EXISTING STRUCTURE TO REMAIN. DAMAGE TO THE EXISTING STRUCTURE TO REMAIN SHALL BE REPAIRED AT THE CONTRACTOR'S EXPENSE USING METHODS REVIEWED BY THE STRUCTURAL ENGINEER. IF EXISTING CONDITIONS DIFFER FROM THOSE SHOWN IN THE CONTRACT DOCUMENTS CONTACT THE ARCHITECT PRIOR TO PROCEEDING WITH WORK.

2. SHORING OF THE EXISTING STRUCTURE SHALL BE PROVIDED BY THE CONTRACTOR AND DESIGNED BY A QUALIFIED PROFESSIONAL ENGINEER REGISTERED IN THE STATE IN WHICH THE PROJECT IS LOCATED.

ABBREVIATIONS

ABBREVIATIONS ARE AS SHOWN IN THE CONTRACT DOCUMENTS WITH THE FOLLOWING EXCEPTIONS:

#	REINFORCING BAR SIZE, SHEET METAL SCREW SIZE
@	AT (SPACING)
Ø	DIAMETER
AB	ANCHOR BOLT
ABC	AGGREGATE BASE COURSE
ADDL	ADDITIONAL
AFF	ABOVE FINISHED FLOOR
AHJ	AUTHORITY HAVING JURISDICTION
ALT	ALTERNATE
ANCH	ANCHOR
APPROX	APPROXIMATE
AR	ANCHOR ROD
ARCH	ARCHITECTURAL
B/	BOTTOM OF
BOD	BOTTOM OF DECK
BLDG	BUILDING
BLKG	BLOCKING
BM(S)	BEAM(S)
BOF	BOTTOM OF FOOTING
BOL	BOTTOM OF LINTEL
BOS	BOTTOM OF STEEL
BOT	BOTTOM
BRBF	BUCKLING RESTRAINED BRACED FRAME
BRG	BEARING
BTWN	BETWEEN
C	CHANNEL
CANT	CANTILEVER
CFMF	COLD-FORMED METAL FRAMING
CIP	CAST-IN-PLACE
CJ	CONTROL JOINT
CJP	COMPLETE JOINT PENETRATION
CL	CENTERLINE
CLR	CLEAR
CMU	CONCRETE MASONRY UNIT
COL	COLUMN
COMP	COMPOSITE
CONC	CONCRETE
CONN(S)	CONNECTION(S)
CONST	CONSTRUCTION
CONT	CONTINUOUS
CONTR	CONTRACT(OR)
CSTJ	CONSTRUCTION JOINT
CTR	CENTER
(D)	DEMOLISH
DBA	DEFORMED BAR ANCHOR
DCW	DEMAND CRITICAL WELD
DEG	DEGREE
DIA	DIAMETER
DIAG	DIAGONAL
DIM	DIMENSION
DL	DEAD LOAD
DO	DITTO
DT	PRESTRESSED PRECAST DOUBLE TEE
DTL	DETAIL
DWG(S)	DRAWING(S)
DWL(S)	DOWEL(S)
(E)	EXISTING
EA	EACH
EBF	ECCENTRICALLY BRACED FRAME
EE	EACH END
EF	EACH FACE
EJ	EXPANSION JOINT
EL	ELEVATION
ELEC	ELECTRICAL
ELEV	ELEVATOR
EMBED	EMBEDMENT, EMBEDDED
EN	EDGE NAILING
EWP	ENGINEERED WOOD PRODUCT
ENG	ENGINEER
EOD	EDGE OF DECK
EOR	ENGINEER OF RECORD
EOS	EDGE OF SLAB
EQ	EQUAL
EQUIP	EQUIPMENT
EQUIV	EQIUVALENT
EW	EACH WAY
EXP	EXPANSION
EXT	EXTERIOR
f'c	SPECIFIED COMPRESSIVE STRENGTH OF CONCRETE
f'm	SPECIFIED COMPRESSIVE STRENGTH OF MASONRY
FD	FLOOR DRAIN
FDN	FOUNDATION
FRT	FIRE RESISTANCE TREATED
FS	FAR SIDE
FT	FEET (FOOT)
FTG	FOOTING
FV	FIELD VERIFY
Fy	YIELD STRENGTH
GA	GAGE, GAUGE
GALV	GALVANIZED
GB	GRADE BEAM
GC	GENERAL CONTRACTOR
GLB	GLUE LAMINATED BEAM
GR	GRADE
H	HEIGHT
HC	PRESTRESSED PRECAST HOLLOW CORE
HDR	HEADER
HORIZ	HORIZONTAL
HS	HEADED STUD
ID	INSIDE DIAMETER
IF	INSIDE FACE
IMF	INTERMEDIATE MOMENT FRAME
IN	INCH
INC	INCLUDE(ING)
INT	INTERIOR
JBE	JOIST BEARING ELEVATION
JST	JOIST
JT	JOINT
K	KIP (1,000 LBS)
KSF	KIPS PER SQUARE FOOT

LB(S)	POUND(S)
Ld	REINFORCING BAR DEVELOPMENT LENGTH
Ldh	HOOKED REINFORCING BAR DEVELOPMENT LENGTH
LF	LINEAR FOOT (FEET)
LFRS	LATERAL FORCE RESISTING SYSTEM
LIN	LINEAR
LL	LIVE LOAD
LLBB	LONG LEG BACK TO BACK
LLH	LONG LEG HORIZONTAL
LLV	LONG LEG VERTICAL
LONG	LONGITUDINAL
Ls	REINFORCING BAR LAP SPLICE LENGTH
LSH	LONG SLOTTED HOLE
LVL	LAMINATED VENEER LUMBER
LW	LONG WAY
LWC	LIGHTWEIGHT CONCRETE
MAX	MAXIMUM
MECH	MECHANICAL
MEP	MECHANICAL, ELECTRICAL & PLUMBING
MF	MOMENT FRAME
MFR	MANUFACTURER
MIN	MINIMUM
MISC	MISCELLANEOUS
MTL	METAL
MWFRS	MAIN WIND FORCE RESISTING SYSTEM
(N)	NEW
NA	NOT APPLICABLE
NIC	NOT IN CONTRACT
NO	NUMBER
NS	NEAR SIDE
NTS	NOT TO SCALE
NWC	NORMAL WEIGHT CONRETE
OC	ON CENTER
OCBF	ORDINARY CONCENTRICALLY BRACED FRAME
OCCS	ORDINARY CANTILEVER COLUMN SYSTEM
OD	OUTSIDE DIAMETER
OF	OUTSIDE FACE
OH	OPPOSITE HAND
OMF	ORDINARY MOMENT FRAME
OPG(S)	OPENING(S)
OPP	OPPOSITE
OWJ	OPEN WEB JOIST
PAF	POWDER ACTUATED FASTENER
PC	PRECAST CONCRETE, PILE CAP
PCBE	PRECAST CONCRETE BEARING ELEVATION
PCF	POUNDS PER CUBIC FOOT
PERP	PERPENDICULAR
PJP	PARTIAL JOINT PENETRATION
PL	PLATE
PLF	POUNDS PER LINEAL FOOT
PLWD	PLYWOOD
PREFAB	PREFABRICATED
PROJ	PROJECTION
PSF	POUNDS PER SQUARE FOOT
PSI	POUNDS PER SQUARE INCH
PTW	PRESERVATIVE TREATED WOOD
RAD	RADIUS
RC	REINFORCED CONCRETE
REF	REFERENCE
REINF	REINFORCE, REINFORCED, REINFORCEMENT, REINFORCING
REQ(D)	REQUIRE(D)
REV(S)	REVISION(S)
RTU	ROOFTOP UNIT
SCBF	SPECIAL CONCENTRICALLY BRACED FRAME
SCCS	SPECIAL CANTILEVER COLUMN SYSTEM
SCHED	SCHEDULE
SDL	SUPERIMPOSED DEAD LOAD
SDS	SELF-DRILLING SCREWS
SSH	SHORT SLOTTED HOLE
SECT	SECTION
SEOR	STRUCTURAL ENGINEER OF RECORD
SF	SQUARE FOOT
SFRS	SEISMIC FORCE RESISTING SYSTEM
SHT	SHEET
SIM	SIMILAR
SL	SNOW LOAD
SMF	SPECIAL MOMENT FRAME
SOG	SLAB ON GRADE
SPA	SPACE, SPACING
SPEC(S)	SPECIFICATION(S)
SST	STAINLESS STEEL
STAG'D	STAGGERED
STD	STANDARD
STIFF	STIFFENER
STL	STEEL
STRUCT	STRUCTURE, STRUCTURAL
SYM	SYMMETRICAL
t	THICKNESS
T&B	TOP & BOTTOM
T&G	TONGUE & GROOVE
TC	TENSION CONTROL
TCW	TOP OF CONCRETE WALL
TEMP	TEMPORARY
THRD	THREADED
T/	TOP OF
TOB	TOP OF BEAM
TOC	TOP OF CONCRETE
TOF	TOP OF FOOTING
TOS	TOP OF STEEL
TOW	TOP OF WALL
TPE	TOP OF PIER ELEVATION
TRANS	TRANSVERSE
TSE	TOP OF SLAB ELEVATION
TWE	TOP OF WALL ELEVATION
TYP	TYPICAL
UNO	UNLESS NOTED OTHERWISE
VERT	VERTICAL
VFY	VERIFY
W/	WITH
W/O	WITHOUT
WD	WOOD
WFRS	WIND FORCE RESISTING SYSTEM
WGT	WEIGHT
WP	WORK POINT
WPS	WELDING PROCEDURE SPECIFICATION
WT	STEEL TEE SECTION
WWR	WELDED WIRE FABRIC/REINFORCEMENT
X-STR	EXTRA STRONG
XX-STR	DOUBLE EXTRA STRONG
ZRC	ZINC RICH COATING

GENERAL SYMBOLS

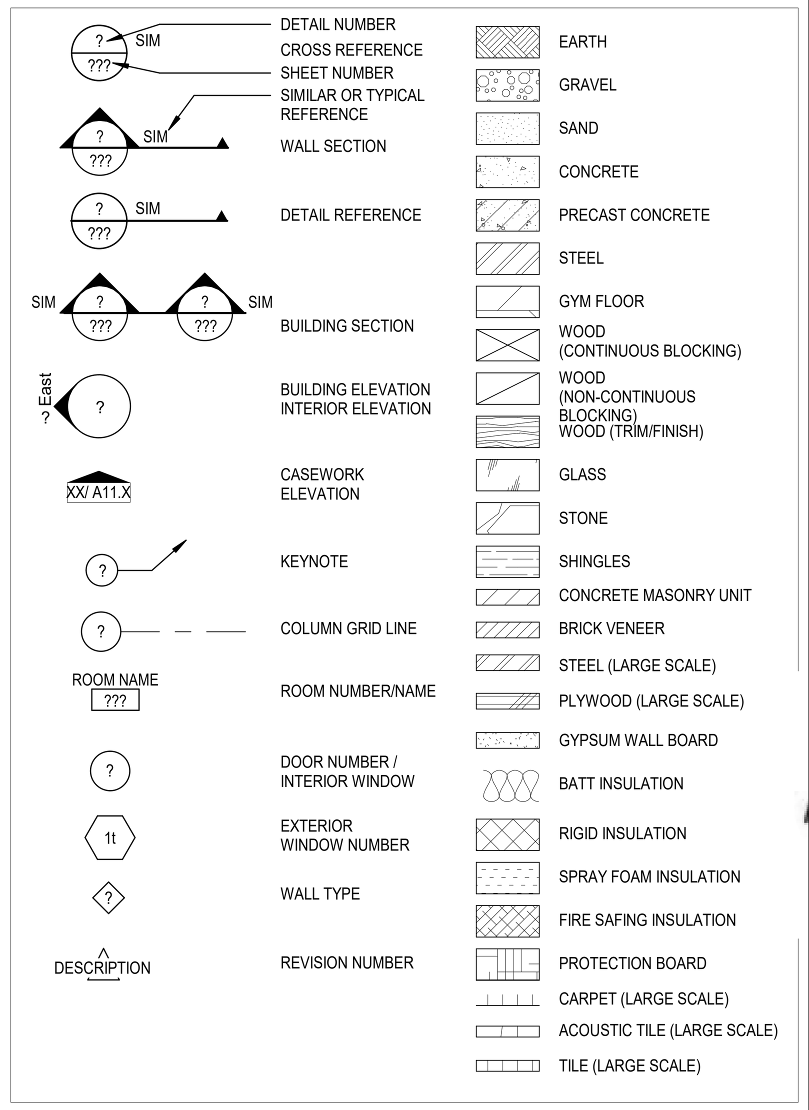

DLR Group

© DLR Group

REGISTERED PROFESSIONAL ENGINEER
DANIEL LEE AHKIAM
6351
STRUCTURAL
STATE OF CALIFORNIA
EXP. 3/31/23

CVUSD

MERWIN ELEMENTARY SCHOOL

COVID 19- COVINA VALLEY DISTRICT HVAC REPLACEMENT

16125 CYPRESS AVE. COVINA, CA 91722

100% CONSTRUCTION DOCUMENTS

11/04/2022

REVISIONS

75-22605-00
DSA A#03-122235
DSA File#: 19-25

GENERAL STRUCTURAL NOTES

S0.1

REQUIRED STRUCTURAL OBSERVATIONS

1. IN ACCORDANCE WITH IBC, SECTION 1704.6, THE OWNER'S REPRESENTATIVE SHALL EMPLOY A REGISTERED DESIGN PROFESSIONAL TO PERFORM STRUCTURAL OBSERVATIONS AS LISTED IN THE BELOW STATEMENT OF REQUIRED STRUCTURAL OBSERVATIONS.
2. STRUCTURAL OBSERVATION DOES NOT INCLUDE, OR WAIVE, THE RESPONSIBILITY FOR COMPLETING THE LISTED SPECIAL INSPECTIONS OR INSPECTIONS REQUIRED BY IBC SECTION 110.
3. AT THE CONCLUSION OF THE WORK, THE STRUCTURAL OBSERVER SHALL SUBMIT TO THE AHJ A WRITTEN STATEMENT THAT THE SITE VISITS HAVE BEEN MADE AND IDENTIFY ANY REPORTED DEFICIENCIES WHICH, TO THE BEST OF THE STRUCTURAL OBSERVER'S KNOWLEDGE, HAVE NOT BEEN RESOLVED.
4. IT IS THE RESPONSIBILITY OF THE GENERAL CONTRACTOR OR CONSTRUCTION MANAGER TO NOTIFY THE ENGINEER AS TO WHEN EACH MAJOR PHASE OF CONSTRUCTION IS READY FOR OBSERVATION A MINIMUM OF TEN (10) WORKING DAYS IN ADVANCE.
5. THE CONTRACTOR SHALL BE RESPONSIBLE FOR ENSURING THAT NAILING, REINFORCEMENT, WELDS, CONNECTIONS, ETC. ARE VISIBLE FOR DESIGNATED STRUCTURAL OBSERVER AT THE TIME OF SITE VISIT.
6. PRIOR TO THE FIRST STRUCTURAL OBSERVATION, THE OWNER'S REPRESENTATIVE SHALL COORDINATE A PRE-CONSTRUCTION MEETING BETWEEN THE OBSERVING ENGINEER, ARCHITECT, CONTRACTOR, SUBCONTRACTORS AND OTHER INSPECTORS. THE PURPOSE OF THE MEETING SHALL BE TO IDENTIFY THE STRUCTURAL ELEMENTS AND CONNECTIONS THAT ARE PART OF THE VERTICAL AND LATERAL LOAD RESISTING SYSTEMS AND REVIEW SCHEDULING OF SCHEDULED STRUCTURAL OBSERVATIONS.
7. THE STRUCTURAL OBSERVER SHALL PERFORM OBSERVATIONS AT THE FOLLOWING SIGNIFICANT CONSTRUCTION STAGES:

   CONSTRUCTION STAGES ELEMENTS/CONNECTIONS TO BE OBSERVED
   a. AT SUBSTANTIAL COMPLETION OF THE PRIMARY STRUCTURE

STATEMENT OF SPECIAL INSPECTIONS

1. IN ACCORDANCE WITH IBC, SECTION 1704, THE OWNER'S REPRESENTATIVE SHALL EMPLOY ONE OR MORE QUALIFIED SPECIAL INSPECTORS AND/OR TESTING AGENCIES TO PERFORM STRUCTURAL TESTS AND SPECIAL INSPECTIONS ON THE TYPES OF WORK LISTED IN THE STATEMENT OF SPECIAL INSPECTIONS.
2. THE DESIGNATED ENGINEER OF RECORD FOR SPECIAL INSPECTIONS SHALL BE RESPONSIBLE FOR DEFINING THE ACTIVITIES OF THE INSPECTORS, FOR CERTIFYING THE QUALIFICATIONS OF THE INSPECTORS WITH THE AHJ, AND TO ATTEND THE PRE-CONSTRUCTION MEETING TO DEFINE THEIR SCOPE OF SERVICES AND THE TESTING OR TEST PROCEDURES THAT ARE REQUIRED AS OUTLINED IN THE BUILDING CODE.
3. THE INSPECTOR SHALL OBSERVE THE WORK ASSIGNED TO VERIFY CONFORMANCE WITH THE APPROVED CONTRACT DOCUMENTS.
4. THE INSPECTOR SHALL FURNISH DAILY INSPECTION REPORTS ON THE WORK TO THE OWNER'S REPRESENTATIVE, AHJ AND ENGINEER. ALL DISCREPANCIES SHALL BE BROUGHT TO THE IMMEDIATE ATTENTION OF THE CONTRACTOR FOR CORRECTION, AND, IF UNCORRECTED, TO THE ENGINEER AND THE AHJ.
5. THE DESIGNATED ENGINEER OF RECORD FOR SPECIAL INSPECTIONS SHALL COMPLETE, SIGN AND SEAL A FINAL REPORT CERTIFYING THAT TO THE BEST OF THEIR KNOWLEDGE, THE WORK IS IN CONFORMANCE WITH THE APPROVED CONTRACT DOCUMENTS.
6. SPECIAL INSPECTION IS TO BE PROVIDED IN ADDITION TO THE INSPECTIONS CONDUCTED BY THE AHJ AND SHALL NOT BE CONSTRUED TO RELIEVE THE OWNER OR AUTHORIZED AGENT FROM REQUESTING THE INSPECTIONS REQUIRED BY IBC SECTION 110.
7. CONTRACTOR RESPONSIBILITY: EACH CONTRACTOR RESPONSIBLE FOR THE CONSTRUCTION OF A MAIN WIND- OR SEISMIC FORCE-RESISTING COMPONENT LISTED IN THE STATEMENT OF SPECIAL INSPECTIONS SHALL SUBMIT A WRITTEN STATEMENT OF RESPONSIBILITY TO THE AHJ AND THE OWNER'S REPRESENTATIVE ACKNOWLEDGING AWARENESS OF REQUIRED SPECIAL INSPECTIONS PRIOR TO COMMENCEMENT OF WORK ON THE SYSTEM OR COMPONENT.
8. STEEL CONSTRUCTION: SPECIAL INSPECTIONS FOR STRUCTURAL STEEL SHALL BE IN ACCORDANCE WITH THE QUALITY ASSURANCE INSPECTION REQUIREMENTS OF AISC 360-16. PROVIDE INSPECTION PER IBC SECTION 1704.2.5 FOR STRUCTURAL LOADING-BEARING MEMBERS AND ASSEMBLIES FABRICATED ON THE PREMISES OF A FABRICATOR'S SHOP. THESE INSPECTIONS SHALL BE AT CONTRACTOR'S EXPENSE IF THE FABRICATOR IS NOT AN APPROVED FABRICATOR PER SECTION 1704.2.5.1.
9. WELDING: WELDING INSPECTION SHALL BE IN COMPLIANCE WITH AWS D1.1. THE BASIS FOR WELDING INSPECTOR QUALIFICATIONS SHALL BE AWS D1.1. PROVIDE SPECIAL INSPECTION IN ACCORDANCE WITH AISC 360-16 TABLE N5.4-1 THROUGH TABLE N5.4-3.
10. STEEL DETAILING: AN INSPECTION OF THE STEEL FRAME SHALL BE PERFORMED TO VERIFY COMPLIANCE WITH THE DETAILS SHOWN ON THE APPROVED CONSTRUCTION DOCUMENTS, SUCH AS BRACING, STIFFENING, MEMBER LOCATIONS AND PROPER APPLICATION OF JOINT DETAILS AT EACH CONNECTION.
11. HIGH STRENGTH BOLTING: INSTALLATION OF HIGH STRENGTH BOLTS SHALL BE PERIODICALLY INSPECTED IN ACCORDANCE WITH AISC SPECIFICATIONS. HIGH STRENGTH BOLTING. PROVIDE SPECIAL INSPECTION IN ACCORDANCE WITH AISC 360-16 TABLE N5.6-1 THROUGH TABLE N5.6-3.
12. SPRAY-APPLIED FIREPROOFING: PER SECTION 1705.14.
13. MASTIC AND INTUMESCENT FIRE RESISTING COATINGS: PER SECTION 1705.15.
14. EXTERIOR INSULATION AND FINISH SYSTEM (EIFS): PER SECTION 1705.16.
15. FIRE-RESISTANT PENETRATIONS AND JOINTS: PER SECTION 1705.17.
16. SMOKE CONTROL: PER SECTION 1705.18.
17. EXPANSION BOLT, SCREW ANCHOR AND ADHESIVE ANCHORS: INSTALLATION TO VERIFY INSTALLATION IN ACCORDANCE WITH ICC-ES REPORTS NOTED PREVIOUSLY OR APPROVED EQUAL.
18. HEADED CONCRETE SHEAR CONNECTORS: INSPECTED AND TESTED PER AMERICAN WELDING SOCIETY CODE AWS D1.1.

TMS 402 / 602 — TABLE 3
MINIMUM VERIFICATION REQUIREMENTS

MINIMUM VERIFICATION	REQUIRED FOR QUALITY ASSURANCE (a)			REFERENCE FOR CRITERIA
	LEVEL 1	LEVEL 2	LEVEL 3	TMS 602
Prior to construction, verification of compliance of submittals.	R	R	R	Art. 1.5
Prior to construction, verification of f'm and f'AAC, except where specifically exempted by the Code.	NR	R	R	Art. 1.4B
During construction, verification of Slump flow and Visual Stability Index (VSI) when self-consolidating grout is delivered to the project site.	NR	R	R	Art. 1.5 & 1.6.3
During construction, verification of f'm and f'AAC for every 5,000 square feet (465 square meters).	NR	NR	R	Art. 1.4B
During construction, verification of proportions of materials as delivered to the project site for premixed or preblended mortar, prestressing grout, and grout other than self-consolidating grout.	NR	NR	R	Art. 1.4B

a. R = Required, NR = Not Required

AISC 360 — TABLE N5.6-1
INSPECTION TASKS PRIOR TO BOLTING

INSPECTION TASKS PRIOR TO BOLTING	QC	QA
Manufacturer's certifications available for fastener materials	O	P
Fasteners marked in accordance with ASTM requirements	O	O
Proper fasteners selected for the joint detail (grade, type, bolt length if threads are to be excluded from shear plane)	O	O
Proper bolting procedure selected for joint detail	O	O
Connecting elements, including the appropriate faying surface condition and hole preparation, if specified, meet applicable requirements	O	O
Pre-installation verification testing by installation personnel observed and documented for fastener assemblies and methods used	P	O
Proper storage provided for bolts, nuts, washers, and other fastener components	O	O

O - Observe these items on a random basis. Operations need not be delayed pending these inspections.
P - Perform these tasks for each bolted connection.

AISC 360 — TABLE N5.6-2
INSPECTION TASKS DURING BOLTING

INSPECTION TASKS DURING BOLTING	QC	QA
Fastener assemblies placed in all holes and washers and nuts are positioned as required	O	O
Joint brought to the snug-tight condition prior to the pretensioning operation	O	O
Fastener component not turned by the wrench prevented from rotating	O	O
Fasteners are pretensioned in accordance with the RCSC Specification, progressing systematically from the most rigid point toward the free edges	O	O

O - Observe these items on a random basis. Operations need not be delayed pending these inspections.
P - Perform these tasks for each bolted connection.

AISC 360 — TABLE N5.6-3
INSPECTION TASKS AFTER BOLTING

INSPECTION TASKS AFTER BOLTING	QC	QA
Document acceptance or rejection of bolted connections	P	P

O - Observe these items on a random basis. Operations need not be delayed pending these inspections.
P - Perform these tasks for each bolted connection.

AISC 360 — TABLE N5.4-1
INSPECTION TASKS PRIOR TO WELDING

INSPECTION TASKS PRIOR TO WELDING	QC	QA
Welder qualification records and continuity records	P	O
Welding procedure specifications (WPS) available	P	P
Manufacturer certifications for welding consumables available	P	P
Material identification (type / grade)	O	O
Welder identification system [a]	O	O
Fit-up of groove welds (including joint geometry) • Joint preparations • Dimensions (alignment, root opening, root face, bevel) • Cleanliness (condition of steel surfaces) • Tacking (tack weld quality and location) • Backing type and fit (if applicable)	O	O
Fit-up of CJP groove welds of HSS T-, Y- and K-joints without backing (including joint geometry) • Joint preparations • Dimensions (alignment, root opening, root face, bevel) • Cleanliness (condition of steel surfaces) • Tacking (tack weld quality and location)	P	O
Configuration and finish of access holes	O	O
Fit-up of fillet welds • Dimensions (alignment, gaps at root) • Cleanliness (condition of steel surfaces) • Tacking (tack weld quality and location)	O	O
Check welding equipment	O	—

[a] The fabricator or erector, as applicable, shall maintain a system by which a welder who has welded a joint or member can be identified. Stamps, if used, shall be the low-stress type.

O - Observe these items on a random basis. Operations need not be delayed pending these inspections.
P - Perform these tasks for each welded joint or member.

AISC 360 — TABLE N5.4-2
INSPECTION TASKS DURING WELDING

INSPECTION TASKS DURING WELDING	QC	QA
Control and handling of welding consumables • Packaging • Exposure Control	O	O
No welding over cracked tack welds	O	O
Environmental conditions • Wind speed within limits • Precipitation and temperature	O	O
WPS Followed • Settings on welding equipment • Travel Speed • Selected welding materials • Shielding gas type / flow rate • Preheat applied • Interpass temperature maintained (min. / max.) • Proper position (F, V, H, OH)	O	O
Welding techniques • Interpass and final cleaning • Each pass within profile limitations • Each pass meets quality requirements	O	O
Placement and installation of steel headed stud anchors	P	P

O - Observe these items on a random basis. Operations need not be delayed pending these inspections.
P - Perform these tasks for each welded joint or member.

AISC 360 — TABLE N5.4-3
INSPECTION TASKS AFTER WELDING

INSPECTION TASKS AFTER WELDING	QC	QA
Welds cleaned	O	O
Size, length and location of welds	P	P
Welds meet visual acceptance criteria • Crack prohibiton • Weld / base-metal fusion • Crater cross section • Weld profiles • Weld size • Undercut • Porosity	P	P
Arc strikes	P	P
k-area [a]	P	P
Weld access holes in rolled heavy shapes and build-up heavy shapes [b]	P	P
Backing removed and weld tabs removed (if required)	P	P
Repair activities	P	P
Document acceptance or rejection of welded joint or member	P	P
No prohibited welds have been added without the approval of the EOR	O	O

[a] When welding of doubler plates, continuity plates or stiffeners has been performed in the k-area, visually inspect the web k-area for cracks within 3 inches (75 mm) of the weld.

[b] After rolled heavy shapes (see Section A3.1c) and built-up heavy shapes (see Section A3.1d) are welded, visually inspect the weld access hole for cracks.

O - Observe these items on a random basis. Operations need not be delayed pending these inspections.
P - Perform these tasks for each welded joint or member.

ANSI / SDI QA/QC— TABLE 1.3
INSPECTION OR EXECUTION TASKS PRIOR TO WELDING

TASK	QC	QA
A. Welding procedure specifications (WPS) available	O	O
B. Manufacturer certifications for welding consumables available	O	O
C. Meterial identification (type / grade)	O	O
D. Check welding equipment	O	O

O - Observe these items on an intermittent basis. Operations need not be delayed pending these inspections.
P - Perform these tasks prior to final acceptance for each item or element.

ANSI / SDI QA/QC— TABLE 1.4
INSPECTION OR EXECUTION TASKS DURING WELDING

TASK	QC	QA
A. Use of qualified welders.	O	O
B. Control and handling of welding consumables	O	O
C. Environmental conditions (wind speed, moisture, temperature)	O	O
D. WPS followed	O	O

O - Observe these items on an intermittent basis. Operations need not be delayed pending these inspections.
P - Perform these tasks prior to final acceptance for each item or element.

ANSI / SDI QA/QC— TABLE 1.5
INSPECTION OR EXECUTION TASKS AFTER WELDING

TASK	QC	QA
A. Verify size and location of welds, including support, sidelap, and perimeter welds	P	P
B. Welds meet visual acceptance criteria	P	P
C. Verify repair activities	P	P
D. Document acceptance or rejection of welds	P	P

O - Observe these items on an intermittent basis. Operations need not be delayed pending these inspections.
P - Perform these tasks prior to final acceptance for each item or element.

ANSI / SDI QA/QC— TABLE 1.6
INSPECTION OR EXECUTION TASKS PRIOR TO MECHANICAL FASTENING

TASK	QC	QA
A. Manufacturer installation instructions available for mechanical fasteners	O	O
B. Proper tools available for fastener installation	O	O
C. Proper storage for mechanical fasteners	O	O

O - Observe these items on an intermittent basis. Operations need not be delayed pending these inspections.
P - Perform these tasks prior to final acceptance for each item or element.

ANSI / SDI QA/QC— TABLE 1.7
INSPECTION OR EXECUTION TASKS DURING MECHANICAL FASTENING

TASK	QC	QA
A. Fasteners are positioned as required	O	O
B. Fasteners are installed in accordance with manufacturer's instructions	O	O

O - Observe these items on an intermittent basis. Operations need not be delayed pending these inspections.
P - Perform these tasks prior to final acceptance for each item or element.

ANSI / SDI QA/QC— TABLE 1.8
INSPECTION OR EXECUTION TASKS AFTER MECHANICAL FASTENING

TASK	QC	QA
A. Check spacing, type, and installation of support fasteners	P	P
B. Check spacing, type, and installation of sidelap fasteners	P	P
C. Check spacing, type, and installation of perimeter fasteners	P	P
D. Verify repair activities	P	P
E. Document acceptance or rejection on mechanical fasteners	P	P

O - Observe these items on an intermittent basis. Operations need not be delayed pending these inspections.
P - Perform these tasks prior to final acceptance for each item or element.

DLR Group
© DLR Group

REGISTERED PROFESSIONAL ENGINEER DANIEL LEE ARKRAM 6351 STRUCTURAL STATE OF CALIFORNIA
5/31/23

MERWIN ELEMENTARY SCHOOL
COVID 19- COVINA VALLEY DISTRICT HVAC REPLACEMENT
16125 CYPRESS AVE. COVINA, CA 91722

100% CONSTRUCTION DOCUMENTS
11/04/2022
REVISIONS

75-22605-00
DSA A#03-122235
DSA File#: 19-25

GENERAL STRUCTURAL NOTES & SPECIAL INSPECTIONS

S0.2

Autodesk Docs://75-22605-00 CVUSD - District Wide HVAC Replacement/75-22605-00_CVUSD_Merwin ES_ST_2022.rvt
11/4/2022 8:32:41 AM

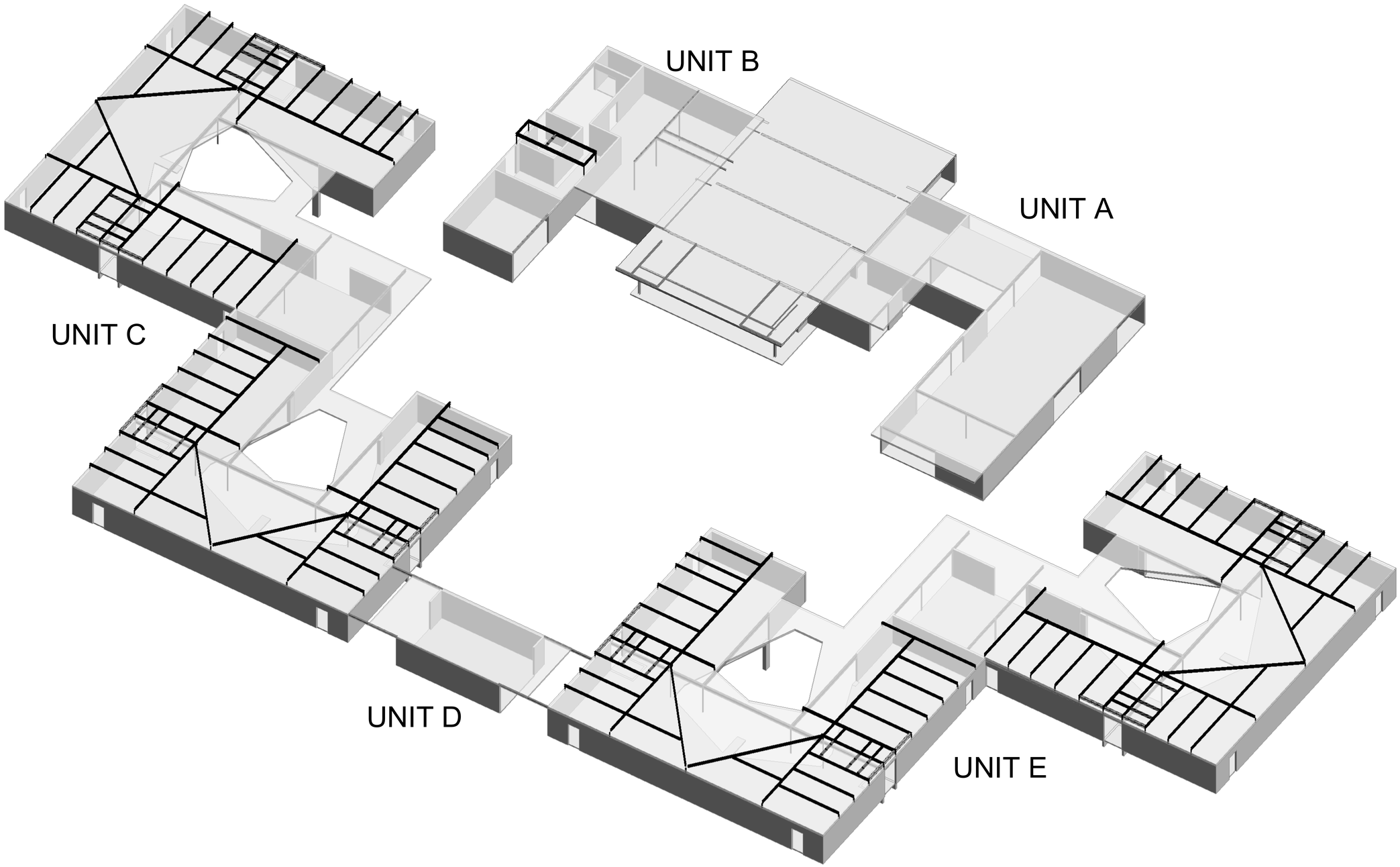

ISOMETRIC VIEW
SCALE:

NOTES:

1. 3D VIEW SHOWN (INCLUDING, BUT NOT LIMITED TO ISOMETRICS, PERSPECTIVES, ETC.) ARE PROVIDED FOR REFERENCE PURPOSES ONLY.
2. IN THE EVENT OF ANY DISCREPANCY BETWEEN INFORMATION REPRESENTED BY BOTH A 3D VIEW AND BY A NON-3D VIEW WITHIN THE CONSTRUCTION DOCUMENTS, THE NON-3D VIEW SHALL GOVERN IN ALL CASES.

KEY PLAN

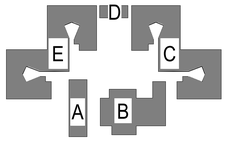

DLR Group
© DLR Group

REGISTERED PROFESSIONAL ENGINEER
DANIEL LEE ANKRAM
6351
STRUCTURAL
STATE OF CALIFORNIA
5/31/23

MERWIN ELEMENTARY SCHOOL
COVID 19- COVINA VALLEY DISTRICT HVAC REPLACEMENT
16125 CYPRESS AVE, COVINA, CA 91722

100% CONSTRUCTION DOCUMENTS
11/04/2022
REVISIONS

75-22605-00
DSA A#03-122235
DSA File#: 19-25

ISOMETRIC VIEW

S1.0

Autodesk Docs://75-22605-00 CVUSD - District Wide HVAC Replacement/75-22605-00_CVUSD_Merwin ES_ST_2022.rvt
11/4/2022 8:32:49 AM

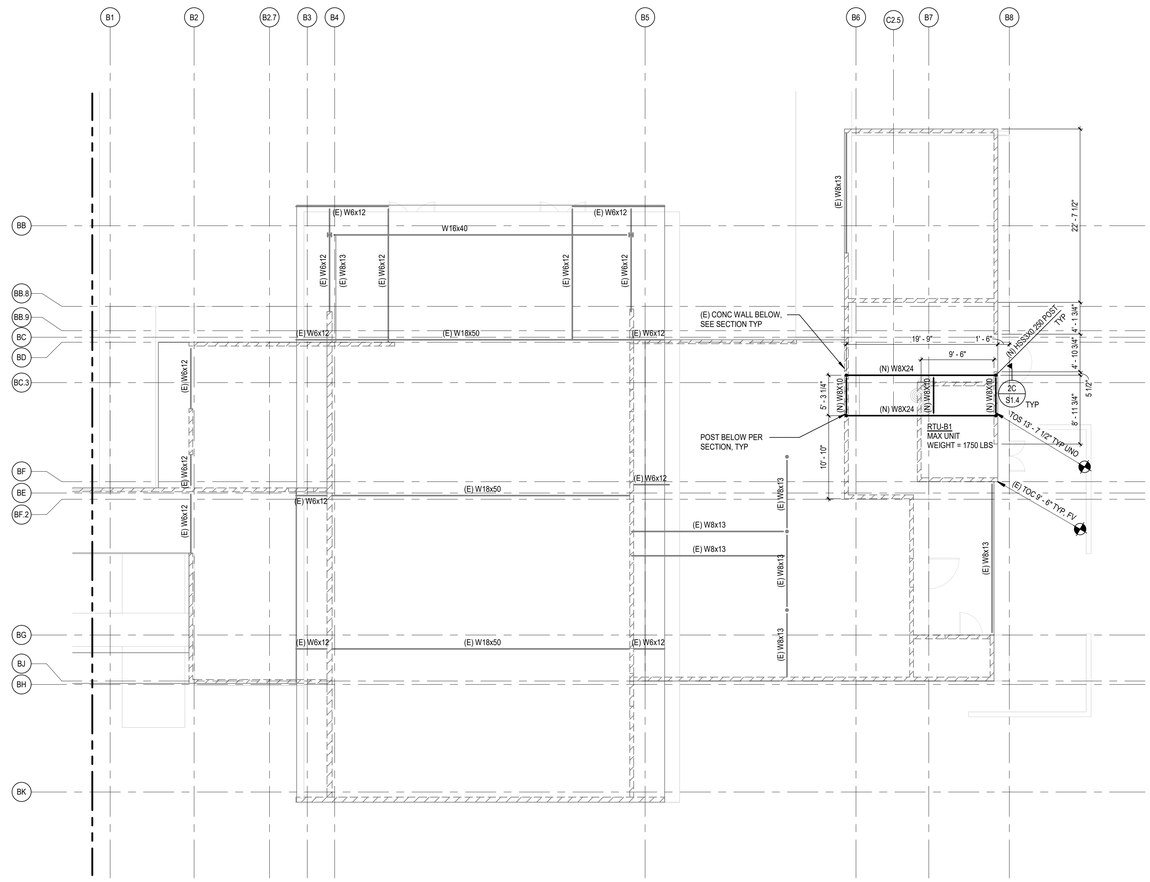

N

ROOF FRAMING PLAN - UNIT B

SCALE: 1/8" = 1'-0"

ROOF FRAMING PLAN NOTES:

1. ELEVATIONS ARE BASED ON A FLOOR DATUM OF 0'-0" UNO.
2. RTU SIZES AND LOCATIONS SHOWN ON PLAN ARE ONLY SCHEMATIC. CONTRACTOR SHALL VERIFY AND COORDINATE FINAL LOCATIONS/PLAN DIMENSIONS, WEIGHTS AND ROOF OPENING SIZES/LOCATIONS FOR ALL MECHANICAL UNITS/EQUIPMENT.
3. FOR ELEVATIONS, WALL SECTIONS AND DIMENSIONS NOT SHOWN SEE ARCHITECTURAL DRAWINGS.
4. (E) STEEL FRAMING LOCATION, SIZES, AND ELEVATIONS SHOWN FOR REFERENCE ONLY. CONTRACTOR TO FIELD VERIFY ALL (E) BEAMS TO SUPPORTING NEW POST ABOVE.
5. ALL (N) STRUCTURAL STEEL PERMANENTLY EXPOSED TO THE WEATHER SHALL BE HOT DIP GALVANIZED PER GENERAL NOTES.
6. (E) ROOF SYSTEM CONSISTS OF 6T-18 OR 8T-18 INLAND STEEL DECK SEAM WELD W/ 1/8"X1" LONG FILLETS @ 36" OC. PLEASE REFER TO EXISTING DRAWINGS FOR DETAILS
7. FV (N) FRAMING ATTACHMENT IS TO (E) CONCRETE WALL. CONTACT SEOR IF (N) FRAMING ATTACHMENT CANNOT BE MET.

LEGEND

EXISTING CONCRETE WALL

KEY PLAN

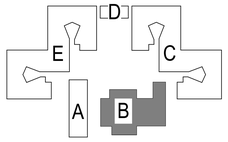

DLR Group

© DLR Group

REGISTERED PROFESSIONAL ENGINEER
DANIEL LEE ARKHAM
6351
STRUCTURAL
STATE OF CALIFORNIA
5/31/23

MERWIN ELEMENTARY SCHOOL

COVID 19- COVINA VALLEY DISTRICT HVAC REPLACEMENT

16123 CYPRESS AVE, COVINA, CA 91722

100% CONSTRUCTION DOCUMENTS

11/04/2022

REVISIONS

75-22605-00
DSA A#03-122235
DSA File#: 19-25

ROOF FRAMING PLAN - UNIT B

S1.1

Autodesk Docs://75-22605-00 CVUSD - District Wide HVAC Replacement/75-22605-00_CVUSD_Merwin ES_ST_2022.rvt
11/4/2022 8:32:56 AM

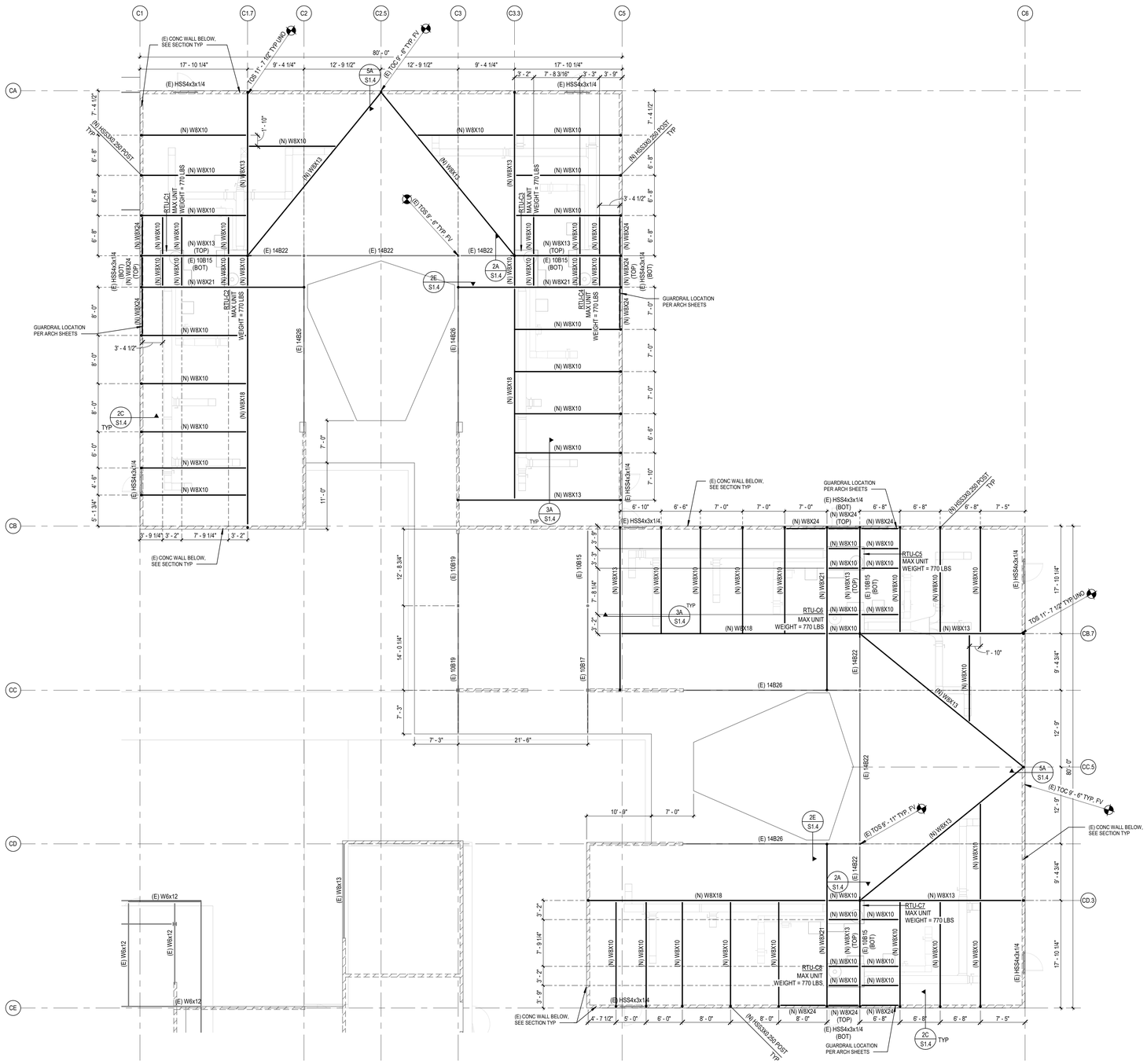

ROOF FRAMING PLAN - UNIT C

SCALE: 1/8" = 1'-0"

ROOF FRAMING PLAN NOTES:

1. ELEVATIONS ARE BASED ON A FLOOR DATUM OF 0'-0" UNO.
2. RTU SIZES AND LOCATIONS SHOWN ON PLAN ARE ONLY SCHEMATIC. CONTRACTOR SHALL VERIFY AND COORDINATE FINAL LOCATIONS/PLAN DIMENSIONS, WEIGHTS AND ROOF OPENING SIZES/LOCATIONS FOR ALL MECHANICAL UNITS/EQUIPMENT.
3. FOR ELEVATIONS, WALL SECTIONS AND DIMENSIONS NOT SHOWN SEE ARCHITECTURAL DRAWINGS.
4. (E) STEEL FRAMING LOCATION, SIZES, AND ELEVATIONS SHOWN FOR REFERENCE ONLY. CONTRACTOR TO FIELD VERIFY ALL (E) BEAMS TO SUPPORTING NEW POST ABOVE.
5. ALL (N) STRUCTURAL STEEL PERMANENTLY EXPOSED TO THE WEATHER SHALL BE HOT DIP GALVANIZED PER GENERAL NOTES.
6. (E) ROOF SYSTEM CONSISTS OF 6T-18 OR 8T-18 INLAND STEEL DECK SEAM WELD W/ 1/8"X1" LONG FILLETS @ 36" OC. PLEASE REFER TO EXISTING DRAWINGS FOR DETAILS
7. FV (N) FRAMING ATTACHMENT IS TO (E) CONCRETE WALL. CONTACT SEOR IF (N) FRAMING ATTACHMENT CANNOT BE MET.

LEGEND

EXISTING CONCRETE WALL

KEY PLAN

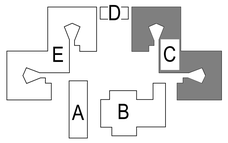

DLR Group

© DLR Group

REGISTERED PROFESSIONAL ENGINEER DANIEL LEE ARKAM 6351 STRUCTURAL STATE OF CALIFORNIA
5/31/23

MERWIN ELEMENTARY SCHOOL

COVID 19- COVINA VALLEY DISTRICT HVAC REPLACEMENT

16125 CYPRESS AVE, COVINA, CA 91722

100% CONSTRUCTION DOCUMENTS

11/04/2022

REVISIONS

75-22605-00
DSA A#03-122235
DSA File#: 19-25

ROOF FRAMING PLAN - UNIT C

S1.2

Autodesk Docs://75-22605-00 CVUSD - District Wide HVAC Replacement/75-22605-00_CVUSD_Merwin ES_ST_2022.rvt
11/4/2022 8:33:00 AM

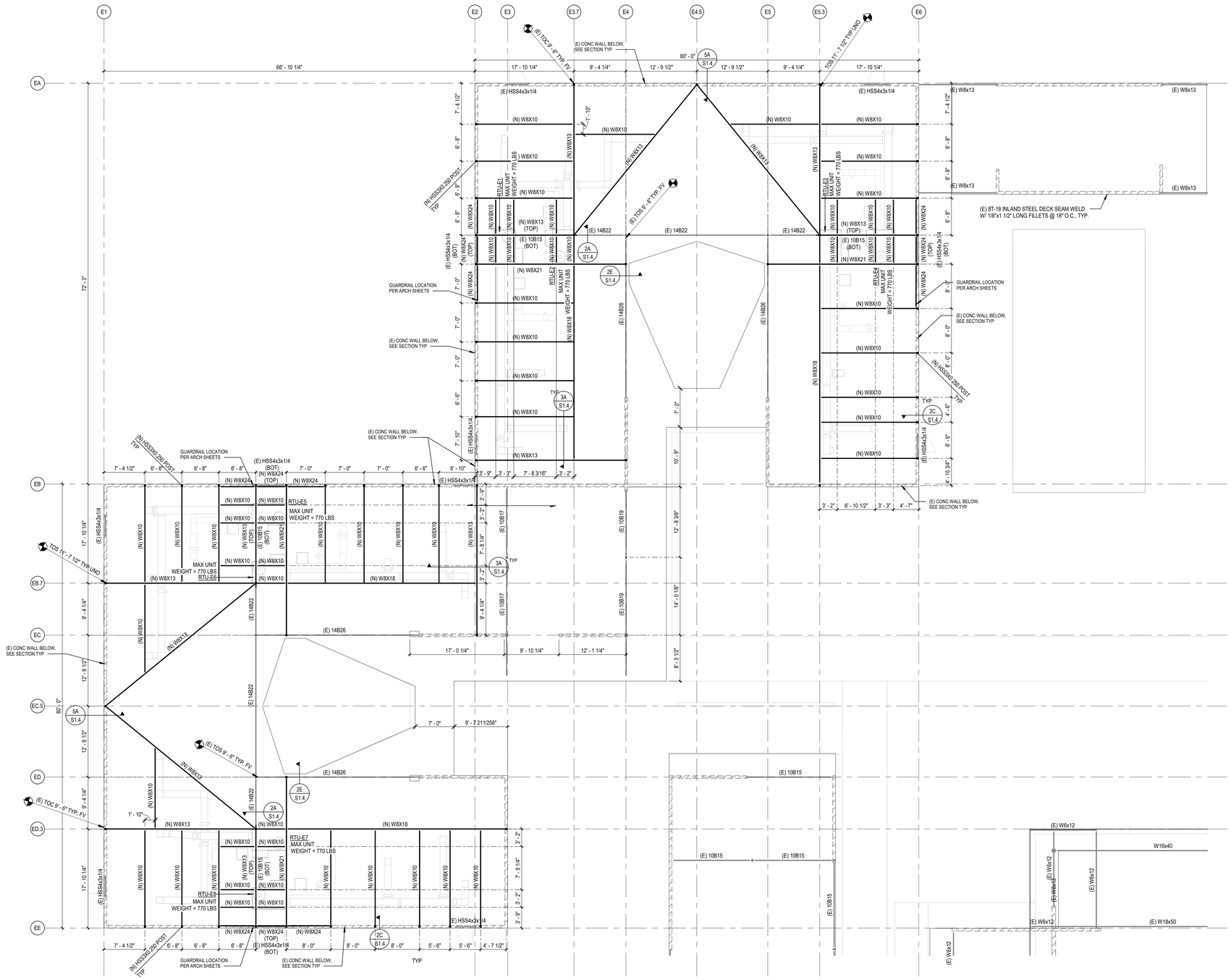

ROOF FRAMING PLAN - UNIT D & E

SCALE: 1/8" = 1'-0"

ROOF FRAMING PLAN NOTES:

1. ELEVATIONS ARE BASED ON A FLOOR DATUM OF 0'-0" UNO.
2. RTU SIZES AND LOCATIONS SHOWN ON PLAN ARE ONLY SCHEMATIC. CONTRACTOR SHALL VERIFY AND COORDINATE FINAL LOCATIONS/PLAN DIMENSIONS, WEIGHTS AND ROOF OPENING SIZES/LOCATIONS FOR ALL MECHANICAL UNITS/EQUIPMENT.
3. FOR ELEVATIONS, WALL SECTIONS AND DIMENSIONS NOT SHOWN SEE ARCHITECTURAL DRAWINGS.
4. (E) STEEL FRAMING LOCATION, SIZES, AND ELEVATIONS SHOWN FOR REFERENCE ONLY. CONTRACTOR TO FIELD VERIFY ALL (E) BEAMS TO SUPPORTING NEW POST ABOVE.
5. ALL (N) STRUCTURAL STEEL PERMANENTLY EXPOSED TO THE WEATHER SHALL BE HOT DIP GALVANIZED PER GENERAL NOTES.
6. (E) ROOF SYSTEM CONSISTS OF 6T-18 OR 8T-18 INLAND STEEL DECK SEAM WELD W/ 1/8"X1" LONG FILLETS @ 36" OC. PLEASE REFER TO EXISTING DRAWINGS FOR DETAILS
7. FV (N) FRAMING ATTACHMENT IS TO (E) CONCRETE WALL. CONTACT SEOR IF (N) FRAMING ATTACHMENT CANNOT BE MET.

LEGEND

EXISTING CONCRETE WALL

DLR Group
© DLR Group

REGISTERED PROFESSIONAL ENGINEER DANIEL LEE ARKHAM 6351 STRUCTURAL STATE OF CALIFORNIA
5/31/23

MERWIN ELEMENTARY SCHOOL

COVID 19- COVINA VALLEY DISTRICT HVAC REPLACEMENT

16125 CYPRESS AVE, COVINA, CA 91722

100% CONSTRUCTION DOCUMENTS
11/04/2022
REVISIONS

KEY PLAN

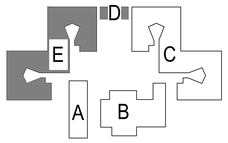

75-22605-00
DSA A#03-122235
DSA File#: 19-25

ROOF FRAMING PLAN - UNIT D&E

S1.3

Autodesk Docs://75-22605-00 CVUSD - District Wide HVAC Replacement/75-22605-00_CVUSD_Merwin ES_ST_2022.rvt
11/4/2022 8:33:04 AM

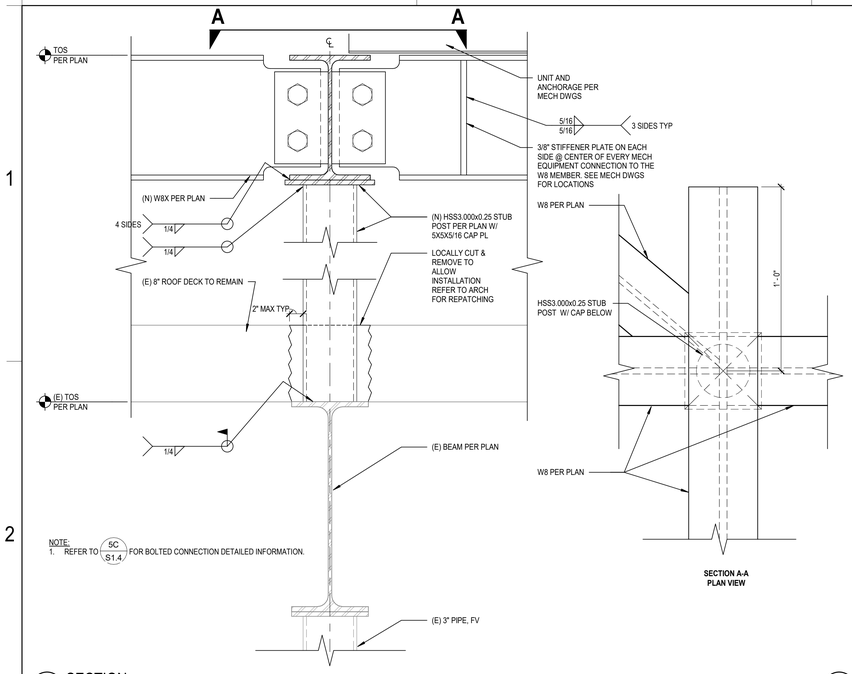

NOTE:
1. REFER TO 5C/S1.4 FOR BOLTED CONNECTION DETAILED INFORMATION.

2A/S1.4 SECTION
NO SCALE

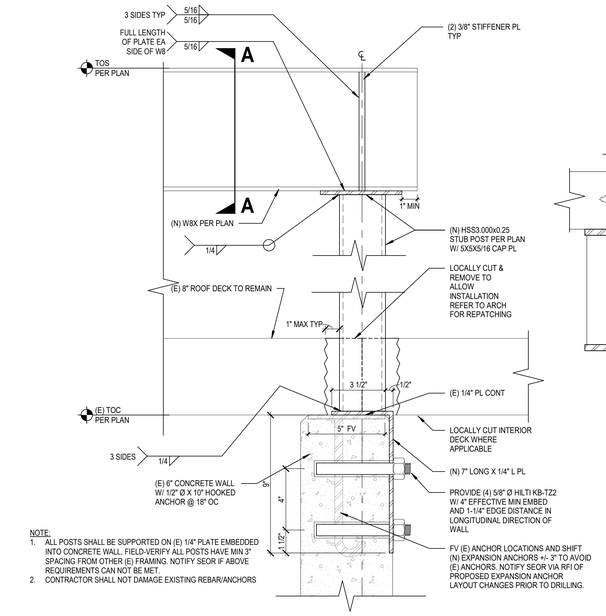

NOTE:
1. ALL POSTS SHALL BE SUPPORTED ON (E) 1/4" PLATE EMBEDDED INTO CONCRETE WALL. FIELD-VERIFY ALL POSTS HAVE MIN 3" SPACING FROM OTHER (E) FRAMING. NOTIFY SEOR IF ABOVE REQUIREMENTS CAN NOT BE MET.
2. CONTRACTOR SHALL NOT DAMAGE EXISTING REBAR/ANCHORS

2C/S1.4 SECTION
NO SCALE

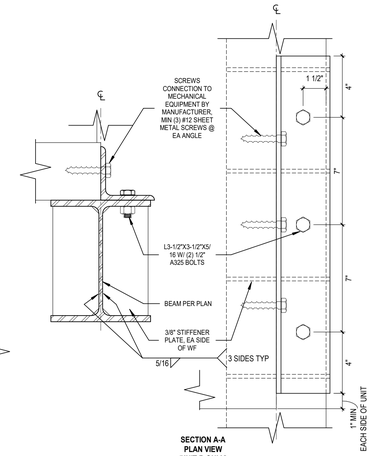

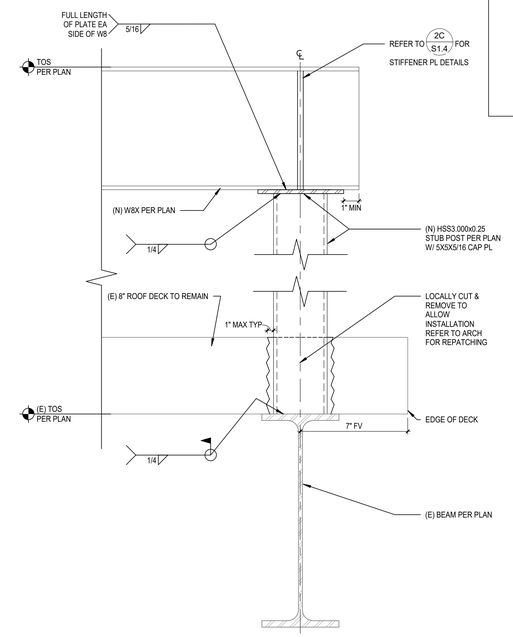

2E/S1.4 SECTION
NO SCALE

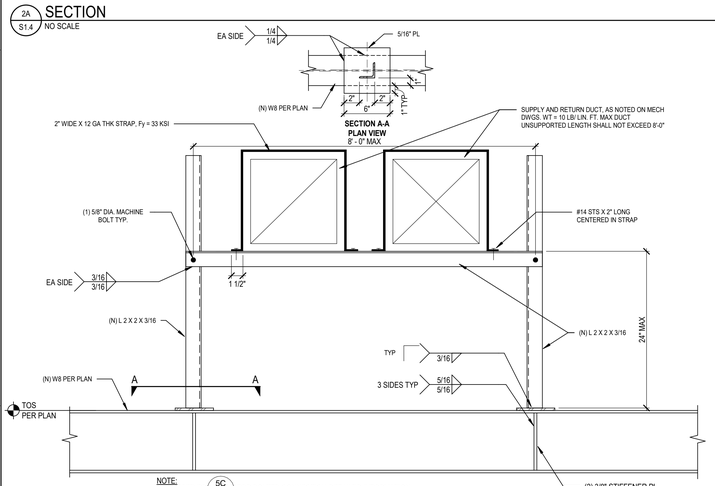

NOTE:
1. REFER TO 5C/S1.4 FOR BOLTED CONNECTION DETAILED INFORMATION.

3A/S1.4 TYPICAL DUCT SUPPORT ON ROOF DETAIL
NO SCALE

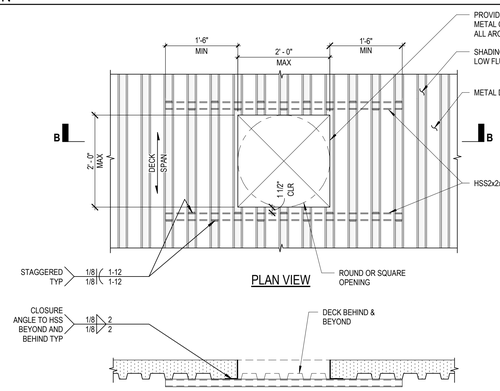

NOTE:
1. TRANSVERSE AND LONGITUDINAL SPACING OF SIMILAR DECK OPENINGS SHALL NOT BE LESS THAN 5'-6".

A OPENINGS WITH ANY SIDE GREATER THAN 8" AND LESS THAN OR EQUAL TO 2'-0"

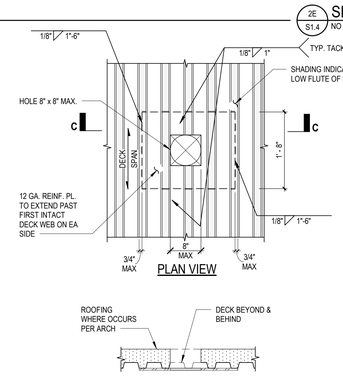

NOTE:
FOR HOLES LESS THAN 4"x4" NO REINF. PLATE IS NEEDED

B OPENINGS WITH ANY SIDE EQUAL OR LESS THAN 8" SQ

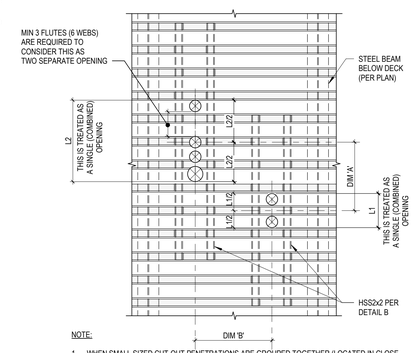

NOTE:
1. WHEN SMALL SIZED CUT-OUT PENETRATIONS ARE GROUPED TOGETHER (LOCATED IN CLOSE PROXIMITY) THEY SHALL BE TREADED AS A LARGE (COMBINED) OPENING AS SHOWN ABOVE.
2. SMALL OPENING (SINGLE CUT-OUT) WHERE ONLY ONE DECK WEB IS REMOVED, DO NOT REQUIRE REINFORCING.
3. REINFORCING PLATE (DETAIL C) AND HSS MEMBER (DETAIL B) MAY BE PLACED AT TOP OF DECK, AT CONTRACTOR'S OPTION.
4. IF BOTH DIM 'A' AND DIM 'B' ARE LESS THAN LARGER OF 4L1, 4L2, OR 36", THE TWO OPENINGS SHOWN SHALL BE TREADED AS ONE LARGE (COMBINED) OPENING AND SHALL BE FRAMED PER DETAIL A.

C GROUP OPENING REQUIREMENTS

3C/S1.4 TYPICAL METAL DECK REINF AT (N) OPENINGS
SCALE: 3/4" = 1'-0"

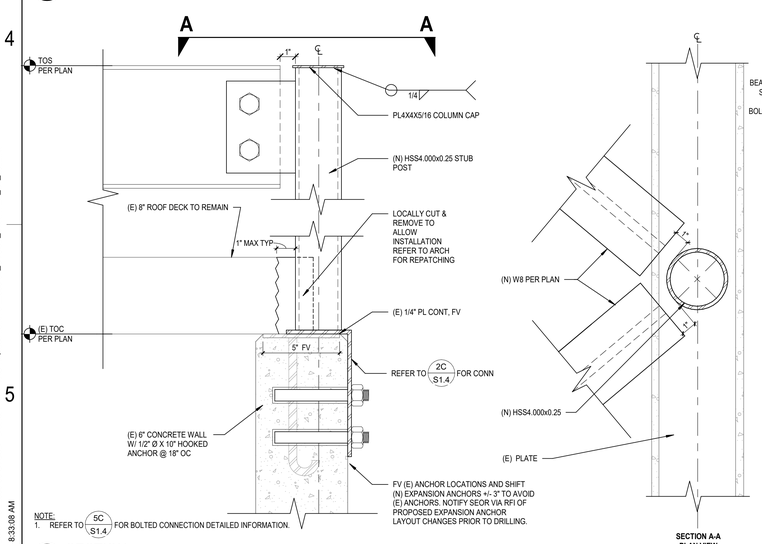

NOTE:
1. REFER TO 5C/S1.4 FOR BOLTED CONNECTION DETAILED INFORMATION.

5A/S1.4 SECTION
NO SCALE

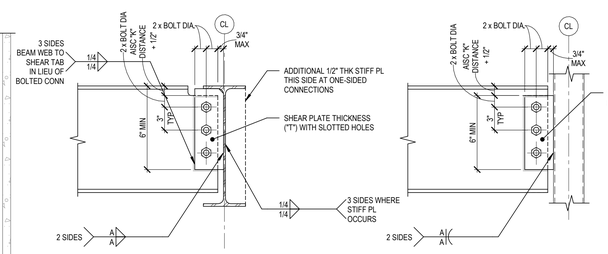

BEAM CONNECTION SCHEDULE			
NOMINAL MEMBER DEPTH	SHEAR PL. THICKNESS ("T")	FASTENERS A325X NON-SLIP CRITICAL	WELD SIZE ("A") SEE NOTE 3
8" THROUGH 10"	3/8"	(2)-7/8" Ø	5/16"
12" THROUGH 14"	3/8"	(3)-7/8" Ø	5/16"

NOTE:
1. PROVIDE SHORT SLOTTEDD HOLES PER AISC, TYP UNO
2. FULL HEIGHT SHEAR PLATE REQUIRED AT SKEWED BEAM CONNECTIONS
3. FOR SKEWED BEAM WELD REQUIREMENTS, REFER TO THE BLOW-UP PLAN VIEW DETAIL PROVIDED

5C/S1.4 TYP BOLTED BEAM TO BEAM CONNECTION
NO SCALE

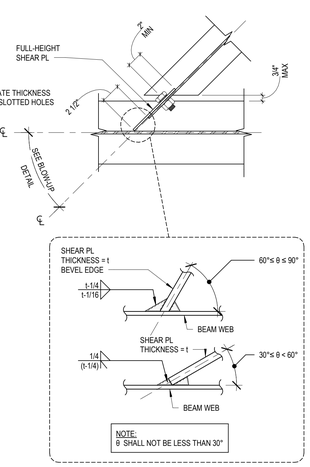

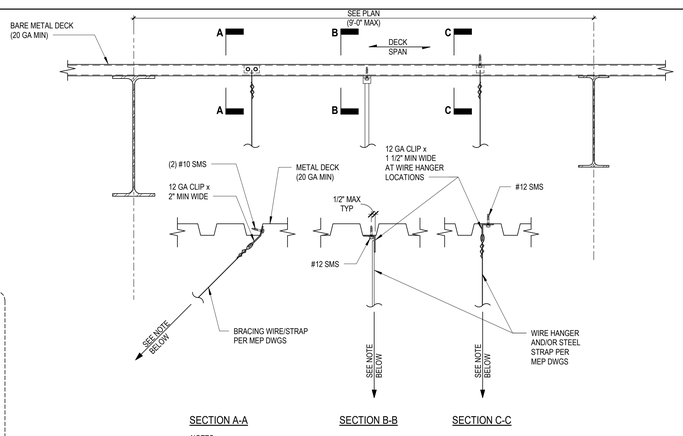

NOTES:
MAXIMUM HANGING LOAD OF 20 LBS PER SPAN IS ALLOWED FROM METAL DECK PROVIDED THAT ALL OF THE FOLLOWING CRITERIA ARE MET:
A. THE METAL DECK IS CONTINUOUS FOR AT LEAST TWO BAYS.
B. TOTAL NUMBERS OF HANGERS AND BRACES SHALL BE LIMITED SUCH THAT TOTAL LOADS IMPOSED ON METAL DECK DO NOT EXCEED 20 LBS.
C. THE MINIMUM TRANSVERSE SPACING BETWEEN THE HANGERS IN THE DIRECTION PERPENDICULAR TO DECK SPAN IS 2'-0".

A HANGING LOADS ≤ 20 LBS

3E/S1.4 DETAIL
SCALE: 1 1/2" = 1'-0"

DLR Group
© DLR Group

REGISTERED PROFESSIONAL ENGINEER
DANIEL LEE ARKRAM
6351
STRUCTURAL
STATE OF CALIFORNIA
5/31/23

MERWIN ELEMENTARY SCHOOL
COVID 19- COVINA VALLEY DISTRICT HVAC REPLACEMENT
16125 CYPRESS AVE, COVINA, CA 91722

100% CONSTRUCTION DOCUMENTS
11/04/2022
REVISIONS

75-22605-00
DSA A#03-122235
DSA File#: 19-25

ROOF FRAMING DETAILS

S1.4

Autodesk Docs://75-22605-00 CVUSD - District Wide HVAC Replacement/75-22605-00_CVUSD_Merwin ES_ST_2022.rvt
11/4/2022 8:33:08 AM

ABBREVIATIONS

(D)	DEMOLISHED
(E)	EXISTING
(R)	RELOCATED
°C	DEGREES CELSIUS
°F	DEGREES FAHRENHEIT
Ø	DIAMETER
A	AMPERE
A/C	AIR CONDITIONING(ER)
AABC	ASSOCIATED AIR BALANCE COUNCIL
AAV	AUTOMATIC AIR VENT
ACC	ACCESSIBLE
ACCU	AIR COOLED CONDENSING UNIT
AD	ACCESS DOOR
ADJ	ADJUSTABLE
AF	AIR FILTER
AHRI	AIR-CONDITIONING HEATING AND REFRIGERATION INSTITUTE
AHU	AIR HANDLING UNIT
AMB	AMBIENT
AMBA	AMERICAN BOILER MANUFACTURERS ASSOCIATION
AMP	AMPERE
AP	ACCESS PANEL
AS	AIR SEPARATOR
ASCE	AMERICAN SOCIETY OF CIVIL ENGINEERS
ASHRAE	AMERICAN SOCIETY OF HEATING REFRIGERATION AND AIR CONDITIONING ENGINEERS
ASME	AMERICAN SOCIETY OF MECHANICAL ENGINEERS
AUTO	AUTOMATIC
AV	ACID VENT
B	BOILER
BAS	BUILDING AUTOMATION SYSTEM
BAT	BATTERY
BBO	BOILER BLOW OFF
BC	BALANCING COCK
BC	BARE COPPER
BDD	BACK DRAFT DAMPER
BF	BOILER FEED
BFF	BELOW FINISH FLOOR
BFV	BUTTERFLY VALVE
BHP	BREAK HORSEPOWER
BLKG	BLOCKING
BLKHD	BULKHEAD
BMS	BUILDING MANAGEMENT SYSTEM
BOD	BOTTOM OF DUCT
BOT	BOTTOM
BPIP	BOILER PLANT INSTRUMENTATION PANEL
BTU	BRITISH THERMAL UNIT
BTUH	BRITISH THERMAL UNIT PER HOUR
C	CONDUIT
CA	COMBUSTION AIR
CAP	CAPACITY
CD	CONSTRUCTION DOCUMENTS
CENT	CENTRIFUGAL
CF	CUBIC FEET
CFH	CUBIC FEET PER HOUR
CFM	CUBIC FEET PER MINUTE
CH	CHILLER
CIRC	CIRCULATING
CLR	CLEAR
CO	CARBON MONOXIDE
CO2	CARBON DIOXIDE
COMB	COMBINATION
CONV	CONVECTOR
CP	CONDENSATE PUMP
CPS	CYCLES PER SECOND
CR	CONDENSER WATER RETURN
CR	CORROSION RESISTANT
CRAC	COMPUTER ROOM AIR CONDITIONING UNIT
CS	COUNTERSINK
CS	CONDENSER WATER SUPPLY
CT	COOLING TOWER
CTL	CONTROL
CU	CONDENSING UNIT
CUH	CABINET UNIT HEATER
CWR	CHILLED WATER RETURN
CWS	CHILLED WATER SUPPLY
CYL	CYLINDER
D	DIFFUSER
DB	DECIBEL
DB	DRY BULB
DBL	DOUBLE
DC	DUST COLLECTOR
DEPT	DEPARTMENT
DH	DUCT HEATER
DI	DISTILLED WATER
DIAG	DIAGONAL
DIC	DISCHARGE
DISCH	DISCHARGE
DISTR	DISTRIBUTION
DSTB	DISTRIBUTED
EA	EACH
EA	EXHAUST AIR
EAT	ENTERING AIR TEMPERATURE
EDH	ELECTRIC DUCT HEATER
EER	ENERGY EFFICIENCY RATIO
EF	EXHAUST FAN
EFF	EFFICIENCY
EFF	EFFICIENCY
EH	ELECTRICAL HEATER
ELEV	ELEVATOR
EMER	EMERGENCY
ENCL	ENCLOSURE
ENT	ENTERING
ESP	EXTERNAL STATIC PRESSURE
EST	ESTIMATE
ET	EXPANSION TANK
EWT	ENTERING WATER TEMPERATURE
EXH	EXHAUST
EXP	EXPOSED
F	FAHRENHEIT
F	FURNACE
F.V.	FIELD VERIFY
FA	FACE
FAB	FABRICATE(D)
FCU	FAN COIL UNIT
FD	FIRE DAMPER
FF	FINISH FLOOR
FLEX	FLEXIBLE
FME	FLOW MEASURING EQUIPMENT
FPM	FEET PER MINUTE
FS	FLOW SWITCH
FSD	FIRE SMOKE DAMPER
FT	FIN TUBE
G	GRILLE
GA	GAUGE
GAL	GALLON
GALV	GALVANIZED
GFI, GFCI	GROUND FAULT CIRCUIT INTERRUPTER
GHR	GLYCOL-WATER HEATING RETURN
GHS	GLYCOL-WATER HEATING SUPPLY
GPD	GALLONS PER DAY
GPH	GALLONS PER HOUR
GPM	GALLONS PER MINUTE
GV	GATE VALVE
HCR	HOT/CHILLED WATER RETURN
HCS	HOT/CHILLED WATER SUPPLY
HGR	HANGER
HID	HIGH INTENSITY DISCHARGE
HP	HORSE POWER
HP	HEAT PUMP
HP	HIGH PRESSURE
HPR	HIGH PRESSURE STEAM RETURN
HPS	HIGH PRESSURE STEAM SUPPLY
HR	HOUR
HTG	HEATING
HTR	HEATER
HTWR	HIGH TEMPERATURE HOT WATER RETURN

ABBREVIATIONS

HTWS	HIGH TEMPERATURE HOT WATER SUPPLY
HUM	HUMIDIFIER
HV	HEATING VENTILATING UNIT
HVAC	HEATING VENTILATING AND AIR CONDITIONING
HWR	HEATING WATER RETURN
HWS	HEATING WATER SUPPLY
HX	HEAT EXCHANGER
HZ	HERTZ (FREQUENCY)
IAQ	INDOOR AIR QUALITY
IAW	IN ACCORDANCE WITH
ID	INSIDE DIAMETER
IH	INTAKE HOOD
INSUL	INSULATION
KH	KITCHEN HOOD
LAT	LEAVING AIR TEMPERATURE
LF	LINEAR FOOT
LG	LENGTH (LONG)
LIN	LINEAR
LOX	LIQUID OXYGEN
LPG	LIQUIFIED PETROLEUM GAS
LPR	LOW PRESSURE STEAM RETURN
LPS	LOW PRESSURE STEAM SUPPLY
LTD	LINED TRANSFER DUCT
LV	LOUVER
LVG	LEAVING
MA	MIXED AIR
MAINT	MAINTENANCE
MAN	MANUAL
MATL	MATERIAL
MAU	MAKEUP AIR UNIT
MAV	MANUAL AIR VENT
MBH	THOUSAND BTU PER HOUR
MFRG	MANUFACTURING
ML	MOTORIZED LOUVER
MPG	MEDIUM PRESSURE GAS
MTD	MOUNTED
MTG	MOUNTING
MTWR	MEDIUM TEMP HOT WATER RETURN
MTWS	MEDIUM TEMP HOT WATER SUPPLY
N.C.	NORMALLY CLOSED
N.O.	NORMALLY OPEN
NEC	NATIONAL ELECTRIC CODE
NEMA	NATIONAL ELECTRICAL MANUFACTURERS ASSN.
NO	NUMBER
NOM	NOMINAL
O&M	OPERATION AND MAINTENANCE
OA	OUTSIDE AIR
OD	OUTSIDE DIAMETER
P	PUMP
P/T	PRESSURE/TEMPERATURE TEST PORT
PB	PUSH BUTTON
PCF	POUNDS PER CUBIC FOOT
PD	PRESSURE DROP
PERF	PERFORATED
PERP	PERPENDICULAR
PG	PRESSURE GAUGE
PI	POINT OF INTERSECTION
PI	PRESSURE INDICATOR
PL	PLATE
PLBG	PLUMBING
PNEU	PNEUMATIC
PNL	PANEL
POC	POINT OF CONNECTION
PR	PAIR
PSI	POUNDS PER SQUARE INCH
PVC	POLYVINYL CHLORIDE
PWR	POWER
RA	RETURN AIR
RAD	RADIUS
RAD	RADIATOR
RAD	RADIATED
RCP	REFLECTED CEILING PLAN
RCU	RECIPROCATING CHILLER UNIT
RD	REFRIGERANT DISCHARGE
REFR	REFRIGERANT
REG	REGISTER
REM	REMOVABLE
RESP	RESPONSIVE
RF	RETURN FAN
RH	RELATIVE HUMIDITY
RH	REFLIEF HOOD
RHC	REHEAT COIL
RHG	REFRIGERANT HOT GAS
RL	REFRIGERANT LIQUID
RPM	REVOLUTIONS PER MINUTE
RS	REFRIGERANT SUCTION
RTU	ROOF TOP UNIT
S	SMOKE DAMPER
SA	SUPPLY AIR
SC	SECURITY
SD	SMOKE DAMPER
SD	SMOKE DETECTOR
SD	SOAP DISPENSER
SE	STEAM EXHAUST VENT
SGL	SINGLE
SP	STATIC PRESSURE (H2O)
SPD	SURGE PROTECTION DEVICE
SQ	SQUARE
SS	STAINLESS STEEL
STOR	STORAGE
SUSP	SUSPENDED
SV	SOLENOID VALVE
SWP	STEAM WORKING PRESSURE
T	THERMOSTAT
T&B	TOP AND BOTTOM
TA	TRANSFER AIR
TB	TERMINAL BOX
TC	TEMPERATURE CONTROL
TD	TRANSFER DUCT
TEMP	TEMPERATURE
THK	THICK(NESS)
TOD	TOP OF DUCT
TS	TEMPERATURE SENSOR
TSP	TOTAL STATIC PRESSURE
TT	TEMPERATURE TRANSMITTER
UC	UNIT COOLER
UG	UNDERGROUND
UH	UNIT HEATER
UL	UNDERWRITERS LABORATORIES
UV	UNIT VENTILATOR
V	VOLT
VA	VOLT-AMPERE
VA	VALVE
VAC	VACUUM
VAV	VARIABLE AIR VOLUME
VD	VOLUME DAMPER
VEL	VELOCITY
VENT	VENTALATOR(TION)
VFD	VARIABLE FREQUENCY DRIVE
VOL	VOLUME
VP	VACUUM PUMP
VSMP	VARIABLE SPEED MOTOR CONTROLLER
W	WIDE
W	WATT
WB	WET BULB
WC	WATER COLUMN
WCC	WATER COOLED CONDENSER
WFMD	WATER FLOW MEASURING DEVICE
WH	WATER HEATER
WLR	WATER LOOP RETURN
WLS	WATER LOOP SUPPLY
WP	WEATHERPROOF
WT	WEIGHT

SHEET INDEX

M0.1	MECHANICAL SYMBOLS, ABBREVIATIONS & NOTES
M0.2	TITLE 24 COMPLIANCE
M0.3	TITLE 24 COMPLIANCE
M0.4	TITLE 24 COMPLIANCE
M0.5	TITLE 24 COMPLIANCE
M0.6	TITLE 24 COMPLIANCE
M1.1	OVERALL MECHANICAL SITE PLAN
M1.1C	BUILDING C - MECHANICAL FLOOR PLAN
M1.1E	BUILDING E - MECHANICAL FLOOR PLAN
M2.1B	BUILDING B - MECHANICAL ROOF PLAN
M2.1C	BUILDING C - MECHANICAL ROOF PLAN
M2.1E	BUILDING E - MECHANICAL ROOF PLAN
M5.1	CONTROLS DIAGRAMS
M5.2	CONTROLS DIAGRAMS
M7.1	MECHANICAL DETAILS
M7.2	MECHANICAL DETAILS
M7.3	MECHANICAL DETAILS
M7.4	MECHANICAL DETAILS
M8.1	MECHANICAL SCHEDULES
MP1.1	MECHANICAL PLUMBING SITE PLAN

MECHANICAL MANDATORY MEASURES

EQUIPMENT AND SYSTEMS EFFICIENCY

ANY APPLIANCE FOR WHICH THERE IS A CALIFORNIA STADARD ESTABLISHED IN THE APPLIANCE EFFICIENCY STANDARDS SHALL COMPLY WITH THAT STANDARD.

PIPING, EXCEPT THOSE CONVEYING FLUIDS WITH A DESIGN OPERATING TERMPERATURE BETWEEN 60°F AND 105°F, OR WITHIN SPACE-CONDITIONING EQUIPMENT CERTIFIED UNDER, §110.1 OR §110.2, SHALL BE INSULATED IN ACCORDANCE WITH §120.3.

ALL AIR DISTRIBUTION SYSTEM DUCTS AND PLENUMS ARE REQUIRED TO BE INSTALLED, SEALED, AND INSULATED IN ACCORDANCE WITH THE CALIFORNIA MECHANICAL CODE (CMC) SECTIONS 601, 602, 603, 604, 605, AND ANSI/SMACNA-006-2006 HVAC DUCT CONSTRUCTION STANDARDS METAL AND FLEXIBLE 3RD EDITION.

VENTILATION

CONTROLS SHALL BE PROVIDED TO ALLOW OUTSIDE AIR DAMPERS OR DEVICES TO BE OPERATED AT THE VENTILATION RATES AS SPECIFIED IN THESE PLANS.

ALL GRAVITY VENTILATING SYSTEMS SHALL BE PROVIDED WITH AUTOMATIC OR READILY ACCESSIBLE MANUALLY OPERATED DAMPERS IN ALL OPENINGS TO THE OUTSIDE.

AIR BALANCING: ALL SPACE CONDITIONING AND VENTILATION SYSTEMS SHALL BE BALANCED TO THE QUANTITIES SPECIFIED IN THESE PLANS, IN ACCORDANCE WITH THE ASSOCIATED AIR BALANCE COUNCIL (AABC) NATIONAL STANDARDS.

GRAVITY OR AUTOMATIC DAMPERS INTERLOCKED AND CLOSED ON FAN SHUTDOWN SHALL BE PROVIDED ON THE OUTSIDE AIR INTAKES AND DISCHARGES OF ALL SPACE CONDITIONING AND EXHAUST SYSTEMS.

FANS USED FOR VENTIALATION SHALL OPERATE CONTINUOUSLY DURING OCCUPIED HOURS.

THE MINIMUM OUTDOOR AIR LISTED OR THREE COMPLETE AIR CHANGES SHALL BE SUPPLIED TO THE ENTIRE BLDG. DURING THE ONE HOUR PERIOD IMMEDIATELY BEFORE THE BLDG. IS NORMALLY OCCUPIED.

CONTROLS

EACH SPACE CONDITIONING ZONE SHALL BE CONTROLLED BY AN INDIVIDUAL THERMOSTATIC CONTROL THAT RESPONDS TO THE SUPPLY OF HEATING AND COOLING ENERGY WITHIN THAT ZONE §120.2(a). WHEN USED TO CONTROL HEATING, THE THERMOSTATIC CONTROL MUST BE ADJUSTABLE UP TO 55°F OR LOWER. FOR COOLING, THE THERMOSTATIC CONTROL MUST BE ADJUSTABLE UP TO 85°F OR HIGHER. WHEN USED TO CONTROL BOTH HEATING AND COOLING, THE THERMOSTATIC THE CONTROL MUST BE ADJUSTABLE FROM 55°F TO 85°F AND ALSO PROVIDE A DEAD BAND OF AT LEAST 5°F WITHIN WHICH THE SUPPLY OF HEATING AND COOLING IS SHUT OFF OR REDUCED TO A MINIMUM.

EACH SPACE CONDITIONING SYSTEM SERVING BUILDING TYPES SUCH AS OFFICES AND MANUFACTURING FACILITIES (AND ALL OTHERS NOT EXPLICITLY EXEMPT FROM THE REQUIREMENTS OF SECTION 112 (D)) SHALL BE INSTALLED WITH AN AUTOMATIC TIME SWITCH WITH AN ACCESSIBLE MANUAL OVERRIDE THAT ALLOWS OPERATION OF THE SYSTEM DURING OFF-HOURS FOR UP TO 4 HOURS. THE TIME SWITCH SHALL BE CAPABLE OF PROFGRAMMING DIFFERENT SCHEDULES FOR WEEKDAYS OR WEEKENDS. INCORPORATE AN AUTOMATIC HOLIDAY "SHUTOFF" FEATURE THAT TURNS OFF ALL LOADS FOR AT LEAST 24 HOURS. THEN RESUMES THE NORMALLY SCHEDULED OPERATION, AND HAS PROGRAM BACKUP CAPABILITIES THAT PREVENT THE LOSS OF THE DEVICES PROGRAM AND TIME SETTING FOR AT LEAST 10 HOURS IF POWER IS INTERRUPTED.

SYSTEM WITH DDC TO THE §110.2(c) ARE ALSO REQUIRED TO HAVE AUTOMATIC DEMAND SHED CONTROLS.

EACH SPACE CONDITIONING SYSTEM MUST BE PROVIDED WITH CONTROLS THAT CAN AUTOMATICALLY SHUT OFF THE EQUIPMENT DURING UNOCCUPIED HOURS. WHEN SHUT DOWN, THE CONTROLS SHALL AUTOMATICALLY RESTART THE SYSTEM TO MAINTAIN A SETBACK HEATING THERMOSTAT SETPOINT. IF THE SYSTEM PROVIDES MECHANICAL HEATING AND SETPU COOLING THERMOSTAT SETPOINT, IF THE SYSTEM PROVIDES MECHANICAL COOLING.

THERMOSTATS SHALL HAVE NUMERIC SETPOINTS IN DEFREES FAHRENHEIT (F) AND ADJUSTABLE STOPS ACCESSIBLE ONLY BY AUTHORIZED PERSONNEL.

EQUIPMENT ANCHORAGE NOTE

MEP COMPONENT ANCHORAGE NOTE

ALL MECHANICAL, PLUMBING, AND ELECTRICAL COMPONENTS SHALL BE ANCHORED AND INSTALLED PER THE DETAILS ON THE DSA APPROVED CONSTRUCTION DOCUMENTS. THE FOLLOWING COMPONENTS SHALL BE ANCHORED OR BRACED TO MEET THE FORCE AND DISPLACEMENT REQUIREMENTS PRESCRIBED IN THE 2019 CBC, SECTIONS 1617A.1.18 THROUGH 1617A.1.26 AND ASCE 7-16 CHAPTERS 13, 26 AND 30.

1. ALL PERMANENT EQUIPMENT AND COMPONENTS.
2. TEMPORARY, MOVABLE OR MOBILE EQUIPMENT THAT IS PERMANENTLY ATTACHED (E.G. HARD WIRED) TO THE BUILDING UTILITY SERVICES SUCH AS ELECTRICITY, GAS OR WATER. "PERMANENTLY ATTACHED" SHALL INCLUDE ALL ELECTRICAL CONNECTIONS EXCEPT PLUGS FOR 110/220 VOLT RECEPTACLES HAVING A FLEXIBLE CABLE.
3. TEMPORARY, MOVABLE OR MOBILE EQUIPMENT WHICH IS HEAVIER THAN 400 POUNDS OR HAS A CENTER OF MASS LOCATED 4 FEET OR MORE ABOVE THE ADJACENT FLOOR OR ROOF LEVEL THAT DIRECTLY SUPPORT THE COMPONENT IS REQUIRED TO BE RESTRAINED IN A MANNER APPROVED BY DSA.

THE FOLLOWING MECHANICAL AND ELECTRICAL COMPONENTS SHALL BE POSITIVELY ATTACHED TO THE STRUCTURE BUT NEED NOT DEMONSTRATE DESIGN COMPLIANCE WITH THE REFERENCES NOTED ABOVE. THESE COMPONENTS SHALL HAVE FLEXIBLE CONNECTIONS PROVIDED BETWEEN THE COMPONENT AND ASSOCIATED DUCTWORK, PIPING, AND CONDUIT. FLEXIBLE CONNECTIONS MUST ALLOW MOVEMENT IN BOTH TRANSVERSE AND LONGITUDINAL DIRECTIONS:

A. COMPONENTS WEIGHING LESS THAN 400 POUNDS AND HAVING A CENTER OF MASS LOCATED 4 FEET OR LESS ABOVE THE ADJACENT FLOOR OR ROOF LEVEL THAT DIRECTLY SUPPORT THE COMPONENT.

B. COMPONENTS WEIGHING LESS THAN 20 POUNDS, OR IN THE CASE OF DISTRIBUTED SYSTEMS, LESS THAN 5 POUNDS PER FOOT, WHICH ARE SUSPENDED FROM A ROOF OR FLOOR OR HUNG FROM A WALL.

THE ANCHORAGE OF ALL MECHANICAL, ELECTRICAL AND PLUMBING COMPONENTS SHALL BE SUBJECT TO THE APPROVAL OF THE DESIGN PROFESSIONAL IN GENERAL RESPONSIBLE CHARGE OR STRUCTURAL ENGINEER DELEGATED RESPONSIBILITY AND ACCEPTANCE BY DSA. THE PROJECT INSPECTOR WILL VERIFY THAT ALL COMPONENTS AND EQUIPMENT HAVE BEEN ANCHORED IN ACCORDANCE WITH THE ABOVE REQUIREMENTS.

PIPING, DUCTWORK, AND ELECTRICAL DISTRIBUTION SYSTEM BRACING NOTE

PIPING, DUCTWORK, AND ELECTRICAL DISTRIBUTION SYSTEMS SHALL BE BRACED TO COMPLY WITH THE FORCES AND DISPLACEMENTS PRESCRIBED IN ASCE 7-16 SECTION 13.3 AS DEFINED IN ASCE 7-16 SECTIONS 13.6.5, 13.6.6, 13.6.7, 13.6.8; AND 2019 CBC, SECTIONS 1617A.1.24, 1617A.1.25 AND 1617A.1.26.

THE METHOD OF SHOWING BRACING AND ATTACHMENTS TO THE STRUCTURE FOR THE IDENTIFIED DISTRIBUTION SYSTEM ARE AS NOTED BELOW. WHEN BRACING AND ATTACHMENTS ARE BASED ON A PRE-APPROVED INSTALLATION GUIDE (E.G., OSHPD OPM FOR 2019 CBC OR LATER), COPIES OF THE BRACING SYSTEM INSTALLATION GUIDE OR MANUAL SHALL BE AVAILABLE ON THE JOBSITE PRIOR TO THE START OF AND DURING THE HANGING AND BRACING OF THE DISTRIBUTION SYSTEMS. THE STRUCTURAL ENGINEER OF RECORD SHALL VERIFY THE ADEQUACY OF THE STRUCTURE TO SUPPORT THE HANGER AND BRACE LOADS.

MECHANICAL PIPING (MP), MECHANICAL DUCTS (MD), PLUMBING PIPING (PP), ELECTRICAL DISTRIBUTION SYSTEMS (E):

MP☒ MD☒ PP☐ E☐ OPTION 1: DETAILED ON THE APPROVED DRAWINGS WITH PROJECT SPECIFIC NOTES AND DETAILS.

MP☐ MD☐ PP☐ E☐ OPTION 2: SHALL COMPLY WITH THE APPLICABLE OSHPD PRE-APPROVAL (OPM# #0043-13.

ACCEPTANCE TESTING

MANDATORY ACCEPTANCE TESTING PER TITLE 24, PART 6 SHALL BE AS FOLLOWS:
AN AABC AGENCY SHALL ACT AS THE ACCEPTANCE AGENT AND PERFORM WORK REQUIRED IN THE FOLLOWING ACCEPTANCE TESTS AS DESCRIBED IN CHAPTER 13 OF THE 2019 NONRESIDENTIAL COMPLIANCE MANUAL. THIS SHALL INCLUDE FILLING OUT, SIGNING, AND SUBMITTING APPLICABLE FORMS LISTED HEREIN.

NRCA-MCH-02-A – OUTDOOR AIR ACCEPTANCE
NRCA-MCH-03-A – CONSTANT VOLUME, SINGLE ZONE, UNITARY AIR CONDITIONER AND HEAT PUMP SYSTEMS.
NRCA-MCH-04-A – AIR DISTRIBUTION SYSTEMS ACCEPTANCE
NRCA-MCH-05-A – AIR ECONOMIZER CONTROLS ACCEPTANCE
NRCA-MCH-06-A – DEMAND CONTROL VENTILATION SYSTEMS ACCEPTANCE
NRCA-MCH-07-A – SUPPLY FAN VFD ACCEPTANCE
NRCA-MCH-08-A – VALVE LEAKAGE TEST
NRCA-MCH-11-A – AUTOMATIC DEMAND SHED CONTROL ACCEPTANCE
NRCA-MCH-12-A – FAULT DETECTION & DIAGNOSITCS (FDD) FOR PACKAGED DIRECT EXPANSION UNITS
NRCA-MCH-13-A – AUTOMATIC FAULT DETECTION & DIAGNOSITCS (FDD) FOR AIR HANDLING UNITS & ZONE TERMINAL UNITS ACCEPTANCE
NRCA-MCH-16-A – SUPPLY AIR TEMPERATURE RESET CONTROLS ACCEPTANCE
NRCA-MCH-18-A – ENERGY MANAGEMENT CONTROL SYSTEM ACCEPTANCE

GENERAL SYMBOLS

	POINT OF DISCONNECT - DEMOLITION REMOVED FROM EXISTING
	POINT OF CONNECTION - NEW CONNECTS TO EXISTING
	AREA NOT IN CONTRACT

GENERAL NOTES

1. THE MECHANICAL CONTRACTOR SHALL BE RESPONSIBLE FOR FIELD VERIFYING, PRIOR TO FINAL BID, ALL EXISTING CONDITIONS FOR PLUMBING AND MECHANICAL SYSTEMS.
2. WHERE FLOOR DRAINS OCCUR WITHIN THE LIMITS OF CONSTRUCTION, PREVENT CONSTRUCTION DEBRIS FROM ENTERING DRAIN BODY BY SEALING DRAIN OPENING PRIOR TO START OF WORK. UNSEAL DRAINS AT COMPLETION OF CONSTRUCTION.
3. COORDINATE INSTALLATION OF PIPING, DUCTWORK, CONDUIT, LIGHTS, CABLE TRAY, STRUCTURE, AND EQUIPMENT TO PREVENT CONFLICTS.
4. THE CONTRACTOR SHALL BE FAMILIAR WITH ALL THE CONDITIONS BOTH EXISTING AND THOSE ILLUSTRATED BY THESE DOCUMENTS AS WELL AS THOSE WHICH CAN BE REASONABLY ANTICIPATED INCLUDING, BUT NOT LIMITED TO ARCHITECTURAL, ELECTRICAL, VENTILATION, PLUMBING, AND OTHER SYSTEMS INVOLVED ON THIS PROJECT.
5. FINAL PRODUCT SHALL BE A COMPLETE AND FUNCTIONING SYSTEM, AND SHALL CONFORM TO ALL REQUIREMENTS OF APPLICABLE FEDERAL, STATE, AND LOCAL CODES, INCLUDING BUT NOT LIMITED TO THE INTERNATIONAL BUILDING CODE AND INTERNATIONAL MECHANICAL CODE.
6. INSTALL ALL EQUIPMENT IN ACCORDANCE WITH THE RESPECTIVE MANUFACTURER'S WRITTEN INSTALLATION INSTRUCTIONS, AT A LEVEL OF QUALITY AND WORKMANSHIP CONSISTENT WITH THE SPECIFICATIONS.
7. FOR DETAILS, EQUIPMENT CONNECTIONS, AND PIPE SIZES NOT SHOWN ON THE SEGMENTS, REFER TO DETAILS, SCHEDULES, AND SPECIFICATIONS.
8. LOCATIONS OF PIPING, DUCTWORK AND EQUIPMENT AS INDICATED ON THE DRAWING, ARE APPROXIMATE AND SUBJECT TO MINOR ADJUSTMENTS IN THE FIELD. WORK SHALL BE COORDINATED WITH ALL OTHER TRADES TO AVOID INTERFERENCE IN THE FIELD.
9. REFER TO MECHANICAL SERIES DRAWINGS FOR GAS AND A.C. CONDENSATE DRAIN PIPING.
10. ADJUST PIPING AND DUCTWORK SIZES TO PROPERLY CONNECT TO MECHANICAL EQUIPMENT.

GENERAL HVAC NOTES

1. CONDENSATE DRAINS SHALL BE SUPPLIED FOR ALL COOLING EQUIPMENT. CONTRACTOR SHALL ENSURE PROPER INSTALLATION AND DRAINAGE AS REQUIRED BY FEDERAL, STATE, AND LOCAL CODES. CONDENSATE PIPING SHALL BE TYPE "L" COPPER.
2. ALL SUPPLY, RETURN, AND EXHAUST DUCTWORK SHALL BE RATED FOR PRESSURE CLASS OF 2" W.G. UNLESS NOTED OTHERWISE.
3. THIS CONTRACTOR SHALL BE REQUIRED TO REPLACE FILTERS ON HVAC EQUIPMENT AFTER ALL DUST PRODUCING CONSTRUCTION HAS BEEN COMPLETED AND PRIOR TO THE FINAL PUNCH.

HVAC SYMBOLS

SCHEMATIC	3D	DESCRIPTION
FEA	FEA	GAS FLUE EXHAUST AIR
EA	EA	GENERAL EXHAUST AIR
GEA	GEA	GREASE EXHAUST AIR
RELA	RELA	RELIEF AIR
SEA	SEA	SMOKE EXHAUST AIR
ERA	ERA	ENERGY RECOVERY AIR
RA	RA	RETURN AIR
TA	TA	TRANSFER AIR
CA	CA	COMBUSTION AIR
OA	OA	OUTSIDE AIR
SA	SA	SUPPLY AIR
		DIFFUSER (SUPPLY)
		GRILLE (RETURN)
		GRILLE (EXHAUST)
		WALL REGISTER
		LINEAR DIFFUSER (SLOT)
AFMS	AFMS	AIR FLOW MEASURING STATION
BDD	BDD	BACKDRAFT DAMPER
RD	RD	BAROMETRIC RELIEF DAMPER
DP	DP	DIFFERENTIAL PRESSURE SENSOR
DD	DD	DUCT DETECTOR
GD	GD	GRAVITY DAMPER
M	M	MOTORIZED DAMPER
PR	PR	PRESSURE REDUCING DAMPER
SB	SB	SECURITY BARS
SP	SP	STATIC PRESSURE SENSOR
VD	VD	VOLUME DAMPER
RVD	RVD	REMOTE VOLUME DAMPER
F	F	FIRE DAMPER
FS	FS	COMBINATION FIRE / SMOKE DAMPER
S	S	SMOKE DAMPER
		ROUND DUCT UP
		RECTANGULAR DUCT UP
		OVAL DUCT UP
		ROUND DUCT DOWN
		RECTANGULAR DUCT DOWN
		OVAL DUCT DOWN
		MITERED ELBOW WITH VANES
		MITERED ELBOW WITHOUT VANES
		RADIUSED ELBOW
		TEE WITH VANES
		RADIUSED TEE
		DUCT WITH INSULATION
		DUCT WITH LINING
		DUCT IS FABRIC
		FLEXIBLE DUCT
		TRANSFER DUCT
		DUCT SMOKE DETECTOR
		SUPPLY ARROW
		RETURN ARROW
		EXHAUST ARROW
UC / 100		DOOR UNDERCUT ARROW WITH CFM
D-1 / 12"x12" / 200 CFM		DIFFUSER, REGISTER OR GRILLE TAG / NECK SIZE (00"x00" - SQ / RECT) (0"ø ROUND) / AIR FLOW (CUBIC FEET PER MINUTE)
24"x12"		TYPICAL DUCT - SIZE AS INDICATED (WIDTH x DEPTH) SIZE INDICATED FREE AREA
DDC-xx		MECHANICAL EQUIPMENT TAG / MECHANICAL EQUIPMENT CLEARANCE
CO2		CARBON DIOXIDE SENSOR - WALL MOUNTED
CO2		CARBON DIOXIDE SENSOR - CEILING MOUNTED
CO		CARBON MONOXIDE SENSOR - WALL MOUNTED
CO		CARBON MONOXIDE SENSOR - CEILING MOUNTED
H		HUMIDISTAT - WALL MOUNTED
H		HUMIDISTAT - CEILING MOUNTED
NO2		NITROGEN DIOXIDE SENSOR - WALL MOUNTED
NO2		NITROGEN DIOXIDE SENSOR - CEILING MOUNTED
P		PRESSURE SENSOR - WALL MOUNTED
P		PRESSURE SENSOR - CEILING MOUNTED
T		TEMPERATURE SENSOR - WALL MOUNTED
T		TEMPERATURE SENSOR - CEILING MOUNTED
T / CO2		THERMOSTAT - WALL MOUNTED
T		THERMOSTAT - CEILING MOUNTED

PIPING VALVES AND FITTINGS

SCHEMATIC	3D	DESCRIPTION
		PIPE DROP
		PIPE RISE
		PIPE TEE DOWN
		PIPE TEE UP
		CONCENTRIC REDUCER
		ECCENTRIC REDUCER
		PIPE CAP
		PIPE ALIGNMENT GUIDE
		PIPE ANCHOR
		FLOW DIRECTION
		EXPANSION JOINT
		FLEXIBLE CONNECTION
		UNION
		DIRECTION OF PIPE PITCH
		AQUASTAT
		EXPANSION LOOP
		BALANCING VALVE
		BALANCING VALVE W/ METERING POINTS
		BALL VALVE
		BUTTERFLY VALVE
		CHECK VALVE
		STEAM TRAP
		GATE VALVE
		CIRCUIT SETTER
		MANUAL AIR VENT
		AUTOMATIC AIR VENT
		PLUG VALVE
		PRESSURE GAUGE
		SOLENOID VALVE
		ANGLE VALVE
		AUTOMATIC CONTROL VALVE 2-WAY
		AUTOMATIC CONTROL VALVE 3-WAY
		AUTOMATIC FLOW CONTROL VALVE
		STRAINER
		PRESSURE AND TEMPERATURE TEST PORT
		THERMOMETER
		PRESSURE REDUCING VALVE (WATER SYSTEMS) / PRESSURE REGULATING VALVE (GAS SYSTEMS)
		RELIEF VALVE
		FLOW MEASURING DEVICE
		BACKFLOW PREVENTER
		UNION

* NOTE *

ALL NOTES ON THIS SHEET ARE APPLICABLE TO ALL OTHER SHEETS IN THIS SET.

THE SYMBOLS AND ABBREVIATIONS SHOWN ON THIS SHEET MAY OR MAY NOT BE APPLICABLE IN THIS SET OF DRAWINGS.

DLR Group
© DLR Group

REGISTERED PROFESSIONAL ENGINEER
DING FANG TANG
No. M24391
Exp. 12/31/22
MECHANICAL
STATE OF CALIFORNIA

WSW

Merwin Elementary School
COVINA VALLEY USD
16125 CYPRESS ST, COVINA, CA 91722

100% CONSTRUCTION DOCUMENTS
11/04/2022
REVISIONS

75-22605-00

MECHANICAL SYMBOLS, ABBREVIATIONS & NOTES

M0.1

Autodesk Docs://75-22605-00 CVUSD - District Wide HVAC Replacement/75-22605-00_CVUSD_Merwin ES_MEP_2022.rvt
10/21/2022 4:25:00 PM

STATE OF CALIFORNIA
Mechanical Systems
NRCC-MCH-E — CALIFORNIA ENERGY COMMISSION

CERTIFICATE OF COMPLIANCE			NRCC-MCH-E
Project Name:	CVUSD Merwin	Report Page:	(Page 1 of 38)
Project Address:	16125 Cypress St	Date Prepared:	8/5/2022

This document is used to demonstrate compliance for mechanical systems that are within the scope of the permit application and are demonstrating compliance using the prescriptive path outlined in §140.4, or §141.0(b)2 for alterations.

A. GENERAL INFORMATION

01	Project Location (city)	Covina	04	Total Conditioned Floor Area	18660
02	Climate Zone	10	05	Total Unconditioned Floor Area	0
03	Occupancy Types Within Project:		06	# of Stories (Habitable Above Grade)	1
☐ Office (B)		☐ Retail (M)	☐ Non-refrigerated Warehouse (S)		
☐ Hotel/ Motel Guest Rooms (R-1)		☐ School (E)	☐ Healthcare Facility (I)		
☐ High-Rise Residential (R-2/R-3)		☐ Relocatable Class Bldg (E)	☒ Other (write in)		See Table J

B. PROJECT SCOPE

This table includes mechanical systems or components that are within the scope of the permit application and are demonstrating compliance using the prescriptive path outlined in §140.4, or §141.0(b)2 for alterations.

01	02	03
Air System(s)	Wet System Components	Dry System Components
☒ Heating Air System	☐ Water Economizer	☐ Air Economizer
☒ Cooling Air System	☐ Pumps	☐ Electric Resistance Heat
Mechanical Controls	☐ System Piping	☒ Fan Systems
☒ Mechanical Controls (existing to remain, altered or new)	☐ Cooling Towers	☒ Ductwork (existing to remain, altered or new)
	☐ Chillers	☒ Ventilation
	☐ Boilers	☐ Zonal Systems/ Terminal Boxes

Registration Number: | Registration Date/Time: | Registration Provider: Energysoft
CA Building Energy Efficiency Standards - 2019 Nonresidential Compliance | Report Version: 2019.1.003 Schema Version: rev 20200601 | Report Generated: 2022-08-05 13:08:17

STATE OF CALIFORNIA
Mechanical Systems
NRCC-MCH-E — CALIFORNIA ENERGY COMMISSION

CERTIFICATE OF COMPLIANCE			NRCC-MCH-E
Project Name:	CVUSD Merwin	Report Page:	(Page 2 of 38)
Project Address:	16125 Cypress St	Date Prepared:	8/5/2022

C. COMPLIANCE RESULTS

Table C will indicate if the project data input into the compliance document is compliant with mechanical requirements. This table is not editable by the user. If this table says "DOES NOT COMPLY" or "COMPLIES with Exceptional Conditions" refer to Table D., or the table indicated as not compliant for guidance.

01		02		03		04		05		06		07		08	09
System Summary §110.1, §110.2, §140.4	AND	Pumps §140.4(k)	AND	Fans/ Economizers §140.4(c), §140.4(e)	AND	System Controls §110.2, §120.2, §140.4(f)	AND	Ventilation §120.1	AND	Terminal Box Controls §140.4(d)	AND	Distribution §120.3, §140.4(l)	AND	Cooling Towers §110.2(e)2	Compliance Results
(See Table F)		(See Table G)		(See Table H)		(See Table I)		(See Table J)		(See Table K)		(See Table L)		(See Table M)	
Yes	AND		AND	Yes	AND	Yes	AND	Yes	AND		AND	Yes	AND		COMPLIES
Mandatory Measures Compliance (See Table Q for Details)										COMPLIES					

D. EXCEPTIONAL CONDITIONS
This table is auto-filled with uneditable comments because of selections made or data entered in tables throughout the form.

E. ADDITIONAL REMARKS
This table includes remarks made by the permit applicant to the Authority Having Jurisdiction.

Registration Number: | Registration Date/Time: | Registration Provider: Energysoft
CA Building Energy Efficiency Standards - 2019 Nonresidential Compliance | Report Version: 2019.1.003 Schema Version: rev 20200601 | Report Generated: 2022-08-05 13:08:17

STATE OF CALIFORNIA
Mechanical Systems
NRCC-MCH-E — CALIFORNIA ENERGY COMMISSION

CERTIFICATE OF COMPLIANCE			NRCC-MCH-E
Project Name:	CVUSD Merwin	Report Page:	(Page 3 of 38)
Project Address:	16125 Cypress St	Date Prepared:	8/5/2022

F. HVAC SYSTEM SUMMARY (DRY & WET SYSTEMS)

This table is used to demonstrate compliance for mechanical equipment with mandatory requirements found in §110.1 and §110.2(a) and prescriptive requirements found in §140.4(a), §140.4(b) and §140.4(k) or §141.0(b)2 for alterations.

Dry System Equipment Sizing (includes air conditioners, condensers, heat pumps, VRF, furnaces and unit heaters)

01	02	03	04	05	06	07	08	09	10	11
Name or Item Tag	Equipment Category per Tables 110.2	Equipment Type per Tables 110.2 / Title 20	Smallest Size Available[1] §140.4(a)	Equipment Sizing per Mechanical Schedule (kBtu/h) §140.4 (a&b)						
				Heating Output[2,3]			Cooling Output[2,3]		Load Calculations[3,4]	
				Per Design (kBtu/h)	Rated (kBtu/h)	Supp. Heating Output (kBtu/h)	Sensible Per Design (kBtu/h)	Rated (kBtu/h)	Total Heating Load (kBtu/h)	Total Sensible Cooling Load (kBtu/h)
FCU/CU-B1	Unitary Heat Pumps	Air-cooled, split (3 phase)	NA: Load Controls	94.83	160.55	0	140.07	118.37	196.44	161.35
RTU-C1	Unitary Heat Pumps	Air-cooled, pkg (3 phase)	NA: Load Controls	12.7	21.5	0	24.99	24.5	30.72	29.65
RTU-C2	Unitary Heat Pumps	Air-cooled, pkg (3 phase)	NA: Load Controls	12.7	21.5	0	24.98	24.5	29.9	28.31
RTU-C3	Unitary Heat Pumps	Air-cooled, pkg (3 phase)	NA: Load Controls	12.7	21.5	0	24.15	23.5	30.72	28.01
RTU-C4	Unitary Heat Pumps	Air-cooled, pkg (3 phase)	NA: Load Controls	13.29	22.5	0	24.51	24	31.84	28.84
RTU-C5	Unitary Heat Pumps	Air-cooled, pkg (3 phase)	NA: Load Controls	12.7	21.5	0	23.68	23.5	30.72	28.18
RTU-C6	Unitary Heat Pumps	Air-cooled, pkg (3 phase)	NA: Load Controls	13.29	22.5	0	23.57	23.5	31.8	27.9
RTU-C7	Unitary Heat Pumps	Air-cooled, pkg (3 phase)	NA: Load Controls	12.7	21.5	0	24.15	23.5	30.72	28.35
RTU-C8	Unitary Heat Pumps	Air-cooled, pkg (3 phase)	NA: Load Controls	13.29	22.5	0	24.15	23.5	31.84	28.39

Registration Number: | Registration Date/Time: | Registration Provider: Energysoft
CA Building Energy Efficiency Standards - 2019 Nonresidential Compliance | Report Version: 2019.1.003 Schema Version: rev 20200601 | Report Generated: 2022-08-05 13:08:17

STATE OF CALIFORNIA
Mechanical Systems
NRCC-MCH-E — CALIFORNIA ENERGY COMMISSION

CERTIFICATE OF COMPLIANCE			NRCC-MCH-E
Project Name:	CVUSD Merwin	Report Page:	(Page 4 of 38)
Project Address:	16125 Cypress St	Date Prepared:	8/5/2022

F. HVAC SYSTEM SUMMARY (DRY & WET SYSTEMS)

Dry System Equipment Sizing (includes air conditioners, condensers, heat pumps, VRF, furnaces and unit heaters)

01	02	03	04	05	06	07	08	09	10	11
RTU-E1	Unitary Heat Pumps	Air-cooled, pkg (3 phase)	NA: Load Controls	12.7	21.5	0	23.33	22.75	30.72	27.52
RTU-E2	Unitary Heat Pumps	Air-cooled, pkg (3 phase)	NA: Load Controls	12.4	21	0	24.04	23.5	29.9	28.31
RTU-E3	Unitary Heat Pumps	Air-cooled, pkg (3 phase)	NA: Load Controls	12.7	21.5	0	24.15	23.5	30.72	28.01
RTU-E4	Unitary Heat Pumps	Air-cooled, pkg (3 phase)	NA: Load Controls	13.29	22.5	0	24.51	24	31.84	28.84
RTU-E5	Unitary Heat Pumps	Air-cooled, pkg (3 phase)	NA: Load Controls	13.29	22.5	0	24.04	23.5	31.8	28.39
RTU-E6	Unitary Heat Pumps	Air-cooled, pkg (3 phase)	NA: Load Controls	12.7	21.5	0	24.51	24	30.72	28.75
RTU-E7	Unitary Heat Pumps	Air-cooled, pkg (3 phase)	NA: Load Controls	13.29	22.5	0	24.04	23.5	31.84	28.46
RTU-E8	Unitary Heat Pumps	Air-cooled, pkg (3 phase)	NA: Load Controls	12.7	21.5	0	24.51	24	30.72	28.81

[1] *FOOTNOTES: Equipment shall be the smallest size, within the available options of the desired equipment line, necessary to meet the design heating and cooling loads of the building per §140.4(a). Healthcare facilities are excepted.*
[2] *It is common practice to show rated output capacity on the equipment schedule. Sensible cooling output comes from specification sheet tables.*
[3] *If equipment is heating only, leave cooling output and load blank. If equipment is cooling only, leave heating output and load blank.*
[4] *Authority Having Jurisdiction may ask for load calculations used for compliance per §140.4(b).*

Registration Number: | Registration Date/Time: | Registration Provider: Energysoft
CA Building Energy Efficiency Standards - 2019 Nonresidential Compliance | Report Version: 2019.1.003 Schema Version: rev 20200601 | Report Generated: 2022-08-05 13:08:17

STATE OF CALIFORNIA
Mechanical Systems
NRCC-MCH-E — CALIFORNIA ENERGY COMMISSION

CERTIFICATE OF COMPLIANCE			NRCC-MCH-E
Project Name:	CVUSD Merwin	Report Page:	(Page 5 of 38)
Project Address:	16125 Cypress St	Date Prepared:	8/5/2022

F. HVAC SYSTEM SUMMARY (DRY & WET SYSTEMS)

Dry System Equipment Efficiency (other than Package Terminal Air Conditioners (PTAC) and Package Terminal Heat Pumps (PTHP))

01	02	03	04	05	06	07	08	09
Name or Item Tag	Size Category (Btu/h)	Heating Mode				Cooling Mode		
		Rating Condition (°F)	Efficiency Unit	Minimum Efficiency Required per Tables 110.2 / Title 20	Design Efficiency	Efficiency Unit	Minimum Efficiency Required per Tables 110.2 / Title 20	Design Efficiency
FCU/CU-B1	>=135,000 and <240,000		COP	3.2	3.5	EER IEER	10.6 11.6	12 12.9
RTU-C1	<65,000		HSPF	7.7	8.2	SEER	13.0	14.3
RTU-C2	<65,000		HSPF	7.7	8.2	SEER	13.0	14.3
RTU-C3	<65,000		HSPF	7.7	8.2	SEER	13.0	14.3
RTU-C4	<65,000		HSPF	7.7	8.2	SEER	13.0	14.3
RTU-C5	<65,000		HSPF	7.7	8.2	SEER	13.0	14.3
RTU-C6	<65,000		HSPF	7.7	8.2	SEER	13.0	14.3
RTU-C7	<65,000		HSPF	7.7	8.2	SEER	13.0	14.3
RTU-C8	<65,000		HSPF	7.7	8.2	SEER	13.0	14.3
RTU-E1	<65,000		HSPF	7.7	8.2	SEER	13.0	14.3
RTU-E2	<65,000		HSPF	7.7	8.2	SEER	13.0	14.3
RTU-E3	<65,000		HSPF	7.7	8.2	SEER	13.0	14.3
RTU-E4	<65,000		HSPF	7.7	8.2	SEER	13.0	14.3
RTU-E5	<65,000		HSPF	7.7	8.2	SEER	13.0	14.3
RTU-E6	<65,000		HSPF	7.7	8.2	SEER	13.0	14.3
RTU-E7	<65,000		HSPF	7.7	8.2	SEER	13.0	14.3
RTU-E8	<65,000		HSPF	7.7	8.2	SEER	13.0	14.3

G. PUMPS
This section does not apply to this project.

Registration Number: | Registration Date/Time: | Registration Provider: Energysoft
CA Building Energy Efficiency Standards - 2019 Nonresidential Compliance | Report Version: 2019.1.003 Schema Version: rev 20200601 | Report Generated: 2022-08-05 13:08:17

STATE OF CALIFORNIA
Mechanical Systems
NRCC-MCH-E — CALIFORNIA ENERGY COMMISSION

CERTIFICATE OF COMPLIANCE			NRCC-MCH-E
Project Name:	CVUSD Merwin	Report Page:	(Page 6 of 38)
Project Address:	16125 Cypress St	Date Prepared:	8/5/2022

H. FAN SYSTEMS & AIR ECONOMIZERS

This table is used to demonstrate compliance with prescriptive requirements found in §140.4(c), §140.4(e) and §140.4(m) for fan systems. Fan systems serving only process loads are exempt from these requirements and do not need to be included in Table H.

System Name:	FCU/CU-B1	Economizer:[1]	NA: Special OA filtration	Economizer Controls:	Designed per §140.4(e) and (m)	System Fan Type:	Constant Volume
01	02	03	04	05	06	07	08
Fan Name or Item Tag	Fan Function	Qty	Maximum Design Supply Airflow (CFM)	HP Unit[2]	Design HP	Fan Power Pressure Drop Adjustment - Table 140.4-B	
						Device	Design Airflow through Device (CFM)
SF	Supply	1	4472	BHP	2.35	NA	NA
Total System Design Supply Airflow (CFM):			4472	Total System Design (B)HP:	2.35	Maximum System Fan Power (B)HP:	

System Name:	RTU-C1	Economizer:[1]	NA: <=54 kBtu/h cooling	Economizer Controls:	Designed per §140.4(e) and (m)	System Fan Type:	Constant Volume
01	02	03	04	05	06	07	08
Fan Name or Item Tag	Fan Function	Qty	Maximum Design Supply Airflow (CFM)	HP Unit[2]	Design HP	Fan Power Pressure Drop Adjustment - Table 140.4-B	
						Device	Design Airflow through Device (CFM)
SF	Supply	1	1600	BHP	0.95	NA	NA
Total System Design Supply Airflow (CFM):			1600	Total System Design (B)HP:	0.95	Maximum System Fan Power (B)HP:	

System Name:	RTU-C2	Economizer:[1]	NA: <=54 kBtu/h cooling	Economizer Controls:	Designed per §140.4(e) and (m)	System Fan Type:	Constant Volume
01	02	03	04	05	06	07	08
Fan Name or Item Tag	Fan Function	Qty	Maximum Design Supply Airflow (CFM)	HP Unit[2]	Design HP	Fan Power Pressure Drop Adjustment - Table 140.4-B	
						Device	Design Airflow through Device (CFM)
SF	Supply	1	1600	BHP	0.95	NA	NA
Total System Design Supply Airflow (CFM):			1600	Total System Design (B)HP:	0.95	Maximum System Fan Power (B)HP:	

Registration Number: | Registration Date/Time: | Registration Provider: Energysoft
CA Building Energy Efficiency Standards - 2019 Nonresidential Compliance | Report Version: 2019.1.003 Schema Version: rev 20200601 | Report Generated: 2022-08-05 13:08:17

STATE OF CALIFORNIA
Mechanical Systems
NRCC-MCH-E — CALIFORNIA ENERGY COMMISSION

CERTIFICATE OF COMPLIANCE			NRCC-MCH-E
Project Name:	CVUSD Merwin	Report Page:	(Page 7 of 38)
Project Address:	16125 Cypress St	Date Prepared:	8/5/2022

H. FAN SYSTEMS & AIR ECONOMIZERS

System Name:	RTU-C3	Economizer:[1]	NA: <=54 kBtu/h cooling	Economizer Controls:	Designed per §140.4(e) and (m)	System Fan Type:	Constant Volume
01	02	03	04	05	06	07	08
Fan Name or Item Tag	Fan Function	Qty	Maximum Design Supply Airflow (CFM)	HP Unit[2]	Design HP	Fan Power Pressure Drop Adjustment - Table 140.4-B	
						Device	Design Airflow through Device (CFM)
SF	Supply	1	1600	BHP	0.95	NA	NA
Total System Design Supply Airflow (CFM):			1600	Total System Design (B)HP:	0.95	Maximum System Fan Power (B)HP:	

System Name:	RTU-C4	Economizer:[1]	NA: <=54 kBtu/h cooling	Economizer Controls:	Designed per §140.4(e) and (m)	System Fan Type:	Constant Volume
01	02	03	04	05	06	07	08
Fan Name or Item Tag	Fan Function	Qty	Maximum Design Supply Airflow (CFM)	HP Unit[2]	Design HP	Fan Power Pressure Drop Adjustment - Table 140.4-B	
						Device	Design Airflow through Device (CFM)
SF	Supply	1	1600	BHP	0.95	NA	NA
Total System Design Supply Airflow (CFM):			1600	Total System Design (B)HP:	0.95	Maximum System Fan Power (B)HP:	

System Name:	RTU-C5	Economizer:[1]	NA: <=54 kBtu/h cooling	Economizer Controls:	Designed per §140.4(e) and (m)	System Fan Type:	Constant Volume
01	02	03	04	05	06	07	08
Fan Name or Item Tag	Fan Function	Qty	Maximum Design Supply Airflow (CFM)	HP Unit[2]	Design HP	Fan Power Pressure Drop Adjustment - Table 140.4-B	
						Device	Design Airflow through Device (CFM)
SF	Supply	1	1600	BHP	0.95	NA	NA
Total System Design Supply Airflow (CFM):			1600	Total System Design (B)HP:	0.95	Maximum System Fan Power (B)HP:	

Registration Number: | Registration Date/Time: | Registration Provider: Energysoft
CA Building Energy Efficiency Standards - 2019 Nonresidential Compliance | Report Version: 2019.1.003 Schema Version: rev 20200601 | Report Generated: 2022-08-05 13:08:17

STATE OF CALIFORNIA
Mechanical Systems
NRCC-MCH-E — CALIFORNIA ENERGY COMMISSION

CERTIFICATE OF COMPLIANCE			NRCC-MCH-E
Project Name:	CVUSD Merwin	Report Page:	(Page 8 of 38)
Project Address:	16125 Cypress St	Date Prepared:	8/5/2022

H. FAN SYSTEMS & AIR ECONOMIZERS

System Name:	RTU-C6	Economizer:[1]	NA: <=54 kBtu/h cooling	Economizer Controls:	Designed per §140.4(e) and (m)	System Fan Type:	Constant Volume
01	02	03	04	05	06	07	08
Fan Name or Item Tag	Fan Function	Qty	Maximum Design Supply Airflow (CFM)	HP Unit[2]	Design HP	Fan Power Pressure Drop Adjustment - Table 140.4-B	
						Device	Design Airflow through Device (CFM)
SF	Supply	1	1600	BHP	0.95	NA	NA
Total System Design Supply Airflow (CFM):			1600	Total System Design (B)HP:	0.95	Maximum System Fan Power (B)HP:	

System Name:	RTU-C7	Economizer:[1]	NA: <=54 kBtu/h cooling	Economizer Controls:	Designed per §140.4(e) and (m)	System Fan Type:	Constant Volume
01	02	03	04	05	06	07	08
Fan Name or Item Tag	Fan Function	Qty	Maximum Design Supply Airflow (CFM)	HP Unit[2]	Design HP	Fan Power Pressure Drop Adjustment - Table 140.4-B	
						Device	Design Airflow through Device (CFM)
SF	Supply	1	1600	BHP	0.95	NA	NA
Total System Design Supply Airflow (CFM):			1600	Total System Design (B)HP:	0.95	Maximum System Fan Power (B)HP:	

System Name:	RTU-C8	Economizer:[1]	NA: <=54 kBtu/h cooling	Economizer Controls:	Designed per §140.4(e) and (m)	System Fan Type:	Constant Volume
01	02	03	04	05	06	07	08
Fan Name or Item Tag	Fan Function	Qty	Maximum Design Supply Airflow (CFM)	HP Unit[2]	Design HP	Fan Power Pressure Drop Adjustment - Table 140.4-B	
						Device	Design Airflow through Device (CFM)
SF	Supply	1	1600	BHP	0.95	NA	NA
Total System Design Supply Airflow (CFM):			1600	Total System Design (B)HP:	0.95	Maximum System Fan Power (B)HP:	

Registration Number: | Registration Date/Time: | Registration Provider: Energysoft
CA Building Energy Efficiency Standards - 2019 Nonresidential Compliance | Report Version: 2019.1.003 Schema Version: rev 20200601 | Report Generated: 2022-08-05 13:08:17

STATE OF CALIFORNIA
Mechanical Systems
NRCC-MCH-E — CALIFORNIA ENERGY COMMISSION

CERTIFICATE OF COMPLIANCE			NRCC-MCH-E
Project Name:	CVUSD Merwin	Report Page:	(Page 9 of 38)
Project Address:	16125 Cypress St	Date Prepared:	8/5/2022

H. FAN SYSTEMS & AIR ECONOMIZERS

System Name:	RTU-E1	Economizer:[1]	NA: <=54 kBtu/h cooling	Economizer Controls:	Designed per §140.4(e) and (m)	System Fan Type:	Constant Volume
01	02	03	04	05	06	07	08
Fan Name or Item Tag	Fan Function	Qty	Maximum Design Supply Airflow (CFM)	HP Unit[2]	Design HP	Fan Power Pressure Drop Adjustment - Table 140.4-B	
						Device	Design Airflow through Device (CFM)
SF	Supply	1	1600	BHP	0.95	NA	NA
Total System Design Supply Airflow (CFM):			1600	Total System Design (B)HP:	0.95	Maximum System Fan Power (B)HP:	

System Name:	RTU-E2	Economizer:[1]	NA: <=54 kBtu/h cooling	Economizer Controls:	Designed per §140.4(e) and (m)	System Fan Type:	Constant Volume
01	02	03	04	05	06	07	08
Fan Name or Item Tag	Fan Function	Qty	Maximum Design Supply Airflow (CFM)	HP Unit[2]	Design HP	Fan Power Pressure Drop Adjustment - Table 140.4-B	
						Device	Design Airflow through Device (CFM)
SF	Supply	1	1600	BHP	0.95	NA	NA
Total System Design Supply Airflow (CFM):			1600	Total System Design (B)HP:	0.95	Maximum System Fan Power (B)HP:	

System Name:	RTU-E3	Economizer:[1]	NA: <=54 kBtu/h cooling	Economizer Controls:	Designed per §140.4(e) and (m)	System Fan Type:	Constant Volume
01	02	03	04	05	06	07	08
Fan Name or Item Tag	Fan Function	Qty	Maximum Design Supply Airflow (CFM)	HP Unit[2]	Design HP	Fan Power Pressure Drop Adjustment - Table 140.4-B	
						Device	Design Airflow through Device (CFM)
SF	Supply	1	1600	BHP	0.95	NA	NA
Total System Design Supply Airflow (CFM):			1600	Total System Design (B)HP:	0.95	Maximum System Fan Power (B)HP:	

Registration Number: | Registration Date/Time: | Registration Provider: Energysoft
CA Building Energy Efficiency Standards - 2019 Nonresidential Compliance | Report Version: 2019.1.003 Schema Version: rev 20200601 | Report Generated: 2022-08-05 13:08:17

DLR Group
© DLR Group

REGISTERED PROFESSIONAL ENGINEER — No. M24391 — 12/31/22 — MECHANICAL — STATE OF CALIFORNIA

WSW

Merwin Elementary School
COVINA VALLEY USD
16125 CYPRESS ST, COVINA, CA 91722

100% CONSTRUCTION DOCUMENTS
11/04/2022
REVISIONS

75-22605-00

TITLE 24 COMPLIANCE

M0.2

Autodesk Docs://75-22605-00 CVUSD - District Wide HVAC Replacement/75-22605-00_CVUSD_Merwin ES_MEP_2022.rvt
10/21/2022 4:25:00 PM

STATE OF CALIFORNIA
Mechanical Systems
NRCC-MCH-E — CALIFORNIA ENERGY COMMISSION

CERTIFICATE OF COMPLIANCE			**NRCC-MCH-E**
Project Name:	CVUSD Merwin	**Report Page:**	**(Page 10 of 38)**
Project Address:	16125 Cypress St	**Date Prepared:**	8/5/2022

H. FAN SYSTEMS & AIR ECONOMIZERS

System Name:	RTU-E4	**Economizer:**[1]	NA: <=54 kBtu/h cooling	**Economizer Controls:**	Designed per §140.4(e) and (m)	**System Fan Type:**	Constant Volume
01	02	03	04	05	06	07	08
Fan Name or Item Tag	Fan Function	Qty	Maximum Design Supply Airflow (CFM)	HP Unit[2]	Design HP	Fan Power Pressure Drop Adjustment - Table 140.4-B: Device	Fan Power Pressure Drop Adjustment - Table 140.4-B: Design Airflow through Device (CFM)
SF	Supply	1	1600	BHP	0.95	N/A	N/A
Total System Design Supply Airflow (CFM):			1600	Total System Design (B)HP:	0.95	**Maximum System Fan Power (B)HP:**	

System Name:	RTU-E5	**Economizer:**[1]	NA: <=54 kBtu/h cooling	**Economizer Controls:**	Designed per §140.4(e) and (m)	**System Fan Type:**	Constant Volume
01	02	03	04	05	06	07	08
Fan Name or Item Tag	Fan Function	Qty	Maximum Design Supply Airflow (CFM)	HP Unit[2]	Design HP	Fan Power Pressure Drop Adjustment - Table 140.4-B: Device	Fan Power Pressure Drop Adjustment - Table 140.4-B: Design Airflow through Device (CFM)
SF	Supply	1	1600	BHP	0.95	N/A	N/A
Total System Design Supply Airflow (CFM):			1600	Total System Design (B)HP:	0.95	**Maximum System Fan Power (B)HP:**	

System Name:	RTU-E6	**Economizer:**[1]	NA: <=54 kBtu/h cooling	**Economizer Controls:**	Designed per §140.4(e) and (m)	**System Fan Type:**	Constant Volume
01	02	03	04	05	06	07	08
Fan Name or Item Tag	Fan Function	Qty	Maximum Design Supply Airflow (CFM)	HP Unit[2]	Design HP	Fan Power Pressure Drop Adjustment - Table 140.4-B: Device	Fan Power Pressure Drop Adjustment - Table 140.4-B: Design Airflow through Device (CFM)
SF	Supply	1	1600	BHP	0.95	N/A	N/A
Total System Design Supply Airflow (CFM):			1600	Total System Design (B)HP:	0.95	**Maximum System Fan Power (B)HP:**	

Registration Number: | Registration Date/Time: | Registration Provider: Energysoft

CA Building Energy Efficiency Standards - 2019 Nonresidential Compliance | Report Version: 2019.1.003 Schema Version: rev 20200601 | Report Generated: 2022-08-05 13:08:17

STATE OF CALIFORNIA
Mechanical Systems
NRCC-MCH-E — CALIFORNIA ENERGY COMMISSION

CERTIFICATE OF COMPLIANCE			**NRCC-MCH-E**
Project Name:	CVUSD Merwin	**Report Page:**	**(Page 11 of 38)**
Project Address:	16125 Cypress St	**Date Prepared:**	8/5/2022

H. FAN SYSTEMS & AIR ECONOMIZERS

System Name:	RTU-E7	**Economizer:**[1]	NA: <=54 kBtu/h cooling	**Economizer Controls:**	Designed per §140.4(e) and (m)	**System Fan Type:**	Constant Volume
01	02	03	04	05	06	07	08
Fan Name or Item Tag	Fan Function	Qty	Maximum Design Supply Airflow (CFM)	HP Unit[2]	Design HP	Fan Power Pressure Drop Adjustment - Table 140.4-B: Device	Fan Power Pressure Drop Adjustment - Table 140.4-B: Design Airflow through Device (CFM)
SF	Supply	1	1600	BHP	0.95	N/A	N/A
Total System Design Supply Airflow (CFM):			1600	Total System Design (B)HP:	0.95	**Maximum System Fan Power (B)HP:**	

System Name:	RTU-E8	**Economizer:**[1]	NA: <=54 kBtu/h cooling	**Economizer Controls:**	Designed per §140.4(e) and (m)	**System Fan Type:**	Constant Volume
01	02	03	04	05	06	07	08
Fan Name or Item Tag	Fan Function	Qty	Maximum Design Supply Airflow (CFM)	HP Unit[2]	Design HP	Fan Power Pressure Drop Adjustment - Table 140.4-B: Device	Fan Power Pressure Drop Adjustment - Table 140.4-B: Design Airflow through Device (CFM)
SF	Supply	1	1600	BHP	0.95	N/A	N/A
Total System Design Supply Airflow (CFM):			1600	Total System Design (B)HP:	0.95	**Maximum System Fan Power (B)HP:**	

[1] FOOTNOTES: Computer room economizers must meet requirements of §140.9(a) and will be documented on the NRCC-PRC-E document.

[2] The unit used for HP must be consistent for all fans within a system.

Registration Number: | Registration Date/Time: | Registration Provider: Energysoft

CA Building Energy Efficiency Standards - 2019 Nonresidential Compliance | Report Version: 2019.1.003 Schema Version: rev 20200601 | Report Generated: 2022-08-05 13:08:17

STATE OF CALIFORNIA
Mechanical Systems
NRCC-MCH-E — CALIFORNIA ENERGY COMMISSION

CERTIFICATE OF COMPLIANCE			**NRCC-MCH-E**
Project Name:	CVUSD Merwin	**Report Page:**	**(Page 12 of 38)**
Project Address:	16125 Cypress St	**Date Prepared:**	8/5/2022

I. SYSTEM CONTROLS

This table is used to demonstrate compliance with mandatory controls in §110.2 and §120.2 and prescriptive controls in §140.4(f) and (n) or requirements in §141.0(b)2E for altered space conditioning systems.

01	02	03	04	05	06	07	08	09
System Name	System Zoning	Conditioned Floor Area Being Served (ft²)	Thermostats §110.2(b) & (c)[1], §120.2(a)or §141.0(b)2E	Shut-Off Controls §120.2(e)	Isolation Zone Controls §120.2(g)	Demand Response §110.12 and §120.2(b)	Supply Air Temp. Reset §140.4(f)	Window Interlocks per §140.4(n)
FCU/CU-B1	Single zone	<= 25,000 ft²	Setback	Auto Timer Switch	4 Hour Timer	EMCS	Included	Provided
RTU-C1	Single zone	<= 25,000 ft²	Setback	Auto Timer Switch	4 Hour Timer	EMCS	Included	Provided
RTU-C2	Single zone	<= 25,000 ft²	Setback	Auto Timer Switch	4 Hour Timer	EMCS	Included	Provided
RTU-C3	Single zone	<= 25,000 ft²	Setback	Auto Timer Switch	4 Hour Timer	EMCS	Included	Provided
RTU-C4	Single zone	<= 25,000 ft²	Setback	Auto Timer Switch	4 Hour Timer	EMCS	Included	Provided
RTU-C5	Single zone	<= 25,000 ft²	Setback	Auto Timer Switch	4 Hour Timer	EMCS	Included	Provided
RTU-C6	Single zone	<= 25,000 ft²	Setback	Auto Timer Switch	4 Hour Timer	EMCS	Included	Provided
RTU-C7	Single zone	<= 25,000 ft²	Setback	Auto Timer Switch	4 Hour Timer	EMCS	Included	Provided
RTU-C8	Single zone	<= 25,000 ft²	Setback	Auto Timer Switch	4 Hour Timer	EMCS	Included	Provided
RTU-E1	Single zone	<= 25,000 ft²	Setback	Auto Timer Switch	4 Hour Timer	EMCS	Included	Provided
RTU-E2	Single zone	<= 25,000 ft²	Setback	Auto Timer Switch	4 Hour Timer	EMCS	Included	Provided
RTU-E3	Single zone	<= 25,000 ft²	Setback	Auto Timer Switch	4 Hour Timer	EMCS	Included	Provided

Registration Number: | Registration Date/Time: | Registration Provider: Energysoft

CA Building Energy Efficiency Standards - 2019 Nonresidential Compliance | Report Version: 2019.1.003 Schema Version: rev 20200601 | Report Generated: 2022-08-05 13:08:17

STATE OF CALIFORNIA
Mechanical Systems
NRCC-MCH-E — CALIFORNIA ENERGY COMMISSION

CERTIFICATE OF COMPLIANCE			**NRCC-MCH-E**
Project Name:	CVUSD Merwin	**Report Page:**	**(Page 13 of 38)**
Project Address:	16125 Cypress St	**Date Prepared:**	8/5/2022

I. SYSTEM CONTROLS

RTU-E4	Single zone	<= 25,000 ft²	Setback	Auto Timer Switch	4 Hour Timer	EMCS	Included	Provided
RTU-E5	Single zone	<= 25,000 ft²	Setback	Auto Timer Switch	4 Hour Timer	EMCS	Included	Provided
RTU-E6	Single zone	<= 25,000 ft²	Setback	Auto Timer Switch	4 Hour Timer	EMCS	Included	Provided
RTU-E7	Single zone	<= 25,000 ft²	Setback	Auto Timer Switch	4 Hour Timer	EMCS	Included	Provided
RTU-E8	Single zone	<= 25,000 ft²	Setback	Auto Timer Switch	4 Hour Timer	EMCS	Included	Provided

[1] FOOTNOTES: Gravity gas wall heaters, gravity floor heaters, gravity room heaters, non-central electric heaters, fireplaces or decorative gas appliances, wood stoves are not required to have setback thermostats.

*Notes: Controls with a * require a note in the space below explaining how compliance is achieved. EX: system 1: SA Temp Reset: Exempt because zones compliant with §140.4(d) ; EXCEPTION 1 to §140.4(f)

J. VENTILATION AND INDOOR AIR QUALITY

This table is used to demonstrate compliance with mandatory ventilation requirements in §120.1 and §120.2(e)3B for all nonresidential, high-rise residential and hotel/motel occupancies. For alterations, only ventialtion systems being altered within the scope of the permit application need to be documented in this table. In lieu of this table, the required outdoor ventilation rates and airflows may be shown on the plans or the calculations can be presented in a spreadsheet.

01	☐	Check the box if the project is showing ventilation calculations on the plans, or attaching the calculations instead of completing this table.
02	☒	Check this box if the project included Nonresidential or Hotel/Motel spaces
	☐	Check this box if the project included new or altered high-rise residential dwelling units.
03	☐	Check the box if the project is using natural ventilation in any nonresidential or hotel/motel spaces to meet required ventilation rates per §120.1(c)2.

Nonresidential and Hotel/ Motel Ventilation Systems

04	05				06		07
System Name	FCU/CU-B1	System Design OA CFM Airflow[1]		2250	System Design Transfer Air CFM	0	Air Filtration per §120.1(c) and §141.0(b)2[2]; Provided per §120.1(c) (NR and Hotel/Motel))
08	09	10	11	12	13	14	15 / 16

Registration Number: | Registration Date/Time: | Registration Provider: Energysoft

CA Building Energy Efficiency Standards - 2019 Nonresidential Compliance | Report Version: 2019.1.003 Schema Version: rev 20200601 | Report Generated: 2022-08-05 13:08:17

STATE OF CALIFORNIA
Mechanical Systems
NRCC-MCH-E — CALIFORNIA ENERGY COMMISSION

CERTIFICATE OF COMPLIANCE			**NRCC-MCH-E**
Project Name:	CVUSD Merwin	**Report Page:**	**(Page 14 of 38)**
Project Address:	16125 Cypress St	**Date Prepared:**	8/5/2022

J. VENTILATION AND INDOOR AIR QUALITY

Space Name ot item Tag	Mechanical Ventilation Required per §120.1(c)3[3]: Occupancy Type[4]	Conditioned Floor Area (ft²)	# of Shower heads/ toilets	# of people[5]	Required Min OA CFM	Exh. Vent per §120.1(c)4: Required Min CFM	Provided per Design CFM	DCV or Sensor Controls per §120.1(d)3, §120.1(d)5, and §120.1(e)3[6]	
MPR	Assembly- multiuse	3550		150	2250	0	0	DCV	Provided per §120.1(d)4
								Occ Sensor	NA: Not required space type
17	Total System Required Min OA CFM				2250	18	Ventilation for this System Complies?		Yes
04		05			06		07		
System Name	RTU-C1	System Design OA CFM Airflow[1]		225	System Design Transfer Air CFM		0	Air Filtration per §120.1(c) and §141.0(b)2[2]; Provided per §120.1(c) (NR and Hotel/Motel))	
08	09	10	11	12	13	14	15 / 16		

Space Name ot item Tag	Mechanical Ventilation Required per §120.1(c)3[3]: Occupancy Type[4]	Conditioned Floor Area (ft²)	# of Shower heads/ toilets	# of people[5]	Required Min OA CFM	Exh. Vent per §120.1(c)4: Required Min CFM	Provided per Design CFM	DCV or Sensor Controls per §120.1(d)3, §120.1(d)5, and §120.1(e)3[6]	
Classroom	Lecture/ postsecondary classroom	945		15	225	0	0	DCV	Provided per §120.1(d)4
								Occ Sensor	NA: Not required space type
17	Total System Required Min OA CFM				225	18	Ventilation for this System Complies?		Yes
04		05			06		07		
System Name	RTU-C2	System Design OA CFM Airflow[1]		225	System Design Transfer Air CFM		0	Air Filtration per §120.1(c) and §141.0(b)2[2]; Provided per §120.1(c) (NR and Hotel/Motel))	
08	09	10	11	12	13	14	15 / 16		

Registration Number: | Registration Date/Time: | Registration Provider: Energysoft

CA Building Energy Efficiency Standards - 2019 Nonresidential Compliance | Report Version: 2019.1.003 Schema Version: rev 20200601 | Report Generated: 2022-08-05 13:08:17

STATE OF CALIFORNIA
Mechanical Systems
NRCC-MCH-E — CALIFORNIA ENERGY COMMISSION

CERTIFICATE OF COMPLIANCE			**NRCC-MCH-E**
Project Name:	CVUSD Merwin	**Report Page:**	**(Page 15 of 38)**
Project Address:	16125 Cypress St	**Date Prepared:**	8/5/2022

J. VENTILATION AND INDOOR AIR QUALITY

Space Name ot item Tag	Mechanical Ventilation Required per §120.1(c)3[3]: Occupancy Type[4]	Conditioned Floor Area (ft²)	# of Shower heads/ toilets	# of people[5]	Required Min OA CFM	Exh. Vent per §120.1(c)4: Required Min CFM	Provided per Design CFM	DCV or Sensor Controls per §120.1(d)3, §120.1(d)5, and §120.1(e)3[6]	
Classroom	Lecture/ postsecondary classroom	945		15	225	0	0	DCV	Provided per §120.1(d)4
								Occ Sensor	NA: Not required space type
17	Total System Required Min OA CFM				225	18	Ventilation for this System Complies?		Yes
04		05			06		07		
System Name	RTU-C3	System Design OA CFM Airflow[1]		225	System Design Transfer Air CFM		0	Air Filtration per §120.1(c) and §141.0(b)2[2]; Provided per §120.1(c) (NR and Hotel/Motel))	
08	09	10	11	12	13	14	15 / 16		

Space Name ot item Tag	Mechanical Ventilation Required per §120.1(c)3[3]: Occupancy Type[4]	Conditioned Floor Area (ft²)	# of Shower heads/ toilets	# of people[5]	Required Min OA CFM	Exh. Vent per §120.1(c)4: Required Min CFM	Provided per Design CFM	DCV or Sensor Controls per §120.1(d)3, §120.1(d)5, and §120.1(e)3[6]	
Classroom	Lecture/ postsecondary classroom	945		15	225	0	0	DCV	Provided per §120.1(d)4
								Occ Sensor	NA: Not required space type
17	Total System Required Min OA CFM				225	18	Ventilation for this System Complies?		Yes
04		05			06		07		
System Name	RTU-C4	System Design OA CFM Airflow[1]		225	System Design Transfer Air CFM		0	Air Filtration per §120.1(c) and §141.0(b)2[2]; Provided per §120.1(c) (NR and Hotel/Motel))	
08	09	10	11	12	13	14	15 / 16		

Registration Number: | Registration Date/Time: | Registration Provider: Energysoft

CA Building Energy Efficiency Standards - 2019 Nonresidential Compliance | Report Version: 2019.1.003 Schema Version: rev 20200601 | Report Generated: 2022-08-05 13:08:17

STATE OF CALIFORNIA
Mechanical Systems
NRCC-MCH-E — CALIFORNIA ENERGY COMMISSION

CERTIFICATE OF COMPLIANCE			**NRCC-MCH-E**
Project Name:	CVUSD Merwin	**Report Page:**	**(Page 16 of 38)**
Project Address:	16125 Cypress St	**Date Prepared:**	8/5/2022

J. VENTILATION AND INDOOR AIR QUALITY

Space Name ot item Tag	Mechanical Ventilation Required per §120.1(c)3[3]: Occupancy Type[4]	Conditioned Floor Area (ft²)	# of Shower heads/ toilets	# of people[5]	Required Min OA CFM	Exh. Vent per §120.1(c)4: Required Min CFM	Provided per Design CFM	DCV or Sensor Controls per §120.1(d)3, §120.1(d)5, and §120.1(e)3[6]	
Classroom	Lecture/ postsecondary classroom	945		15	225	0	0	DCV	Provided per §120.1(d)4
								Occ Sensor	NA: Not required space type
17	Total System Required Min OA CFM				225	18	Ventilation for this System Complies?		Yes
04		05			06		07		
System Name	RTU-C5	System Design OA CFM Airflow[1]		225	System Design Transfer Air CFM		0	Air Filtration per §120.1(c) and §141.0(b)2[2]; Provided per §120.1(c) (NR and Hotel/Motel))	
08	09	10	11	12	13	14	15 / 16		

Space Name ot item Tag	Mechanical Ventilation Required per §120.1(c)3[3]: Occupancy Type[4]	Conditioned Floor Area (ft²)	# of Shower heads/ toilets	# of people[5]	Required Min OA CFM	Exh. Vent per §120.1(c)4: Required Min CFM	Provided per Design CFM	DCV or Sensor Controls per §120.1(d)3, §120.1(d)5, and §120.1(e)3[6]	
Classroom	Lecture/ postsecondary classroom	945		15	225	0	0	DCV	Provided per §120.1(d)4
								Occ Sensor	NA: Not required space type
17	Total System Required Min OA CFM				225	18	Ventilation for this System Complies?		Yes
04		05			06		07		
System Name	RTU-C6	System Design OA CFM Airflow[1]		225	System Design Transfer Air CFM		0	Air Filtration per §120.1(c) and §141.0(b)2[2]; Provided per §120.1(c) (NR and Hotel/Motel))	
08	09	10	11	12	13	14	15 / 16		

Registration Number: | Registration Date/Time: | Registration Provider: Energysoft

CA Building Energy Efficiency Standards - 2019 Nonresidential Compliance | Report Version: 2019.1.003 Schema Version: rev 20200601 | Report Generated: 2022-08-05 13:08:17

STATE OF CALIFORNIA
Mechanical Systems
NRCC-MCH-E — CALIFORNIA ENERGY COMMISSION

CERTIFICATE OF COMPLIANCE			**NRCC-MCH-E**
Project Name:	CVUSD Merwin	**Report Page:**	**(Page 17 of 38)**
Project Address:	16125 Cypress St	**Date Prepared:**	8/5/2022

J. VENTILATION AND INDOOR AIR QUALITY

Space Name ot item Tag	Mechanical Ventilation Required per §120.1(c)3[3]: Occupancy Type[4]	Conditioned Floor Area (ft²)	# of Shower heads/ toilets	# of people[5]	Required Min OA CFM	Exh. Vent per §120.1(c)4: Required Min CFM	Provided per Design CFM	DCV or Sensor Controls per §120.1(d)3, §120.1(d)5, and §120.1(e)3[6]	
Classroom	Lecture/ postsecondary classroom	940		15	225	0	0	DCV	Provided per §120.1(d)4
								Occ Sensor	NA: Not required space type
17	Total System Required Min OA CFM				225	18	Ventilation for this System Complies?		Yes
04		05			06		07		
System Name	RTU-C7	System Design OA CFM Airflow[1]		225	System Design Transfer Air CFM		0	Air Filtration per §120.1(c) and §141.0(b)2[2]; Provided per §120.1(c) (NR and Hotel/Motel))	
08	09	10	11	12	13	14	15 / 16		

Space Name ot item Tag	Mechanical Ventilation Required per §120.1(c)3[3]: Occupancy Type[4]	Conditioned Floor Area (ft²)	# of Shower heads/ toilets	# of people[5]	Required Min OA CFM	Exh. Vent per §120.1(c)4: Required Min CFM	Provided per Design CFM	DCV or Sensor Controls per §120.1(d)3, §120.1(d)5, and §120.1(e)3[6]	
Classroom	Lecture/ postsecondary classroom	945		15	225	0	0	DCV	Provided per §120.1(d)4
								Occ Sensor	NA: Not required space type
17	Total System Required Min OA CFM				225	18	Ventilation for this System Complies?		Yes
04		05			06		07		
System Name	RTU-C8	System Design OA CFM Airflow[1]		225	System Design Transfer Air CFM		0	Air Filtration per §120.1(c) and §141.0(b)2[2]; Provided per §120.1(c) (NR and Hotel/Motel))	
08	09	10	11	12	13	14	15 / 16		

Registration Number: | Registration Date/Time: | Registration Provider: Energysoft

CA Building Energy Efficiency Standards - 2019 Nonresidential Compliance | Report Version: 2019.1.003 Schema Version: rev 20200601 | Report Generated: 2022-08-05 13:08:17

STATE OF CALIFORNIA
Mechanical Systems
NRCC-MCH-E — CALIFORNIA ENERGY COMMISSION

CERTIFICATE OF COMPLIANCE			**NRCC-MCH-E**
Project Name:	CVUSD Merwin	**Report Page:**	**(Page 18 of 38)**
Project Address:	16125 Cypress St	**Date Prepared:**	8/5/2022

J. VENTILATION AND INDOOR AIR QUALITY

Space Name ot item Tag	Mechanical Ventilation Required per §120.1(c)3[3]: Occupancy Type[4]	Conditioned Floor Area (ft²)	# of Shower heads/ toilets	# of people[5]	Required Min OA CFM	Exh. Vent per §120.1(c)4: Required Min CFM	Provided per Design CFM	DCV or Sensor Controls per §120.1(d)3, §120.1(d)5, and §120.1(e)3[6]	
Classroom	Lecture/ postsecondary classroom	945		15	225	0	0	DCV	Provided per §120.1(d)4
								Occ Sensor	NA: Not required space type
17	Total System Required Min OA CFM				225	18	Ventilation for this System Complies?		Yes
04		05			06		07		
System Name	RTU-E1	System Design OA CFM Airflow[1]		225	System Design Transfer Air CFM		0	Air Filtration per §120.1(c) and §141.0(b)2[2]; Provided per §120.1(c) (NR and Hotel/Motel))	
08	09	10	11	12	13	14	15 / 16		

Space Name ot item Tag	Mechanical Ventilation Required per §120.1(c)3[3]: Occupancy Type[4]	Conditioned Floor Area (ft²)	# of Shower heads/ toilets	# of people[5]	Required Min OA CFM	Exh. Vent per §120.1(c)4: Required Min CFM	Provided per Design CFM	DCV or Sensor Controls per §120.1(d)3, §120.1(d)5, and §120.1(e)3[6]	
Classroom	Lecture/ postsecondary classroom	945		15	225	0	0	DCV	Provided per §120.1(d)4
								Occ Sensor	NA: Not required space type
17	Total System Required Min OA CFM				225	18	Ventilation for this System Complies?		Yes
04		05			06		07		
System Name	RTU-E2	System Design OA CFM Airflow[1]		225	System Design Transfer Air CFM		0	Air Filtration per §120.1(c) and §141.0(b)2[2]; Provided per §120.1(c) (NR and Hotel/Motel))	
08	09	10	11	12	13	14	15 / 16		

Registration Number: | Registration Date/Time: | Registration Provider: Energysoft

CA Building Energy Efficiency Standards - 2019 Nonresidential Compliance | Report Version: 2019.1.003 Schema Version: rev 20200601 | Report Generated: 2022-08-05 13:08:17

DLR Group
© DLR Group

REGISTERED PROFESSIONAL ENGINEER — DENG FANG ZHAO — No. M34391 — Exp. 12/31/22 — MECHANICAL — STATE OF CALIFORNIA

WSW

Merwin Elementary School
COVINA VALLEY USD
16125 CYPRESS ST, COVINA, CA 91722

100% CONSTRUCTION DOCUMENTS
11/04/2022
REVISIONS

75-22605-00

TITLE 24 COMPLIANCE

M0.3

Autodesk Docs://75-22605-00 CVUSD - District Wide HVAC Replacement/75-22605-00_CVUSD_Merwin ES_MEP_2022.rvt
10/21/2022 4:25:00 PM

STATE OF CALIFORNIA

Mechanical Systems

NRCC-MCH-E — CALIFORNIA ENERGY COMMISSION

CERTIFICATE OF COMPLIANCE			**NRCC-MCH-E**
Project Name:	CVUSD Merwin	**Report Page:**	**(Page 19 of 38)**
Project Address:	16125 Cypress St	**Date Prepared:**	8/5/2022

J. VENTILATION AND INDOOR AIR QUALITY

Space Name ot Item Tag	Mechanical Ventilation Required per §120.1(c)3 [3]				Exh. Vent per §120.1(c)4		DCV or Sensor Controls per §120.1(d)3, §120.1(d)5, and §120.1(e)3 [6]	
	Occupancy Type[4]	Conditioned Floor Area (ft^2)	# of Shower heads/ toilets	# of people[5]	Required Min OA CFM	Required Min CFM	Provided per Design CFM	
Classroom	Lecture/ postsecondary classroom	945		15	225	0	0	DCV: Provided per §120.1(d)4
								Occ Sensor: NA: Not required space type
17	Total System Required Min OA CFM				225	18	Ventilation for this System Complies?	Yes
04		05				06		07
System Name	RTU-E3	System Design OA CFM Airflow[1]		225	System Design Transfer Air CFM		0	Air Filtration per §120.1(c) and §141.0(b)2 [2]; Provided per §120.1(c) (NR and Hotel/Motel))
08	09	10	11	12	13	14	15	16
Space Name ot Item Tag	Mechanical Ventilation Required per §120.1(c)3 [3]				Exh. Vent per §120.1(c)4		DCV or Sensor Controls per §120.1(d)3, §120.1(d)5, and §120.1(e)3 [6]	
	Occupancy Type[4]	Conditioned Floor Area (ft^2)	# of Shower heads/ toilets	# of people[5]	Required Min OA CFM	Required Min CFM	Provided per Design CFM	
Classroom	Lecture/ postsecondary classroom	945		15	225	0	0	DCV: Provided per §120.1(d)4
								Occ Sensor: NA: Not required space type
17	Total System Required Min OA CFM				225	18	Ventilation for this System Complies?	Yes
04		05				06		07
System Name	RTU-E4	System Design OA CFM Airflow[1]		225	System Design Transfer Air CFM		0	Air Filtration per §120.1(c) and §141.0(b)2 [2]; Provided per §120.1(c) (NR and Hotel/Motel))
08	09	10	11	12	13	14	15	16

Registration Number: | Registration Date/Time: | Registration Provider: Energysoft

CA Building Energy Efficiency Standards - 2019 Nonresidential Compliance

Report Version: 2019.1.003
Schema Version: rev 20200601

Report Generated: 2022-08-05 13:08:17

STATE OF CALIFORNIA

Mechanical Systems

NRCC-MCH-E — CALIFORNIA ENERGY COMMISSION

CERTIFICATE OF COMPLIANCE			**NRCC-MCH-E**
Project Name:	CVUSD Merwin	**Report Page:**	**(Page 20 of 38)**
Project Address:	16125 Cypress St	**Date Prepared:**	8/5/2022

J. VENTILATION AND INDOOR AIR QUALITY

Space Name ot Item Tag	Mechanical Ventilation Required per §120.1(c)3 [3]				Exh. Vent per §120.1(c)4		DCV or Sensor Controls per §120.1(d)3, §120.1(d)5, and §120.1(e)3 [6]	
	Occupancy Type[4]	Conditioned Floor Area (ft^2)	# of Shower heads/ toilets	# of people[5]	Required Min OA CFM	Required Min CFM	Provided per Design CFM	
Classroom	Lecture/ postsecondary classroom	945		15	225	0	0	DCV: Provided per §120.1(d)4
								Occ Sensor: NA: Not required space type
17	Total System Required Min OA CFM				225	18	Ventilation for this System Complies?	Yes
04		05				06		07
System Name	RTU-E5	System Design OA CFM Airflow[1]		225	System Design Transfer Air CFM		0	Air Filtration per §120.1(c) and §141.0(b)2 [2]; Provided per §120.1(c) (NR and Hotel/Motel))
08	09	10	11	12	13	14	15	16
Space Name ot Item Tag	Mechanical Ventilation Required per §120.1(c)3 [3]				Exh. Vent per §120.1(c)4		DCV or Sensor Controls per §120.1(d)3, §120.1(d)5, and §120.1(e)3 [6]	
	Occupancy Type[4]	Conditioned Floor Area (ft^2)	# of Shower heads/ toilets	# of people[5]	Required Min OA CFM	Required Min CFM	Provided per Design CFM	
Classroom	Lecture/ postsecondary classroom	940		15	225	0	0	DCV: Provided per §120.1(d)4
								Occ Sensor: NA: Not required space type
17	Total System Required Min OA CFM				225	18	Ventilation for this System Complies?	Yes
04		05				06		07
System Name	RTU-E6	System Design OA CFM Airflow[1]		225	System Design Transfer Air CFM		0	Air Filtration per §120.1(c) and §141.0(b)2 [2]; Provided per §120.1(c) (NR and Hotel/Motel))
08	09	10	11	12	13	14	15	16

Registration Number: | Registration Date/Time: | Registration Provider: Energysoft

CA Building Energy Efficiency Standards - 2019 Nonresidential Compliance

Report Version: 2019.1.003
Schema Version: rev 20200601

Report Generated: 2022-08-05 13:08:17

STATE OF CALIFORNIA

Mechanical Systems

NRCC-MCH-E — CALIFORNIA ENERGY COMMISSION

CERTIFICATE OF COMPLIANCE			**NRCC-MCH-E**
Project Name:	CVUSD Merwin	**Report Page:**	**(Page 21 of 38)**
Project Address:	16125 Cypress St	**Date Prepared:**	8/5/2022

J. VENTILATION AND INDOOR AIR QUALITY

Space Name ot Item Tag	Mechanical Ventilation Required per §120.1(c)3 [3]				Exh. Vent per §120.1(c)4		DCV or Sensor Controls per §120.1(d)3, §120.1(d)5, and §120.1(e)3 [6]	
	Occupancy Type[4]	Conditioned Floor Area (ft^2)	# of Shower heads/ toilets	# of people[5]	Required Min OA CFM	Required Min CFM	Provided per Design CFM	
Classroom	Lecture/ postsecondary classroom	945		15	225	0	0	DCV: Provided per §120.1(d)4
								Occ Sensor: NA: Not required space type
17	Total System Required Min OA CFM				225	18	Ventilation for this System Complies?	Yes
04		05				06		07
System Name	RTU-E7	System Design OA CFM Airflow[1]		225	System Design Transfer Air CFM		0	Air Filtration per §120.1(c) and §141.0(b)2 [2]; Provided per §120.1(c) (NR and Hotel/Motel))
08	09	10	11	12	13	14	15	16
Space Name ot Item Tag	Mechanical Ventilation Required per §120.1(c)3 [3]				Exh. Vent per §120.1(c)4		DCV or Sensor Controls per §120.1(d)3, §120.1(d)5, and §120.1(e)3 [6]	
	Occupancy Type[4]	Conditioned Floor Area (ft^2)	# of Shower heads/ toilets	# of people[5]	Required Min OA CFM	Required Min CFM	Provided per Design CFM	
Classroom	Lecture/ postsecondary classroom	945		15	225	0	0	DCV: Provided per §120.1(d)4
								Occ Sensor: NA: Not required space type
17	Total System Required Min OA CFM				225	18	Ventilation for this System Complies?	Yes
04		05				06		07
System Name	RTU-E8	System Design OA CFM Airflow[1]		225	System Design Transfer Air CFM		0	Air Filtration per §120.1(c) and §141.0(b)2 [2]; Provided per §120.1(c) (NR and Hotel/Motel))
08	09	10	11	12	13	14	15	16

Registration Number: | Registration Date/Time: | Registration Provider: Energysoft

CA Building Energy Efficiency Standards - 2019 Nonresidential Compliance

Report Version: 2019.1.003
Schema Version: rev 20200601

Report Generated: 2022-08-05 13:08:17

STATE OF CALIFORNIA

Mechanical Systems

NRCC-MCH-E — CALIFORNIA ENERGY COMMISSION

CERTIFICATE OF COMPLIANCE			**NRCC-MCH-E**
Project Name:	CVUSD Merwin	**Report Page:**	**(Page 22 of 38)**
Project Address:	16125 Cypress St	**Date Prepared:**	8/5/2022

J. VENTILATION AND INDOOR AIR QUALITY

Space Name ot Item Tag	Mechanical Ventilation Required per §120.1(c)3 [3]				Exh. Vent per §120.1(c)4		DCV or Sensor Controls per §120.1(d)3, §120.1(d)5, and §120.1(e)3 [6]	
	Occupancy Type[4]	Conditioned Floor Area (ft^2)	# of Shower heads/ toilets	# of people[5]	Required Min OA CFM	Required Min CFM	Provided per Design CFM	
Classroom	Lecture/ postsecondary classroom	945		15	225	0	0	DCV: Provided per §120.1(d)4
								Occ Sensor: NA: Not required space type
17	Total System Required Min OA CFM				225	18	Ventilation for this System Complies?	Yes

[1] *FOOTNOTES: System CFM should include both mechanical and natural ventilation for the zone/system*

[2] *Air filtration requirements apply to the following three system types per §120.1(c)1A : space conditioning systems utilizing ducts to supply air to occupiable space; supply-only ventilation systems providing outside air to occupiable space; supply side of balanced ventilation systems including heat recovery and energy recovery ventilation systems providing outside air to occupiable space.*

[3] *Uniform Mechanical Code may have more stringent ventilation requirements; the most stringent code requirement takes precedence.*

[4] *See Standards Tables 120.1-A and 120.1-B.*

[5] *For lecture halls with fixed seating, the expected number of occupants shall be shall be determined in accordance with the California Building Code.*

[6] *§120.2(e)3 requires systems serving rooms that are required by §130.1(c) to have lighting occupancy sensing controls to also have occupancy sensing zone controls for ventilation. Examples of spaces which require lighting occupancy sensors include offices 250ft^2 or smaller, multipurpose rooms less than 1,000 ft^2, classrooms, conference rooms, restrooms, aisles and open areas in warehouses, library book stack aisles, corridors, stairwells, parking garages, and loading and unloading zones, unless excepted by §130.1(c).*

K. TERMINAL BOX CONTROLS

This section does not apply to this project.

L. DISTRIBUTION (DUCTWORK and PIPING)

This table is used to show compliance with mandatory pipe insulation requirements found in §120.3 and prescriptive requirements found in §140.4(l) for duct leakage testing.

Duct Leakage Sealing

Registration Number: | Registration Date/Time: | Registration Provider: Energysoft

CA Building Energy Efficiency Standards - 2019 Nonresidential Compliance

Report Version: 2019.1.003
Schema Version: rev 20200601

Report Generated: 2022-08-05 13:08:17

STATE OF CALIFORNIA

Mechanical Systems

NRCC-MCH-E — CALIFORNIA ENERGY COMMISSION

CERTIFICATE OF COMPLIANCE			**NRCC-MCH-E**
Project Name:	CVUSD Merwin	**Report Page:**	**(Page 23 of 38)**
Project Address:	16125 Cypress St	**Date Prepared:**	8/5/2022

L. DISTRIBUTION (DUCTWORK and PIPING)

The answers to the questions below apply to the following duct systems:		FCU/CU-B1	Duct leakage testing triggered for these systems?	No
11	No	The scope of the project includes only duct systems serving healthcare facilities		
12	Yes	Duct system provides conditioned air to an occupiable space for a constant volume, single zone, space-conditioning system.		
13	Yes	The space conditioning system serves less than 5,000 ft^2 of conditioned floor area.		
14	No	The combined surface area of the ducts in the following locations is more than 25% of the total surface area of the entire duct system:		
		☐	Outdoors	
		☐	In a space directly under a roof that has a U-factor greater than the u-factor of the ceiling, or if the roof does not meet the requirements of §140.3(a)1B or if the roof has fixed vents or openings to the outside/ unconditioned spaces	
		☐	In an unconditioned crawl space	
		☐	In other unconditioned spaces	
15		The scope of the project includes extending an existing duct system, which is constructed, insulated or sealed with asbestos.		
16		The scope of the project includes an existing duct system that is documented to have been previously sealed as confirmed through field verification and diagnostic testing in accordance with procedures in the Reference Nonresidential Appendix NA2.		
17	Yes	Duct system shall be sealed in acordance with the California Mechanical Code		
The answers to the questions below apply to the following duct systems:		RTU-C1	Duct leakage testing triggered for these systems?	No
11	No	The scope of the project includes only duct systems serving healthcare facilities		
12	Yes	Duct system provides conditioned air to an occupiable space for a constant volume, single zone, space-conditioning system.		
13	Yes	The space conditioning system serves less than 5,000 ft^2 of conditioned floor area.		
14	No	The combined surface area of the ducts in the following locations is more than 25% of the total surface area of the entire duct system:		
		☐	Outdoors	
		☐	In a space directly under a roof that has a U-factor greater than the u-factor of the ceiling, or if the roof does not meet the requirements of §140.3(a)1B or if the roof has fixed vents or openings to the outside/ unconditioned spaces	
		☐	In an unconditioned crawl space	
		☐	In other unconditioned spaces	
15		The scope of the project includes extending an existing duct system, which is constructed, insulated or sealed with asbestos.		
16		The scope of the project includes an existing duct system that is documented to have been previously sealed as confirmed through field verification and diagnostic testing in accordance with procedures in the Reference Nonresidential Appendix NA2.		
17	Yes	Duct system shall be sealed in acordance with the California Mechanical Code		

Registration Number: | Registration Date/Time: | Registration Provider: Energysoft

CA Building Energy Efficiency Standards - 2019 Nonresidential Compliance

Report Version: 2019.1.003
Schema Version: rev 20200601

Report Generated: 2022-08-05 13:08:17

STATE OF CALIFORNIA

Mechanical Systems

NRCC-MCH-E — CALIFORNIA ENERGY COMMISSION

CERTIFICATE OF COMPLIANCE			**NRCC-MCH-E**
Project Name:	CVUSD Merwin	**Report Page:**	**(Page 24 of 38)**
Project Address:	16125 Cypress St	**Date Prepared:**	8/5/2022

L. DISTRIBUTION (DUCTWORK and PIPING)

The answers to the questions below apply to the following duct systems:		RTU-C2	Duct leakage testing triggered for these systems?	No
11	No	The scope of the project includes only duct systems serving healthcare facilities		
12	Yes	Duct system provides conditioned air to an occupiable space for a constant volume, single zone, space-conditioning system.		
13	Yes	The space conditioning system serves less than 5,000 ft^2 of conditioned floor area.		
14	No	The combined surface area of the ducts in the following locations is more than 25% of the total surface area of the entire duct system:		
		☐	Outdoors	
		☐	In a space directly under a roof that has a U-factor greater than the u-factor of the ceiling, or if the roof does not meet the requirements of §140.3(a)1B or if the roof has fixed vents or openings to the outside/ unconditioned spaces	
		☐	In an unconditioned crawl space	
		☐	In other unconditioned spaces	
15		The scope of the project includes extending an existing duct system, which is constructed, insulated or sealed with asbestos.		
16		The scope of the project includes an existing duct system that is documented to have been previously sealed as confirmed through field verification and diagnostic testing in accordance with procedures in the Reference Nonresidential Appendix NA2.		
17	Yes	Duct system shall be sealed in acordance with the California Mechanical Code		
The answers to the questions below apply to the following duct systems:		RTU-C3	Duct leakage testing triggered for these systems?	No
11	No	The scope of the project includes only duct systems serving healthcare facilities		
12	Yes	Duct system provides conditioned air to an occupiable space for a constant volume, single zone, space-conditioning system.		
13	Yes	The space conditioning system serves less than 5,000 ft^2 of conditioned floor area.		
14	No	The combined surface area of the ducts in the following locations is more than 25% of the total surface area of the entire duct system:		
		☐	Outdoors	
		☐	In a space directly under a roof that has a U-factor greater than the u-factor of the ceiling, or if the roof does not meet the requirements of §140.3(a)1B or if the roof has fixed vents or openings to the outside/ unconditioned spaces	
		☐	In an unconditioned crawl space	
		☐	In other unconditioned spaces	
15		The scope of the project includes extending an existing duct system, which is constructed, insulated or sealed with asbestos.		
16		The scope of the project includes an existing duct system that is documented to have been previously sealed as confirmed through field verification and diagnostic testing in accordance with procedures in the Reference Nonresidential Appendix NA2.		
17	Yes	Duct system shall be sealed in acordance with the California Mechanical Code		

Registration Number: | Registration Date/Time: | Registration Provider: Energysoft

CA Building Energy Efficiency Standards - 2019 Nonresidential Compliance

Report Version: 2019.1.003
Schema Version: rev 20200601

Report Generated: 2022-08-05 13:08:17

STATE OF CALIFORNIA

Mechanical Systems

NRCC-MCH-E — CALIFORNIA ENERGY COMMISSION

CERTIFICATE OF COMPLIANCE			**NRCC-MCH-E**
Project Name:	CVUSD Merwin	**Report Page:**	**(Page 25 of 38)**
Project Address:	16125 Cypress St	**Date Prepared:**	8/5/2022

L. DISTRIBUTION (DUCTWORK and PIPING)

The answers to the questions below apply to the following duct systems:		RTU-C4	Duct leakage testing triggered for these systems?	No
11	No	The scope of the project includes only duct systems serving healthcare facilities		
12	Yes	Duct system provides conditioned air to an occupiable space for a constant volume, single zone, space-conditioning system.		
13	Yes	The space conditioning system serves less than 5,000 ft^2 of conditioned floor area.		
14	No	The combined surface area of the ducts in the following locations is more than 25% of the total surface area of the entire duct system:		
		☐	Outdoors	
		☐	In a space directly under a roof that has a U-factor greater than the u-factor of the ceiling, or if the roof does not meet the requirements of §140.3(a)1B or if the roof has fixed vents or openings to the outside/ unconditioned spaces	
		☐	In an unconditioned crawl space	
		☐	In other unconditioned spaces	
15		The scope of the project includes extending an existing duct system, which is constructed, insulated or sealed with asbestos.		
16		The scope of the project includes an existing duct system that is documented to have been previously sealed as confirmed through field verification and diagnostic testing in accordance with procedures in the Reference Nonresidential Appendix NA2.		
17	Yes	Duct system shall be sealed in acordance with the California Mechanical Code		
The answers to the questions below apply to the following duct systems:		RTU-C5	Duct leakage testing triggered for these systems?	No
11	No	The scope of the project includes only duct systems serving healthcare facilities		
12	Yes	Duct system provides conditioned air to an occupiable space for a constant volume, single zone, space-conditioning system.		
13	Yes	The space conditioning system serves less than 5,000 ft^2 of conditioned floor area.		
14	No	The combined surface area of the ducts in the following locations is more than 25% of the total surface area of the entire duct system:		
		☐	Outdoors	
		☐	In a space directly under a roof that has a U-factor greater than the u-factor of the ceiling, or if the roof does not meet the requirements of §140.3(a)1B or if the roof has fixed vents or openings to the outside/ unconditioned spaces	
		☐	In an unconditioned crawl space	
		☐	In other unconditioned spaces	
15		The scope of the project includes extending an existing duct system, which is constructed, insulated or sealed with asbestos.		
16		The scope of the project includes an existing duct system that is documented to have been previously sealed as confirmed through field verification and diagnostic testing in accordance with procedures in the Reference Nonresidential Appendix NA2.		
17	Yes	Duct system shall be sealed in acordance with the California Mechanical Code		

Registration Number: | Registration Date/Time: | Registration Provider: Energysoft

CA Building Energy Efficiency Standards - 2019 Nonresidential Compliance

Report Version: 2019.1.003
Schema Version: rev 20200601

Report Generated: 2022-08-05 13:08:17

STATE OF CALIFORNIA

Mechanical Systems

NRCC-MCH-E — CALIFORNIA ENERGY COMMISSION

CERTIFICATE OF COMPLIANCE			**NRCC-MCH-E**
Project Name:	CVUSD Merwin	**Report Page:**	**(Page 26 of 38)**
Project Address:	16125 Cypress St	**Date Prepared:**	8/5/2022

L. DISTRIBUTION (DUCTWORK and PIPING)

The answers to the questions below apply to the following duct systems:		RTU-C6	Duct leakage testing triggered for these systems?	No
11	No	The scope of the project includes only duct systems serving healthcare facilities		
12	Yes	Duct system provides conditioned air to an occupiable space for a constant volume, single zone, space-conditioning system.		
13	Yes	The space conditioning system serves less than 5,000 ft^2 of conditioned floor area.		
14	No	The combined surface area of the ducts in the following locations is more than 25% of the total surface area of the entire duct system:		
		☐	Outdoors	
		☐	In a space directly under a roof that has a U-factor greater than the u-factor of the ceiling, or if the roof does not meet the requirements of §140.3(a)1B or if the roof has fixed vents or openings to the outside/ unconditioned spaces	
		☐	In an unconditioned crawl space	
		☐	In other unconditioned spaces	
15		The scope of the project includes extending an existing duct system, which is constructed, insulated or sealed with asbestos.		
16		The scope of the project includes an existing duct system that is documented to have been previously sealed as confirmed through field verification and diagnostic testing in accordance with procedures in the Reference Nonresidential Appendix NA2.		
17	Yes	Duct system shall be sealed in acordance with the California Mechanical Code		
The answers to the questions below apply to the following duct systems:		RTU-C7	Duct leakage testing triggered for these systems?	No
11	No	The scope of the project includes only duct systems serving healthcare facilities		
12	Yes	Duct system provides conditioned air to an occupiable space for a constant volume, single zone, space-conditioning system.		
13	Yes	The space conditioning system serves less than 5,000 ft^2 of conditioned floor area.		
14	No	The combined surface area of the ducts in the following locations is more than 25% of the total surface area of the entire duct system:		
		☐	Outdoors	
		☐	In a space directly under a roof that has a U-factor greater than the u-factor of the ceiling, or if the roof does not meet the requirements of §140.3(a)1B or if the roof has fixed vents or openings to the outside/ unconditioned spaces	
		☐	In an unconditioned crawl space	
		☐	In other unconditioned spaces	
15		The scope of the project includes extending an existing duct system, which is constructed, insulated or sealed with asbestos.		
16		The scope of the project includes an existing duct system that is documented to have been previously sealed as confirmed through field verification and diagnostic testing in accordance with procedures in the Reference Nonresidential Appendix NA2.		
17	Yes	Duct system shall be sealed in acordance with the California Mechanical Code		

Registration Number: | Registration Date/Time: | Registration Provider: Energysoft

CA Building Energy Efficiency Standards - 2019 Nonresidential Compliance

Report Version: 2019.1.003
Schema Version: rev 20200601

Report Generated: 2022-08-05 13:08:17

STATE OF CALIFORNIA

Mechanical Systems

NRCC-MCH-E — CALIFORNIA ENERGY COMMISSION

CERTIFICATE OF COMPLIANCE			**NRCC-MCH-E**
Project Name:	CVUSD Merwin	**Report Page:**	**(Page 27 of 38)**
Project Address:	16125 Cypress St	**Date Prepared:**	8/5/2022

L. DISTRIBUTION (DUCTWORK and PIPING)

The answers to the questions below apply to the following duct systems:		RTU-C8	Duct leakage testing triggered for these systems?	No
11	No	The scope of the project includes only duct systems serving healthcare facilities		
12	Yes	Duct system provides conditioned air to an occupiable space for a constant volume, single zone, space-conditioning system.		
13	Yes	The space conditioning system serves less than 5,000 ft^2 of conditioned floor area.		
14	No	The combined surface area of the ducts in the following locations is more than 25% of the total surface area of the entire duct system:		
		☐	Outdoors	
		☐	In a space directly under a roof that has a U-factor greater than the u-factor of the ceiling, or if the roof does not meet the requirements of §140.3(a)1B or if the roof has fixed vents or openings to the outside/ unconditioned spaces	
		☐	In an unconditioned crawl space	
		☐	In other unconditioned spaces	
15		The scope of the project includes extending an existing duct system, which is constructed, insulated or sealed with asbestos.		
16		The scope of the project includes an existing duct system that is documented to have been previously sealed as confirmed through field verification and diagnostic testing in accordance with procedures in the Reference Nonresidential Appendix NA2.		
17	Yes	Duct system shall be sealed in acordance with the California Mechanical Code		
The answers to the questions below apply to the following duct systems:		RTU-E1	Duct leakage testing triggered for these systems?	No
11	No	The scope of the project includes only duct systems serving healthcare facilities		
12	Yes	Duct system provides conditioned air to an occupiable space for a constant volume, single zone, space-conditioning system.		
13	Yes	The space conditioning system serves less than 5,000 ft^2 of conditioned floor area.		
14	No	The combined surface area of the ducts in the following locations is more than 25% of the total surface area of the entire duct system:		
		☐	Outdoors	
		☐	In a space directly under a roof that has a U-factor greater than the u-factor of the ceiling, or if the roof does not meet the requirements of §140.3(a)1B or if the roof has fixed vents or openings to the outside/ unconditioned spaces	
		☐	In an unconditioned crawl space	
		☐	In other unconditioned spaces	
15		The scope of the project includes extending an existing duct system, which is constructed, insulated or sealed with asbestos.		
16		The scope of the project includes an existing duct system that is documented to have been previously sealed as confirmed through field verification and diagnostic testing in accordance with procedures in the Reference Nonresidential Appendix NA2.		
17	Yes	Duct system shall be sealed in acordance with the California Mechanical Code		

Registration Number: | Registration Date/Time: | Registration Provider: Energysoft

CA Building Energy Efficiency Standards - 2019 Nonresidential Compliance

Report Version: 2019.1.003
Schema Version: rev 20200601

Report Generated: 2022-08-05 13:08:17

DLR Group
© DLR Group

REGISTERED PROFESSIONAL ENGINEER
DING FANG ZHAO
No. M34391
Exp. 12/31/22
MECHANICAL
STATE OF CALIFORNIA

WSW

Merwin Elementary School
COVINA VALLEY USD
16125 CYPRESS ST, COVINA, CA 91722

100% CONSTRUCTION DOCUMENTS
11/04/2022
REVISIONS

75-22605-00

TITLE 24 COMPLIANCE

M0.4

Autodesk Docs://75-22605-00 CVUSD - District Wide HVAC Replacement/75-22605-00_CVUSD_Merwin ES_MEP_2022.rvt
10/21/2022 4:25:01 PM

STATE OF CALIFORNIA
Mechanical Systems
NRCC-MCH-E — CALIFORNIA ENERGY COMMISSION

CERTIFICATE OF COMPLIANCE			**NRCC-MCH-E**
Project Name:	CVUSD Merwin	**Report Page:**	**(Page 28 of 38)**
Project Address:	16125 Cypress St	**Date Prepared:**	8/5/2022

L. DISTRIBUTION (DUCTWORK and PIPING)

The answers to the questions below apply to the following duct systems:	RTU-E2	Duct leakage testing triggered for these systems?	No
11	No	The scope of the project includes only duct systems serving healthcare facilities	
12	Yes	Duct system provides conditioned air to an occupiable space for a constant volume, single zone, space-conditioning system.	
13	Yes	The space conditioning system serves less than 5,000 ft² of conditioned floor area.	
14	No	The combined surface area of the ducts in the following locations is more than 25% of the total surface area of the entire duct system:	
		☐ Outdoors	
		☐ In a space directly under a roof that has a U-factor greater than the u-factor of the ceiling, or if the roof does not meet the requirements of §140.3(a)1B or if the roof has fixed vents or openings to the outside/ unconditioned spaces	
		☐ In an unconditioned crawl space	
		☐ In other unconditioned spaces	
15		The scope of the project includes extending an existing duct system, which is constructed, insulated or sealed with asbestos.	
16		The scope of the project includes an existing duct system that is documented to have been previously sealed as confirmed through field verification and diagnostic testing in accordance with procedures in the Reference Nonresidential Appendix NA2.	
17	Yes	Duct system shall be sealed in acordance with the California Mechanical Code	
The answers to the questions below apply to the following duct systems:	RTU-E3	Duct leakage testing triggered for these systems?	No
11	No	The scope of the project includes only duct systems serving healthcare facilities	
12	Yes	Duct system provides conditioned air to an occupiable space for a constant volume, single zone, space-conditioning system.	
13	Yes	The space conditioning system serves less than 5,000 ft² of conditioned floor area.	
14	No	The combined surface area of the ducts in the following locations is more than 25% of the total surface area of the entire duct system:	
		☐ Outdoors	
		☐ In a space directly under a roof that has a U-factor greater than the u-factor of the ceiling, or if the roof does not meet the requirements of §140.3(a)1B or if the roof has fixed vents or openings to the outside/ unconditioned spaces	
		☐ In an unconditioned crawl space	
		☐ In other unconditioned spaces	
15		The scope of the project includes extending an existing duct system, which is constructed, insulated or sealed with asbestos.	
16		The scope of the project includes an existing duct system that is documented to have been previously sealed as confirmed through field verification and diagnostic testing in accordance with procedures in the Reference Nonresidential Appendix NA2.	
17	Yes	Duct system shall be sealed in acordance with the California Mechanical Code	

Registration Number: | Registration Date/Time: | Registration Provider: Energysoft

CA Building Energy Efficiency Standards - 2019 Nonresidential Compliance | Report Version: 2019.1.003 Schema Version: rev 20200601 | Report Generated: 2022-08-05 13:08:17

STATE OF CALIFORNIA
Mechanical Systems
NRCC-MCH-E — CALIFORNIA ENERGY COMMISSION

CERTIFICATE OF COMPLIANCE			**NRCC-MCH-E**
Project Name:	CVUSD Merwin	**Report Page:**	**(Page 29 of 38)**
Project Address:	16125 Cypress St	**Date Prepared:**	8/5/2022

L. DISTRIBUTION (DUCTWORK and PIPING)

The answers to the questions below apply to the following duct systems:	RTU-E4	Duct leakage testing triggered for these systems?	No
11	No	The scope of the project includes only duct systems serving healthcare facilities	
12	Yes	Duct system provides conditioned air to an occupiable space for a constant volume, single zone, space-conditioning system.	
13	Yes	The space conditioning system serves less than 5,000 ft² of conditioned floor area.	
14	No	The combined surface area of the ducts in the following locations is more than 25% of the total surface area of the entire duct system:	
		☐ Outdoors	
		☐ In a space directly under a roof that has a U-factor greater than the u-factor of the ceiling, or if the roof does not meet the requirements of §140.3(a)1B or if the roof has fixed vents or openings to the outside/ unconditioned spaces	
		☐ In an unconditioned crawl space	
		☐ In other unconditioned spaces	
15		The scope of the project includes extending an existing duct system, which is constructed, insulated or sealed with asbestos.	
16		The scope of the project includes an existing duct system that is documented to have been previously sealed as confirmed through field verification and diagnostic testing in accordance with procedures in the Reference Nonresidential Appendix NA2.	
17	Yes	Duct system shall be sealed in acordance with the California Mechanical Code	
The answers to the questions below apply to the following duct systems:	RTU-E5	Duct leakage testing triggered for these systems?	No
11	No	The scope of the project includes only duct systems serving healthcare facilities	
12	Yes	Duct system provides conditioned air to an occupiable space for a constant volume, single zone, space-conditioning system.	
13	Yes	The space conditioning system serves less than 5,000 ft² of conditioned floor area.	
14	No	The combined surface area of the ducts in the following locations is more than 25% of the total surface area of the entire duct system:	
		☐ Outdoors	
		☐ In a space directly under a roof that has a U-factor greater than the u-factor of the ceiling, or if the roof does not meet the requirements of §140.3(a)1B or if the roof has fixed vents or openings to the outside/ unconditioned spaces	
		☐ In an unconditioned crawl space	
		☐ In other unconditioned spaces	
15		The scope of the project includes extending an existing duct system, which is constructed, insulated or sealed with asbestos.	
16		The scope of the project includes an existing duct system that is documented to have been previously sealed as confirmed through field verification and diagnostic testing in accordance with procedures in the Reference Nonresidential Appendix NA2.	
17	Yes	Duct system shall be sealed in acordance with the California Mechanical Code	

Registration Number: | Registration Date/Time: | Registration Provider: Energysoft

CA Building Energy Efficiency Standards - 2019 Nonresidential Compliance | Report Version: 2019.1.003 Schema Version: rev 20200601 | Report Generated: 2022-08-05 13:08:17

STATE OF CALIFORNIA
Mechanical Systems
NRCC-MCH-E — CALIFORNIA ENERGY COMMISSION

CERTIFICATE OF COMPLIANCE			**NRCC-MCH-E**
Project Name:	CVUSD Merwin	**Report Page:**	**(Page 30 of 38)**
Project Address:	16125 Cypress St	**Date Prepared:**	8/5/2022

L. DISTRIBUTION (DUCTWORK and PIPING)

The answers to the questions below apply to the following duct systems:	RTU-E6	Duct leakage testing triggered for these systems?	No
11	No	The scope of the project includes only duct systems serving healthcare facilities	
12	Yes	Duct system provides conditioned air to an occupiable space for a constant volume, single zone, space-conditioning system.	
13	Yes	The space conditioning system serves less than 5,000 ft² of conditioned floor area.	
14	No	The combined surface area of the ducts in the following locations is more than 25% of the total surface area of the entire duct system:	
		☐ Outdoors	
		☐ In a space directly under a roof that has a U-factor greater than the u-factor of the ceiling, or if the roof does not meet the requirements of §140.3(a)1B or if the roof has fixed vents or openings to the outside/ unconditioned spaces	
		☐ In an unconditioned crawl space	
		☐ In other unconditioned spaces	
15		The scope of the project includes extending an existing duct system, which is constructed, insulated or sealed with asbestos.	
16		The scope of the project includes an existing duct system that is documented to have been previously sealed as confirmed through field verification and diagnostic testing in accordance with procedures in the Reference Nonresidential Appendix NA2.	
17	Yes	Duct system shall be sealed in acordance with the California Mechanical Code	
The answers to the questions below apply to the following duct systems:	RTU-E7	Duct leakage testing triggered for these systems?	No
11	No	The scope of the project includes only duct systems serving healthcare facilities	
12	Yes	Duct system provides conditioned air to an occupiable space for a constant volume, single zone, space-conditioning system.	
13	Yes	The space conditioning system serves less than 5,000 ft² of conditioned floor area.	
14	No	The combined surface area of the ducts in the following locations is more than 25% of the total surface area of the entire duct system:	
		☐ Outdoors	
		☐ In a space directly under a roof that has a U-factor greater than the u-factor of the ceiling, or if the roof does not meet the requirements of §140.3(a)1B or if the roof has fixed vents or openings to the outside/ unconditioned spaces	
		☐ In an unconditioned crawl space	
		☐ In other unconditioned spaces	
15		The scope of the project includes extending an existing duct system, which is constructed, insulated or sealed with asbestos.	
16		The scope of the project includes an existing duct system that is documented to have been previously sealed as confirmed through field verification and diagnostic testing in accordance with procedures in the Reference Nonresidential Appendix NA2.	
17	Yes	Duct system shall be sealed in acordance with the California Mechanical Code	

Registration Number: | Registration Date/Time: | Registration Provider: Energysoft

CA Building Energy Efficiency Standards - 2019 Nonresidential Compliance | Report Version: 2019.1.003 Schema Version: rev 20200601 | Report Generated: 2022-08-05 13:08:17

STATE OF CALIFORNIA
Mechanical Systems
NRCC-MCH-E — CALIFORNIA ENERGY COMMISSION

CERTIFICATE OF COMPLIANCE			**NRCC-MCH-E**
Project Name:	CVUSD Merwin	**Report Page:**	**(Page 31 of 38)**
Project Address:	16125 Cypress St	**Date Prepared:**	8/5/2022

L. DISTRIBUTION (DUCTWORK and PIPING)

The answers to the questions below apply to the following duct systems:	RTU-E8	Duct leakage testing triggered for these systems?	No
11	No	The scope of the project includes only duct systems serving healthcare facilities	
12	Yes	Duct system provides conditioned air to an occupiable space for a constant volume, single zone, space-conditioning system.	
13	Yes	The space conditioning system serves less than 5,000 ft² of conditioned floor area.	
14	No	The combined surface area of the ducts in the following locations is more than 25% of the total surface area of the entire duct system:	
		☐ Outdoors	
		☐ In a space directly under a roof that has a U-factor greater than the u-factor of the ceiling, or if the roof does not meet the requirements of §140.3(a)1B or if the roof has fixed vents or openings to the outside/ unconditioned spaces	
		☐ In an unconditioned crawl space	
		☐ In other unconditioned spaces	
15		The scope of the project includes extending an existing duct system, which is constructed, insulated or sealed with asbestos.	
16		The scope of the project includes an existing duct system that is documented to have been previously sealed as confirmed through field verification and diagnostic testing in accordance with procedures in the Reference Nonresidential Appendix NA2.	
17	Yes	Duct system shall be sealed in acordance with the California Mechanical Code	

M. COOLING TOWERS

This section does not apply to this project.

N. DECLARATION OF REQUIRED CERTIFICATES OF INSTALLATION

Selections have been made based on information provided in previous tables of this document. If any selection needs to be changed, please explain why in Table E Additional Remarks. These documents must be provided to the building inspector during construction and can be found online at https://www.energy.ca.gov/title24/2019standards/2019_compliance_documents/Nonresidential_Documents/NRCI/

Form/Title	Field Inspector Pass	Field Inspector Fail
NRCI-MCH-01-E - Must be submitted for all buildings	☐	☐

Registration Number: | Registration Date/Time: | Registration Provider: Energysoft

CA Building Energy Efficiency Standards - 2019 Nonresidential Compliance | Report Version: 2019.1.003 Schema Version: rev 20200601 | Report Generated: 2022-08-05 13:08:17

STATE OF CALIFORNIA
Mechanical Systems
NRCC-MCH-E — CALIFORNIA ENERGY COMMISSION

CERTIFICATE OF COMPLIANCE			**NRCC-MCH-E**
Project Name:	CVUSD Merwin	**Report Page:**	**(Page 32 of 38)**
Project Address:	16125 Cypress St	**Date Prepared:**	8/5/2022

O. DECLARATION OF REQUIRED CERTIFICATES OF ACCEPTANCE

Selections have been made based on information provided in previous tables of this document. If any selection needs to be changed, please explain why in Table E Additional Remarks. These documents must be provided to the building inspector during construction and can be found online at https://www.energy.ca.gov/title24/2019standards/2019_compliance_documents/Nonresidential_Documents/NRCA/

Form/Title	Systems/Spaces To Be Field Verified	Field Inspector Pass	Field Inspector Fail
NRCA-MCH-02-A - Outdoor Air must be submitted for all newly installed HVAC units. Note: MCH-02-A can be performed in conjunction with MCH-07-A Supply Fan VFD Acceptance (if applicable) since testing activities overlap.	FCU/CU-B1A & B1B; RTU-C1 CARRIER 4-TON; RTU-C1 CARRIER 4-TON; RTU-C3 CARRIER 4-TON; RTU-C4 CARRIER 4-TON; RTU-C5 CARRIER 4-TON; RTU-C6 CARRIER 4-TON; RTU-C7 CARRIER 4-TON; RTU-C8 CARRIER 4-TON; RTU-E1 CARRIER 4-TON; RTU-E2 CARRIER 4-TON; RTU-E3 CARRIER 4-TON; RTU-E4 CARRIER 4-TON; RTU-E5 CARRIER 4-TON; RTU-E6 CARRIER 4-TON; RTU-E7 CARRIER 4-TON; RTU-E8 CARRIER 4-TON;	☐	☐

Registration Number: | Registration Date/Time: | Registration Provider: Energysoft

CA Building Energy Efficiency Standards - 2019 Nonresidential Compliance | Report Version: 2019.1.003 Schema Version: rev 20200601 | Report Generated: 2022-08-05 13:08:17

STATE OF CALIFORNIA
Mechanical Systems
NRCC-MCH-E — CALIFORNIA ENERGY COMMISSION

CERTIFICATE OF COMPLIANCE			**NRCC-MCH-E**
Project Name:	CVUSD Merwin	**Report Page:**	**(Page 33 of 38)**
Project Address:	16125 Cypress St	**Date Prepared:**	8/5/2022

O. DECLARATION OF REQUIRED CERTIFICATES OF ACCEPTANCE

Selections have been made based on information provided in previous tables of this document. If any selection needs to be changed, please explain why in Table E Additional Remarks. These documents must be provided to the building inspector during construction and can be found online at https://www.energy.ca.gov/title24/2019standards/2019_compliance_documents/Nonresidential_Documents/NRCA/

Form/Title	Systems/Spaces To Be Field Verified	Field Inspector Pass	Field Inspector Fail
NRCA-MCH-03-A - Constant Volume Single Zone HVAC NOTE: This form does not automatically move to "Yes". If Constant Volume Single Zone HVAC Systems are included in the scope, permit applicant should move this form to "Yes".	FCU/CU-B1A & B1B; RTU-C1 CARRIER 4-TON; RTU-C1 CARRIER 4-TON; RTU-C3 CARRIER 4-TON; RTU-C4 CARRIER 4-TON; RTU-C5 CARRIER 4-TON; RTU-C6 CARRIER 4-TON; RTU-C7 CARRIER 4-TON; RTU-C8 CARRIER 4-TON; RTU-E1 CARRIER 4-TON; RTU-E2 CARRIER 4-TON; RTU-E3 CARRIER 4-TON; RTU-E4 CARRIER 4-TON; RTU-E5 CARRIER 4-TON; RTU-E6 CARRIER 4-TON; RTU-E7 CARRIER 4-TON; RTU-E8 CARRIER 4-TON;	☐	☐

Registration Number: | Registration Date/Time: | Registration Provider: Energysoft

CA Building Energy Efficiency Standards - 2019 Nonresidential Compliance | Report Version: 2019.1.003 Schema Version: rev 20200601 | Report Generated: 2022-08-05 13:08:17

STATE OF CALIFORNIA
Mechanical Systems
NRCC-MCH-E — CALIFORNIA ENERGY COMMISSION

CERTIFICATE OF COMPLIANCE			**NRCC-MCH-E**
Project Name:	CVUSD Merwin	**Report Page:**	**(Page 34 of 38)**
Project Address:	16125 Cypress St	**Date Prepared:**	8/5/2022

O. DECLARATION OF REQUIRED CERTIFICATES OF ACCEPTANCE

Selections have been made based on information provided in previous tables of this document. If any selection needs to be changed, please explain why in Table E Additional Remarks. These documents must be provided to the building inspector during construction and can be found online at https://www.energy.ca.gov/title24/2019standards/2019_compliance_documents/Nonresidential_Documents/NRCA/

Form/Title	Systems/Spaces To Be Field Verified	Field Inspector Pass	Field Inspector Fail
NRCA-MCH-06-A Demand Control Ventilation Systems must be submitted for all systems required to employ demand controlled ventilation (refer to §120.1(c)3) can vary outside ventilation flow rates based on maintaining interior carbon dioxide (CO_2) concentration setpoints.	FCU/CU-B1A & B1B; RTU-C1 CARRIER 4-TON; RTU-C1 CARRIER 4-TON; RTU-C3 CARRIER 4-TON; RTU-C4 CARRIER 4-TON; RTU-C5 CARRIER 4-TON; RTU-C6 CARRIER 4-TON; RTU-C7 CARRIER 4-TON; RTU-C8 CARRIER 4-TON; RTU-E1 CARRIER 4-TON; RTU-E2 CARRIER 4-TON; RTU-E3 CARRIER 4-TON; RTU-E4 CARRIER 4-TON; RTU-E5 CARRIER 4-TON; RTU-E6 CARRIER 4-TON; RTU-E7 CARRIER 4-TON; RTU-E8 CARRIER 4-TON;	☐	☐

Registration Number: | Registration Date/Time: | Registration Provider: Energysoft

CA Building Energy Efficiency Standards - 2019 Nonresidential Compliance | Report Version: 2019.1.003 Schema Version: rev 20200601 | Report Generated: 2022-08-05 13:08:17

STATE OF CALIFORNIA
Mechanical Systems
NRCC-MCH-E — CALIFORNIA ENERGY COMMISSION

CERTIFICATE OF COMPLIANCE			**NRCC-MCH-E**
Project Name:	CVUSD Merwin	**Report Page:**	**(Page 35 of 38)**
Project Address:	16125 Cypress St	**Date Prepared:**	8/5/2022

O. DECLARATION OF REQUIRED CERTIFICATES OF ACCEPTANCE

Selections have been made based on information provided in previous tables of this document. If any selection needs to be changed, please explain why in Table E Additional Remarks. These documents must be provided to the building inspector during construction and can be found online at https://www.energy.ca.gov/title24/2019standards/2019_compliance_documents/Nonresidential_Documents/NRCA/

Form/Title	Systems/Spaces To Be Field Verified	Field Inspector Pass	Field Inspector Fail
NRCA-MCH-11-A Automatic Demand Shed Controls	FCU/CU-B1A & B1B; RTU-C1 CARRIER 4-TON; RTU-C1 CARRIER 4-TON; RTU-C3 CARRIER 4-TON; RTU-C4 CARRIER 4-TON; RTU-C5 CARRIER 4-TON; RTU-C6 CARRIER 4-TON; RTU-C7 CARRIER 4-TON; RTU-C8 CARRIER 4-TON; RTU-E1 CARRIER 4-TON; RTU-E2 CARRIER 4-TON; RTU-E3 CARRIER 4-TON; RTU-E4 CARRIER 4-TON; RTU-E5 CARRIER 4-TON; RTU-E6 CARRIER 4-TON; RTU-E7 CARRIER 4-TON; RTU-E8 CARRIER 4-TON;	☐	☐

Registration Number: | Registration Date/Time: | Registration Provider: Energysoft

CA Building Energy Efficiency Standards - 2019 Nonresidential Compliance | Report Version: 2019.1.003 Schema Version: rev 20200601 | Report Generated: 2022-08-05 13:08:17

STATE OF CALIFORNIA
Mechanical Systems
NRCC-MCH-E — CALIFORNIA ENERGY COMMISSION

CERTIFICATE OF COMPLIANCE			**NRCC-MCH-E**
Project Name:	CVUSD Merwin	**Report Page:**	**(Page 36 of 38)**
Project Address:	16125 Cypress St	**Date Prepared:**	8/5/2022

O. DECLARATION OF REQUIRED CERTIFICATES OF ACCEPTANCE

Selections have been made based on information provided in previous tables of this document. If any selection needs to be changed, please explain why in Table E Additional Remarks. These documents must be provided to the building inspector during construction and can be found online at https://www.energy.ca.gov/title24/2019standards/2019_compliance_documents/Nonresidential_Documents/NRCA/

Form/Title	Systems/Spaces To Be Field Verified	Field Inspector Pass	Field Inspector Fail
NRCA-MCH-16-A Supply Air Temperature Reset Controls	FCU/CU-B1A & B1B; RTU-C1 CARRIER 4-TON; RTU-C1 CARRIER 4-TON; RTU-C3 CARRIER 4-TON; RTU-C4 CARRIER 4-TON; RTU-C5 CARRIER 4-TON; RTU-C6 CARRIER 4-TON; RTU-C7 CARRIER 4-TON; RTU-C8 CARRIER 4-TON; RTU-E1 CARRIER 4-TON; RTU-E2 CARRIER 4-TON; RTU-E3 CARRIER 4-TON; RTU-E4 CARRIER 4-TON; RTU-E5 CARRIER 4-TON; RTU-E6 CARRIER 4-TON; RTU-E7 CARRIER 4-TON; RTU-E8 CARRIER 4-TON;	☐	☐

Registration Number; | Registration Date/Time: | Registration Provider: Energysoft

CA Building Energy Efficiency Standards - 2019 Nonresidential Compliance | Report Version: 2019.1.003 Schema Version: rev 20200601 | Report Generated: 2022-08-05 13:08:17

DLR Group
© DLR Group

REGISTERED PROFESSIONAL ENGINEER
DONG FANG ZHAO
No. M24891
Exp. 12/31/22
MECHANICAL
STATE OF CALIFORNIA

WSW

Merwin Elementary School
COVINA VALLEY USD
16125 CYPRESS ST, COVINA, CA 91722

100% CONSTRUCTION DOCUMENTS
11/04/2022
REVISIONS

75-22605-00

TITLE 24 COMPLIANCE

M0.5

Autodesk Docs://75-22605-00 CVUSD - District Wide HVAC Replacement/75-22605-00_CVUSD_Merwin ES_MEP_2022.rvt
10/21/2022 4:25:01 PM

STATE OF CALIFORNIA

Mechanical Systems

NRCC-MCH-E

CALIFORNIA ENERGY COMMISSION

CERTIFICATE OF COMPLIANCE			**NRCC-MCH-E**
Project Name:	CVUSD Merwin	**Report Page:**	**(Page 37 of 38)**
Project Address:	16125 Cypress St	**Date Prepared:**	8/5/2022

O. DECLARATION OF REQUIRED CERTIFICATES OF ACCEPTANCE

Selections have been made based on information provided in previous tables of this document. If any selection needs to be changed, please explain why in Table E Additional Remarks. These documents must be provided to the building inspector during construction and can be found online at https://www.energy.ca.gov/title24/2019standards/2019_compliance_documents/Nonresidential_Documents/NRCA/

Form/Title	Systems/Spaces To Be Field Verified	Field Inspector	
		Pass	Fail
NRCA-MCH-18-A Energy Management Control Systems	FCU/CU-B1A & B1B; RTU-C1 CARRIER 4-TON; RTU-C1 CARRIER 4-TON; RTU-C3 CARRIER 4-TON; RTU-C4 CARRIER 4-TON; RTU-C5 CARRIER 4-TON; RTU-C6 CARRIER 4-TON; RTU-C7 CARRIER 4-TON; RTU-C8 CARRIER 4-TON; RTU-E1 CARRIER 4-TON; RTU-E2 CARRIER 4-TON; RTU-E3 CARRIER 4-TON; RTU-E4 CARRIER 4-TON; RTU-E5 CARRIER 4-TON; RTU-E6 CARRIER 4-TON; RTU-E7 CARRIER 4-TON; RTU-E8 CARRIER 4-TON;	☐	☐

P. DECLARATION OF REQUIRED CERTIFICATES OF VERIFICATION

There are no NRCV forms required for this project.

Q. MANDATORY MEASURES DOCUMENTATION LOCATION

This table is used to indicate where mandatory measures are documented in the plan set or construction documentation.

01		02
Compliance with Mandatory Measures documented through MCH Mandatory Measures Note Block	Yes	M-Sheets

Registration Number:

CA Building Energy Efficiency Standards - 2019 Nonresidential Compliance

Registration Date/Time:

Report Version: 2019.1.003
Schema Version: rev 20200601

Registration Provider: Energysoft

Report Generated: 2022-08-05 13:08:17

STATE OF CALIFORNIA

Mechanical Systems

NRCC-MCH-E

CALIFORNIA ENERGY COMMISSION

CERTIFICATE OF COMPLIANCE			**NRCC-MCH-E**
Project Name:	CVUSD Merwin	**Report Page:**	**(Page 38 of 38)**
Project Address:	16125 Cypress St	**Date Prepared:**	8/5/2022

DOCUMENTATION AUTHOR'S DECLARATION STATEMENT

I certify that this Certificate of Compliance documentation is accurate and complete.

Documentation Author Name: Abhijit Rege	Documentation Author Signature:
Company: DLR Group	Signature Date: 2022-08-05
Address:	CEA/ HERS Certification Identification (if applicable): 9F30-5A88-E6C4-7653-2F72-A82E-9671-A2D4-7420-7AD7-DA3E-A59B-8F3B-18A3-B88E-17FE
City/State/Zip:	Phone: (949)-701-8533

RESPONSIBLE PERSON'S DECLARATION STATEMENT

I certify the following under penalty of perjury, under the laws of the State of California:

1. The information provided on this Certificate of Compliance is true and correct.
2. I am eligible under Division 3 of the Business and Professions Code to accept responsibility for the building design or system design identified on this Certificate of Compliance (responsible designer)
3. The energy features and performance specifications, materials, components, and manufactured devices for the building design or system design identified on this Certificate of Compliance conform to the requirements of Title 24, Part 1 and Part 6 of the California Code of Regulations.
4. The building design features or system design features identified on this Certificate of Compliance are consistent with the information provided on other applicable compliance documents, worksheets, calculations, plans and specifications submitted to the enforcement agency for approval with this building permit application.
5. I will ensure that a completed signed copy of this Certificate of Compliance shall be made available with the building permit(s) issued for the building, and made available to the enforcement agency for all applicable inspections. I understand that a completed signed copy of this Certificate of Compliance is required to be included with the documentation the builder provides to the building owner at occupancy.

Responsible Designer Name: TONG FANG ZHAO	Responsible Designer Signature:
Company: DLR GROUP	Date Signed: 2022-08-05
Address: 700 FLOWER STREET	License: M-34291
City/State/Zip: LOS ANGELES CA 90017	Phone: 213-444-0610

Registration Number:

CA Building Energy Efficiency Standards - 2019 Nonresidential Compliance

Registration Date/Time:

Report Version: 2019.1.003
Schema Version: rev 20200601

Registration Provider: Energysoft

Report Generated: 2022-08-05 13:08:17

DLR Group
© DLR Group

REGISTERED PROFESSIONAL ENGINEER
TONG FANG ZHAO
No. M34291
MECHANICAL
STATE OF CALIFORNIA

WSW

Merwin Elementary School
COVINA VALLEY USD
16125 CYPRESS ST, COVINA, CA 91722

100% CONSTRUCTION DOCUMENTS
11/04/2022
REVISIONS

75-22605-00

TITLE 24 COMPLIANCE

M0.6

Autodesk Docs://75-22605-00 CVUSD - District Wide HVAC Replacement/75-22605-00_CVUSD_Merwin ES_MEP_2022.rvt
11/02/2022 4:25:01 PM

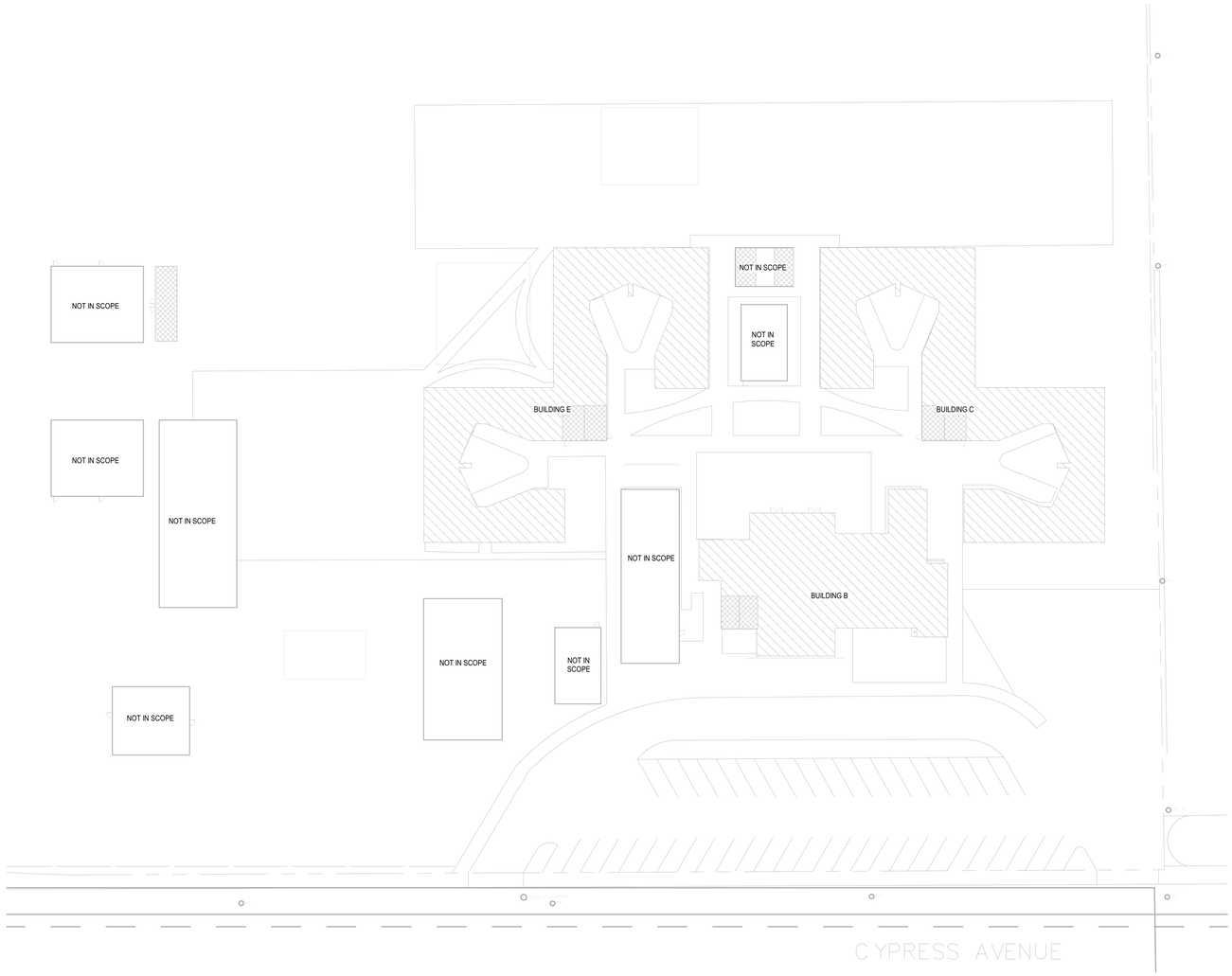

N

OVERALL MECHANICAL SITE PLAN

SCALE: 1" = 30'-0"

GENERAL NOTES

A FOR SYMBOLS AND ABBREVIATIONS SEE DRAWING M0.1

SITE LEGEND

- EXISTING BUILDING NOT IN SCOPE
- EXISTING BUILDING - SCOPE OF WORK UNDER THIS DSA APPLICATION
- (E) RESTROOMS - NOT IN SCOPE

DLR Group

© DLR Group

REGISTERED PROFESSIONAL ENGINEER
LONG TANG CHAN
No. M34391
MECHANICAL
STATE OF CALIFORNIA

WSW

Merwin Elementary School

COVINA VALLEY USD

16125 CYPRESS ST., COVINA, CA 91722

100% CONSTRUCTION DOCUMENTS

11/04/2022

REVISIONS

75-22605-00

OVERALL MECHANICAL SITE PLAN

M1.1

Autodesk Docs://75-22605-00 CVUSD - District Wide HVAC Replacement/75-22605-00_CVUSD_Merwin ES_MEP_2022.rvt
10/21/2022 4:25:02 PM

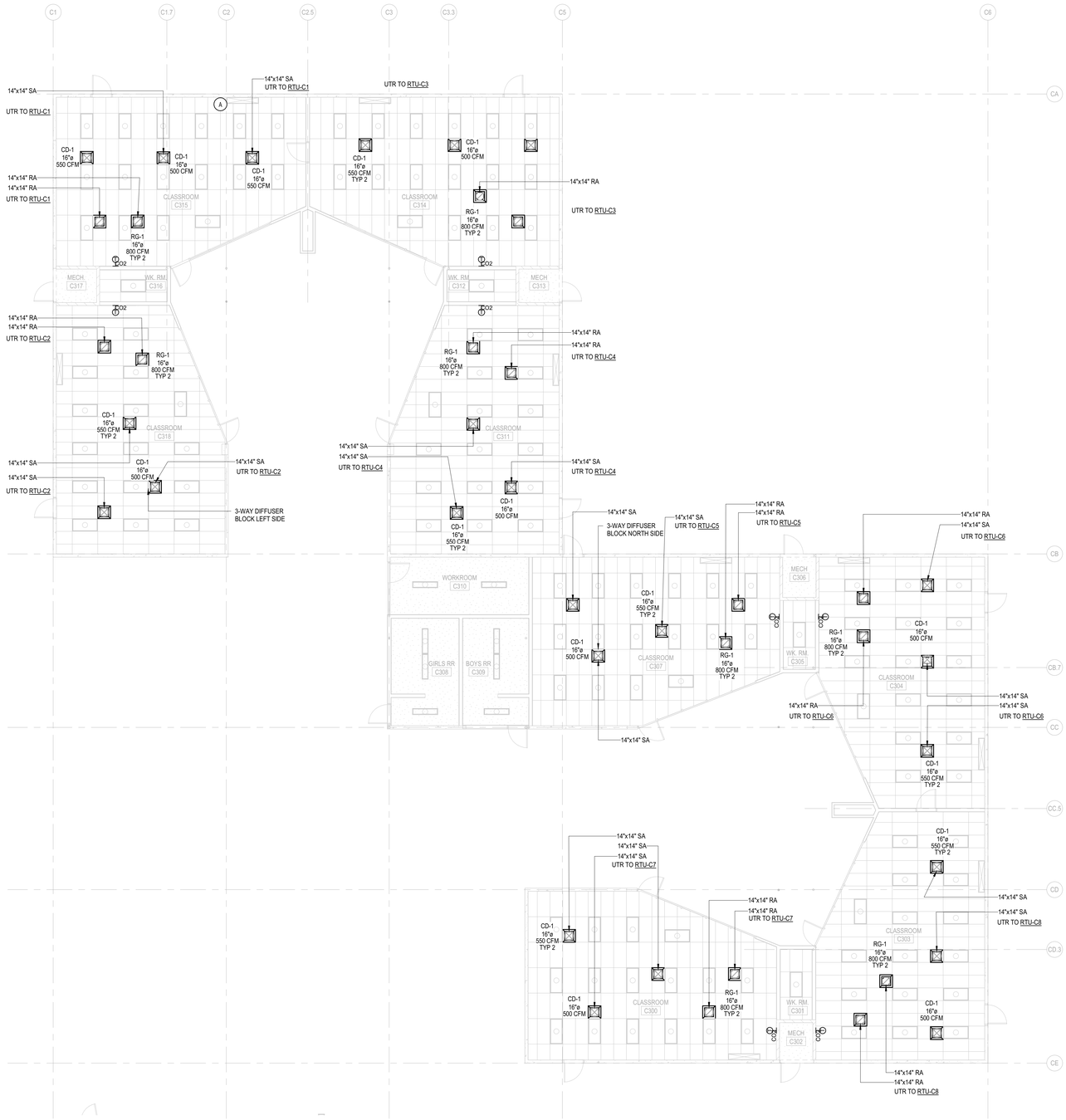

BUILDING C - MECHANICAL FLOOR PLAN

SCALE: 1/8" = 1'-0"

DEMO NOTES

A. DEMOLISH EXISTING OUTDOOR CONDENSING UNIT ON ROOF AND INDOOR FANCOIL UNITS, ALONG WITH RELATED CONCRETE PADS, PIPING, CONDUIT, FENCE, SUPPORTS AND OTHER APPURTENANCES. REFER TO ARCH PLANS OR SPECS FOR FILLING HOLES AND MATCHING WALL. CONTRACTOR TO VERIFY LOCATIONS ON SITE. TYP.

GENERAL NOTES

1. SCOPE OF WORK IS CLASSROOMS & MPR ONLY.
2. DIFFUSERS AND GRILLES TO MATCH (E) CEILING TILES. REFER TO RCP.

DLR Group

© DLR Group

REGISTERED PROFESSIONAL ENGINEER
DING FANG CHAO
No. M34391
Exp. 12/31/22
MECHANICAL
STATE OF CALIFORNIA

WSW

Merwin Elementary School

COVINA VALLEY USD

16125 CYPRESS ST, COVINA, CA 91722

100% CONSTRUCTION DOCUMENTS

11/04/2022

REVISIONS

75-22605-00

BUILDING C - MECHANICAL FLOOR PLAN

M1.1C

Autodesk Docs://75-22605-00 CVUSD - District Wide HVAC Replacement/75-22605-00_CVUSD_Merwin ES_MEP_2022.rvt
11/02/2022 4:25:03 PM

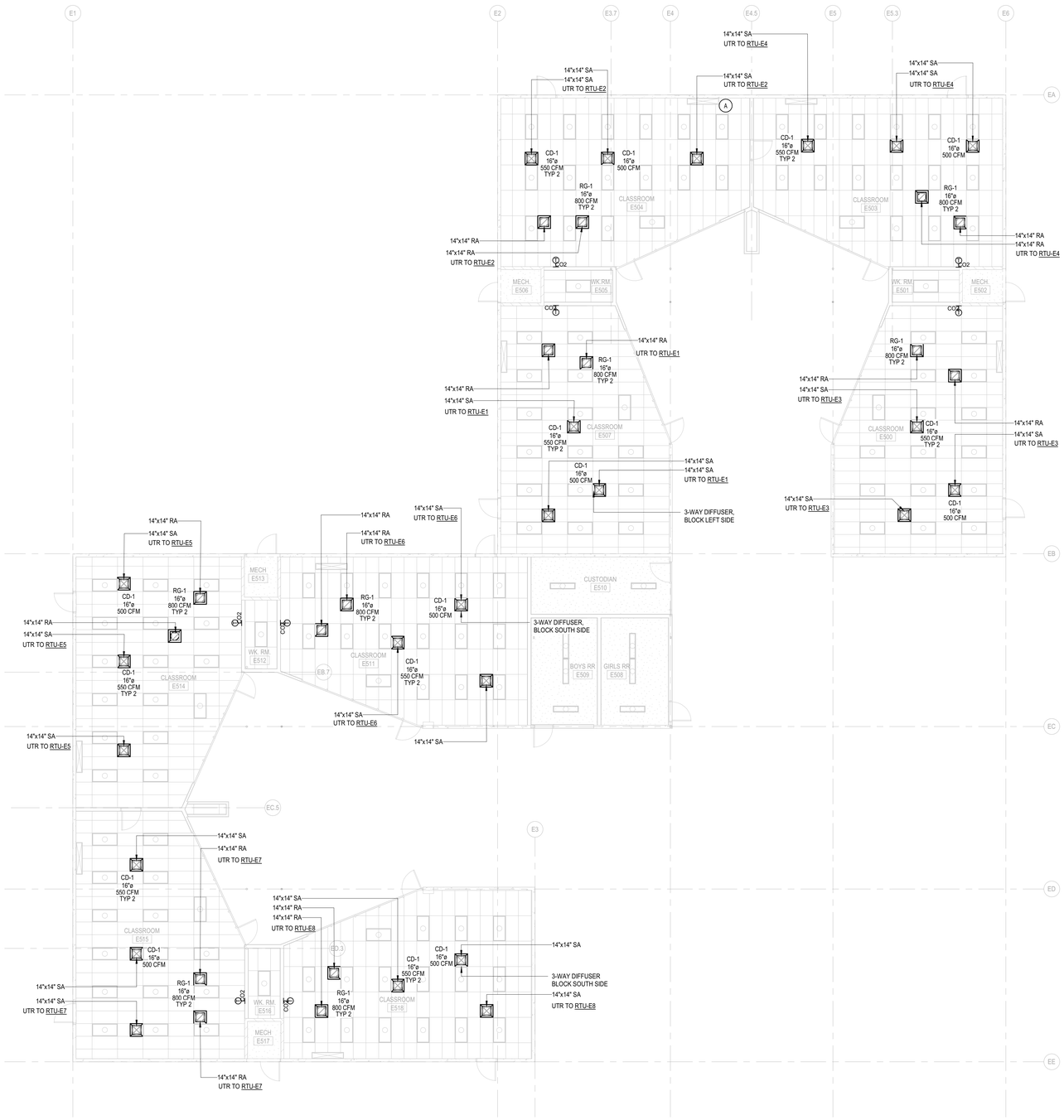

BUILDING E MECHANICAL FLOOR PLAN

SCALE: 1/8" = 1'-0"

DEMO NOTES

A. DEMOLISH EXISTING OUTDOOR CONDENSING UNIT ON ROOF AND INDOOR FANCOIL UNITS, ALONG WITH RELATED CONCRETE PADS, PIPING, CONDUIT, FENCE, SUPPORTS AND OTHER APPURTENANCES. REFER TO ARCH PLANS OR SPECS FOR FILLING HOLES AND MATCHING WALL. CONTRACTOR TO VERIFY LOCATIONS ON SITE. TYP.

GENERAL NOTES

1. SCOPE OF WORK IS CLASSROOMS & MPR ONLY.
2. DIFFUSERS AND GRILLES TO MATCH (E) CEILING TILES. REFER TO RCP.

DLR Group

© DLR Group

REGISTERED PROFESSIONAL ENGINEER
DING FANG TAO
No. M34391
Exp. 12/31/22
MECHANICAL
STATE OF CALIFORNIA

WSW

Merwin Elementary School

COVINA VALLEY USD

16125 CYPRESS ST, COVINA, CA 91722

100% CONSTRUCTION DOCUMENTS

11/04/2022

REVISIONS

75-22605-00

BUILDING E - MECHANICAL FLOOR PLAN

M1.1E

Autodesk Docs://75-22605-00 CVUSD - Distrct Wide HVAC Replacement/75-22605-00_CVUSD_Merwin ES_MEP_2022.rvt
11/02/2022 4:25:04 PM

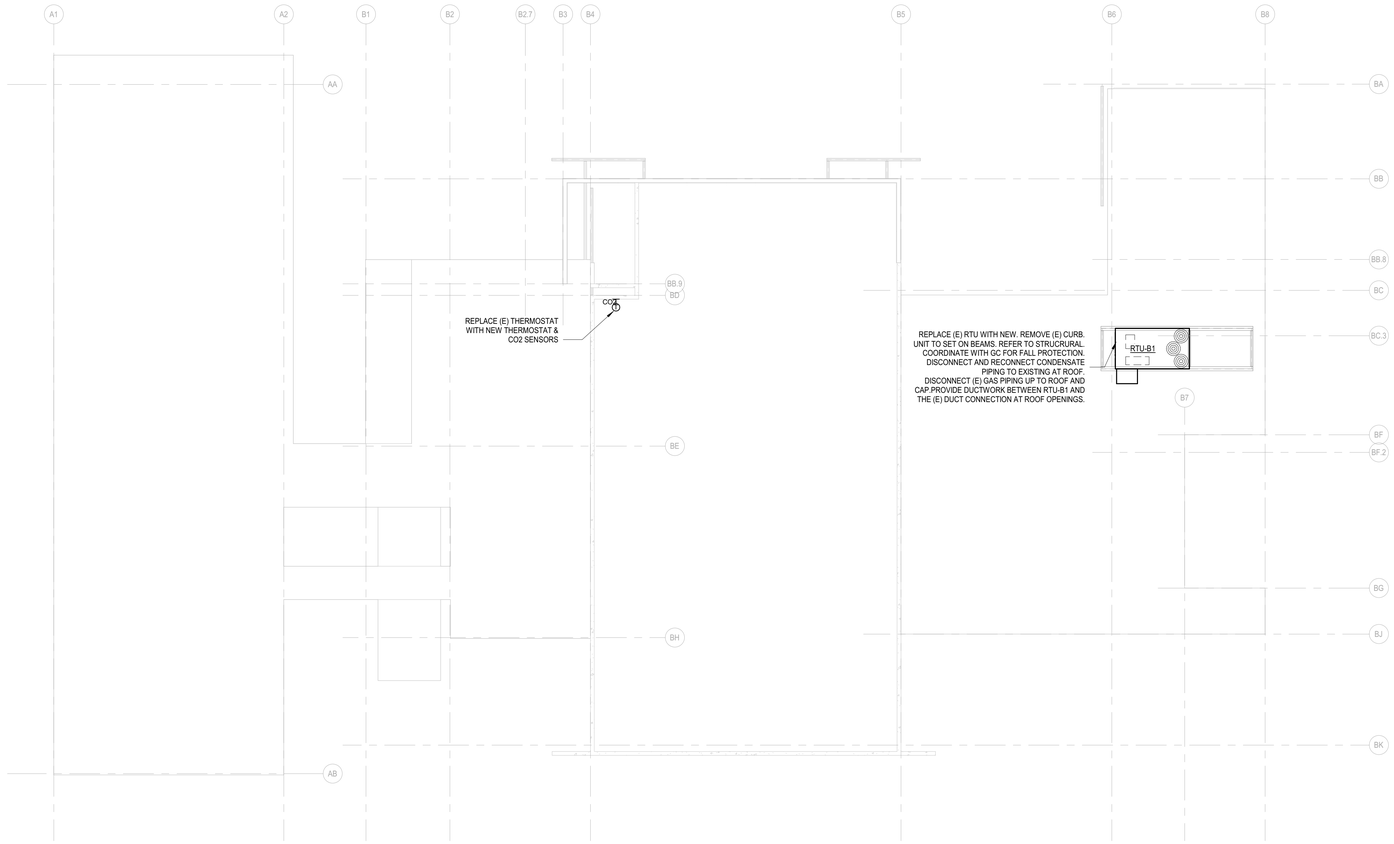

N

BUILDING B MECHANICAL ROOF PLAN

SCALE: 1/8" = 1'-0"

DLR Group

© DLR Group

REGISTERED PROFESSIONAL ENGINEER
CHING FANG CHAO
No. M34391
11/04/22
MECHANICAL
STATE OF CALIFORNIA

WSW

Merwin Elementary School

COVINA VALLEY USD

16125 CYPRESS ST, COVINA, CA 91722

100% CONSTRUCTION DOCUMENTS

11/04/2022

REVISIONS

75-22605-00

BUILDING B - MECHANICAL ROOF PLAN

M2.1B

Autodesk Docs://75-22605-00 CVUSD - District Wide HVAC Replacement/75-22605-00_CVUSD_Merwin ES_MEP_2022.rvt
10/21/2022 4:25:04 PM

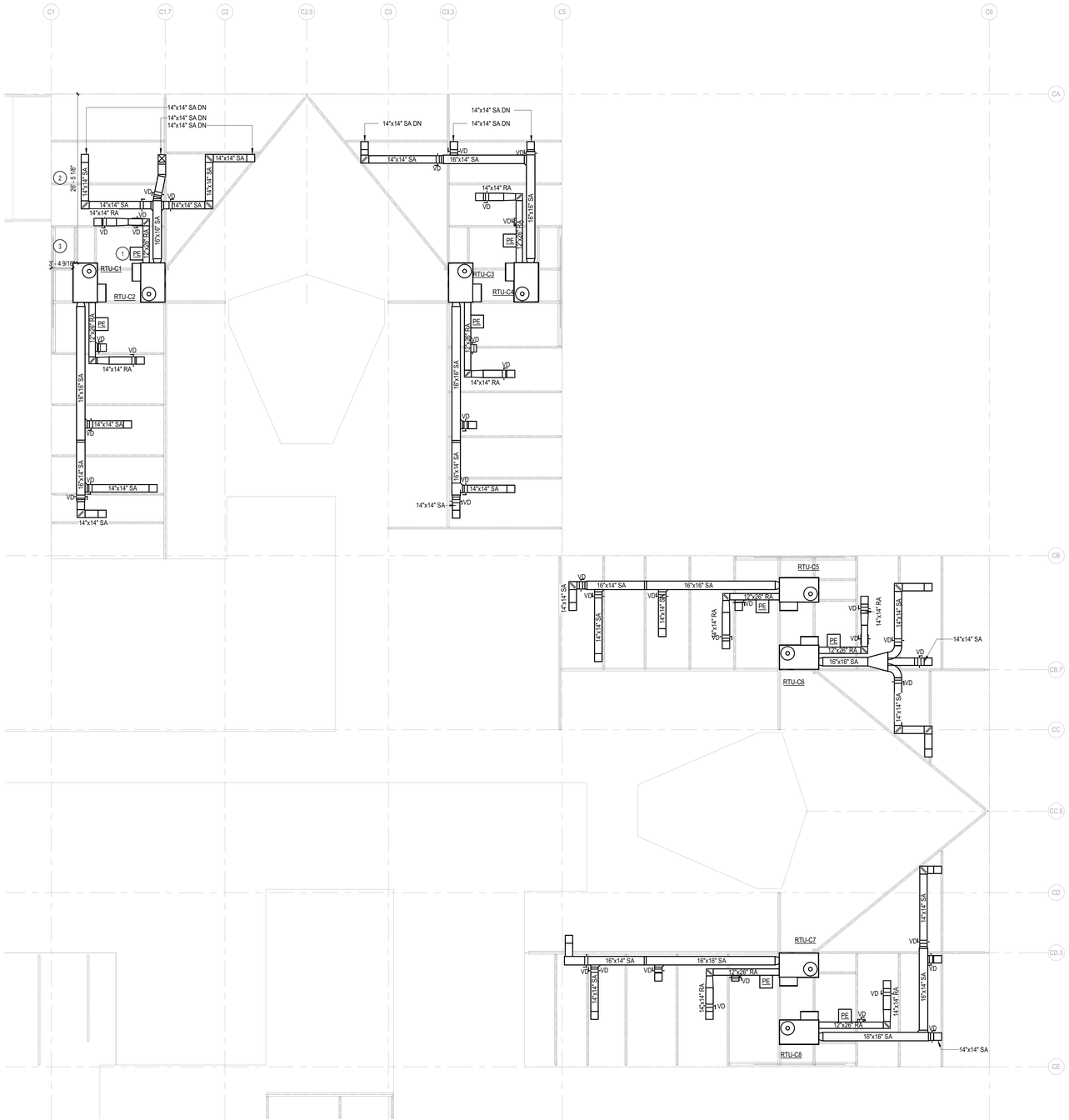

BUILDING C - MECHANICAL ROOF PLAN

SCALE: 1/8" = 1'-0"

GENERAL HVAC NOTES

1. INSTALL NEW RTU ON BEAM WITH ISOLATORS.
2. ALL ROOFTOP UNITS SHALL BE PROVIDED WITH UNPOWERED CONVENIENCE OUTLET.
3. DISCONNECTING MEANS TO BE NEMA 3R RATED. FURNISHEDBY HVAC EQUIPMENT MANUFACTURER AND INSTALLEDUNDER DIVISION 26.
4. NEW OPENINGS FOR SUPPLY AND RETURN DUCTS SHOULD BE MADE BETWEEN THE ROOF JOISTS. DO NOT CUT THE JOISTS.
5. DUCT SUPPORT ON ROOF TO REFER TO 3A/S1.4.
6. PROVIDE FLEXIBLE CONNECTION AT UNIT FOR SA & RA DUCT.

KEY NOTES

1. PROVIDE POWER EXHAUST ON RETURN DUCT WITH LEG LENGTH TO FIT THE ROOF SLOPE. CONTRACTOR TO VERIFY ON SITE. TYP.
2. RTU TO BE 10'-0" MIN. FROM ROOF EDGE. CONTRACTOR TO VERIFY ON SITE. TYP.
3. RTU IS LESS THAN 10'-0" FROM ROOF EDGE. ARCH TO PROVIDE PROTECTION GUARDS. TYP.

DLR Group

© DLR Group

REGISTERED PROFESSIONAL ENGINEER
JONG FANG TSAI
No. M24391
Exp. 12/31/22
MECHANICAL
STATE OF CALIFORNIA

WSW

Merwin Elementary School

COVINA VALLEY USD

16125 CYPRESS ST, COVINA, CA 91722

100% CONSTRUCTION DOCUMENTS

11/04/2022

REVISIONS

75-22605-00

BUILDING C - MECHANICAL ROOF PLAN

M2.1C

Autodesk Docs://75-22605-00 CVUSD - District Wide HVAC Replacement/75-22605-00_CVUSD_Merwin ES_MEP_2022.rvt
10/21/2022 4:25:05 PM

BUILDING E MECHANICAL ROOF PLAN

SCALE: 1/8" = 1'-0"

GENERAL HVAC NOTES

1. INSTALL NEW RTU ON BEAM WITH ISOLATORS.
2. ALL ROOFTOP UNITS SHALL BE PROVIDED WITH UNPOWERED CONVENIENCE OUTLET.
3. DISCONNECTING MEANS TO BE NEMA 3R RATED, FURNISHEDBY HVAC EQUIPMENT MANUFACTURER AND INSTALLEDUNDER DIVISION 26.
4. NEW OPENINGS FOR SUPPLY AND RETURN DUCTS SHOULD BE MADE BETWEEN THE ROOF JOISTS. DO NOT CUT THE JOISTS.
5. DUCT SUPPORT ON ROOF TO REFER TO 3A/S1.4.
6. PROVIDE FLEXIBLE CONNECTION AT UNIT FOR SA & RA DUCT.

KEY NOTES

1. PROVIDE POWER EXHAUST ON RETURN DUCT WITH LEG LENGTH TO FIT THE ROOF SLOPE. CONTRACTOR TO VERIFY ON SITE. TYP.
2. RTU TO BE 10'-0" MIN. FROM ROOF EDGE. CONTRACTOR TO VERIFY ON SITE. TYP.
3. RTU IS LESS THAN 10'-0" FROM ROOF EDGE. ARCH TO PROVIDE PROTECTION GUARDS. TYP.

DLR Group

© DLR Group

REGISTERED PROFESSIONAL ENGINEER
DONG FANG ZHAO
No. M34391
12/31/22
MECHANICAL
STATE OF CALIFORNIA

WSW

Merwin Elementary School

COVINA VALLEY USD

16125 CYPRESS ST, COVINA, CA 91722

100% CONSTRUCTION DOCUMENTS

11/04/2022

REVISIONS

75-22605-00

BUILDING E - MECHANICAL ROOF PLAN

M2.1E

Autodesk Docs://75-22605-00 CVUSD - District Wide HVAC Replacement/75-22605-00_CVUSD_Merwin ES_MEP_2022.rvt
10/21/2022 4:25:06 PM

SEQUENCES OF OPERATION

SEQUENCE OF OPERATION FOR CVUSD MERWIN ES

HEAT PUMP RTU (RTU-C1, RTU-C2, RTU- D1 THRU RTU-D3, RTU-G1 THRU RTU-G3, RTU-H1 THRU RTU-H3, RTU-I1 THRU RTU-I3, AND RTU-J1 THRU RTU-J3)

Indoor Fan
The fan operates at a variable speed to meet the load conditions and SAT safety requirements to provide maximum energy savings by minimizing fan horsepower consumption. Fan speed is NOT controlled by static pressure.

Heating Mode
When space temperature is below the occupied heating setpoint, unit shall operate in the heating mode. Unit shall stage available heat stages to satisfy demand in the occupied space.

Cooling Mode
When space temperature is above occupied cooling setpoint, unit shall operate in the cooling mode. Unit shall enable available cooling stages to satisfy demand in the occupied space.

CO2 Control
Unit shall monitor space CO2 when the supply fan is energized. When CO2 is above setpoint of 1000 PPM, an alarm shall be enabled through the EMS.

1.1.2 GAS ELECTRIC RTU (RTU-B1)

Indoor Fan
During Occupied periods, the fan shall operate continuously. During Unoccupied periods, the fan shall operate when the space temperature exceeds the unoccupied heating or cooling setpoints. The fan operates at 1 of 2 speeds depending on the mode of operation and load conditions. During vent only mode and low load conditions, the fan operates at low speed. If load conditions increase or if there is a call for heating, the fan operates at high speed.

Heating Mode
When space temperature is below the occupied heating setpoint, unit shall operate in the heating mode. Unit shall stage available heat stages to satisfy demand in the occupied space.

Cooling Mode
When space temperature is above occupied cooling setpoint, unit shall operate in the cooling mode. Unit shall enable available cooling stages to satisfy demand in the occupied space.

Economizer
Economizer shall close when fan is off or during a loss of power. During occupied hours when fan is energized, the economizer shall open to adjustable minimum position. When outside air temperature is below 75° and occupied space requires cooling, economizer shall open. If economizer air is not sufficient to meet the demand in the occupied space, unit shall enable available mechanical cooling stages to satisfy demand in the occupied space.

CO2 Control
Unit shall monitor space CO2 when the supply fan is energized. When CO2 is above setpoint of 1000 PPM, economizer shall modulate open toward an adjustable maximum CO2 position. As the CO2 level in the space increases above the setpoint, the minimum positions of the dampers will be increased proportionally, until the maximum ventilation setting is reached. As the space CO2 level decreases because of the increase in fresh air, the outdoor-damper will follow the higher demand condition from the DCV mode or from the free-cooling mode.

Power Exhaust
The exhaust fan shall modulate to maintain the room pressure setpoint (as determined by air balancer). Not controlled through EMS.

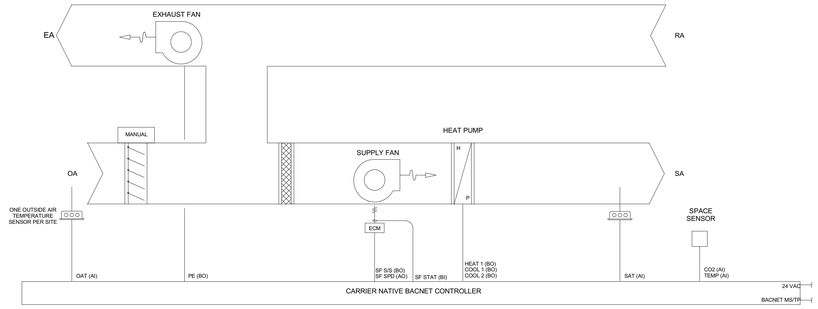

CONTROLS PROVIDED AND INSTALLED BY CARRIER CONTROLS EXPERT DEALER

50FCQ HEAT PUMP RTU DETAIL (RTU-C1 THRU RTU-C8 AND RTU-E1 THRU RTU-E8)	SCALE	1
	NONE	

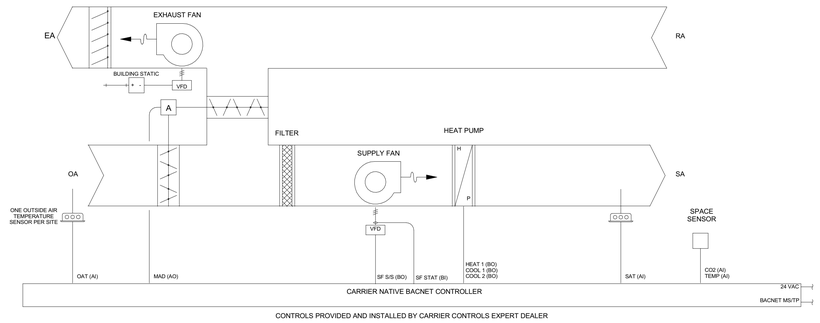

CONTROLS PROVIDED AND INSTALLED BY CARRIER CONTROLS EXPERT DEALER

HEAT PUMP UNIT DETAIL (RTU-B1)	SCALE	2
	NONE	

1 / M5.1 DETAILS
NO SCALE

DLR Group
© DLR Group

REGISTERED PROFESSIONAL ENGINEER
DING FANG ZHAO
No. M-34391
Exp. 12/31/22
MECHANICAL
STATE OF CALIFORNIA

WSW

Merwin Elementary School
COVINA VALLEY USD
16125 CYPRESS ST, COVINA, CA 91722

100% CONSTRUCTION DOCUMENTS
11/04/2022
REVISIONS

75-22605-00

CONTROLS DIAGRAMS

M5.1

Autodesk Docs://75-22605-00 CVUSD - District Wide HVAC Replacement/75-22605-00_CVUSD_Merwin ES_MEP_2022.rvt
10/21/2022 4:25:06 PM

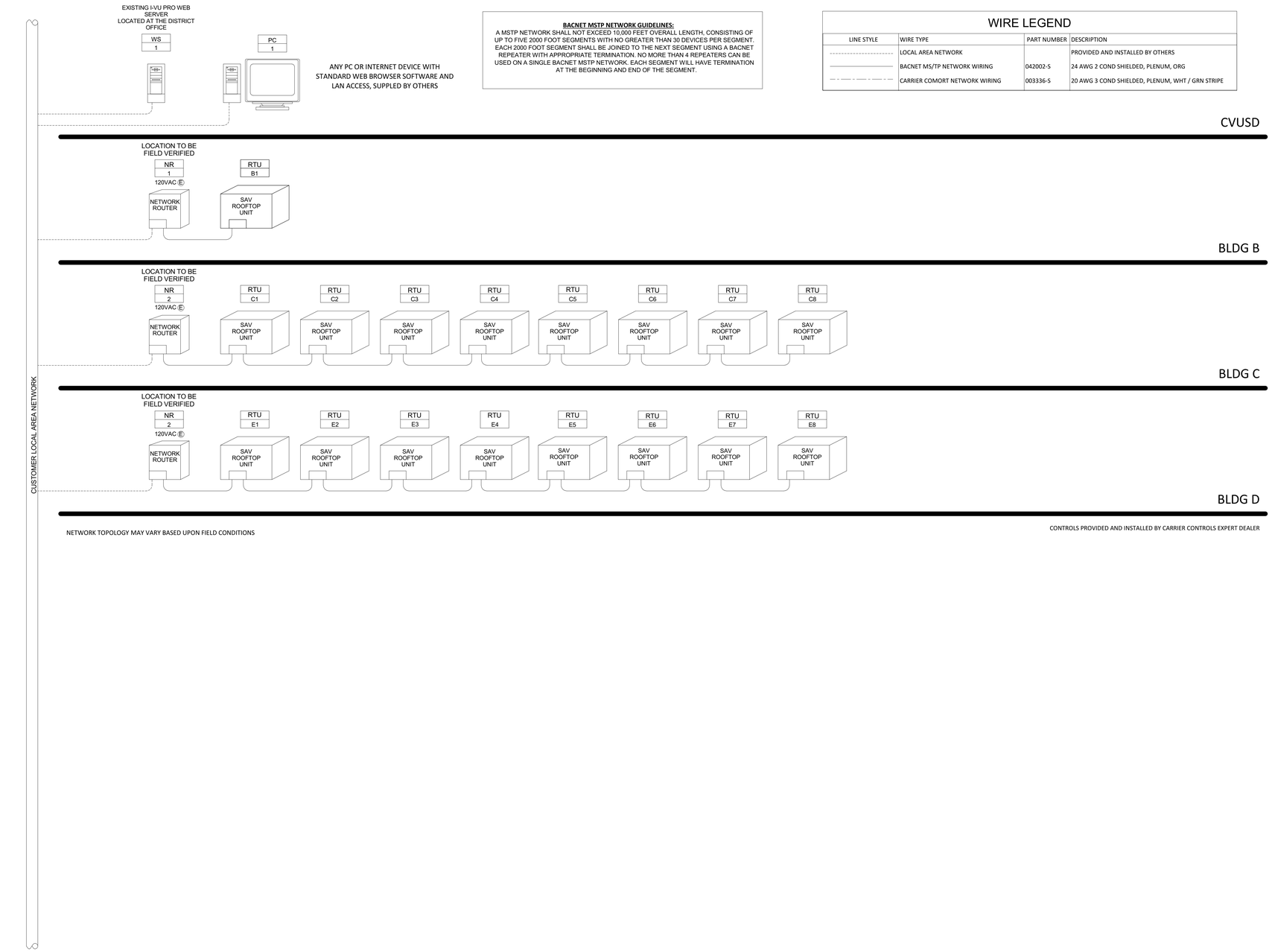

BACNET MSTP NETWORK GUIDELINES:
A MSTP NETWORK SHALL NOT EXCEED 10,000 FEET OVERALL LENGTH, CONSISTING OF UP TO FIVE 2000 FOOT SEGMENTS WITH NO GREATER THAN 30 DEVICES PER SEGMENT. EACH 2000 FOOT SEGMENT SHALL BE JOINED TO THE NEXT SEGMENT USING A BACNET REPEATER WITH APPROPRIATE TERMINATION. NO MORE THAN 4 REPEATERS CAN BE USED ON A SINGLE BACNET MSTP NETWORK. EACH SEGMENT WILL HAVE TERMINATION AT THE BEGINNING AND END OF THE SEGMENT.

WIRE LEGEND

LINE STYLE	WIRE TYPE	PART NUMBER	DESCRIPTION
	LOCAL AREA NETWORK		PROVIDED AND INSTALLED BY OTHERS
	BACNET MS/TP NETWORK WIRING	042002-S	24 AWG 2 COND SHIELDED, PLENUM, ORG
	CARRIER COMORT NETWORK WIRING	003336-S	20 AWG 3 COND SHIELDED, PLENUM, WHT / GRN STRIPE

1 / M5.2 BACS RISER DIAGRAM
NO SCALE

DLR Group
© DLR Group

REGISTERED PROFESSIONAL ENGINEER
CHING FANG CHAO
No. M-34391
10/21/2022
MECHANICAL
STATE OF CALIFORNIA

WSW

Merwin Elementary School
COVINA VALLEY USD
16125 CYPRESS ST, COVINA, CA 91722

100% CONSTRUCTION DOCUMENTS
11/04/2022
REVISIONS

75-22605-00

CONTROLS DIAGRAMS

M5.2

Autodesk Docs://75-22605-00 CVUSD - District Wide HVAC Replacement/75-22605-00_CVUSD_Merwin ES_MEP_2022.rvt
10/21/2022 4:25:06 PM

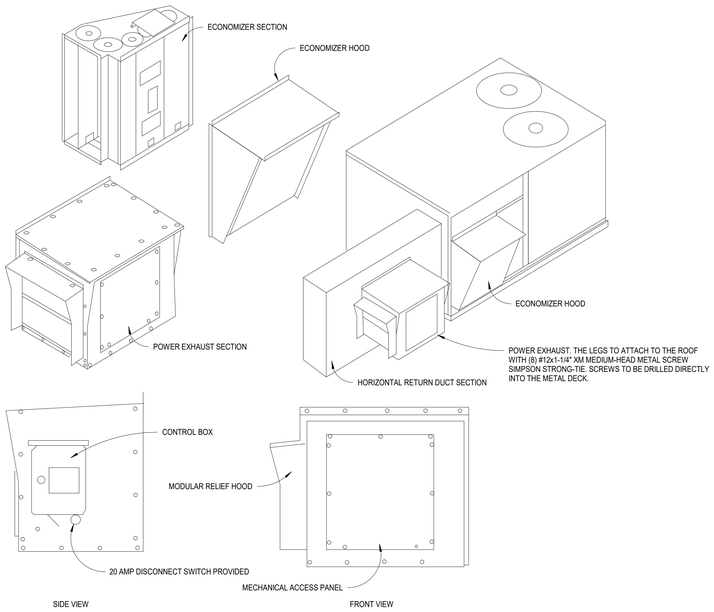

3 / M7.1 ECONOMIZER AND POWER EXHAUST DETAIL - HORIZONTAL DISCHARGE RTU (LESS THAN 15 TONS)
NO SCALE

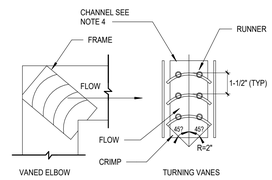

NOTES:
1. MAXIMUM UNSUPPORTED VANE LENGTH 36".
2. VANES AND FRAMES -24 GAUGE.
3. DUCT INLET AND OUTLET DIMENSIONS TO BE EQUAL.
4. FOR HIGH VELOCITY APPLICATIONS PROVIDE 18 GAUGE CHANNEL AND TACK WELD VANE EDGES TO CHANNEL, TYPICAL BOTH ENDS.
5. FRAMES AND CHANNELS -BOLTED OR TACK WELDED TO ELBOW.

7 / M7.1 RECTANGULAR ELBOW W/ TURNING VANES DETAIL
NO SCALE

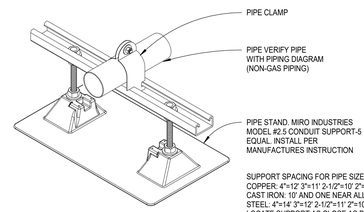

SUPPORT SPACING FOR PIPE SIZE:
COPPER: 4"=12' 3"=11' 2-1/2"=10' 2"=9' 1-1/2"=8' 1"=6' 3/4"=6'.
CAST IRON: 10' AND ONE NEAR ALL JOINTS.
STEEL: 4"=14' 3"=12' 2-1/2"=11' 2"=10' 1-1/2"=9' 1"=7' 3/4"=6'.
LOCATE SUPPORT AS CLOSE AS POSSIBLE TO TURNS AND TEES OF PIPE.

6 / M7.1 PIPE SUPPORT ON ROOF DETAIL
NO SCALE

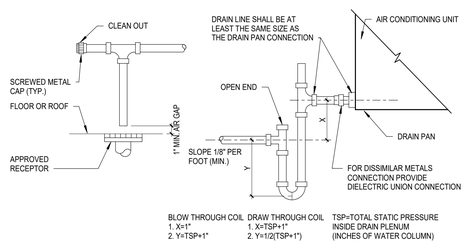

BLOW THROUGH COIL	DRAW THROUGH COIL	TSP=TOTAL STATIC PRESSURE INSIDE DRAIN PLENUM (INCHES OF WATER COLUMN)
1. X=1"	1. X=TSP+1"	
2. Y=TSP+1"	2. Y=1/2(TSP+1")	

NOTES:
1. WHERE VERTICAL SPACE DOES NOT PERMIT TRAP INSTALLATION AS REQUIRED ABOVE FLOOR SLAB, EXTEND P-TRAP TO BELOW SLAB.
2. FOR INDOOR AND OUTDOOR INSTALLATION PROVIDE INSULATED RAIN LINE TO THE POINT OF DISCHARGE AT APPROVED RECEPTOR.

4 / M7.1 CONDENSATE DRAIN CONNECTION DETAIL
NO SCALE

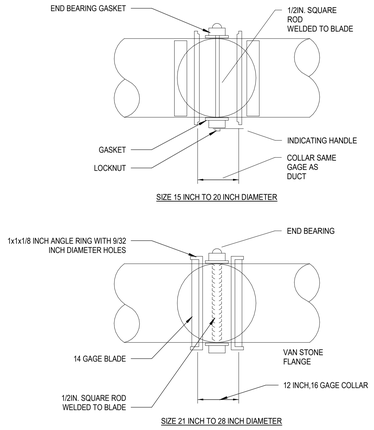

9 / M7.1 ROUND VOLUME DAMPER (LARGER THAN 14" DIA.)
NO SCALE

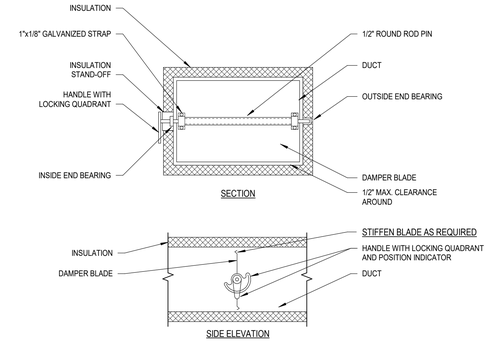

1. DELETE INSULATION STAND-OFF ON DUCTWORK WITHOUT EXTERIOR INSULATION.
2. DETAIL SHOWS SINGLE BLADE DAMPER. MULTI-BLADE DAMPERS INSTALLATIONS SHALL BE SIMILAR.
3. LOCK DAMPER DURING AIR BALANCE AND MARK QUADRANT TO RECORD AIR BALANCED DAMPER POSITION.
4. PROVIDE "HAT" SECTION AT QUADRANT FOR ALL EXTTERNALLY INSUALATED DUCTWORK.
5. PROVIDE FLUORESCENT COLORED MARKERS ON CEILING AT ALL VOLUME DAMPER LOCATIONS.

8 / M7.1 RECTANGULAR VOLUME DAMPER DETAIL
NO SCALE

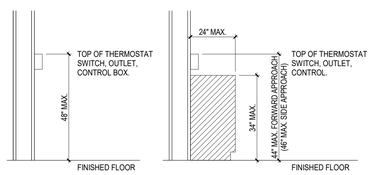

1 / M7.1 THERMOSTAT MOUNTING
NO SCALE

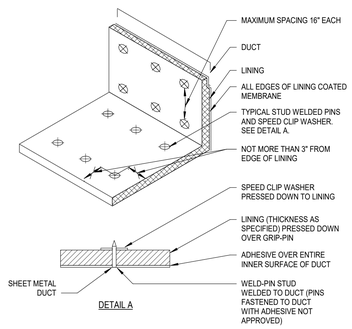

10 / M7.1 ACOUSTICAL DUCT LINING INSTALLATION DETAIL
NO SCALE

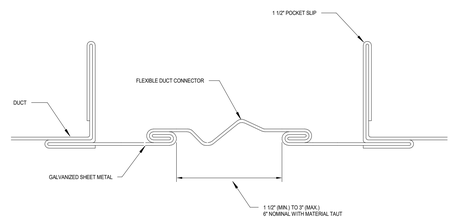

11 / M7.1 FLEXIBLE DUCT CONNECTION
NO SCALE

DLR Group
© DLR Group

REGISTERED PROFESSIONAL ENGINEER
JING TANG ZHAO
No. M34391
12/31/22
MECHANICAL
STATE OF CALIFORNIA

WSW

Merwin Elementary School
COVINA VALLEY USD
16125 CYPRESS ST, COVINA, CA 91722

100% CONSTRUCTION DOCUMENTS
11/04/2022
REVISIONS

75-22605-00

MECHANICAL DETAILS

M7.1

Autodesk Docs://75-22605-00 CVUSD - District Wide HVAC Replacement/75-22605-00_CVUSD_Merwin ES_MEP_2022.rvt
11/7/2022 3:47:09 PM

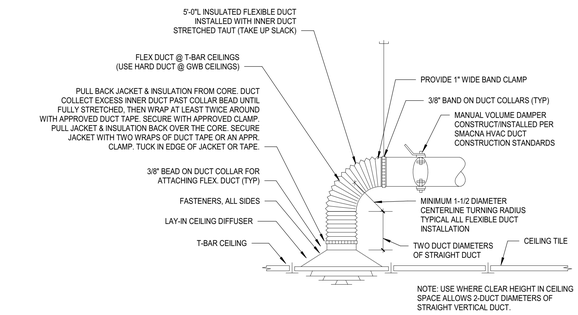

1 / M7.2 CEILING SUPPLY DIFFUSER CONNECTION DETAIL
NO SCALE

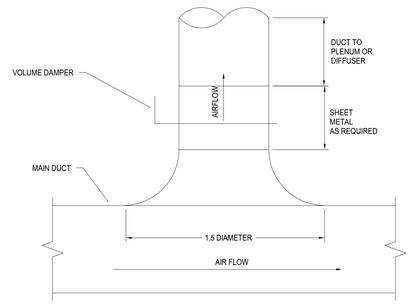

NOTES:

1. FURNISH THIS TYPE CONNECTION WHEN SINGLE-LINE DUCTWORK IS INDICATED AS THIS. FOR BRANCHES WITH MORE THAN 25% OF TOTAL AIR FLOW

3 / M7.2 ROUND SUPPLY DUCT BRANCH TO RECTANGULAR DUCT
NO SCALE

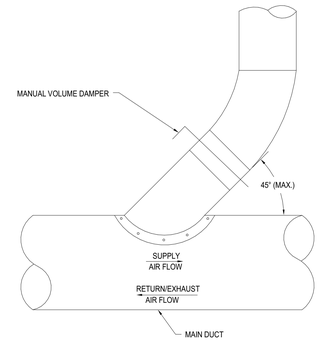

NOTES:

1. FURNISH LATERAL TEE CONNECTION FOR BRANCHES WHEN SINGLE LINE DUCTWORK IS INDICATED AS THIS.
2. FOR MANUAL VOLUME DAMPER SEE DETAIL 24/M5.2.

5 / M7.2 ROUND DUCT BRANCH TO ROUND MAIN CONNECTION
NO SCALE

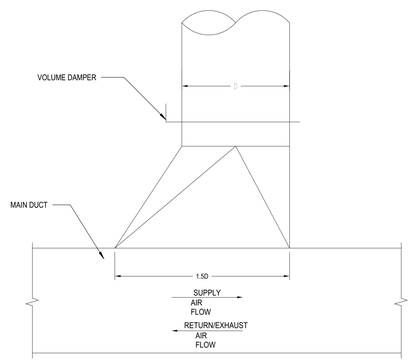

NOTES:

1. FURNISH THIS TYPE CONNECTION WHEN SINGLE-LINE DUCTWORK IS INDICATED AS THIS. FOR BRANCHES WITH LESS THAN 25% OF TOTAL AIR FLOW.
2. PROVIDE FLUORESCENT COLORED MARKERS ON CEILING AT ALL MANUAL VOLUME DAMPER LOCATION.

2 / M7.2 ROUND DUCT BRANCH TO MAIN RECT. CONNECTION
NO SCALE

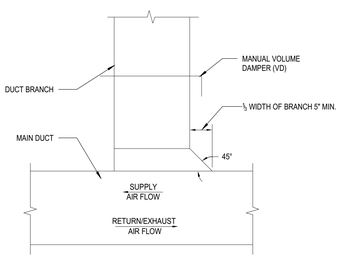

NOTES:

1. FURNISH THIS TYPE OF CONNECTION WHEN SINGLE-LINE DUCTWORK IS INDICATED AS THIS. FOR BRANCHES WITH LESS THAN 25% OF THE TOTAL AIR FLOW, OR WHERE INDICATED ON DRAWINGS.
2. FOR MANUAL VOLUME DAMPER SEE DETAIL 22/M5.1.
3. SLIP-IN VOLUME DAMPER HOUSING WILL NOT BE ALLOWED.

4 / M7.2 RECTANGULAR DUCT BRANCH TO RECTANGULAR DUCT
NO SCALE

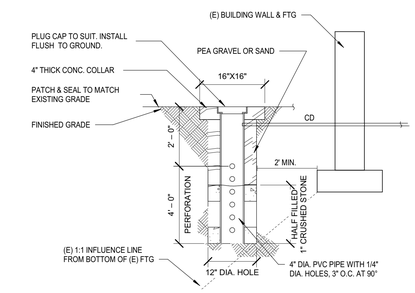

6 / M7.2 DRY WELL DETAIL
NO SCALE

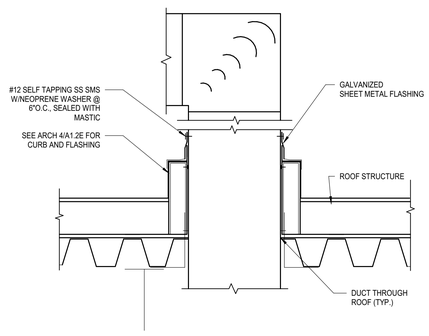

9 / M7.2 DUCT THRU ROOF PENETRATION
NO SCALE

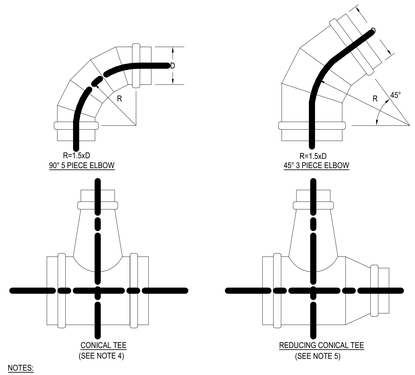

NOTES:

1. FITINGS TO BE 2 GAGES HEAVIER THAN CONNECTED DUCT.
2. ADJUSTABLE ELBOWS WILL BE PERMITTED FOR DUCT CONSTRUCTION OF 2" W.G. OR LESS.
3. PROVIDE CONTINUOUS SEALANT AT EACH FITTING JOINT.
4. PROVIDE THIS TYPE OF CONNECTION FOR BRANCHES WHEN SINGLE LINE DUCTWORK IS INDICATED AS THIS.
5. PROVIDE THIS TYPE OF CONNECTION FOR BRANCHES WHEN SINGLE LINE DUCTWORK IS INDICATED AS THIS.

8 / M7.2 ROUND DUCT FITTINGS
NO SCALE

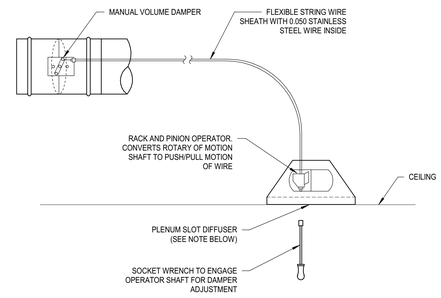

NOTES:

1. DIFFUSER OR REGISTER LOCATED IN GYP BOARD CEILING.
2. PROVIDE REGULATOR FOR ALL MANUAL VOLUME DAMPERS INSTALLED IN INACCESSIBLE CEILING OR HARD TO REACH PLACES.
3. FOR CEILING TYPE AND CONSTRUCTION, SEE ARCHITECTURAL DRAWINGS.

7 / M7.2 BOWDEN TYPE CABLE CONTROL (YOUNG'S REGULATOR)
NO SCALE

DLR Group
© DLR Group

REGISTERED PROFESSIONAL ENGINEER
DING FANG ZHAO
No. M24391
12/31/22
MECHANICAL
STATE OF CALIFORNIA

WSW

Merwin Elementary School
COVINA VALLEY USD
16125 CYPRESS ST, COVINA, CA 91722

100% CONSTRUCTION DOCUMENTS
11/04/2022
REVISIONS

75-22605-00

MECHANICAL DETAILS

M7.2

Autodesk Docs://75-22605-00 CVUSD - District Wide HVAC Replacement/75-22605-00_CVUSD_Merwin ES_MEP_2022.rvt
10/21/2022 4:25:07 PM

MARK	MAKE	TYPE	STEEL SIZE
RTU -B1	CARRIER	50TCQD14	ASTM A36, L 4 X 3 X 1/4

DETAIL-1

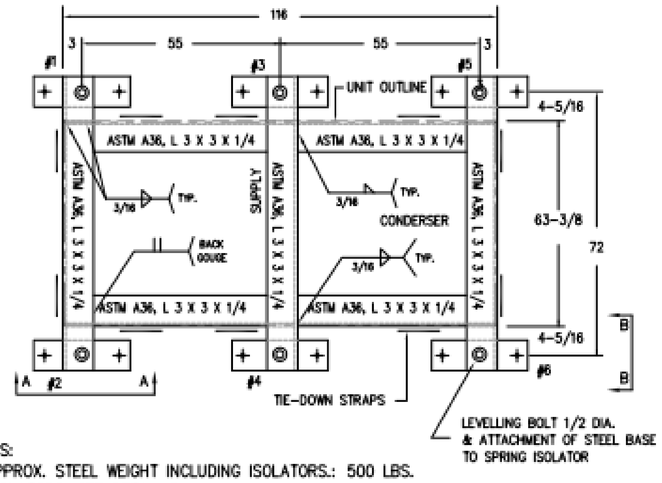

NOTES:
1. APPROX. STEEL WEIGHT INCLUDING ISOLATORS.: 500 LBS.
2. ISOLATORS, SEE DETAIL 3.
3. —— INDICATES TIE-DOWN STRAP. SEE DETAIL 3.
4. M.W. SAUSSE & CO. INC. IS NOT RESPONSIBLE FOR THE STRUCTURAL INTEGRITY OF THE EQUIPMENT WHEN ANCHORED AS SHOWN.
5. ALL DIMENSIONS REQUIRE FINAL REVIEW AT COMMENCEMENT OF PROJECT.

DETAIL-2

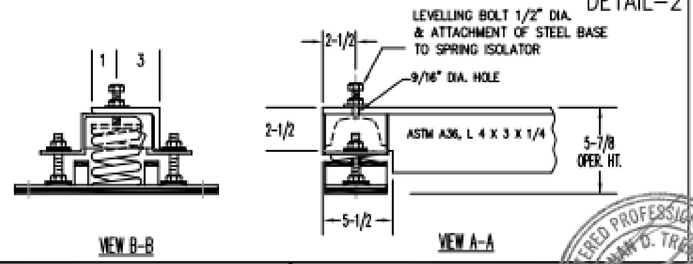

DETAIL-3

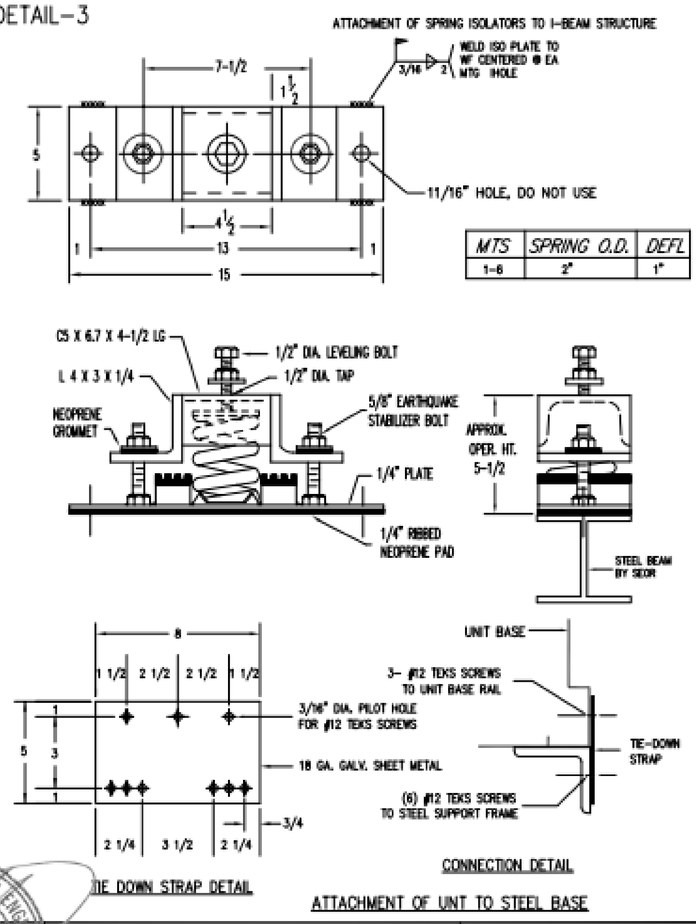

MTS	SPRING O.D.	DEFL
1-6	2"	1"

M. W. SAUSSE & CO., INC.
28774 Whitherspoon Pkwy. Valencia, CA 91355
Phone: (661) 257-3311 Fax: (661) 257-7673

Vibrex RMUAB

JOB NAME:	COVINA USD - MERWIN ES	REVISIONS:	DRN: TDT
CUST.:		A: ROOF CURB TO RMUAB (8-17-22)	DATE: 08-17-22
CUST. P.O.:	10/20/2022	B: call out all attachments (9-9-22)	DRAWING NO.:
MECH. ENGR.:	DLR	C: CURB TO BASE (10-10-22)	-1C
MARK:	RTU-B1 (12.5 TON)	D:	

REGISTERED PROFESSIONAL ENGINEER — BRIAN D. TRENBLAY — No. 86481 — Exp. 9/30/23 — STRUCTURAL — STATE OF CALIFORNIA

1 M7.3 BLDG B AC1
1/2" = 1'-0"

DLR Group © DLR Group

Merwin Elementary School
COVINA VALLEY USD
16125 CYPRESS ST, COVINA, CA 91722

100% CONSTRUCTION DOCUMENTS
11/04/2022
REVISIONS

75-22605-00

MECHANICAL DETAILS

M7.3

Autodesk Docs://75-22605-00 CVUSD - District Wide HVAC Replacement/75-22605-00_CVUSD_Merwin ES_MEP_2022.rvt
10/21/2022 4:25:07 PM

MARK	MAKE	TYPE	STEEL SIZE
RTU C1 to C8	CARRIER	50FCQA05	ASTM A36, L 3 X 2 X 1/4
RTU D1 to D8	CARRIER	50FCQA05	

DETAIL-1

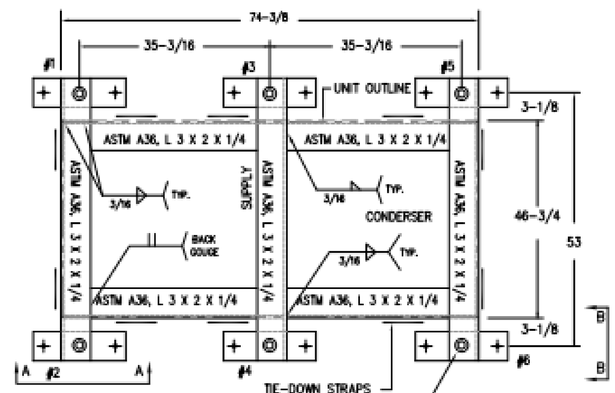

NOTES:
1. APPROX. STEEL WEIGHT INCLUDING ISOLATORS.: 200 LBS.
2. ISOLATORS, SEE DETAIL 3.
3. —— INDICATES TIE-DOWN STRAP. SEE DETAIL 3.
4. M.W. SAUSSE & CO. INC. IS NOT RESPONSIBLE FOR THE STRUCTURAL INTEGRITY OF THE EQUIPMENT WHEN ANCHORED AS SHOWN.
5. ALL DIMENSIONS REQUIRE FINAL REVIEW AT COMMENCEMENT OF PROJECT.

DETAIL-2

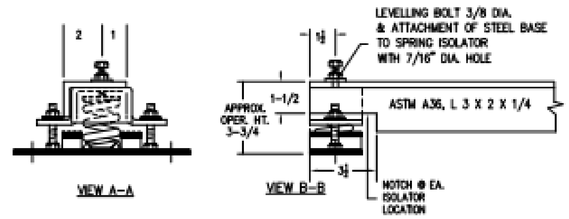

DETAIL-3

MTS	SPRING O.D.	DEFL
1-6	2"	1"

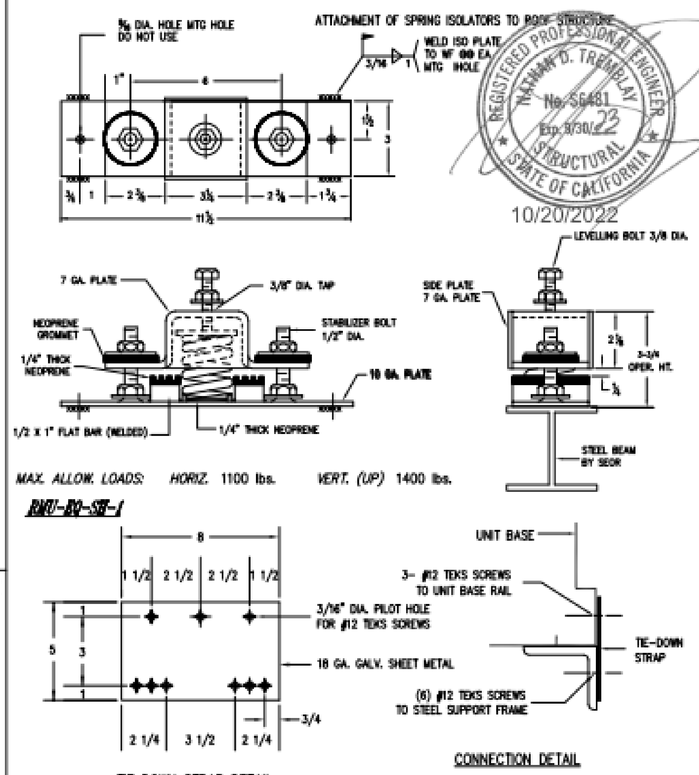

REGISTERED PROFESSIONAL ENGINEER TRAYNAM D. TREMBLAY No. SE481 Exp. 9/30/22 STRUCTURAL STATE OF CALIFORNIA
10/20/2022

M. W. SAUSSE & CO., INC.
28774 Witherspoon Pkwy. Valencia, CA 91355
Phone: (661) 257-3311 Fax: (661) 257-7673

Vibrex RMUAB

JOB NAME: COVINA USD – MERWIN ES	REVISIONS:	DRN: TDT	
CUST.:	A: ROOF CURB TO RMUAB (8-17-22)	DATE: 08-17-22	
CUST. P.O.:	B: call out all attachments (9-9-22)	DRAWING NO.:	
MECH. ENGR.: DLR	C: SPECS ANGLE (9-20-22)	-2C	
MARK: RTU-C1-C8, D1-D8 (RTU 4 TON)	D:		

1 M7.4 RTU-C1 TO C8, RTU-E1 TO E8
NO SCALE

DLR Group

Merwin Elementary School
COVINA VALLEY USD
16125 CYPRESS ST, COVINA, CA 91722

100% CONSTRUCTION DOCUMENTS
11/04/2022
REVISIONS

75-22605-00

MECHANICAL DETAILS

M7.4

Autodesk Docs://75-22605-00 CVUSD - District Wide HVAC Replacement/75-22605-00_CVUSD_Merwin ES_MEP_2022.rvt
10/21/2022 4:25:07 PM

MERWIN E.S. AC UNIT REPLACEMENT

MERWIN E.S. EXISTING UNIT												NEW UNIT																									
TAGS	MAKE	MODEL	CAPACITY (TONS)	GAS INPUT/OUTPUT (BTU/HR)	ELECTRICAL (SINGLE CIRCUIT)			WEIGHT (LBS)	POWER EXHAUST		OPERATING WEIGHT (LBS)	DIRECT REPLACEMENT? Y/N	CARRIER MODEL #	NET COOLING CAPACITY			AIRFLOW (CFM)		ESP (IN WG)	SEER	EER	HEATING CAPACITY (MBH)	NEW MERV RATING	FILTER QUANTITY & SIZE (W" X H" X D")	ELECTRICAL			WEIGHT	OUTSIDE AIR HOOD WEIGHT (LBS)	ECONOMIZER		POWER EXHAUST				ROOF CURB WEIGHT (LBS)	TOTAL WEIGHT (LBS)	UNIT DIMENSIONS (L" X W" X H")	ANCHORAGE DETAIL REFERENCE
					V/PH	MCA	FLA		EXISTING	WEIGHT				NOMINAL TON	TOTAL (BTUH)	SENSIBLE (BTUH)	SUPPLY	MIN OSA							V/PH	MCA	MOCP	LBS		REQUIRED ?	WEIGHT	REQUIRED ?	MODEL #	MCA	MOCP	WEIGHT				
RTU-B1 (BLDG. B)	CARRIER	48HJD014---561--	12.5	224,000/183,680	208/3	60.6/60.6	64/64	1050	NO	0	1050	Y	50TCQD14A2A5-2A0G0	14	140810	104790	4800	1000	0.8	12 (IEER)	10.6	142.28	13	6 (18X24X2)	208/3	64	80	1370	N/A	YES	SEE POWER EXHAUST	YES	PECD-SRT05CB-D0DB-2L3-4	17	30.6	332	211	1913	116 X 64 X 58	1/M7.5
RTU-C1 THRU RTU-C8 (BLDG. C)	CARRIER	38RC048 (53QAE048)	4.0	45500	208/1	30.5	24.7	255	NO	0	255	N	50FCQA05A2A3	4	47170	35070	1600	300	1	14.3	10.44	46.1	13	2 (16X25X2)	208/1	34	50	475	12	NO	NA	YES	PCD-SRT12CA	7.1	12.8	152	NA	639	75 X 47 X 34	1/M7.4
RTU-E1 THRU RTU-E8 (BLDG. E)	CARRIER	38RC048 (53QAE048)	4.0	45500	208/1	30.5	24.7	255	NO	0	255	N	50FCQA05A2A3	4	47170	35070	1600	300	1	14.3	10.44	46.1	13	2 (16X25X2)	208/1	34	50	475	12	NO	NA	YES	PCD-SRT12CA	7.1	12.8	152	NA	639	75 X 47 X 34	1/M7.4

NOTES:

1. PROVIDE MECHANICAL UNIT WITH INTEGRAL CONVENIENCE RECEPTACLE.
2. ALL ROOFTOP UNITS SHALL BE PROVIDED WITH UNPOWERED CONVENIENCE OUTLET.
3. ALL CLASSROOM ROOFTOP UNITS ARE HORIZONTALLY DISCHARGED CONFIGURATION, UNO. FIELD VERIFY PRIOR TO ORDERING.
4. PROVIDE HINGED ACCESS PANEL FOR ALL ROOFTOP UNITS.
5. FINAL WEIGHT (LBS) IS SUMMATION OF RTU WEIGHT, AND OUTSIDE AIR HOOD FOR CLASSROOMS AND ECONORMIZER WITH POWER EXHAUST FOR MPR.
6. SCCR RATING OF RTUs SHALL BE MINIMUM OF 22KA FOR CLASSROOMS AND 65KA FOR RTU-B1.

DIFFUSER AND GRILLE SCHEDULE

MARK NO.	MANUFACTURER & MODEL NO.	TYPE	OVERALL DIMENSIONS	NECK SIZE	CFM RANGE	MAX NC	MAX SP	NOTES
CD-1	TITUS PAS	CEILING SUPPLY	24"x24"	6"Ø	0 - 110	25	0.1	1,2,3
				8"Ø	111 - 190	25	0.1	
				10"Ø	191 - 280	25	0.1	
				12"Ø	281 - 350	25	0.1	
				14Ø	351 - 450	25	0.1	
				16"Ø	451 - 550	25	0.1	
RG-1	TITUS PAR	CEILING RETURN	24"x24"	6"Ø	0 - 100	20	0.1	1,2,3
				8"Ø	101 - 175	20	0.1	
				10"Ø	176 - 275	20	0.1	
				12"Ø	276 - 380	20	0.1	
				14"Ø	381 - 500	20	0.1	
				16"Ø	501 - 570	20	0.1	

NOTES:
1. OBTAIN ARCHITECT'S APPROVAL FOR COLOR AND FINISH.
2. MATCH THE BORDER TYPE TO THE CEILING.
3. PROVIDE FLAT BLACK INTERNAL FINISH.

DUCT SIZING SCHEDULE *** FOR LOW VELOCITY SUPPLY, RETURN AND EXHAUST

CFM RANGE	ROUND DUCT DIAMETER OR EQUIVALENT RECTANGULAR DUCT	CFM RANGE	ROUND DUCT DIAMETER OR EQUIVALENT RECTANGULAR DUCT
0-110	6" OR 8" X 4"	1400-1900	18" OR 24" X 12"
101-180	8" OR 10" X 6"	1900-2500	20" OR 24" X 14"
181-270	10" OR 10" X 8"	2500-3300	22" OR 32" X 14"
271-400	10" OR 12" X 8"	3300-4100	24" OR 36" X 14"
401-600	12" OR 12" X 10"	4100-5000	26" OR 40" X 16"
601-900	14" OR 16" X 10"	5000-6200	28" OR 48" X 16"
901-1400	16" OR 18" X 12"	6200-7500	30" OR 48" X 18"

REMARKS:

DUCT SIZES INDICATED ARE INSIDE DIMENSIONS WHICH MAY BE ALTERED BY CONTRACTOR TO OTHER DIMENSIONS TO AVOID INTERFERENCES AND CLEARANCE REQUIREMENTS. USE EQUAL FRICTION METHOD, 0.1"WG PER 100FT. OF DUCT TO DETERMINE DUCT SIZES.

VERIFY ALL DIMENSIONS AT THE SITE, MAKE ALL FIELD MEASUREMENTS AND SHOP DRAWINGS NECESSARY FOR FABRICATION AND ERECTION OF SHEET METAL WORK. MAKE ALLOWANCES FOR BEAMS, PIPE OR OTHER OBSTRUCTION AND FOR WORK BY OTHER TRADES AND NOTIFY THE ARCHITECT IN THE EVENT OF ANY POTENTIAL INTERFERENCE. MAKE AN INITIAL VERIFICATION OF BEAM PENETRATIONS SHOWN ON STRUCTURAL DRAWINGS AND ADVISE OF ANY POTENTIAL INTERFERENCES.

AIR VELOCITY GUIDELINES (FPM)						
LOCATION	NOISE CRITERIA (NC)					
	40	35	30	25	20	15
MAIN SUPPLY DUCT	1700	1500	1000	800	700	600
MAIN RETURN DUCT	1200	1000	750	600	500	400
DUCT TO GRILLE SUPPLY	600	500	400	300	250	200
DUCT TO GRILLE RETURN	600	500	400	300	250	200

DUCT SIZING *** MEDIUM PRESSURE DUCTWORK

CFM	ROUND DUCT (IN)	RECTANGULAR DUCT (IN) (W IS DUCT WIDTH)				
		WX4	WX6	WX8	WX10	WX12
UP TO 150	6	8	6	X	X	X
151-280	8	10	10	8	X	X
281-500	10	X	16	12	10	X
501-800	12	X	X	16	12	X
801-1200	14	X	X	22	16	14

REMARKS:

DUCT SIZES INDICATED ARE INSIDE DIMENSIONS WHICH MAY BE ALTERED BY CONTRACTOR TO OTHER DIMENSIONS TO AVOID INTERFERENCES AND CLEARANCE REQUIREMENTS. USE EQUAL FRICTION METHOD, 0.1"WG PER 100FT. OF DUCT TO DETERMINE DUCT SIZES.

VERIFY ALL DIMENSIONS AT THE SITE, MAKE ALL FIELD MEASUREMENTS AND SHOP DRAWINGS NECESSARY FOR FABRICATION AND ERECTION OF SHEET METAL WORK. MAKE ALLOWANCES FOR BEAMS, PIPE OR OTHER OBSTRUCTION AND FOR WORK BY OTHER TRADES AND NOTIFY THE ARCHITECT IN THE EVENT OF ANY POTENTIAL INTERFERENCE. MAKE AN INITIAL VERIFICATION OF BEAM PENETRATIONS SHOWN ON STRUCTURAL DRAWINGS AND ADVISE OF ANY POTENTIAL INTERFERENCES.

DLR Group
© DLR Group

REGISTERED PROFESSIONAL ENGINEER
DING FANG CHAO
No. M24391
Exp. 12/31/22
MECHANICAL
STATE OF CALIFORNIA

WSU

Merwin Elementary School
COVINA VALLEY USD
16125 CYPRESS ST., COVINA, CA 91722

100% CONSTRUCTION DOCUMENTS
11/04/2022
REVISIONS

75-22605-00

MECHANICAL SCHEDULES

M8.1

Autodesk Docs://75-22605-00 CVUSD - District Wide HVAC Replacement/75-22605-00_CVUSD_Merwin ES_MEP_2022.rvt
10/21/2022 4:25:08 PM

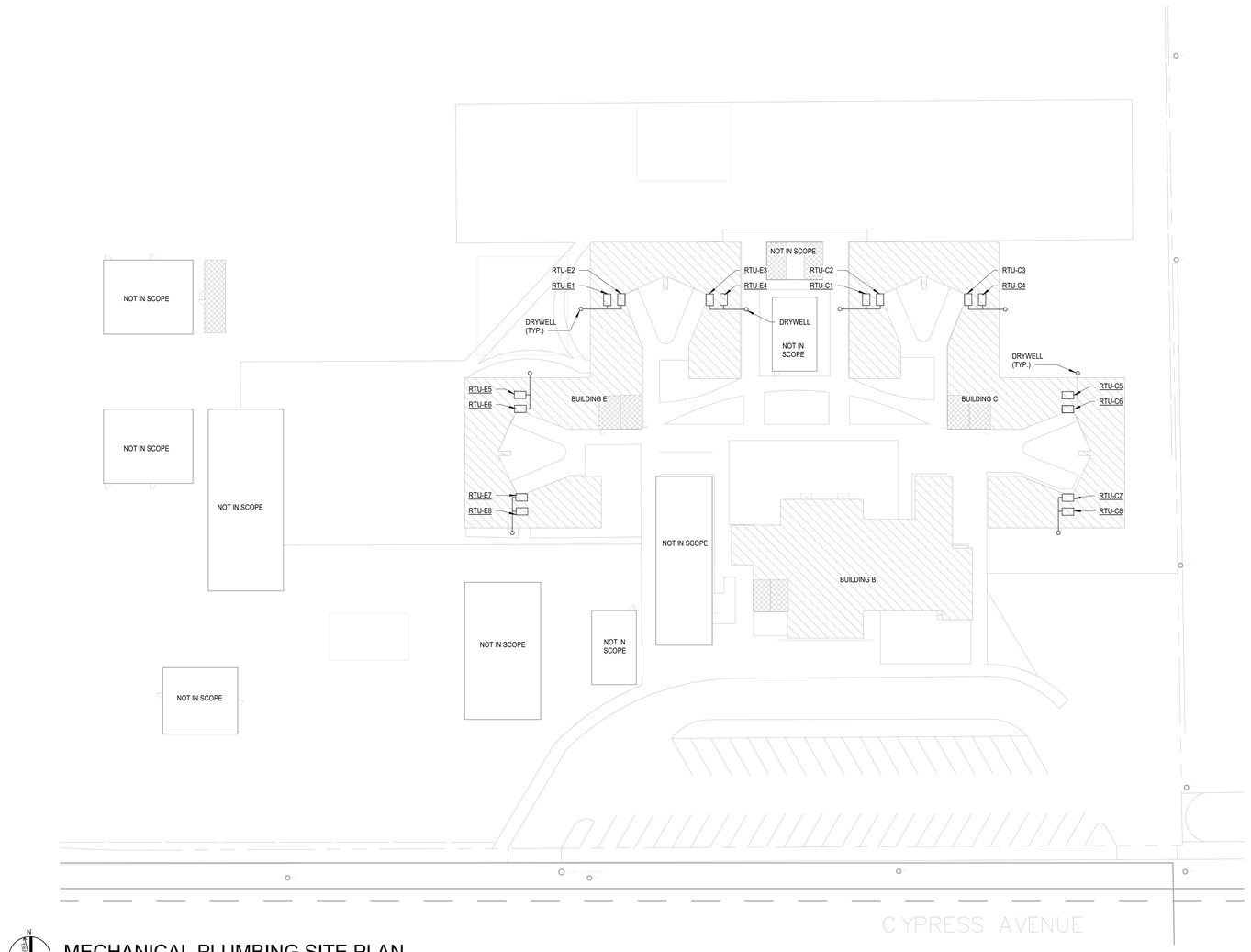

MECHANICAL PLUMBING SITE PLAN

SCALE: 1" = 30'-0"

SITE LEGEND

- EXISTING BUILDING NOT IN SCOPE
- EXISTING BUILDING - SCOPE OF WORK UNDER THIS DSA APPLICATION
- (E) RESTROOMS - NOT IN SCOPE

DLR Group

© DLR Group

REGISTERED PROFESSIONAL ENGINEER
LONG FANG TSAI
No. M-34391
12/13/22
MECHANICAL
STATE OF CALIFORNIA

WSW

Merwin Elementary School

COVINA VALLEY USD

16125 CYPRESS ST, COVINA, CA 91722

100% CONSTRUCTION DOCUMENTS

11/04/2022

REVISIONS

75-22605-00

MECHANICAL PLUMBING SITE PLAN

MP1.1

Autodesk Docs://75-22605-00 CVUSD - District Wide HVAC Replacement/75-22605-00_CVUSD_Merwin ES_MEP_2022.rvt
10/21/2022 4:25:08 PM

APPLICABLE CODE: 2019 CBC 02/02/2020 REVISED: 02/14/2020

MEP COMPONENT ANCHORAGE NOTE

ALL MECHANICAL, PLUMBING, AND ELECTRICAL COMPONENTS SHALL BE ANCHORED AND INSTALLED PER THE DETAILS ON THE DSA-APPROVED CONSTRUCTION DOCUMENTS. THE FOLLOWING COMPONENTS SHALL BE ANCHORED OR BRACED TO MEET THE FORCE AND DISPLACEMENT REQUIREMENTS PRESCRIBED IN THE 2019 CBC SECTIONS 1617A.1.18 THROUGH 1617A.1.26 AND ASCE 7-16 CHAPTERS 13, 26, AND 30:

1. ALL PERMANENT EQUIPMENT AND COMPONENTS.
2. TEMPORARY, MOVABLE OR MOBILE EQUIPMENT THAT IS PERMANENTLY ATTACHED (E.G. HARD WIRED) TO THE BUILDING UTILITY SERVICES SUCH AS ELECTRICITY, GAS OR WATER. "PERMANENTLY ATTACHED" SHALL INCLUDE ALL ELECTRICAL CONNECTIONS EXCEPT PLUGS FOR 110/ 220 VOLT RECEPTACLES HAVING A FLEXIBLE CABLE.
3. TEMPORARY, MOVABLE OR MOBILE EQUIPMENT WHICH IS HEAVIER THAN 400 POUNDS OR HAS A CENTER OF MASS LOCATED 4 FEET OR MORE ABOVE THE ADJACENT FLOOR OR ROOF LEVEL THAT DIRECTLY SUPPORT THE COMPONENT IS REQUIRED TO BE RESTRAINED IN A MANNER APPROVED BY DSA.

THE FOLLOWING MECHANICAL AND ELECTRICAL COMPONENTS SHALL BE POSITIVELY ATTACHED TO THE STRUCTURE BUT NEED NOT DEMONSTRATE DESIGN COMPLIANCE WITH THE REFERENCES NOTED ABOVE. THESE COMPONENTS SHALL HAVE FLEXIBLE CONNECTIONS PROVIDED BETWEEN THE COMPONENT AND ASSOCIATED DUCTWORK, PIPING, AND CONDUIT. FLEXIBLE CONNECTIONS MUST ALLOW MOVEMENT IN BOTH TRANSVERSE AND LONGITUDINAL DIRECTIONS:

A. COMPONENTS WEIGHING LESS THAN 400 POUNDS AND HAVING A CENTER OF MASS LOCATED 4 FEET OR LESS ABOVE THE ADJACENT FLOOR OR ROOF LEVEL THAT DIRECTLY SUPPORT THE COMPONENT.
B. COMPONENTS WEIGHING LESS THAN 20 POUNDS, OR IN THE CASE OF DISTRIBUTED SYSTEMS, LESS THAN 5 POUNDS PER FOOT, WHICH ARE SUSPENDED FROM A ROOF OR FLOOR OR HUNG FROM A WALL.

THE ANCHORAGE OF ALL MECHANICAL, ELECTRICAL AND PLUMBING COMPONENTS SHALL BE SUBJECT TO THE APPROVAL OF THE DESIGN PROFESSIONAL IN GENERAL RESPONSIBLE CHARGE OR STRUCTURAL ENGINEER DELEGATED RESPONSIBILITY AND ACCEPTANCE BY DSA. THE PROJECT INSPECTOR WILL VERIFY THAT ALL COMPONENTS AND EQUIPMENT HAVE BEEN ANCHORED IN ACCORDANCE WITH THE ABOVE REQUIREMENTS.

PIPING, DUCTWORK, AND ELECTRICAL DISTRIBUTION SYSTEM BRACING NOTE

PIPING, DUCTWORK, AND ELECTRICAL DISTRIBUTION SYSTEMS SHALL BE BRACED TO COMPLY WITH THE FORCES AND DISPLACEMENTS PRESCRIBED IN ASCE 7-16 SECTION 13.3 AS DEFINED IN ASCE 7-16 SECTIONS 13.6.5, 13.6.6, 13.6.7, 13.6.8; AND 2019 CBC, SECTIONS 1617A.1.24, 1617A.1.25 AND 1617A.1.26.

THE METHOD OF SHOWING BRACING AND ATTACHEMENTS TO THE STRUCTURE FOR THE IDENTIFIED DISTRIBUTION SYSTEM ARE AS NOTED BELOW. WHEN BRACING AND ATTACHMENTS ARE BASED ON A PREAPPROVED INSTALLATION GUIDE (E.G., OSHPD OPM FOR 2013 CBC OR LATER), COPIES OF THE BRACING SYSTEM INSTALLATION GUIDE OR MANUAL SHALL BE AVAILABLE ON THE JOBSITE PRIOR TO THE START OF AND DURING THE HANGING AND BRACING OF THE DISTRIBUTION SYSTEMS. THE STRUCTURAL ENGINEER OF RECORD SHALL VERIFY THE ADEQUACY OF THE STRUCTURE TO SUPPORT THE HANGER AND BRACE LOADS.

MECHANICAL PIPING (MP), MECHANICAL DUCTS (MD), PLUMBING PIPING (PP), ELECTRICAL DISTRIBUTION SYSTEMS (E):

MP	MD	PP	(E)	OPTION 1: DETAILED ON THE APPROVED DRAWINGS WITH PROJECT SPECIFIC NOTES AND DETAILS.
MP	MD	PP	E	OPTION 2: SHALL COMPLY WITH THE APPLICABLE OSHPD PRE-APPROVAL (OPM#) #.:_____

SHEET INDEX

E0.1 ELECTRICAL SYMBOLS, ABBREVIATIONS & NOTES

E2.1 BUILDING ELECTRICAL ROOF PLAN

GENERAL NOTES

1 PENETRATIONS IN WALLS REQUIRING PROTECTED OPENINGS MUST BE FIRESTOPPED WITH AN APPROVED MATERIAL.

2 UNLESS SPECIFICALLY SHOWN ON THESE DRAWINGS, NO STRUCTURAL MEMBER SHALL BE CUT, DRILLED, OR NOTCHED WITHOUT PRIOR AUTHORIZATION IN WRITING BY THE STRUCTURAL ENGINEER OF RECORD AND DSA.

GENERAL SYMBOLS

	POINT OF DISCONNECT - DEMOLITION REMOVED FROM EXISTING
	POINT OF CONNECTION - NEW CONNECTS TO EXISTING
	AREA NOT IN CONTRACT

POWER

CIRCUIT HOME RUN
CONDUIT TURNING UP
CONDUIT TURNING DOWN
CONDUIT STUB-UP
CONDUIT SLEEVE
CONDUIT SEAL
CONDUIT CONCEALED IN CEILING OR WALLS, POWER
CONDUIT CONCEALED IN CEILING OR WALLS, OTHER (* = SEE ABBREVIATIONS)
CONDUIT CONCEALED IN FLOOR OR UNDERGROUND, POWER
CONDUIT CONCEALED IN FLOOR OR UNDERGROUND, OTHER (* = SEE ABBREVIATIONS)
EXPOSED CONDUIT, POWER
EXPOSED CONDUIT, OTHER (* = SEE ABBREVIATIONS)
FRS FIRE RATED SLEEVE
T TRANSFORMER
XXX BRANCH CIRCUIT PANELBOARD MOUNT 72-INCHES TO TOP
XXX DISTRIBUTION PANELBOARD MOUNT 72-INCHES TO TOP
EQUIPMENT CABINET, AS NOTED
XXX SWITCHBOARD
MOTOR STARTER OR DRIVE
DISCONNECT SWITCH
COMBINATION STARTER / DISCONNECT SWITCH
CT CURRENT TRANSFORMER ENCLOSURE
M METER
GEN GENERATOR
ATS AUTOMATIC TRANSFER SWITCH
SYSTEM GROUND ELECTRODE
T THERMOSTAT
MUSHROOM SWITCH
MH ELECTRICAL MANHOLE
HH ELECTRICAL HAND HOLE
M MOTOR CONNECTION, HORSEPOWER AS INDICATED
S_F FUSE AND SWITCH ASSEMBLY
S_T MANUAL CONTROLLER WITH THERMAL OVERLOAD
S_M MANUAL CONTROLLER W/O THERMAL OVERLOAD
B CIRCUIT BREAKER ENCLOSURE
PB PULL BOX
EQUIPMENT CONNECTION
CABLE TRAY, LADDER TYPE OR RUNWAY
CABLE TRAY
MULTI-OUTLET ASSEMBLIES MOUNT 18-INCHES AFF, UNO WHERE DENOTED 'AC', MOUNT ABOVE COUNTER
DIVIDED SURFACE RACEWAY MOUNT 18-INCHES AFF, UNO WHERE DENOTED 'AC', MOUNT ABOVE COUNTER

PUSHBUTTON STATION: MOUNT 42-INCHES AFF UNO
SWITCH, PUSH BUTTON, SINGLE
SWITCH, PUSH BUTTON, DOUBLE
SWITCH, PUSH BUTTON, TRIPLE

RECEPTACLES: MOUNT 18-INCHES AFF, UNO

DIAGONAL LINE THROUGH SYMBOL OR DENOTED 'AC' INDICATES MOUNT DEVICE ABOVE COUNTER. WHERE INDICATED AS 'MOUNT ABOVE COUNTER' MOUNT BOTTOM OF BOX 2-INCHES ABOVE TOP OF BACKSPLASH OR 6-INCHES ABOVE COUNTERTOP IF NO BACKSPLASH EXISTS.

LABELS SHALL BE MACHINE PRINTED, UNO

SIMPLEX RECEPTACLE
DUPLEX RECEPTACLE
DUPLEX RECEPTACLE, GFI TYPE
DUPLEX RECEPTACLE, MOUNT ABOVE COUNTER
DUPLEX RECEPTACLE, GFI TYPE, MOUNT ABOVE COUNTER
FOURPLEX RECEPTACLE
FOURPLEX RECEPTACLE, GFI TYPE
FOURPLEX RECEPTACLE, MOUNT ABOVE COUNTER
FOURPLEX RECEPTACLE, GFI TYPE, MOUNT ABOVE COUNTER
DUPLEX RECEPTACLE, FLUSH IN CEILING
FOURPLEX RECEPTACLE, FLUSH IN CEILING
DUPLEX RECEPTACLE, HORIZONTALLY MOUNTED
DUPLEX RECEPTACLE, HORIZ. MTD, GFI TYPE
DUPLEX RECEPTACLE, HORIZ. MTD, ABOVE COUNTER
DUPLEX RECEPTACLE, HORIZ. MTD, GFI TYPE, MOUNT ABOVE COUNTER
R WEATHER RESISTANT GFI DUPLEX RECEPTACLE, ROOF MOUNT 18-INCHES ABOVE ADJACENT STRUCTURE WITH A WEATHERPROOF, IN-USE COVER
WP WEATHER RESISTANT GFI DUPLEX RECEPTACLE, MOUNT 18-INCHES AFF WITH A WEATHERPROOF, IN-USE COVER
EWC STD DUPLEX RECEPTACLE TO SERVE ELECTRIC WATER COOLER. MOUNT AT HEIGHT PER EQUIPMENT MANUFACTURER'S INSTALLATION GUIDELINES. WIRE TO GFCI BKR IN PANELBOARD.
TV DUPLEX RECEPTACLE TO SERVE TELEVISION, MOUNT AT SAME HEIGHT AND WITHIN 8-INCHES OF ADJACENT TV OUTLET
DUPLEX RECEPTACLE, EMERGENCY
FOURPLEX RECEPTACLE, EMERGENCY
DUPLEX RECEPTACLE, LOWER SWITCH
DUPLEX RECEPTACLE, SWITCHED
RANGE RECEPTACLE, MOUNT 8-INCHES AFF
SPECIAL RECEPTACLE, DEEP WELL BOX
FLUSH FLOOR OUTLET BOX UNO
FLUSH FLOOR BOX WITH DUPLEX RECEPTACLE UNO
MULTI-DEVICE FLOOR BOX WITH DUPLEX RECEPTACLE AND TELECOMMUNICATIONS OUTLETS
U USB ONLY RECEPTACLE
U RECEPTACLE WITH USB PORTS
J FLUSH JUNCTION BOX, CEILING MOUNTED
J_P JUNCTION BOX FOR FUTURE PROJECTOR POWER MOUNT 24-INCHES ABOVE SUSPENDED CEILING MOUNT TIGHT TO CEILING AT EXPOSED STRUCTURE LABEL BOX COVER 'PROJECTOR POWER'
JUNCTION BOX ABOVE SUSPENDED CEILING WITH FLEX CONNECTION
J FLUSH JUNCTION BOX, WALL MOUNTED
J SURFACE JUNCTION BOX, WALL MOUNTED
J SURFACE JUNCTION BOX, CEILING MOUNTED
H HAND DRYER, INSTALL HAND DRYER SPECIFIED IN DIV. 11

ABBREVIATIONS

(D)	DEMOLISHED
(E)	EXISTING
(R)	RELOCATED
Ø	PHASE
A	AMPERE
AC	ABOVE COUNTER
AF	AMP FRAME (CIRCUIT BREAKER)
AIC	AMPERE INTERRUPTING CAPACITY
AL	ALUMINUM
AMP	AMPERE
AP	WIRELESS ACCESS POINT
AT	AMP TRIP (CIRCUIT BREAKER OR FUSE)
ATS	AUTOMATIC TRANSFER SWITCH
AV	AUDIO/VIDEO, AUDIO/VISUAL
AWG	AMERICAN WIRE GAUGE
BAS	BUILDING AUTOMATION SYSTEM
BJ	BONDING JUMPER
BKR	BREAKER
BMS	BUILDING MANAGEMENT SYSTEM
C	CONDUIT
CATV	CABLE TELEVISION
CB	CIRCUIT BREAKER
CCTV	CLOSED CIRCUIT TELEVISION
CFCI	CONTRACTOR FURNISHED CONTRACTOR INSTALLED
CKT	CIRCUIT
CTL	CONTROL
CU	COPPER
DB	DECIBEL
DC	DIRECT CURRENT
DISC	DISCONNECT
DP	DISTRIBUTION PANELBOARD
DW	DISHWASHER
ECS	EMERGENCY COMMUNICATION SYSTEM
EGB	ELECTRICAL GROUNDING BUSBAR
EMD	ESTIMATED MAXIMUM DEMAND
EMGB	ELECTRICAL MAIN GROUNDING BUSBAR
EP	EXPLOSION PROOF
ER	EXISTING (TO BE) RELOCATED
ERMS	ENERGY REDUCTION MAINTENANCE SWITCH
EWC	ELECTRIC WATER COOLER
FA	FIRE ALARM
FAA	FIRE ALARM ANNUNCIATOR
FACP	FIRE ALARM CONTROL PANEL
FC	FOOT CANDLE
FLA	FULL LOAD AMPS
FS	FLOW SWITCH
FSD	FIRE SMOKE DAMPER
G	EQUIPMENT GROUNDING CONDUCTOR
GEN	GENERATOR
GFI, GFCI	GROUND FAULT CIRCUIT INTERRUPTER
GFPE	GROUND FAULT PROTECTION OF EQUIPMENT
GND	EQUIPMENT GROUNDING CONDUCTOR
HH	HANDHOLE
HOA	HAND-OFF-AUTOMATIC
HP	HORSE POWER
IC	INTERCOM
IG	ISOLATED GROUND
JB	JUNCTION BOX
KAIC	THOUSAND AMPERE INTERRUPTING CIRCUIT

ABBREVIATIONS

KV	KILOVOLT
KVA	KILOVOLT AMPERES
KW	KILOWATT
LT	LIGHT
LTG	LIGHTING
MCA	MINIMUM CIRCUIT AMPACITY
MCB	MAIN CIRCUIT BREAKER
MCC	MOTOR CONTROL CENTER
MH	MANHOLE
MLO	MAIN LUGS ONLY
MOCP	MAXIMUM OVERCURRENT PROTECTION
MRTS	MOTOR RATED TOGGLE SWITCH
MSB	MAIN SWITCHBOARD
MTD	MOUNTED
MTG	MOUNTING
MTS	MAIN TRANSFER SWITCH
N	NEUTRAL
N.C.	NORMALLY CLOSED
N.O.	NORMALLY OPEN
NF	NON-FUSED
NL	NIGHT LIGHT
OFCI	OWNER FURNISHED CONTRACTOR INSTALLED
OS&Y	OUTSIDE SCREW AND YOKE
P	POLE(S)
PA	PUBLIC ADDRESS
PB	PULL BOX
PH	PHASE
PIV	POST INDICATOR VALVE
PNL	PANEL
PWR	POWER
RCP	REFLECTED CEILING PLAN
RECPT	RECEPTACLE
REF	REFERENCE
RESP	RESPONSIVE
SCCR	SHORT CIRCUIT CURRENT RATING
SD	SMOKE DAMPER
SEC	SECONDARY
SPD	SURGE PROTECTION DEVICE
SWBD	SWITCHBOARD
TBB	TELECOMMUNICATIONS BONDING BACKBONE
TC	TIME CLOCK
TGB	TELECOMMUNICATIONS GRONDING BUSBAR
TMGB	TELECOMMUNICATIONS MAIN GRONDING BUSBAR
TO	TELECOMMUNICATIONS OUTLET
TR	TELECOMMUNICATIONS ROOM
TS	TAMPER SWITCH
TV	TELEVISION
UG	UNDERGROUND
UPS	UNINTERRUPTABLE POWER SUPPLY
V	VOLT
VA	VOLT-AMPERE
VFD	VARIABLE FREQUENCY DRIVE
W	WIRE
WA	TELECOMMUNICATIONS WORK AREA
WG	WIRE GUARD
WP	WEATHER-PROOF (NEMA 3R)
XFMR	TRANSFORMER

* NOTE *

ALL NOTES ON THIS SHEET ARE APPLICABLE TO ALL OTHER SHEETS IN THIS SET.

THE SYMBOLS AND ABBREVIATIONS SHOWN ON THIS SHEET MAY OR MAY NOT BE APPLICABLE IN THIS SET OF DRAWINGS.

SEE DETAIL 3E ON SHEET S1.4 FOR CONDUIT SUPPORT DETAIL FROM DECK ABOVE. PROVIDE CADDY CLIP EC311 PER THIS IMAGE AND ATTACHED TO ACT RUNNERS. PROVIDE CONDUIT CLIP TO HOLD CONDUIT.

CONDUIT SUPPORT

MERWIN E.S. AC UNIT REPLACEMENT

TAGS	EXISTING UNIT ELECTRICAL V/PH	MCA	FLA	MOCP	PANEL/ CKT#	FEEDER SIZE	DISCONNECT	DIRECT REPLACEMENT? Y/N	NEW UNIT CFM	ELECTRICAL V-PH	MCA	MOCP	DISCONNECT	POWER EXHAUST REQUIRED?	Model#	MCA	MOCP	FEEDER SIZE	DISCONNECT	NOTES
RTU-B1	208/3	60.6	64	100	M5B-3	3#3,1#6 GND-1.25"C	100	Y	4,800	208/3	64	80	100A (80A FUSE)	YES	PECD-SRT05CB-D0DB-2L3-4	17	30.6	3#3,1#6 GND-1.25"C	40A (40A FUSE)	
CU-C1 (BLDG. C)	208/1	30.5	24.7	50	LC-1,3	4#8, 1#10GND-1.25"C	50	Y	1,600	208/1	34	50	60A (50A FUSE)	YES	PCD-SRT12CA	7.1	12.8	2#8, 1#10GND-1"C	30A (15 FUSE)	
CU-C2 (BLDG. C)	208/1	30.5	24.7	50	LC-5,7		50	Y	1,600	208/1	34	50	60A (50A FUSE)	YES	PCD-SRT12CA	7.1	12.8	2#8, 1#10GND-1"C	30A (15 FUSE)	
CU-C3(BLDG. C)	208/1	30.5	24.7	50	LC-9,11	4#8, 1#10GND-1.25"C	50	Y	1,600	208/1	34	50	60A (50A FUSE)	YES	PCD-SRT12CA	7.1	12.8	2#8, 1#10GND-1"C	30A (15 FUSE)	
CU-C4 (BLDG. C)	208/1	30.5	24.7	50	LC-13,15		50	Y	1,600	208/1	34	50	60A (50A FUSE)	YES	PCD-SRT12CA	7.1	12.8	2#8, 1#10GND-1"C	30A (15 FUSE)	
CU-C5 (BLDG. C)	208/1	30.5	24.7	50	LC-14,16	4#8, 1#10GND-1.25"C	50	Y	1,600	208/1	34	50	60A (50A FUSE)	YES	PCD-SRT12CA	7.1	12.8	2#8, 1#10GND-1"C	30A (15 FUSE)	
CU-C6 (BLDG. C)	208/1	30.5	24.7	50	LC-10,12		50	Y	1,600	208/1	34	50	60A (50A FUSE)	YES	PCD-SRT12CA	7.1	12.8	2#8, 1#10GND-1"C	30A (15 FUSE)	
CU-C7 (BLDG. C)	208/1	30.5	24.7	50	LC-2,4	4#8, 1#10GND-1.25"C	50	Y	1,600	208/1	34	50	60A (50A FUSE)	YES	PCD-SRT12CA	7.1	12.8	2#8, 1#10GND-1"C	30A (15 FUSE)	
CU-C8 (BLDG. C)	208/1	30.5	24.7	50	LC-6,8		50	Y	1,600	208/1	34	50	60A (50A FUSE)	YES	PCD-SRT12CA	7.1	12.8	2#8, 1#10GND-1"C	30A (15 FUSE)	
CU-E1 (BLDG. E)	208/1	30.5	24.7	50	LE-1,3	4#8, 1#10GND-1.25"C	50	Y	1,600	208/1	34	50	60A (50A FUSE)	YES	PCD-SRT12CA	7.1	12.8	2#8, 1#10GND-1"C	30A (15 FUSE)	
CU-E2 (BLDG. E)	208/1	30.5	24.7	50	LE-5,7		50	Y	1,600	208/1	34	50	60A (50A FUSE)	YES	PCD-SRT12CA	7.1	12.8	2#8, 1#10GND-1"C	30A (15 FUSE)	
CU-E3 (BLDG. E)	208/1	30.5	24.7	50	LE-13,15	4#8, 1#10GND-1.25"C	50	Y	1,600	208/1	34	50	60A (50A FUSE)	YES	PCD-SRT12CA	7.1	12.8	2#8, 1#10GND-1"C	30A (15 FUSE)	
CU-E4 (BLDG. E)	208/1	30.5	24.7	50	LE-9,11		50	Y	1,600	208/1	34	50	60A (50A FUSE)	YES	PCD-SRT12CA	7.1	12.8	2#8, 1#10GND-1"C	30A (15 FUSE)	
CU-E5 (BLDG. E)	208/1	30.5	24.7	50	LE-14,16	4#8, 1#10GND-1.25"C	50	Y	1,600	208/1	34	50	60A (50A FUSE)	YES	PCD-SRT12CA	7.1	12.8	2#8, 1#10GND-1"C	30A (15 FUSE)	
CU-E6 (BLDG. E)	208/1	30.5	24.7	50	LE-10,12		50	Y	1,600	208/1	34	50	60A (50A FUSE)	YES	PCD-SRT12CA	7.1	12.8	2#8, 1#10GND-1"C	30A (15 FUSE)	
CU-E7 (BLDG. E)	208/1	30.5	24.7	50	LE-2,4	4#8, 1#10GND-1.25"C	50	Y	1,600	208/1	34	50	60A (50A FUSE)	YES	PCD-SRT12CA	7.1	12.8	2#8, 1#10GND-1"C	30A (15 FUSE)	
CU-E8 (BLDG. E)	208/1	30.5	24.7	50	LE-6,8		50	Y	1,600	208/1	34	50	60A (50A FUSE)	YES	PCD-SRT12CA	7.1	12.8	2#8, 1#10GND-1"C	30A (15 FUSE)	

GENERAL NOTES:

1 CONTRACTOR TO FIELD VERIFY CIRCUITING AND FEEDER INFORMATION PRIOR TO EQUIPMENT REMOVAL. CONTRACTOR TO PROVIDE REQUIRED ADJUSTMENTS AS NEEDED.

2 PROVIDE MECHANICAL UNIT WITH INTEGRAL CONVENIENCE RECEPTACLE. FEED FROM SPARE 20A/1P BREAKER IN NEAREST PANEL. ROUTE 2#12+1#12GND IN 1/2" EMT CONDUIT FROM PANEL TO RECEPTACLE.
POWER NO MORE THAN 10 RECEPTACLES ON ONE CIRCUIT. FIELD VERIFY EXACT LOCATION OF NEAREST PANEL AND ROUTE OF NEW CIRCUIT FROM PANEL TO UNIT RECEPTACLE.

3 CONTRACTOR TO DEMOLISH POWER CONNECTION FROM ALL ROOF TOP UNITS. DEMOLITION TO CONSIST OF REMOVAL OF POWER CONNECTION, CABLING, AND CONDUIT BACK TO SOURCE UNLESS NOTED OTHERWISE.

4 FIELD COORDINATE EQUIPMENT MANUFACTURER FOR FAULT CURRENT LIMITING FUSE TYPES

DLR Group
© DLR Group

REGISTERED PROFESSIONAL ENGINEER NIMAN E. PATINO REG.#C15990 EXP. 6/30/ 23 ELECTRICAL STATE OF CALIFORNIA

WSU

Merwin Elementary School
COVINA VALLEY USD
16125 CYPRESS ST, COVINA, CA 91722

100% CONSTRUCTION DOCUMENTS
11/04/2022
REVISIONS

75-22605-00

ELECTRICAL SYMBOLS, ABBREVIATIONS & NOTES

E0.1

Autodesk Docs://75-22605-00 CVUSD - District Wide HVAC Replacement/75-22605-00_CVUSD_Merwin ES_MEP_2022.rvt
9/13/2022 4:05:27 PM

OVERALL ELECTRICAL POWER PLAN

SCALE: 1/16" = 1'-0"

GENERAL NOTES

A WORK TO INCLUDE REMOVAL OF EXISTING FEEDER TO EXISTING HVAC EQUIPMENT THAT ARE TO BE REMOVED AND REPLACED. FEEDER TO EXISTING INDOOR FAN COIL UNIT TO BE REMOVED IN ITS ENTIRETY.

B DISCONNECTING MEANS TO BE NEMA 3R RATED, FURNISHED AND INSTALLED BY DIVISION 26.

C CARBON MONOXIDE DETECTION SYSTEM NOT REQUIRED. ELECTRIC HEATING IS BEING PROVIDED.

D SEE SCHEDULE ON SHEET E0.1 FOR ADDITIONAL INFORMATION.

D FUSES SHALL BE PROVIDED PER EQUIPMENT NAMEPLATE RATING.

E ELECTRICAL PANELS LOCATED AT GRADE LEVEL DIRECTLY BELOW WHERE SHOWN.

G ENERGY MANGEMENT SYSTEM (EMS) / BUILDING AUTOMATION SYSTEM (BAS) IS A DELAGATED DESIGN SCOPE BY CONTRACTOR. CONTRACTOR TO FIELD COORDINATE WITH SCHOOL DISTRICT FOR LOCATIONS OF EMS ROUTER AND EMS PANEL AS WELL AS CONDUIT ROUTING.

H CARBON MONOXIDE DETECTION SYSTEM WILL NOT BE PROVIDED AT THIS TIME UNDER CEBC 503.15.1:

EXCEPTION 2: THE GROUP BUILDING WAS CONSTRUCTED BEFORE THE ADOPTION OF THE 2016 CALIFORNIA BUILDING STANDARDS CODE.

EXISTING HVAC UNITS ARE BEING REPLACED IN KIND THROUGHOUT.

J CONTRACTOR TO PROVIDE CONNECTION FROM LOAD SIDE OF HVAC EQUIPMENT DISCONNECT SWITCH TO FEED POWER EXHAUST DISCONNECT SWITCH. PROVIDE SAME SIZE FEEDER. PROVIDE FUSES PER EQUIPMENT NAMEPLATE RATING.

KEYNOTES

No.	DESCRIPTION
1	EXISTING HVAC EQUIPMENT ON THE ROOF TO BE DISCONNECTED AND REPLACED AS PART OF THIS SCOPE OF WORK. EXISTING FEEDER TO BE EXTENDED AS REQUIRED. PROVIDE ALL REQUIRED CONNECTION. FUSED DISCONNECT FOR POWER EXHAUST FAN SHALL BE PROVIDE #8 CONDUCTOR AND #10 GND CONDUCTOR TO LOAD SIDE OF MAIN DISCONNECT FOR RTU.
2	DUCT SMOKE DETECTOR FOR COMPLIANCE TO CALIFORNIA MECHANICAL CODE SECTION 608 IS NOT REQUIRED PER CODE EXCEPTION NO.2. ROOM HAVE DIRECT EXIT TO EXTERIOR AND TRAVEL DISTANCE DOES NOT EXCEED 100 FEET.
4	FUSED DISCONNECT SIZE PER TABLE SHOWN ON E0.1.
5	GFCI TYPE RECEPTACLE PROVIDED BY HVAC EQUIPMENT MANUFACTURER. SEE TABLE PROVIDED ON SHEET E0.1, GENERAL NOTE NO.2 FOR CIRCUITING OF OUTLETS. PROVIDE WEATHERPROOF COVER.
6	PROVIDE 120V CIRCUIT FOR EMS ROUTER AND EMS PANEL. FIELD VERIFY EXACT LOCATION OF EMS ROUTER AND EMS PANEL.

SITE LEGEND

- EXISTING BUILDING NOT IN SCOPE
- EXISTING BUILDING - SCOPE OF WORK UNDER THIS DSA APPLICATION
- (E) RESTROOMS - NOT IN SCOPE

DLR Group

© DLR Group

REGISTERED PROFESSIONAL ENGINEER
NORMAN E. PATINE
REG.#E15990
EXP. 6/30/23
ELECTRICAL
STATE OF CALIFORNIA

WSU

Merwin Elementary School

COVINA VALLEY USD

16125 CYPRESS ST, COVINA, CA 91722

100% CONSTRUCTION DOCUMENTS

11/04/2022

REVISIONS

75-22605-00

BUILDING ELECTRICAL ROOF PLAN

E2.1

Autodesk Docs://75-22605-00 CVUSD - District Wide HVAC Replacement/75-22605-00_CVUSD_Merwin ES_MEP_2022.rvt
9/13/2022 4:05:35 PM