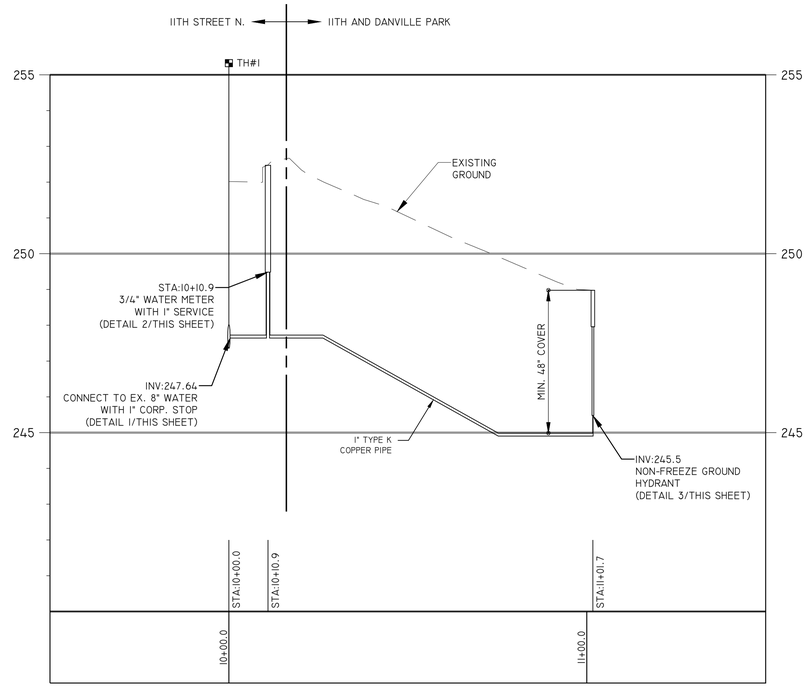

WATERLINE PROFILE

SCALE: HORZ 1" = 20'
VERT. 1" = 2'

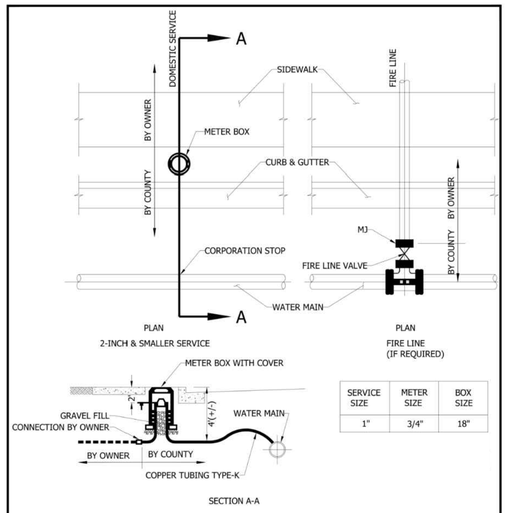

SERVICE SIZE	METER SIZE	BOX SIZE
1"	3/4"	18"

NOTES :

1. SERVICES WILL BE INSTALLED AFTER ALL FEES HAVE BEEN PAID AND ALL SITE CONDITIONS FOR SETTING THE METER HAVE BEEN MET.
2. THE PROPERTY OWNER'S PLUMBER SHALL BE RESPONSIBLE FOR CONNECTING TO THE COUNTY METER INSTALLATION. PLUMBER SHALL NOT ENTER METER BOX.

WATER SERVICE CONNECTIONS
2-INCH AND SMALLER

1 7/01/2020
REVISION & DATE

ARLINGTON VIRGINIA

ARLINGTON COUNTY, VIRGINIA
DEPARTMENT OF ENVIRONMENTAL SERVICES

DRAWING NO.
W-8.0

1 WATER SERVICE CONNECTION
N.T.S.

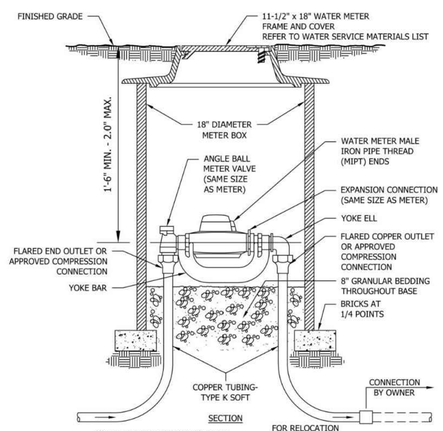

NOTE: THE MINIMUM SIZE OF NEW WATER SERVICES SHALL BE 1-INCH.

WATER SERVICE SIZE	3/4"	1"
COPPER TUBING SIZE	3/4"	1"
METER AND YOKE SIZE	5/8"	3/4"
ANGLE VALVE (METER END x OUTLET END)	5/8"x3/4"	3/4"x1"
YOKE ELL (METER END x OUTLET END)	5/8"x3/4"	3/4"x1"

WATER METER INSTALLATION
$\frac{3}{4}$-INCH AND 1-INCH SERVICE

ISSUED 9/14/2020

ARLINGTON VIRGINIA

ARLINGTON COUNTY, VIRGINIA
DEPARTMENT OF ENVIRONMENTAL SERVICES

DRAWING NO.
W-9.0

2 WATER METER CROCK
N.T.S.

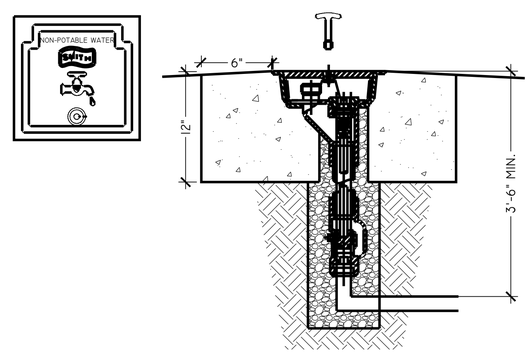

3 NON-FREEZE GROUND HYDRANT
N.T.S.

1. WATER HYDRANT SHALL BE MODEL 5811 WATER HYDRANT FROM JAY R. SMITH MFG. CO. OR APPROVED EQUAL WITH 1" WATER CONNECTION.
2. FUNCTION: GROUND HYDRANT IS MANUFACTURED IN BRONZE WITH A HINGED COVERED BOX FOR POSITIVE PROTECTION AGAINST FREEZING. CLOSING VALVE IS LOCATED BELOW THE FROST LINE.
3. INSTALL PER MANUFACTURER'S INSTRUCTIONS.
4. LOCATE AS SHOWN IN PLANS: LOCATION SHALL BE APPROVED BY LANDSCAPE ARCHITECT PRIOR TO INSTALLATION.
5. HYDRANT COVER SHALL HAVE A SIGN READING 'NON-POTABLE WATER'.
6. HYDRANT TAG REQUIRED. TAG TO READ "NOT POTABLE-NOT SAFE FOR DRINKING". LETTERS TO BE $\frac{1}{2}$" IN HEIGHT IN A COLOR CONTRASTING WITH THE BACKGROUND. TAG TO BE VISIBLE.

ARLINGTON VIRGINIA

DEPARTMENT OF PARKS AND RECREATION

Park Development Division
2100 Clarendon Boulevard, Suite 414
Arlington, VA 22201
Phone: 703.228.3332
Fax: 703.228.3328

-

Project Name and Location

11th & Danville Public Space Improvements

2751 11th Street North
Arlington, VA 22201

Sheet Title

WATERLINE PROFILE

Approval Date

Design Manager

Revisions Date

Designed: AW
Drawn: AMT
Checked: CMB

Filename: C-10-210330.001 WATERLINE PROFILE
Plotted: 2022-05-12

Scale:
Date: MAY 12, 2022

Seal

COMMONWEALTH OF VIRGINIA
CHELSEA M. BISHOP
Lic. No. 50030
Chelsea Bishop
MAY 12, 2022

Sheet

C-10