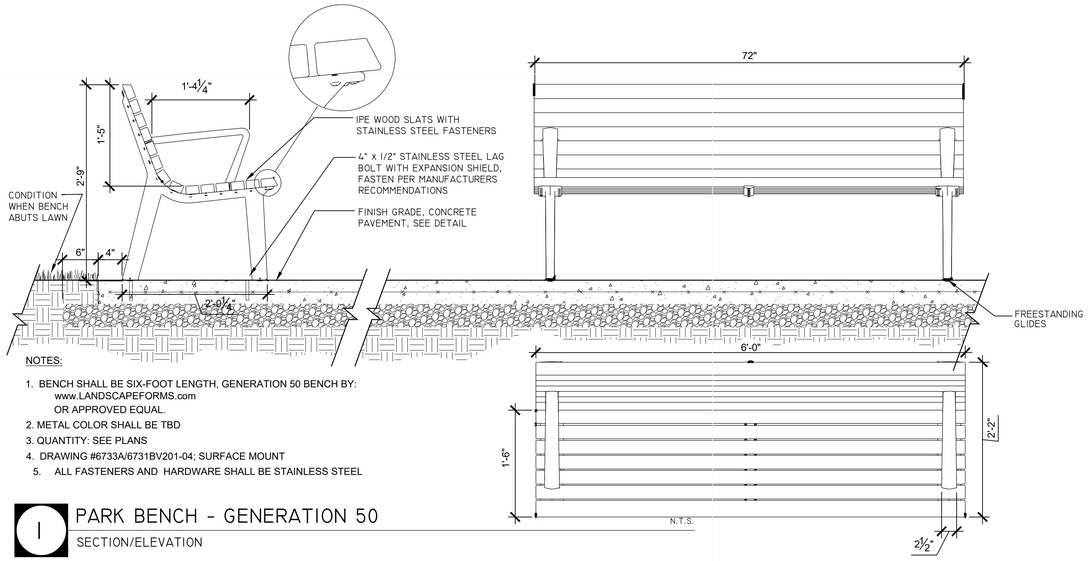

NOTES:

1. BENCH SHALL BE SIX-FOOT LENGTH, GENERATION 50 BENCH BY: www.LANDSCAPEFORMS.com OR APPROVED EQUAL.
2. METAL COLOR SHALL BE TBD
3. QUANTITY: SEE PLANS
4. DRAWING #6733A/6731BV201-04; SURFACE MOUNT
5. ALL FASTENERS AND HARDWARE SHALL BE STAINLESS STEEL

1 PARK BENCH - GENERATION 50

SECTION/ELEVATION

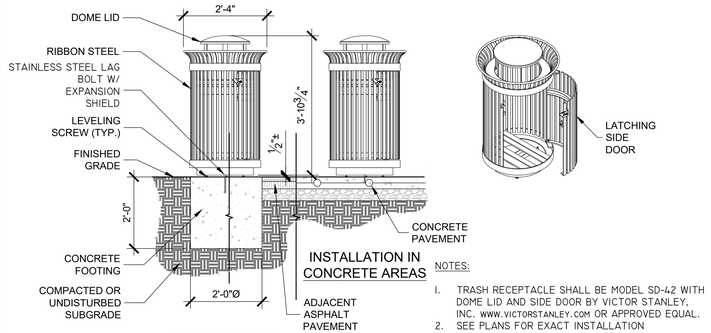

NOTES:

1. TRASH RECEPTACLE SHALL BE MODEL SD-42 WITH DOME LID AND SIDE DOOR BY VICTOR STANLEY, INC. WWW.VICTORSTANLEY.COM OR APPROVED EQUAL.
2. SEE PLANS FOR EXACT INSTALLATION CONDITIONS.
3. ANCHOR TO GROUND PER MANUFACTURER'S RECOMMENDATIONS.
4. SEE APPROPRIATE DETAILS FOR PAVING.
5. LATCHING SIDE DOOR SHALL BE LOCATED SO THAT THE DOOR OPENS ALL OF THE WAY.
6. COLOR SHALL BE BLACK.

2 TRASH RECEPTACLE

SECTION

1/2"=1'-0"

NOTES:

1. PROVIDE SHOP DRAWINGS PRIOR TO ANY FABRICATION.
2. COLORS SHALL BE APPROVED BY LANDSCAPE ARCHITECT PRIOR TO ANY FABRICATION. PARK, RULES AND AGE APPROPRIATE SIGNS TO COLOR MATCH. CONFIRM PRIOR TO ANY SUBMITTALS.
3. SEE LAYOUT PLAN FOR LOCATIONS.
4. SIGNS SHALL BE FABRICATED BY BY ENGRAPHIX ARCHITECTURAL SIGNAGE OR APPROVED EQUAL. SEE SPECIFICATIONS.
5. REFER TO PLAN SET FOR PARK NAME AND ADDRESS.
6. FOR ATTACHMENT, SEE SIGN ATTACHMENT DETAIL.

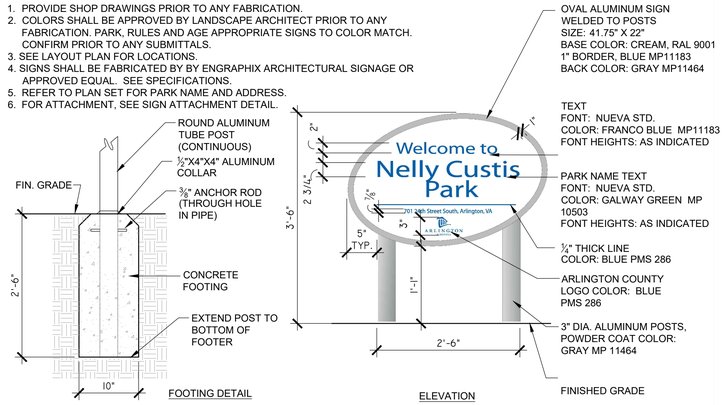

NOTE: PARK NAME AND ADDRESS TO CHANGE. DO NOT USE PARK NAME AND ADDRESS AS SHOWN ON DETAIL.

3 PARK SIGN

10430

1"=1'-0"

PARK SIGN

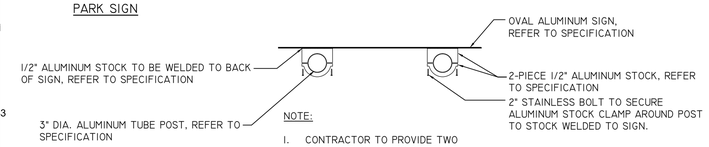

NOTE:

1. CONTRACTOR TO PROVIDE TWO POST ATTACHMENTS PER POST (4 TOTAL PER SIGN).
2. CONTRACTOR TO PROVIDE CONSTRUCTION SUBMITTAL FOR REVIEW AND APPROVAL

3 SIGN ATTACHMENT DETAIL

10430

1"=1'-0"

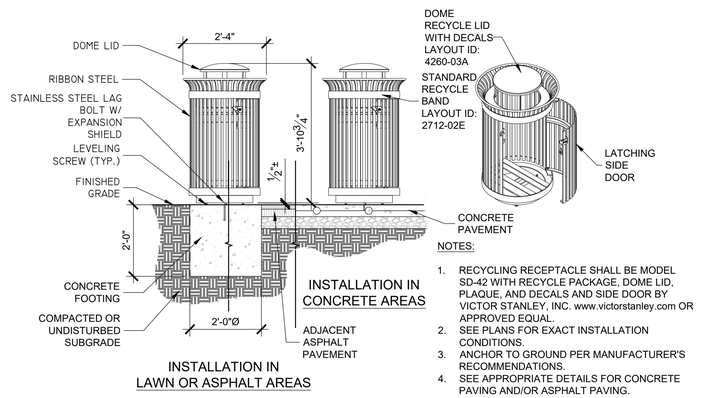

NOTES:

1. RECYCLING RECEPTACLE SHALL BE MODEL SD-42 WITH RECYCLE PACKAGE, DOME LID, PLAQUE, AND DECALS AND SIDE DOOR BY VICTOR STANLEY, INC. www.victorstanley.com OR APPROVED EQUAL.
2. SEE PLANS FOR EXACT INSTALLATION CONDITIONS.
3. ANCHOR TO GROUND PER MANUFACTURER'S RECOMMENDATIONS.
4. SEE APPROPRIATE DETAILS FOR CONCRETE PAVING AND/OR ASPHALT PAVING.
5. LATCHING SIDE DOOR SHALL BE LOCATED SO THAT THE DOOR OPENS ALL OF THE WAY.
6. COLOR SHALL BE VS BLUE.

2 RECYCLING RECEPTACLE

SECTION

1/2"=1'-0"

NOTES:

1. SINGLE CHAIRS SHALL BE AD-4SFC-CG, 4 SLAT. ALL MANUFACTURED BY: LOLL DESIGNS, www.lolldesigns.com, OR APPROVED EQUAL.
2. COLOR: SKY BLUE (4), ORANGE (4)
3. QUANTITY: 8

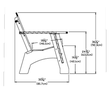

4 PARK CHAIR

SECTION/ELEVATION

NOT TO SCALE

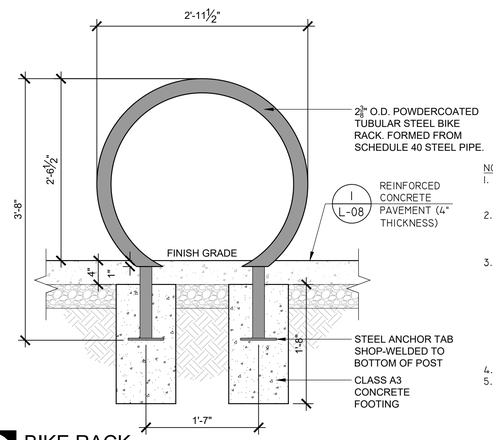

NOTES:

1. BIKE RACK TO BE BRHS-101 BY VICTOR STANLEY OR APPROVED EQUAL.
2. INSTALL BIKE RACKS ACCORDING TO MANUFACTURER'S SPECIFICATIONS.
3. COLOR TO BE BLACK; CONTRACTOR TO PROVIDE COLOR SAMPLES FROM THE MANUFACTURER'S STANDARD COLOR SELECTION AND CUSTOM COLOR AS DESCRIBED ABOVE, SEE SPECIFICATIONS.
4. SEE PLAN FOR LOCATIONS.
5. ORIENTATION TO BE VERIFIED BY LANDSCAPE ARCHITECT PRIOR TO INSTALLATION.

5 BIKE RACK

129300

1"=1'-0"

FOR INFORMATION ONLY

ARLINGTON VIRGINIA

DEPARTMENT OF PARKS AND RECREATION

Park Development Division
2100 Clarendon Boulevard, Suite 414
Arlington, VA 22201
Phone: 703.228.3332
Fax: 703.228.3328

ITB

SWM

Project Name and Location

11th and Danville Park Renovation

By-Right

2751 11th Street North
Arlington, VA

Sheet Title

Details-

Site Furnishings

LDA-46746
#LDA22032

Approval	Date
bg	DS_DATE
Design Supervisor	

Revisions	Date
REV 1	REV 1 DATE
REV 2	REV 2 DATE
REV 1	REV 3 DATE
REV 1	REV 4 DATE
REV 5	REV 5 DATE

Designed: KvB
Drawn: KvB
Checked: BG

Filename: DVILLE LYT DETAILS
Plotted: May. 18, 22

Scale: SCALE
Date: May. 18, 22

Seal

COMMONWEALTH OF VIRGINIA
KATHY VON BREDOW
Lic. No. 1611
05.12.2022
LANDSCAPE ARCHITECT

Sheet

L-07