JACKSON COUNTY DETENTION CENTER
555 STAN EVANS DRIVE
JEFFERSON, GEORGIA 30549

CLOSED CIRCUIT TV SYSTEM UPGRADE

JACKSON COUNTY BOARD OF COMMISSIONERS
5000 JACKSON PARKWAY
JEFFERSON, GEORGIA 30549

DRAWING INDEX

Sheet Name	Sheet Number
COVER SHEET	G-001
IP-CCTV LEGEND	SE-001
SITE PLAN	SE-002
AREA A FLOORPLAN - SHERIFF'S OFFICE	SE-401
AREA B FLOORPLAN - VSP AND DISPATCH	SE-402
AREA C FLOORPLAN - JAIL ADMINISTRATION AND SUPPORT	SE-403
AREA D FLOORPLAN LEVEL 1 - HOUSING PODS B, C, D, E, F	SE-404
AREA E FLOORPLAN LEVEL 1 - HOUSING PODS G, H, J, K, L	SE-405
AREA D FLOORPLAN MEZZANINE - HOUSING PODS B, C, D, E, F	SE-406
AREA E FLOORPLAN MEZZANINE - HOUSING PODS G, H, J, K, L	SE-407
CAMERA VIEWS	SE-601
CAMERA VIEWS	SE-602
CAMERA VIEWS	SE-603
CAMERA VIEWS	SE-604
CAMERA VIEWS	SE-605
CAMERA VIEWS	SE-606
CAMERA VIEWS	SE-607
CAMERA VIEWS	SE-608
CAMERA SCHEDULE	SE-701
CAMERA SCHEDULE	SE-702
CAMERA SCHEDULE	SE-703
CAMERA DETAILS	SE-704
CAMERA DETAILS	SE-705
CAMERA DETAILS	SE-706
LARGE SCALE FLOORPLANS	SE-801
LARGE SCALE FLOORPLANS	SE-802
CENTRAL CONTROL ELEVATION AND SECTION	SE-803
CENTRAL CONTROL SPOT MONITOR 1 INITIAL SETUP	SE-804
CENTRAL CONTROL SPOT MONITOR 2 INITIAL SETUP	SE-805
ONE LINE DIAGRAM	SE-806

LOCATION MAPS

NEXTLEVEL
ENGINEERING AND CONSTRUCTION SERVICES
2891 LINE STREET
AUSTELL, GEORGIA 30106
470-330-0231
floyd@nextlevelengineering.net

This drawing and all prints of it are the property of Next Level Engineering and Construction Services, LLC (Next Level). Prints are to be returned to Next Level upon completion of use for which they were issued. Reproduction of these drawings without the written consent of Next Level is not permitted and Next Level retains all common law, statutory and other reserved rights, including the copyright thereto.

CONSULTANTS

STAMP

GEORGIA REGISTERED No. 035071 PROFESSIONAL ENGINEER FLOYD A. KEELS 03/08/2021

JACKSON COUNTY GEORGIA
Jackson County Detention Center
CCTV System Upgrade
Enter address here
555 Stan Evans Drive
Jefferson, Georgia 30549
RELEASED FOR BID

KEY PLAN

PRINTING AND REVISIONS

MARK	DATE	DESCRIPTION

NEXT LEVEL PROJECT NUMBER	NL202003LL
DRAWN BY	LTL
CHECKED BY	FAK
DATE RELEASED FOR CONSTRUCTION	03/08/2021

COPYRIGHT © 2020 Next Level Engineering and Construction Services, LLC

SHEET TITLE
COVER SHEET

SHEET NUMBER
G-001

3/7/2021 1:36:27 PM

1 INCH

RELEASED FOR CONSTRUCTION

GENERAL NOTES

1. COORDINATE LOCATION OF CEILING MOUNTED EQUIPMENT WITH MECHANICAL AND ELECTRICAL EQUIPMENT INSTALLED IN OR ON THE CEILING. LOCATE EQUIPMENT PROVIDED UNDER DIVISION 27/28 FOR SYMMETRICAL LAYOUT WITH OTHER EQUIPMENT IN OR ON CEILING COMPLYING WITH APPLICABLE CODE REQUIREMENTS.
2. "WP" INDICATES ASSOCIATED DEVICE IS WEATHERPROOF - ALL EXTERIOR MOUNTED EQUIPMENT WILL BE WEATHERPROOF EVEN IF NOT SO MARKED
3. * INDICATES VANDAL COVER, GRILLE OR BAFFLE. ALL DEVICES IN THE DETENTION AREA TO BE CORRECTIONS GRADE OR HAVE VANDAL COVERS REGARDLESS OF MARKING.
4. "SEC" INDICATES - SECURITY EQUIPMENT CABINET OR SECURITY EQUIPMENT CLOSET
5. WHEN FLUSH MOUNTED DEVICES OF ANY KIND ARE SHOWN ON OPPOSITE SIDES OF A DETENTION WALL THERE SHALL BE A MINIMUM OF 6" BETWEEN DEVICES. IF THE DEVICES ARE OF THE SAME SYSTEM AND CONNECTED BY CONDUIT, THERE SHALL BE A MINIMUM OF 2-90 DEGREE ANGLES IN THE CONDUIT BETWEEN THE DEVICES
6. DO NOT SCALE SEC/COMM DRAWINGS. DEVICE LOCATIONS ARE APPROXIMATE. ACTUAL DEVICE LOCATIONS SHALL BE FIELD COORDINATED WITH ALL OTHER TRADES AND APPLICABLE CODE REQUIREMENTS
7. POWER CONNECTION - CONNECT POWER DIRECTLY TO EQUIPMENT DESIGNED TO RECEIVE DIRECT CONNECTION. PROVIDE RECEPTACLE COMPATIBLE WITH EQUIPMENT DESIGNED FOR PLUG-IN POWER CONNECTION. PROVIDE AND INSTALL WIRE AND CONDUIT TO PANELBOARD DESIGNATED. SEE NOTES OR ELECTRICAL PANELBOARD SCHEDULES FOR CIRCUIT(S) AS REQUIRED TO POWER DIVISION 27/28 EQUIPMENT OR DEVICES. WHERE MORE THAN ONE CIRCUIT(S) ARE LISTED ON PANELBOARD SCHEDULES, DIVIDE LOAD EVENLY BETWEEN THE DEVICES.
8. WHERE POSSIBLE ALWAYS RUN NEW RACEWAY IN WALL CAVITIES AND SPACES INACCESSIBLE TO INMATES. EXPOSED SURFACE APPLIED CONDUIT IN INMATE ACCESSIBLE AREAS MUST BE RIGID OR INTERMEDIATE METAL RACEWAY. SURFACE APPLIED RACEWAY AT ELEVATIONS 12' AFF OR BELOW MUST BE COVERED WITH 14 GA BENT PLATE IN "TOP HAT" CONFIGURATION CHANNEL - EACH "LEG" OR "BRIM" BEING MIN 1.5" WIDE (SEE PROFILE BELOW). THE CHANNEL PORTION OF THE "TOP HAT" WILL BE SIZED TO ACCOMMODATE THE RACEWAY. THE CHANNEL RACEWAY COVER MUST BE AFFIXED TO THE SURFACE WITH SECURITY TORX HEAD PIN REJECT SCREWS WITH FASTENERS APPROPRIATE TO THE SUBSTRATE - FASTENERS WILL BE MOUNTED 12" OC NOT MORE THAN 2" FROM EACH END AND SECURED TO THE "LEGS" OR "BRIM" OF THE HAT CHANNEL. BOTH "LEGS" OR "BRIMS" OF THE HAT CHANNEL MUST BE AFFIXED TO THE SURFACE. WHERE CHANNEL IS AFFIXED TO HOLLOW METAL SECTIONS THE CHANNEL MAY BE CONFORMED TO THE HOLLOW METAL PROFILE AND STITCH WELDED TO ITS SURFACE (1" ON 12" CENTERS). ALL EXPOSED SURFACE CONDUIT AND CHANNEL WILL BE PAINTED TO MATCH SURROUNDING SURFACES. CHANNEL WILL BE SECURITY CAULKED AT WALL JOINT AND AT CLOSURE PLATES.

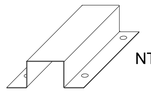

NTS

9. CABLE TRAYS SHALL BE ROUTED AND SIZED BY THE SYSTEMS INTEGRATOR IN ACCORDANCE WITH PREVAILING CODES AND STANDARDS FOR WIRE FILL. ALL DIVISION 28 (ISS) SYSTEM DATA CABLING MAY BE ROUTED IN CABLE TRAY. COORDINATE WITH COMMUNICATIONS CONTRACTOR TO ENSURE NEC MAXIMUM FILL IS NOT EXCEEDED. IF SUBSTRATE IN TR ROOMS (SECURITY EQUIPMENT ROOMS) IS NOT CMU, PROVIDE CONTINUOUS HORIZONTAL WOOD BLOCKING 24" OC AROUND THE ENTIRE PERIMETER OF THE ROOM TO FULL CEILING HEIGHT. SEE COMMUNICATIONS DRAWINGS FOR CONCEPT CABLE TRAY LAYOUT - EXACT CABLE TRAY LAYOUT MUST BE COORDINATED AMONG TRADES EARLY IN THE PROJECT. WHERE THE USE OF CABLE TRAY IS SHOWN OR APPROVED, UNLESS OTHERWISE NOTED, CONDUCTOR ROUTING FROM CABLE TRAY TO THEIR DESTINATION SHALL BE FULLY IN CONDUIT. J-HOOKS AND OTHER EXPOSED WIRING TECHNIQUES SHALL NOT BE UTILIZED.
10. LARGE SCALE EQUIPMENT ROOM PLANS DO NOT SHOW EDGE DEVICE COMPONENTS SUCH AS LOCKS, SPEAKERS, ETC. UNLESS SPECIFICALLY NOTED. SEE FLOOR PLANS.

IP-CCTV SYSTEM LEGEND

- CEILING MOUNTED 2.0MP (or as otherwise noted) DOME IP CLOSED CIRCUIT TV CAMERA
- WALL MOUNTED 2.0MP (or as otherwise noted) DOME IP CLOSED CIRCUIT TV CAMERA
- 360 — PAN TILT ZOOM 2.0MP 10X OPTICAL (or as otherwise noted) DOME IP CLOSED CIRCUIT TV CAMERA
  - INDICATES IP DIGITAL 360 DEGREE PANORAMIC "PTZ" CAMERA (see specs)
- XXX — WALL MOUNT PAN TILT ZOOM 2MP 10X OPTICAL (or as otherwise noted) DOME IP CLOSED CIRCUIT TV CAMERA
  - 180 or VWA - INDICATES IP DIGITAL 180 DEGREE PANORAMIC "PTZ" CAMERA (see specs and below)
  - AV - INDICATES AV CAMERA/VIDEO CONFERENCING SYSTEM.
- "ELEVATOR" STYLE CORNER MOUNTED 1.3MP DIGITAL IP CLOSED CIRCUIT TV CAMERA. MUST SEE ENTIRE FLOOR AREA OF SPACE.
- THIS SYMBOL (OR CIRCLE) ADJACENT TO DEVICE INDICATES POST OR POLE MOUNTING
- (M) CEILING MOUNTED MICROPHONE - RECORD AUDIO WITH VIDEO FROM ASSOCIATED CAMERA(S). ASSOCIATION SHOWN BY DASHED LINE

1. ALL ICONS INDICATE A COMPLETE CAMERA UNIT INSTALLATION PROVIDE ALL CAMERAS WITH LENS, ENCLOSURES, MOUNTS, ACCESSORIES
2. "ARROW" SHOWS INTENDED LINE OF VIEW. CONTRACTOR TO SUBMIT VARI-FOCAL LENS AND FIELD OF VIEW WITH SHOP DRAWINGS
3. PROVIDE EXTERIOR RATED CAMERAS/HOUSINGS ON EXTERIOR OF THE FACILITY. POLE MOUNTED CAMERAS ARE INDICATED ON THE SITE PLAN. PROVIDE SEPARATE POWER FOR CAMERA HEATERS, PTZ FUNCTIONS.
4. OTHER TAGS
   - "WA" INDICATES WIDE ANGLE CAMERA (2.8 MM LENS OR WIDER)
   - "VWA" INDICATES VERY WIDE ANGLE CAMERA (1.4 MM - 180 DEGREES OR WIDER)

NEXT LEVEL
ENGINEERING AND CONSTRUCTION SERVICES
2891 LINE STREET
AUSTELL, GEORGIA 30106
470-330-0231
floyd@nextleveleng.net

This drawing and all prints of it are the property of Next Level Engineering and Construction Services, LLC (Next Level). Prints are to be returned to Next Level upon completion of use for which they were issued. Reproduction of these drawings without the written consent of Next Level is not permitted and Next Level retains all common law, statutory and other reserved rights, including the copyright thereto.

CONSULTANTS

STAMP

GEORGIA REGISTERED No. 035071 PROFESSIONAL ENGINEER FLOYD A. KEELS 03/08/2021

JACKSON COUNTY GEORGIA
Jackson County Detention Center
CCTV System Upgrade
Enter address here
555 Stan Evans Drive
Jefferson, Georgia 30549
RELEASED FOR BID

KEY PLAN

PRINTING AND REVISIONS

MARK	DATE	DESCRIPTION

NEXT LEVEL PROJECT NUMBER	NL202003LL
DRAWN BY	LTL
CHECKED BY	FAK
DATE RELEASED FOR CONSTRUCTION	03/08/2021

COPYRIGHT © 2020 Next Level Engineering and Construction Services, LLC

SHEET TITLE
IP-CCTV LEGEND

SHEET NUMBER
SE-001

RELEASED FOR CONSTRUCTION

3/7/2021 1:38:27 PM

1 INCH

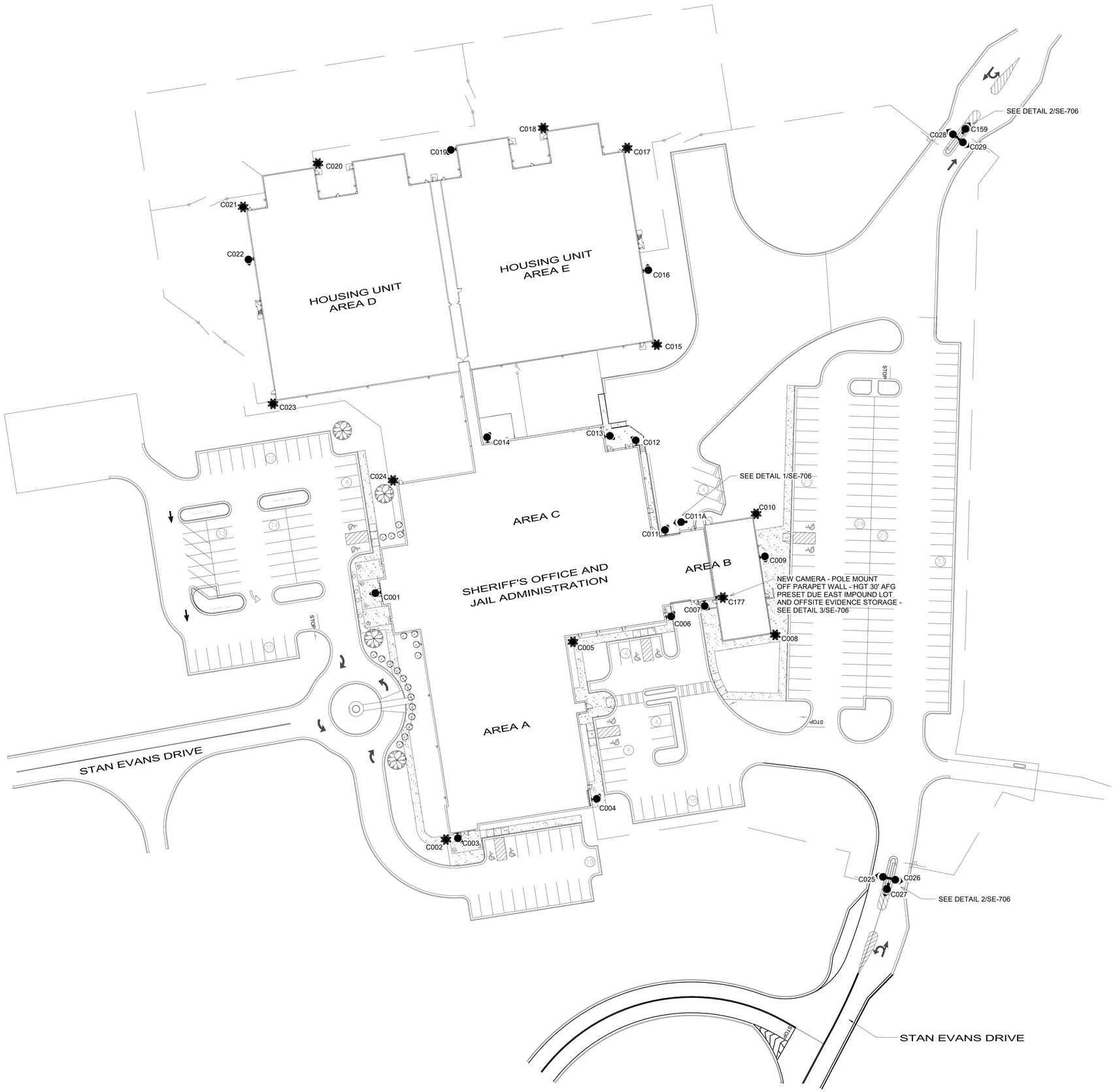

NEXTLEVEL
ENGINEERING AND CONSTRUCTION SERVICES
2891 LINE STREET
AUSTELL, GEORGIA 30106
470-330-0231
floyd@nextlevelengineering.net

This drawing and all prints of it are the property of Next Level Engineering and Construction Services, LLC (Next Level). Prints are to be returned to Next Level upon completion of use for which they were issued. Reproduction of these drawings without the written consent of Next Level is not permitted and Next Level retains all common law, statutory and other reserved rights, including the copyright thereto.

CONSULTANTS

STAMP

GEORGIA
REGISTERED
No. 035071
PROFESSIONAL
ENGINEER
FLOYD A. KEELS
03/08/2021

JACKSON COUNTY GEORGIA
Jackson County Detention Center
CCTV System Upgrade
Enter address here
555 Stan Evans Drive
Jefferson, Georgia 30549
CONSTRUCTION DOCUMENTS

KEY PLAN

PRINTING AND REVISIONS

MARK	DATE	DESCRIPTION

NEXT LEVEL PROJECT NUMBER	NL202003LL
DRAWN BY	LTL
CHECKED BY	FAK
DATE RELEASED FOR CONSTRUCTION	03/08/2021

COPYRIGHT © 2020 Next Level Engineering and Construction Services, LLC

SHEET TITLE
SITE PLAN

SHEET NUMBER
SE-002

RELEASED FOR CONSTRUCTION

3/7/2021 1:36:28 PM

1 INCH

1 Level 1 Area A
1/8" = 1'-0"

NEXT LEVEL
ENGINEERING AND CONSTRUCTION SERVICES
2891 LINE STREET
AUSTELL, GEORGIA 30106
470-330-0231
floyd@nextleveleng.net

This drawing and all prints of it are the property of Next Level Engineering and Construction Services, LLC (Next Level). Prints are to be returned to Next Level upon completion of use for which they were issued. Reproduction of these drawings without the written consent of Next Level is not permitted and Next Level retains all common law, statutory and other reserved rights, including the copyright thereto.

CONSULTANTS

STAMP

GEORGIA REGISTERED No. 035071 PROFESSIONAL ENGINEER FLOYD A. KEELS 03/08/2021

JACKSON COUNTY GEORGIA

Jackson County Detention Center
CCTV System Upgrade
Enter address here
555 Stan Evans Drive
Jefferson, Georgia 30549

RELEASED FOR BID

KEY PLAN

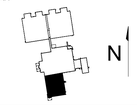

PRINTING AND REVISIONS

MARK	DATE	DESCRIPTION

NEXT LEVEL PROJECT NUMBER	NL202003LL
DRAWN BY	LTL
CHECKED BY	FAK
DATE RELEASED FOR CONSTRUCTION	03/08/2021

COPYRIGHT © 2020 Next Level Engineering and Construction Services, LLC

SHEET TITLE

AREA A FLOORPLAN - SHERIFF'S OFFICE

SHEET NUMBER

SE-401

3/7/2021 1:36:29 PM

RELEASED FOR CONSTRUCTION

1 INCH

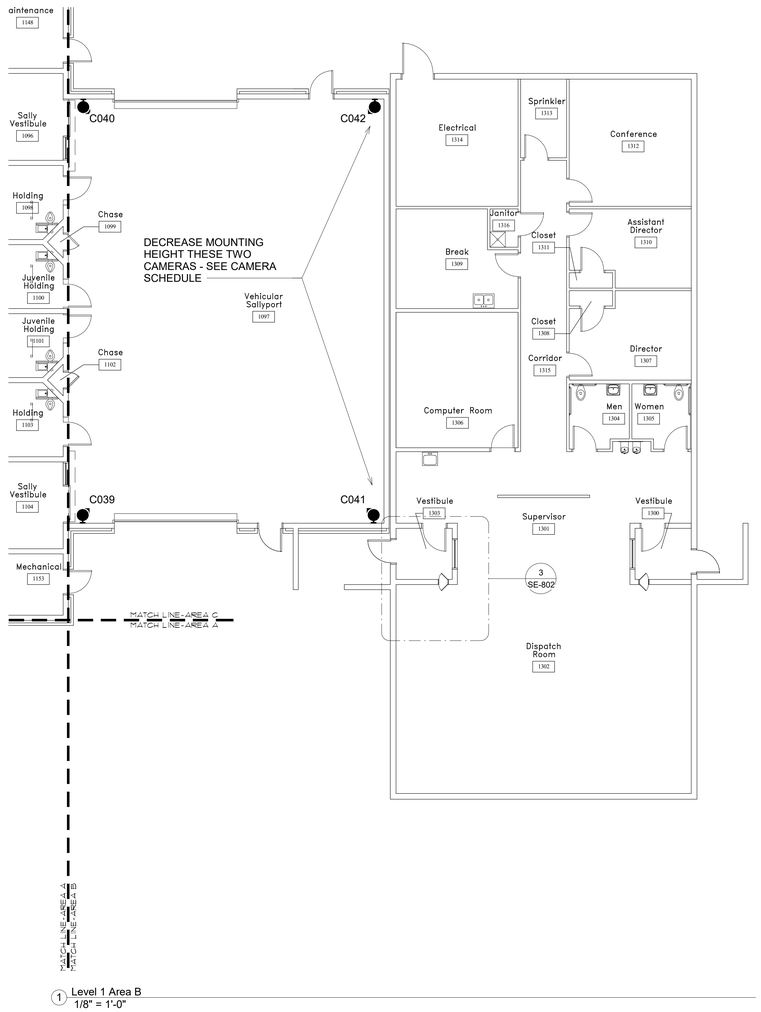

1 Level 1 Area B
1/8" = 1'-0"

NEXTLEVEL
ENGINEERING AND CONSTRUCTION SERVICES
2891 LINE STREET
AUSTELL, GEORGIA 30106
470-330-0231
floyd@nextleveleng.net

This drawing and all prints of it are the property of Next Level Engineering and Construction Services, LLC (Next Level). Prints are to be returned to Next Level upon completion of use for which they were issued. Reproduction of these drawings without the written consent of Next Level is not permitted and Next Level retains all common law, statutory and other reserved rights, including the copyright thereto.

CONSULTANTS

STAMP

GEORGIA
REGISTERED
No. 035071
PROFESSIONAL
ENGINEER
FLOYD A. KEELS
03/08/2021

JACKSON COUNTY GEORGIA
Jackson County Detention Center
CCTV System Upgrade
Enter address here
555 Stan Evans Drive
Jefferson, Georgia 30549
RELEASED FOR BID

KEY PLAN

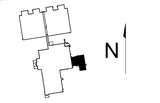

PRINTING AND REVISIONS

MARK	DATE	DESCRIPTION

NEXT LEVEL PROJECT NUMBER	NL202003LL
DRAWN BY	LTL
CHECKED BY	FAK
DATE RELEASED FOR CONSTRUCTION	03/08/2021

COPYRIGHT © 2020 Next Level Engineering and Construction Services, LLC

SHEET TITLE

AREA B FLOORPLAN - VSP AND DISPATCH

SHEET NUMBER

SE-402

3/7/2021 1:38:29 PM

RELEASED FOR CONSTRUCTION

1 INCH

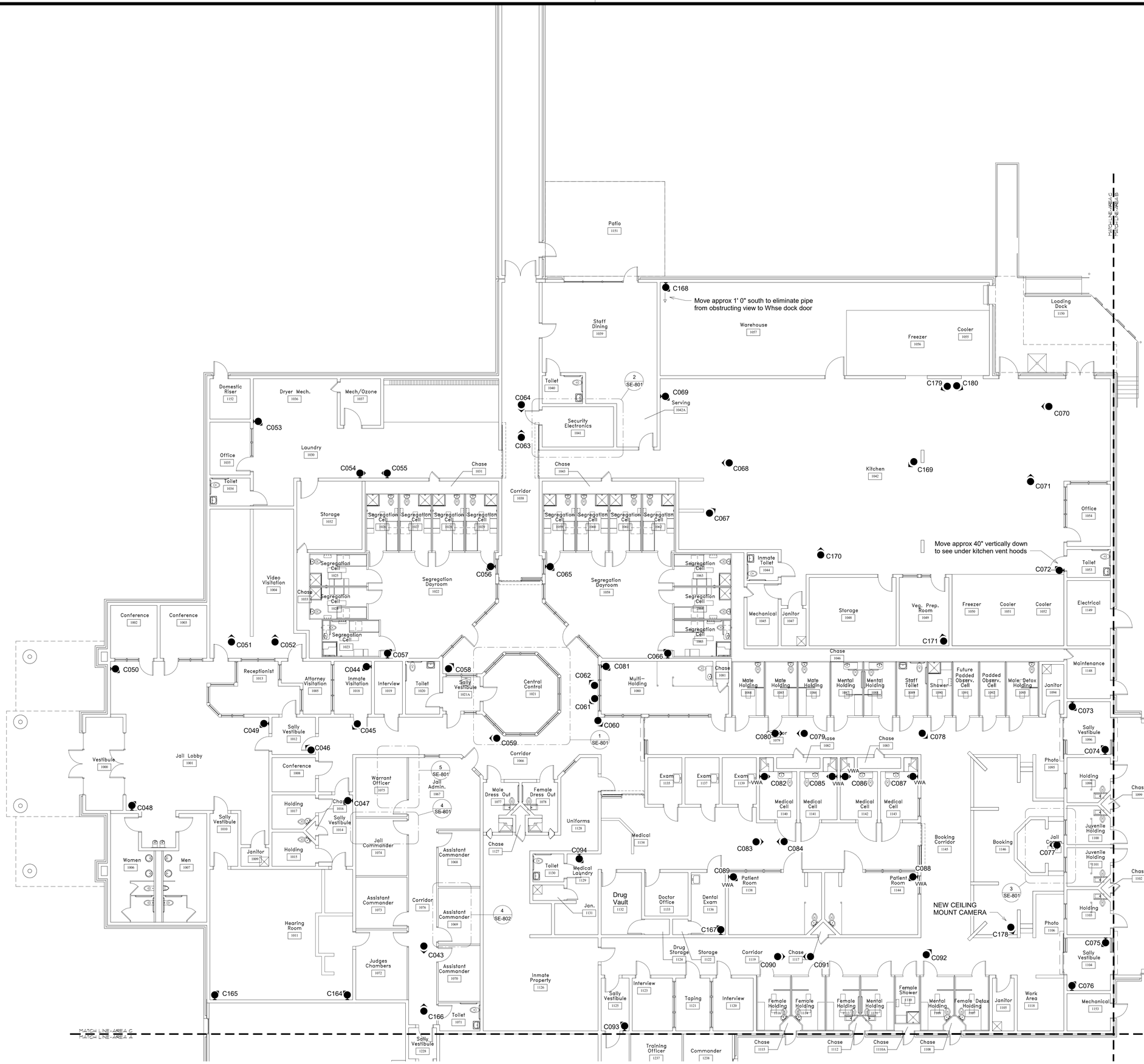

1 Level 1 Area C
1/8" = 1'-0"

1 INCH

3/7/2021 1:36:30 PM

NEXT LEVEL
ENGINEERING AND CONSTRUCTION SERVICES
2891 LINE STREET
AUSTELL, GEORGIA 30106
470-330-0231
floyd@nextleveleng.net

This drawing and all prints of it are the property of Next Level Engineering and Construction Services, LLC (Next Level). Prints are to be returned to Next Level upon completion of use for which they were issued. Reproduction of these drawings without the written consent of Next Level is not permitted and Next Level retains all common law, statutory and other reserved rights, including the copyright thereto.

CONSULTANTS

STAMP

GEORGIA REGISTERED No. 035071 PROFESSIONAL ENGINEER FLOYD A. KEELS 03/08/2021

JACKSON COUNTY GEORGIA

Jackson County Detention Center
CCTV System Upgrade
Enter address here
555 Stan Evans Drive
Jefferson, Georgia 30549

RELEASED FOR BID

KEY PLAN

PRINTING AND REVISIONS

MARK	DATE	DESCRIPTION

NEXT LEVEL PROJECT NUMBER	NL202003LL
DRAWN BY	LTL
CHECKED BY	FAK
DATE RELEASED FOR CONSTRUCTION	03/08/2021

COPYRIGHT © 2020 Next Level Engineering and Construction Services, LLC

SHEET TITLE

AREA C FLOORPLAN - JAIL ADMINISTRATION AND SUPPORT

SHEET NUMBER

SE-403

RELEASED FOR CONSTRUCTION

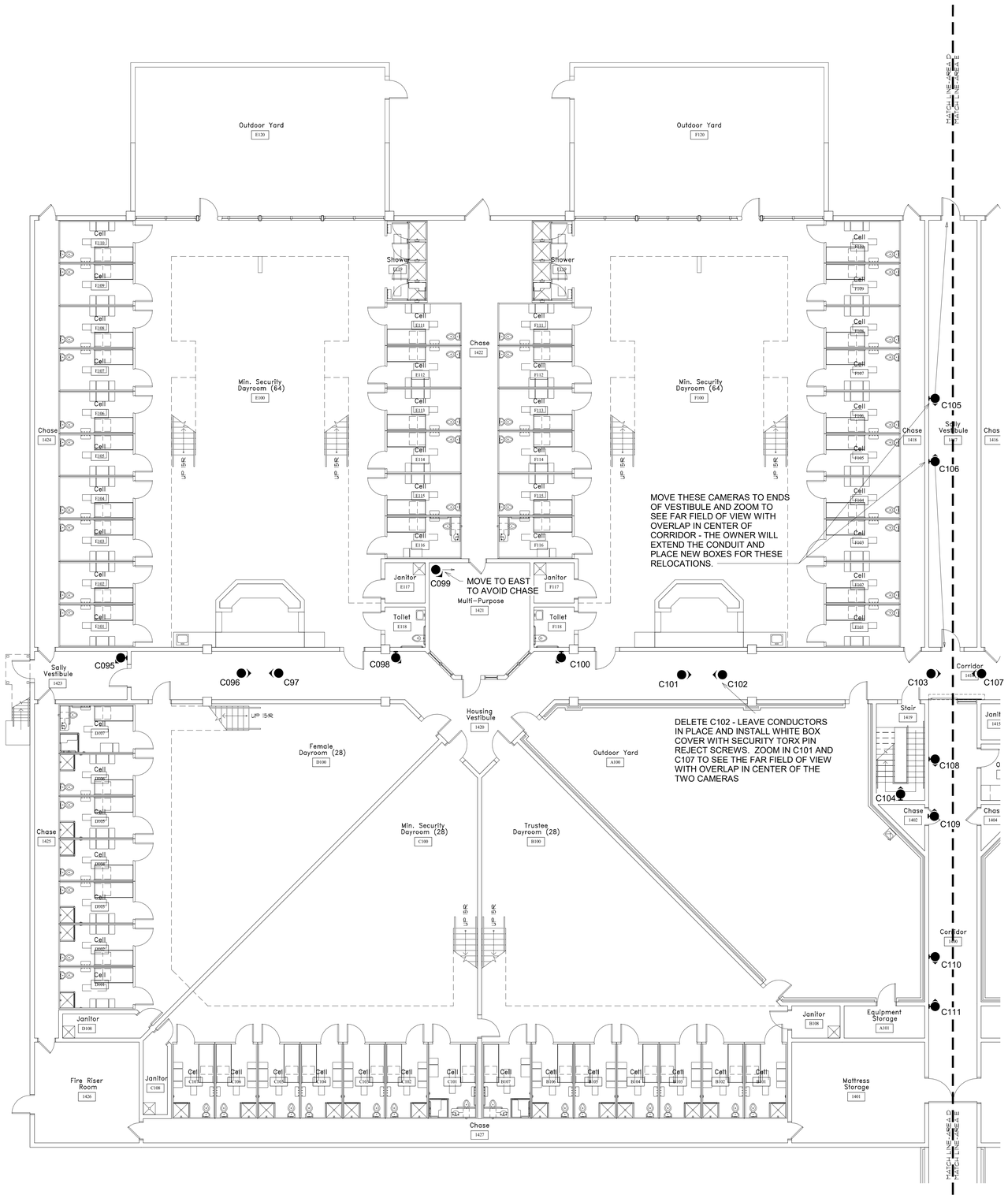

1 Level 1 Area D Housing
1/8" = 1'-0"

NEXT LEVEL
ENGINEERING AND CONSTRUCTION SERVICES
2891 LINE STREET
AUSTELL, GEORGIA 30106
470-330-0231
floyd@nextleveleng.net

This drawing and all prints of it are the property of Next Level Engineering and Construction Services, LLC (Next Level). Prints are to be returned to Next Level upon completion of use for which they were issued. Reproduction of these drawings without the written consent of Next Level is not permitted and Next Level retains all common law, statutory and other reserved rights, including the copyright thereto.

CONSULTANTS

STAMP

GEORGIA
REGISTERED
No. 035071
PROFESSIONAL
ENGINEER
FLOYD A. KEELS
03/08/2021

JACKSON COUNTY GEORGIA
Jackson County Detention Center
CCTV System Upgrade
Enter address here
555 Stan Evans Drive
Jefferson, Georgia 30549

RELEASED FOR BID

KEY PLAN

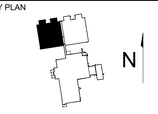

PRINTING AND REVISIONS

MARK	DATE	DESCRIPTION

NEXT LEVEL PROJECT NUMBER	NL202003LL
DRAWN BY	LTL
CHECKED BY	FAK
DATE RELEASED FOR CONSTRUCTION	03/08/2021

COPYRIGHT © 2020 Next Level Engineering and Construction Services, LLC

SHEET TITLE

AREA D FLOORPLAN
LEVEL 1 - HOUSING PODS
B, C, D, E, F

SHEET NUMBER

SE-404

RELEASED FOR CONSTRUCTION

3/7/2021 1:36:30 PM

1 INCH

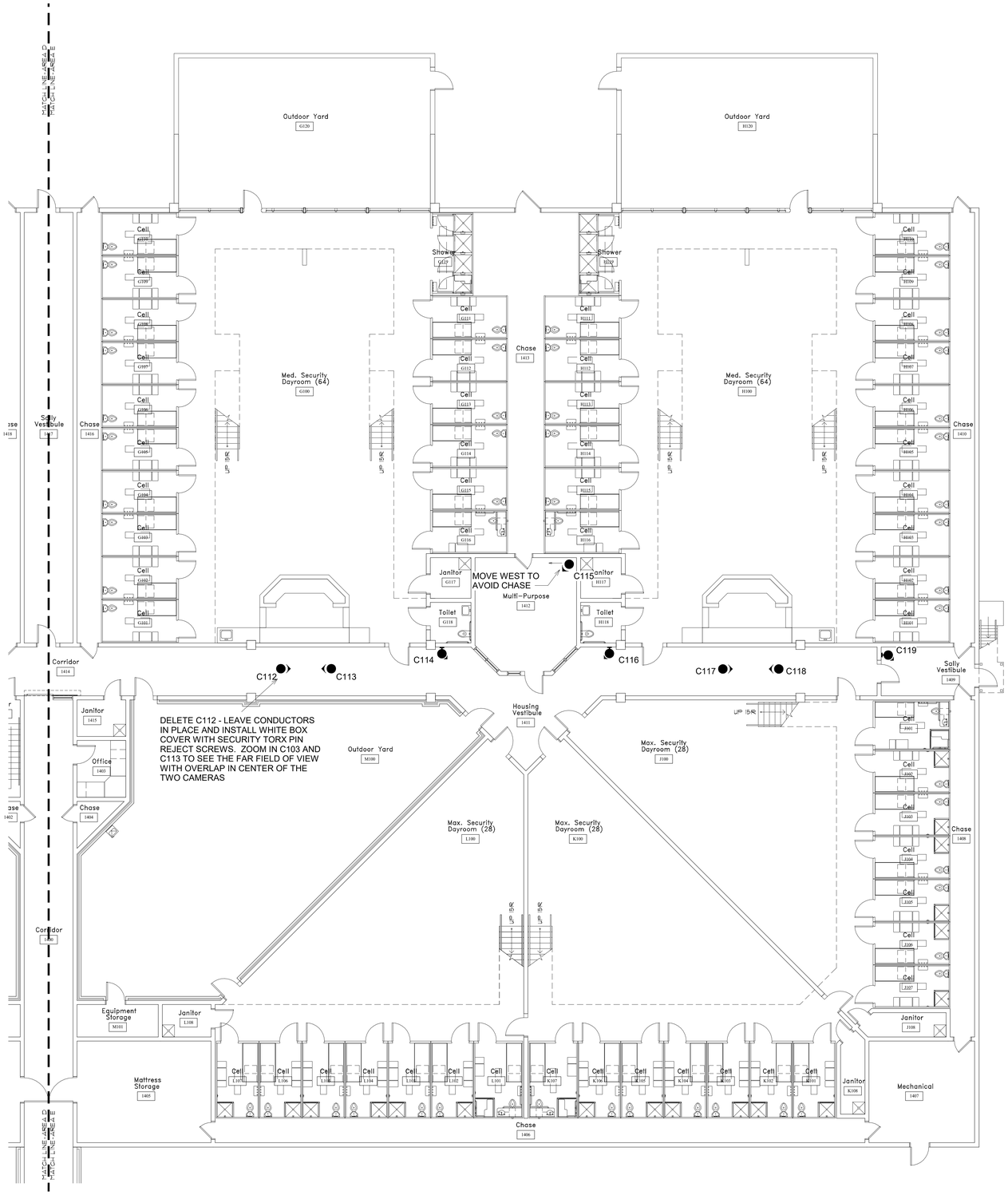

1 Level 1 Area E Housing
1/8" = 1'-0"

NEXTLEVEL
ENGINEERING AND CONSTRUCTION SERVICES
2891 LINE STREET
AUSTELL, GEORGIA 30106
470-330-0231
floyd@nextleveleng.net

This drawing and all prints of it are the property of Next Level Engineering and Construction Services, LLC (Next Level). Prints are to be returned to Next Level upon completion of use for which they were issued. Reproduction of these drawings without the written consent of Next Level is not permitted and Next Level retains all common law, statutory and other reserved rights, including the copyright thereto.

CONSULTANTS

STAMP

GEORGIA
REGISTERED
No. 035071
PROFESSIONAL
ENGINEER
FLOYD A. KEELS
03/08/2021

JACKSON COUNTY GEORGIA

Jackson County Detention Center
CCTV System Upgrade
Enter address here
555 Stan Evans Drive
Jefferson, Georgia 30549

RELEASED FOR BID

KEY PLAN

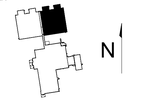

PRINTING AND REVISIONS

MARK	DATE	DESCRIPTION

NEXT LEVEL PROJECT NUMBER	NL202003LL
DRAWN BY	LTL
CHECKED BY	FAK
DATE RELEASED FOR CONSTRUCTION	03/08/2021

COPYRIGHT © 2020 Next Level Engineering and Construction Services, LLC

SHEET TITLE

AREA E FLOORPLAN
LEVEL 1 - HOUSING PODS
G, H, J, K, L

SHEET NUMBER

SE-405

RELEASED FOR CONSTRUCTION

3/7/2021 1:36:31 PM

1 INCH

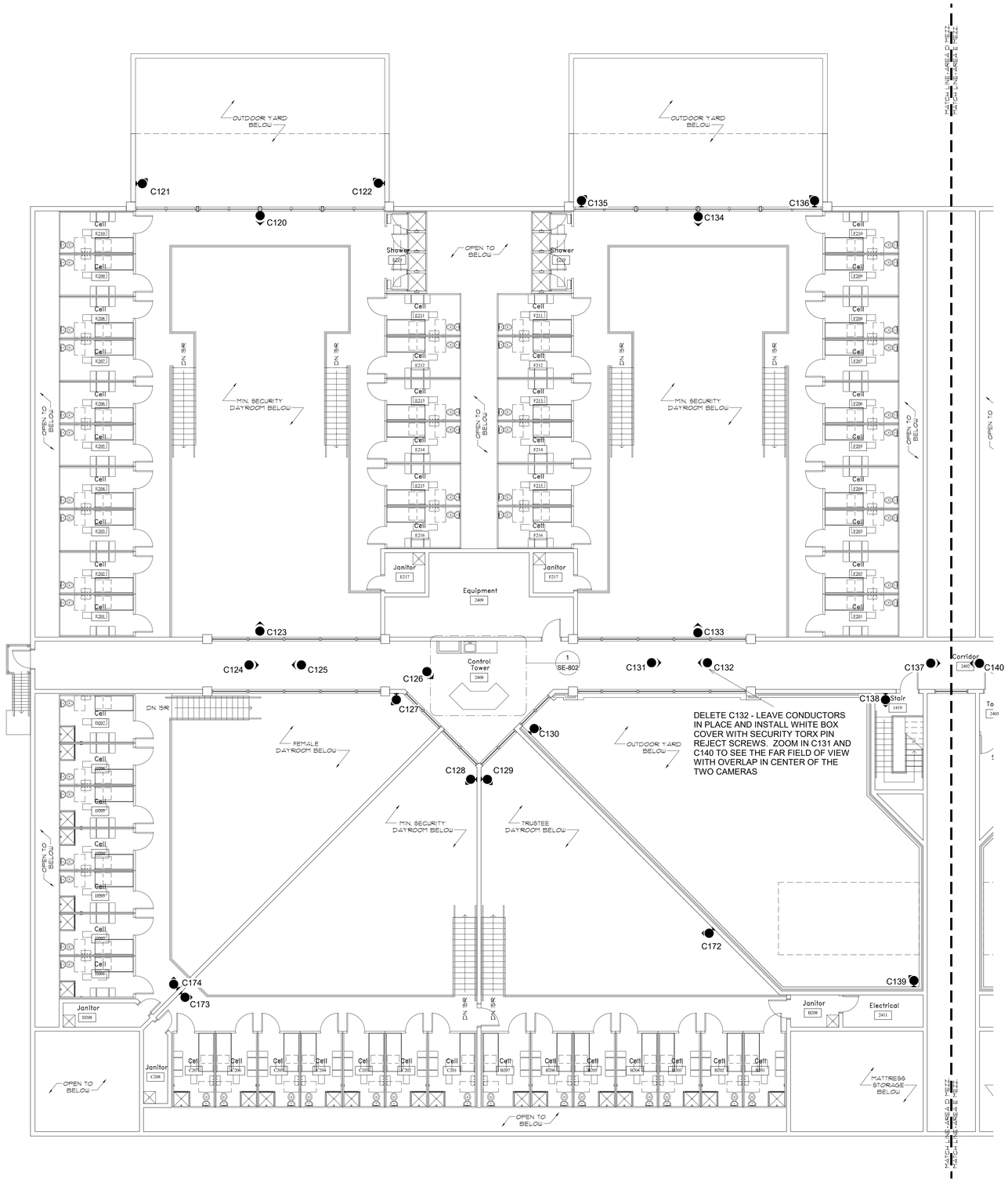

DELETE C132 - LEAVE CONDUCTORS IN PLACE AND INSTALL WHITE BOX COVER WITH SECURITY TORX PIN REJECT SCREWS. ZOOM IN C131 AND C140 TO SEE THE FAR FIELD OF VIEW WITH OVERLAP IN CENTER OF THE TWO CAMERAS

1 Level Mezz Area D Housing
1/8" = 1'-0"

NEXTLEVEL
ENGINEERING AND CONSTRUCTION SERVICES
2891 LINE STREET
AUSTELL, GEORGIA 30106
470-330-0231
floyd@nextleveleng.net

This drawing and all prints of it are the property of Next Level Engineering and Construction Services, LLC (Next Level). Prints are to be returned to Next Level upon completion of use for which they were issued. Reproduction of these drawings without the written consent of Next Level is not permitted and Next Level retains all common law, statutory and other reserved rights, including the copyright thereto.

CONSULTANTS

STAMP

GEORGIA REGISTERED No. 035071 PROFESSIONAL ENGINEER FLOYD A. KEELS 03/08/2021

JACKSON COUNTY GEORGIA

Jackson County Detention Center
CCTV System Upgrade
Enter address here
555 Stan Evans Drive
Jefferson, Georgia 30549

RELEASED FOR BID

KEY PLAN

PRINTING AND REVISIONS

MARK	DATE	DESCRIPTION

NEXT LEVEL PROJECT NUMBER	NL202003LL
DRAWN BY	LTL
CHECKED BY	FAK
DATE RELEASED FOR CONSTRUCTION	03/08/2021

COPYRIGHT © 2020 Next Level Engineering and Construction Services, LLC

SHEET TITLE

AREA D FLOORPLAN MEZZANINE - HOUSING PODS B, C, D, E, F

SHEET NUMBER

SE-406

RELEASED FOR CONSTRUCTION

3/7/2021 1:36:31 PM

1 INCH

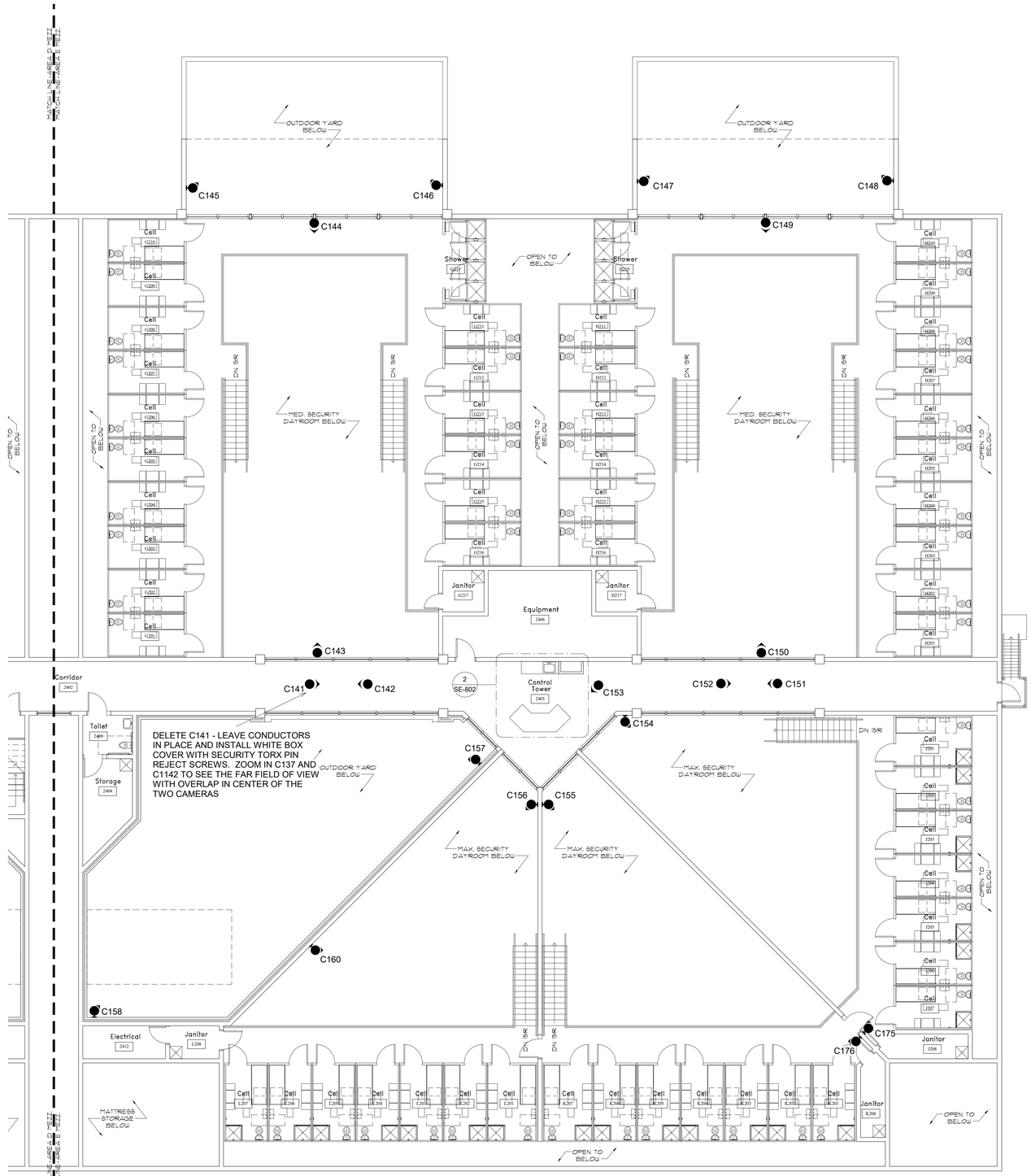

1 Level Mezz Area E Housing
1/8" = 1'-0"

NEXT LEVEL
ENGINEERING AND CONSTRUCTION SERVICES
2891 LINE STREET
AUSTELL, GEORGIA 30106
470-330-0231
floyd@nextlevelengineering.net

This drawing and all prints of it are the property of Next Level Engineering and Construction Services, LLC (Next Level). Prints are to be returned to Next Level upon completion of use for which they were issued. Reproduction of these drawings without the written consent of Next Level is not permitted and Next Level retains all common law, statutory and other reserved rights, including the copyright thereto.

CONSULTANTS

STAMP

GEORGIA REGISTERED No. 035071 PROFESSIONAL ENGINEER FLOYD A. KEELS 03/08/2021

JACKSON COUNTY GEORGIA

Jackson County Detention Center
CCTV System Upgrade
Enter address here
555 Stan Evans Drive
Jefferson, Georgia 30549

RELEASED FOR BID

KEY PLAN

PRINTING AND REVISIONS

MARK	DATE	DESCRIPTION

NEXT LEVEL PROJECT NUMBER	NL202003LL
DRAWN BY	LTL
CHECKED BY	FAK
DATE RELEASED FOR CONSTRUCTION	03/08/2021

COPYRIGHT © 2020 Next Level Engineering and Construction Services, LLC

SHEET TITLE

AREA E FLOORPLAN MEZZANINE - HOUSING PODS G, H, J, K, L

SHEET NUMBER

SE-407

RELEASED FOR CONSTRUCTION

3/7/2021 1:36:32 PM

1 INCH

CAMERA 001

CAMERA 002

CAMERA 003

CAMERA 004

CAMERA 005

CAMERA 006

CAMERA 007

CAMERA 008

CAMERA 009

CAMERA 010

CAMERA 011

CAMERA 012

CAMERA 013

CAMERA 014

CAMERA 015

CAMERA 016

CAMERA 017

CAMERA 018

CAMERA 019

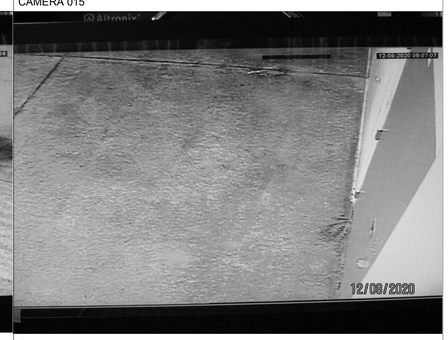

CAMERA 020

CAMERA 021

CAMERA 022

CAMERA 023

NO IMAGE AVAILABLE

CAMERA 024

CAMERA 025

CAMERA VIEWS SHOWN IN MONOCHROME - ALL ACTUAL CAMERAS ARE COLOR. PTZ PRESET VIEWS WILL BE COORDINATED WITH OWNER. OWNER RESERVES RIGHT TO MODIFY VIEWS.

NEXT LEVEL
ENGINEERING AND CONSTRUCTION SERVICES
2891 LINE STREET
AUSTELL, GEORGIA 30106
470-330-0231
floyd@nextleveleng.net

This drawing and all prints of it are the property of Next Level Engineering and Construction Services, LLC (Next Level). Prints are to be returned to Next Level upon completion of use for which they were issued. Reproduction of these drawings without the written consent of Next Level is not permitted and Next Level retains all common law, statutory and other reserved rights, including the copyright thereto.

CONSULTANTS

STAMP

GEORGIA
REGISTERED
No. 035071
PROFESSIONAL
ENGINEER
FLOYD A. KEELS
03/08/2021

JACKSON COUNTY GEORGIA
Jackson County Detention Center
CCTV System Upgrade
Enter address here
555 Stan Evans Drive
Jefferson, Georgia 30549
RELEASED FOR BID

KEY PLAN

PRINTING AND REVISIONS

MARK	DATE	DESCRIPTION

NEXT LEVEL PROJECT NUMBER	NL202003LL
DRAWN BY	LTL
CHECKED BY	FAK
DATE RELEASED FOR CONSTRUCTION	03/08/2021

COPYRIGHT © 2020 Next Level Engineering and Construction Services, LLC

SHEET TITLE
CAMERA VIEWS

SHEET NUMBER
SE-601

RELEASED FOR CONSTRUCTION

3/7/2021 1:36:32 PM

1 INCH

CAMERA 026

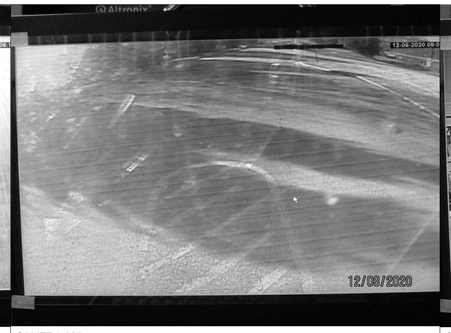

CAMERA 027

CAMERA 028

CAMERA 029

CAMERA 030

CAMERA 031

CAMERA 032

CAMERA 033

CAMERA 034

CAMERA 035

CAMERA 036

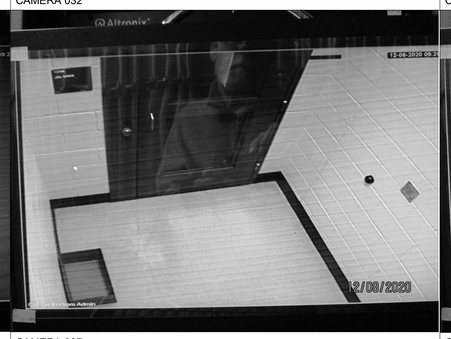

CAMERA 037

CAMERA 039

CAMERA 039

CAMERA 040

CAMERA 041

CAMERA 042

CAMERA 043

CAMERA 044

CAMERA 045

CAMERA 046

CAMERA 047

CAMERA 048

CAMERA 049

CAMERA 050

CAMERA VIEWS SHOWN IN MONOCHROME - ALL ACTUAL CAMERAS ARE COLOR. PTZ PRESET VIEWS WILL BE COORDINATED WITH OWNER. OWNER RESERVES RIGHT TO MODIFY VIEWS.

1 INCH

3/7/2021 1:36:35 PM

NEXT LEVEL
ENGINEERING AND CONSTRUCTION SERVICES
2891 LINE STREET
AUSTELL, GEORGIA 30106
470-330-0231
floyd@nextleveleng.net

This drawing and all prints of it are the property of Next Level Engineering and Construction Services, LLC (Next Level). Prints are to be returned to Next Level upon completion of use for which they were issued. Reproduction of these drawings without the written consent of Next Level is not permitted and Next Level retains all common law, statutory and other reserved rights, including the copyright thereto.

CONSULTANTS

STAMP

GEORGIA REGISTERED No. 035071 PROFESSIONAL ENGINEER FLOYD A. KEELS 03/08/2021

JACKSON COUNTY GEORGIA
Jackson County Detention Center
CCTV System Upgrade
Enter address here
555 Stan Evans Drive
Jefferson, Georgia 30549
RELEASED FOR BID

KEY PLAN

PRINTING AND REVISIONS

MARK	DATE	DESCRIPTION

NEXT LEVEL PROJECT NUMBER	NL202003LL
DRAWN BY	LTL
CHECKED BY	FAK
DATE RELEASED FOR CONSTRUCTION	03/08/2021

COPYRIGHT © 2020 Next Level Engineering and Construction Services, LLC

SHEET TITLE
CAMERA VIEWS

SHEET NUMBER
SE-602

RELEASED FOR CONSTRUCTION

CAMERA 051

CAMERA 052

CAMERA 053

CAMERA 054

CAMERA 055

CAMERA 056

CAMERA 057

CAMERA 058

CAMERA 059

CAMERA 060

CAMERA 061

CAMERA 062

CAMERA 063

CAMERA 064

CAMERA 065

CAMERA 066

CAMERA 067

CAMERA 068

CAMERA 069

CAMERA 070

CAMERA 071

CAMERA 072

CAMERA 073

CAMERA 074

CAMERA 075

CAMERA VIEWS SHOWN IN MONOCHROME - ALL ACTUAL CAMERAS ARE COLOR. PTZ PRESET VIEWS WILL BE COORDINATED WITH OWNER. OWNER RESERVES RIGHT TO MODIFY VIEWS.

1 INCH

3/7/2021 1:36:36 PM

NEXT LEVEL
ENGINEERING AND CONSTRUCTION SERVICES
2891 LINE STREET
AUSTELL, GEORGIA 30106
470-330-0231
floyd@nextleveleng.net

This drawing and all prints of it are the property of Next Level Engineering and Construction Services, LLC (Next Level). Prints are to be returned to Next Level upon completion of use for which they were issued. Reproduction of these drawings without the written consent of Next Level is not permitted and Next Level retains all common law, statutory and other reserved rights, including the copyright thereto.

CONSULTANTS

STAMP

GEORGIA
REGISTERED
No. 035071
PROFESSIONAL
ENGINEER
FLOYD A. KEELS
03/08/2021

JACKSON COUNTY GEORGIA

Jackson County Detention Center
CCTV System Upgrade
Enter address here
555 Stan Evans Drive
Jefferson, Georgia 30549

RELEASED FOR BID

KEY PLAN

PRINTING AND REVISIONS

MARK	DATE	DESCRIPTION

NEXT LEVEL PROJECT NUMBER	NL202003LL
DRAWN BY	LTL
CHECKED BY	FAK
DATE RELEASED FOR CONSTRUCTION	03/08/2021

COPYRIGHT © 2020 Next Level Engineering and Construction Services, LLC

SHEET TITLE
CAMERA VIEWS

SHEET NUMBER
SE-603

RELEASED FOR CONSTRUCTION

CAMERA 076

CAMERA 077

CAMERA 078

CAMERA 079

CAMERA 080

CAMERA 081

CAMERA 082

CAMERA 083

CAMERA 084

CAMERA 085

CAMERA 086

CAMERA 087

CAMERA 088

CAMERA 089

CAMERA 090

CAMERA 091

CAMERA 092

CAMERA 093

CAMERA 094

CAMERA 095

CAMERA 096

CAMERA 097

CAMERA 098

CAMERA 099

CAMERA 100

CAMERA VIEWS SHOWN IN MONOCHROME - ALL ACTUAL CAMERAS ARE COLOR. PTZ PRESET VIEWS WILL BE COORDINATED WITH OWNER. OWNER RESERVES RIGHT TO MODIFY VIEWS.

NEXT LEVEL
ENGINEERING AND CONSTRUCTION SERVICES
2891 LINE STREET
AUSTELL, GEORGIA 30106
470-330-0231
floyd@nextleveleng.net

This drawing and all prints of it are the property of Next Level Engineering and Construction Services, LLC (Next Level). Prints are to be returned to Next Level upon completion of use for which they were issued. Reproduction of these drawings without the written consent of Next Level is not permitted and Next Level retains all common law, statutory and other reserved rights, including the copyright thereto.

CONSULTANTS

STAMP

GEORGIA
REGISTERED
No. 035071
PROFESSIONAL
ENGINEER
FLOYD A. KEELS
03/08/2021

JACKSON COUNTY GEORGIA
Jackson County Detention Center
CCTV System Upgrade
Enter address here
555 Stan Evans Drive
Jefferson, Georgia 30549
RELEASED FOR BID

KEY PLAN

PRINTING AND REVISIONS

MARK	DATE	DESCRIPTION

NEXT LEVEL PROJECT NUMBER	NL202003LL
DRAWN BY	LTL
CHECKED BY	FAK
DATE RELEASED FOR CONSTRUCTION	03/08/2021

COPYRIGHT © 2020 Next Level Engineering and Construction Services, LLC

SHEET TITLE
CAMERA VIEWS

SHEET NUMBER
SE-604

RELEASED FOR CONSTRUCTION

3/7/2021 1:36:37 PM

1 INCH

CAMERA 101

CAMERA 102

CAMERA 103

CAMERA 104

CAMERA 105

CAMERA 106

CAMERA 107

CAMERA 108

CAMERA 109

CAMERA 110

CAMERA 111

CAMERA 112

CAMERA 113

CAMERA 114

CAMERA 115

CAMERA 116

CAMERA 117

CAMERA 118

CAMERA 119

CAMERA 120

CAMERA 121

CAMERA 122

CAMERA 123

CAMERA 124

CAMERA 125

CAMERA VIEWS SHOWN IN MONOCHROME - ALL ACTUAL CAMERAS ARE COLOR. PTZ PRESET VIEWS WILL BE COORDINATED WITH OWNER. OWNER RESERVES RIGHT TO MODIFY VIEWS.

1 INCH

3/7/2021 1:36:38 PM

NEXT LEVEL
ENGINEERING AND CONSTRUCTION SERVICES
2891 LINE STREET
AUSTELL, GEORGIA 30106
470-330-0231
floyd@nextlevelengineering.net

This drawing and all prints of it are the property of Next Level Engineering and Construction Services, LLC (Next Level). Prints are to be returned to Next Level upon completion of use for which they were issued. Reproduction of these drawings without the written consent of Next Level is not permitted and Next Level retains all common law, statutory and other reserved rights, including the copyright thereto.

CONSULTANTS

STAMP

GEORGIA
REGISTERED
No. 035071
PROFESSIONAL
ENGINEER
FLOYD A. KEELS
03/08/2021

JACKSON COUNTY GEORGIA
Jackson County Detention Center
CCTV System Upgrade
Enter address here
555 Stan Evans Drive
Jefferson, Georgia 30549
RELEASED FOR BID

KEY PLAN

PRINTING AND REVISIONS

MARK	DATE	DESCRIPTION

NEXT LEVEL PROJECT NUMBER	NL202003LL
DRAWN BY	LTL
CHECKED BY	FAK
DATE RELEASED FOR CONSTRUCTION	03/08/2021

COPYRIGHT © 2020 Next Level Engineering and Construction Services, LLC

SHEET TITLE
CAMERA VIEWS

SHEET NUMBER
SE-605

RELEASED FOR CONSTRUCTION

CAMERA 126

CAMERA 127

CAMERA 128

CAMERA 129

CAMERA 130

CAMERA 131

CAMERA 132

CAMERA 133

NO IMAGE AVAILABLE

CAMERA 134

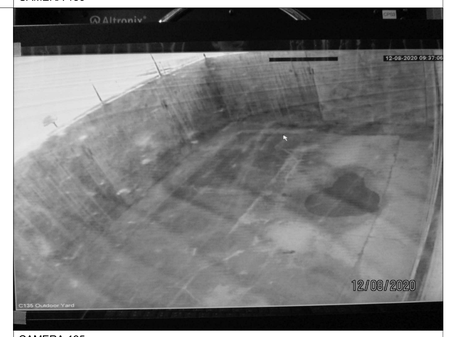

CAMERA 135

CAMERA 136

CAMERA 137

CAMERA 138

CAMERA 139

CAMERA 140

CAMERA 141

CAMERA 142

CAMERA 143

CAMERA 144

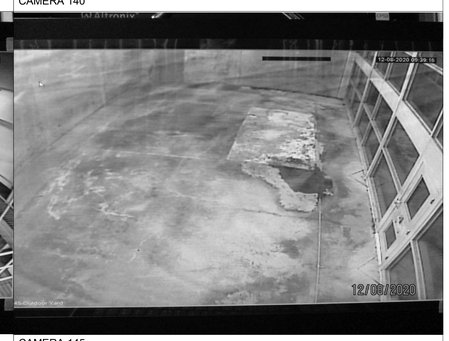

CAMERA 145

CAMERA 146

CAMERA 147

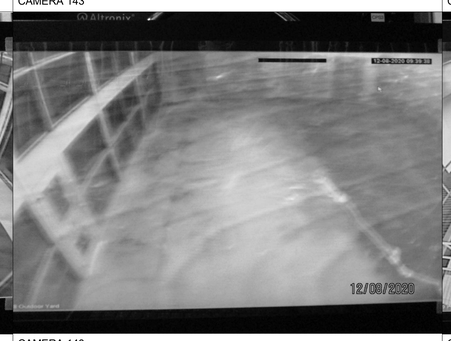

CAMERA 148

CAMERA 149

CAMERA 150

CAMERA VIEWS SHOWN IN MONOCHROME - ALL ACTUAL CAMERAS ARE COLOR. PTZ PRESET VIEWS WILL BE COORDINATED WITH OWNER. OWNER RESERVES RIGHT TO MODIFY VIEWS.

NEXT LEVEL
ENGINEERING AND CONSTRUCTION SERVICES
2891 LINE STREET
AUSTELL, GEORGIA 30106
470-330-0231
floyd@nextleveleng.net

This drawing and all prints of it are the property of Next Level Engineering and Construction Services, LLC (Next Level). Prints are to be returned to Next Level upon completion of use for which they were issued. Reproduction of these drawings without the written consent of Next Level is not permitted and Next Level retains all common law, statutory and other reserved rights, including the copyright thereto.

CONSULTANTS

STAMP

GEORGIA
REGISTERED
No. 035071
PROFESSIONAL
ENGINEER
FLOYD A. KEELS
03/08/2021

JACKSON COUNTY GEORGIA

Jackson County Detention Center
CCTV System Upgrade
Enter address here
555 Stan Evans Drive
Jefferson, Georgia 30549

RELEASED FOR BID

KEY PLAN

PRINTING AND REVISIONS

MARK	DATE	DESCRIPTION

NEXT LEVEL PROJECT NUMBER	NL202003LL
DRAWN BY	LTL
CHECKED BY	FAK
DATE RELEASED FOR CONSTRUCTION	03/08/2021

COPYRIGHT © 2020 Next Level Engineering and Construction Services, LLC

SHEET TITLE
CAMERA VIEWS

SHEET NUMBER
SE-606

RELEASED FOR CONSTRUCTION

3/7/2021 1:36:40 PM

1 INCH

CAMERA 151

CAMERA 152

CAMERA 153

CAMERA 154

CAMERA 155

CAMERA 156

CAMERA 157

CAMERA 158

CAMERA 159

CAMERA 160

CAMERA 161

CAMERA 162

CAMERA 163

CAMERA 164

CAMERA 165

CAMERA 166

IMAGE NOT AVAILABLE

CAMERA 167

CAMERA 168

CAMERA 169

CAMERA 170

CAMERA 171

CAMERA 172

CAMERA 173

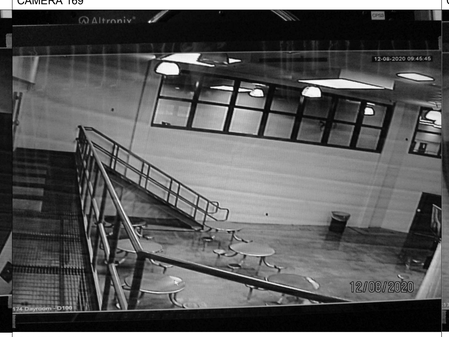

CAMERA 174

CAMERA 175

CAMERA VIEWS SHOWN IN MONOCHROME - ALL ACTUAL CAMERAS ARE COLOR. PTZ PRESET VIEWS WILL BE COORDINATED WITH OWNER. OWNER RESERVES RIGHT TO MODIFY VIEWS.

NEXT LEVEL
ENGINEERING AND CONSTRUCTION SERVICES
2891 LINE STREET
AUSTELL, GEORGIA 30106
470-330-0231
floyd@nextleveleng.net

This drawing and all prints of it are the property of Next Level Engineering and Construction Services, LLC (Next Level). Prints are to be returned to Next Level upon completion of use for which they were issued. Reproduction of these drawings without the written consent of Next Level is not permitted and Next Level retains all common law, statutory and other reserved rights, including the copyright thereto.

CONSULTANTS

STAMP

GEORGIA
REGISTERED
No. 035071
PROFESSIONAL
ENGINEER
FLOYD A. KEELS
03/08/2021

JACKSON COUNTY GEORGIA

Jackson County Detention Center
CCTV System Upgrade
Enter address here
555 Stan Evans Drive
Jefferson, Georgia 30549

RELEASED FOR BID

KEY PLAN

PRINTING AND REVISIONS

MARK	DATE	DESCRIPTION

NEXT LEVEL PROJECT NUMBER	NL202003LL
DRAWN BY	LTL
CHECKED BY	FAK
DATE RELEASED FOR CONSTRUCTION	03/08/2021

COPYRIGHT © 2020 Next Level Engineering and Construction Services, LLC

SHEET TITLE
CAMERA VIEWS

SHEET NUMBER
SE-607

RELEASED FOR CONSTRUCTION

3/7/2021 1:36:41 PM

1 INCH

CAMERA C176	CAMERA C11A			

CAMERA VIEWS SHOWN IN MONOCHROME - ALL ACTUAL CAMERAS ARE COLOR. PTZ PRESET VIEWS WILL BE COORDINATED WITH OWNER. OWNER RESERVES RIGHT TO MODIFY VIEWS.

NEXT LEVEL
ENGINEERING AND CONSTRUCTION SERVICES
2891 LINE STREET
AUSTELL, GEORGIA 30106
470-330-0231
floyd@nextleveleng.net

This drawing and all prints of it are the property of Next Level Engineering and Construction Services, LLC (Next Level). Prints are to be returned to Next Level upon completion of use for which they were issued. Reproduction of these drawings without the written consent of Next Level is not permitted and Next Level retains all common law, statutory and other reserved rights, including the copyright thereto.

CONSULTANTS

STAMP

GEORGIA
REGISTERED
No. 035071
PROFESSIONAL
ENGINEER
FLOYD A. KEELS
03/08/2021

JACKSON COUNTY GEORGIA
Jackson County Detention Center
CCTV System Upgrade
Enter address here
555 Stan Evans Drive
Jefferson, Georgia 30549
RELEASED FOR BID

KEY PLAN

PRINTING AND REVISIONS

MARK	DATE	DESCRIPTION

NEXT LEVEL PROJECT NUMBER	NL202003LL
DRAWN BY	LTL
CHECKED BY	FAK
DATE RELEASED FOR CONSTRUCTION	03/08/2021

COPYRIGHT © 2020 Next Level Engineering and Construction Services, LLC

SHEET TITLE
CAMERA VIEWS

SHEET NUMBER
SE-608

3/7/2021 1:36:41 PM

RELEASED FOR CONSTRUCTION

1 INCH

JACKSON COUNTY DETENTION CENTER - CCTV UPGRADES
CAMERA SCHEDULE PG 1

Cam #	Orig Cam #	Camera View Text	Interior/Exterior	Type	Lens	Lens Special	Mount	Mount Hgt	Retention of Video	Intended FOV - Comments	NOTES
C 001	EXT-01	ENTRANCE JAIL LOBBY	EXTERIOR	FIXED	VARI-FOCAL	WIDE ANGLE	WALL PENDANT	MATCH EXIST	30 DAYS	JAIL ENTRY AND PARKING	
C 002	EXT-02	JAIL FRONT N SIDE	EXTERIOR	PTZ	30X OPT ZOOM		EXT CORNER	MATCH EXIST	30 DAYS	PRESET ENTRY DRIVE, PARKING AND JAIL ENTRY	
C 003	EXT-03	JAIL LOBBY ENTRANCE	EXTERIOR	FIXED	VARI-FOCAL	WIDE ANGLE	WALL PENDANT	MATCH EXIST	30 DAYS	SHERIFF'S OFFICE ENTRANCE (WIDEN EXISTING FOV)	
C 004	EXT-04	EMPLOYEE PARKING NORTH	EXTERIOR	FIXED	VARI-FOCAL		WALL PENDANT	MATCH EXIST	30 DAYS	EMPLOYEE ENTRANCE AND NEAR PARKING	
C 005	EXT-05	EMPLOYEE PARKING SOUTH SIDE	EXTERIOR	PTZ	30X OPT ZOOM		INT CORNER	MATCH EXIST	30 DAYS	PRESET EMPLOYEE LOT	
C 006	EXT-06	SALLYPORT EXIT	EXTERIOR	FIXED	VARI-FOCAL	WIDE ANGLE	WALL PENDANT	MATCH EXIST	30 DAYS	VEHICLE AND PEDESTRIAN EXIT FROM VEHICLE SALLYPORT	
C 007	EXT-07	911 ENTRY	EXTERIOR	FIXED	VARI-FOCAL	WIDE ANGLE	WALL	MATCH EXIST	30 DAYS	ENTRY TO 911 AND PARTIAL SIDEWALK/PARKING	
C 008	EXT-08	SOUTH GATE	EXTERIOR	PTZ	30X OPT ZOOM		EXT CORNER	MATCH EXIST	30 DAYS	PRESET SOUTH GATE AND PARTIAL SOUTH PARKING	
C 009	EXT-09	911 ENTRANCE AND PARKIGN	EXTERIOR	FIXED	VARI-FOCAL	WIDE ANGLE	WALL	MATCH EXIST	30 DAYS	911 ENTRY DOOR AND PARKING	
C 010	EXT-10	NORTH GATE	EXTERIOR	PTZ	30X OPT ZOOM		EXT CORNER	MATCH EXIST	30 DAYS	PRESET NORTH GATE, FAR PARKING AND EVIDENCE FAC BEYOND	
C 011	EXT-11	SALLYPORT ENTRY	EXTERIOR	FIXED	VARI-FOCAL	WIDE ANGLE	WALL PENDANT	MATCH EXIST	30 DAYS	VEHICLE SALLYPORT ENTRY, COMM PEDESTAL AND APPROACH DRIVE	
C 012	EXT-12	LOADING DOCK	EXTERIOR	FIXED	VARI-FOCAL	WIDE ANGLE	WALL	MATCH EXIST	30 DAYS	LOADING DOCK APPROACH, WHSE DR, DOCK PARKING AND DUMPSTER	NOTE 5
C 013	EXT-13	KITCHEN DOCK	EXTERIOR	FIXED	VARI-FOCAL	WIDE ANGLE	WALL	MATCH EXIST	30 DAYS	KITCHEN ENTRY SWING DOOR AND CAN WASH AREA	NOTE 6
C 014	EXT-14	PATIO KITCHEN	EXTERIOR	FIXED	VARI-FOCAL	WIDE ANGLE	WALL	MATCH EXIST	30 DAYS	EXTERIOR STAFF DINING AND AREA BETWEEN AREA C AND AREA E	
C 015	EXT-15	KITCHEN ROLL-UP	EXTERIOR	PTZ	30X OPT ZOOM		EXT CORNER	MATCH EXIST	30 DAYS	PRESET KITCHEN ROLL-UP DOOR	
C 016	EXT-16	EAST CORNER HOUSING	EXTERIOR	FIXED	VARI-FOCAL		WALL PENDANT	MATCH EXIST	30 DAYS	AREA E EAST EXITS AND FENCED AREA	
C 017	EXT-17	EAST REAR HOUSING	EXTERIOR	PTZ	30X OPT ZOOM		EXT CORNER	MATCH EXIST	30 DAYS	PRESET NEAR FENCING AND YARD, FAR PARKING LOT	
C 018	EXT-18	EXTERIOR AREA E	EXTERIOR	PTZ	30X OPT ZOOM		EXT CORNER	MATCH EXIST	30 DAYS	PRESET CHASE DOOR EXIT	
C 019	EXT-19	EXTERIOR AREA D, AREA E	EXTERIOR	FIXED	VARI-FOCAL	WIDE ANGLE	WALL PENDANT	MATCH EXIST	30 DAYS	AREA E WEST CHASE EXIT, AREA D EAST CHASE EXIT, VESTIBULE EXIT	
C 020	EXT-20	REAR FENCE	EXTERIOR	PTZ	30X OPT ZOOM		EXT CORNER	MATCH EXIST	30 DAYS	PRESET E POD YARD EXIT	
C 021	EXT-21	WEST FENCE	EXTERIOR	PTZ	30X OPT ZOOM		EXT CORNER	MATCH EXIST	30 DAYS	PRESET NORTH ALONG AREA D WALL AND PARKING BEYOND	
C 022	EXT-22	WEST FENCE	EXTERIOR	FIXED	VARI-FOCAL	WIDE ANGLE	WALL PENDANT	MATCH EXIST	30 DAYS	AREA D WEST EXITS AND FENCED AREA	
C 023	EXT-23	JAIL FRONT WEST SIDE	EXTERIOR	PTZ	30X OPT ZOOM		EXT CORNER	MATCH EXIST	30 DAYS	PRESET SERVICE YARD BETWEEN HOUSING AND JAIL ADMIN	
C 024	EXT-24	JAIL LOBBY PARKING	EXTERIOR	PTZ	30X OPT ZOOM		EXT CORNER	MATCH EXIST	30 DAYS	PRESET JAIL PUBLIC PARKING	NOTE 1
C 025	EXT-25	SOUTH DRIVE EXIT	EXTERIOR	FIXED	VARI-FOCAL		POST	MATCH EXIST	30 DAYS	EXIT DRIVE VEH HEIGHT AT SOUTH DRIVE GATE	
C 026	EXT-26	SOUTH DRIVE ENTRY	EXTERIOR	FIXED	VARI-FOCAL		POST	MATCH EXIST	30 DAYS	ENTRANCE DRIVE VEH HEIGHT AT SOUTH DRIVE GATE	
C 027	EXT-27	SOUTH DRIVE	EXTERIOR	FIXED	VARI-FOCAL		POST	MATCH EXIST	30 DAYS	SOUTH DRIVE AND APPROACH	
C 028	EXT-28	NORTH DRIVE ENTRY	EXTERIOR	FIXED	VARI-FOCAL		POST	MATCH EXIST	30 DAYS	ENTRANCE DRIVE VEH HEIGHT AT NORTH DRIVE GATE	
C 029	EXT-29	NORTH DRIVE EXIT	EXTERIOR	FIXED	VARI-FOCAL		POST	MATCH EXIST	30 DAYS	EXIT DRIVE VEH HEIGHT AT NORTH DRIVE GATE	
C 030	INT-01	SHERIFF'S LOBBY	INTERIOR	FIXED	VARI-FOCAL	WIDE ANGLE	CEILING	MATCH EXIST	30 DAYS	SHERIFF'S LOBBY	
C 031	INT-132	CORRIDOR 1266	INTERIOR	FIXED	VARI-FOCAL		CEILING	MATCH EXIST	30 DAYS	CORRIDOR 1266 LOOKING SOUTH	NOTE 4
C 032	INT-03	EMPLOYEE ENTRANCE	INTERIOR	FIXED	VARI-FOCAL		CEILING	MATCH EXIST	30 DAYS	STAFF ENTRY CORRIDOR AND DOOR	
C 033	INT-04	TRAINING - RECORDS	INTERIOR	FIXED	VARI-FOCAL		CEILING	MATCH EXIST	30 DAYS	CORRIDOR 1225 LOOKING NORTH	
C 034	INT-05	JAIL ADMIN TO RECORDS	INTERIOR	FIXED	VARI-FOCAL		CEILING	MATCH EXIST	30 DAYS	CORRIDOR 1225 LOOKING SOUTH	
C 035	INT-06	PATROL - ARMORY	INTERIOR	FIXED	VARI-FOCAL		CEILING	MATCH EXIST	30 DAYS	CORRIDOR 1251 LOOKING NORTH	
C 036	INT-07	JAIL TO PATROL	INTERIOR	FIXED	VARI-FOCAL		CEILING	MATCH EXIST	30 DAYS	CORRIDOR 1251 LOOKING SOUTH	
C 037	INT-08	JAIL ENT FROM ADMIN	INTERIOR	FIXED	VARI-FOCAL	WIDE ANGLE	CEILING	MATCH EXIST	30 DAYS	SALLY VESTIBULE 1228	
C 038	INT-09	CORRIDOR EVIDENCE	INTERIOR	FIXED	VARI-FOCAL		CEILING	MATCH EXIST	30 DAYS	CORRIDOR 1256	
C 039	INT-10	SALLYPORT ENTRY	INTERIOR	FIXED	VARI-FOCAL	WIDE ANGLE	WALL	MATCH EXIST	30 DAYS	VEHICLE SALLYPORT NORTHEAST QUADRANT	
C 040	INT-11	SALLYPORT EXIT	INTERIOR	FIXED	VARI-FOCAL	WIDE ANGLE	WALL	MATCH EXIST	30 DAYS	VEHICLE SALLYPORT SOUTHEAST QUADRANT	
C 041	INT-12	SALLYPORT HOLDING	INTERIOR	FIXED	VARI-FOCAL	WIDE ANGLE	WALL	4' LOWER EXIST	30 DAYS	VEHICLE SALLYPORT NORTHWEST QUADRANT	NOTE 3
C 042	INT-13	SALLYPORT S1 ENT	INTERIOR	FIXED	VARI-FOCAL	WIDE ANGLE	WALL	4' LOWER EXIST	30 DAYS	VEHICLE SALLYPORT SOUTHWEST QUADRANT	NOTE 3
C 043	INT-14	ADMIN TO JAIL ADMIN	INTERIOR	FIXED	VARI-FOCAL		CEILING	MATCH EXIST	30 DAYS	CORRIDOR 1076 LOOKING SOUTH	
C 044	INT-15	INMATE-ATTORNEY	INTERIOR	FIXED	VARI-FOCAL		WALL	MATCH EXIST	30 DAYS	NON-CONTACT VISITATION INMATE SIDE	
C 045	INT-16	ENT TO JAIL LOBBY	INTERIOR	FIXED	VARI-FOCAL	WIDE ANGLE	CEILING	MATCH EXIST	30 DAYS	CORRIDOR 1066 LOOKING WEST, SOUTHWEST	
C 046	INT-17	ENT TO RELEASE	INTERIOR	FIXED	VARI-FOCAL	WIDE ANGLE	CEILING	MATCH EXIST	30 DAYS	SALLY VESTIBULE 1012	
C 047	INT-18	COURT HOUSING	INTERIOR	FIXED	VARI-FOCAL	WIDE ANGLE	WALL	MATCH EXIST	30 DAYS	SALLY VESTIBULE 1014	
C 048	INT-19	JAIL LOBBY	INTERIOR	FIXED	VARI-FOCAL	WIDE ANGLE	WALL	MATCH EXIST	30 DAYS	JAIL LOBBY LOOKING NORTHEAST	
C 049	INT-20	JAIL LOBBY 2	INTERIOR	FIXED	VARI-FOCAL		WALL	MATCH EXIST	30 DAYS	JAIL LOBBY LOOKING NORTHWEST	
C 050	INT-21	JAIL LOBBY 3	INTERIOR	FIXED	VARI-FOCAL	WIDE ANGLE	WALL	MATCH EXIST	30 DAYS	JAIL LOBBY LOOKING SOUTHEAST	
C 051	INT-22	VISITATION 1-16	INTERIOR	FIXED	VARI-FOCAL		CEILING	MATCH EXIST	30 DAYS	VISITATION WEST SIDE	
C 052	INT-23	VISITATION 17-32	INTERIOR	FIXED	VARI-FOCAL		CEILING	MATCH EXIST	30 DAYS	VISITATION EAST SIDE	
C 053	INT-24	LAUNDRY 1	INTERIOR	FIXED	VARI-FOCAL	WIDE ANGLE	WALL	MATCH EXIST	30 DAYS	LAUNDRY WEST SIDE	
C 054	INT-25	LAUNDRY 2	INTERIOR	FIXED	VARI-FOCAL		WALL	MATCH EXIST	30 DAYS	LAUNDRY LOOKING EAST	
C 055	INT-26	LAUNDRY 3	INTERIOR	FIXED	VARI-FOCAL		WALL	MATCH EXIST	30 DAYS	LAUNDRY LOOKING WEST	
C 056	INT-27	ISO-1	INTERIOR	FIXED	VARI-FOCAL	WIDE ANGLE	WALL	MATCH EXIST	30 DAYS	ISOLATION DAYROOM LOOKING SOUTHWEST	
C 057	INT-28	ISO-2	INTERIOR	FIXED	VARI-FOCAL	WIDE ANGLE	WALL	MATCH EXIST	30 DAYS	ISOLATION DAYROOM LOOKING NORTHEAST	
C 058	INT-29	CORRIDOR ISO 1+2	INTERIOR	FIXED	VARI-FOCAL		CEILING	MATCH EXIST	30 DAYS	NORTH LOOKING NORTHEAST OF CORRIDOR 1066	
C 059	INT-30	CORRIDOR JAIL ADMIN	INTERIOR	FIXED	VARI-FOCAL	WIDE ANGLE	CEILING	MATCH EXIST	30 DAYS	SOUTH LOOKING SOUTHWEST OF CORRIDOR 1066	
C 060	INT-31	CORRIDOR AT MEDICAL	INTERIOR	FIXED	VARI-FOCAL	WIDE ANGLE	CEILING	MATCH EXIST	30 DAYS	SOUTH LOOKING SOUTHEAST OF CORRIDOR 1066	NOTE 7
C 061	INT-32	CORRIDOR AT CLASSIFICATION	INTERIOR	FIXED	VARI-FOCAL	WIDE ANGLE	CEILING	MATCH EXIST	30 DAYS	EAST LOOKING SOUTHWEST CORRIDOR 1066	
C 062	INT-33	CORRIDOR AT CENTRAL	INTERIOR	FIXED	VARI-FOCAL	WIDE ANGLE	CEILING	MATCH EXIST	30 DAYS	EAST LOOKING NORTHWEST CORRIDOR 1066	
C 063	INT-34	GREEN MILE	INTERIOR	FIXED	VARI-FOCAL		CEILING	MATCH EXIST	30 DAYS	CORRIDOR 1038 LOOKING NORTH	
C 064	INT-35	CORRIDOR KIT AT LAUNDRY	INTERIOR	FIXED	VARI-FOCAL		CEILING	MATCH EXIST	30 DAYS	CORRIDOR 1038 LOOKING SOUTH	
C 065	INT-36	ISOLATION 1	INTERIOR	FIXED	VARI-FOCAL	WIDE ANGLE	WALL	MATCH EXIST	30 DAYS	ISOLATION DAYROOM LOOKING SOUTHEAST	
C 066	INT-37	ISOLATION 2	INTERIOR	FIXED	VARI-FOCAL	WIDE ANGLE	WALL	MATCH EXIST	30 DAYS	ISOLATION DAYROOM LOOKING NORTHWEST	
C 067	INT-38	KITCHEN - SINKS	INTERIOR	FIXED	VARI-FOCAL	WIDE ANGLE	CEILING	MATCH EXIST	30 DAYS	SOUTHWEST OF KITCHEN LOOKING NORTHEAST TO CENTER	

NOTES:
1. GENERAL NOTE: ALL PREVIOUSLY RECESSED MOUNTED WALL OR CEILING DOME CAMERAS WILL BE REPLACED WITH SURFACE MOUNT - PROVIDE OEM SURFACE MOUNT BOX AND HARDWARE TO MATCH CAMERA AND FIELD ELEC BOX
2. EXISTING CAMERA AT THIS LOCATION IS NOT FUNCTIONAL - IF CAMERA REPLACEMENT DOES NOT RESOLVE THE ISSUE, TROUBLESHOOT AND REPAIR BASED ON UNIT PRICE RATES OF ALTERNATE 1
3. MOVE CAMERA APPROXIMATELY 4' 0" VERTICALLY DOWN - ENOUGH TO SEE BENEATH THE SUSPENDED HEATER
4. ZOOM IN TO SEE FAR FIELD OF VIEW LEAVING AN OVERLAP IN THE CENTER OF THE CORRIDOR WITH C161
5. PAN LEFT OR ZOOM OUT TO INCLUDE THE ROLL-UP DOOR TO THE WAREHOUSE IN VIEW
6. ZOOM OUT WIDE ENOUGH TO VIEW THE PAIR DOORS FROM THE KITCHEN AS WELL AS THE SINGLE DOOR AS CURRENTLY SHOWN
7. PAN LEFT TO INCLUDE ENTRANCE TO BOOKING IN THE FIELD OF VIEW
8. PTZ PRESETS WILL BE COORDINATED WITH THE OWNER

3/7/2021 1:36:42 PM

JACKSON COUNTY DETENTION CENTER - CCTV UPGRADES
CAMERA SCHEDULE PG 2

Cam #	Orig Cam #	Camera View Text	Interior/Exterior	Type	Lens	Lens Special	Mount	Mount Hgt	Retention of Video	Intended FOV - Comments	NOTES
C 068	INT-39	KITCHEN ENTRANCE	INTERIOR	FIXED	VARI-FOCAL	WIDE ANGLE	CEILING	MATCH EXIST	30 DAYS	KITCHEN ENTRY AND NORTH WEST	
C 069	INT-40	KITCHEN PREP	INTERIOR	FIXED	VARI-FOCAL	WIDE ANGLE	CEILING	MATCH EXIST	30 DAYS	NORTHWEST OF KITCHEN LOOKING SOUTHEAST TO CENTER	
C 070	INT-41	KITCHEN - DRY PREP	INTERIOR	FIXED	VARI-FOCAL	WIDE ANGLE	CEILING	MATCH EXIST	30 DAYS	NORTHEAST OF KITCHEN LOOKING WEST	
C 071	INT-42	KITCHEN DOCK EXIT	INTERIOR	FIXED	VARI-FOCAL		CEILING	MATCH EXIST	30 DAYS	EAST OF KITCHEN LOOKING NORTH	
C 072	INT-43	KITCHEN STOVES	INTERIOR	FIXED	VARI-FOCAL	WIDE ANGLE	CEILING	MATCH EXIST	30 DAYS	SOUTHEAST OF KITCHEN LOOKING WEST	NOTE 6
C 073	INT-44	MAKE INTAKE 2	INTERIOR	FIXED	VARI-FOCAL	WIDE ANGLE	WALL	MATCH EXIST	30 DAYS	SALLY VESTIBULE 1096 LOOKING SOUTHEAST	
C 074	INT-45	MALE INTAKE	INTERIOR	FIXED	VARI-FOCAL	WIDE ANGLE	WALL	MATCH EXIST	30 DAYS	SALLY VESTIBULE 1096 LOOKING NORTHWEST	
C 075	INT-46	FEMALE INTAKE	INTERIOR	FIXED	VARI-FOCAL	WIDE ANGLE	WALL	MATCH EXIST	30 DAYS	SALLY VESTIBULE 1104 LOOKING SOUTHWEST	
C 076	INT-47	FEMALE INTAKE 2	INTERIOR	FIXED	VARI-FOCAL	WIDE ANGLE	WALL	MATCH EXIST	30 DAYS	SALLY VESTIBULE 1104 LOOKING NORTHEAST	
C 077	INT-48	SERGEANTS DESK	INTERIOR	FIXED	VARI-FOCAL	WIDE ANGLE	CEILING	MATCH EXIST	30 DAYS	BOOKING AREA SOUTH, INTOX AREA	NOTE 5
C 078	INT-49	MAIN BOOKING	INTERIOR	FIXED	VARI-FOCAL	WIDE ANGLE	CEILING	MATCH EXIST	30 DAYS	BOOKING DESK NORTH	
C 079	INT-50	COURT HOLDING	INTERIOR	FIXED	VARI-FOCAL		CEILING	MATCH EXIST	30 DAYS	CORRIDOR 1079 WEST	
C 080	INT-51	MALE HOLDING HALL	INTERIOR	FIXED	VARI-FOCAL		CEILING	MATCH EXIST	30 DAYS	CORRIDOR 1079 EAST	
C 081	INT-52	INMATE MH8	INTERIOR	FIXED	VARI-FOCAL	WIDE ANGLE	WALL	MATCH EXIST	30 DAYS	MULTI-HOLDING 1080	
C 082	INT-53	MEDICAL 6	INTERIOR	FIXED	VARI-FOCAL	VERY WIDE 180	WALL	MATCH EXIST	30 DAYS	MEDICAL CELL 1140 - SET UP SIMILAR TO C085	
C 083	INT-54	MEDICAL HALL	INTERIOR	FIXED	VARI-FOCAL		CEILING	MATCH EXIST	30 DAYS	MEDICAL CORRIDOR EAST	
C 084	INT-55	NURSES STATION	INTERIOR	FIXED	VARI-FOCAL		CEILING	MATCH EXIST	30 DAYS	MEDICAL CORRIDOR WEST AND NURSES STATION	
C 085	INT-56	MEDICAL 5	INTERIOR	FIXED	VARI-FOCAL	VERY WIDE 180	WALL	MATCH EXIST	30 DAYS	MEDICAL CELL 1141	
C 086	INT-57	MEDICAL 4	INTERIOR	FIXED	VARI-FOCAL	VERY WIDE 180	WALL	MATCH EXIST	30 DAYS	MECICAL CELL 1142 - SET UP SIMILAR TO C085	
C 087	INT-58	MEDICAL 3	INTERIOR	FIXED	VARI-FOCAL	VERY WIDE 180	WALL	MATCH EXIST	30 DAYS	MEDICAL CELL 1143 - SET UP SIMILAR TO C085	
C 088	INT-59	MEDICAL 2	INTERIOR	FIXED	VARI-FOCAL	VERY WIDE 180	WALL	MATCH EXIST	30 DAYS	PATIENT ROOM 1144 - SET UP WIDE ENOUGH TO SEE ENTIRE CELL	
C 089	INT-60	MEDICAL 1	INTERIOR	FIXED	VARI-FOCAL	VERY WIDE 180	WALL	MATCH EXIST	30 DAYS	PATIENT ROOM 1138 - SET UP WIDE ENOUGH TO SEE ENTIRE CELL	
C 090	INT-61	FEMALE HOLDING TO BOOKING	INTERIOR	FIXED	VARI-FOCAL		CEILING	MATCH EXIST	30 DAYS	CORRIDOR 1119 LOOKING EAST	
C 091	INT-62	EMPLOYEE ENTRANCE TO BOOKING	INTERIOR	FIXED	VARI-FOCAL		CEILING	MATCH EXIST	30 DAYS	CORRIDOR 1119 LOOKING WEST	
C 092	INT-63	FEMALE BOOKING	INTERIOR	FIXED	VARI-FOCAL	WIDE ANGLE	CEILING	MATCH EXIST	30 DAYS	BOOKING DESK SOUTH	
C 093	INT-64	ADMIN TO BOOKING	INTERIOR	FIXED	VARI-FOCAL	WIDE ANGLE	WALL	MATCH EXIST	30 DAYS	SALLY VESTIBULE 1125	NOTE 2
C 094	INT-65	DRUG VAULT	INTERIOR	FIXED	VARI-FOCAL	WIDE ANGLE	WALL	MATCH EXIST	30 DAYS	CORRIDOR OUTSIDE DRUG VAULT 1132 AND MED LAUNDRY 1129	NOTE 7
C 095	INT-66	WEST HSNG EXIT	INTERIOR	FIXED	VARI-FOCAL	WIDE ANGLE	WALL	MATCH EXIST	30 DAYS	SALLY VESTIBULE 1423	
C 096	INT-67	WEST HOUSING MP	INTERIOR	W	VARI-FOCAL		CEILING	MATCH EXIST	30 DAYS	WEST SIDE HSNG VEST CORRIDOR 1420 LOOKING EAST	
C 097	INT-68	HOUSING 1420	INTERIOR	FIXED	VARI-FOCAL		CEILING	MATCH EXIST	30 DAYS	WEST SIDE HSNG VEST CORRIDOR 1420 LOOKING WEST	
C 098	INT-69	HOUSING 1420	INTERIOR	FIXED	VARI-FOCAL		WALL	MATCH EXIST	30 DAYS	WEST SIDE HSNG VEST 1420 LOOKING AT ENTRY TO PODS A, B, C, D	
C 099	INT-70	W MP ROOM	INTERIOR	FIXED	VARI-FOCAL	WIDE ANGLE	CEILING	APPROX 2' EAST	30 DAYS	MULTI-PURPOSE ROOM	NOTE 9
C 100	INT-71	HOUSING 1420	INTERIOR	FIXED	VARI-FOCAL		WALL	MATCH EXIST	30 DAYS	EAST SIDE HSNG VEST 1420 LOOKING AT ENTRY TO PODS A, B, C, D	NOTE 3
C 101	INT-72	HOUSING 1420	INTERIOR	FIXED	VARI-FOCAL		CEILING	MATCH EXIST	30 DAYS	EAST SIDE HSNG VEST CORRIDOR 1420 LOOKING EAST - FAR FOV	
~~C 102~~	~~INT-73~~	~~HOUSING 1420~~	~~INTERIOR~~	~~FIXED~~	~~VARI-FOCAL~~		~~CEILING~~	~~MATCH EXIST~~	~~30 DAYS~~	DELETE THIS CAMERA - SEE FLOOR PLAN	
C 103	INT-74	CORRIDOR 1414	INTERIOR	FIXED	VARI-FOCAL		CEILING	MATCH EXIST	30 DAYS	CORRIDOR 1414 LOOKING EAST TO HSNG VEST 1411 - FAR FOV	
C 104	INT-75	STAIR 1419	INTERIOR	FIXED	VARI-FOCAL		WALL	MATCH EXIST	30 DAYS	UPPER AND LOWER STAIR 1419 DOORS	
C 105	INT-76	CORRIDOR 1447	INTERIOR	FIXED	VARI-FOCAL		WALL	MATCH EXIST	30 DAYS	CORRIDOR 1447 LOOKING SOUTH	NOTE 8
C 106	INT-77	CORRIDOR 1447	INTERIOR	FIXED	VARI-FOCAL		WALL	MATCH EXIST	30 DAYS	CORRIDOR 1447 LOOKING NORTH	NOTE 8
C 107	INT-78	CORRIDOR 1414	INTERIOR	FIXED	VARI-FOCAL		CEILING	MATCH EXIST	30 DAYS	CORRIDOR 1414 LOOKING WEST TO 1420 - FAR FOV	
C 108	INT-79	CORRIDOR 1400	INTERIOR	FIXED	VARI-FOCAL		WALL	MATCH EXIST	30 DAYS	NORTH CORRIDOR 1400 LOOKING SOUTH	
C 109	INT-80	CORRIDOR 1400	INTERIOR	FIXED	VARI-FOCAL		WALL	MATCH EXIST	30 DAYS	NORTH CORRIDOR 1400 LOOKING NORTH	
C 110	INT-81	CORRIDOR 1400	INTERIOR	FIXED	VARI-FOCAL		WALL	MATCH EXIST	30 DAYS	SOUTH CORRIDOR 1400 LOOKING SOUTH	
C 111	INT-82	CORRIDOR 1400	INTERIOR	FIXED	VARI-FOCAL		WALL	MATCH EXIST	30 DAYS	SOUTH CORRIDOR 1400 LOOKING NORTH	
~~C 112~~	~~INT-83~~	~~HOUSING 1411~~	~~INTERIOR~~	~~FIXED~~	~~VARI-FOCAL~~	-	~~CEILING~~	~~MATCH EXIST~~	~~30 DAYS~~	DELETE THIS CAMERA - SEE FLOOR PLAN	
C 113	INT-84	HOUSING 1411	INTERIOR	FIXED	VARI-FOCAL		CEILING	MATCH EXIST	30 DAYS	WEST SIDE HSNG VEST 1411 LOOKING WEST - FAR FOV	
C 114	INT-85	HOUSING 1411	INTERIOR	FIXED	VARI-FOCAL		WALL	MATCH EXIST	30 DAYS	WEST SIDE HSNG VEST 1411 LOOKING AT ENTRY TO PODS J, K, L, M	
C 115	INT-86	E MPR ROOM	INTERIOR	FIXED	VARI-FOCAL	WIDE ANGLE	CEILING	APPROX 2' WEST	30 DAYS	MULTI-PURPOSE ROOM	NOTE 9
C 116	INT-87	HOUSING 1411	INTERIOR	FIXED	VARI-FOCAL		WALL	MATCH EXIST	30 DAYS	EAST SIDE HSNG VEST 1411 LOOKING AT ENTRY TO PODS J, K, L, M	
C 117	INT-88	HOUSING 1411	INTERIOR	FIXED	VARI-FOCAL		CEILING	MATCH EXIST	30 DAYS	EAST SIDE HSNG VEST 1411 LOOKING EAST	
C 118	INT-89	HOUSING 1411	INTERIOR	FIXED	VARI-FOCAL		CEILING	MATCH EXIST	30 DAYS	EAST SIDE HSNG VEST 1411 LOOKING WEST	
C 119	INT-90	SALLY VESTIBULE 1409	INTERIOR	FIXED	VARI-FOCAL		WALL	MATCH EXIST	30 DAYS	SALLY VESTIBULE 1409	
C 120	INT-91	E100 MEZZANINE	INTERIOR	FIXED	VARI-FOCAL		CEILING	MATCH EXIST	30 DAYS	E POD DAYROOM LOOKING SOUTH	
C 121	INT-92	OUTDOOR YARD	EXTERIOR	FIXED	VARI-FOCAL	WIDE ANGLE	WALL	MATCH EXIST	30 DAYS	E POD REC YARD LOOKING EAST	
C 122	INT-93	OUTDOOR YARD	EXTERIOR	FIXED	VARI-FOCAL	WIDE ANGLE	WALL	MATCH EXIST	30 DAYS	E POD REC YARD LOOKING WEST	
C 123	INT-94	E100 MEZZANINE	INTERIOR	FIXED	VARI-FOCAL		CEILING	MATCH EXIST	30 DAYS	E POD DAYROOM LOOKING NORTH	
C 124	INT-95	CONTROL TOWER 2408	INTERIOR	FIXED	VARI-FOCAL		CEILING	MATCH EXIST	30 DAYS	WEST CNTL TOWER CORR 2408 LOOKING EAST	
C 125	INT-96	CONTROL TOWER 2408	INTERIOR	FIXED	VARI-FOCAL		CEILING	MATCH EXIST	30 DAYS	WEST CNTL TOWER CORR 2408 LOOKING WEST	
C 126	INT-97	CONTROL TOWER 2408	INTERIOR	FIXED	VARI-FOCAL		CEILING	MATCH EXIST	30 DAYS	CENTER CNTL TOWER CORR 2408 LOOKING AT CNTL STATION	
C 127	INT-97	D100 MEZZANINE	INTERIOR	FIXED	VARI-FOCAL		WALL	MATCH EXIST	30 DAYS	DAYROOM D100 LOOKING WEST	
C 128	INT-99	C100 MEZZANINE	INTERIOR	FIXED	VARI-FOCAL		WALL	MATCH EXIST	30 DAYS	DAYROOM C100 LOOKNG SOUTHWEST	
C 129	INT-100	B100 MEZZANINE	INTERIOR	FIXED	VARI-FOCAL		WALL	MATCH EXIST	30 DAYS	DAYROOM B100 LOOKING SOUTHEAST	
C 130	EXT-101	OUTDOOR YARD	EXTERIOR	FIXED	VARI-FOCAL		WALL	MATCH EXIST	30 DAYS	OUTDOOR YARD A100 LOOKING SOUTHEAST	
C 131	INT-102	2408 CONTROL TOWER	INTERIOR	FIXED	VARI-FOCAL		CEILING	MATCH EXIST	30 DAYS	EAST CNTL TOWER CORR 2408 LOOKING EAST - FAR FOV	
~~C 132~~	~~INT-103~~	~~2408 CONTROL TOWER~~	~~INTERIOR~~	~~FIXED~~	~~VARI-FOCAL~~		~~CEILING~~	~~MATCH EXIST~~	~~30 DAYS~~	DELETE THIS CAMERA - SEE FLOOR PLAN	
C 133	INT-104	F100 MEZZANINE	INTERIOR	FIXED	VARI-FOCAL		CEILING	MATCH EXIST	30 DAYS	DAYROOM F100 LOOKING NORTH	
C 134	INT-105	F100 MEZZANINE	INTERIOR	FIXED	VARI-FOCAL		CEILING	MATCH EXIST	30 DAYS	DAYROOM F100 LOOKING SOUTH	NOTE 10

NOTES:
1. GENERAL NOTE: ALL PREVIOUSLY RECESSED MOUNTED WALL OR CEILING DOME CAMERAS WILL BE REPLACED WITH SURFACE MOUNT - PROVIDE OEM SURFACE MOUNT BOX AND HARDWARE TO MATCH CAMERA AND FIELD ELEC BOX
2. REORIENT THIS CAMERA VIEW TO HORIZONTAL TO THE EXTENT POSSIBLE
3. MOVE CAMERA MOUNT EAST APPROX 2' 0" TO SEE AROUND BOXED CHASE ON WALL ADJACENT TO CAMERA. SEE LEGEND SHEET GENERAL NOTES ABOUT SURFACE APPLIED CONDUIT IN INMATE ACCESSIBLE AREAS.
4. NOT USED
5. UPON INSTALLATION OF NEW CAMERA C178 INTOX, REORIENT THIS CAMERA TO VIEW DIRECTLY OVER BOOKING 1146 DUE WEST
6. MOVE CAMERA MOUNT DOWN APPROX 40" TO SEE UNDER KITCHEN VENT HOOD. SEE LEGEND SHEET GENERAL NOTES ABOUT SURFACE APPLIED CONDUIT IN INMATE ACCESSIBLE AREAS.
7. CHANGE THIS VIEW TO MUCH WIDER TO SEE > 90 DEGREES
8. EXTEND CIRCUITS TO MOVE C105 AND C106 TO ENDS OF CORRIDOR OVER DOOR AND ZOOM TO SEE FAR END FIELD OF VIEW WITH OVERLAP IN CENTER (CONDUIT AND BOXES BY OWNER)
9. MOVE CAMERA MOUNT EAST (C099) OR WEST (C115) APPROX 2' 0" AND ZOOM OUT TO SEE ENTIRE SPACE AROUND BOXED CHASE ON WALL ADJACENT TO CAMERA. SEE LEGEND SHEET GENERAL NOTES ABOUT SURFACE APPLIED CONDUIT IN INMATE ACCESSIBLE AREAS.
10. EXISTING CAMERA AT THIS LOCATION IS NOT FUNCTIONAL - IF CAMERA REPLACEMENT DOES NOT RESOLVE THE ISSUE, TROUBLESHOOT AND REPAIR BASED ON UNIT PRICE RATES OF ALTERNATE 1

3/7/2021 1:38:42 PM

JACKSON COUNTY DETENTION CENTER - CCTV UPGRADES
CAMERA SCHEDULE PG 3

Cam #	Orig Cam #	Camera View Text	Interior/Exterior	Type	Lens	Lens Special	Mount	Mount Hgt	Retention of Video	Intended FOV - Comments	NOTES
C 135	INT-106	OUTDOOR YARD	EXTERIOR	FIXED	VARI-FOCAL	WIDE ANGLE	WALL	MATCH EXIST	30 DAYS	POD E OUTDOOR REC YARD LOOKING SOUTHEAST	
C 136	INT-107	OUTDOOR YARD	EXTERIOR	FIXED	VARI-FOCAL	WIDE ANGLE	WALL	MATCH EXIST	30 DAYS	POD E OUTDOOR REC YARD LOOKING NORTHWEST	
C 137	INT-108	2402 CORRIDOR	INTERIOR	FIXED	VARI-FOCAL		CEILING	MATCH EXIST	30 DAYS	WEST CORRIDOR 2402 LOOKING EAST - FAR FOV	
C 138	INT-109	STAIR 1419	INTERIOR	FIXED	VARI-FOCAL		WALL	MATCH EXIST	30 DAYS	STAIRS 1419 LOOKING SOUTH	
C 139	EXT-110	OUTDOOR YARD	EXTERIOR	FIXED	VARI-FOCAL		WALL	MATCH EXIST	30 DAYS	POD A100 OUTDOOR REC YARD LOOKING NORTHWEST	
C 140	INT-111	2408 CORRIDOR	INTERIOR	FIXED	VARI-FOCAL		CEILING	MATCH EXIST	30 DAYS	EAST CORRIDOR 2402 LOOKING WEST - FAR FOV	
~~C 141~~	~~INT-112~~	~~2405 CONTROL TOWER~~	~~INTERIOR~~	~~FIXED~~	~~VARI-FOCAL~~	-	~~CEILING~~	~~MATCH EXIST~~	~~30 DAYS~~	DELETE THIS CAMERA - SEE FLOORPLAN	
C 142	INT-113	2405 CONTROL TOWER	INTERIOR	FIXED	VARI-FOCAL		CEILING	MATCH EXIST	30 DAYS	WEST CNTL TOWER CORR 2405 LOOKING WEST - FAR FOV	
C 143	INT-114	G100 MEZZANINE	INTERIOR	FIXED	VARI-FOCAL		CEILING	MATCH EXIST	30 DAYS	POD G100 DAYROOM LOOKING NORTH	
C 144	INT-115	G100 MEZZANINE	INTERIOR	FIXED	VARI-FOCAL		CEILING	MATCH EXIST	30 DAYS	POD G100 DAYROOM LOOKING SOUTH	
C 145	EXT-116	OUTDOOR YARD	EXTERIOR	FIXED	VARI-FOCAL	WIDE ANGLE	WALL	MATCH EXIST	30 DAYS	POD G OUTDOOR REC YARD LOOKING NORTHEAST	NOTE 2
C 146	EXT-117	OUTDOOR YARD	EXTERIOR	FIXED	VARI-FOCAL	WIDE ANGLE	WALL	MATCH EXIST	30 DAYS	POD G OUTDOOR REC YARD LOOKING SOUTHWEST	
C 147	EXT-118	OUTDOOR YARD	EXTERIOR	FIXED	VARI-FOCAL	WIDE ANGLE	WALL	MATCH EXIST	30 DAYS	POD H OUTDOOR REC YARD LOOKING SOUTHEAST	
C 148	EXT-119	OUTDOOR YARD	EXTERIOR	FIXED	VARI-FOCAL	WIDE ANGLE	WALL	MATCH EXIST	30 DAYS	POD H OUTDOOR REC YARD LOOKING NORTHWEST	
C 149	INT-120	H100 MEZZANINE	INTERIOR	FIXED	VARI-FOCAL		CEILING	MATCH EXIST	30 DAYS	POD H100 DAYROOM LOOKING SOUTH	
C 150	INT-121	H100 MEZZANINE	INTERIOR	FIXED	VARI-FOCAL		CEILING	MATCH EXIST	30 DAYS	POD H100 DAYROOM LOOKING NORTH	
C 151	INT-122	2405 CONTROL TOWER	INTERIOR	FIXED	VARI-FOCAL		CEILING	MATCH EXIST	30 DAYS	EAST CNTL TOWER CORR 2405 LOOKING WEST	
C 152	INT-123	2405 CONTROL TOWER	INTERIOR	FIXED	VARI-FOCAL		CEILING	MATCH EXIST	30 DAYS	EAST CNTL TOWER CORR 2405 LOOKING EAST	
C 153	INT-124	2405 CONTROL TOWER	INTERIOR	FIXED	VARI-FOCAL	WIDE ANGLE	CEILING	MATCH EXIST	30 DAYS	CENTER CONTROL TOWER 2405 LOOKING AT CNTL STATION	
C 154	INT-125	J100 MEZZANINE	INTERIOR	FIXED	VARI-FOCAL		WALL	MATCH EXIST	30 DAYS	J100 DAYROOM LOOKING SOUTHEAST	
C 155	INT-126	K100 MEZZANINE	INTERIOR	FIXED	VARI-FOCAL		WALL	MATCH EXIST	30 DAYS	DAYROOM K100 LOOKING SOUTHEAST	
C 156	INT-127	L100 MEZZANINE	INTERIOR	FIXED	VARI-FOCAL		WALL	MATCH EXIST	30 DAYS	DAYROOM L100 LOODING SOUTHWEST	
C 157	EXT-128	M100 OUTDOOR YARD	EXTERIOR	FIXED	VARI-FOCAL		WALL	MATCH EXIST	30 DAYS	POD M OUTDOOR REC YARD LOOKING WEST	
C 158	EXT-129	M100 OUTDOOR YARD	EXTERIOR	FIXED	VARI-FOCAL		WALL	MATCH EXIST	30 DAYS	POD M OUTDOOR REC YARD LOOKING NORTHEAST	
C 159	INT-130	DELIVERY GATE	EXTERIOR	FIXED	VARI-FOCAL		POST	MATCH EXIST	30 DAYS	DELIVERY DRIVE AND BEYOND	
C 160	INT-131	DAYROOM L100	INTERIOR	FIXED	VARI-FOCAL		WALL	MATCH EXIST	30 DAYS	DAYROOM LOOKING EAST	
C 161	INT-132	CORRIDOR 1266	INTERIOR	FIXED	VARI-FOCAL		CEILING	MATCH EXIST	30 DAYS	CORRIDOR 1266 LOOKING NORTH TOWARD TRAINING	NOTE 6
C 162	INT-133	EVIDENCE 1252	INTERIOR	FIXED	VARI-FOCAL	WIDE ANGLE	WALL	MATCH EXIST	30 DAYS	EVIDENCE ROOM LOOKING SOUTHEAST	
C 163	INT-134	EVIDENCE 1253	INTERIOR	FIXED	VARI-FOCAL	WIDE ANGLE	WALL	MATCH EXIST	30 DAYS	EVIDENCE GARAGE LOOKING EAST - SOUTHEAST	NOTE 5
C 164	INT-135	HEARING 1011-1	INTERIOR	FIXED	VARI-FOCAL	WIDE ANGLE	WALL	MATCH EXIST	30 DAYS	SOUTHWEST HEARING ROOM LOOKING NORTHEAST	
C 165	INT-136	HEARING 1011-2	INTERIOR	FIXED	VARI-FOCAL	WIDE ANGLE	WALL	MATCH EXIST	30 DAYS	SOUTHEAST HEARING ROOM LOOKING NORTHWEST	
C 166	INT-137	JAIL ADMIN HALL	INTERIOR	FIXED	VARI-FOCAL		CEILING	MATCH EXIST	30 DAYS	SOUTH CORRIDOR 1076 LOOKING NORTH	NOTE 3
C 167	INT-138	DENTAL 1136	INTERIOR	FIXED	VARI-FOCAL		WALL	MATCH EXIST	30 DAYS	DENTAL EXAM ROOM 1136	NOTE 9
C 168	INT-139	WAREHOUSE 1057	INTERIOR	FIXED	VARI-FOCAL	WIDE ANGLE	WALL	MATCH EXIST	30 DAYS	NORTHWEST WAREHOUSE LOOKING SOUTHEAST	NOTE 8
C 169	INT-140	KITCHEN 1042-1	INTERIOR	FIXED	VARI-FOCAL	WIDE ANGLE	CEILING	MATCH EXIST	30 DAYS	CENTER KITCHEN LOOKING SOUTHWEST CENTER	
C 170	INT-141	KITCHEN 1042-2	INTERIOR	FIXED	VARI-FOCAL	WIDE ANGLE	CEILING	MATCH EXIST	30 DAYS	SOUTH CENTER KITCHEN LOOKING NORTH CENTER	
C 171	INT-142	VEG PREP 1049	INTERIOR	FIXED	VARI-FOCAL	WIDE ANGLE	CEILING	MATCH EXIST	30 DAYS	VEGETABLE PREP AREA 1049	
C 172	INT-143	DAYROOM B100	INTERIOR	FIXED	VARI-FOCAL	WIDE ANGLE	WALL	MATCH EXIST	30 DAYS	SOUTHEAST B DAYROOM LOOKING WEST	
C 173	INT-144	DAYROOM C100	INTERIOR	FIXED	VARI-FOCAL	WIDE ANGLE	WALL	MATCH EXIST	30 DAYS	SOUTHWEST C DAYROOM LOOKING EAST	
C 174	INT-145	DAYROOM D100	INTERIOR	FIXED	VARI-FOCAL	WIDE ANGLE	WALL	MATCH EXIST	30 DAYS	SOUTH D DAYROOM LOOKING NORTH	
C 175	INT-146	DAYROOM J100	INTERIOR	FIXED	VARI-FOCAL	WIDE ANGLE	WALL	MATCH EXIST	30 DAYS	SOUTH J DAYROOM LOOKING NORTH	
C 176	INT-147	DAYROOM K100	INTERIOR	FIXED	VARI-FOCAL	WIDE ANGLE	WALL	MATCH EXIST	30 DAYS	SOUTHEAST K DAYROOM LOOKING WEST	
C 177		EVIDENCE STOR FAC - IMPOUND (NEW)	EXTERIOR	PTZ	13X ZOOM		POST	30' AFG	30 DAYS	PRESET EVIDENCE STORAGE FACILITY ADJ TO DET CENTER	NOTE 7
C 178		INTOX (NEW)	INTERIOR	FIXED	VARI-FOCAL		CEILING		30 DAYS	INTOX AREA 1118	NOTE 4
C 179		KITCHEN 1042 - 3 (NEW)	INTERIOR	FIXED	VARI-FOCAL	WIDE ANGLE	CEILING		30 DAYS	NEAR VIEW CENTER OF KITCHEN	
C 180		KITCHEN 1042 - 4 (NEW)	INTERIOR	FIXED	VARI-FOCAL		CEILING		30 DAYS	INMATE DINING AREA AND AREA TO RIGHT AND LEFT	
C 011A	EXT-31/C160	SALLYPORT ENTRY DRIVER SIDE	EXTERIOR	FIXED	VARI-FOCAL		POST	MATCH EXIST	30 DAYS	VEHICLE DRIVER FROM DRIVERS SIDE	
C											
C											
C											
C											
C											
C											
C											
C											
C											
C											
C											
C											
C											
C											
C											
C											
C											

NOTES:
1. GENERAL NOTE: ALL PREVIOUSLY RECESSED MOUNTED WALL OR CEILING DOME CAMERAS WILL BE REPLACED WITH SURFACE MOUNT - PROVIDE OEM SURFACE MOUNT BOX AND HARDWARE TO MATCH CAMERA AND FIELD ELEC BOX
2. ADJUST VIEW PANNING UP TO SEE OUTDOOR REC YARD EMERGENCY EGRESS DOOR
3. MOVE CAMERA HORIZONTALLY LEFT (SOUTH) BY APPROX 1' 0" TO REMOVE INSULATED PIPE FROM OBSTRUCTING VIEW TO THE WAREHOUSE DOCK DOOR. OBSERVE LEGEND GENERAL NOTES REGARDING EXPOSED CONDUIT IN INMATE ACCESSIBLE AREAS.
4. UPON INSTALLATION OF THIS CAMERA, REORIENT CAMERA C077 TO WIDE ANGLE LOOKING DIRECTLY OVER BOOKING 1146 DUE WEST
5. RELOCATE CAM 163 TO ABOVE ENTRY DOOR SO EAST EXIT DOOR IS IN THE FIELD OF VIEW - MAKE WIDE ENOUGH TO SEE ISLE ENTRY OF ALL ROWS OF SHELVES (SEE PLANS)
6. ZOOM IN ON FAR FIELD OF VIEW LEAVING AN OVERLAP AT CENTER OF CORRIDOR WITH C031
7. MOUNT ON NEW 3" GALV STEEL POST MOUNTED TO EXTERIOR OF PARAPET WALL WHERE SHOWN ON DRAWINGS (SEE DETAILS) - MAKE PRESET VIEW TO INCLUDE SURPLUS EVIDENCE STORAGE BLDG (BLUE) AND IMPOUND LOT IMMEDIATELY EAST OF CAMERA LOCATION
8. MOVE CAMERA APPROX 1' SOUTH TO AVOID PIPE OBSTRUCTION TO VIEW OF WAREHOUSE ROLL-UP DOOR - OBSERVE LEGEND GENERAL NOTES REGARDING EXPOSED CONDUIT IN INMATE ACCESSIBLE AREAS.
9. EXISTING CAMERA AT THIS LOCATION IS NOT FUNCTIONAL - IF CAMERA REPLACEMENT DOES NOT RESOLVE THE ISSUE, TROUBLESHOOT AND REPAIR BASED ON UNIT PRICE RATES OF ALTERNATE 1
10. PTZ PRESETS WILL BE COORDINATED WITH OWNER

3/7/2021 1:38:42 PM

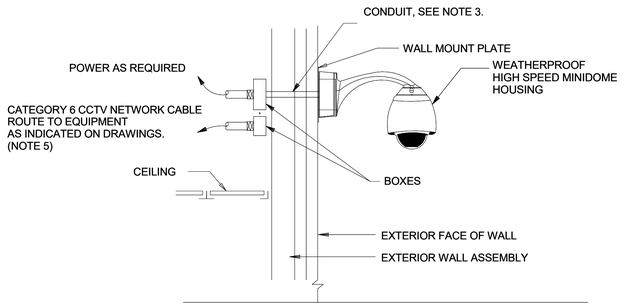

1 SE-704 WALL MOUNTED FIXED/PTZ CAMERA SIMILAR

NTS

NOTES:

1. COORDINATE MOUNTING FASTENER TO WALL MATERIAL.
2. ALL ENCLOSURES TO BE HINGED, LOCKABLE, NEMA 3R TYPE AND CONDUIT ROUTING TO BE CONCEALED.
3. U.V. RESISTANT, LIQUIDTIGHT FLEXIBLE CONDUIT SHALL HAVE THE FOLLOWING CONDUCTORS:
   A. CATEGORY 6 CCTV NETWORK CABLE
   B. LENS CONTROL
4. DETAIL IS TYPICAL FOR CAMERA ASSEMBLY WITH FIXED POSITION MOUNTING WITH LENS.
5. PROVIDE TRANSIENT VOLTAGE SURGE SUPPRESSION (TVSS) AS REQUIRED FOR VIDEO SIGNALING AND POWER.

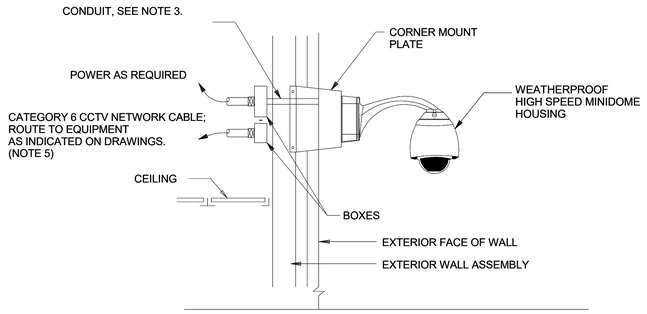

2 SE-704 CORNER MOUNTED FIXED/PTZ CAMERA SIMILAR

NTS

NOTES:

1. COORDINATE MOUNTING FASTENER TO WALL MATERIAL.
2. ALL ENCLOSURES TO BE HINGED, LOCKABLE, NEMA 3R TYPE AND CONDUIT ROUTING TO BE CONCEALED.
3. U.V. RESISTANT, LIQUIDTIGHT FLEXIBLE CONDUIT SHALL HAVE THE FOLLOWING CONDUCTORS:
   A. CATEGORY 6 CCTV NETWORK CABLE
   B. LENS CONTROL
   C. CAMERA POWER 24VAC ONLY. PROVIDE SEPARATE CONDUIT FOR CAMERAS REQUIRING 120VAC POWER.
4. DETAIL IS TYPICAL FOR CAMERA ASSEMBLY WITH FIXED POSITION MOUNTING WITH LENS.
5. PROVIDE TRANSIENT VOLTAGE SURGE SUPPRESSION (TVSS) AS REQUIRED FOR VIDEO SIGNALING AND POWER.

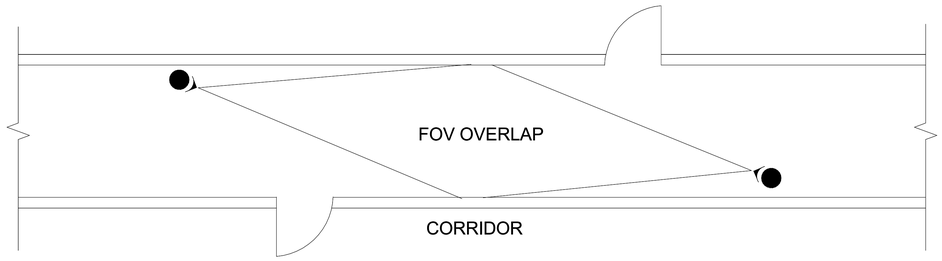

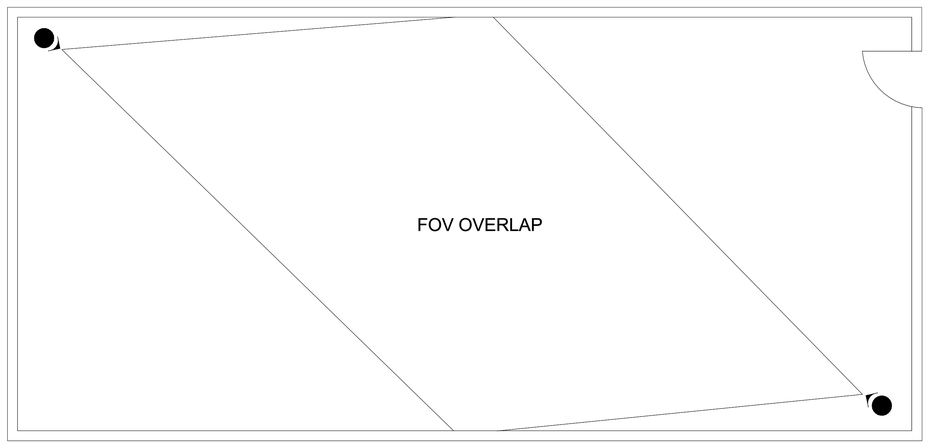

3 SE-704 TYPICAL CAMERA FIELD OF VIEW

NTS

NOTES:

1. APPLIES TO WALL OR CEILING MOUNTED CAMERAS IN RECTILINEAR AND POLYGONAL SPACES.
2. THIS IS A GUIDELINE FOR INITIAL CAMERA SET-UP. CAMERA POSITIONING MUST BE REVIEWED BY THE ARCHITECT AND OWNER. ADDITIONAL POSITIONING WILL BE REQUIRED.
3. RADIATING LINES INDICATE THE DESIRED FIELD OF VIEW (FOV) - EACH CAMERA VIEWS ITS FAR FIELD OF VIEW, NOT THE NEAR FIELD OF VIEW

NEXT LEVEL
ENGINEERING AND CONSTRUCTION SERVICES
2891 LINE STREET
AUSTELL, GEORGIA 30106
470-330-0231
floyd@nextleveleng.net

This drawing and all prints of it are the property of Next Level Engineering and Construction Services, LLC (Next Level). Prints are to be returned to Next Level upon completion of use for which they were issued. Reproduction of these drawings without the written consent of Next Level is not permitted and Next Level retains all common law, statutory and other reserved rights, including the copyright thereto.

CONSULTANTS

STAMP

GEORGIA REGISTERED No. 035071 PROFESSIONAL ENGINEER FLOYD A. KEELS 03/08/2021

JACKSON COUNTY GEORGIA
Jackson County Detention Center
CCTV System Upgrade
Enter address here
555 Stan Evans Drive
Jefferson, Georgia 30549
RELEASED FOR BID

KEY PLAN

PRINTING AND REVISIONS

MARK	DATE	DESCRIPTION

NEXT LEVEL PROJECT NUMBER	NL202003LL
DRAWN BY	LTL
CHECKED BY	FAK
DATE RELEASED FOR CONSTRUCTION	03/08/2021

COPYRIGHT © 2020 Next Level Engineering and Construction Services, LLC

SHEET TITLE
CAMERA DETAILS

SHEET NUMBER
SE-704

RELEASED FOR CONSTRUCTION

3/7/2021 1:36:42 PM

1 INCH

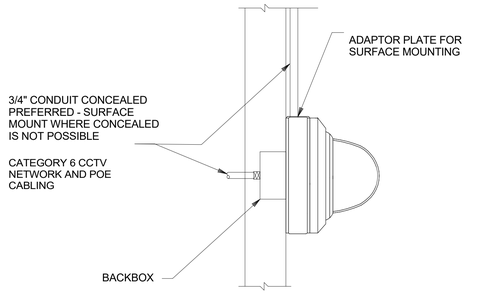

1 SE-705

WALL MOUNT FIXED MINI DOME CAMERA

NTS

NOTES:

1. COORDINATE MOUNTING FASTENER WITH CEILING OR STRUCTURAL MEMBER.
2. ALL CONDUIT MUST BE CONCEALED IN NEW WORK

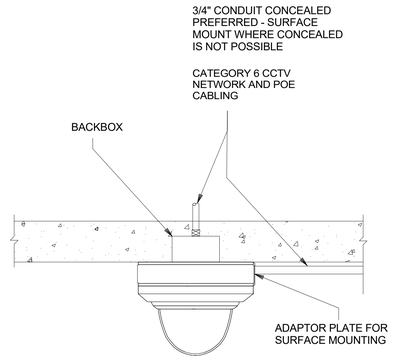

2 SE-705

SOLID CEILING SURFACE MINI DOME CAMERA

SCALE: NONE

NOTES:

1. COORDINATE MOUNTING FASTENER WITH CEILING OR STRUCTURAL MEMBER.
2. ALL CONDUIT MUST BE CONCEALED IN NEW WORK.

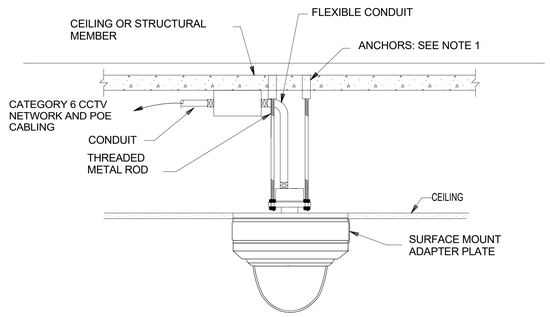

3 SE-705

DROP CEILING MINI DOME FIXED/ PTZ DOME SIMILAR

NTS

NOTES:

1. COORDINATE MOUNTING FASTENER WITH CEILING OR STRUCTURAL MEMBER.
2. DO NOT MOUNT CONDUIT ON SURFACE OF DROP CEILING
3. ALL CONDUIT MUST BE CONCEALED ON NEW WORK.

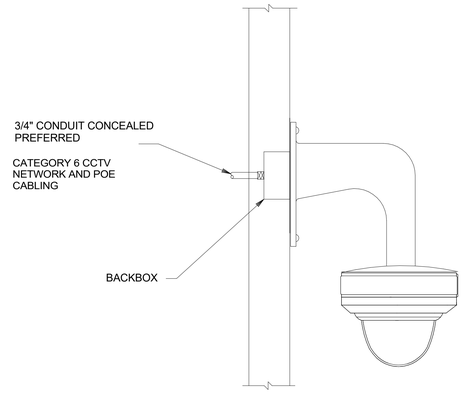

4 SE-705

WALL MOUNT PENDANT MINI DOME FIXED/ PTZ DOME SIMILAR

NTS

NOTES:

1. COORDINATE MOUNTING FASTENER WITH CEILING OR STRUCTURAL MEMBER.
2. USE MANUFACTURER'S PENDANT MOUNT FIXTURE AND COMPONENTS
3. ALL CONDUIT MUST BE CONCEALED ON NEW WORK.

NEXT LEVEL
ENGINEERING AND CONSTRUCTION SERVICES
2891 LINE STREET
AUSTELL, GEORGIA 30106
470-330-0231
floyd@nextleveleng.net

This drawing and all prints of it are the property of Next Level Engineering and Construction Services, LLC (Next Level). Prints are to be returned to Next Level upon completion of use for which they were issued. Reproduction of these drawings without the written consent of Next Level is not permitted and Next Level retains all common law, statutory and other reserved rights, including the copyright thereto.

CONSULTANTS

STAMP

GEORGIA REGISTERED No. 035071 PROFESSIONAL ENGINEER FLOYD A. KEELS 03/08/2021

JACKSON COUNTY GEORGIA
Jackson County Detention Center
CCTV System Upgrade
Enter address here
555 Stan Evans Drive
Jefferson, Georgia 30549
RELEASED FOR BID

KEY PLAN

PRINTING AND REVISIONS

MARK	DATE	DESCRIPTION

NEXT LEVEL PROJECT NUMBER	NL202003LL
DRAWN BY	LTL
CHECKED BY	FAK
DATE RELEASED FOR CONSTRUCTION	03/08/2021

COPYRIGHT © 2020 Next Level Engineering and Construction Services, LLC

SHEET TITLE
CAMERA DETAILS

SHEET NUMBER
SE-705

RELEASED FOR CONSTRUCTION

3/7/2021 1:36:42 PM

1 INCH

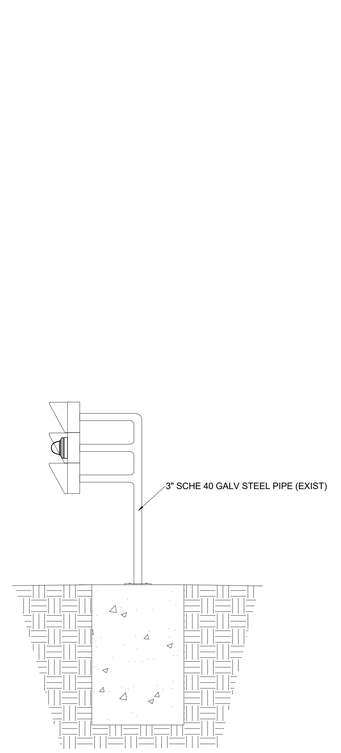

1 SE-706 PEDESTAL MOUNT FIXED CAMERA (EXIST)

NTS

NOTES:

1. USE EXISTING RACEWAY AND MOUNTING PEDESTAL/HEAT SHIELD.
2. USE EXISTING COAXIAL CONDUCTOR(S) - SEE ONE LINE DIAGRAM

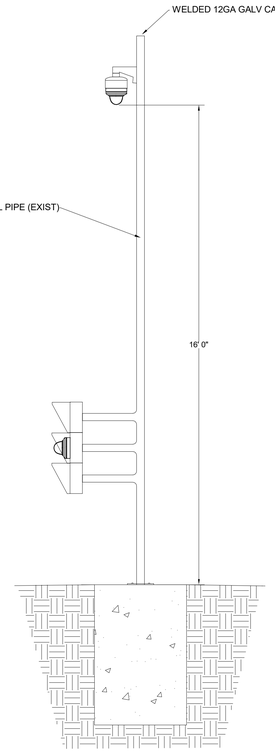

2 SE-706 PEDESTAL/POST MOUNT CAMERA (EXIST)

NTS

NOTES:

1. USE EXISTING RACEWAY AND MOUNTING PEDESTAL/HEAT SHIELD/POST.
2. USE EXISTING COAXIAL CONDUCTOR(S) - SEE ONE LINE DIAGRAM

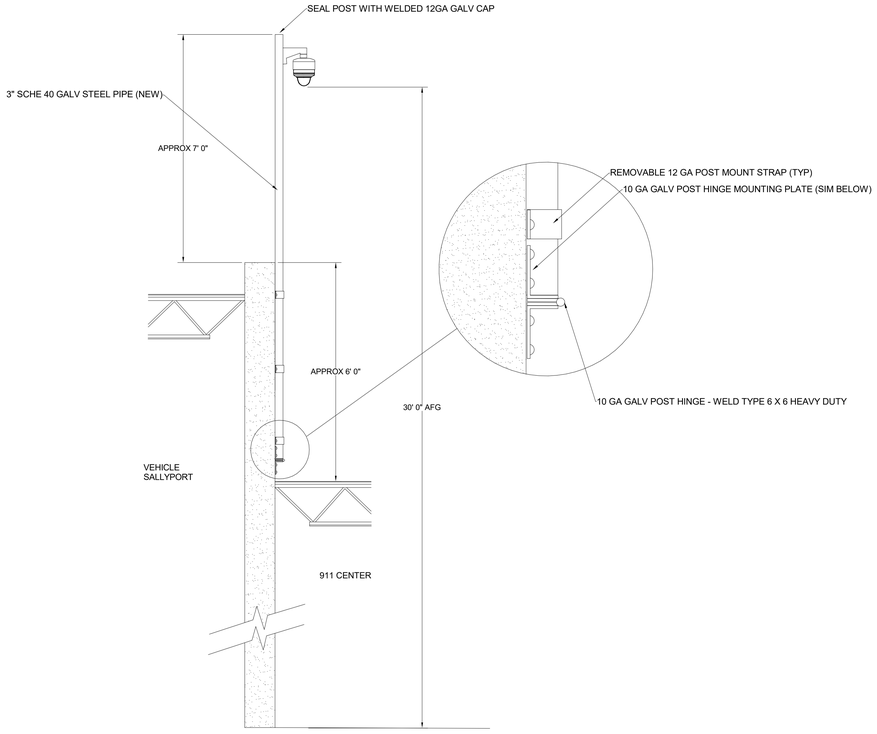

3 SE-706 POST MOUNT PAN TILT ZOOM CAMERA (NEW)

NTS

NOTES:

1. PROVIDE NEW RACEWAY, CAT 6 AND PTZ CONTROL CABLING
2. PROVIDE NEW 3" GALV STEEL POST WITH THREE REMOVABLE LOCKING MOUNT STRAPS
3. PROVIDE HINGE BASE AND MOUNTING PLATE AT POST BASE FOR TILT-DOWN SERVICE
4. USE TORX REJECT PIN FASTENERS WITH ANCHORS APPROPRIATE TO SUBSTRATE AND FUNCTION
5. MIN 2 COATS COLD GALVANIZING PAINT ON ALL DRESSED WELDS

NEXT LEVEL
ENGINEERING AND CONSTRUCTION SERVICES
2891 LINE STREET
AUSTELL, GEORGIA 30106
470-330-0231
floyd@nextleveleng.net

This drawing and all prints of it are the property of Next Level Engineering and Construction Services, LLC (Next Level). Prints are to be returned to Next Level upon completion of use for which they were issued. Reproduction of these drawings without the written consent of Next Level is not permitted and Next Level retains all common law, statutory and other reserved rights, including the copyright thereto.

CONSULTANTS

STAMP

GEORGIA REGISTERED No. 035071 PROFESSIONAL ENGINEER FLOYD A. KEELS 03/08/2021

JACKSON COUNTY GEORGIA
Jackson County Detention Center
CCTV System Upgrade
Enter address here
555 Stan Evans Drive
Jefferson, Georgia 30549
RELEASED FOR BID

KEY PLAN

PRINTING AND REVISIONS

MARK	DATE	DESCRIPTION

NEXT LEVEL PROJECT NUMBER	NL202003LL
DRAWN BY	LTL
CHECKED BY	FAK
DATE RELEASED FOR CONSTRUCTION	03/08/2021

COPYRIGHT © 2020 Next Level Engineering and Construction Services, LLC

SHEET TITLE

CAMERA DETAILS

SHEET NUMBER

SE-706

3/7/2021 1:36:42 PM

1 INCH

RELEASED FOR CONSTRUCTION

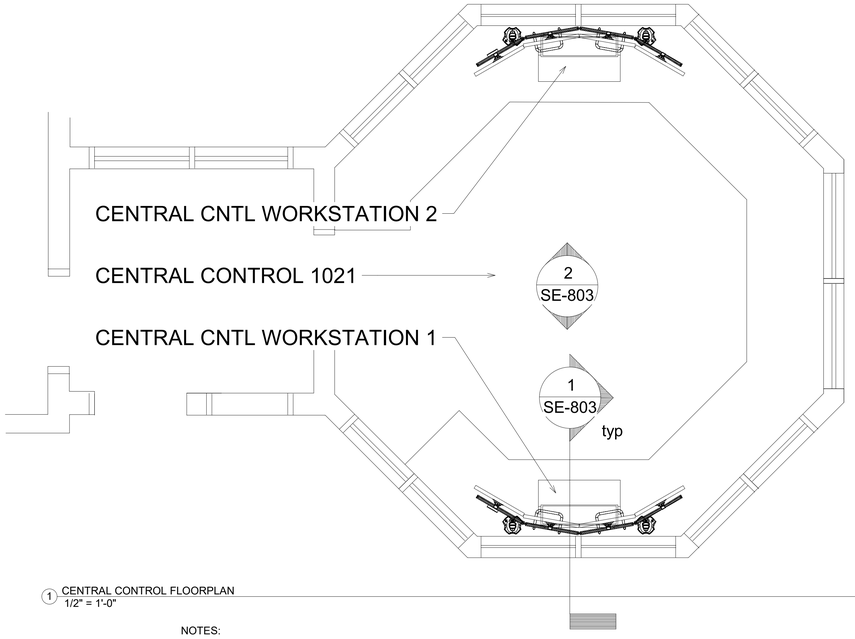

1 CENTRAL CONTROL FLOORPLAN
1/2" = 1'-0"

NOTES:

1. REMOVE EXISTING CCTV MONITORS, REMOTE KEYBOARD HOOKUPS, MONITOR RECIEVERS AND KEYBOARD/CONTROLLERS. TURN REMOVED EQUIPMENT OVER TO THE OWNER.
2. REMOVE CONDUCTORS FROM CONDUIT TO SEC 1 - USE EXISTING CONDUCTORS TO PULL IN CAT 6 CABLING.
3. PROVIDE 2 EACH NEW IP-CCTV WORKSTATIONS INCLUDING PER WORKSTATION - 24" MONITORS (8 PER STATION), TWO EA CPUS WITH QUAD MONITOR OUTPUTS, MOUSE, KEYBOARD AND MANUFACTURER'S JOYSTICK CONTROLLER.
3. MOUNT NEW IP-CCTV WORK STATIONS CPU IN KNEE SPACE UNDER COUNTER IN SLIDE/PIVOT UNDERCOUNTER MOUNT - UPLIFT CPU128-NTS OR EQUAL. CONNECT TO EXISING UPS/EMERGENCY POWER OUTLET. MOUNT ADJACENT TO EXISTING MILLWORK BASE CABINETS.
4. PROVIDE MANUFACTURER'S JOYSTICK CONTROLLER, KEYBOARD AND MOUSE FOR EACH NEW IP-CCTV WORKSTATION
5. PROVIDE "8 UP" GROMMET BASE POST MONITOR MOUNTING SYSTEM - CHEIF KONTOUR K4G420 OR EQUAL FOR EACH WORK STATION. OBSERVE BOTTOM OF MONITOR CLEARANCE OVER COUNTERTOP WORK SURFACE - SEE 2/SE-803.

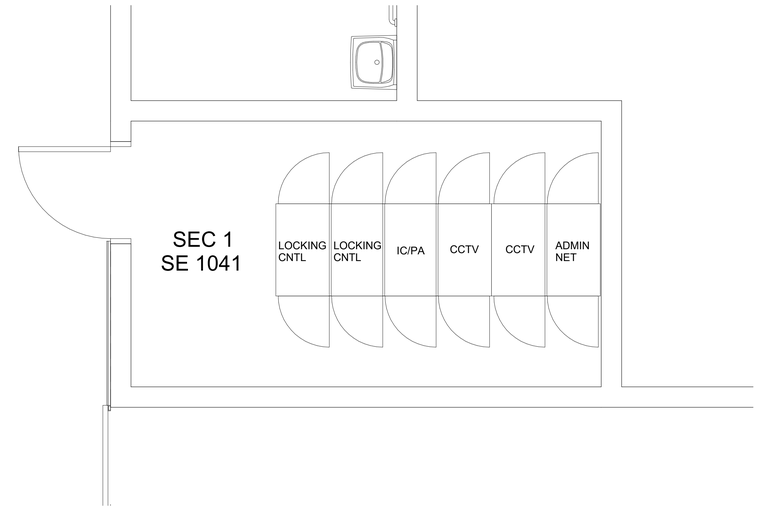

2 SE 1041 - SEC 1 FLOORPLAN
1/2" = 1'-0"

NOTES:

1. REMOVE EXISTING CCTV RACKS AND COMPONENTS - TURN REMOVED EQUIPMENT OVER TO OWNER.
2. PRESERVE EXISTING COAXIAL CABLE AND CCTV POWER CABLING - PULL BACK TO THE WIRING TROUGH ABOVE THE RACK ASSEMBLY ALL CABLING THAT IS NOT RE-USED. BUNDLE, IDENTIFY AND LEAVE IN PLACE ALL PULLED BACK CABLING. DO NOT LEAVE UN-USED CABLING IN THE NEW IP-CCTV RACKS.
3. RE-TERMINATE COAXIAL CABLE WITH NEW 3 PIECE BNC CRIMP ON CONNECTORS AT THE HEADEND AND AT EDGE DEVICES. ENSURE CONNECTORS MATCH EXISTING CABLE. TEST ALL FIELD WIRING FOR CONTIUNITY SHORTS, SHORTS TO GROUND AND RESISTANCE. SUBMIT REPORT OF FINDINGS TO THE DESIGNER.
3. IN THE LOCATION OF THE EXISTING CCTV RACKS INSTALL 2 EA NEW 4 POST SECURITY RACKS - MATCH EXIST RACKS HEIGHT, WIDTH AND DEPTH (ASSUMING NEW SERVERS WILL FIT - IF NOT EXTEND DEPTH OF NEW RACKS TO ACCOMMODATE NEW EQUIPMENT). INCLUDE VENTILATED DOORS FRONT AND BACK AND SOLID SIDE PANELS EXCEPT BETWEEN THE TWO CCTV RACKS.
4. UTILIZE EXISTING POWER CIRCUITS FOR NEW EQUIPMENT. EXISTING UPS POWER CIRCUITS ARE ROUTED FROM ELECTRICAL 1149 (EAST SIDE OF KITCHEN). UPS CIRCUITS ORIGINATE FROM PANEL ELC AND ARE ROUTED TO PANEL UPS-SEC 1 - BREAKERS 29, 33, 37.
5. COORDINATE WITH COUNTY IT STAFF THE USE OF THE SHERIFF'S OFFICE ADMINISTRATIVE NETWORK FOR THE SECURITY NETWORK. COUNTY IT STAFF WILL ESTABLISH A DEDICATED VLAN AND OFFSITE SAN STORAGE FOR THE IP-CCTV SYSTEM. UPON COORDINATION AND APPROVAL WITH COUNTY IT CONNECT IP-CCTV SWITCHES TO THE ADMINISTRATIVE NETWORK SWITCHES ADJACENT TO THE IP-CCTV RACKS.

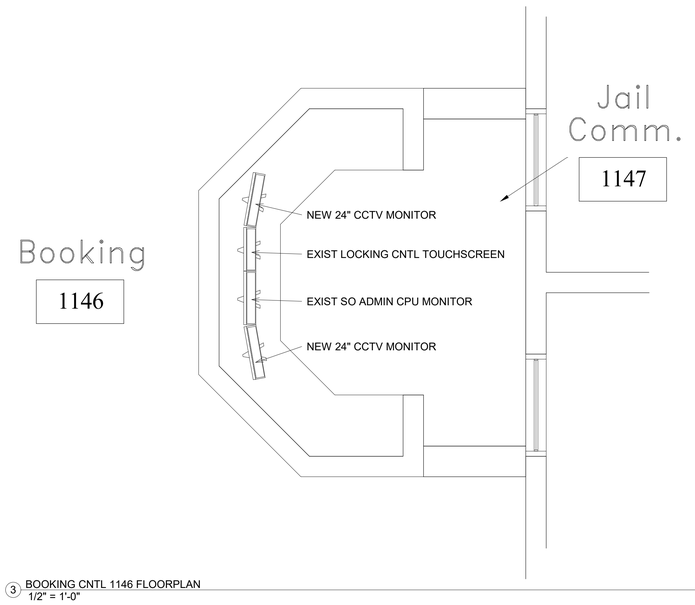

3 BOOKING CNTL 1146 FLOORPLAN
1/2" = 1'-0"

NOTES:

1. REMOVE EXISTING CCTV MONITORS, REMOTE KEYBOARD HOOKUPS, MONITOR RECIEVERS AND KEYBOARD/CONTROLLERS. TURN REMOVED EQUIPMENT OVER TO THE OWNER.
2. REMOVE CONDUCTORS FROM CONDUIT TO SEC 1 - USE EXISTING CONDUCTORS TO PULL IN CAT 6 CABLING.
3. PROVIDE NEW IP-CCTV WORKSTATION INCLUDING MONITOR, CPU WITH DUAL MONITOR OUTPUTS, MOUSE AND KEYBOARD.
4. MOUNT NEW IP-CCTV WORK STATION CPU UNDER COUNTER IN SLIDE/PIVOT UNDERCOUNTER MOUNT - UPLIFT CPU128-NTS OR EQUAL. CONNECT TO EXISING EMERGENCY POWER OUTLET. MOUNT ADJACENT TO EXISTING MILLWORK BASE CABINET.
5. PROVIDE KEYBOARD AND MOUSE FOR NEW IP-CCTV WORKSTATION
6. PROVIDE MANUFACTURER'S STANDARD DESK MONITOR MOUNT PER SPECIFICATIONS.

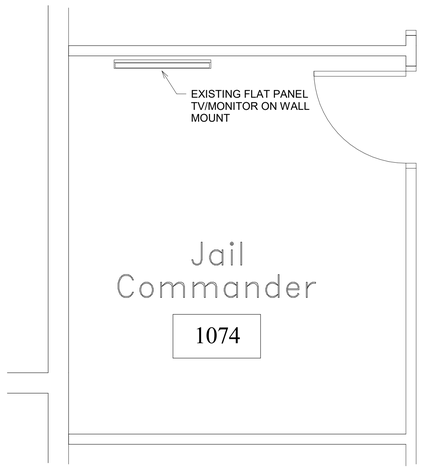

4 JAIL COMMANDER 1074 FLOORPLAN
1/2" = 1'-0"

NOTES:

1. EXISTING LARGE FLAT PANEL TV/MONITOR TO REMAIN AND BE REUSED.
2. REMOVE CONDUCTORS FROM CONDUIT TO SEC 1 - USE EXISTING CONDUCTORS TO PULL IN CAT 6 CABLING IF ADMIN NETWORK PORT IS NOT ALREADY AVAILABLE.
3. PROVIDE NEW IP-CCTV WORKSTATION CPU WITH MONITOR OUTPUTS, WIRELESS MOUSE AND WIRELESS KEYBOARD.
4. PROVIDE SEAT LICENSE (IF NECESSARY) FOR VIDEO MONITORING AND ARCHIVING STATION. MAKE RECORDED VIDEO ACCESSIBLE TO THIS WORK STATION.
5. MOUNT NEW IP-CCTV WORK STATION CPU AT LOCATION OF CURRENT CPU. REMOVE EXISTING CPU AND CONNECTIONS TO MONITOR AND TURN OVER TO OWNER. PROVIDE NEW CABLING TO MONITOR VIA WALL CAVITY AND CABLE PASS THRU PLATES OVER SINGLE GANG BOXES.
6. PROVIDE WIRELESS KEYBOARD AND MOUSE FOR NEW IP-CCTV WORKSTATION.

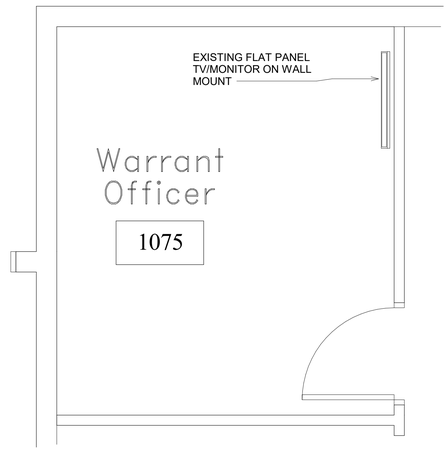

5 WARRANTS OFFICER 1075 FLOORPLAN
1/2" = 1'-0"

NOTES:

1. EXISTING LARGE FLAT PANEL TV/MONITOR TO REMAIN AND BE REUSED.
2. REMOVE CONDUCTORS FROM CONDUIT TO SEC 1 - USE EXISTING CONDUCTORS TO PULL IN CAT 6 CABLING IF ADMIN NETWORK PORT IS NOT ALREADY AVAILABLE.
3. PROVIDE NEW IP-CCTV WORKSTATION CPU WITH MONITOR OUTPUTS, WIRELESS MOUSE AND WIRELESS KEYBOARD.
4. PROVIDE SEAT LICENSE (IF NECESSARY) FOR VIDEO MONITORING AND ARCHIVING STATION. MAKE RECORDED VIDEO ACCESSIBLE TO THIS WORK STATION.
5. MOUNT NEW IP-CCTV WORK STATION CPU AT LOCATION OF CURRENT CPU. REMOVE EXISTING CPU AND CONNECTIONS TO MONITOR AND TURN OVER TO OWNER. PROVIDE NEW CABLING TO MONITOR VIA WALL CAVITY AND CABLE PASS THRU PLATES OVER SINGLE GANG BOXES.
6. PROVIDE WIRELESS KEYBOARD AND MOUSE FOR NEW IP-CCTV WORKSTATION.

NEXT LEVEL
ENGINEERING AND CONSTRUCTION SERVICES
2891 LINE STREET
AUSTELL, GEORGIA 30106
470-330-0231
floyd@nextlevelengineering.net

This drawing and all prints of it are the property of Next Level Engineering and Construction Services, LLC (Next Level). Prints are to be returned to Next Level upon completion of use for which they were issued. Reproduction of these drawings without the written consent of Next Level is not permitted and Next Level retains all common law, statutory and other reserved rights, including the copyright thereto.

CONSULTANTS

STAMP

GEORGIA
REGISTERED
No. 035071
PROFESSIONAL
ENGINEER
FLOYD A. KEELS
03/08/2021

JACKSON COUNTY GEORGIA

Jackson County Detention Center
CCTV System Upgrade
Enter address here
555 Stan Evans Drive
Jefferson, Georgia 30549

RELEASED FOR BID

KEY PLAN

PRINTING AND REVISIONS

MARK	DATE	DESCRIPTION

NEXT LEVEL PROJECT NUMBER	NL202003LL
DRAWN BY	LTL
CHECKED BY	FAK
DATE RELEASED FOR CONSTRUCTION	03/08/2021

COPYRIGHT © 2020 Next Level Engineering and Construction Services, LLC

SHEET TITLE
LARGE SCALE FLOORPLANS

SHEET NUMBER
SE-801

RELEASED FOR CONSTRUCTION

3/7/2021 1:36:43 PM

1 INCH

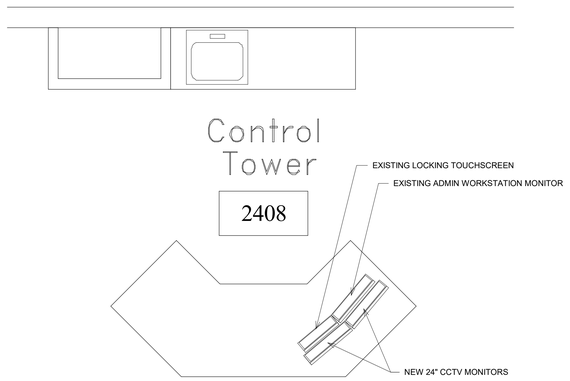

1 CONTROL TOWER 2408 FLOORPLAN
1/2" = 1'-0"

NOTES:

1. REMOVE EXISTING CCTV MONITORS, REMOTE KEYBOARD HOOKUPS, MONITOR RECIEVERS AND KEYBOARD/CONTROLLERS. TURN REMOVED EQUIPMENT OVER TO THE OWNER.
2. REMOVE CONDUCTORS FROM CONDUIT TO SEC 1 - USE EXISTING CONDUCTORS TO PULL IN CAT 6 CABLING.
3. PROVIDE NEW IP-CCTV WORKSTATION INCLUDING MONITORS, CPU WITH DUAL MONITOR OUTPUTS, MOUSE AND KEYBOARD.
4. MOUNT NEW IP-CCTV WORK STATION CPU IN KNEE SPACE UNDER COUNTER IN SLIDE/PIVOT UNDERCOUNTER MOUNT - UPLIFT CPU128-NTS OR EQUAL. CONNECT TO EXISING EMERGENCY POWER OUTLET. MOUNT ADJACENT TO EXISTING MILLWORK BASE CABINET.
5. PROVIDE KEYBOARD AND MOUSE FOR NEW IP-CCTV WORKSTATION
6. RE-USE EXISTING POST MOUNTED QUAD MONITOR MOUNT.

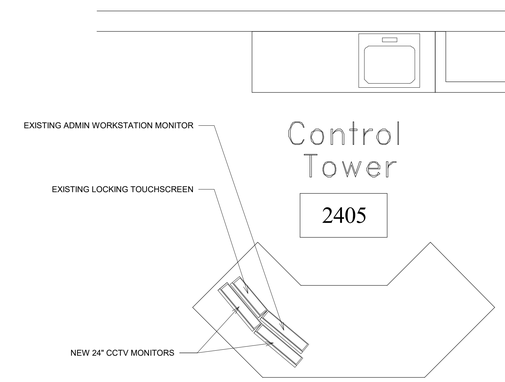

2 CONTROL TOWER 2405 FLOORPLAN
1/2" = 1'-0"

NOTES:

1. REMOVE EXISTING CCTV MONITORS, REMOTE KEYBOARD HOOKUPS, MONITOR RECIEVERS AND KEYBOARD/CONTROLLERS. TURN REMOVED EQUIPMENT OVER TO THE OWNER.
2. REMOVE CONDUCTORS FROM CONDUIT TO SEC 1 - USE EXISTING CONDUCTORS TO PULL IN CAT 6 CABLING.
3. PROVIDE NEW IP-CCTV WORKSTATION INCLUDING MONITORS, CPU WITH DUAL MONITOR OUTPUTS, MOUSE AND KEYBOARD.
4. MOUNT NEW IP-CCTV WORK STATION CPU IN KNEE SPACE UNDER COUNTER IN SLIDE/PIVOT UNDERCOUNTER MOUNT - UPLIFT CPU128-NTS OR EQUAL. CONNECT TO EXISING EMERGENCY POWER OUTLET. MOUNT ADJACENT TO EXISTING MILLWORK BASE CABINET.
5. PROVIDE KEYBOARD AND MOUSE FOR NEW IP-CCTV WORKSTATION
6. RE-USE EXISTING POST MOUNTED QUAD MONITOR MOUNT.

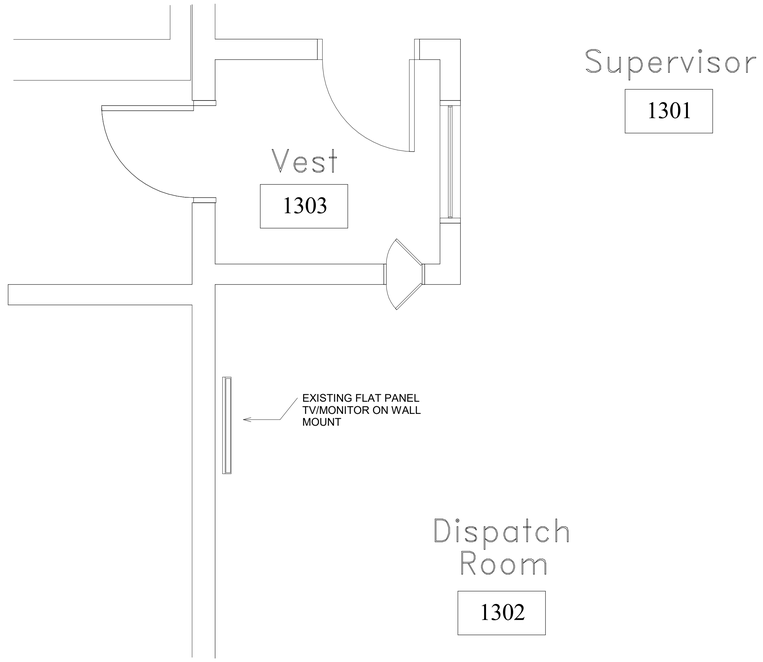

3 DISPATCH 1302
1/2" = 1'-0"

NOTES:

1. EXISTING LARGE FLAT PANEL TV/MONITOR TO REMAIN AND BE REUSED.
2. REMOVE CONDUCTORS FROM CONDUIT TO SEC 1 - USE EXISTING CONDUCTORS TO PULL IN CAT 6 CABLING IF ADMIN NETWORK PORT IS NOT ALREADY AVAILABLE.
3. PROVIDE NEW IP-CCTV WORKSTATION CPU WITH MONITOR OUTPUTS, WIRELESS MOUSE AND WIRELESS KEYBOARD.
4. PROVIDE SEAT LICENSE (IF NECESSARY) FOR VIDEO MONITORING AND ARCHIVING STATION. MAKE RECORDED VIDEO ACCESSIBLE TO THIS WORK STATION.
5. MOUNT NEW IP-CCTV WORK STATION CPU AT LOCATION OF CURRENT CPU. REMOVE EXISTING CPU AND CONNECTIONS TO MONITOR AND TURN OVER TO OWNER. PROVIDE NEW CABLING TO MONITOR VIA WALL CAVITY AND CABLE PASS THRU PLATES OVER SINGLE GANG BOXES.
6. PROVIDE WIRELESS KEYBOARD AND MOUSE FOR NEW IP-CCTV WORKSTATION.

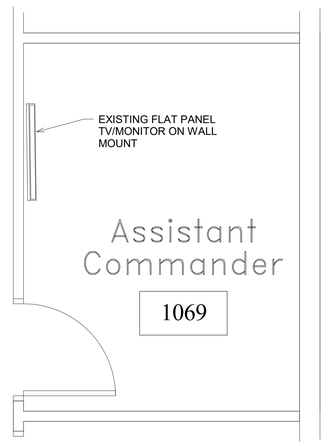

4 ASST COMMANDER 1069
1/2" = 1'-0"

NOTES:

1. EXISTING LARGE FLAT PANEL TV/MONITOR TO REMAIN AND BE REUSED.
2. IF ADMIN NETWORK PORT IS NOT ALREADY AVAILABLE CREATE PATH AND INSTALL NEW PORT FROM ADMIN NETWORK AT NEAREST IDF OR SEC-1..
3. PROVIDE NEW IP-CCTV WORKSTATION CPU WITH MONITOR OUTPUTS, WIRELESS MOUSE AND WIRELESS KEYBOARD.
4. PROVIDE SEAT LICENSE (IF NECESSARY) FOR VIDEO MONITORING AND ARCHIVING STATION. MAKE RECORDED VIDEO ACCESSIBLE TO THIS WORK STATION.
5. MOUNT NEW IP-CCTV WORK STATION CPU UNDER LOCATION OF OWNER'S MONITOR. IF ' IT EXISTS, REMOVE EXISTING CPU AND CONNECTIONS TO MONITOR AND TURN OVER TO OWNER. PROVIDE NEW CABLING TO MONITOR VIA WALL CAVITY AND CABLE PASS THRU PLATES OVER SINGLE GANG BOXES.
6. PROVIDE WIRELESS KEYBOARD AND MOUSE FOR NEW IP-CCTV WORKSTATION.

NEXT LEVEL
ENGINEERING AND CONSTRUCTION SERVICES
2891 LINE STREET
AUSTELL, GEORGIA 30106
470-330-0231
floyd@nextleveleng.net

This drawing and all prints of it are the property of Next Level Engineering and Construction Services, LLC (Next Level). Prints are to be returned to Next Level upon completion of use for which they were issued. Reproduction of these drawings without the written consent of Next Level is not permitted and Next Level retains all common law, statutory and other reserved rights, including the copyright thereto.

CONSULTANTS

STAMP

GEORGIA
REGISTERED
No. 035071
PROFESSIONAL
ENGINEER
FLOYD A. KEELS
03/08/2021

JACKSON COUNTY GEORGIA
Jackson County Detention Center
CCTV System Upgrade
Enter address here
555 Stan Evans Drive
Jefferson, Georgia 30549
RELEASED FOR BID

KEY PLAN

PRINTING AND REVISIONS

MARK	DATE	DESCRIPTION

NEXT LEVEL PROJECT NUMBER	NL202003LL
DRAWN BY	LTL
CHECKED BY	FAK
DATE RELEASED FOR CONSTRUCTION	03/08/2021

COPYRIGHT © 2020 Next Level Engineering and Construction Services, LLC

SHEET TITLE
LARGE SCALE FLOORPLANS

SHEET NUMBER
SE-802

RELEASED FOR CONSTRUCTION

3/7/2021 1:36:44 PM

1 INCH

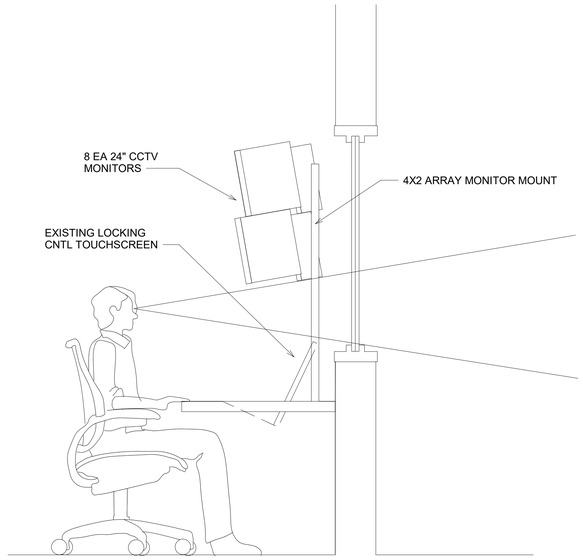

1 SE-802 CENTRAL CONTROL MONITOR ARRAY SECTION
NTS

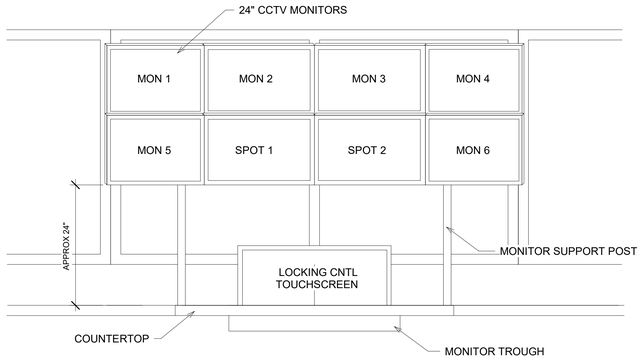

2 SE-802 CENTRAL CONTROL MONITOR ARRAY ELEVATION
NTS

NEXT LEVEL
ENGINEERING AND CONSTRUCTION SERVICES
2891 LINE STREET
AUSTELL, GEORGIA 30106
470-330-0231
floyd@nextlevelengineering.net

This drawing and all prints of it are the property of Next Level Engineering and Construction Services, LLC (Next Level). Prints are to be returned to Next Level upon completion of use for which they were issued. Reproduction of these drawings without the written consent of Next Level is not permitted and Next Level retains all common law, statutory and other reserved rights, including the copyright thereto.

CONSULTANTS

STAMP

GEORGIA
REGISTERED
No. 035071
PROFESSIONAL
ENGINEER
FLOYD A. KEELS
03/08/2021

JACKSON COUNTY GEORGIA
Jackson County Detention Center
CCTV System Upgrade
Enter address here
555 Stan Evans Drive
Jefferson, Georgia 30549
RELEASED FOR BID

KEY PLAN

PRINTING AND REVISIONS

MARK	DATE	DESCRIPTION

NEXT LEVEL PROJECT NUMBER	NL202003LL
DRAWN BY	LTL
CHECKED BY	FAK
DATE RELEASED FOR CONSTRUCTION	03/08/2021

COPYRIGHT © 2020 Next Level Engineering and Construction Services, LLC

SHEET TITLE
CENTRAL CONTROL ELEVATION AND SECTION

SHEET NUMBER
SE-803

3/7/2021 1:36:44 PM

RELEASED FOR CONSTRUCTION

1 INCH

1 CC SPOT 1
12" = 1'-0"

NEXTLEVEL
ENGINEERING AND CONSTRUCTION SERVICES
2891 LINE STREET
AUSTELL, GEORGIA 30106
470-330-0231
floyd@nextleveleng.net

This drawing and all prints of it are the property of Next Level Engineering and Construction Services, LLC (Next Level). Prints are to be returned to Next Level upon completion of use for which they were issued. Reproduction of these drawings without the written consent of Next Level is not permitted and Next Level retains all common law, statutory and other reserved rights, including the copyright thereto.

CONSULTANTS

STAMP

GEORGIA
REGISTERED
No. 035071
PROFESSIONAL
ENGINEER
FLOYD A. KEELS
03/08/2021

JACKSON COUNTY GEORGIA
Jackson County Detention Center
CCTV System Upgrade
Enter address here
555 Stan Evans Drive
Jefferson, Georgia 30549
RELEASED FOR BID

KEY PLAN

PRINTING AND REVISIONS

MARK	DATE	DESCRIPTION

NEXT LEVEL PROJECT NUMBER	NL202003LL
DRAWN BY	LTL
CHECKED BY	FAK
DATE RELEASED FOR CONSTRUCTION	03/08/2021

COPYRIGHT © 2020 Next Level Engineering and Construction Services, LLC

SHEET TITLE
CENTRAL CONTROL SPOT MONITOR 1 INITIAL SETUP

SHEET NUMBER
SE-804

3/7/2021 1:36:45 PM

RELEASED FOR CONSTRUCTION

1 INCH

1 CC SPOT 2
12" = 1'-0"

NEXT LEVEL
ENGINEERING AND CONSTRUCTION SERVICES
2891 LINE STREET
AUSTELL, GEORGIA 30106
470-330-0231
floyd@nextleveleng.net

This drawing and all prints of it are the property of Next Level Engineering and Construction Services, LLC (Next Level). Prints are to be returned to Next Level upon completion of use for which they were issued. Reproduction of these drawings without the written consent of Next Level is not permitted and Next Level retains all common law, statutory and other reserved rights, including the copyright thereto.

CONSULTANTS

STAMP
GEORGIA
REGISTERED
No. 035071
PROFESSIONAL
ENGINEER
FLOYD A. KEELS
03/08/2021

JACKSON COUNTY GEORGIA
Jackson County Detention Center
CCTV System Upgrade
Enter address here
555 Stan Evans Drive
Jefferson, Georgia 30549
RELEASED FOR BID

KEY PLAN

PRINTING AND REVISIONS

MARK	DATE	DESCRIPTION

NEXT LEVEL PROJECT NUMBER	NL202003LL
DRAWN BY	LTL
CHECKED BY	FAK
DATE RELEASED FOR CONSTRUCTION	03/08/2021

COPYRIGHT © 2020 Next Level Engineering and Construction Services, LLC

SHEET TITLE
CENTRAL CONTROL SPOT MONITOR 2 INITIAL SETUP

SHEET NUMBER
SE-805

3/7/2021 1:36:47 PM

RELEASED FOR CONSTRUCTION

1 INCH

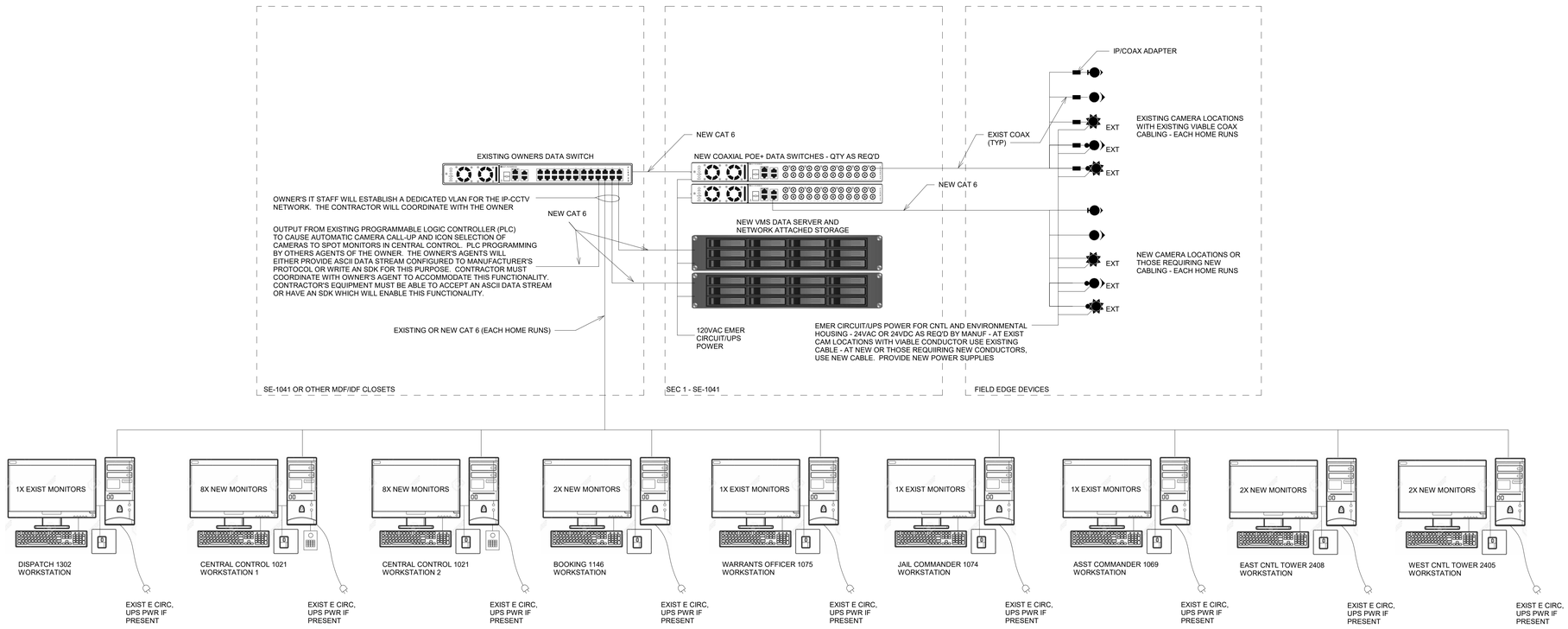

SHEET NOTES:

1. DEVICES ARE ONLY REPRESENTATIVE OF SYSTEM CONFIGURATION AND TYPES OF DEVICES TO BE INSTALLED - THIS ONE LINE DIAGRAM IS NOT INTENDED TO BE EXHAUSTIVE. CONTRACTOR MUST ENGINEER THE SYSTEM FOR THE UNIQUE PRODUCTS PROVIDED. SEE DRAWINGS FOR DEVICE QUANTITIES, LOCATIONS AND TYPE. MANUFACTURER SPECIFIC CONFIGURATION IS NOT REPRESENTED.
2. MICROPHONES INDICATED HERE AND ON THE DRAWINGS ARE TO BE PROVIDED BY THE SYSTEMS INTEGRATOR AND AUDIO FROM THE TO BE DIRECTLY CONNECTED TO ASSOCIATED CCTV CAMERA(S). AUDIO TO BE RECOREDE ON ASSOCIATED NAS VIA CAMERA FEED.
3. PROVIDE SIGNAL AND POWER TRANSIENT VOLTAGE SURGE SUPPRESSION DEVICES PER SPECIFICATIONS AND MANUFACTURERS RECOMMENDATIONS.
4. ALL DEVICES IN DETENTION AREAS TO BE SECURELY ANCHORED WITH FASTNERS APPROPRIATE TO THE SUBSTRATE AND HAVE ABUSE (VANDAL) RESISTANT HOUSINGS. EXPOSED FASTENERS MUST BE TORX PIN REJECT SECURITY SCREWS.
5. CAMERA IP NETWORK IS HYBRID IP OVER COAX (AT EXSITING CAMERA LOCATIONS) AND CAT 6 FOR NEW CAMERAS AND NETWORK COMMUNICATION. DO NOT EXCEED EIA/TIA STANDARD FOR CAT 6 CABLE INSTALLATION. AS A CONTRACTOR OPTION, CAT 6 MAY BE SUBSTITUTED FOR CAMERAS WITHIN THE 100 METER EIA/TIA CIRCUIT LIMIT OF CAT 6 CABLING AND WHERE THE EXISTING COAX/POWER CAN BE SAFELY PULLED OUT TO MAKE A PATH FOR CAT 6. IF CONTRACTOR ELECTS THIS OPTION, HE IS SOLELY RESPONSIBLE FOR DAMAGE TO EXISTING CONDUCTORS OR PATH AND THE PROVISION OF NEW PATH WHERE EXISTING PATH CANNOT BE REUSED. IF CONTRACTOR ELECTS THIS OPTION HE MAY ALSO SUBSTITUTE COAXIAL RUNS IN EXCESS OF 100 METERS WITH PAIGE DATACOM SOLUTIONS "GAME CHANGER" CAT 6 CABLE (NO SUBSTITUTES). UNDER THIS OPTION, CONTRACTOR WILL PROVIDE MANAGED POE DATA SWITCHES PER THE SPECIFICATIONS.
6. EXTERIOR CAMERAS WILL BE IN WEATHER PROOF ENVIRONMENTAL ENCLOSURES WITH ENVIRONMENTAL PROTECTION - SEE SPECIFICATIONS.

NEXT LEVEL
ENGINEERING AND CONSTRUCTION SERVICES
2891 LINE STREET
AUSTELL, GEORGIA 30106
470-330-0231
floyd@nextleveleng.net

This drawing and all prints of it are the property of Next Level Engineering and Construction Services, LLC (Next Level). Prints are to be returned to Next Level upon completion of use for which they were issued. Reproduction of these drawings without the written consent of Next Level is not permitted and Next Level retains all common law, statutory and other reserved rights, including the copyright thereto.

CONSULTANTS

STAMP

GEORGIA REGISTERED No. 035071 PROFESSIONAL ENGINEER FLOYD A. KEELS 03/08/2021

JACKSON COUNTY GEORGIA
Jackson County Detention Center
CCTV System Upgrade
Enter address here
555 Stan Evans Drive
Jefferson, Georgia 30549
RELEASED FOR BID

KEY PLAN

PRINTING AND REVISIONS

MARK	DATE	DESCRIPTION

NEXT LEVEL PROJECT NUMBER	NL202003LL
DRAWN BY	LTL
CHECKED BY	FAK
DATE RELEASED FOR CONSTRUCTION	03/08/2021

COPYRIGHT © 2020 Next Level Engineering and Construction Services, LLC

SHEET TITLE
ONE LINE DIAGRAM

SHEET NUMBER
SE-806

3/7/2021 1:36:47 PM

RELEASED FOR CONSTRUCTION

1 INCH