# TRACK AND FIELD ATHLETIC FACILITY IMPROVEMENTS PROGRAM

## CAROLINA FOREST HIGH SCHOOL

*February, 2020*

**HORRY COUNTY SCHOOLS**
**OFFICE OF FACILITIES**
**1160 E. HIGHWAY 501**
**CONWAY. SC 29526**

SITE VICINITY MAP
SCALE: NOT TO SCALE

100% CONSTRUCTION DOCUMENTS

## Sheet Index


| Sheet Number | Sheet Title |
|---|---|
| G-000 | TITLE SHEET |
| C-001 | EXISTING CONDITIONS PLAN |
| C-002 | DEMOLITION PLAN |
| C-100 | LAYOUT PLAN |
| C-101 | TRACK SURFACING AND DIMENSION PLAN |
| C-200 | GRADING PLAN |
| C-300 | DRAINAGE AND UTILITY PLAN |
| C-500 | SEDIMENT AND EROSION CONTROL PLAN PHASE I |
| C-501 | SEDIMENT AND EROSION CONTROL PLAN PHASE II |
| C-502 | SEDIMENT AND EROSION CONTROL DETAILS |
| C-600 | TRACK AND FIELD DETAILS |
| C-601 | TRACK AND FIELD DETAILS |
| C-602 | TRACK AND FIELD DETAILS |
| C-603 | TRACK AND FIELD DETAILS |
| E-001 | ELECTRICAL SITE PLAN |


Drawing Copyright © 2019

CHA
1258 Professional Drive
Myrtle Beach, SC 29577-5896
843.692.3535 x284 • www.chacompanies.com

HORRY COUNTY SCHOOLS

OFFICE OF FACILITIES
1160 E. HIGHWAY 501
CONWAY, SC 29526

IT IS A VIOLATION OF LAW FOR ANY PERSON, UNLESS THEY ARE ACTING UNDER THE DIRECTION OF A LICENSED PROFESSIONAL ENGINEER, ARCHITECT, LANDSCAPE ARCHITECT OR LAND SURVEYOR TO ALTER AN ITEM IN ANY WAY. IF AN ITEM BEARING THE STAMP OF A LICENSED PROFESSIONAL ENGINEER, ARCHITECT, LANDSCAPE ARCHITECT OR LAND SURVEYOR SHALL STAMP THE DOCUMENT AND INCLUDE THE NOTATION "ALTERED BY" FOLLOWED BY THEIR SIGNATURE, THE DATE OF SUCH ALTERATION, AND A SPECIFIC DESCRIPTION OF THE ALTERATION.

**CAROLINA FOREST HIGH SCHOOL**

TRACK AND FIELD ATHLETIC FACILITY IMPROVEMENTS PROGRAM

| No. | Submittal / Revision | App'd | By | Date |
|---|---|---|---|---|
| | | | | |

TITLE SHEET

| Designed By: | Drawn By: | Checked By: |
|---|---|---|
| JRP | RMH | PG |
| Issue Date: | Project No: | Scale: |
| 02/21/2020 | 36108 | AS SHOWN |

Drawing No.:
**G-000**

File: V:\PROJECTS\ANY\V53\36108\CADD_ACAD\G-000_CFHS.DWG
Saved: 2/21/2020 12:42:54 PM Portrait Current User: Heitmer, Rose LastSavedBy: 5683
Plotted: 2/28/2020 10:00:50 AM

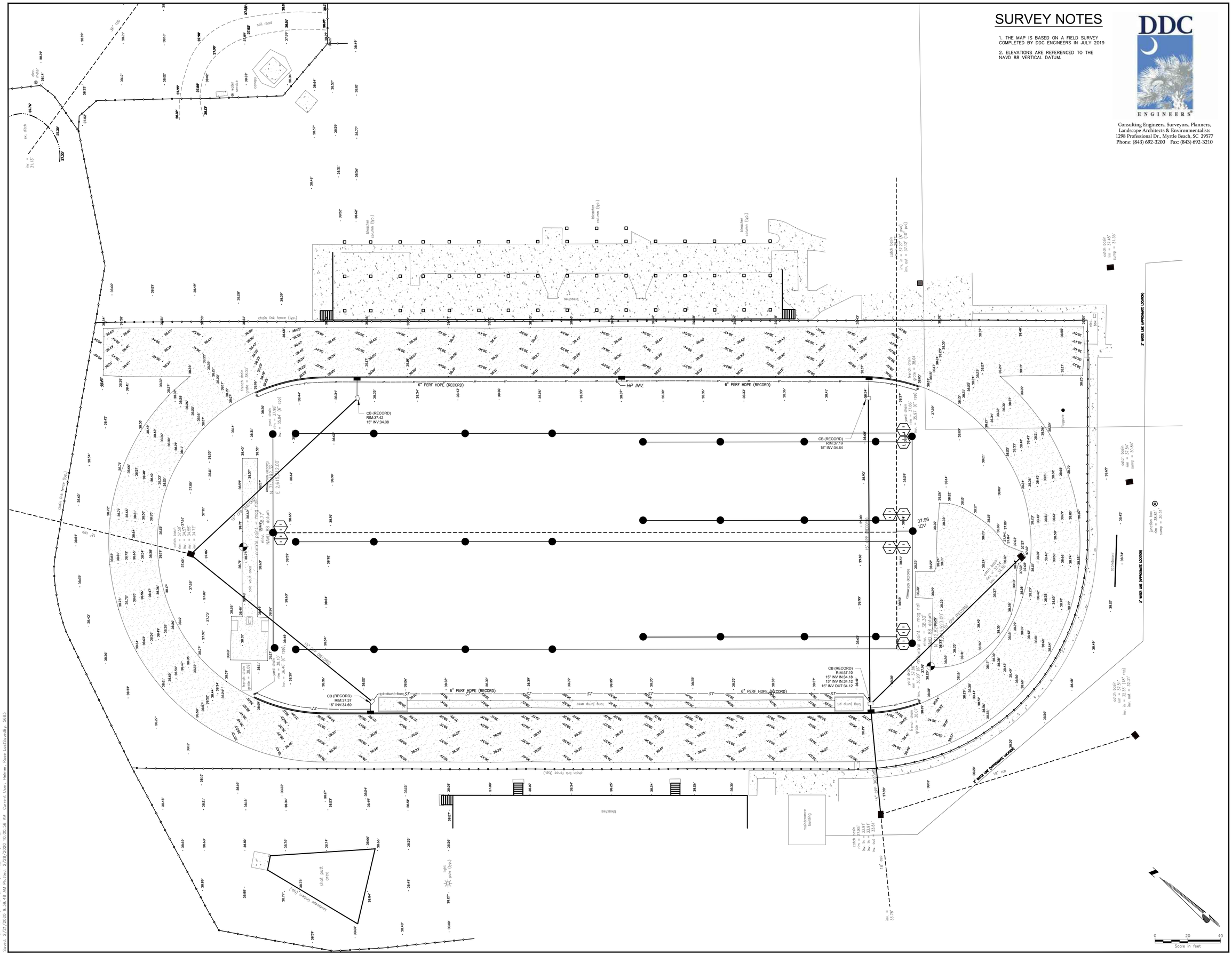


# SURVEY NOTES

1. THE MAP IS BASED ON A FIELD SURVEY COMPLETED BY DDC ENGINEERS IN JULY 2019

2. ELEVATIONS ARE REFERENCED TO THE NAVD 88 VERTICAL DATUM.


DDC ENGINEERS

Consulting Engineers, Surveyors, Planners,
Landscape Architects & Environmentalists
1298 Professional Dr., Myrtle Beach, SC 29577
Phone: (843) 692-3200 Fax: (843) 692-3210


Drawing Copyright © 2019


CHA
1298 Professional Drive
Myrtle Beach, SC 29577-5896
843.692.3200 x284 • www.chacompanies.com


HCS Horry County Schools

DDC ENGINEERS

HORRY COUNTY SCHOOLS

OFFICE OF FACILITIES
1160 E. HIGHWAY 501
CONWAY, SC 29526

IT IS A VIOLATION OF LAW FOR ANY PERSON, UNLESS THEY ARE ACTING UNDER THE DIRECTION OF A LICENSED PROFESSIONAL ENGINEER, ARCHITECT, LANDSCAPE ARCHITECT OR LAND SURVEYOR TO ALTER AN ITEM IN ANY WAY. IF AN ITEM BEARING THE STAMP OF A LICENSED PROFESSIONAL IS ALTERED, THE ALTERING ENGINEER, ARCHITECT, LANDSCAPE ARCHITECT OR LAND SURVEYOR SHALL STAMP THE DOCUMENT AND INCLUDE THE NOTATION "ALTERED BY" FOLLOWED BY THEIR SIGNATURE, THE DATE OF SUCH ALTERATION, AND A SPECIFIC DESCRIPTION OF THE ALTERATION.

**CAROLINA FOREST HIGH SCHOOL**

TRACK AND FIELD
ATHLETIC FACILITY
IMPROVEMENTS PROGRAM

| No. | Submittal / Revision | App'd. | By | Date |
|---|---|---|---|---|
| | | | | |

EXISTING CONDITIONS PLAN

| Designed By: | Drawn By: | Checked By: |
|---|---|---|
| JRP | RMH | PG |
| Issue Date: | Project No: | Scale: |
| 02/21/2020 | 36108 | AS SHOWN |

Drawing No.:

**C-001**

File: V:\PROJECTS\ANY\V45\36108\CADD_ACAD\C-001_CFHS.DWG
Sheet: 2/21/2020 9:39:48 AM Printed: 2/29/2020 10:00:59 AM Current User: Hefner, Rose LastSavedBy: 5683

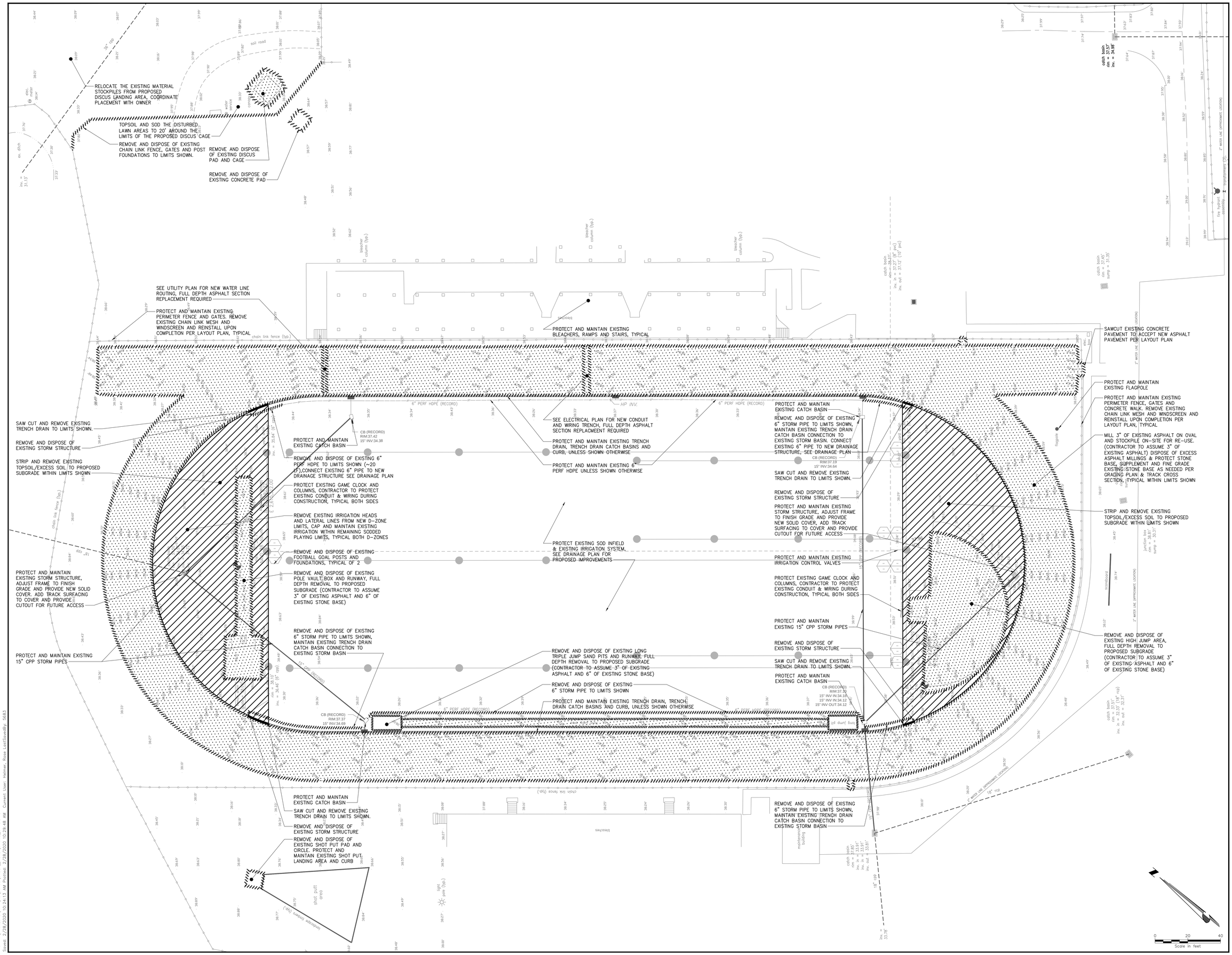


Drawing Copyright © 2019

CHA
1258 Professional Drive
Myrtle Beach, SC 29577-5896
843.692.3255 x284 • www.chacompanies.com

HCS Horry County Schools

DDC ENGINEERS

HORRY COUNTY SCHOOLS

OFFICE OF FACILITIES
1160 E. HIGHWAY 501
CONWAY, SC 29526

IT IS A VIOLATION OF LAW FOR ANY PERSON, UNLESS THEY ARE ACTING UNDER THE DIRECTION OF A LICENSED PROFESSIONAL ENGINEER, ARCHITECT, LANDSCAPE ARCHITECT OR LAND SURVEYOR TO ALTER AN ITEM IN ANY WAY. IF AN ITEM BEARING THE STAMP OF A LICENSED PROFESSIONAL ENGINEER, LAND SURVEYOR, ENGINEER, ARCHITECT, LANDSCAPE ARCHITECT OR LAND SURVEYOR SHALL STAMP THE DOCUMENT AND INCLUDE THE NOTATION "ALTERED BY" FOLLOWED BY THEIR SIGNATURE, THE DATE OF SUCH ALTERATION, AND A SPECIFIC DESCRIPTION OF THE ALTERATION.

**CAROLINA FOREST HIGH SCHOOL**

TRACK AND FIELD ATHLETIC FACILITY IMPROVEMENTS PROGRAM

| No. | Submittal / Revision | App'd | By | Date |
|---|---|---|---|---|
| | | | | |

DEMOLITION PLAN

| Designed By: | Drawn By: | Checked By: |
|---|---|---|
| JRP | RMH | PG |
| Issue Date: | Project No: | Scale: |
| 02/21/2020 | 36108 | AS SHOWN |

Drawing No.:
C-002

File: V:\PROJECTS\ANY\VS\36108\CADD_ACAD\C-002_CFHS.DWG
Saved: 2/28/2020 10:24:13 AM Plotted: 2/28/2020 10:29:48 AM Current User: Hamer, Ross LastSavedBy: 5983

SEE ENLARGED DISCUS AREA LAYOUT FOR CONTINUATION

1 C-600 ASPHALT PAVEMENT, EXTEND TO EXISTING DOUBLE GATE

R=20.0'

1 C-602 OUTER CONCRETE PERIMETER CURB, TYPICAL

1-2 C-603 LONG/TRIPLE JUMP SAND PIT, TYPICAL OF 2

1 C-603 LONG/TRIPLE JUMP TAKE-OFF BOARDS (PAINTED), TYPICAL BOTH RUNWAYS

HIGH JUMP AREA

3 C-600 NEW FOOTBALL GOAL POSTS, TYPICAL OF 2

1 C-602 ENDLINE CONCRETE CURB, TYPICAL

TOPSOIL AND SEED ALL DISTURBED LAWN AREAS OUTSIDE TRACK LIMITS, TYPICAL UNLESS NOTED OTHERWISE

NEW 6' HIGH CHAIN LINK FENCE (~171LF), TIE INTO EXISTING 42" HIGH FENCE 2 C-600

REMOVE CHAIN LINK MESH & WINDSCREEN, EXTEND ASPHALT TO 6" BEYOND (OUTSIDE TRACK FACILITY) FENCE LINE OR TO CONCRETE PAVEMENT, TYPICAL WITHIN LIMITS SHOWN 1 C-602

ASPHALT PAVEMENT, EXTEND TO EXISTING CONCRETE PAVEMENT 1 C-600

ASPHALT PAVEMENT, TYPICAL 1 C-600

POLE VAULT BOX, TYPICAL OF 2 3 C-603

OUTER CONCRETE PERIMETER CURB, TYPICAL 1 C-602

400M, (8) 42" WIDE LANE RUNNING TRACK

ENDLINE CONCRETE CURB, TYPICAL 1 C-602

REMOVE CHAIN LINK MESH & WINDSCREEN, EXTEND ASPHALT TO 6" BEYOND (OUTSIDE TRACK FACILITY) FENCE LINE OR TO CONCRETE PAVEMENT, TYPICAL WITHIN LIMITS SHOWN 1 C-602

NEW SHOT PUT PAD AND CIRCLE, ALIGN NEW CONCRETE PAD AND CIRCLE WITH EXISTING LANDING AREA 4-5 C-603

DISCUS LANDING AREA

TOPSOIL AND SEED ALL DISTURBED LAWN AREAS OUTSIDE TRACK LIMITS, TYPICAL UNLESS NOTED OTHERWISE

DISCUS CIRCLE 7-8 C-603

DISCUS PAD 6-9 C-603

DISCUS CAGE 6,9 C-603

NEW 6' HIGH CHAIN LINK FENCE (~171LF), TIE INTO EXISTING 6' HIGH FENCE 2 C-600

ENLARGED DISCUS AREA LAYOUT
SCALE: 1"=20'

0 20 40
Scale in feet

Drawing Copyright © 2019

CHA
1258 Professional Drive
Myrtle Beach, SC 29577-5896
843.692.3105 x284 • www.chacompanies.com

HCS Horry County Schools

DDC ENGINEERS

HORRY COUNTY SCHOOLS

OFFICE OF FACILITIES
1160 E. HIGHWAY 501
CONWAY, SC 29526

IT IS A VIOLATION OF LAW FOR ANY PERSON, UNLESS THEY ARE ACTING UNDER THE DIRECTION OF A LICENSED PROFESSIONAL ENGINEER, ARCHITECT, LANDSCAPE ARCHITECT OR LAND SURVEYOR TO ALTER AN ITEM IN ANY WAY. IF AN ITEM BEARING THE STAMP OF A LICENSED PROFESSIONAL IS ALTERED, THE ALTERING ENGINEER, ARCHITECT, LANDSCAPE ARCHITECT OR LAND SURVEYOR SHALL STAMP THE DOCUMENT AND INCLUDE THE NOTATION "ALTERED BY" FOLLOWED BY THEIR SIGNATURE, THE DATE OF SUCH ALTERATION, AND A SPECIFIC DESCRIPTION OF THE ALTERATION.

**CAROLINA FOREST HIGH SCHOOL**

TRACK AND FIELD ATHLETIC FACILITY IMPROVEMENTS PROGRAM

| No. | Submittal / Revision | App'd. | By | Date |
|---|---|---|---|---|
| | | | | |

LAYOUT PLAN

| Designed By: | Drawn By: | Checked By: |
|---|---|---|
| JRP | RMH | PG |
| Issue Date: | Project No: | Scale: |
| 02/21/2020 | 36108 | AS SHOWN |

Drawing No.:
**C-100**

File: V:\PROJECTS\ANY\K5\36108\CADD_ACAD\C-100_CFHS.DWG
Saved: 2/21/2020 9:45:59 AM Plotted: 2/28/2020 10:01:06 AM Current User: Warner, Rose LastSaveBy: 5683

SEE ENLARGED DISCUS AREA LAYOUT FOR CONTINUATION

54.80'
66.16'
105.50' RADIUS POINT TO MEASURE LINE
71.16'
44.13'
RADIUS POINT
N: 713152.7182
E: 2615345.7687
8 C-601
324.732' BETWEEN RADIUS POINTS
RADIUS POINT
N: 712902.4160
E: 2615552.6497
8 C-601
51.14'
54.71'
57.78'
46.97'
6" PERF HDPE (RECORD)
HP INV.
CB (RECORD)
RIM:37.37
15" INV:34.69
CB (RECORD)
RIM:37.42
15" INV:34.38
CB (RECORD)
RIM:37.37
15" INV:34.12
15" INV OUT:34.12
long jump pit
long jump area
chain link fence (typ.)
catch basin
rim = 37.84'
sump = 30.84'
junction box
rim = 38.81'
sump = 30.81'
2" WATER LINE (APPROXIMATE LOCATION)
RADIUS POINT
N: 713063.9716
E: 2615169.4946
shot put area
(Regulation Throwers Circle)
light pole (typ.)

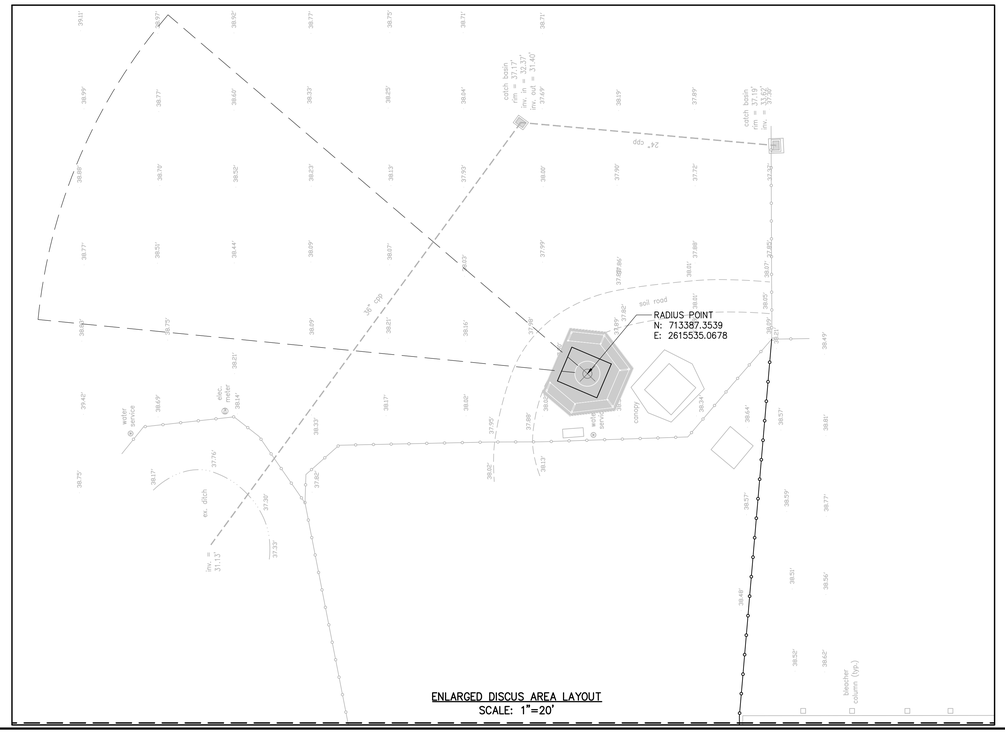


ENLARGED DISCUS AREA LAYOUT
SCALE: 1"=20'

## LEGEND

- SYNTHETIC SURFACING
- CONCRETE PAVEMENT
- ASPHALT PAVEMENT
- SAND
- STONE DUST

0 20 40
Scale in feet

Drawing Copyright © 2019

CHA
1258 Professional Drive
Myrtle Beach, SC 29577-5896
843.692.3105 x284 • www.chacompanies.com

HCS Horry County Schools

DDC ENGINEERS

HORRY COUNTY SCHOOLS

OFFICE OF FACILITIES
1160 E. HIGHWAY 501
CONWAY, SC 29526

IT IS A VIOLATION OF LAW FOR ANY PERSON, UNLESS THEY ARE ACTING UNDER THE DIRECTION OF A LICENSED PROFESSIONAL ENGINEER, ARCHITECT, LANDSCAPE ARCHITECT OR LAND SURVEYOR TO ALTER AN ITEM IN ANY WAY. IF AN ITEM BEARING THE STAMP OF A LICENSED PROFESSIONAL ENGINEER, ARCHITECT, LANDSCAPE ARCHITECT OR LAND SURVEYOR SHALL STAMP THE DOCUMENT AND INCLUDE THE NOTATION "ALTERED BY" FOLLOWED BY THEIR SIGNATURE, THE DATE OF SUCH ALTERATION, AND A SPECIFIC DESCRIPTION OF THE ALTERATION.

**CAROLINA FOREST HIGH SCHOOL**

TRACK AND FIELD ATHLETIC FACILITY IMPROVEMENTS PROGRAM

| No. | Submittal / Revision | App'd | By | Date |
|---|---|---|---|---|
| | | | | |

TRACK SURFACING AND DIMENSION PLAN

| Designed By: | Drawn By: | Checked By: |
|---|---|---|
| JRP | RMH | PG |
| Issue Date: | Project No: | Scale: |
| 02/21/2020 | 36108 | AS SHOWN |

Drawing No.:
**C-101**

File: V:\PROJECTS\ANY\V5\36108\CADD_ACAD\C-101_CFHS.DWG
Saved: 2/21/2020 9:51:25 AM Postface: 2/28/2020 10:01:16 AM Current User: Helmer, Rose LastSavedBy: 5483

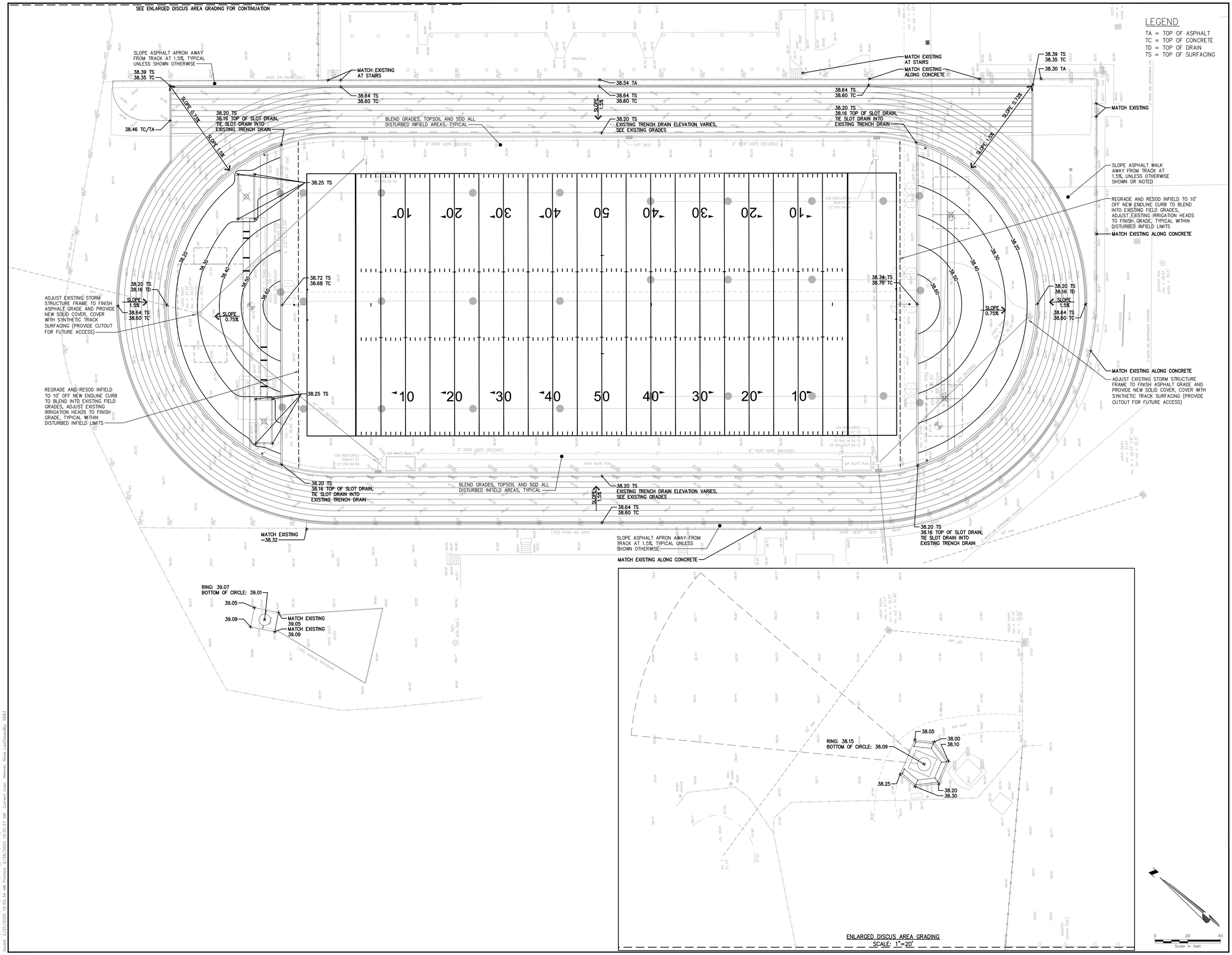


Drawing Copyright © 2019

CHA
1258 Professional Drive
Myrtle Beach, SC 29577-5896
843.692.3105 x284 • www.chacompanies.com

Horry County Schools

DDC ENGINEERS

HORRY COUNTY SCHOOLS

OFFICE OF FACILITIES
1160 E. HIGHWAY 501
CONWAY, SC 29526

IT IS A VIOLATION OF LAW FOR ANY PERSON, UNLESS THEY ARE ACTING UNDER THE DIRECTION OF A PROFESSIONAL ENGINEER, ARCHITECT, LANDSCAPE ARCHITECT OR LAND SURVEYOR TO ALTER AN ITEM IN ANY WAY. IF AN ITEM BEARING THE STAMP OF A PROFESSIONAL ENGINEER, ARCHITECT, LANDSCAPE ARCHITECT OR LAND SURVEYOR SHALL STAMP THE DOCUMENT AND INCLUDE THE NOTATION "ALTERED BY" FOLLOWED BY THEIR SIGNATURE, THE DATE OF SUCH ALTERATION, AND A SPECIFIC DESCRIPTION OF THE ALTERATION.

**CAROLINA FOREST HIGH SCHOOL**

TRACK AND FIELD ATHLETIC FACILITY IMPROVEMENTS PROGRAM

| No. | Submittal / Revision | App'd | By | Date |
|---|---|---|---|---|
| | | | | |

GRADING PLAN

| Designed By: | Drawn By: | Checked By: |
|---|---|---|
| JRP | RMH | PG |
| Issue Date: | Project No: | Scale: |
| 02/21/2020 | 36108 | AS SHOWN |

Drawing No.:

**C-200**

File: V:\PROJECTS\ANY\V63\36108\CADD_ACAD\C-200_CFHS.DWG
Saved: 2/21/2020 10:05:34 AM Plotted: 2/26/2020 10:01:27 AM Current User: Hamer, Ross LastSaveBy: 5983

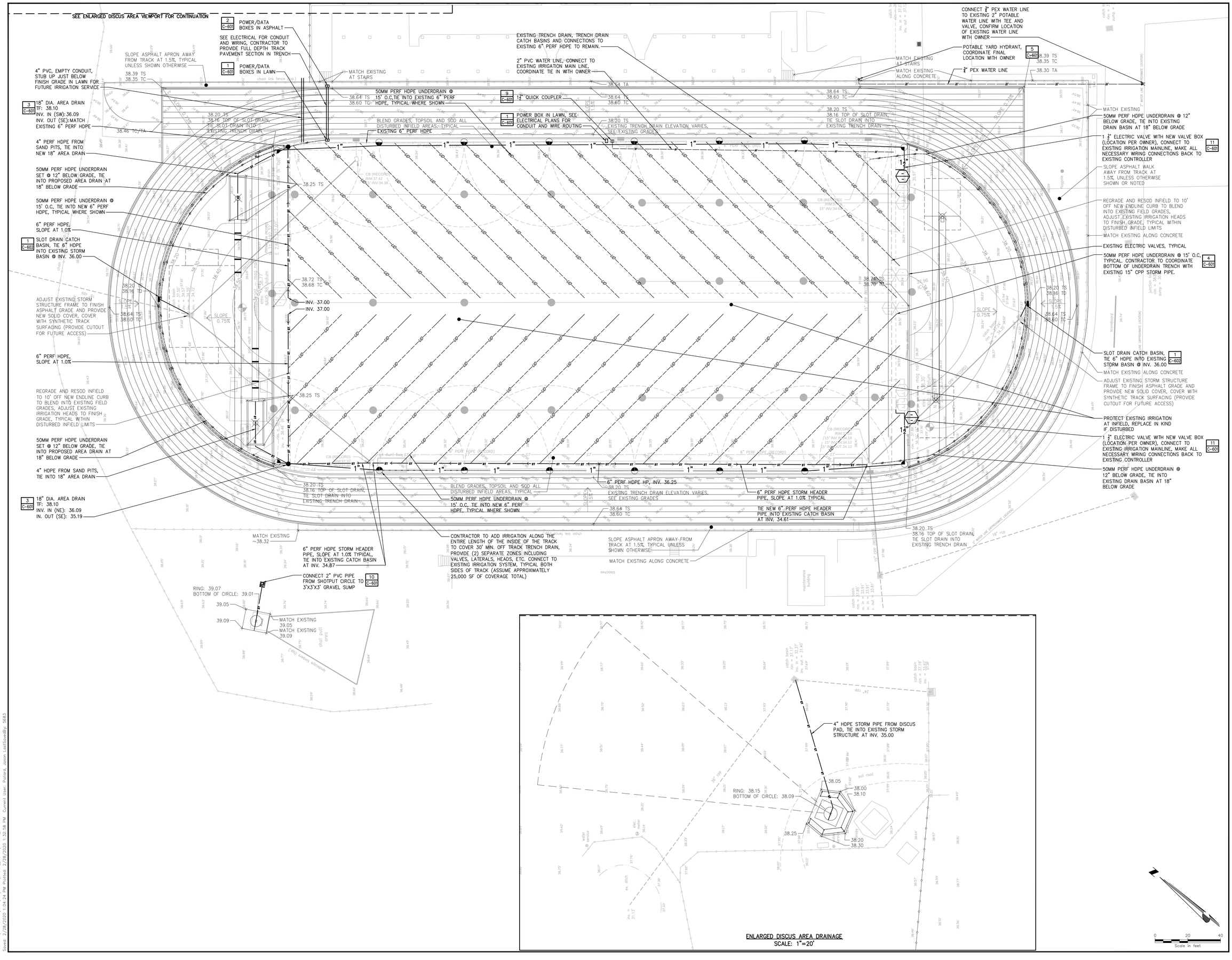


Drawing Copyright © 2019

CHA
1298 Professional Drive
Myrtle Beach, SC 29577-5896
843.692.3105 x284 • www.chacompanies.com

HCS Horry County Schools

DDC ENGINEERS

HORRY COUNTY SCHOOLS

OFFICE OF FACILITIES
1160 E. HIGHWAY 501
CONWAY, SC 29526

IT IS A VIOLATION OF LAW FOR ANY PERSON, UNLESS THEY ARE ACTING UNDER THE DIRECTION OF A LICENSED PROFESSIONAL ENGINEER, ARCHITECT, LANDSCAPE ARCHITECT OR LAND SURVEYOR TO ALTER AN ITEM IN ANY WAY. IF AN ITEM BEARING THE STAMP OF A LICENSED PROFESSIONAL ENGINEER, ARCHITECT, LANDSCAPE ARCHITECT OR LAND SURVEYOR SHALL STAMP THE DOCUMENT AND INCLUDE THE NOTATION "ALTERED BY" FOLLOWED BY THEIR SIGNATURE, THE DATE OF SUCH ALTERATION, AND A SPECIFIC DESCRIPTION OF THE ALTERATION.

**CAROLINA FOREST HIGH SCHOOL**

TRACK AND FIELD ATHLETIC FACILITY IMPROVEMENTS PROGRAM

| No. | Submittal / Revision | App'd. | By | Date |
|---|---|---|---|---|
| | | | | |

DRAINAGE AND UTILITY PLAN

| Designed By: | Drawn By: | Checked By: |
|---|---|---|
| JRP | RMH | PG |
| Issue Date: | Project No: | Scale: |
| 02/21/2020 | 36108 | AS SHOWN |

Drawing No.:

C-300

File: V:\PROJECTS\ANYYAS\36108\CADD_ACAD\C-300_CFHS.DWG
Saved: 2/28/2020 1:04:24 PM Printed: 2/28/2020 1:23:58 PM Current User: Richard, Jason LastSavedBy: 5683

SEEDING NOTES:

1. INCLUDES RURAL AREAS ADJACENT TO WELL-DEVELOPED LAWNS.
2. NOT REQUIRED ON SHOULDERS, MEDIANS, ETC...AND SLOPES UNDER 5 FEET IN HEIGHT.
3. GIANT BERMUDA SEED, INCLUDING NK-37, SHALL NOT BE USED.
4. RESEEDING CRIMSON CLOVER SHALL BE INOCULATED IN ACCORDANCE WITH SUBSECTION 810.05. DO NOT PLANT CLOVER IN MEDIANS OR IN RURAL AREAS ADJACENT TO WELL-DEVELOPED LAWNS.
5. PENSACOLA BAHIA SHALL BE ALLOWED ONLY AS SHOWN IN SEEDING SCHEDULES 3 AND 4 AT THE RATE OF 50 POUNDS PER ACRE ONLY WHEN SEEDING PIT AREAS THAT ARE GOVERNED BY THE SOUTH CAROLINA MINING ACT. OTHERWISE, DO NOT INCLUDE BAHIA SEED IN THE MIX.
6. THE CONTRACTOR SHALL OBTAIN A SATISFACTORY STAND OF PERENNIAL VEGETATION WHOSE ROOT SYSTEM SHALL BE DEVELOPED SUFFICIENTLY TO SURVIVE DRY PERIODS AND WINTER WEATHER, AND BE CAPABLE OF RE-ESTABLISHMENT IN THE SPRING. THE PERENNIAL VEGETATIVE COVER SHALL HAVE A MINIMUM COVERAGE DENSITY OF 70% FOR THE SEEDED AREAS. CONTRACTOR SHALL DETERMINE ALL RATES OF APPLICATION NECESSARY TO PRODUCE THE REQUIRED STAND OF GRASS, AND SHALL FOLLOW THE APPLICATION PROCEDURES AS SPECIFIED HEREIN.
7. GIANT BERMUDA SEED, INCLUDING NK-37, SHALL NOT BE USED.

### SEEDING SCHEDULE FOR TEMPORARY VEGETATION Ds3

| SCHEDULE NO. | COMMON NAME OF SEED | RATE PER ACRE (LBS.) | PLANTING DATES |
|---|---|---|---|
| 1 | COMMON BERMUDA (HULLED) | 210 | MARCH 16 TO AUG. 31 |
| | TALL FESCUE | 140 | |
| 2 | COMMON BERMUDA (UNHULLED) | 175 | SEPT. 1 TO MARCH 15 |
| | ANNUAL RYEGRASS | 175 | |

NOTES:

THE CONTRACTOR SHALL OBTAIN A SATISFACTORY STAND OF PERENNIAL VEGETATION WHOSE ROOT SYSTEM SHALL BE DEVELOPED SUFFICIENTLY TO SURVIVE DRY PERIODS AND WINTER WEATHER, AND BE CAPABLE OF RE-ESTABLISHMENT IN THE SPRING. THE PERENNIAL VEGETATIVE COVER SHALL HAVE A MINIMUM COVERAGE DENSITY OF 70% FOR THE SEEDED AREAS. CONTRACTOR SHALL DETERMINE ALL RATES OF APPLICATION NECESSARY TO PRODUCE THE REQUIRED STAND OF GRASS, AND SHALL FOLLOW THE APPLICATION PROCEDURES AS SPECIFIED HEREIN.

### SEEDING SCHEDULE FOR PERMANENT VEGETATION

| SCHEDULE NO. | COMMON NAME OF SEED | RURAL RATE | URBAN RATE [1] | PLANTING DATES |
|---|---|---|---|---|
| 3 [5] | COMMON BERMUDA (HULLED) [3] | 30 | 30 | MARCH 1 TO AUG. 14 |
| | WEEPING LOVEGRASS [2] | 10 | 10 | |
| | SERICEA LESPEDEZA (SCARIFIED) [4] | 50 | 50 | |
| 4 [5] | COMMON BERMUDA (UNHULLED) [3] | 40 | 40 | AUG. 5 TO FEB. 28 |
| | WEEPING LOVEGRASS [2] | 10 | 10 | |
| | SERICEA LESPEDEZA (UNHULLED, UNSCARIFIED) [4] | 80 | 80 | |
| | RESEEDING CRIMSON CLOVER [6] | 20 | 0 | |
| | RYE GRAIN | 20 | 0 | |

NOTES:

1 INCLUDES RURAL AREAS ADJACENT TO WELL-DEVELOPED LAWNS.

2 NOT REQUIRED ON SHOULDERS, MEDIANS, ECT., AND SLOPES UNDER 5 FEET IN HEIGHT

3 GIANT BERMUDA SEED, INCLUDING NK-37, SHALL NOT BE USED.

4 RESEEDING CRIMSON CLOVER SHALL BE INOCULATED IN ACCORDANCE WITH SUBSECTION 810.05. DO NOT PLANT CLOVER IN MEDIANS OR IN RURAL AREAS ADJACENT TO WELL-DEVELOPED LAWNS.

5 PENSACOLA BAHIA SHALL BE ALLOWED ONLY AS SHOWN IN SEEDING SCHEDULES 3 AND 4 AT THE RATE OF 50 POUNDS PER ACRE ONLY WHEN SEEDING PIT AREAS THAT ARE GOVERNED BY THE SOUTH CAROLINA MINING ACT. OTHERWISE, DO NOT INCLUDE BAHIA SEED IN THE MIX.

THE CONTRACTOR SHALL OBTAIN A SATISFACTORY STAND OF PERENNIAL VEGETATION WHOSE ROOT SYSTEM SHALL BE DEVELOPED SUFFICIENTLY TO SURVIVE DRY PERIODS AND WINTER WEATHER, AND BE CAPABLE OF RE-ESTABLISHMENT IN THE SPRING. THE PERENNIAL VEGETATIVE COVER SHALL HAVE A MINIMUM COVERAGE DENSITY OF 70% FOR THE SEEDED AREAS. CONTRACTOR SHALL DETERMINE ALL RATES OF APPLICATION NECESSARY TO PRODUCE THE REQUIRED STAND OF GRASS, AND SHALL FOLLOW THE APPLICATION PROCEDURES AS SPECIFIED HEREIN.

THE CONTRACTOR MAY INCLUDE QUANTITIES OF RYE GRAIN AND MILLET IN SCHEDULE 1 AND 3 IN ORDER TO ESTABLISH QUICK GROUND COVER FOR EROSION CONTROL PURPOSES.

### SEEDING SCHEDULE FOR TEMPORARY VEGETATION

| SCHEDULE NO. | COMMON NAME OF SEED | RATE PER ACRE (LBS.) | PLANTING DATES |
|---|---|---|---|
| 1 | ANNUAL SUDAN GRASS (SWEET OR TIFF) | 40 | APRIL 1- AUGUST 15 |
| 2 | BROWN TOP MILLET | 50 | APRIL 1- AUGUST 15 |
| 3 | RYE GRAIN | 55 | AUGUST 16- MARCH 31 |

OAT GRAIN IS TO BE ADDED TO ALL SCHEDULES, IF SEEDING DATE IS BETWEEN MARCH 1 AND APRIL 16, AT THE RATE OF 10 POUNDS PER ACRE.

THE CONTRACTOR SHALL OBTAIN A SATISFACTORY STAND OF VEGETATION THAT IS CAPABLE OF EROSION CONTROL. CONTRACTOR SHALL DETERMINE ALL RATES OF APPLICATION NECESSARY TO PRODUCE THE REQUIRED RESULTS. THE TEMPORARY VEGETATION SHALL PROVIDE MINIMUM DENSITY COVERAGE OF 70% OF THE SEEDED AREA.

## CONSTRUCTION SEQUENCE:

1. CONTRACTOR TO LOCATE ALL EXISTING UTILITIES WITHIN AND IMMEDIATELY ADJACENT TO PROJECT AREA.
2. INSTALL CONSTRUCTION ENTRANCE.
3. INSTALL PERIMETER EROSION CONTROL DEVICES, INCLUDING ALL TREE PROTECTION.
4. DEMO EXISTING TRACK AND APPURTENANCES.

## EROSION CONTROL LEGEND

| SYMBOL | PRACTICE | DESCRIPTION |
|---|---|---|
| IP | INLET PROTECTION | A TEMPORARY SEDIMENT BARRIER LAID AROUND A STORM DRAIN INLET TO PREVENT SEDIMENT FROM ENTERING THE DRAINAGE SYSTEM. |
| OP | OUTLET PROTECTION | RIP RAP CHANNEL / BANK PLACED BELOW DRAINAGE OUTLETS TO REDUCE THE VELOCITY OF FLOW, EROSION, AND STABILIZE GRADES DOWNSTREAM OF OUTLET STRUCTURES. |
| CD | TEMPORARY CHECK DAM | RIP RAP BANK PLACED BELOW DRAINAGE OUTLETS TO REDUCE THE VELOCITY OF FLOW, EROSION AND STABILIZE GRADES DOWN STREAM OF DRAINAGE OUTLETS. |
| SF | SILT FENCE | A TEMPORARY STRUCTURE USED TO SLOW THE VELOCITY OF RUN-OFF, CAUSE SEDIMENT DEPOSITION AT THE STRUCTURE, AND FILTER SEDIMENT FROM RUN-OFF. |
| $SF_2$ | DOUBLE ROW SILT FENCE | A TEMPORARY STRUCTURE USED TO SLOW THE VELOCITY OF RUN-OFF, CAUSE SEDIMENT DEPOSITION AT THE STRUCTURE, AND FILTER SEDIMENT FROM RUN-OFF. |
| CL | CONSTRUCTION LIMITS | A DEFINED AREA THAT ALL LAND DISTURBANCE WILL OCCUR DURING CONSTRUCTION. |
| ECB | PERMANENT EROSION CONTROL MATTING (HIGH PERFORMANCE TRM PYRAMAT BY S4 GEOSOLUTIONS OR EQUAL) | A PERMANENT REINFORCEMENT MAT TO PREVENT SOIL EROSION AND MAINTAIN PERMANENT GROUND COVER. |
| Ds3 | DISTURBED AREA STABILIZATION (WITH TEMPORARY VEGETATION) | ESTABLISHING PERMANENT VEGETATIVE COVER SUCH AS TREES, SHRUBS, VINES, GRASSES, SOD, OR LEGUMES ON DISTURBED AREAS. |
| ST | SEDIMENT TUBE | SEDIMENT TUBE PLACED IN EXISTING OR PROPOSED DITCH SECTIONS TO REDUCE THE VELOCITY OF FLOW, EROSION AND STABILIZE GRADES DOWN STREAM OR DRAINAGE OUTLETS. |

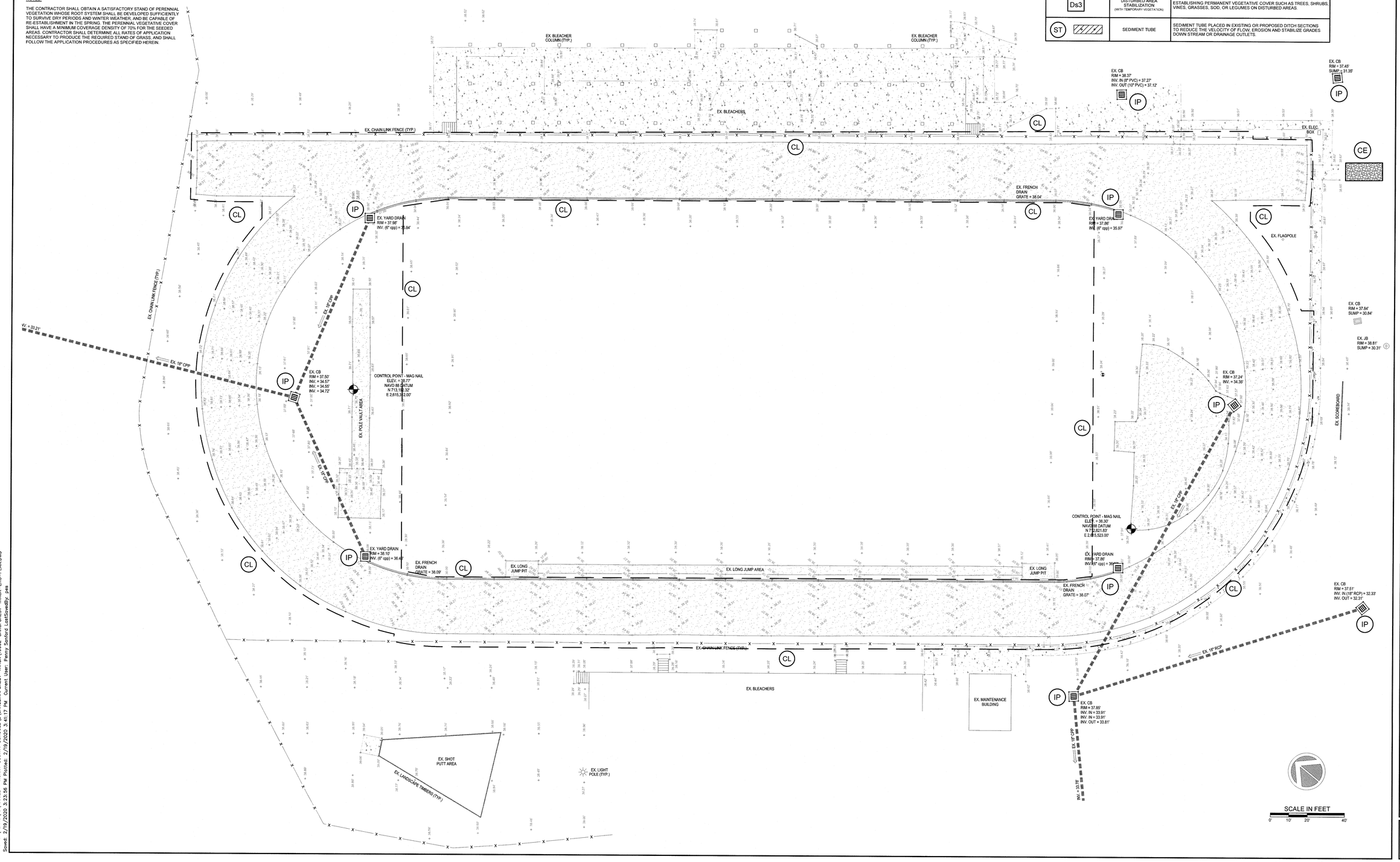


File: J:\PLANS\19\19062E - HORRY COUNTY SCHOOLS\E\CAROLINAFOREST-TRACK\19062-CAROFOREST-TRACK-ERO-PLAN.DWG
Saved: 2/19/2020 3:23:55 PM Plotted: 2/19/2020 3:41:17 PM Current User: Perry Sanford LastSaved By: pes

Drawing Copyright © 2016

CHA
1298 Professional Drive
Myrtle Beach, SC 29577-5896
843.692.3200 v.843 • www.chacompanies.com

HCS
Horry County Schools

DDC
ENGINEERS®
Consulting Engineers, Surveyors, Planners, Landscape Architects & Environmentalists
1298 Professional Dr., Myrtle Beach, SC 29577
Phone: (843) 692-3200 Fax: (843) 692-3210

HORRY COUNTY SCHOOLS

OFFICE OF FACILITIES
1160 E. HIGHWAY 501
CONWAY, SC 29526

SOUTH CAROLINA CERTIFICATE OF AUTHORIZATION
DDC ENGINEERS, INC.
No. C00036

SOUTH CAROLINA REGISTERED PROFESSIONAL ENGINEER
No. 29814
ERIC K. SANFORD

IT IS A VIOLATION OF LAW FOR ANY PERSON, UNLESS THEY ARE ACTING UNDER THE DIRECTION OF A LICENSED PROFESSIONAL ENGINEER, ARCHITECT, LANDSCAPE ARCHITECT OR LAND SURVEYOR TO ALTER AN ITEM IN ANY WAY. IF AN ITEM BEARING THE STAMP OF A LICENSED PROFESSIONAL IS ALTERED, THE ALTERING ENGINEER, ARCHITECT, LANDSCAPE ARCHITECT OR LAND SURVEYOR SHALL STAMP THE DOCUMENT AND INCLUDE THE NOTATION "ALTERED BY" FOLLOWED BY THEIR SIGNATURE, THE DATE OF SUCH ALTERATION, AND A SPECIFIC DESCRIPTION OF THE ALTERATION.

CAROLINA FOREST
HIGH SCHOOL
TRACK AND FIELD
ATHLETIC FACILITY
IMPROVEMENTS PROGRAM

| No. | Submittal / Revision | App'd | By | Date |
|---|---|---|---|---|
| | | | | |

SEDIMENT AND EROSION CONTROL PLAN PHASE I

| Designed By: | Drawn By: | Checked By: |
|---|---|---|
| EKS | PES | EKS |
| Issue Date: | Project No: | Scale: |
| 1/31/20 | 19062E | 1" = 20' |

Drawing No.:
C-500

SEEDING NOTES:

1. INCLUDES RURAL AREAS ADJACENT TO WELL-DEVELOPED LAWNS.
2. NOT REQUIRED ON SHOULDERS, MEDIANS, ETC... AND SLOPES UNDER 5 FEET IN HEIGHT.
3. GIANT BERMUDA SEED, INCLUDING NK-37, SHALL NOT BE USED.
4. RESEEDING CRIMSON CLOVER SHALL BE INOCULATED IN ACCORDANCE WITH SUBSECTION 810.05. DO NOT PLANT CLOVER IN MEDIANS OR IN RURAL AREAS ADJACENT TO WELL-DEVELOPED LAWNS.
5. PENSACOLA BAHIA SHALL BE ALLOWED ONLY AS SHOWN IN SEEDING SCHEDULES 3 AND 4 AT THE RATE OF 50 POUNDS PER ACRE ONLY WHEN SEEDING PIT AREAS THAT ARE GOVERNED BY THE SOUTH CAROLINA MINING ACT. OTHERWISE, DO NOT INCLUDE BAHIA SEED IN THE MIX.
6. THE CONTRACTOR SHALL OBTAIN A SATISFACTORY STAND OF PERENNIAL VEGETATION WHOSE ROOT SYSTEM SHALL BE DEVELOPED SUFFICIENTLY TO SURVIVE DRY PERIODS AND WINTER WEATHER, AND BE CAPABLE OF RE-ESTABLISHMENT IN THE SPRING. THE PERENNIAL VEGETATIVE COVER SHALL HAVE A MINIMUM COVERAGE DENSITY OF 70% FOR THE SEEDED AREAS. CONTRACTOR SHALL DETERMINE ALL RATES OF APPLICATION NECESSARY TO PRODUCE THE REQUIRED STAND OF GRASS, AND SHALL FOLLOW THE APPLICATION PROCEDURES AS SPECIFIED HEREIN.
7. GIANT BERMUDA SEED, INCLUDING NK-37, SHALL NOT BE USED.

### SEEDING SCHEDULE FOR TEMPORARY VEGETATION Ds3

| SCHEDULE NO. | COMMON NAME OF SEED | RATE PER ACRE (LBS.) | PLANTING DATES |
|---|---|---|---|
| 1 | COMMON BERMUDA (HULLED) | 210 | MARCH 16 TO AUG. 31 |
| | TALL FESCUE | 140 | |
| 2 | COMMON BERMUDA (UNHULLED) | 175 | SEPT. 1 TO MARCH 15 |
| | ANNUAL RYEGRASS | 175 | |

NOTES:

THE CONTRACTOR SHALL OBTAIN A SATISFACTORY STAND OF PERENNIAL VEGETATION WHOSE ROOT SYSTEM SHALL BE DEVELOPED SUFFICIENTLY TO SURVIVE DRY PERIODS AND WINTER WEATHER, AND BE CAPABLE OF RE-ESTABLISHMENT IN THE SPRING. THE PERENNIAL VEGETATIVE COVER SHALL HAVE A MINIMUM COVERAGE DENSITY OF 70% FOR THE SEEDED AREAS. CONTRACTOR SHALL DETERMINE ALL RATES OF APPLICATION NECESSARY TO PRODUCE THE REQUIRED STAND OF GRASS, AND SHALL FOLLOW THE APPLICATION PROCEDURES AS SPECIFIED HEREIN.

### SEEDING SCHEDULE FOR PERMANENT VEGETATION

| SCHEDULE NO. | COMMON NAME OF SEED | RURAL RATE | URBAN RATE [1] | PLANTING DATES |
|---|---|---|---|---|
| 3[4] | COMMON BERMUDA (HULLED) [3] | 30 | 30 | MARCH 1 TO AUG. 14 |
| | WEEPING LOVEGRASS [2] | 10 | 10 | |
| | SERICEA LESPEDEZA (SCARIFIED) [7] | 50 | 50 | |
| 4[5] | COMMON BERMUDA (UNHULLED) [3] | 40 | 40 | AUG. 5 TO FEB. 28 |
| | WEEPING LOVEGRASS [2] | 10 | 10 | |
| | SERICEA LESPEDEZA (UNHULLED, UNSCARIFIED) [7] | 80 | 80 | |
| | RESEEDING CRIMSON CLOVER [6] | 20 | 0 | |
| | RYE GRAIN | 20 | 0 | |

NOTES:

1 INCLUDES RURAL AREAS ADJACENT TO WELL-DEVELOPED LAWNS.

2 NOT REQUIRED ON SHOULDERS, MEDIANS, ECT., AND SLOPES UNDER 5 FEET IN HEIGHT

3 GIANT BERMUDA SEED, INCLUDING NK-37, SHALL NOT BE USED.

4 RESEEDING CRIMSON CLOVER SHALL BE INOCULATED IN ACCORDANCE WITH SUBSECTION 810.05 DO NOT PLANT CLOVER IN MEDIANS OR IN RURAL AREAS ADJACENT TO WELL-DEVELOPED LAWNS.

5 PENSACOLA BAHIA SHALL BE ALLOWED ONLY AS SHOWN IN SEEDING SCHEDULES 3 AND 4 AT THE RATE OF 50 POUNDS PER ACRE ONLY WHEN SEEDING PIT AREAS THAT ARE GOVERNED BY THE SOUTH CAROLINA MINING ACT. OTHERWISE, DO NOT INCLUDE BAHIA SEED IN THE MIX.

THE CONTRACTOR SHALL OBTAIN A SATISFACTORY STAND OF PERENNIAL VEGETATION WHOSE ROOT SYSTEM SHALL BE DEVELOPED SUFFICIENTLY TO SURVIVE DRY PERIODS AND WINTER WEATHER, AND BE CAPABLE OF RE-ESTABLISHMENT IN THE SPRING. THE PERENNIAL VEGETATIVE COVER SHALL HAVE A MINIMUM COVERAGE DENSITY OF 70% FOR THE SEEDED AREAS. CONTRACTOR SHALL DETERMINE ALL RATES OF APPLICATION NECESSARY TO PRODUCE THE REQUIRED STAND OF GRASS, AND SHALL FOLLOW THE APPLICATION PROCEDURES AS SPECIFIED HEREIN.

THE CONTRACTOR MAY INCLUDE QUANTITIES OF RYE GRAIN AND MILLET IN SCHEDULE 1 AND 3 IN ORDER TO ESTABLISH QUICK GROUND COVER FOR EROSION CONTROL PURPOSES.

### SEEDING SCHEDULE FOR TEMPORARY VEGETATION

| SCHEDULE NO. | COMMON NAME OF SEED | RATE PER ACRE (LBS.) | PLANTING DATES |
|---|---|---|---|
| 1 | ANNUAL SUDAN GRASS (SWEET OR TIFF) | 40 | APRIL 1- AUGUST 15 |
| 2 | BROWN TOP MILLET | 50 | APRIL 1- AUGUST 15 |
| 3 | RYE GRAIN | 55 | AUGUST 16- MARCH 31 |

OAT GRAIN IS TO BE ADDED TO ALL SCHEDULES, IF SEEDING DATE IS BETWEEN MARCH 1 AND APRIL 16, AT THE RATE OF 10 POUNDS PER ACRE.

THE CONTRACTOR SHALL OBTAIN A SATISFACTORY STAND OF VEGETATION THAT IS CAPABLE OF EROSION CONTROL. CONTRACTOR SHALL DETERMINE ALL RATES OF APPLICATION NECESSARY TO PRODUCE THE REQUIRED RESULTS. THE TEMPORARY VEGETATION SHALL PROVIDE MINIMUM DENSITY COVERAGE OF 70% OF THE SEEDED AREA.

## CONSTRUCTION SEQUENCE:

1. EXCAVATE END ZONE TRACK EXTENSION AREA.
2. INSTALL UNDER DRAINAGE SYSTEM.
3. FINE GRADE TRACK AND INFIELD AREAS.
4. PAVE TRACK AND INSTALL SYNTHETIC SURFACING.
5. PAINT TRACK LINES AND FINISH REMAINING SITE IMPROVEMENTS.
6. GRADE AND SEED PERIMETER TIE IN POINTS.
7. FINAL STABILIZATION OF ALL DENUDED AREAS.
8. PER SEEDING SCHEDULE, WATER AND MAINTAIN TO INSURE PROPER GROUND COVERAGE.
9. UPON APPROVAL BY HORRY COUNTY, REMOVE ALL TEMPORARY EROSION CONTROL DEVICES.

## EROSION CONTROL LEGEND

| SYMBOL | PRACTICE | DESCRIPTION |
|---|---|---|
| IP | INLET PROTECTION | A TEMPORARY SEDIMENT BARRIER LAID AROUND A STORM DRAIN INLET TO PREVENT SEDIMENT FROM ENTERING THE DRAINAGE SYSTEM. |
| OP | OUTLET PROTECTION | RIP RAP CHANNEL / BANK PLACED BELOW DRAINAGE OUTLETS TO REDUCE THE VELOCITY OF FLOW, EROSION, AND STABILIZE GRADES DOWNSTREAM OF OUTLET STRUCTURES. |
| CD | TEMPORARY CHECK DAM | RIP RAP BANK PLACED BELOW DRAINAGE OUTLETS TO REDUCE THE VELOCITY OF FLOW, EROSION AND STABILIZE GRADES DOWN STREAM OF DRAINAGE OUTLETS. |
| SF | SILT FENCE | A TEMPORARY STRUCTURE USED TO SLOW THE VELOCITY OF RUN-OFF, CAUSE SEDIMENT DEPOSITION AT THE STRUCTURE, AND FILTER SEDIMENT FROM RUN-OFF. |
| $SF_D$ | DOUBLE ROW SILT FENCE | A TEMPORARY STRUCTURE USED TO SLOW THE VELOCITY OF RUN-OFF, CAUSE SEDIMENT DEPOSITION AT THE STRUCTURE, AND FILTER SEDIMENT FROM RUN-OFF. |
| CL | CONSTRUCTION LIMITS | A DEFINED AREA THAT ALL LAND DISTURBANCE WILL OCCUR DURING CONSTRUCTION. |
| ECB | PERMANENT EROSION CONTROL MATTING (HIGH PERFORMANCE TRM PYRAMAT BY SI GEOSOLUTIONS OR EQUAL) | A PERMANENT REINFORCEMENT MAT TO PREVENT SOIL EROSION AND MAINTAIN PERMANENT GROUND COVER. |
| Ds3 | DISTURBED AREA STABILIZATION (WITH TEMPORARY VEGETATION) | ESTABLISHING PERMANENT VEGETATIVE COVER SUCH AS TREES, SHRUBS, VINES, GRASSES, SOD, OR LEGUMES ON DISTURBED AREAS. |
| ST | SEDIMENT TUBE | SEDIMENT TUBE PLACED IN EXISTING OR PROPOSED DITCH SECTIONS TO REDUCE THE VELOCITY OF FLOW, EROSION AND STABILIZE GRADES DOWN STREAM OR DRAINAGE OUTLETS. |

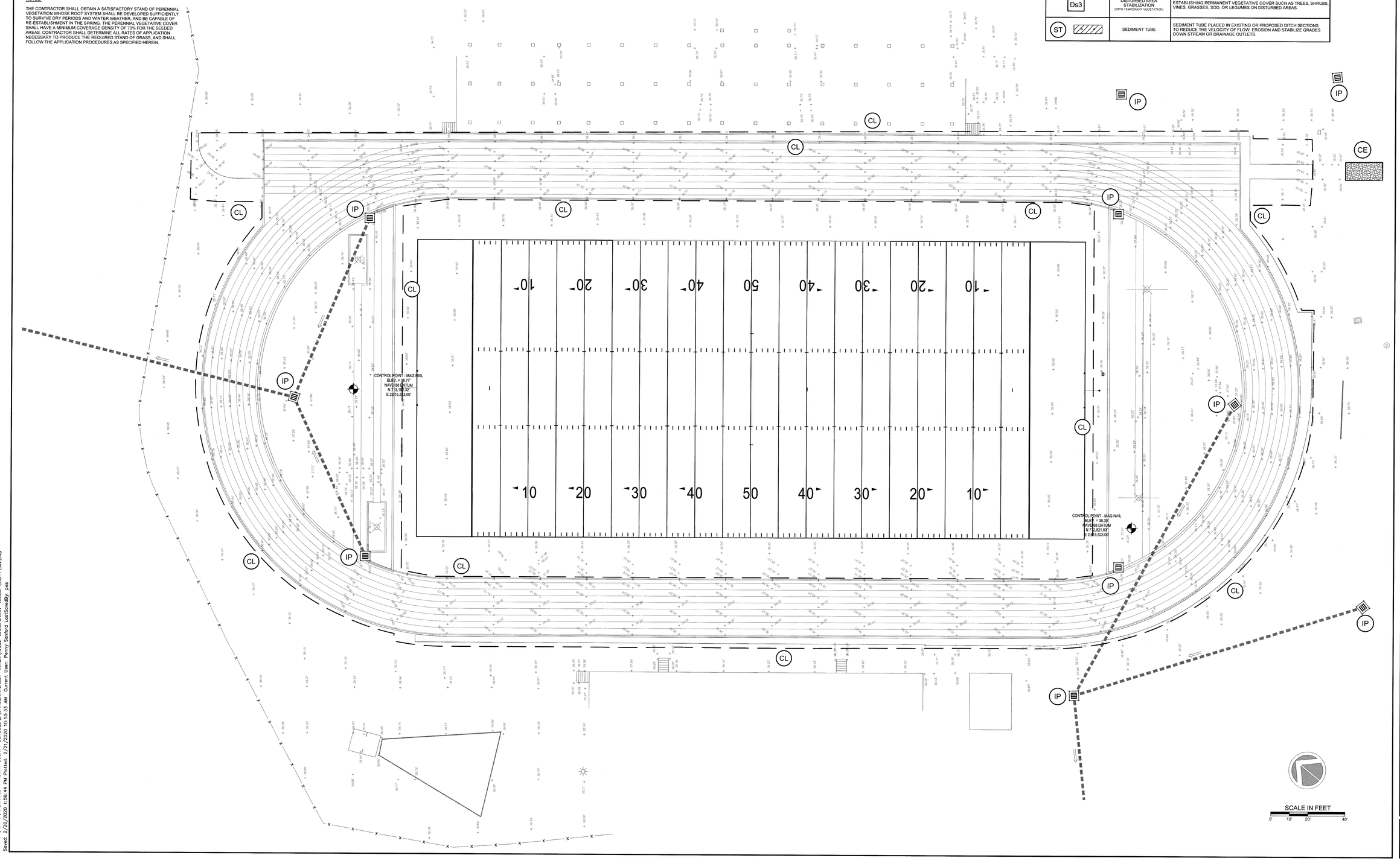


File: J:\PLANS\19\19062E - HORRY COUNTY SCHOOLS\E\CAROLINAFOREST-TRACK\19062-CAROFOREST-TRACK-ERO-PLAN.DWG
Saved: 2/20/2020 1:56:14 PM PMOHAE Z:\2020 10:13:33 AM Current User: Penny Sanford LastSavedBy: pes

Drawing Copyright © 2016

CHA
1298 Professional Drive
Myrtle Beach, SC 29577-5806
843.692.3200 x34 - www.chacompanies.com

HCS
Horry County Schools

DDC
ENGINEERS®
Consulting Engineers, Surveyors, Planners, Landscape Architects & Environmentalists
1298 Professional Dr., Myrtle Beach, SC 29577
Phone: (843) 692-3200 Fax: (843) 692-3210

HORRY COUNTY SCHOOLS

OFFICE OF FACILITIES
1160 E. HIGHWAY 501
CONWAY, SC 29526

SOUTH CAROLINA DDC ENGINEERS, INC. No. C00036 CERTIFICATE OF AUTHORIZATION

SOUTH CAROLINA No. 29814 ERIC K. SANFORD

IT IS A VIOLATION OF LAW FOR ANY PERSON, UNLESS THEY ARE ACTING UNDER THE DIRECTION OF A LICENSED PROFESSIONAL ENGINEER, ARCHITECT, LANDSCAPE ARCHITECT OR LAND SURVEYOR, TO ALTER AN ITEM IN ANY WAY. IF AN ITEM BEARING THE STAMP OF A LICENSED PROFESSIONAL IS ALTERED, THE ALTERING ENGINEER, ARCHITECT, LANDSCAPE ARCHITECT OR LAND SURVEYOR SHALL STAMP THE DOCUMENT AND INCLUDE THE NOTATION "ALTERED BY" FOLLOWED BY THEIR SIGNATURE, THE DATE OF SUCH ALTERATION, AND A SPECIFIC DESCRIPTION OF THE ALTERATION.

CAROLINA FOREST
HIGH SCHOOL
TRACK AND FIELD
ATHLETIC FACILITY
IMPROVEMENTS PROGRAM

| No. | Submittal / Revision | App'd. | By | Date |
|---|---|---|---|---|
| | | | | |

SEDIMENT AND EROSION
CONTROL PLAN
PHASE II

| Designed By: | Drawn By: | Checked By: |
|---|---|---|
| EKS | PES | EKS |
| Issue Date: 1/31/20 | Project No: 19062E | Scale: 1" = 20' |

Drawing No.:
C-501

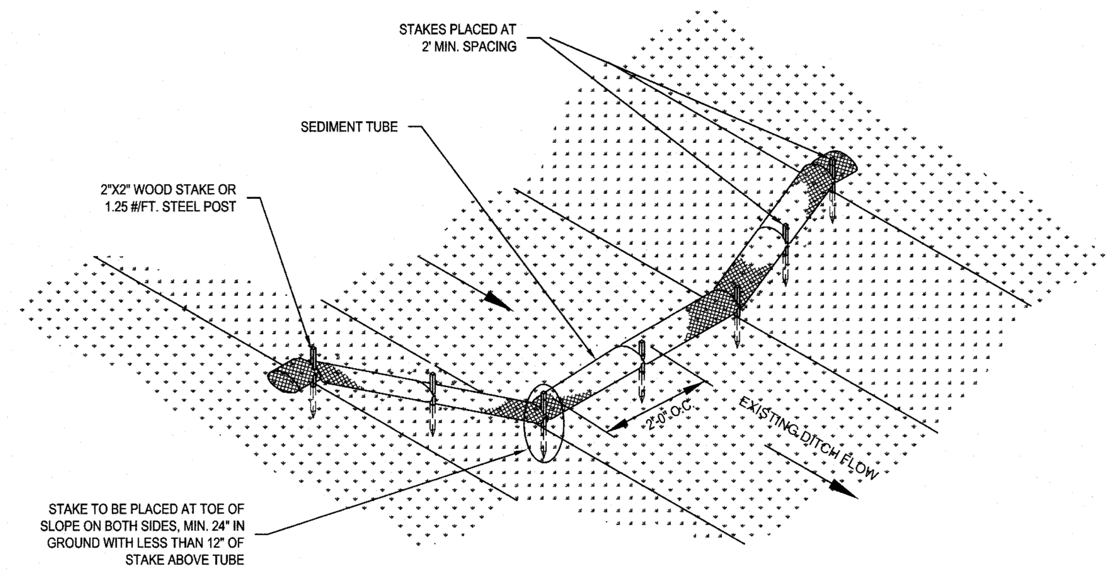


SEDIMENT TUBE CHECK DAM DETAIL (NO BLANKET)

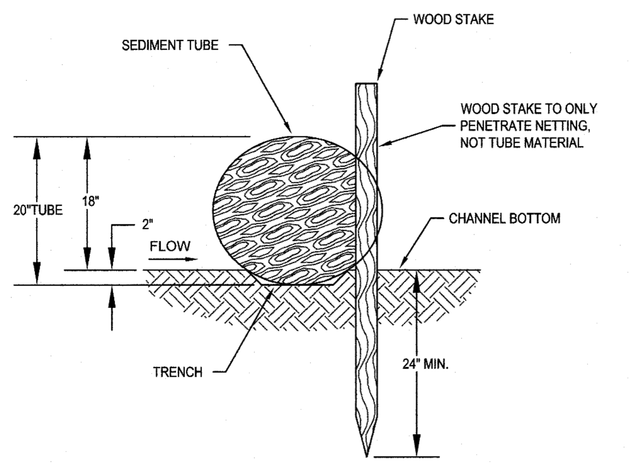


1 1/8" x 1 1/8" x 48" WOODEN STAKES ARE RECOMMENDED FOR 20" SEDIMENT LOGS.

STAKE DETAIL (WITH TRENCH)

## SEDIMENT TUBES - GENERAL NOTES

1. SEDIMENT TUBES MAY BE INSTALLED ALONG CONTOURS, IN DRAINAGE CONVEYANCE CHANNELS, AND AROUND INLETS TO HELP PREVENT OFF SITE DISCHARGE OF SEDIMENT LADEN STORM WATER RUNOFF.
2. SEDIMENT TUBES ARE ELONGATED TUBES OF COMPACTED GEOTEXTILES, CURLED EXCELSIOR WOOD, NATURAL COCONUT FIBER, OR HARDWOOD MULCH. STRAW, PINE NEEDLE AND LEAF MULCH FILLED SEDIMENT TUBES ARE NOT PERMITTED.
3. THE OUTER NETTING OF THE SEDIMENT TUBE SHOULD CONSIST OF SEAMLESS, HIGH DENSITY POLYETHYLENE PHOTODEGRADABLE MATERIALS TREATED WITH ULTRAVIOLET STABILIZERS OR A SEAMLESS, HIGH DENSITY POLYETHYLENE NON DEGRADABLE MATERIAL.
4. SEDIMENT TUBES, WHEN USED AS CHECKS WITHIN CHANNELS, SHOULD RANGE BETWEEN 18 INCHES AND 24 INCHES DEPENDING ON CHANNEL DIMENSIONS. DIAMETERS OUTSIDE THIS RANGE MAY BE ALLOWED WHERE NECESSARY WHEN APPROVED.
5. CURLED EXCELSIOR WOOD, OR NATURAL COCONUT PRODUCTS THAT ARE ROLLED UP TO CREATE A SEDIMENT TUBE ARE NOT ALLOWED.
6. SEDIMENT TUBES SHOULD BE STAKED USING WOODEN STAKES ( 2" X 2" ) OR STEEL POSTS (STANDARD "U" OR "T" SECTIONS WITH A MINIMUM WEIGHT OF 1.25 POUNDS PER FOOT) AT A MINIMUM OF 48 INCHES IN LENGTH PLACED ON 2 FOOT CENTERS.
7. INSTALL ALL SEDIMENT TUBES TO ENSURE THAT NO GAPS EXIST BETWEEN THE SOIL AND THE BOTTOM OF THE TUBE. MANUFACTURER'S RECOMMENDATIONS SHOULD ALWAYS BE CONSULTED BEFORE INSTALLATION.
8. THE ENDS OF ADJACENT SEDIMENT TUBES SHOULD BE OVERLAPPED 6 INCHES TO PREVENT FLOW AND SEDIMENT FROM PASSING THROUGH THE FIELD JOINT.
9. SEDIMENT TUBES SHOULD NOT BE STACKED ON TOP OF ONE ANOTHER, UNLESS RECOMMENDED BY MANUFACTURER.
10. EACH SEDIMENT TUBE SHOULD BE INSTALLED IN A TRENCH WITH A DEPTH EQUAL TO 1/5 THE DIAMETER OF THE SEDIMENT TUBE.
11. SEDIMENT TUBES SHOULD CONTINUE UP THE SIDE SLOPES A MINIMUM OF 1 FOOT ABOVE THE DESIGN FLOW DEPTH OF THE CHANNEL.
12. INSTALL STAKES AT A DIAGONAL FACING INCOMING RUNOFF.

## SEDIMENT TUBES - INSPECTION & MAINTENANCE

1. THE KEY TO FUNCTIONAL SEDIMENT TUBES IS WEEKLY INSPECTIONS, ROUTINE MAINTENANCE AND REGULAR SEDIMENT REMOVAL.
2. REGULAR INSPECTIONS OF SEDIMENT TUBES SHALL BE CONDUCTED ONCE EVERY CALENDAR WEEK AND, AS RECOMMENDED, WITHIN 24 HOURS AFTER EACH RAINFALL EVEN THAT PRODUCES 1/2 INCH OR MORE OF PRECIPITATION.
3. ATTENTION TO SEDIMENT ACCUMULATIONS IN FRONT OF THE SEDIMENT TUBE IS EXTREMELY IMPORTANT. ACCUMULATED SEDIMENT SHOULD BE CONTINUALLY MONITORED AND REMOVED WHEN NECESSARY.
4. REMOVE ACCUMULATED SEDIMENT WHEN IT REACHES 1/3 THE HEIGHT OF THE SEDIMENT TUBE.
5. REMOVED SEDIMENT SHALL BE PLACED IN STOCKPILE STORAGE AREAS OR SPREAD THINLY ACROSS DISTURBED AREA. STABILIZE THE REMOVED SEDIMENT AFTER IT IS RELOCATED.
6. LARGE DEBRIS, TRASH AND LEAVES SHOULD BE REMOVED FROM IN FRONT OF TUBES WHEN FOUND.
7. IF EROSION CAUSES THE EDGES TO FALL TO A HEIGHT EQUAL TO OR BELOW THE HEIGHT OF THE SEDIMENT TUBE, REPAIRS SHOULD BE MADE IMMEDIATELY TO PREVENT RUNOFF FROM BYPASSING TUBE.
8. SEDIMENT TUBES SHOULD BE REMOVED AFTER THE CONTRIBUTING DRAINAGE AREA HAS BEEN COMPLETELY STABILIZED. PERMANENT VEGETATION SHOULD REPLACE AREAS FROM WHICH SEDIMENT TUBES HAVE BEEN REMOVED.

## SEDIMENT TUBE SPACING

| SLOPE | MAX. SEDIMENT TUBE SPACING |
|---|---|
| LESS THAN 2% | 150-FEET |
| 2% | 100-FEET |
| 3% | 75-FEET |
| 4% | 50-FEET |
| 5% | 40-FEET |
| 6% | 30-FEET |
| GREATER THAN 6% | 25-FEET |

(ST) SEDIMENT TUBE DETAIL
SCALE: N.T.S.

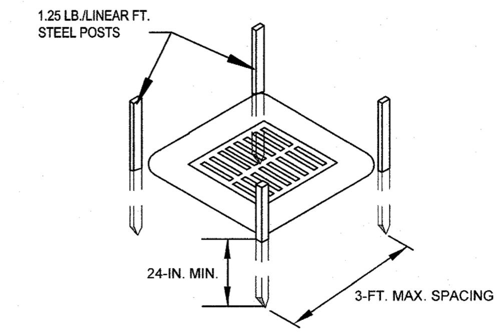


POST INSTALLATION DETAIL

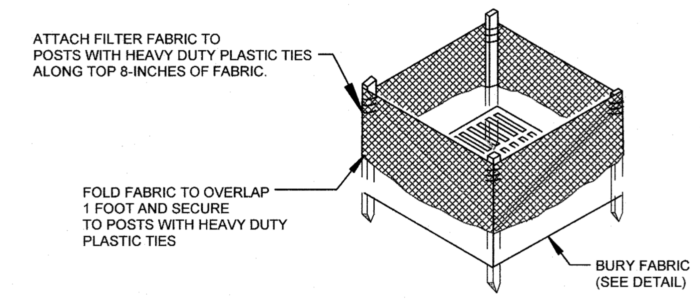


FILTER FABRIC INSTALLATION DETAIL

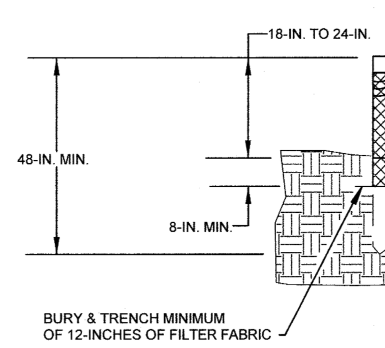


FILTER FABRIC BURIAL DETAIL

## TYPE A - POST REQUIREMENTS

1. SILT FENCE POSTS MUST BE 48 INCH LONG STEEL POSTS THAT MEET, AT A MINIMUM, THE FOLLOWING PHYSICAL CHARACTERISTICS.
   - COMPOSED OF A HIGH STRENGTH STEEL WITH A MINIMUM YIELD STRENGTH OF 50,000 PSI.
   - INCLUDE A STANDARD "T" SECTION WITH A NOMINAL FACE WIDTH OF 1.38 INCHES AND A NOMINAL "T" LENGTH OF 1.48 INCHES.
   - WEIGH 1.25 POUNDS PER FOOT (±8%).
2. POSTS SHALL BE EQUIPPED WITH PROJECTIONS TO AID IN FASTENING OF FILTER FABRIC.
3. INSTALL POSTS TO A MINIMUM OF 24 INCHES. A MINIMUM HEIGHT OF 1 TO 2 INCHES ABOVE THE FABRIC SHALL BE MAINTAINED, AND A MAXIMUM HEIGHT OF 3 FEET SHALL BE MAINTAINED ABOVE THE GROUND.
4. POST SPACING SHALL BE AT A MAXIMUM OF 3 FEET ON CENTER.

## TYPE A - FILTER FABRIC REQUIREMENTS

1. SILT FENCE MUST BE COMPOSED OF WOVEN GEOTEXTILE FILTER FABRIC THAT CONSISTS OF THE FOLLOWING REQUIREMENTS:
   - COMPOSED OF FIBERS CONSISTING OF LONG CHAIN SYNTHETIC POLYMERS OF AT LEAST 85% BY WEIGHT OF POLYOLEFINS, POLYESTERS OR POLYAMIDES THAT ARE FORMED INTO A NETWORK SUCH THAT THE FILAMENTS OR YARNS RETAIN DIMENSIONAL STABILITY RELATIVE TO EACH OTHER;
   - FREE OF ANY TREATMENT OR COATING WHICH MIGHT ADVERSELY ALTER ITS PHYSICAL PROPERTIES AFTER INSTALLATION;
   - FREE OF ANY DEFECTS OR FLAWS THAT SIGNIFICANTLY AFFECT ITS PHYSICAL AND/OR FILTERING PROPERTIES; AND,
   - HAVE A MINIMUM WIDTH OF 36 INCHES.
2. USE ONLY FABRIC APPEARING ON SC DOT'S QUALIFIED PRODUCTS LISTING (QPL), APPROVAL SHEET #34 MEETING THE REQUIREMENTS OF THE MOST CURRENT EDITION OF THE SC DOT STANDARD SPECIFICATIONS FOR HIGHWAY CONSTRUCTION.
3. 12 INCHES OF THE FABRIC SHOULD BE PLACED WITHIN EXCAVATED TRENCH AND TOED IN WHEN THE TRENCH IS BACKFILLED.
4. FILTER FABRIC SHALL BE PURCHASED IN CONTINUOUS ROLLS AND CUT TO THE LENGTH OF THE BARRIER TO AVOID JOINTS.
5. FILTER FABRIC SHALL BE INSTALLED AT A MINIMUM OF 24 INCHES ABOVE THE GROUND.

## TYPE A - INSPECTION & MAINTENANCE

1. THE KEY TO FUNCTIONAL INLET PROTECTION IS WEEKLY INSPECTIONS, ROUTINE MAINTENANCE AND REGULAR SEDIMENT REMOVAL.
2. REGULAR INSPECTIONS OF INLET PROTECTION SHALL BE CONDUCTED ONCE EVERY CALENDAR WEEK AND, AS RECOMMENDED, WITHIN 24 HOURS AFTER EACH RAINFALL EVEN THAT PRODUCES 1/2 INCH OR MORE OF PRECIPITATION.
3. ATTENTION TO SEDIMENT ACCUMULATIONS ALONG THE FILTER FABRIC IS EXTREMELY IMPORTANT. ACCUMULATED SEDIMENT SHOULD BE CONTINUALLY MONITORED AND REMOVED WHEN NECESSARY.
4. REMOVE ACCUMULATED SEDIMENT WHEN IT REACHES 1/3 THE HEIGHT OF THE FILTER FABRIC. WHEN A SUMP IS INSTALLED IN FRONT OF THE FABRIC, SEDIMENT SHOULD BE REMOVED WHEN IT FILLS APPROXIMATELY 1/3 THE DEPTH OF THE SUMP.
5. REMOVED SEDIMENT SHALL BE PLACED IN STOCKPILE STORAGE AREAS OR SPREAD THINLY ACROSS DISTURBED AREA. STABILIZE THE REMOVED SEDIMENT AFTER IT IS RELOCATED.
6. CHECK FOR AREAS WHERE STORM WATER RUNOFF HAS ERODED A CHANNEL BENEATH THE FILTER FABRIC, BENEATH THE FILTER FABRIC, OR WHERE THE FABRIC HAS SAGGED OR COLLAPSED DUE TO RUNOFF OVERTOPPING THE INLET PROTECTION.
7. CHECK FOR TEARS WITHIN THE FILTER FABRIC, AREAS WHERE FABRIC HAS BEGUN TO DECOMPOSE, AND FOR ANY OTHER CIRCUMSTANCE THAT MAY RENDER THE INLET PROTECTION INEFFECTIVE. REMOVE DAMAGED FABRIC AND REINSTALL NEW FILTER FABRIC IMMEDIATELY.
8. INLET PROTECTION STRUCTURES SHOULD BE REMOVED AFTER ALL THE DISTURBED AREAS ARE PERMANENTLY STABILIZED. REMOVE ALL CONSTRUCTION MATERIAL AND SEDIMENT, AND DISPOSE OF THEM PROPERLY. GRADE THE DISTURBED AREA TO THE ELEVATION OF THE DROP INLET STRUCTURE CREST. STABILIZE ALL BARE AREAS IMMEDIATELY.

(IP) INLET PROTECTION
SCALE: N.T.S.

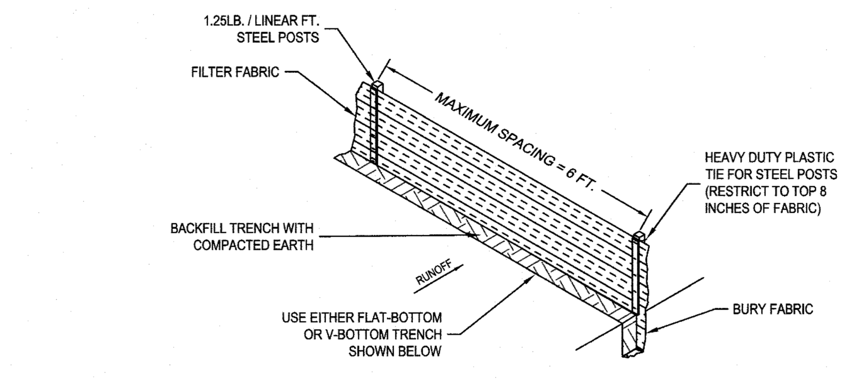


SILT FENCE INSTALLATION

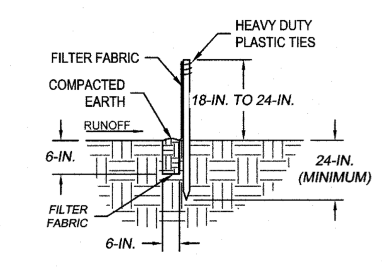


FLAT-BOTTOM TRENCH DETAIL

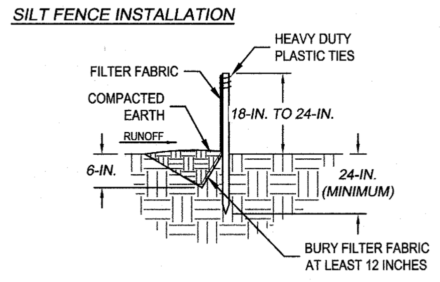


V-SHAPED TRENCH DETAIL

## SILT FENCE - GENERAL NOTES:

1. DO NOT PLACE SILT FENCE ACROSS CHANNELS OR IN OTHER AREAS SUBJECT TO CONCENTRATED FLOWS. SILT FENCE SHOULD NOT BE USED AS A VELOCITY CONTROL BMP. CONCENTRATED FLOWS ARE ANY FLOWS GREATER THAN 0.5 CFS.
2. MAXIMUM SHEET OR OVERLAND FLOW PATH LENGTH TO THE SILT FENCE SHALL BE 100 FEET.
3. MAXIMUM SLOPE STEEPNESS (NORMAL [PERPENDICULAR] TO THE FENCE LINE) SHALL BE 2:1.
4. SILT FENCE JOINTS, WHEN NECESSARY SHALL BE COMPLETED BY ONE OF THE FOLLOWING OPTIONS:
   - WRAP EACH FABRIC TOGETHER AT A SUPPORT POST WITH BOTH ENDS FASTENED TO THE POST, WITH A 1 FOOT MINIMUM OVERLAP.
   - OVERLAP SILT FENCE BY INSTALLING 3 FEET PAST THE SUPPORT POST TO WHICH THE NEW SILT FENCE ROLL IS ATTACHED. ATTACH OLD ROLL TO NEW ROLL WITH HEAVY DUTY PLASTIC TIES; OR
   - OVERLAP ENTIRE WIDTH OF EACH SILT FENCE ROLL FROM ONE SUPPORT POST TO THE NEXT SUPPORT POST.
5. ATTACH FILTER FABRIC TO THE STEEL POSTS USING HEAVY DUTY PLASTIC TIES THAT ARE EVENLY SPACED WITHIN THE TOP 8 INCHES OF THE FABRIC.
6. INSTALL THE SILT FENCE PERPENDICULAR TO THE DIRECTION OF THE STORM WATER FLOW AND PLACE THE SILT FENCE THE PROPER DISTANCE FROM THE TOE OF STEEP SLOPES TO PROVIDE SEDIMENT STORAGE AND ACCESS FOR MAINTENANCE AND CLEAN OUT.
7. INSTALL SILT FENCE CHECKS (TIE-BACKS) EVERY 50-100 FEET, DEPENDENT ON SLOPE, ALONG SILT FENCE THAT IS INSTALLED WITH SLOPE AND WHERE CONCENTRATED FLOWS ARE EXPECTED OR ARE DOCUMENTED ALONG THE PROPOSED / INSTALLED SILT FENCE.

## SILT FENCE - POST REQUIREMENTS

1. SILT FENCE POSTS MUST BE 48 INCH LONG STEEL POSTS THAT MEET, AT A MINIMUM, THE FOLLOWING PHYSICAL CHARACTERISTICS.
   - COMPOSED OF A HIGH STRENGTH STEEL WITH A MINIMUM YIELD STRENGTH OF 50,000 PSI.
   - INCLUDE A STANDARD "T" SECTION WITH A NOMINAL FACE WIDTH OF 1.38 INCHES AND A NOMINAL "T" LENGTH OF 1.48 INCHES.
   - WEIGH 1.25 POUNDS PER FOOT (±8%).
2. POSTS SHALL BE EQUIPPED WITH PROJECTIONS TO AID IN FASTENING OF FILTER FABRIC.
3. STEEL POSTS MAY NEED TO HAVE A METAL SOIL STABILIZATION PLATE WELDED NEAR THE BOTTOM WHEN INSTALLED ALONG STEEP SLOPES OR INSTALLED IN LOOSE SOILS. THE PLATE SHOULD HAVE A MINIMUM CROSS SECTION OF 17 SQUARE INCHES AND BE COMPOSED OF 15 GAUGE STEEL, AT A MINIMUM. THE METAL SOIL STABILIZATION PLATE SHOULD BE COMPLETELY BURIED.
4. INSTALL POSTS A MINIMUM OF 24 INCHES. A MINIMUM HEIGHT OF 1 TO 2 INCHES ABOVE THE FABRIC SHALL BE MAINTAINED, AND A MAXIMUM HEIGHT OF 3 FEET SHALL BE MAINTAINED ABOVE THE GROUND.
5. POST SPACING SHALL BE AT A MAXIMUM OF 6 FEET ON CENTER.

## SILT FENCE - FABRIC REQUIREMENTS

1. SILT FENCE MUST BE COMPOSED OF WOVEN GEOTEXTILE FILTER FABRIC THAT CONSISTS OF THE FOLLOWING REQUIREMENTS:
   - COMPOSED OF FIBERS CONSISTING OF LONG CHAIN SYNTHETIC POLYMERS OF AT LEAST 85% BY WEIGHT OF POLYOLEFINS, POLYESTERS OR POLYAMIDES THAT ARE FORMED INTO A NETWORK SUCH THAT THE FILAMENTS OR YARNS RETAIN DIMENSIONAL STABILITY RELATIVE TO EACH OTHER;
   - FREE OF ANY TREATMENT OR COATING WHICH MIGHT ADVERSELY ALTER ITS PHYSICAL PROPERTIES AFTER INSTALLATION;
   - FREE OF ANY DEFECTS OR FLAWS THAT SIGNIFICANTLY AFFECT ITS PHYSICAL AND/OR FILTERING PROPERTIES; AND,
   - HAVE A MINIMUM WIDTH OF 36 INCHES.
2. USE ONLY FABRIC APPEARING ON SC DOT'S QUALIFIED PRODUCTS LISTING (QPL), APPROVAL SHEET #34 MEETING THE REQUIREMENTS OF THE MOST CURRENT EDITION OF THE SC DOT STANDARD SPECIFICATIONS FOR HIGHWAY CONSTRUCTION.
3. 12 INCHES OF THE FABRIC SHOULD BE PLACED WITHIN EXCAVATED TRENCH AND TOED IN WHEN THE TRENCH IS BACKFILLED.
4. FILTER FABRIC SHALL BE PURCHASED IN CONTINUOUS ROLLS AND CUT TO THE LENGTH OF THE BARRIER TO AVOID JOINTS.
5. FILTER FABRIC SHALL BE INSTALLED AT A MINIMUM OF 24 INCHES ABOVE THE GROUND.

## SILT FENCE - INSPECTION & MAINTENANCE

1. THE KEY TO FUNCTIONAL SILT FENCE IS WEEKLY INSPECTIONS, ROUTINE MAINTENANCE AND REGULAR SEDIMENT REMOVAL.
2. REGULAR INSPECTIONS OF SILT FENCE SHALL BE CONDUCTED ONCE EVERY CALENDAR WEEK AND, AS RECOMMENDED, WITHIN 24 HOURS AFTER EACH RAINFALL EVEN THAT PRODUCES 1/2 INCH OR MORE OF PRECIPITATION.
3. ATTENTION TO SEDIMENT ACCUMULATIONS ALONG THE SILT FENCE IS EXTREMELY IMPORTANT. ACCUMULATED SEDIMENT SHOULD BE CONTINUALLY MONITORED AND REMOVED WHEN NECESSARY.
4. REMOVE ACCUMULATED SEDIMENT WHEN IT REACHES 1/3 THE HEIGHT OF THE SILT FENCE.
5. REMOVED SEDIMENT SHALL BE PLACED IN STOCKPILE STORAGE AREAS OR SPREAD THINLY ACROSS DISTURBED AREA. STABILIZE THE REMOVED SEDIMENT AFTER IT IS RELOCATED.
6. CHECK FOR AREAS WHERE STORM WATER RUNOFF HAS ERODED A CHANNEL BENEATH THE SILT FENCE, OR WHERE THE FENCE HAS SAGGED OR COLLAPSED DUE TO RUNOFF OVERTOPPING THE SILT FENCE. INSTALL CHECKS/TIE-BACKS AND/OR REINSTALL SILT FENCE, AS NECESSARY.
7. CHECK FOR TEARS WITHIN THE SILT FENCE, AREAS WHERE SILT FENCE HAS BEGUN TO DECOMPOSE, AND FOR ANY OTHER CIRCUMSTANCE THAT MAY RENDER THE SILT FENCE INEFFECTIVE. REMOVE DAMAGED SILT FENCE AND REINSTALL NEW SILT FENCE IMMEDIATELY.
8. SILT FENCE SHOULD BE REMOVED WITHIN 30 DAYS AFTER FINAL STABILIZATION IS ACHIEVED AND ONCE IT IS REMOVED, THE RESULTING DISTURBED AREA SHALL BE PERMANENTLY STABILIZED.

(SF) CONSTRUCTION OF A SILT FENCE
SCALE: N.T.S.

## EROSION CONTROL NOTES:

1. TOTAL DEVELOPMENT AREA : 3.90 ± ACRES
2. DISTURBED AREA THIS PHASE: 1.16 ± ACRES
3. IF NECESSARY, SLOPES, WHICH EXCEED EIGHT (8) VERTICAL FEET SHOULD BE STABILIZED WITH SYNTHETIC OR VEGETATIVE MATS, IN ADDITION TO HYDROSEEDING. IT MAY BE NECESSARY TO INSTALL TEMPORARY SLOPE DRAINS DURING CONSTRUCTION. TEMPORARY BERMS MAY BE NEEDED UNTIL THE SLOPE IS BROUGHT TO GRADE.
4. STABILIZATION MEASURES SHALL BE INITIATED AS SOON AS PRACTICABLE IN PORTIONS OF THE SITE WHERE CONSTRUCTION ACTIVITIES HAVE TEMPORARILY OR PERMANENTLY CEASED, BUT IN NO CASE MORE THAN FOURTEEN (14) DAYS AFTER WORK HAS CEASED, EXCEPT AS STATED BELOW:
   - WHERE STABILIZATION BY THE 14TH DAY IS PRECLUDED BY SNOW COVER OR FROZEN GROUND CONDITIONS STABILIZATION MEASURES MUST BE INITIATED AS SOON AS PRACTICABLE.
   - WHERE CONSTRUCTION ACTIVITY ON A PORTION OF THE SITE IS TEMPORARILY CEASED, AND EARTH-DISTURBING ACTIVITIES WILL BE RESUMED WITHIN 14 DAYS, TEMPORARY STABILIZATION MEASURES DO NOT HAVE TO BE INITIATED ON THAT PORTION OF THE SITE.
5. ALL SEDIMENT AND EROSION CONTROL DEVICES SHALL BE INSPECTED EVERY CALENDAR WEEK. IF PERIODIC INSPECTION OR OTHER INFORMATION INDICATES THAT A BMP HAS BEEN INAPPROPRIATELY OR INCORRECTLY INSTALLED, THE PERMITTEE MUST ADDRESS THE NECESSARY REPLACEMENT OR MODIFICATION REQUIRED TO CORRECT THE BMP WITHIN 48 HOURS OF IDENTIFICATION.
6. PROVIDE SILT FENCE AND/OR OTHER CONTROL DEVICES, AS MAY BE REQUIRED, TO CONTROL SOIL EROSION DURING UTILITY CONSTRUCTION. ALL DISTURBED AREAS SHALL BE CLEANED, GRADED AND STABILIZED WITH GRASSING IMMEDIATELY AFTER THE UTILITY INSTALLATION. FILL, COVER AND TEMPORARY SEEDING AT THE END OF EACH DAY ARE RECOMMENDED. IF WATER IS ENCOUNTERED WHILE TRENCHING, THE WATER SHOULD BE FILTERED TO REMOVE ANY SEDIMENTS BEFORE BEING PUMPED BACK INTO ANY WATERS OF THE STATE.
7. ALL EROSION CONTROL DEVICES SHALL BE PROPERLY MAINTAINED DURING ALL PHASES OF CONSTRUCTION UNTIL THE COMPLETION OF ALL CONSTRUCTION ACTIVITIES AND ALL DISTURBED AREAS HAVE BEEN STABILIZED. ADDITIONAL CONTROL DEVICES MAY BE REQUIRED DURING CONSTRUCTION IN ORDER TO CONTROL EROSION AND/OR OFF SITE SEDIMENTATION. ALL TEMPORARY CONTROL DEVICES SHALL BE REMOVED ONCE CONSTRUCTION IS COMPLETE AND THE SITE IS STABILIZED.
8. THE CONTRACTOR MUST TAKE NECESSARY ACTION TO MINIMIZE THE TRACKING OF MUD ONTO PAVED ROADWAYS FROM CONSTRUCTION AREAS AND THE GENERATION OF DUST. THE CONTRACTOR SHALL DAILY REMOVE MUD/SOIL FROM PAVEMENT, AS MAY BE REQUIRED.
9. RESIDENTIAL SUBDIVISIONS REQUIRE EROSION CONTROL FEATURES FOR INFRASTRUCTURE AS WELL AS FOR INDIVIDUAL LOT CONSTRUCTION. INDIVIDUAL PROPERTY OWNERS SHALL FOLLOW THESE PLANS DURING CONSTRUCTION OR OBTAIN APPROVAL OF AN INDIVIDUAL PLAN IN ACCORDANCE WITH S.C. REG. 72-300 ET SEQ. AND SCR 100000.
10. TEMPORARY DIVERSION BERMS AND/OR DITCHES WILL BE PROVIDED AS NEEDED DURING CONSTRUCTION TO PROTECT WORK AREAS FROM UPSLOPE RUNOFF AND/OR TO DIVERT SEDIMENT-LADEN WATER TO APPROPRIATE TRAPS OR STABLE OUTLETS.
11. ALL WATERS OF THE STATE (WoS), INCLUDING WETLANDS, ARE TO BE FLAGGED OR OTHERWISE CLEARLY MARKED IN THE FIELD. A DOUBLE ROW OF SILT FENCE IS TO BE INSTALLED IN ALL AREAS WHERE A 50 FOOT BUFFER CANNOT BE MAINTAINED BETWEEN THE DISTURBED AREA AND ALL WoS. A 10 FOOT BUFFER SHOULD BE MAINTAINED BETWEEN THE LAST ROW OF SILT FENCE AND ALL WoS.
12. LITTER, CONSTRUCTION DEBRIS, OILS, FUELS AND BUILDING PRODUCTS WITH SIGNIFICANT POTENTIAL FOR IMPACT (SUCH AS STOCKPILES OF FRESHLY TREATED LUMBER) AND CONSTRUCTION CHEMICALS THAT COULD BE EXPOSED TO STORM WATER MUST BE PREVENTED FROM BECOMING A POLLUTANT SOURCE IN STORM WATER DISCHARGES.
13. A COPY OF THE SWPPP, INSPECTION RECORDS, AND RAINFALL DATA MUST BE RETAINED AT THE CONSTRUCTION SITE OR A NEARBY LOCATION EASILY ACCESSIBLE DURING NORMAL BUSINESS HOURS, FROM THE DATE OF COMMENCEMENT OF CONSTRUCTION ACTIVITIES TO THE DATE THAT FINAL STABILIZATION IS REACHED.
14. INITIATE STABILIZATION MEASURES ON ANY EXPOSED STEEP SLOPE (3H:1V OR GREATER) WHERE LAND DISTURBING ACTIVITIES HAVE PERMANENTLY OR TEMPORARILY CEASED, AND WILL NOT RESUME FOR A PERIOD OF 7 CALENDAR DAYS.
15. MINIMIZE SOIL COMPACTION AND, UNLESS INFEASIBLE, PRESERVE TOPSOIL.
16. MINIMIZE THE DISCHARGE OF POLLUTANTS FROM EQUIPMENT AND VEHICLE WASHING, WHEEL WASH WATER, AND OTHER WASH WATERS. WASH WATERS MUST BE TREATED IN A SEDIMENT BASIN OR ALTERNATIVE CONTROL THAT PROVIDES EQUIVALENT OR BETTER TREATMENT PRIOR TO DISCHARGE.
17. MINIMIZE THE DISCHARGE OF POLLUTANTS FROM DEWATERING OF TRENCHES AND EXCAVATED AREAS. THESE DISCHARGES ARE TO BE ROUTED THROUGH APPROPRIATE BMPs (SEDIMENT BASIN, FILTER BAG, ETC.).
18. THE FOLLOWING DISCHARGES FROM SITES ARE PROHIBITED:
   - WASTEWATER FROM WASHOUT OF CONCRETE, UNLESS MANAGED BY AN APPROPRIATE CONTROL;
   - WASTEWATER FROM WASHOUT AND CLEANOUT OF STUCCO, PAINT, FORM RELEASE OILS CURING COMPOUNDS AND OTHER CONSTRUCTION MATERIALS;
   - FUELS, OILS, OR OTHER POLLUTANTS USED IN VEHICLE AND EQUIPMENT OPERATION AND MAINTENANCE; AND
   - SOAPS OR SOLVENTS USED IN VEHICLE AND EQUIPMENT WASHING.
19. AFTER CONSTRUCTION ACTIVITIES BEGIN, INSPECTIONS MUST BE CONDUCTED AT A MINIMUM OF AT LEAST ONCE EVERY CALENDAR WEEK AND MUST BE CONDUCTED UNTIL FINAL STABILIZATION IS REACHED ON ALL AREAS OF THE CONSTRUCTION SITE.
20. IF EXISTING BMPs NEED TO BE MODIFIED OR IF ADDITIONAL BMPs ARE NECESSARY TO COMPLY WITH THE REQUIREMENTS OF THIS PERMIT AND / OR SC'S WATER QUALITY STANDARDS, IMPLEMENTATION MUST BE COMPLETED BEFORE THE NEXT STORM EVENT WHENEVER PRACTICABLE. IF IMPLEMENTATION BEFORE THE NEXT STORM EVENT IS IMPRACTICABLE, THE SITUATION MUST BE DOCUMENTED IN THE SWPPP AND ALTERNATIVE BMPs MUST BE IMPLEMENTED AS SOON AS REASONABLY POSSIBLE.
21. A PRE-CONSTRUCTION CONFERENCE MUST BE HELD FOR EACH CONSTRUCTION SITE WITH AN APPROVED ON-SITE SWPPP PRIOR TO THE IMPLEMENTATION OF CONSTRUCTION ACTIVITIES. FOR NON-LINEAR PROJECTS THAT DISTURB 10 ACRES OR MORE THIS CONFERENCE MUST BE HELD ON-SITE UNLESS THE DEPARTMENT HAS APPROVED OTHERWISE.
22. THE CONTRACTOR SHALL BE RESPONSIBLE FOR MAINTAINING ALL SILT BARRIERS AND SEDIMENT CONTROL INSTALLATIONS DURING CONSTRUCTION UNTIL THE COMPLETION OF THE SITE DEVELOPMENT.
23. EROSION CONTROL DEVICES MUST BE INSTALLED IMMEDIATELY AFTER LAND DISTURBANCE OCCURS. THE LOCATION OF SOME OF THE CONTROL DEVICES MAY BE ALTERED FROM THAT SHOWN ON THE APPROVED PLANS, IF DRAINAGE PATTERNS DURING CONSTRUCTION VARY FROM THE FINAL DRAINAGE PATTERNS. IT SHALL BE THE CONTRACTORS RESPONSIBILITY TO PROVIDE SOIL EROSION CONTROL FOR ALL DRAINAGE PATTERNS DURING ALL STAGES OF CONSTRUCTION. ALL INADEQUACIES IN SOIL EROSION CONTROL DURING ANY PHASE OF CONSTRUCTION MUST BE REPORTED IMMEDIATELY TO THE ENGINEER.
24. THE CONTRACTOR SHALL MAINTAIN ALL EROSION CONTROL MEASURES UNTIL PERMANENT VEGETATION HAS BEEN ESTABLISHED. THE CONTRACTOR SHALL INSPECT EROSION CONTROL MEASURES AT THE END OF EACH WORKING DAY TO ENSURE PROPER FUNCTIONING OF ALL DEVICES.
25. FAILURE TO INSTALL, OPERATE AND MAINTAIN ALL EROSION CONTROL MEASURES, AS SHOWN ON THE APPROVED PLANS OR AS DIRECTED BY THE ENGINEER AND/OR OCRM WILL RESULT IN ALL WORK ON THE CONSTRUCTION SITE BEING STOPPED UNTIL PROPER CORRECTIVE MEASURES HAVE BEEN MET, AS REQUIRED AND/OR DIRECTED.
26. ALL LAND DISTURBING ACTIVITIES REQUIRES COMPLIANCE UNDER THE NPDES GENERAL PERMIT FOR STORM WATER DISCHARGES FROM THE CONSTRUCTION ACTIVITIES (PERMIT NO. SCR100000). ANY NONCOMPLIANCE WITH THESE REGULATIONS IS A VIOLATION OF THE FEDERAL CLEAN WATER ACT AND MAY REQUIRE ENFORCEMENT ACTION BY HORRY COUNTY OR SCDHEC.
27. CONTRACTOR SHALL PROVIDE A WATER TIGHT ENCLOSURE FOR STORAGE OF THE OCRM CERTIFIED PLANS AND INSPECTION REPORTS. ENCLOSURE SHALL BE LOCATED IN AN AREA ACCESSIBLE TO REGULATORY PERSONNEL.
28. ALL STOCKPILE TO BE PROTECTED WITH SILT FENCE.
29. ALL CONCRETE TO BE WASHED OUT IN AN APPROVED AREA.

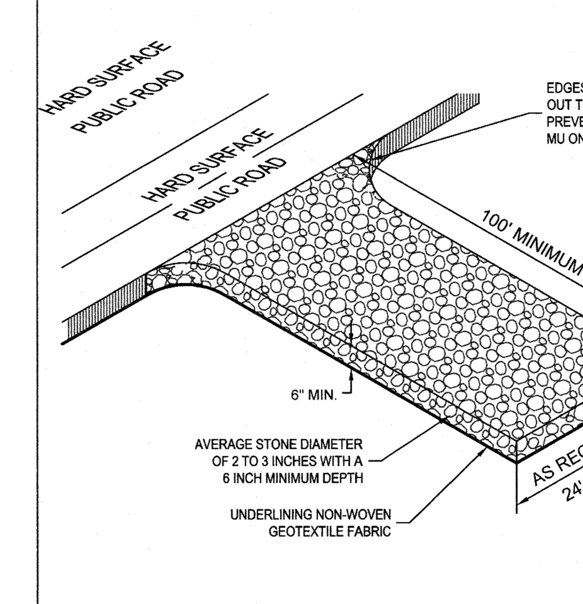


NOTE:

- INSTALL A CULVERT PIPE ACROSS THE ENTRANCE WHEN NEEDED TO PROVIDE POSITIVE DRAINAGE.
- DIVERT ALL SURFACE RUNOFF AND DRAINAGE FROM THE STONE PAD TO A SEDIMENT TRAP OR BASIN OR OTHER SEDIMENT TRAPPING STRUCTURE.
- ENTRANCES SHALL COMPLY WITH SCDOT STANDARD DRAWING 651-115-01

(CE) STABILIZIED CONSTRUCTION ENTRANCE
SCALE: N.T.S.

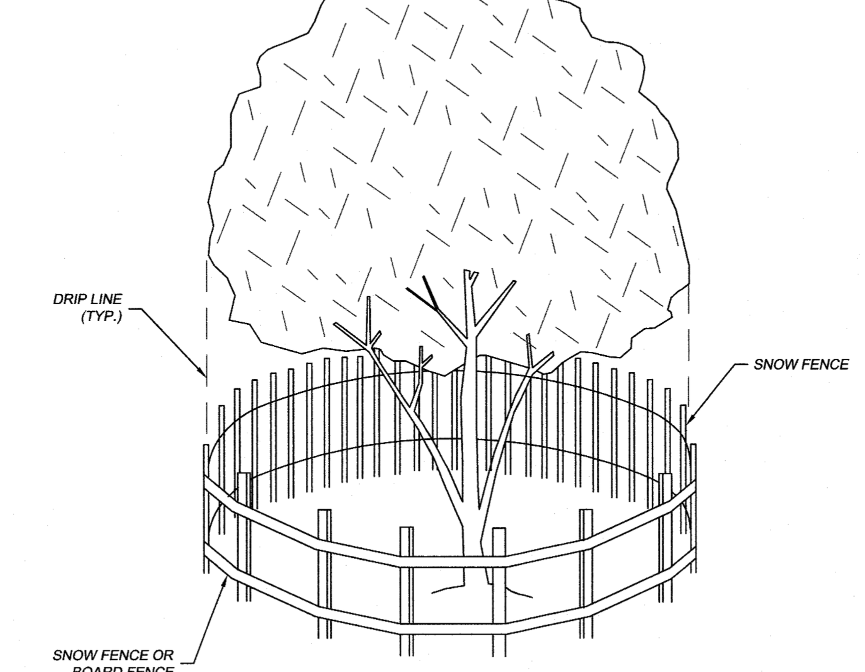


CORRECT METHODS OF TREE FENCING

TREE PROTECTION
SCALE: N.T.S.

Drawing Copyright © 2016

CHA
1298 Professional Drive
Myrtle Beach, SC 29577-5896
843.692.3205 x284 · www.chacompanies.com

HCS
Horry County Schools

DDC
ENGINEERS®
Consulting Engineers, Surveyors, Planners,
Landscape Architects & Environmentalists
1298 Professional Dr., Myrtle Beach, SC 29577
Phone: (843) 692-3200 Fax: (843) 692-3210

HORRY COUNTY SCHOOLS

OFFICE OF FACILITIES
1160 E. HIGHWAY 501
CONWAY, SC 29526

SOUTH CAROLINA
DDC ENGINEERS, INC.
No. C00036
CERTIFICATE OF AUTHORIZATION

SOUTH CAROLINA
LICENSED PROFESSIONAL ENGINEER
No. 29814
ERIC K. SANFORD

IT IS A VIOLATION OF LAW FOR ANY PERSON, UNLESS THEY ARE ACTING UNDER THE DIRECTION OF A LICENSED PROFESSIONAL ENGINEER, ARCHITECT, LANDSCAPE ARCHITECT OR LAND SURVEYOR TO ALTER AN ITEM IN ANY WAY. IF AN ITEM BEARING THE STAMP OF A LICENSED PROFESSIONAL IS ALTERED, THE ALTERING ENGINEER, ARCHITECT, LANDSCAPE ARCHITECT OR LAND SURVEYOR SHALL STAMP THE DOCUMENT AND INCLUDE THE NOTATION "ALTERED BY" FOLLOWED BY THEIR SIGNATURE, THE DATE OF SUCH ALTERATION, AND A SPECIFIC DESCRIPTION OF THE ALTERATION.

CAROLINA FOREST
HIGH SCHOOL
TRACK AND FIELD
ATHLETIC FACILITY
IMPROVEMENTS PROGRAM

| No. | Submittal / Revision | App'd. | By | Date |
|---|---|---|---|---|
| | | | | |

SEDIMENT AND EROSION CONTROL DETAILS

| Designed By: | Drawn By: | Checked By: |
|---|---|---|
| EKS | PES | EKS |
| Issue Date: | Project No: | Scale: |
| 1/31/20 | 19062E | NO SCALE |

Drawing No.:
C-502

File: J:\PLANS\19\19062E – HORRY COUNTY SCHOOLS\E\CAROLINAFOREST-TRACK\19062-CAROFOREST-TRACK-ERO-DETAILS.DWG
Saved: 2/20/2020 1:37:19 PM Plotted: 2/20/2020 1:41:07 PM Current User: Penny Sanford LastSavedBy: pes

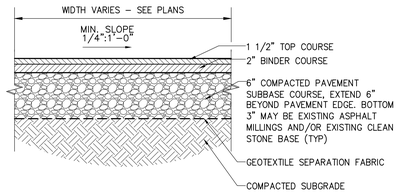


## 1 ASPHALT PAVEMENT
SCALE:

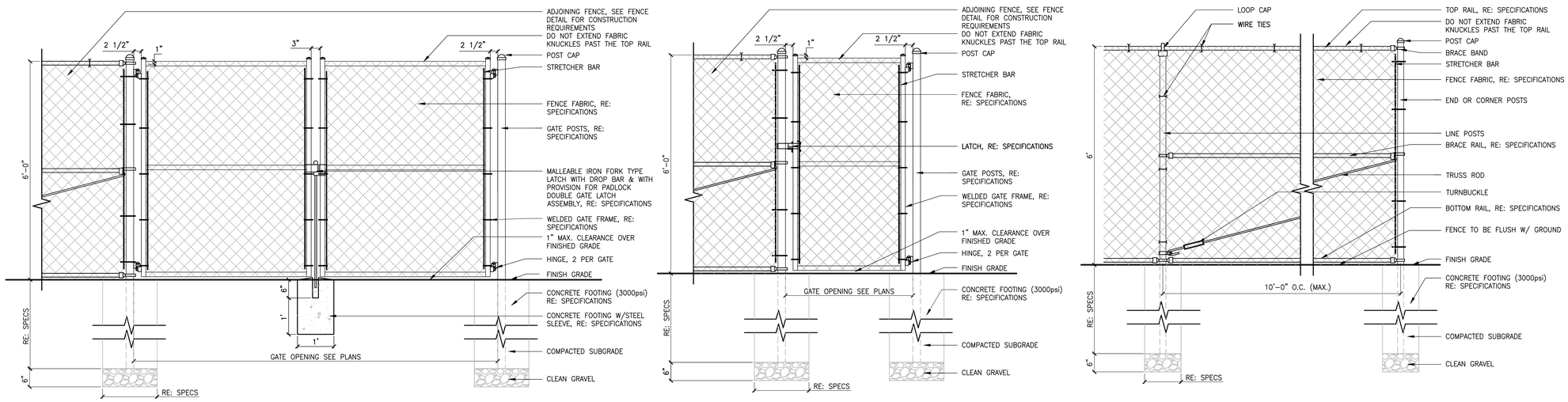


NOTES:
1. SEE SPECIFICATIONS FOR POST AND FENCE FRAME SIZING.
2. ALL POST FOOTINGS SHALL BE PER SPECIFICATIONS.
3. SEE SPECIFICATIONS FOR FENCE FINISH REQUIREMENTS.
4. HOLD DOWN TOP OF FOOTING BELOW WALK (TYP.).
5. ALL CHAIN LINK FENCING SHALL HAVE A CONTINUOUS BOTTOM RAIL, NO TENSION WIRE IS ALLOWED
6. ALL CHAIN LINK FENCING, POST RAILS AND MESH/FABRIC SHALL BE BLACK POLYMER COATED. CHAIN LINK GATE POSTS AND RAILS MAY BE POWDER COATED.

## 2 6' CHAIN LINK FENCE AND GATES DETAIL
SCALE:

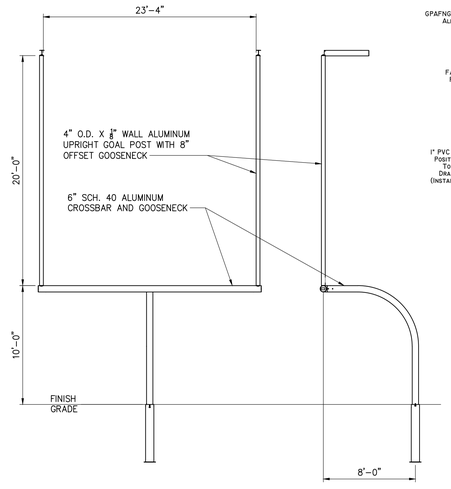


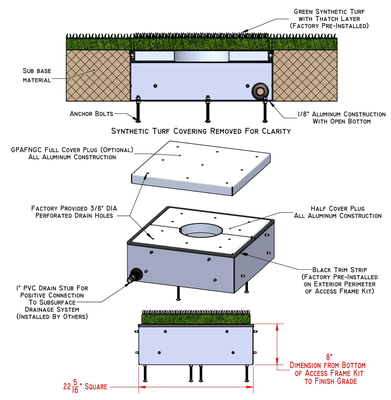


GOAL POST ACCESS FRAME KIT
GPAFNG (GP4570PW) BY SPORTSFIELD SPECIALTIES OR EQUAL

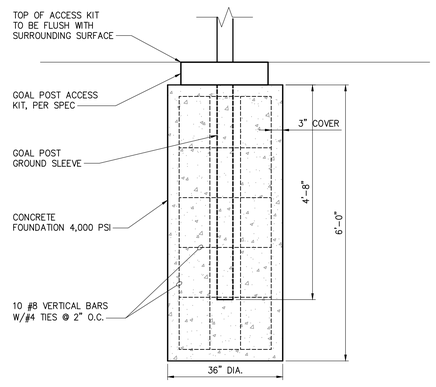


## 3 FOOTBALL GOAL POST AND FOUNDATION DETAIL
SCALE:

File: V:\PROJECTS\ANYVS\36108\CADD_ACAD\C-600_CFHS.DWG
Sheet: 2/21/2020 12:26:13 PM Plotted: 2/26/2020 10:01:54 AM Current User: Hetmer, Rose LastSavedBy: 5683

Drawing Copyright © 2019

CHA
1258 Professional Drive
Myrtle Beach, SC 29577-5896
843.692.3105 x284 • www.chacompanies.com

HCS Horry County Schools

DDC ENGINEERS

HORRY COUNTY SCHOOLS

OFFICE OF FACILITIES
1160 E. HIGHWAY 501
CONWAY, SC 29526

IT IS A VIOLATION OF LAW FOR ANY PERSON, UNLESS THEY ARE ACTING UNDER THE DIRECTION OF A LICENSED PROFESSIONAL ENGINEER, ARCHITECT, LANDSCAPE ARCHITECT OR LAND SURVEYOR, TO ALTER AN ITEM IN ANY WAY. IF AN ITEM BEARING THE STAMP OF A LICENSED PROFESSIONAL IS ALTERED, THE ALTERING ENGINEER, ARCHITECT, LANDSCAPE ARCHITECT OR LAND SURVEYOR SHALL ATTACH TO THE ITEM A DESCRIPTIVE ALTERATION NOTATION "ALTERED BY" FOLLOWED BY THEIR SIGNATURE, THE DATE OF SUCH ALTERATION, AND A SPECIFIC DESCRIPTION OF THE ALTERATION.

**CAROLINA FOREST HIGH SCHOOL**

TRACK AND FIELD ATHLETIC FACILITY IMPROVEMENTS PROGRAM

| No. | Submittal / Revision | App'd. | By | Date |
|---|---|---|---|---|
| | | | | |

TRACK AND FIELD DETAILS

| Designed By: | Drawn By: | Checked By: |
|---|---|---|
| JRP | RMH | PG |
| Issue Date: 02/21/2020 | Project No: 36108 | Scale: AS SHOWN |

Drawing No.:
**C-600**

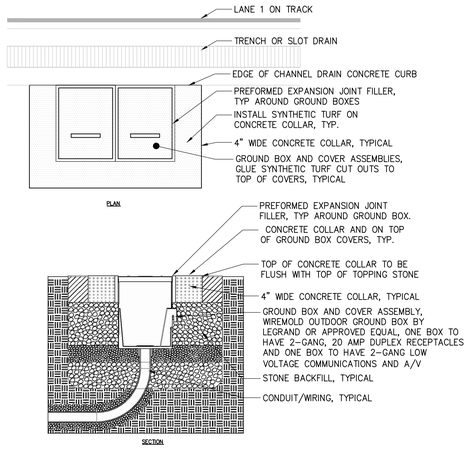


1 JUNCTION BOX – LAWN
SCALE:

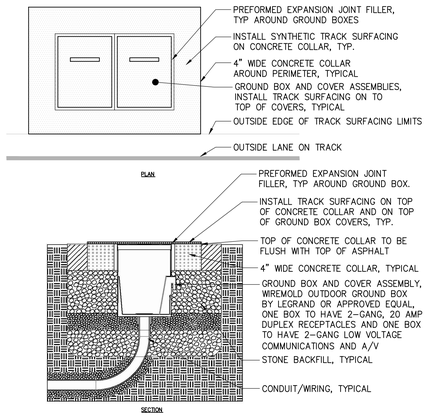


2 JUNCTION BOX – ASPHALT
SCALE:

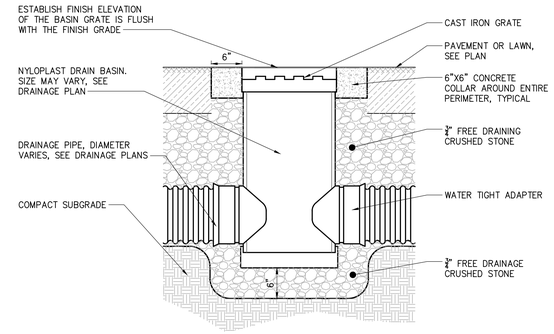


3 AREA DRAIN
SCALE:

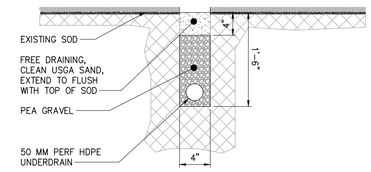


4 SAND SILT DRAINAGE DETAIL
SCALE:

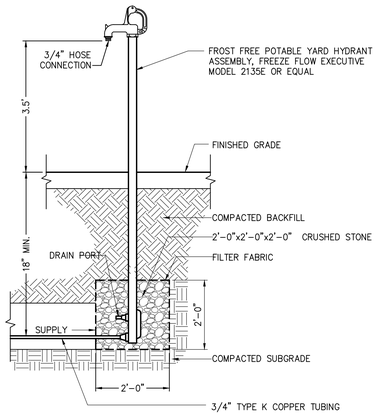


5 FROST FREE POTABLE YARD HYDRANT
SCALE:

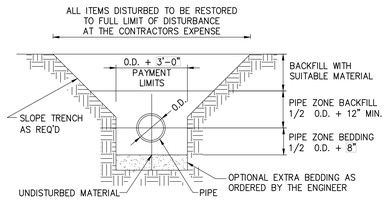


6 TYPICAL STORM TRENCH DETAIL
SCALE:

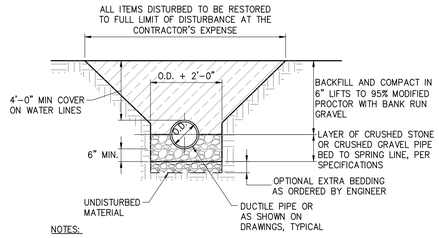


NOTES:

1. ALL BACKFILL MATERIAL COMPACTED IN 6" (MAX.) LIFTS TO 95% STANDARD PROCTOR DENSITY
2. OVEREXCAVATE AT BELLS TO PROVIDE 4" BEDDING BELOW BELLS
3. ALL TRENCH EXCAVATION SHALL MEET OSHA REQUIREMENTS AND ALL STATE AND LOCAL SAFETY REGULATIONS

7 TYPICAL WATER PIPE TRENCH DETAIL
SCALE:

NOTE:

1. PROVIDE LOCATION PINS IN OUTSIDE CONCRETE CURBS AT 4 POINTS OF CURVATURE (PC'S) AND APEX OF BOTH TURNS

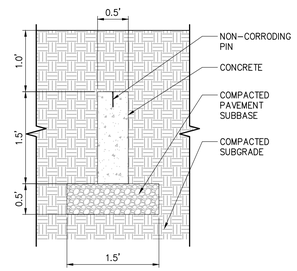


8 TRACK RADIUS MOMUNMENT POINT DETAIL
SCALE:

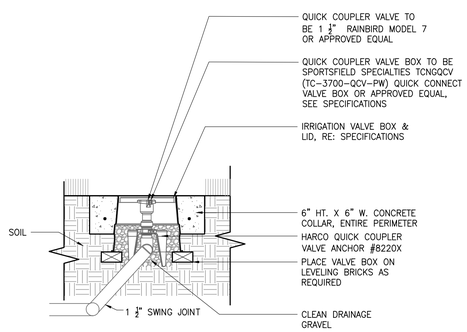


9 QUICK COUPLER DETAIL
SCALE:

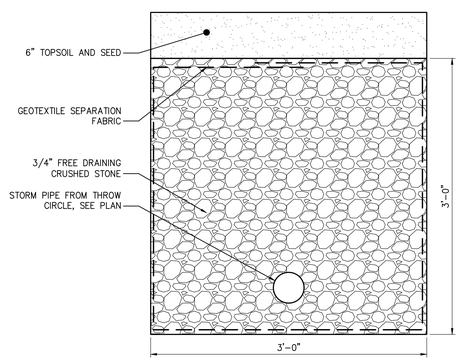


10 GRAVEL SUMP DETAIL
SCALE:

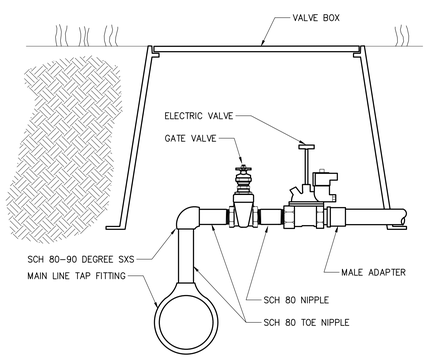


11 BURIED ELECTRICAL VALVE ASSEMBLY
SCALE:

Drawing Copyright © 2019

CHA
1258 Professional Drive
Myrtle Beach, SC 29577-5896
843.692.3105 x284 • www.chacompanies.com

HCS Horry County Schools

DDC ENGINEERS

HORRY COUNTY SCHOOLS

OFFICE OF FACILITIES
1160 E. HIGHWAY 501
CONWAY, SC 29526

IT IS A VIOLATION OF LAW FOR ANY PERSON, UNLESS THEY ARE ACTING UNDER THE DIRECTION OF A PROFESSIONAL ENGINEER, ARCHITECT, LANDSCAPE ARCHITECT OR LAND SURVEYOR TO ALTER AN ITEM IN ANY WAY. IF AN ITEM BEARING THE STAMP OF A LICENSED PROFESSIONAL ENGINEER, ARCHITECT, LANDSCAPE ARCHITECT OR LAND SURVEYOR SHALL STAMP THE DOCUMENT AND INCLUDE THE NOTATION "ALTERED BY" FOLLOWED BY THEIR SIGNATURE, THE DATE OF SUCH ALTERATION, AND A SPECIFIC DESCRIPTION OF THE ALTERATION.

**CAROLINA FOREST HIGH SCHOOL**

TRACK AND FIELD ATHLETIC FACILITY IMPROVEMENTS PROGRAM

| No. | Submittal / Revision | App'd | By | Date |
|---|---|---|---|---|
| | | | | |

TRACK AND FIELD DETAILS

| Designed By: | Drawn By: | Checked By: |
|---|---|---|
| JRP | RMH | PG |
| Issue Date: 02/21/2020 | Project No: 36108 | Scale: AS SHOWN |

Drawing No.:
**C-601**

File: V:\PROJECTS\ANY\C53\36108\CADD_ACAD\C-600_OTHS.DWG
Saved: 2/21/2020 12:26:13 PM Plotted: 2/26/2020 10:02:00 AM Current User: Helmer, Rose LastSaveBy: 5683

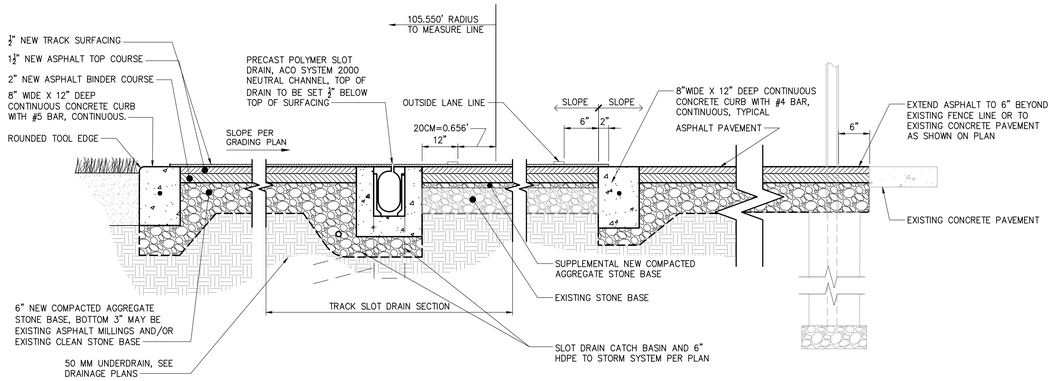


1 TRACK CROSS SECTION AT D-ZONE AND PERIMETER CURB
SCALE:

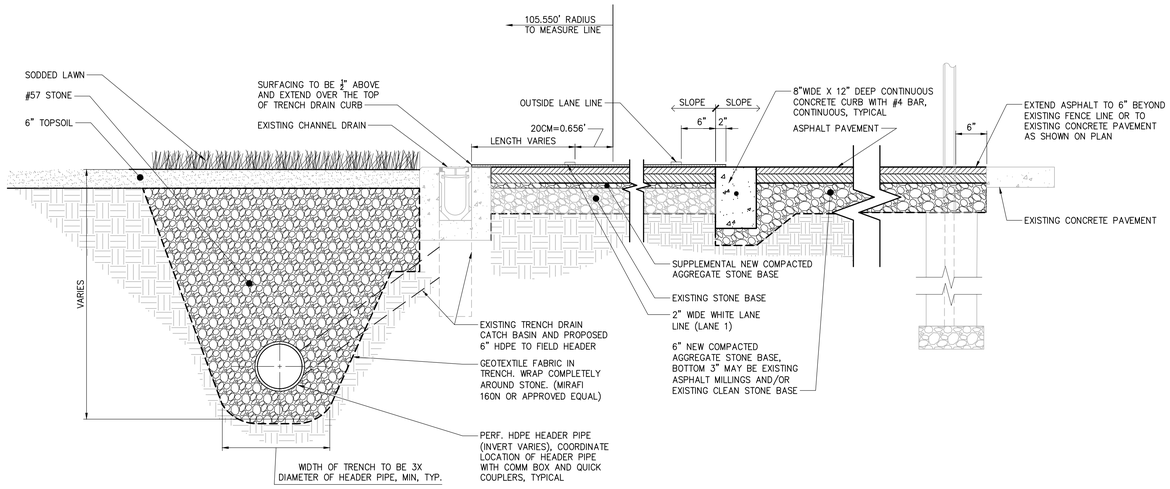


2 TRACK CROSS SECTION AT EXISTING TRENCH DRAIN AND PERIMETER CURB (WEST SIDE)
SCALE:

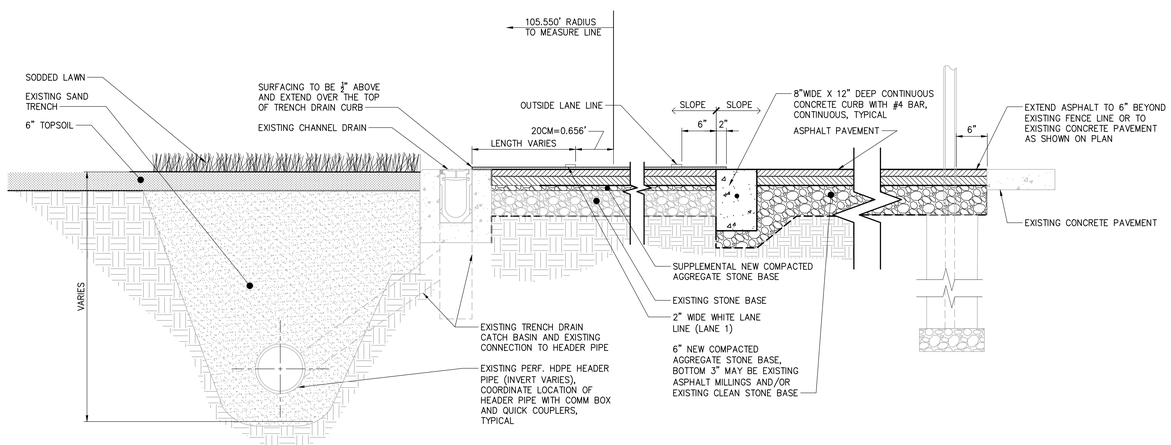


3 TRACK CROSS SECTION AT EXISTING TRENCH DRAIN AND PERIMETER CURB (EAST SIDE)
SCALE:

Drawing Copyright © 2019

CHA
1258 Professional Drive
Myrtle Beach, SC 29577-5896
843.692.3105 x284 • www.chacompanies.com

HCS Horry County Schools

DDC ENGINEERS

HORRY COUNTY SCHOOLS

OFFICE OF FACILITIES
1160 E. HIGHWAY 501
CONWAY, SC 29526

IT IS A VIOLATION OF LAW FOR ANY PERSON, UNLESS THEY ARE ACTING UNDER THE DIRECTION OF A LICENSED PROFESSIONAL ENGINEER, ARCHITECT, LANDSCAPE ARCHITECT OR LAND SURVEYOR, TO ALTER THIS DOCUMENT IN ANY WAY. IF ALTERED THE STAMP OF A LICENSED PROFESSIONAL ENGINEER, LANDSCAPE ARCHITECT, ENGINEER, ARCHITECT, LANDSCAPE ARCHITECT OR LAND SURVEYOR SHALL STAMP THE DOCUMENT AND INCLUDE THE NOTATION "ALTERED BY" FOLLOWED BY THEIR SIGNATURE, THE DATE OF SUCH ALTERATION, AND A SPECIFIC DESCRIPTION OF THE ALTERATION.

**CAROLINA FOREST HIGH SCHOOL**

TRACK AND FIELD
ATHLETIC FACILITY
IMPROVEMENTS PROGRAM

| No. | Submittal / Revision | App'd. | By | Date |
|---|---|---|---|---|
| | | | | |
| | | | | |
| | | | | |
| | | | | |
| | | | | |
| | | | | |

TRACK AND FIELD DETAILS

| Designed By: | Drawn By: | Checked By: |
|---|---|---|
| JRP | RMH | PG |
| Issue Date: | Project No: | Scale: |
| 02/21/2020 | 36108 | AS SHOWN |

Drawing No.:
**C-602**

File: V:\PROJECTS\ANYVAS\36108\CADD_ACAD\C-600_CFHS.DWG
Saved: 2/21/2020 12:26:13 PM Printed: 2/28/2020 10:02:04 AM Current User: Hofmer, Rose LastSaveBy: 5683

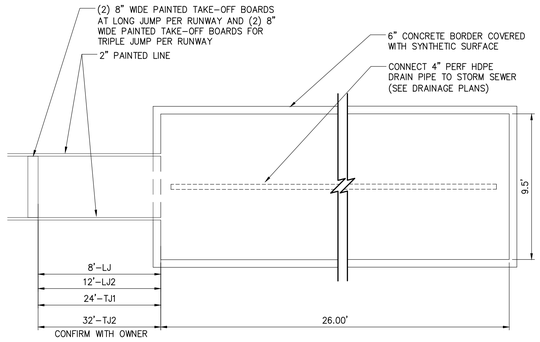


1 LONG/TRIPLE JUMP SAND PIT PLAN
SCALE:

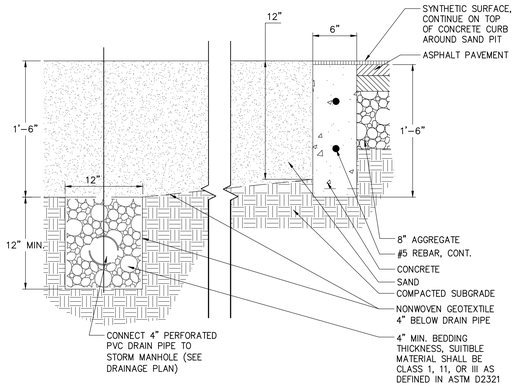


2 LONG/TRIPLE JUMP SAND PIT SECTION
SCALE:

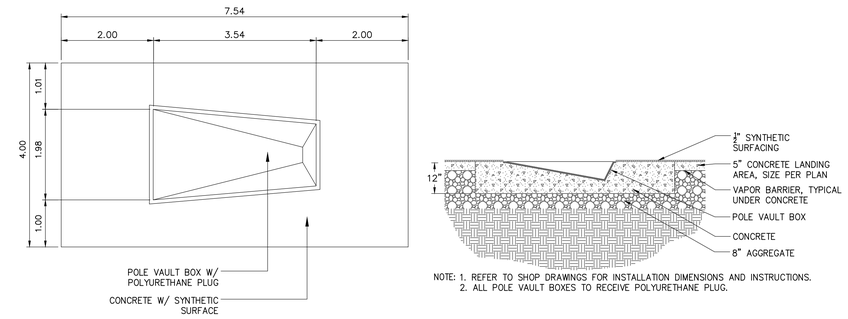


3 POLE VAULT BOX PLAN AND SECTION
SCALE:

NOTE:
1. ALL DRAWINGS DEPICTING IN-GROUND EQUIPMENT ARE FOR INFORMATION ONLY. REFER TO MANUFACTURER SHOP DRAWINGS FOR INSTALLATION DIMENSIONS AND INSTRUCTIONS.
2. CONCRETE TEXTURE IS A LIGHT BROOM FINISH. OWNER'S REPRESENTATIVE TO BE PRESENT UPON CONCRETE INSTALLATION TO VERIFY PROPER TEXTURE.

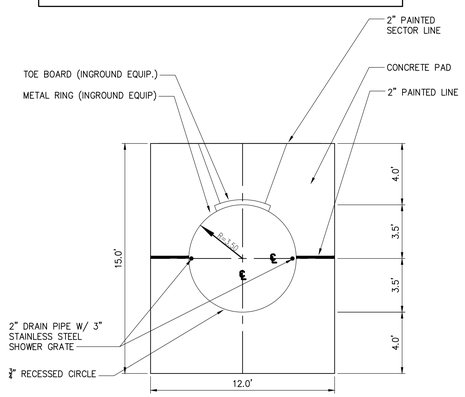


4 SHOT PUT CIRCLE PLAN
SCALE:

NOTE: ALL DRAWINGS DEPICTING IN-GROUND EQUIPMENTS ARE FOR BIDDING ONLY. REFER TO SHOP DRAWINGS FOR INSTALLATION DIMENSIONS AND INSTRUCTIONS.

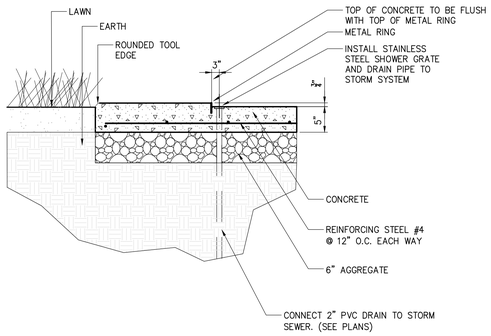


5 SHOT PUT CIRCLE SECTION
SCALE:

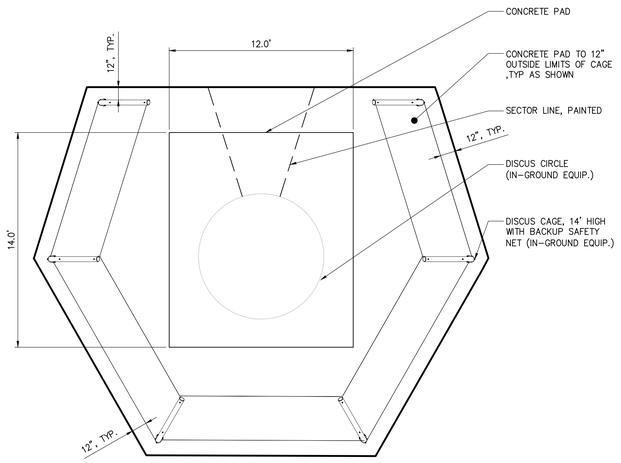


6 DISCUS CAGE PLAN
SCALE:

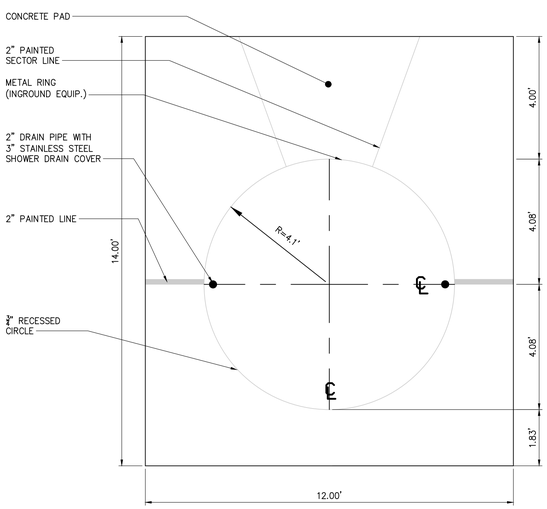


7 DISCUS CIRCLE PLAN
SCALE:

NOTE: ALL DRAWINGS DEPICTING IN-GROUND EQUIPMENTS ARE FOR BIDDING ONLY. REFER TO SHOP DRAWINGS FOR INSTALLATION DIMENSIONS AND INSTRUCTIONS.

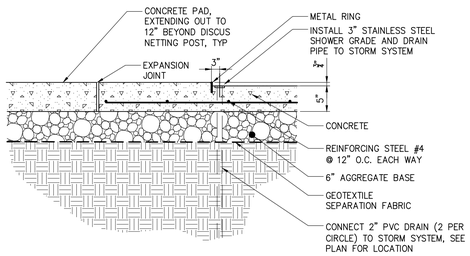


8 DISCUS CIRCLE SECTION
SCALE:

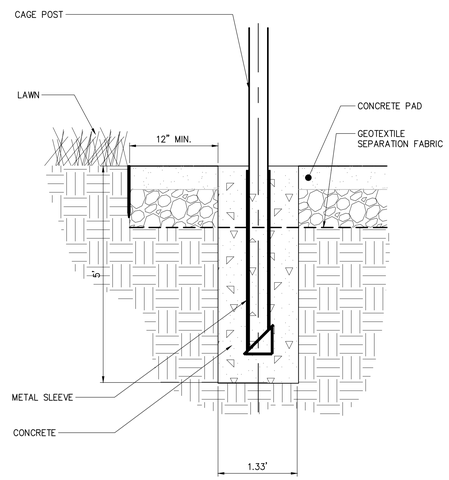


9 DISCUS NETTING SECTION
SCALE:

Drawing Copyright © 2019

CHA
1258 Professional Drive
Myrtle Beach, SC 29577-5896
843.692.3105 x284 • www.chacompanies.com

Horry County Schools

DDC ENGINEERS

HORRY COUNTY SCHOOLS

OFFICE OF FACILITIES
1160 E. HIGHWAY 501
CONWAY, SC 29526

IT IS A VIOLATION OF LAW FOR ANY PERSON, UNLESS THEY ARE ACTING UNDER THE DIRECTION OF A LICENSED PROFESSIONAL ENGINEER, ARCHITECT, LANDSCAPE ARCHITECT OR SURVEYOR TO ALTER AN ITEM IN ANY WAY. IF AN ITEM BEARING THE STAMP OF A LICENSED PROFESSIONAL IS ALTERED, THE ALTERING ENGINEER, ARCHITECT, LANDSCAPE ARCHITECT OR SURVEYOR SHALL STAMP THE DOCUMENT AND INCLUDE THE NOTATION "ALTERED BY" FOLLOWED BY THEIR SIGNATURE, THE DATE OF SUCH ALTERATION, AND A SPECIFIC DESCRIPTION OF THE ALTERATION.

**CAROLINA FOREST HIGH SCHOOL**

TRACK AND FIELD
ATHLETIC FACILITY
IMPROVEMENTS PROGRAM

| No. | Submittal / Revision | App'd. | By | Date |
|---|---|---|---|---|
| | | | | |

TRACK AND FIELD DETAILS

| Designed By: | Drawn By: | Checked By: |
|---|---|---|
| JRP | RMH | PG |
| Issue Date: | Project No: | Scale: |
| 02/21/2020 | 36108 | AS SHOWN |

Drawing No.:
**C-603**

File: V:\PROJECTS\ANY\K5\36108\CADD_ACAD\C-600_CFHS.DWG
Saved: 2/21/2020 12:26:13 PM Plotted: 2/26/2020 10:02:10 AM Current User: Hermer, Ross LastSaveBy: 5683

## ABBREVIATIONS

| | |
|---|---|
| A | AMPERE |
| AC | ALTERNATING CURRENT |
| AF | AMPERE FRAME |
| AFF/G | ABOVE FINISHED FLOOR/GRADE |
| AIC | AMPERE INTERRUPTING CAPACITY |
| AT | AMPERE TRIP |
| AUX | AUXILIARY |
| AWG | AMERICAN WIRE GAUGE |
| BTM | BOTTOM |
| BKR | BREAKER |
| BLDG | BUILDING |
| C | CONDUIT |
| CAB | CABINET |
| CB | CIRCUIT BREAKER |
| CIR | CIRCUIT |
| CKT | CIRCUIT |
| ℄ | CENTER LINE |
| CO | COMPANY |
| COMM | COMMUNICATIONS |
| CONN | CONNECTION, CONNECT |
| CU | COPPER |
| △ | DELTA CONNECTION |
| DIA | DIAMETER |
| DISC | DISCONNECT |
| DIST | DISTRIBUTION |
| DIV | DIVISION |
| DN | DOWN |
| DWG | DRAWING |
| EA | EACH |
| EF | EXHAUST FAN |
| EL | ELEVATION |
| ELEC | ELECTRIC(AL) |
| ENCL | ENCLOSURE |
| EQUIP | EQUIPMENT |
| ETR | EXISTING TO REMAIN |
| EXT | EXTERIOR |
| F | FUSE(D) |
| FC | FOOTCANDLES |
| FIXT | FIXTURE |
| FLR | FLOOR |
| FT | FOOT (FEET) |
| FUT | FUTURE |
| G, GND | GROUND |
| GALV | GALVANIZE(D) |
| GC | GENERAL CONTRACTOR |
| GFI | GROUND FAULT CIRCUIT INTERRUPTER |
| GFP | GROUND FAULT PROTECTION |
| HGT | HEIGHT |
| HPS | HIGH PRESSURE SODIUM |
| HTR | HEATER |
| HV | HIGH VOLTAGE |
| HW | HOT WATER |
| ID | IDENTIFY, IDENTIFICATION |
| INCAND | INCANDESCENT |
| J-BOX | JUNCTION BOX |
| JCT | JUNCTION |
| KCM/Kcmil | THOUSAND CIRCULAR MILS |
| KVA | KILO VOLT AMPERE |
| KW | KILOWATT |
| LGT | LIGHTING |
| LT(S) | LIGHT(S) |
| LED | LIGHT EMITTING DIODE |
| L | LOUVER |
| MAX | MAXIMUM |
| MCB | MAIN CIRCUIT BREAKER |
| MC | METAL CLAD CABLE |
| MFR | MANUFACTURER |
| MH | METAL HALIDE |
| MECH | MECHANICAL |
| MIN | MINIMUM |
| MLO | MAIN LUGS ONLY |
| MT | MOUNT |
| MTD | MOUNTED |
| N | NORTH |
| NEC | NATIONAL ELECTRICAL CODE |
| NF | NON-FUSED |
| NL | NIGHT LIGHT |
| No/# | NUMBER |
| OL | OVERLOAD |
| P | POLE(S) |
| PNL | PANEL |
| PR | PAIR |
| PRI | PRIMARY |
| PWR | POWER |
| ø | PHASE |
| PT | PRESSURE TREATED |
| RECEPT | RECEPTACLE |
| RGS | RIGID GALVANIZED STEEL |
| RM | ROOM |
| SEC | SECONDARY |
| SH | SHIELDED |
| SW | SWITCH |
| TEMP | TEMPORARY/TEMPERATURE |
| TB | TERMINAL BOARD |
| TYP | TYPICAL |
| UON | UNLESS OTHERWISE NOTED |
| V | VOLT, VOLTS |
| VA | VOLT-AMPERES |
| W | WATT, WIRE |
| W/ | WITH |
| WP | WEATHERPROOF |
| XFMR/T | TRANSFORMER |
| Y | WYE CONNECTION |

## DEVICES AND APPURTENANCES

- SINGLE POLE TOGGLE SWITCH
- DUPLEX RECEPTACLE
- TWO – 20 AMP DUPLEX RECEPTACLES UNDER SINGLE COVER
- JUNCTION BOX
- HAND HOLE

## RACEWAYS

- CONDUIT CONCEALED OR EXPOSED AS SPECIFIED
- CONDUIT TURNING UP
- CONDUIT TURNING DOWN
- PP-1 1/3/5 — HOMERUN BACK TO PANEL (PANEL AND CIRCUITS INDICATED)
- CIRCUIT CONTINUED OR CONNECTED TO EQUIPMENT AS INDICATED
- UNDERGROUND CONDUIT
- GROUND CONDUCTOR
- GROUNDING CONDUCTOR TERMINATION POINT AT SERVICE EQUIPMENT
- INDICATES EXISTING DEVICES OR EQUIPMENT

## POWER DISTRIBUTION EQUIPMENT

- SURFACE MOUNTED BRANCH CIRCUIT PANELBOARD 208/120V, 3ø, 4W, UON
- RECESSED BRANCH CIRCUIT PANELBOARD 208/120V, 3ø, 4W, UON
- SURFACE MOUNTED BRANCH CIRCUIT PANELBOARD 480/277V, 3ø, 4W, UON
- RECESSED BRANCH CIRCUIT PANELBOARD 480/277V, 3ø, 4W, UON
- DISTRIBUTION PANEL
- CR — CONTROL RELAY PANEL

## GENERAL

- # — NUMBER IN CIRCLE, WITH OR WITHOUT ARROW OR LEADER, REFER TO MATCHING NUMBERED CODED NOTE
- # — NUMBER IN DIAMOND, WITH OR WITHOUT ARROW OR LEADER; REFER TO THE DEMOLITION CODED NOTE WITH THE MATCHING NUMBER
- X / XXX — DETAIL CALLOUT

## GENERAL NOTES

1. REFER TO CIVIL DRAWINGS FOR SYMBOLS ASSOCIATED WITH WORK, EQUIPMENT, ETC. BY OTHER(S).
2. ALL WORK SHOWN ON THE ELECTRICAL DRAWINGS SHALL BE BY THE ELECTRICAL CONTRACT UNLESS OTHERWISE INDICATED.
3. CONDUIT RUNS SHOWN ARE DIAGRAMMATIC UON. EXACT LOCATION OF ALL CONDUIT RUNS SHALL BE DETERMINED IN THE FIELD. COORDINATE INSTALLATIONS AND AVOID CONFLICT WITH PIPING, DUCTWORK, ACCESS DOORS AND WORK BY OTHER TRADES.
4. GENERAL NOTES APPLY TO ALL ELECTRICAL CONTRACT DRAWINGS.

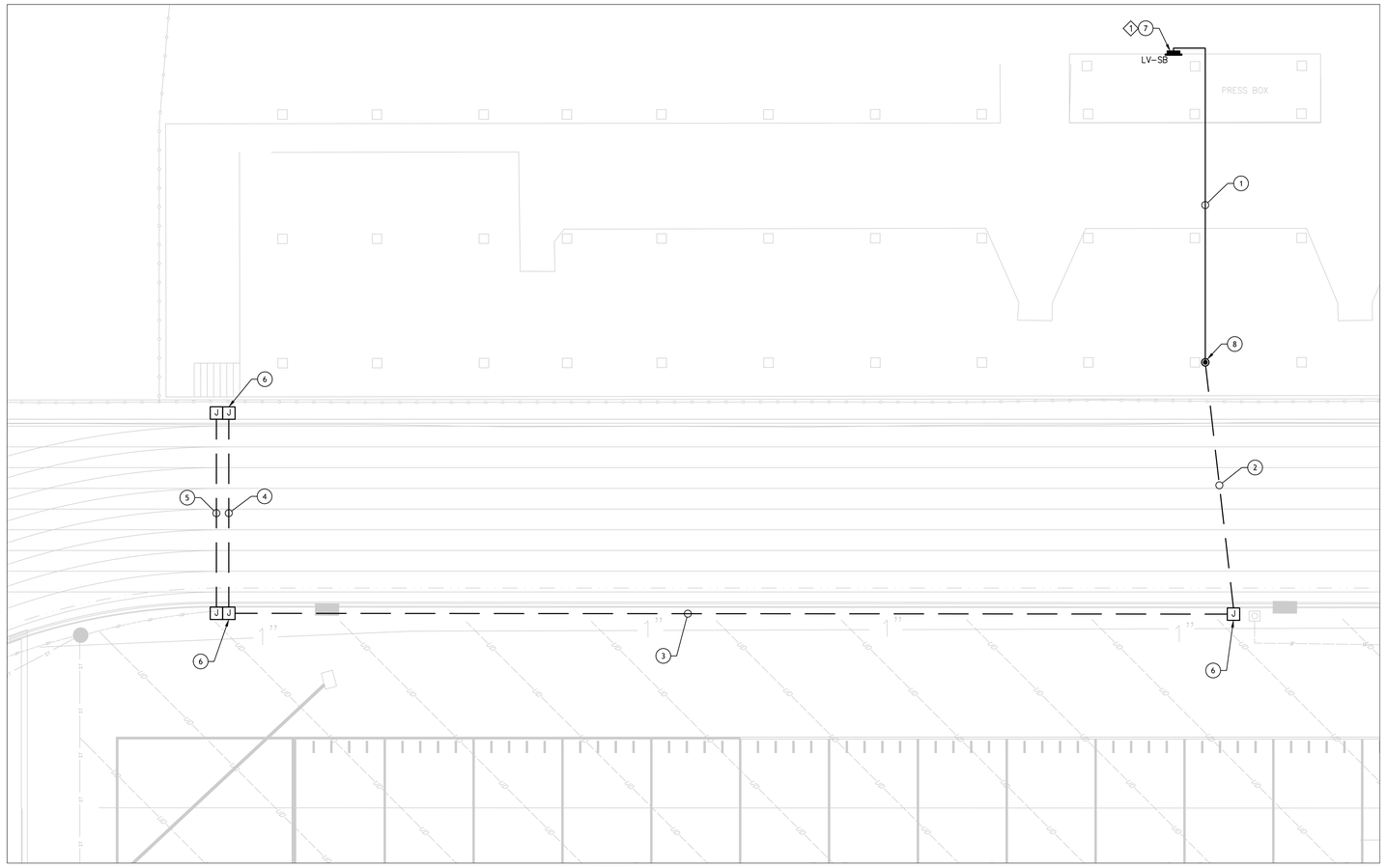


## ELECTRICAL SITE PLAN

SCALE: 1" = 10'

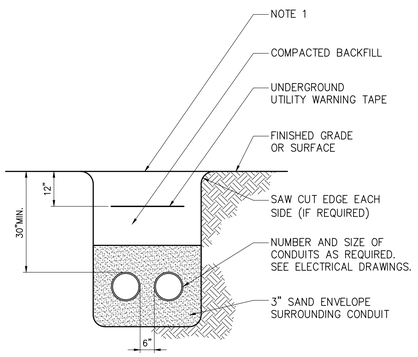


### NOTE

1. REPLACE EXISTING SURFACE CONDITIONS IN KIND TO INCLUDE, BUT NOT LIMITED TO: CONCRETE, CRUSHED STONE, SELECT GRAVEL, ASPHALT, TOPSOIL AND GRASS.

## 1 TYPICAL DIRECT BURIED CONDUIT(S) DETAIL

NOT TO SCALE

## CODED NOTES

1. 1" RGS CONDUIT WITH (2) #8 (1) #8G FOR MIDFIELD AND (2) #8, (1) #8G FOR FINISH LINE RECEPTACLES FROM PANEL LV-SB TO JUNCTION BOX. TO RUN CONDUIT ALONG THE UNDERSIDE OF THE BLEACHERS.
2. 1" SCHEDULE 40 PVC CONDUIT WITH (2) #8 AND (1) #8G FOR FINISH LINE RECEPTACLES, AND (2) #8 AND (1) #8G FOR MIDFIELD RECEPTACLES FROM PANEL LV-SB TO MIDFIELD JUNCTION BOX.
3. 1" SCHEDULE 40 PVC CONDUIT WITH (2) #8 AND (1) #8G FOR FINISH LINE RECEPTACLES FROM MIDFIELD AND FINISH LINE JUNCTION BOXES.
4. 1" SCHEDULE 40 PVC CONDUIT WITH (2) #8 AND (1) #8G BETWEEN FINISH LINE JUNCTION BOXES.
5. 1 1/2" SCHEDULE 40 PVC SCHEDULE 40 PVC CONDUIT BETWEEN JUNCTION BOXES FOR INSTALLATION OF COMMUNICATION WIRING.
6. PROVIDE JUNCTION BOX (SEE DETAILS 1 & 2 ON C-601)
7. REPAIR WALL WHEN INSTALLING LARGER RECESSED PANEL.
8. TRANSITION BETWEEN ABOVE GROUND AND UNDERGROUND CONDUIT.

## DEMO CODED NOTES

1. REPLACE EXISTING RECESSED 12 CKT PANELBOARD WITH 24 CKT. 120/240V, 1P, 3W PANEL BOARD. RECONNECT ALL EXISTING BRANCH CKTS. (SEE PANEL BOARD SCHEDULE LV-SB FOR BREAKER AND FEEDER REQUIREMENTS)

## GENERAL NOTES

1. PROTECT AND MAINTAIN EXISTING ELECTRICAL WIRING. REPAIR ANY DAMAGED CONDUIT/WIRING AND OR ELECTRICAL BOXES IN KIND.

| | | | |
|---|---|---|---|
| LOCATION: | CFHS STADIUM BOOTH | PANEL ID | LV-SB |
| MOUNTING: | RECESSED | VOLTS, PHASE, WIRE: | 240/120V, 1ϕ, 3W |
| SOURCE: | ? | MAINS: | 200A/2P |
| | | SHORT CIRCUIT RATING: | 10 kA |

| CKT | LOAD DESCRIPTION | CB AMPS/ POLE | CONN LOAD KVA | CONN LOAD KVA | | CONN LOAD KVA | CONN LOAD KVA | CB AMPS/ POLE | LOAD DESCRIPTION | CKT |
|---|---|---|---|---|---|---|---|---|---|---|
| 1 | RECPT | 20/1 | | | | | | 30/2 | HIGHBAY LIGHT | 2 |
| 3 | RECPT | 20/1 | | | | | | | | 4 |
| 5 | RECPT | 20/1 | | | | | | 30/2 | HIGHBAY LIGHT | 6 |
| 7 | LIGHT-RECPT | 20/1 | | | | | | | | 8 |
| 9 | RECPT-LIGHT | 20/1 | | | | | | 25/2 | SPARE | 10 |
| 11 | RECPT | 20/1 | | | | | | | | 12 |
| 13 | MIDFIELD RECEPTACLES | 20/1 | 0.18 | | | | | | | 14 |
| 15 | FIELD RECEPTACLES | 20/1 | | 0.36 | | | | | | 16 |
| 17 | | | | | | | | | | 18 |
| 19 | | | | | | | | | | 20 |
| 21 | | | | | | | | | | 22 |
| 23 | | | | | | | | | | 24 |
| | | | 0.18 | 0.36 | | #### | #### | | | |
| | | | TOTAL ADDED EST. kVA | | | | | | | |
| | | | 0.54 | | | | | | | |

NOTES
1. CKT BKR ARE ASSUMPTIONS FOR BIDDING PURPOSES ONLY.

Drawing Copyright © 2019

CHA
1308 Professional Drive
Myrtle Beach, SC 29577-5896
843.692.3035 x259 • www.chacompanies.com

HCS Horry County Schools

DDC ENGINEERS

HORRY COUNTY SCHOOLS

OFFICE OF FACILITIES
1160 E. HIGHWAY 501
CONWAY, SC 29526

IT IS A VIOLATION OF LAW FOR ANY PERSON, UNLESS THEY ARE ACTING UNDER THE DIRECTION OF A LICENSED PROFESSIONAL ENGINEER, ARCHITECT, LANDSCAPE ARCHITECT OF LAND SURVEYOR, TO ALTER AN ITEM IN ANY WAY. IF AN ITEM BEARING THE STAMP OF A LICENSED PROFESSIONAL IS ALTERED, THE ALTERING ENGINEER, ARCHITECT, LANDSCAPE ARCHITECT OF LAND SURVEYOR SHALL ATTACH TO THE ITEM A CONSPICUOUS NOTATION "ALTERED BY" FOLLOWED BY THEIR SIGNATURE, THE DATE OF SUCH ALTERATION, AND A SPECIFIC DESCRIPTION OF THE ALTERATION.

**CAROLINA FOREST HIGH SCHOOL**

TRACK AND FIELD ATHLETIC FACILITY IMPROVEMENTS PROGRAM

| No. | Submittal / Revision | App'd. | By | Date |
|---|---|---|---|---|
| | | | | |

ELECTRICAL SITE PLAN

| Designed By: | Drawn By: | Checked By: |
|---|---|---|
| JRH | JRH | JD |
| Issue Date: 02/21/2020 | Project No: 36108 | Scale: AS SHOWN |

Drawing No.:
**E-001**

File: V:\PROJECTS\ANY\KS\36108\CADD_AC40\E-602_CFHS_SITE.DWG
Saved: 2/28/2020 9:14:33 AM Plotted: 2/28/2020 10:02:18 AM Current User: Heimer, Rose LastSavedBy: 6616

# TRACK AND FIELD ATHLETIC FACILITY IMPROVEMENTS PROGRAM

## LORIS HIGH SCHOOL

*February, 2020*

**HORRY COUNTY SCHOOLS**
**OFFICE OF FACILITIES**
**1160 E. HIGHWAY 501**
**CONWAY. SC 29526**

SITE VICINITY MAP
SCALE: NOT TO SCALE

## 100% CONSTRUCTION DOCUMENTS

## Sheet Index


| SHEET #'S | SHEET TITLE |
|---|---|
| G-000 | TITLE SHEET |
| C-001 | EXISTING CONDITIONS PLAN |
| C-002 | DEMOLITION PLAN |
| C-100 | LAYOUT PLAN |
| C-101 | TRACK SURFACING AND DIMENSION PLAN |
| C-200 | GRADING PLAN |
| C-300 | DRAINAGE AND UTILITY PLAN |
| C-500 | SEDIMENT AND EROSION CONTROL PLAN PHASE 1 |
| C-501 | SEDIMENT AND EROSION CONTROL PLAN PHASE II |
| C-502 | SEDIMENT AND EROSION CONTROL DETAILS |
| C-600 | TRACK AND FIELD DETAILS |
| C-601 | TRACK AND FIELD DETAILS |
| C-602 | TRACK AND FIELD DETAILS |
| C-603 | TRACK AND FIELD DETAILS |
| E-001 | ELECTRICAL LEGEND |
| E-002 | ELECTRICAL SITE PLAN |


Drawing Copyright © 2019

CHA
1258 Professional Drive
Myrtle Beach, SC 29577-5896
843.692.3535 x284 • www.chacompanies.com

HORRY COUNTY SCHOOLS

OFFICE OF FACILITIES
1160 E. HIGHWAY 501
CONWAY, SC 29526

IT IS A VIOLATION OF LAW FOR ANY PERSON, UNLESS THEY ARE ACTING UNDER THE DIRECTION OF A PROFESSIONAL ENGINEER, ARCHITECT, LANDSCAPE ARCHITECT OR LAND SURVEYOR TO ALTER AN ITEM IN ANY WAY. IF AN ITEM BEARING THE STAMP OF A LICENSED PROFESSIONAL IS ALTERED, THE ALTERING ENGINEER, ARCHITECT, LANDSCAPE ARCHITECT OR LAND SURVEYOR SHALL STAMP THE DOCUMENT AND INCLUDE THE NOTATION "ALTERED BY" FOLLOWED BY THEIR SIGNATURE, THE DATE OF SUCH ALTERATION, AND A SPECIFIC DESCRIPTION OF THE ALTERATION.

**LORIS HIGH SCHOOL**

TRACK AND FIELD
ATHLETIC FACILITY
IMPROVEMENTS PROGRAM

| No. | Submittal / Revision | App'd | By | Date |
|---|---|---|---|---|
| | | | | |
| | | | | |
| | | | | |
| | | | | |
| | | | | |
| | | | | |

TITLE SHEET

| Designed By: | Drawn By: | Checked By: |
|---|---|---|
| JRP | RMH | PG |
| Issue Date: | Project No: | Scale: |
| 02/21/2020 | 36108 | AS SHOWN |

Drawing No.:
**G-000**

File: V:\PROJECTS\ANY\V53\36108\CADD_ACAD\G-000_LHS.DWG
Saved: 2/21/2020 12:28:29 PM Portrait Current User: Hetmer, Rose LastSavedBy: 5683
Plotted: 2/21/2020 10:41:11 AM

# SURVEY NOTES

1. THE MAP IS BASED ON A FIELD SURVEY COMPLETED BY DDC ENGINEERS IN JULY 2019

2. ELEVATIONS ARE REFERENCED TO THE NAVD 88 VERTICAL DATUM.


DDC ENGINEERS

Consulting Engineers, Surveyors, Planners,
Landscape Architects & Environmentalists
1298 Professional Dr., Myrtle Beach, SC 29577
Phone: (843) 692-3200 Fax: (843) 692-3210


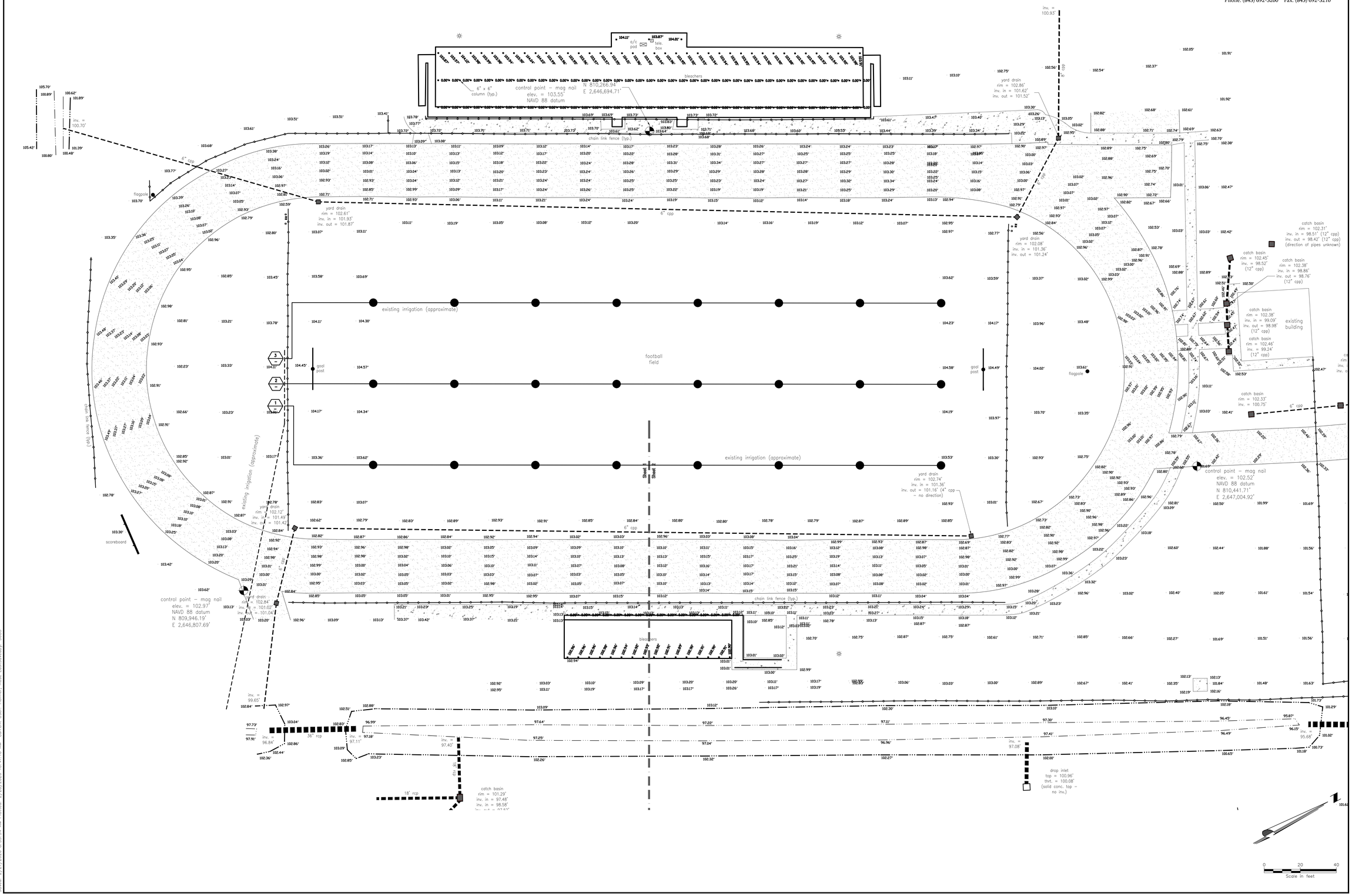


Drawing Copyright © 2019


CHA
1298 Professional Drive
Myrtle Beach, SC 29577-5896
843.692.3255 x284 • www.chacompanies.com


HCS Horry County Schools

DDC ENGINEERS

HORRY COUNTY SCHOOLS

OFFICE OF FACILITIES
1160 E. HIGHWAY 501
CONWAY, SC 29526

IT IS A VIOLATION OF LAW FOR ANY PERSON, UNLESS THEY ARE ACTING UNDER THE DIRECTION OF A PROFESSIONAL ENGINEER, ARCHITECT, LANDSCAPE ARCHITECT OR LAND SURVEYOR TO ALTER AN ITEM IN ANY WAY. IF AN ITEM BEARING THE STAMP OF A LICENSED PROFESSIONAL IS ALTERED, THE ALTERING ENGINEER, ARCHITECT, LANDSCAPE ARCHITECT OR LAND SURVEYOR SHALL ATTACH A PROPERLY DESIGNED EXPLANATORY NOTATION "ALTERED BY" FOLLOWED BY THEIR SIGNATURE, THE DATE OF SUCH ALTERATION, AND A SPECIFIC DESCRIPTION OF THE ALTERATION.

## LORIS HIGH SCHOOL

TRACK AND FIELD
ATHLETIC FACILITY
IMPROVEMENTS PROGRAM

| No. | Submittal / Revision | App'd. | By | Date |
|---|---|---|---|---|
| | | | | |

## EXISTING CONDITIONS PLAN

| Designed By: | Drawn By: | Checked By: |
|---|---|---|
| JRP | RMH | PG |
| Issue Date: | Project No: | Scale: |
| 02/21/2020 | 36108 | AS SHOWN |

Drawing No.:

**C-001**

File: V:\PROJECTS\ANY\X5\36108\CADD_ACAD\C-001_LHS.DWG
Saved: 2/21/2020 8:35:54 AM PortNet Current User: Hermer, Rose LastSavedBy: 5683

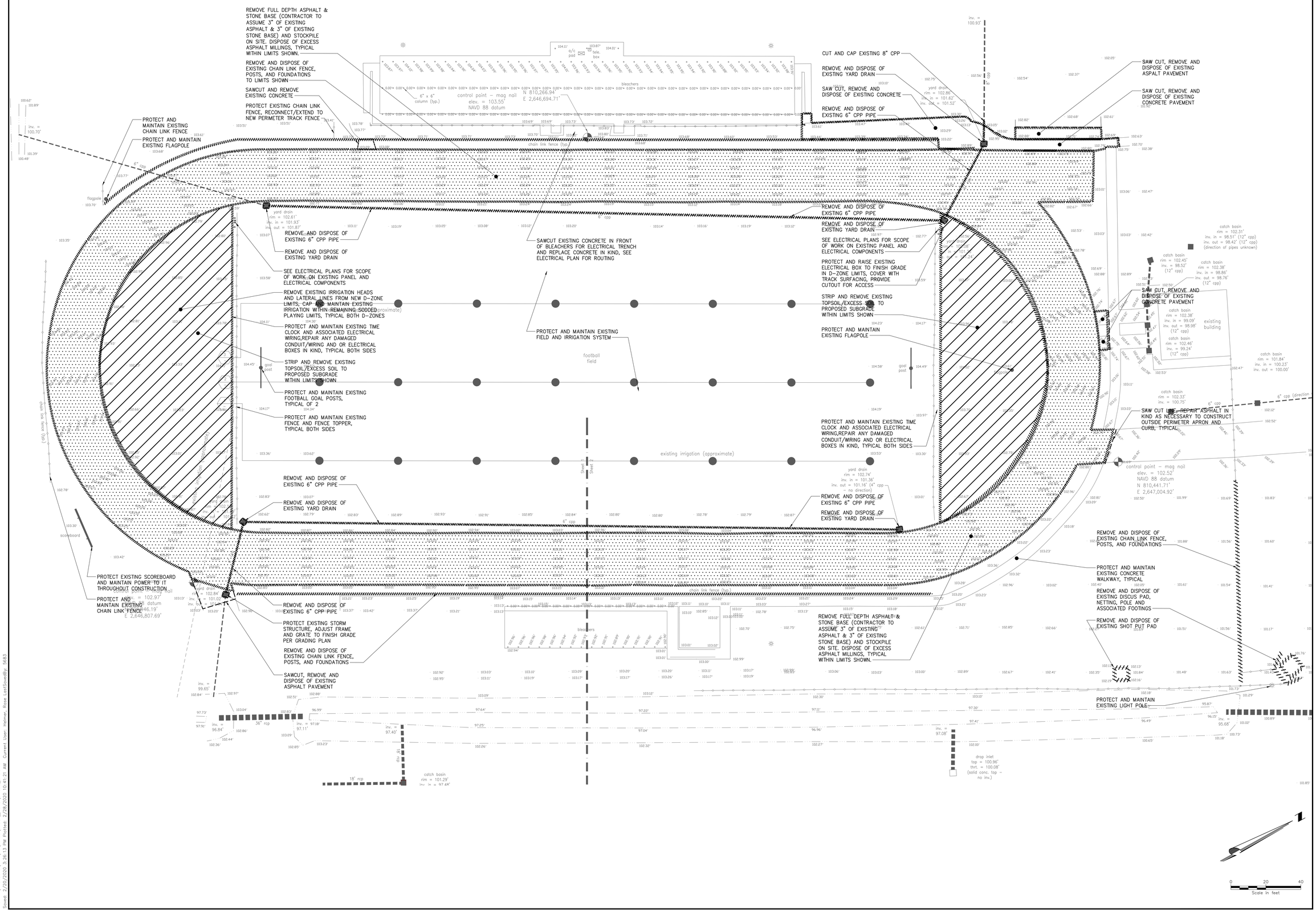


Drawing Copyright © 2019

CHA
1258 Professional Drive
Myrtle Beach, SC 29577-5896
843.692.3105 x284 • www.chacompanies.com

HCS Horry County Schools

DDC ENGINEERS

HORRY COUNTY SCHOOLS

OFFICE OF FACILITIES
1160 E. HIGHWAY 501
CONWAY, SC 29526

IT IS A VIOLATION OF LAW FOR ANY PERSON, UNLESS THEY ARE ACTING UNDER THE DIRECTION OF A LICENSED PROFESSIONAL ENGINEER, ARCHITECT, LANDSCAPE ARCHITECT OR LAND SURVEYOR, TO ALTER AN ITEM IN ANY WAY. IF AN ITEM BEARING THE STAMP OF A LICENSED PROFESSIONAL IS ALTERED, THE ALTERING ENGINEER, ARCHITECT, LANDSCAPE ARCHITECT OR LAND SURVEYOR SHALL ATTACH TO THE ITEM A DESCRIPTIVE SUFFIX TO HIS/HER NOTATION "ALTERED BY" FOLLOWED BY THEIR SIGNATURE, THE DATE OF SUCH ALTERATION, AND A SPECIFIC DESCRIPTION OF THE ALTERATION.

**LORIS HIGH SCHOOL**

TRACK AND FIELD
ATHLETIC FACILITY
IMPROVEMENTS PROGRAM

| No. | Submittal / Revision | App'd. | By | Date |
|---|---|---|---|---|
| | | | | |

# DEMOLITION PLAN

| Designed By: | Drawn By: | Checked By: |
|---|---|---|
| JRP | RMH | PG |
| Issue Date: | Project No: | Scale: |
| 02/21/2020 | 36108 | AS SHOWN |

Drawing No.:
**C-002**

File: V:\PROJECTS\ANY\V35\36108\CADD_ACAD\C-002_LHS.DWG
Saved: 2/25/2020 3:26:13 PM Plotted: 2/25/2020 10:41:37 AM Current User: Hetmer, Ross LastSavedBy: 5683

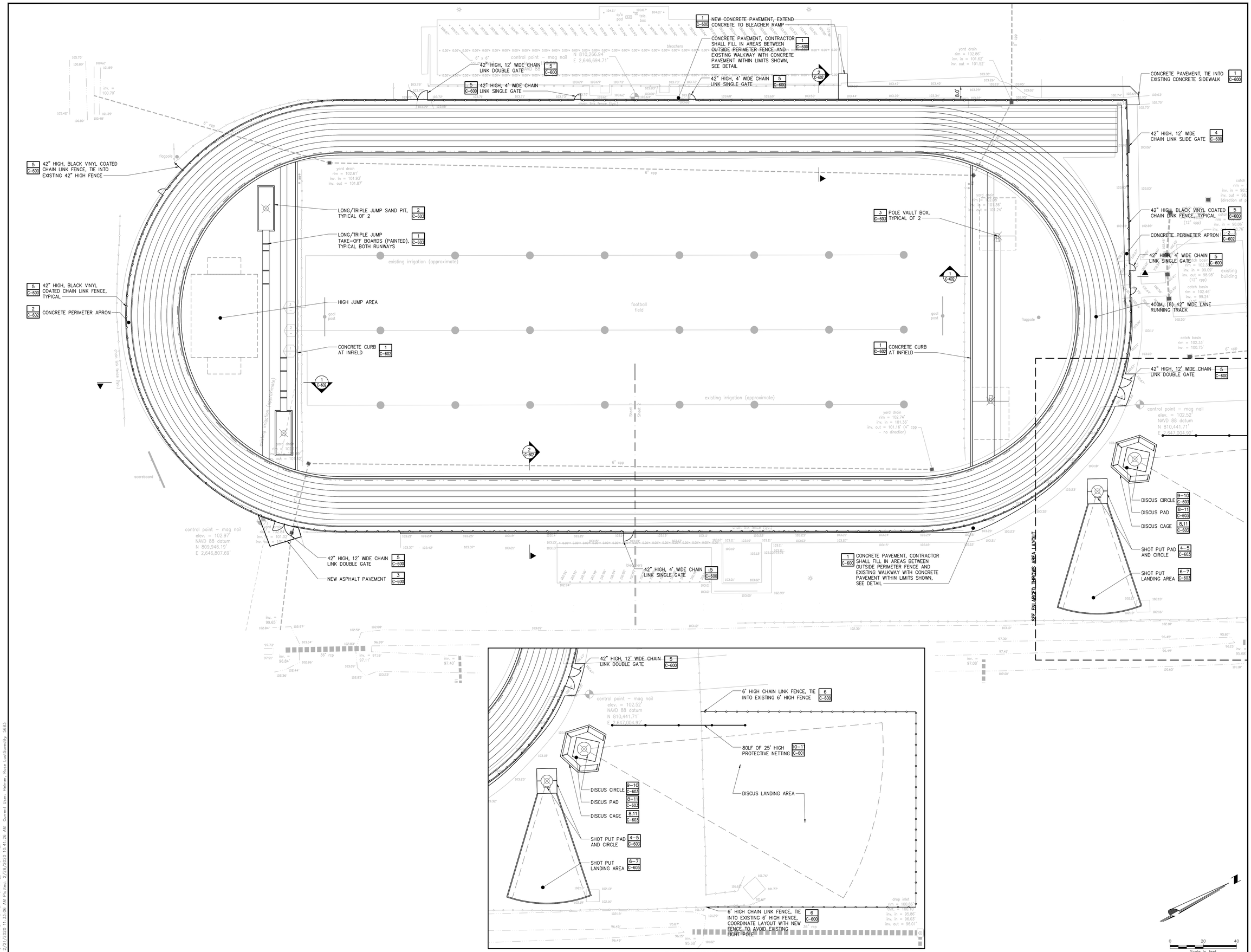


ENLARGED THROWS AREA LAYOUT
SCALE: 1"=20'

Drawing Copyright © 2019

CHA
1258 Professional Drive
Myrtle Beach, SC 29577-5896
843.692.3105 x284 • www.chacompanies.com

HCS Horry County Schools

DDC ENGINEERS

HORRY COUNTY SCHOOLS

OFFICE OF FACILITIES
1160 E. HIGHWAY 501
CONWAY, SC 29526

IT IS A VIOLATION OF LAW FOR ANY PERSON, UNLESS THEY ARE ACTING UNDER THE DIRECTION OF A LICENSED PROFESSIONAL ENGINEER, ARCHITECT, LANDSCAPE ARCHITECT OR LAND SURVEYOR, TO ALTER AN ITEM IN ANY WAY. IF AN ITEM BEARING THE STAMP OF A LICENSED PROFESSIONAL IS ALTERED, THE ALTERING ENGINEER, ARCHITECT, LANDSCAPE ARCHITECT OR LAND SURVEYOR SHALL STAMP THE DOCUMENT AND INCLUDE THE NOTATION "ALTERED BY" FOLLOWED BY THEIR SIGNATURE, THE DATE OF SUCH ALTERATION, AND A SPECIFIC DESCRIPTION OF THE ALTERATION.

**LORIS HIGH SCHOOL**

TRACK AND FIELD
ATHLETIC FACILITY
IMPROVEMENTS PROGRAM

| No. | Submittal / Revision | App'd. | By | Date |
|---|---|---|---|---|
| | | | | |

LAYOUT PLAN

| Designed By: | Drawn By: | Checked By: |
|---|---|---|
| JRP | RMH | PG |
| Issue Date: | Project No: | Scale: |
| 02/21/2020 | 36108 | AS SHOWN |

Drawing No.:
**C-100**

File: V:\PROJECTS\ANY\K5\36108\CADD_ACAD\C-100_LHS.DWG
Saved: 2/21/2020 11:33:06 AM PrintTime: 2/28/2020 10:41:26 AM Current User: Hetmer, Rose LastSavedBy: 5683

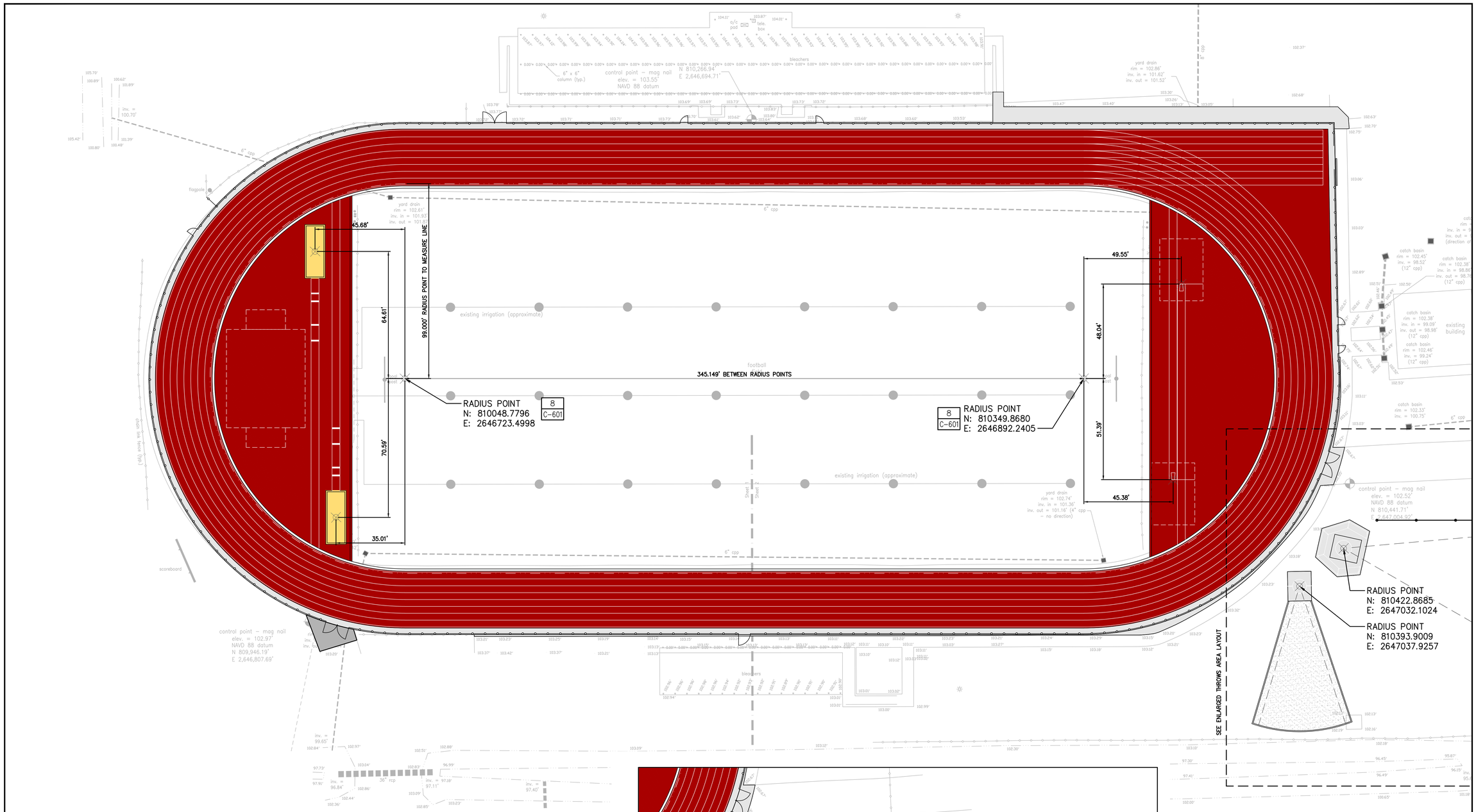


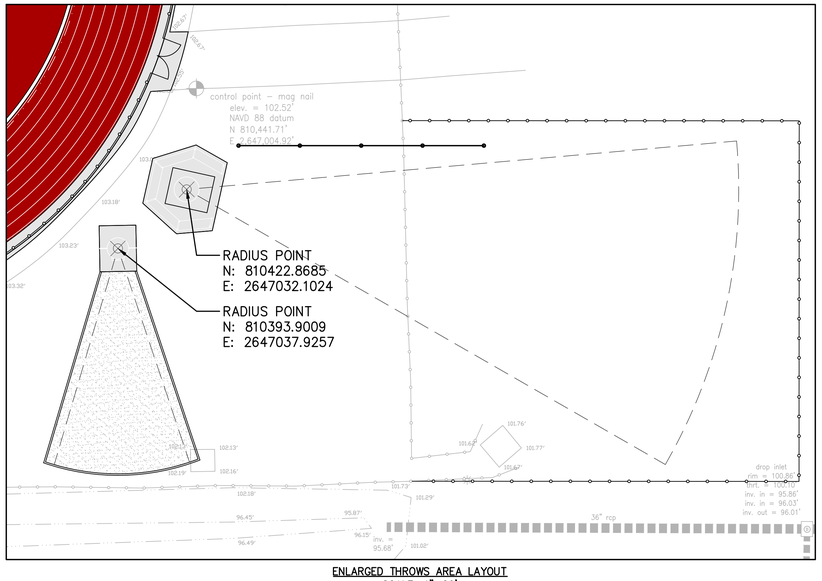


ENLARGED THROWS AREA LAYOUT
SCALE: 1"=20'

## LEGEND

- SYNTHETIC SURFACING
- CONCRETE PAVEMENT
- ASPHALT PAVEMENT
- SAND
- STONE DUST

0 20 40
Scale in feet

Drawing Copyright © 2019

CHA
1258 Professional Drive
Myrtle Beach, SC 29577-5896
843.692.3105 x284 • www.chacompanies.com

HCS Horry County Schools

DDC ENGINEERS

HORRY COUNTY SCHOOLS

OFFICE OF FACILITIES
1160 E. HIGHWAY 501
CONWAY, SC 29526

IT IS A VIOLATION OF LAW FOR ANY PERSON, UNLESS THEY ARE ACTING UNDER THE DIRECTION OF A LICENSED PROFESSIONAL ENGINEER, ARCHITECT, LANDSCAPE ARCHITECT OR LAND SURVEYOR, TO ALTER AN ITEM IN ANY WAY. IF AN ITEM BEARING THE STAMP OF A LICENSED PROFESSIONAL IS ALTERED, THE ALTERING ENGINEER, ARCHITECT, LANDSCAPE ARCHITECT OR LAND SURVEYOR SHALL STAMP THE DOCUMENT AND INCLUDE THE NOTATION "ALTERED BY" FOLLOWED BY their SIGNATURE, THE DATE OF SUCH ALTERATION, AND A SPECIFIC DESCRIPTION OF THE ALTERATION.

**LORIS HIGH SCHOOL**

TRACK AND FIELD
ATHLETIC FACILITY
IMPROVEMENTS PROGRAM

| No. | Submittal / Revision | App'd. | By | Date |
|---|---|---|---|---|
| | | | | |

TRACK SURFACING AND DIMENSION PLAN

| Designed By: | Drawn By: | Checked By: |
|---|---|---|
| JRP | RMH | PG |
| Issue Date: | Project No: | Scale: |
| 02/21/2020 | 36108 | AS SHOWN |

Drawing No.:
**C-101**

File: V:\PROJECTS\ANY\K5\36108\CADD_ACAD\C-101_LHS.DWG
Saved: 2/21/2020 11:25:24 AM Plotted: 2/28/2020 10:41:36 AM Current User: Warner, Ross LastSaveBy: 5683

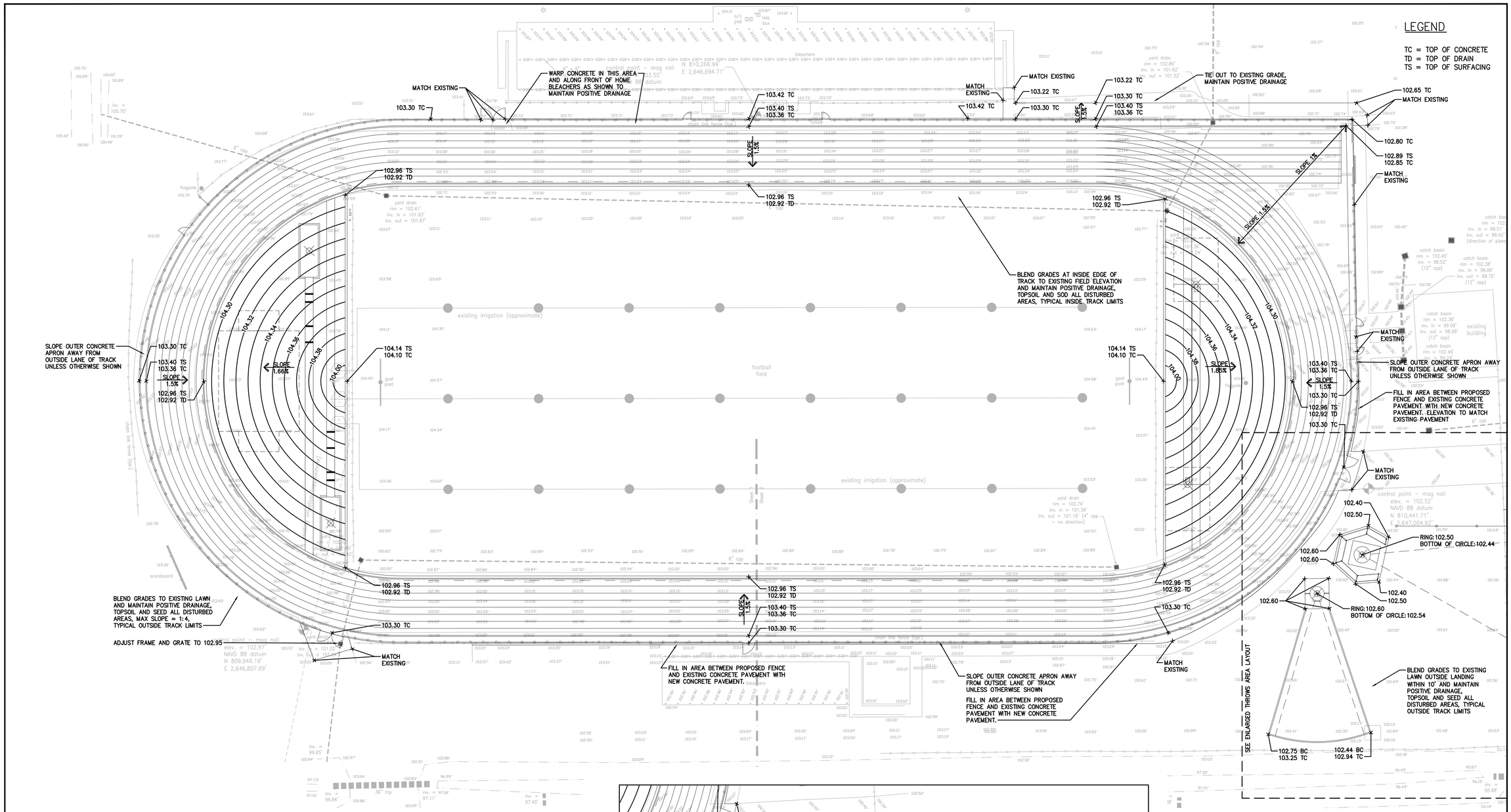


ENLARGED THROWS AREA GRADING
SCALE: 1"=20'

Drawing Copyright © 2019

CHA
1258 Professional Drive
Myrtle Beach, SC 29577-5896
843.692.3105 x284 • www.chacompanies.com

Horry County Schools

DDC ENGINEERS

HORRY COUNTY SCHOOLS

OFFICE OF FACILITIES
1160 E. HIGHWAY 501
CONWAY, SC 29526

IT IS A VIOLATION OF LAW FOR ANY PERSON, UNLESS THEY ARE ACTING UNDER THE DIRECTION OF A LICENSED PROFESSIONAL ENGINEER, ARCHITECT, LANDSCAPE ARCHITECT OR LICENSED SURVEYOR TO ALTER AN ITEM IN ANY WAY. IF AN ITEM BEARING THE STAMP OF A LICENSED PROFESSIONAL IS ALTERED, THE ALTERING ENGINEER, ARCHITECT, LANDSCAPE ARCHITECT OR LICENSED SURVEYOR SHALL STAMP THE DOCUMENT AND INCLUDE THE NOTATION "ALTERED BY" FOLLOWED BY THEIR SIGNATURE, THE DATE OF SUCH ALTERATION, AND A SPECIFIC DESCRIPTION OF THE ALTERATION.

**LORIS HIGH SCHOOL**

TRACK AND FIELD
ATHLETIC FACILITY
IMPROVEMENTS PROGRAM

| No. | Submittal / Revision | App'd. | By | Date |
|---|---|---|---|---|
| | | | | |

GRADING PLAN

| Designed By: | Drawn By: | Checked By: |
|---|---|---|
| JRP | RMH | PG |
| Issue Date: 02/21/2020 | Project No: 36108 | Scale: AS SHOWN |

Drawing No.:
C-200

0 20 40
Scale in feet

File: V:\PROJECTS\ANY\H5\36108\CADD_ACAD\C-200_LHS.DWG
Saved: 2/28/2020 11:27:57 AM Printed: 2/28/2020 11:36:52 AM Current User: Herman Ross LastSaveBy: 5683

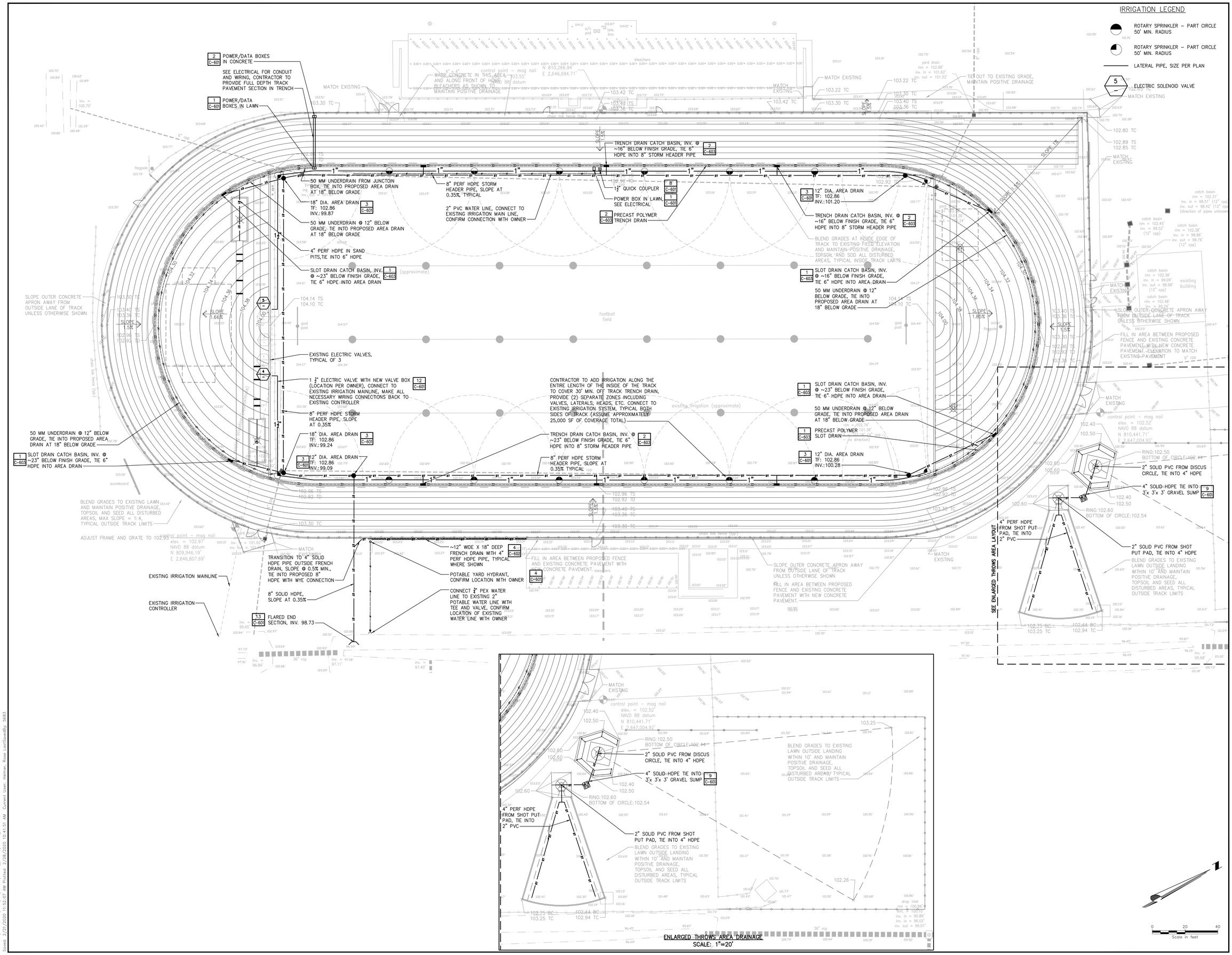


Drawing Copyright © 2019

CHA
1258 Professional Drive
Myrtle Beach, SC 29577-5896
843.692.3105 x284 • www.chacompanies.com

Horry County Schools

DDC ENGINEERS

HORRY COUNTY SCHOOLS

OFFICE OF FACILITIES
1160 E. HIGHWAY 501
CONWAY, SC 29526

IT IS A VIOLATION OF LAW FOR ANY PERSON, UNLESS THEY ARE ACTING UNDER THE DIRECTION OF A LICENSED PROFESSIONAL ENGINEER, ARCHITECT, LANDSCAPE ARCHITECT OR LAND SURVEYOR TO ALTER AN ITEM IN ANY WAY. IF AN ITEM BEARING THE STAMP OF A LICENSED PROFESSIONAL ENGINEER, LAND SURVEYOR, ENGINEER, ARCHITECT, LANDSCAPE ARCHITECT OR LAND SURVEYOR SHALL STAMP THE DOCUMENT AND INCLUDE THE NOTATION "ALTERED BY" FOLLOWED BY THEIR SIGNATURE, THE DATE OF SUCH ALTERATION, AND A SPECIFIC DESCRIPTION OF THE ALTERATION.

**LORIS HIGH SCHOOL**

TRACK AND FIELD
ATHLETIC FACILITY
IMPROVEMENTS PROGRAM

| No. | Submittal / Revision | App'd | By | Date |
|---|---|---|---|---|
| | | | | |

DRAINAGE AND UTILITY PLAN

| Designed By: | Drawn By: | Checked By: |
|---|---|---|
| JRP | RMH | PG |
| Issue Date: | Project No: | Scale: |
| 02/21/2020 | 36108 | AS SHOWN |

Drawing No.:
**C-300**

File: V:\PROJECTS\ANYCS\36108\CADD_ACAD\C-300_LHS.DWG
Saved: 2/21/2020 11:52:07 AM Plotted: 2/28/2020 10:41:51 AM Current User: Holmes, Rose LastSaved By: 5683

SEEDING NOTES:

1. INCLUDES RURAL AREAS ADJACENT TO WELL-DEVELOPED LAWNS.
2. NOT REQUIRED ON SHOULDERS, MEDIANS, ETC., AND SLOPES UNDER 5 FEET IN HEIGHT.
3. GIANT BERMUDA SEED, INCLUDING NK-37, SHALL NOT BE USED.
4. RESEEDING CRIMSON CLOVER SHALL BE INOCULATED IN ACCORDANCE WITH SUBSECTION 810.05. DO NOT PLANT CLOVER IN MEDIANS OR IN RURAL AREAS ADJACENT TO WELL-DEVELOPED LAWNS.
5. PENSACOLA BAHIA SHALL BE ALLOWED ONLY AS SHOWN IN SEEDING SCHEDULES 3 AND 4 AT THE RATE OF 50 POUNDS PER ACRE ONLY WHEN SEEDING PIT AREAS THAT ARE GOVERNED BY THE SOUTH CAROLINA MINING ACT. OTHERWISE, DO NOT INCLUDE BAHIA SEED IN THE MIX.
6. THE CONTRACTOR SHALL OBTAIN A SATISFACTORY STAND OF PERENNIAL VEGETATION WHOSE ROOT SYSTEM SHALL BE DEVELOPED SUFFICIENTLY TO SURVIVE DRY PERIODS AND WINTER WEATHER, AND BE CAPABLE OF RE-ESTABLISHMENT IN THE SPRING. THE PERENNIAL VEGETATIVE COVER SHALL HAVE A MINIMUM COVERAGE DENSITY OF 70% FOR THE SEEDED AREAS. CONTRACTOR SHALL DETERMINE ALL RATES OF APPLICATION NECESSARY TO PRODUCE THE REQUIRED STAND OF GRASS, AND SHALL FOLLOW THE APPLICATION PROCEDURES AS SPECIFIED HEREIN.
7. GIANT BERMUDA SEED, INCLUDING NK-37, SHALL NOT BE USED.

### SEEDING SCHEDULE FOR TEMPORARY VEGETATION — Ds3

| SCHEDULE NO. | COMMON NAME OF SEED | RATE PER ACRE (LBS.) | PLANTING DATES |
|---|---|---|---|
| 1 | COMMON BERMUDA (UNHULLED) | 210 | MARCH 16 TO AUG. 31 |
| | TALL FESCUE | 140 | |
| 2 | COMMON BERMUDA (UNHULLED) | 175 | SEPT. 1 TO MARCH 15 |
| | ANNUAL RYEGRASS | 175 | |

NOTES:

THE CONTRACTOR SHALL OBTAIN A SATISFACTORY STAND OF PERENNIAL VEGETATION WHOSE ROOT SYSTEM SHALL BE DEVELOPED SUFFICIENTLY TO SURVIVE DRY PERIODS AND WINTER WEATHER, AND BE CAPABLE OF RE-ESTABLISHMENT IN THE SPRING. THE PERENNIAL VEGETATIVE COVER SHALL HAVE A MINIMUM COVERAGE DENSITY OF 70% FOR THE SEEDED AREAS. CONTRACTOR SHALL DETERMINE ALL RATES OF APPLICATION NECESSARY TO PRODUCE THE REQUIRED STAND OF GRASS, AND SHALL FOLLOW THE APPLICATION PROCEDURES AS SPECIFIED HEREIN.

### SEEDING SCHEDULE FOR PERMANENT VEGETATION

| SCHEDULE NO. | COMMON NAME OF SEED | RURAL RATE | URBAN RATE[1] | PLANTING DATES |
|---|---|---|---|---|
| 3[5] | COMMON BERMUDA (HULLED)[3] | 30 | 30 | MARCH 1 TO AUG. 14 |
| | WEEPING LOVEGRASS[7] | 10 | 10 | |
| | SERICEA LESPEDEZA (SCARIFIED)[2] | 50 | 50 | |
| 4[5] | COMMON BERMUDA (UNHULLED)[3] | 40 | 40 | AUG. 5 TO FEB. 28 |
| | WEEPING LOVEGRASS[7] | 10 | 10 | |
| | SERICEA LESPEDEZA (UNHULLED, UNSCARIFIED)[6] | 80 | 80 | |
| | RESEEDING CRIMSON CLOVER[4] | 20 | 0 | |
| | RYE GRAIN | 20 | 0 | |

NOTES:

1 INCLUDES RURAL AREAS ADJACENT TO WELL-DEVELOPED LAWNS.

2 NOT REQUIRED ON SHOULDERS, MEDIANS, ECT., AND SLOPES UNDER 5 FEET IN HEIGHT

3 GIANT BERMUDA SEED, INCLUDING NK-37, SHALL NOT BE USED.

4 RESEEDING CRIMSON CLOVER SHALL BE INOCULATED IN ACCORDANCE WITH SUBSECTION 810.05. DO NOT PLANT CLOVER IN MEDIANS OR IN RURAL AREAS ADJACENT TO WELL-DEVELOPED LAWNS.

5 PENSACOLA BAHIA SHALL BE ALLOWED ONLY AS SHOWN IN SEEDING SCHEDULES 3 AND 4 AT THE RATE OF 50 POUNDS PER ACRE ONLY WHEN SEEDING PIT AREAS THAT ARE GOVERNED BY THE SOUTH CAROLINA MINING ACT. OTHERWISE, DO NOT INCLUDE BAHIA SEED IN THE MIX.

THE CONTRACTOR SHALL OBTAIN A SATISFACTORY STAND OF PERENNIAL VEGETATION WHOSE ROOT SYSTEM SHALL BE DEVELOPED SUFFICIENTLY TO SURVIVE DRY PERIODS AND WINTER WEATHER, AND BE CAPABLE OF RE-ESTABLISHMENT IN THE SPRING. THE PERENNIAL VEGETATIVE COVER SHALL HAVE A MINIMUM COVERAGE DENSITY OF 70% FOR THE SEEDED AREAS. CONTRACTOR SHALL DETERMINE ALL RATES OF APPLICATION NECESSARY TO PRODUCE THE REQUIRED STAND OF GRASS, AND SHALL FOLLOW THE APPLICATION PROCEDURES AS SPECIFIED HEREIN.

THE CONTRACTOR MAY INCLUDE QUANTITIES OF RYE GRAIN AND MILLET IN SCHEDULE 1 AND 3 IN ORDER TO ESTABLISH QUICK GROUND COVER FOR EROSION CONTROL PURPOSES.

### SEEDING SCHEDULE FOR TEMPORARY VEGETATION

| SCHEDULE NO. | COMMON NAME OF SEED | RATE PER ACRE (LBS.) | PLANTING DATES |
|---|---|---|---|
| 1 | ANNUAL SUDAN GRASS (SWEET OR TIFF) | 40 | APRIL 1- AUGUST 15 |
| 2 | BROWN TOP MILLET | 50 | APRIL 1- AUGUST 15 |
| 3 | RYE GRAIN | 55 | AUGUST 16- MARCH 31 |

OAT GRAIN IS TO BE ADDED TO ALL SCHEDULES, IF SEEDING DATE IS BETWEEN MARCH 1 AND APRIL 16, AT THE RATE OF 10 POUNDS PER ACRE.

THE CONTRACTOR SHALL OBTAIN A SATISFACTORY STAND OF VEGETATION THAT IS CAPABLE OF EROSION CONTROL. CONTRACTOR SHALL DETERMINE ALL RATES OF APPLICATION NECESSARY TO PRODUCE THE REQUIRED RESULTS. THE TEMPORARY VEGETATION SHALL PROVIDE MINIMUM DENSITY COVERAGE OF 70% OF THE SEEDED AREA.

## CONSTRUCTION SEQUENCE:

1. CONTRACTOR TO LOCATE ALL EXISTING UTILITIES WITHIN AND IMMEDIATELY ADJACENT TO PROJECT AREA.
2. INSTALL CONSTRUCTION ENTRANCE.
3. INSTALL PERIMETER EROSION CONTROL DEVICES, INCLUDING ALL TREE PROTECTION.
4. DEMO EXISTING TRACK AND APPURTENANCES.

## EROSION CONTROL LEGEND

| SYMBOL | PRACTICE | DESCRIPTION |
|---|---|---|
| IP | INLET PROTECTION | A TEMPORARY SEDIMENT BARRIER LAID AROUND A STORM DRAIN INLET TO PREVENT SEDIMENT FROM ENTERING THE DRAINAGE SYSTEM. |
| OP | OUTLET PROTECTION | RIP RAP CHANNEL / BANK PLACED BELOW DRAINAGE OUTLETS TO REDUCE THE VELOCITY OF FLOW, EROSION, AND STABILIZE GRADES DOWNSTREAM OF OUTLET STRUCTURES. |
| CD | TEMPORARY CHECK DAM | RIP RAP BANK PLACED BELOW DRAINAGE OUTLETS TO REDUCE THE VELOCITY OF FLOW, EROSION AND STABILIZE GRADES DOWN STREAM OF DRAINAGE OUTLETS. |
| SF | SILT FENCE | A TEMPORARY STRUCTURE USED TO SLOW THE VELOCITY OF RUN-OFF, CAUSE SEDIMENT DEPOSITION AT THE STRUCTURE, AND FILTER SEDIMENT FROM RUN-OFF. |
| $SF_2$ | DOUBLE ROW SILT FENCE | A TEMPORARY STRUCTURE USED TO SLOW THE VELOCITY OF RUN-OFF, CAUSE SEDIMENT DEPOSITION AT THE STRUCTURE, AND FILTER SEDIMENT FROM RUN-OFF. |
| CL | CONSTRUCTION LIMITS | A DEFINED AREA THAT ALL LAND DISTURBANCE WILL OCCUR DURING CONSTRUCTION. |
| ECB | PERMANENT EROSION CONTROL MATTING (HIGH PERFORMANCE TRM PYRAMAT BY SI GEOSOLUTIONS OR EQUAL) | A PERMANENT REINFORCEMENT MAT TO PREVENT SOIL EROSION AND MAINTAIN PERMANENT GROUND COVER. |
| Ds3 | DISTURBED AREA STABILIZATION (WITH TEMPORARY VEGETATION) | ESTABLISHING PERMANENT VEGETATIVE COVER SUCH AS TREES, SHRUBS, VINES, GRASSES, SOD, OR LEGUMES ON DISTURBED AREAS. |
| ST | SEDIMENT TUBE | SEDIMENT TUBE PLACED IN EXISTING OR PROPOSED DITCH SECTIONS TO REDUCE THE VELOCITY OF FLOW, EROSION AND STABILIZE GRADES DOWN STREAM OR DRAINAGE OUTLETS. |

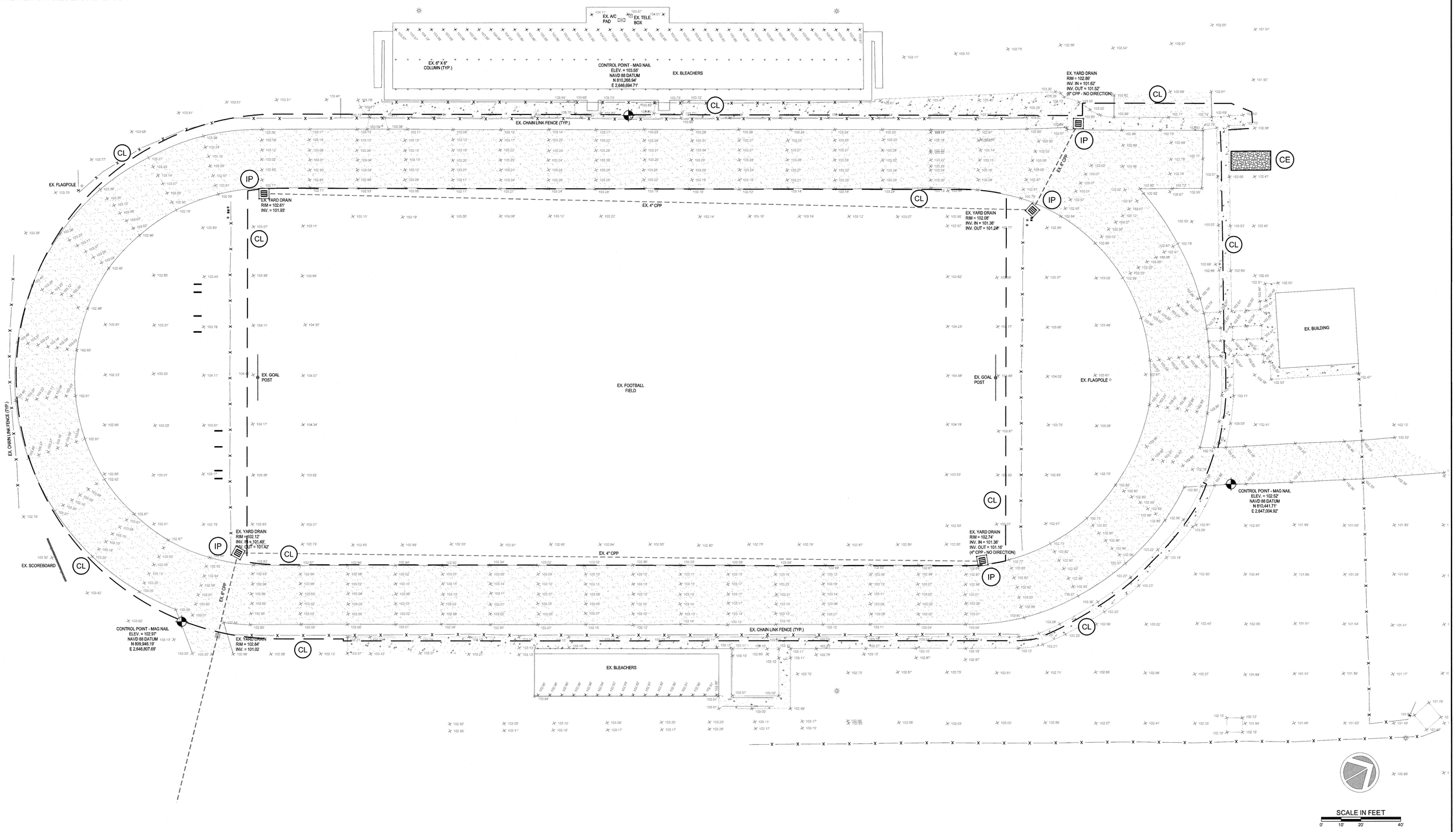


File: J:\PLANS\19\19062E - HORRY COUNTY SCHOOLS\E\LORIS-TRACK\19062-LORIS-TRACK-ERO-PLAN.DWG
Saved: 2/21/2020 9:48:58 AM Plotted: 2/21/2020 9:48:15 AM Current User: Perry Sanford LastSavedBy: pes

Drawing Copyright © 2016

CHA
1298 Professional Drive
Myrtle Beach, SC 29577-5896
843.692.3205 x24 • www.chacompanies.com

HCS
Horry County Schools

DDC
ENGINEERS®
Consulting Engineers, Surveyors, Planners, Landscape Architects & Environmentalists
1298 Professional Dr., Myrtle Beach, SC 29577
Phone: (843) 692-3200 Fax: (843) 692-3210

HORRY COUNTY SCHOOLS

OFFICE OF FACILITIES
1160 E. HIGHWAY 501
CONWAY, SC 29526

SOUTH CAROLINA
DDC ENGINEERS, INC.
No. C00036
CERTIFICATE OF AUTHORIZATION

SOUTH CAROLINA
LICENSED PROFESSIONAL ENGINEER
No. 29814
ERIC K. SANFORD

IT IS A VIOLATION OF LAW FOR ANY PERSON, UNLESS THEY ARE ACTING UNDER THE DIRECTION OF A LICENSED PROFESSIONAL ENGINEER, ARCHITECT, LANDSCAPE ARCHITECT OR LAND SURVEYOR TO ALTER AN ITEM IN ANY WAY. IF AN ITEM BEARING THE SEAL OF A LICENSED PROFESSIONAL ENGINEER, ARCHITECT, LANDSCAPE ARCHITECT OR LAND SURVEYOR SHALL STAMP THE DOCUMENT AND INCLUDE THE NOTATION "ALTERED BY" FOLLOWED BY THEIR SIGNATURE, THE DATE OF SUCH ALTERATION, AND A SPECIFIC DESCRIPTION OF THE ALTERATION.

LORIS HIGH SCHOOL
TRACK AND FIELD
ATHLETIC FACILITY
IMPROVEMENTS PROGRAM

| No. | Submittal / Revision | App'd. | By | Date |
|---|---|---|---|---|
| | | | | |

SEDIMENT AND EROSION CONTROL PLAN
PHASE I

| Designed By: | Drawn By: | Checked By: |
|---|---|---|
| EKS | PES | EKS |
| Issue Date: | Project No: | Scale: |
| 1/31/20 | 19062E | 1" = 20' |

Drawing No.:
C-500

SEEDING NOTES:

1. INCLUDES RURAL AREAS ADJACENT TO WELL-DEVELOPED LAWNS.
2. NOT REQUIRED ON SHOULDERS, MEDIANS, ETC., AND SLOPES UNDER 5 FEET IN HEIGHT.
3. GIANT BERMUDA SEED, INCLUDING NK-37, SHALL NOT BE USED.
4. RESEEDING CRIMSON CLOVER SHALL BE INOCULATED IN ACCORDANCE WITH SUBSECTION 810.05. DO NOT PLANT CLOVER IN MEDIANS OR IN RURAL AREAS ADJACENT TO WELL-DEVELOPED LAWNS.
5. PENSACOLA BAHIA SHALL BE ALLOWED ONLY AS SHOWN IN SEEDING SCHEDULES 3 AND 4 AT THE RATE OF 50 POUNDS PER ACRE ONLY WHEN SEEDING PIT AREAS THAT ARE GOVERNED BY THE SOUTH CAROLINA MINING ACT. OTHERWISE, DO NOT INCLUDE BAHIA SEED IN THE MIX.
6. THE CONTRACTOR SHALL OBTAIN A SATISFACTORY STAND OF PERENNIAL VEGETATION WHOSE ROOT SYSTEM SHALL BE DEVELOPED SUFFICIENTLY TO SURVIVE DRY PERIODS AND WINTER WEATHER, AND BE CAPABLE OF RE-ESTABLISHMENT IN THE SPRING. THE PERENNIAL VEGETATIVE COVER SHALL HAVE A MINIMUM COVERAGE DENSITY OF 70% FOR THE SEEDED AREAS. CONTRACTOR SHALL DETERMINE ALL RATES OF APPLICATION NECESSARY TO PRODUCE THE REQUIRED STAND OF GRASS, AND SHALL FOLLOW THE APPLICATION PROCEDURES AS SPECIFIED HEREIN.
7. GIANT BERMUDA SEED, INCLUDING NK-37, SHALL NOT BE USED.

### SEEDING SCHEDULE FOR TEMPORARY VEGETATION Ds3

| SCHEDULE NO. | COMMON NAME OF SEED | RATE PER ACRE (LBS.) | PLANTING DATES |
|---|---|---|---|
| 1 | COMMON BERMUDA (HULLED) | 210 | MARCH 16 TO AUG. 31 |
| | TALL FESCUE | 140 | |
| 2 | COMMON BERMUDA (UNHULLED) | 175 | SEPT. 1 TO MARCH 15 |
| | ANNUAL RYEGRASS | 175 | |

NOTES:

THE CONTRACTOR SHALL OBTAIN A SATISFACTORY STAND OF PERENNIAL VEGETATION WHOSE ROOT SYSTEM SHALL BE DEVELOPED SUFFICIENTLY TO SURVIVE DRY PERIODS AND WINTER WEATHER, AND BE CAPABLE OF RE-ESTABLISHMENT IN THE SPRING. THE PERENNIAL VEGETATIVE COVER SHALL HAVE A MINIMUM COVERAGE DENSITY OF 70% FOR THE SEEDED AREAS. CONTRACTOR SHALL DETERMINE ALL RATES OF APPLICATION NECESSARY TO PRODUCE THE REQUIRED STAND OF GRASS, AND SHALL FOLLOW THE APPLICATION PROCEDURES AS SPECIFIED HEREIN.

### SEEDING SCHEDULE FOR PERMANENT VEGETATION

| SCHEDULE NO. | COMMON NAME OF SEED | RURAL RATE | URBAN RATE[1] | PLANTING DATES |
|---|---|---|---|---|
| 3[3] | COMMON BERMUDA (HULLED)[7] | 30 | 30 | MARCH 1 TO AUG. 14 |
| | WEEPING LOVEGRASS[7] | 10 | 10 | |
| | SERICEA LESPEDEZA (SCARIFIED)[2] | 50 | 50 | |
| 4[5] | COMMON BERMUDA (UNHULLED)[7] | 40 | 40 | AUG. 5 TO FEB. 28 |
| | WEEPING LOVEGRASS[7] | 10 | 10 | |
| | SERICEA LESPEDEZA (UNHULLED, UNSCARIFIED)[2] | 80 | 80 | |
| | RESEEDING CRIMSON CLOVER[4] | 20 | 0 | |
| | RYE GRAIN | 20 | 0 | |

NOTES:

1 INCLUDES RURAL AREAS ADJACENT TO WELL-DEVELOPED LAWNS.

2 NOT REQUIRED ON SHOULDERS, MEDIANS, ECT., AND SLOPES UNDER 5 FEET IN HEIGHT

3 GIANT BERMUDA SEED, INCLUDING NK-37, SHALL NOT BE USED.

4 RESEEDING CRIMSON CLOVER SHALL BE INOCULATED IN ACCORDANCE WITH SUBSECTION 610.05. DO NOT PLANT CLOVER IN MEDIANS OR IN RURAL AREAS ADJACENT TO WELL-DEVELOPED LAWNS.

5 PENSACOLA BAHIA SHALL BE ALLOWED ONLY AS SHOWN IN SEEDING SCHEDULES 3 AND 4 AT THE RATE OF 50 POUNDS PER ACRE ONLY WHEN SEEDING PIT AREAS THAT ARE GOVERNED BY THE SOUTH CAROLINA MINING ACT. OTHERWISE, DO NOT INCLUDE BAHIA SEED IN THE MIX.

THE CONTRACTOR SHALL OBTAIN A SATISFACTORY STAND OF PERENNIAL VEGETATION WHOSE ROOT SYSTEM SHALL BE DEVELOPED SUFFICIENTLY TO SURVIVE DRY PERIODS AND WINTER WEATHER, AND BE CAPABLE OF RE-ESTABLISHMENT IN THE SPRING. THE PERENNIAL VEGETATIVE COVER SHALL HAVE A MINIMUM COVERAGE DENSITY OF 70% FOR THE SEEDED AREAS. CONTRACTOR SHALL DETERMINE ALL RATES OF APPLICATION NECESSARY TO PRODUCE THE REQUIRED STAND OF GRASS, AND SHALL FOLLOW THE APPLICATION PROCEDURES AS SPECIFIED HEREIN.

THE CONTRACTOR MAY INCLUDE QUANTITIES OF RYE GRAIN AND MILLET IN SCHEDULE 1 AND 3 IN ORDER TO ESTABLISH QUICK GROUND COVER FOR EROSION CONTROL PURPOSES.

### SEEDING SCHEDULE FOR TEMPORARY VEGETATION

| SCHEDULE NO. | COMMON NAME OF SEED | RATE PER ACRE (LBS.) | PLANTING DATES |
|---|---|---|---|
| 1 | ANNUAL SUDAN GRASS (SWEET OR TIFF) | 40 | APRIL 1- AUGUST 15 |
| 2 | BROWN TOP MILLET | 50 | APRIL 1- AUGUST 15 |
| 3 | RYE GRAIN | 55 | AUGUST 16- MARCH 31 |

OAT GRAIN IS TO BE ADDED TO ALL SCHEDULES, IF SEEDING DATE IS BETWEEN MARCH 1 AND APRIL 16, AT THE RATE OF 10 POUNDS PER ACRE.

THE CONTRACTOR SHALL OBTAIN A SATISFACTORY STAND OF VEGETATION THAT IS CAPABLE OF EROSION CONTROL. CONTRACTOR SHALL DETERMINE ALL RATES OF APPLICATION NECESSARY TO PRODUCE THE REQUIRED RESULTS. THE TEMPORARY VEGETATION SHALL PROVIDE MINIMUM DENSITY COVERAGE OF 70% OF THE SEEDED AREA.

## CONSTRUCTION SEQUENCE:

1. EXCAVATE END ZONE TRACK EXTENSION AREA.
2. INSTALL UNDER DRAINAGE SYSTEM.
3. FINE GRADE TRACK AND INFIELD AREAS.
4. PAVE TRACK AND INSTALL SYNTHETIC SURFACING.
5. PAINT TRACK LINES AND FINISH REMAINING SITE IMPROVEMENTS.
6. GRADE AND SEED PERIMETER TIE IN POINTS.
7. FINAL STABILIZATION OF ALL DENUDED AREAS.
8. PER SEEDING SCHEDULE, WATER AND MAINTAIN TO INSURE PROPER GROUND COVERAGE.
9. UPON APPROVAL BY HORRY COUNTY, REMOVE ALL TEMPORARY EROSION CONTROL DEVICES.

## EROSION CONTROL LEGEND

| SYMBOL | PRACTICE | DESCRIPTION |
|---|---|---|
| IP | INLET PROTECTION | A TEMPORARY SEDIMENT BARRIER LAID AROUND A STORM DRAIN INLET TO PREVENT SEDIMENT FROM ENTERING THE DRAINAGE SYSTEM. |
| OP | OUTLET PROTECTION | RIP RAP CHANNEL / BANK PLACED BELOW DRAINAGE OUTLETS TO REDUCE THE VELOCITY OF FLOW, EROSION, AND STABILIZE GRADES DOWNSTREAM OF OUTLET STRUCTURES. |
| CD | TEMPORARY CHECK DAM | RIP RAP BANK PLACED BELOW DRAINAGE OUTLETS TO REDUCE THE VELOCITY OF FLOW, EROSION AND STABILIZE GRADES DOWN STREAM OF DRAINAGE OUTLETS. |
| SF | SILT FENCE | A TEMPORARY STRUCTURE USED TO SLOW THE VELOCITY OF RUN-OFF, CAUSE SEDIMENT DEPOSITION AT THE STRUCTURE, AND FILTER SEDIMENT FROM RUN-OFF. |
| $SF_2$ | DOUBLE ROW SILT FENCE | A TEMPORARY STRUCTURE USED TO SLOW THE VELOCITY OF RUN-OFF, CAUSE SEDIMENT DEPOSITION AT THE STRUCTURE, AND FILTER SEDIMENT FROM RUN-OFF. |
| CL | CONSTRUCTION LIMITS | A DEFINED AREA THAT ALL LAND DISTURBANCE WILL OCCUR DURING CONSTRUCTION. |
| ECB | PERMANENT EROSION CONTROL MATTING (HIGH PERFORMANCE TRM PYRAMAT BY SI GEOSOLUTIONS OR EQUAL) | A PERMANENT REINFORCEMENT MAT TO PREVENT SOIL EROSION AND MAINTAIN PERMANENT GROUND COVER. |
| Ds3 | DISTURBED AREA STABILIZATION (WITH TEMPORARY VEGETATION) | ESTABLISHING PERMANENT VEGETATIVE COVER SUCH AS TREES, SHRUBS, VINES, GRASSES, SOD, OR LEGUMES ON DISTURBED AREAS. |
| ST | SEDIMENT TUBE | SEDIMENT TUBE PLACED IN EXISTING OR PROPOSED DITCH SECTIONS TO REDUCE THE VELOCITY OF FLOW, EROSION AND STABILIZE GRADES DOWN STREAM OR DRAINAGE OUTLETS. |

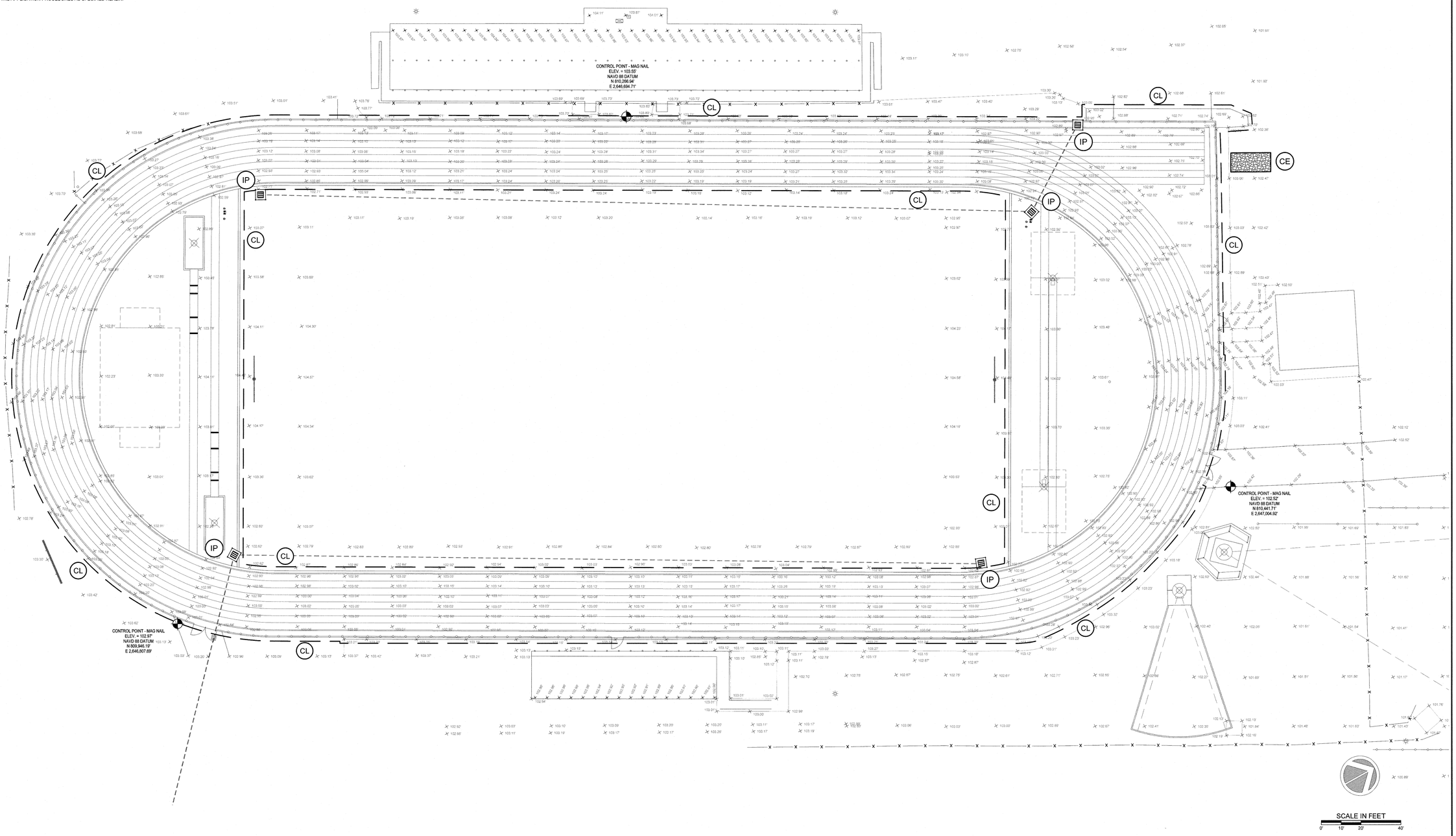


File: J:\PLANS\19\19062E - HORRY COUNTY SCHOOLS\E\LORIS-TRACK\19062-LORIS-ERO-PLAN.DWG
Saved: 2/21/2020 8:48:40 AM Plotted: 2/21/2020 10:09:18 AM Current User: Perry Sanford LastSavedBy: pes

Drawing Copyright © 2016

CHA
1298 Professional Drive
Myrtle Beach, SC 29577-5896
843.692.3200 x284 • www.chaconsperms.com

HCS
Horry County Schools

DDC
ENGINEERS®
Consulting Engineers, Surveyors, Planners, Landscape Architects & Environmentalists
1298 Professional Dr., Myrtle Beach, SC 29577
Phone: (843) 692-3200 Fax: (843) 692-3210

HORRY COUNTY SCHOOLS

OFFICE OF FACILITIES
1160 E. HIGHWAY 501
CONWAY, SC 29526

SOUTH CAROLINA
DDC ENGINEERS, INC.
No. C00036
CERTIFICATE OF AUTHORIZATION

SOUTH CAROLINA
No. 29814
ERIC K. SANFORD
LICENSED PROFESSIONAL ENGINEER

IT IS A VIOLATION OF LAW FOR ANY PERSON, UNLESS THEY ARE ACTING UNDER THE DIRECTION OF A LICENSED PROFESSIONAL ENGINEER, ARCHITECT, LANDSCAPE ARCHITECT OR LAND SURVEYOR TO ALTER AN ITEM IN ANY WAY. IF AN ITEM BEARING THE SEAL OF A LICENSED PROFESSIONAL ENGINEER, ARCHITECT, LANDSCAPE ARCHITECT OR LAND SURVEYOR SHALL STAMP THE DOCUMENT AND INCLUDE THE NOTATION "ALTERED BY" FOLLOWED BY THEIR SIGNATURE, THE DATE OF SUCH ALTERATION, AND A SPECIFIC DESCRIPTION OF THE ALTERATION.

LORIS HIGH SCHOOL
TRACK AND FIELD
ATHLETIC FACILITY
IMPROVEMENTS PROGRAM

| No. | Submittal / Revision | App'd. | By | Date |
|---|---|---|---|---|
| | | | | |

SEDIMENT AND EROSION CONTROL PLAN
PHASE II

| Designed By: | Drawn By: | Checked By: |
|---|---|---|
| EKS | PES | EKS |
| Issue Date: | Project No: | Scale: |
| 1/31/20 | 19062E | 1" = 20' |

Drawing No.:
C-501

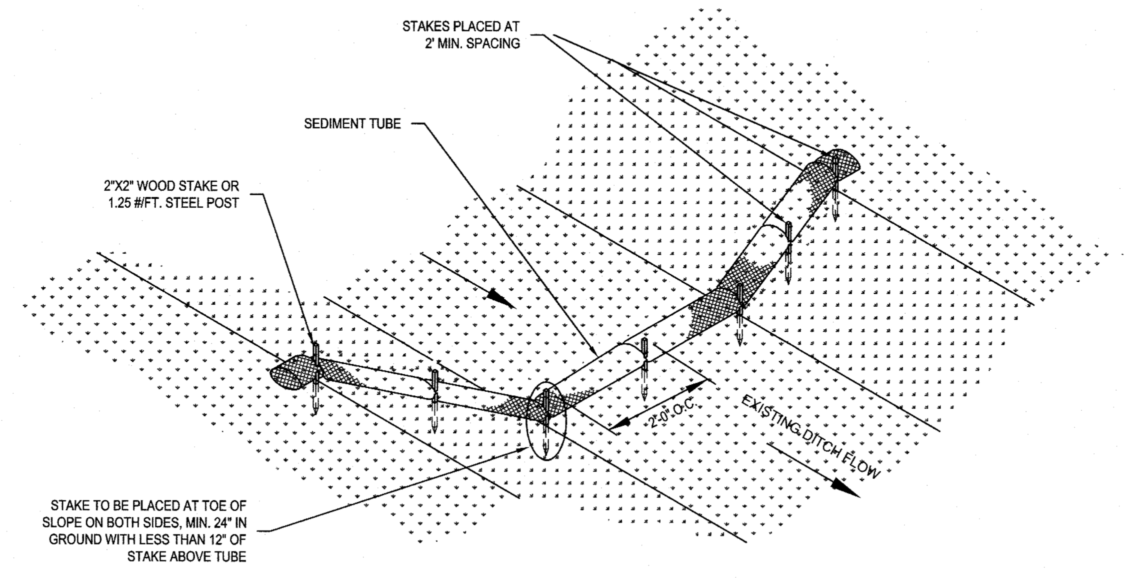


SEDIMENT TUBE CHECK DAM DETAIL (NO BLANKET)

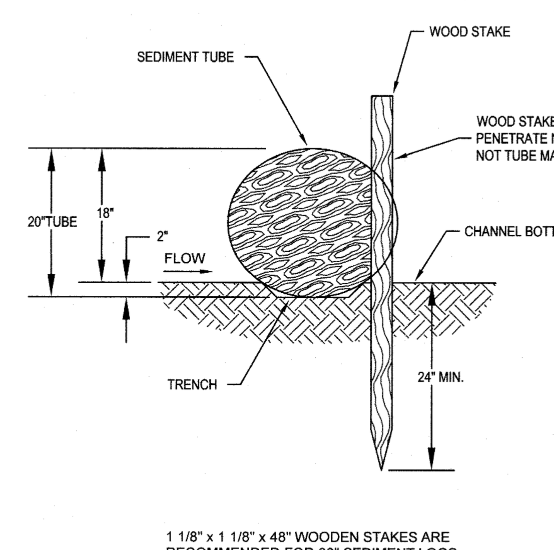


1 1/8" x 1 1/8" x 48" WOODEN STAKES ARE RECOMMENDED FOR 20" SEDIMENT LOGS.

STAKE DETAIL (WITH TRENCH)

## SEDIMENT TUBES - GENERAL NOTES

1. SEDIMENT TUBES MAY BE INSTALLED ALONG CONTOURS, IN DRAINAGE CONVEYANCE CHANNELS, AND AROUND INLETS TO HELP PREVENT OFF SITE DISCHARGE OF SEDIMENT LADEN STORM WATER RUNOFF.
2. SEDIMENT TUBES ARE ELONGATED TUBES OF COMPACTED GEOTEXTILES, CURLED EXCELSIOR WOOD, NATURAL COCONUT FIBER, OR HARDWOOD MULCH. STRAW, PINE NEEDLE AND LEAF MULCH FILLED SEDIMENT TUBES ARE NOT PERMITTED.
3. THE OUTER NETTING OF THE SEDIMENT TUBE SHOULD CONSIST OF SEAMLESS, HIGH DENSITY POLYETHYLENE PHOTODEGRADABLE MATERIALS TREATED WITH ULTRAVIOLET STABILIZERS OR A SEAMLESS, HIGH DENSITY POLYETHYLENE NON DEGRADABLE MATERIAL.
4. SEDIMENT TUBES, WHEN USED AS CHECKS WITHIN CHANNELS, SHOULD RANGE BETWEEN 18 INCHES AND 24 INCHES DEPENDING ON CHANNEL DIMENSIONS. DIAMETERS OUTSIDE THIS RANGE MAY BE ALLOWED WHERE NECESSARY WHEN APPROVED.
5. CURLED EXCELSIOR WOOD, OR NATURAL COCONUT PRODUCTS THAT ARE ROLLED UP TO CREATE A SEDIMENT TUBE ARE NOT ALLOWED.
6. SEDIMENT TUBES SHOULD BE STAKED USING WOODEN STAKES ( 2" X 2" ) OR STEEL POSTS (STANDARD "U" OR "T" SECTIONS WITH A MINIMUM WEIGHT OF 1.25 POUNDS PER FOOT) AT A MINIMUM OF 48 INCHES IN LENGTH PLACED ON 2 FOOT CENTERS.
7. INSTALL ALL SEDIMENT TUBES TO ENSURE THAT NO GAPS EXIST BETWEEN THE SOIL AND THE BOTTOM OF THE TUBE. MANUFACTURER'S RECOMMENDATIONS SHOULD ALWAYS BE CONSULTED BEFORE INSTALLATION.
8. THE ENDS OF ADJACENT SEDIMENT TUBES SHOULD BE OVERLAPPED 6 INCHES TO PREVENT FLOW AND SEDIMENT FROM PASSING THROUGH THE FIELD JOINT.
9. SEDIMENT TUBES SHOULD NOT BE STACKED ON TOP OF ONE ANOTHER, UNLESS RECOMMENDED BY MANUFACTURER.
10. EACH SEDIMENT TUBE SHOULD BE INSTALLED IN A TRENCH WITH A DEPTH EQUAL TO 1/5 THE DIAMETER OF THE SEDIMENT TUBE.
11. SEDIMENT TUBES SHOULD CONTINUE UP THE SIDE SLOPES A MINIMUM OF 1 FOOT ABOVE THE DESIGN FLOW DEPTH OF THE CHANNEL.
12. INSTALL STAKES AT A DIAGONAL FACING INCOMING RUNOFF.

## SEDIMENT TUBES - INSPECTION & MAINTENANCE

1. THE KEY TO FUNCTIONAL SEDIMENT TUBES IS WEEKLY INSPECTIONS, ROUTINE MAINTENANCE AND REGULAR SEDIMENT REMOVAL.
2. REGULAR INSPECTIONS OF SEDIMENT TUBES SHALL BE CONDUCTED ONCE EVERY CALENDAR WEEK AND, AS RECOMMENDED, WITHIN 24 HOURS AFTER EACH RAINFALL EVEN THAT PRODUCES 1/2 INCH OR MORE OF PRECIPITATION.
3. ATTENTION TO SEDIMENT ACCUMULATIONS IN FRONT OF THE SEDIMENT TUBE IS EXTREMELY IMPORTANT. ACCUMULATED SEDIMENT SHOULD BE CONTINUALLY MONITORED AND REMOVED WHEN NECESSARY.
4. REMOVE ACCUMULATED SEDIMENT WHEN IT REACHES 1/3 THE HEIGHT OF THE SEDIMENT TUBE.
5. REMOVED SEDIMENT SHALL BE PLACED IN STOCKPILE STORAGE AREAS OR SPREAD THINLY ACROSS DISTURBED AREA. STABILIZE THE REMOVED SEDIMENT AFTER IT IS RELOCATED.
6. LARGE DEBRIS, TRASH AND LEAVES SHOULD BE REMOVED FROM IN FRONT OF TUBES WHEN FOUND.
7. IF EROSION CAUSES THE EDGES TO FALL TO A HEIGHT EQUAL TO OR BELOW THE HEIGHT OF THE SEDIMENT TUBE, REPAIRS SHOULD BE MADE IMMEDIATELY TO PREVENT RUNOFF FROM BYPASSING TUBE.
8. SEDIMENT TUBES SHOULD BE REMOVED AFTER THE CONTRIBUTING DRAINAGE AREA HAS BEEN COMPLETELY STABILIZED. PERMANENT VEGETATION SHOULD REPLACE AREAS FROM WHICH SEDIMENT TUBES HAVE BEEN REMOVED.

## SEDIMENT TUBE SPACING

| SLOPE | MAX. SEDIMENT TUBE SPACING |
|---|---|
| LESS THAN 2% | 150-FEET |
| 2% | 100-FEET |
| 3% | 75-FEET |
| 4% | 50-FEET |
| 5% | 40-FEET |
| 6% | 30-FEET |
| GREATER THAN 6% | 25-FEET |

## (ST) SEDIMENT TUBE DETAIL
SCALE: N.T.S.

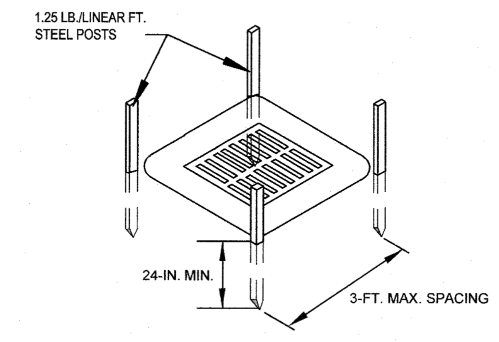


POST INSTALLATION DETAIL

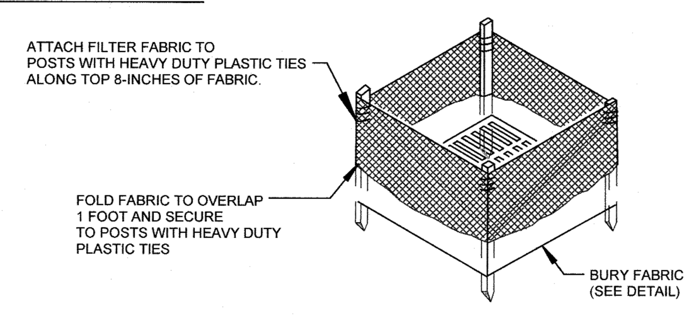


FILTER FABRIC INSTALLATION DETAIL

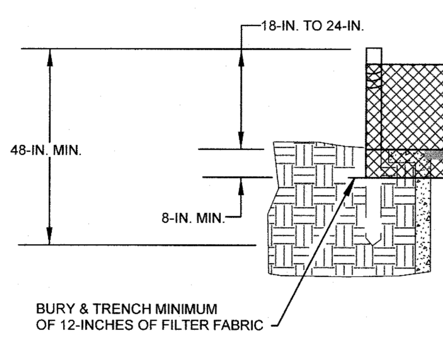


FILTER FABRIC BURIAL DETAIL

## TYPE A - POST REQUIREMENTS

1. SILT FENCE POSTS MUST BE 48 INCH LONG STEEL POSTS THAT MEET, AT A MINIMUM, THE FOLLOWING PHYSICAL CHARACTERISTICS.
   - COMPOSED OF A HIGH STRENGTH STEEL WITH A MINIMUM YIELD STRENGTH OF 50,000 PSI.
   - INCLUDE A STANDARD "T" SECTION WITH A NOMINAL FACE WIDTH OF 1.38 INCHES AND A NOMINAL "T" LENGTH OF 1.48 INCHES.
   - WEIGH 1.25 POUNDS PER FOOT (±8%).
2. POSTS SHALL BE EQUIPPED WITH PROJECTIONS TO AID IN FASTENING OF FILTER FABRIC.
3. INSTALL POSTS TO A MINIMUM OF 24 INCHES. A MINIMUM HEIGHT OF 1 TO 2 INCHES ABOVE THE FABRIC SHALL BE MAINTAINED, AND A MAXIMUM HEIGHT OF 3 FEET SHALL BE MAINTAINED ABOVE THE GROUND.
4. POST SPACING SHALL BE AT A MAXIMUM OF 3 FEET ON CENTER.

## TYPE A - FILTER FABRIC REQUIREMENTS

1. SILT FENCE MUST BE COMPOSED OF WOVEN GEOTEXTILE FILTER FABRIC THAT CONSISTS OF THE FOLLOWING REQUIREMENTS:
   - COMPOSED OF FIBERS CONSISTING OF LONG CHAIN SYNTHETIC POLYMERS OF AT LEAST 85% BY WEIGHT OF POLYOLEFINS, POLYESTERS OR POLYAMIDES THAT ARE FORMED INTO A NETWORK SUCH THAT THE FILAMENTS OR YARNS RETAIN DIMENSIONAL STABILITY RELATIVE TO EACH OTHER;
   - FREE OF ANY TREATMENT OR COATING WHICH MIGHT ADVERSELY ALTER ITS PHYSICAL PROPERTIES AFTER INSTALLATION;
   - FREE OF ANY DEFECTS OR FLAWS THAT SIGNIFICANTLY AFFECT ITS PHYSICAL AND/OR FILTERING PROPERTIES; AND,
   - HAVE A MINIMUM WIDTH OF 36 INCHES.
2. USE ONLY FABRIC APPEARING ON SC DOT'S QUALIFIED PRODUCTS LISTING (QPL), APPROVAL SHEET #34 MEETING THE REQUIREMENTS OF THE MOST CURRENT EDITION OF THE SC DOT STANDARD SPECIFICATIONS FOR HIGHWAY CONSTRUCTION.
3. 12 INCHES OF THE FABRIC SHOULD BE PLACED WITHIN EXCAVATED TRENCH AND TOED IN WHEN THE TRENCH IS BACKFILLED.
4. FILTER FABRIC SHALL BE PURCHASED IN CONTINUOUS ROLLS AND CUT TO THE LENGTH OF THE BARRIER TO AVOID JOINTS.
5. FILTER FABRIC SHALL BE INSTALLED AT A MINIMUM OF 24 INCHES ABOVE THE GROUND.

## TYPE A - INSPECTION & MAINTENANCE

1. THE KEY TO FUNCTIONAL INLET PROTECTION IS WEEKLY INSPECTIONS, ROUTINE MAINTENANCE AND REGULAR SEDIMENT REMOVAL.
2. REGULAR INSPECTIONS OF INLET PROTECTION SHALL BE CONDUCTED ONCE EVERY CALENDAR WEEK AND, AS RECOMMENDED, WITHIN 24 HOURS AFTER EACH RAINFALL EVEN THAT PRODUCES 1/2 INCH OR MORE OF PRECIPITATION.
3. ATTENTION TO SEDIMENT ACCUMULATIONS ALONG THE FILTER FABRIC IS EXTREMELY IMPORTANT. ACCUMULATED SEDIMENT SHOULD BE CONTINUALLY MONITORED AND REMOVED WHEN NECESSARY.
4. REMOVE ACCUMULATED SEDIMENT WHEN IT REACHES 1/3 THE HEIGHT OF THE FILTER FABRIC. WHEN A SUMP IS INSTALLED IN FRONT OF THE FABRIC, SEDIMENT SHOULD BE REMOVED WHEN IT FILLS APPROXIMATELY 1/3 THE DEPTH OF THE SUMP.
5. REMOVED SEDIMENT SHALL BE PLACED IN STOCKPILE STORAGE AREAS OR SPREAD THINLY ACROSS DISTURBED AREA. STABILIZE THE REMOVED SEDIMENT AFTER IT IS RELOCATED.
6. CHECK FOR AREAS WHERE STORM WATER RUNOFF HAS ERODED A CHANNEL BENEATH THE FILTER FABRIC, BENEATH THE FILTER FABRIC, OR WHERE THE FABRIC HAS SAGGED OR COLLAPSED DUE TO RUNOFF OVERTOPPING THE INLET PROTECTION.
7. CHECK FOR TEARS WITHIN THE FILTER FABRIC, AREAS WHERE FABRIC HAS BEGUN TO DECOMPOSE, AND FOR ANY OTHER CIRCUMSTANCE THAT MAY RENDER THE INLET PROTECTION INEFFECTIVE. REMOVE DAMAGED FABRIC AND REINSTALL NEW FILTER FABRIC IMMEDIATELY.
8. INLET PROTECTION STRUCTURES SHOULD BE REMOVED AFTER ALL THE DISTURBED AREAS ARE PERMANENTLY STABILIZED. REMOVE ALL CONSTRUCTION MATERIAL AND SEDIMENT, AND DISPOSE OF THEM PROPERLY. GRADE THE DISTURBED AREA TO THE ELEVATION OF THE DROP INLET STRUCTURE CREST. STABILIZE ALL BARE AREAS IMMEDIATELY.

## (IP) INLET PROTECTION
SCALE: N.T.S.

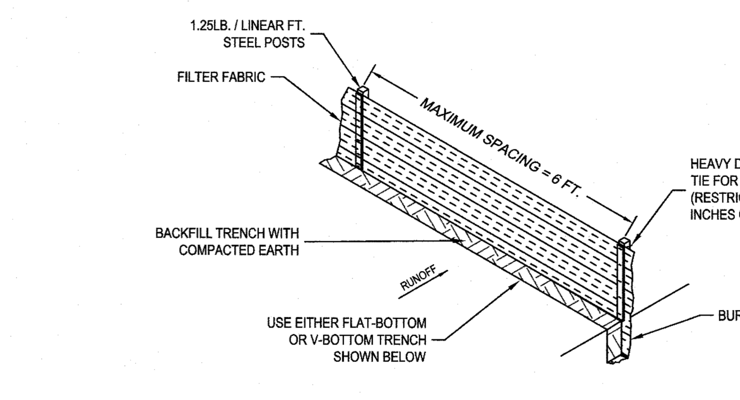


SILT FENCE INSTALLATION

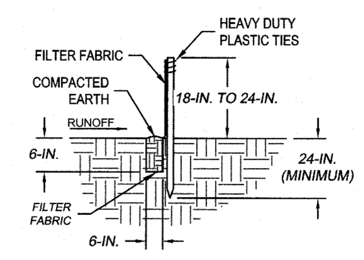


FLAT-BOTTOM TRENCH DETAIL

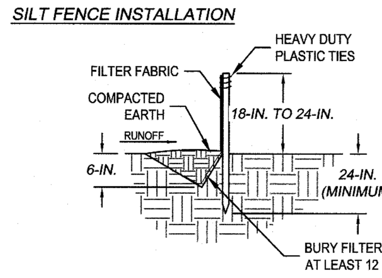


V-SHAPED TRENCH DETAIL

## SILT FENCE - GENERAL NOTES:

1. DO NOT PLACE SILT FENCE ACROSS CHANNELS OR IN OTHER AREAS SUBJECT TO CONCENTRATED FLOWS. SILT FENCE SHOULD NOT BE USED AS A VELOCITY CONTROL BMP. CONCENTRATED FLOWS ARE ANY FLOWS GREATER THAN 0.5 CFS.
2. MAXIMUM SHEET OR OVERLAND FLOW PATH LENGTH TO THE SILT FENCE SHALL BE 100 FEET.
3. MAXIMUM SLOPE STEEPNESS (NORMAL [PERPENDICULAR] TO THE FENCE LINE) SHALL BE 2:1.
4. SILT FENCE JOINTS, WHEN NECESSARY SHALL BE COMPLETED BY ONE OF THE FOLLOWING OPTIONS:
   - WRAP EACH FABRIC TOGETHER AT A SUPPORT POST WITH BOTH ENDS FASTENED TO THE POST, WITH A 1 FOOT MINIMUM OVERLAP.
   - OVERLAP SILT FENCE BY INSTALLING 3 FEET PAST THE SUPPORT POST TO WHICH THE NEW SILT FENCE ROLL IS ATTACHED. ATTACH OLD ROLL TO NEW ROLL WITH HEAVY DUTY PLASTIC TIES; OR
   - OVERLAP ENTIRE WIDTH OF EACH SILT FENCE ROLL FROM ONE SUPPORT POST TO THE NEXT SUPPORT POST.
5. ATTACH FILTER FABRIC TO THE STEEL POSTS USING HEAVY DUTY PLASTIC TIES THAT ARE EVENLY SPACED WITHIN THE TOP 8 INCHES OF THE FABRIC.
6. INSTALL THE SILT FENCE PERPENDICULAR TO THE DIRECTION OF THE STORM WATER FLOW AND PLACE THE SILT FENCE THE PROPER DISTANCE FROM THE TOE OF STEEP SLOPES TO PROVIDE SEDIMENT STORAGE AND ACCESS FOR MAINTENANCE AND CLEAN OUT.
7. INSTALL SILT FENCE CHECKS (TIE-BACKS) EVERY 50-100 FEET, DEPENDENT ON SLOPE, ALONG SILT FENCE THAT IS INSTALLED WITH SLOPE AND WHERE CONCENTRATED FLOWS ARE EXPECTED OR ARE DOCUMENTED ALONG THE PROPOSED / INSTALLED SILT FENCE.

## SILT FENCE - POST REQUIREMENTS

1. SILT FENCE POSTS MUST BE 48 INCH LONG STEEL POSTS THAT MEET, AT A MINIMUM, THE FOLLOWING PHYSICAL CHARACTERISTICS.
   - COMPOSED OF A HIGH STRENGTH STEEL WITH A MINIMUM YIELD STRENGTH OF 50,000 PSI.
   - INCLUDE A STANDARD "T" SECTION WITH A NOMINAL FACE WIDTH OF 1.38 INCHES AND A NOMINAL "T" LENGTH OF 1.48 INCHES.
   - WEIGH 1.25 POUNDS PER FOOT (±8%).
2. POSTS SHALL BE EQUIPPED WITH PROJECTIONS TO AID IN FASTENING OF FILTER FABRIC.
3. STEEL POSTS MAY NEED TO HAVE A METAL SOIL STABILIZATION PLATE WELDED NEAR THE BOTTOM WHEN INSTALLED ALONG STEEP SLOPES OR INSTALLED IN LOOSE SOILS. THE PLATE SHOULD HAVE A MINIMUM CROSS SECTION OF 17 SQUARE INCHES AND BE COMPOSED OF 15 GAUGE STEEL, AT A MINIMUM. THE METAL SOIL STABILIZATION PLATE SHOULD BE COMPLETELY BURIED.
4. INSTALL POSTS A MINIMUM OF 24 INCHES. A MINIMUM HEIGHT OF 1 TO 2 INCHES ABOVE THE FABRIC SHALL BE MAINTAINED, AND A MAXIMUM HEIGHT OF 3 FEET SHALL BE MAINTAINED ABOVE THE GROUND.
5. POST SPACING SHALL BE AT A MAXIMUM OF 6 FEET ON CENTER.

## SILT FENCE - FABRIC REQUIREMENTS

1. SILT FENCE MUST BE COMPOSED OF WOVEN GEOTEXTILE FILTER FABRIC THAT CONSISTS OF THE FOLLOWING REQUIREMENTS:
   - COMPOSED OF FIBERS CONSISTING OF LONG CHAIN SYNTHETIC POLYMERS OF AT LEAST 85% BY WEIGHT OF POLYOLEFINS, POLYESTERS OR POLYAMIDES THAT ARE FORMED INTO A NETWORK SUCH THAT THE FILAMENTS OR YARNS RETAIN DIMENSIONAL STABILITY RELATIVE TO EACH OTHER;
   - FREE OF ANY TREATMENT OR COATING WHICH MIGHT ADVERSELY ALTER ITS PHYSICAL PROPERTIES AFTER INSTALLATION;
   - FREE OF ANY DEFECTS OR FLAWS THAT SIGNIFICANTLY AFFECT ITS PHYSICAL AND/OR FILTERING PROPERTIES; AND,
   - HAVE A MINIMUM WIDTH OF 36 INCHES.
2. USE ONLY FABRIC APPEARING ON SC DOT'S QUALIFIED PRODUCTS LISTING (QPL), APPROVAL SHEET #34 MEETING THE REQUIREMENTS OF THE MOST CURRENT EDITION OF THE SC DOT STANDARD SPECIFICATIONS FOR HIGHWAY CONSTRUCTION.
3. 12 INCHES OF THE FABRIC SHOULD BE PLACED WITHIN EXCAVATED TRENCH AND TOED IN WHEN THE TRENCH IS BACKFILLED.
4. FILTER FABRIC SHALL BE PURCHASED IN CONTINUOUS ROLLS AND CUT TO THE LENGTH OF THE BARRIER TO AVOID JOINTS.
5. FILTER FABRIC SHALL BE INSTALLED AT A MINIMUM OF 24 INCHES ABOVE THE GROUND.

## SILT FENCE - INSPECTION & MAINTENANCE

1. THE KEY TO FUNCTIONAL SILT FENCE IS WEEKLY INSPECTIONS, ROUTINE MAINTENANCE AND REGULAR SEDIMENT REMOVAL.
2. REGULAR INSPECTIONS OF SILT FENCE SHALL BE CONDUCTED ONCE EVERY CALENDAR WEEK AND, AS RECOMMENDED, WITHIN 24 HOURS AFTER EACH RAINFALL EVEN THAT PRODUCES 1/2 INCH OR MORE OF PRECIPITATION.
3. ATTENTION TO SEDIMENT ACCUMULATIONS ALONG THE SILT FENCE IS EXTREMELY IMPORTANT. ACCUMULATED SEDIMENT SHOULD BE CONTINUALLY MONITORED AND REMOVED WHEN NECESSARY.
4. REMOVE ACCUMULATED SEDIMENT WHEN IT REACHES 1/3 THE HEIGHT OF THE SILT FENCE.
5. REMOVED SEDIMENT SHALL BE PLACED IN STOCKPILE STORAGE AREAS OR SPREAD THINLY ACROSS DISTURBED AREA. STABILIZE THE REMOVED SEDIMENT AFTER IT IS RELOCATED.
6. CHECK FOR AREAS WHERE STORM WATER RUNOFF HAS ERODED A CHANNEL BENEATH THE SILT FENCE, OR WHERE THE FENCE HAS SAGGED OR COLLAPSED DUE TO RUNOFF OVERTOPPING THE SILT FENCE. INSTALL CHECKS/TIE-BACKS AND/OR REINSTALL SILT FENCE, AS NECESSARY.
7. CHECK FOR TEARS WITHIN THE SILT FENCE, AREAS WHERE SILT FENCE HAS BEGUN TO DECOMPOSE, AND FOR ANY OTHER CIRCUMSTANCE THAT MAY RENDER THE SILT FENCE INEFFECTIVE. REMOVE DAMAGED SILT FENCE AND REINSTALL NEW SILT FENCE IMMEDIATELY.
8. SILT FENCE SHOULD BE REMOVED WITHIN 30 DAYS AFTER FINAL STABILIZATION IS ACHIEVED AND ONCE IT IS REMOVED, THE RESULTING DISTURBED AREA SHALL BE PERMANENTLY STABILIZED.

## (SF) CONSTRUCTION OF A SILT FENCE
SCALE: N.T.S.

## EROSION CONTROL NOTES:

1. TOTAL DEVELOPMENT AREA : 3.50 ± ACRES
2. DISTURBED AREA THIS PHASE: 2.40 ± ACRES
3. IF NECESSARY, SLOPES, WHICH EXCEED EIGHT (8) VERTICAL FEET SHOULD BE STABILIZED WITH SYNTHETIC OR VEGETATIVE MATS, IN ADDITION TO HYDROSEEDING. IT MAY BE NECESSARY TO INSTALL TEMPORARY SLOPE DRAINS DURING CONSTRUCTION. TEMPORARY BERMS MAY BE NEEDED UNTIL THE SLOPE IS BROUGHT TO GRADE.
4. STABILIZATION MEASURES SHALL BE INITIATED AS SOON AS PRACTICABLE IN PORTIONS OF THE SITE WHERE CONSTRUCTION ACTIVITIES HAVE TEMPORARILY OR PERMANENTLY CEASED, BUT IN NO CASE MORE THAN FOURTEEN (14) DAYS AFTER WORK HAS CEASED, EXCEPT AS STATED BELOW:
   - WHERE STABILIZATION BY THE 14TH DAY IS PRECLUDED BY SNOW COVER OR FROZEN GROUND CONDITIONS STABILIZATION MEASURES MUST BE INITIATED AS SOON AS PRACTICABLE.
   - WHERE CONSTRUCTION ACTIVITY ON A PORTION OF THE SITE IS TEMPORARILY CEASED, AND EARTH-DISTURBING ACTIVITIES WILL BE RESUMED WITHIN 14 DAYS, TEMPORARY STABILIZATION MEASURES DO NOT HAVE TO BE INITIATED ON THAT PORTION OF THE SITE.
5. ALL SEDIMENT AND EROSION CONTROL DEVICES SHALL BE INSPECTED EVERY CALENDAR WEEK. IF PERIODIC INSPECTION OR OTHER INFORMATION INDICATES THAT A BMP HAS BEEN INAPPROPRIATELY OR INCORRECTLY INSTALLED, THE PERMITTEE MUST ADDRESS THE NECESSARY REPLACEMENT OR MODIFICATION REQUIRED TO CORRECT THE BMP WITHIN 48 HOURS OF IDENTIFICATION.
6. PROVIDE SILT FENCE AND/OR OTHER CONTROL DEVICES, AS MAY BE REQUIRED, TO CONTROL SOIL EROSION DURING UTILITY CONSTRUCTION. ALL DISTURBED AREAS SHALL BE CLEANED, GRADED AND STABILIZED WITH GRASSING IMMEDIATELY AFTER THE UTILITY INSTALLATION. FILL, COVER AND TEMPORARY SEEDING AT THE END OF EACH DAY ARE RECOMMENDED. IF WATER IS ENCOUNTERED WHILE TRENCHING, THE WATER SHOULD BE FILTERED TO REMOVE ANY SEDIMENTS BEFORE BEING PUMPED BACK INTO ANY WATERS OF THE STATE.
7. ALL EROSION CONTROL DEVICES SHALL BE PROPERLY MAINTAINED DURING ALL PHASES OF CONSTRUCTION UNTIL THE COMPLETION OF ALL CONSTRUCTION ACTIVITIES AND ALL DISTURBED AREAS HAVE BEEN STABILIZED. ADDITIONAL CONTROL DEVICES MAY BE REQUIRED DURING CONSTRUCTION IN ORDER TO CONTROL EROSION AND/OR OFF SITE SEDIMENTATION. ALL TEMPORARY CONTROL DEVICES SHALL BE REMOVED ONCE CONSTRUCTION IS COMPLETE AND THE SITE IS STABILIZED.
8. THE CONTRACTOR MUST TAKE NECESSARY ACTION TO MINIMIZE THE TRACKING OF MUD ONTO PAVED ROADWAYS FROM CONSTRUCTION AREAS AND THE GENERATION OF DUST. THE CONTRACTOR SHALL DAILY REMOVE MUD/SOIL FROM PAVEMENT, AS MAY BE REQUIRED.
9. RESIDENTIAL SUBDIVISIONS REQUIRE EROSION CONTROL FEATURES FOR INFRASTRUCTURE AS WELL AS FOR INDIVIDUAL LOT CONSTRUCTION. INDIVIDUAL PROPERTY OWNERS SHALL FOLLOW THESE PLANS DURING CONSTRUCTION OR OBTAIN APPROVAL OF AN INDIVIDUAL PLAN IN ACCORDANCE WITH S.C. REG. 72-300 ET SEQ. AND SCR 100000.
10. TEMPORARY DIVERSION BERMS AND/OR DITCHES WILL BE PROVIDED AS NEEDED DURING CONSTRUCTION TO PROTECT WORK AREAS FROM UPSLOPE RUNOFF AND/OR TO DIVERT SEDIMENT-LADEN WATER TO APPROPRIATE TRAPS OR STABLE OUTLETS.
11. ALL WATERS OF THE STATE (WoS), INCLUDING WETLANDS, ARE TO BE FLAGGED OR OTHERWISE CLEARLY MARKED IN THE FIELD. A DOUBLE ROW OF SILT FENCE IS TO BE INSTALLED IN ALL AREAS WHERE A 50 FOOT BUFFER CANNOT BE MAINTAINED BETWEEN THE DISTURBED AREA AND ALL WoS. A 10 FOOT BUFFER SHOULD BE MAINTAINED BETWEEN THE LAST ROW OF SILT FENCE AND ALL WoS.
12. LITTER, CONSTRUCTION DEBRIS, OILS, FUELS AND BUILDING PRODUCTS WITH SIGNIFICANT POTENTIAL FOR IMPACT (SUCH AS STOCKPILES OF FRESHLY TREATED LUMBER) AND CONSTRUCTION CHEMICALS THAT COULD BE EXPOSED TO STORM WATER MUST BE PREVENTED FROM BECOMING A POLLUTANT SOURCE IN STORM WATER DISCHARGES.
13. A COPY OF THE SWPPP, INSPECTION RECORDS, AND RAINFALL DATA MUST BE RETAINED AT THE CONSTRUCTION SITE OR A NEARBY LOCATION EASILY ACCESSIBLE DURING NORMAL BUSINESS HOURS, FROM THE DATE OF COMMENCEMENT OF CONSTRUCTION ACTIVITIES TO THE DATE THAT FINAL STABILIZATION IS REACHED.
14. INITIATE STABILIZATION MEASURES ON ANY EXPOSED STEEP SLOPE (3H:1V OR GREATER) WHERE LAND DISTURBING ACTIVITIES HAVE PERMANENTLY OR TEMPORARILY CEASED, AND WILL NOT RESUME FOR A PERIOD OF 7 CALENDAR DAYS.
15. MINIMIZE SOIL COMPACTION AND, UNLESS INFEASIBLE, PRESERVE TOPSOIL.
16. MINIMIZE THE DISCHARGE OF POLLUTANTS FROM EQUIPMENT AND VEHICLE WASHING, WHEEL WASH WATER, AND OTHER WASH WATERS. WASH WATERS MUST BE TREATED IN A SEDIMENT BASIN OR ALTERNATIVE CONTROL THAT PROVIDES EQUIVALENT OR BETTER TREATMENT PRIOR TO DISCHARGE.
17. MINIMIZE THE DISCHARGE OF POLLUTANTS FROM DEWATERING OF TRENCHES AND EXCAVATED AREAS. THESE DISCHARGES ARE TO BE ROUTED THROUGH APPROPRIATE BMPs (SEDIMENT BASIN, FILTER BAG, ETC.).
18. THE FOLLOWING DISCHARGES FROM SITES ARE PROHIBITED:
   - WASTEWATER FROM WASHOUT OF CONCRETE, UNLESS MANAGED BY AN APPROPRIATE CONTROL;
   - WASTEWATER FROM WASHOUT AND CLEANOUT OF STUCCO, PAINT, FORM RELEASE OILS CURING COMPOUNDS AND OTHER CONSTRUCTION MATERIALS;
   - FUELS, OILS, OR OTHER POLLUTANTS USED IN VEHICLE AND EQUIPMENT OPERATION AND MAINTENANCE; AND
   - SOAPS OR SOLVENTS USED IN VEHICLE AND EQUIPMENT WASHING.
19. AFTER CONSTRUCTION ACTIVITIES BEGIN, INSPECTIONS MUST BE CONDUCTED AT A MINIMUM OF AT LEAST ONCE EVERY CALENDAR WEEK AND MUST BE CONDUCTED UNTIL FINAL STABILIZATION IS REACHED ON ALL AREAS OF THE CONSTRUCTION SITE.
20. IF EXISTING BMPs NEED TO BE MODIFIED OR IF ADDITIONAL BMPs ARE NECESSARY TO COMPLY WITH THE REQUIREMENTS OF THIS PERMIT AND / OR SC'S WATER QUALITY STANDARDS, IMPLEMENTATION MUST BE COMPLETED BEFORE THE NEXT STORM EVENT WHENEVER PRACTICABLE. IF IMPLEMENTATION BEFORE THE NEXT STORM EVENT IS IMPRACTICABLE, THE SITUATION MUST BE DOCUMENTED IN THE SWPPP AND ALTERNATIVE BMPs MUST BE IMPLEMENTED AS SOON AS REASONABLY POSSIBLE.
21. A PRE-CONSTRUCTION CONFERENCE MUST BE HELD FOR EACH CONSTRUCTION SITE WITH AN APPROVED ON-SITE SWPPP PRIOR TO THE IMPLEMENTATION OF CONSTRUCTION ACTIVITIES. FOR NON-LINEAR PROJECTS THAT DISTURB 10 ACRES OR MORE THIS CONFERENCE MUST BE HELD ON-SITE UNLESS THE DEPARTMENT HAS APPROVED OTHERWISE.
22. THE CONTRACTOR SHALL BE RESPONSIBLE FOR MAINTAINING ALL SILT BARRIERS AND SEDIMENT CONTROL INSTALLATIONS DURING CONSTRUCTION UNTIL THE COMPLETION OF THE SITE DEVELOPMENT.
23. EROSION CONTROL DEVICES MUST BE INSTALLED IMMEDIATELY AFTER LAND DISTURBANCE OCCURS. THE LOCATION OF SOME OF THE CONTROL DEVICES MAY BE ALTERED FROM THAT SHOWN ON THE APPROVED PLANS, IF DRAINAGE PATTERNS DURING CONSTRUCTION VARY FROM THE FINAL DRAINAGE PATTERNS. IT SHALL BE THE CONTRACTORS RESPONSIBILITY TO PROVIDE SOIL EROSION CONTROL FOR ALL DRAINAGE PATTERNS DURING ALL STAGES OF CONSTRUCTION. ALL INADEQUACIES IN SOIL EROSION CONTROL DURING ANY PHASE OF CONSTRUCTION MUST BE REPORTED IMMEDIATELY TO THE ENGINEER.
24. THE CONTRACTOR SHALL MAINTAIN ALL EROSION CONTROL MEASURES UNTIL PERMANENT VEGETATION HAS BEEN ESTABLISHED. THE CONTRACTOR SHALL INSPECT EROSION CONTROL MEASURES AT THE END OF EACH WORKING DAY TO ENSURE PROPER FUNCTIONING OF ALL DEVICES.
25. FAILURE TO INSTALL, OPERATE AND MAINTAIN ALL EROSION CONTROL MEASURES, AS SHOWN ON THE APPROVED PLANS OR AS DIRECTED BY THE ENGINEER AND/OR OCRM WILL RESULT IN ALL WORK ON THE CONSTRUCTION SITE BEING STOPPED UNTIL PROPER CORRECTIVE MEASURES HAVE BEEN MET, AS REQUIRED AND/OR DIRECTED.
26. ALL LAND DISTURBING ACTIVITIES REQUIRES COMPLIANCE UNDER THE NPDES GENERAL PERMIT FOR STORM WATER DISCHARGES FROM THE CONSTRUCTION ACTIVITIES (PERMIT NO. SCR100000). ANY NONCOMPLIANCE WITH THESE REGULATIONS IS A VIOLATION OF THE FEDERAL CLEAN WATER ACT AND MAY REQUIRE ENFORCEMENT ACTION BY HORRY COUNTY OR SCDHEC.
27. CONTRACTOR SHALL PROVIDE A WATER TIGHT ENCLOSURE FOR STORAGE OF THE OCRM CERTIFIED PLANS AND INSPECTION REPORTS. ENCLOSURE SHALL BE LOCATED IN AN AREA ACCESSIBLE TO REGULATORY PERSONNEL.
28. ALL STOCKPILE TO BE PROTECTED WITH SILT FENCE.
29. ALL CONCRETE TO BE WASHED OUT IN AN APPROVED AREA.

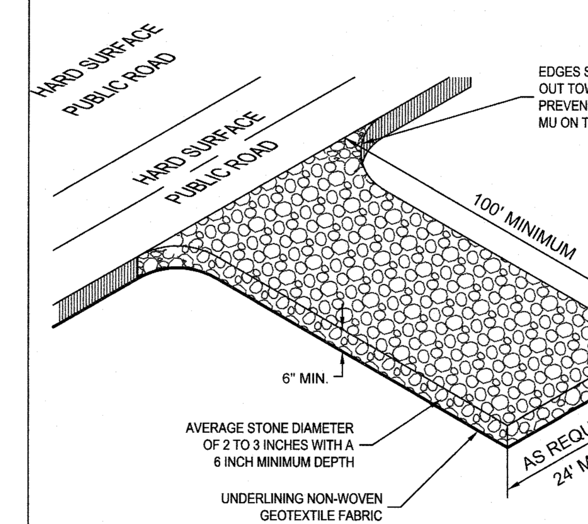


NOTE:

- INSTALL A CULVERT PIPE ACROSS THE ENTRANCE WHEN NEEDED TO PROVIDE POSITIVE DRAINAGE.
- DIVERT ALL SURFACE RUNOFF AND DRAINAGE FROM THE STONE PAD TO A SEDIMENT TRAP OR BASIN OR OTHER SEDIMENT TRAPPING STRUCTURE.
- ENTRANCES SHALL COMPLY WITH SCDOT STANDARD DRAWING 651-115-01

## (CE) STABILIZIED CONSTRUCTION ENTRANCE
SCALE: N.T.S.

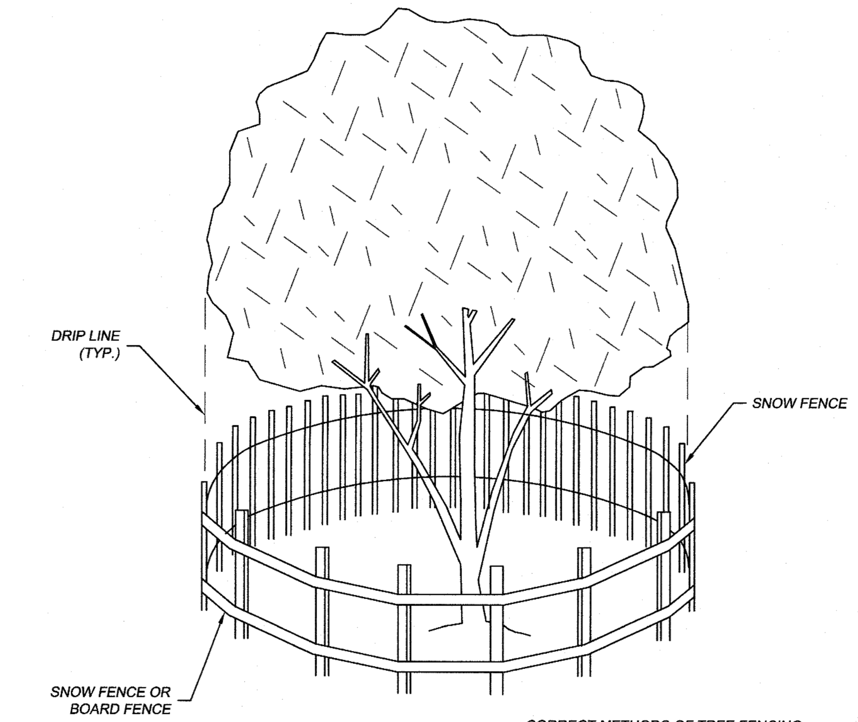


CORRECT METHODS OF TREE FENCING

## TREE PROTECTION
SCALE: N.T.S.

Drawing Copyright © 2016

CHA
1298 Professional Drive
Myrtle Beach, SC 29577-5896
843.692.3205 x284 • www.chacompanies.com

HCS Horry County Schools

DDC ENGINEERS®
Consulting Engineers, Surveyors, Planners, Landscape Architects & Environmentalists
1298 Professional Dr., Myrtle Beach, SC 29577
Phone: (843) 692-3200 Fax: (843) 692-3210

HORRY COUNTY SCHOOLS

OFFICE OF FACILITIES
1160 E. HIGHWAY 501
CONWAY, SC 29526

SOUTH CAROLINA
DDC ENGINEERS, INC.
No. C00036
CERTIFICATE OF AUTHORIZATION

SOUTH CAROLINA
LICENSED PROFESSIONAL ENGINEER
No. 29814
ERIC K. SANFORD

IT IS A VIOLATION OF LAW FOR ANY PERSON, UNLESS THEY ARE ACTING UNDER THE DIRECTION OF A LICENSED PROFESSIONAL ENGINEER, ARCHITECT, LANDSCAPE ARCHITECT OR LAND SURVEYOR TO ALTER AN ITEM IN ANY WAY. IF AN ITEM BEARING THE STAMP OF A LICENSED PROFESSIONAL IS ALTERED, THE ALTERING ENGINEER, ARCHITECT, LANDSCAPE ARCHITECT OR LAND SURVEYOR SHALL STAMP THE DOCUMENT AND INCLUDE THE NOTATION "ALTERED BY" FOLLOWED BY THEIR SIGNATURE, THE DATE OF SUCH ALTERATION, AND A SPECIFIC DESCRIPTION OF THE ALTERATION.

LORIS HIGH SCHOOL
TRACK AND FIELD
ATHLETIC FACILITY
IMPROVEMENTS PROGRAM

| No. | Submittal / Revision | App'd. | By | Date |
|---|---|---|---|---|
| | | | | |

SEDIMENT AND EROSION CONTROL DETAILS

| Designed By: | Drawn By: | Checked By: |
|---|---|---|
| EKS | PES | EKS |
| Issue Date: | Project No: | Scale: |
| 1/31/20 | 19062E | NO SCALE |

Drawing No.:
C-502

File: J:\PLANS\19\19062E – HORRY COUNTY SCHOOLS\E\LORIS-TRACK\19062-LORIS-TRACK-ERO-DETAILS.DWG
Saved: 2/20/2020 1:54:33 PM Plotted: 2/21/2020 9:50:10 AM Current User: Penny Sanford LastSavedBy: pes

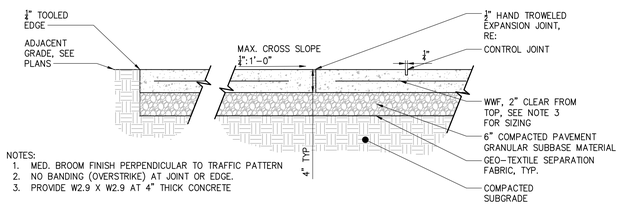


NOTES:
1. MED. BROOM FINISH PERPENDICULAR TO TRAFFIC PATTERN
2. NO BANDING (OVERSTRIKE) AT JOINT OR EDGE.
3. PROVIDE W2.9 X W2.9 AT 4" THICK CONCRETE

## 1 CONCRETE PAVEMENT
SCALE:

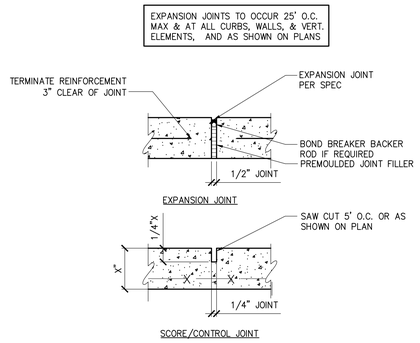


## 2 CONCRETE PAVEMENT
SCALE:

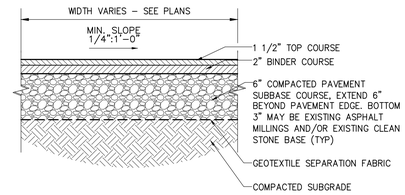


## 3 ASPHALT PAVEMENT
SCALE:

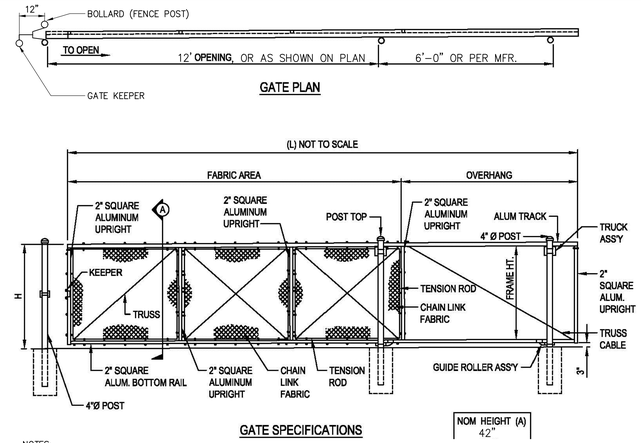


NOTES:
1. INSTALLATION TO BE COMPLETED IN ACCORDANCE WITH THE MANUFACTURER'S SPECIFICATIONS.
2. FOOTING WIDTH TO BE 4 X POST WIDTH
3. ALL FRAMING TO BE GALVANIZED AND ALL MESH TO MATCH COLOR
4. ROLLER COVERS REQUIRED
5. BY INTERNATIONAL GATE DEVICES OR APPROVED EQUAL
6. ENCLOSED TOP TRACK REQUIRED. EXPOSED ROLLERS ARE NOT PERMITTED.

## 4 42" HIGH, 12' WIDE CANTILEVER SLIDE GATE DETAIL
SCALE:

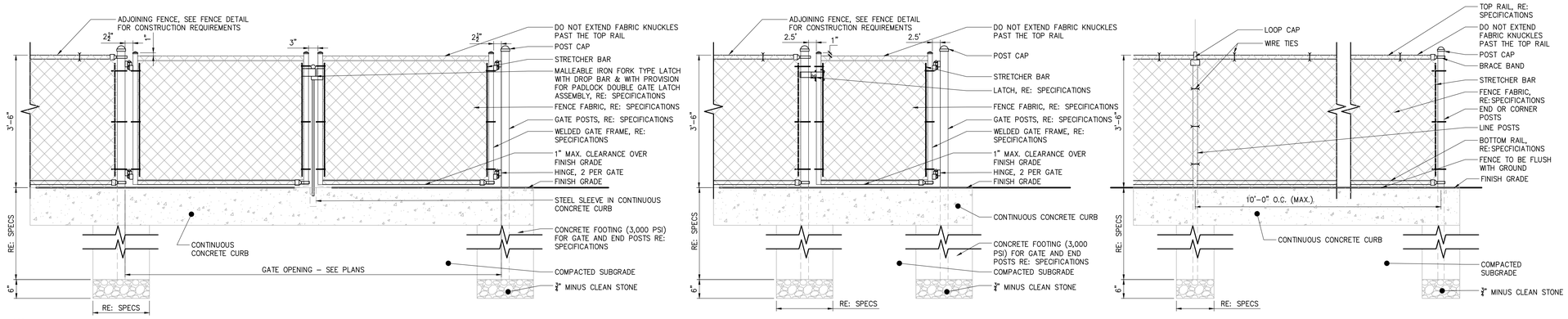


NOTES:
1. SEE SPECIFICATIONS FOR POST AND FENCE FRAMING SIZING.
2. ALL POST FOOTINGS SHALL BE PER SPECIFICATIONS.
3. SEE SPECIFICATIONS FOR FENCE FINISH REQUIREMENTS.
4. HOLD DOWN TOP OF FOOTING BELOW WALK (TYP.).

## 5 42" HEIGHT CHAIN LINK FENCE AND GATES DETAIL
SCALE:

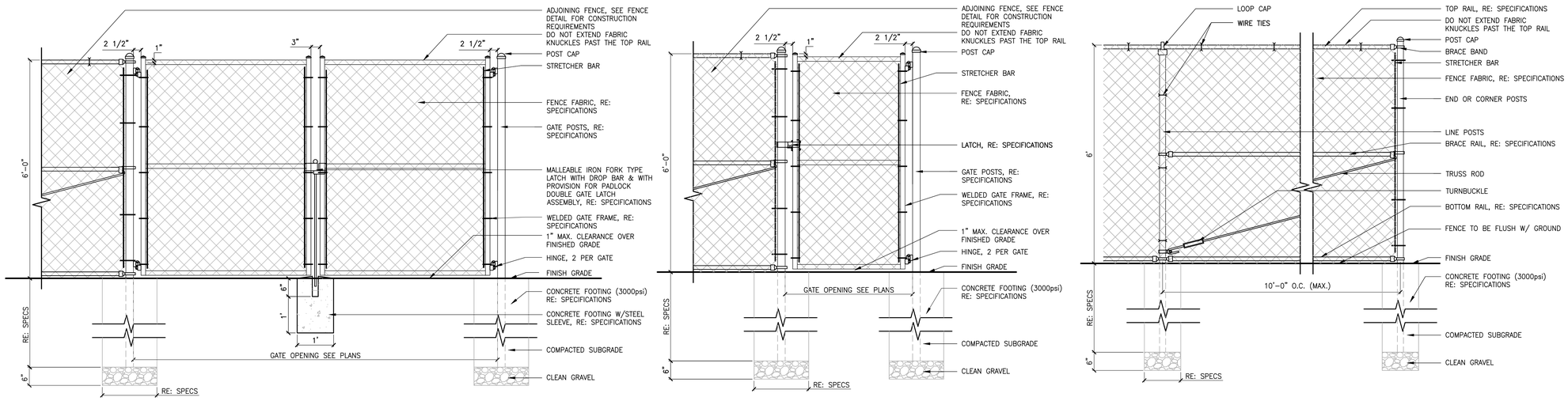


NOTES:
1. SEE SPECIFICATIONS FOR POST AND FENCE FRAME SIZING.
2. ALL POST FOOTINGS SHALL BE PER SPECIFICATIONS.
3. SEE SPECIFICATIONS FOR FENCE FINISH REQUIREMENTS.
4. HOLD DOWN TOP OF FOOTING BELOW WALK (TYP.).
5. ALL CHAIN LINK FENCING SHALL HAVE A CONTINUOUS BOTTOM RAIL, NO TENSION WIRE IS ALLOWED
6. ALL CHAIN LINK FENCING, POST RAILS AND MESH/FABRIC SHALL BE BLACK POLYMER COATED. CHAIN LINK GATE POSTS AND RAILS MAY BE POWDER COATED.

## 6 6' HEIGHT CHAIN LINK FENCE AND GATES DETAIL
SCALE:

Drawing Copyright © 2019

CHA
1258 Professional Drive
Myrtle Beach, SC 29577-5896
843.692.3105 x284 • www.chacompanies.com

HCS Horry County Schools

DDC ENGINEERS

HORRY COUNTY SCHOOLS

OFFICE OF FACILITIES
1160 E. HIGHWAY 501
CONWAY, SC 29526

IT IS A VIOLATION OF LAW FOR ANY PERSON, UNLESS THEY ARE ACTING UNDER THE DIRECTION OF A LICENSED PROFESSIONAL ENGINEER, ARCHITECT, LANDSCAPE ARCHITECT OR LICENSED SURVEYOR TO ALTER AN ITEM IN ANY WAY. IF AN ITEM BEARING THE STAMP OF A LICENSED PROFESSIONAL IS ALTERED, THE ALTERING ENGINEER, ARCHITECT, LANDSCAPE ARCHITECT OR LICENSED SURVEYOR SHALL STAMP THE DOCUMENT AND INCLUDE THE NOTATION "ALTERED BY" FOLLOWED BY THEIR SIGNATURE, THE DATE OF SUCH ALTERATION, AND A SPECIFIC DESCRIPTION OF THE ALTERATION.

**LORIS HIGH SCHOOL**

TRACK AND FIELD
ATHLETIC FACILITY
IMPROVEMENTS PROGRAM

| No. | Submittal / Revision | App'd. | By | Date |
|---|---|---|---|---|
| | | | | |

TRACK AND FIELD DETAILS

| Designed By: | Drawn By: | Checked By: |
|---|---|---|
| JRP | RMH | PG |
| Issue Date: 02/21/2020 | Project No: 36108 | Scale: AS SHOWN |

Drawing No.:
**C-600**

File: V:\PROJECTS\ANY\K5\36108\CADD_ACAD\C-600_LHS.DWG
Saved: 2/21/2020 1:36:44 PM Plotted: 2/28/2020 10:42:13 AM Current User: Werner, Rose (ardSaved) 5683

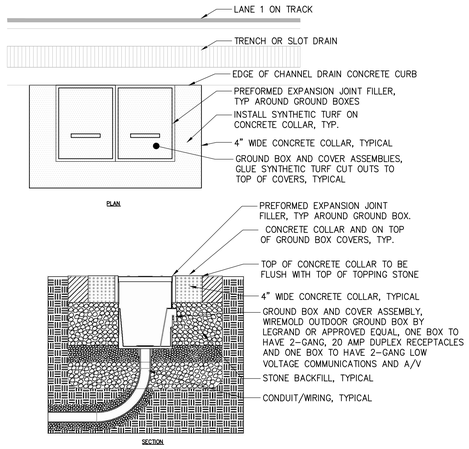


1 JUNCTION BOX – LAWN
SCALE:

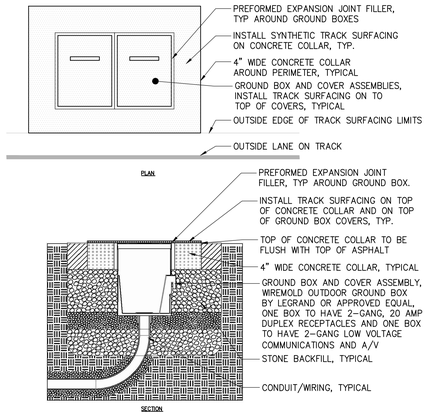


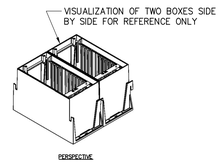


2 JUNCTION BOX – CONCRETE
SCALE:

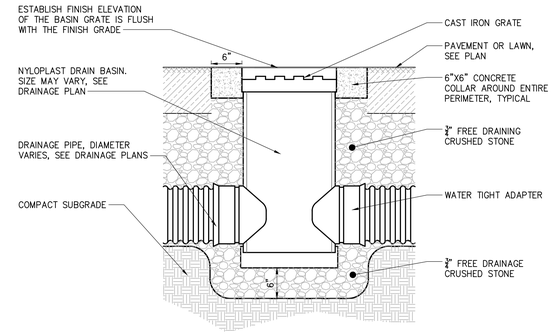


3 AREA DRAIN
SCALE:

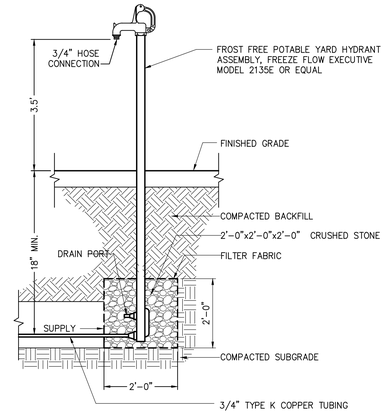


4 FROST FREE POTABLE YARD HYDRANT
SCALE:

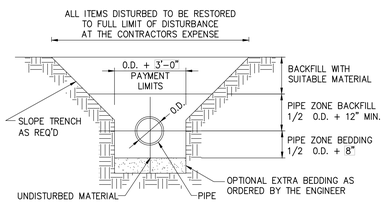


5 TYPICAL STORM TRENCH DETAIL
SCALE:

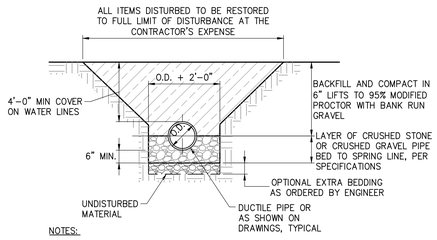


NOTES:

1. ALL BACKFILL MATERIAL COMPACTED IN 6" (MAX.) LIFTS TO 95% STANDARD PROCTOR DENSITY
2. OVEREXCAVATE AT BELLS TO PROVIDE 4" BEDDING BELOW BELLS
3. ALL TRENCH EXCAVATION SHALL MEET OSHA REQUIREMENTS AND ALL STATE AND LOCAL SAFETY REGULATIONS

6 TYPICAL WATER PIPE TRENCH DETAIL
SCALE:

NOTE:
1. PROVIDE LOCATION PINS IN OUTSIDE CONCRETE CURBS AT 4 POINTS OF CURVATURE (PC'S) AND APEX OF BOTH TURNS

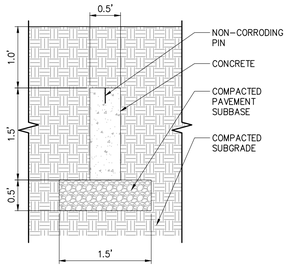


7 TRACK RADIUS MOMUNMENT POINT DETAIL
SCALE:

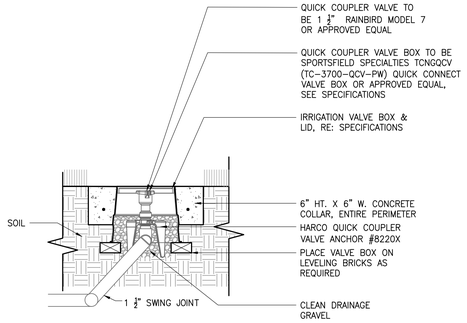


8 QUICK COUPLER DETAIL
SCALE:

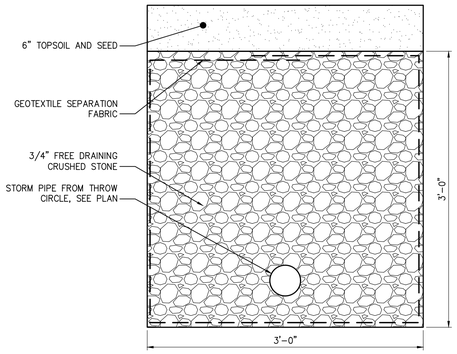


9 GRAVEL SUMP DETAIL
SCALE:

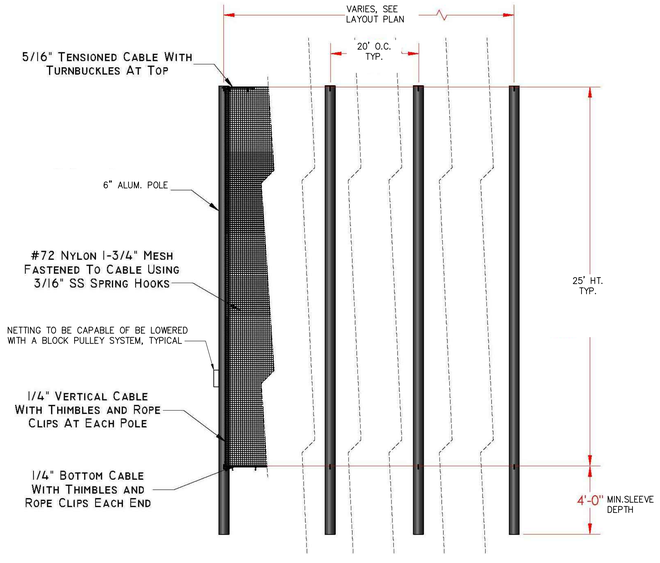


10 25' HIGH PROTECTIVE NETTING DETAIL
SCALE:

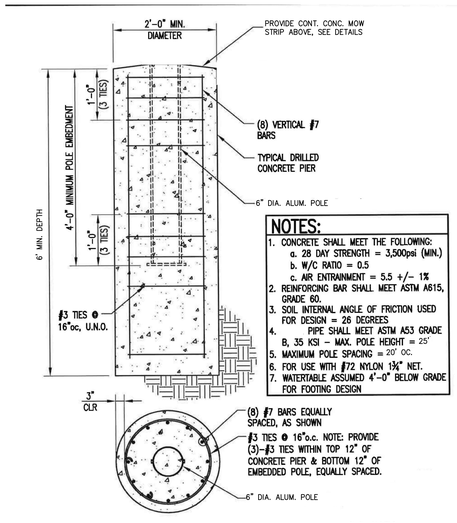


NOTES:

1. CONCRETE SHALL MEET THE FOLLOWING:
   a. 28 DAY STRENGTH = 3,500psi (MIN.)
   b. W/C RATIO = 0.5
   c. AIR ENTRAINMENT = 5.5 +/- 1%
2. REINFORCING BAR SHALL MEET ASTM A615, GRADE 60.
3. SOIL INTERNAL ANGLE OF FRICTION USED FOR DESIGN = 26 DEGREES
4. PIPE SHALL MEET ASTM A53 GRADE B, 35 KSI – MAX. POLE HEIGHT = 25'
5. MAXIMUM POLE SPACING = 20' OC.
6. FOR USE WITH #72 NYLON 1¾" NET.
7. WATERTABLE ASSUMED 4'-0" BELOW GRADE FOR FOOTING DESIGN

11 25' HIGH PROTECTIVE NETTING FOUNDATION DETAIL
SCALE:

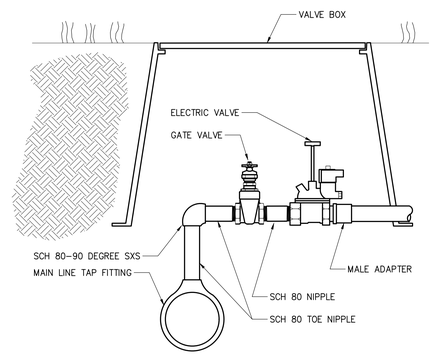


12 BURIED ELECTRICAL VALVE ASSEMBLY
SCALE:

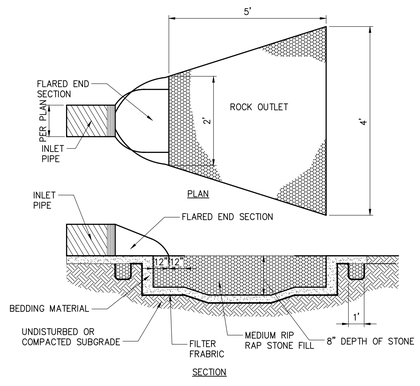


13 FLARED END SECTION DETAIL
SCALE:

Drawing Copyright © 2019

CHA
1258 Professional Drive
Myrtle Beach, SC 29577-5896
843.692.3105 x284 • www.chacompanies.com

HCS Horry County Schools

DDC ENGINEERS

HORRY COUNTY SCHOOLS

OFFICE OF FACILITIES
1160 E. HIGHWAY 501
CONWAY, SC 29526

IT IS A VIOLATION OF LAW FOR ANY PERSON, UNLESS THEY ARE ACTING UNDER THE DIRECTION OF A LICENSED PROFESSIONAL ENGINEER, ARCHITECT, LANDSCAPE ARCHITECT OR LAND SURVEYOR, TO ALTER IN ANY WAY AN ITEM BEARING THE SEAL OR STAMP OF A LICENSED PROFESSIONAL IS ALTERED, THE ALTERING ENGINEER, ARCHITECT, LANDSCAPE ARCHITECT OR LAND SURVEYOR SHALL AFFIX TO THE ITEM THE PHRASE "ALTERED BY" FOLLOWED BY THEIR NOTATION, "ALTERED BY" FOLLOWED BY THEIR SIGNATURE, THE DATE OF SUCH ALTERATION, AND A SPECIFIC DESCRIPTION OF THE ALTERATION.

**LORIS HIGH SCHOOL**

TRACK AND FIELD ATHLETIC FACILITY IMPROVEMENTS PROGRAM

| No. | Submittal / Revision | App'd. | By | Date |
|---|---|---|---|---|
| | | | | |

TRACK AND FIELD DETAILS

| Designed By: | Drawn By: | Checked By: |
|---|---|---|
| JRP | RMH | PG |
| Issue Date: 02/21/2020 | Project No: 36108 | Scale: AS SHOWN |

Drawing No.:
**C-601**

File: V:\PROJECTS\ANY\VS\36108\CADD_ACAD\C-600_LHS.DWG
Saved: 2/21/2020 1:35:44 PM Plotted: 2/26/2020 10:42:22 AM Current User: Heather Rose (ant0rose@y 5683

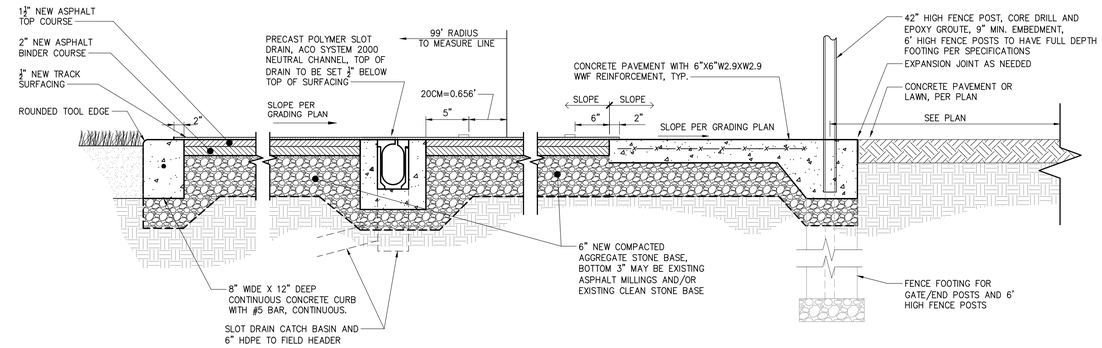


## 1 TRACK CROSS SECTION AT D-ZONE AND PERIMETER CURB

SCALE:

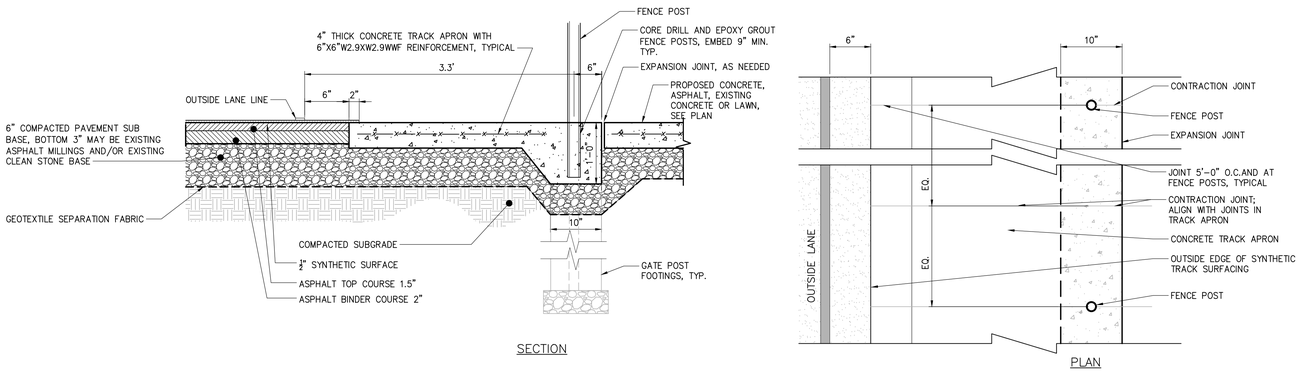


## 2 TRACK CROSS SECTION AT CONCRETE PERIMETER APRON & CURB

SCALE:

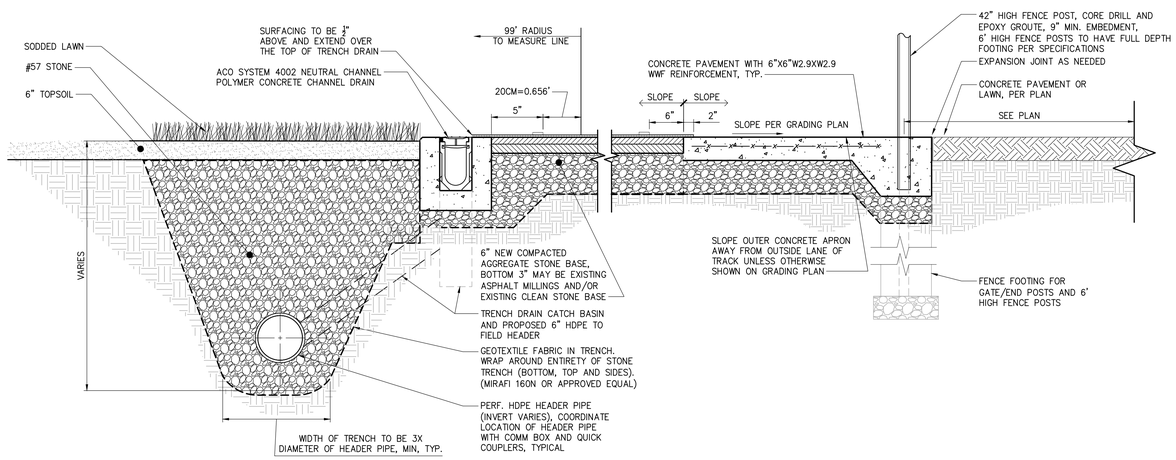


## 3 TRACK CROSS SECTION AT TRENCH DRAIN AND PERIMETER CURB

SCALE:

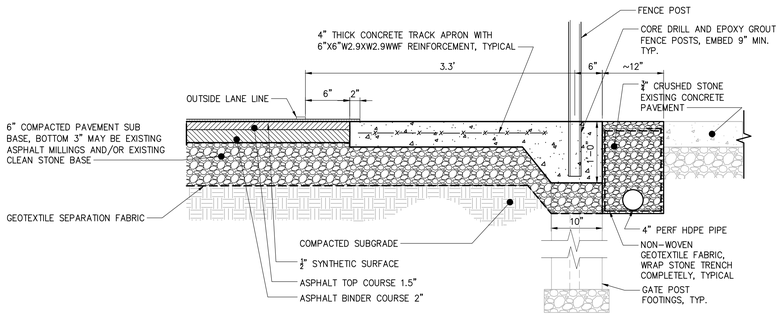


## 4 TRACK CROSS SECTION AT PERIMETER APRON & EXISTING CONCRETE PAVEMENT WITH FRENCH DRAIN

SCALE:

Drawing Copyright © 2019

CHA
1258 Professional Drive
Myrtle Beach, SC 29577-5896
843.692.3105 x284 • www.chacompanies.com

HCS Horry County Schools

DDC ENGINEERS

HORRY COUNTY SCHOOLS

OFFICE OF FACILITIES
1160 E. HIGHWAY 501
CONWAY, SC 29526

IT IS A VIOLATION OF LAW FOR ANY PERSON, UNLESS THEY ARE ACTING UNDER THE DIRECTION OF A LICENSED PROFESSIONAL ENGINEER, ARCHITECT, LANDSCAPE ARCHITECT OR LAND SURVEYOR, TO ALTER AN ITEM IN ANY WAY. IF AN ITEM BEARING THE STAMP OF A LICENSED PROFESSIONAL IS ALTERED, THE ALTERING ENGINEER, ARCHITECT, LANDSCAPE ARCHITECT OR LAND SURVEYOR SHALL ATTACH TO THE ITEM THE PHRASE "ALTERED BY" FOLLOWED BY THEIR SIGNATURE, THE DATE OF SUCH ALTERATION, AND A SPECIFIC DESCRIPTION OF THE ALTERATION.

**LORIS HIGH SCHOOL**

TRACK AND FIELD
ATHLETIC FACILITY
IMPROVEMENTS PROGRAM

| No. | Submittal / Revision | App'd. | By | Date |
|---|---|---|---|---|
| | | | | |
| | | | | |
| | | | | |
| | | | | |
| | | | | |
| | | | | |

TRACK AND FIELD DETAILS

| Designed By: | Drawn By: | Checked By: |
|---|---|---|
| JRP | RMH | PG |
| Issue Date: | Project No: | Scale: |
| 02/21/2020 | 36108 | AS SHOWN |

Drawing No.:

**C-602**

File: V:\PROJECTS\ANY\V5\36108\CADD_ACAD\C-600_LHS.DWG
Saved: 2/21/2020 1:35:44 PM Plotted: 2/26/2020 10:42:29 AM Current User: Heather Rose LastSavedBy: 5683

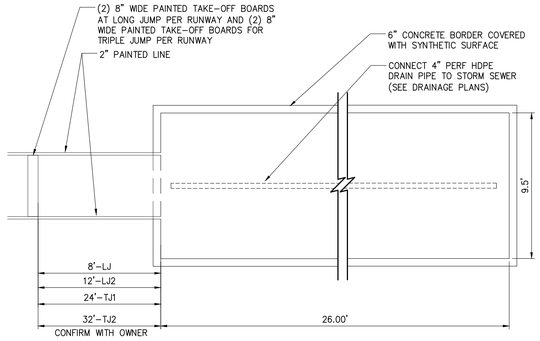


1 LONG/TRIPLE JUMP SAND PIT PLAN
SCALE:

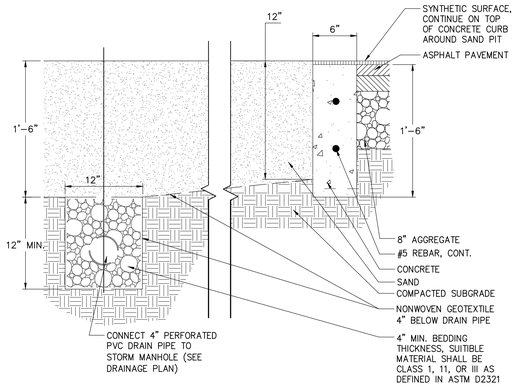


2 LONG/TRIPLE JUMP SAND PIT SECTION
SCALE:

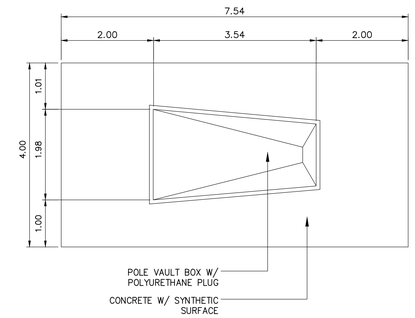


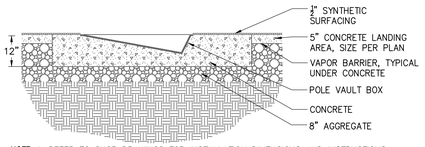


NOTE: 1. REFER TO SHOP DRAWINGS FOR INSTALLATION DIMENSIONS AND INSTRUCTIONS.
2. ALL POLE VAULT BOXES TO RECEIVE POLYURETHANE PLUG.

3 POLE VAULT BOX PLAN AND SECTION
SCALE:

NOTE:
1. ALL DRAWINGS DEPICTING IN-GROUND EQUIPMENT ARE FOR INFORMATION ONLY. REFER TO MANUFACTURER SHOP DRAWINGS FOR INSTALLATION DIMENSIONS AND INSTRUCTIONS.
2. CONCRETE TEXTURE IS A LIGHT BROOM FINISH. OWNER'S REPRESENTATIVE TO BE PRESENT UPON CONCRETE INSTALLATION TO VERIFY PROPER TEXTURE.

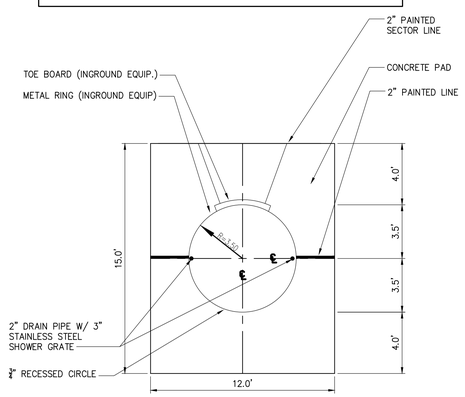


4 SHOT PUT CIRCLE PLAN
SCALE:

NOTE: ALL DRAWINGS DEPICTING IN-GROUND EQUIPMENTS ARE FOR BIDDING ONLY. REFER TO SHOP DRAWINGS FOR INSTALLATION DIMENSIONS AND INSTRUCTIONS.

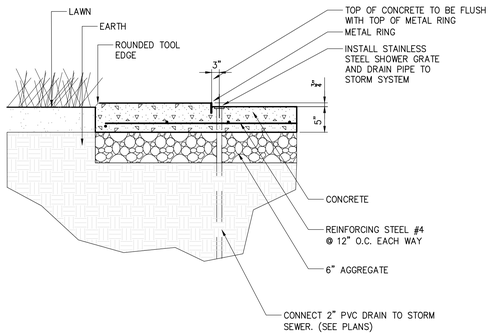


5 SHOT PUT CIRCLE SECTION
SCALE:

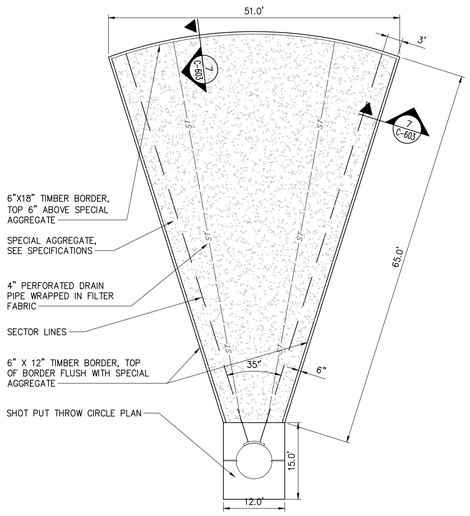


6 SHOT PUT LANDING AREA – PLAN
SCALE:

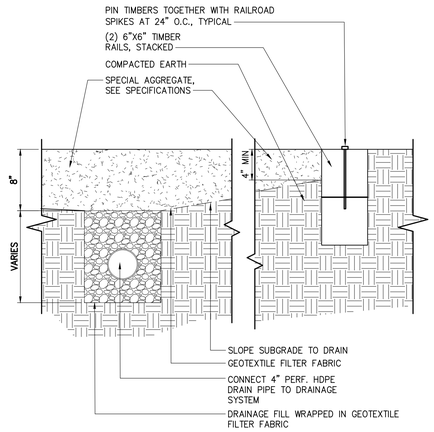


7 SHOT PUT LANDING AREA – SECTION
SCALE:

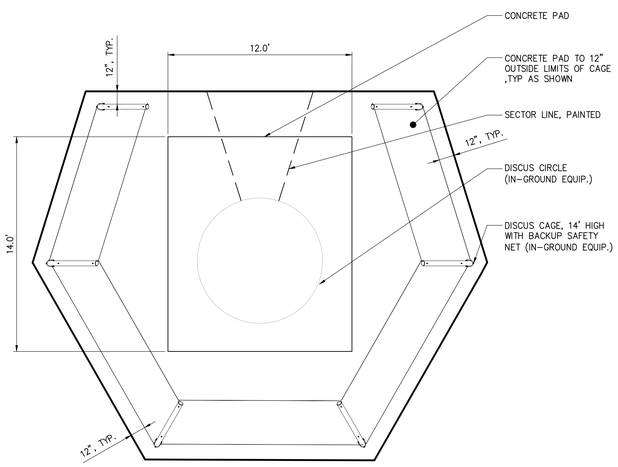


8 DISCUS CAGE PLAN
SCALE:

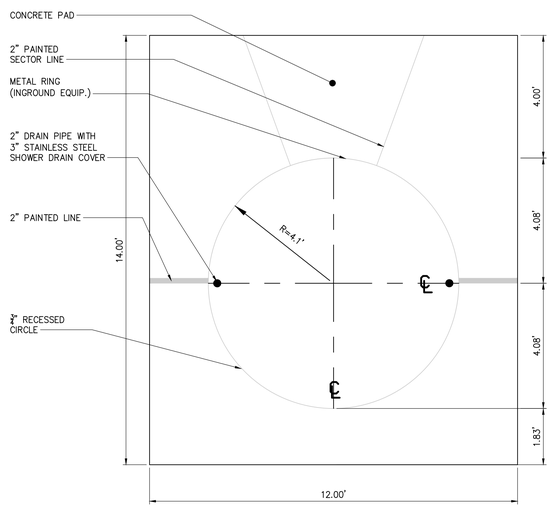


9 DISCUS CIRCLE PLAN
SCALE:

NOTE: ALL DRAWINGS DEPICTING IN-GROUND EQUIPMENTS ARE FOR BIDDING ONLY. REFER TO SHOP DRAWINGS FOR INSTALLATION DIMENSIONS AND INSTRUCTIONS.

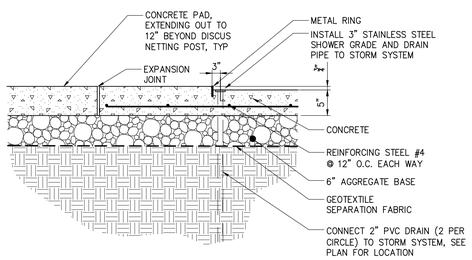


10 DISCUS CIRCLE SECTION
SCALE:

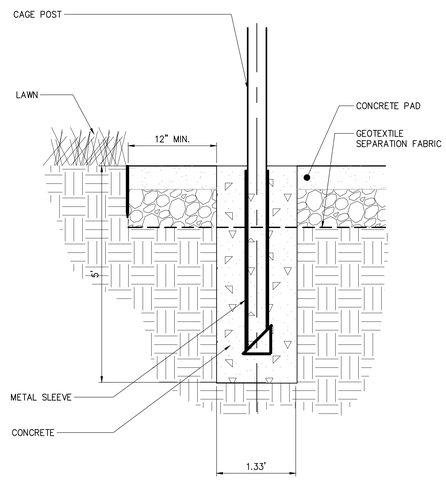


11 DISCUS NETTING SECTION
SCALE:

Drawing Copyright © 2019

CHA
1258 Professional Drive
Myrtle Beach, SC 29577-5896
843.692.3105 x284 • www.chacompanies.com

HCS Horry County Schools

DDC ENGINEERS

HORRY COUNTY SCHOOLS

OFFICE OF FACILITIES
1160 E. HIGHWAY 501
CONWAY, SC 29526

IT IS A VIOLATION OF LAW FOR ANY PERSON, UNLESS THEY ARE ACTING UNDER THE DIRECTION OF A LICENSED PROFESSIONAL ENGINEER, ARCHITECT, LANDSCAPE ARCHITECT OR SURVEYOR TO ALTER AN ITEM IN ANY WAY. IF AN ITEM BEARING THE STAMP OF A LICENSED PROFESSIONAL IS ALTERED, THE ALTERING ENGINEER, ARCHITECT, LANDSCAPE ARCHITECT OR SURVEYOR SHALL STAMP THE DOCUMENT AND INCLUDE THE NOTATION "ALTERED BY" FOLLOWED BY THEIR SIGNATURE, THE DATE OF SUCH ALTERATION, AND A SPECIFIC DESCRIPTION OF THE ALTERATION.

**LORIS HIGH SCHOOL**

TRACK AND FIELD
ATHLETIC FACILITY
IMPROVEMENTS PROGRAM

| No. | Submittal / Revision | App'd. | By | Date |
|---|---|---|---|---|
| | | | | |

TRACK AND FIELD DETAILS

| Designed By: | Drawn By: | Checked By: |
|---|---|---|
| JRP | RMH | PG |
| Issue Date: | Project No: | Scale: |
| 02/21/2020 | 36108 | AS SHOWN |

Drawing No.:
**C-603**

File: V:\PROJECTS\ANY\K5\36108\CADD_ACAD\C-600_LHS.DWG
Saved: 2/27/2020 1:30:44 PM Plotted: 2/28/2020 10:42:36 AM Current User: Hamer, Ross LastSaveBy: 5083

## ABBREVIATIONS

| | |
|---|---|
| A | AMPERE |
| AC | ALTERNATING CURRENT |
| AF | AMPERE FRAME |
| AFF/G | ABOVE FINISHED FLOOR/GRADE |
| AIC | AMPERE INTERRUPTING CAPACITY |
| AT | AMPERE TRIP |
| AUX | AUXILIARY |
| AWG | AMERICAN WIRE GAUGE |
| BTM | BOTTOM |
| BKR | BREAKER |
| BLDG | BUILDING |
| C | CONDUIT |
| CAB | CABINET |
| CB | CIRCUIT BREAKER |
| CIR | CIRCUIT |
| CKT | CIRCUIT |
| ℄ | CENTER LINE |
| CO | COMPANY |
| COMM | COMMUNICATIONS |
| CONN | CONNECTION, CONNECT |
| CU | COPPER |
| △ | DELTA CONNECTION |
| DIA | DIAMETER |
| DISC | DISCONNECT |
| DIST | DISTRIBUTION |
| DIV | DIVISION |
| DN | DOWN |
| DWG | DRAWING |
| EA | EACH |
| EF | EXHAUST FAN |
| EL | ELEVATION |
| ELEC | ELECTRIC(AL) |
| ENCL | ENCLOSURE |
| EQUIP | EQUIPMENT |
| ETR | EXISTING TO REMAIN |
| EXT | EXTERIOR |
| F | FUSE(D) |
| FC | FOOTCANDLES |
| FIXT | FIXTURE |
| FLR | FLOOR |
| FT | FOOT (FEET) |
| FUT | FUTURE |
| G, GND | GROUND |
| GALV | GALVANIZE(D) |
| GC | GENERAL CONTRACTOR |
| GFI | GROUND FAULT CIRCUIT INTERRUPTER |
| GFP | GROUND FAULT PROTECTION |
| HGT | HEIGHT |
| HPS | HIGH PRESSURE SODIUM |
| HTR | HEATER |
| HV | HIGH VOLTAGE |
| HW | HOT WATER |
| ID | IDENTIFY, IDENTIFICATION |
| INCAND | INCANDESCENT |
| J-BOX | JUNCTION BOX |
| JCT | JUNCTION |
| KCM/Kcmil | THOUSAND CIRCULAR MILS |
| KVA | KILO VOLT AMPERE |
| KW | KILOWATT |
| LGT | LIGHTING |
| LT(S) | LIGHT(S) |
| LED | LIGHT EMITTING DIODE |
| L | LOUVER |
| MAX | MAXIMUM |
| MCB | MAIN CIRCUIT BREAKER |
| MC | METAL CLAD CABLE |
| MFR | MANUFACTURER |
| MH | METAL HALIDE |
| MECH | MECHANICAL |
| MIN | MINIMUM |
| MLO | MAIN LUGS ONLY |
| MT | MOUNT |
| MTD | MOUNTED |
| N | NORTH |
| NEC | NATIONAL ELECTRICAL CODE |
| NF | NON-FUSED |
| NL | NIGHT LIGHT |
| No/# | NUMBER |
| OL | OVERLOAD |
| P | POLE(S) |
| PNL | PANEL |
| PR | PAIR |
| PRI | PRIMARY |
| PWR | POWER |
| ø | PHASE |
| PT | PRESSURE TREATED |
| RECEPT | RECEPTACLE |
| RGS | RIGID GALVANIZED STEEL |
| RM | ROOM |
| SEC | SECONDARY |
| SH | SHIELDED |
| SW | SWITCH |
| TEMP | TEMPORARY/TEMPERATURE |
| TB | TERMINAL BOARD |
| TYP | TYPICAL |
| UON | UNLESS OTHERWISE NOTED |
| V | VOLT, VOLTS |
| VA | VOLT-AMPERES |
| W | WATT, WIRE |
| W/ | WITH |
| WP | WEATHERPROOF |
| XFMR/T | TRANSFORMER |
| Y | WYE CONNECTION |

## DEVICES AND APPURTENANCES

- SINGLE POLE TOGGLE SWITCH
- DUPLEX RECEPTACLE
- TWO – 20 AMP DUPLEX RECEPTACLES UNDER SINGLE COVER
- JUNCTION BOX
- HAND HOLE

## RACEWAYS

- CONDUIT CONCEALED OR EXPOSED AS SPECIFIED
- CONDUIT TURNING UP
- CONDUIT TURNING DOWN
- PP-1 1/3/5 — HOMERUN BACK TO PANEL (PANEL AND CIRCUITS INDICATED)
- CIRCUIT CONTINUED OR CONNECTED TO EQUIPMENT AS INDICATED
- UNDERGROUND CONDUIT
- GROUND CONDUCTOR
- GROUNDING CONDUCTOR TERMINATION POINT AT SERVICE EQUIPMENT
- INDICATES EXISTING DEVICES OR EQUIPMENT

## POWER DISTRIBUTION EQUIPMENT

- SURFACE MOUNTED BRANCH CIRCUIT PANELBOARD 208/120V, 3ø, 4W, UON
- RECESSED BRANCH CIRCUIT PANELBOARD 208/120V, 3ø, 4W, UON
- SURFACE MOUNTED BRANCH CIRCUIT PANELBOARD 480/277V, 3ø, 4W, UON
- RECESSED BRANCH CIRCUIT PANELBOARD 480/277V, 3ø, 4W, UON
- DISTRIBUTION PANEL
- CR — CONTROL RELAY PANEL

## GENERAL

- # — NUMBER IN CIRCLE, WITH OR WITHOUT ARROW OR LEADER, REFER TO MATCHING NUMBERED CODED NOTE
- # — NUMBER IN DIAMOND, WITH OR WITHOUT ARROW OR LEADER; REFER TO THE DEMOLITION CODED NOTE WITH THE MATCHING NUMBER
- X / XXX — DETAIL CALLOUT

## GENERAL NOTES

1. REFER TO CIVIL DRAWINGS FOR SYMBOLS ASSOCIATED WITH WORK, EQUIPMENT, ETC. BY OTHER(S).
2. ALL WORK SHOWN ON THE ELECTRICAL DRAWINGS SHALL BE BY THE ELECTRICAL CONTRACT UNLESS OTHERWISE INDICATED.
3. CONDUIT RUNS SHOWN ARE DIAGRAMMATIC UON. EXACT LOCATION OF ALL CONDUIT RUNS SHALL BE DETERMINED IN THE FIELD. COORDINATE INSTALLATIONS AND AVOID CONFLICT WITH PIPING, DUCTWORK, ACCESS DOORS AND WORK BY OTHER TRADES.
4. GENERAL NOTES APPLY TO ALL ELECTRICAL CONTRACT DRAWINGS.

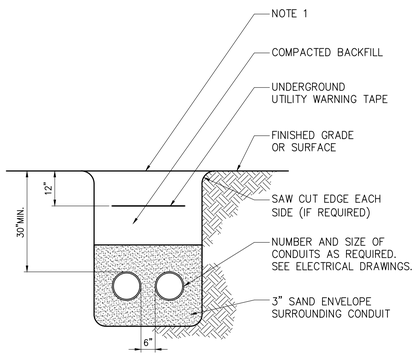


NOTE

1. REPLACE EXISTING SURFACE CONDITIONS IN KIND TO INCLUDE, BUT NOT LIMITED TO: CONCRETE, CRUSHED STONE, SELECT GRAVEL, ASPHALT, TOPSOIL AND GRASS.

1 TYPICAL DIRECT BURIED CONDUIT(S) DETAIL
– NOT TO SCALE

Drawing Copyright © 2019

CHA
1308 Professional Drive
Myrtle Beach, SC 29577-5896
843.693.3035 x269 • www.chacompanies.com

HCS Horry County Schools

DDC ENGINEERS

HORRY COUNTY SCHOOLS

OFFICE OF FACILITIES
1160 E. HIGHWAY 501
CONWAY, SC 29526

IT IS A VIOLATION OF LAW FOR ANY PERSON, UNLESS THEY ARE ACTING UNDER THE DIRECTION OF A LICENSED PROFESSIONAL ENGINEER, ARCHITECT, LANDSCAPE ARCHITECT OR LAND SURVEYOR, TO ALTER IN ANY WAY AN ITEM BEARING THE SEAL OR STAMP OF A LICENSED PROFESSIONAL IS ALTERED. THE ALTERING ENGINEER, ARCHITECT, LANDSCAPE ARCHITECT OR LAND SURVEYOR MAY ADD TO THE ITEM A DESIGNATION DESIGNING THE ALTERATION "ALTERED BY" FOLLOWED BY THEIR SIGNATURE, THE DATE OF SUCH ALTERATION, AND A SPECIFIC DESCRIPTION OF THE ALTERATION.

**LORIS HIGH SCHOOL**

TRACK AND FIELD
ATHLETIC FACILITY
IMPROVEMENTS PROGRAM

| No. | Submittal / Revision | App'd. | By | Date |
|---|---|---|---|---|
| | | | | |

ELECTRICAL
LEGEND

| Designed By: | Drawn By: | Checked By: |
|---|---|---|
| JRH | JRH | JD |
| Issue Date: 02/21/2020 | Project No: 36108 | Scale: AS SHOWN |

Drawing No.:
**E-001**

File: V:\PROJECTS\ANY\63\36108\CADD_ACAD\E-001_GEN_NOTES.DWG
Saved: 2/27/2020 2:48:22 PM Plotted: 2/28/2020 10:42:46 AM Current User: Helmer, Rose LastSavedBy: 6616

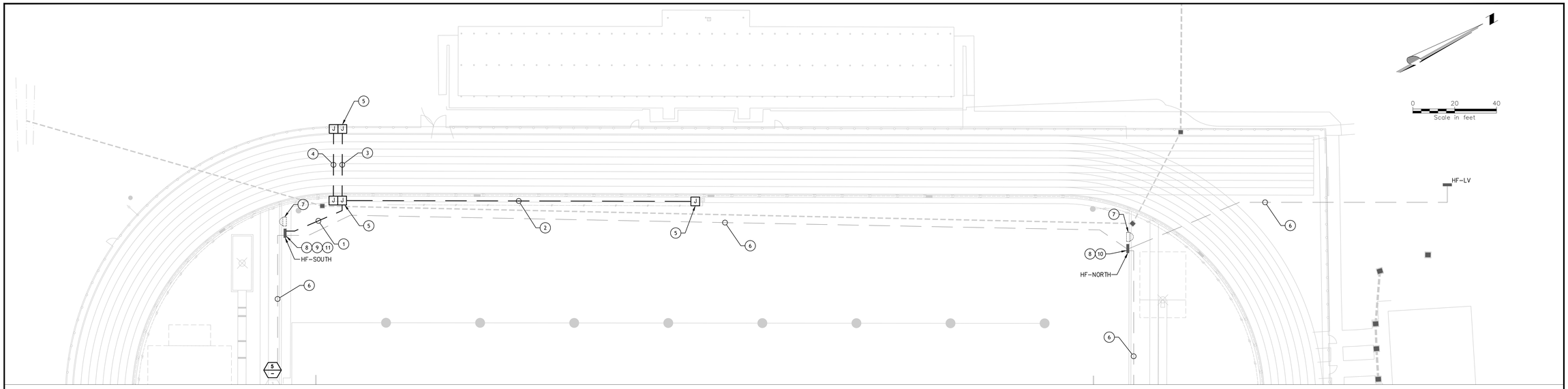


## ELECTRICAL SITE PLAN
SCALE: 1" = 20'

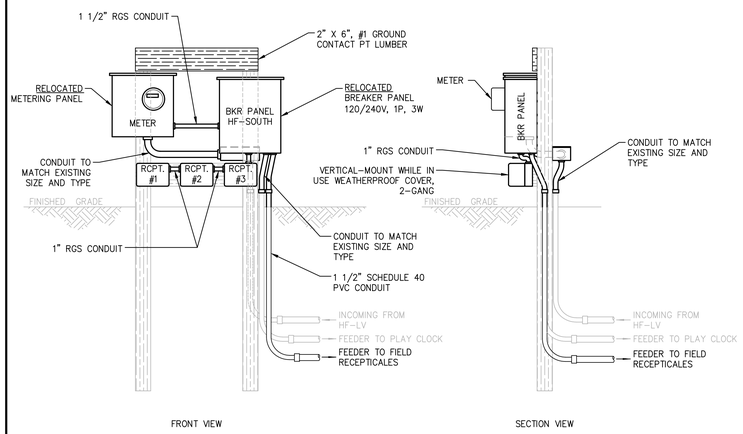


### NOTES

1. ALL EXPOSED EQUIPMENT SHALL BE GROUNDED.
2. ALL ELECTRICAL ENCLOSURES SHALL BE NEMA 3R RATED.
3. ALL MOUNTING HARDWARE TO BE GALVANIZED
4. REDUCED HEIGHT OF ASSOCIATED SUPPORT STRUCTURE TO BE EQUAL TO THE HEIGHT OF THE ADJACENT FENCE
5. PROVIDE QUAD RECEPTICALES FOR RCPT #1-#3 AND REFEED WIRING TO ASSCODIATED PANEL.
6. RELOCATE METER AND PANEL AS SHOWN ABOVE.
7. SEAL UNUSED HOLES IN PANELS.

## 1 LORIS H.S. HENIFORD FIELD SOUTH D-ZONE PANELBOARD
NOT TO SCALE

LOCATION: HENIFORD FIELD SOUTH D-ZONE
MOUNTING: SURFACE
SOURCE: HF-LV

PANEL ID: HF-SOUTH

VOLTS, PHASE, WIRE: 240/120V, 1ϕ, 3W
MAINS: 30A/2P
SHORT CIRCUIT RATING: 10 kA

EXISTING

| CKT | LOAD DESCRIPTION | CB AMPS/ POLE | CONN LOAD KVA | CONN LOAD KVA | | CONN LOAD KVA | CONN LOAD KVA | CB AMPS/ POLE | LOAD DESCRIPTION | CKT |
|---|---|---|---|---|---|---|---|---|---|---|
| 1 | | | | | | 0.36 | | 20/1 | FINISH LINE RECEPTACLE | 2 |
| 3 | | | | | | | | 30/1 | | 4 |
| 5 | | | | | | 0.36 | | 20/1 | RECEPTACLE #2 | 6 |
| 7 | RECEPTACLE #1 | 20/1 | | 0.36 | | | 0.18 | 20/1 | MIDFIELD RECEPTACLE | 8 |
| 9 | MAIN BREAKER | 30/2 | | | | 0.18 | | 20/1 | 25 SECOND CLOCK | 10 |
| 11 | | | | | | | 0.36 | 20/1 | RECEPTACLE #3 | 12 |
| | | | 0 | 0.36 | | 0.90 | 0.54 | | | |
| | | | TOTAL kVA | | | | | | | |
| | | | 1.80 | | | | | | | |

NOTES
1. ALL EXISTING BREAKERS EXCEPT CIRCUIT #2
2. REFEED CIRCUITS 6, 7, & 12

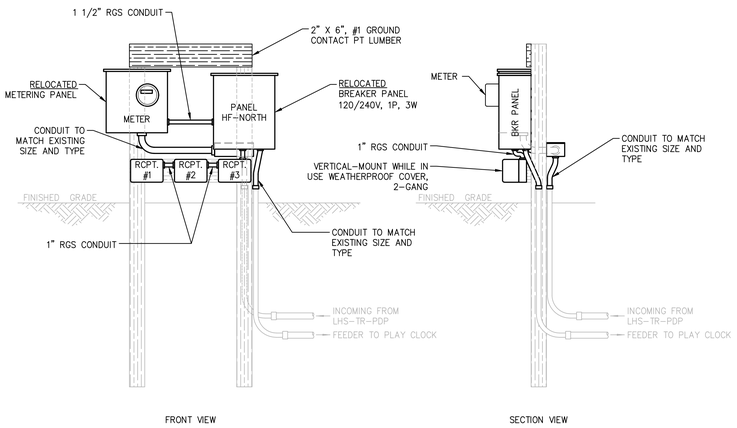


### NOTES

1. ALL EXPOSED EQUIPMENT SHALL BE GROUNDED.
2. ALL ELECTRICAL ENCLOSURES SHALL BE NEMA 3R RATED.
3. ALL MOUNTING HARDWARE TO BE GALVANIZED.
4. REDUCED HEIGHT OF ASSOCIATED SUPPORT STRUCTURE TO BE EQUAL TO THE HEIGHT OF THE ADJACENT FENCE
5. PROVIDE QUAD RECEPTICALES FOR RCPT #1-#3 AND REFEED WIRING TO ASSCODIATED PANEL.
6. RELOCATE METER AND PANEL AS SHOWN ABOVE.
7. SEAL UNUSED HOLES IN PANELS.

## 2 LORIS H.S. HENIFORD FIELD NORTH D-ZONE PANELBOARD
NOT TO SCALE

LOCATION: HENIFORD FIELD NORTH D-ZONE
MOUNTING: SURFACE
SOURCE: HF-LV

PANEL ID: HF-NORTH

VOLTS, PHASE, WIRE: 240/120V, 1ϕ, 3W
MAINS: 30A/2P
SHORT CIRCUIT RATING: 10 kA

EXISTING

| CKT | LOAD DESCRIPTION | CB AMPS/ POLE | CONN LOAD KVA | CONN LOAD KVA | | CONN LOAD KVA | CONN LOAD KVA | CB AMPS/ POLE | LOAD DESCRIPTION | CKT |
|---|---|---|---|---|---|---|---|---|---|---|
| 1 | | | | | | | | | | 2 |
| 3 | | | | | | | | 30/1 | | 4 |
| 5 | | | | | | 0.36 | | 20/1 | RECEPTACLE #2 | 6 |
| 7 | RECEPTACLE #1 | 20/1 | | 0.36 | | | | 20/1 | SPARE | 8 |
| 9 | MAIN BREAKER | 30/2 | | | | 0.18 | | 20/1 | 25 SECOND CLOCK | 10 |
| 11 | | | | | | | 0.36 | 20/1 | RECEPTACLE #3 | 12 |
| | | | 0 | 0.36 | | 0.54 | 0.36 | | | |
| | | | TOTAL kVA | | | | | | | |

NOTES
1. REFEED CIRCUITS 6, 7, & 12

### CODED NOTES

1. 1 1/2" SCHEDULE 40 PVC CONDUIT WITH (2) #8, (1) #8G, FOR MIDFIELD RECEPTACLES AND (2) #10, AND (1) #10G FOR FINISH LINE RECEPTACLES.
2. 1" SCHEDULE 40 PVC CONDUIT WITH (2) #8 AND (1) #8G FOR MIDFIELD RECEPTACLES FROM PANEL HF-SOUTH.
3. 1" SCHEDULE 40 PVC CONDUIT WITH (2) #10 AND (1) #10G FOR FINISH LINE RECEPTACLES FROM PANEL HF-SOUTH.
4. 1 1/2" SCHEDULE 40 PVC CONDUIT BETWEEN JUNCTION BOXES FOR INSTALLATION OF COMMUNICATION WIRING.
5. PROVIDE JUNCTION BOX (SEE DETAILS 1 & 2 ON C-601)
6. PROTECT AND MAINTAIN EXISTING ELECTRICAL WIRING. REPAIR ANY DAMAGED CONDUIT/WIRING AND OR ELECTRICAL BOXES IN KIND.
7. REMOVE EXISTING METER & ASSOCIATED SUPPORTS, ABANDON UNDERGROUND WIRING. COORDINATE WITH UTILITY TO DISCONNECT SERVICE FEED.
8. REMOVE, PROTECT, AND MAINTAIN EQUIPMENT AS SHOWN IN DETAIL 3 ON THIS DRAWING.
9. RELOCATE AND ADD EQUIPMENT AS SHOWN IN DETAIL 1 ON THIS DRAWING.
10. RELOCATE AND ADD EQUIPMENT AS SHOWN IN DETAIL 2 ON THIS DRAWING.
11. PROVIDE 20A/1P BREAKER AT CKT 2 IN EXISTING PANEL HF-SOUTH. TYPE OF BREAKER TO MATCH EXISTING.

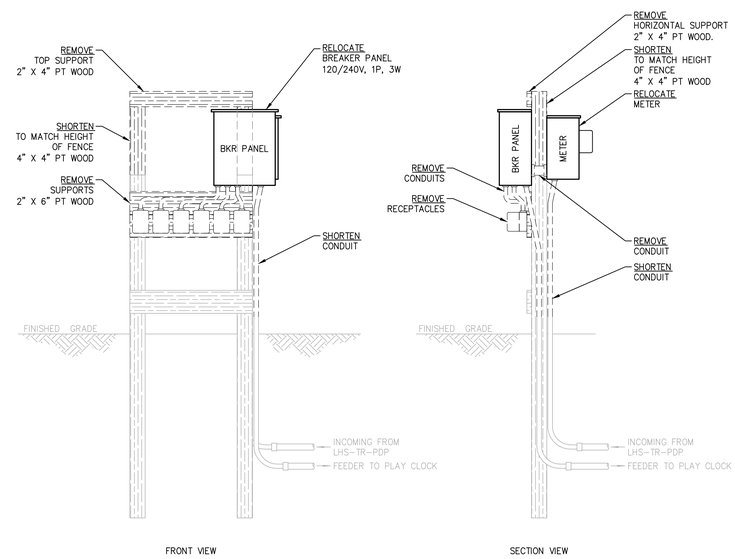


## 3 REMOVALS LORIS H.S. HENIFORD FIELD D-ZONE PANELBOARD (TYP. NORTH & SOUTH)
NOT TO SCALE

Drawing Copyright © 2019

CHA
1298 Professional Drive
Myrtle Beach, SC 29577-5896
843.693.3035-USA • www.chacompanies.com

HCS Horry County Schools

DDC ENGINEERS

HORRY COUNTY SCHOOLS

OFFICE OF FACILITIES
1160 E. HIGHWAY 501
CONWAY, SC 29526

IT IS A VIOLATION OF LAW FOR ANY PERSON, UNLESS THEY ARE ACTING UNDER THE DIRECTION OF A LICENSED PROFESSIONAL ENGINEER, ARCHITECT, LANDSCAPE ARCHITECT OR LAND SURVEYOR TO ALTER AN ITEM IN ANY WAY. IF AN ITEM BEARING THE STAMP OF A LICENSED PROFESSIONAL IS ALTERED, THE ALTERING ENGINEER, ARCHITECT, LANDSCAPE ARCHITECT OR LAND SURVEYOR SHALL ATTACH TO THE ITEM THE PHRASE "ALTERED BY" FOLLOWED BY THEIR NOTATION "ALTERED BY" FOLLOWED BY THEIR SIGNATURE, THE DATE OF SUCH ALTERATION, AND A SPECIFIC DESCRIPTION OF THE ALTERATION.

**LORIS HIGH SCHOOL**

TRACK AND FIELD
ATHLETIC FACILITY
IMPROVEMENTS PROGRAM

| No. | Submittal / Revision | App'd. | By | Date |
|---|---|---|---|---|
| | | | | |

ELECTRICAL SITE PLAN

| Designed By: | Drawn By: | Checked By: |
|---|---|---|
| JRH | JRH | JD |
| Issue Date: | Project No: | Scale: |
| 02/21/2020 | 36108 | AS SHOWN |

Drawing No.:
**E-002**

File: W:\PROJECTS\MYYK5\36108\CADD_ACAD\E-002_LHS_SITE_TRACK.DWG
Saved: 2/21/2020 11:26:11 AM Plotted: 2/26/2020 10:42:51 AM Current User: Heimer, Rose LastSavedBy: 5683

# TRACK AND FIELD ATHLETIC FACILITY IMPROVEMENTS PROGRAM

## SAINT JAMES HIGH SCHOOL

*February, 2020*

**HORRY COUNTY SCHOOLS**
**OFFICE OF FACILITIES**
**1160 E. HIGHWAY 501**
**CONWAY. SC 29526**

SITE VICINITY MAP
SCALE: NOT TO SCALE

100% CONSTRUCTION DOCUMENTS

## Sheet Index


| SHEET #'S | SHEET TITLE |
|---|---|
| G-000 | TITLE SHEET |
| C-001 | EXISTING CONDITIONS PLAN |
| C-002 | DEMOLITION PLAN |
| C-100 | LAYOUT PLAN |
| C-101 | TRACK SURFACING AND DIMENSION PLAN |
| C-200 | GRADING PLAN |
| C-300 | DRAINAGE AND UTILITY PLAN |
| C-500 | SEDIMENT AND EROSION CONTROL PLAN PHASE I |
| C-501 | SEDIMENT AND EROSION CONTROL PLAN PHASE II |
| C-502 | SEDIMENT AND EROSION CONTROL DETAILS |
| C-600 | TRACK AND FIELD DETAILS |
| C-601 | TRACK AND FIELD DETAILS |
| C-602 | TRACK AND FIELD DETAILS |
| E-001 | ELECTRICAL SITE PLAN |


Drawing Copyright © 2019

CHA
1258 Professional Drive
Myrtle Beach, SC 29577-5896
843.692.3535 x284 • www.chacompanies.com

HORRY COUNTY SCHOOLS

OFFICE OF FACILITIES
1160 E. HIGHWAY 501
CONWAY, SC 29526

IT IS A VIOLATION OF LAW FOR ANY PERSON, UNLESS THEY ARE ACTING UNDER THE DIRECTION OF A PROFESSIONAL ENGINEER, ENGINEER, ARCHITECT, LANDSCAPE ARCHITECT OR LAND SURVEYOR TO ALTER AN ITEM IN ANY WAY. IF AN ITEM BEARING THE STAMP OF A LICENSED PROFESSIONAL IS ALTERED, THE ALTERING ENGINEER, ARCHITECT, LANDSCAPE ARCHITECT OR LAND SURVEYOR SHALL STAMP THE DOCUMENT AND INCLUDE THE NOTATION "ALTERED BY" FOLLOWED BY THEIR SIGNATURE, THE DATE OF SUCH ALTERATION, AND A SPECIFIC DESCRIPTION OF THE ALTERATION.

**SAINT JAMES HIGH SCHOOL**

TRACK AND FIELD ATHLETIC FACILITY IMPROVEMENTS PROGRAM

| No. | Submittal / Revision | App'd | By | Date |
|---|---|---|---|---|
| | | | | |
| | | | | |
| | | | | |
| | | | | |
| | | | | |
| | | | | |

TITLE SHEET

| Designed By: | Drawn By: | Checked By: |
|---|---|---|
| JRP | RMH | PG |
| Issue Date: | Project No: | Scale: |
| 02/21/2020 | 36108 | AS SHOWN |

Drawing No.:
**G-000**

File: V:\PROJECTS\ANY\C53\36108\CADD_ACAD\C-000_SJHS.DWG
Saved: 2/25/2020 10:54:21 AM Plotted: 2/26/2020 11:37:20 AM Current User: Helmer, Rose LastSavedBy: 5693

# SURVEY NOTES

1. THE MAP IS BASED ON A FIELD SURVEY COMPLETED BY DDC ENGINEERS IN JULY 2019

2. ELEVATIONS ARE REFERENCED TO THE NAVD 88 VERTICAL DATUM.

3. ALL DRAINAGE AND IRRIGATION SHOWN IS PER RECORD DRAWINGS AND SHOULD BE FIELD VERIFIED FOR LOCATIONS, RIM AND INVERT ELEVATIONS


DDC ENGINEERS

Consulting Engineers, Surveyors, Planners,
Landscape Architects & Environmentalists
1298 Professional Dr., Myrtle Beach, SC 29577
Phone: (843) 692-3200 Fax: (843) 692-3210


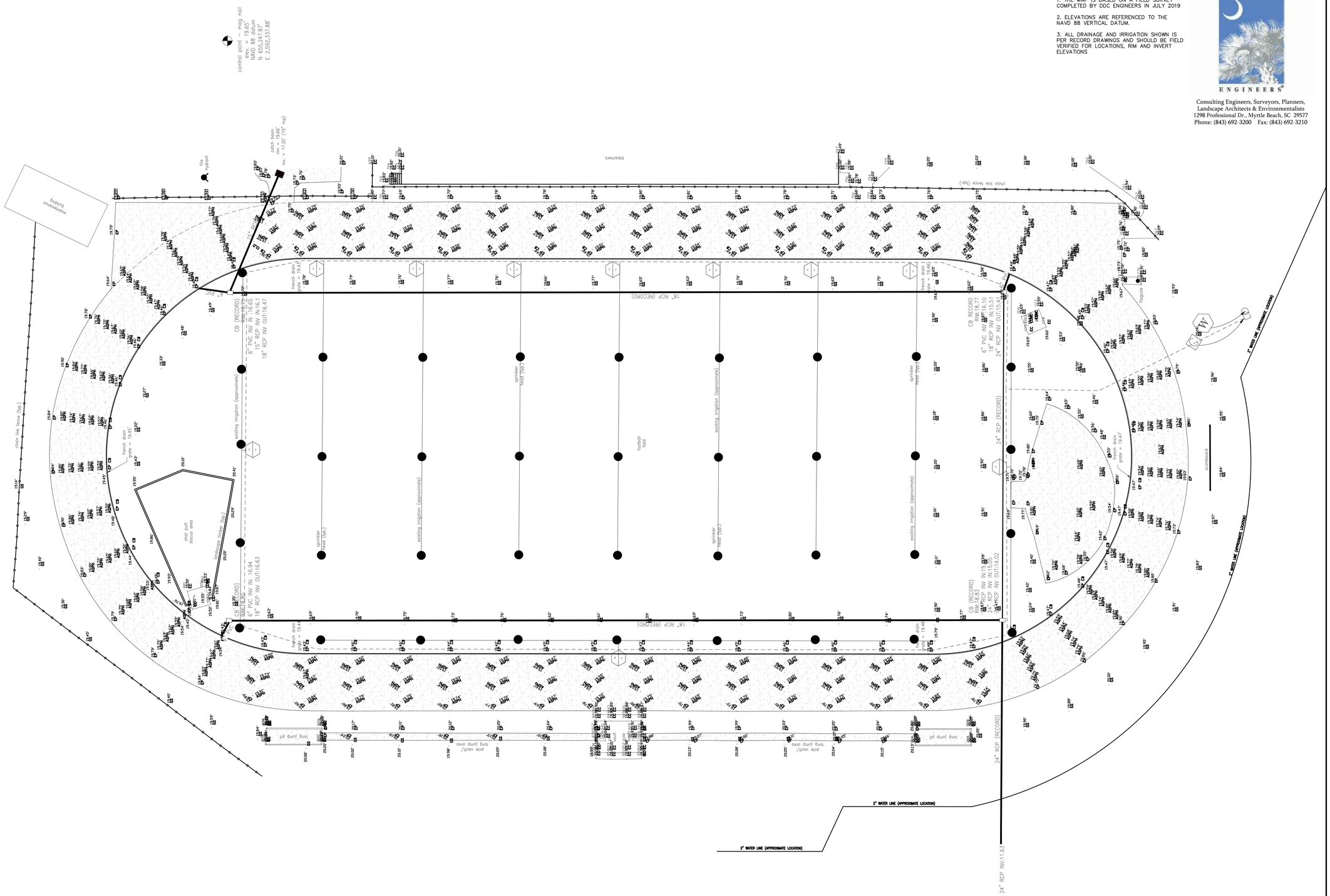


0 20 40
Scale in feet


Drawing Copyright © 2019



CHA
1298 Professional Drive
Myrtle Beach, SC 29577-5896
843.692.3200 x236 • www.chacompanies.com


HCS Horry County Schools

DDC ENGINEERS

HORRY COUNTY SCHOOLS

OFFICE OF FACILITIES
1160 E. HIGHWAY 501
CONWAY, SC 29526


IT IS A VIOLATION OF LAW FOR ANY PERSON, UNLESS THEY ARE ACTING UNDER THE DIRECTION OF A PROFESSIONAL ENGINEER, ARCHITECT, LANDSCAPE ARCHITECT OR LAND SURVEYOR TO ALTER AN ITEM IN ANY WAY. IF AN ITEM BEARING THE STAMP OF A LICENSED PROFESSIONAL ENGINEER, ARCHITECT, LANDSCAPE ARCHITECT OR LAND SURVEYOR SHALL STAMP THE DOCUMENT AND INCLUDE THE NOTATION "ALTERED BY" FOLLOWED BY THEIR SIGNATURE, THE DATE OF SUCH ALTERATION, AND A SPECIFIC DESCRIPTION OF THE ALTERATION.


**SAINT JAMES HIGH SCHOOL**

TRACK AND FIELD
ATHLETIC FACILITY
IMPROVEMENTS PROGRAM

| No. | Submittal / Revision | App'd. | By | Date |
|---|---|---|---|---|
| | | | | |
| | | | | |
| | | | | |
| | | | | |
| | | | | |
| | | | | |

EXISTING
CONDITIONS PLAN

| Designed By: | Drawn By: | Checked By: |
|---|---|---|
| JRP | RMH | PG |
| Issue Date: | Project No: | Scale: |
| 02/21/2020 | 36108 | AS SHOWN |

Drawing No.:
**C-001**


File: V:\PROJECTS\ANY\C5\36108\CADD_ACAD\C-001_SJHS.DWG
Saved: 2/21/2020 8:36:29 AM Plotted: 2/28/2021 11:37:25 AM Current User: Helmer, Rose LastSavedBy: 5683

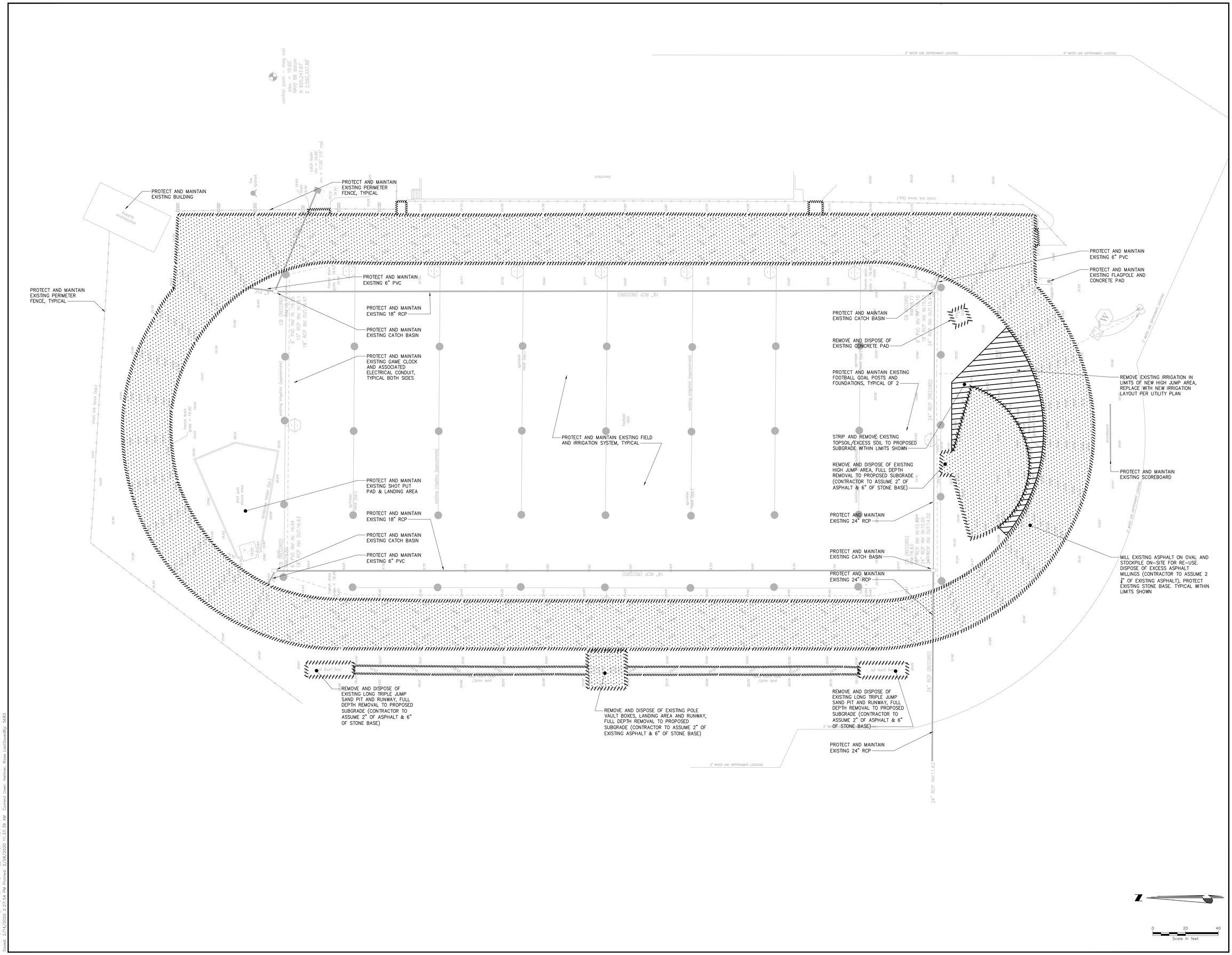


Drawing Copyright © 2019

CHA
1258 Professional Drive
Myrtle Beach, SC 29577-5896
843.692.3105 x284 • www.chacompanies.com

HCS Horry County Schools

DDC ENGINEERS

HORRY COUNTY SCHOOLS

OFFICE OF FACILITIES
1160 E. HIGHWAY 501
CONWAY, SC 29526

IT IS A VIOLATION OF LAW FOR ANY PERSON, UNLESS THEY ARE ACTING UNDER THE DIRECTION OF A LICENSED PROFESSIONAL ENGINEER, ARCHITECT, LANDSCAPE ARCHITECT OR LAND SURVEYOR, TO ALTER AN ITEM IN ANY WAY. IF AN ITEM BEARING THE STAMP OF A LICENSED PROFESSIONAL IS ALTERED, THE ALTERING ENGINEER, ARCHITECT, LANDSCAPE ARCHITECT OR LAND SURVEYOR SHALL ATTACH TO THE ITEM THE PHRASE "ALTERED BY" FOLLOWED BY THEIR SIGNATURE, THE DATE OF SUCH ALTERATION, AND A SPECIFIC DESCRIPTION OF THE ALTERATION.

**SAINT JAMES HIGH SCHOOL**

TRACK AND FIELD
ATHLETIC FACILITY
IMPROVEMENTS PROGRAM

| No. | Submittal / Revision | App'd. | By | Date |
|---|---|---|---|---|
| | | | | |
| | | | | |
| | | | | |
| | | | | |
| | | | | |
| | | | | |

DEMOLITION PLAN

| Designed By: | Drawn By: | Checked By: |
|---|---|---|
| JRP | RMH | PG |
| Issue Date: | Project No: | Scale: |
| 02/21/2020 | 36108 | AS SHOWN |

Drawing No.:
**C-002**

File: V:\PROJECTS\ANY\VS\36108\CADD_ACAD\C-002_SAHS.DWG
Saved: 2/14/2020 2:27:54 PM Plotted: 2/28/2020 11:33:39 AM Current User: Hetmer, Ross LastSavedBy: 5683

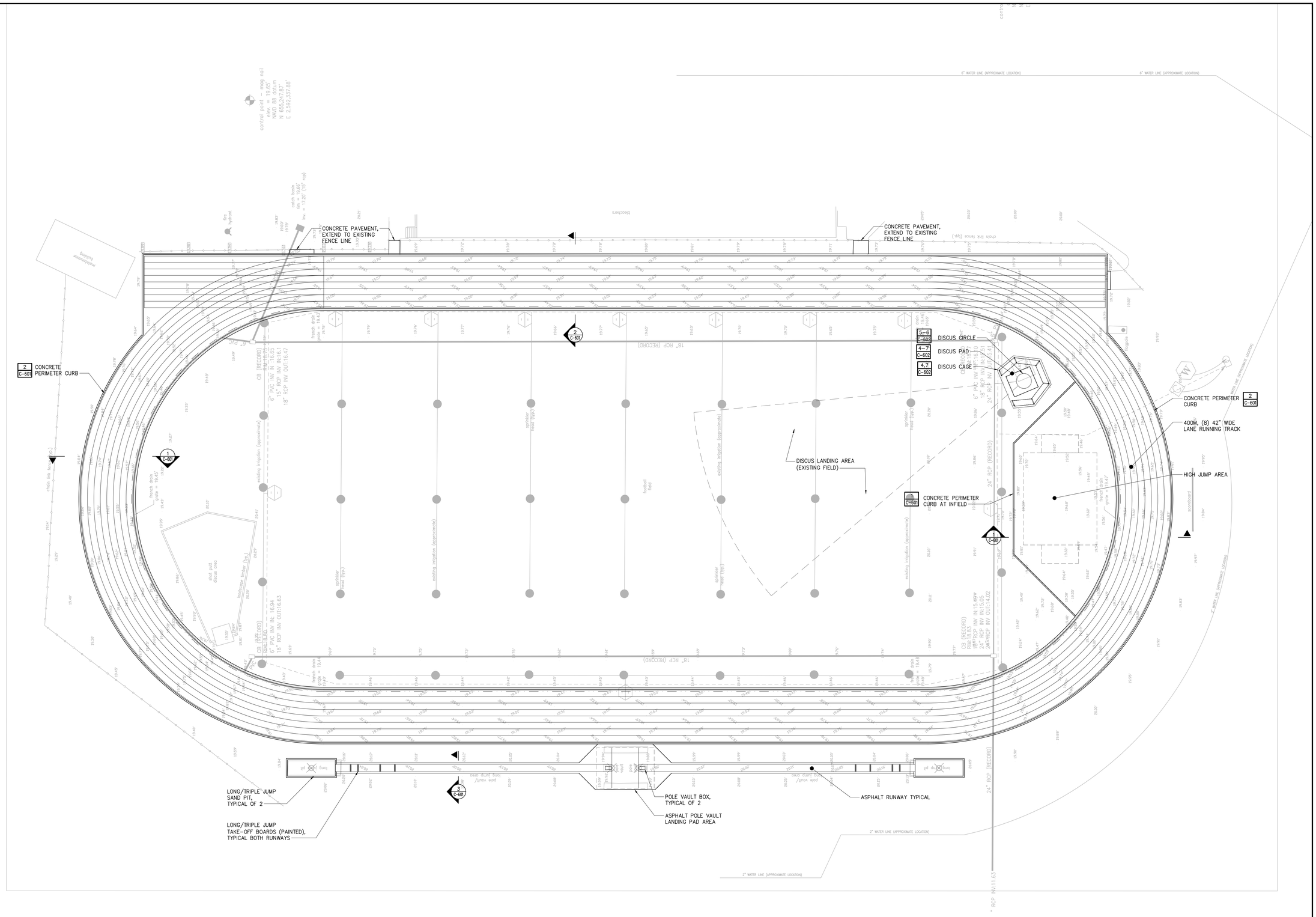


Scale in feet: 0 20 40

Drawing Copyright © 2019

CHA
1258 Professional Drive
Myrtle Beach, SC 29577-5896
843.692.3105 x284 • www.chacompanies.com

HCS Horry County Schools

DDC ENGINEERS

HORRY COUNTY SCHOOLS

OFFICE OF FACILITIES
1160 E. HIGHWAY 501
CONWAY, SC 29526

IT IS A VIOLATION OF LAW FOR ANY PERSON, UNLESS THEY ARE ACTING UNDER THE DIRECTION OF A LICENSED PROFESSIONAL ENGINEER, ARCHITECT, LANDSCAPE ARCHITECT OR LAND SURVEYOR, TO ALTER AN ITEM IN ANY WAY. IF AN ITEM BEARING THE STAMP OF A LICENSED PROFESSIONAL IS ALTERED, THE ALTERING ENGINEER, ARCHITECT, LANDSCAPE ARCHITECT OR LAND SURVEYOR SHALL STAMP THE DOCUMENT AND INCLUDE THE NOTATION "ALTERED BY" FOLLOWED BY THEIR SIGNATURE, THE DATE OF SUCH ALTERATION, AND A SPECIFIC DESCRIPTION OF THE ALTERATION.

**SAINT JAMES HIGH SCHOOL**

TRACK AND FIELD ATHLETIC FACILITY IMPROVEMENTS PROGRAM

| No. | Submittal / Revision | App'd. | By | Date |
|---|---|---|---|---|
| | | | | |

LAYOUT PLAN

| Designed By: | Drawn By: | Checked By: |
|---|---|---|
| JRP | RMH | PG |
| Issue Date: | Project No: | Scale: |
| 02/21/2020 | 36108 | AS SHOWN |

Drawing No.:
**C-100**

File: V:\PROJECTS\ANY\K5\36108\CADD_ACAD\C-100_SJHS.DWG
Saved: 2/14/2020 2:29:58 PM Plotted: 2/26/2020 11:37:45 AM Current User: Herman Rose LastSavedBy: 5683

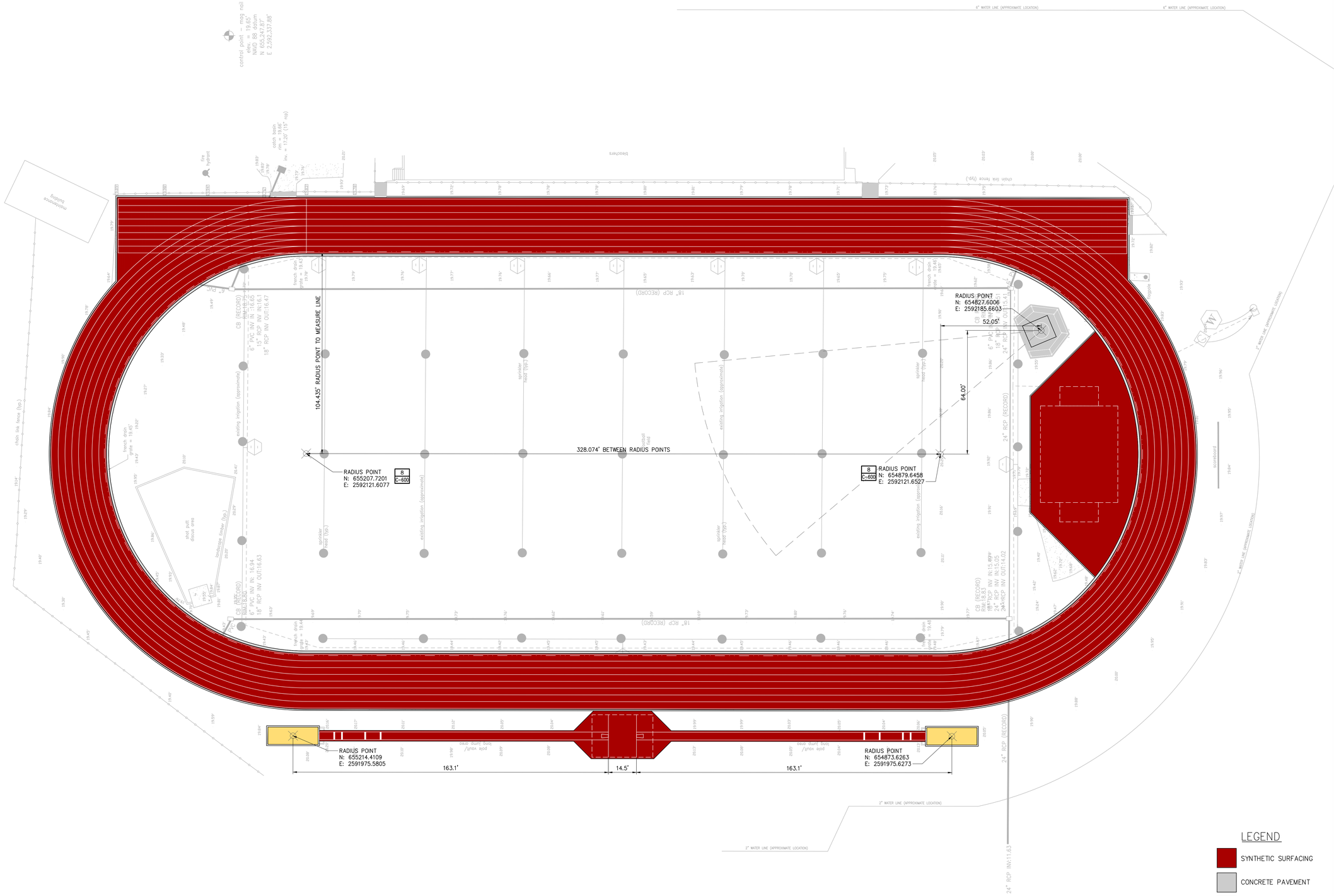


Drawing Copyright © 2019

CHA
1258 Professional Drive
Myrtle Beach, SC 29577-5896
843.692.3255 x236 • www.chacompanies.com

HCS Horry County Schools

DDC ENGINEERS

HORRY COUNTY SCHOOLS

OFFICE OF FACILITIES
1160 E. HIGHWAY 501
CONWAY, SC 29526

IT IS A VIOLATION OF LAW FOR ANY PERSON, UNLESS THEY ARE ACTING UNDER THE DIRECTION OF A LICENSED PROFESSIONAL ENGINEER, ARCHITECT, LANDSCAPE ARCHITECT OR LAND SURVEYOR, TO ALTER IN ANY WAY, AN ITEM BEARING THE STAMP OF A LICENSED PROFESSIONAL ENGINEER, ARCHITECT, LANDSCAPE ARCHITECT OR LAND SURVEYOR. SHALL STAMP THE DOCUMENT AND INCLUDE THE NOTATION "ALTERED BY" FOLLOWED BY THEIR SIGNATURE, THE DATE OF SUCH ALTERATION, AND A SPECIFIC DESCRIPTION OF THE ALTERATION.

**SAINT JAMES HIGH SCHOOL**

TRACK AND FIELD
ATHLETIC FACILITY
IMPROVEMENTS PROGRAM

| No. | Submittal / Revision | App'd. | By | Date |
|---|---|---|---|---|
| | | | | |
| | | | | |
| | | | | |
| | | | | |
| | | | | |
| | | | | |

TRACK SURFACING AND DIMENSION PLAN

| Designed By: | Drawn By: | Checked By: |
|---|---|---|
| JRP | RMH | PG |
| Issue Date: | Project No: | Scale: |
| 02/21/2020 | 36108 | AS SHOWN |

Drawing No.:
**C-101**

File: V:\PROJECTS\ANYVX5\36108\CADD_ACAD\C-101_SJHS.DWG
Saved: 2/14/2020 2:32:03 PM Plotted: 2/29/2020 11:39:59 AM Current User: Hunter, Rose LastSavedBy: 5683

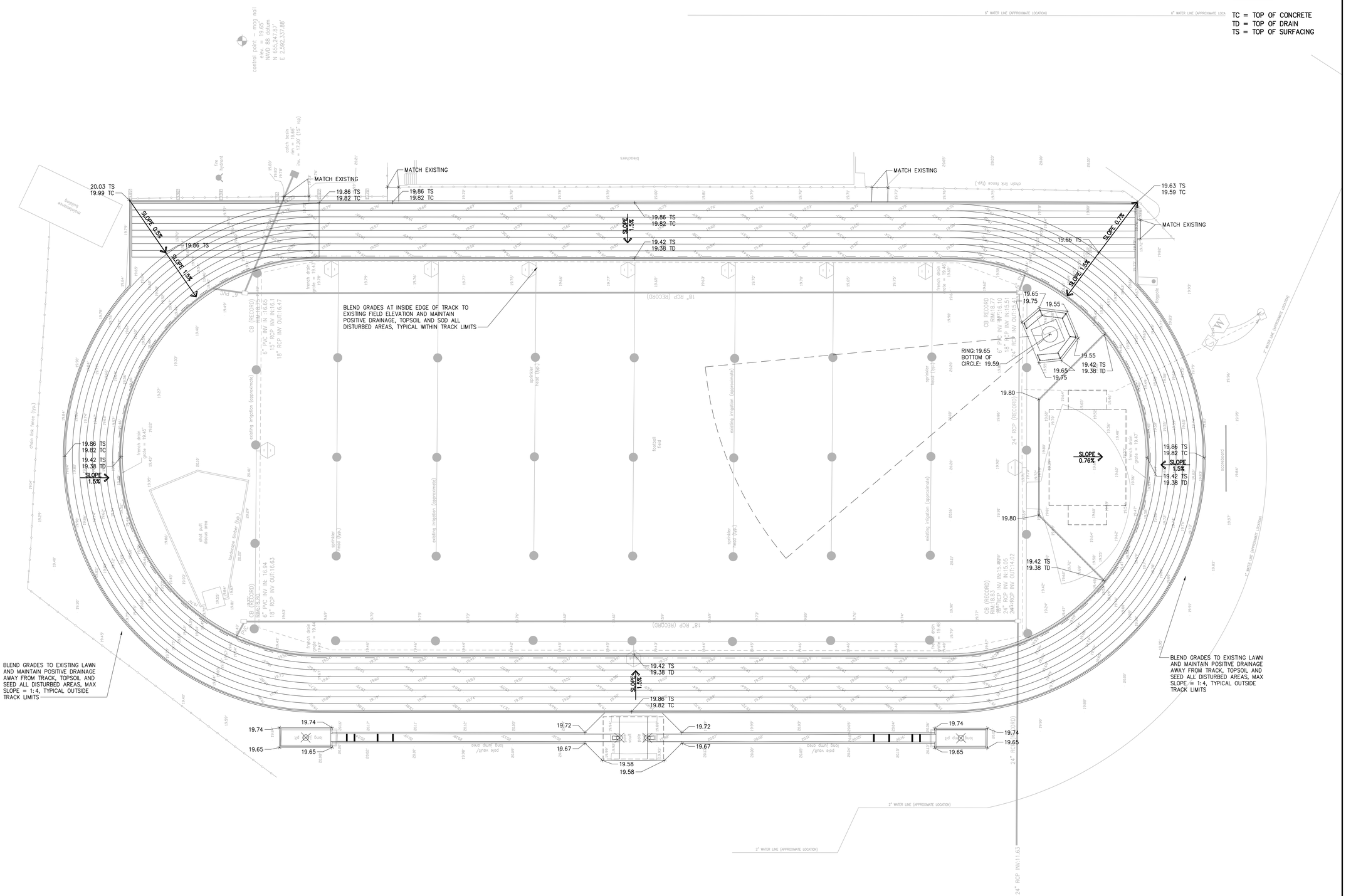


Drawing Copyright © 2019

CHA
1258 Professional Drive
Myrtle Beach, SC 29577-5896
843.692.3105 x284 • www.chacompanies.com

HCS Horry County Schools

DDC ENGINEERS

HORRY COUNTY SCHOOLS

OFFICE OF FACILITIES
1160 E. HIGHWAY 501
CONWAY, SC 29526

IT IS A VIOLATION OF LAW FOR ANY PERSON, UNLESS THEY ARE ACTING UNDER THE DIRECTION OF A LICENSED PROFESSIONAL ENGINEER, ARCHITECT, LANDSCAPE ARCHITECT OR LAND SURVEYOR TO ALTER AN ITEM IN ANY WAY. IF AN ITEM BEARING THE STAMP OF A LICENSED PROFESSIONAL ENGINEER, ARCHITECT, LANDSCAPE ARCHITECT OR LAND SURVEYOR SHALL STAMP THE DOCUMENT AND INCLUDE THE NOTATION "ALTERED BY" FOLLOWED BY THEIR SIGNATURE, THE DATE OF SUCH ALTERATION, AND A SPECIFIC DESCRIPTION OF THE ALTERATION.

**SAINT JAMES HIGH SCHOOL**

TRACK AND FIELD
ATHLETIC FACILITY
IMPROVEMENTS PROGRAM

| No. | Submittal / Revision | App'd. | By | Date |
|---|---|---|---|---|
| | | | | |

GRADING PLAN

| Designed By: | Drawn By: | Checked By: |
|---|---|---|
| XXX | XXX | XXX |
| Issue Date: | Project No: | Scale: |
| 02/21/2020 | 36108 | AS SHOWN |

Drawing No.:
**C-200**

File: V:\PROJECTS\ANY\X5\36108\CADD_ACAD\C-200_SJHS.DWG
Saved: 2/14/2020 2:39:38 PM Plotted: 2/26/2020 11:37:55 AM Current User: Helmer, Rose LastSavedBy: 5683

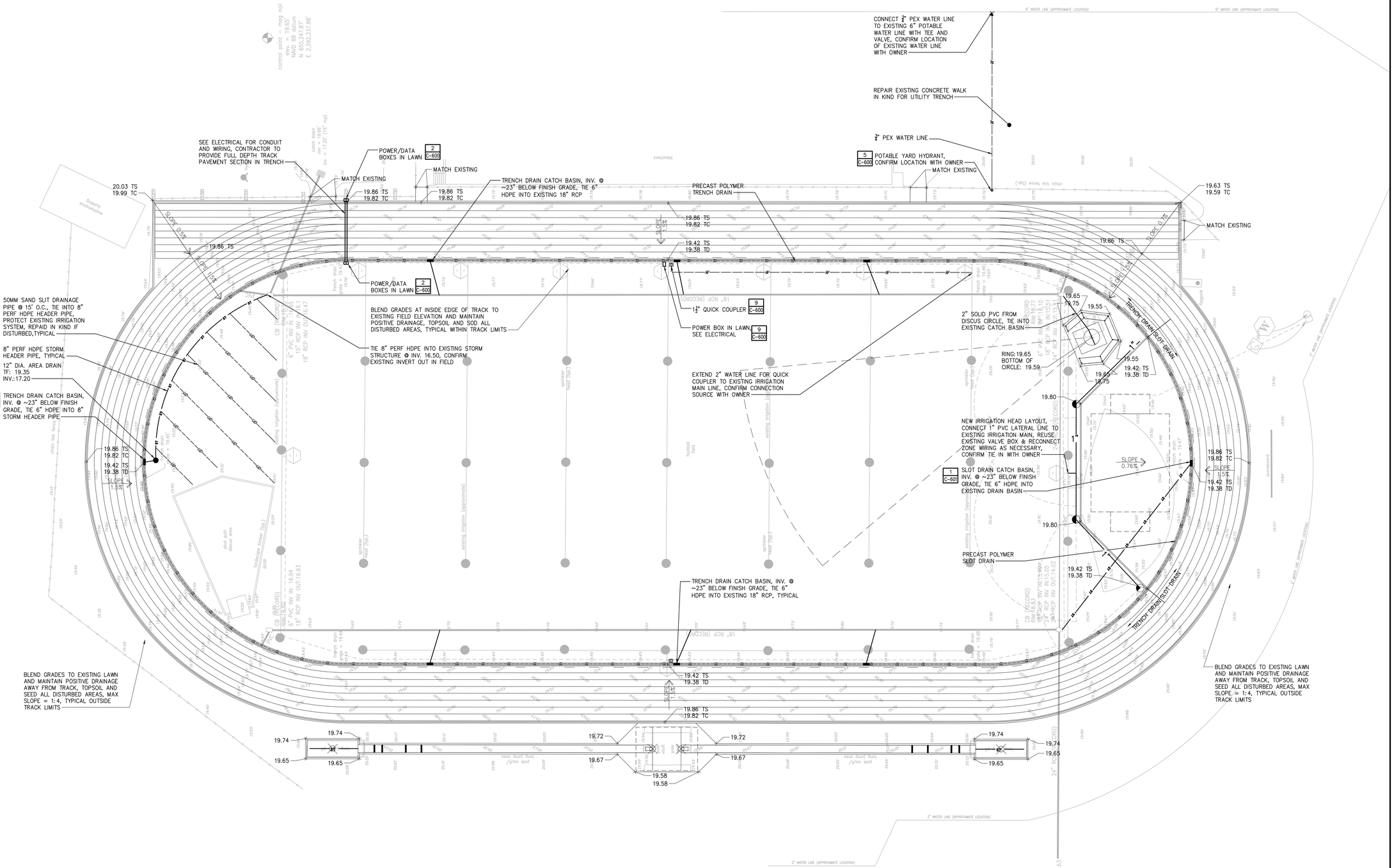


Drawing Copyright © 2019

CHA
1258 Professional Drive
Myrtle Beach, SC 29577-5896
843.692.3105 x286 • www.chacompanies.com

HCS Horry County Schools

DDC ENGINEERS

HORRY COUNTY SCHOOLS

OFFICE OF FACILITIES
1160 E. HIGHWAY 501
CONWAY, SC 29526

IT IS A VIOLATION OF LAW FOR ANY PERSON, UNLESS THEY ARE ACTING UNDER THE DIRECTION OF A LICENSED PROFESSIONAL ENGINEER, ARCHITECT, LANDSCAPE ARCHITECT OR LAND SURVEYOR TO ALTER AN ITEM IN ANY WAY. IF AN ITEM BEARING THE STAMP OF A LICENSED PROFESSIONAL ENGINEER, LAND SURVEYOR, ENGINEER, ARCHITECT, LANDSCAPE ARCHITECT OR LAND SURVEYOR SHALL STAMP THE DOCUMENT AND INCLUDE THE NOTATION "ALTERED BY" FOLLOWED BY THE PROFESSIONAL'S SIGNATURE, THE DATE OF SUCH ALTERATION, AND A SPECIFIC DESCRIPTION OF THE ALTERATION.

**SAINT JAMES HIGH SCHOOL**

TRACK AND FIELD ATHLETIC FACILITY IMPROVEMENTS PROGRAM

| No. | Submittal / Revision | App'd. | By | Date |
|---|---|---|---|---|
| | | | | |

DRAINAGE AND UTILITY PLAN

| Designed By: | Drawn By: | Checked By: |
|---|---|---|
| JP | RH | PG |
| Issue Date: | Project No: | Scale: |
| 02/21/2020 | 36108 | AS SHOWN |

Drawing No.:

**C-300**

0 20 40
Scale in feet

File: V:\PROJECTS\ANYCS\36108\CADD_ACAD\C-300_SJHS.DWG
Saved: 2/25/2020 10:59:17 AM Plotted: 2/25/2020 11:38:50 AM Current User: Werner, Ross Last Saved By: 5683

SEEDING NOTES:

1. INCLUDES RURAL AREAS ADJACENT TO WELL-DEVELOPED LAWNS.
2. NOT REQUIRED ON SHOULDERS, MEDIANS, ETC., AND SLOPES UNDER 5 FEET IN HEIGHT.
3. GIANT BERMUDA SEED, INCLUDING NK-37, SHALL NOT BE USED.
4. RESEEDING CRIMSON CLOVER SHALL BE INOCULATED IN ACCORDANCE WITH SUBSECTION 810.05. DO NOT PLANT CLOVER IN MEDIANS OR IN RURAL AREAS ADJACENT TO WELL-DEVELOPED LAWNS.
5. PENSACOLA BAHIA SHALL BE ALLOWED ONLY AS SHOWN IN SEEDING SCHEDULES 3 AND 4 AT THE RATE OF 50 POUNDS PER ACRE ONLY WHEN SEEDING PIT AREAS THAT ARE GOVERNED BY THE SOUTH CAROLINA MINING ACT. OTHERWISE, DO NOT INCLUDE BAHIA SEED IN THE MIX.
6. THE CONTRACTOR SHALL OBTAIN A SATISFACTORY STAND OF PERENNIAL VEGETATION WHOSE ROOT SYSTEM SHALL BE DEVELOPED SUFFICIENTLY TO SURVIVE DRY PERIODS AND WINTER WEATHER, AND BE CAPABLE OF RE-ESTABLISHMENT IN THE SPRING. THE PERENNIAL VEGETATIVE COVER SHALL HAVE A MINIMUM COVERAGE DENSITY OF 70% FOR THE SEEDED AREAS. CONTRACTOR SHALL DETERMINE ALL RATES OF APPLICATION NECESSARY TO PRODUCE THE REQUIRED STAND OF GRASS, AND SHALL FOLLOW THE APPLICATION PROCEDURES AS SPECIFIED HEREIN.
7. GIANT BERMUDA SEED, INCLUDING NK-37, SHALL NOT BE USED.

**SEEDING SCHEDULE FOR TEMPORARY VEGETATION** Ds3

| SCHEDULE NO. | COMMON NAME OF SEED | RATE PER ACRE (LBS.) | PLANTING DATES |
|---|---|---|---|
| 1 | COMMON BERMUDA (HULLED) | 210 | MARCH 16 TO AUG. 31 |
| | TALL FESCUE | 140 | |
| 2 | COMMON BERMUDA (UNHULLED) | 175 | SEPT. 1 TO MARCH 15 |
| | ANNUAL RYEGRASS | 175 | |

NOTES:

THE CONTRACTOR SHALL OBTAIN A SATISFACTORY STAND OF PERENNIAL VEGETATION WHOSE ROOT SYSTEM SHALL BE DEVELOPED SUFFICIENTLY TO SURVIVE DRY PERIODS AND WINTER WEATHER, AND BE CAPABLE OF RE-ESTABLISHMENT IN THE SPRING. THE PERENNIAL VEGETATIVE COVER SHALL HAVE A MINIMUM COVERAGE DENSITY OF 70% FOR THE SEEDED AREAS. CONTRACTOR SHALL DETERMINE ALL RATES OF APPLICATION NECESSARY TO PRODUCE THE REQUIRED STAND OF GRASS, AND SHALL FOLLOW THE APPLICATION PROCEDURES AS SPECIFIED HEREIN.

**SEEDING SCHEDULE FOR PERMANENT VEGETATION**

| SCHEDULE NO. | COMMON NAME OF SEED | RURAL RATE | URBAN RATE[1] | PLANTING DATES |
|---|---|---|---|---|
| 3[5] | COMMON BERMUDA (HULLED)[3] | 30 | 30 | MARCH 1 TO AUG. 14 |
| | WEEPING LOVEGRASS[2] | 10 | 10 | |
| | SERICEA LESPEDEZA (SCARIFIED)[7] | 50 | 50 | |
| 4[5] | COMMON BERMUDA (UNHULLED)[3] | 40 | 40 | AUG. 5 TO FEB. 28 |
| | WEEPING LOVEGRASS[2] | 10 | 10 | |
| | SERICEA LESPEDEZA, (UNHULLED, UNSCARIFIED)[7] | 80 | 80 | |
| | RESEEDING CRIMSON CLOVER[4] | 20 | 0 | |
| | RYE GRAIN | 20 | 0 | |

NOTES:

1. INCLUDES RURAL AREAS ADJACENT TO WELL-DEVELOPED LAWNS.
2. NOT REQUIRED ON SHOULDERS, MEDIANS, ECT., AND SLOPES UNDER 5 FEET IN HEIGHT
3. GIANT BERMUDA SEED, INCLUDING NK-37, SHALL NOT BE USED.
4. RESEEDING CRIMSON CLOVER SHALL BE INOCULATED IN ACCORDANCE WITH SUBSECTION 810.05. DO NOT PLANT CLOVER IN MEDIANS OR IN RURAL AREAS ADJACENT TO WELL-DEVELOPED LAWNS.
5. PENSACOLA BAHIA SHALL BE ALLOWED ONLY AS SHOWN IN SEEDING SCHEDULES 3 AND 4 AT THE RATE OF 50 POUNDS PER ACRE ONLY WHEN SEEDING PIT AREAS THAT ARE GOVERNED BY THE SOUTH CAROLINA MINING ACT. OTHERWISE, DO NOT INCLUDE BAHIA SEED IN THE MIX.

THE CONTRACTOR SHALL OBTAIN A SATISFACTORY STAND OF PERENNIAL VEGETATION WHOSE ROOT SYSTEM SHALL BE DEVELOPED SUFFICIENTLY TO SURVIVE DRY PERIODS AND WINTER WEATHER, AND BE CAPABLE OF RE-ESTABLISHMENT IN THE SPRING. THE PERENNIAL VEGETATIVE COVER SHALL HAVE A MINIMUM COVERAGE DENSITY OF 70% FOR THE SEEDED AREAS. CONTRACTOR SHALL DETERMINE ALL RATES OF APPLICATION NECESSARY TO PRODUCE THE REQUIRED STAND OF GRASS, AND SHALL FOLLOW THE APPLICATION PROCEDURES AS SPECIFIED HEREIN.

THE CONTRACTOR MAY INCLUDE QUANTITIES OF RYE GRAIN AND MILLET IN SCHEDULE 1 AND 3 IN ORDER TO ESTABLISH QUICK GROUND COVER FOR EROSION CONTROL PURPOSES.

**SEEDING SCHEDULE FOR TEMPORARY VEGETATION**

| SCHEDULE NO. | COMMON NAME OF SEED | RATE PER ACRE (LBS.) | PLANTING DATES |
|---|---|---|---|
| 1 | ANNUAL SUDAN GRASS (SWEET OR TIFF) | 40 | APRIL 1- AUGUST 15 |
| 2 | BROWN TOP MILLET | 50 | APRIL 1- AUGUST 15 |
| 3 | RYE GRAIN | 55 | AUGUST 16- MARCH 31 |

OAT GRAIN IS TO BE ADDED TO ALL SCHEDULES, IF SEEDING DATE IS BETWEEN MARCH 1 AND APRIL 16, AT THE RATE OF 10 POUNDS PER ACRE.

THE CONTRACTOR SHALL OBTAIN A SATISFACTORY STAND OF VEGETATION THAT IS CAPABLE OF EROSION CONTROL. CONTRACTOR SHALL DETERMINE ALL RATES OF APPLICATION NECESSARY TO PRODUCE THE REQUIRED RESULTS. THE TEMPORARY VEGETATION SHALL PROVIDE MINIMUM DENSITY COVERAGE OF 70% OF THE SEEDED AREA.

## *CONSTRUCTION SEQUENCE:*

1. CONTRACTOR TO LOCATE ALL EXISTING UTILITIES WITHIN AND IMMEDIATELY ADJACENT TO PROJECT AREA.
2. INSTALL CONSTRUCTION ENTRANCE.
3. INSTALL PERIMETER EROSION CONTROL DEVICES, INCLUDING ALL TREE PROTECTION.
4. DEMO EXISTING TRACK AND APPURTENANCES.

## EROSION CONTROL LEGEND

| SYMBOL | PRACTICE | DESCRIPTION |
|---|---|---|
| IP | INLET PROTECTION | A TEMPORARY SEDIMENT BARRIER LAID AROUND A STORM DRAIN INLET TO PREVENT SEDIMENT FROM ENTERING THE DRAINAGE SYSTEM. |
| OP | OUTLET PROTECTION | RIP RAP CHANNEL / BANK PLACED BELOW DRAINAGE OUTLETS TO REDUCE THE VELOCITY OF FLOW, EROSION, AND STABILIZE GRADES DOWNSTREAM OF OUTLET STRUCTURES. |
| CD | TEMPORARY CHECK DAM | RIP RAP BANK PLACED BELOW DRAINAGE OUTLETS TO REDUCE THE VELOCITY OF FLOW, EROSION AND STABILIZE GRADES DOWN STREAM OF DRAINAGE OUTLETS. |
| SF | SILT FENCE | A TEMPORARY STRUCTURE USED TO SLOW THE VELOCITY OF RUN-OFF, CAUSE SEDIMENT DEPOSITION AT THE STRUCTURE, AND FILTER SEDIMENT FROM RUN-OFF. |
| $SF_2$ | DOUBLE ROW SILT FENCE | A TEMPORARY STRUCTURE USED TO SLOW THE VELOCITY OF RUN-OFF, CAUSE SEDIMENT DEPOSITION AT THE STRUCTURE, AND FILTER SEDIMENT FROM RUN-OFF. |
| CL | CONSTRUCTION LIMITS | A DEFINED AREA THAT ALL LAND DISTURBANCE WILL OCCUR DURING CONSTRUCTION. |
| ECB | PERMANENT EROSION CONTROL MATTING (HIGH PERFORMANCE TRM PYRAMAT BY SI GEOSOLUTIONS OR EQUAL) | A PERMANENT REINFORCEMENT MAT TO PREVENT SOIL EROSION AND MAINTAIN PERMANENT GROUND COVER. |
| Ds3 | DISTURBED AREA STABILIZATION (WITH TEMPORARY VEGETATION) | ESTABLISHING PERMANENT VEGETATIVE COVER SUCH AS TREES, SHRUBS, VINES, GRASSES, SOD, OR LEGUMES ON DISTURBED AREAS. |
| ST | SEDIMENT TUBE | SEDIMENT TUBE PLACED IN EXISTING OR PROPOSED DITCH SECTIONS TO REDUCE THE VELOCITY OF FLOW, EROSION AND STABILIZE GRADES DOWN STREAM OR DRAINAGE OUTLETS. |

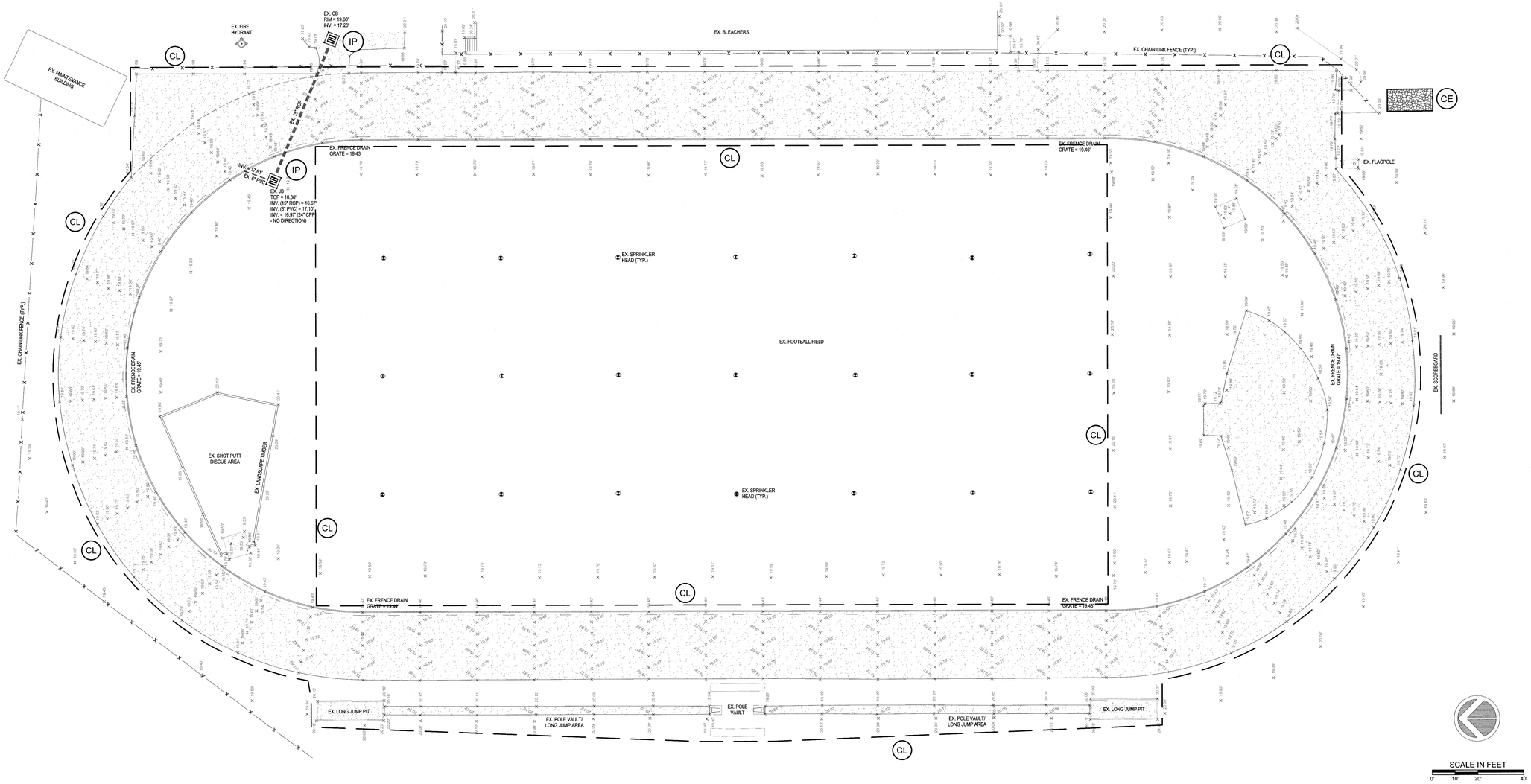


File: J:\PLANS\19\19062E - HORRY COUNTY SCHOOLS\E\SAINTJAMES-TRACK\19062-SAINTJAMES-TRACK-ERO-PLAN.DWG
Saved: 2/21/2020 1:23:14 PM Plotted: 2/21/2020 1:23:33 PM Current User: Perry Sanford LastSavedBy: pes

Drawing Copyright © 2016

CHA
1298 Professional Drive
Myrtle Beach, SC 29577-5896
843.692.3200 x264 • www.chacompanies.com

HCS
Horry County Schools

DDC
ENGINEERS®
Consulting Engineers, Surveyors, Planners, Landscape Architects & Environmentalists
1298 Professional Dr., Myrtle Beach, SC 29577
Phone: (843) 692-3200 Fax: (843) 692-3210

HORRY COUNTY SCHOOLS

OFFICE OF FACILITIES
1160 E. HIGHWAY 501
CONWAY, SC 29526

SOUTH CAROLINA
DDC ENGINEERS, INC.
No. C00036
CERTIFICATE OF AUTHORIZATION

SOUTH CAROLINA
No. 29814
ERIC K. SANFORD
LICENSED PROFESSIONAL ENGINEER

IT IS A VIOLATION OF LAW FOR ANY PERSON, UNLESS THEY ARE ACTING UNDER THE DIRECTION OF A LICENSED PROFESSIONAL ENGINEER, TO ALTER AN ITEM IN ANY WAY. IF AN ITEM BEARING THE STAMP OF A LICENSED PROFESSIONAL IS ALTERED, THE ALTERING ENGINEER SHALL AFFIX TO THE DOCUMENT THE ENGINEER'S SEAL. THE SURVEYOR SHALL STAMP THE DOCUMENT AND INCLUDE THE NOTATION "ALTERED BY" FOLLOWED BY THEIR SIGNATURE, THE DATE OF SUCH ALTERATION, AND A SPECIFIC DESCRIPTION OF THE ALTERATION.

SAINT JAMES
HIGH SCHOOL
TRACK AND FIELD
ATHLETIC FACILITY
IMPROVEMENTS PROGRAM

| No. | Submittal / Revision | App'd. | By | Date |
|---|---|---|---|---|
| | | | | |

SEDIMENT AND EROSION CONTROL PLAN
PHASE I

| Designed By: | Drawn By: | Checked By: |
|---|---|---|
| EKS | PES | EKS |
| Issue Date: | Project No: | Scale: |
| 1/31/20 | 19062E | 1" = 20' |

Drawing No.:
C-500

SEEDING NOTES:

1. INCLUDES RURAL AREAS ADJACENT TO WELL-DEVELOPED LAWNS.
2. NOT REQUIRED ON SHOULDERS, MEDIANS, ETC., AND SLOPES UNDER 5 FEET IN HEIGHT.
3. GIANT BERMUDA SEED, INCLUDING NK-37, SHALL NOT BE USED.
4. RESEEDING CRIMSON CLOVER SHALL BE INOCULATED IN ACCORDANCE WITH SUBSECTION 810.05. DO NOT PLANT CLOVER IN MEDIANS OR IN RURAL AREAS ADJACENT TO WELL-DEVELOPED LAWNS.
5. PENSACOLA BAHIA SHALL BE ALLOWED ONLY AS SHOWN IN SEEDING SCHEDULES 3 AND 4 AT THE RATE OF 50 POUNDS PER ACRE ONLY WHEN SEEDING PIT AREAS THAT ARE GOVERNED BY THE SOUTH CAROLINA MINING ACT. OTHERWISE, DO NOT INCLUDE BAHIA SEED IN THE MIX.
6. THE CONTRACTOR SHALL OBTAIN A SATISFACTORY STAND OF PERENNIAL VEGETATION WHOSE ROOT SYSTEM SHALL BE DEVELOPED SUFFICIENTLY TO SURVIVE DRY PERIODS AND WINTER WEATHER, AND BE CAPABLE OF RE-ESTABLISHMENT IN THE SPRING. THE PERENNIAL VEGETATIVE COVER SHALL HAVE A MINIMUM COVERAGE DENSITY OF 70% FOR THE SEEDED AREAS. CONTRACTOR SHALL DETERMINE ALL RATES OF APPLICATION NECESSARY TO PRODUCE THE REQUIRED STAND OF GRASS, AND SHALL FOLLOW THE APPLICATION PROCEDURES AS SPECIFIED HEREIN.
7. GIANT BERMUDA SEED, INCLUDING NK-37, SHALL NOT BE USED.

### SEEDING SCHEDULE FOR TEMPORARY VEGETATION Ds3

| SCHEDULE NO. | COMMON NAME OF SEED | RATE PER ACRE (LBS.) | PLANTING DATES |
|---|---|---|---|
| 1 | COMMON BERMUDA (HULLED) | 210 | MARCH 16 TO AUG. 31 |
| | TALL FESCUE | 140 | |
| 2 | COMMON BERMUDA (UNHULLED) | 175 | SEPT. 1 TO MARCH 15 |
| | ANNUAL RYEGRASS | 175 | |

NOTES:

THE CONTRACTOR SHALL OBTAIN A SATISFACTORY STAND OF PERENNIAL VEGETATION WHOSE ROOT SYSTEM SHALL BE DEVELOPED SUFFICIENTLY TO SURVIVE DRY PERIODS AND WINTER WEATHER, AND BE CAPABLE OF RE-ESTABLISHMENT IN THE SPRING. THE PERENNIAL VEGETATIVE COVER SHALL HAVE A MINIMUM COVERAGE DENSITY OF 70% FOR THE SEEDED AREAS. CONTRACTOR SHALL DETERMINE ALL RATES OF APPLICATION NECESSARY TO PRODUCE THE REQUIRED STAND OF GRASS, AND SHALL FOLLOW THE APPLICATION PROCEDURES AS SPECIFIED HEREIN.

### SEEDING SCHEDULE FOR PERMANENT VEGETATION

| SCHEDULE NO. | COMMON NAME OF SEED | RURAL RATE | URBAN RATE[1] | PLANTING DATES |
|---|---|---|---|---|
| 3[5] | COMMON BERMUDA (HULLED)[7] | 30 | 30 | MARCH 1 TO AUG. 14 |
| | WEEPING LOVEGRASS[7] | 10 | 10 | |
| | SERICEA LESPEDEZA (SCARIFIED)[2] | 50 | 50 | |
| 4[5] | COMMON BERMUDA (UNHULLED)[7] | 40 | 40 | AUG. 5 TO FEB. 28 |
| | WEEPING LOVEGRASS[7] | 10 | 10 | |
| | SERICEA LESPEDEZA (UNHULLED, UNSCARIFIED)[3] | 80 | 80 | |
| | RESEEDING CRIMSON CLOVER[4] | 20 | 0 | |
| | RYE GRAIN | 20 | 0 | |

NOTES:

1 INCLUDES RURAL AREAS ADJACENT TO WELL-DEVELOPED LAWNS.

2 NOT REQUIRED ON SHOULDERS, MEDIANS, ECT., AND SLOPES UNDER 5 FEET IN HEIGHT

3 GIANT BERMUDA SEED, INCLUDING NK-37, SHALL NOT BE USED.

4 RESEEDING CRIMSON CLOVER,SHALL BE INOCULATED IN ACCORDANCE WITH SUBSECTION 810.05. DO NOT PLANT CLOVER IN MEDIANS OR IN RURAL AREAS ADJACENT TO WELL-DEVELOPED LAWNS.

5 PENSACOLA BAHIA SHALL BE ALLOWED ONLY AS SHOWN IN SEEDING SCHEDULES 3 AND 4 AT THE RATE OF 50 POUNDS PER ACRE ONLY WHEN SEEDING PIT AREAS THAT ARE GOVERNED BY THE SOUTH CAROLINA MINING ACT. OTHERWISE, DO NOT INCLUDE BAHIA SEED IN THE MIX.

THE CONTRACTOR SHALL OBTAIN A SATISFACTORY STAND OF PERENNIAL VEGETATION WHOSE ROOT SYSTEM SHALL BE DEVELOPED SUFFICIENTLY TO SURVIVE DRY PERIODS AND WINTER WEATHER, AND BE CAPABLE OF RE-ESTABLISHMENT IN THE SPRING. THE PERENNIAL VEGETATIVE COVER SHALL HAVE A MINIMUM COVERAGE DENSITY OF 70% FOR THE SEEDED AREAS. CONTRACTOR SHALL DETERMINE ALL RATES OF APPLICATION NECESSARY TO PRODUCE THE REQUIRED STAND OF GRASS, AND SHALL FOLLOW THE APPLICATION PROCEDURES AS SPECIFIED HEREIN.

THE CONTRACTOR MAY INCLUDE QUANTITIES OF RYE GRAIN AND MILLET IN SCHEDULE 1 AND 3 IN ORDER TO ESTABLISH QUICK GROUND COVER FOR EROSION CONTROL PURPOSES.

### SEEDING SCHEDULE FOR TEMPORARY VEGETATION

| SCHEDULE NO. | COMMON NAME OF SEED | RATE PER ACRE (LBS.) | PLANTING DATES |
|---|---|---|---|
| 1 | ANNUAL SUDAN GRASS (SWEET OR TIFF) | 40 | APRIL 1- AUGUST 15 |
| 2 | BROWN TOP MILLET | 50 | APRIL 1- AUGUST 15 |
| 3 | RYE GRAIN | 55 | AUGUST 16- MARCH 31 |

OAT GRAIN IS TO BE ADDED TO ALL SCHEDULES, IF SEEDING DATE IS BETWEEN MARCH 1 AND APRIL 16, AT THE RATE OF 10 POUNDS PER ACRE.

THE CONTRACTOR SHALL OBTAIN A SATISFACTORY STAND OF VEGETATION THAT IS CAPABLE OF EROSION CONTROL. CONTRACTOR SHALL DETERMINE ALL RATES OF APPLICATION NECESSARY TO PRODUCE THE REQUIRED RESULTS. THE TEMPORARY VEGETATION SHALL PROVIDE MINIMUM DENSITY COVERAGE OF 70% OF THE SEEDED AREA.

## CONSTRUCTION SEQUENCE:

1. EXCAVATE END ZONE TRACK EXTENSION AREA.
2. INSTALL UNDER DRAINAGE SYSTEM.
3. FINE GRADE TRACK AND INFIELD AREAS.
4. PAVE TRACK AND INSTALL SYNTHETIC SURFACING.
5. PAINT TRACK LINES AND FINISH REMAINING SITE IMPROVEMENTS.
6. GRADE AND SEED PERIMETER TIE IN POINTS.
7. FINAL STABILIZATION OF ALL DENUDED AREAS.
8. PER SEEDING SCHEDULE, WATER AND MAINTAIN TO INSURE PROPER GROUND COVERAGE.
9. UPON APPROVAL BY HORRY COUNTY, REMOVE ALL TEMPORARY EROSION CONTROL DEVICES.

## EROSION CONTROL LEGEND

| SYMBOL | PRACTICE | DESCRIPTION |
|---|---|---|
| IP | INLET PROTECTION | A TEMPORARY SEDIMENT BARRIER LAID AROUND A STORM DRAIN INLET TO PREVENT SEDIMENT FROM ENTERING THE DRAINAGE SYSTEM. |
| OP | OUTLET PROTECTION | RIP RAP CHANNEL / BANK PLACED BELOW DRAINAGE OUTLETS TO REDUCE THE VELOCITY OF FLOW, EROSION, AND STABILIZE GRADES DOWNSTREAM OF OUTLET STRUCTURES. |
| CD | TEMPORARY CHECK DAM | RIP RAP BANK PLACED BELOW DRAINAGE OUTLETS TO REDUCE THE VELOCITY OF FLOW, EROSION AND STABILIZE GRADES DOWN STREAM OF DRAINAGE OUTLETS. |
| SF | SILT FENCE | A TEMPORARY STRUCTURE USED TO SLOW THE VELOCITY OF RUN-OFF. CAUSE SEDIMENT DEPOSITION AT THE STRUCTURE, AND FILTER SEDIMENT FROM RUN-OFF. |
| $SF_2$ | DOUBLE ROW SILT FENCE | A TEMPORARY STRUCTURE USED TO SLOW THE VELOCITY OF RUN-OFF. CAUSE SEDIMENT DEPOSITION AT THE STRUCTURE, AND FILTER SEDIMENT FROM RUN-OFF. |
| CL | CONSTRUCTION LIMITS | A DEFINED AREA THAT ALL LAND DISTURBANCE WILL OCCUR DURING CONSTRUCTION. |
| ECB | PERMANENT EROSION CONTROL MATTING (HIGH PERFORMANCE TRM PYRAMAT BY SI GEOSOLUTIONS OR EQUAL) | A PERMANENT REINFORCEMENT MAT TO PREVENT SOIL EROSION AND MAINTAIN PERMANENT GROUND COVER. |
| Ds3 | DISTURBED AREA STABILIZATION (WITH TEMPORARY VEGETATION) | ESTABLISHING PERMANENT VEGETATIVE COVER SUCH AS TREES, SHRUBS, VINES, GRASSES, SOD, OR LEGUMES ON DISTURBED AREAS. |
| ST | SEDIMENT TUBE | SEDIMENT TUBE PLACED IN EXISTING OR PROPOSED DITCH SECTIONS TO REDUCE THE VELOCITY OF FLOW, EROSION AND STABILIZE GRADES DOWN STREAM OR DRAINAGE OUTLETS. |

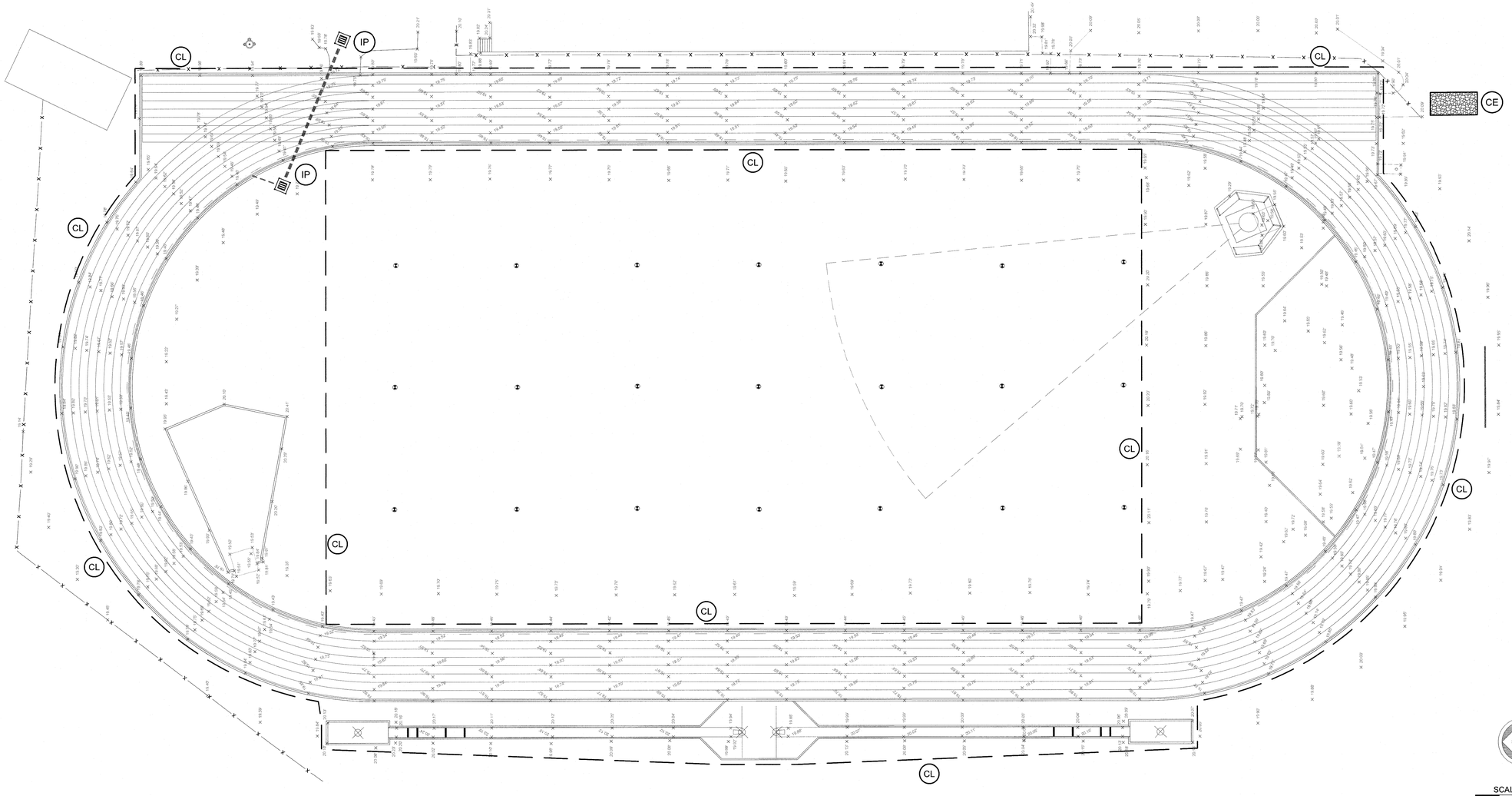


File: J:\PLANS\19\19062E - HORRY COUNTY SCHOOLS\E\SAINTJAMES-TRACK\19062-SAINTJAMES-TRACK-ERO-PLAN.DWG
Saved: 2/21/2020 1:06:01 PM Plotted: 2/21/2020 1:06:23 PM Current User: Perry Sanford LastSavedBy: pes

Drawing Copyright © 2016

CHA
1298 Professional Drive
Myrtle Beach, SC 29577-5806
843.692.3200 x38 • www.chacompanies.com

HCS
Horry County Schools

DDC
ENGINEERS®
Consulting Engineers, Surveyors, Planners, Landscape Architects & Environmentalists
1298 Professional Dr., Myrtle Beach, SC 29577
Phone: (843) 692-3200 Fax: (843) 692-3210

HORRY COUNTY SCHOOLS

OFFICE OF FACILITIES
1160 E. HIGHWAY 501
CONWAY, SC 29526

SOUTH CAROLINA
DDC ENGINEERS, INC.
No. C00036
CERTIFICATE OF AUTHORIZATION

SOUTH CAROLINA
No. 29814
ERIC K. SANFORD
LICENSED PROFESSIONAL ENGINEER

IT IS A VIOLATION OF LAW FOR ANY PERSON, UNLESS THEY ARE ACTING UNDER THE DIRECTION OF A LICENSED PROFESSIONAL ENGINEER, TO ALTER AN ITEM IN ANY WAY. IF AN ITEM BEARING THE STAMP OF A LICENSED PROFESSIONAL IS ALTERED, THE ALTERING ENGINEER OR LICENSED PROFESSIONAL ENGINEER OR LICENSED SURVEYOR SHALL STAMP THE DOCUMENT AND INCLUDE THE NOTATION "ALTERED BY" FOLLOWED BY THEIR SIGNATURE, THE DATE OF SUCH ALTERATION, AND A SPECIFIC DESCRIPTION OF THE ALTERATION.

SAINT JAMES
HIGH SCHOOL
TRACK AND FIELD
ATHLETIC FACILITY
IMPROVEMENTS PROGRAM

| No. | Submittal / Revision | App'd. | By | Date |
|---|---|---|---|---|
| | | | | |

SEDIMENT AND EROSION CONTROL PLAN
PHASE II

| Designed By: | Drawn By: | Checked By: |
|---|---|---|
| EKS | PES | EKS |
| Issue Date: | Project No: | Scale: |
| 1/31/20 | 19062E | 1" = 20' |

Drawing No.:
C-501

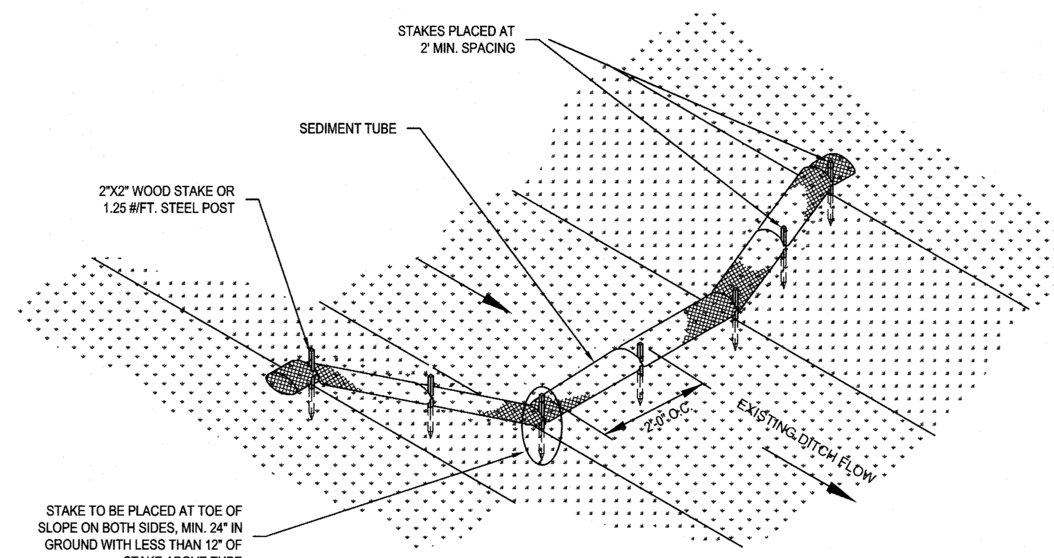


SEDIMENT TUBE CHECK DAM DETAIL (NO BLANKET)

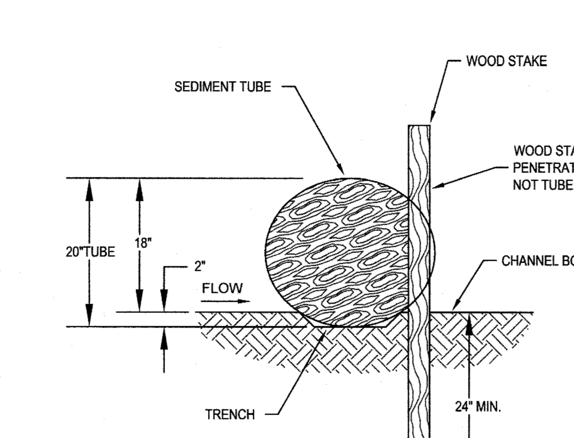


1 1/8" x 1 1/8" x 48" WOODEN STAKES ARE RECOMMENDED FOR 20" SEDIMENT LOGS.

STAKE DETAIL (WITH TRENCH)

## SEDIMENT TUBES - GENERAL NOTES

1. SEDIMENT TUBES MAY BE INSTALLED ALONG CONTOURS, IN DRAINAGE CONVEYANCE CHANNELS, AND AROUND INLETS TO HELP PREVENT OFF SITE DISCHARGE OF SEDIMENT LADEN STORM WATER RUNOFF.
2. SEDIMENT TUBES ARE ELONGATED TUBES OF COMPACTED GEOTEXTILES, CURLED EXCELSIOR WOOD, NATURAL COCONUT FIBER, OR HARDWOOD MULCH. STRAW, PINE NEEDLE AND LEAF MULCH FILLED SEDIMENT TUBES ARE NOT PERMITTED.
3. THE OUTER NETTING OF THE SEDIMENT TUBE SHOULD CONSIST OF SEAMLESS, HIGH DENSITY POLYETHYLENE PHOTODEGRADABLE MATERIALS TREATED WITH ULTRAVIOLET STABILIZERS OR A SEAMLESS, HIGH DENSITY POLYETHYLENE NON DEGRADABLE MATERIAL.
4. SEDIMENT TUBES, WHEN USED AS CHECKS WITHIN CHANNELS, SHOULD RANGE BETWEEN 18 INCHES AND 24 INCHES DEPENDING ON CHANNEL DIMENSIONS. DIAMETERS OUTSIDE THIS RANGE MAY BE ALLOWED WHERE NECESSARY WHEN APPROVED.
5. CURLED EXCELSIOR WOOD, OR NATURAL COCONUT PRODUCTS THAT ARE ROLLED UP TO CREATE A SEDIMENT TUBE ARE NOT ALLOWED.
6. SEDIMENT TUBES SHOULD BE STAKED USING WOODEN STAKES ( 2" X 2" ) OR STEEL POSTS (STANDARD "U" OR "T" SECTIONS WITH A MINIMUM WEIGHT OF 1.25 POUNDS PER FOOT) AT A MINIMUM OF 48 INCHES IN LENGTH PLACED ON 2 FOOT CENTERS.
7. INSTALL ALL SEDIMENT TUBES TO ENSURE THAT NO GAPS EXIST BETWEEN THE SOIL AND THE BOTTOM OF THE TUBE. MANUFACTURER'S RECOMMENDATIONS SHOULD ALWAYS BE CONSULTED BEFORE INSTALLATION.
8. THE ENDS OF ADJACENT SEDIMENT TUBES SHOULD BE OVERLAPPED 6 INCHES TO PREVENT FLOW AND SEDIMENT FROM PASSING THROUGH THE FIELD JOINT.
9. SEDIMENT TUBES SHOULD NOT BE STACKED ON TOP OF ONE ANOTHER, UNLESS RECOMMENDED BY MANUFACTURER.
10. EACH SEDIMENT TUBE SHOULD BE INSTALLED IN A TRENCH WITH A DEPTH EQUAL TO 1/5 THE DIAMETER OF THE SEDIMENT TUBE.
11. SEDIMENT TUBES SHOULD CONTINUE UP THE SIDE SLOPES A MINIMUM OF 1 FOOT ABOVE THE DESIGN FLOW DEPTH OF THE CHANNEL.
12. INSTALL STAKES AT A DIAGONAL FACING INCOMING RUNOFF.

## SEDIMENT TUBES - INSPECTION & MAINTENANCE

1. THE KEY TO FUNCTIONAL SEDIMENT TUBES IS WEEKLY INSPECTIONS, ROUTINE MAINTENANCE AND REGULAR SEDIMENT REMOVAL.
2. REGULAR INSPECTIONS OF SEDIMENT TUBES SHALL BE CONDUCTED ONCE EVERY CALENDAR WEEK AND, AS RECOMMENDED, WITHIN 24 HOURS AFTER EACH RAINFALL EVEN THAT PRODUCES 1/2 INCH OR MORE OF PRECIPITATION.
3. ATTENTION TO SEDIMENT ACCUMULATIONS IN FRONT OF THE SEDIMENT TUBE IS EXTREMELY IMPORTANT. ACCUMULATED SEDIMENT SHOULD BE CONTINUALLY MONITORED AND REMOVED WHEN NECESSARY.
4. REMOVE ACCUMULATED SEDIMENT WHEN IT REACHES 1/3 THE HEIGHT OF THE SEDIMENT TUBE.
5. REMOVED SEDIMENT SHALL BE PLACED IN STOCKPILE STORAGE AREAS OR SPREAD THINLY ACROSS DISTURBED AREA. STABILIZE THE REMOVED SEDIMENT AFTER IT IS RELOCATED.
6. LARGE DEBRIS, TRASH AND LEAVES SHOULD BE REMOVED FROM IN FRONT OF TUBES WHEN FOUND.
7. IF EROSION CAUSES THE EDGES TO FALL TO A HEIGHT EQUAL TO OR BELOW THE HEIGHT OF THE SEDIMENT TUBE, REPAIRS SHOULD BE MADE IMMEDIATELY TO PREVENT RUNOFF FROM BYPASSING TUBE.
8. SEDIMENT TUBES SHOULD BE REMOVED AFTER THE CONTRIBUTING DRAINAGE AREA HAS BEEN COMPLETELY STABILIZED. PERMANENT VEGETATION SHOULD REPLACE AREAS FROM WHICH SEDIMENT TUBES HAVE BEEN REMOVED.

## SEDIMENT TUBE SPACING

| SLOPE | MAX. SEDIMENT TUBE SPACING |
|---|---|
| LESS THAN 2% | 150-FEET |
| 2% | 100-FEET |
| 3% | 75-FEET |
| 4% | 50-FEET |
| 5% | 40-FEET |
| 6% | 30-FEET |
| GREATER THAN 6% | 25-FEET |

(ST) SEDIMENT TUBE DETAIL
SCALE: N.T.S.

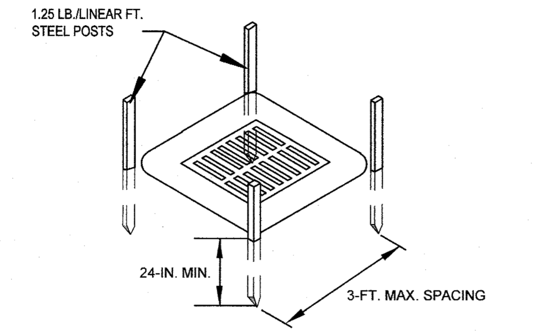


POST INSTALLATION DETAIL

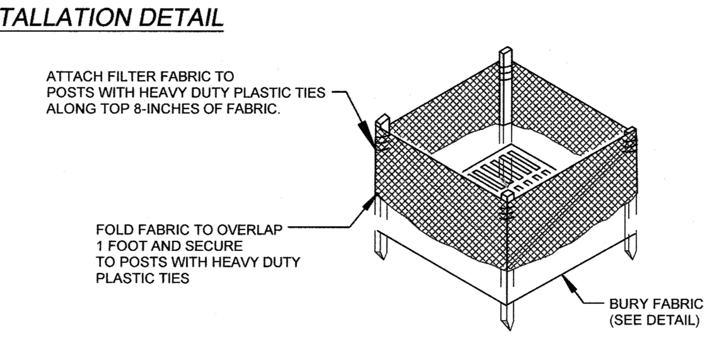


FILTER FABRIC INSTALLATION DETAIL

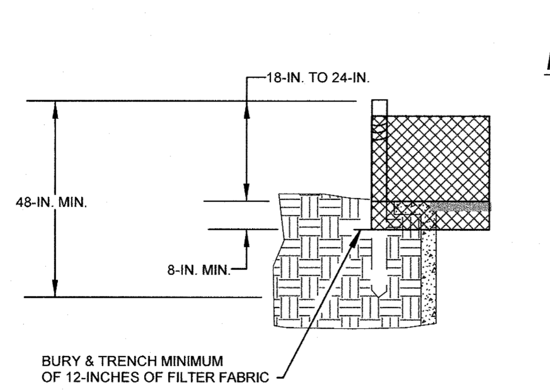


FILTER FABRIC BURIAL DETAIL

## TYPE A - POST REQUIREMENTS

1. SILT FENCE POSTS MUST BE 48 INCH LONG STEEL POSTS THAT MEET, AT A MINIMUM, THE FOLLOWING PHYSICAL CHARACTERISTICS.
   - COMPOSED OF A HIGH STRENGTH STEEL WITH A MINIMUM YIELD STRENGTH OF 50,000 PSI.
   - INCLUDE A STANDARD "T" SECTION WITH A NOMINAL FACE WIDTH OF 1.38 INCHES AND A NOMINAL "T" LENGTH OF 1.48 INCHES.
   - WEIGH 1.25 POUNDS PER FOOT (±8%).
2. POSTS SHALL BE EQUIPPED WITH PROJECTIONS TO AID IN FASTENING OF FILTER FABRIC.
3. INSTALL POSTS TO A MINIMUM OF 24 INCHES. A MINIMUM HEIGHT OF 1 TO 2 INCHES ABOVE THE FABRIC SHALL BE MAINTAINED, AND A MAXIMUM HEIGHT OF 3 FEET SHALL BE MAINTAINED ABOVE THE GROUND.
4. POST SPACING SHALL BE AT A MAXIMUM OF 3 FEET ON CENTER.

## TYPE A - FILTER FABRIC REQUIREMENTS

1. SILT FENCE MUST BE COMPOSED OF WOVEN GEOTEXTILE FILTER FABRIC THAT CONSISTS OF THE FOLLOWING REQUIREMENTS:
   - COMPOSED OF FIBERS CONSISTING OF LONG CHAIN SYNTHETIC POLYMERS OF AT LEAST 85% BY WEIGHT OF POLYOLEFINS, POLYESTERS OR POLYAMIDES THAT ARE FORMED INTO A NETWORK SUCH THAT THE FILAMENTS OR YARNS RETAIN DIMENSIONAL STABILITY RELATIVE TO EACH OTHER;
   - FREE OF ANY TREATMENT OR COATING WHICH MIGHT ADVERSELY ALTER ITS PHYSICAL PROPERTIES AFTER INSTALLATION;
   - FREE OF ANY DEFECTS OR FLAWS THAT SIGNIFICANTLY AFFECT ITS PHYSICAL AND/OR FILTERING PROPERTIES; AND,
   - HAVE A MINIMUM WIDTH OF 36 INCHES.
2. USE ONLY FABRIC APPEARING ON SC DOT'S QUALIFIED PRODUCTS LISTING (QPL), APPROVAL SHEET #34 MEETING THE REQUIREMENTS OF THE MOST CURRENT EDITION OF THE SC DOT STANDARD SPECIFICATIONS FOR HIGHWAY CONSTRUCTION.
3. 12 INCHES OF THE FABRIC SHOULD BE PLACED WITHIN EXCAVATED TRENCH AND TOED IN WHEN THE TRENCH IS BACKFILLED.
4. FILTER FABRIC SHALL BE PURCHASED IN CONTINUOUS ROLLS AND CUT TO THE LENGTH OF THE BARRIER TO AVOID JOINTS.
5. FILTER FABRIC SHALL BE INSTALLED AT A MINIMUM OF 24 INCHES ABOVE THE GROUND.

## TYPE A - INSPECTION & MAINTENANCE

1. THE KEY TO FUNCTIONAL INLET PROTECTION IS WEEKLY INSPECTIONS, ROUTINE MAINTENANCE AND REGULAR SEDIMENT REMOVAL.
2. REGULAR INSPECTIONS OF INLET PROTECTION SHALL BE CONDUCTED ONCE EVERY CALENDAR WEEK AND, AS RECOMMENDED, WITHIN 24 HOURS AFTER EACH RAINFALL EVEN THAT PRODUCES 1/2 INCH OR MORE OF PRECIPITATION.
3. ATTENTION TO SEDIMENT ACCUMULATIONS ALONG THE FILTER FABRIC IS EXTREMELY IMPORTANT. ACCUMULATED SEDIMENT SHOULD BE CONTINUALLY MONITORED AND REMOVED WHEN NECESSARY.
4. REMOVE ACCUMULATED SEDIMENT WHEN IT REACHES 1/3 THE HEIGHT OF THE FILTER FABRIC. WHEN A SUMP IS INSTALLED IN FRONT OF THE FABRIC, SEDIMENT SHOULD BE REMOVED WHEN IT FILLS APPROXIMATELY 1/3 THE DEPTH OF THE SUMP.
5. REMOVED SEDIMENT SHALL BE PLACED IN STOCKPILE STORAGE AREAS OR SPREAD THINLY ACROSS DISTURBED AREA. STABILIZE THE REMOVED SEDIMENT AFTER IT IS RELOCATED.
6. CHECK FOR AREAS WHERE STORM WATER RUNOFF HAS ERODED A CHANNEL BENEATH THE FILTER FABRIC, BENEATH THE FILTER FABRIC, OR WHERE THE FABRIC HAS SAGGED OR COLLAPSED DUE TO RUNOFF OVERTOPPING THE INLET PROTECTION.
7. CHECK FOR TEARS WITHIN THE FILTER FABRIC, AREAS WHERE FABRIC HAS BEGUN TO DECOMPOSE, AND FOR ANY OTHER CIRCUMSTANCE THAT MAY RENDER THE INLET PROTECTION INEFFECTIVE. REMOVE DAMAGED FABRIC AND REINSTALL NEW FILTER FABRIC IMMEDIATELY.
8. INLET PROTECTION STRUCTURES SHOULD BE REMOVED AFTER ALL THE DISTURBED AREAS ARE PERMANENTLY STABILIZED. REMOVE ALL CONSTRUCTION MATERIAL AND SEDIMENT, AND DISPOSE OF THEM PROPERLY. GRADE THE DISTURBED AREA TO THE ELEVATION OF THE DROP INLET STRUCTURE CREST. STABILIZE ALL BARE AREAS IMMEDIATELY.

(IP) INLET PROTECTION
SCALE: N.T.S.

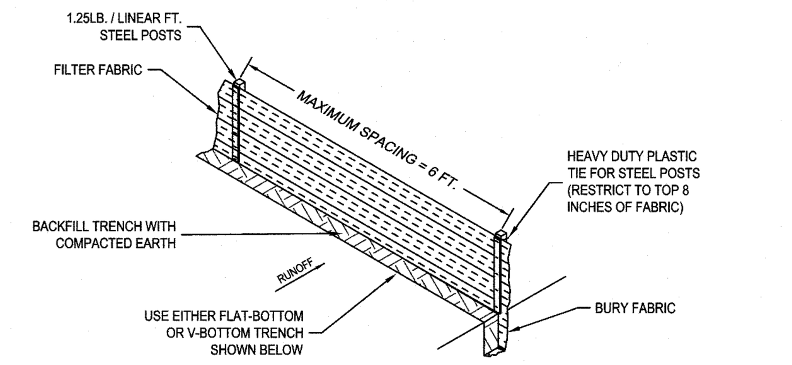


SILT FENCE INSTALLATION

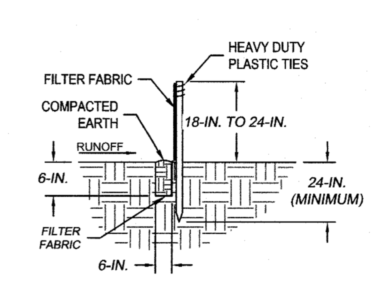


FLAT-BOTTOM TRENCH DETAIL

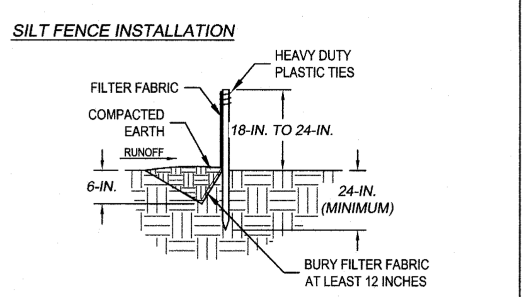


V-SHAPED TRENCH DETAIL

## SILT FENCE - GENERAL NOTES:

1. DO NOT PLACE SILT FENCE ACROSS CHANNELS OR IN OTHER AREAS SUBJECT TO CONCENTRATED FLOWS. SILT FENCE SHOULD NOT BE USED AS A VELOCITY CONTROL BMP. CONCENTRATED FLOWS ARE ANY FLOWS GREATER THAN 0.5 CFS.
2. MAXIMUM SHEET OR OVERLAND FLOW PATH LENGTH TO THE SILT FENCE SHALL BE 100 FEET.
3. MAXIMUM SLOPE STEEPNESS (NORMAL [PERPENDICULAR] TO THE FENCE LINE) SHALL BE 2:1.
4. SILT FENCE JOINTS, WHEN NECESSARY SHALL BE COMPLETED BY ONE OF THE FOLLOWING OPTIONS:
   - WRAP EACH FABRIC TOGETHER AT A SUPPORT POST WITH BOTH ENDS FASTENED TO THE POST, WITH A 1 FOOT MINIMUM OVERLAP.
   - OVERLAP SILT FENCE BY INSTALLING 3 FEET PAST THE SUPPORT POST TO WHICH THE NEW SILT FENCE ROLL IS ATTACHED. ATTACH OLD ROLL TO NEW ROLL WITH HEAVY DUTY PLASTIC TIES; OR
   - OVERLAP ENTIRE WIDTH OF EACH SILT FENCE ROLL FROM ONE SUPPORT POST TO THE NEXT SUPPORT POST.
5. ATTACH FILTER FABRIC TO THE STEEL POSTS USING HEAVY DUTY PLASTIC TIES THAT ARE EVENLY SPACED WITHIN THE TOP 8 INCHES OF THE FABRIC.
6. INSTALL THE SILT FENCE PERPENDICULAR TO THE DIRECTION OF THE STORM WATER FLOW AND PLACE THE SILT FENCE THE PROPER DISTANCE FROM THE TOE OF STEEP SLOPES TO PROVIDE SEDIMENT STORAGE AND ACCESS FOR MAINTENANCE AND CLEAN OUT.
7. INSTALL SILT FENCE CHECKS (TIE-BACKS) EVERY 50-100 FEET, DEPENDENT ON SLOPE, ALONG SILT FENCE THAT IS INSTALLED WITH SLOPE AND WHERE CONCENTRATED FLOWS ARE EXPECTED OR ARE DOCUMENTED ALONG THE PROPOSED / INSTALLED SILT FENCE.

## SILT FENCE - POST REQUIREMENTS

1. SILT FENCE POSTS MUST BE 48 INCH LONG STEEL POSTS THAT MEET, AT A MINIMUM, THE FOLLOWING PHYSICAL CHARACTERISTICS.
   - COMPOSED OF A HIGH STRENGTH STEEL WITH A MINIMUM YIELD STRENGTH OF 50,000 PSI.
   - INCLUDE A STANDARD "T" SECTION WITH A NOMINAL FACE WIDTH OF 1.38 INCHES AND A NOMINAL "T" LENGTH OF 1.48 INCHES.
   - WEIGH 1.25 POUNDS PER FOOT (±8%).
2. POSTS SHALL BE EQUIPPED WITH PROJECTIONS TO AID IN FASTENING OF FILTER FABRIC.
3. STEEL POSTS MAY NEED TO HAVE A METAL SOIL STABILIZATION PLATE WELDED NEAR THE BOTTOM WHEN INSTALLED ALONG STEEP SLOPES OR INSTALLED IN LOOSE SOILS. THE PLATE SHOULD HAVE A MINIMUM CROSS SECTION OF 17 SQUARE INCHES AND BE COMPOSED OF 15 GAUGE STEEL, AT A MINIMUM. THE METAL SOIL STABILIZATION PLATE SHOULD BE COMPLETELY BURIED.
4. INSTALL POSTS A MINIMUM OF 24 INCHES. A MINIMUM HEIGHT OF 1 TO 2 INCHES ABOVE THE FABRIC SHALL BE MAINTAINED, AND A MAXIMUM HEIGHT OF 3 FEET SHALL BE MAINTAINED ABOVE THE GROUND.
5. POST SPACING SHALL BE AT A MAXIMUM OF 6 FEET ON CENTER.

## SILT FENCE - FABRIC REQUIREMENTS

1. SILT FENCE MUST BE COMPOSED OF WOVEN GEOTEXTILE FILTER FABRIC THAT CONSISTS OF THE FOLLOWING REQUIREMENTS:
   - COMPOSED OF FIBERS CONSISTING OF LONG CHAIN SYNTHETIC POLYMERS OF AT LEAST 85% BY WEIGHT OF POLYOLEFINS, POLYESTERS OR POLYAMIDES THAT ARE FORMED INTO A NETWORK SUCH THAT THE FILAMENTS OR YARNS RETAIN DIMENSIONAL STABILITY RELATIVE TO EACH OTHER;
   - FREE OF ANY TREATMENT OR COATING WHICH MIGHT ADVERSELY ALTER ITS PHYSICAL PROPERTIES AFTER INSTALLATION;
   - FREE OF ANY DEFECTS OR FLAWS THAT SIGNIFICANTLY AFFECT ITS PHYSICAL AND/OR FILTERING PROPERTIES; AND,
   - HAVE A MINIMUM WIDTH OF 36 INCHES.
2. USE ONLY FABRIC APPEARING ON SC DOT'S QUALIFIED PRODUCTS LISTING (QPL), APPROVAL SHEET #34 MEETING THE REQUIREMENTS OF THE MOST CURRENT EDITION OF THE SC DOT STANDARD SPECIFICATIONS FOR HIGHWAY CONSTRUCTION.
3. 12 INCHES OF THE FABRIC SHOULD BE PLACED WITHIN EXCAVATED TRENCH AND TOED IN WHEN THE TRENCH IS BACKFILLED.
4. FILTER FABRIC SHALL BE PURCHASED IN CONTINUOUS ROLLS AND CUT TO THE LENGTH OF THE BARRIER TO AVOID JOINTS.
5. FILTER FABRIC SHALL BE INSTALLED AT A MINIMUM OF 24 INCHES ABOVE THE GROUND.

## SILT FENCE - INSPECTION & MAINTENANCE

1. THE KEY TO FUNCTIONAL SILT FENCE IS WEEKLY INSPECTIONS, ROUTINE MAINTENANCE AND REGULAR SEDIMENT REMOVAL.
2. REGULAR INSPECTIONS OF SILT FENCE SHALL BE CONDUCTED ONCE EVERY CALENDAR WEEK AND, AS RECOMMENDED, WITHIN 24 HOURS AFTER EACH RAINFALL EVEN THAT PRODUCES 1/2 INCH OR MORE OF PRECIPITATION.
3. ATTENTION TO SEDIMENT ACCUMULATIONS ALONG THE SILT FENCE IS EXTREMELY IMPORTANT. ACCUMULATED SEDIMENT SHOULD BE CONTINUALLY MONITORED AND REMOVED WHEN NECESSARY.
4. REMOVE ACCUMULATED SEDIMENT WHEN IT REACHES 1/3 THE HEIGHT OF THE SILT FENCE.
5. REMOVED SEDIMENT SHALL BE PLACED IN STOCKPILE STORAGE AREAS OR SPREAD THINLY ACROSS DISTURBED AREA. STABILIZE THE REMOVED SEDIMENT AFTER IT IS RELOCATED.
6. CHECK FOR AREAS WHERE STORM WATER RUNOFF HAS ERODED A CHANNEL BENEATH THE SILT FENCE, OR WHERE THE FENCE HAS SAGGED OR COLLAPSED DUE TO RUNOFF OVERTOPPING THE SILT FENCE. INSTALL CHECKS/TIE-BACKS AND/OR REINSTALL SILT FENCE, AS NECESSARY.
7. CHECK FOR TEARS WITHIN THE SILT FENCE, AREAS WHERE SILT FENCE HAS BEGUN TO DECOMPOSE, AND FOR ANY OTHER CIRCUMSTANCE THAT MAY RENDER THE SILT FENCE INEFFECTIVE. REMOVE DAMAGED SILT FENCE AND REINSTALL NEW SILT FENCE IMMEDIATELY.
8. SILT FENCE SHOULD BE REMOVED WITHIN 30 DAYS AFTER FINAL STABILIZATION IS ACHIEVED AND ONCE IT IS REMOVED, THE RESULTING DISTURBED AREA SHALL BE PERMANENTLY STABILIZED.

(SF) CONSTRUCTION OF A SILT FENCE
SCALE: N.T.S.

## EROSION CONTROL NOTES:

1. TOTAL DEVELOPMENT AREA : 3.50 ± ACRES
2. DISTURBED AREA THIS PHASE: 0.51 ± ACRES
3. IF NECESSARY, SLOPES, WHICH EXCEED EIGHT (8) VERTICAL FEET SHOULD BE STABILIZED WITH SYNTHETIC OR VEGETATIVE MATS, IN ADDITION TO HYDROSEEDING. IT MAY BE NECESSARY TO INSTALL TEMPORARY SLOPE DRAINS DURING CONSTRUCTION. TEMPORARY BERMS MAY BE NEEDED UNTIL THE SLOPE IS BROUGHT TO GRADE.
4. STABILIZATION MEASURES SHALL BE INITIATED AS SOON AS PRACTICABLE IN PORTIONS OF THE SITE WHERE CONSTRUCTION ACTIVITIES HAVE TEMPORARILY OR PERMANENTLY CEASED, BUT IN NO CASE MORE THAN FOURTEEN (14) DAYS AFTER WORK HAS CEASED, EXCEPT AS STATED BELOW:
   - WHERE STABILIZATION BY THE 14TH DAY IS PRECLUDED BY SNOW COVER OR FROZEN GROUND CONDITIONS STABILIZATION MEASURES MUST BE INITIATED AS SOON AS PRACTICABLE.
   - WHERE CONSTRUCTION ACTIVITY ON A PORTION OF THE SITE IS TEMPORARILY CEASED, AND EARTH-DISTURBING ACTIVITIES WILL BE RESUMED WITHIN 14 DAYS, TEMPORARY STABILIZATION MEASURES DO NOT HAVE TO BE INITIATED ON THAT PORTION OF THE SITE.
5. ALL SEDIMENT AND EROSION CONTROL DEVICES SHALL BE INSPECTED EVERY CALENDAR WEEK. IF PERIODIC INSPECTION OR OTHER INFORMATION INDICATES THAT A BMP HAS BEEN INAPPROPRIATELY OR INCORRECTLY INSTALLED, THE PERMITTEE MUST ADDRESS THE NECESSARY REPLACEMENT OR MODIFICATION REQUIRED TO CORRECT THE BMP WITHIN 48 HOURS OF IDENTIFICATION.
6. PROVIDE SILT FENCE AND/OR OTHER CONTROL DEVICES, AS MAY BE REQUIRED, TO CONTROL SOIL EROSION DURING UTILITY CONSTRUCTION. ALL DISTURBED AREAS SHALL BE CLEANED, GRADED AND STABILIZED WITH GRASSING IMMEDIATELY AFTER THE UTILITY INSTALLATION. FILL, COVER AND TEMPORARY SEEDING AT THE END OF EACH DAY ARE RECOMMENDED. IF WATER IS ENCOUNTERED WHILE TRENCHING, THE WATER SHOULD BE FILTERED TO REMOVE ANY SEDIMENTS BEFORE BEING PUMPED BACK INTO ANY WATERS OF THE STATE.
7. ALL EROSION CONTROL DEVICES SHALL BE PROPERLY MAINTAINED DURING ALL PHASES OF CONSTRUCTION UNTIL THE COMPLETION OF ALL CONSTRUCTION ACTIVITIES AND ALL DISTURBED AREAS HAVE BEEN STABILIZED. ADDITIONAL CONTROL DEVICES MAY BE REQUIRED DURING CONSTRUCTION IN ORDER TO CONTROL EROSION AND/OR OFF SITE SEDIMENTATION. ALL TEMPORARY CONTROL DEVICES SHALL BE REMOVED ONCE CONSTRUCTION IS COMPLETE AND THE SITE IS STABILIZED.
8. THE CONTRACTOR MUST TAKE NECESSARY ACTION TO MINIMIZE THE TRACKING OF MUD ONTO PAVED ROADWAYS FROM CONSTRUCTION AREAS AND THE GENERATION OF DUST. THE CONTRACTOR SHALL DAILY REMOVE MUD/SOIL FROM PAVEMENT, AS MAY BE REQUIRED.
9. RESIDENTIAL SUBDIVISIONS REQUIRE EROSION CONTROL FEATURES FOR INFRASTRUCTURE AS WELL AS FOR INDIVIDUAL LOT CONSTRUCTION. INDIVIDUAL PROPERTY OWNERS SHALL FOLLOW THESE PLANS DURING CONSTRUCTION OR OBTAIN APPROVAL OF AN INDIVIDUAL PLAN IN ACCORDANCE WITH S.C. REG. 72-300 ET SEQ. AND SCR 100000.
10. TEMPORARY DIVERSION BERMS AND/OR DITCHES WILL BE PROVIDED AS NEEDED DURING CONSTRUCTION TO PROTECT WORK AREAS FROM UPSLOPE RUNOFF AND/OR TO DIVERT SEDIMENT-LADEN WATER TO APPROPRIATE TRAPS OR STABLE OUTLETS.
11. ALL WATERS OF THE STATE (WoS), INCLUDING WETLANDS, ARE TO BE FLAGGED OR OTHERWISE CLEARLY MARKED IN THE FIELD. A DOUBLE ROW OF SILT FENCE IS TO BE INSTALLED IN ALL AREAS WHERE A 50 FOOT BUFFER CANNOT BE MAINTAINED BETWEEN THE DISTURBED AREA AND ALL WoS. A 10 FOOT BUFFER SHOULD BE MAINTAINED BETWEEN THE LAST ROW OF SILT FENCE AND ALL WoS.
12. LITTER, CONSTRUCTION DEBRIS, OILS, FUELS AND BUILDING PRODUCTS WITH SIGNIFICANT POTENTIAL FOR IMPACT (SUCH AS STOCKPILES OF FRESHLY TREATED LUMBER) AND CONSTRUCTION CHEMICALS THAT COULD BE EXPOSED TO STORM WATER MUST BE PREVENTED FROM BECOMING A POLLUTANT SOURCE IN STORM WATER DISCHARGES.
13. A COPY OF THE SWPPP, INSPECTION RECORDS, AND RAINFALL DATA MUST BE RETAINED AT THE CONSTRUCTION SITE OR A NEARBY LOCATION EASILY ACCESSIBLE DURING NORMAL BUSINESS HOURS, FROM THE DATE OF COMMENCEMENT OF CONSTRUCTION ACTIVITIES TO THE DATE THAT FINAL STABILIZATION IS REACHED.
14. INITIATE STABILIZATION MEASURES ON ANY EXPOSED STEEP SLOPE (3H:1V OR GREATER) WHERE LAND DISTURBING ACTIVITIES HAVE PERMANENTLY OR TEMPORARILY CEASED, AND WILL NOT RESUME FOR A PERIOD OF 7 CALENDAR DAYS.
15. MINIMIZE SOIL COMPACTION AND, UNLESS INFEASIBLE, PRESERVE TOPSOIL.
16. MINIMIZE THE DISCHARGE OF POLLUTANTS FROM EQUIPMENT AND VEHICLE WASHING, WHEEL WASH WATER, AND OTHER WASH WATERS. WASH WATERS MUST BE TREATED IN A SEDIMENT BASIN OR ALTERNATIVE CONTROL THAT PROVIDES EQUIVALENT OR BETTER TREATMENT PRIOR TO DISCHARGE.
17. MINIMIZE THE DISCHARGE OF POLLUTANTS FROM DEWATERING OF TRENCHES AND EXCAVATED AREAS. THESE DISCHARGES ARE TO BE ROUTED THROUGH APPROPRIATE BMPs (SEDIMENT BASIN, FILTER BAG, ETC.).
18. THE FOLLOWING DISCHARGES FROM SITES ARE PROHIBITED:
   - WASTEWATER FROM WASHOUT OF CONCRETE, UNLESS MANAGED BY AN APPROPRIATE CONTROL;
   - WASTEWATER FROM WASHOUT AND CLEANOUT OF STUCCO, PAINT, FORM RELEASE OILS CURING COMPOUNDS AND OTHER CONSTRUCTION MATERIALS;
   - FUELS, OILS, OR OTHER POLLUTANTS USED IN VEHICLE AND EQUIPMENT OPERATION AND MAINTENANCE; AND
   - SOAPS OR SOLVENTS USED IN VEHICLE AND EQUIPMENT WASHING.
19. AFTER CONSTRUCTION ACTIVITIES BEGIN, INSPECTIONS MUST BE CONDUCTED AT A MINIMUM OF AT LEAST ONCE EVERY CALENDAR WEEK AND MUST BE CONDUCTED UNTIL FINAL STABILIZATION IS REACHED ON ALL AREAS OF THE CONSTRUCTION SITE.
20. IF EXISTING BMPs NEED TO BE MODIFIED OR IF ADDITIONAL BMPs ARE NECESSARY TO COMPLY WITH THE REQUIREMENTS OF THIS PERMIT AND / OR SC'S WATER QUALITY STANDARDS, IMPLEMENTATION MUST BE COMPLETED BEFORE THE NEXT STORM EVENT WHENEVER PRACTICABLE. IF IMPLEMENTATION BEFORE THE NEXT STORM EVENT IS IMPRACTICABLE, THE SITUATION MUST BE DOCUMENTED IN THE SWPPP AND ALTERNATIVE BMPs MUST BE IMPLEMENTED AS SOON AS REASONABLY POSSIBLE.
21. A PRE-CONSTRUCTION CONFERENCE MUST BE HELD FOR EACH CONSTRUCTION SITE WITH AN APPROVED ON-SITE SWPPP PRIOR TO THE IMPLEMENTATION OF CONSTRUCTION ACTIVITIES. FOR NON-LINEAR PROJECTS THAT DISTURB 10 ACRES OR MORE THIS CONFERENCE MUST BE HELD ON-SITE UNLESS THE DEPARTMENT HAS APPROVED OTHERWISE.
22. THE CONTRACTOR SHALL BE RESPONSIBLE FOR MAINTAINING ALL SILT BARRIERS AND SEDIMENT CONTROL INSTALLATIONS DURING CONSTRUCTION UNTIL THE COMPLETION OF THE SITE DEVELOPMENT.
23. EROSION CONTROL DEVICES MUST BE INSTALLED IMMEDIATELY AFTER LAND DISTURBANCE OCCURS. THE LOCATION OF SOME OF THE CONTROL DEVICES MAY BE ALTERED FROM THAT SHOWN ON THE APPROVED PLANS, IF DRAINAGE PATTERNS DURING CONSTRUCTION VARY FROM THE FINAL DRAINAGE PATTERNS. IT SHALL BE THE CONTRACTORS RESPONSIBILITY TO PROVIDE SOIL EROSION CONTROL FOR ALL DRAINAGE PATTERNS DURING ALL STAGES OF CONSTRUCTION. ALL INADEQUACIES IN SOIL EROSION CONTROL DURING ANY PHASE OF CONSTRUCTION MUST BE REPORTED IMMEDIATELY TO THE ENGINEER.
24. THE CONTRACTOR SHALL MAINTAIN ALL EROSION CONTROL MEASURES UNTIL PERMANENT VEGETATION HAS BEEN ESTABLISHED. THE CONTRACTOR SHALL INSPECT EROSION CONTROL MEASURES AT THE END OF EACH WORKING DAY TO ENSURE PROPER FUNCTIONING OF ALL DEVICES.
25. FAILURE TO INSTALL, OPERATE AND MAINTAIN ALL EROSION CONTROL MEASURES, AS SHOWN ON THE APPROVED PLANS OR AS DIRECTED BY THE ENGINEER AND/OR OCRM WILL RESULT IN ALL WORK ON THE CONSTRUCTION SITE BEING STOPPED UNTIL PROPER CORRECTIVE MEASURES HAVE BEEN MET, AS REQUIRED AND/OR DIRECTED.
26. ALL LAND DISTURBING ACTIVITIES REQUIRES COMPLIANCE UNDER THE NPDES GENERAL PERMIT FOR STORM WATER DISCHARGES FROM THE CONSTRUCTION ACTIVITIES (PERMIT NO. SCR100000). ANY NONCOMPLIANCE WITH THESE REGULATIONS IS A VIOLATION OF THE FEDERAL CLEAN WATER ACT AND MAY REQUIRE ENFORCEMENT ACTION BY HORRY COUNTY OR SCDHEC.
27. CONTRACTOR SHALL PROVIDE A WATER TIGHT ENCLOSURE FOR STORAGE OF THE OCRM CERTIFIED PLANS AND INSPECTION REPORTS. ENCLOSURE SHALL BE LOCATED IN AN AREA ACCESSIBLE TO REGULATORY PERSONNEL.
28. ALL STOCKPILE TO BE PROTECTED WITH SILT FENCE.
29. ALL CONCRETE TO BE WASHED OUT IN AN APPROVED AREA.

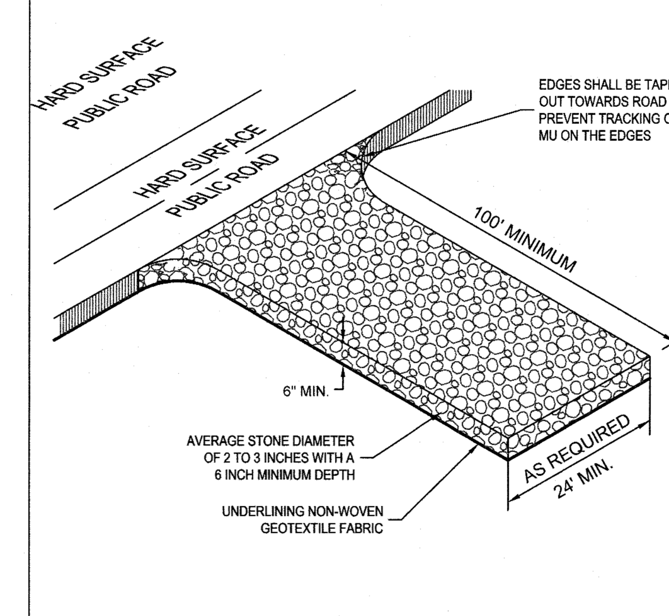


NOTE:

- INSTALL A CULVERT PIPE ACROSS THE ENTRANCE WHEN NEEDED TO PROVIDE POSITIVE DRAINAGE.
- DIVERT ALL SURFACE RUNOFF AND DRAINAGE FROM THE STONE PAD TO A SEDIMENT TRAP OR BASIN OR OTHER SEDIMENT TRAPPING STRUCTURE.
- ENTRANCES SHALL COMPLY WITH SCDOT STANDARD DRAWING 651-115-01

(CE) STABILIZIED CONSTRUCTION ENTRANCE
SCALE: N.T.S.

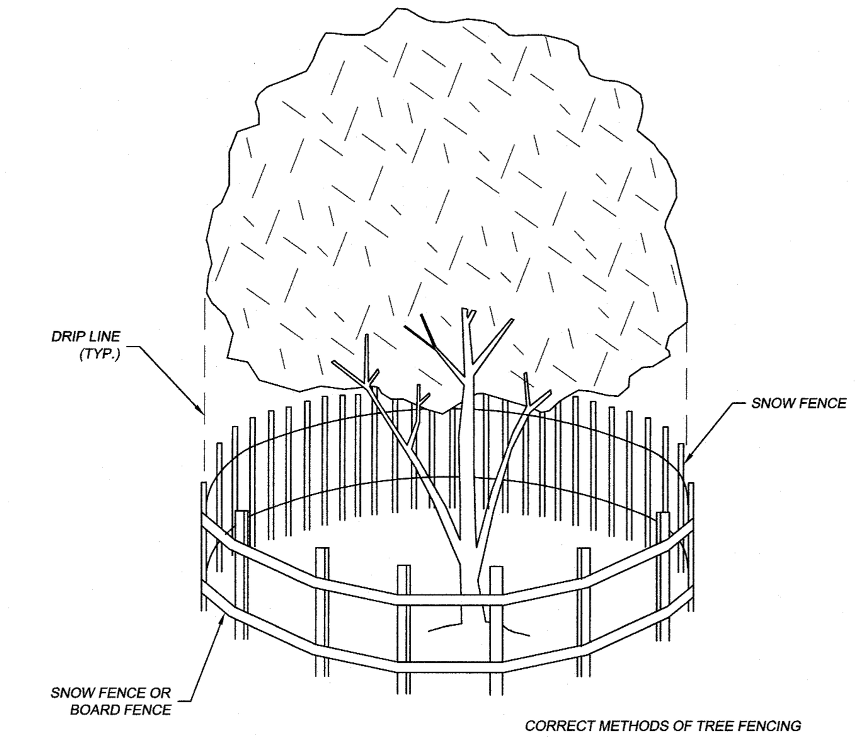


CORRECT METHODS OF TREE FENCING

TREE PROTECTION
SCALE: N.T.S.

Drawing Copyright © 2016
CHA
1298 Professional Drive
Myrtle Beach, SC 29577-5896
843.692.3205 x284 · www.chacompanies.com

HCS
Horry County Schools

DDC
ENGINEERS®
Consulting Engineers, Surveyors, Planners, Landscape Architects & Environmentalists
1298 Professional Dr., Myrtle Beach, SC 29577
Phone: (843) 692-3200 Fax: (843) 692-3210

HORRY COUNTY SCHOOLS

OFFICE OF FACILITIES
1160 E. HIGHWAY 501
CONWAY, SC 29526

SOUTH CAROLINA
DDC ENGINEERS, INC.
No. C00036
CERTIFICATE OF AUTHORIZATION

SOUTH CAROLINA
LICENSED PROFESSIONAL ENGINEER
No. 29814
ERIC K. SANFORD

IT IS A VIOLATION OF LAW FOR ANY PERSON, UNLESS THEY ARE ACTING UNDER THE DIRECTION OF A LICENSED PROFESSIONAL ENGINEER, ARCHITECT, LANDSCAPE ARCHITECT OR LAND SURVEYOR TO ALTER AN ITEM IN ANY WAY. IF AN ITEM BEARING THE STAMP OF A LICENSED PROFESSIONAL IS ALTERED, THE ALTERING ENGINEER, ARCHITECT, LANDSCAPE ARCHITECT OR LAND SURVEYOR SHALL STAMP THE DOCUMENT AND INCLUDE THE NOTATION "ALTERED BY" FOLLOWED BY THEIR SIGNATURE, THE DATE OF SUCH ALTERATION, AND A SPECIFIC DESCRIPTION OF THE ALTERATION.

SAINT JAMES
HIGH SCHOOL
TRACK AND FIELD
ATHLETIC FACILITY
IMPROVEMENTS PROGRAM

| No. | Submittal / Revision | App'd. | By | Date |
|---|---|---|---|---|
| | | | | |

SEDIMENT AND EROSION CONTROL DETAILS

| Designed By: | Drawn By: | Checked By: |
|---|---|---|
| EKS | PES | EKS |
| Issue Date: | Project No: | Scale: |
| 1/31/20 | 19062E | NO SCALE |

Drawing No.:
C-502

File: J:\PLANS\19\19062E - HORRY COUNTY SCHOOLS\E\SAINTJAMES-TRACK\19062-SAINTJAMES-TRACK-ERO-DETAILS.DWG
Saved: 2/21/2020 10:26:52 AM Plotted: 2/21/2020 1:06:36 PM Current User: Penny Sanford LastSavedBy: pes

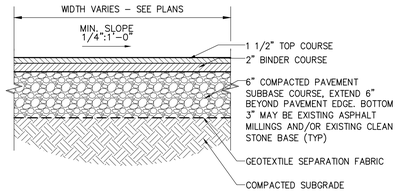


1 ASPHALT PAVEMENT DETAIL
SCALE:

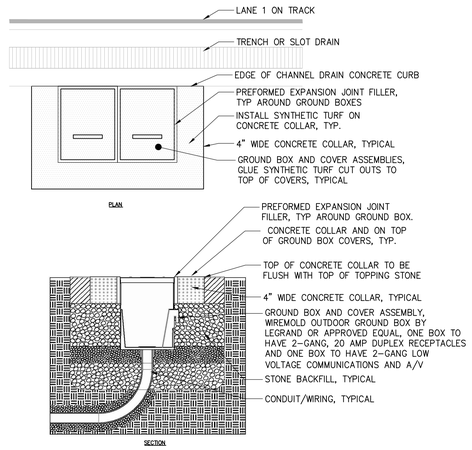


2 JUNCTION BOX – LAWN
SCALE:

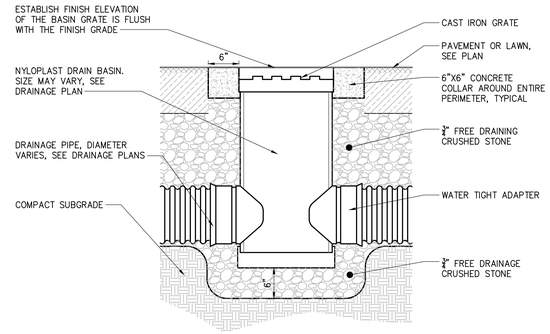


3 AREA DRAIN
SCALE:

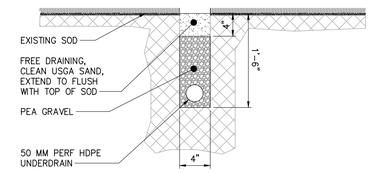


4 SAND SILT DRAINAGE DETAIL
SCALE:

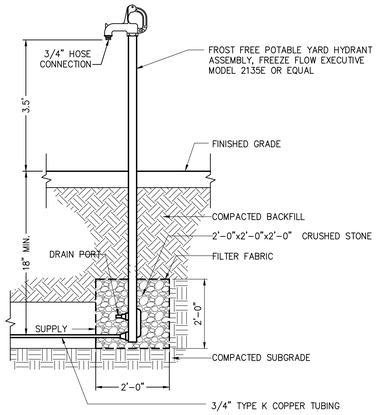


5 FROST FREE POTABLE YARD HYDRANT
SCALE:

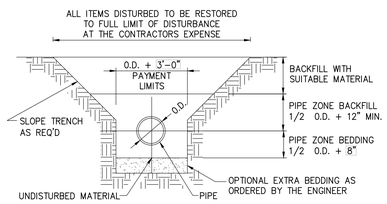


6 TYPICAL STORM TRENCH DETAIL
SCALE:

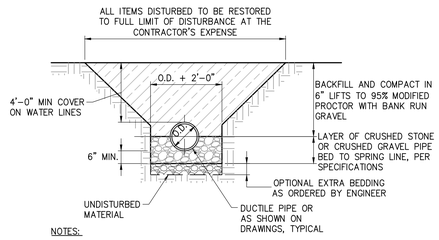


NOTES:

1. ALL BACKFILL MATERIAL COMPACTED IN 6" (MAX.) LIFTS TO 95% STANDARD PROCTOR DENSITY
2. OVEREXCAVATE AT BELLS TO PROVIDE 4" BEDDING BELOW BELLS
3. ALL TRENCH EXCAVATION SHALL MEET OSHA REQUIREMENTS AND ALL STATE AND LOCAL SAFETY REGULATIONS

7 TYPICAL WATER PIPE TRENCH DETAIL
SCALE:

NOTE:

1. PROVIDE LOCATION PINS IN OUTSIDE CONCRETE CURBS AT 4 POINTS OF CURVATURE (PC'S) AND APEX OF BOTH TURNS

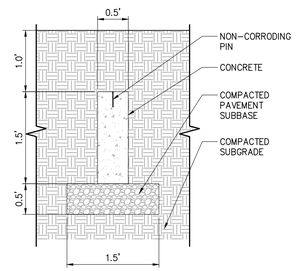


8 TRACK RADIUS MOMUNMENT POINT DETAIL
SCALE:

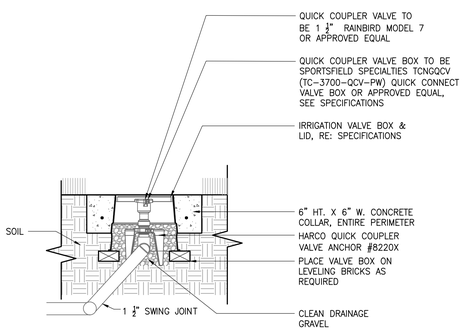


9 QUICK COUPLER DETAIL
SCALE:

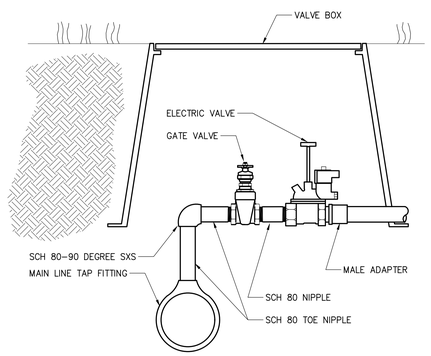


10 BURIED ELECTRICAL VALVE ASSEMBLY
SCALE:

Drawing Copyright © 2019

CHA
1258 Professional Drive
Myrtle Beach, SC 29577-5896
843.692.3105 x284 • www.chacompanies.com

HCS Horry County Schools

DDC ENGINEERS

HORRY COUNTY SCHOOLS

OFFICE OF FACILITIES
1160 E. HIGHWAY 501
CONWAY, SC 29526

IT IS A VIOLATION OF LAW FOR ANY PERSON, UNLESS THEY ARE ACTING UNDER THE DIRECTION OF A PROFESSIONAL ENGINEER, ARCHITECT, LANDSCAPE ARCHITECT OR LAND SURVEYOR TO ALTER AN ITEM IN ANY WAY. IF AN ITEM BEARING THE STAMP OR SEAL OF A LICENSED PROFESSIONAL IS ALTERED, THE ALTERING ENGINEER, ARCHITECT, LANDSCAPE ARCHITECT OR LAND SURVEYOR SHALL STAMP THE DOCUMENT AND INCLUDE THE NOTATION "ALTERED BY" FOLLOWED BY THEIR SIGNATURE, THE DATE OF SUCH ALTERATION, AND A SPECIFIC DESCRIPTION OF THE ALTERATION.

**SAINT JAMES HIGH SCHOOL**

TRACK AND FIELD ATHLETIC FACILITY IMPROVEMENTS PROGRAM

| No. | Submittal / Revision | App'd | By | Date |
|---|---|---|---|---|
| | | | | |
| | | | | |
| | | | | |
| | | | | |
| | | | | |
| | | | | |

TRACK AND FIELD DETAILS

| Designed By: | Drawn By: | Checked By: |
|---|---|---|
| JRP | RMH | PG |
| Issue Date: 02/21/2020 | Project No: 36108 | Scale: AS SHOWN |

Drawing No.:
**C-600**

File: V:\PROJECTS\ANY\C5\36108\CADD_ACAD\C-600_SJHS.DWG
Saved: 2/21/2020 1:30:27 PM PrintTime: 2/28/2020 11:38:11 AM Current User: Heather Rose LastSavedBy: 5683

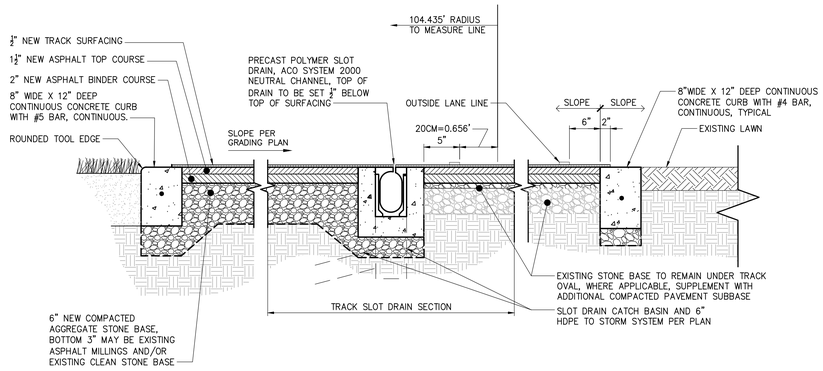


1 TRACK CROSS SECTION AT D-ZONE AND PERIMETER CURB
SCALE:

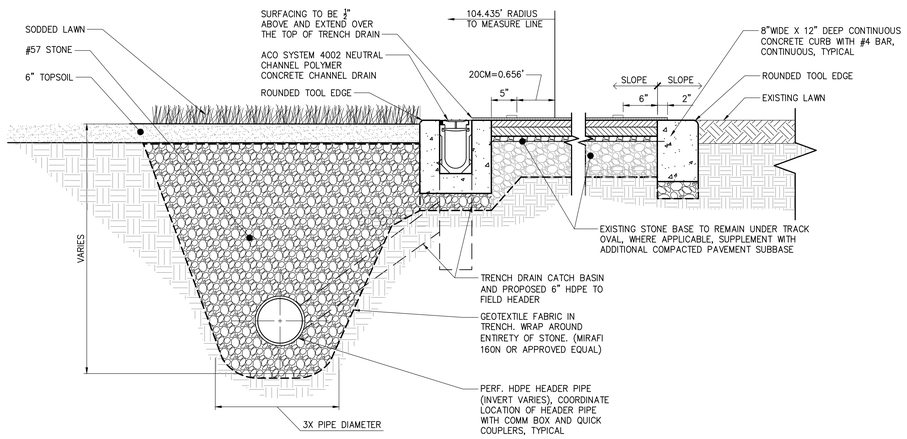


2 TRACK CROSS SECTION AT TRENCH DRAIN AND PERIMETER CURB
SCALE:

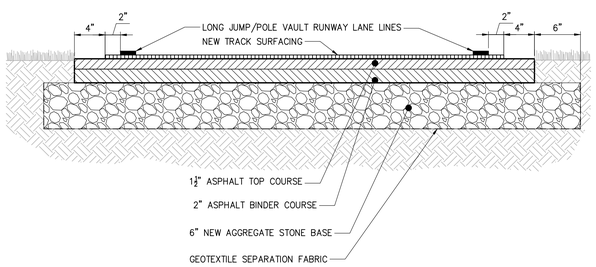


3 LONG/TRIPLE JUMP AND POLE VAULT RUNWAY CROSS SECTION
SCALE:

Drawing Copyright © 2019

CHA
1258 Professional Drive
Myrtle Beach, SC 29577-5896
843.692.3105 x236 • www.chacompanies.com

HCS Horry County Schools

DDC ENGINEERS

HORRY COUNTY SCHOOLS

OFFICE OF FACILITIES
1160 E. HIGHWAY 501
CONWAY, SC 29526

IT IS A VIOLATION OF LAW FOR ANY PERSON, UNLESS THEY ARE ACTING UNDER THE DIRECTION OF A LICENSED PROFESSIONAL ENGINEER, ARCHITECT, LANDSCAPE ARCHITECT OR LAND SURVEYOR TO ALTER AN ITEM IN ANY WAY. IF AN ITEM BEARING THE STAMP OF A LICENSED PROFESSIONAL IS ALTERED, THE ALTERING ENGINEER, ARCHITECT, LANDSCAPE ARCHITECT OR LAND SURVEYOR SHALL STAMP THE DOCUMENT AND INCLUDE THE NOTATION "ALTERED BY" FOLLOWED BY THEIR SIGNATURE, THE DATE OF SUCH ALTERATION, AND A SPECIFIC DESCRIPTION OF THE ALTERATION.

**SAINT JAMES HIGH SCHOOL**

TRACK AND FIELD ATHLETIC FACILITY IMPROVEMENTS PROGRAM

| No. | Submittal / Revision | App'd | By | Date |
|---|---|---|---|---|
| | | | | |
| | | | | |
| | | | | |
| | | | | |
| | | | | |
| | | | | |

TRACK AND FIELD DETAILS

| Designed By: | Drawn By: | Checked By: |
|---|---|---|
| JRP | RMH | PG |
| Issue Date: 02/21/2020 | Project No: 36108 | Scale: AS SHOWN |

Drawing No.:
**C-601**

File: V:\PROJECTS\ANY\V5\36108\CADD_ACAD\C-600_SJHS.DWG
Saved: 2/21/2020 1:30:27 PM Portrait 2/28/2020 11:38:16 AM Current User: Hetmer, Rose LastSavedBy: 5683

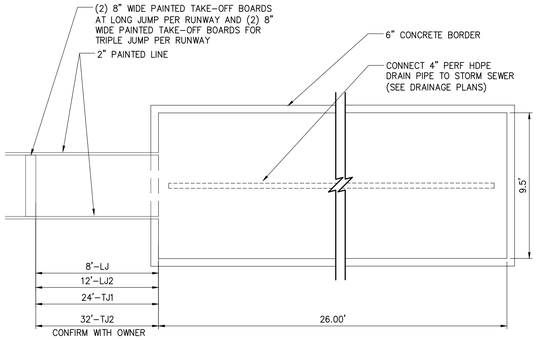


1 LONG/TRIPLE JUMP SAND PIT PLAN
SCALE:

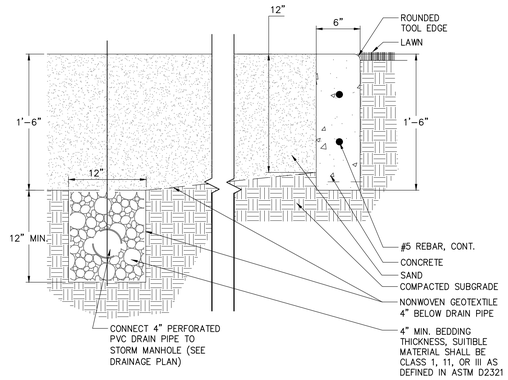


2 LONG/TRIPLE JUMP SAND PIT SECTION
SCALE:

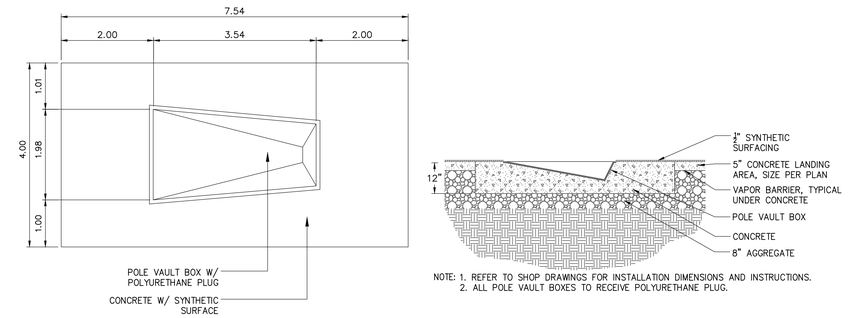


NOTE: 1. REFER TO SHOP DRAWINGS FOR INSTALLATION DIMENSIONS AND INSTRUCTIONS.
2. ALL POLE VAULT BOXES TO RECEIVE POLYURETHANE PLUG.

3 POLE VAULT BOX PLAN AND SECTION
SCALE:

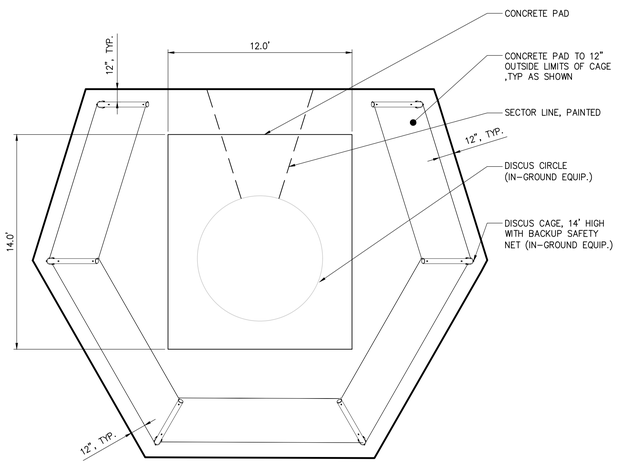


4 DISCUS CAGE PLAN
SCALE:

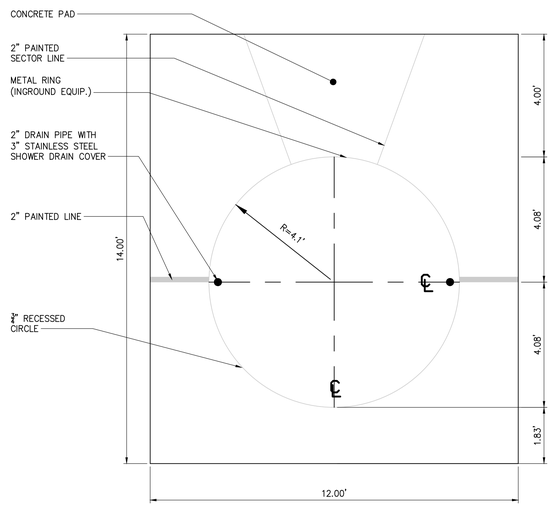


5 DISCUS CIRCLE PLAN
SCALE:

NOTE: ALL DRAWINGS DEPICTING IN-GROUND EQUIPMENTS ARE FOR BIDDING ONLY. REFER TO SHOP DRAWINGS FOR INSTALLATION DIMENSIONS AND INSTRUCTIONS.

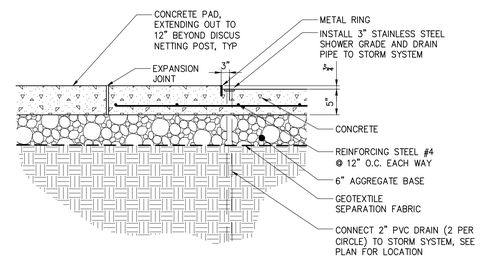


6 DISCUS CIRCLE SECTION
SCALE:

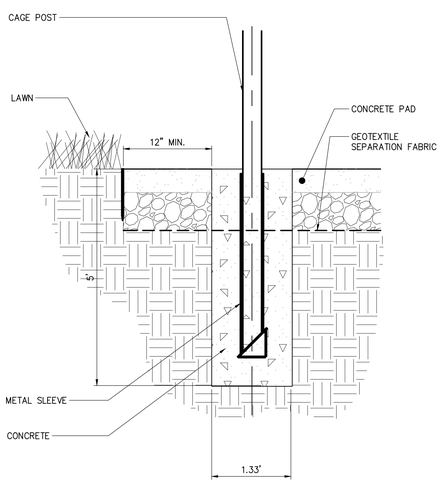


7 DISCUS NETTING SECTION
SCALE:

Drawing Copyright © 2019

CHA
1258 Professional Drive
Myrtle Beach, SC 29577-5896
843.692.3105 x284 • www.chacompanies.com

HCS Horry County Schools

DDC ENGINEERS

HORRY COUNTY SCHOOLS

OFFICE OF FACILITIES
1160 E. HIGHWAY 501
CONWAY, SC 29526

IT IS A VIOLATION OF LAW FOR ANY PERSON, UNLESS THEY ARE ACTING UNDER THE DIRECTION OF A LICENSED PROFESSIONAL ENGINEER, ARCHITECT, LANDSCAPE ARCHITECT OR LAND SURVEYOR TO ALTER AN ITEM IN ANY WAY. IF AN ITEM BEARING THE STAMP OF A LICENSED PROFESSIONAL IS ALTERED, THE ALTERING ENGINEER, ARCHITECT, LANDSCAPE ARCHITECT OR LAND SURVEYOR SHALL STAMP THE DOCUMENT AND INCLUDE THE NOTATION "ALTERED BY" FOLLOWED BY THEIR SIGNATURE, THE DATE OF SUCH ALTERATION, AND A SPECIFIC DESCRIPTION OF THE ALTERATION.

**SAINT JAMES HIGH SCHOOL**

TRACK AND FIELD
ATHLETIC FACILITY
IMPROVEMENTS PROGRAM

| No. | Submittal / Revision | App'd | By | Date |
|---|---|---|---|---|
| | | | | |

TRACK AND FIELD DETAILS

| Designed By: | Drawn By: | Checked By: |
|---|---|---|
| JRP | RMH | PG |
| Issue Date: | Project No: | Scale: |
| 02/21/2020 | 36108 | AS SHOWN |

Drawing No.:
**C-602**

File: V:\PROJECTS\ANY\V45\36108\CADD_ACAD\C-600_SJHS.DWG
Saved: 2/27/2020 1:30:37 PM Plotted: 2/28/2020 11:38:24 AM Current User: Nemer, Ross LastSaveBy: 5683

## ABBREVIATIONS

| | |
|---|---|
| A | AMPERE |
| AC | ALTERNATING CURRENT |
| AF | AMPERE FRAME |
| AFF/G | ABOVE FINISHED FLOOR/GRADE |
| AIC | AMPERE INTERRUPTING CAPACITY |
| AT | AMPERE TRIP |
| AUX | AUXILIARY |
| AWG | AMERICAN WIRE GAUGE |
| BTM | BOTTOM |
| BKR | BREAKER |
| BLDG | BUILDING |
| C | CONDUIT |
| CAB | CABINET |
| CB | CIRCUIT BREAKER |
| CIR | CIRCUIT |
| CKT | CIRCUIT |
| ℄ | CENTER LINE |
| CO | COMPANY |
| COMM | COMMUNICATIONS |
| CONN | CONNECTION, CONNECT |
| CU | COPPER |
| △ | DELTA CONNECTION |
| DIA | DIAMETER |
| DISC | DISCONNECT |
| DIST | DISTRIBUTION |
| DIV | DIVISION |
| DN | DOWN |
| DWG | DRAWING |
| EA | EACH |
| EF | EXHAUST FAN |
| EL | ELEVATION |
| ELEC | ELECTRIC(AL) |
| ENCL | ENCLOSURE |
| EQUIP | EQUIPMENT |
| ETR | EXISTING TO REMAIN |
| EXT | EXTERIOR |
| F | FUSE(D) |
| FC | FOOTCANDLES |
| FIXT | FIXTURE |
| FLR | FLOOR |
| FT | FOOT (FEET) |
| FUT | FUTURE |
| G, GND | GROUND |
| GALV | GALVANIZE(D) |
| GC | GENERAL CONTRACTOR |
| GFI | GROUND FAULT CIRCUIT INTERRUPTER |
| GFP | GROUND FAULT PROTECTION |
| HGT | HEIGHT |
| HPS | HIGH PRESSURE SODIUM |
| HTR | HEATER |
| HV | HIGH VOLTAGE |
| HW | HOT WATER |
| ID | IDENTIFY, IDENTIFICATION |
| INCAND | INCANDESCENT |
| J-BOX | JUNCTION BOX |
| JCT | JUNCTION |
| KCM/Kcmil | THOUSAND CIRCULAR MILS |
| KVA | KILO VOLT AMPERE |
| KW | KILOWATT |
| LGT | LIGHTING |
| LT(S) | LIGHT(S) |
| LED | LIGHT EMITTING DIODE |
| L | LOUVER |
| MAX | MAXIMUM |
| MCB | MAIN CIRCUIT BREAKER |
| MC | METAL CLAD CABLE |
| MFR | MANUFACTURER |
| MH | METAL HALIDE |
| MECH | MECHANICAL |
| MIN | MINIMUM |
| MLO | MAIN LUGS ONLY |
| MT | MOUNT |
| MTD | MOUNTED |
| N | NORTH |
| NEC | NATIONAL ELECTRICAL CODE |
| NF | NON-FUSED |
| NL | NIGHT LIGHT |
| No/# | NUMBER |
| OL | OVERLOAD |
| P | POLE(S) |
| PNL | PANEL |
| PR | PAIR |
| PRI | PRIMARY |
| PWR | POWER |
| ø | PHASE |
| PT | PRESSURE TREATED |
| RECEPT | RECEPTACLE |
| RGS | RIGID GALVANIZED STEEL |
| RM | ROOM |
| SEC | SECONDARY |
| SH | SHIELDED |
| SW | SWITCH |
| TEMP | TEMPORARY/TEMPERATURE |
| TB | TERMINAL BOARD |
| TYP | TYPICAL |
| UON | UNLESS OTHERWISE NOTED |
| V | VOLT, VOLTS |
| VA | VOLT-AMPERES |
| W | WATT, WIRE |
| W/ | WITH |
| WP | WEATHERPROOF |
| XFMR/T | TRANSFORMER |
| Y | WYE CONNECTION |

## DEVICES AND APPURTENANCES

- SINGLE POLE TOGGLE SWITCH
- DUPLEX RECEPTACLE
- TWO – 20 AMP DUPLEX RECEPTACLES UNDER SINGLE COVER
- JUNCTION BOX
- HAND HOLE

## RACEWAYS

- CONDUIT CONCEALED OR EXPOSED AS SPECIFIED
- CONDUIT TURNING UP
- CONDUIT TURNING DOWN
- PP-1 1/3/5 — HOMERUN BACK TO PANEL (PANEL AND CIRCUITS INDICATED)
- CIRCUIT CONTINUED OR CONNECTED TO EQUIPMENT AS INDICATED
- UNDERGROUND CONDUIT
- GROUND CONDUCTOR
- GROUNDING CONDUCTOR TERMINATION POINT AT SERVICE EQUIPMENT
- INDICATES EXISTING DEVICES OR EQUIPMENT

## POWER DISTRIBUTION EQUIPMENT

- SURFACE MOUNTED BRANCH CIRCUIT PANELBOARD 208/120V, 3ø, 4W, UON
- RECESSED BRANCH CIRCUIT PANELBOARD 208/120V, 3ø, 4W, UON
- SURFACE MOUNTED BRANCH CIRCUIT PANELBOARD 480/277V, 3ø, 4W, UON
- RECESSED BRANCH CIRCUIT PANELBOARD 480/277V, 3ø, 4W, UON
- DISTRIBUTION PANEL
- CR — CONTROL RELAY PANEL

## GENERAL

- # — NUMBER IN CIRCLE, WITH OR WITHOUT ARROW OR LEADER, REFER TO MATCHING NUMBERED CODED NOTE
- # — NUMBER IN DIAMOND, WITH OR WITHOUT ARROW OR LEADER; REFER TO THE DEMOLITION CODED NOTE WITH THE MATCHING NUMBER
- X / XXX — DETAIL CALLOUT

## GENERAL NOTES

1. REFER TO CIVIL DRAWINGS FOR SYMBOLS ASSOCIATED WITH WORK, EQUIPMENT, ETC. BY OTHER(S).
2. ALL WORK SHOWN ON THE ELECTRICAL DRAWINGS SHALL BE BY THE ELECTRICAL CONTRACT UNLESS OTHERWISE INDICATED.
3. CONDUIT RUNS SHOWN ARE DIAGRAMMATIC UON. EXACT LOCATION OF ALL CONDUIT RUNS SHALL BE DETERMINED IN THE FIELD. COORDINATE INSTALLATIONS AND AVOID CONFLICT WITH PIPING, DUCTWORK, ACCESS DOORS AND WORK BY OTHER TRADES.
4. GENERAL NOTES APPLY TO ALL ELECTRICAL CONTRACT DRAWINGS.

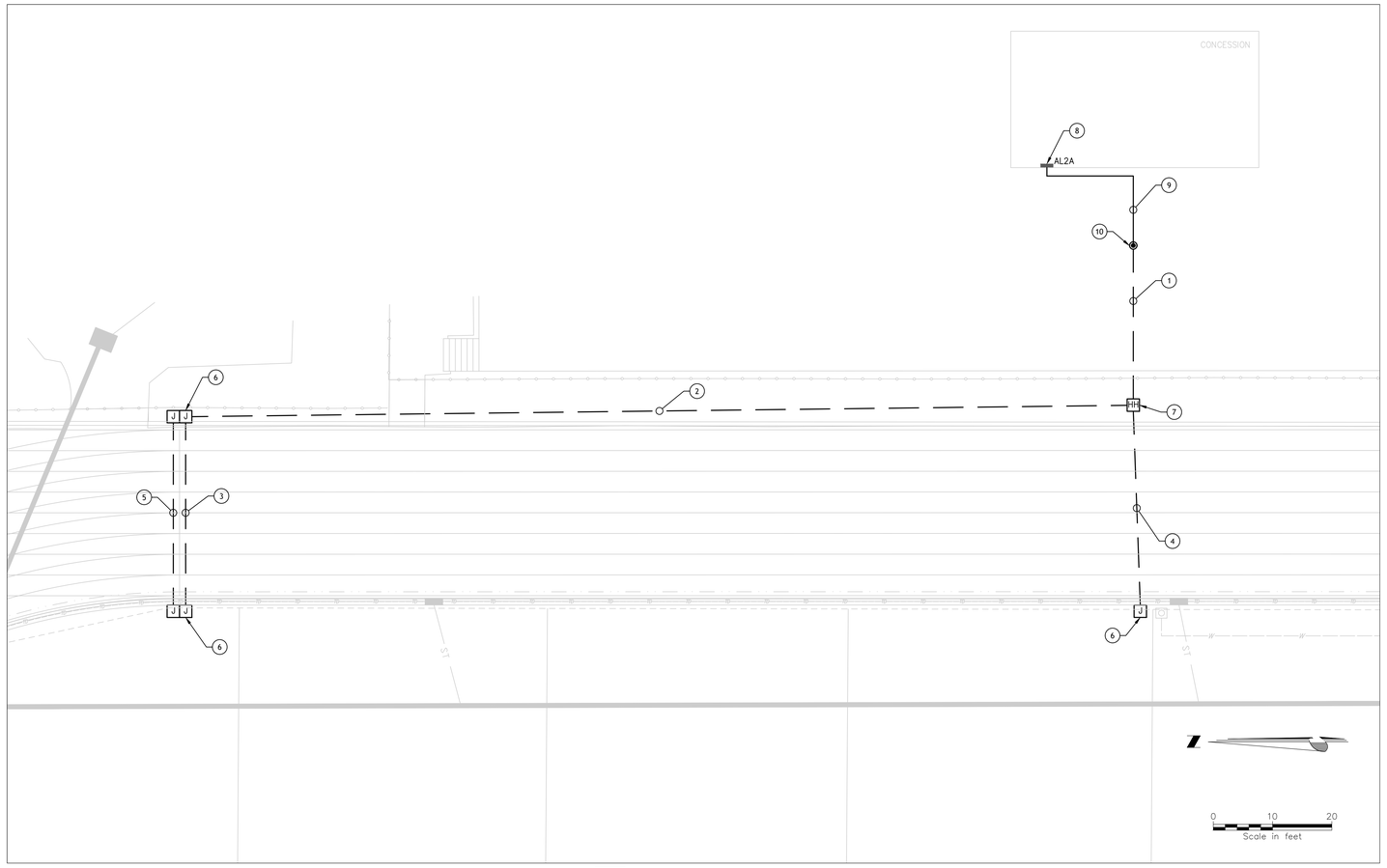


## – ELECTRICAL SITE PLAN

– SCALE: 1" = 10'

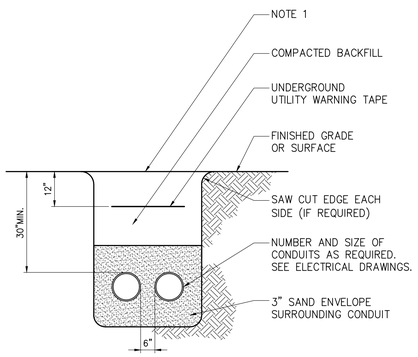


### NOTE

1. REPLACE EXISTING SURFACE CONDITIONS IN KIND TO INCLUDE, BUT NOT LIMITED TO: CONCRETE, CRUSHED STONE, SELECT GRAVEL, ASPHALT, TOPSOIL AND GRASS.

## 1 TYPICAL DIRECT BURIED CONDUIT(S) DETAIL

– NOT TO SCALE

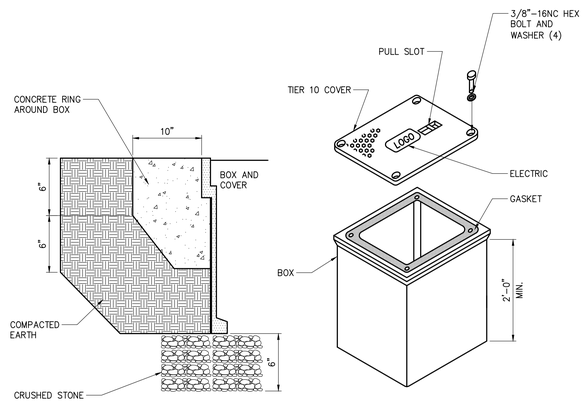


### NOTES

1. SIZE HANDHOLE AT EACH LOCATION PER NEC. MINIMUM SIZE SHALL BE 18" X 18" X 24".
2. PROVIDE ALL CONDUITS WITH A PULL ROPE.
3. REPLACE EXISTING SURFACE CONDITIONS IN KIND TO INCLUDE, BUT NOT LIMITED TO: CONCRETE, CRUSHED STONE, SELECT GRAVEL, ASPHALT CONCRETE, TOPSOIL AND GRASS.

## 2 HANDHOLE – DETAIL

– NOT TO SCALE

### CODED NOTES

1. 1" RGS CONDUIT WITH (2) #8, (1) #8G, FOR MIDFIELD AND FINISH LINE RECEPTICALES FROM PANEL AL2A TO JUNCTION BOX.
2. 1" SCHEDULE 40 PVC CONDUIT WITH (2) #8 AND (1) #8G FOR FINISH LINE RECEPTACLES FROM HANDHOLE TO FIELD JUNCTION BOX.
3. 1" SCHEDULE 40 PVC CONDUIT WITH (2) #8 AND (1) #8G FOR FINISH LINE RECEPTACLES FOR BETWEEN JUNCTION BOXES..
4. 1" SCHEDULE 40 PVC CONDUIT WITH (2) #8 AND (1) #8G FOR MIDFIELD RECEPTACLES FROM HANDHOLE TO FINISH LINE JUNCTION BOX.
5. 1 1/2" SCHEDULE 40 PVC CONDUIT BETWEEN JUNCTION BOXES FOR INSTALLATION OF COMMUNICATION WIRING.
6. PROVIDE JUNCTION BOX (SEE DETAILS 1 & 2 ON C-601)
7. PROVIDE HANDHOLE (SEE DETAIL 2 ON THIS DRAWING)
8. PROVIDE 20A/1P BREAKER AT CKT 2 IN EXISTING PANEL AL2A. TYPE OF BREAKER TO MATCH EXISTING. LOCATED IN EXISTING CONCESSION BUILDING BELOW GRANDSTANDS. (GE 9T21S100 SERVICE CENTER)
9. 1" RGS CONDUIT WITH (2) #8, (1) #8G, FOR MIDFIELD AND FINISH LINE RECEPTACLES FROM PANEL AL2A TO JUNCTION BOX.
10. TRANSITION BETWEEN ABOVE GROUND AND UNDERGROUND CONDUIT

### GENERAL NOTES

1. PROTECT AND MAINTAIN EXISTING ELECTRICAL WIRING. REPAIR ANY DAMAGED CONDUIT/WIRING AND OR ELECTRICAL BOXES IN KIND.

Drawing Copyright © 2019

CHA
1308 Professional Drive
Myrtle Beach, SC 29577-5896
843.692.3035 x269 • www.chacompanies.com

Horry County Schools

DDC ENGINEERS

HORRY COUNTY SCHOOLS

OFFICE OF FACILITIES
1160 E. HIGHWAY 501
CONWAY, SC 29526

IT IS A VIOLATION OF LAW FOR ANY PERSON, UNLESS THEY ARE ACTING UNDER THE DIRECTION OF A LICENSED PROFESSIONAL ENGINEER, ARCHITECT, LANDSCAPE ARCHITECT OR LAND SURVEYOR, TO ALTER AN ITEM IN ANY WAY. IF AN ITEM BEARING THE STAMP OF A LICENSED PROFESSIONAL IS ALTERED, THE ALTERING ENGINEER, ARCHITECT, LANDSCAPE ARCHITECT OR LAND SURVEYOR SHALL ATTACH TO THE ITEM THE PHRASE "ALTERED BY" FOLLOWED BY THEIR SIGNATURE, THE DATE OF SUCH ALTERATION, AND A SPECIFIC DESCRIPTION OF THE ALTERATION.

**SAINT JAMES HIGH SCHOOL**

TRACK AND FIELD ATHLETIC FACILITY IMPROVEMENTS PROGRAM

| No. | Submittal / Revision | App'd. | By | Date |
|---|---|---|---|---|
| | | | | |

ELECTRICAL SITE PLAN

| Designed By: | Drawn By: | Checked By: |
|---|---|---|
| JRH | JRH | JD |
| Issue Date: 02/21/2020 | Project No: 36108 | Scale: AS SHOWN |

Drawing No.:

**E-001**

File: V:\PROJECTS\HY\X63\36108\CADD_ACAD\E-002_SAHS_SITE_TRACK.DWG
Saved: 2/19/2020 11:13:53 AM Plotted: 2/26/2020 11:38:31 AM Current User: Helmer, Rose LastSavedBy: 6616