CODE COMPLIANCE

PARTIAL LIST OF APPLICABLE CODES as of January 1, 2020

ALL WORK SHALL CONFORM TO 2019 TITLE 24, CALIFORNIA CODE OF REGULATIONS (CCR).

GRADING PLANS, DRAINAGE IMPROVEMENTS, ROAD AND ACCESS REQUIREMENTS AND ENVIRONMENTAL HEALTH CONSIDERATIONS SHALL COMPLY WITH ALL LOCAL ORDINANCES.

2019	CALIFORNIA ADMINISTRATIVE CODE (CAC), PART 1, TITLE 24, CCR
2019	CALIFORNIA BUILDING CODE (CBC), PART 2, TITLE 24, CCR (2018 INTERNATIONAL BUILDING CODE, VOL 1 & 2, AND 2019 CALIFORNIA AMENDMENTS)
2019	CALIFORNIA ELECTRICAL CODE (CEC), PART 3, TITLE 24, CCR (2017 NATIONAL ELECTRICAL CODE AND 2019 CALIFORNIA AMENDMENTS)
2019	CALIFORNIA MECHANICAL CODE (CMC), PART 4, TITLE 24, CCR (2018 IAPMO UNIFORM MECHANICAL CODE AND 2019 CALIFORNIA AMENDMENTS)
2019	CALIFORNIA PLUMBING CODE (CPC), PART 5, TITLE 24, CCR (2018 IAPMO UNIFORM PLUMBING CODE AND 2019 CALIFORNIA AMENDMENTS)
2019	CALIFORNIA ENERGY CODE (CENC), PART 6, TITLE 24, CCR
2019	CALIFORNIA FIRE CODE (CFC), PART 9, TITLE 24, CCR (2018 INTERNATIONAL FIRE CODE AND 2019 CALIFORNIA AMENDMENTS)
2019	CALIFORNIA EXISTING BUILDING CODE (CEBC), PART 10, TITLE 24, CCR (2018 INTERNATIONAL EXISTING BUILDING CODE AND 2019 CALIFORNIA AMENDMENTS)
2019	CALIFORNIA GREEN BUILDING STANDARDS CODE (CALGREEN), PART 11, TITLE 24, CCR
2019	CALIFORNIA REFERENCED STANDARDS CODE, PART 12, TITLE 24, CCR
2019	TITLE 19, CCR, PUBLIC SAFETY, STATE FIRE MARSHAL REGULATIONS
2016	ASME A17.1/CSA B44-13 SAFETY CODE FOR ELEVATORS AND ESCALATORS (PER 2019 CBC, PART 2, CHAPTER 35) NOTE: CAL/OSHA ELEVATOR UNIT ENFORCES CCR TITLE 8 AND USES THE 2004 ASME A17.1 BY ADOPTION.

PARTIAL LIST OF APPLICABLE NATIONAL FIRE PROTECTION ASSOCIATION (NFPA) STANDARDS

NFPA 13	INSTALLATION OF SPRINKLER SYSTEMS (CA AMENDED), 2016 EDITION
NFPA 14	INSTALLATION OF STANDPIPE AND HOSE SYSTEMS (CA AMENDED), 2016 EDITION
NFPA 17	DRY CHEMICAL EXTINGUISHING SYSTEMS, 2017 EDITION
NFPA 17A	WET CHEMICAL EXTINGUISHING SYSTEMS, 2017 EDITION
NFPA 20	INSTALLATION OF STATIONARY PUMPS FOR FIRE PROTECTION, 2016 EDITION
NFPA 22	WATER TANKS FOR PRIVATE FIRE PROTECTION, 2013 EDITION
NFPA 24	INSTALLATION OF PRIVATE FIRE SERVICE MAINS AND THEIR APPURTENANCES (CA AMENDED), 2016 EDITION
NFPA 72	NATIONAL FIRE ALARM AND SIGNALING CODE (CA AMENDED), 2016 EDITION
NFPA 80	STANDARD FOR FIRE DOORS AND OTHER OPENING PROTECTIVES, 2016 EDITION
NFPA 2001	STANDARD ON CLEAN AGENT FIRE EXTINGUISHING SYSTEMS (CA AMENDED), 2015 EDITION

FOR A COMPLETE LIST OF APPLICABLE NFPA STANDARDS REFER TO 2019 CBC (SFM) CHAPTER 35 AND CALIFORNIA FIRE CODE CHAPTER 80.

SEE CALIFORNIA BUILDING CODE, CHAPTER 35, FOR STATE OF CALIFORNIA AMENDMENTS TO THE NFPA STANDARDS.

PARTIAL LIST OF APPLICABLE STANDARDS

UL 300	STANDARD FOR FIRE TESTING OF FIRE EXTINGUISHING SYSTEMS FOR PROTECTION OF COMMERCIAL COOKING EQUIPMENT, 2005 (R2010)
UL 464	AUDIBLE SIGNALING DEVICES FOR FIRE ALARM AND SIGNALING SYSTEMS, INCLUDING ACCESSORIES, 2003 EDITION
UL 521	STANDARD FOR HEAT DETECTORS FOR FIRE PROTECTIVE SIGNALING SYSTEMS, 1999 EDITION
UL 1971	STANDARD FOR SIGNALING DEVICES FOR THE HEARING IMPAIRED, 2002 (R2010)
ICC 300	STANDARD FOR BLEACHERS, FOLDING AND TELESCOPIC SEATING, AND GRANDSTANDS, 2017 EDITION

STATEMENT OF GENERAL CONFORMANCE

FOR ARCHITECTS/ENGINEERS WHO UTILIZE PLANS,
INCLUDING BUT NOT LIMITED TO SHOP DRAWINGS, PREPARED BY OTHER
LICENSED DESIGN PROFESSIONALS AND/OR CONSULTANTS

(**Application No.** 01-119409 **File No.** 1-C1)

☒ The drawings or sheets listed on the cover or sheet index (C, L, S, FP, P, M, E, T, FA, GH, W,
☐ This drawing, page of specifications/calculations A AND G SERIES SHEETS)
have been prepared by other design professionals or consultants who are licensed and/or authorized to prepare such drawings in this state. It has been examined by me for:

1) design intent and appears to meet the appropriate requirements of Title 24, California Code of Regulations and the project specifications prepared by me, and
2) coordination with my plans and specifications and is acceptable for incorporation into the construction of this project.

The Statement of General Conformance "shall not be construed as relieving me of my rights, duties, and responsibilities under Sections 17302 and 81138 of the Education Code and Sections 4-336, 4-341 and 4-344" of the Title 24, Part 1. (Title 24, Part 1, Section 4-317 (b))

I certify that:
☒ All drawings or sheets listed on the cover or index sheet
☐ This drawing or page

☒ is/are in general conformance and
☒ have been coordinated

Signature — Date: 03/03/2022

Architect or Engineer designated to be in general responsible charge

Christopher Noll
Print Name

C15916 — 12/31/23
License Number — **Expiration Date**

2019 CALIFORNIA CODE OF REGULATIONS (CCR) TITLE 24 PART 1 CHAPTER 4 ADMINISTRATIVE REGULATIONS (PARTIAL LISTING ONLY) FOR THE DIVISION OF THE STATE ARCHITECT (DSA) - STRUCTURAL SAFETY

1. ADMINISTRATION OF CONSTRUCTION SHALL BE PER CCR TITLE 24, PART I
2. A COPY OF CCR TITLE 24, PARTS 1 & 2 SHALL BE KEPT AND BE MADE AVAILABLE AT THE JOBSITE DURING CONSTRUCTION.
3. DSA SHALL BE NOTIFIED AT THE START OF CONSTRUCTION AND PRIOR TO THE PLACEMENT OF CONCRETE PER SECTION 4-331.
4. THE ARCHITECT AND THE STRUCTURAL ENGINEER SHALL PERFORM THEIR DUTIES IN ACCORDANCE WITH SECTION 4-333(a) AND 4-341
5. PROJECT INSPECTOR SHALL BE APPROVED BY DSA. INSPECTOR AND CONTINUOUS INSPECTION OF WORK PER SECTION 4-333(b) AND 4-342.
6. SPECIAL INSPECTION PER SECTION 4-333(c).
7. SUPERVISION OF CONSTRUCTION BY DSA SHALL BE IN ACCORDANCE WITH SECTION 4-334.
8. TESTING LABORATORY SHALL BE APPROVED BY DSA. TESTS AND TESTING LABORATORY PER SECTION 4-335 AND APPROVED TESTING & INSPECTION FORMS. THE DISTRICT SHALL EMPLOY AND PAY THE LABORATORY. COSTS OF RE-TEST MAY BE BACK CHARGED TO THE CONTRACTOR.
9. CONTRACTOR, INSPECTOR, ARCHITECT, AND ENGINEERS SHALL SUBMIT VERIFIED REPORTS (FORM DSA-6) IN ACCORDANCE WITH SECTION 4-336 AND 4-343(c).
10. THE INTENT OF THE DRAWINGS AND SPECIFICATIONS IS TO CONSTRUCT THE PROJECT IN ACCORDANCE WITH CCR TITLE 24. DURING CONSTRUCTION, SHOULD ANY CONDITIONS DEVELOP THAT ARE NOT COVERED BY THE DSA APPROVED CONTRACT DOCUMENTS, THEN CONSTRUCTION CHANGE DOCUMENTS (CCD) THAT DETAIL AND SPECIFY THE REQUIRED WORK SHALL BE SUBMITTED TO, AND BE APPROVED BY, DSA BEFORE PROCEEDING WITH THE WORK. ALL CCDS AND ADDENDA SHALL BE SIGNED BY THE ARCHITECT AND THE OWNER. CCDS ARE NOT VALID UNTIL APPROVED BY DSA PER SECTION 4-338.
11. THE CONTRACTOR SHALL PERFORM THEIR DUTIES IN ACCORDANCE WITH SECTION 4-343.
12. DSA IS NOT SUBJECT TO ARBITRATION.

ADDITIVE ALTERNATES

Additive Alternate 1: NOT USED

Additive Alternate 2: ADDITIONAL GREENHOUSE EQUIPMENT
- Base Bid: Refer to Specification Section 13 34 13 – Greenhouses: Equipment fit out for all Greenhouses to be as described in Parts 1-3.
- Add Alternate: Refer to Specification Section 13 34 13 – Greenhouses: In addition to equipment specified in Parts 1-3, provide additional equipment as described in Part 4.

Additive Alternate 3: PAVING TYPE
- Base Bid: Refer to Sheet L2.03: Paving Type P-08 to be Core Gravel paving as specified in Section 32 14 43 – Porous Unit Paving.
- Add Alternate: Refer to Sheet L2.03: Paving Type P-08 to be GrassCrete paving as specified in Section 32 14 43 – Porous Unit Paving.

Additive Alternate 4:GARDEN WATER FOUNTAINS
- Base Bid: To each exterior fountain location shown on Sheet L2.02 provide outdoor weatherproof receptacle and irrigation water supply piping with 1/2 inch diameter stub out and shutoff valve.
- Add Alternate: Refer to Specification Section 13 12 13 Exterior Fountains, and Sheets L2.02 and L5.03. Provide Garden Fountains Type A, B, and C. Connect to power and water provided under the Base Bid.

DEFERRED SUBMITTALS

NONE.

MERRITT COLLEGE NEW LANDSCAPE HORTICULTURE COMPLEX

Peralta Community College District

12500 Campus Drive
Oakland, CA 94619

BID SET - 03/03/2022

Structural

IDA Structural Engineers Inc.
1630 Telegraph Avenue
Suite 300
Oakland CA 94612-2114
Tel: 510.834.1629

Landscape

BASE Landscape Architecture
2427 17th Street
San Francisco CA 94110
Tel: 415.999.5313

Architect

Noll & Tam Architects
729 Heinz Ave
Berkeley, CA 94710
Tel: 510.542.2200
Fax: 510.542.2201

Owner
Peralta Community College District
333 E 8th Street
Oakland CA 94606
Tel: 510.436.2479

VICINITY MAP

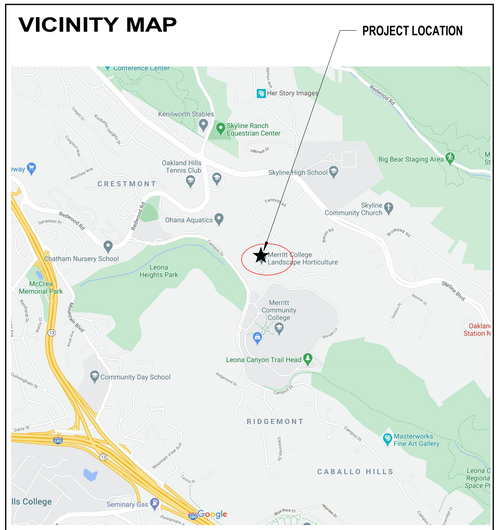

CAMPUS PLAN

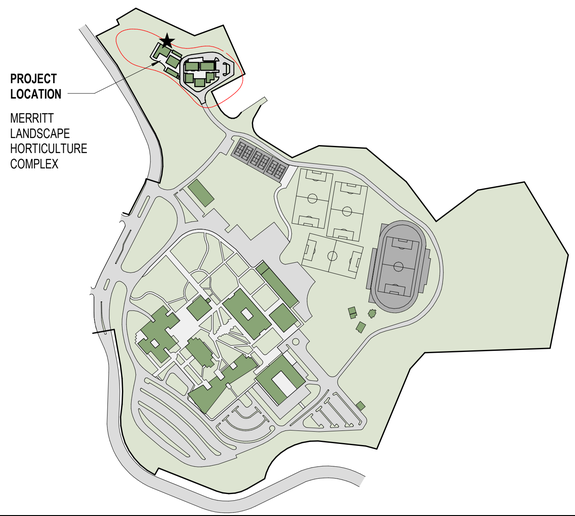

PROJECT SUMMARY

PROJECT TITLE: MERRITT LANDSCAPE HORTICULTURE COMPLEX

PROJECT LOCATION: 12500 CAMPUS DRIVE, OAKLAND, CA 94616

PROJECT SCOPE: THIS PROJECT CONSISTS OF ABATEMENT AND DEMOLITION OF EXISTING BUILDINGS AND SITE IMPROVEMENTS, CONSTRUCTION OF NEW CLASSROOMS, GREENHOUSES AND SUPPORT SPACES TO HOUSE THE MERRITT LANDSCAPE HORTICULTURE PROGRAM, WITH ASSOCIATED SITE IMPROVEMENTS.

BUILDINGS SUMMARY: REFER TO SHEET G1.21 FOR ADDITIONAL INFORMATION
ALL BUILDINGS ARE SINGLE STORY.
OCCUPANCY CLASSIFICATIONS INCLUDE A-3, B AND U.
CONSTRUCTION TYPE IS V-B, FULLY SPRINKLED.
AUTOMATIC SPRINKLER SYSTEM PER NFPA 13, AUTOMATIC FIRE ALARM SYSTEM PER NFPA 72
SEISMIC ZONE E

THE WORK TO BE PERFORMED UNDER THIS CONTRACT INCLUDES THE FURNISHING OF ALL LABOR, MATERIALS, EQUIPMENT, TRANSPORTATION, SERVICES, PERMITS, TEMPORARY CONTROLS AND CONSTRUCTION FACILITIES, AND ALL GENERAL CONDITIONS, SEISMIC REQUIREMENTS, GENERAL REQUIREMENTS AND INCIDENTALS REQUIRED TO COMPLETE THE WORK ON THE PROJECT IN ITS ENTIRETY AS DESCRIBED IN THE CONTRACT DOCUMENTS.

Commissioning

Red Car Analytics
4460 Chico Ave.
Santa Rosa CA 95407
Tel: 707.714.0102

Signage

Ross Luthin Creative
849 Third Street Studio B
Santa Rosa CA 95404
Tel: 707.573.7359

Fire Protection

HYT Corporation
3498 Clayton Road, Ste 101
Concord CA 94519
Tel: 925.681.2731

Electrical

RIJA, Inc.
1620 Montgomery Street
San Francisco CA 94111
Tel: 415.730.7994

Mechanical

Blue Forest Engineering
3622 Kingsley Street
Oakland CA 94610
Tel: 510.924.8224
Fax: 510.924.8225

Civil

Sherwood Design Engineers
2548 Mission Street
San Francisco CA 94110
Tel: 415.677.7300

APPROVALS

IDENTIFICATION STAMP
DIV. OF THE STATE ARCHITECT
APP: 01-119409 INC:
REVIEWED FOR
SS ☑ FLS ☑ ACS ☑
DATE: 03/14/2022

NOLL & TAM ARCHITECTS
729 Heinz Avenue
Berkeley, CA 94710
tel 510.542.2200
fax 510.542.2201

SEAL

LICENSED ARCHITECT
CHRISTOPHER NOLL
No. C15916
REN. 12-31-23
STATE OF CALIFORNIA

PROJECT TITLE

Peralta Community College District
MERRITT COLLEGE NEW LANDSCAPE HORTICULTURE COMPLEX
12500 Campus Drive
Oakland, CA 94619

BID SET

ISSUE DATE	03/03/2022
N&T JOB NUMBER	22003

REVISIONS

	DATE	DESCRIPTION

DRAWN BY **Author** CHECKED BY **Checker**

SHEET TITLE

COVER SHEET

SHEET NUMBER

G0.00

3/3/2022 10:59:08 AM BIM 360://PCCD Merritt Horticulture/Merritt Horticulture_2020.rvt

SHEET INDEX

GENERAL

G0.00	COVER SHEET
G0.01	SHEET INDEX
G0.02	GENERAL NOTES
G1.01	CAMPUS PLAN
G1.02	CAMPUS PLAN- DSA 810
G1.11	SITE ACCESS PLAN
G1.21	CODE SUMMARY PLAN
G1.31	CODE OCCUPANCY & EXIT PLANS
G1.41	CODE PLUMBING OCCUPANCY PLANS & FIXTURE COUNT
G1.51	DEMOLITION AND SITEWORK LOGISTICS DIAGRAM
G1.61	ASSIGNED AREAS
G2.01	CAL GREEN
G2.21	TITLE 24- COMMISSIONING FORMS
G2.22	TITLE 24- COMMISSIONING FORMS
G2.41	SOLAR READY ROOF AREAS
G3.21	MOUNTING HEIGHTS / STANDARD CODE AND ACCESSIBILITY DETAILS
G3.22	STANDARD CODE AND ACCESSIBILITY DETAILS
G3.25	ACCESSIBLE PARKING ENLARGED PLANS
G3.26	SITE ACCESSIBILITY DETAILS

19

CIVIL

C0.0	GENERAL NOTES
C1.0	OVERALL DEMOLITION PLAN
C1.1	ENLARGED DEMOLITION PLAN
C2.0	SITE PLAN KEY MAP
C2.1	SITE PLAN
C2.2	SITE PLAN
C2.3	SITE SECTIONS
C3.1	GRADING AND DRAINAGE PLAN
C3.2	GRADING AND DRAINAGE PLAN
C3.3	GRADING AND DRAINAGE PLAN
C3.4	GRADING AND DRAINAGE PLAN
C3.5	GRADING AND DRAINAGE PLAN
C3.6	GRADING AND DRAINAGE PLAN
C4.0	UTILITIES PLAN KEY MAP
C4.1	UTILITY PLAN
C4.2	UTILITY PLAN
C4.3	UTILITY PLAN
C4.4	UTILITY PLAN
C4.5	UTILITY PLAN
C4.6	UTILITY PLAN
C5.1	SITE DETAILS
C5.2	SITE DETAILS
C5.3	DRAINAGE DETAILS
C5.4	DRAINAGE DETAILS
C5.5	DRAINAGE DETAILS
C5.6	UTILITY DETAILS
C5.7	UTILITY DETAILS
C6.0	EROSION CONTROL PLAN
C6.1	EROSION CONTROL DETAILS

29

LANDSCAPE

L0.01	LANDSCAPE DRAWING INDEX, ABBREVIATIONS AND NOTES
L1.00	EXISTING CONDITIONS SITE PLAN
L1.01	SELECTIVE LANDSCAPE DEMOLITION PLAN
L1.02	EXISTING TREE PROTECTION AND REMOVAL PLAN
L1.03	TREE PROTECTION DETAILS AND NOTES
L2.00	LANDSCAPE MATERIALS SCHEDULE
L2.01	LANDSCAPE MATERIALS PLAN
L2.02	LANDSCAPE MATERIALS PLAN WEST
L2.03	LANDSCAPE MATERIALS PLAN EAST
L2.04	LANDSCAPE PAVING PLAN, WEST
L2.05	LANDSCAPE PAVING PLAN, EAST
L3.00	GRADING PLAN
L3.01	GRADING PLAN WEST
L3.02	GRADING PLAN EAST
L4.00	LAYOUT PLAN
L4.01	LAYOUT PLAN WEST
L4.02	LAYOUT PLAN EAST
L5.00	LANDSCAPE CONSTRUCTION DETAILS
L5.01	LANDSCAPE CONSTRUCTION DETAILS
L5.02	LANDSCAPE CONSTRUCTION DETAILS
L5.03	LANDSCAPE CONSTRUCTION DETAILS
L5.04	LANDSCAPE CONSTRUCTION DETAILS
L5.05	LANDSCAPE CONSTRUCTION DETAILS
L5.06	LANDSCAPE CONSTRUCTION DETAILS
L5.07	LANDSCAPE CONSTRUCTION DETAILS
L6.00	IRRIGATION PLAN
L6.01	IRRIGATION PLAN WEST
L6.02	IRRIGATION PLAN EAST
L6.03	IRRIGATION NOTES
L6.04	IRRIGATION LEGEND
L6.05	IRRIGATION DETAILS
L6.06	IRRIGATION DETAILS
L6.07	IRRIGATION DETAILS
L6.08	IRRIGATION DETAILS
L7.00	SOILS PLAN
L8.00	PLANT SCHEDULE
L8.01	PLANTING PLAN WEST
L8.02	PLANTING PLAN EAST
L8.03	PLANTING DETAILS
L8.04	PLANTING DETAILS

40

ARCHITECTURE

A0.01	ABBREVIATIONS AND SYMBOLS
A1.01	DEMOLITION PLAN
A1.21	ENLARGED DEMOLITION PLAN & ELEVATIONS
A1.31	DEMOLITION ELEVATIONS
A2.01	SITE PLAN - FLOOR LEVEL
A2.10	GRID LAYOUT PLAN
A2.11	SLAB PLAN - WEST BUILDING GROUP
A2.12	SLAB PLAN - EAST BUILDING GROUP
A2.21	LAYOUT PLAN - WEST BUILDING GROUP
A2.22	LAYOUT PLAN - EAST BUILDING GROUP
A2.31	FLOOR PLAN - WEST BUILDING GROUP
A2.32	FLOOR PLAN - EAST BUILDING GROUP
A2.41	ROOF PLAN - WEST BUILDING GROUP
A2.42	ROOF PLAN - EAST BUILDING GROUP
A2.51	REFLECTED CEILING PLAN - WEST BUILDING GROUP
A2.52	REFLECTED CEILING PLAN - EAST BUILDING GROUP
A2.61	DOOR SCHEDULE AND TYPES
A2.71	WINDOW SCHEDULE & TYPES
A3.11	EXTERIOR ELEVATIONS - WEST BUILDING GROUP
A3.12	EXTERIOR ELEVATIONS - WEST BUILDING GROUP
A3.13	EXTERIOR ELEVATIONS - WEST BUILDING GROUP
A3.14	EXTERIOR ELEVATIONS - WEST BUILDING GROUP
A3.15	EXTERIOR ELEVATIONS - EAST BUILDING GROUP
A3.16	EXTERIOR ELEVATIONS - EAST BUILDING GROUP
A3.17	EXTERIOR ELEVATIONS - EAST BUILDING GROUP
A3.18	EXTERIOR ELEVATIONS - EAST BUILDING GROUP
A3.19	EXTERIOR ELEVATIONS - EAST BUILDING GROUP
A3.20	EXTERIOR ENLARGED ELEVATIONS
A3.21	EXTERIOR ENLARGED ELEVATIONS
A3.31	BUILDING SECTIONS - WEST BUILDING GROUP
A3.32	BUILDING SECTIONS - EAST BUILDING GROUP
A4.21	ENLARGED PLANS - WEST RESTROOMS
A4.22	ENLARGED PLANS - EAST RESTROOMS
A4.23	ENLARGED PLANS - GATES & FENCES
A4.24	ENLARGED PLANS - WHEELBARROW ENCLOSURE
A5.11	INTERIOR ELEVATIONS - WEST BUILDING GROUP
A5.12	INTERIOR ELEVATIONS - WEST BUILDING GROUP
A5.13	INTERIOR ELEVATIONS - WEST BUILDING GROUP
A5.14	INTERIOR ELEVATIONS - EAST BUILDING GROUP
A5.15	INTERIOR ELEVATIONS - EAST BUILDING GROUP
A5.16	INTERIOR ELEVATIONS - EAST BUILDING GROUP
A5.17	INTERIOR ELEVATIONS - EAST BUILDING GROUP
A6.11	WALL SECTIONS - WEST BUILDING GROUP
A6.12	WALL SECTIONS - WEST BUILDING GROUP
A6.13	WALL SECTIONS - WEST BUILDING GROUP
A6.14	WALL SECTIONS - WEST BUILDING GROUP
A6.15	WALL SECTIONS - EAST BUILDING GROUP
A6.16	WALL SECTIONS - EAST BUILDING GROUP
A6.17	WALL SECTIONS - EAST BUILDING GROUP
A7.11	EXTERIOR - FLOOR & CURB DETAILS
A7.21	EXTERIOR - TYPICAL WALL ASSEMBLIES
A7.22	EXTERIOR - WALL ASSEMBLY DETAILS
A7.23	EXTERIOR - WALL ASSEMBLY DETAILS
A7.31	EXTERIOR - SOFFIT DETAILS
A7.35	EXTERIOR - GUTTER & DRAIN DETAILS
A7.41	EXTERIOR - TYPICAL ROOF ASSEMBLIES
A7.42	EXTERIOR - ROOF AND FASCIA DETAILS
A7.43	EXTERIOR - ROOF AND FASCIA DETAILS
A7.44	EXTERIOR - ROOF AND FASCIA DETAILS
A7.45	EXTERIOR - ROOF AND FASCIA DETAILS
A7.46	EXTERIOR - ROOF AND FASCIA DETAILS
A7.51	EXTERIOR - DOOR DETAILS
A7.52	EXTERIOR - DOOR DETAILS
A7.53	INTERIOR / EXTERIOR - GATE DETAILS
A7.54	INTERIOR / EXTERIOR - GATE DETAILS
A7.61	EXTERIOR - WINDOW & STOREFRONT DETAILS
A7.62	EXTERIOR - WINDOW & STOREFRONT DETAILS
A7.71	EXTERIOR - FLASHING DETAILS
A7.72	EXTERIOR - FLASHING DETAILS
A7.81	EXTERIOR - SPECIALTY AND MISCELLANEOUS DETAILS
A7.82	EXTERIOR - SPECIALTY AND MISCELLANEOUS DETAILS
A8.10	INTERIOR - TYPICAL PARTITIONS
A8.11	INTERIOR - PARTITION DETAILS
A8.12	INTERIOR - PARTITION DETAILS
A8.21	INTERIOR - CEILING DETAILS
A8.22	INTERIOR - SOFFIT DETAILS
A8.31	INTERIOR - DOOR AND WINDOW DETAILS
A8.41	INTERIOR - WALL FINISH DETAILS
A8.42	INTERIOR - WALL FINISH DETAILS
A8.50	INTERIOR - CASEWORK SCHEDULE
A8.51	INTERIOR - STORAGE SCHEDULE
A8.52	INTERIOR - CASEWORK DETAILS
A8.53	INTERIOR - CASEWORK DETAILS
A8.54	INTERIOR - CASEWORK DETAILS
A8.55	INTERIOR - CASEWORK DETAILS
A8.71	INTERIOR - FLOOR & RESTROOM DETAILS
A9.41	FURNITURE PLAN - WEST BUILDING GROUP
A9.42	FURNITURE PLAN - EAST BUILDING GROUP
A9.90	FINISH SCHEDULE

89

WAYFINDING

W0.1	SIGNAGE GENERAL
W1.1	SIGNAGE LOCATIONS SITE
W1.2	SIGNAGE LOCATIONS WEST BUILDING GROUP
W1.3	SIGNAGE LOCATIONS EAST BUILDING GROUP
W2.1	SIGNAGE DESIGN WAYFINDING W1-W5
W2.2	SIGNAGE DESIGN WAYFINDING W6-W14
W2.3	SIGNAGE DESIGN ROOM SIGNS R1-R2
W2.4	SIGNAGE DESIGN ROOM SIGNS R5-R8
W2.5	SIGNAGE DESIGN ROOM SIGNS R9-R12, FDC
W3.0	SIGN MESSAGES

10

STRUCTURAL

S1.01	GENERAL NOTES
S1.02	GENERAL NOTES CONTINUED AND ABBREVIATIONS
S1.03	ROOF LOADING DIAGRAMS
S1.04	FASTENING SCHEDULE
S2.31	WEST BUILDINGS - FOUNDATION / FIRST FLOOR FRAMING PLAN
S2.32	EAST BUILDINGS - FOUNDATION / FIRST FLOOR FRAMING PLAN
S2.41	WEST BUILDINGS - ROOF FRAMING PLAN
S2.42	EAST BUILDINGS - ROOF FRAMING PLAN
S3.01	WALL FRAMING ELEVATIONS - WEST BUILDING WORKSHOP/STORAGE
S3.02	WALL FRAMING ELEVATIONS - WEST BUILDING HEAD HOUSE
S3.03	WALL FRAMING ELEVATIONS - EAST BUILDING - CLASS LAB 1
S3.04	WALL FRAMING ELEVATIONS - EAST BUILDING - STUDENT/FACULTY
S3.05	WALL FRAMING ELEVATIONS - EAST BUILDING - CLASS LAB 2
S3.06	WALL FRAMING ELEVATIONS - EAST BUILDING - CLASS LAB 3
S4.01	TYPICAL CONCRETE DETAILS
S4.02	TYPICAL CONCRETE DETAILS
S4.03	TYPICAL SITE WALL DETAILS
S4.04	TYPICAL CMU/TRASH/SOIL BIN DETAILS
S4.05	FOUNDATION DETAILS
S5.01	TYPICAL WOOD DETAILS
S5.02	TYPICAL WOOD DETAILS
S5.03	TYPICAL WOOD DETAILS
S5.04	ENLARGED PLAN DETAILS
S6.01	TRUSS ELEVATIONS AND DETAILS
S6.02	TRUSS ELEVATIONS AND DETAILS
S6.03	ROOF FRAMING DETAILS
S6.04	ROOF FRAMING DETAILS
S6.05	ROOF FRAMING DETAILS
S7.01	STEEL FRAMING DETAILS
S8.01	ANCHORAGE OF EQUIPMENT

30

FIRE PROTECTION

FP0.01	FIRE SPRINKLERS GENERAL NOTES, LEGEND, AND DETAILS
FP0.02	FIRE SPRINKLERS SEISMIC BRACING AND RESTRAINT DETAILS
FP0.03	FIRE SPRINKLERS SEISMIC BRACE LOAD CALCULATIONS
FP0.04	FIRE SPRINKLERS DETAILS
FP0.05	FIRE SPRINKLERS DETAILS
FP0.06	FIRE SPRINKLERS DETAILS
FP0.07	FIRE SPRINKLERS DETAILS
FP2.01	FIIRE SPRINKLERS SITE PLAN
FP2.51	FIRE SPRINKLERS PLAN - WEST BUILIDNG GROUP
FP2.52	FIRE SPRINKLERS PLAN - EAST BUILDING GROUP
FP2.53	FIRE SPRINKLERS GREENHOUSE EXPOSURE PROTECTION DELUGE SYSTEMS
FP3.31	FIRE SPRINKLER SECTIONS
FP3.32	FIRE SPRINKLER SECTIONS

13

PLUMBING

P0.01	PLUMBING TITLE SHEET
P2.31	PLUMBING WATER FLOOR PLAN - WEST BUILDING GROUP
P2.32	PLUMBING WATER FLOOR PLAN - EAST BUILDING GROUP
P2.33	PLUMBING SANITARY FLOOR PLAN - WEST BUILDING GROUP
P2.34	PLUMBING SANITARY FLOOR PLAN - EAST BUILDING GROUP
P2.41	ROOF PLAN - WEST BUILDING GROUP
P2.42	ROOF PLAN - EAST BUILDING GROUP
P4.01	PLUMBING DETAILS
P4.02	PLUMBING DETAILS
P4.03	PLUMBING DETAILS
P4.04	PLUMBING DETAILS
P4.05	PLUMBING DETAILS
P6.01	PLUMBING SCHEDULES
P6.02	PLUMBING SANITARY AND VENT ISOMETRIC

14

MECHANICAL

M0.01	MECHANICAL TITLE SHEET
M2.31	MECHANICAL PLAN - WEST BUILDING
M2.32	MECHANICAL PLAN - EAST BUILDING
M3.32	MECHANICAL SECTIONS - EAST BUILDING
M4.01	MECHANICAL DETAILS
M4.02	MECHANICAL DETAILS
M4.03	MECHANICAL DETAILS
M4.04	MECHANICAL DETAILS
M6.01	MECHANICAL SCHEDULES
M6.02	MECHANICAL SCHEDULES
M6.03	MECHANICAL VRF PIPING & WIRING
M6.04	MECHANICAL VRF PIPING & WIRING
M6.05	MECHANICAL CONTROLS DIAGRAMS
M6.06	MECHANICAL POINTS LIST
M8.01	TITLE 24 COMPLIANCE FORMS
M8.02	TITLE 24 COMPLIANCE FORMS
M8.03	TITLE 24 COMPLIANCE FORMS
M8.04	TITLE 24 COMPLIANCE FORMS
M8.05	TITLE 24 COMPLIANCE FORMS
M8.06	TITLE 24 COMPLIANCE FORMS
M8.07	TITLE 24 COMPLIANCE FORMS
M8.08	TITLE 24 COMPLIANCE FORMS
M8.09	TITLE 24 COMPLIANCE FORMS
M8.10	TITLE 24 COMPLIANCE FORMS
M8.11	TITLE 24 COMPLIANCE FORMS
M8.12	TITLE 24 COMPLIANCE FORMS

26

ELECTRICAL

E0.01	COVER SHEET - ELECTRICAL
E2.01	SITE PLAN - ELECTRICAL
E2.11	ENLARGED SITE PLAN - ELECTRICAL
E2.31	POWER PLAN - WEST BUILDING GROUP
E2.32	POWER PLAN - EAST BUILDING GROUP
E2.51	LIGHTING PLAN - WEST BUILDING GROUP
E2.52	LIGHTING PLAN - EAST BUILDING GROUP
E3.12	ENLARGED PLANS
E4.01	SINGLE LINE DIAGRAM
E5.01	SCHEDULES
E5.02	SCHEDULES
E5.03	SCHEDULES
E6.01	DETAILS
E6.02	DETAILS
E6.03	DETAILS
E6.04	DETAILS
E6.05	DETAILS
E6.06	DETAILS
E6.07	DETAILS
E6.08	DETAILS
E7.01	SITE PHOTOMETRICS
E7.02	SITE PHOTOMETRICS - EGRESS
E7.03	SITE PHOTOMETRICS RENDERINGS
E8.01	TITLE 24
E8.02	TITLE 24
E8.03	TITLE 24
E8.04	TITLE 24
E8.05	TITLE 24
E8.06	TITLE 24
E8.07	TITLE 24

30

TECHNOLOGY

T0.01	COVER SHEET - TECHNOLOGY
T2.01	SITE PLAN - TECHNOLOGY
T2.31	TECHNOLOGY PLAN - WEST BUILDING GROUP
T2.32	TECHNOLOGY PLAN - EAST BUILDING GROUP
T3.01	TECHNOLOGY ENLARGED ROOM PLANS
T3.02	TECHNOLOGY ENLARGED ROOM PLANS
T3.03	TECHNOLOGY ENLARGED PLANS
T4.01	TECHNOLOGY DIAGRAMS
T4.02	A/V DIAGRAM
T6.01	DETAILS
T6.02	SECURITY DOOR DETAIL

11

FIRE ALARM

FA0.01	COVER SHEET - FIRE ALARM
FA2.01	SITE PLAN - FIRE ALARM
FA2.31	FIRE ALARM PLAN - WEST BUILDING GROUP
FA2.32	FIRE ALARM PLAN - EAST BUILDING GROUP
FA3.01	RISER DIAGRAM
FA4.01	SCHEDULES
FA5.01	DETAILS
FA5.02	DETAILS
FA5.03	DETAILS

9

GREENHOUSE

GH0.0	GREENHOUSE TITLE PAGE
GH1.0	GREENHOUSE TYPE 1 COLUMN & BASE PLATE LAYOUT, ROOF PLAN & BENCH LAYOUT
GH2.0	GREENHOUSE TYPE 2 COLUMN & BASE PLATE LAYOUT, ROOF PLAN & BENCH LAYOUT
GH2.1	GREENHOUSE BENCH DETAILS
GH3.0	GREENHOUSE TYPE 1 & TYPE 2 EQUIPMENT & DOOR LAYOUT
GH4.0	GREENHOUSE TYPE 1 GABLE END, SIDEWALL & SECTION ELEVATIONS (FRAMING)
GH5.0	GREENHOUSE TYPE 2 GABLE END, SIDEWALL & SECTION ELEVATIONS (FRAMING)
GH6.0	GREENHOUSE TYPE 1 GABLE, SIDEWALL & SECTION ELEVATIONS (EQUIPMENT & GLAZING)
GH7.0	GREENHOUSE TYPE 2 GABLE, SIDEWALL & SECTION ELEVATIONS (EQUIPMENT & GLAZING)
GH8.0	GREENHOUSE TYPICAL WELDED TRUSS DETAIL
GH9.0	GREENHOUSE TYP. X-ROD CONNECTION & KNEE BRACE DETAIL
GH9.1	GREENHOUSE TYP. CAP TO TRUSS ASSEMBLY, SIDEWALL DOOR FRAME, MISC. EQUIPMENT DETAILS
GH9.2	GREENHOUSE 8MM POLYCARBONATE COVERING FASTENER SPACING DETAIL
GH10.1	GREENHOUSE 8MM POLYCARBONATE ROOF & ROOF VENT INSTALL DETAILS
GH10.2	GREENHOUSE 8MM POLYCARBONATE ROOF & ROOF VENT INSTALL DETAILS
GH10.3	GREENHOUSE 8MM POLYCARBONATE ROOF & ROOF VENT INSTALL DETAILS
GH10.4	GREENHOUSE 8MM POLYCARBONATE ROOF & ROOF VENT INSTALL DETAILS
GH10.5	GREENHOUSE 8MM POLYCARBONATE ROOF & ROOF VENT INSTALL DETAILS
GH11.1	GREENHOUSE EDDG VENT DETAILS 8MM COVERING - OVERVIEW & PARTS IDENTIFICATION
GH11.2	GREENHOUSE EDDG VENT DETAILS 8MM COVERING - OVERVIEW & PARTS IDENTIFICATION
GH11.3	GREENHOUSE EDDG VENT DETAILS 8MM COVERING - OVERVIEW & PARTS IDENTIFICATION

21

TOTAL SHEETS: : 341

APPROVALS

IDENTIFICATION STAMP
DIV. OF THE STATE ARCHITECT
APP: 01-119409 INC:
REVIEWED FOR
SS ☑ FLS ☑ ACS ☑
DATE: 03/14/2022

NOLL & TAM ARCHITECTS

729 Heinz Avenue
Berkeley, CA 94710
tel 510.542.2200
fax 510.542.2201

SEAL

LICENSED ARCHITECT
CHRISTOPHER NOLL
No. C15916
REN. 12-31-23
STATE OF CALIFORNIA

PROJECT TITLE

Peralta Community College District

MERRITT COLLEGE NEW LANDSCAPE HORTICULTURE COMPLEX

12500 Campus Drive
Oakland, CA 94619

BID SET

ISSUE DATE	03/03/2022
N&T JOB NUMBER	22003

REVISIONS

	DATE	DESCRIPTION

DRAWN BY **Author** | CHECKED BY **Checker**

SHEET TITLE

SHEET INDEX

SHEET NUMBER

G0.01

3/3/2022 3:16:36 PM BIM 360://PCCD Merritt Horticulture/Merritt Horticulture_2020.rvt

ILLUSTRATIVE VIEW - NOT FOR CONSTRUCTION

GENERAL NOTES

1. WORK SHALL MEET OR EXCEED THE MINIMUM STANDARDS OF APPLICABLE CODES AND ORDINANCES AND SHALL NOT BE CONSTRUED TO PERMIT WORK NOT CONFORMING TO THOSE CODES.

2. CONSTRUCTION MATERIALS AND WORKMANSHIP SHALL CONFORM TO THE PROJECT SPECIFICATIONS.

3. VERIFY ALL DIMENSIONS AND INSPECT CONDITION OF IN-PLACE CONSTRUCTION BEFORE STARTING WORK. PROCEEDING WITH THE WORK SHALL CONSTITUTE ACCEPTANCE OF CONDITIONS.

4. CONTRACTOR SHALL EXAMINE THE DOCUMENTS AND SHALL NOTIFY THE ARCHITECT OF ANY DISCREPANCIES PRIOR TO THE START OF WORK.

5. THE CONTRACTOR AND ALL SUBCONTRACTORS ARE REQUIRED TO VISIT AND INSPECT THE SITE PRIOR TO CONSTRUCTION OR ORDERING ANY MATERIALS.

6. ITEMS MARKED "NIC" ARE NOT IN CONTRACT. SUCH ITEMS ARE INCLUDED IN THE DOCUMENTS WHEN CONTRACTOR'S COORDINATION IS REQUIRED OR FOR CLARIFICATION OF PROJECT LIMITS.

7. DETAILS MARKED "TYPICAL" SHALL APPLY IN ALL SIMILAR CASES, UON.

8. DIMENSIONS
   a. IN NO CASE SHALL WORKING DIMENSIONS BE SCALED FROM THE DRAWINGS.
   b. ALL DIMENSIONS SHALL BE VERIFIED IN THE FIELD BY THE CONTRACTOR PRIOR TO PROCEEDING WITH CONSTRUCTION.
   c. ELEVATION MARKERS REFER TO THE TOP OF THE SLAB ON GRADE DATUM. FLOOR AND ROOF ELEVATIONS NOTED ARE TO TOP OF STRUCTURAL ASSEMBLY, UON. WALL HEIGHT ELEVATIONS ARE TO TOP OF FRAMING, UON.
   d. STUD WALLS: ALL DIMENSIONS ARE TO THE FACE OF STUD, UON.
   e. CEILING HEIGHT DIMENSIONS: ARE FROM FINISHED FLOOR TO FINISHED FACE OF CEILING, UON.
   f. OPENINGS: DOOR DIMENSIONS ARE TO THE EDGE OF DOOR PANEL, UON. LOCATE UNDIMENSIONED DOORS 4" FROM FINISHED FACE OF INTERSECTING PARTITION TO HINGE EDGE OF DOOR PANEL.
   g. ALL DIMENSIONS NOTED "CLEAR" OR "CLR" INDICATE DIMENSION FROM FACE OF FINISH TO FACE OF FINISH OR OBJECT, UON AND MUST BE STRICTLY MAINTAINED.
   h. ALL DIMENSIONS NOTED "VERIFY" OR "VIF" ARE TO BE CHECKED BY THE CONTRACTOR PRIOR TO CONSTRUCTION. ANY VARIANCE FROM THE REQUIRED DIMENSIONS MUST BE BROUGHT IMMEDIATELY TO THE ARCHITECT'S ATTENTION.
   i. COORDINATE WITH EQUIPMENT CONTRACTORS FOR ROUGH-IN DIMENSIONS AND TEMPLATES.

9. EXISTING BUILDING AND SITE DOCUMENTATION IS BASED ON AVAILABLE DOCUMENTATION PROVIDED BY THE OWNER AND LIMITED SITE OBSERVATION INVESTIGATIONS. AS BUILT CONDITIONS MAY VARY. CONTRACTOR IS TO USE CAUTION IN DEMOLITION AND IS TO NOTIFY ARCHITECT IMMEDIATELY IF ANY VARIATIONS OR DISCREPANCIES ARE UNCOVERED.

10. CONTRACTOR TO MAINTAIN SAFE & COMPLIANT EGRESS FROM OCCUPIED AREAS TO THE PUBLIC WAY OR TO SAFE DISPERSAL AREAS DURING CONSTRUCTION ACTIVITIES.

11. THE DRAWINGS INDICATE THE GENERAL EXTENT OF CONSTRUCTION NECESSARY FOR THE WORK BUT ARE NOT INTENDED TO BE ALL-INCLUSIVE. ALL DEMO AND NEW WORK NECESSARY FOR A COMPLETED PROJECT IN ACCORDANCE W/ THE CONTRACT DOCUMENTS SHALL BE INCLUDED REGARDLESS OF WHETHER OR NOT SHOWN IN THE CONTRACT DOCUMENTS.

12. PROVIDE TEMPORARY BARRIERS FOR SAFETY, SECURITY & CLEANLINESS. REFER TO SHEET G1.51 FOR ADDITIONAL REQUIREMENTS.

13. FIRE SAFETY DURING CONSTRUCTION AND DEMOLITION WILL BE ENFORCED IN ACCORDANCE WITH CBC AND CFC CHAPTER 33.

3/3/2022 10:59:09 AM BIM 360://PCCD Merritt Horticulture/Merritt Horticulture_2020.rvt

APPROVALS

IDENTIFICATION STAMP
DIV. OF THE STATE ARCHITECT
APP: 01-119409 INC:
REVIEWED FOR
SS ☑ FLS ☑ ACS ☑
DATE: 03/14/2022

NOLL & TAM ARCHITECTS
729 Heinz Avenue
Berkeley, CA 94710
tel 510.542.2200
fax 510.542.2201

SEAL

LICENSED ARCHITECT
CHRISTOPHER NOLL
No. C15916
REN. 12-31-23
STATE OF CALIFORNIA

PROJECT TITLE

Peralta Community College District
MERRITT COLLEGE NEW LANDSCAPE HORTICULTURE COMPLEX

12500 Campus Drive
Oakland, CA 94619

BID SET

ISSUE DATE 03/03/2022
N&T JOB NUMBER 22003

REVISIONS

	DATE	DESCRIPTION

DRAWN BY Author | CHECKED BY Checker

SHEET TITLE
GENERAL NOTES

SHEET NUMBER
G0.02

1 G1.01 **CAMPUS PLAN**
NOT TO SCALE

BUILDING ID	DSA APPL #
BUILDING A	01-107882, 29582, 45863, 63957
BUILDING B	01-113309
BUILDING D	29582, 42467, 63957
BUILDING E	01-110992, 29582, 63957
BUILDING F	01-106582, 29582, 45863, 63957
BUILDING L	01-112497, 01-113038, 01-101617, 01-111545, 01-110378, 29582, 36801, 42467, 63957
BUILDING P	01-106892, 01-110429, 29582, 42467, 52113, 63957
BUILDING Q	01-110536, 29582, 42467, 52113, 63957
BUILDING R	01-106892, 01-110429, 29582, 42467, 52113, 63957
CHILD CARE	45863, 63957
PARKING LOT C	01-111488
CAMPUS-WIDE IMPROVEMENTS	01-113074, 01-106947, 01-102079, 01-102524, 01-106083, 01-110711, 01-110042, 01-112497, 01-112534, 01-112724, 63957

PARKING COUNT									
	MAIN CAMPUS - EXISTING								PROJECT SITE - PROPOSED
	LOT A	LOT C	LOT D	LOT E	LOT F	LOT G	LOT 1	TOTAL- EXISTING	
REGULAR	62	354	123	107	6	75	6	733	42
ACCESSIBLE	7	21	9	0	0	4	4	45	3
MOTORCYCLE	0	3	35	0	0	0	0	38	0
TOTAL								816	45

NOTES:
1. EXISTING PARKING COUNT DATA IS MATCHED FROM DSA APPLICATION #01-119166.
2. REFER TO SHEET G1.11 FOR ADDL PARKING TABULATION INFO FOR THIS PROJECT.

THIS CAMPUS IS LOCATED WITHIN THE WILDLAND / URBAN INTERFACE.

LEGEND

- (E) FIRE DEPT ACCESS ROAD
- (E) FH — (E) FIRE HYDRANT
- (E) PROPERTY LINE
- PROJECT AREA

APPROVALS

IDENTIFICATION STAMP
DIV. OF THE STATE ARCHITECT
APP: 01-119409 INC:
REVIEWED FOR
SS ☑ FLS ☑ ACS ☑
DATE: 03/14/2022

NOLL & TAM ARCHITECTS
729 Heinz Avenue
Berkeley, CA 94710
tel 510.542.2200
fax 510.542.2201

SEAL

LICENSED ARCHITECT
CHRISTOPHER NOLL
No. C15916
REN. 12-31-23
STATE OF CALIFORNIA

PROJECT TITLE

Peralta Community College District
MERRITT COLLEGE NEW LANDSCAPE HORTICULTURE COMPLEX

12500 Campus Drive
Oakland, CA 94619

BID SET

ISSUE DATE 03/03/2022
N&T JOB NUMBER 22003

REVISIONS

#	DATE	DESCRIPTION

DRAWN BY Author | CHECKED BY Checker

SHEET TITLE
CAMPUS PLAN

SHEET NUMBER
G1.01

3/3/2022 10:59:22 AM BIM 360://PCCD Merritt Horticulture/Merritt Horticulture_2020.rvt

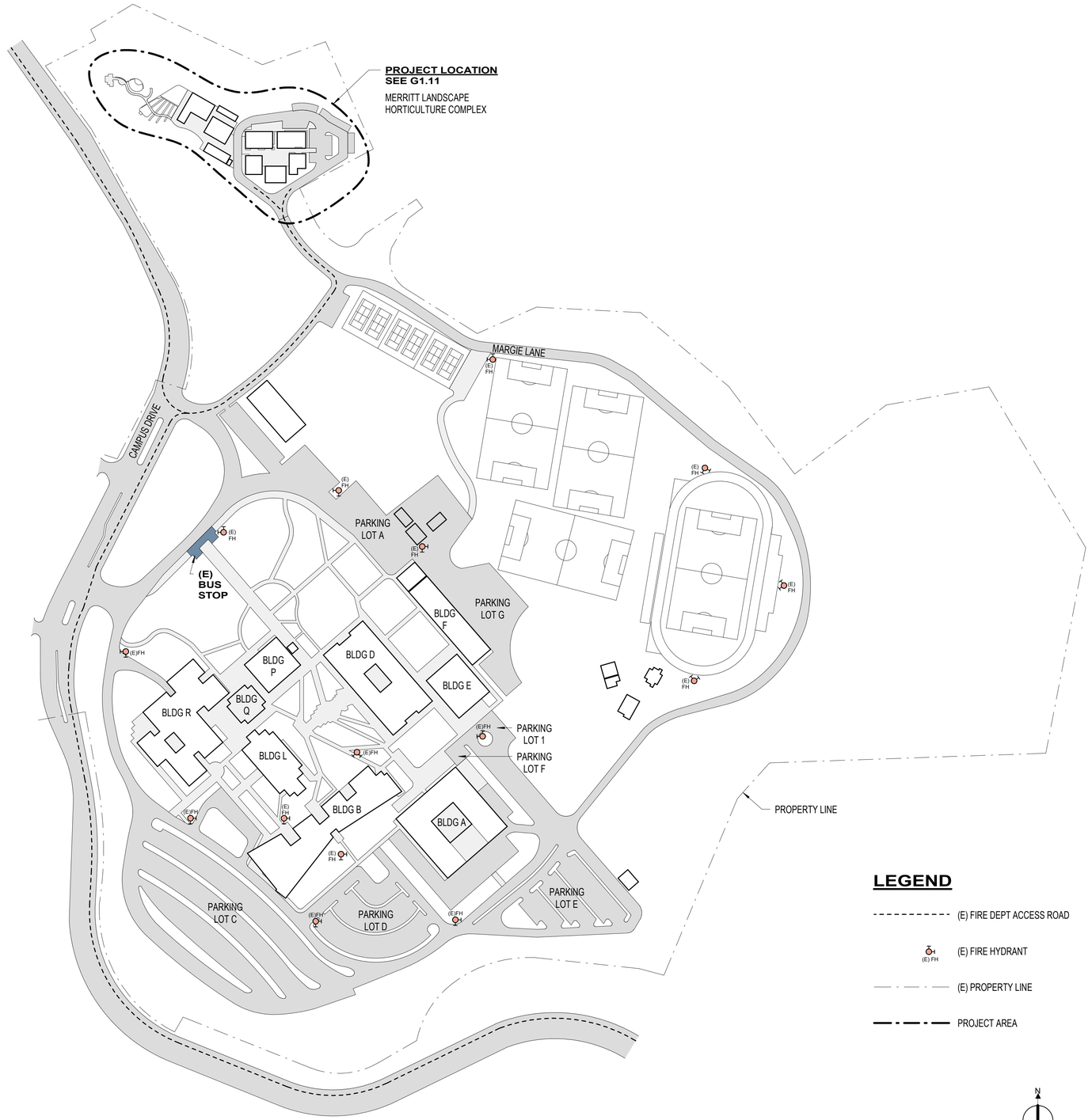

CAMPUS PLAN
1" = 160'-0"

3/3/2022 10:59:40 AM BIM 360://PCCD Merritt Horticulture/Merritt Horticulture_2020.rvt

DSA 810

FIRE & LIFE SAFETY SITE CONDITIONS SUBMITTAL

Division of the State Architect (DSA) documents referenced within this publication are available on the DSA Forms or DSA Publications webpages.

To facilitate the Division of the State Architect's (DSA) fire and life safety plan review of project site conditions, DSA requires the design professional to provide the following information at time of project submittal for projects consisting of construction of a new campus, construction of new building(s), additions to existing buildings, and for site alternate design means for fire department emergency vehicle access, and fire suppression water supply.

Information associated with compliance items 1 through 3 below is to be provided for all project types indicated above. Information associated with items 4 through 7 is to be completed when an alternate means is utilized. Acknowledgement by the school district and signature from the Local Fire Authority (LFA) is only required when an alternate design means is being requested.

The Project Information and Fire & Life Safety Information sections are to be completed for all projects and imaged onto the fire access site plan. When an alternate design/means is proposed, all sections on pages 1 and 2 are to be completed and imaged on the fire access site plan.

For additional information refer to the instructions at the end of this form and DSA Policy *PL 09-01: Fire Flow for Buildings*.

PROJECT INFORMATION
School District/Owner: PERALTA COMMUNITY COLLEGE DISTRICT
Project Name/School: MERRITT COLLEGE LANDSCAPE HORTICULTURE COMPLEX
Project Address: 12500 CAMPUS DRIVE, OAKLAND CA 94616

FIRE & LIFE SAFETY INFORMATION				
1.	Has a fire hydrant flow test been performed within the past 12 months? *(If yes, provide a copy of the test data.)*	Yes ☑		No ☐
2.	Was the fire hydrant water flow test performed as part of this LFA review?	Yes ☑		No ☐
3.	Is the project located within a designated fire hazard severity zone (FHSZ) as established by Cal-Fire? *(If yes, indicate FHSZ classification below.)* VHFHSZ in LRA	Yes ☑		No ☐
	Refer to the following website for FHSZ locations: http://egis.fire.ca.gov/FHSZ/	Moderate ☐	High ☐	Very High ☑
	Wildland Interface Area (WIFA) *(If any designations are checked, project design must meet the requirements of CBC Chapter 7A.)*			WIFA ☑

CONDITION MEANS AND METHODS RESOLUTION		**ALTERNATE ACCEPTED**			
		Yes	No	N/A	N/R
4.	Emergency vehicle access roadways do not meet CFC requirements.			✔ LL	
4a.	**Acceptable Alternate:** Emergency vehicle and personnel access as proposed by the project architect is acceptable for providing fire suppression and protection of life and property.	✔ LL			
5.	**Fire Hydrants:** Number and spacing does not meet CFC requirements.			✔ LL	
5a.	**Acceptable Alternate:** Number of fire hydrants and spacing as proposed by the project architect is acceptable for fire suppression and protection of life and property.	✔ LL			
6.	**Fire Hydrants:** Water flow and pressure are less than CFC minimum.			✔	
6a.	**Acceptable Alternate:** The available flow and pressure is acceptable for providing fire suppression and protection of life and property.				
7.	Location of fire department connection(s) serving fire sprinkler systems or standpipe systems does not meet CFC requirements.			✔	
7a.	**Acceptable Alternate:** The location of fire department connection serving the fire sprinkler system and/or standpipe system is acceptable for providing fire suppression and protection of life and property.				

School District Acceptance of Acceptable Design Alternates

By signing this form, the school district acknowledges and accepts the proposed design as an alternative to California Building Code (CBC) and California Fire Code (CFC) minimum requirements, as indicated by one or more of the conditions indicated at items 4a, 5a, 6a or 7a, for providing fire and life safety protection of life and property.

Accepted by: Atheria Smith Title: Interim Vice Chancellor of General Sevices

Signature: Atheria Smith (Feb 24, 2022 12:38 PST) Date: 02/24/2022

LOCAL FIRE AUTHORITY (LFA) INFORMATION			
LFA Agency Name:	OAKLAND FIRE DEPARTMENT		
LFA Review Official:	Anita Tsui / Ly Ly Lam		
Title:	Fire Protection Engineer	Work Phone:	510-238-3866/ 510-238-6675
Work Email:	atsui@oaklandca.gov / LLam@oaklandca.gov		

LFA Reviewer's Signature: Date: 03/04/2021/ 02.19.2022

OFD 2021-00192 Anita Tsui Ly Ly Lam Digitally signed by Ly Ly Lam Date: 2022.02.19 14:24:29-08'00'

APPROVALS

IDENTIFICATION STAMP
DIV. OF THE STATE ARCHITECT
APP: 01-119409 INC:
REVIEWED FOR
SS ☑ FLS ☑ ACS ☑
DATE: 03/14/2022

NOLL & TAM ARCHITECTS
729 Heinz Avenue
Berkeley, CA 94710
tel 510.542.2200
fax 510.542.2201

SEAL

LICENSED ARCHITECT
CHRISTOPHER NOLL
No. C15916
REN. 12-31-23
STATE OF CALIFORNIA

PROJECT TITLE

Peralta Community College District
MERRITT COLLEGE NEW LANDSCAPE HORTICULTURE COMPLEX

12500 Campus Drive
Oakland, CA 94619

BID SET

ISSUE DATE 03/03/2022
N&T JOB NUMBER 22003
REVISIONS

#	DATE	DESCRIPTION

DRAWN BY **Author** CHECKED BY **Checker**
SHEET TITLE
CAMPUS PLAN- DSA 810

SHEET NUMBER
G1.02

CODE NOTES

EGRESS

CBC SECTION 1028.5, EXCEPTION
ACCESS TO A PUBLIC WAY
Where exit discharge direct access to a public way cannot be provided, a safe dispersal area shall be provided. Size to accommodate not less than 5 sqft for each person.
5 sqft/occ x 256 total occupants (see G1.31)= 1,280 sqft

EMERGENCY RESPONDER INFORMATION

PATHWAYS, CONDUITS AND CONNECTIVITY FOR EMERGENCY RESPONDER INFORMATION COMMUNICATIONS SYSTEM IS FULLY DOCUMENTED ON THESE PLANS. SED, STED.
DEVICES AND HEAD-END COMMUNICATIONS EQUIPMENT PROVIDED BY DISTRICT UNDER A SEPARATE CONTRACT.

PARKING

CBC SECTION 11B-208.1, TABLE 11B-208.2
PARKING SPACES
For the purposes of this section, electric vehicle charging stations are not parking spaces.
Required Accessible Spaces (26 to 50 total): 2

CBC SECTION 11B-208.2.4
VAN PARKING SPACES
For every six or fraction of six required accessible parking spaces, at least one shall be a van parking space.

CBC TABLE 11B-228.3.2.1
ELECTRIC VEHICLE CHARGING STATION (EVCS) FOR PUBLIC USE AND COMMON USE
Required Accessible EVCS (1 to 4 total EVCS): 1 van accessible

CALGREEN SECTION 5.106.5.3, TABLE 5.106.5.3.3
EV CHARGING SPACE CALCULATION
Construction shall comply with this section to facilitate future installation of electric vehicle supply equipment (EVSE).
Required EV Charging Space (26 to 50 total): 2

TOTAL PARKING SPACES PROVIDED: 45 Total Spaces

PARKING SPACES REQUIRED & PROVIDED:
1 Accessible
2 Van Accessible
1 Regular (Future Std acc EVCS)
1 Regular (Future Van acc EVCS)
40 Regular

ACCESSIBLE PATH OF TRAVEL

ACCESSIBLE PATH OF TRAVEL AS INDICATED ON PLAN IS A CONTINUOUS, BARRIER FREE ACCESS ROUTE WITHOUT ANY ABRUPT LEVEL CHANGES EXCEEDING 1/2" BEVELED AT 1:2 MAX SLOPE, OR VERTICAL CHANGES NOT EXCEEDING 1/4" MAX AND AT LEAST 48" WIDE PER CBC SECTION 11B-403.5.1. SURFACE IS SLIP RESISTANT, STABLE, FIRM, AND SMOOTH. CROSS SLOPE DOES NOT EXCEED 1:48 AND SLOPE IN THE DIRECTION OF TRAVEL IS LESS THAN 1:20 UNLESS OTHERWISE INDICATED. CONTRACTOR SHALL VERIFY THAT ALL BARRIERS IN THE PATH OF TRAVEL HAVE BEEN REMOVED OR WILL BE REMOVED UNDER THIS PROJECT, AND PATH OF TRAVEL COMPLIES WITH CBC.
ALL PATHS OF TRAVEL SHALL BE ACCESSIBLE.

SEE G1.01 FOR (E) BUS STOP LOCATION AT MAIN CAMPUS

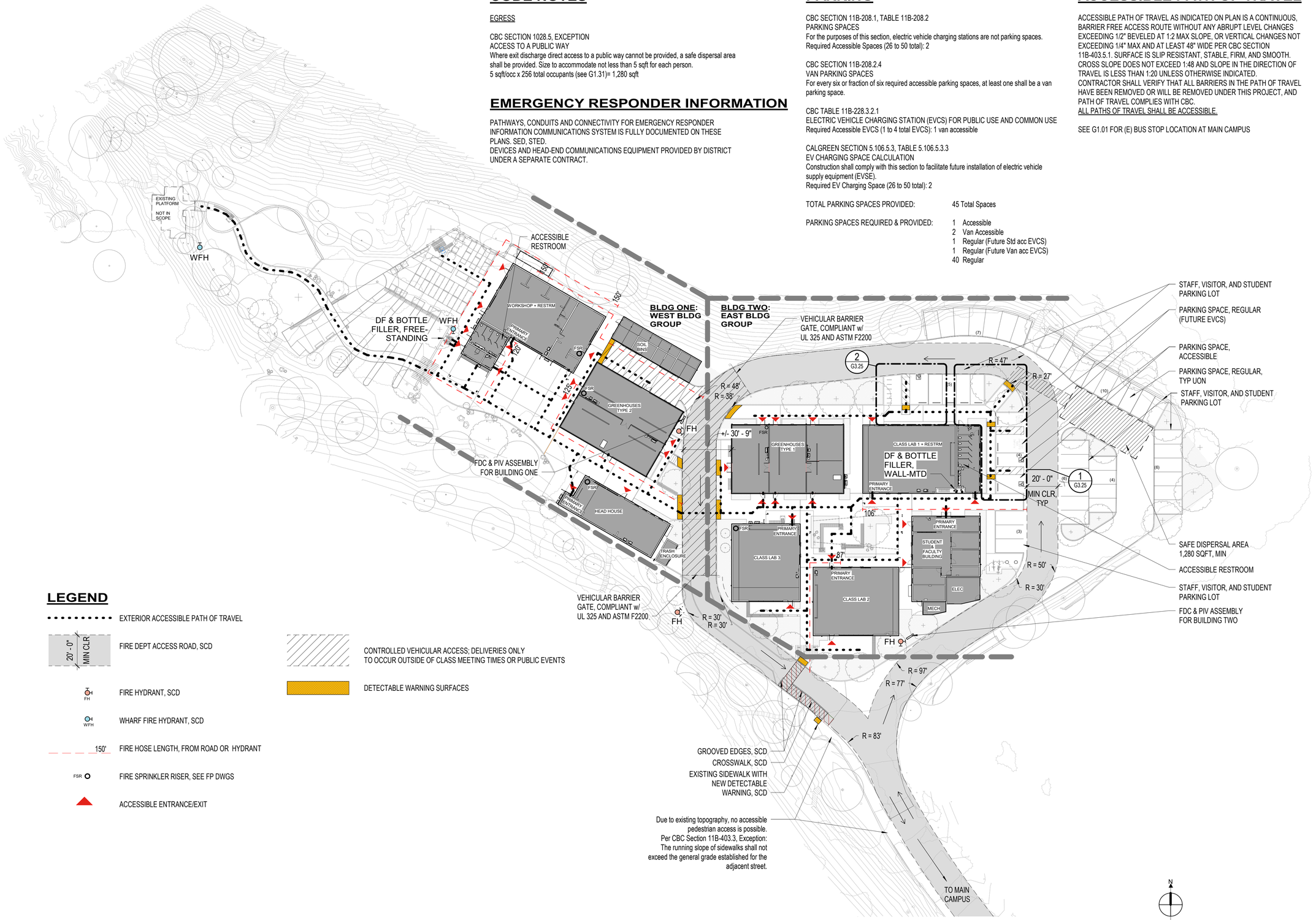

LEGEND

- EXTERIOR ACCESSIBLE PATH OF TRAVEL
- 20' - 0" MIN CLR — FIRE DEPT ACCESS ROAD, SCD
- FH — FIRE HYDRANT, SCD
- WFH — WHARF FIRE HYDRANT, SCD
- 150' — FIRE HOSE LENGTH, FROM ROAD OR HYDRANT
- FSR — FIRE SPRINKLER RISER, SEE FP DWGS
- ACCESSIBLE ENTRANCE/EXIT
- CONTROLLED VEHICULAR ACCESS; DELIVERIES ONLY TO OCCUR OUTSIDE OF CLASS MEETING TIMES OR PUBLIC EVENTS
- DETECTABLE WARNING SURFACES

1 G1.11 **SITE PLAN - CODE**
1" = 30'-0"

APPROVALS

IDENTIFICATION STAMP
DIV. OF THE STATE ARCHITECT
APP: 01-119409 INC:
REVIEWED FOR
SS ☑ FLS ☑ ACS ☑
DATE: 03/14/2022

NOLL & TAM ARCHITECTS
729 Heinz Avenue
Berkeley, CA 94710
tel 510.542.2200
fax 510.542.2201

SEAL

LICENSED ARCHITECT
CHRISTOPHER NOLL
No. C15916
REN. 12-31-23
STATE OF CALIFORNIA

PROJECT TITLE

Peralta Community College District
MERRITT COLLEGE NEW LANDSCAPE HORTICULTURE COMPLEX

12500 Campus Drive
Oakland, CA 94619

BID SET

ISSUE DATE 03/03/2022
N&T JOB NUMBER 22003

REVISIONS

	DATE	DESCRIPTION

DRAWN BY **Author** CHECKED BY **Checker**

SHEET TITLE
SITE ACCESS PLAN

SHEET NUMBER
G1.11

3/3/2022 10:59:47 AM BIM 360://PCCD Merritt Horticulture/Merritt Horticulture_2020.rvt

CODE SUMMARY

PROJECT ADDRESS: 12500 CAMPUS DRIVE
OAKLAND CA 94619

CONSTRUCTION TYPE: V-B, FULLY SPRINKLERED

OCCUPANCIES: BLDG 1: B, S-1, U
BLDG 2: A-3, B, U

BUILDING HEIGHT: BLDG 1: 20' - 11"
BLDG 2: 24' - 3"

STORIES: BLDG 1: 1 STORY
BLDG 2: 1 STORY

BUILDING AREA:	BUILDING 1	HEAD HOUSE	1,601
		WORKSHOP + RESTRM	3,895
		GREENHOUSES	3,001
		SOIL BINS	872
		TRASH ENCLOSURE	108
			9,477
	BUILDING 2	STUDENT & FACULTY	1,938
		CLASS LAB 1 + RESTRM	3,209
		CLASS LAB 2	2,292
		CLASS LAB 3	2,077
		GREENHOUSES	3,095
		BREEZEWAY	2,376
			14,987
	TOTAL PROPOSED		24,464 GROSS SQFT

NOTE: REFER TO SHEET G1.31 FOR AREA AND OCCUPANCY OF INDIVIDUAL SPACES.

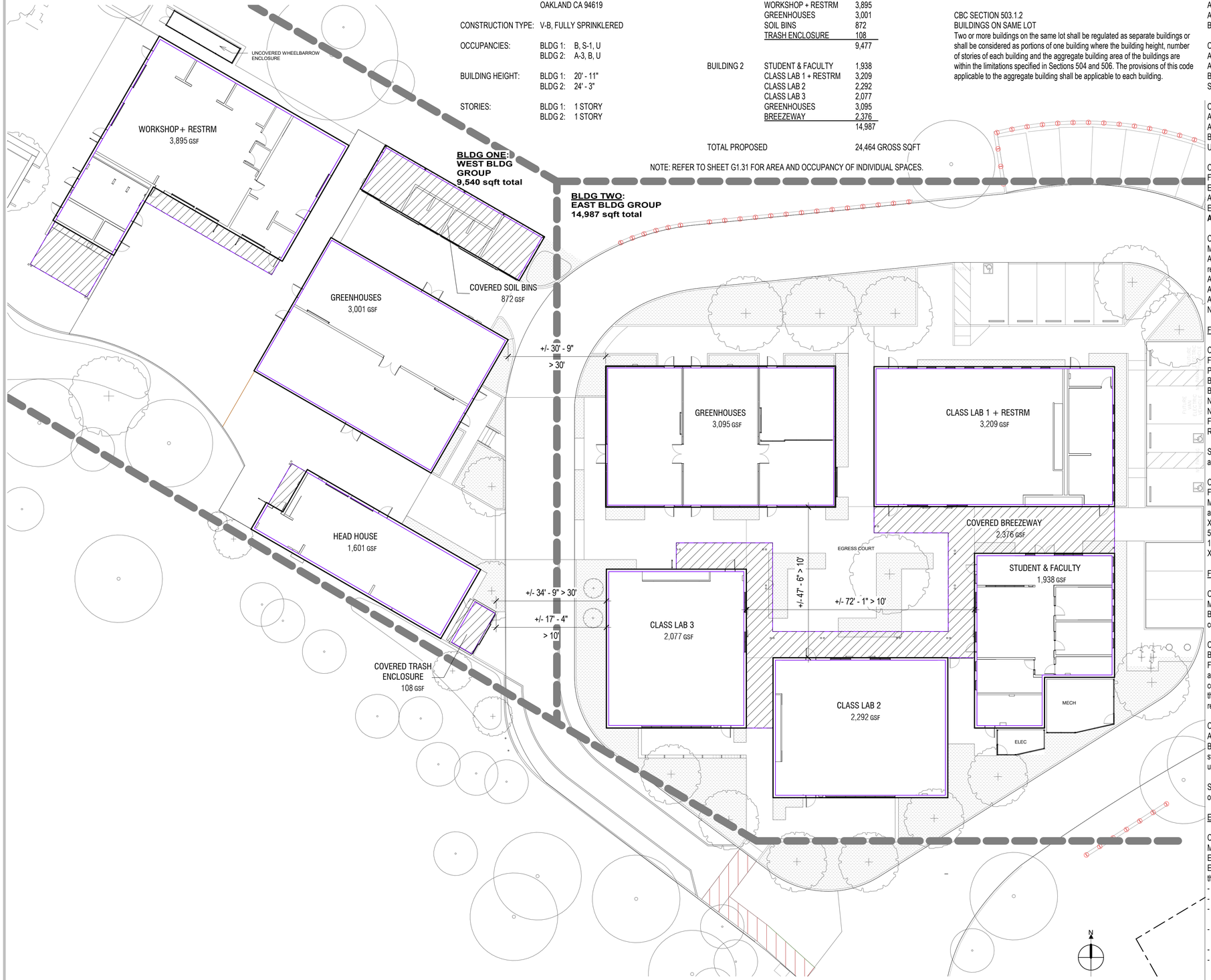

1 G1.21 **TYPE OF CONSTRUCTION & ALLOWABLE AREA**
1/16" = 1'-0"

CODE NOTES

BUILDING HEIGHT, STORIES, AREA

CBC SECTION 503.1.2
BUILDINGS ON SAME LOT
Two or more buildings on the same lot shall be regulated as separate buildings or shall be considered as portions of one building where the building height, number of stories of each building and the aggregate building area of the buildings are within the limitations specified in Sections 504 and 506. The provisions of this code applicable to the aggregate building shall be applicable to each building.

CBC SECTION/TABLE 504.3
ALLOWABLE BUILDING HEIGHT
A Occupancy: 60 feet w/o area increase, 40 feet w/ area increase
B, S, U Occupancy: 60 feet

CBC SECTION/TABLE 504.4
ALLOWABLE NUMBER OF STORIES
A-3 Occupancy: 2 stories w/o area increase, 1 story w/ area increase
B Occupancy: 3 stories
S-1, U Occupancy: 2 stories

CBC SECTION/TABLE 506.2
ALLOWABLE BUILDING AREA
A-3 Occupancy: 24,000 sqft
B, S-1 Occupancy: 36,000 sqft
U Occupancy: 22,000 sqft

CBC SECTION 506.3
FRONTAGE INCREASE
EQUATION 5-5
Area Factor Increase= (1/1 - 0.25) x 30/30= 0.75
EQUATION 5-1
Allowable Area= 22,000 + (5,500 x 0.75)= 26,125 sqft

CBC SECTION 508.1; CBC SECTION 508.3
MIXED USE AND OCCUPANCY; NONSEPARATED OCCUPANCIES
Allowable building area, height, and number of stories shall be based on the most restrictive allowances for the occupancy groups under consideration.
Allowable Building Height (A occ w/ area increase): 40 feet > Proposed 24'-3" max
Allowable Number of Stories (A-3 occ w/ area increase): 1 story = Proposed 1 story
Allowable Building Area (U occ): 26,125 sqft > Proposed 24,464 sqft
No separation is required between nonseparated occupancies.

FIRE RESISTANCE

CBC TABLE 601
FIRE-RESISTANCE RATING REQUIREMENTS (HOURS)

Primary structural frame:	0
Bearing walls exterior:	0
Bearing walls interior:	0
Non-bearing exterior:	See Table 602
Non-bearing interior:	0
Floor construction:	0
Roof construction:	0

See CBC Chapter 7A notes below for additional fire resistance requirements at exterior assemblies.

CBC TABLE 602
FIRE-RESISTANCE RATING REQUIREMENTS FOR EXTERIOR WALLS
Measure at right angle from building face to: closest interior lot line; centerline street, alley, public way; or imaginary line betw two bldgs on lot.

X < 5 feet:	S-1 occ 2 hour; A, B, U occ 1 hour
5 feet ≤ X < 10 feet:	1 hour
10 feet ≤ X < 30 feet:	0 hour
X ≥30 feet :	0 hour

FIRE AND SMOKE PROTECTION

CBC SECTION 705.2, EXCEPTION
MINIMUM DISTANCE OF PROJECTION
Buildings on the same lot and considered as portions of one building are not required to comply with this section for projections between the buildings.

CBC SECTION 705.3, EXCEPTION 1
BUILDINGS ON THE SAME LOT
For the purposes of determining the required wall and opening protection, projections and roof-covering requirements, two or more buildings on the same lot shall be considered as portions of one building if the aggregate area of such buildings is within the limits specified in Chapter 5 for a single building, based on the area for the most restrictive occupancy.

CBC SECTION 705.8.1, EXCEPTION 2
ALLOWABLE AREA OF OPENINGS
Buildings whose exterior bearing walls, exterior nonbearing walls and exterior primary structural frame are not required to be fire-resistance rated shall be permitted to have unlimited unprotected openings.

See CBC Chapter 7A notes below for additional fire resistance requirements at openings.

EXTERIOR WILDFIRE EXPOSURE

CBC CHAPTER 7A
MATERIALS AND CONSTRUCTION METHODS FOR EXTERIOR WILDFIRE EXPOSURE
Exterior building materials, systems and/or assemblies shall comply with provisions of this chapter.
- Roof coverings are fire-retardant, Class A. (Section 705A, 1501.1.1)
- Exterior wall covering materials are noncombustible. (Section 707A.3)
- Solid wood rafters and blocking at exposed underside of open roof eaves are 2" nominal minimum. (Section 707A.4)
- Exterior windows, skylights, and glazed doors are constructed of dual-pane, tempered glazing. (Section 708A.2.1)
- Exterior exposure protection sprinkler systems provided at greenhouses.
- Interior of all covered structures are fully sprinklered.

APPROVALS

IDENTIFICATION STAMP
DIV. OF THE STATE ARCHITECT
APP: 01-119409 INC:
REVIEWED FOR
SS ☑ FLS ☑ ACS ☑
DATE: 03/14/2022

NOLL & TAM ARCHITECTS
729 Heinz Avenue
Berkeley, CA 94710
tel 510.542.2200
fax 510.542.2201

SEAL

LICENSED ARCHITECT
CHRISTOPHER NOLL
No. C15916
REN. 12-31-23
STATE OF CALIFORNIA

PROJECT TITLE

Peralta Community College District
MERRITT COLLEGE NEW LANDSCAPE HORTICULTURE COMPLEX

12500 Campus Drive
Oakland, CA 94619

BID SET

ISSUE DATE 03/03/2022
N&T JOB NUMBER 22003

REVISIONS

	DATE	DESCRIPTION

DRAWN BY Author | CHECKED BY Checker

SHEET TITLE
CODE SUMMARY PLAN

SHEET NUMBER
G1.21

3/3/2022 10:59:51 AM BIM 360://PCCD Merritt Horticulture/Merritt Horticulture_2020.rvt

AREA SCHEDULE - OCCUPANT LOAD				
OCC Group	OCC Group Description	Area	OCC Load Factor	Total Occupants
B	ACCESSORY STORAGE, EQUIPMENT	52 SF	300 SF	1
B	VOCATIONAL- B	3337 SF	50 SF	68
S-1	STORAGE	895 SF	300 SF	4
U	UTILITY	3001 SF	300 SF	12
BUILDING ONE		7285 SF		85
A-3	VOCATIONAL- A	6862 SF	50 SF	138
B	ACCESSORY STORAGE, EQUIPMENT	404 SF	300 SF	3
B	LIBRARY- READING	400 SF	50 SF	9
B	OFFICE	1221 SF	150 SF	9
U	UTILITY	3099 SF	300 SF	12
BUILDING TWO		11986 SF		171
SITE TOTAL		19272 SF		256

1 G1.31 **OCCUPANCY / EXITING**
1/16" = 1'-0"

OCCUPANCY TYPE

OCCUPANT LOAD FACTORS PER CBC TABLE 1004.5

- A-3 VOCATIONAL AREA (50 SQFT NET/OCC)
- B ACCESSORY STORAGE / EQUIPMENT (300 SQFT GROSS/OCC)
- B LIBRARY- READING ROOM (50 SQFT NET/OCC)
- B OFFICE AREA (150 SQFT GROSS/OCC)
- B VOCATIONAL AREA (50 SQFT NET/OCC)
- S-1 STORAGE (300 SQFT GROSS/OCC)
- U UTILITY (300 SQFT GROSS/OCC)
- ACCESSORY AREA (NO OCCUPANT LOAD)

LEGEND

ASSEMBLY- UNCONCENTRATED
4,000 SF
A-3 200 OLF
20 OCC

- OCCUPANCY TYPE DESCRIPTION
- TOTAL ROOM AREA IN SQUARE FEET
- OCCUPANT LOAD FACTOR, PER CBC TABLE 1004.5
- TOTAL OCCUPANT LOAD
- OCCUPANCY GROUP, PER CBC SECTION 302
- 10' — EXIT ACCESS TRAVEL DISTANCE, PER CBC TABLE 1017.2
- 42 — EXIT OR EXIT ACCESS w/ OCCUPANT COUNT
- 4 — NUMBER OF OCCUPANTS EXITING A SPACE
- FEC — FIRE EXTINGUISHER CABINET
- EXIT SIGNS

CODE NOTES

FIRE PROTECTION

CBC TABLE 906.3(1)
FIRE EXTINGUISHERS FOR CLASS A HAZARDS
Ordinary (Moderate) Hazard Occupancy
Minimum-rated single extinguisher: 2-A
Maximum floor area per unit of A: 1,500 sqft
Maximum floor area per extinguisher: 11,250 sqft
Maximum travel distance to extinguisher: 75'

EGRESS

CBC TABLE 1006.2.1
SPACES w/ ONE EXIT OR EXIT ACCESS DOORWAY
A, U Occupancy with less than 50 occupants & sprinkler system, 75' max common path
B Occupancy with less than 50 occupants & sprinkler system, 100' max common path
S Occupancy with less than 30 occupants & sprinkler system, 100' max common path

CBC SECTION 1007.1.1, EXCEPTION 2
EXIT DOORWAY CONFIGURATION
Where two exits are required, they shall be placed not less than 1/3 the distance of the maximum overall diagonal dimension of the building or area being served where equipped throughout with an automatic sprinkler system.

CBC SECTION 1010.1.2.1
DIRECTION OF SWING
Swinging doors shall swing in the direction of egress travel where serving a room or area containing an occupant load of 50 or more.

CBC SECTION 1010.1.10
PANIC AND FIRE EXIT HARDWARE
Doors serving an assembly occupancy with occupant load of 50 or more shall have panic or fire exit hardware.

CBC SECTION 1013.1, EXCEPTION 1
EXIT SIGNS, WHERE REQUIRED
Exit signs are not required in rooms or areas that require only one exit or exit access.

CBC TABLE 1017.2
EXIT ACCESS TRAVEL DISTANCE
A, S-1 with sprinkler: 250'
B with sprinkler : 300'
U with sprinkler: 400'

CBC TABLE 1020.1
CORRIDOR FIRE-RESISTANCE RATING
A, B, S, U with more than 30 occupants and sprinkler system: 0 hr

CBC SECTION 1020.4
CORRIDOR DEAD ENDS
Limit to dead end corridor length does not apply where only one exit or exit access is required.

CBC SECTION 1028.4
EGRESS COURTS
Egress courts shall comply with the requirements of this section.

APPROVALS

IDENTIFICATION STAMP
DIV. OF THE STATE ARCHITECT
APP: 01-119409 INC:
REVIEWED FOR
SS ☑ FLS ☑ ACS ☑
DATE: 03/14/2022

NOLL & TAM ARCHITECTS
729 Heinz Avenue
Berkeley, CA 94710
tel 510.542.2200
fax 510.542.2201

SEAL

LICENSED ARCHITECT
CHRISTOPHER NOLL
No. C15916
REN. 12-31-23
STATE OF CALIFORNIA

PROJECT TITLE

Peralta Community College District
MERRITT COLLEGE NEW LANDSCAPE HORTICULTURE COMPLEX

12500 Campus Drive
Oakland, CA 94619

BID SET

ISSUE DATE 03/03/2022
N&T JOB NUMBER 22003

REVISIONS

	DATE	DESCRIPTION

DRAWN BY Author | CHECKED BY Checker

SHEET TITLE
CODE OCCUPANCY & EXIT PLANS

SHEET NUMBER
G1.31

3/3/2022 10:59:56 AM BIM 360://PCCD Merritt Horticulture/Merritt Horticulture_2020.rvt

AREA SCHEDULE - PLUMBING CALCULATIONS				
Plumbing_Occ Group	Plumbing_Occ Group Description	Area	Plumbing_Occ Load Factor	Total Occupants
B	OFFICE	4341	200	24
E-C	EDUCATIONAL	6862	50	138
S	STORAGE	771	5000	1 **
		11974		163

** S OCCUPANCY = 0.15 TOTAL OCCUPANTS AND IS ROUNDED TO 0 IN THE MINIMUM PLUMBING FACILITIES TABULATIONS ON THIS SHEET.

1 G1.41 **PLUMBING AREA PLAN**
1/16" = 1'-0"

OCCUPANCY TYPE

OCCUPANT LOAD FACTORS PER CPC TABLE 422.1, TABLE A

- B OFFICE (200 SQFT/OCC)
- E-C EDUCATIONAL (50 SQFT/OCC)
- S STORAGE (5,000 SQFT/OCC)
- U UTILITY (NO OCCUPANT LOAD)
- ACCESSORY AREA (NO OCCUPANT LOAD)

PLUMBING FIXTURE SUMMARY

CPC TABLE 422.1, TABLE A
OCCUPANT LOAD FACTOR
See plumbing calculations table on this sheet.

CPC TABLE 422.1
MINIMUM PLUMBING FACILITIES

OCCUPANTS:	TOTAL	MALE	FEMALE
B + E-C	162	81	81
S	0	0	0

MIN REQUIRED:	WC		UR	LAV		DF	SER SINK
	M	F		M	F		
B + E-C	2	4	1	2	2	2	1
S	0	0	0	0	0	0	0
	2	4		2	2		
TOTAL REQUIRED:	6		1	4		2	1

PROVIDED:	WC	UR	LAV	DF	SER SINK
	9	0	8	4	2

NOTE: ALL RESTROOMS ARE GENDER NEUTRAL.

APPROVALS

IDENTIFICATION STAMP
DIV. OF THE STATE ARCHITECT
APP: 01-119409 INC:
REVIEWED FOR
SS ☑ FLS ☑ ACS ☑
DATE: 03/14/2022

NOLL & TAM ARCHITECTS
729 Heinz Avenue
Berkeley, CA 94710
tel 510.542.2200
fax 510.542.2201

SEAL

LICENSED ARCHITECT
CHRISTOPHER NOLL
No. C15916
REN. 12-31-23
STATE OF CALIFORNIA

PROJECT TITLE

Peralta Community College District
MERRITT COLLEGE NEW LANDSCAPE HORTICULTURE COMPLEX

12500 Campus Drive
Oakland, CA 94619

BID SET

ISSUE DATE 03/03/2022
N&T JOB NUMBER 22003

REVISIONS

	DATE	DESCRIPTION

DRAWN BY Author | CHECKED BY Checker

SHEET TITLE
CODE PLUMBING OCCUPANCY PLANS & FIXTURE COUNT

SHEET NUMBER
G1.41

3/3/2022 11:00:02 AM BIM 360://PCCD Merritt Horticulture/Merritt Horticulture_2020.rvt

GENERAL NOTES

1. CONTRACTOR TO PREPARE AND SUBMIT A DETAILED DEMOLITION PLAN FOR DISTRICT APPROVAL PRIOR TO PROCEEDING WITH TEMPORARY FENCING AND DEMOLITION AS WELL AS UTILITIES AFFECTED BY THE WORK OF THIS PROJECT.
2. TWO DEMOLITION AND SITE IMPROVEMENT AREAS ARE IDENTIFIED. REFER TO SHEET NOTES FOR AUTHORIZED ACCESS REQUIREMENTS.
3. MEET WITH THE DISTRICT AND COLLEGE TO ESTABLISH REQUIREMENTS FOR AUTHORIZED MAINTENANCE ACCESS TO DEMOLITION AND SITEWORK AREA B, AND TO PLANT STORAGE AREA.
4. REFER TO SHEETS A1.01, A1.02, AND SPECIFICATION SECTION 024116 FOR BUILDING DEMOLITION
5. REFER TO SHEET L1.01 AND SPECIFICATION SECTION 024119 FOR SELECTIVE LANDSCAPE DEMOLITION.
6. REFER TO SHEET L1.02 FOR TREE PROTECTION AND REMOVAL. NUMEROUS TREE PROTECTION ZONES ARE IDENTIFIED ALONG THE PERIMETER OF THE CONSTRUCTION ZONE. CONSTRUCTION SITE FENCE MAY SERVE AS PART OF TREE PROTECTION. NOTE REQUIREMENTS FOR ADDITIONAL TREE PROTECTION MEASURES INCLUDING ROOT PROTECTION AND MULCH WITHIN THE CONSTRUCTION PERIMETER FENCE.
7. PROVIDE NO LESS THAN 7 DAYS NOTICE IN ADVANCE OF ANY UTILITY SHUTDOWN.
8. PROVIDE NO LESS THAN 7 DAYS NOTICE IN ADVANCE OF ANY ROAD CLOSURE.
9. SITE CLEANLINESS - IN ADDITION TO WHAT IS MENTIONED IN SPEC 01 50 00 TEMPORARY FACILITIES AND CONTROLS SECTION 1.06.C - TEMPORARY CONTROLS AND SPEC 01 50 13 CONSTRUCTION WASTE MANAGEMENT AND DISPOSAL; REFER TO OSHA REGULATION 1926.25 HOUSEKEEPING STANDARDS.
10. REFERENCE THE PROJECT CEQA MND/IS FOR FURTHER CONSTRUCTION ACTIVITY MITIGATION EFFORTS.

REQUIREMENTS FOR DEMOLITION AND SITEWORK AREA A

1. DISTRICT WILL REMOVE ANY ITEMS IT WISHES TO SALVAGE OR RELOCATE PRIOR TO COMMENCEMENT OF CONTRACTOR'S MOBILIZATION AND DEMOLITION ACTIVITIES.
2. REFER TO SHEET A1.01 FOR ITEMS TO BE REMOVED AND STORED FOR REINSTALLATION AS PART OF THIS CONTRACT
3. ESTABLISH AUTHORIZED MAINTENANCE ACCESS ROUTE PRIOR TO INSTALLATION OF TEMPORARY PERIMETER FENCING.
4. PROTECT SITE FEATURES AS NOTED ON CIVIL AND LANDSCAPE DRAWINGS.

REQUIREMENTS FOR DEMOLITION AND SITEWORK AREA B AND PLANT STORAGE AREA

1. SITEWORK AREA B AND PLANT STORAGE AREA ARE AUTHORIZED MAINTENANCE ZONES AND MUST REMAIN ACCESSIBLE TO DISTRICT PERSONNEL UNTIL THE CONTRACTOR REQUESTS ACCESS TO CONSTRUCT PERMANENT SITE IMPROVEMENTS, LANDSCAPING AND IRRIGATION.
2. PROTECT SITE FEATURES AS NOTED ON CIVIL AND LANDSCAPE DRAWINGS.
3. MAINTAIN IRRIGATION TO DEMOLITION AND SITEWORK AREA B AND PLANT STORAGE AREA CONTINUOUSLY DURING CONSTRUCTION. WHERE UNDERGROUND IRRIGATION IS DISRUPTED, TEMPORARY RECONNECTION IS ACCEPTABLE. PROVIDE BACKFLOW PREVENTION ON ALL TEMPORARY IRRIGATION LINES.
4. PROVIDE TEMPORARY IRRIGATION HOSE BIBBS NO MORE THAN 100 FT ON CENTER IN DEMOLITION AND SITEWORK AREA B.
5. PRIOR TO CONSTRUCTION OF NEW SITE IMPROVEMENTS, LANDSCAPING AND IRRIGATION WITHIN SITEWORK AREA B CONTRACTOR MAY PROPOSE TO PERFORM SPECIFIC PORTIONS OF THE WORK AND MAY DO SO WITH TEMPORARY FENCING AND BARRICADES THAT SHALL BE REMOVED UPON COMPLETION. MEET WITH THE DISTRICT TO DISCUSS THESE ACTIVITIES AND PROVIDE NO LESS THAN 7 DAYS NOTICE PRIOR TO COMMENCEMENT SO THAT INTERRUPTIONS TO AUTHORIZED MAINTENANCE ACTIVITIES ARE MINIMIZED.

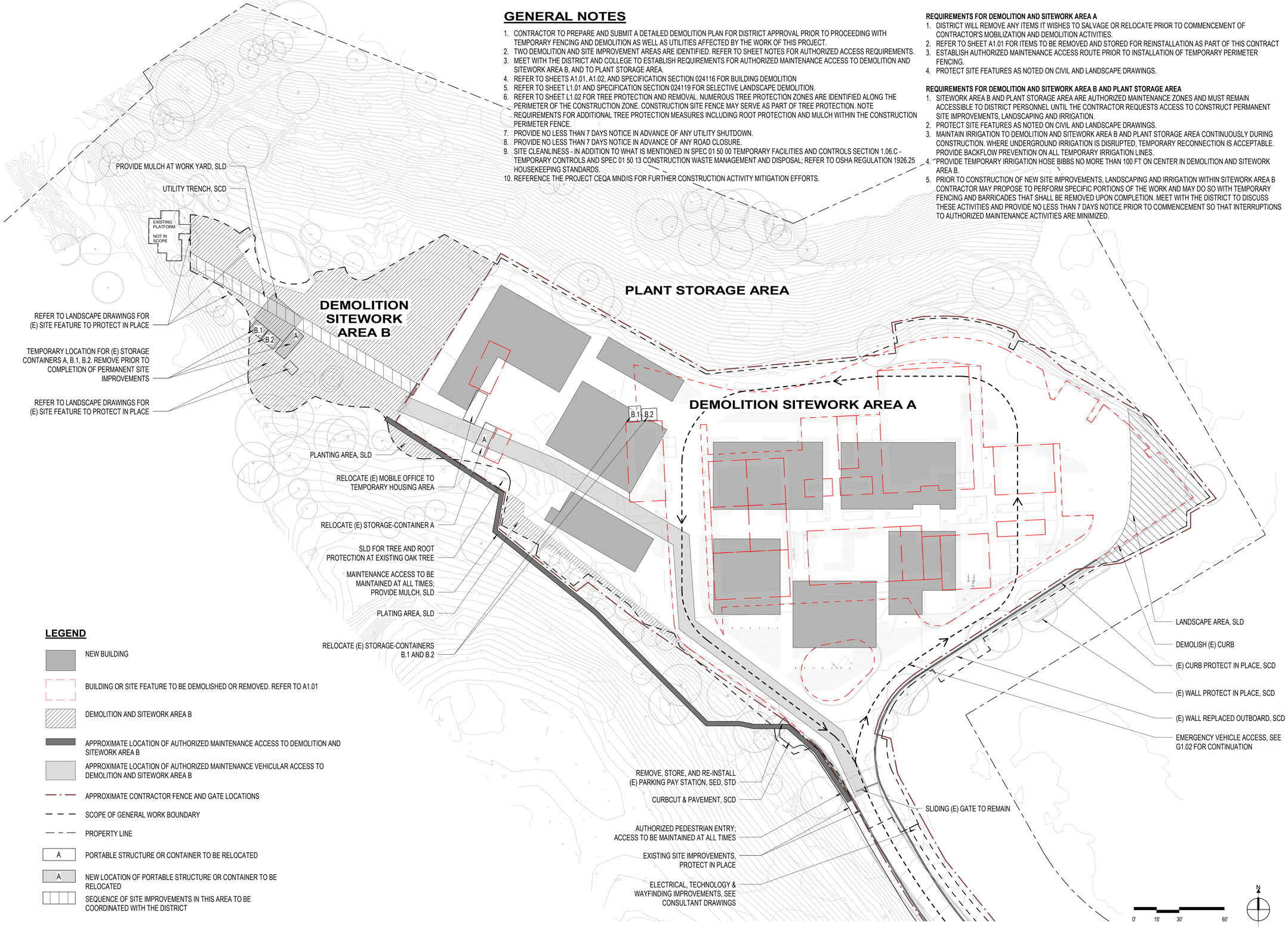

LEGEND

- NEW BUILDING
- BUILDING OR SITE FEATURE TO BE DEMOLISHED OR REMOVED. REFER TO A1.01
- DEMOLITION AND SITEWORK AREA B
- APPROXIMATE LOCATION OF AUTHORIZED MAINTENANCE ACCESS TO DEMOLITION AND SITEWORK AREA B
- APPROXIMATE LOCATION OF AUTHORIZED MAINTENANCE VEHICULAR ACCESS TO DEMOLITION AND SITEWORK AREA B
- APPROXIMATE CONTRACTOR FENCE AND GATE LOCATIONS
- SCOPE OF GENERAL WORK BOUNDARY
- PROPERTY LINE
- A — PORTABLE STRUCTURE OR CONTAINER TO BE RELOCATED
- A — NEW LOCATION OF PORTABLE STRUCTURE OR CONTAINER TO BE RELOCATED
- SEQUENCE OF SITE IMPROVEMENTS IN THIS AREA TO BE COORDINATED WITH THE DISTRICT

1 G1.51 **SITE PLAN - DEMOLITION**
1" = 30'-0"

APPROVALS

IDENTIFICATION STAMP
DIV. OF THE STATE ARCHITECT
APP: 01-119409 INC:
REVIEWED FOR
SS ☑ FLS ☑ ACS ☑
DATE: 03/14/2022

NOLL & TAM ARCHITECTS
729 Heinz Avenue
Berkeley, CA 94710
tel 510.542.2200
fax 510.542.2201

SEAL

LICENSED ARCHITECT
CHRISTOPHER NOLL
No. C15916
REN. 12-31-23
STATE OF CALIFORNIA

PROJECT TITLE

Peralta Community College District
MERRITT COLLEGE NEW LANDSCAPE HORTICULTURE COMPLEX

12500 Campus Drive
Oakland, CA 94619

BID SET

ISSUE DATE 03/03/2022
N&T JOB NUMBER 22003

REVISIONS

	DATE	DESCRIPTION

DRAWN BY Author | CHECKED BY Checker

SHEET TITLE
DEMOLITION AND SITEWORK LOGISTICS DIAGRAM

SHEET NUMBER
G1.51

3/3/2022 11:00:03 AM BIM 360://PCCD Merritt Horticulture/Merritt Horticulture_2020.rvt

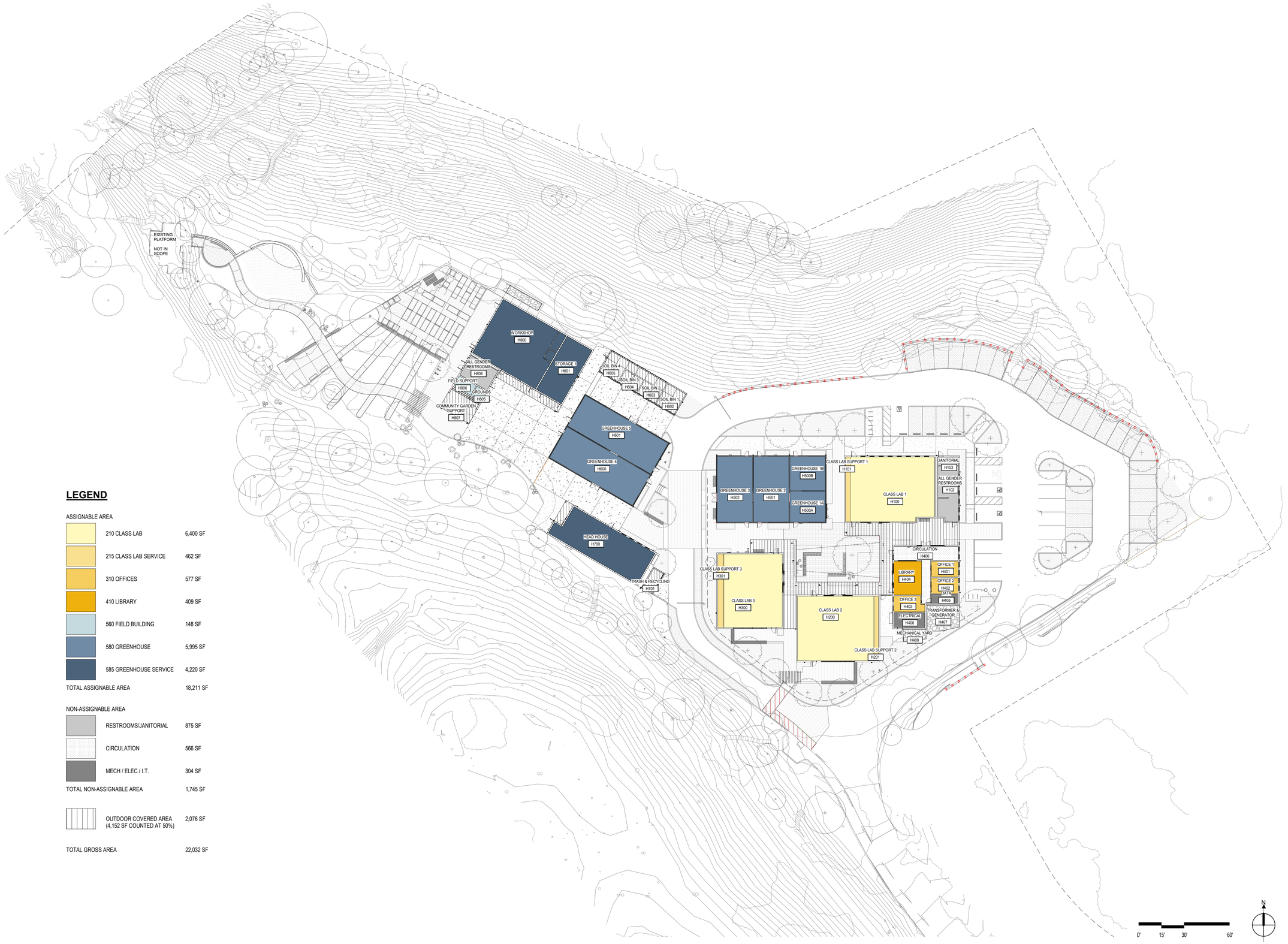

LEGEND

ASSIGNABLE AREA

	210 CLASS LAB	6,400 SF
	215 CLASS LAB SERVICE	462 SF
	310 OFFICES	577 SF
	410 LIBRARY	409 SF
	560 FIELD BUILDING	148 SF
	580 GREENHOUSE	5,995 SF
	585 GREENHOUSE SERVICE	4,220 SF
TOTAL ASSIGNABLE AREA		18,211 SF

NON-ASSIGNABLE AREA

	RESTROOMS/JANITORIAL	875 SF
	CIRCULATION	566 SF
	MECH / ELEC / I.T.	304 SF
TOTAL NON-ASSIGNABLE AREA		1,745 SF
	OUTDOOR COVERED AREA (4,152 SF COUNTED AT 50%)	2,076 SF
TOTAL GROSS AREA		22,032 SF

1 G1.61 **SITE PLAN - ASSIGNED AREAS**
1" = 30'-0"

3/3/2022 11:00:10 AM BIM 360://PCCD Merritt Horticulture/Merritt Horticulture_2020.rvt

APPROVALS

IDENTIFICATION STAMP
DIV. OF THE STATE ARCHITECT
APP: 01-119409 INC:
REVIEWED FOR
SS ☑ FLS ☑ ACS ☑
DATE: 03/14/2022

NOLL & TAM ARCHITECTS
729 Heinz Avenue
Berkeley, CA 94710
tel 510.542.2200
fax 510.542.2201

SEAL

LICENSED ARCHITECT
CHRISTOPHER NOLL
No. C15916
REN. 12-31-23
STATE OF CALIFORNIA

PROJECT TITLE

Peralta Community College District
MERRITT COLLEGE NEW LANDSCAPE HORTICULTURE COMPLEX

12500 Campus Drive
Oakland, CA 94619

BID SET

ISSUE DATE	03/03/2022
N&T JOB NUMBER	22003

REVISIONS

	DATE	DESCRIPTION

DRAWN BY **Author** CHECKED BY **Checker**

SHEET TITLE
ASSIGNED AREAS

SHEET NUMBER
G1.61

STATE OF CALIFORNIA – DEPARTMENT OF GENERAL SERVICES – BUILDING STANDARDS COMMISSION

CALGreen - NONRESIDENTIAL MANDATORY MEASURES CHECKLIST

The provisions of Title 24 Part 11 (CalGreen) - Chapter 5 Nonresidential Mandatory Measures shall apply to newly constructed buildings, building additions of 1,000 square feet or greater, and/or building alterations with a permit valuation of $200,000 or above.

Y = Yes (section has been selected and/or included)
N/A = Not Applicable (Code section does not apply to the project, mainly used for additions and alterations)
O = Other (provide explanation)
[N] = New construction pursuant to Section 301.1
[A] = Additions and/or alterations pursuant to Section 301.1

CHAPTER 5 DIVISIONS		SECTION TITLE	CODE SECTION	Y	N/A	O	SHEET, SPEC, OR OTHER REFERENCE	COMMENTS
DIVISION 5.1 Planning and Design	Mandatory	Storm water pollution prevention w/ subsections for projects that disturb less than one acre of land.	5.106.1 through 5.106.1.2	Y			Contractor to provide compliance documentation.	SWPPP to be prepared by Contractor.
	Mandatory	Short term bicycle parking (w/ exception)	5.106.4.1.1	Y			L2.03	Short term bicycle parking provided, 18 spaces. Long term bicycle parking not required.
		Long term bicycle parking	5.106.4.1.2 though 5.106.4.1.5					
	Mandatory	Designated parking for clean air vehicles	5.106.5.2	Y			C2.2	
		Parking stall marking	5.106.5.2.1					
	Mandatory	Single charging space requirements	5.106.5.3.1	Y			C2.2	
		Multiple charging space requirements	5.106.5.3.2					
		EV charging space calculation w/exceptions	5.106.5.3.3					
		[N] Identification	5.106.5.3.4					
		[N] Future charging spaces w/ notes 1-3	5.106.5.3.5					
	Mandatory	Light pollution reduction (w/ exceptions and notes)	5.106.8	Y			E5.01	Refer to Luminaire Schedule for B-U-G ratings and listed exceptions where allowed.
	Mandatory	Grading and Paving (w/ exception for Additions and Alterations not altering the drainage path)	5.106.10	Y			C3.1-C3.6	
	Mandatory	[DSA] Shade trees	5.106.12	Y			G2.01	
DIVISION 5.2 Energy Efficiency	Mandatory	Meet the minimum energy efficiency standard as required by the authority having jurisdiction (California Energy Code minimum)	5.201.1	Y			M8.01-M8.12	This project is complying using the perfommance approach. Compliance it demonstrated through compliance software and attached Energy Code compliance forms.
DIVISION 5.3 Water Efficiency and Conservation	Mandatory	Separate Meters (new buildings or additions > 50,000 SF that consume more than 100 gal/day)	5.303.1.1		N/A			This project does not require separate meters under CALGreen, however, the project does include a single potable water meter and a single irrigation water meter with telemetry to the campus central plant as requested by the owner.
		Separate Meters (for tenants in new buildings or additions that consume more than 1,000 gal/day)	5.303.1.2					
	Mandatory	Water closets shall not exceed 1.28 gallons per flush (gpf)	5.303.3.1	Y			P6.01, 22 40 00	The water closets have 1.28GPF flushometers.
		Wall-mounted urinals shall not exceed 0.5 gpf	5.303.3.2.1		N/A			Urinals not required or provided (gender neutral restrooms are provided instead).
		Floor-mounted urinals shall not exceed 0.5 gpf	5.303.3.2.2					
		Single showerhead shall have maximum flow rate of 1.8 gallons per minute (gpm) at 80 psi	5.303.3.3.1		N/A			Showers not required or provided.
		Multiple showerheads serving one shower shall have a combined flow rate not to exceed 1.8 gpm at 80 psi	5.303.3.3.2					
		Nonresidential lavatory faucets shall have max flow rate of 0.5 gpm at 60 psi	5.303.3.4.1	Y			P6.01, 22 40 00	The lavatory facuets have a maximum flow rate of 0.5 GPM.
		Kitchen faucets shall have max flow rate of 1.8 gpm at 60 psi (w/ temporary increase to 2.2 gpm at 60 psi max)	5.303.3.4.2		N/A			No kitchen faucets required or provided.
		Wash fountains shall have max flow rate of 1.8 gpm at 60 psi	5.303.3.4.3		N/A			No wash fountains required or provided.
		Metering faucets shall not exceed 0.20 gallons per cycle	5.303.3.4.4		N/A			
		Metering faucets for wash fountains shall have max flow rate of 0.20 gallons per cycle at 60 psi	5.303.3.4.5		N/A			No wash fountains required or provided.
	Mandatory	Food waste disposers	5.303.4.1		N/A			No food waste disposers required or provided.
	Mandatory	Areas of additions or alterations	5.303.5		N/A			Project is all new construction.
	Mandatory	Standards for plumbing fixtures and fittings	5.303.6	Y			P6.01, 22 40 00	Ssee reference.
	Mandatory	Outdoor potable water use in landscape areas	5.304.1	Y			L6.02	Water source for landscape irrigation is connected to separate backflow preventer and water meter from other potable water.

CHAPTER 5 DIVISIONS		SECTION TITLE	CODE SECTION	Y	N/A	O	Plan sheet, Spec or Attach Reference	Explanation
DIVISION 5.4 Material Conservation and Resource Efficiency	Mandatory	Weather protection	5.407.1	Y			07 27 26	See specification reference.
	Mandatory	Moisture control: Sprinklers	5.407.2.1	Y			L6.01, L6.02, A2.31, A2.32	Irrigation system has been designed to prevent irrigation spray on structures. Roof overhangs and non-absorbant surfaces have been provided at building entrances.
		Moisture control: Exterior door protection	5.407.2.2.1					
		Moisture control: Flashing	5.407.2.2.2					
	Mandatory	Construction waste management: comply with either: sections 5.408.1.1, 5.408.1.2, 5.408.1.3, or more stringent local ordinance	5.408.1.1, 5.408.1.2, 5.408.1.3		N/A			Contractor to provide compliance documentation.
		Construction waste management: Documentation	5.408.1.4					
	Mandatory	[A] Universal Waste must be disposed of properly	5.408.2		N/A			Contractor to provide compliance documentation.
	Mandatory	Excavated soil and land clearing debris: 100 % reuse or recycle	5.408.3		N/A			Contractor to provide compliance documentation.
	Mandatory	Recycling by Occupants (w/ exception)	5.410.1	Y			A9.41, A9.42	See reference.
		Recycling by Occupants: Additions (w/ exception)	5.410.1.1					
		Recycling by Occupants: Sample ordinance	5.410.1.2					
	Mandatory	[N] Commissioning: Required for new buildings (□ 10,000...	5.410.2	Y			01 91 00	See reference; OPR, BOD and other documents in this list available upon request.
		[N] Owner's or Owner representative's Project Requirements (OPR)	5.410.2.1					
		[N] Basis of Design (BOD)	5.410.2.2					
		[N] Commissioning Plan	5.410.2.3					
		[N] Functional Performance Testing	5.410.2.4					
		[N] Documentation and Training	5.410.2.5					
		[N] Systems Manual	5.410.2.5.1					
		[N] Systems Operations Training	5.410.2.5.2					
		[N] Commissioning Report	5.410.2.6					
	Mandatory	Testing and adjusting: required for new buildings > 10,000 SF or new systems that serve additions or alterations (refer to California Energy Code for commissioning/testing requirements related to HVAC, lighting, and water heating)	5.410.4	Y			23 05 93	Refer to 23 05 93 TAB for HVAC specification
		[A] Systems: Develop a written plan for testing/adjusting systems related to renewable energy, landscape irrigation, and water reuse	5.410.4.2					
		Procedures: perform testing/adjusting per applicable standards	5.410.4.3					
		HVAC balancing: per national standards	5.410.4.3.1					
		Reporting for testing and adjusting	5.410.4.4					
		Operation and maintenance (O&M) manual	5.410.4.5					
		Inspections and reports	5.410.4.5.1					

CHAPTER 5 DIVISIONS		SECTION TITLE	CODE SECTION	Y	N/A	O	Plan sheet, Spec or Attach Reference	Explanation
DIVISION 5.5 Environmental Quality	Mandatory	Fireplaces	5.503.1		N/A			
	Mandatory	Woodstoves	5.503.1.1		N/A			
	Mandatory	Pollutant control: Temporary ventilation	5.504.1	Y			M0.01	
	Mandatory	Pollutant control: Covering of ducts openings and protection of mechanical equipment during construction	5.504.3	Y			M0.01	
	Mandatory	Pollutant control: Adhesives, sealants and caulks	5.504.4.1	Y			07 92 00	
	Mandatory	Paints and coatings	5.504.4.3	Y			09 90 00	
		Aerosol paints and coatings	5.504.4.3.1					
		Aerosol paints and coatings: Verification	5.504.4.3.2					
	Mandatory	Carpet systems	5.504.4.4		N/A			
		Carpet cushion	5.504.4.4.1					
		Carpet adhesive per table 5.504.4.4.2	5.504.4.4.2					
	Mandatory	Composite wood products	5.504.4.5	Y			06 10 00	
		Composite wood products: documentation	5.504.4.5.3					
	Mandatory	Resilient flooring systems	5.504.4.6	Y			09 65 00	
		Resilient flooring: verification of compliance	5.504.4.6.1					
	Mandatory	Filters (w/ exceptions)	5.504.5.3				M6.01 & M6.02	Filters are Minimum MERV 13 & labeled.
		Filters: labeling	5.504.5.3.1					
	Mandatory	Environmental tobacco smoke (ETS) control	5.504.7	Y				Non-smoking campus policy already in place for the entire site
	Mandatory	Indoor moisture control	5.505.1	Y			M6.01 & M6.02, A7.21, A7.31	All mechanical systems meet the provisions where, per CBC1202, mechanical ventilation is required. Architectural systems are designed to exclude vapor. At soffits, ventilation is provided.
	Mandatory	Outside air delivery	5.506.1	Y			M6.01, M6.02 & M8.01-M8.12	Minimum OA listed on T-24 forms is met or exceeded.
	Mandatory	Carbon dioxide (CO2) monitoring	5.506.2	Y			M2.32 & M8.01-8.12	CO2 sensors for classrooms labs; all other spaces have low occupancy
	Mandatory	Acoustical control (w/ exception)	5.507.4	Y			A8.10	Interior partitions include acoustic insulation, and wall finishes run to the underside of structure. Classroom ceilings are comprised of acoustical tiles.
	Mandatory	Exterior noise transmission, prescriptive method w/ exceptions	5.507.4.1		N/A			Exempt by location; building are located in a remote site with no adjacent noise nuisances.
		Noise exposure where noise contours are not readily available	5.507.4.1.1					
	Mandatory	Performance method	5.507.4.2		N/A			Exempt by location; building are located in a remote site with no adjacent noise nuisances.
		Site features	5.507.4.2.1					
		Documentation of compliance	5.507.4.2.2					
	Mandatory	Interior sound transmission: Wall and floor assemblies shall have STC of at least 40	5.507.4.3		N/A			No separate tenant spaces; exempt.
	Mandatory	Ozone depletion and greenhouse gas reductions	5.508.1	Y			M6.02 & M6.02	No CFCs or Halons have been used in this project.
		Chlorofluorocarbons (CFCs) shall not be used	5.508.1.1					
		Halons shall not be used	5.508.1.2					
	Mandatory	Supermarket refrigerant leak reduction for retail food stores 8,000 square feet or more sections 5.508.2 through 5.508.2.6.3	5.508.2 through 5.508.2.6.3		N/A			

END OF MANDATORY PROVISIONS

Documentation Author's /Responsible Designer's Declaration Statement

Mandatory: I attest that this mandatory provisions checklist is accurate and complete.

Signature:

Company: Noll & Tam Architects	Date: 03/26/2021
Address: 729 Heinz Ave #7	License: C15916
City/State/Zip Berkeley, CA 94710	Phone Number: 510-542-5200

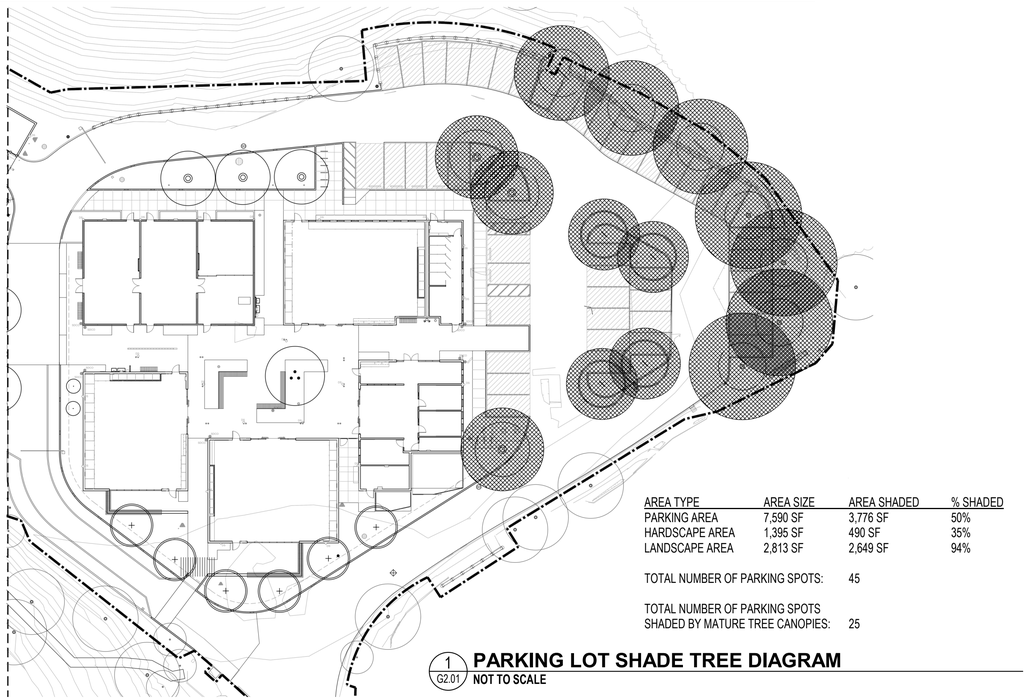

AREA TYPE	AREA SIZE	AREA SHADED	% SHADED
PARKING AREA	7,590 SF	3,776 SF	50%
HARDSCAPE AREA	1,395 SF	490 SF	35%
LANDSCAPE AREA	2,813 SF	2,649 SF	94%

TOTAL NUMBER OF PARKING SPOTS: 45

TOTAL NUMBER OF PARKING SPOTS SHADED BY MATURE TREE CANOPIES: 25

1 G2.01 **PARKING LOT SHADE TREE DIAGRAM**
NOT TO SCALE

APPROVALS

IDENTIFICATION STAMP
DIV. OF THE STATE ARCHITECT
APP: 01-119409 INC:
REVIEWED FOR
SS ☑ FLS ☑ ACS ☑
DATE: 03/14/2022

NOLL & TAM ARCHITECTS
729 Heinz Avenue
Berkeley, CA 94710
tel 510.542.2200
fax 510.542.2201

SEAL

LICENSED ARCHITECT
CHRISTOPHER NOLL
No. C15916
REN. 12-31-23
STATE OF CALIFORNIA

PROJECT TITLE

Peralta Community College District
MERRITT COLLEGE NEW LANDSCAPE HORTICULTURE COMPLEX

12500 Campus Drive
Oakland, CA 94619

BID SET

ISSUE DATE 03/03/2022
N&T JOB NUMBER 22003

REVISIONS

	DATE	DESCRIPTION

DRAWN BY **Author** CHECKED BY **Checker**

SHEET TITLE

CAL GREEN

SHEET NUMBER

G2.01

3/3/2022 11:00:14 AM BIM 360://PCCD Merritt Horticulture/Merritt Horticulture_2020.rvt

CERTIFICATE OF COMPLIANCE		NRCC-CXR-E
This document is used to demonstrate compliance with mandatory commissioning requirements in §120.8 for nonresidential buildings and hotel/motel or high-rise residential buildings with nonresidential spaces. This document does not demonstrate compliance with commissioning requirements within Title 24, Part 11, which need to be documented separately if they apply.		
Project Name: Merritt Landscape and Horticulture Complex	Report Page:	Page 1 of 9
Project Address: 12500 Campus Drive Oakland CA 94616	Date Prepared:	2/10/2021

A. GENERAL INFORMATION

01	Project Location (city)	Oakland	04	Building Size (ft²)	19,032
02	Occupancy Type	Nonresidential	05	Nonresidential Conditioned Floor Area (ft²)	10,000 - 49,999 ft²
03	Project Type	Newly constructed	06	HVAC System Type	All other HVAC system types (indicates "complex")

B. PROJECT SCOPE

Table Instructions: Based on project information provided in Table A, Table B indicates which commissioning related requirements apply per §120.8. Table B is not editable by the user.

Commissioning Requirements per §120.8

01	Table F: Design Review Kickoff	§120.8(d)1 and §120.8(d)2	The design review kickoff meeting establishes who will play the role of the design reviewer, the project schedule and identify owner's requirements. This meeting should be conducted during schematic design.
02	Table G: Owner's Project Requirements (OPR)	§120.8(b)	The owner's project requirements establish the owner's goals, requirements, and expections for everything related to energy consumption and operation. This should be completed during schematic design.
03	Table H: Basis of Design (BOD)	§120.8(c)	The basis of design documents the design elements such as calculations and product selections that meet the owner's project requirements and applicable regulatory requirements. This should be completed during schematic design.
04	Table I: Design Review	§120.8(d) and §120.8(e)	The design reviewer(s) reviews the construction documents for clarity, completeness, and adherence to the owner's goals. Commissioning measures must be included in the construction documents to faciliate the design review and commissioning process. For projects with ≥ 10,000 ft² of nonresidential conditioned floor area, or with complex mechanical systems, the design review is for adherence with the Owner's Project Requirements (OPR) and Basis of Design (BOD). This should be conducted during design.
05	Table J: Commissioning Plan	§120.8(f)	The commissioning plan is developed by the commissioning provider with input from the designer and defines the scope of commissioning the project. This should be drafted during design and completed during early construction.
06	Table K: Functional Performance Testing	§120.8(g)	Functional performance testing is conducted on building systems to demonstrate correct installation and operation.
07	Table L: Documentation and Training	§120.8(h)	Documentation of the operational aspects of the building shall be completed within the Systems Manual and delivered to the building owner or representative and facilities operator.
08	Table M: Commissioning Report	§120.8(i)	A complete report of commissioning process activities undertaken through the design, construction and reporting recommendations for post-construction phases of the building project shall be completed and provided to the owner or representative.

CERTIFICATE OF COMPLIANCE		NRCC-CXR-E
Project Name: Merritt Landscape and Horticulture Complex	Report Page:	Page 2 of 9
Project Address: 12500 Campus Drive Oakland CA 94616	Date Prepared:	2/10/2021

C. COMPLIANCE RESULTS

Table Instructions: Table C will indicate if the project data input into the compliance document is compliant with commissioning requirements per §120.8. This table is not editable by the user. If this table says "DOES NOT COMPLY" or "COMPLIES with Exceptional Conditions" refer to Table D. for guidance.

01	02	03	04	05	06	07	08	09
Design Review Kickoff	Owner's Project Requirements	Basis of Design	Design Review	Commissioning Plan	Functional Performance Testing	Documentation and Training	Commissioning Report	Compliance Results
Table F	Table G	Table H	Table I	Table J	Table K	Table L	Table M	
Yes	Yes	Yes	Yes	Yes	Yes	Yes	Yes	**COMPLIES**
10	Design Reviewer(s) for the project include:			Hillary Price				**COMPLIES**

D. EXCEPTIONAL CONDITIONS

This table is auto-filled with uneditable comments because of selections made or data entered in tables throughout the form.

Table G. indicates that the Owner's Project Requirements (OPR) document is attached to the permit application.
Table H. indicates that the Basis of Design (BOD) document is attached to the permit application.
Table J. indicates that a draft commissioning plan is attached to the permit application.

E. ADDITIONAL REMARKS

This table includes remarks made by the permit applicant to the Authority Having Jurisdiction.

F. DESIGN REVIEW KICKOFF MEETING

Table Instructions: Complete this table to indicate that the design reviewer meets the qualification requirements per Title 24, Part 1 Section 10-103(a)1 and to demonstrate compliance with design review kickoff requirements per §120.8(d)2. This meeting should occur during the Schematic Design phase of the project.

Design Review Kickoff Meeting Details

01	Date of Design Review Kickoff Meeting	Jun 23, 2020
02	Meeting Attendees: (one person may play multiple roles)	

☒ Owner/ Facility Manager:	Atheria Smith	☐ Design Reviewer(s):	
☒ Project Manager:	Erin Griffin, Sharon Serrano	☒ Design Architect/ Engineer(s):	Jocelyn Lawrence, Tyler Bradshaw, Ray Juachon
☐ Contractor:		☐ Certified Acceptance Test Tech(s):	
☒ Commissioning Provider:	Michele Sagehorn	☐ Energy/ T24 Part 6 Consultant:	

Table Continued

CERTIFICATE OF COMPLIANCE		NRCC-CXR-E
Project Name: Merritt Landscape and Horticulture Complex	Report Page:	Page 3 of 9
Project Address: 12500 Campus Drive Oakland CA 94616	Date Prepared:	2/10/2021

Table Continued

Design Reviewer Qualifications per Title 24, Part 1 Section 10-103(a)1

		YES	NO
The design reviewer(s) must be licensed professional engineers or licensed architects, or licensed contractors representing services performed by or under the direct supervision of a licensed engineer or architect, as specified in the provisions of Division 3 of the Business and Professions Code.	Do the Design Reviewer(s) meet these qualifications?		
03	In addition, for buildings with ≥ 50,000 ft², or complex mechanical systems[1], the design reviewer(s) shall be a third party design engineer, architect, or contractor.	◉	○
04	The design reviewer(s) for this project will be:	Hillary Price	

[1] *FOOTNOTE: Complex Mechanical Systems are systems that include 1) fan systems each serving multiple thermostatically controlled zones, or 2) built-up air handler systems (non-unitary or nonpackaged HVAC equipment), or 3) hydronic or steam heating systems, or 4) hydronic cooling systems.*

Preliminary Construction Schedule

		Start Date	Completion Date
05	Schematic Design	2020-03-01	2020-07-01
06	Design Development	2020-07-01	2020-10-12
07	Construction Documents	2020-10-12	2021-03-01
08	Construction	2022-03-01	2023-10-01
09	Building Turnover	2023-10-01	2023-10-30

Please proceed to Table G. to complete an Owner's Project Requirements (OPR) Document per §120.8(b).

G. OWNER'S PROJECT REQUIREMENTS (OPR)

Table Instructions: Complete the table below if not attaching an OPR document, or attach an OPR document to your permit application to demonstrate compliance with §120.8(b). If a specific field is not applicable to the project scope, put "NA." Per §120.8(b), the OPR is to be completed before design begins. This may be done at the Design Review Kickoff Meeting (see Table F.).

		YES	NO
01	Attaching Completed Owner's Project Requirements Document?	◉	○
02	Owner's Project Requirements Document Authors and Roles	Atheria Smith, Peralta Community College Facility Manager	

H. BASIS OF DESIGN (BOD)

Table Instructions: Complete the table below if not attaching a BOD document, or attach a BOD document to demonstrate compliance with §120.8(c). If a specific field is not applicable to the project scope, put "NA". Per §120.8(c), the BOD should be completed and updated during the design phase.

Table Continued

CERTIFICATE OF COMPLIANCE		NRCC-CXR-E
Project Name: Merritt Landscape and Horticulture Complex	Report Page:	Page 4 of 9
Project Address: 12500 Campus Drive Oakland CA 94616	Date Prepared:	2/10/2021

Table Continued

		YES	NO
01	Attaching Completed Basis of Design Document?	◉	○
02	Basis of Design Document Authors and Roles	Tyler Bradshaw (Mech & Plumb EOR), Ray Juachon (Elec EOR)	

I. CONSTRUCTION DOCUMENT DESIGN REVIEW CHECKLIST

Table Instructions: The design reviewer(s) may fill out the table below or attach a design review document that lists the items checked by the design reviewer(s) during the construction document review. For buildings with ≥ 10,000 ft² conditioned floor area, the design review will ensure the construction documents meet the Owner's Project Requirements (Table G.) and the Basis of Design Documents (Table H.). For buildings with < 10,000 ft² conditioned floor area, the design review will ensure the construction documents meet the goals documented in Table F. during the Design Review Kickoff.

		YES	NO
01	Attaching Completed Design Review Documentation?	○	◉

Design Review Checklist

02	Envelope Design	*Confirmed design met owner's OPR requirements for envelope design. Reviewed compliance to 110.7, 120.7, 140.3(a)1.A and 140.3(a)1.A-B*
03	HVAC System Design	*Confirmed design met owner's OPR requirements and BOD. Reviewed compliance for 120.1, 140.4, 120.9 . Updated drawing to include 120.2 occupied standby.*
04	HVAC Controls Design	*Confirmed design met owner's OPR requirements and BOD. Reviewed compliance for 120.2, 140.4*
05	Indoor Lighting System Design	*Confirmed design met owner's OPR requirements and BOD. Reviewed compliance for 2019 LPD 140.6*
06	Indoor Lighting Controls Design	*Confirmed design met owner's OPR requirements and BOD. Reviewed compliance for 130.1(a)4, 130.1(b), 130.1(c)1,5, & 6, 130.1(e), 130.1(d)2, and 140.3(c)*
07	Outdoor Lighting System and Controls Design	*Confirmed design met owner's OPR requirements and BOD. Reviewed compliance for 130.2(a), 130.2(c)1, 130.2(c)3, and 130.2(c)5*
08	Water Heating System Design	*Confirmed design met owner's OPR requirements and BOD. Reviewed compliance for 110.3(c)2 and 120.3*
09	Other Systems and Features	*N/A*

J. COMMISSIONING PLAN

Table Instructions: Complete the table below if not attaching a Commissioning Plan document, or attach a Commissioning Plan document to demonstrate compliance with §120.8(i). Per §120.8(i), the Commissioning Plan is to be started during the design phase and a completed draft must be submitted with permit application.

		YES	NO
01	Attaching Completed Commissioning Plan?	◉	○
02	Commissioning Plan Authors and Roles	Michele Sagehorn, Red Car Analytics Commissioning Agent	

CERTIFICATE OF COMPLIANCE		NRCC-CXR-E
Project Name: Merritt Landscape and Horticulture Complex	Report Page:	Page 5 of 9
Project Address: 12500 Campus Drive Oakland CA 94616	Date Prepared:	2/10/2021

K. FUNCTIONAL PERFORMANCE TESTING

Table Instructions: Complete the table below to demonstrate compliance with functional performance testing requirements per §120.8(g).

By checking this box, the responsible party[1] certifies that functional performance testing will be executed to demonstrate the correct installation and operation of each component, system and system-to-system interface in accordance with the acceptance test requirements in §120.5, §130.4 and §140.9. The functional performance testing reports shall contain information addressing each of the building components tested, the testing methods utilized, and include any readings and adjustments made.	01 ☒

The following acceptance tests have been identified as applicable to the project scope:[2]

02	03	04	05
System/ Equipment to be Tested	Brief description of functional performance test	Applicable Reference Appendix	Certified Acceptance Test Technician Required?
Daylight Sensors	Daylighting controls in building day light zones	NA7.6.1 Daylighting Controls	Yes
Motion Sensors	Motion Sensor, operation and coverage	NA7.8.2 Motion Sensor	Yes
Lighting Controls	Lighting Shut-off during unoccupied hours	NA7.6.2 Lighting Shut-Off	Yes
Lighting Controls	Lighting Demand Response	NA7.6.3 Lighting Demand Response	Yes
Domestic HW System	Verify proper operation, temperature control		No
Split Heat Pump System	Verify proper operation in each mode	NA7.5.2 CV, Single Zone AC/HP's	No
Split Heat Pump System	Verify units report faults when appropriate	NA7.5.11 FDD for Package DX	No
VRF Indoor Units	Verify proper modes of operation, heating, cooling, deadband		
VRF Outdoor Units	Verify proper operation		No

The acceptance tests required by Title 24, Part 6 outline the minimum functional performance testing scope to be conducted for compliance. However, the commissioning scope may include additional functional performance tests on systems or equipment not having acceptance tests required by Title 24, Part 6.

The following additional functional performance tests have been requested by the owner or owner's representative:

06	07
System/ Equipment to be Tested	Brief description of functional performance test

[1] *FOOTNOTE: See the signature block on the last page of this compliance document for the responsible party.*
[2] *Required acceptance tests can be determined by reviewing the "Certificates of Acceptance" table on each Certificate of Compliance submitted for permit application.*

CERTIFICATE OF COMPLIANCE		NRCC-CXR-E
Project Name: Merritt Landscape and Horticulture Complex	Report Page:	Page 6 of 9
Project Address: 12500 Campus Drive Oakland CA 94616	Date Prepared:	2/10/2021

L. DOCUMENTATION AND TRAINING

Table Instructions: Complete the table below to demonstrate compliance with documentation and training requirements per §120.8(h).

By checking this box, the responsible party[1] certifies that a systems manual will be provided to the building owner or representative per §120.8(h)1.	01 ☒
By checking this box, the responsible party[1] certifies that a training of the appropriate maintenance staff for each equipment and system will be completed and documented in the commissioning report per §120.8(h)2. Training requirements should be included in the contract document in the specifications.	02 ☒

[1] *FOOTNOTE: See the signature block on the last page of this compliance document for the responsible party.*

M. COMMISSIONING REPORT

Table Instructions: Complete the table below to demonstrate compliance with commissioning report requirements per §120.8(i).

By checking this box, the responsible party[1] certifies that a complete report of commissioning process' activities undertaken through the design, construction and reporting recommendations for post-construction phases of the building project shall be completed and provided to the owner or owner's representative.	01 ☒

[1] *FOOTNOTE: See the signature block on the last page of this compliance document for the responsible party.*

N. DECLARATION OF REQUIRED CERTIFICATES OF INSTALLATION

There are no Certificates of Installation applicable to commissioning requirements.

O. DECLARATION OF REQUIRED CERTIFICATES OF ACCEPTANCE

Although there are no "CXR" Certificates of Acceptance required to document commissioning requirements, Certificates of Acceptance may be used to supplement functional performance testing required by §120.8(g).

APPROVALS

IDENTIFICATION STAMP
DIV. OF THE STATE ARCHITECT
APP: 01-119409 INC:
REVIEWED FOR
SS ☑ FLS ☑ ACS ☑
DATE: 03/14/2022

NOLL & TAM ARCHITECTS
729 Heinz Avenue
Berkeley, CA 94710
tel 510.542.2200
fax 510.542.2201

SEAL

LICENSED ARCHITECT
CHRISTOPHER NOLL
No. C15916
REN. 12-31-23
STATE OF CALIFORNIA

PROJECT TITLE

Peralta Community College District
MERRITT COLLEGE NEW LANDSCAPE HORTICULTURE COMPLEX

12500 Campus Drive
Oakland, CA 94619

BID SET

ISSUE DATE 03/03/2022
N&T JOB NUMBER 22003

REVISIONS

	DATE	DESCRIPTION

DRAWN BY Author CHECKED BY Checker

SHEET TITLE
TITLE 24- COMMISSIONING FORMS

SHEET NUMBER
G2.21

3/3/2022 11:00:17 AM BIM 360://PCCD Merritt Horticulture/Merritt Horticulture_2020.rvt

L. DOCUMENTATION AND TRAINING

Table Instructions: Complete the table below to demonstrate compliance with documentation and training requirements per §120.8(h).

By checking this box, the responsible party[1] certifies that a systems manual will be provided to the building owner or representative per §120.8(h)1.	01 ☒
By checking this box, the responsible party[1] certifies that a training of the appropriate maintenance staff for each equipment and system will be completed and documented in the commissioning report per §120.8(h)2. Training requirements should be included in the contract document in the specifications.	02 ☒

[1] *FOOTNOTE: See the signature block on the last page of this compliance document for the responsible party.*

M. COMMISSIONING REPORT

Table Instructions: Complete the table below to demonstrate compliance with commissioning report requirements per §120.8(i).

By checking this box, the responsible party[1] certifies that a complete report of commissioning process' activities undertaken through the design, construction and reporting recommendations for post-construction phases of the building project shall be completed and provided to the owner or owner's representative.	01 ☒

[1] *FOOTNOTE: See the signature block on the last page of this compliance document for the responsible party.*

N. DECLARATION OF REQUIRED CERTIFICATES OF INSTALLATION

There are no Certificates of Installation applicable to commissioning requirements.

O. DECLARATION OF REQUIRED CERTIFICATES OF ACCEPTANCE

Although there are no "CXR" Certificates of Acceptance required to document commissioning requirements, Certificates of Acceptance may be used to supplement functional performance testing required by §120.8(g).

STATE OF CALIFORNIA
Nonresidential Building Commissioning
NRCC-CXR-E (Created 12/19) CALIFORNIA ENERGY COMMISSION

CERTIFICATE OF COMPLIANCE		NRCC-CXR-E
Project Name: Merritt Landscape and Horticulture Complex	Report Page:	Page 8 of 9
Project Address: 12500 Campus Drive Oakland CA 94616	Date Prepared:	2/10/2021

RESPONSIBLE PERSON'S DECLARATION STATEMENT
I certify the following under penalty of perjury, under the laws of the State of California:
1. The information provided on this Certificate of Compliance is true and correct.
2. I am eligible under Division 3 of the Business and Professions Code to accept responsibility for the building design or system design identified on this Certificate of Compliance (responsible designer)
3. The energy features and performance specifications, materials, components, and manufactured devices for the building design or system design identified on this Certificate of Compliance conform to the requirements of Title 24, Part 1 and Part 6 of the California Code of Regulations.
4. The building design features or system design features identified on this Certificate of Compliance are consistent with the information provided on other applicable compliance documents, worksheets, calculations, plans and specifications submitted to the enforcement agency for approval with this building permit application.
5. I will ensure that a completed signed copy of this Certificate of Compliance shall be made available with the building permit(s) issued for the building, and made available to the enforcement agency for all applicable inspections. I understand that a completed signed copy of this Certificate of Compliance is required to be included with the documentation the builder provides to the building owner at occupancy.

Responsible Designer Name:		Responsible Designer Signature:	
Company :	RIJA	Date Signed:	2/24/2021
Address:	1620 Montgomery Street #250	License:	E19586
City/State/Zip:	San Francisco CA 94111	Phone:	415-730-7994

DOCUMENTATION AUTHOR'S DECLARATION STATEMENT

I certify that this Certificate of Compliance documentation is accurate and complete

Documentation Author Name:	Hillary Price	Documentation Author Signature:	
Company:	Red Car Analytics	Signature Date:	3/04/2021
Address:	4460 Chico Ave.	CEA/ HERS Certification Identification (if applicable):	
City/State/Zip:	Santa Rosa, CA 95407	Phone:	614-893-9647

RESPONSIBLE PERSON'S DECLARATION STATEMENT
I certify the following under penalty of perjury, under the laws of the State of California:
1. The information provided on this Certificate of Compliance is true and correct.
2. I am eligible under Division 3 of the Business and Professions Code to accept responsibility for the building design or system design identified on this Certificate of Compliance (responsible designer)
3. The energy features and performance specifications, materials, components, and manufactured devices for the building design or system design identified on this Certificate of Compliance conform to the requirements of Title 24, Part 1 and Part 6 of the California Code of Regulations.
4. The building design features or system design features identified on this Certificate of Compliance are consistent with the information provided on other applicable compliance documents, worksheets, calculations, plans and specifications submitted to the enforcement agency for approval with this building permit application.

STATE OF CALIFORNIA
Nonresidential Building Commissioning
NRCC-CXR-E (Created 12/19) CALIFORNIA ENERGY COMMISSION

CERTIFICATE OF COMPLIANCE		NRCC-CXR-E
Project Name: Merritt Landscape and Horticulture Complex	Report Page:	Page 7 of 9
Project Address: 12500 Campus Drive Oakland CA 94616	Date Prepared:	2/10/2021

DOCUMENTATION AUTHOR'S DECLARATION STATEMENT

I certify that this Certificate of Compliance documentation is accurate and complete

Documentation Author Name:	Hillary Price	Documentation Author Signature:	
Company:	Red Car Analytics	Signature Date:	3/04/2021
Address:	4460 Chico Ave.	CEA/ HERS Certification Identification (if applicable):	
City/State/Zip:	Santa Rosa CA 95407	Phone:	614-893-9647

RESPONSIBLE PERSON'S DECLARATION STATEMENT
I certify the following under penalty of perjury, under the laws of the State of California:
1. The information provided on this Certificate of Compliance is true and correct.
2. I am eligible under Division 3 of the Business and Professions Code to accept responsibility for the building design or system design identified on this Certificate of Compliance (responsible designer)
3. The energy features and performance specifications, materials, components, and manufactured devices for the building design or system design identified on this Certificate of Compliance conform to the requirements of Title 24, Part 1 and Part 6 of the California Code of Regulations.
4. The building design features or system design features identified on this Certificate of Compliance are consistent with the information provided on other applicable compliance documents, worksheets, calculations, plans and specifications submitted to the enforcement agency for approval with this building permit application.
5. I will ensure that a completed signed copy of this Certificate of Compliance shall be made available with the building permit(s) issued for the building, and made available to the enforcement agency for all applicable inspections. I understand that a completed signed copy of this Certificate of Compliance is required to be included with the documentation the builder provides to the building owner at occupancy.

Responsible Designer Name:	Tyler Bradshaw	Responsible Designer Signature:	
Company :	Blue Forest Engineering	Date Signed:	3/1/2021
Address:	3622 Kingsley Street	License:	CA M33496
City/State/Zip:	Oakland, CA 94610	Phone:	501.924.8205

DOCUMENTATION AUTHOR'S DECLARATION STATEMENT

I certify that this Certificate of Compliance documentation is accurate and complete

Documentation Author Name:	Hillary Price	Documentation Author Signature:	
Company:	Red Car Analytics	Signature Date:	3/04/2021
Address:	4460 Chico Ave.	CEA/ HERS Certification Identification (if applicable):	
City/State/Zip:	Santa Rosa, CA 95407	Phone:	614-893-9647

STATE OF CALIFORNIA
Nonresidential Building Commissioning
NRCC-CXR-E (Created 12/19) CALIFORNIA ENERGY COMMISSION

CERTIFICATE OF COMPLIANCE		NRCC-CXR-E
Project Name: Merritt Landscape and Horticulture Complex	Report Page:	Page 9 of 9
Project Address: 12500 Campus Drive Oakland CA 94616	Date Prepared:	2/10/2021

5. I will ensure that a completed signed copy of this Certificate of Compliance shall be made available with the building permit(s) issued for the building, and made available to the enforcement agency for all applicable inspections. I understand that a completed signed copy of this Certificate of Compliance is required to be included with the documentation the builder provides to the building owner at occupancy.

Responsible Designer Name:	Chris Noll	Responsible Designer Signature:	
Company :	Noll & Tam Architects	Date Signed:	03/26/2021
Address:	729 Heinz Ave	License:	C15916
City/State/Zip:	Berkeley CA 94710	Phone:	510-542-2200

CA Building Energy Efficiency Standards - 2019 Nonresidential Compliance: http://www.energy.ca.gov/title24/2019standards/ December 2019

APPROVALS

IDENTIFICATION STAMP
DIV. OF THE STATE ARCHITECT
APP: 01-119409 INC:
REVIEWED FOR
SS ☑ FLS ☑ ACS ☑
DATE: 03/14/2022

NOLL & TAM ARCHITECTS
729 Heinz Avenue
Berkeley, CA 94710
tel 510.542.2200
fax 510.542.2201

SEAL

LICENSED ARCHITECT
CHRISTOPHER NOLL
No. C15916
REN. 12-31-23
STATE OF CALIFORNIA

PROJECT TITLE

Peralta Community College District
MERRITT COLLEGE NEW LANDSCAPE HORTICULTURE COMPLEX

12500 Campus Drive
Oakland, CA 94619

BID SET

ISSUE DATE **03/03/2022**
N&T JOB NUMBER **22003**

REVISIONS

	DATE	DESCRIPTION

DRAWN BY **Author** CHECKED BY **Checker**

SHEET TITLE
TITLE 24- COMMISSIONING FORMS

SHEET NUMBER
G2.22

3/3/2022 11:00:19 AM BIM 360://PCCD Merritt Horticulture/Merritt Horticulture_2020.rvt

STATE OF CALIFORNIA
Solar Ready Areas
NRCC-SRA-E (Created 11/19) — CALIFORNIA ENERGY COMMISSION

CERTIFICATE OF COMPLIANCE		NRCC-SRA-E
Project Name:	LANDSCAPE HORTICULTURE COMPLEX, MERRITT COLLEGE	Report Page: Page 1 of 5
Project Address:	12500 CAMPUS DR, OAKLAND CA 94619	Date Prepared: 03/26/2021

This document is used to demonstrate compliance with mandatory requirements in §110.10 for newly constructed buildings which are either high-rise multifamily ten stories or fewer, hotel/motel ten stories or fewer or all other nonresidential buildings three stories or fewer. It is also used to demonstrate compliance for additions to these building types which add more than 2,000 ft² of roof area. Alterations or additions of less than 2,000 ft² of roof area are not required to comply with §110.10.

A. GENERAL INFORMATION

01	Project Location (city)	OAKLAND	04	Building Type	Other nonresidential bldg 3 stories or fewer
02	Climate Zone	3	05	Construction Type	New Construction
03	☐ Roof is designed for vehicle traffic, parking or for heliport				

B. PROJECT SCOPE

Table Instructions: Select the compliance path the project is using to comply per §110.10(b)1B.

My project consists of (check one):

01

☑ Provide Solar Ready Area no exceptions	The project has allocated a solar zone on the roof plan per requirements in §110.10(b), as documented in Table F.
☐ Exception to Solar Ready Area: Installed Solar Photovoltaic System	The project includes a permanently installed solar electric system having a nameplate DC power rating, measured under Standard Test Conditions, of no less than one watt per square foot of roof area, as documented in Table G.
☐ Exception to Solar Ready Area: Installed Solar Water Heating System	The project is a hotel/motel or high-rise multifamily occupancy and includes a permanently installed domestic solar water-heating system complying with §150.1(c)8Bii and Reference Residential Appendix RA4, as documented in Table H.
☐ Exception to Solar Ready Area: Smart Thermostat and Alternative Energy Efficiency Measure	The project is a high-rise multifamily occupancy where all thermostats in each dwelling unit comply with §110.12(a) AND at least one additional measure listed in Exception 4 to §110.10(b)1B is installed, as documented in Table I.

C. COMPLIANCE RESULTS

Table Instructions: If any cell on this table says "DOES NOT COMPLY" or "COMPLIES with Exceptional Conditions" refer to Table D. for guidance or see the applicable Table referenced below

Allocated Solar Zone				Installed PV System				Installed SWH System				Smart Tstat and Alternative EE Measure		Compliance Results
01		02		03		04		05		06		07	08	09
Required Minimum Area (ft²)	≤	Designated Area (ft²)	OR	Required Minimum DC Power Rating (Watts)	≤	Designed DC Power Rating (Watts)	OR	Required Minimum Solar Savings Fraction	≤	Designed/ Rated Solar Savings Fraction	OR	JA5 Compliant Thermostat Specified?	Alternative Energy Efficiency Measure	
(See Table F)				(See Table G)				(See Table H)				(See Table I)		
3,046.2	≤	3,147	OR		≤		OR		≤		OR			COMPLIES
Drawing Sheet E4.01 Location in construction documents showing the location for inverters and metering equipment and a pathway for the routing of conduit/ plumbing to the electrical service/ water heating system per §110.10(c).														COMPLIES

D. EXCEPTIONAL CONDITIONS

This table is auto-filled with uneditable comments because of selections made or data entered in tables throughout the form.

No exceptional conditions apply to this project.

E. ADDITIONAL REMARKS

This table includes remarks made by the permit applicant to the Authority Having Jurisdiction.

F. ALLOCATED SOLAR ZONE

Table Instructions: Complete this table if the project is designating a solar zone to comply with §110.10(b)1B. For new construction consider total roof area; for additions consider newly added roof area.

Required Minimum Solar Zone

01	02	03	04	05	06		07	08
					Potential Solar Zone Areas: Roof Areas with ≥ 70% Solar Access			
Minimum Solar Zone Area Calculation Method	Total New or Added Roof Area (ft²)	Total New or Added Roof Area Covered with Skylights (ft²)	Minimum Solar Zone Based on Total or Added Roof Area (0.15 x (Roof-Skylt)) (ft²)	Method/Tool(s) Used to Determine Annual Solar Access for Potential Zones[1]	Low-Sloped Area (≤ 2:12 pitch) (ft²)	Steep-Sloped Area (> 2:12 pitch), Oriented 90° - 300° (ft²)	Total Potential Solar Zone Area (ft²)	Minimum Solar Zone Based on Potential Zone (0.5 x (Total Potential Zone)) (ft²)	Required Minimum Solar Zone Area (ft²)
Total New or Added Ro	27,413	7,105	3,046.2						3,046.2

Designated Solar Zone Subareas

09	10	11	12	13	14	15	16	17	18	19
Subarea Name or Tag	Building Plan Reference	Roof or Overhang Slope (Low ≤ 2:12 pitch) (Steep > 2:12 pitch)	Is Steep-Sloped Roof or Overhang between 90 and 300 degrees?	Subarea Complies with Title 24, Part 9	Solar Zone Subarea Free of Obstructions per §110.10(b)3A	Subarea is Required Distance from Potential Obstructions per §110.10(b)3B	Is the Smallest Dimension 5 feet or greater?	Min. Area Required per Subarea (ft²)	Designated Area (ft²)	Subarea Complies?

Table Continued

Designated Solar Zone Subareas

09	10	11	12	13	14	15	16	17	18	19
Subarea Name or Tag	Building Plan Reference	Roof or Overhang Slope (Low ≤ 2:12 pitch) (Steep > 2:12 pitch)	Is Steep-Sloped Roof or Overhang between 90 and 300 degrees?	Subarea Complies with Title 24, Part 9	Solar Zone Subarea Free of Obstructions per §110.10(b)3A	Subarea is Required Distance from Potential Obstructions per §110.10(b)3B	Is the Smallest Dimension 5 feet or greater?	Min. Area Required per Subarea (ft²)	Designated Area (ft²)	Subarea Complies?
W1	A2.41	Steep-Sloped	Yes	Yes	Yes	Yes	Yes	160	237	COMPLIES
W2	A2.41	Steep-Sloped	Yes	Yes	Yes	Yes	Yes	160	358	COMPLIES
W3	A2.41	Steep-Sloped	Yes	Yes	Yes	Yes	Yes	160	1,000	COMPLIES
E1	A2.42	Steep-Sloped	Yes	Yes	Yes	Yes	Yes	160	273	COMPLIES
E2	A2.42	Steep-Sloped	Yes	Yes	Yes	Yes	Yes	160	1,279	COMPLIES
								Total Designated Solar Zone Area (ft²):	**3,147**	

Interconnection Pathways	
Location in construction documents showing the location for inverters and metering equipment and a pathway for the routing of conduit/ plumbing to the electrical service/ water heating system per §110.10(c).	Drawing Sheet E4.01

[1] *FOOTNOTE: This field is used to document how the percentage of annual solar access was determined per §110.10(b)1B. Solar access is the ratio of solar insolation including shade to the solar insolation without shade. Shading from obstructions located on the roof or any other part of the building shall not be included in the determination of annual solar access.*

G. PERMANENTLY INSTALLED SOLAR PHOTOVOLTAIC (PV) SYSTEM

This Section Does Not Apply

H. PERMANENTLY INSTALLED SOLAR HOT WATER SYSTEM

This Section Does Not Apply

I. SMART THERMOSTATS AND ALTERNATIVE EFFICIENCY MEASURE

This Section Does Not Apply

J. DECLARATION OF REQUIRED CERTIFICATES OF INSTALLATION

Table Instructions: Selections have been made based on information provided in previous tables of this document. If any selection needs to be changed, please explain why in Table E. Additional Remarks. These documents must be provided to the building inspector during construction and can be found online at https://www.energy.ca.gov/title24/2019standards/2019_compliance_documents/Nonresidential_Documents/NRCI/

YES	NO	Form/Title	Field Inspector Pass	Field Inspector Fail
○	◉	NRCI-SPV-01-E - Must be submitted for all newly installed Photovoltaic Systems (PV) being used to comply with §110.10(b)1B for high-rise multifamily, Hotel/Motel buildings less than 10 stories and nonresidential buildings less than 4 stories.	☐	☐
○	◉	NRCI-STH-01-E - Must be submitted for all newly installed Solar Water Heating systems being used to comply with §110.10(b)1B for high-rise multifamily, Hotel/Motel buildings less than 10 stories and nonresidential buildings less than 4 stories.	☐	☐

K. DECLARATION OF REQUIRED CERTIFICATES OF ACCEPTANCE

There are no Certificates of Acceptance applicable to solar ready requirements.

DOCUMENTATION AUTHOR'S DECLARATION STATEMENT

I certify that this Certificate of Compliance documentation is accurate and complete

Documentation Author Name:	CHRISTOPHER NOLL	Documentation Author Signature:	
Company:	NOLL & TAM ARCHITECTS	Signature Date:	03/26/2021
Address:	729 HEINZ AVE #7	CEA/ HERS Certification Identification (if applicable):	
City/State/Zip:	BERKELEY, CA 94710	Phone:	510-542-2200

RESPONSIBLE PERSON'S DECLARATION STATEMENT

I certify the following under penalty of perjury, under the laws of the State of California:

1. **The information provided on this Certificate of Compliance is true and correct.**
2. **I am eligible under Division 3 of the Business and Professions Code to accept responsibility for the building design or system design identified on this Certificate of Compliance (responsible designer)**
3. **The energy features and performance specifications, materials, components, and manufactured devices for the building design or system design identified on this Certificate of Compliance conform to the requirements of Title 24, Part 1 and Part 6 of the California Code of Regulations.**
4. **The building design features or system design features identified on this Certificate of Compliance are consistent with the information provided on other applicable compliance documents, worksheets, calculations, plans and specifications submitted to the enforcement agency for approval with this building permit application.**
5. **I will ensure that a completed signed copy of this Certificate of Compliance shall be made available with the building permit(s) issued for the building, and made available to the enforcement agency for all applicable inspections. I understand that a completed signed copy of this Certificate of Compliance is required to be included with the documentation the builder provides to the building owner at occupancy.**

Responsible Designer Name:	CHRISTOPHER NOLL	Responsible Designer Signature:	
Company :	NOLL & TAM ARCHITECTS	Date Signed:	03/26/2021
Address:	729 HEINZ AVE #7	License:	C15916
City/State/Zip:	BERKELEY, CA 94710	Phone:	510-542-2200

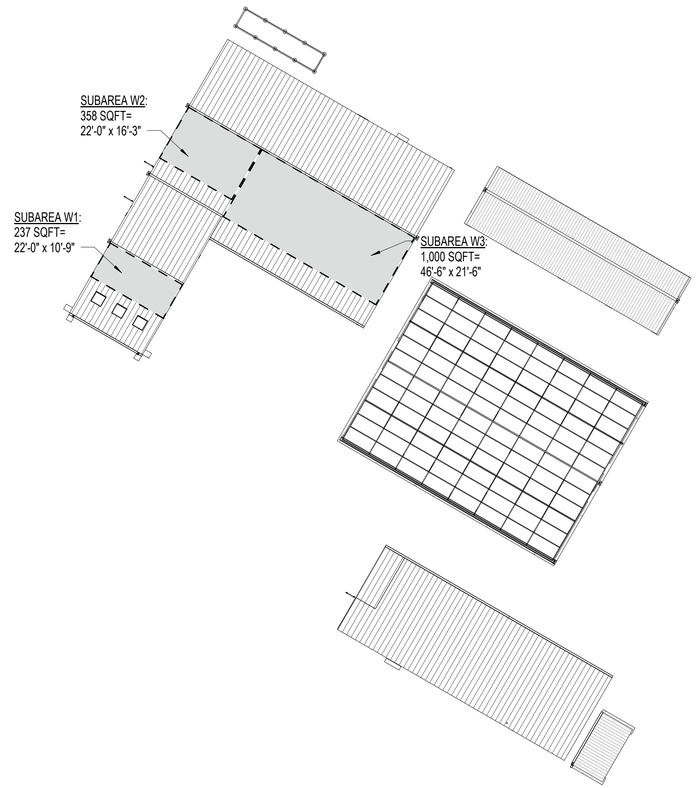

DESIGN LOAD FOR FUTURE PV = 5 PSF

CEC SECTION 110.10 (b) 1 B
SOLAR ZONE AREA

TOTAL ROOF AREA = 27,413 SQFT
SKYLIGHT AREA = 7,105 SQFT

TOTAL MINIMUM SOLAR ZONE AREA, REQUIRED = (27,413 - 7,105) x 0.15
= 3,046 SQFT

TOTAL MINIMUM SOLAR ZONE AREA, PROVIDED = 237 + 358 + 1,000 + 273 + 1,279
= 3,147 SQFT

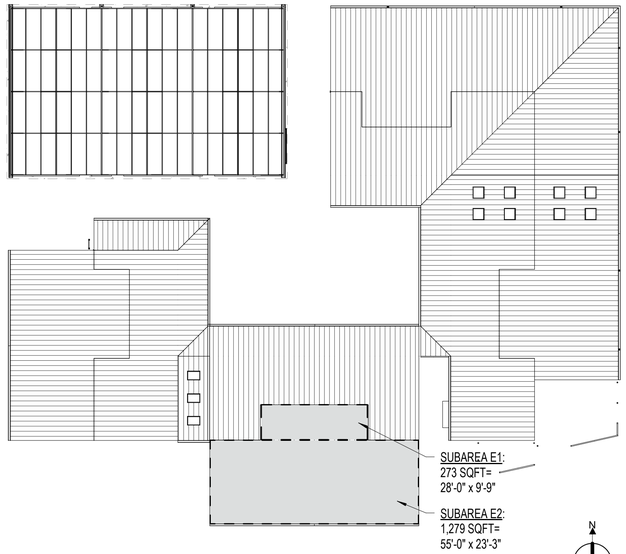

1 G2.41 **ROOF PLAN, SOLAR ZONES**
1" = 20'-0"

APPROVALS

IDENTIFICATION STAMP
DIV. OF THE STATE ARCHITECT
APP: 01-119409 INC:
REVIEWED FOR
SS ☑ FLS ☑ ACS ☑
DATE: 03/14/2022

NOLL & TAM ARCHITECTS
729 Heinz Avenue
Berkeley, CA 94710
tel 510.542.2200
fax 510.542.2201

SEAL

LICENSED ARCHITECT
CHRISTOPHER NOLL
No. C15916
REN. 12-31-23
STATE OF CALIFORNIA

PROJECT TITLE

Peralta Community College District
MERRITT COLLEGE NEW LANDSCAPE HORTICULTURE COMPLEX

12500 Campus Drive
Oakland, CA 94619

BID SET

ISSUE DATE 03/03/2022
N&T JOB NUMBER 22003

REVISIONS

	DATE	DESCRIPTION

DRAWN BY Author | CHECKED BY Checker

SHEET TITLE
SOLAR READY ROOF AREAS

SHEET NUMBER
G2.41

3/3/2022 11:00:26 AM BIM 360://PCCD Merritt Horticulture/Merritt Horticulture_2020.rvt

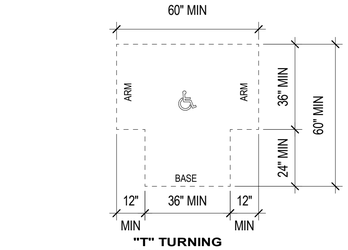

2 G3.21 ACCESSIBLE CLEARANCES
3/8" = 1'-0"

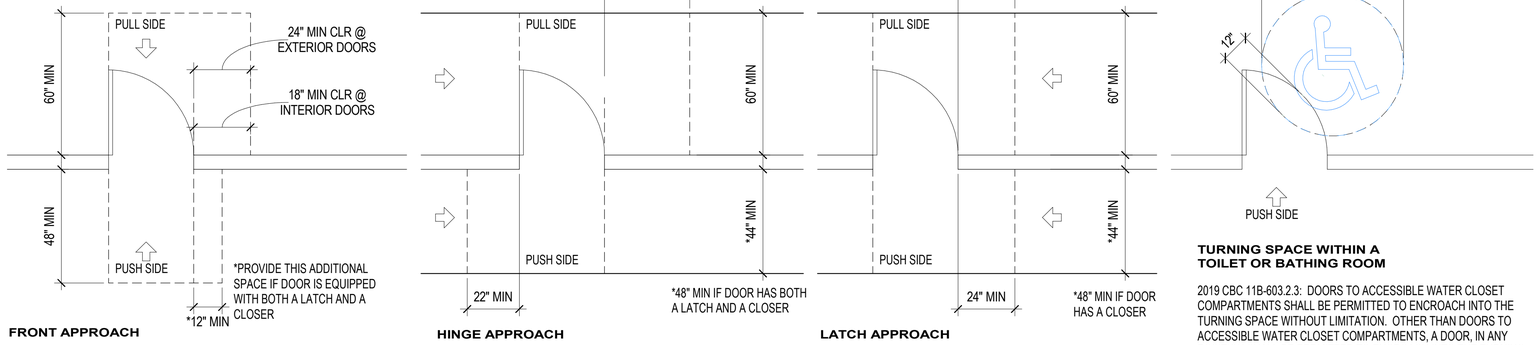

GENERAL NOTES REGARDING DOOR CLEARANCES:
1. LEVEL IS DEFINED AS 2% MAX SLOPE IN ANY DIRECTION.
2. ALL DOORS REQUIRING FULL USER PASSAGE MUST BE 3'-0"x6'-8" MIN OR HUNG TO PROVIDE 32" MIN. CLEAR OPENING
3. SYMBOL DENOTING "CLEAR DIRECTION OF APPROACH"

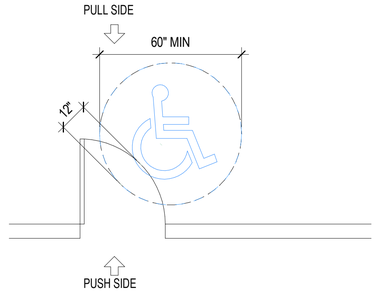

TURNING SPACE WITHIN A TOILET OR BATHING ROOM

2019 CBC 11B-603.2.3: DOORS TO ACCESSIBLE WATER CLOSET COMPARTMENTS SHALL BE PERMITTED TO ENCROACH INTO THE TURNING SPACE WITHOUT LIMITATION. OTHER THAN DOORS TO ACCESSIBLE WATER CLOSET COMPARTMENTS, A DOOR, IN ANY POSITION SHALL BE PERMITTED TO ENCROACH INTO THE TURNING SPACE BY 12' MAXIMUM.

1 G3.21 LEVEL MANEUVERING CLEARANCES AT DOORS
3/8" = 1'-0"

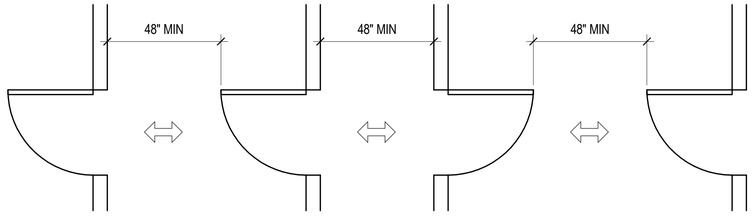

3 G3.21 DOORS IN SERIES(REFERENCE)
3/8" = 1'-0"

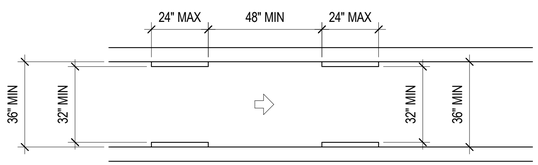

5 G3.21 ACCESSIBLE ROUTE WIDTH(REFERENCE)
3/8" = 1'-0"

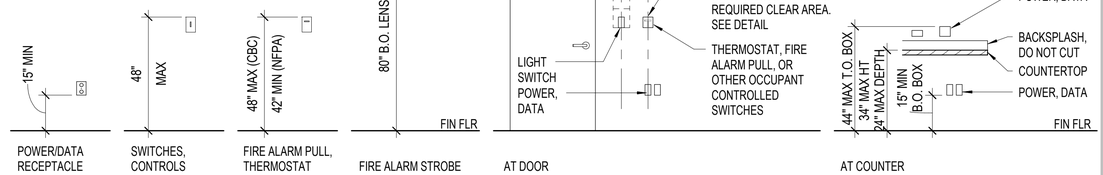

4 G3.21 ELEC MOUNTING HTS (REFERENCE)
3/8" = 1'-0"

NOTE:
1. RECEPTACLES, POWER/DATA, SWITCHES/CONTROLS/THERMOSTATS SHALL BE INSTALLED AT A RANGE OF 15" TO BOTTOM OF BOX AND 48" AFF TO TOP OF BOX.
2. FIRE STROBES ARE TO BE MOUNTED 80" MIN. AFF TO 96" MAX. AFF TO BOTTOM OF LENSE, PER NFPA 72-4-4.4
3. UNLESS OTHERWISE NOTED, MOUNT ELECTRICAL ITEMS AS INDICATED.

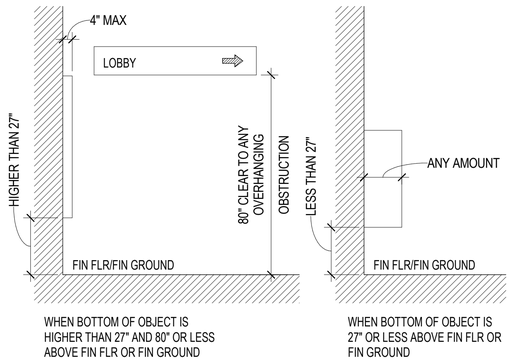

6 G3.21 PROTRUDING OBJECTS (REFERENCE)
3/8" = 1'-0"

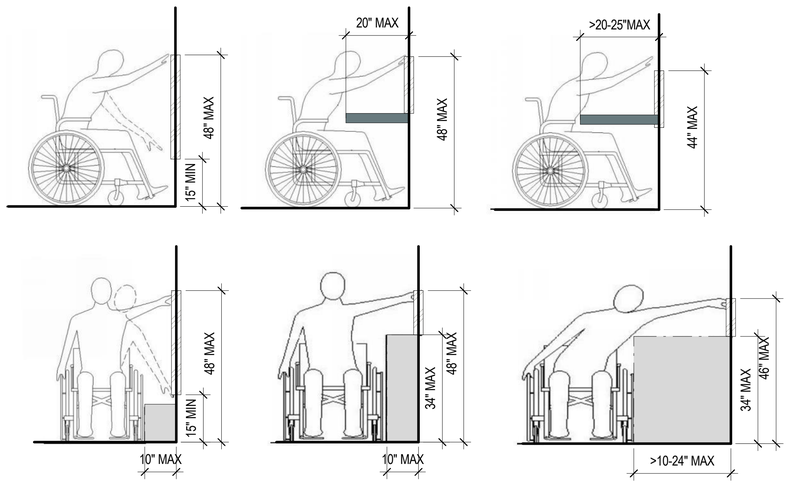

8 G3.21 REACH RANGES(REFERENCE)
1/2" = 1'-0"

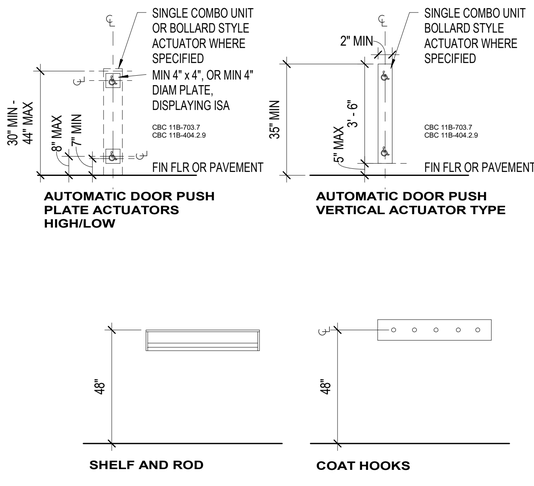

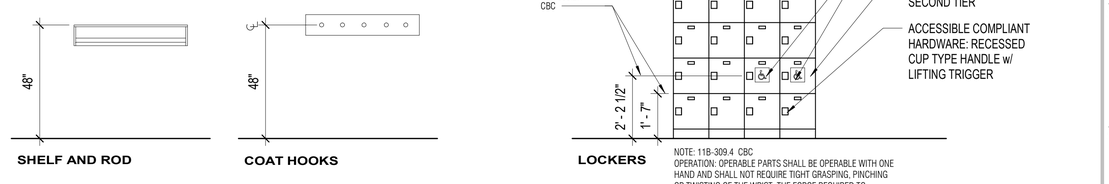

7 G3.21 TYP MOUNTING HTS (REFERENCE)
3/8" = 1'-0"

APPROVALS

IDENTIFICATION STAMP
DIV. OF THE STATE ARCHITECT
APP: 01-119409 INC:
REVIEWED FOR
SS ☑ FLS ☑ ACS ☑
DATE: 03/14/2022

NOLL & TAM ARCHITECTS
729 Heinz Avenue
Berkeley, CA 94710
tel 510.542.2200
fax 510.542.2201

SEAL

LICENSED ARCHITECT
CHRISTOPHER NOLL
No. C15916
REN. 12-31-23
STATE OF CALIFORNIA

PROJECT TITLE

Peralta Community College District
MERRITT COLLEGE NEW LANDSCAPE HORTICULTURE COMPLEX

12500 Campus Drive
Oakland, CA 94619

BID SET

ISSUE DATE	03/03/2022
N&T JOB NUMBER	22003

REVISIONS

	DATE	DESCRIPTION

DRAWN BY **Author** CHECKED BY **Checker**

SHEET TITLE
MOUNTING HEIGHTS / STANDARD CODE AND ACCESSIBILITY DETAILS

SHEET NUMBER
G3.21

3/3/2022 11:00:28 AM BIM 360://PCCD Merritt Horticulture/Merritt Horticulture_2020.rvt

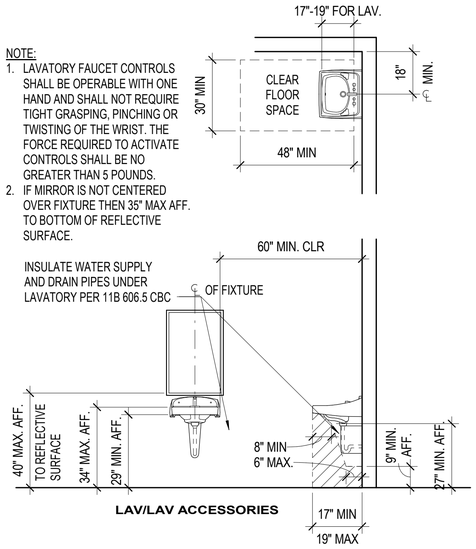

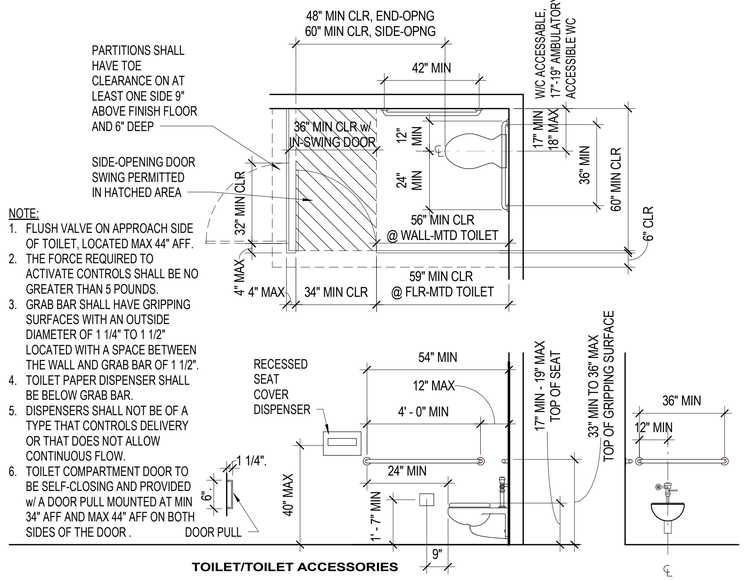

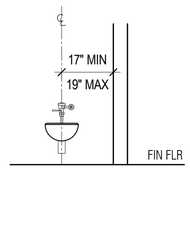

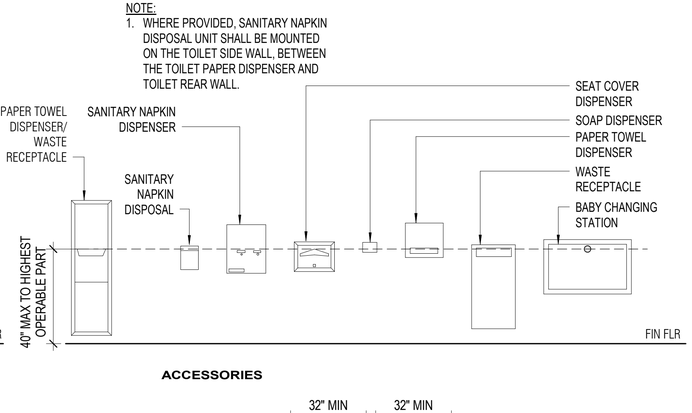

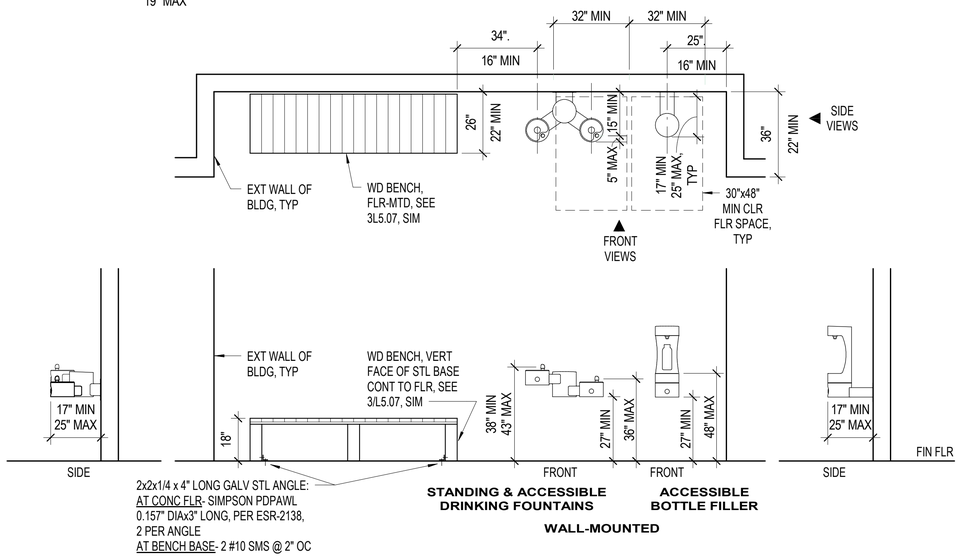

NOTE:
1. DRINKING FOUNTAIN SHALL BE A 18" MIN, 19" MAX IN DEPTH, WITH A CLEAR AND UNOBSTRUCTED KNEE SPACE UNDER THE DRINKING FOUNTAIN NOT LESS THAN 27" IN HEIGHT AND 8" IN DEPTH FROM THE EDGE OF THE FOUNTAIN.
2. THE BUBBLER SHALL BE ACTIVATED BY A MANUALLY OPERATED SYSTEM NOT REQUIRING A FORCE GREATER THAN 5 POUNDS THAT IS LOCATED WITHIN 6" OF THE FRONT EDGE OF THE FOUNTAIN OR AN ELECTRONICALLY CONTROLLED DEVICE.
3. THE BUBBLER ORIFICE SHALL BE LOCATED WITHIN 5" OF THE FRONT EDGE OF THE FOUNTAIN AND WITHIN 36" OF THE FLOOR.
4. THE SPOUT SHALL PROVIDE A FLOW OF WATER AT LEAST 4" HIGH AS TO ALLOW THE INSERTION OF A CUP OR GLASS UNDER THE FLOW OF WATER.
5. WHEN USED, WING WALL OR BARRIERS SHALL PROJECT HORIZ AT LEAST AS FAR AS THE DRINKING FOUNTAIN, AND TO WITHIN 6" VERT FROM THE FLOOR/GROUND.

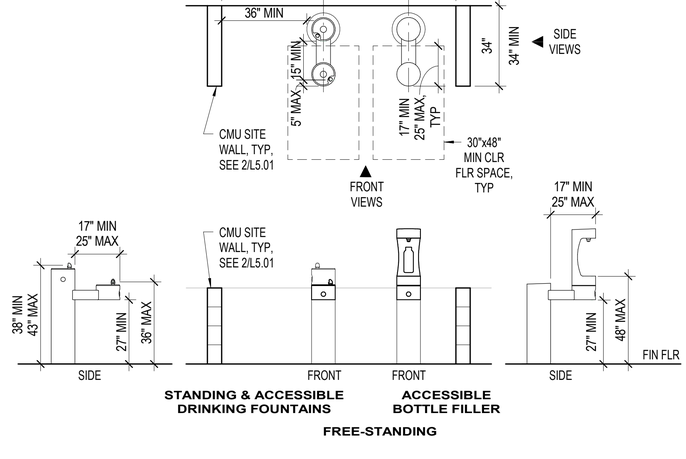

1 G3.22 TOILET ROOM MOUNTING HEIGHTS(REFERENCE)

3/8" = 1'-0"

APPROVALS

IDENTIFICATION STAMP
DIV. OF THE STATE ARCHITECT
APP: 01-119409 INC:
REVIEWED FOR
SS ☑ FLS ☑ ACS ☑
DATE: 03/14/2022

NOLL & TAM ARCHITECTS
729 Heinz Avenue
Berkeley, CA 94710
tel 510.542.2200
fax 510.542.2201

SEAL

LICENSED ARCHITECT
CHRISTOPHER NOLL
No. C15916
REN. 12-31-23
STATE OF CALIFORNIA

PROJECT TITLE

Peralta Community College District
MERRITT COLLEGE NEW LANDSCAPE HORTICULTURE COMPLEX

12500 Campus Drive
Oakland, CA 94619

BID SET

ISSUE DATE 03/03/2022
N&T JOB NUMBER 22003

REVISIONS

	DATE	DESCRIPTION

DRAWN BY Author | CHECKED BY Checker

SHEET TITLE

STANDARD CODE AND ACCESSIBILITY DETAILS

SHEET NUMBER

G3.22

3/3/2022 11:00:30 AM BIM 360://PCCD Merritt Horticulture/Merritt Horticulture_2020.rvt

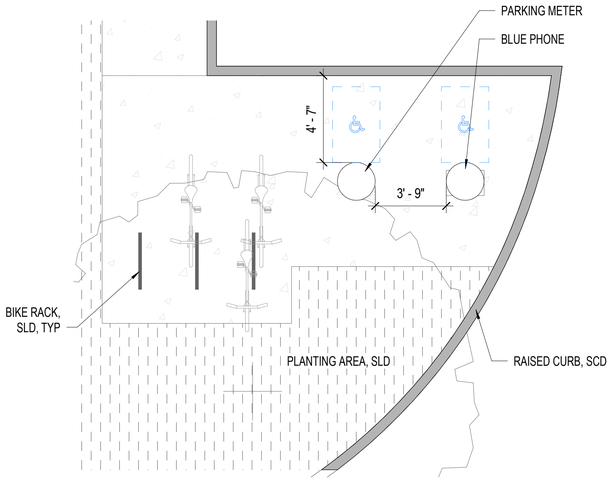

3 G3.25 ENLARGED PLAN - BLUE PHONE

1/4" = 1'-0"

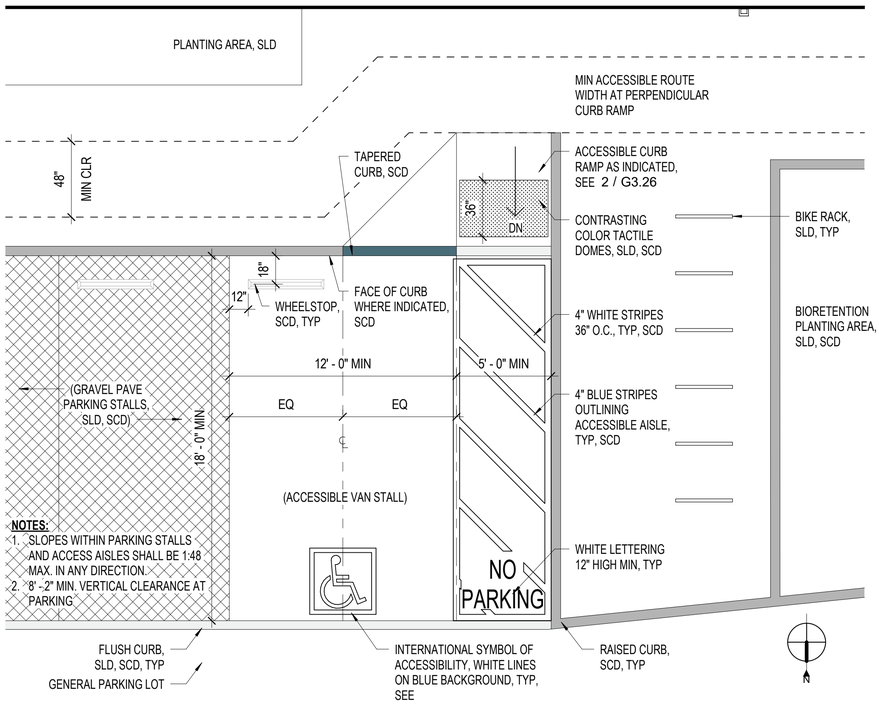

2 G3.25 ENLARGED ACCESIBLE VAN STALL

1/4" = 1'-0"

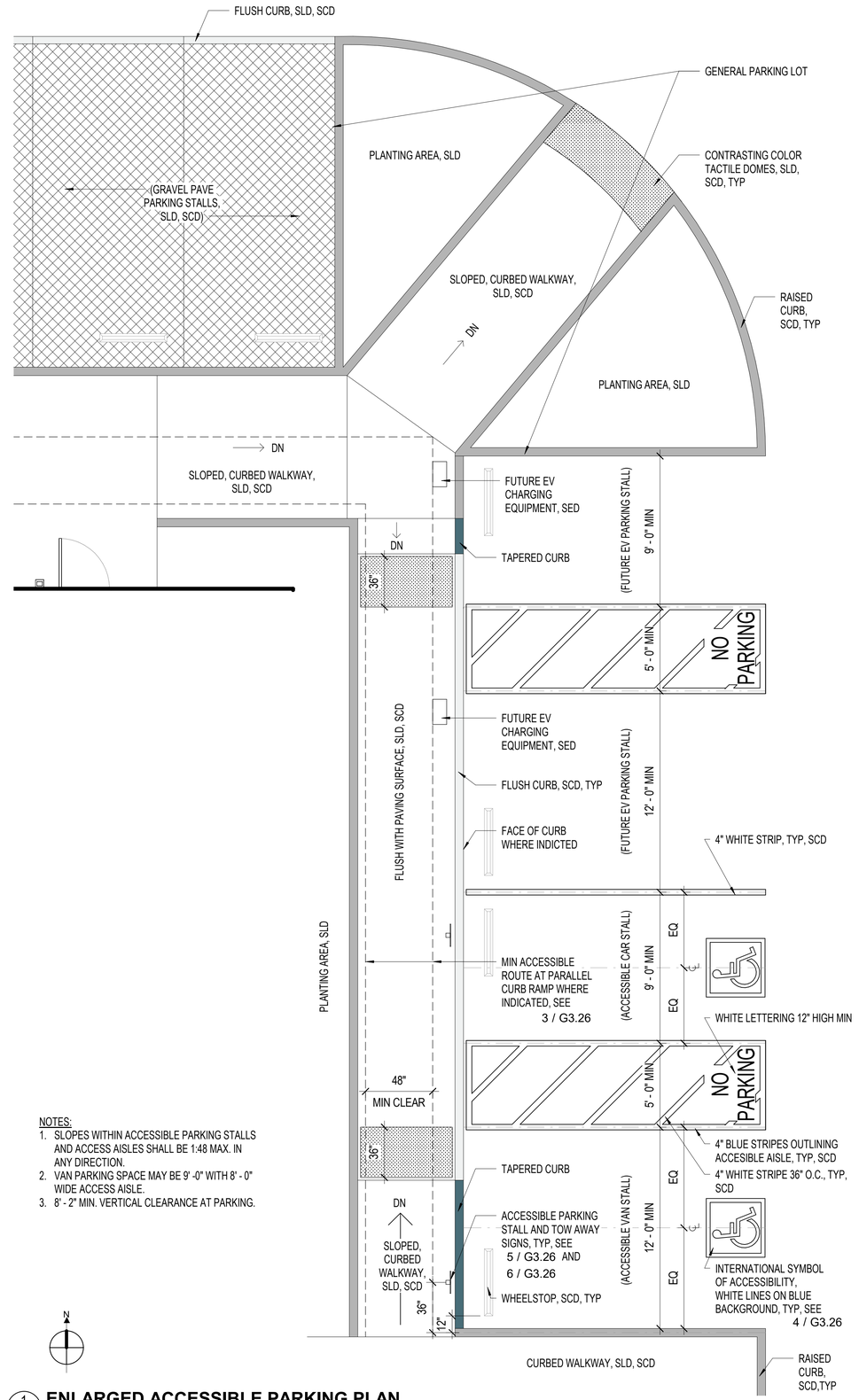

1 G3.25 ENLARGED ACCESSIBLE PARKING PLAN

1/4" = 1'-0"

APPROVALS

IDENTIFICATION STAMP
DIV. OF THE STATE ARCHITECT
APP: 01-119409 INC:
REVIEWED FOR
SS ☑ FLS ☑ ACS ☑
DATE: 03/14/2022

NOLL & TAM ARCHITECTS
729 Heinz Avenue
Berkeley, CA 94710
tel 510.542.2200
fax 510.542.2201

SEAL

LICENSED ARCHITECT
CHRISTOPHER NOLL
No. C15916
REN. 12-31-23
STATE OF CALIFORNIA

PROJECT TITLE

Peralta Community College District
MERRITT COLLEGE NEW LANDSCAPE HORTICULTURE COMPLEX

12500 Campus Drive
Oakland, CA 94619

BID SET

ISSUE DATE	03/03/2022
N&T JOB NUMBER	22003

REVISIONS

	DATE	DESCRIPTION

DRAWN BY **Author** CHECKED BY **Checker**

SHEET TITLE
ACCESSIBLE PARKING ENLARGED PLANS

SHEET NUMBER
G3.25

3/3/2022 11:00:32 AM BIM 360://PCCD Merritt Horticulture/Merritt Horticulture_2020.rvt

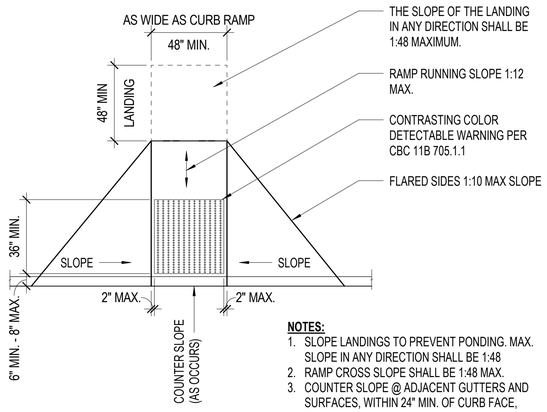

NOTES:
1. SLOPE LANDINGS TO PREVENT PONDING. MAX. SLOPE IN ANY DIRECTION SHALL BE 1:48
2. RAMP CROSS SLOPE SHALL BE 1:48 MAX.
3. COUNTER SLOPE @ ADJACENT GUTTERS AND SURFACES, WITHIN 24" MIN. OF CURB FACE, SHALL BE 1:20 MAX .
4. PROVIDE FLUSH TRANSITIONS AT ADJACENT SURFACES

2 G3.26 LANDINGS/SIDES OF CURB RAMPS
1/4" = 1'-0"

NOTE:
SEE LANDINGS/SIDES OF CURB RAMPS DETAIL 7/- FOR FURTHER REQUIREMENTS

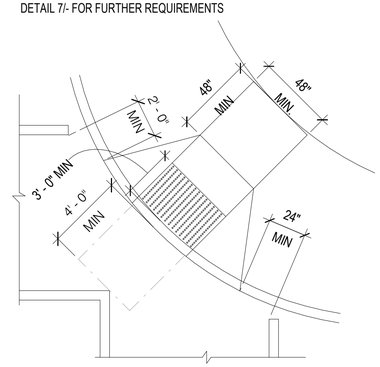

1 G3.26 DIAGONAL OR CORNER TYPE CURB RAMPS
1/4" = 1'-0"

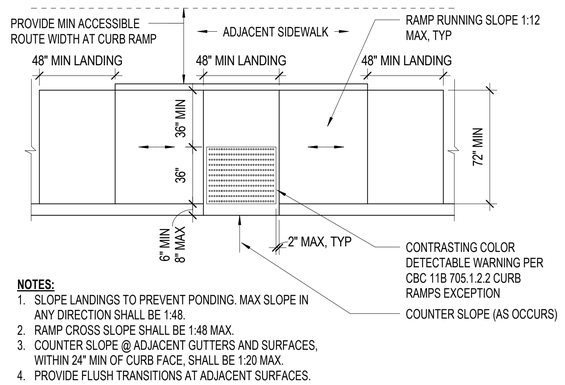

NOTES:
1. SLOPE LANDINGS TO PREVENT PONDING. MAX SLOPE IN ANY DIRECTION SHALL BE 1:48.
2. RAMP CROSS SLOPE SHALL BE 1:48 MAX.
3. COUNTER SLOPE @ ADJACENT GUTTERS AND SURFACES, WITHIN 24" MIN OF CURB FACE, SHALL BE 1:20 MAX.
4. PROVIDE FLUSH TRANSITIONS AT ADJACENT SURFACES.

3 G3.26 TYPICAL PARALLEL CURB RAMP
1/4" = 1'-0"

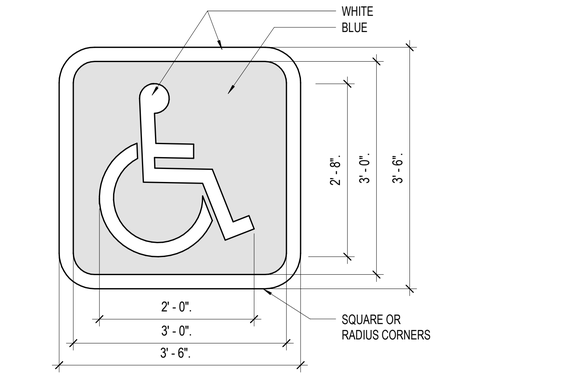

4 G3.26 INTERNATIONAL SYMBOL OF ACCESSIBILITY
3/4" = 1'-0"

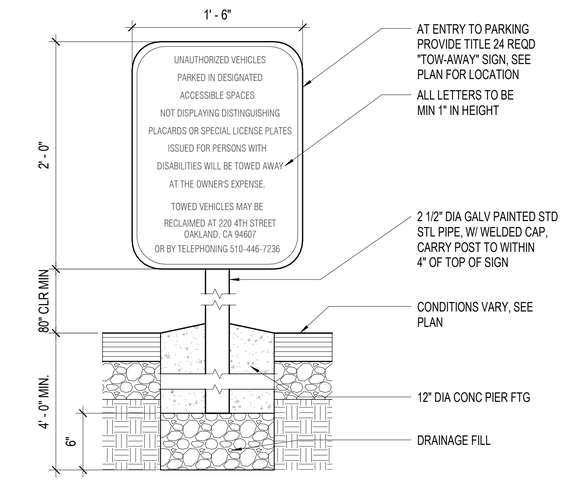

6 G3.26 TOW-AWAY SIGN
1 1/2" = 1'-0"

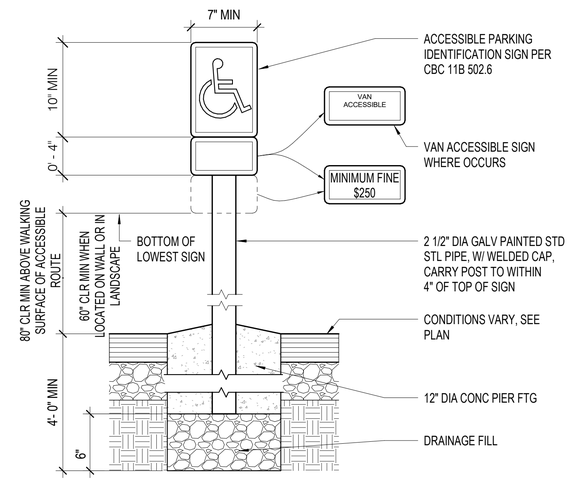

5 G3.26 IDENTIFICATION SIGN
1 1/2" = 1'-0"

APPROVALS

IDENTIFICATION STAMP
DIV. OF THE STATE ARCHITECT
APP: 01-119409 INC:
REVIEWED FOR
SS ☑ FLS ☑ ACS ☑
DATE: 03/14/2022

NOLL & TAM ARCHITECTS
729 Heinz Avenue
Berkeley, CA 94710
tel 510.542.2200
fax 510.542.2201

SEAL

LICENSED ARCHITECT
CHRISTOPHER NOLL
No. C15916
REN. 12-31-23
STATE OF CALIFORNIA

PROJECT TITLE

Peralta Community College District
MERRITT COLLEGE NEW LANDSCAPE HORTICULTURE COMPLEX

12500 Campus Drive
Oakland, CA 94619

BID SET

ISSUE DATE	03/03/2022
N&T JOB NUMBER	22003

REVISIONS

	DATE	DESCRIPTION

DRAWN BY	CHECKED BY
	MT

SHEET TITLE
SITE ACCESSIBILITY DETAILS

SHEET NUMBER
G3.26

3/3/2022 11:00:34 AM BIM 360://PCCD Merritt Horticulture/Merritt Horticulture_2020.rvt

GENERAL NOTES

1. WORK SHALL BE PERFORMED IN ACCORDANCE WITH THE PROJECT PLANS AND SPECIFICATIONS.
2. THE CONTRACTOR SHALL FAMILIARIZE HIMSELF OR HERSELF WITH THE GEOTECHNICAL REPORT, ENTITLED "GEOTECHNICAL DESIGN AND GEOLOGICAL HAZARDS EVALUATION REPORT" PREPARED BY TERRAPHASE ENGINEERING ON AUGUST 7, 2020 AND KEEP A COPY OF THIS REPORT ON SITE.
3. SHOULD IT APPEAR THAT THE WORK OUTLINED ON THESE PLANS IS NOT SUFFICIENTLY DETAILED OR SPECIFIED IN THE CONSTRUCTION DOCUMENTS, THE CONTRACTOR SHALL NOTIFY THE OWNER BEFORE PROCEEDING WITH THE WORK IN QUESTION AND REQUEST CLARIFICATION.
4. WHEN SPECIFICATIONS OR STANDARDS FROM DIFFERENT AUTHORITIES DIFFER FOR THE SAME SUBJECT MATTER, NOTIFY OWNER FOR CLARIFICATION.
5. CONSTRUCTION STAKING SHALL BE PERFORMED BY A LAND SURVEYOR REGISTERED IN THE STATE OF CALIFORNIA.
6. UTILITIES AND UNDERGROUND FACILITIES INDICATED ARE FOR INFORMATION ONLY. IT IS THE CONTRACTOR'S RESPONSIBILITY TO VERIFY THE LOCATION AND DEPTH WITH THE APPROPRIATE AGENCIES AND /OR FIELD INVESTIGATION.
7. THE CONTRACTOR OR ANY SUBCONTRACTOR SHALL NOTIFY UNDERGROUND SERVICE ALERT ONE CALL PROGRAM 48 HOURS IN ADVANCE OF PERFORMING EXCAVATION WORK BY CALLING THE TOLL-FREE NUMBER 811. EXCAVATION IS DEFINED AS REMOVING MATERIAL 18 INCHES OR MORE BELOW EXISTING GRADE.
8. THE CONTRACTOR SHALL ADJUST TO FINAL GRADE EXISTING AND/OR NEW MANHOLES, CURB INLETS, CATCH BASINS, VALVES, VAULTS, MONUMENT COVERS, AND OTHER CASTINGS WITHIN THE WORK AREA TO FINAL GRADE IN PAVEMENT AND LANDSCAPE AREAS, UNLESS OTHERWISE NOTED.
9. THE CONTRACTOR SHALL POST ON SITE EMERGENCY TELEPHONE NUMBERS FOR AMBULANCE, POLICE, FIRE DEPARTMENTS, AND THOSE AGENCIES RESPONSIBLE FOR MAINTENANCE OF UTILITIES IN THE VICINITY OF THE JOB SITE.
10. THE CONTRACTOR SHALL MAINTAIN ON-SITE AND IN ALL VEHICLES A COPY OF THE SPILL PREVENTION AND RESPONSE PLAN AND SHALL BE KNOWLEDGEABLE OF THE REPORTING REQUIREMENTS AND PROCEDURES.
11. CONSTRUCTION CONTRACTOR AGREES THAT IN ACCORDANCE WITH GENERALLY ACCEPTED CONSTRUCTION PRACTICES, CONSTRUCTION CONTRACTOR WILL BE REQUIRED TO ASSUME SOLE AND COMPLETE RESPONSIBILITY FOR JOB SITE CONDITIONS DURING THE COURSE OF CONSTRUCTION OF THE PROJECT, INCLUDING SAFETY OF ALL PERSONS AND PROPERTY. THIS REQUIREMENT SHALL BE MADE TO APPLY CONTINUOUSLY AND NOT BE LIMITED TO NORMAL WORKING HOURS. CONSTRUCTION CONTRACTOR FURTHER AGREES TO DEFEND, INDEMNIFY AND HOLD THE ENGINEER HARMLESS FROM ANY AND ALL LIABILITY, REAL OR ALLEGED, IN CONNECTION WITH THE PERFORMANCE OF WORK ON THIS PROJECT, EXCEPTING LIABILITY ARISING FROM THE SOLE NEGLIGENCE OF THE ENGINEER.
12. CONTRACTOR SHALL COMPLY WITH STATE, COUNTY AND CITY LAWS AND ORDINANCES; AND REGULATIONS OF THE DEPARTMENT OF INDUSTRIAL RELATIONS, OSHA AND INDUSTRIAL ACCIDENT COMMISSION RELATING TO SAFETY AND CHARACTER OF WORK, EQUIPMENT AND LABOR PERSONNEL.
13. THE CONTRACTOR IS RESPONSIBLE FOR PROVIDING DUST CONTROL 24-HOUR PER DAY. DUST CONTROL MEASURES SHALL BE APPLIED AS NECESSARY, OR AS DIRECTED BY PERALTA COMMUNICTY COLLEGE DISTRICT, TO PREVENT THE TRANSPORT OFF-SITE OF ANY DUST OR OTHER AIRBORNE NUISANCE.
14. TREE PROTECTION FENCING SHALL BE PROVIDED AT THE DRIP LINE AROUND TREES TO REMAIN. ANY EXCAVATION REQUIRED WITHIN THE TREE PROTECTION ZONE SHALL BE BY HAND EXCAVATION OR AIR ONLY AND THE CONTRACTOR SHALL AVOID DAMAGE TO THE TREE'S ROOTS. WHEN CUTTING ROOTS IS UNAVOIDABLE, THE CONTRACTOR SHALL FOLLOW THE RECOMMENDATIONS OF THE PROJECT ARBORIST OR LANDSCAPE ARCHITECT.
15. TRUCKS HAULING DIRT AND DEBRIS SHALL BE COVERED TO REDUCE WINDBLOWN DUST SPILLS.
16. ON-SITE STOCKPILES OF IMPORTED AND EXCAVATED MATERIAL TO BE LEFT IN PLACE FOR MORE THAN 24 HOURS SHALL BE COVERED AND WATERED TO PREVENT DUST AND RUNOFF.
17. DURING CONSTRUCTION, THE CAMPUS AND PUBLIC STREETS SHALL BE CLEANED AS OFTEN AS REQUIRED TO REMOVE ACCUMULATION OF MUD AND DEBRIS RESULTING FROM CONSTRUCTION. IF IMPORT OR EXPORT OF DIRT IS NECESSARY, THE CONTRACTOR SHALL OBTAIN AN APPROVAL FOR THE HAULING ROUTE FROM THE OAKLAND CITY PLANNING. THE HAULING ROUTES SHALL BE STRICTLY ADHERED TO BY THE CONTRACTOR AND SUBCONTRACTORS.
18. STORAGE OF CONSTRUCTION MATERIAL AND EQUIPMENT ON CITY STREETS WILL NOT BE PERMITTED.
19. CONSTRUCTION EQUIPMENT, TOOLS, ETC. SHALL NOT BE CLEANED OR RINSED INTO A STREET, GUTTER, OR STORM DRAIN.
20. TRAFFIC CONTROL SHALL BE THE CONTRACTOR'S RESPONSIBILITY.
21. THE CONTRACTOR SHALL MAINTAIN THE WORKSITE AND ADJACENT AREAS IN A CLEAN AND ORGANIZED MANNER THROUGHOUT THE PROJECT DURATION.
22. THE CONTRACTOR SHALL PRESERVE AND PROTECT ALL EXISTING SITE FEATURES/STRUCTURES NOT SPECIFICALLY SHOWN TO BE REMOVED. THE CONTRACTOR SHALL BE FULLY RESPONSIBLE FOR ALL MITIGATION TO DAMAGED SITE FEATURES/STRUCTURES.
23. THE COST OF PROTECTION AND/OR REPAIR OF THE CONTRACTOR'S WORK AS AFFECTED BY STORMWATER DURING A STORM EVENT SHALL BE THE CONTRACTOR'S RESPONSIBILITY UNTIL THE IMPROVEMENTS HAVE BEEN ACCEPTED BY THE OWNER. THE CONTRACTOR SHALL BE RESPONSIBLE FOR ANY DAMAGE TO ADJACENT PROPERTIES OR IMPROVEMENTS AS A RESULT OF NOT PROTECTING SUCH AREAS FROM STORMWATER FLOWING BEYOND THE WORK AREA.
24. THE COST OF CORRECTIVE WORK REQUIRED FOR COMPLETION AND/OR ACCEPTANCE OF THE WORK NECESSITATED BECAUSE OF UNSATISFACTORY WORKMANSHIP OR MATERIALS OR DUE TO THE CONTRACTOR'S NEGLIGENCE SHALL BE THE RESPONSIBILITY OF THE CONTRACTOR.
25. THE WORK SITE SHALL BE CLEANED AND LEFT FREE OF CONSTRUCTION WASTE AND RUBBISH OF ANY NATURE BY THE CONTRACTOR AT THE END OF EACH WORK DAY.
26. CHAPTER 33 OF THE CALIFORNIA FIRE CODE AND NFPA 241 SHALL BE FOLLOWED FOR AREAS UNDER CONSTRUCTION. CONTACT THE OAKLAND FIRE DEPARTMENT FOR SPECIFIC REQUIREMENTS FOR BUILDINGS UNDER CONSTRUCTION.
27. THE CONTRACTOR SHALL ABIDE BY THE RULES AND REGULATIONS OF THE STATE OF CALIFORNIA CONSTRUCTION SAFETY ORDERS PERTAINING TO EXCAVATIONS AND TRENCHES.

APPLICABLE CODES AND STANDARDS

THE DESIGN SHOWN IN THESE DRAWINGS WAS BASED UPON THE FOLLOWING STANDARDS. IN THE EVENT OF CONFLICTING REQUIREMENTS, THE WORK SHALL FOLLOW THE MORE STRINGENT STANDARD OR THE ORDER LISTED BELOW.

1. CALIFORNIA BUILDING CODE 2019
2. CALIFORNIA FIRE CODE 2019

EXISTING CONDITIONS

1. EXISTING TOPOGRAPHIC INFORMATION SHOWN ON THESE PLANS IS BASED ON TOPOGRAPHIC SURVEY PREPARED BY CSW/STUBER-STROEH ENGINEERING GROUP, INC. IN JANUARY 2020 AND SUPPLEMENTED ON JULY 20, 2020. HORIZONTAL DATUM IS NAD83 PER TRIMBLE CSDS RTN AND VERTICAL DATUM IS NAVD88 PER TRIMBLE CSDS RTN. UNDERGROUND UTILITY INFORMATION IS BASED ON UVARA RECORD DRAWINGS AND THE TOPOGRAPHIC SURVEYS LISTED ABOVE. GRADES ENCOUNTERED ON-SITE MAY VARY FROM THOSE SHOWN. CONTRACTOR SHALL REVIEW THE PLANS AND SPECIFICATIONS AND CONDUCT FIELD INVESTIGATIONS TO VERIFY EXISTING CONDITIONS AT THE PROJECT SITE.
2. THIS TOPOGRAPHIC SURVEY IS NOT MEANT TO BE A FULL CATALOG OF EXISTING CONDITIONS. INFORMATION REGARDING EXISTING SURFACE OR SUBSURFACE IMPROVEMENTS AND UTILITIES SHOWN ON THESE PLANS REFLECTS INCOMPLETE AVAILABLE INFORMATION AS OF THE DATE OF DESIGN. CONTRACTOR SHALL CONDUCT FIELD INVESTIGATIONS AS REQUIRED TO VERIFY THE LOCATION AND ELEVATION OF EXISTING SUBSURFACE IMPROVEMENTS AND UTILITIES (WHETHER SHOWN ON THESE PLANS OR NOT) PRIOR TO THE COMMENCEMENT OF WORK. CONTRACTOR SHALL NOTIFY THE ENGINEER IMMEDIATELY UPON DISCOVERY OF ANY DISCREPANCIES BETWEEN EXISTING CONDITIONS IN THE FIELD AND INFORMATION SHOWN ON THESE PLANS.
3. CONTRACTOR SHALL STAKE AND RELOCATE PROJECT COORDINATE POINTS PRIOR TO START OF CONSTRUCTION. NEW LOCATION OF PROJECT COORDINATE POINT SHALL BE RECORDED AND MAINTAINED THROUGHOUT THE ENTIRETY OF THE PROJECT. PROJECT COORDINATE POINT NORTHING AND EASTING ARE LOCATED ON CIVIL PLANS.
4. EXISTING UTILITIES SHOWN ON THESE PLANS ARE BASED ON SURVEYS LISTED ABOVE AND RECORD DOCUMENTS AND PLANS PROVIDED BY THE DISTRICT.

GRADING NOTES

1. ALL GRADING SHALL COMPLY WITH APPLICABLE PERMITS, LOCAL ORDINANCES AND RECOMMENDATIONS OF THE GEOTECHNICAL REPORT REFERENCED UNDER GENERAL NOTES.
2. SEDIMENT AND EROSION CONTROL MEASURES, AS SPECIFIED IN THE ATTACHED EROSION CONTROL PLAN AND DETAILS, SHALL BE INSTALLED PRIOR TO START OF GRADING ACTIVITIES.
3. WHEN GRADING ACTIVITIES COMMENCE MORE THAN 30 DAYS AFTER GRUBBING ACTIVITIES, THE AREA SHALL BE SEEDED WITH PLANT MATERIAL TO CONTROL EROSION. ROOT DEPTH OF SUCH PLANT MATERIAL NOT TO EXCEED 4 INCHES.
4. ALL COMPACTION TESTS AND FINAL GRADING REPORT SHALL BE SUBMITTED TO THE OWNER'S REPRESENTATIVE PRIOR TO SCHEDULING INSPECTIONS.
5. CUT AND/OR FILL SLOPES SHALL NOT EXCEED SLOPE RECOMMENDED BY GEOTECHNICAL ENGINEER.
6. PROVIDE FINISHED GRADE AS SHOWN ON PLANS. MAINTAIN MINIMUM 2% SLOPE AWAY FROM BUILDING.
7. PROVIDE MIN SOIL COMPACTION OF 90% RELATIVE COMPACTION FOR FILLS BENEATH PROPOSED FLATWORK; 95% RELATIVE COMPACTION FOR FILLS BENEATH VEHICULAR PAVEMENT; AND 95% IN SOFTSCAPE OR LANDSCAPE AREAS, UNLESS OTHERWISE NOTED.

GEOTECHNICAL REPORT

THE CONTRACTOR SHALL FAMILIARIZE HIMSELF OR HERSELF WITH THE GEOTECHNICAL REPORT, ENTITLED GEOTECHNICAL DESIGN AND GEOLOGICAL HAZARDS EVALUATION REPORT PREPARED ON AUGUST 7, 2020 BY TERRAPHASE ENGINEERING AND KEEP A COPY OF THIS REPORT ON SITE.

PROJECT SCOPE

THE INCLUDED DRAWINGS DETAIL THE ENGINEERED SITE IMPROVEMENTS INCLUDING UTILITIES, GRADING, DRAINAGE AND EROSION CONTROL FOR THE DEVELOPMENT OF MERRITT COLLEGE NEW LANDSCAPE HORTICULTURE COMPLEX.

ABBREVIATIONS

AB	AGGREGATE BASE
AC	ASPHALT CONCRETE
AD	AREA DRAIN
ADA	AMERICANS WITH DISABILITIES ACT
BS	BOTTOM OF STEP
BW	BOTTOM OF WALL / BACK OF WALK
C&G	CURB AND GUTTER
CB	CATCH BASIN
CF	CUBIC FEET
CL	CENTERLINE
CO	CLEAN OUT
CONC	CONCRETE
DI	DRAINAGE INLET
DS	DOWN SPOUT
DW	DOMESTIC WATER
DWS	DETECTABLE WARNING SURFACE
E	EAST
(E)	EXISTING
EB	ELECTRICAL BOX
EL, ELEV	ELEVATION
ELEC	ELECTRIC
EP	EDGE OF PAVEMENT
FC	FACE OF CURB
FFE	FINISHED FLOOR ELEVATION
FG	FINISH GRADE
FH	FIRE HYDRANT
FL	FLOWLINE
FS	FINISH SURFACE
FT	FEET
FW	FIRE WATER
G	GAS
GB	GRADE BREAK
GM	GAS METER
GR	GRATE
GV	GATE VALVE
HB	HOSE BIB
HDPE	HIGH-DENSITY POLYETHYLENE
HP	HIGH POINT/ HINGE POINT
HT	HEIGHT
HV	HIGH VOLTAGE
INV	INVERT OF PIPE OR CHANNEL
IRR	IRRIGATION
JB	JUNCTION BOX
JP	JOINT POLE
LA	LANDSCAPE ARCHITECT
LF	LINEAR FEET
LP	LIGHT POLE / LOW POINT
LT	LEFT
MAX	MAXIMUM
MH	MANHOLE
MIN	MINIMUM
N	NORTH
NTS	NOT TO SCALE
OC	ON CENTER
OS	OVERFLOW STRUCTURE
(P)	PROPOSED
PA	PLANTED AREA
PED	PEDESTRIAN
PIP	PROTECT IN PLACE
PIV	POST INDICATOR VALVE
PL	PROPERTY LINE
POC	POINT OF CONNECTION
PSI	POUNDS PER SQUARE INCH
PVMT	PAVEMENT
R, RAD	RADIUS
RC	RELATIVE COMPACTION
RCP	REINFORCED CONCRETE PIPE
REQ'D	REQUIRED
RET	RETAINING
RIM	TOP OF STRUCTURE GRATE/ COVER
S	SLOPE
SAP	SEE ARCHITECTURAL PLANS
SCO	SOFTSCAPE CLEANOUT
SD	STORM DRAIN
SDE	SHERWOOD DESIGN ENGINEERS
SDMH	STORM DRAIN MANHOLE
SDP	SEE DRAINAGE PLANS
SEP	SEE ELECTRICAL PLANS
SF	SQUARE FEET
SFFP	SEE FIRE PROTECTION PLANS
SLP	SEE LANDSCAPE PLANS
SMP	SEE MECHANICAL PLANS
SPP	SEE PLUMBING PLANS
SPRK	FW SPRINKLER LINE
SQ	SQUARE
SS	SANITARY SEWER
SSCO	SANITARY SEWER CLEAN OUT
SSMH	SANITARY SEWER MANHOLE
SSP	SEE STRUCTURAL PLANS
STD	STANDARD
SW	SIDEWALK
TB	TOP OF BANK
TC	TOP OF CURB
TD	TRENCH DRAIN
TE	TRASH ENCLOSURE
TEL	TELEPHONE
TEMP	TEMPORARY
TG	TOP OF GRATE
TS	TOP OF STEP
TW	TOP OF WALL
TYP	TYPICAL
UON	UNLESS OTHERWISE NOTED
VERT	VERTICAL
VIF	VERIFY IN FIELD
W	WATER
WALK	WALKWAY/SIDEWALK
WM	WATER METER
XFMR	TRANSFORMER/UTILITY

SHEET INDEX

C0.0 GENERAL NOTES
C1.0 OVERALL DEMOLITION PLAN
C1.1 ENLARGED DEMOLITION PLAN
C2.0 SITE PLAN KEY MAP
C2.1 SITE PLAN
C2.2 SITE PLAN
C2.3 SITE SECTIONS
C3.1 GRADING AND DRAINAGE PLAN
C3.2 GRADING AND DRAINAGE PLAN
C3.3 GRADING AND DRAINAGE PLAN
C3.4 GRADING AND DRAINAGE PLAN
C3.5 GRADING AND DRAINAGE PLAN
C3.6 GRADING AND DRAINAGE PLAN
C4.0 UTILITIES PLAN KEY MAP
C4.1 UTILITY PLAN
C4.2 UTILITY PLAN
C4.3 UTILITY PLAN
C4.4 UTILITY PLAN
C4.5 UTILITY PLAN
C4.6 UTILITY PLAN
C5.1 SITE DETAILS
C5.2 SITE DETAILS
C5.3 DRAINAGE DETAILS
C5.4 DRAINAGE DETAILS
C5.5 DRAINAGE DETAILS
C5.6 UTILITY DETAILS
C5.7 UTILITY DETAILS
C6.0 EROSION CONTROL PLAN
C6.1 EROSION CONTROL DETAILS

APPROVALS

IDENTIFICATION STAMP
DIV. OF THE STATE ARCHITECT
APP: 01-119409 INC:
REVIEWED FOR
SS ☑ FLS ☑ ACS ☑
DATE: 03/14/2022

NOLL & TAM ARCHITECTS
729 Heinz Avenue
Berkeley, CA 94710
tel 510.542.2200
fax 510.542.2201

SEAL

REGISTERED PROFESSIONAL ENGINEER
JIMMY A. GALVEZ
EXP: 06/30/22
C-75568
CIVIL
STATE OF CALIFORNIA

FOR DSA APPROVAL

SHERWOOD DESIGN ENGINEERS
625 2nd Street, Suite 202
Petaluma, CA 94952
www.sherwoodengineers.com

PROJECT TITLE

Peralta Community College District

MERRITT COLLEGE NEW LANDSCAPE HORTICULTURE COMPLEX

12500 Campus Drive
Oakland, CA 94619

BID SET

ISSUE DATE	03/03/2022
N&T JOB NUMBER	22003

REVISIONS

#	DATE	DESCRIPTION

DRAWN BY	MR	CHECKED BY	LC

SHEET TITLE

GENERAL NOTES

SHEET NUMBER

C0.0

P:\2021\21-380 Merritt_Hort\02_Design\01_CAD\Sheet\C0.00_General Notes.dwg,C0.0,Lorraine Cruz,Plotted: 12/14/2021 1:12:03 PM

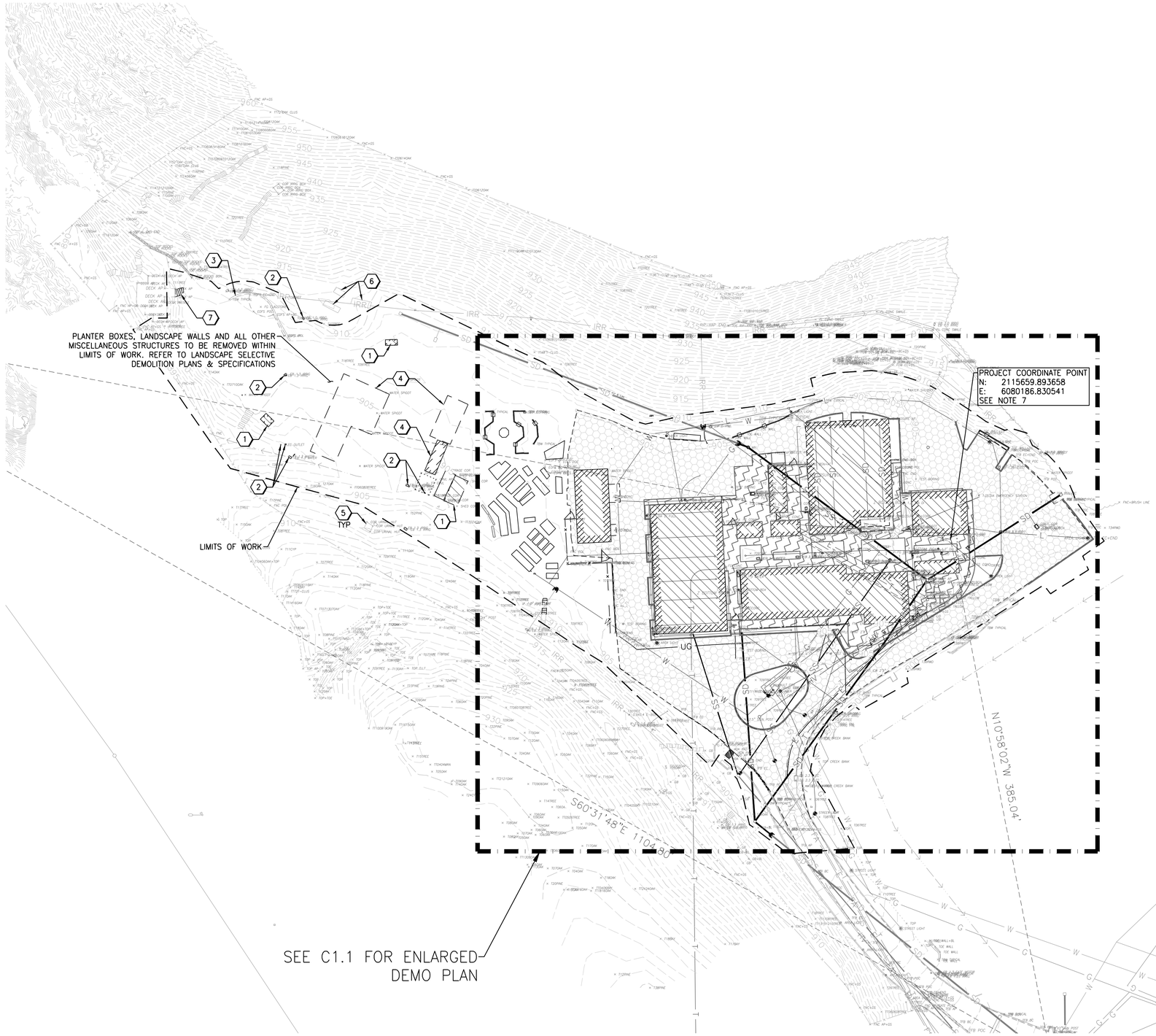

DEMO LEGEND

- BUILDING REMOVAL
- ASPHALT REMOVAL
- CONCRETE REMOVAL
- WALL TO BE REMOVED
- LIMITS OF WORK
- STORM DRAIN TO BE REMOVED (SD)
- STORM DRAIN TO REMAIN (SD)
- SANITARY SEWER TO BE REMOVED (SS)
- SANITARY SEWER TO REMAIN (SS)
- UTILITY LINE TO BE REMOVED (W)
- UTILITY LINE TO REMAIN (W)
- FENCE TO BE REMOVED
- POINT OF CONNECTION

DEMOLITION NOTES

1. SEDIMENT AND EROSION CONTROL MEASURES, AS SPECIFIED IN THE ATTACHED EROSION CONTROL PLAN AND DETAILS, SHALL BE INSTALLED PRIOR TO START OF DEMOLITION.
2. THE CONTRACTOR SHALL PHOTO DOCUMENT EXISTING CONDITIONS OF ADJACENT BUILDINGS AND STRUCTURES PRIOR TO COMMENCEMENT OF WORK.
3. ALL AREAS TO BE IMPROVED SHALL BE STRIPPED OF CONCRETE, LOOSE SURFACE SOIL, VEGETATION, ASPHALT, UTILITY CONDUIT, FOUNDATIONS AND BASE LAYERS, UNLESS OTHERWISE INDICATED. ANY RESULTING EXCAVATIONS THAT EXTEND BELOW FINISHED SUBGRADE SHALL BE BACKFILLED PER THE GEOTECHNICAL ENGINEER'S RECOMMENDATIONS.
4. ALL EXCAVATED AND DEMOLISHED MATERIALS NOT SPECIFIED TO BE REUSED SHALL BE IMMEDIATELY DISPOSED OF ACCORDING TO LOCAL REGULATIONS AND REQUIREMENTS AND NOT ALLOWED TO STOCKPILE ON SITE.
5. ALL PAVEMENT, FLATWORK AND STRUCTURES TO BE PARTIALLY REMOVED SHALL BE NEATLY SAWCUT [IN ACCORDANCE WITH THE SPECIFICATIONS]. SAWCUT EDGES SHALL BE PROTECTED TO ASSURE A NEAT LINE OF CONFORMANCE WITH THE ADJACENT SURFACE. ANY DAMAGED EDGE SHALL BE SAWCUT BACK TO WHERE A CLEAN COMPETENT EDGE CAN BE ACHIEVED, AT THE EXPENSE OF THE CONTRACTOR.
6. PIPES AND CONDUITS TO BE REMOVED SHALL BE REMOVED BACK TO THE NEAREST MANHOLE, JUNCTION BOX, PULL BOX OR OTHER RELEVANT STRUCTURE. THE CONDUIT SHALL BE FULLY REMOVED WHERE IT CAN BE DONE WITHOUT DAMAGE TO THE EXISTING STRUCTURE TO REMAIN AND THE STRUCTURE REPAIRED TO A NEAT, SMOOTH SURFACE. OTHERWISE, THE CONDUIT SHALL BE CUT, PLUGGED AND CAPPED IN ACCORDANCE WITH THE UTILITY OWNER'S STANDARDS.
7. CONTRACTOR SHALL STAKE AND RELOCATE PROJECT COORDINATE POINTS PRIOR TO START OF CONSTRUCTION. NEW LOCATION OF PROJECT COORDINATE POINT SHALL BE RECORDED AND MAINTAINED THROUGHOUT THE ENTIRETY OF THE PROJECT.
8. REFER TO ARCHITECTURAL PLANS FOR DESCRIPTION OF BUILDING DEMOLITION.
9. REFER TO LANDSCAPE PLANS FOR DESCRIPTION OF LANDSCAPE DEMOLITION AND TREE PROTECTION MEASURES.
10. RECORDS OF EXISTING IRRIGATION LINES WITHIN AND OUTSIDE OF LIMIT OF WORK ARE NOT AVAILABLE. REMOVE EXISTING IRRIGATION LINES AS NEEDED TO THE NEAREST REMOTE CONTROL VALVE. IMMEDIATELY ALERT THE OWNER OF IRRIGATION DISCONNECTION.
11. DEMOLITION UTILITIES AT NORTHING/EASTING POINTS PROVIDED.

DEMO KEYNOTES

1. REMOVE (E) STRUCTURES, SEE DEMO NOTE 8
2. REMOVE (E) UTILITY AND ASSOCIATED STRUCTURES
3. PROTECT IN PLACE (E) WALLS
4. REMOVE (E) LANDSCAPE PLANTER BOXES, SEE DEMO NOTE 9
5. PROTECT IN PLACE (E) UTILITY AND ASSOCIATED STRUCTURES
6. PROTECT IN PLACE (E) LANDSCAPE PLANTER BOXES
7. REMOVE (E) STAIRS

NORTH

0 20' 40' 80'

APPROVALS

IDENTIFICATION STAMP
DIV. OF THE STATE ARCHITECT
APP: 01-119409 INC:
REVIEWED FOR
SS ☑ FLS ☑ ACS ☑
DATE: 03/14/2022

NOLL & TAM ARCHITECTS
729 Heinz Avenue
Berkeley, CA 94710
tel 510.542.2200
fax 510.542.2201

SEAL

REGISTERED PROFESSIONAL ENGINEER
JIMMY A. GALVEZ
EXP: 06/30/22
C-75568
CIVIL
STATE OF CALIFORNIA

FOR DSA APPROVAL

SHERWOOD DESIGN ENGINEERS
625 2nd Street, Suite 202
Petaluma, CA 94952
www.sherwoodengineers.com

PROJECT TITLE

Peralta Community College District
MERRITT COLLEGE NEW LANDSCAPE HORTICULTURE COMPLEX

12500 Campus Drive
Oakland, CA 94619

BID SET

ISSUE DATE	03/03/2022
N&T JOB NUMBER	22003

REVISIONS

#	DATE	DESCRIPTION

DRAWN BY | CHECKED BY

SHEET TITLE
OVERALL DEMOLITION PLAN

SHEET NUMBER
C1.0

P:\2018\18-009-Merritt_Hort\03_Design\01_CAD Sheets\C1.00_Demo Plan.dwg C1.0 Lorraine Cayfalva 12/14/2021 3:10:35 PM —1:1

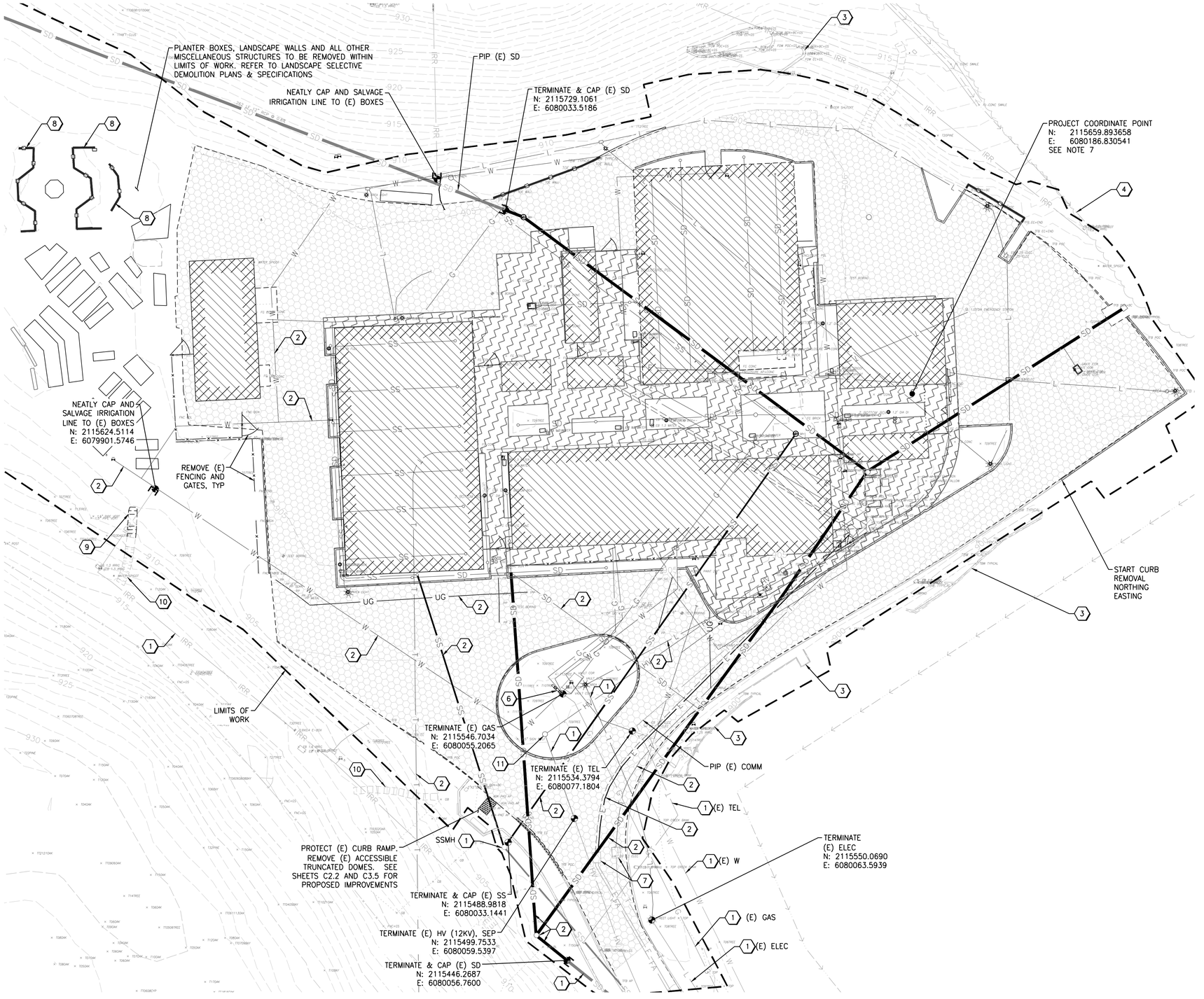

DEMO LEGEND

- BUILDING REMOVAL
- ASPHALT REMOVAL
- CONCRETE REMOVAL
- WALL TO BE REMOVED
- LIMITS OF WORK
- STORM DRAIN TO BE REMOVED
- STORM DRAIN TO REMAIN
- SANITARY SEWER TO BE REMOVED
- SANITARY SEWER TO REMAIN
- UTILITY LINE TO BE REMOVED
- UTILITY LINE TO REMAIN
- FENCE TO BE REMOVED
- POINT OF CONNECTION

DEMOLITION NOTES

1. SEDIMENT AND EROSION CONTROL MEASURES, AS SPECIFIED IN THE ATTACHED EROSION CONTROL PLAN AND DETAILS, SHALL BE INSTALLED PRIOR TO START OF DEMOLITION.
2. THE CONTRACTOR SHALL PHOTO DOCUMENT EXISTING CONDITIONS OF ADJACENT BUILDINGS AND STRUCTURES PRIOR TO COMMENCEMENT OF WORK.
3. ALL AREAS TO BE IMPROVED SHALL BE STRIPPED OF CONCRETE, LOOSE SURFACE SOIL, VEGETATION, ASPHALT, UTILITY CONDUIT, FOUNDATIONS AND BASE LAYERS, UNLESS OTHERWISE INDICATED. ANY RESULTING EXCAVATIONS THAT EXTEND BELOW FINISHED SUBGRADE SHALL BE BACKFILLED PER THE GEOTECHNICAL ENGINEER'S RECOMMENDATIONS.
4. ALL EXCAVATED AND DEMOLISHED MATERIALS NOT SPECIFIED TO BE REUSED SHALL BE IMMEDIATELY DISPOSED OF ACCORDING TO LOCAL REGULATIONS AND REQUIREMENTS AND NOT ALLOWED TO STOCKPILE ON SITE.
5. ALL PAVEMENT, FLATWORK AND STRUCTURES TO BE PARTIALLY REMOVED SHALL BE NEATLY SAWCUT [IN ACCORDANCE WITH THE SPECIFICATIONS]. SAWCUT EDGES SHALL BE PROTECTED TO ASSURE A NEAT LINE OF CONFORMANCE WITH THE ADJACENT SURFACE. ANY DAMAGED EDGE SHALL BE SAWCUT BACK TO WHERE A CLEAN COMPETENT EDGE CAN BE ACHIEVED, AT THE EXPENSE OF THE CONTRACTOR.
6. PIPES AND CONDUITS TO BE REMOVED SHALL BE REMOVED BACK TO THE NEAREST MANHOLE, JUNCTION BOX, PULL BOX OR OTHER RELEVANT STRUCTURE. THE CONDUIT SHALL BE FULLY REMOVED WHERE IT CAN BE DONE WITHOUT DAMAGE TO THE EXISTING STRUCTURE TO REMAIN AND THE STRUCTURE REPAIRED TO A NEAT, SMOOTH SURFACE. OTHERWISE, THE CONDUIT SHALL BE CUT, PLUGGED AND CAPPED IN ACCORDANCE WITH THE UTILITY OWNER'S STANDARDS.
7. CONTRACTOR SHALL STAKE AND RELOCATE PROJECT COORDINATE POINTS PRIOR TO START OF CONSTRUCTION. NEW LOCATION OF PROJECT COORDINATE POINT SHALL BE RECORDED AND MAINTAINED THROUGHOUT THE ENTIRETY OF THE PROJECT.
8. REFER TO ARCHITECTURAL PLANS FOR DESCRIPTION OF BUILDING DEMOLITION.
9. REFER TO LANDSCAPE PLANS FOR DESCRIPTION OF LANDSCAPE DEMOLITION AND TREE PROTECTION MEASURES.
10. RECORDS OF EXISTING IRRIGATION LINES WITHIN AND OUTSIDE OF LIMIT OF WORK ARE NOT AVAILABLE. REMOVE EXISTING IRRIGATION LINES AS NEEDED TO THE NEAREST REMOTE CONTROL VALVE. IMMEDIATELY ALERT THE OWNER OF IRRIGATION DISCONNECTION.
11. DEMOLITION UTILITIES AT NORTHING/EASTING POINTS PROVIDED.

DEMO KEYNOTES

1. PROTECT IN PLACE (E) UTILITY AND ASSOCIATED STRUCTURES
2. REMOVE (E) UTILITIES AND ASSOCIATED STRUCTURES
3. PROTECT IN PLACE (E) TIMBER RETAINING WALL
4. PROTECT IN PLACE (E) DRAINAGE SWALE
5. REMOVE AND SALVAGE (E) PULL BOXES FOR REUSE
6. REMOVE AND SALVAGE (E) BFP FOR REUSE
7. PROTECT IN PLACE (E) PULL BOX
8. REMOVE (E) WALL/CURB
9. REMOVE (E) STAIRS AND LANDING
10. PROTECT IN PLACE (E) STAIRS
11. REMOVE (E) HANDHOLE

NORTH 0 10' 20' 40'

APPROVALS

IDENTIFICATION STAMP
DIV. OF THE STATE ARCHITECT
APP: 01-119409 INC:
REVIEWED FOR
SS ☑ FLS ☑ ACS ☑
DATE: 03/14/2022

NOLL & TAM ARCHITECTS
729 Heinz Avenue
Berkeley, CA 94710
tel 510.542.2200
fax 510.542.2201

SEAL

REGISTERED PROFESSIONAL ENGINEER
JIMMY A. GALVEZ
EXP: 06/30/22
C-75568
CIVIL
STATE OF CALIFORNIA

FOR DSA APPROVAL

SHERWOOD DESIGN ENGINEERS
625 2nd Street, Suite 202
Petaluma, CA 94952
www.sherwoodengineers.com

PROJECT TITLE

Peralta Community College District
MERRITT COLLEGE NEW LANDSCAPE HORTICULTURE COMPLEX

12500 Campus Drive
Oakland, CA 94619

BID SET

ISSUE DATE	03/03/2022
N&T JOB NUMBER	22003

REVISIONS

#	DATE	DESCRIPTION

DRAWN BY | CHECKED BY

SHEET TITLE

ENLARGED DEMOLITION PLAN

SHEET NUMBER

C1.1

P:\2019\19-008-Merritt_Hort\03_Design\01_CAD\Sheets\C1.00_Demo Plan.dwg C1.1 Lorena Cuffaro 10/14/2021 3:13:52 PM -- 1:1

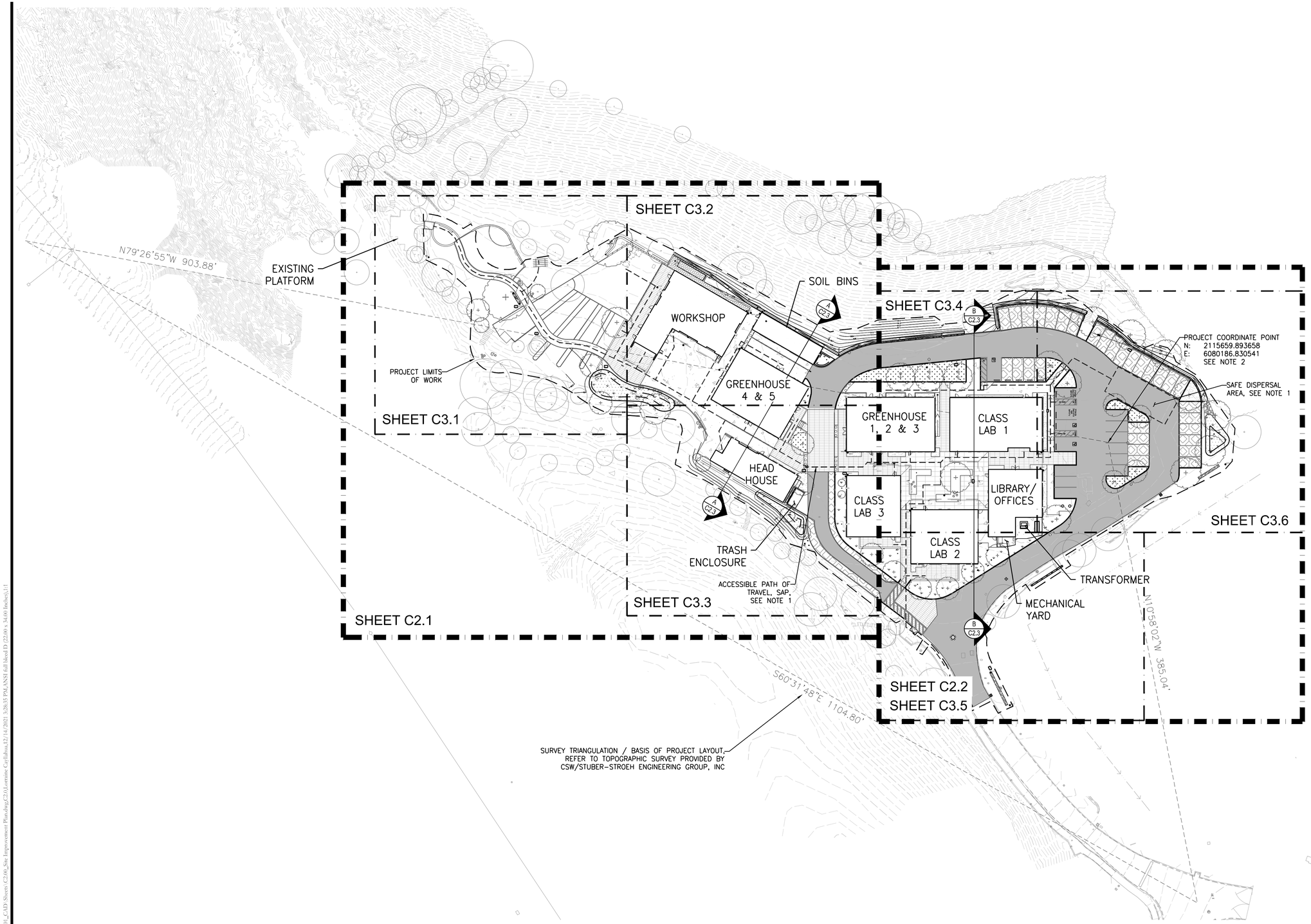

NOTE

1. SEE ARCHITECTURAL PLAN G1.11 FOR ACCESSIBILITY NOTES.
2. CONTRACTOR SHALL STAKE AND RELOCATE PROJECT COORDINATE POINTS PRIOR TO START OF CONSTRUCTION. NEW LOCATION OF PROJECT COORDINATE POINT SHALL BE RECORDED AND MAINTAINED THROUGHOUT THE ENTIRETY OF THE PROJECT.

NORTH 0 20' 40' 80'

P:\2020\19-269.Merritt_Hort\03_Design\01_CAD Sheets\C2.00_Site Improvement Plan.dwg,C2.01,cortese Carlabus,12/14/2021 3:28:35 PM,ANSI full bleed D (22.00 x 34.00 Inches),1:1

APPROVALS

IDENTIFICATION STAMP
DIV. OF THE STATE ARCHITECT
APP: 01-119409 INC:
REVIEWED FOR
SS ☑ FLS ☑ ACS ☑
DATE: 03/14/2022

NOLL & TAM ARCHITECTS
729 Heinz Avenue
Berkeley, CA 94710
tel 510.542.2200
fax 510.542.2201

SEAL

REGISTERED PROFESSIONAL ENGINEER
JIMMY A. GALVEZ
EXP: 06/30/22
C-75568
CIVIL
STATE OF CALIFORNIA

FOR DSA APPROVAL

SHERWOOD DESIGN ENGINEERS
625 2nd Street, Suite 202
Petaluma, CA 94952
www.sherwoodengineers.com

PROJECT TITLE

Peralta Community College District
MERRITT COLLEGE NEW LANDSCAPE HORTICULTURE COMPLEX

12500 Campus Drive
Oakland, CA 94619

BID SET

ISSUE DATE	03/03/2022
N&T JOB NUMBER	22003

REVISIONS

#	DATE	DESCRIPTION

DRAWN BY MR | CHECKED BY LC

SHEET TITLE
SITE PLAN KEY MAP

SHEET NUMBER
C2.0

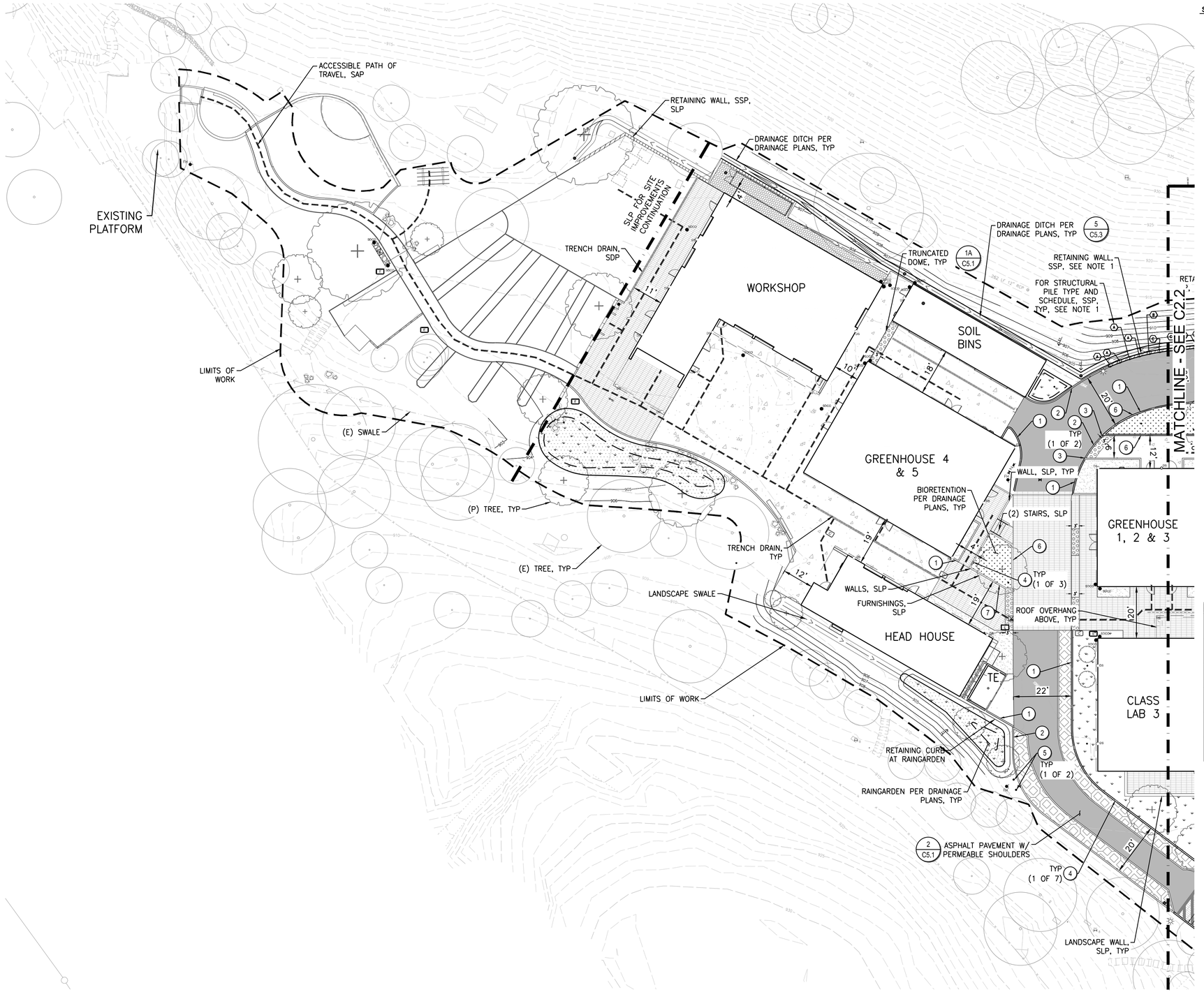

SITE LEGEND

- LIMITS OF WORK
- DETECTABLE WARNING SURFACE 36" WIDE UON
- WHEELSTOP
- EDGE OF PAVEMENT
- FLUSH CURB, SLP
- VERTICAL CURB
- FLOWLINE
- VEHICULAR ASPHALT SEE DETAIL 2/C5.1
- VEHICULAR CONCRETE, SLP
- PERMEABLE PAVERS, SLP
- CONCRETE PAVERS, SLP
- RETAINING WALL, SSP
- RAINGARDEN SEE DETAIL 1/C5.4
- BIORETENTION SEE DETAIL 6/C5.4
- TREATMENT LANDSCAPE
- MULCH, SLP
- PERMEABLE PAVING, SLP
- GRAVEL, SLP
- LANDSCAPE, SLP
- ACCESSIBLE PATH OF TRAVEL, SAP
- STRUCTURAL PILE, TYP, SEE NOTE 1

KEYNOTES

1	VERTICAL CURB SEE DETAIL 3/C5.1
2	FLUSH CURB, SLP
3	TAPER VERTICAL CURB DOWN TO FLUSH CURB WITHIN 12"
4	CURB OPENING, APPROXIMATE WHERE SHOWN SEE DETAIL 2/C5.2
5	BOLLARD SEE DETAIL 1/C5.2
6	VERTICAL RETAINING CURB SEE DETAIL 4/C5.2

NOTES:
1. RETAINING WALL PILES AND CALLOUTS ARE SHOWN FOR REFERENCE ONLY. SEE STRUCTURAL PLAN 8/S4.03 FOR PILE TYPE, SCHEDULE AND INSTALLATION.
2. SEE ARCHITECTURAL PLAN G1.11 FOR ACCESSIBILITY NOTES.

NORTH

0 10' 20' 40'

APPROVALS

IDENTIFICATION STAMP
DIV. OF THE STATE ARCHITECT
APP: 01-119409 INC:
REVIEWED FOR
SS ☑ FLS ☑ ACS ☑
DATE: 03/14/2022

NOLL & TAM ARCHITECTS
729 Heinz Avenue
Berkeley, CA 94710
tel 510.542.2200
fax 510.542.2201

SEAL

REGISTERED PROFESSIONAL ENGINEER
JIMMY A. GALVEZ
EXP: 06/30/22
C-75568
CIVIL
STATE OF CALIFORNIA

FOR DSA APPROVAL

SHERWOOD DESIGN ENGINEERS
625 2nd Street, Suite 202
Petaluma, CA 94952
www.sherwoodengineers.com

PROJECT TITLE

Peralta Community College District
MERRITT COLLEGE NEW LANDSCAPE HORTICULTURE COMPLEX

12500 Campus Drive
Oakland, CA 94619

BID SET

ISSUE DATE	03/03/2022
N&T JOB NUMBER	22003

REVISIONS

#	DATE	DESCRIPTION

DRAWN BY MR | CHECKED BY LC

SHEET TITLE

SITE PLAN

SHEET NUMBER

C2.1

P:\2019\19-260 Merritt_Hort\03_Design\01_CAD Sheets\C2\19_Site Improvement Plan.dwg C2.1 Lorraine Carlabasa 12/14/2021 3:43:25 PM ANSI full bleed D (22.00 x 34.00 Inches).ctb

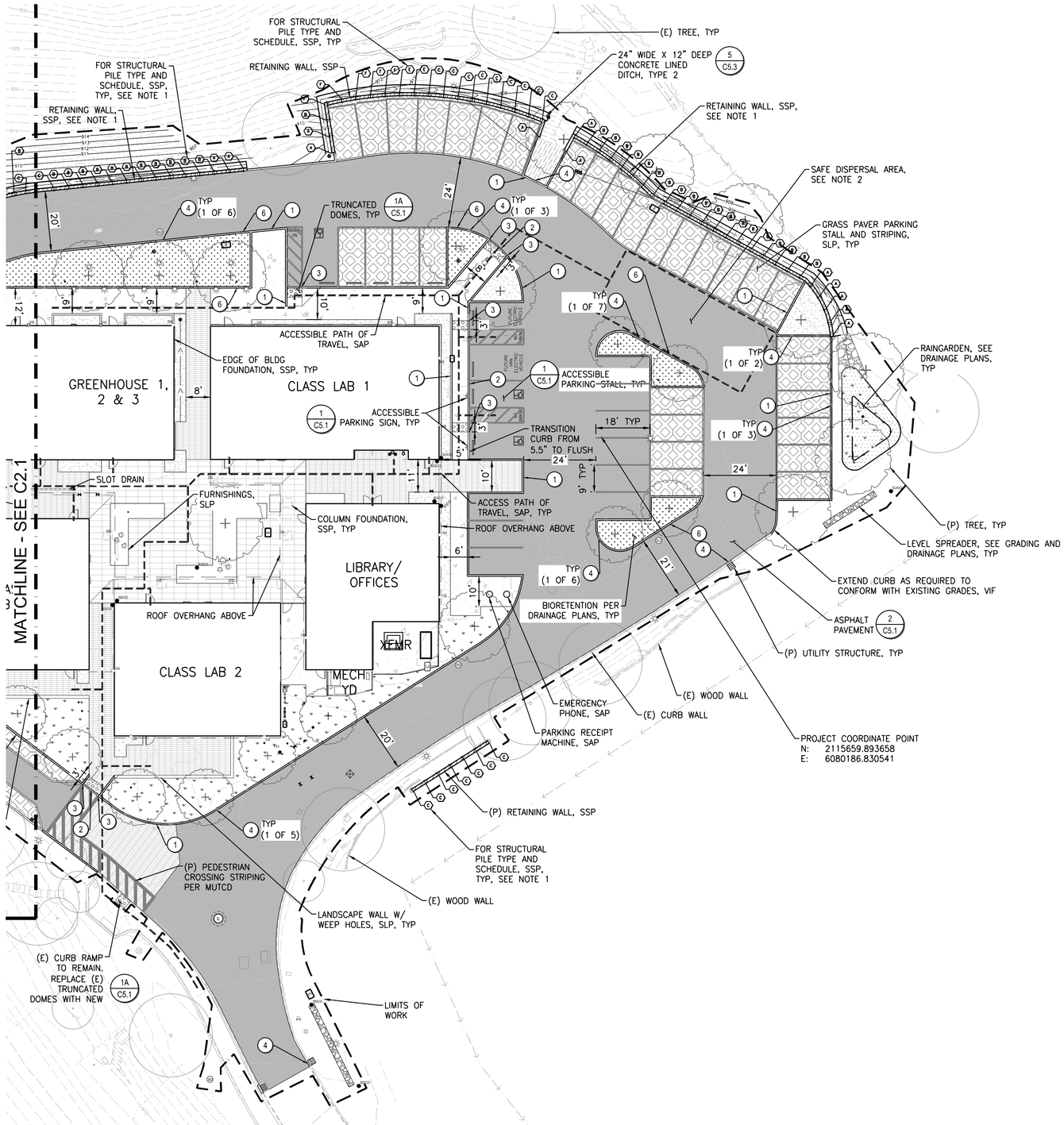

SITE LEGEND

- LIMITS OF WORK
- DETECTABLE WARNING SURFACE 36" WIDE UON
- WHEELSTOP
- EDGE OF PAVEMENT
- FLUSH CURB, SLP
- VERTICAL CURB
- FLOWLINE
- VEHICULAR ASPHALT SEE DETAIL 2/C5.1
- VEHICULAR CONCRETE, SLP
- PERMEABLE PAVERS, SLP
- CONCRETE PAVERS, SLP
- RETAINING WALL, SSP
- RAINGARDEN SEE DETAIL 1/C5.4
- BIORETENTION SEE DETAIL 6/C5.4
- TREATMENT LANDSCAPE
- MULCH, SLP
- PERMEABLE PAVING, SLP
- GRAVEL, SLP
- LANDSCAPE, SLP
- ACCESSIBLE PATH OF TRAVEL, SAP
- STRUCTURAL PILE, TYP, SEE NOTE 1

KEYNOTES

1	VERTICAL CURB SEE DETAIL 3/C5.1
2	FLUSH CURB, SLP
3	TAPER VERTICAL CURB DOWN TO FLUSH CURB WITHIN 12"
4	CURB OPENING, APPROXIMATE WHERE SHOWN SEE DETAIL 2/C5.2
5	BOLLARD SEE DETAIL 1/C5.2
6	VERTICAL RETAINING CURB SEE DETAIL 4/C5.2

NOTES:
1. RETAINING WALL PILES AND CALLOUTS ARE SHOWN FOR REFERENCE ONLY. SEE STRUCTURAL PLAN 8/S4.03 FOR PILE TYPE, SCHEDULE AND INSTALLATION.
2. SEE ARCHITECTURAL PLAN G1.11 FOR ACCESSIBILITY NOTES.

NORTH

0 10' 20' 40'

APPROVALS

IDENTIFICATION STAMP
DIV. OF THE STATE ARCHITECT
APP: 01-119409 INC:
REVIEWED FOR
SS ☑ FLS ☑ ACS ☑
DATE: 03/14/2022

NOLL & TAM ARCHITECTS
729 Heinz Avenue
Berkeley, CA 94710
tel 510.542.2200
fax 510.542.2201

SEAL

REGISTERED PROFESSIONAL ENGINEER
JIMMY A. GALVEZ
EXP: 06/30/22
C-75568
CIVIL
STATE OF CALIFORNIA

FOR DSA APPROVAL

SHERWOOD DESIGN ENGINEERS
625 2nd Street, Suite 202
Petaluma, CA 94952
www.sherwoodengineers.com

PROJECT TITLE

Peralta Community College District
MERRITT COLLEGE NEW LANDSCAPE HORTICULTURE COMPLEX

12500 Campus Drive
Oakland, CA 94619

BID SET

ISSUE DATE	03/03/2022
N&T JOB NUMBER	22003

REVISIONS

#	DATE	DESCRIPTION

DRAWN BY MR | CHECKED BY LC

SHEET TITLE

SITE PLAN

SHEET NUMBER

C2.2

P:\2019\19-265-Merritt_Hort\05_Design\01_CAD Sheets\C2.00_Site Improvement Plan.dwg C2.2 Lorraine Cuillahua, 12/14/2021 3:14:35 PM ANSI full bleed D (22.00 x 34.00 Inches) 1:1

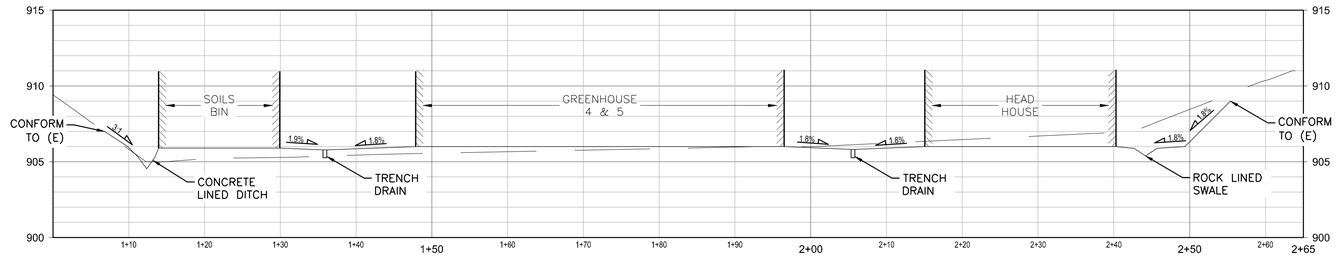

SECTION A

HORIZ: 1"=10'
VERT:1"=5'

SECTION B

HORIZ: 1"=10'
VERT:1"=5'

NORTH

0 5' 10' 20'

P:\2019\19-26\Merritt_Hort\03_Design\01_CAD Sheets\C2\16_Site Improvement Plan.dwg C2.3 Lorraine Cuffaluna 12/14/2021 3:44:41 PM ANSI full bleed D (22.00 x 34.00 Inches).ctb

APPROVALS

IDENTIFICATION STAMP
DIV. OF THE STATE ARCHITECT
APP: 01-119409 INC:
REVIEWED FOR
SS ☑ FLS ☑ ACS ☑
DATE: 03/14/2022

NOLL & TAM ARCHITECTS

729 Heinz Avenue
Berkeley, CA 94710
tel 510.542.2200
fax 510.542.2201

SEAL

REGISTERED PROFESSIONAL ENGINEER
JIMMY A. GALVEZ
EXP: 06/30/22
C-75568
CIVIL
STATE OF CALIFORNIA

FOR DSA APPROVAL

SHERWOOD DESIGN ENGINEERS
625 2nd Street, Suite 202
Petaluma, CA 94952
www.sherwoodengineers.com

PROJECT TITLE

Peralta Community College District
MERRITT COLLEGE NEW LANDSCAPE HORTICULTURE COMPLEX

12500 Campus Drive
Oakland, CA 94619

BID SET

ISSUE DATE	03/03/2022
N&T JOB NUMBER	22003

REVISIONS

#	DATE	DESCRIPTION

DRAWN BY MR | CHECKED BY LC

SHEET TITLE

SITE SECTIONS

SHEET NUMBER

C2.3

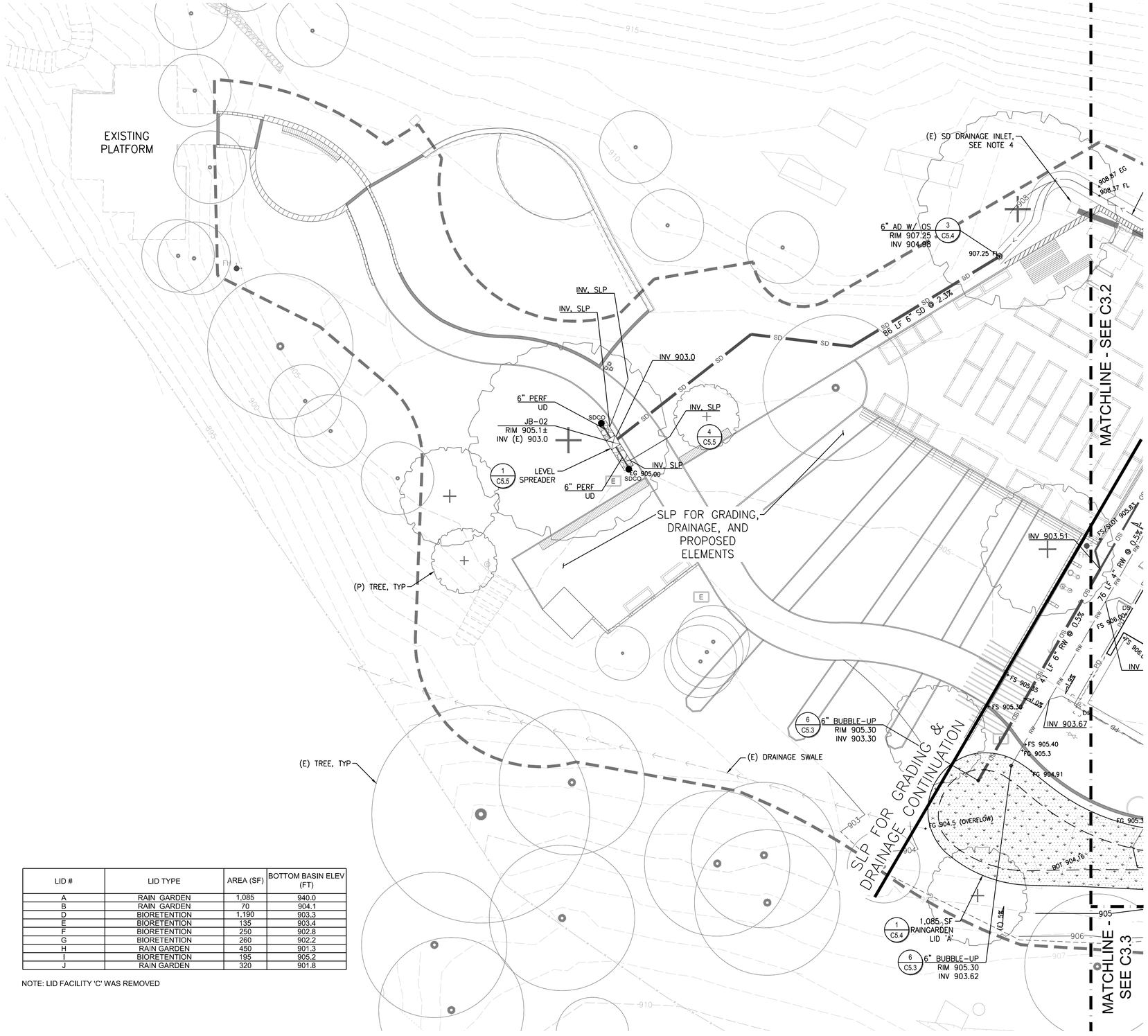

LID #	LID TYPE	AREA (SF)	BOTTOM BASIN ELEV (FT)
A	RAIN GARDEN	1,085	940.0
B	RAIN GARDEN	70	904.1
D	BIORETENTION	1,190	903.3
E	BIORETENTION	135	903.4
F	BIORETENTION	250	902.8
G	BIORETENTION	260	902.2
H	RAIN GARDEN	450	901.3
I	BIORETENTION	195	905.2
J	RAIN GARDEN	320	901.8

NOTE: LID FACILITY 'C' WAS REMOVED

LEGEND

- LIMITS OF GRADING
- GB GRADE BREAK
- (P) MINOR CONTOUR
- (P) MAJOR CONTOUR
- (E) MINOR CONTOUR
- (E) MAJOR CONTOUR
- LIMITS OF WORK
- SAWCUT
- X.X% SLOPE
- (P) CURB CUT
- (P) AREA DRAIN
- (P) DRAIN INLET
- (P) TRENCH DRAIN
- (P) SLOT DRAIN
- SD (P) SD MANHOLE
- SDCO (P) SD CLEAN OUT SEE DETAIL 2/C5.5
- DS (P) DOWNSPOUT SEE DETAIL 4/C5.4
- (P) ROCK INLET/OUTLET PROTECTION
- SD (E) STORM DRAIN PIPE
- SD SD (P) STORM DRAIN PIPE
- UD UD (P) PERFORATED UNDER DRAIN
- PD PD (P) PERIMETER DRAIN
- DRAINAGE ARROW
- (E) FLOWLINE
- (P) FLOWLINE
- (P) RAINGARDEN
- (P) BIORETENTION
- (P) TREATMENT LANDSCAPE

DRAINAGE NOTES

1. CONTRACTOR TO PROVIDE STORM DRAIN PIPES OF SIZE, LENGTH AND SLOPE INDICATED ON THE DRAWINGS. UNLABELED PIPES ARE 6-INCHES DIAMETER FOR STORM DRAIN LINES & 4-INCHES DIAMETER FOR RAIN WATER LINES AT 2% MINIMUM SLOPE, LENGTH AS SCALED, UNLESS OTHERWISE NOTED.
   RAIN GARDENS AND BIORETENTION BASINS SHALL BE CONSTRUCTED PER DETAILS PROVIDED AND CONSTRUCTED TO SHAPE, DIMENSIONS AND DETENTION VOLUMES INDICATED. PONDING SURFACE DEPTHS AND FREEBOARD REQUIRE LEVEL GRADES AT TOP AND TOE OF BASIN EMBANKMENTS. NO ADJUSTMENTS TO GRADES ARE ALLOWED WITHOUT EXPRESS WRITTEN DIRECTION FROM THE ENGINEER.
2. SOILS INCORPORATED INTO RAIN GARDENS AND BIORETENTION BASINS SHALL BE AS SPECIFIED AND APPROVED BY THE ENGINEER WITHOUT EXCEPTION.
3. THE CONTRACTOR IS RESPONSIBLE TO OPERATE AND MAINTAIN ALL DRAINAGE STRUCTURES AND FEATURES UNTIL FINAL ACCEPTANCE BY THE OWNER. FEATURES SUCH AS RAIN GARDENS AND OTHER LOW-IMPACT DEVELOPMENT (LID) ELEMENTS SHALL NOT BE USED FOR IMPOUNDMENT OR EROSION/SEDIMENT CONTROL DURING CONSTRUCTION UNLESS THOROUGHLY PROTECTED FROM SILT-UP OR CLOGGING. CLEAN UP OR REPLACEMENT OF SOILS IMPACTED BY CONSTRUCTION ACTIVITIES OR RUNOFF PRIOR TO HAND-OVER SHALL BE REPLACED PER ORIGINAL DESIGN AT THE CONTRACTOR'S EXPENSE.
4. VERIFY LOCATION OF EXISTING STORM DRAINS TO ASSURE THERE ARE NO CONFLICTS. COORDINATE WITH CIVIL ENGINEER IF EXISTING STORM DRAIN LOCATION, INVERTS OR SLOPES VARY FROM PLANS.

ACCESIBILITY NOTES

1. ALL SITE WORK SHALL BE IN CONFORMANCE WITH THE AMERICANS WITH DISABILITIES ACT.
2. A 1:48 MAXIMUM SLOPE LANDING SHALL BE PROVIDED AT PRIMARY ENTRANCES OF THE BUILDINGS. THE LANDINGS SHALL HAVE A MINIMUM DEPTH OF 60" WHEN THE DOOR OPENS INTO THE BUILDING OR 42" PLUS THE WIDTH OF THE DOOR WHEN THE DOOR OPEN ONTO THE LANDING.
3. CROSS SLOPE ON ANY SIDEWALK OR RAMP SHALL BE 1:48 MAXIMUM.
4. CURB RAMPS SHALL NOT EXCEED A SLOPE OF 1:12 (8.33%).
5. SLOPES WITHIN ACCESSIBLE PARKING STALLS AND ACCESS AISLES SHALL BE 1:48 MAXIMUM IN ANY DIRECTION.
6. PROVIDE FLUSH TRANSITIONS AT ADJACENT SURFACES.

NORTH

0 5' 10' 20'

APPROVALS

IDENTIFICATION STAMP
DIV. OF THE STATE ARCHITECT
APP: 01-119409 INC:
REVIEWED FOR
SS ☑ FLS ☑ ACS ☑
DATE: 03/14/2022

NOLL & TAM ARCHITECTS
729 Heinz Avenue
Berkeley, CA 94710
tel 510.542.2200
fax 510.542.2201

SEAL

REGISTERED PROFESSIONAL ENGINEER
JIMMY A. GALVEZ
EXP: 06/30/22
C-75568
CIVIL
STATE OF CALIFORNIA

FOR DSA APPROVAL

SHERWOOD DESIGN ENGINEERS
625 2nd Street, Suite 202
Petaluma, CA 94952
www.sherwoodengineers.com

PROJECT TITLE

Peralta Community College District
MERRITT COLLEGE NEW LANDSCAPE HORTICULTURE COMPLEX

12500 Campus Drive
Oakland, CA 94619

BID SET

ISSUE DATE	03/03/2022
N&T JOB NUMBER	22003

REVISIONS

#	DATE	DESCRIPTION

DRAWN BY	MR	CHECKED BY	LC

SHEET TITLE

GRADING AND DRAINAGE PLAN

SHEET NUMBER

C3.1

P:\2019\19-009-Merritt_Hort\03_Design\01_CAD Sheets\C3.00_Grading and Drainage.dwg C3.1 Lorraine Cuyjet on 3/14/2022 3:15:14 PM - 1:1

LID #	LID TYPE	AREA (SF)	BOTTOM BASIN ELEV (FT)
A	RAIN GARDEN	1,085	940.0
B	RAIN GARDEN	70	904.1
D	BIORETENTION	1,190	903.3
E	BIORETENTION	135	903.4
F	BIORETENTION	250	902.8
G	BIORETENTION	260	902.2
H	RAIN GARDEN	450	901.3
I	BIORETENTION	195	905.2
J	RAIN GARDEN	320	901.8

NOTE: LID FACILITY 'C' WAS REMOVED

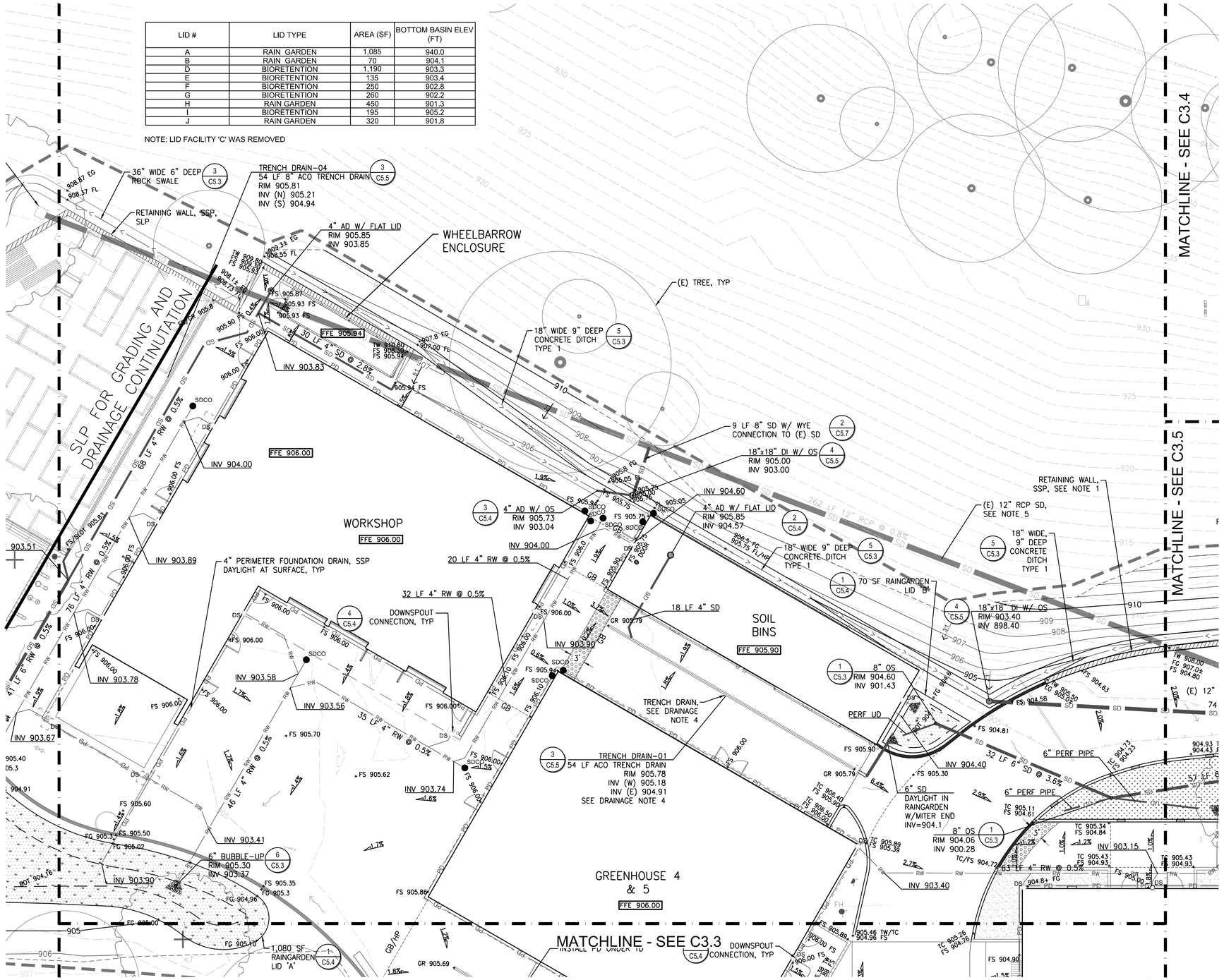

LEGEND

- LIMITS OF GRADING
- GRADE BREAK
- (P) MINOR CONTOUR
- (P) MAJOR CONTOUR
- (E) MINOR CONTOUR
- (E) MAJOR CONTOUR
- LIMITS OF WORK
- SAWCUT
- SLOPE
- (P) CURB CUT
- (P) AREA DRAIN
- (P) DRAIN INLET
- (P) TRENCH DRAIN
- (P) SLOT DRAIN
- (P) SD MANHOLE
- (P) SD CLEAN OUT SEE DETAIL 2/C5.5
- (P) DOWNSPOUT SEE DETAIL 4/C5.4
- (P) ROCK INLET/OUTLET PROTECTION
- (E) STORM DRAIN PIPE
- (P) STORM DRAIN PIPE
- (P) PERFORATED UNDER DRAIN
- (P) PERIMETER DRAIN
- DRAINAGE ARROW
- (E) FLOWLINE
- (P) FLOWLINE
- (P) RAINGARDEN
- (P) BIORETENTION
- (P) TREATMENT LANDSCAPE

DRAINAGE NOTES

1. CONTRACTOR TO PROVIDE STORM DRAIN PIPES OF SIZE, LENGTH AND SLOPE INDICATED ON THE DRAWINGS. UNLABELED PIPES ARE 6-INCHES DIAMETER FOR SD LINES & 4-INCHES DIAMETER FOR RW LINES AT 2% MINIMUM SLOPE, LENGTH AS SCALED, UNLESS OTHERWISE NOTED. RAIN GARDENS AND BIORETENTION BASINS SHALL BE CONSTRUCTED PER DETAILS PROVIDED AND CONSTRUCTED TO SHAPE, DIMENSIONS AND DETENTION VOLUMES INDICATED. PONDING SURFACE DEPTHS AND FREEBOARD REQUIRE LEVEL GRADES AT TOP AND TOE OF BASIN EMBANKMENTS. NO ADJUSTMENTS TO GRADES ARE ALLOWED WITHOUT EXPRESS WRITTEN DIRECTION FROM THE ENGINEER.
2. SOILS INCORPORATED INTO RAIN GARDENS AND BIORETENTION BASINS SHALL BE AS SPECIFIED AND APPROVED BY THE ENGINEER WITHOUT EXCEPTION.
3. THE CONTRACTOR IS RESPONSIBLE TO OPERATE AND MAINTAIN ALL DRAINAGE STRUCTURES AND FEATURES UNTIL FINAL ACCEPTANCE BY THE OWNER. FEATURES SUCH AS RAIN GARDENS AND OTHER LOW-IMPACT DEVELOPMENT (LID) ELEMENTS SHALL NOT BE USED FOR IMPOUNDMENT OR EROSION/SEDIMENT CONTROL DURING CONSTRUCTION UNLESS THOROUGHLY PROTECTED FROM SILT-UP OR CLOGGING. CLEAN UP OR REPLACEMENT OF SOILS IMPACTED BY CONSTRUCTION ACTIVITIES OR RUNOFF PRIOR TO HAND-OVER SHALL BE REPLACED PER ORIGINAL DESIGN AT THE CONTRACTOR'S EXPENSE.
4. 54 LF. 8" TD WITH 1/2 METER SECTION AT UPSTREAM END; 1/2 METER CB AT DOWNSTREAM END. BEGIN WITH SHALLOWEST AVAILABLE TD UNIT AT UPSTREAM END.
5. VERIFY LOCATION OF EXISTING STORM DRAINS TO ASSURE THERE ARE NO CONFLICTS. COORDINATE WITH CIVIL ENGINEER IF EXISTING STORM DRAIN LOCATION, INVERTS OR SLOPES VARY FROM PLANS.

ACCESIBILITY NOTES

1. ALL SITE WORK SHALL BE IN CONFORMANCE WITH THE AMERICANS WITH DISABILITIES ACT.
2. A 1:48 MAXIMUM SLOPE LANDING SHALL BE PROVIDED AT PRIMARY ENTRANCES OF THE BUILDINGS. THE LANDINGS SHALL HAVE A MINIMUM DEPTH OF 60" WHEN THE DOOR OPENS INTO THE BUILDING OR 42" PLUS THE WIDTH OF THE DOOR WHEN THE DOOR OPEN ONTO THE LANDING.
3. CROSS SLOPE ON ANY SIDEWALK OR RAMP SHALL BE 1:48 MAXIMUM.
4. CURB RAMPS SHALL NOT EXCEED A SLOPE OF 1:12 (8.33%).
5. SLOPES WITHIN ACCESSIBLE PARKING STALLS AND ACCESS AISLES SHALL BE 1:48 MAXIMUM IN ANY DIRECTION.
6. PROVIDE FLUSH TRANSITIONS AT ADJACENT SURFACES.

NORTH

0 5' 10' 20'

APPROVALS

IDENTIFICATION STAMP
DIV. OF THE STATE ARCHITECT
APP: 01-119409 INC:
REVIEWED FOR
SS ☑ FLS ☑ ACS ☑
DATE: 03/14/2022

NOLL & TAM ARCHITECTS
729 Heinz Avenue
Berkeley, CA 94710
tel 510.542.2200
fax 510.542.2201

SEAL

REGISTERED PROFESSIONAL ENGINEER JIMMY A. GALVEZ EXP: 06/30/22 C-75568 CIVIL STATE OF CALIFORNIA

FOR DSA APPROVAL

SHERWOOD DESIGN ENGINEERS
625 2nd Street, Suite 202
Petaluma, CA 94952
www.sherwoodengineers.com

PROJECT TITLE

Peralta Community College District
MERRITT COLLEGE NEW LANDSCAPE HORTICULTURE COMPLEX

12500 Campus Drive
Oakland, CA 94619

BID SET

ISSUE DATE	03/03/2022
N&T JOB NUMBER	22003

REVISIONS

#	DATE	DESCRIPTION

DRAWN BY	MR	CHECKED BY	LC

SHEET TITLE

GRADING AND DRAINAGE PLAN

SHEET NUMBER

C3.2

P:\2019\19-200-Merritt_Hort\CD_Design\01_CAD Sheets\C3.00_Grading and Drainage.dwg C3.2 Lorraine Cuffaro 10/1/2021 2:16:30 PM -- 11

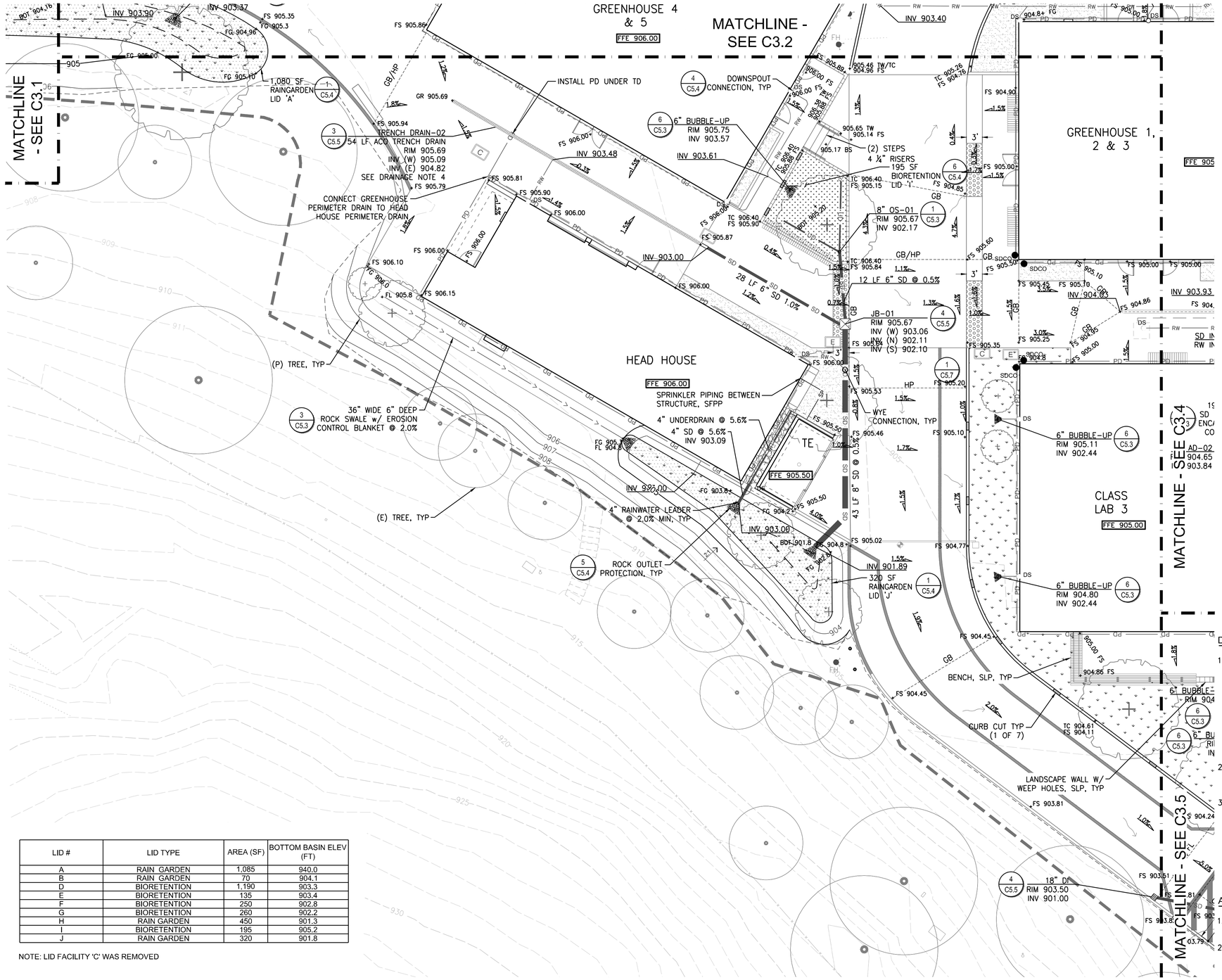

LID #	LID TYPE	AREA (SF)	BOTTOM BASIN ELEV (FT)
A	RAIN GARDEN	1,085	940.0
B	RAIN GARDEN	70	904.1
D	BIORETENTION	1,190	903.3
E	BIORETENTION	135	903.4
F	BIORETENTION	250	902.8
G	BIORETENTION	260	902.2
H	RAIN GARDEN	450	901.3
I	BIORETENTION	195	905.2
J	RAIN GARDEN	320	901.8

NOTE: LID FACILITY 'C' WAS REMOVED

LEGEND

- LIMITS OF GRADING
- GRADE BREAK
- (P) MINOR CONTOUR
- (P) MAJOR CONTOUR
- (E) MINOR CONTOUR
- (E) MAJOR CONTOUR
- LIMITS OF WORK
- SAWCUT
- SLOPE
- (P) CURB CUT
- (P) AREA DRAIN
- (P) DRAIN INLET
- (P) TRENCH DRAIN
- (P) SLOT DRAIN
- (P) SD MANHOLE
- (P) SD CLEAN OUT SEE DETAIL 2/C5.5
- (P) DOWNSPOUT SEE DETAIL 4/C5.4
- (P) ROCK INLET/OUTLET PROTECTION
- (E) STORM DRAIN PIPE
- (P) STORM DRAIN PIPE
- (P) PERFORATED UNDER DRAIN
- (P) PERIMETER DRAIN
- DRAINAGE ARROW
- (E) FLOWLINE
- (P) FLOWLINE
- (P) RAINGARDEN
- (P) BIORETENTION
- (P) TREATMENT LANDSCAPE

DRAINAGE NOTES

1. CONTRACTOR TO PROVIDE STORM DRAIN PIPES OF SIZE, LENGTH AND SLOPE INDICATED ON THE DRAWINGS. UNLABELED PIPES ARE 6-INCHES DIAMETER FOR STORM DRAIN LINES & 4-INCHES DIAMETER FOR RAIN WATER LINES AT 2% MINIMUM SLOPE, LENGTH AS SCALED, UNLESS OTHERWISE NOTED.
   RAIN GARDENS AND BIORETENTION BASINS SHALL BE CONSTRUCTED PER DETAILS PROVIDED AND CONSTRUCTED TO SHAPE, DIMENSIONS AND DETENTION VOLUMES INDICATED. PONDING SURFACE DEPTHS AND FREEBOARD REQUIRE LEVEL GRADES AT TOP AND TOE OF BASIN EMBANKMENTS. NO ADJUSTMENTS TO GRADES ARE ALLOWED WITHOUT EXPRESS WRITTEN DIRECTION FROM THE ENGINEER.
2. SOILS INCORPORATED INTO RAIN GARDENS AND BIORETENTION BASINS SHALL BE AS SPECIFIED AND APPROVED BY THE ENGINEER WITHOUT EXCEPTION.
3. THE CONTRACTOR IS RESPONSIBLE TO OPERATE AND MAINTAIN ALL DRAINAGE STRUCTURES AND FEATURES UNTIL FINAL ACCEPTANCE BY THE OWNER. FEATURES SUCH AS RAIN GARDENS AND OTHER LOW-IMPACT DEVELOPMENT (LID) ELEMENTS SHALL NOT BE USED FOR IMPOUNDMENT OR EROSION/SEDIMENT CONTROL DURING CONSTRUCTION UNLESS THOROUGHLY PROTECTED FROM SILT-UP OR CLOGGING. CLEAN UP OR REPLACEMENT OF SOILS IMPACTED BY CONSTRUCTION ACTIVITIES OR RUNOFF PRIOR TO HAND-OVER SHALL BE REPLACED PER ORIGINAL DESIGN AT THE CONTRACTOR'S EXPENSE.

ACCESIBILITY NOTES

1. ALL SITE WORK SHALL BE IN CONFORMANCE WITH THE AMERICANS WITH DISABILITIES ACT.
2. A 1:48 MAXIMUM SLOPE LANDING SHALL BE PROVIDED AT PRIMARY ENTRANCES OF THE BUILDINGS. THE LANDINGS SHALL HAVE A MINIMUM DEPTH OF 60" WHEN THE DOOR OPENS INTO THE BUILDING OR 42" PLUS THE WIDTH OF THE DOOR WHEN THE DOOR OPEN ONTO THE LANDING.
3. CROSS SLOPE ON ANY SIDEWALK OR RAMP SHALL BE 1:48 MAXIMUM.
4. CURB RAMPS SHALL NOT EXCEED A SLOPE OF 1:12 (8.33%).
5. SLOPES WITHIN ACCESSIBLE PARKING STALLS AND ACCESS AISLES SHALL BE 1:48 MAXIMUM IN ANY DIRECTION.
6. PROVIDE FLUSH TRANSITIONS AT ADJACENT SURFACES.

NORTH 0 5' 10' 20'

APPROVALS

IDENTIFICATION STAMP
DIV. OF THE STATE ARCHITECT
APP: 01-119409 INC:
REVIEWED FOR
SS ☑ FLS ☑ ACS ☑
DATE: 03/14/2022

NOLL & TAM ARCHITECTS
729 Heinz Avenue
Berkeley, CA 94710
tel 510.542.2200
fax 510.542.2201

SEAL

REGISTERED PROFESSIONAL ENGINEER JIMMY A. GALVEZ EXP: 06/30/22 C-75568 CIVIL STATE OF CALIFORNIA

FOR DSA APPROVAL

SHERWOOD DESIGN ENGINEERS
625 2nd Street, Suite 202
Petaluma, CA 94952
www.sherwoodengineers.com

PROJECT TITLE

Peralta Community College District

MERRITT COLLEGE NEW LANDSCAPE HORTICULTURE COMPLEX

12500 Campus Drive
Oakland, CA 94619

BID SET

ISSUE DATE	03/03/2022
N&T JOB NUMBER	22003

REVISIONS

#	DATE	DESCRIPTION

DRAWN BY	MR	CHECKED BY	LC

SHEET TITLE

GRADING AND DRAINAGE PLAN

SHEET NUMBER

C3.3

P:\2019\19-269-Merritt_Hort\02_Design\01_CAD Sheets\C3.00_Grading and Drainage.dwg,C3.3 Lorraine Duffy/Aug 15\1/4/2021 3:16:45 PM -- 11

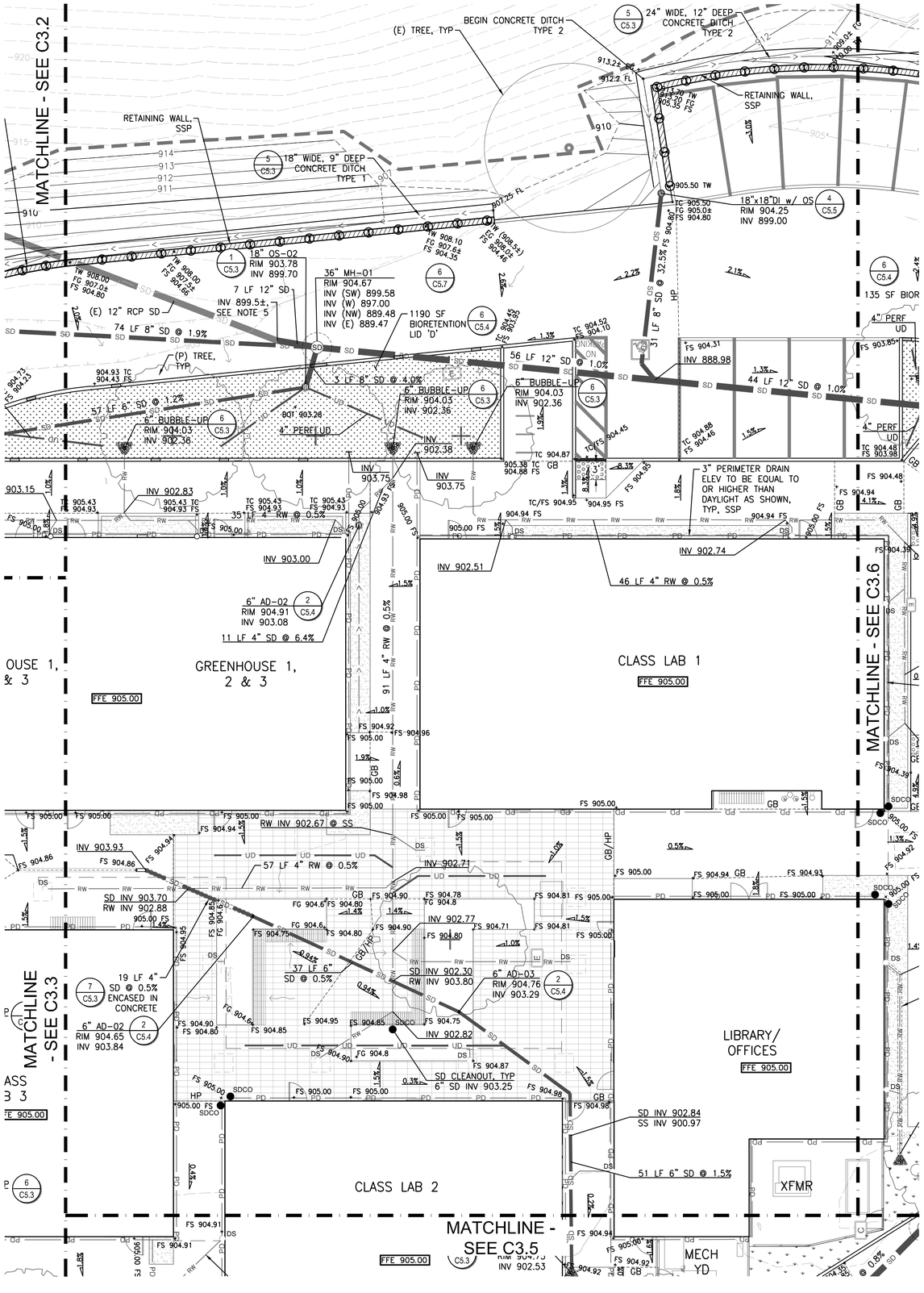

LEGEND

- LIMITS OF GRADING
- GRADE BREAK
- (P) MINOR CONTOUR
- (P) MAJOR CONTOUR
- (E) MINOR CONTOUR
- (E) MAJOR CONTOUR
- LIMITS OF WORK
- SAWCUT
- SLOPE
- (P) CURB CUT
- (P) AREA DRAIN
- (P) DRAIN INLET
- (P) TRENCH DRAIN
- (P) SLOT DRAIN
- (P) SD MANHOLE
- (P) SD CLEAN OUT SEE DETAIL 2/C5.5
- (P) DOWNSPOUT SEE DETAIL 4/C5.4
- (P) ROCK INLET/OUTLET PROTECTION
- (E) STORM DRAIN PIPE
- (P) STORM DRAIN PIPE
- (P) PERFORATED UNDER DRAIN
- (P) PERIMETER DRAIN
- DRAINAGE ARROW
- (E) FLOWLINE
- (P) FLOWLINE
- (P) RAINGARDEN
- (P) BIORETENTION
- (P) TREATMENT LANDSCAPE

LID #	LID TYPE	AREA (SF)	BOTTOM BASIN ELEV (FT)
A	RAIN GARDEN	1,085	940.0
B	RAIN GARDEN	70	904.1
D	BIORETENTION	1,190	903.3
E	BIORETENTION	135	903.4
F	BIORETENTION	250	902.8
G	BIORETENTION	260	902.2
H	RAIN GARDEN	450	901.3
I	BIORETENTION	195	905.2
J	RAIN GARDEN	320	901.8

NOTE: LID FACILITY 'C' WAS REMOVED

DRAINAGE NOTES

1. CONTRACTOR TO PROVIDE STORM DRAIN PIPES OF SIZE, LENGTH AND SLOPE INDICATED ON THE DRAWINGS. UNLABELED PIPES ARE 6-INCHES DIAMETER FOR STORM DRAIN LINES & 4-INCHES DIAMETER FOR RAIN WATER LINES AT 2% MINIMUM SLOPE, LENGTH AS SCALED, UNLESS OTHERWISE NOTED.
   RAIN GARDENS AND BIORETENTION BASINS SHALL BE CONSTRUCTED PER DETAILS PROVIDED AND CONSTRUCTED TO SHAPE, DIMENSIONS AND DETENTION VOLUMES INDICATED. PONDING SURFACE DEPTHS AND FREEBOARD REQUIRE LEVEL GRADES AT TOP AND TOE OF BASIN EMBANKMENTS. NO ADJUSTMENTS TO GRADES ARE ALLOWED WITHOUT EXPRESS WRITTEN DIRECTION FROM THE ENGINEER.
2. SOILS INCORPORATED INTO RAIN GARDENS AND BIORETENTION BASINS SHALL BE AS SPECIFIED AND APPROVED BY THE ENGINEER WITHOUT EXCEPTION.
3. THE CONTRACTOR IS RESPONSIBLE TO OPERATE AND MAINTAIN ALL DRAINAGE STRUCTURES AND FEATURES UNTIL FINAL ACCEPTANCE BY THE OWNER. FEATURES SUCH AS RAIN GARDENS AND OTHER LOW-IMPACT DEVELOPMENT (LID) ELEMENTS SHALL NOT BE USED FOR IMPOUNDMENT OR EROSION/SEDIMENT CONTROL DURING CONSTRUCTION UNLESS THOROUGHLY PROTECTED FROM SILT-UP OR CLOGGING. CLEAN UP OR REPLACEMENT OF SOILS IMPACTED BY CONSTRUCTION ACTIVITIES OR RUNOFF PRIOR TO HAND-OVER SHALL BE REPLACED PER ORIGINAL DESIGN AT THE CONTRACTOR'S EXPENSE.

ACCESIBILITY NOTES

1. ALL SITE WORK SHALL BE IN CONFORMANCE WITH THE AMERICANS WITH DISABILITIES ACT.
2. A 1:48 MAXIMUM SLOPE LANDING SHALL BE PROVIDED AT PRIMARY ENTRANCES OF THE BUILDINGS. THE LANDINGS SHALL HAVE A MINIMUM DEPTH OF 60" WHEN THE DOOR OPENS INTO THE BUILDING OR 42" PLUS THE WIDTH OF THE DOOR WHEN THE DOOR OPEN ONTO THE LANDING.
3. CROSS SLOPE ON ANY SIDEWALK OR RAMP SHALL BE 1:48 MAXIMUM.
4. CURB RAMPS SHALL NOT EXCEED A SLOPE OF 1:12 (8.33%).
5. SLOPES WITHIN ACCESSIBLE PARKING STALLS AND ACCESS AISLES SHALL BE 1:48 MAXIMUM IN ANY DIRECTION.
6. PROVIDE FLUSH TRANSITIONS AT ADJACENT SURFACES.

NORTH 0 5' 10' 20'

APPROVALS

IDENTIFICATION STAMP
DIV. OF THE STATE ARCHITECT
APP: 01-119409 INC:
REVIEWED FOR
SS ☑ FLS ☑ ACS ☑
DATE: 03/14/2022

NOLL & TAM ARCHITECTS
729 Heinz Avenue
Berkeley, CA 94710
tel 510.542.2200
fax 510.542.2201

SEAL

REGISTERED PROFESSIONAL ENGINEER JIMMY A. GALVEZ EXP: 06/30/22 C-75568 CIVIL STATE OF CALIFORNIA

FOR DSA APPROVAL

SHERWOOD DESIGN ENGINEERS
625 2nd Street, Suite 202
Petaluma, CA 94952
www.sherwoodengineers.com

PROJECT TITLE

Peralta Community College District
MERRITT COLLEGE NEW LANDSCAPE HORTICULTURE COMPLEX

12500 Campus Drive
Oakland, CA 94619

BID SET

ISSUE DATE	03/03/2022
N&T JOB NUMBER	22003

REVISIONS

#	DATE	DESCRIPTION

DRAWN BY **MR** CHECKED BY **LC**

SHEET TITLE

GRADING AND DRAINAGE PLAN

SHEET NUMBER

C3.4

P:\2021\21-350-Merritt_Hort\03_Design\01_CAD\Sheets\C3.00_Grading and Drainage.dwg C3.4 Lorraine Chaffeux 11/4/2021 3:14:53 PM — 11

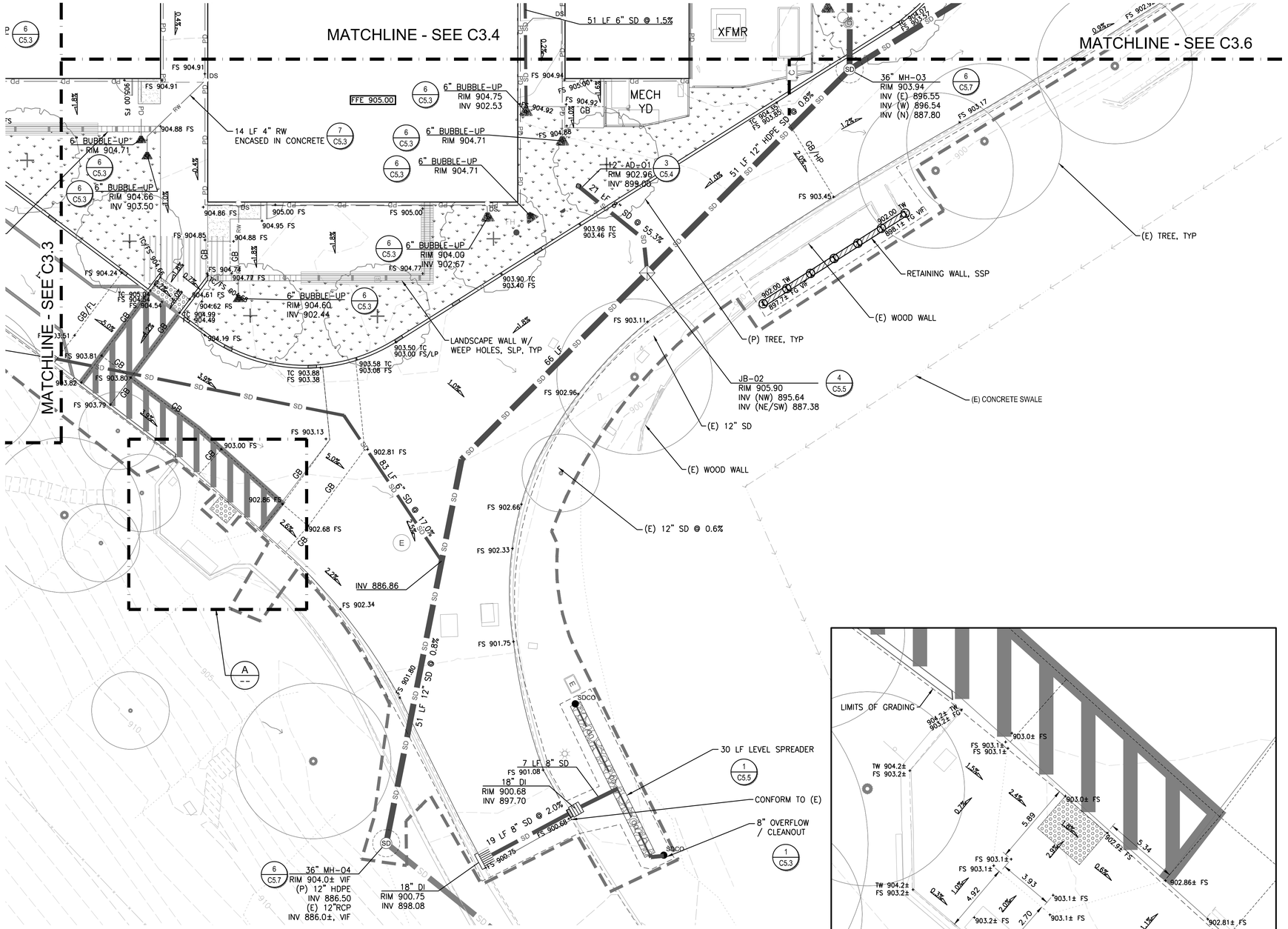

LID #	LID TYPE	AREA (SF)	BOTTOM BASIN ELEV (FT)
A	RAIN GARDEN	1,085	940.0
B	RAIN GARDEN	70	904.1
D	BIORETENTION	1,190	903.3
E	BIORETENTION	135	903.4
F	BIORETENTION	250	902.8
G	BIORETENTION	260	902.2
H	RAIN GARDEN	450	901.3
I	BIORETENTION	195	905.2
J	RAIN GARDEN	320	901.8

NOTE: LID FACILITY 'C' WAS REMOVED

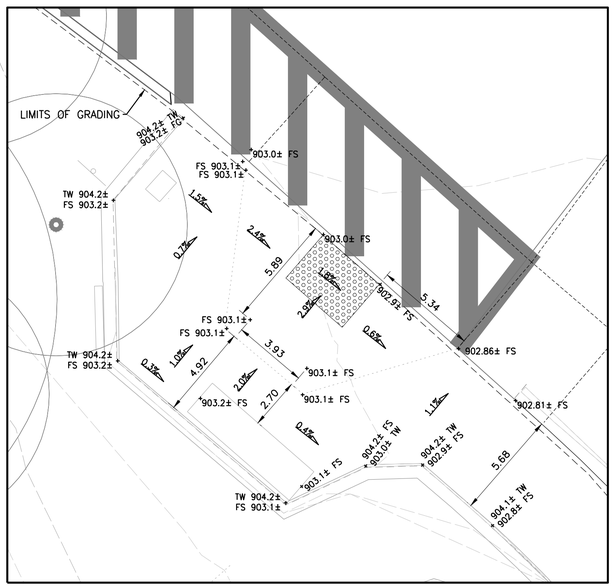

A ENLARGED GRADING OF (E) ACCESSIBLE CURB RAMP

SCALE: 1" = 4'

NOTE: ALL GRADES AND DIMENSIONS IN THIS VIEW REFLECT EXISTING CONDITIONS.

LEGEND

- LIMITS OF GRADING
- GRADE BREAK
- (P) MINOR CONTOUR
- (P) MAJOR CONTOUR
- (E) MINOR CONTOUR
- (E) MAJOR CONTOUR
- LIMITS OF WORK
- SAWCUT
- SLOPE
- (P) CURB CUT
- (P) AREA DRAIN
- (P) DRAIN INLET
- (P) TRENCH DRAIN
- (P) SLOT DRAIN
- (P) SD MANHOLE
- (P) SD CLEAN OUT SEE DETAIL 2/C5.5
- (P) DOWNSPOUT SEE DETAIL 4/C5.4
- (P) ROCK INLET/OUTLET PROTECTION
- (E) STORM DRAIN PIPE
- (P) STORM DRAIN PIPE
- (P) PERFORATED UNDER DRAIN
- (P) PERIMETER DRAIN
- DRAINAGE ARROW
- (E) FLOWLINE
- (P) FLOWLINE
- (P) RAINGARDEN
- (P) BIORETENTION
- (P) TREATMENT LANDSCAPE

DRAINAGE NOTES

1. CONTRACTOR TO PROVIDE STORM DRAIN PIPES OF SIZE, LENGTH AND SLOPE INDICATED ON THE DRAWINGS. UNLABELED PIPES ARE 6-INCHES DIAMETER FOR STORM DRAIN LINES & 4-INCHES DIAMETER FOR RAIN WATER LINES AT 2% MINIMUM SLOPE, LENGTH AS SCALED, UNLESS OTHERWISE NOTED.
   RAIN GARDENS AND BIORETENTION BASINS SHALL BE CONSTRUCTED PER DETAILS PROVIDED AND CONSTRUCTED TO SHAPE, DIMENSIONS AND DETENTION VOLUMES INDICATED. PONDING SURFACE DEPTHS AND FREEBOARD REQUIRE LEVEL GRADES AT TOP AND TOE OF BASIN EMBANKMENTS. NO ADJUSTMENTS TO GRADES ARE ALLOWED WITHOUT EXPRESS WRITTEN DIRECTION FROM THE ENGINEER.
2. SOILS INCORPORATED INTO RAIN GARDENS AND BIORETENTION BASINS SHALL BE AS SPECIFIED AND APPROVED BY THE ENGINEER WITHOUT EXCEPTION.
3. THE CONTRACTOR IS RESPONSIBLE TO OPERATE AND MAINTAIN ALL DRAINAGE STRUCTURES AND FEATURES UNTIL FINAL ACCEPTANCE BY THE OWNER. FEATURES SUCH AS RAIN GARDENS AND OTHER LOW-IMPACT DEVELOPMENT (LID) ELEMENTS SHALL NOT BE USED FOR IMPOUNDMENT OR EROSION/SEDIMENT CONTROL DURING CONSTRUCTION UNLESS THOROUGHLY PROTECTED FROM SILT-UP OR CLOGGING. CLEAN UP OR REPLACEMENT OF SOILS IMPACTED BY CONSTRUCTION ACTIVITIES OR RUNOFF PRIOR TO HAND-OVER SHALL BE REPLACED PER ORIGINAL DESIGN AT THE CONTRACTOR'S EXPENSE.

ACCESIBILITY NOTES

1. ALL SITE WORK SHALL BE IN CONFORMANCE WITH THE AMERICANS WITH DISABILITIES ACT.
2. A 1:48 MAXIMUM SLOPE LANDING SHALL BE PROVIDED AT PRIMARY ENTRANCES OF THE BUILDINGS. THE LANDINGS SHALL HAVE A MINIMUM DEPTH OF 60" WHEN THE DOOR OPENS INTO THE BUILDING OR 42" PLUS THE WIDTH OF THE DOOR WHEN THE DOOR OPEN ONTO THE LANDING.
3. CROSS SLOPE ON ANY SIDEWALK OR RAMP SHALL BE 1:48 MAXIMUM.
4. CURB RAMPS SHALL NOT EXCEED A SLOPE OF 1:12 (8.33%).
5. SLOPES WITHIN ACCESSIBLE PARKING STALLS AND ACCESS AISLES SHALL BE 1:48 MAXIMUM IN ANY DIRECTION.
6. PROVIDE FLUSH TRANSITIONS AT ADJACENT SURFACES.

NORTH

0 5' 10' 20'

APPROVALS

IDENTIFICATION STAMP
DIV. OF THE STATE ARCHITECT
APP: 01-119409 INC:
REVIEWED FOR
SS ☑ FLS ☑ ACS ☑
DATE: 03/14/2022

NOLL & TAM ARCHITECTS
729 Heinz Avenue
Berkeley, CA 94710
tel 510.542.2200
fax 510.542.2201

SEAL

REGISTERED PROFESSIONAL ENGINEER
JIMMY A. GALVEZ
EXP: 06/30/22
C-75568
CIVIL
STATE OF CALIFORNIA

FOR DSA APPROVAL

SHERWOOD DESIGN ENGINEERS
625 2nd Street, Suite 202
Petaluma, CA 94952
www.sherwoodengineers.com

PROJECT TITLE

Peralta Community College District
MERRITT COLLEGE NEW LANDSCAPE HORTICULTURE COMPLEX

12500 Campus Drive
Oakland, CA 94619

BID SET

ISSUE DATE	03/03/2022
N&T JOB NUMBER	22003

REVISIONS

#	DATE	DESCRIPTION

DRAWN BY MR CHECKED BY LC

SHEET TITLE

GRADING AND DRAINAGE PLAN

SHEET NUMBER

C3.5

P:\2021\01-280-Merritt_Hort\03_Design\01_CAD\Sheets\C3.00_Grading and Drainage.dwg,C3.5-Lorraine Duffelhus,1/31/2022 3:16:18 PM -- 1:1

LID #	LID TYPE	AREA (SF)	BOTTOM BASIN ELEV (FT)
A	RAIN GARDEN	1,085	940.0
B	RAIN GARDEN	70	904.1
D	BIORETENTION	1,190	903.3
E	BIORETENTION	135	903.4
F	BIORETENTION	250	902.8
G	BIORETENTION	260	902.2
H	RAIN GARDEN	450	901.3
I	BIORETENTION	195	905.2
J	RAIN GARDEN	320	901.8

NOTE: LID FACILITY 'C' WAS REMOVED

LEGEND

- LIMITS OF GRADING
- GRADE BREAK
- (P) MINOR CONTOUR
- (P) MAJOR CONTOUR
- (E) MINOR CONTOUR
- (E) MAJOR CONTOUR
- LIMITS OF WORK
- SAWCUT
- SLOPE
- FINISH FLOOR ELEVATION
- (P) CURB CUT
- (P) AREA DRAIN
- (P) DRAIN INLET
- (P) TRENCH DRAIN
- (P) SLOT DRAIN
- (P) SD MANHOLE
- (P) SD CLEAN OUT SEE DETAIL 2/C5.5
- (P) DOWNSPOUT SEE DETAIL 4/C5.4
- (P) ROCK INLET/OUTLET PROTECTION
- (E) STORM DRAIN PIPE
- (P) STORM DRAIN PIPE
- (P) PERFORATED UNDER DRAIN
- (P) PERIMETER DRAIN
- DRAINAGE ARROW
- (E) FLOWLINE
- (P) FLOWLINE
- (P) RAINGARDEN
- (P) BIORETENTION
- (P) TREATMENT LANDSCAPE

DRAINAGE NOTES

1. CONTRACTOR TO PROVIDE STORM DRAIN PIPES OF SIZE, LENGTH AND SLOPE INDICATED ON THE DRAWINGS. UNLABELED PIPES ARE 6-INCHES DIAMETER FOR STORM DRAIN LINES & 4-INCHES DIAMETER FOR RAIN WATER LINES AT 2% MINIMUM SLOPE, LENGTH AS SCALED, UNLESS OTHERWISE NOTED.
   RAIN GARDENS AND BIORETENTION BASINS SHALL BE CONSTRUCTED PER DETAILS PROVIDED AND CONSTRUCTED TO SHAPE, DIMENSIONS AND DETENTION VOLUMES INDICATED. PONDING SURFACE DEPTHS AND FREEBOARD REQUIRE LEVEL GRADES AT TOP AND TOE OF BASIN EMBANKMENTS. NO ADJUSTMENTS TO GRADES ARE ALLOWED WITHOUT EXPRESS WRITTEN DIRECTION FROM THE ENGINEER.
2. SOILS INCORPORATED INTO RAIN GARDENS AND BIORETENTION BASINS SHALL BE AS SPECIFIED AND APPROVED BY THE ENGINEER WITHOUT EXCEPTION.
3. THE CONTRACTOR IS RESPONSIBLE TO OPERATE AND MAINTAIN ALL DRAINAGE STRUCTURES AND FEATURES UNTIL FINAL ACCEPTANCE BY THE OWNER. FEATURES SUCH AS RAIN GARDENS AND OTHER LOW-IMPACT DEVELOPMENT (LID) ELEMENTS SHALL NOT BE USED FOR IMPOUNDMENT OR EROSION/SEDIMENT CONTROL DURING CONSTRUCTION UNLESS THOROUGHLY PROTECTED FROM SILT-UP OR CLOGGING. CLEAN UP OR REPLACEMENT OF SOILS IMPACTED BY CONSTRUCTION ACTIVITIES OR RUNOFF PRIOR TO HAND-OVER SHALL BE REPLACED PER ORIGINAL DESIGN AT THE CONTRACTOR'S EXPENSE.

ACCESIBILITY NOTES

1. ALL SITE WORK SHALL BE IN CONFORMANCE WITH THE AMERICANS WITH DISABILITIES ACT.
2. A 1:48 MAXIMUM SLOPE LANDING SHALL BE PROVIDED AT PRIMARY ENTRANCES OF THE BUILDINGS. THE LANDINGS SHALL HAVE A MINIMUM DEPTH OF 60" WHEN THE DOOR OPENS INTO THE BUILDING OR 42" PLUS THE WIDTH OF THE DOOR WHEN THE DOOR OPEN ONTO THE LANDING.
3. CROSS SLOPE ON ANY SIDEWALK OR RAMP SHALL BE 1:48 MAXIMUM.
4. CURB RAMPS SHALL NOT EXCEED A SLOPE OF 1:12 (8.33%).
5. SLOPES WITHIN ACCESSIBLE PARKING STALLS AND ACCESS AISLES SHALL BE 1:48 MAXIMUM IN ANY DIRECTION.
6. PROVIDE FLUSH TRANSITIONS AT ADJACENT SURFACES.

NORTH

0 5' 10' 20'

APPROVALS

IDENTIFICATION STAMP
DIV. OF THE STATE ARCHITECT
APP: 01-119409 INC:
REVIEWED FOR
SS ☑ FLS ☑ ACS ☑
DATE: 03/14/2022

NOLL & TAM ARCHITECTS
729 Heinz Avenue
Berkeley, CA 94710
tel 510.542.2200
fax 510.542.2201

SEAL

REGISTERED PROFESSIONAL ENGINEER
JIMMY A. GALVEZ
EXP: 06/30/22
C-75568
CIVIL
STATE OF CALIFORNIA

FOR DSA APPROVAL

SHERWOOD DESIGN ENGINEERS
625 2nd Street, Suite 202
Petaluma, CA 94952
www.sherwoodengineers.com

PROJECT TITLE

Peralta Community College District
MERRITT COLLEGE NEW LANDSCAPE HORTICULTURE COMPLEX

12500 Campus Drive
Oakland, CA 94619

BID SET

ISSUE DATE	03/03/2022
N&T JOB NUMBER	22003

REVISIONS

#	DATE	DESCRIPTION

DRAWN BY	MR	CHECKED BY	LC

SHEET TITLE

GRADING AND DRAINAGE PLAN

SHEET NUMBER

C3.6

P:\2021\10-Merritt_Hort\02_Design\01_CAD\Sheets\C3.00_Grading and Drainage.dwg, C3.6 Lorraine Cuvilliez, 4/21/2022 1:16:29 PM

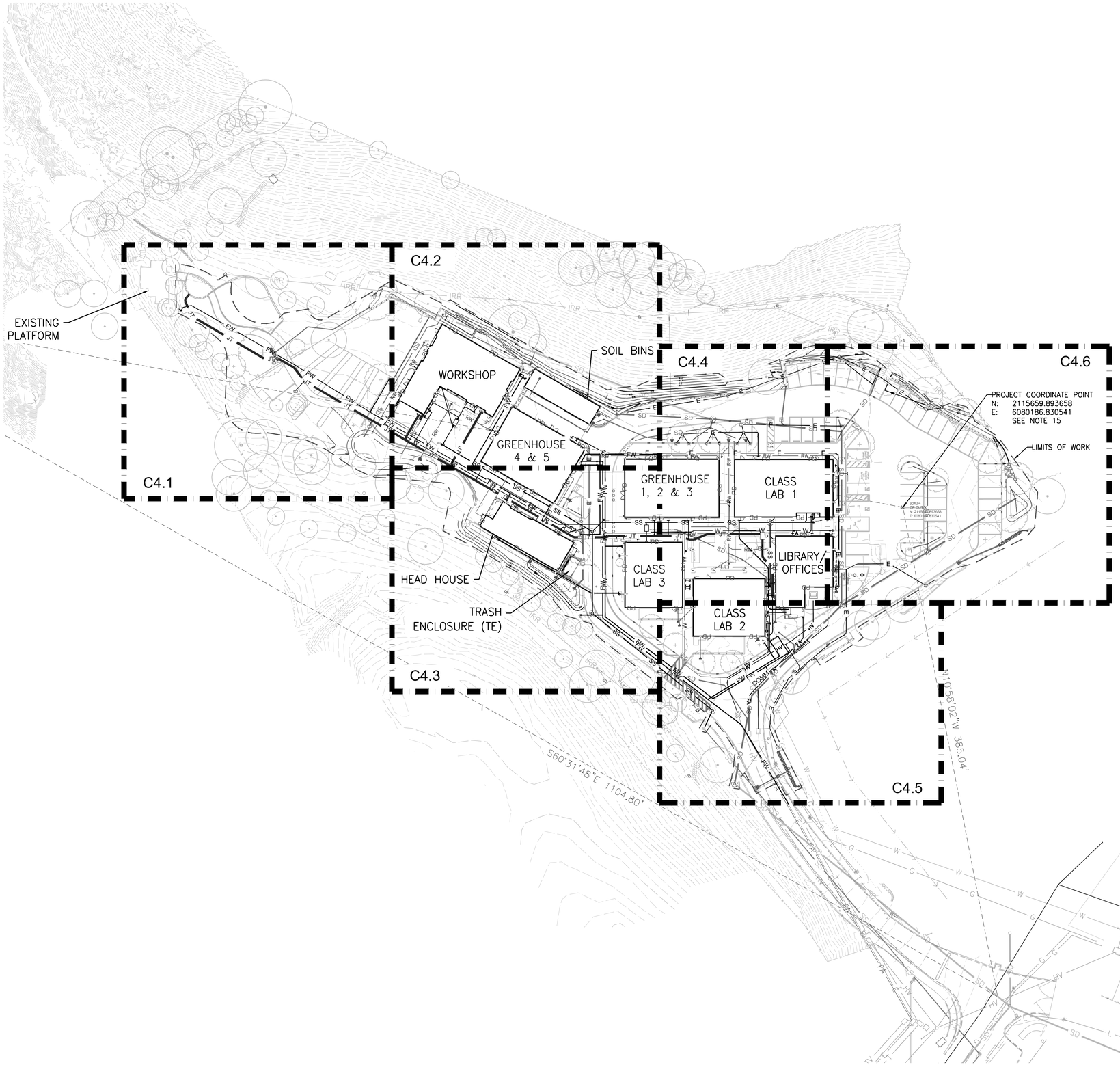

UTILITY NOTES

1. PIPE TRENCHES SHALL BE EXCAVATED INTO UNDISTURBED NATIVE SOIL OR ENGINEERED AND COMPACTED FILL. IN NO EVENT SHALL PIPE BE INSTALLED IN A PROPOSED SLOPE WITH FILL PLACED OVER IT.

2. PIPE TRENCHES SHALL BE OF ADEQUATE WIDTH TO PERMIT COMPACTION TO THE REQUIRED RELATIVE DENSITY UNDER THE HAUNCH OF THE PIPE.

3. ALL PIPE SHALL BE PLACED ON COMPETENT SOIL, AS RECOMMENDED BY THE GEOTECHNICAL ENGINEER, SUCH THAT THE FULL LENGTH OF PIPE REST ON THE TRENCH BOTTOM. HAND EXCAVATE AT THE JOINTS AND FITTINGS WHERE REQUIRED TO AVOID POINT LOADING.

4. GRANULAR BEDDING SHALL BE PLACED TO A DEPTH INDICATED IN THE DRAWINGS WHERE ROCKY OR POORLY DRAINING SOILS ARE FOUND. CONTRACTOR SHALL USE ONLY MATERIALS THAT HAVE BEEN SUBMITTED TO AND APPROVED BY THE GEOTECHNICAL ENGINEER FOR BEDDING AND BACKFILL MATERIAL AND MAY INCLUDE NATIVE SOIL IF IT MEETS PROJECT REQUIREMENTS.

5. BACKFILL PIPE TRENCHES AS FOLLOWS:
   A. PIPE ZONE: ACCEPTABLE PIPE ZONE BACKFILL MATERIAL SHALL BE POORLY GRADED GRANULAR MATERIAL FREE OF CLAY, ORGANICS, FINES OR CLUMPS/STONES LARGER THAN 3-INCHES.
   B. BELOW THE HAUNCH: HAND PLACE APPROVED PIPE ZONE BACKFILL MATERIAL AND COMPACT BY HAND TAMPING TO FILL ALL VOIDS TO THE EXTENT PRACTICAL.
   C. SPRINGLINE TO 12-INCHES ABOVE THE PIPE: HAND PLACE ACCEPTABLE PIPE ZONE BACKFILL MATERIAL AND COMPACT USING HAND METHODS. DO NOT DROP FILL ONTO PIPE. DO NOT USE WHEELED METHODS TO COMPACT.
   D. TRENCH BACKFILL TO 12-INCHES ABOVE THE PIPE: BACKFILL WITH SUITABLE MATERIAL IN LIFTS NOT EXCEEDING 8-INCHES. COMPACT TO THE RELATIVE DENSITY REQUIRED. BACKFILL EVENLY ON BOTH SIDES OF THE PIPE SO AS TO AVOID DISPLACEMENT OF THE PIPE. DO NOT ALLOW WHEELED COMPACTION METHODS OVER THE PIPE UNTIL BACKFILL REACHES AT LEAST 3-FT ABOVE TOP OF PIPE.
   E. TOP ZONE: PLACE AND COMPACT MATERIAL TO FINAL GRADE ACCORDING TO THE PROPOSED SURFACE TREATMENT. IN PAVED AREAS, PLACE APPROPRIATE SUBBASE; IN LANDSCAPE AREAS, PLACE TOPSOIL PER LANDSCAPE PLANS, ETC.

7. GRAVITY SYSTEMS SHALL BE INSTALLED TO THE LINE AND GRADE INDICATED. IF A CONFLICT IS IDENTIFIED, THE CONTRACTOR SHALL PROPOSE A SOLUTION TO THE ENGINEER AND WILL STOP WORK ON THE PIPE UNTIL THE ENGINEER ISSUES NEW ALIGNMENT OR ACCEPTS THE CONTRACTOR'S PROPOSED RESOLUTION IN WRITING.

8. GRAVITY PIPE SHALL BE INSTALLED BEGINNING AT THE LOW POINT OF EACH RUN AND PROCEEDING UPHILL.

9. ALL PIPE BENDS SHALL BE PRE-FABRICATED FITTINGS UNLESS SPECIAL FABRICATION IS APPROVED IN ADVANCE BY THE ENGINEER. NO FIELD-CONSTRUCTED FITTINGS SHALL BE INCORPORATED INTO THE WORK WITHOUT PRIOR APPROVAL OF THE ENGINEER.

10. ALL STRUCTURE RIMS (EXISTING AND PROPOSED) SHALL BE SET OR ADJUSTED TO BE FLUSH WITH ADJACENT PAVEMENT OR FINISHED GRADE, UNLESS OTHERWISE NOTED.

11. METALLIC PIPES SHALL BE SLEEVED, COATED OR PROVIDED WITH OTHER CATHODIC PROTECTION PER DIRECTION FROM THE CORROSION ENGINEER WHERE PLACED IN CORROSIVE SOILS. THE CONTRACTOR SHALL CONFIRM WITH THE GEOTECHNICAL ENGINEER THAT CORROSIVE SOILS ARE NOT PRESENT IN THE PROJECT AREA.

12. IF A UTILITY PROVIDER REQUIRES THAT WORK ASSOCIATED WITH THEIR FACILITIES BE PERFORMED BY ITS OWN OR ANOTHER UTILITY-CERTIFIED CONTRACTOR, THE CONTRACTOR SHALL PROVIDE INFORMATION AND FACILITATE COORDINATION TO ACCOMPLISH THE REQUIRED WORK EFFECTIVELY.

13. CONTRACTOR TO VERIFY IN FIELD EXISTING INVERTS.

14. FIRE WATER ROUTING DESIGNED BY FIRE PROTECTION CONSULTANT. SEE FIRE PROTECTION PLANS FOR RESPECTIVE DETAILS AND NOTES.

15. CONTRACTOR SHALL STAKE AND RELOCATE PROJECT COORDINATE POINT PRIOR TO START OF CONSTRUCTION. NEW LOCATION OF PROJECT COORDINATE POINT SHALL BE RECORDED AND MAINTAINED THROUGHOUT THE ENTIRETY OF THE PROJECT.

16. ALL FIRE PROTECTION UTILITY ROUTING AND EQUIPMENT SHOWN FOR REFERENCE ONLY. SEE FIRE PROTECTION PLANS FOR DETAILS AND INSTALLATION REQUIREMENTS.
    A. REFER TO FIRE PROTECTION PLAN FP2.01 FOR FIRE WATER SYSTEM CONFIGURATION, INCLUDING PIV AND FDC LOCATIONS. REFER TO DETAIL 5 ON SHEET FP0.07 FOR THE TYPICAL INSTALLATION DETAIL.
    B. PER THE FIRE PROTECTION PLANS, THE LOCATIONS OF THE FDC(S) AND PIV(S) HAVE BEEN LOCATED IN ACCORDANCE WITH THE REQUIREMENTS, REQUESTS AND DIRECTION OF THE LOCAL FIRE AGENCY (OAKLAND FIRE DEPARTMENT). NFPA 24 SECTION 6.2.9 (1) (a) PERMITS PIV(S) TO BE LOCATED LESS THAN 40-FEET FROM A BUILDING FOR BUILDINGS LESS THAN 40-FEET IN HEIGHT.

17. REFRIGERANT PIPE ROUTING ON THIS PLAN ARE FOR ALIGNMENT PURPOSES ONLY. REFER TO MECHANICAL PLANS FOR MATERIAL, DETAILS AND INSTALLATION REQUIREMENTS.

APPROVALS

IDENTIFICATION STAMP
DIV. OF THE STATE ARCHITECT
APP: 01-119409 INC:
REVIEWED FOR
SS ☑ FLS ☑ ACS ☑
DATE: 03/14/2022

NOLL & TAM ARCHITECTS
729 Heinz Avenue
Berkeley, CA 94710
tel 510.542.2200
fax 510.542.2201

SEAL

REGISTERED PROFESSIONAL ENGINEER
JIMMY A. GALVEZ
EXP: 06/30/22
C-75568
CIVIL
STATE OF CALIFORNIA

FOR DSA APPROVAL

SHERWOOD DESIGN ENGINEERS
625 2nd Street, Suite 202
Petaluma, CA 94952
www.sherwoodengineers.com

PROJECT TITLE

Peralta Community College District

MERRITT COLLEGE NEW LANDSCAPE HORTICULTURE COMPLEX

12500 Campus Drive
Oakland, CA 94619

BID SET

ISSUE DATE	03/03/2022
N&T JOB NUMBER	22003

REVISIONS

#	DATE	DESCRIPTION

DRAWN BY **MR** CHECKED BY **LC**

SHEET TITLE

UTILITIES PLAN KEY MAP

SHEET NUMBER

C4.0

P:\2019\19-269 Merritt Hort\03_Design\01_CAD\Sheets\C4.00_Utilities Plan Key\C4.0_xrefs: CyArbor, 12/14/2021 3:34:30 PM, ANSI A (11.00 x 8.50 inches)

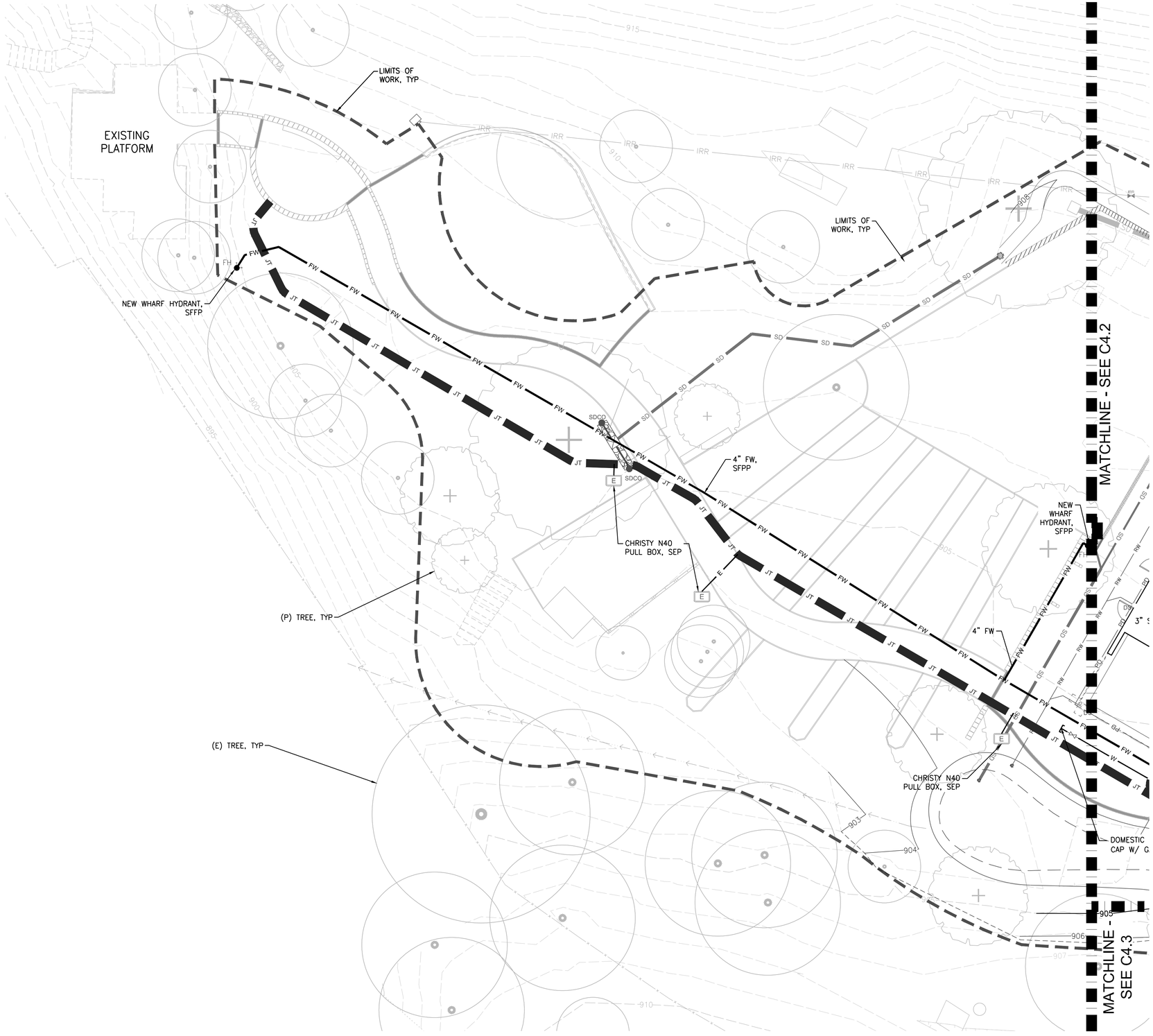

LEGEND

(E) ELECTRICAL CONDUIT	E
(E) GAS LINE	G
(E) IRRIGATION LINE	IRR
(E) SANITARY SEWER LINE	SS
(E) STORM DRAIN LINE	SD
(E) TELEPHONE LINE	T
(E) WATER LINE	W
(P) ELECTRICAL CONDUIT	E
(P) SANITARY SEWER LINE	SS
(P) STORM DRAIN LINE	SD
(P) DOMESTIC WATER LINE	W
(P) FIRE WATER LINE	FW
(P) RAINWATER LINE	RW
(P) PERIMETER DRAIN	PD
(P) JOINT UTILITY TRENCH	JT
(P) REFRIGERANT PIPE, SMP	
(P) LIMITS OF WORK	
(P) SANITARY SEWER MANHOLE	SS
(P) GATE VALVE	
(P) STANDARD HYDRANT OR WHARF HYDRANT, SFFP	FH
(P) BACKFLOW PREVENTER	
(P) ELECTRICAL MANHOLE, SEP	E
(P) ELECTRIC PULLBOX	E
(P) COMMUNICATIONS PULLBOX	C

UTILITY NOTES

1. ELECTRIC, COMM AND JOINT TRENCH ROUTINGS SHOWN ON THIS PLAN ARE FOR ALIGNMENT PURPOSES ONLY. REFER TO ELECTRIC/TELECOM PLANS FOR NUMBER, SIZE AND ARRANGEMENT OF CONDUITS WITHIN EACH TRENCH SEGMENT, AND FOR ALL VAULT AND PULL BOX REQUIREMENTS.
2. FIRE WATER ROUTING DESIGNED BY FIRE PROTECTION CONSULTANT. REFER TO FIRE PROTECTION PLAN FP2.01 FOR THE UNDERGROUND FIRE WATER SYSTEM CONFIGURATION, INCLUDING PIV AND FDC LOCATIONS. REFER TO FIRE PROTECTION PLAN DETAIL 5/FP0.07.
3. ALL FIRE PROTECTION UTILITY ROUTING AND EQUIPMENT SHOWN FOR REFERENCE ONLY. SEE FIRE PROTECTION PLANS FOR DETAILS AND INSTALLATION REQUIREMENTS.

NORTH

0 5' 10' 20'

APPROVALS

IDENTIFICATION STAMP
DIV. OF THE STATE ARCHITECT
APP: 01-119409 INC:
REVIEWED FOR
SS ☑ FLS ☑ ACS ☑
DATE: 03/14/2022

NOLL & TAM ARCHITECTS
729 Heinz Avenue
Berkeley, CA 94710
tel 510.542.2200
fax 510.542.2201

SEAL

REGISTERED PROFESSIONAL ENGINEER
JIMMY A. GALVEZ
EXP: 06/30/22
C-75568
CIVIL
STATE OF CALIFORNIA

FOR DSA APPROVAL

SHERWOOD DESIGN ENGINEERS
625 2nd Street, Suite 202
Petaluma, CA 94952
www.sherwoodengineers.com

PROJECT TITLE

Peralta Community College District
MERRITT COLLEGE NEW LANDSCAPE HORTICULTURE COMPLEX

12500 Campus Drive
Oakland, CA 94619

BID SET

ISSUE DATE	03/03/2022
N&T JOB NUMBER	22003

REVISIONS

#	DATE	DESCRIPTION

DRAWN BY	MR	CHECKED BY	LC

SHEET TITLE

UTILITY PLAN

SHEET NUMBER

C4.1

PLOTTED: 3/9/2022 10:26:0 Morris, Hazel/05_Design/01_CAD Sheets/C4.00_Utilities Plan.dwg/C4.1 Layout: C4.1 Cynthia Gallegos,12/14/2021 3:34:51 PM,ANSI A (11.00 x 8.50 Inches);1:0

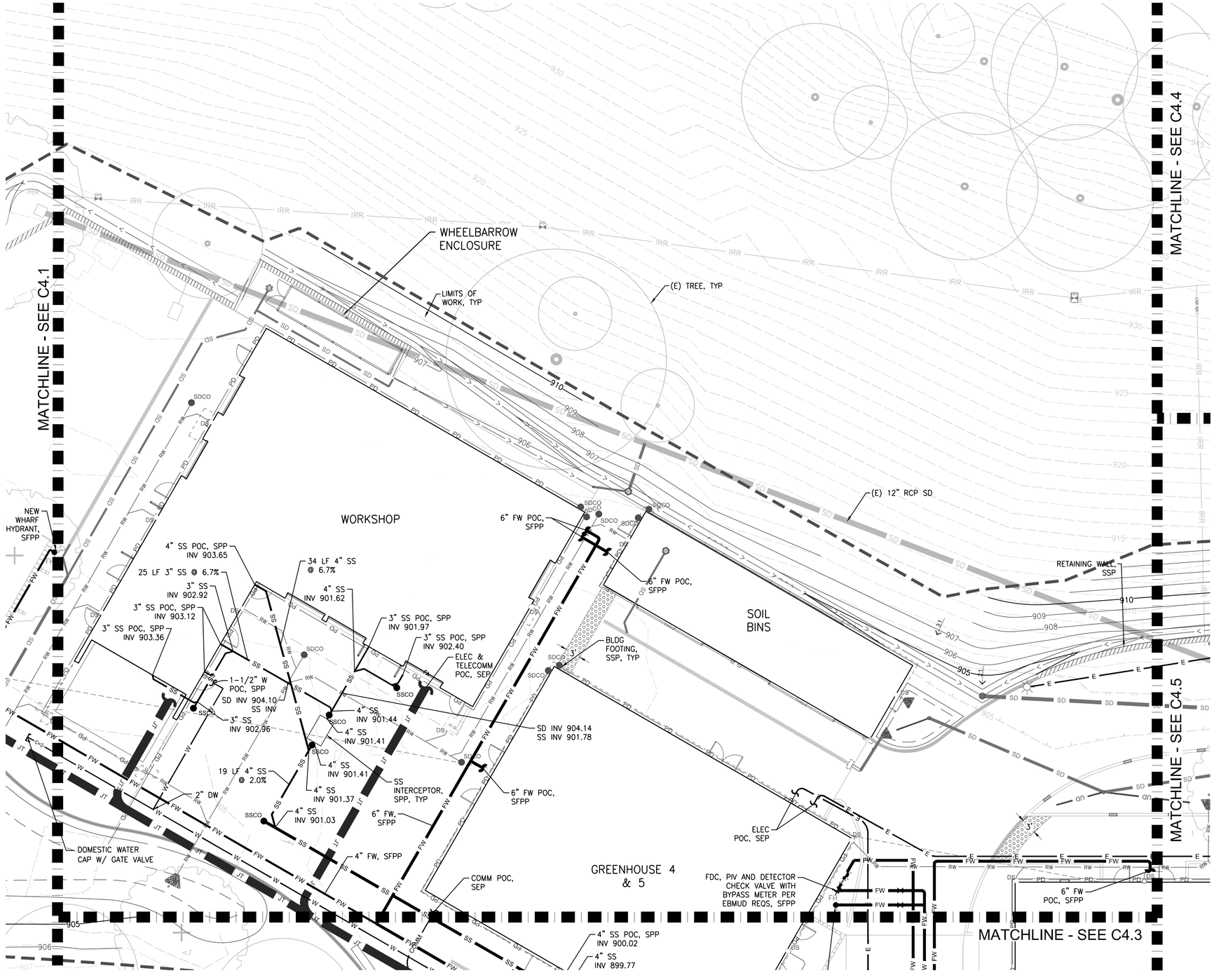

LEGEND

(E) ELECTRICAL CONDUIT	E
(E) GAS LINE	G
(E) IRRIGATION LINE	IRR
(E) SANITARY SEWER LINE	SS
(E) STORM DRAIN LINE	SD
(E) TELEPHONE LINE	T
(E) WATER LINE	W
(P) ELECTRICAL CONDUIT	E E E
(P) SANITARY SEWER LINE	SS SS
(P) STORM DRAIN LINE	SD SD
(P) DOMESTIC WATER LINE	W W
(P) FIRE WATER LINE	FW FW
(P) RAINWATER LINE	RW RW
(P) PERIMETER DRAIN	PD PD
(P) JOINT UTILITY TRENCH	JT JT
(P) REFRIGERANT PIPE, SMP	
(P) LIMITS OF WORK	
(P) SANITARY SEWER MANHOLE	SS
(P) GATE VALVE	
(P) STANDARD HYDRANT OR WHARF HYDRANT, SFFP	FH
(P) BACKFLOW PREVENTER	
(P) ELECTRICAL MANHOLE, SEP	E
(P) ELECTRIC PULLBOX	E
(P) COMMUNICATIONS PULLBOX	C

UTILITY NOTES

1. ELECTRIC, COMM AND JOINT TRENCH ROUTINGS SHOWN ON THIS PLAN ARE FOR ALIGNMENT PURPOSES ONLY. REFER TO ELECTRIC/TELECOM PLANS FOR NUMBER, SIZE AND ARRANGEMENT OF CONDUITS WITHIN EACH TRENCH SEGMENT, AND FOR ALL VAULT AND PULL BOX REQUIREMENTS.
2. FIRE WATER ROUTING DESIGNED BY FIRE PROTECTION CONSULTANT. REFER TO FIRE PROTECTION PLAN FP2.01 FOR THE UNDERGROUND FIRE WATER SYSTEM CONFIGURATION, INCLUDING PIV AND FDC LOCATIONS. REFER TO FIRE PROTECTION PLAN DETAIL 5/FP0.07.
3. ALL FIRE PROTECTION UTILITY ROUTING AND EQUIPMENT SHOWN FOR REFERENCE ONLY. SEE FIRE PROTECTION PLANS FOR DETAILS AND INSTALLATION REQUIREMENTS.

NORTH

0 5' 10' 20'

APPROVALS

IDENTIFICATION STAMP
DIV. OF THE STATE ARCHITECT
APP: 01-119409 INC:
REVIEWED FOR
SS ☑ FLS ☑ ACS ☑
DATE: 03/14/2022

NOLL & TAM ARCHITECTS
729 Heinz Avenue
Berkeley, CA 94710
tel 510.542.2200
fax 510.542.2201

SEAL

REGISTERED PROFESSIONAL ENGINEER
JIMMY A. GALVEZ
EXP: 06/30/22
C-75568
CIVIL
STATE OF CALIFORNIA

FOR DSA APPROVAL

SHERWOOD DESIGN ENGINEERS
625 2nd Street, Suite 202
Petaluma, CA 94952
www.sherwoodengineers.com

PROJECT TITLE

Peralta Community College District
MERRITT COLLEGE NEW LANDSCAPE HORTICULTURE COMPLEX

12500 Campus Drive
Oakland, CA 94619

BID SET

ISSUE DATE	03/03/2022
N&T JOB NUMBER	22003

REVISIONS

#	DATE	DESCRIPTION

DRAWN BY MR | CHECKED BY LC

SHEET TITLE

UTILITY PLAN

SHEET NUMBER

C4.2

D:\2019\19-260 Merritt Hort\V0_Design\01_CAD\Sheets\C4.00_Utility Plan.dwg, C4.2 Layout: C4.2, 12/14/2021 2:56:03 PM, ANSI A (11.00 x 8.50 Inches)

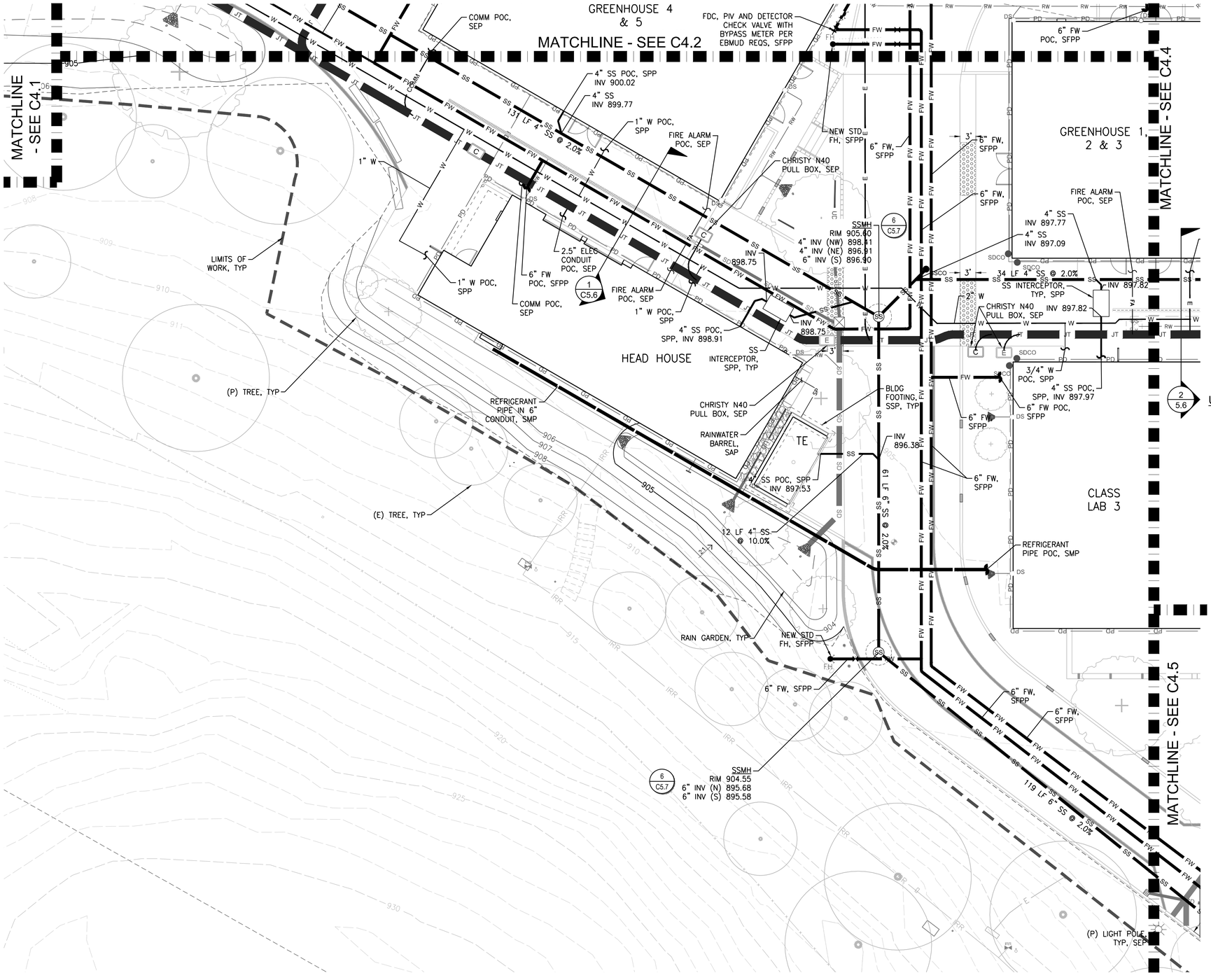

LEGEND

(E) ELECTRICAL CONDUIT	E
(E) GAS LINE	G
(E) IRRIGATION LINE	IRR
(E) SANITARY SEWER LINE	SS
(E) STORM DRAIN LINE	SD
(E) TELEPHONE LINE	T
(E) WATER LINE	W
(P) ELECTRICAL CONDUIT	E E E
(P) SANITARY SEWER LINE	SS SS
(P) STORM DRAIN LINE	SD SD
(P) DOMESTIC WATER LINE	W W
(P) FIRE WATER LINE	FW FW
(P) RAINWATER LINE	RW RW
(P) PERIMETER DRAIN	PD PD
(P) JOINT UTILITY TRENCH	JT JT
(P) REFRIGERANT PIPE, SMP	
(P) LIMITS OF WORK	
(P) SANITARY SEWER MANHOLE	SS
(P) GATE VALVE	
(P) STANDARD HYDRANT OR WHARF HYDRANT, SFFP	FH
(P) BACKFLOW PREVENTER	
(P) ELECTRICAL MANHOLE, SEP	E
(P) ELECTRIC PULLBOX	E
(P) COMMUNICATIONS PULLBOX	C

UTILITY NOTES

1. ELECTRIC, COMM AND JOINT TRENCH ROUTINGS SHOWN ON THIS PLAN ARE FOR ALIGNMENT PURPOSES ONLY. REFER TO ELECTRIC/TELECOM PLANS FOR NUMBER, SIZE AND ARRANGEMENT OF CONDUITS WITHIN EACH TRENCH SEGMENT, AND FOR ALL VAULT AND PULL BOX REQUIREMENTS.
2. FIRE WATER ROUTING DESIGNED BY FIRE PROTECTION CONSULTANT. REFER TO FIRE PROTECTION PLAN FP2.01 FOR THE UNDERGROUND FIRE WATER SYSTEM CONFIGURATION, INCLUDING PIV AND FDC LOCATIONS. REFER TO FIRE PROTECTION PLAN DETAIL 5/FP0.07.
3. REFRIGERANT PIPE ROUTING ON THIS PLAN ARE FOR ALIGNMENT PURPOSES ONLY. REFER TO MECHANICAL PLANS FOR MATERIAL, DETAILS AND INSTALLATION REQUIREMENTS.

NORTH 0 5' 10' 20'

APPROVALS

IDENTIFICATION STAMP
DIV. OF THE STATE ARCHITECT
APP: 01-119409 INC:
REVIEWED FOR
SS ☑ FLS ☑ ACS ☑
DATE: 03/14/2022

NOLL & TAM ARCHITECTS
729 Heinz Avenue
Berkeley, CA 94710
tel 510.542.2200
fax 510.542.2201

SEAL

REGISTERED PROFESSIONAL ENGINEER JIMMY A. GALVEZ EXP: 06/30/22 C-75568 CIVIL STATE OF CALIFORNIA

FOR DSA APPROVAL

SHERWOOD DESIGN ENGINEERS
625 2nd Street, Suite 202
Petaluma, CA 94952
www.sherwoodengineers.com

PROJECT TITLE

Peralta Community College District
MERRITT COLLEGE NEW LANDSCAPE HORTICULTURE COMPLEX

12500 Campus Drive
Oakland, CA 94619

BID SET

ISSUE DATE	03/03/2022
N&T JOB NUMBER	22003

REVISIONS

#	DATE	DESCRIPTION

DRAWN BY MR | CHECKED BY LC

SHEET TITLE

UTILITY PLAN

SHEET NUMBER

C4.3

P:\2019\19-369 Merritt Hort\03_Design\01_CAD\Sheets\C4\04_Utility_Plan.dwg C4.3 Lorenzo Guillen 12/14/2021 3:35:11 PM ANSI A (11.00 x 8.50) Portrait

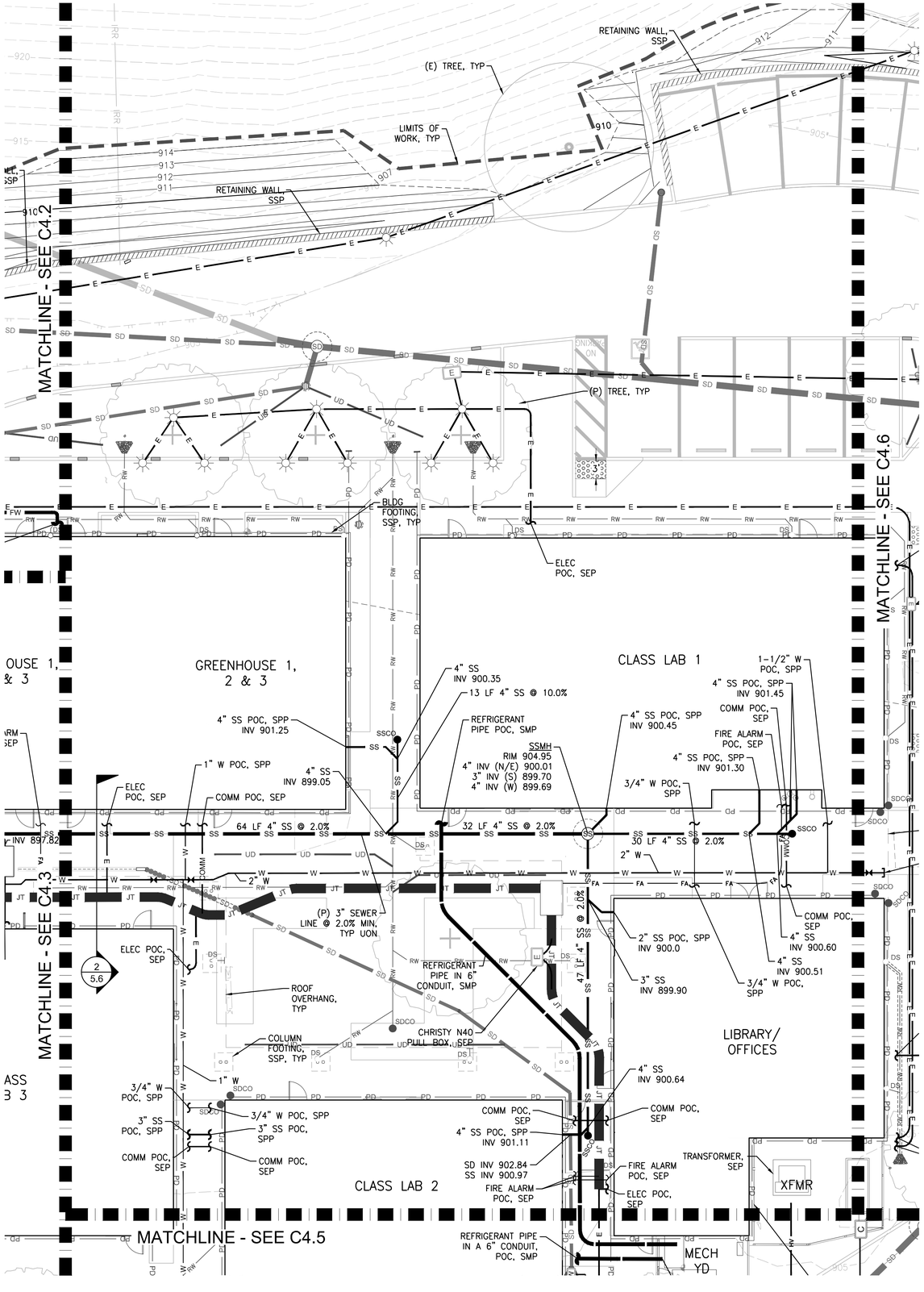

LEGEND

(E) ELECTRICAL CONDUIT	E
(E) GAS LINE	G
(E) IRRIGATION LINE	IRR
(E) SANITARY SEWER LINE	SS
(E) STORM DRAIN LINE	SD
(E) TELEPHONE LINE	T
(E) WATER LINE	W
(P) ELECTRICAL CONDUIT	E E E
(P) SANITARY SEWER LINE	SS SS
(P) STORM DRAIN LINE	SD SD
(P) DOMESTIC WATER LINE	W W
(P) FIRE WATER LINE	FW FW
(P) RAINWATER LINE	RW RW
(P) PERIMETER DRAIN	PD PD
(P) JOINT UTILITY TRENCH	JT JT
(P) REFRIGERANT PIPE, SMP	
(P) LIMITS OF WORK	
(P) SANITARY SEWER MANHOLE	SS
(P) GATE VALVE	
(P) STANDARD HYDRANT OR WHARF HYDRANT, SFFP	FH
(P) BACKFLOW PREVENTER	
(P) ELECTRICAL MANHOLE, SEP	E
(P) ELECTRIC PULLBOX	E
(P) COMMUNICATIONS PULLBOX	C

UTILITY NOTES

1. ELECTRIC, COMM AND JOINT TRENCH ROUTINGS SHOWN ON THIS PLAN ARE FOR ALIGNMENT PURPOSES ONLY. REFER TO ELECTRIC/TELECOM PLANS FOR NUMBER, SIZE AND ARRANGEMENT OF CONDUITS WITHIN EACH TRENCH SEGMENT, AND FOR ALL VAULT AND PULL BOX REQUIREMENTS.
2. FIRE WATER ROUTING DESIGNED BY FIRE PROTECTION CONSULTANT. REFER TO FIRE PROTECTION PLAN FP2.01 FOR THE UNDERGROUND FIRE WATER SYSTEM CONFIGURATION, INCLUDING PIV AND FDC LOCATIONS. REFER TO FIRE PROTECTION PLAN DETAIL 5/FP0.07.
3. REFRIGERANT PIPE ROUTING ON THIS PLAN ARE FOR ALIGNMENT PURPOSES ONLY. REFER TO MECHANICAL PLANS FOR MATERIAL, DETAILS AND INSTALLATION REQUIREMENTS.

APPROVALS

IDENTIFICATION STAMP
DIV. OF THE STATE ARCHITECT
APP: 01-119409 INC:
REVIEWED FOR
SS ☑ FLS ☑ ACS ☑
DATE: 03/14/2022

NOLL & TAM ARCHITECTS
729 Heinz Avenue
Berkeley, CA 94710
tel 510.542.2200
fax 510.542.2201

SEAL

REGISTERED PROFESSIONAL ENGINEER
JIMMY A. GALVEZ
EXP: 06/30/22
C-75568
CIVIL
STATE OF CALIFORNIA

FOR DSA APPROVAL

SHERWOOD DESIGN ENGINEERS
625 2nd Street, Suite 202
Petaluma, CA 94952
www.sherwoodengineers.com

PROJECT TITLE

Peralta Community College District
MERRITT COLLEGE NEW LANDSCAPE HORTICULTURE COMPLEX

12500 Campus Drive
Oakland, CA 94619

BID SET

ISSUE DATE	03/03/2022
N&T JOB NUMBER	22003

REVISIONS

#	DATE	DESCRIPTION

DRAWN BY MR | CHECKED BY LC

SHEET TITLE
UTILITY PLAN

SHEET NUMBER
C4.4

JN 20100 (9-20) Merritt Hort\05 Design\01 CAD Sheets\C4.04 Utility Plan.dwg C4.4 Layout: C4.4 (1) 3/3/2021 3:35:31 PM ANSI A (11.00 x 8.50 Inches) 1:40

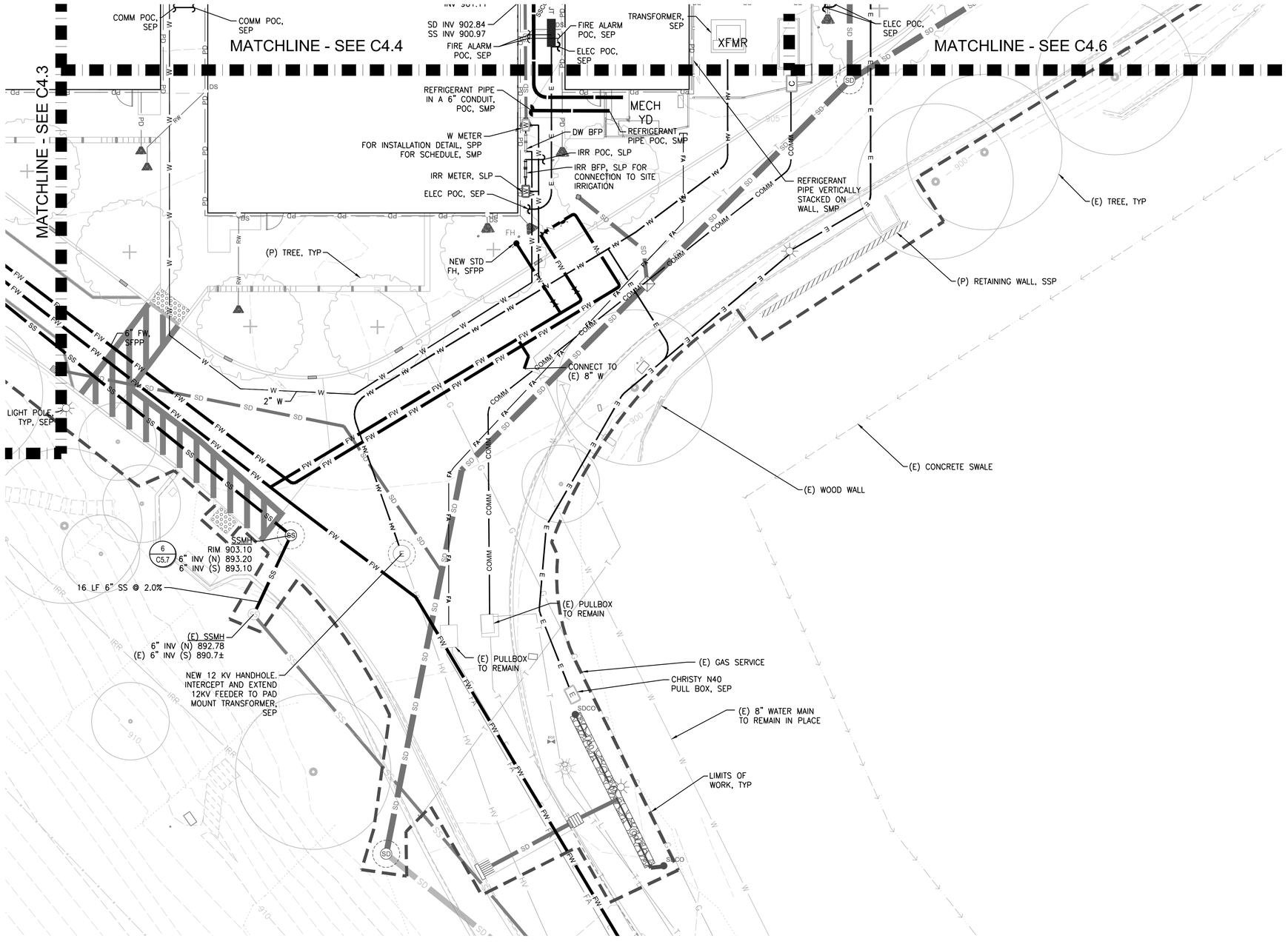

LEGEND

(E) ELECTRICAL CONDUIT	E
(E) GAS LINE	G
(E) IRRIGATION LINE	IRR
(E) SANITARY SEWER LINE	SS
(E) STORM DRAIN LINE	SD
(E) TELEPHONE LINE	T
(E) WATER LINE	W
(P) ELECTRICAL CONDUIT	E E E
(P) SANITARY SEWER LINE	SS SS
(P) STORM DRAIN LINE	SD SD
(P) DOMESTIC WATER LINE	W W
(P) FIRE WATER LINE	FW FW
(P) RAINWATER LINE	RW RW
(P) PERIMETER DRAIN	PD PD
(P) JOINT UTILITY TRENCH	JT JT
(P) REFRIGERANT PIPE, SMP	
(P) LIMITS OF WORK	
(P) SANITARY SEWER MANHOLE	SS
(P) GATE VALVE	
(P) STANDARD HYDRANT OR WHARF HYDRANT, SFFP	FH
(P) BACKFLOW PREVENTER	
(P) ELECTRICAL MANHOLE, SEP	E
(P) ELECTRIC PULLBOX	E
(P) COMMUNICATIONS PULLBOX	C

UTILITY NOTES

1. ELECTRIC, COMM AND JOINT TRENCH ROUTINGS SHOWN ON THIS PLAN ARE FOR ALIGNMENT PURPOSES ONLY. REFER TO ELECTRIC/TELECOM PLANS FOR NUMBER, SIZE AND ARRANGEMENT OF CONDUITS WITHIN EACH TRENCH SEGMENT, AND FOR ALL VAULT AND PULL BOX REQUIREMENTS.
2. FIRE WATER ROUTING DESIGNED BY FIRE PROTECTION CONSULTANT. REFER TO FIRE PROTECTION PLAN FP2.01 FOR THE UNDERGROUND FIRE WATER SYSTEM CONFIGURATION, INCLUDING PIV AND FDC LOCATIONS. REFER TO FIRE PROTECTION PLAN DETAIL 5/FP0.07.
3. REFRIGERANT PIPE ROUTING ON THIS PLAN ARE FOR ALIGNMENT PURPOSES ONLY. REFER TO MECHANICAL PLANS FOR MATERIAL, DETAILS AND INSTALLATION REQUIREMENTS.

NORTH

0 5' 10' 20'

APPROVALS

IDENTIFICATION STAMP
DIV. OF THE STATE ARCHITECT
APP: 01-119409 INC:
REVIEWED FOR
SS ☑ FLS ☑ ACS ☑
DATE: 03/14/2022

NOLL & TAM ARCHITECTS
729 Heinz Avenue
Berkeley, CA 94710
tel 510.542.2200
fax 510.542.2201

SEAL

REGISTERED PROFESSIONAL ENGINEER
JIMMY A. GALVEZ
EXP: 06/30/22
C-75568
CIVIL
STATE OF CALIFORNIA

FOR DSA APPROVAL

SHERWOOD DESIGN ENGINEERS
625 2nd Street, Suite 202
Petaluma, CA 94952
www.sherwoodengineers.com

PROJECT TITLE

Peralta Community College District

MERRITT COLLEGE NEW LANDSCAPE HORTICULTURE COMPLEX

12500 Campus Drive
Oakland, CA 94619

BID SET

ISSUE DATE	03/03/2022
N&T JOB NUMBER	22003

REVISIONS

#	DATE	DESCRIPTION

DRAWN BY MR | CHECKED BY LC

SHEET TITLE

UTILITY PLAN

SHEET NUMBER

C4.5

P:\2020\10-20\Merritt_Hort\03_Design\01_CAD\Sheets\C4\04_Utilities_Plan.dwg, C4.5, Jeremie Guillou, 12/14/2021 3:35:51 PM, ANSI A (11.00 x 8.50 Inches)

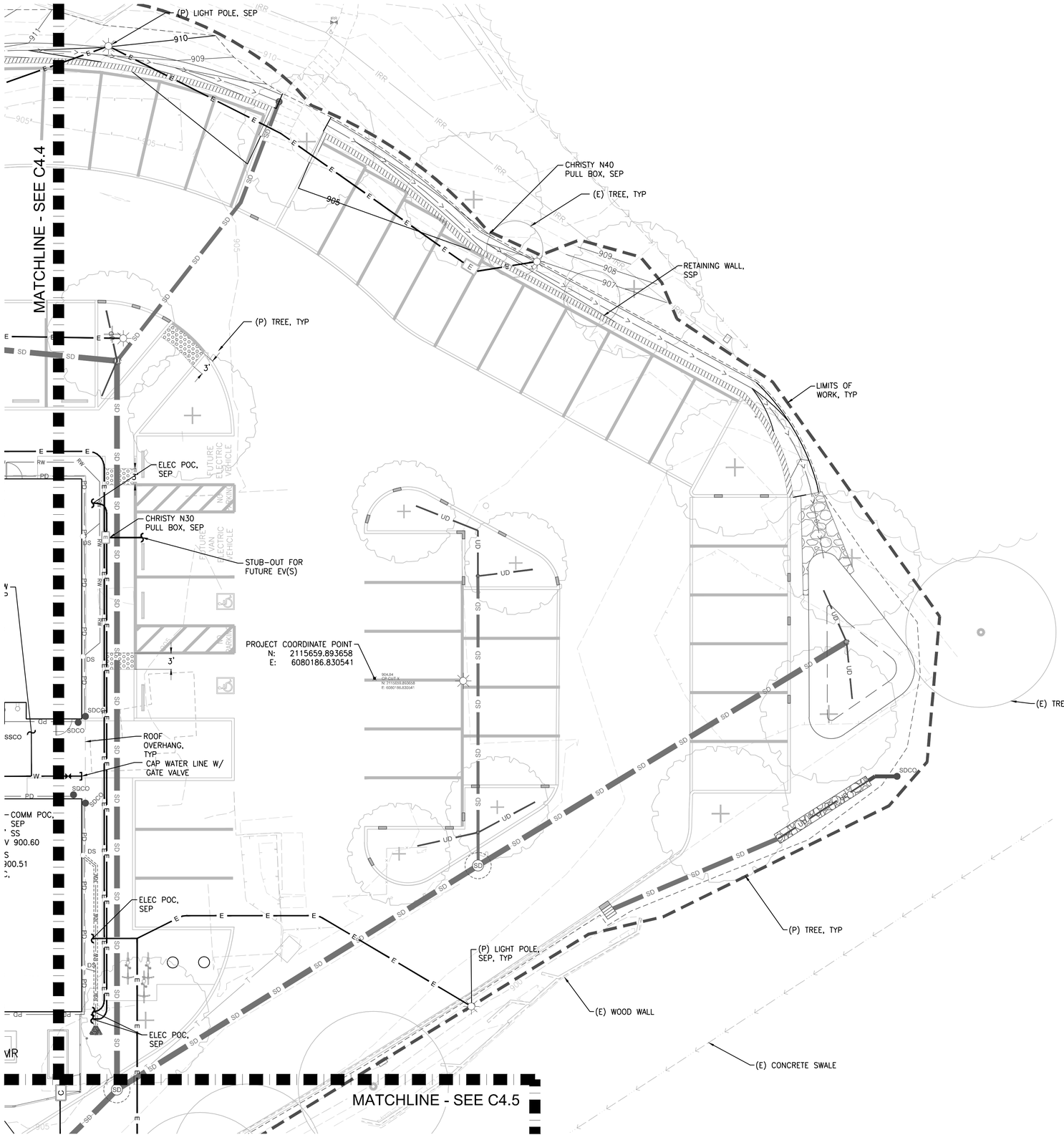

LEGEND

(E) ELECTRICAL CONDUIT	E
(E) GAS LINE	G
(E) IRRIGATION LINE	IRR
(E) SANITARY SEWER LINE	SS
(E) STORM DRAIN LINE	SD
(E) TELEPHONE LINE	T
(E) WATER LINE	W
(P) ELECTRICAL CONDUIT	E E E
(P) SANITARY SEWER LINE	SS SS
(P) STORM DRAIN LINE	SD SD
(P) DOMESTIC WATER LINE	W W
(P) FIRE WATER LINE	FW FW
(P) RAINWATER LINE	RW RW
(P) PERIMETER DRAIN	PD PD
(P) JOINT UTILITY TRENCH	JT JT
(P) REFRIGERANT PIPE, SMP	
(P) LIMITS OF WORK	
(P) SANITARY SEWER MANHOLE	SS
(P) GATE VALVE	
(P) STANDARD HYDRANT OR WHARF HYDRANT, SFFP	FH
(P) BACKFLOW PREVENTER	
(P) ELECTRICAL MANHOLE, SEP	E
(P) ELECTRIC PULLBOX	E
(P) COMMUNICATIONS PULLBOX	C

UTILITY NOTES

1. ELECTRIC, COMM AND JOINT TRENCH ROUTINGS SHOWN ON THIS PLAN ARE FOR ALIGNMENT PURPOSES ONLY. REFER TO ELECTRIC/TELECOM PLANS FOR NUMBER, SIZE AND ARRANGEMENT OF CONDUITS WITHIN EACH TRENCH SEGMENT, AND FOR ALL VAULT AND PULL BOX REQUIREMENTS.
2. FIRE WATER ROUTING DESIGNED BY FIRE PROTECTION CONSULTANT. REFER TO FIRE PROTECTION PLAN FP2.01 FOR THE UNDERGROUND FIRE WATER SYSTEM CONFIGURATION, INCLUDING PIV AND FDC LOCATIONS. REFER TO FIRE PROTECTION PLAN DETAIL 5/FP0.07.
3. REFRIGERANT PIPE ROUTING ON THIS PLAN ARE FOR ALIGNMENT PURPOSES ONLY. REFER TO MECHANICAL PLANS FOR MATERIAL, DETAILS AND INSTALLATION REQUIREMENTS.

NORTH 0 5' 10' 20'

APPROVALS

IDENTIFICATION STAMP
DIV. OF THE STATE ARCHITECT
APP: 01-119409 INC:
REVIEWED FOR
SS ☑ FLS ☑ ACS ☑
DATE: 03/14/2022

NOLL & TAM ARCHITECTS
729 Heinz Avenue
Berkeley, CA 94710
tel 510.542.2200
fax 510.542.2201

SEAL

REGISTERED PROFESSIONAL ENGINEER
JIMMY A. GALVEZ
EXP: 06/30/22
C-75568
CIVIL
STATE OF CALIFORNIA

FOR DSA APPROVAL

SHERWOOD DESIGN ENGINEERS
625 2nd Street, Suite 202
Petaluma, CA 94952
www.sherwoodengineers.com

PROJECT TITLE

Peralta Community College District
MERRITT COLLEGE NEW LANDSCAPE HORTICULTURE COMPLEX

12500 Campus Drive
Oakland, CA 94619

BID SET

ISSUE DATE	03/03/2022
N&T JOB NUMBER	22003

REVISIONS

#	DATE	DESCRIPTION

DRAWN BY MR | CHECKED BY LC

SHEET TITLE
UTILITY PLAN

SHEET NUMBER
C4.6

DO NOT SCALE DRAWINGS

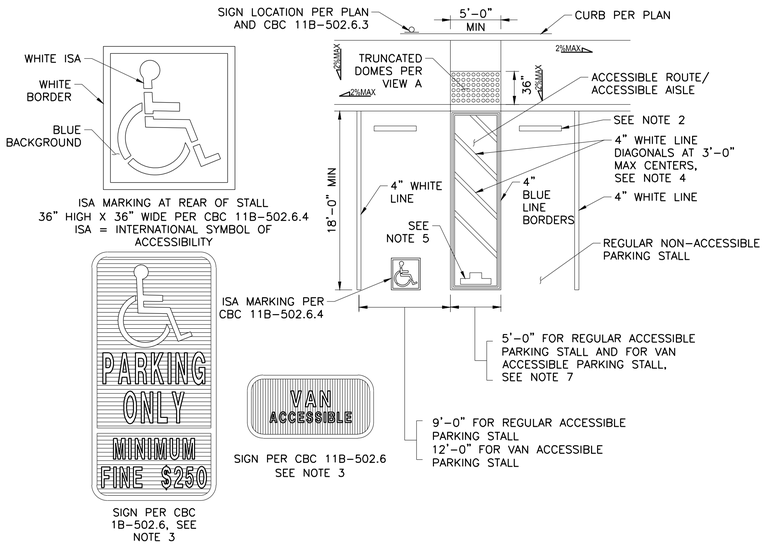

1 ACCESIBLE PARKING STALL AND SIGNAGE

SCALE: NTS

NOTES

1. WHERE PARKING SPACES ARE MARKED WITH LINES, WIDTH MEASUREMENT OF PARKING SPACES AND ACCESS AISLES SHALL BE MADE FROM THE CENTERLINE OF THE MARKINGS.

   EXCEPTION:WHERE PARKING SPACES AND ACCESS AISLES ARE NOT ADJACENT TO ANOTHER PARKING SPACE OR ACCESS AISLE, MEASUREMENTS SHALL BE PERMITTED TO INCLUDE THE FULL WIDTH OF THE LINE DEFINING THE PARKING SPACE OR ACCESS AISLE PER CBC 11B-502.1.

2. IN EACH PARKING STALL, A CURB OR BUMPER SHALL BE PROVIDED AND LOCATED TO PREVENT ENCROACHMENT OF VEHICLES OVER THE REQUIRED WIDTH OF WALKWAYS.

3. SIGNS SHALL BE 60 INCHES MINIMUM ABOVE THE FINISH GROUND SURFACE MEASURE TO THE BOTTOM OF THE SIGN. SIGNS LOCATED WITHIN AN ACCESSIBLE ROUTE SHALL BE A MINIMUM OF 80 INCHES ABOVE THE FINISH FLOOR OR GROUND SURFACE MEASURED TO THE BOTTOM OF THE SIGN.

4. COLOR SHALL CONTRAST WITH THAT OF THE AISLE SURFACE, PREFERABLY WHITE.

5. THE WORDS "NO PARKING", SHALL BE PAINTED IN WHITE LETTERS NO LESS THAN 1'-0" HIGH AND LOCATED SO THAT IT IS VISIBLE TO TRAFFIC ENFORCEMENT OFFICIALS. SEE STANDARD PLAN A90B FOR DETAILS OF THE "NO PARKING" PAVEMENT MARKING.

6. WHERE A SINGLE (NON-VAN) ACCESSIBLE PARKING SPACE IS PROVIDED, THE LOADING AND UNLOADING ACCESS AISLE SHALL BE ON THE PASSENGER SIDE OF THE VEHICLE AS THE VEHICLE IS GOING FORWARD INTO THE PARKING SPACE.

7. WHERE A VAN ACCESSIBLE PARKING SPACE IS PROVIDED, THE LOADING AND UNLOADING ACCESS AISLE SHALL BE 5'-0" WIDE MINIMUM AND SHALL BE ON THE PASSENGER SIDE OF THE VEHICLE AS THE VEHICLE IS GOING FORWARD INTO THE PARKING SPACE.

8. PROVIDE 'TOW AWAY SIGNS' 11B-502.8 ON SAME POST AS ADA PARKING SIGN. A REFLECTIVE SIGN STATING: "UNAUTHORIZED" VEHICLES PARKED IN DESIGNATED ACCESSIBLE SPACES NOT DISPLAYING DISTINGUISHING PLACARDS OR SPECIAL LICENSE PLATES ISSUED FOR PERSONS WITH DISABILITIES WILL BE TOWED AWAY AT THE OWNER'S EXPENSE. TOWED VEHICLES MAY BE RECLAIMED AT 220 4TH STREET, OAKLAND, CA 94607 OR BY TELEPHONING 510-446-7236." SIGNS SHALL BE POSTED AT A CONSPICUOUS PLACE AT EACH ENTRANCE TO AN OFF-STREET PARKING FACILITY OR IMMEDIATELY ADJACENT TO ACCESSIBLE PARKING AND VISIBLE FROM EACH PARKING SPACE. (BLANK SPACES SHALL BE FILLED IN WITH APPROPRIATE INFORMATION AS A PERMANENT PART OF THE SIGN). LETTERS SHALL HAVE A MINIMUM HEIGHT OF 1" FOR ADDITIONAL SIGN, I.E. "TOW-AWAY" APPROPRIATE INFORMATION AS A PERMANENT PART OF THE SIGN, PER CBC 11B-502.8.

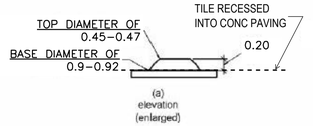

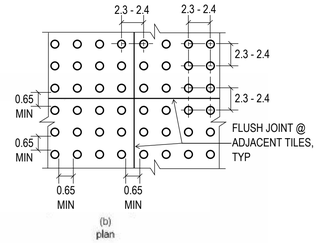

NOTES

1. DOMES SHALL CONFORM TO ALL REQUIREMENTS OF THE AMERICAN DISABILITIES ACT.
2. DOME SIZE: TRUNCATED DOMES IN A DETECTABLE WARNING SURFACE SHALL HAVE A BASE DIAMETER OF 0.9 INCH MINIMUM AND 0.92 INCHES MAXIMUM, A TOP DIAMETER OF 0.45 INCH MINIMUM AND 0.47 INCH MAXIMUM, AND A HEIGHT OF 0.2 INCH.
3. DOME SPACING: TRUNCATED DOMES IN A DETECTABLE WARNING SURFACE SHALL HAVE A CENTER-TO-CENTER SPACING OF 2.3 INCHES MINIMUM AND 2.4 INCHES MAXIMUM, AND A BASE-TO-BASE SPACING OF 0.65 INCH MINIMUM, MEASURED BETWEEN THE MOST ADJACENT DOMES ON A SQUARE GRID.
4. DETECTABLE WARNING SURFACES COLOR SHALL BE YELLOW AND APPROXIMATE FS 33538 OF FEDERAL STANDARD 595C PER CBC 11B-705.
5. WHEN MULTIPLE TILES ARE USED, TRUNCATED DOMES ARE TO MAINTAIN CENTER-TO-CENTER AND BASE-TO-BASE SPACING BETWEEN THE SQUARE GRIDS.

A TRUNCATED DOMES

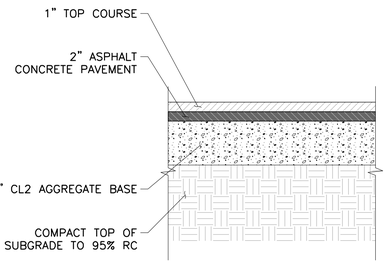

NOTE

1. WHERE TYPICAL ASPHALT SECTION INSTALL OVER ENCOUNTERED UNSUITABLE SOILS. MAY BE INSTALLED WITH A GEOGRID BETWEEN THE SUBGRADE AND SUBBASE AS PER GEOTECHINCAL REPORT.
2. REFER TO GEOTECHNICAL ENGINEER'S REPORT FOR INSTALLATION RECOMMENDATIONS.

2 ASPHALT SECTION
SF-021
SCALE: NTS

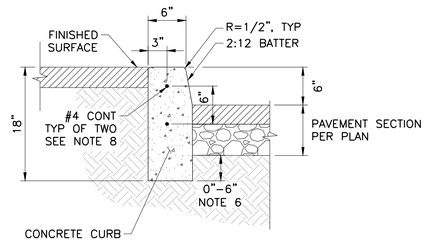

NOTES

1. ALL CONCRETE TO BE CLASS A CONCRETE.
2. PLACE 1/2" DIAMETER X 18" LONG DOWELS AT EXPANSION JOINTS AS SHOWN.
3. PLACE 1/2" THICK EXPANSION JOINTS FULL WIDTH 20' O.C. MAX SPACING. CONTROL JOINTS SHALL BE PROVIDED BETWEEN EXPANSION JOINTS AT 10' MAX SPACING.
4. SUBGRADE PREPARATION AND FILL MATERIAL SHALL MEET STANDARDS PER GEOTECHNICAL REPORT.
5. SEE ASPHALT CONCRETE PAVEMENT, CONCRETE PAVEMENT, AND CONCRETE SIDEWALK DETAILS FOR ADJACENT PAVEMENT SECTIONS.
6. CURB TO EXTEND 6" BELOW DEPTH OF PAVEMENT SECTION WHEN BASE MATERIAL IS AGGREGATE BASE.
7. AT CONTRACTOR OPTION, BATTER ON FACE OF CURB CAN EXTEND FULL DEPTH OF CURB.

3 VERTICAL CURB
SF-007
SCALE: NTS

4 NOT USED
SF-008
SCALE: NTS

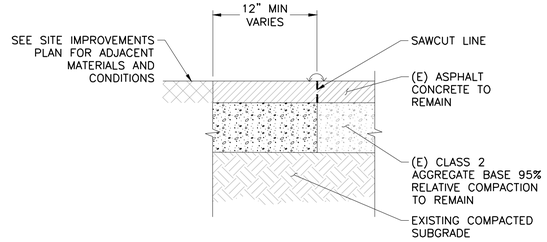

NOTES

1. 12" OF THE AC EDGE SHALL BE SAWCUT AND REMOVED AND REPLACED WITH NEW AC PAVEMENT FLUSH WITH EXISTING.

2. AC PATCHING SAWCUT LINES REPRESENT A MINIMUM AMOUNT OF PAVEMENT REMOVAL AND REPLACEMENT (12" WIDE) REQUIRED. CONTRACTOR MAY INCREASE OR OTHERWISE MODIFY PATCHING LIMITS IF NECESSARY TO IMPROVE CONSTRUCTABILITY, SUBJECT TO ENGINEER'S APPROVAL.

5 AC SAWCUT
SF-040
SCALE: NTS

APPROVALS

IDENTIFICATION STAMP
DIV. OF THE STATE ARCHITECT
APP: 01-119409 INC:
REVIEWED FOR
SS ☑ FLS ☑ ACS ☑
DATE: 03/14/2022

NOLL & TAM ARCHITECTS
729 Heinz Avenue
Berkeley, CA 94710
tel 510.542.2200
fax 510.542.2201

SEAL

REGISTERED PROFESSIONAL ENGINEER
JIMMY A. GALVEZ
EXP: 06/30/22
C-75568
CIVIL
STATE OF CALIFORNIA

FOR DSA APPROVAL

SHERWOOD DESIGN ENGINEERS
625 2nd Street, Suite 202
Petaluma, CA 94952
www.sherwoodengineers.com

PROJECT TITLE

Peralta Community College District

MERRITT COLLEGE NEW LANDSCAPE HORTICULTURE COMPLEX

12500 Campus Drive
Oakland, CA 94619

BID SET

ISSUE DATE	03/03/2022
N&T JOB NUMBER	22003

REVISIONS

#	DATE	DESCRIPTION

DRAWN BY MR | CHECKED BY LC

SHEET TITLE

SITE DETAILS

SHEET NUMBER

C5.1

P:\2019\19-365\Merritt_Hort\03_Design\01_CAD Sheets\C6\00_Details.dwg C5.1 Lorraine Cuellusa 12/14/2021 3:18:23 PM ANSI full bleed D (22.00 x 34.00 Inches) 1:1

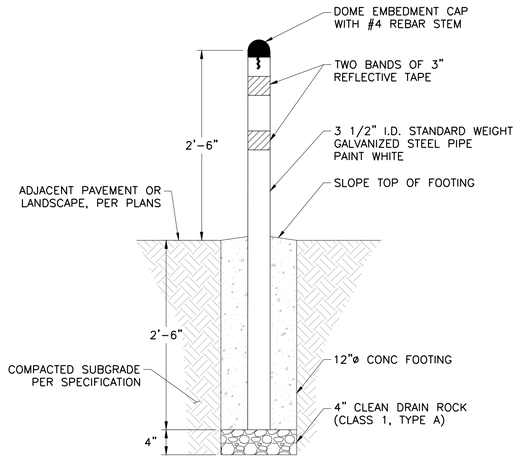

1 STEEL BOLLARD
SF-003
SCALE: NTS

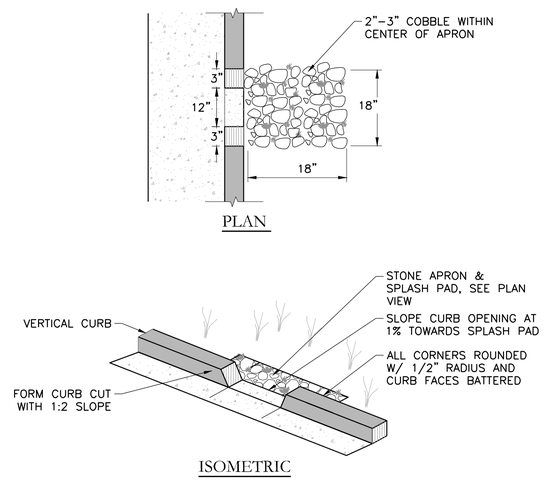

NOTES:

1. PROPOSED TYPE AND APPEARANCE OF STONE MUST BE APPROVED BY LANDSCAPE ARCHITECT PRIOR TO CONSTRUCTION.
2. FOR LOCATION OF CURB OPENINGS, SEE SITE SHEETS C2.0-C2.2.
3. WHERE CURB CUTS ARE LOCATED AT CORNERS, CENTER OPENING AT CORNER, EXTENDING SIX INCHES IN EITHER DIRECTION.

2 CURB OPENING
SCALE: NTS

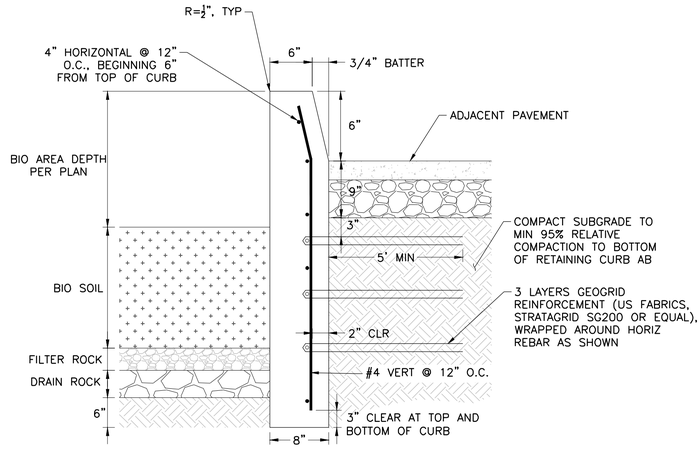

3 RETAINING CURB DETAIL AT BIORETENTION
SCALE: NTS

APPROVALS

IDENTIFICATION STAMP
DIV. OF THE STATE ARCHITECT
APP: 01-119409 INC:
REVIEWED FOR
SS ☑ FLS ☑ ACS ☑
DATE: 03/14/2022

NOLL & TAM ARCHITECTS
729 Heinz Avenue
Berkeley, CA 94710
tel 510.542.2200
fax 510.542.2201

SEAL

REGISTERED PROFESSIONAL ENGINEER
JIMMY A. GALVEZ
EXP: 06/30/22
C-75568
CIVIL
STATE OF CALIFORNIA

FOR DSA APPROVAL

SHERWOOD DESIGN ENGINEERS
625 2nd Street, Suite 202
Petaluma, CA 94952
www.sherwoodengineers.com

PROJECT TITLE

Peralta Community College District
MERRITT COLLEGE NEW LANDSCAPE HORTICULTURE COMPLEX

12500 Campus Drive
Oakland, CA 94619

BID SET

ISSUE DATE	03/03/2022
N&T JOB NUMBER	22003

REVISIONS

#	DATE	DESCRIPTION

DRAWN BY	MR	CHECKED BY	LC

SHEET TITLE

SITE DETAILS

SHEET NUMBER

C5.2

P:\2019\19-369\Merritt_Hort\03_Design\01_CAD Sheets\C600_Details.dwg C5.2 Lorraine Cullihan 12/14/2021 3:18:28 PM ANSI full bleed D (22.00 x 34.00 Inches) 1:1

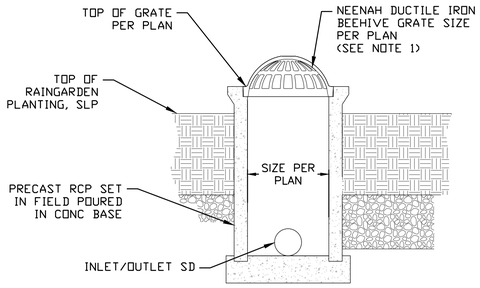

NOTES:

1. SIZE OF GRATE SHALL MATCH SIZE OF RISER SPECIFIED IN PLANS, SHALL BE REMOVABLE TO PROVIDE MAINTENANCE ACCESS, AND SHALL BE BOLTED IN PLACE OR OUTFITTED WITH APPROVED TAMPER-RESISTANT LOCKING MECHANISM. MAXIMUM GRATE OPENING SHALL BE 4 INCHES.
2. IF INTERIOR DEPTH OF OVERFLOW STRUCTURE EXCEEDS 5 FEET, A PERMANENT BOLTED LADDER AND MINIMUM CLEAR SPACE OF 30 IN BY 30 IN SHALL BE PROVIDED FOR MAINTENANCE ACCESS.

1 OVERFLOW STRUCTURE
UT-018 SCALE: NTS

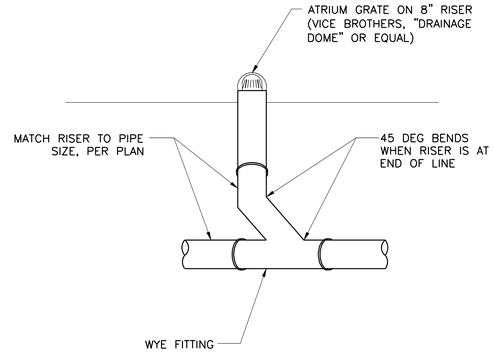

2 WYE FITTING
UT-018 SCALE: NTS

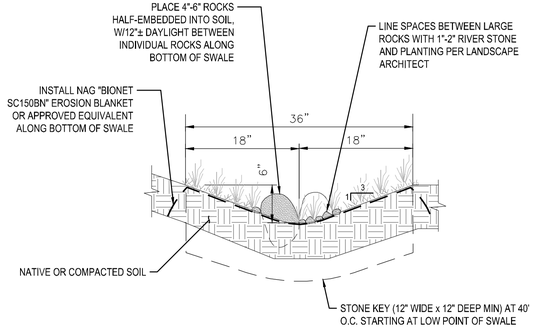

NOTES

"ROCK LINED" SWALE TO BE CONSTRUCTED GENERALLY FOR SWALES WITH LONGITUDINAL SLOPES BETWEEN 2% AND 5%, UNLESS OTHERWISE SHOWN ON PLANS.

3 ROCK LINED SWALE
DR-00-007 SCALE: NTS

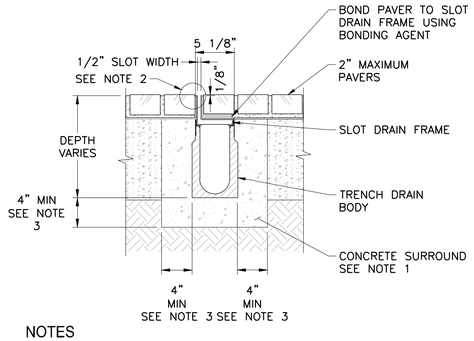

NOTES

1. A MINIMUM CONCRETE STRENGTH OF 3000 PSI. THE CONCRETE SHOULD BE VIBRATED TO ELIMINATE AIR POCKETS.
2. PAVERS TO BE 1/8" ABOVE CHANNEL EDGE, SEALANT BETWEEN THE RAIL & CONCRETE.
3. CONCRETE THICKNESS SHOWN FOR PEDESTRIAN LOADING.
4. TOP OF SLOT DRAIN TO BE FLUSH WITH PAVERS.
5. PROVIDE GRATE CUT SHEET AND SAMPLE FOR APPROVAL BY CIVIL ENGINEER AND LANDSCAPE ARCHITECT.

4 SLOT DRAIN - PAVER SYSTEM
DR-040 SCALE: NTS

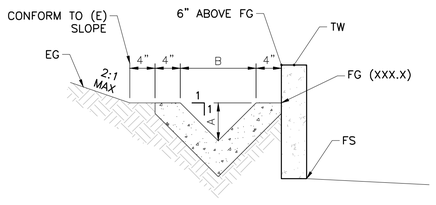

TYPE	A	B
TYPE 1	9"	18"
TYPE 2	12"	24"

NOTES:

1. ALL SECTIONS SHALL BE AT LEAST 4" THICK.
2. CONCRETE SHALL BE CLASS "B" (5 SACK).
3. BOTH SIDES OF THE DITCH SHALL BE FORMED WITH 2"x4" LUMBER, AS SHOWN UNLESS OMITTED BY THE PROJECT ENGINEER.
4. CONCRETE FINISH SHALL CONFORM TO SECTION 51-1.18A OF THE LATEST STATE SPECIFICATIONS.
5. DITCH SIDES SHALL BE BACKFILLED AND COMPACTED IMMEDIATELY AFTER THE REMOVAL OF SIDE FORMS.
6. NO CONCRETE SHALL BE PLACED PRIOR TO FORM INSPECTION BY THE AGENCY ENGINEER.
7. NO DITCH IS TO BE CONSTRUCTED ON FILLED GROUND PRIOR TO CERTIFICATION OF THE FILL TOT EH AGENCY BY THE SOIL ENGINEER.
8. NO EXPANSION JOINTS SHALL BE REQUIRED.

5 CONCRETE LINED DITCH
TR-013 SCALE: NTS

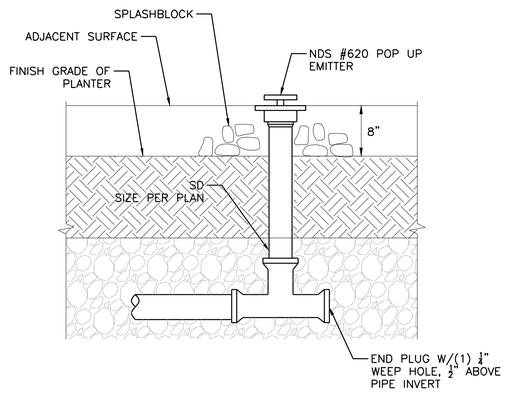

6 BUBBLE-UP
DR SCALE: NTS

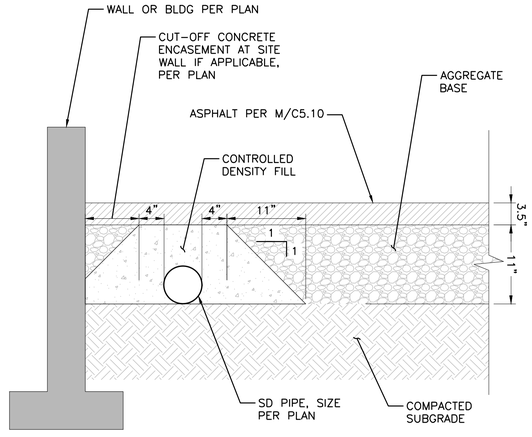

7 DUCTILE IRON CONCRETE ENCASEMENT
DR SCALE: NTS

APPROVALS

IDENTIFICATION STAMP
DIV. OF THE STATE ARCHITECT
APP: 01-119409 INC:
REVIEWED FOR
SS ☑ FLS ☑ ACS ☑
DATE: 03/14/2022

NOLL & TAM ARCHITECTS
729 Heinz Avenue
Berkeley, CA 94710
tel 510.542.2200
fax 510.542.2201

SEAL

REGISTERED PROFESSIONAL ENGINEER
JIMMY A. GALVEZ
EXP: 06/30/22
C-75568
CIVIL
STATE OF CALIFORNIA

FOR DSA APPROVAL

SHERWOOD DESIGN ENGINEERS
625 2nd Street, Suite 202
Petaluma, CA 94952
www.sherwoodengineers.com

PROJECT TITLE

Peralta Community College District
MERRITT COLLEGE NEW LANDSCAPE HORTICULTURE COMPLEX

12500 Campus Drive
Oakland, CA 94619

BID SET

ISSUE DATE	03/03/2022
N&T JOB NUMBER	22003

REVISIONS

#	DATE	DESCRIPTION

DRAWN BY MR | CHECKED BY LC

SHEET TITLE

DRAINAGE DETAILS

SHEET NUMBER

C5.3

P:\2019\19.365\Merritt_Hort\03_Design\01_CAD Sheets\C6.00_Details.dwg C5.3 Lorraine Cuellusa 12/14/2021 3:18:53 PM ANSI full bleed D (22.00 x 34.00 Inches) 1:1

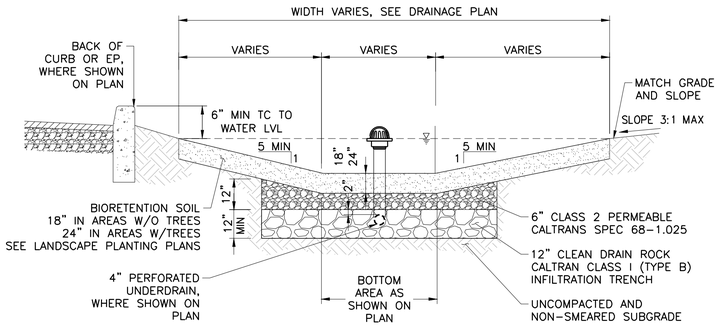

NOTES

1. FILTER FABRIC OPTIONAL PER FINAL APPROVAL OF PEA GRAVEL GRADATION.
2. SEE LANDSCAPE PLAN FOR RAIN GARDEN PLANTINGS, SEEDING, SOIL AND MULCH TYPE.
3. SUBGRADE SHALL NOT BE SMEARED HAND RAKE PRIOR TO CLASS I TYPE B INSTALLATION TO ENSURE PROPER DRAINAGE.
4. INSTALL OUTLET STORM DRAIN (NOT SHOWN) PER PLAN. SEAL IMPERMEABLE LINER PIPE PENETRATION PER LINER MANUFACTURER'S RECOMMENDATIONS

1 RAIN GARDEN
TR-004 SCALE: NTS

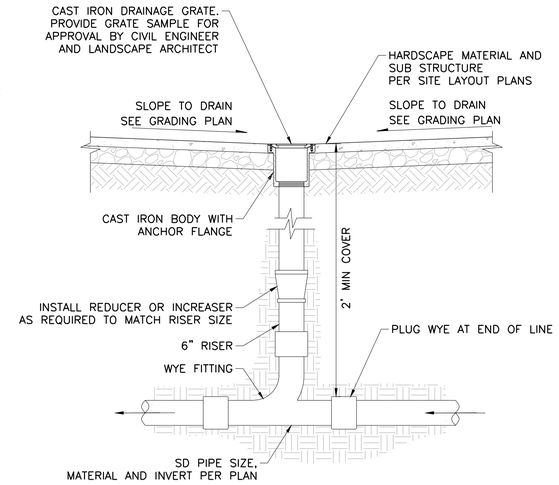

2 HARDSCAPE AREA DRAIN
DR-002 SCALE: NTS

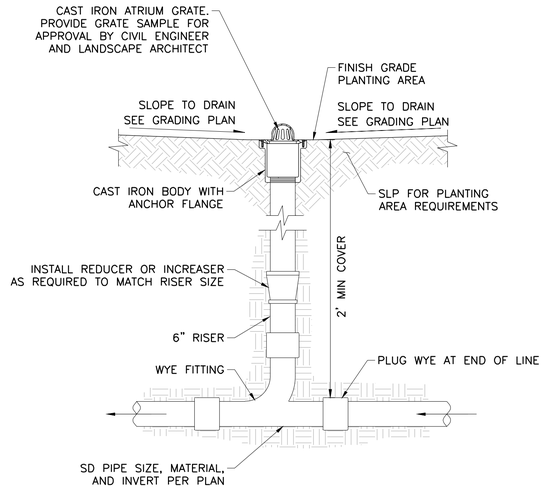

3 SOFTSCAPE AREA DRAIN
DR-004 SCALE: NTS

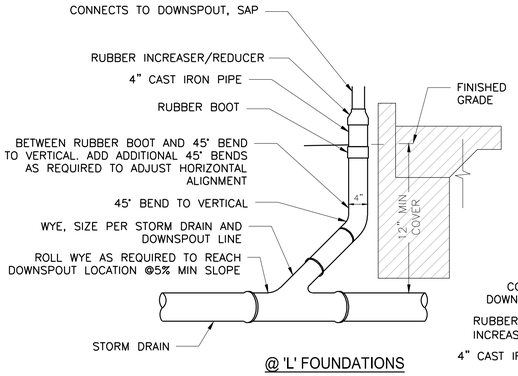

@ 'L' FOUNDATIONS

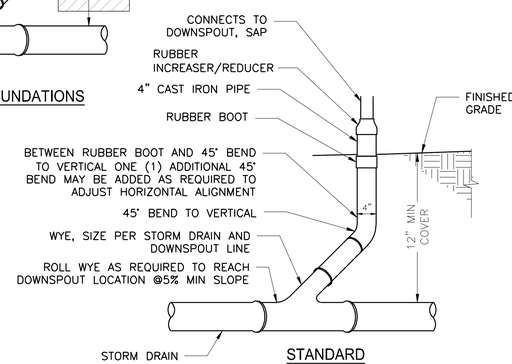

STANDARD

4 DOWNSPOUT CONNECTION
SCALE: NTS

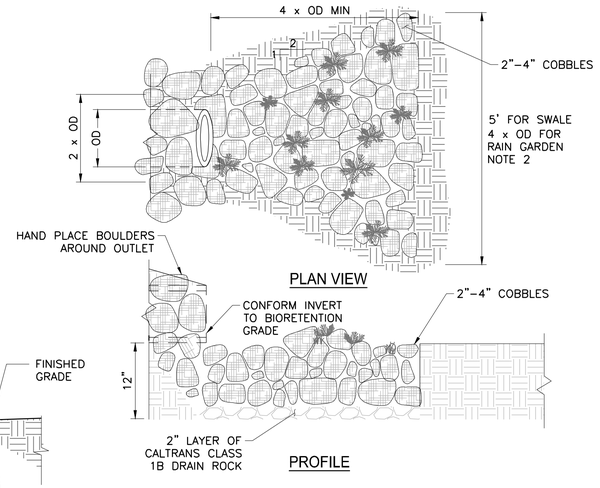

NOTES

1. INITIAL WIDTH OF STONE APRON SHALL BE AT A MINIMUM EQUAL TO TWICE THE OUTLET PIPE DIAMETER (D.O.).
2. AT A MINIMUM THE APRON SHALL FAN OUT AT 2:1 (LONGITUDINAL:LATERAL) UP TO AN ULTIMATE WIDTH EQUAL TO THAT OF THE RECEIVING SWALE; IN THE CASE OF A RAIN GARDEN, FOUR (4) TIMES THE OUTLET PIPE DIAMETER.
3. ALL STONE PLACEMENT TO BE APPROVED BY ENGINEER IN THE FIELD PRIOR TO CONSTRUCTION.

5 ROCK OUTLET PROTECTION
DR-035 SCALE: NTS

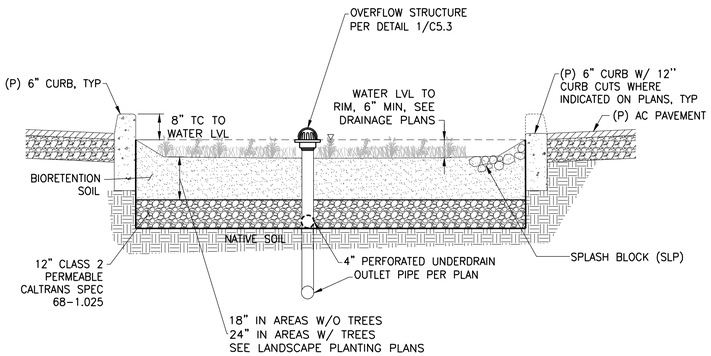

*NOTE – INSTALL OUTLET STORM DRAIN (NOT SHOWN) PER PLAN. SEAL IMPERMEABLE LINER PIPE PENETRATION PER LINER MANUFACTURER'S RECOMMENDATIONS

6 BIORETENTION
DR SCALE: NTS

APPROVALS

IDENTIFICATION STAMP
DIV. OF THE STATE ARCHITECT
APP: 01-119409 INC:
REVIEWED FOR
SS ☑ FLS ☑ ACS ☑
DATE: 03/14/2022

NOLL & TAM ARCHITECTS
729 Heinz Avenue
Berkeley, CA 94710
tel 510.542.2200
fax 510.542.2201

SEAL

REGISTERED PROFESSIONAL ENGINEER
JIMMY A. GALVEZ
EXP: 06/30/22
C-75568
CIVIL
STATE OF CALIFORNIA

FOR DSA APPROVAL

SHERWOOD DESIGN ENGINEERS
625 2nd Street, Suite 202
Petaluma, CA 94952
www.sherwoodengineers.com

PROJECT TITLE

Peralta Community College District
MERRITT COLLEGE NEW LANDSCAPE HORTICULTURE COMPLEX

12500 Campus Drive
Oakland, CA 94619

BID SET

ISSUE DATE	03/03/2022
N&T JOB NUMBER	22003

REVISIONS

#	DATE	DESCRIPTION

DRAWN BY MR | CHECKED BY LC

SHEET TITLE
DRAINAGE DETAILS

SHEET NUMBER
C5.4

P:\2020\19-269.Merritt_Hort\03_Design\01_CAD Sheets\C-00_Details.dwg,C5.4 Larrabee Carlshina,12/14/2021 3:18:38 PM,ANSI full bleed D (22.00 x 34.00 Inches),1:1

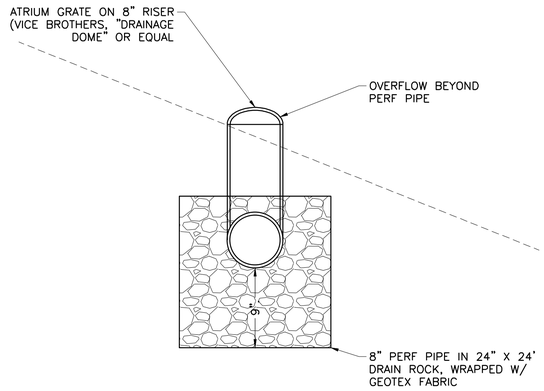

NOTES

1. FIELD LOCATE OVERFLOW RISER AS REQUIRED. TOP OF PIPE IS MINIMUM 6" BELOW THE LOWEST UPSTREAM SURFACE GRADE IN SPREADER DRAINAGE AREA.

1 LEVEL SPREADER
DR-027 SCALE: NTS

2 NOT USED
SCALE: NTS

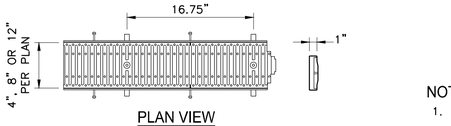

PLAN VIEW

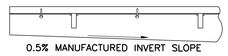

ELEVATION

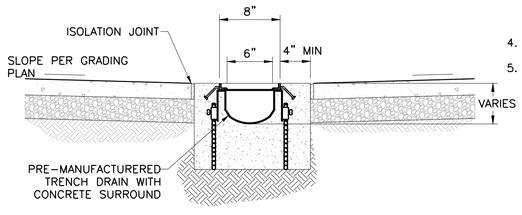

NOTES

1. TRENCH DRAIN LENGTHS SHOWN ON PLAN ARE BASED ON CHANNEL UNITS OF MANUFACTURED IN ONE METER AND ONE HALF METER INCREMENTS. WHERE USE OF A HALF METER UNIT IS REQUIRED TO MEET THE STATED LENGTH, IT SHALL BE INSTALLED AT THE UPSTREAM END OF THE TRENCH DRAIN SECTION.
2. BEGIN TRENCH DRAIN INSTALLATION AT DOWNSTREAM END WITH A CHANNEL UNIT THAT HAS A DEPTH BELOW GRATE ELEVATION THAT MATCHES THE (P) OUTLET INVERT SHOWN ON PLAN.
3. INSTALL TRENCH DRAIN UNITS SEQUENTIALLY FROM THE DOWNSTREAM END, MAINTAINING A CONSTANT INVERT RISE FROM ONE UNIT TO THE NEXT, WITH NO STEPS IN GRADE.
4. PROVIDE GRATE CUT SHEET AND SAMPLE FOR APPROVAL BY CIVIL ENGINEER AND LANDSCAPE ARCHITECT.
5. OPENINGS IN TRENCH DRAIN SHALL NOT ALLOW PASSAGE OF A SPHERE MORE THAN 1/2" DIAMETER.

3 TRENCH DRAIN WITH GRATE
XX-009 SCALE: NTS

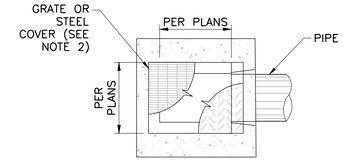

PLAN

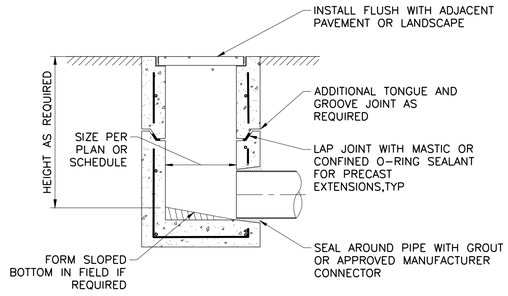

SECTION

NOTES

1. CATCH BASIN/JUNCTION BOXES SHALL BE SQUARED UNLESS OTHERWISE NOTED.
2. CATCH BASINS SHALL BE FURNISHED WITH CAST IRON GRATE OR STEEL GRATE PER SPECIFICATION. JUNCTION BOXES SHALL BE FURNISHED WITH GALVANIZED STEEL, BOLT DOWN CHECKERED PLATE LIDS. FRAMES FOR GRATES AND LIDS SHALL BE GALVANIZED STEEL.

4 DRAINAGE INLET/JUNCTION BOX
DR-013 SCALE NTS

P:\2019\19.369\Merritt_Hort\03_Design\01_CAD Sheets\C600_Details.dwg C5.5 Lorraine Cuellena,12/14/2021 3:18:43 PM,ANSI full bleed D (22.00 x 34.00 Inches),1:1

APPROVALS

IDENTIFICATION STAMP
DIV. OF THE STATE ARCHITECT
APP: 01-119409 INC:
REVIEWED FOR
SS ☑ FLS ☑ ACS ☑
DATE: 03/14/2022

NOLL & TAM ARCHITECTS
729 Heinz Avenue
Berkeley, CA 94710
tel 510.542.2200
fax 510.542.2201

SEAL

REGISTERED PROFESSIONAL ENGINEER
JIMMY A. GALVEZ
EXP: 06/30/22
C-75568
CIVIL
STATE OF CALIFORNIA

FOR DSA APPROVAL

SHERWOOD DESIGN ENGINEERS
625 2nd Street, Suite 202
Petaluma, CA 94952
www.sherwoodengineers.com

PROJECT TITLE

Peralta Community College District
MERRITT COLLEGE NEW LANDSCAPE HORTICULTURE COMPLEX

12500 Campus Drive
Oakland, CA 94619

BID SET

ISSUE DATE	03/03/2022
N&T JOB NUMBER	22003

REVISIONS

#	DATE	DESCRIPTION

DRAWN BY MR | CHECKED BY LC

SHEET TITLE

DRAINAGE DETAILS

SHEET NUMBER

C5.5

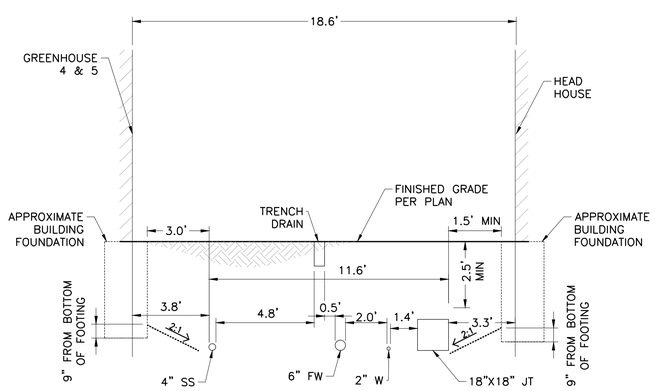

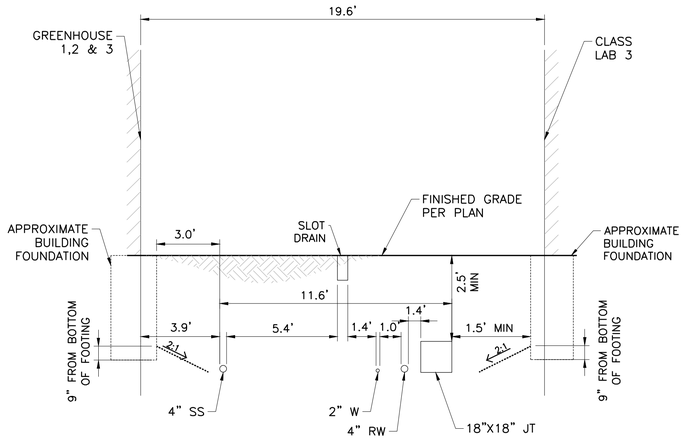

PIPES AND JOINT TRENCHES INSTALLED ADJACENT TO FOUDNATIONS SHALL BE LOCCATED ABOVE ABOVE THE INFLUENCE LINE HACING A DOWNWARD SLOPE OF 2:1 FROM A LINE 9 INCHES ABOVE THE BOTTOM EDGE OF THE FOOTING AND A MINIMUM OF 18 INCHES FROM THE FACE OF FOOTING. REFER TO CBC SECTION 1809A.14.

1 UTILITIES SECTION
SCALE: NTS

2 UTILITIES SECTION
SCALE: NTS

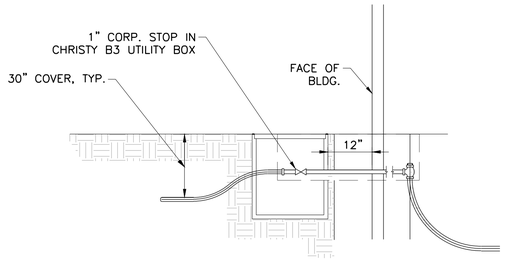

3 WATER VALVE BOX AT BUILDINGS
UT-016
SCALE: NTS

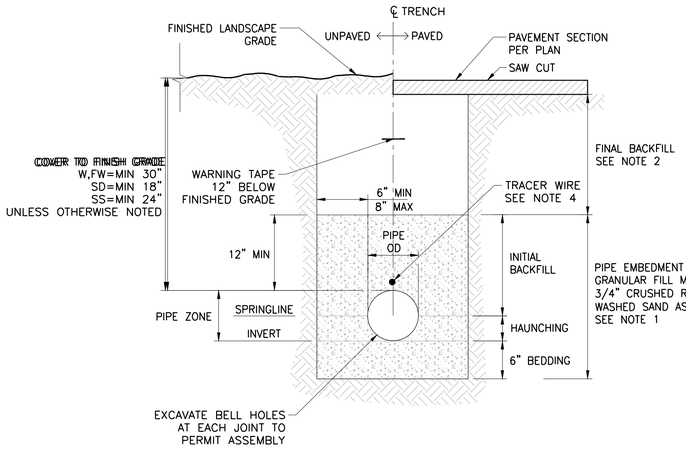

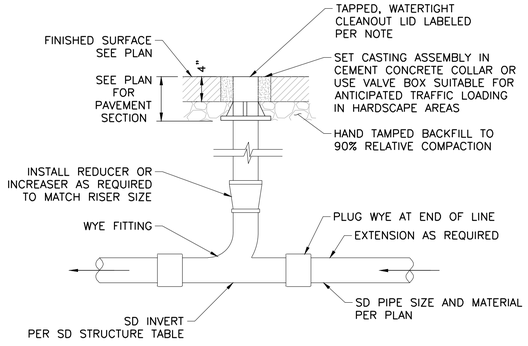

NOTES

1. CIRCULAR BOXES INSTALLED IN SIDEWALK AREAS SHALL HAVE A SOLID COVER WITHOUT HOLES.
2. CONCRETE LIDS ARE ACCEPTABLE FOR USE IN NON VEHICULAR TRAFFIC AREAS, WHILE METAL LIDS MUST BE USED IN TRAFFIC AREAS.
3. ALL CLEANOUT BOX LIDS SHALL BE LABELED "STORM" OR "SEWER" AS APPROPRIATE.
4. BRING TO SURFACE WITH TEMPORARY PLUG. AFTER ALL BACKFILL IS COMPLETE AND SUB-GRADE ESTABLISHED IN AREAS TO BE PAVED, THE FINAL RISER PIPE AND BOX SHALL BE INSTALLED AS SHOWN.

4 HARDSCAPE CLEANOUT
UT-003
SCALE: NTS

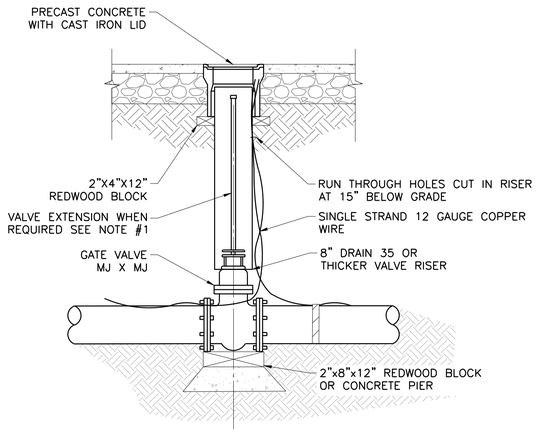

NOTES

1. VALVE OPERATING NUT NOT WITHIN 24" OF FINISH GRADE SHALL REQUIRE A VALVE EXTENSION
2. PRECAST CONCRETE VALVE BOX SHALL BE RATED FOR H-20 LOADING WHEN LOCATED IN VEHICULAR TRAFFIC AREAS.

5 6" - 12" GATE VALVE
UT-044
SCALE: NTS

NOTES

1. FOR WATER AND FIRE WATER USE WASHED SAND AND FOR STORM DRAIN AND SANITARY SEWER USE GRANULAR FILL MATERIAL, 3/4" CRUSHED ROCK FOR BEDDING, HAUNCHING AND INITIAL BACKFILL MATERIAL. SAND MATERIAL SHALL BE COMPACTED TO 90% PROCTOR DENSITY. REFER TO PROJECT SPECIFICATIONS ACCORDINGLY.
2. FINAL BACKFILL SHALL CONSIST OF EXCAVATED NATIVE SOIL WHERE SUITABLE FOR FILL, COMPACTED TO 90% PROCTOR DENSITY IN NON-TRAFFIC AREAS. IF EXCAVATED MATERIAL IS NOT SUITABLE, USE IMPORTED GRANULAR MATERIAL. 3/4" CRUSHED ROCK AS APPROVED BY GEOTECHNICAL ENGINEER.
3. BACKFILL SHALL BE PLACED IN LAYERS NOT TO EXCEED 8" MAXIMUM.
4. FOR WATER AND FIRE WATER MAINS INSTALL SINGLE STRAND 10 GAUGE COPPER WIRE.
5. REMOVE A MINIMUM 6" OF PAVEMENT SURFACE BEYOND EDGE OF TRENCH WHEN INSTALLING UTILITY UNDER EXISTING SURFACE WHERE APPLICABLE PER PLAN.

UTILITY CROSSING NOTES

1. DIP WATER BELOW GRAVITY LINES (SEWER/STORM DRAIN) WITH 45 DEGREE BENDS WHERE REQUIRED TO MAINTAIN MINIMUM 6" VERTICAL CLEARANCE BETWEEN PIPES. LOWERED SECTION TO EXTEND 3' MINIMUM PAST OUTSIDE OF CROSSING PIPE.
2. DIP DRY UTILITIES (ELECTRIC/COMMUNICATIONS) BELOW GRAVITY LINES AND WATER LINES WHERE REQUIRED TO MAINTAIN MINIMUM 6" VERTICAL CLEARANCE BETWEEN CONDUITS AND CROSSING PIPE.

6 UTILITY TRENCH
UT-013
SCALE: NTS

APPROVALS

IDENTIFICATION STAMP
DIV. OF THE STATE ARCHITECT
APP: 01-119409 INC:
REVIEWED FOR
SS ☑ FLS ☑ ACS ☑
DATE: 03/14/2022

NOLL & TAM ARCHITECTS
729 Heinz Avenue
Berkeley, CA 94710
tel 510.542.2200
fax 510.542.2201

SEAL

REGISTERED PROFESSIONAL ENGINEER
JIMMY A. GALVEZ
EXP: 06/30/22
C-75568
CIVIL
STATE OF CALIFORNIA

FOR DSA APPROVAL

SHERWOOD DESIGN ENGINEERS
625 2nd Street, Suite 202
Petaluma, CA 94952
www.sherwoodengineers.com

PROJECT TITLE

Peralta Community College District
MERRITT COLLEGE NEW LANDSCAPE HORTICULTURE COMPLEX

12500 Campus Drive
Oakland, CA 94619

BID SET

ISSUE DATE	03/03/2022
N&T JOB NUMBER	22003

REVISIONS

#	DATE	DESCRIPTION

DRAWN BY MR | CHECKED BY LC

SHEET TITLE
UTILITY DETAILS

SHEET NUMBER
C5.6

P:\2019\19_260 Merritt_Hort\03_Design\01_CAD Sheets (C6.00_Details.dwg (C5.6 Lorraine Cuellhou 12/14/2021 3:48:48 PM ANSI full bleed D (22.00 x 34.00 Inches) 1:1

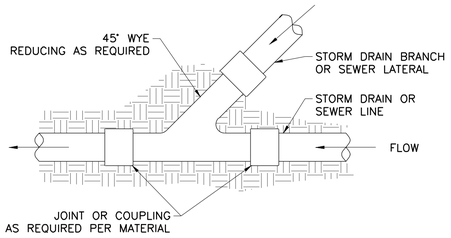

NOTES

1. WHEN INSTALLED ON EXISTING STORM DRAIN, OR SANITARY SEWER REMOVE PIPE AS REQUIRED TO INSERT WYE.
2. CONNECT WYE WITH CALDER COUPLINGS OR APPROVED EQUIVALENT.

1 WYE CONNECTION 45 DEGREES
UT-018 SCALE: NTS

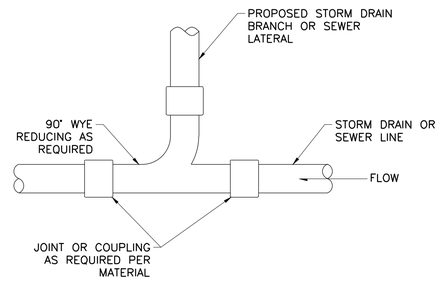

NOTES:

1. WHEN INSTALLED ON EXISTING STORM DRAIN OR SANITARY SEWER, REMOVE SECTION AS REQUIRED TO INSERT WYE
2. CONNECT WYE WITH CALDER COUPLINGS OR APPROVED EQUIVALENT

2 WYE CONNECTION 90 DEGREES
UT-019 SCALE: NTS

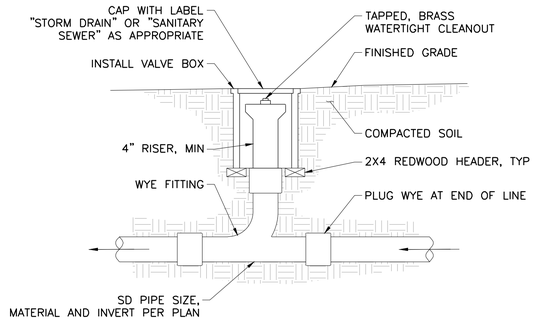

3 SOFTSCAPE CLEANOUT
UT-004 SCALE: NTS

4 NOT USED
UT-015 SCALE: NTS

5 NOT USED
UT-031 SCALE: NTS

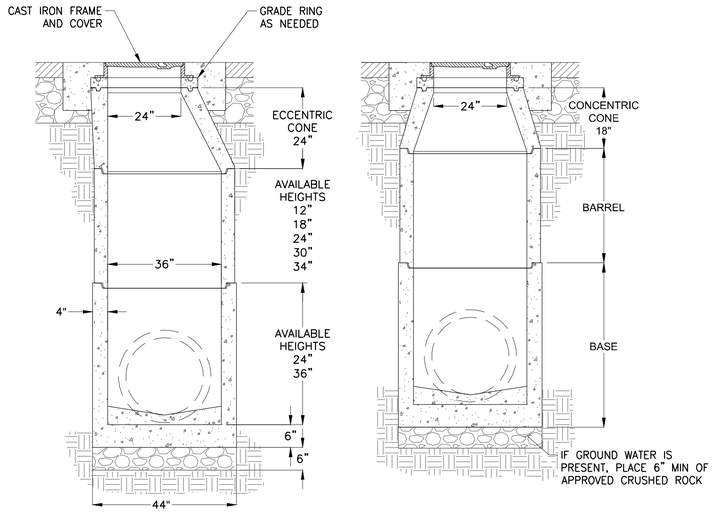

ECCENTRIC MANHOLE CONCENTRIC MANHOLE

NOTES

1. PRECAST MANHOLE COMPONENTS CONFORM TO ASTM C-478, AASHTO M199 AND PROJECT SPECIFICATION SECTIONS 33 31 00 SITE SANITARY SEWER AND 33 40 00 SITE STORM DRAINAGE.
2. FLAT TOPS AND BASE SLABS ARE DESIGNED FOR AASHTO H-20 WHEEL LOADING.

6 MANHOLE
UT-025 SCALE: NTS

APPROVALS

IDENTIFICATION STAMP
DIV. OF THE STATE ARCHITECT
APP: 01-119409 INC:
REVIEWED FOR
SS ☑ FLS ☑ ACS ☑
DATE: 03/14/2022

NOLL & TAM ARCHITECTS
729 Heinz Avenue
Berkeley, CA 94710
tel 510.542.2200
fax 510.542.2201

SEAL

REGISTERED PROFESSIONAL ENGINEER
JIMMY A. GALVEZ
EXP: 06/30/22
C-75568
CIVIL
STATE OF CALIFORNIA

FOR DSA APPROVAL

SHERWOOD DESIGN ENGINEERS
625 2nd Street, Suite 202
Petaluma, CA 94952
www.sherwoodengineers.com

PROJECT TITLE

Peralta Community College District
MERRITT COLLEGE NEW LANDSCAPE HORTICULTURE COMPLEX

12500 Campus Drive
Oakland, CA 94619

BID SET

ISSUE DATE	03/03/2022
N&T JOB NUMBER	22003

REVISIONS

#	DATE	DESCRIPTION

DRAWN BY MR | CHECKED BY LC

SHEET TITLE
UTILITY DETAILS

SHEET NUMBER
C5.7

P:\2019\19-269\Merritt_Hort\03_Design\01_CAD Sheets\C6\00_Details.dwg, C5.7 Lorraine Coffelt on 12/14/2021 3:18:53 PM, ANSI full bleed D (22.00 x 34.00 Inches),1:1

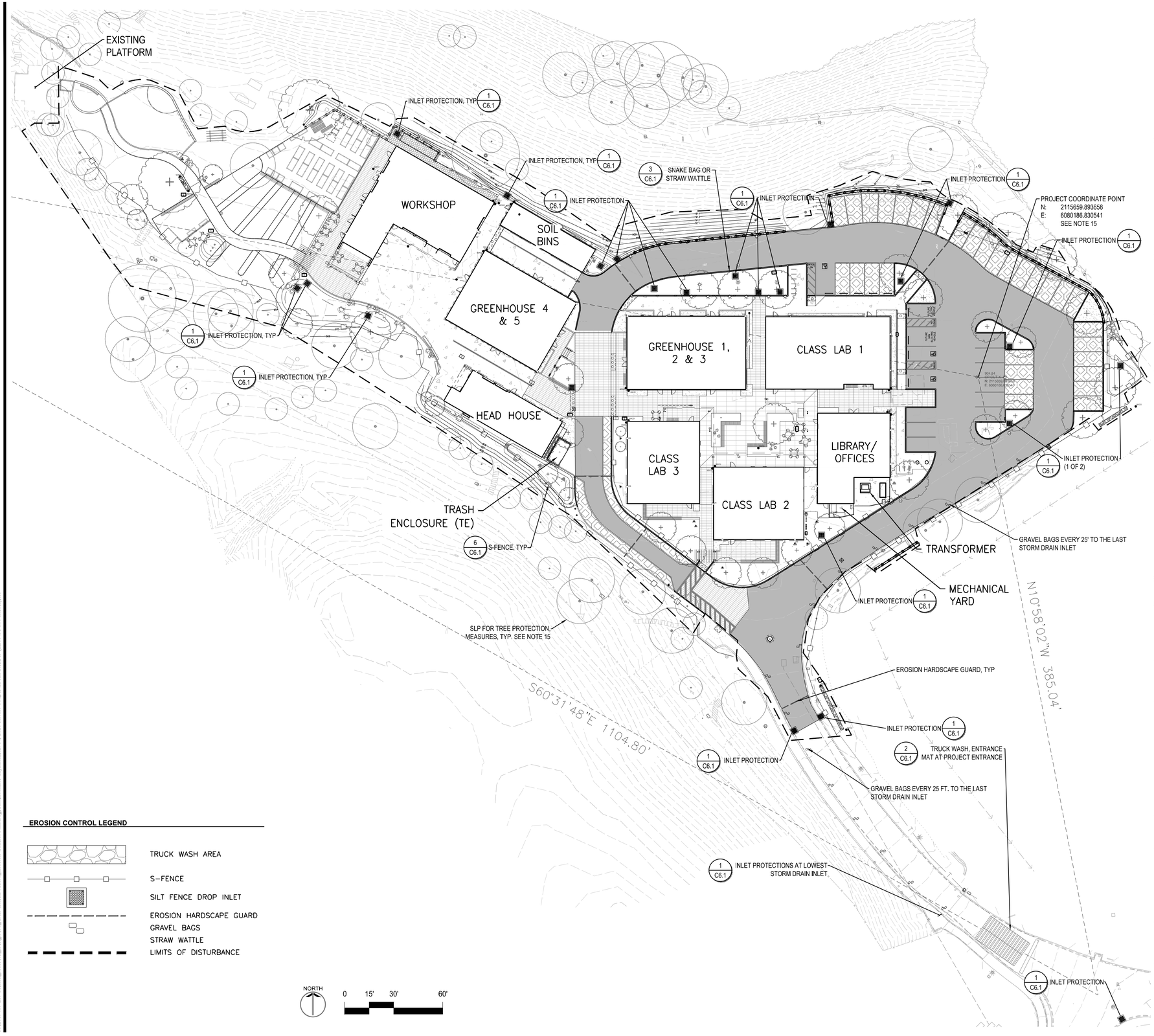

EROSION CONTROL LEGEND

- TRUCK WASH AREA
- S-FENCE
- SILT FENCE DROP INLET
- EROSION HARDSCAPE GUARD
- GRAVEL BAGS
- STRAW WATTLE
- LIMITS OF DISTURBANCE

EROSION CONTROL NOTES

1. THIS PLAN MAY NOT COVER ALL THE SITUATIONS THAT ARISE DURING CONSTRUCTION DUE TO UNANTICIPATED FIELD CONDITIONS. IN GENERAL, THE CONTRACTOR IS RESPONSIBLE FOR KEEPING SEDIMENT STORM RUNOFF AND NON-STORM RUNOFF FROM LEAVING THE SITE. PROTECTIVE DEVICES. PROVIDED ON THESE PLANS SHALL BE USED BY THE CONTRACTOR ON AN AS NEEDED BASIS TO INHIBIT SILT FROM LEAVING THE SITE AND ENTERING THE STORM DRAIN SYSTEM AND NATURAL WATERWAYS. TEMPORARY EROSION CONTROL DEVICES SHOWN ON GRADING PLAN WHICH INTERFERE WITH THE WORK SHALL BE RELOCATED OR MODIFIED WHEN THE INSPECTOR SO DIRECTS AS THE WORK PROGRESSES. EROSION AND SEDIMENT CONTROL MEASURES SHALL BE OPERABLE YEAR AROUND OR UNTIL VEGETATION IS ESTABLISHED ON SLOPED SURFACES.
2. EROSION CONTROL FACILITIES SHALL BE INSPECTED AND MAINTAINED DAILY AS WELL AS WHENEVER RAIN IS FORECAST. BREACHES IN DIKES AND SWALES TO BE REPAIRED AT THE CLOSE OF EACH DAY. THE NAME OF THE PERSON RESPONSIBLE FOR THE DAILY MAINTENANCE OF THESE FACILITIES SHALL BE ON RECORD WITH THE CITY ALONG WITH A PHONE NUMBER WHERE THEY CAN BE REACHED 24 HOURS A DAY. THESE FACILITIES SHALL CONTROL AND CONTAIN EROSION-CAUSED SILT DEPOSITS AND PROVIDE FOR THE SAFE DISCHARGE OF SILT FREE STORM WATER AND NON-STORM WATER DISCHARGE INTO EXISTING AND PROPOSED STORM DRAIN FACILITIES AND PRE-EXISTING DRAINAGE PATTERNS. DESIGN OF THESE FACILITIES MUST BE APPROVED AND UPDATED EACH YEAR BY THE CIVIL ENGINEER. (OCTOBER 1 TO APRIL 15)
3. ALL EROSION AND SEDIMENT CONTROL MEASURES SHALL BE CONSTRUCTED AND MAINTAINED IN ACCORDANCE WITH THE PROVISIONS OF THE CONSTRUCTION GENERAL PERMIT 2009-0014-DWQ. CONTROL MEASURES ARE SUBJECT TO THE INSPECTION AND APPROVAL OF THE ENGINEERING DIVISION OF THE PUBLIC SERVICES DEPARTMENT OF THE GOVERNING JURISDICTION.
4. THE CONTRACTOR IS RESPONSIBLE FOR ENSURING THAT ALL SUB-CONTRACTORS AND SUPPLIERS ARE AWARE OF ALL STORM WATER QUALITY MEASURES & IMPLEMENT SUCH MEASURES. FAILURE TO COMPLY WITH THE APPROVED CONSTRUCTION WILL RESULT IN THE ISSUANCE OF CORRECTION NOTICES, CITATIONS, AND / OR A PROJECT STOP ORDER.
5. THE CONTRACTOR SHALL INSTALL CONTROLLED ACCESS AND EGRESS AS DEFINED IN THESE PLANS. LOCATION TO BE APPROVED BY THE ENGINEER IN THE FIELD. CONSTRUCTION EGRESS WILL BE EQUIPPED WITH A TIRE WASH STATION, AS NEEDED. ALL DISCHARGE FROM THE TIRE WASH STATION WILL BE DIRECTED TO APPROPRIATE COLLECTION AREAS. AND NOT ALLOWED TO LEAVE THE SITE. ANY MUD OR SEDIMENT THAT IS TRACKED OFF-SITE ONTO PAVED AREAS WILL BE REMOVED AS NEEDED. POWER WASHING OF STREETS IS NOT PERMITTED. STREET CLEANING EQUIPMENT WILL HAVE SWEEPERS AND VACUUM CAPABILITY.
6. DURING THE RAINY SEASON, ALL PAVED AREAS ARE TO BE KEPT CLEAR OF EARTH MATERIAL AND DEBRIS. THE SITE IS TO BE MAINTAINED SO AS TO MINIMIZE SEDIMENT RUNOFF TO ANY STORM DRAIN SYSTEM OR ADJACENT LANDSCAPE.
7. DURING PERIODS WHEN STORMS ARE FORECASTED: A. EXCAVATED SOILS SHOULD NOT BE PLACED IN STREETS OR ON PAVED AREAS. B. ANY EXCAVATED SOILS SHOULD BE REMOVED FROM THE SITE BY THE END OF THE DAY. C. WHERE STOCKPILING IS NECESSARY, USE A TARPAULIN AND SURROUND THE STOCKPILED MATERIAL WITH SEDIMENT ROLLS, GRAVEL SEDIMENT BARRIER. SILT FENCE. OR OTHER RUNOFF CONTROLS. D. USE INLET CONTROLS AS NEEDED (E.G. ERTEC DRAIN INLET PROTECTION) FOR STORM DRAIN ADJACENT TO THE PROJECT SITE OR STOCKPILED SOIL.
8. STAND-BY CREWS SHALL BE ALERTED BY THE PERMITTEE OR CONTRACTOR FOR EMERGENCY WORK DURING RAINSTORMS.
9. AS A PART OF THE EROSION CONTROL MEASURES. UNDERGROUND STORM DRAIN FACILITIES AND CONCRETE SHALL BE INSTALLED COMPLETE AS SHOWN ON THE IMPROVEMENT PLANS AS APPROPRIATE FOR THE CURRENT PHASE. DRAINAGE INLET PROTECTION (SEDIMENT BARRIERS) SHALL BE INSTALLED AS SOON AS THE STORM DRAINAGE SYSTEM IS INSTALLED.
10. ALL GRADED AREAS, INCLUDING, BUT NOT LIMITED TO, CUT AND FILL SLOPES, STREETS, PARKING AREAS, AND BUILDING PADS SHALL BE STABILIZED WITH HYDRAULICALLY APPLIED MATERIAL OR SOIL STABILIZER PER THIS PLAN.
11. TO MINIMIZE EROSION OF GRADED BANKS. ALL GRADED BANKS STEEPER THAN 2% AND HIGHER THAN 3 FEET, SHALL BE STABILIZED WITH SOILWORKS PRODUCT, HYDRO STRAW GUARD PLUS OR HYDRO STRAW BFM AND SEED, LANDSCAPED, OR SEALED. IF THE PERMANENT STORM DRAIN SYSTEM IS NOT INSTALLED BY OCTOBER 1, TEMPORARY DITCHES SHALL BE CONSTRUCTED TO CONTAIN THE STORM WATER AND DIRECT it IN A MANNER THAT AVOIDS EROSION OF THE BANKS. TO THE EROSION AND SEDIMENT CONTROL FACILITIES. FOLLOW THE DESIGN OF THESE FACILITIES IN THIS PLAN.
12. ALL CUT AND FILL SLOPES ARE TO BE PROTECTED TO PREVENT OVERBANK FLOW USING ERTEC S-FENCE, AS SPECIFIED ON THESE PLANS.
13. TEMPORARY STOCKPILES SHALL BE PROTECTED WITH APPROPRIATE EROSION CONTROL MEASURES PER PLAN TO THE SATISFACTION OF THE CITY ENGINEER.
14. DUST CONTROL SHOULD BE PRACTICED ON ALL CONSTRUCTION SITES WITH EXPOSED SOILS AS NEEDED ESPECIALLY IN WINDY OR WIND-PRONE AREAS. DUST CONTROL IS CONSIDERED A TEMPORARY MEASURE AND AS AN INTERMEDIATE TREATMENT BETWEEN SITE DISTURBANCE AND CONSTRUCTION, PAVING, OR REVEGETATION. REFER TO EROSION CONTROL AND SEDIMENT CONTROL FIELD MANUAL, 3RD EDITION, PREPARED BY THE CALIFORNIA REGIONAL WATER QUALITY CONTROL BOARD, SAN FRANCISCO BAY REGION.
15. ALL TREES WITHIN THE LIMITS OF WORK ALLOCATED TO REMAIN SHALL BE PROTECTED. PLANS DO NOT REFLECT ALL TREES TO REMAIN OR BE REMOVED. REFER TO THE LANDSCAPE ARCHITECT FOR SPECIFIC TREE PROTECTION MEASURES.
16. WHEN POSSIBLE WORK SHOULD BE CONDUCTED DURING PERIODS OF NO FLOW OR LOW-FLOW.
17. CONTRACTOR SHALL STAKE AND RELOCATE PROJECT COORDINATE POINT PRIOR TO START OF CONSTRUCTION. NEW LOCATION OF PROJECT COORDINATE POINT SHALL BE RECORDED AND MAINTAINED THROUGHOUT THE ENTIRETY OF THE PROJECT.

APPROVALS

IDENTIFICATION STAMP
DIV. OF THE STATE ARCHITECT
APP: 01-119409 INC:
REVIEWED FOR
SS ☑ FLS ☑ ACS ☑
DATE: 03/14/2022

NOLL & TAM ARCHITECTS
729 Heinz Avenue
Berkeley, CA 94710
tel 510.542.2200
fax 510.542.2201

SEAL

REGISTERED PROFESSIONAL ENGINEER
JIMMY A. GALVEZ
EXP: 06/30/22
C-75568
CIVIL
STATE OF CALIFORNIA

FOR DSA APPROVAL

SHERWOOD DESIGN ENGINEERS
625 2nd Street, Suite 202
Petaluma, CA 94952
www.sherwoodengineers.com

PROJECT TITLE

Peralta Community College District
MERRITT COLLEGE NEW LANDSCAPE HORTICULTURE COMPLEX

12500 Campus Drive
Oakland, CA 94619

BID SET

ISSUE DATE	03/03/2022
N&T JOB NUMBER	22003

REVISIONS

#	DATE	DESCRIPTION

DRAWN BY MR | CHECKED BY LC

SHEET TITLE
EROSION CONTROL PLAN

SHEET NUMBER
C6.0

P:\2019\19-269\Merritt_Hort\03_Design\01_CAD Sheets\C6.0_Erosion Control Plan.dwg,C6.0 Lorraine Cubillos,12/14/2021 3:19:49 PM,ANSI full bleed D (22.00 x 34.00 Inches),1:1

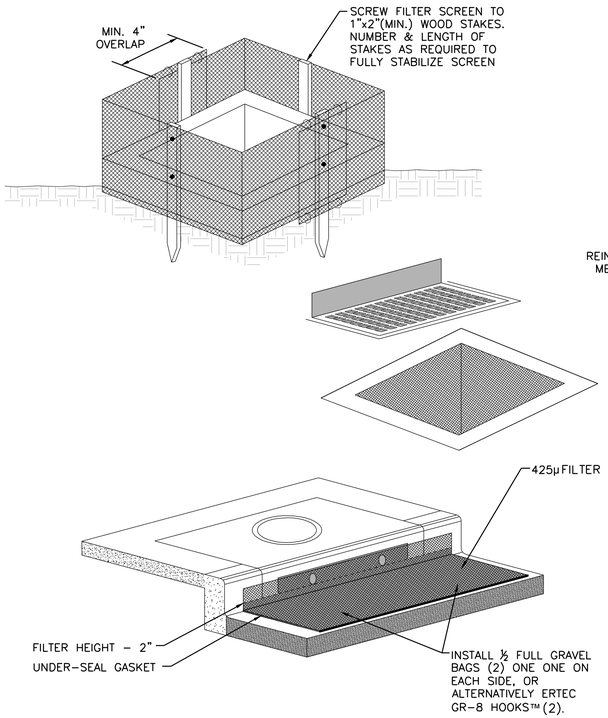

1 INLET PROTECTION DETAILS
EC-012 SCALE: NTS

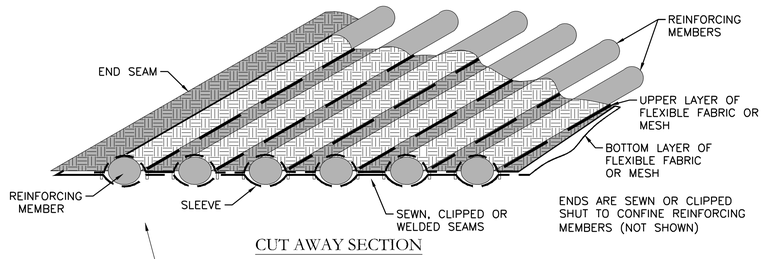

CUT AWAY SECTION

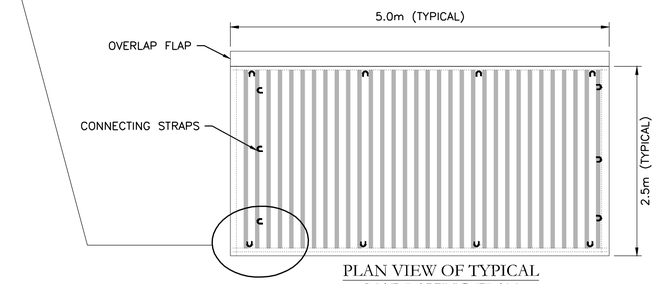

PLAN VIEW OF TYPICAL MAP LAYING FLAT

2 CONSTRUCTION ENTRANCE
EC-014 SCALE: NTS

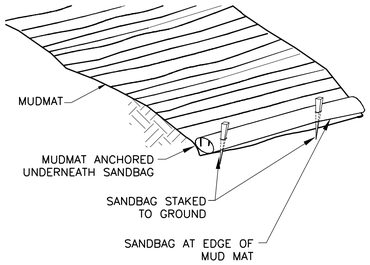

3 SNAKE BAG
ER-000 SCALE: NTS

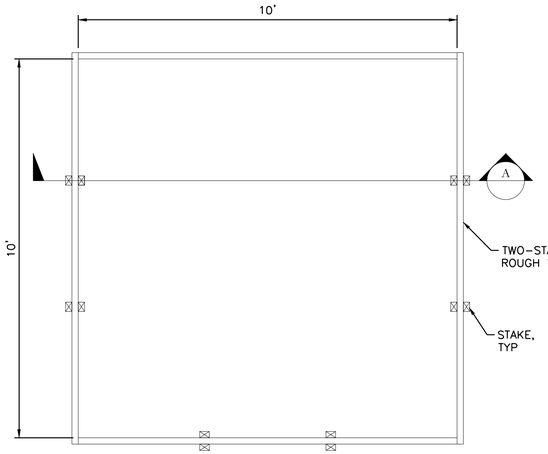

PLAN VIEW

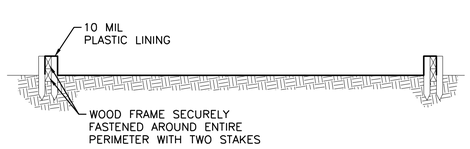

SECTION A-A

NOTES:
1. ACTUAL LAYOUT DETERMINED IN FIELD
2. THE CONCRETE WASHOUT SIGN SHALL BE INSTALLED WITHIN 30FT OF THE TEMPORARY CONCRETE WASHOUT FACILITY

4 CONCRETE WASHOUT
EC-011 SCALE: NTS

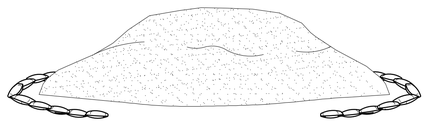

GRAVEL BAGS

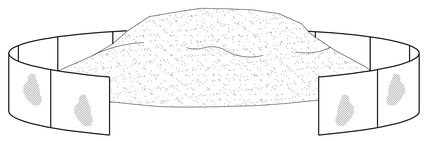

SILT FENCE

NOTE:
1. INSTALL SILT FENCE (ERTEC S-FENCE OR EQUAL) OR HALF FULL GRAVEL BAGS AT APPROXIMATE 3' FROM BASE OF STOCKPILE TO CONTAIN FUNOFF. REPLACE ANY PORTIONS REMOVED FOR ACCESS AT THE END OF WORKING DAY AND PRIOR TO ANY RAINFALL. PLACE AND TIE DOWN TARPS OR PLASTIC SHEETING OVER STOCKPILE IF REQUIRED TO PREVENT WIND EROSION

5 STOCKPILE PROTECTION
EC-010 SCALE: NTS

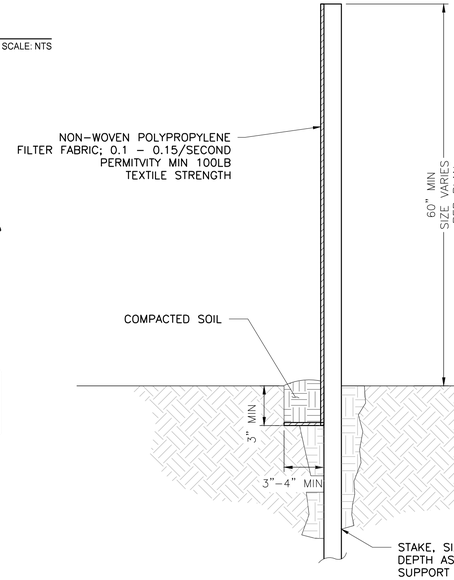

NOTES:
1. REFER TO CASQUA BMP DETAIL SE-1 FOR ADDITIONAL INSTALLATION DETAILS AND MAINTENANCE INSTRUCTIONS.
2. ALTERNATE INSTALLATION: ERTEC S-FENCE, 10" HIGH, OR EQUAL BY APPROVED MANUFACTURERS, INSTALLED IN ACCORDANCE WITH MANUFACTURER'S INSTRUCTIONS.

6 SILT FENCE
ER-000 SCALE: NTS

APPROVALS

IDENTIFICATION STAMP
DIV. OF THE STATE ARCHITECT
APP: 01-119409 INC:
REVIEWED FOR
SS ☑ FLS ☑ ACS ☑
DATE: 03/14/2022

NOLL & TAM ARCHITECTS
729 Heinz Avenue
Berkeley, CA 94710
tel 510.542.2200
fax 510.542.2201

SEAL

REGISTERED PROFESSIONAL ENGINEER
JIMMY A. GALVEZ
EXP: 06/30/22
C-75568
CIVIL
STATE OF CALIFORNIA

FOR DSA APPROVAL

SHERWOOD DESIGN ENGINEERS
625 2nd Street, Suite 202
Petaluma, CA 94952
www.sherwoodengineers.com

PROJECT TITLE

Peralta Community College District
MERRITT COLLEGE NEW LANDSCAPE HORTICULTURE COMPLEX

12500 Campus Drive
Oakland, CA 94619

BID SET

ISSUE DATE	03/03/2022
N&T JOB NUMBER	22003

REVISIONS

#	DATE	DESCRIPTION

DRAWN BY MR | CHECKED BY LC

SHEET TITLE
EROSION CONTROL DETAILS

SHEET NUMBER
C6.1

P:\2019\19-268.Merritt_Hort\05_Design\01_CAD Sheets\C6.00_Details.dwg,C6.1,Lorraine Carlabon,7/14/2021 3:19:37 PM,ANSI full bleed D (22.00 x 34.00 Inches),1:1

SHEET INDEX

L0.01	LANDSCAPE DRAWING INDEX, ABBREVIATIONS AND NOTES
L1.00	EXISTING CONDITIONS SITE PLAN
L1.01	SELECTIVE LANDSCAPE DEMOLITION PLAN
L1.02	EXISTING TREE PROTECTION AND REMOVAL PLAN
L1.03	TREE PROTECTION DETAILS AND NOTES
L2.00	LANDSCAPE MATERIALS SCHEDULE
L2.01	LANDSCAPE MATERIALS PLAN
L2.02	LANDSCAPE MATERIALS PLAN, WEST
L2.03	LANDSCAPE MATERIALS PLAN, EAST
L2.04	LANDSCAPE PAVING PLAN, WEST
L2.05	LANDSCAPE PAVING PLAN, EAST
L3.00	GRADING PLAN
L3.01	GRADING PLAN, WEST
L3.02	GRADING PLAN, EAST
L4.00	LAYOUT PLAN
L4.01	LAYOUT PLAN, WEST
L4.02	LAYOUT PLAN, EAST
L5.00	LANDSCAPE CONSTRUCTION DETAILS
L5.01	LANDSCAPE CONSTRUCTION DETAILS
L5.02	LANDSCAPE CONSTRUCTION DETAILS
L5.03	LANDSCAPE CONSTRUCTION DETAILS
L5.04	LANDSCAPE CONSTRUCTION DETAILS
L5.05	LANDSCAPE CONSTRUCTION DETAILS
L5.06	LANDSCAPE CONSTRUCTION DETAILS
L5.07	LANDSCAPE CONSTRUCTION DETAILS
L6.00	IRRIGATION PLAN
L6.01	IRRIGATION PLAN, WEST
L6.02	IRRIGATION PLAN, EAST
L6.03	IRRIGATION NOTES
L6.04	IRRIGATION LEGEND
L6.05	IRRIGATION DETAILS
L6.06	IRRIGATION DETAILS
L6.07	IRRIGATION DETAILS
L6.08	IRRIGATION DETAILS
L7.00	SOILS PLAN
L8.00	PLANT SCHEDULE
L8.01	PLANTING PLAN, WEST
L8.02	PLANTING PLAN, EAST
L8.03	PARKING LOT SHADING DIAGRAM
L8.04	PLANTING DETAILS

ABBREVIATIONS

S.C.D.	SEE CIVIL DRAWINGS
S.A.D.	SEE ARCHITECTURAL DRAWINGS
S.E.D.	SEE ELECTRICAL DRAWINGS
S.S.D.	SEE STRUCTURAL DRAWINGS
C.L.	CENTERLINE
CLR	CLEAR
EQ	EQUAL DISTANCE
(E)	EXISTING
(N)	NEW
C.L.A.	NOT IN CONTRACT
O.C.	ON CENTER
SIM	SIMILAR
STD	STANDARD
TYP.	TYPICAL

DESIGN NARRATIVE

1. SUSTAINABILITY
WHILE THE PROJECT DOES NOT ASPIRE TO ACHIEVE OFFICIAL LEED OR OTHER SUSTAINABILITY CERTIFICATION, MANY OF THE PRINCIPLES WILL GUIDE THE DESIGN AND CONSTRUCTION. SEVERAL EXISTING LANDSCAPE FEATURES WILL BE PRESERVED TO THE EXTENT POSSIBLE: GRADING OPERATIONS WILL BE KEPT TO A MINIMUM TO AVOID DISTURBANCE TO THE LAND AND VEGETATION; TREES IN THE OPEN LANDSCAPE WILL BE PRESERVED; NATURALLY WET AREAS WILL BE USED FOR BIORETENTION. WHEREVER APPROPRIATE, PERMEABLE PAVING WILL BE PUT IN PLACE FOR GROUND WATER RECHARGE. LANDSCAPE STRUCTURES, FURNISHINGS, AND OTHER ELEMENTS WILL EMPLOY FSC CERTIFIED WOOD OR ALTERNATIVE WOOD MATERIALS, AND LOCALLY MANUFACTURED AND/OR SUPPLIED COMPONENTS. PAVING MATERIALS WILL HAVE HIGH SOLAR REFLECTANCE INDEX (SRI) VALUE FOR REDUCTION OF HEAT ISLAND EFFECT, AND TREES WILL BE PLANTED TO PROVIDE DAPPLED SHADE OVER SEATING AREAS, AND ALLOW FULL SUN EXPOSURE TO GREENHOUSES. PLANTS WILL BE SOURCED FROM NURSERIES WITH KNOW CHAIN OF CUSTODY AND PROSCRIPTION OF SYSTEMIC PESTICIDES, WATERED WITH LOW WATER USE IRRIGATION SYSTEM, FERTILIZED WITH ORGANIC COMPOST OR OMRI APPROVED FERTILIZERS, AND MULCHED. BICYCLE RACKS AND EV PARKING STATIONS WILL BE PROVIDED, AND LED FIXTURES WILL BE USED FOR ALL LANDSCAPE LIGHTING.

2. TREE AND PLANT PROTECTION
THE MERRITT LANDSCAPE HORTICULTURE COMPLEX HAS A COLLECTION OF VARIED PLANT SPECIMENS VALUABLE FOR STUDENTS AND FACULTY. THE PROPOSED DESIGN INTENDS TO EITHER PRESERVE IN PLACE OR TRANSPLANT TO NEW LOCATIONS THE SPECIMENS IDENTIFIED AS SUCH BY THE FACULTY. TREES CURRENTLY USED FOR EDUCATIONAL PURPOSES WILL BE PRESERVED. ALL TREES TO REMAIN WILL BE PROTECTED DURING CONSTRUCTION OPERATIONS WITH FENCES AND MULCH.

3. PAVING
SITE PAVING WILL BE DESIGNED TO VISUALLY UNIFY THE CAMPUS, PARTICULARLY THE EAST AND WEST SIDES. DECORATIVE PAVING WILL EXTEND OVER FIRE LOOP ROAD WHERE IT INTERSECTS THE CAMPUS BUILDING COMPLEX. IMPERVIOUS PAVING WILL BE PLACED IN HIGH-USE AREAS, FIELD WORK AREAS, AND IN AREAS WITH LIGHT VEHICULAR ACCESS WITHIN THE CAMPUS. PERVIOUS PAVING FOR BOTH PEDESTRIAN AND VEHICULAR APPLICATIONS WILL BE USED WHEREVER PRACTICABLE.. REGARDLESS OF THE PAVING TYPES, PAVING ACROSS CAMPUS WILL BE DURABLE, WHEELCHAIR ACCESSIBLE, AND WILL BE SPECIFIED FOR HIGH REFLECTIVITY VALUES.

4. SITE FURNISHING
SELECTED TO VISUALLY UNIFY THE CAMPUS, AND FACILITATE INDIVIDUAL AND GROUP STUDYING, DINING AND RELAXATION. BOTH BUILT-IN AND MOVABLE SEATING WILL BE PROVIDED FOR INDIVIDUAL CHOICE OF SUN/SHADE EXPOSURE, AND TO PROMOTE CONNECTION BETWEEN INDOOR AND OUTDOOR ENVIRONMENTS. DURABLE AND EASILY MAINTAINABLE MATERIALS AND FURNISHINGS WILL BE SELECTED; CONSIDERATION WILL BE GIVEN TO COMFORT, WARMTH, COLOR AND TEXTURE AND STYLE. LOW FIRE RISK MATERIALS WILL BE SELECTED FOR SITE FURNISHING WEST OF THE FIRE ROAD.

5. IRRIGATION
ALL NEWLY PLANTED AREAS WILL BE WATERED BY FULLY AUTOMATIC IRRIGATION SYSTEM. THE SYSTEM WILL USE DOMESTIC WATER, AND WILL COMPLY WITH CURRENT CALIFORNIA WATER EFFICIENT LANDSCAPE ORDINANCE (WELO) REGULATIONS. IRRIGATION ZONES WILL BE BASED ON PLANT GROUPING WATER DEMANDS (HYDROZONES), AND TREES WILL BE IRRIGATED BY SEPARATE CIRCUITS. THE SYSTEM WILL INCLUDE WEATHER SENSOR, SMART INTERNET DATA-BASED CONTROLLER/S, BACKFLOW PREVENTOR, WATER METER OR SUBMETER, AND LOW FLOW AND DRIP EMITTERS.

6. PLANTING
PLANT PALETTE WILL BE EXTENSIVE AS PLANTING WILL REPRESENT A VARIETY OF GARDEN TYPES, INCLUDING POLLINATOR AND NATIVE PLANTING, XERISCAPE, FIRESCAPE, BIORETENTION, GREEN ROOF, AND OTHER. PLANT SPECIES WILL BE SELECTED FOR THE APPROPRIATE USE, SOLAR AND WIND EXPOSURE, NATURAL FLOW OF WATER ON THE SITE, SLOPE ASPECT, AS WELL AS FACULTY REQUESTS FOR PARTICULAR SPECIES FOR INSTRUCTION. PLANTS WILL BE GROUPED INTO HYDROZONES, AND WILL BE GENERALLY SELECTED FOR LOW WATER DEMAND. SIZES OF PLANTS WILL BE CONSIDERED FOR IMMEDIATE VISUAL EFFECT NEAR BUILDINGS, AND FOR GROWTH OBSERVATION FOR EDUCATIONAL PURPOSES ELSEWHERE. SOIL WILL BE PROFESSIONALLY TESTED BY SOIL LAB/S, AND AMENDMENT STRATEGIES WILL BE BASED ON RECOMMENDATIONS FOR ORGANIC FERTILIZERS. TURF WILL BE SODDED.

GENERAL NOTES

1. THE GENERAL CONTRACTOR SHALL BE RESPONSIBLE FOR COORDINATING ALL WORK BY THE SUBCONTRACTORS.
2. CONTRACTOR SHALL VERIFY ALL CONDITIONS AT JOB SITE AND NOTIFY LANDSCAPE ARCHITECT AND OWNER'S REPRESENTATIVE OF DIMENSIONAL OMISSIONS OR DISCREPANCIES BEFORE BEGINNING ANY WORK.
3. CONTRACTOR TO OBTAIN ALL NECESSARY PERMITS PRIOR TO CONSTRUCTION. ALL CONTRACTORS MUST COMPLY WITH PERMIT REQUIREMENTS, LOCAL, STATE AND FEDERAL JURISDICTIONS AND GOVERNING BODIES/AGENCIES RULES AND REGULATIONS AND LAND USE APPROVAL CONDITIONS AT ALL TIMES.
4. WORK PERFORMED WITHOUT APPROVAL OF LOCAL, STATE AND FEDERAL JURISDICTIONS AND GOVERNING AGENCIES AND/OR NOT IN COMPLIANCE WITH SPECIFICATIONS AND/OR DRAWINGS IS SUBJECT TO REMOVAL AT CONTRACTOR'S EXPENSE.
5. CONTRACTOR SHALL VERIFY LOCATION OF ALL ABOVE- AND UNDERGROUND EXISTING UTILITIES, LINES AND STRUCTURES PRIOR TO EXCAVATION OR TRENCHING, OR OTHER CONSTRUCTION ACTIVITIES. THE LANDSCAPE ARCHITECT ASSUMES NO RESPONSIBILITY FOR UTILITIES OR STRUCTURES NOT SHOWN ON THE DRAWINGS. CONTRACTOR SHALL USE EXTREME CAUTION WHEN WORKING OVER OR NEAR EXISTING GAS AND ELECTRICAL LINES. DAMAGE TO UTILITIES, LINES, STRUCTURES, OR OTHER SITE ELEMENTS IS THE SOLE RESPONSIBILITY OF THE CONTRACTOR AND WILL BE REPAIRED AT SOLE EXPENSE OF THE CONTRACTOR AND AT THE DISCRETION OF THE OWNER.
6. THE CONTRACTOR SHALL BE RESPONSIBLE FOR RESETTING ALL LAND MONUMENTS DISRUPTED BY CONSTRUCTION ACTIVITIES OR NEGLIGENCE ON THE PART OF THE CONTRACTOR. RESETS SHALL BE PERFORMED UNDER THE SUPERVISION OF A REGISTERED LAND SURVEYOR AND MONUMENT RECORDS MUST BE FILED AS REQUIRED BY STATUTE FOR ALL MONUMENTS.
7. ALL CONSTRUCTION AND MATERIALS NOT SPECIFICALLY ADDRESSED IN THE CONTRACT DOCUMENTS OR SPECIFICATIONS SHALL BE IN ACCORDANCE WITH LOCAL, STATE AND FEDERAL JURISDICTIONS AND GOVERNING AGENCIES STANDARDS.
8. THE CONTRACTOR SHALL TAKE ALL PRECAUTIONARY MEASURES NECESSARY TO PROTECT EXISTING ELEMENTS TO REMAIN FROM DAMAGE AND ALL SUCH ELEMENTS AND STRUCTURES DAMAGED BY THE CONTRACTOR'S OPERATIONS SHALL BE REPAIRED OR RECONSTRUCTED SATISFACTORY TO THE LANDSCAPE ARCHITECT AND OWNER AT THE CONTRACTOR'S SOLE EXPENSE.
9. ALL BARRICADING AND TEMPORARY TRAFFIC CONTROL DEVICES OR METHODS USED DURING CONSTRUCTION SHALL BE IN ACCORDANCE WITH LOCAL, STATE AND FEDERAL JURISDICTIONS AND GOVERNING AGENCIES STANDARDS. PROVIDE ADEQUATE TIME FOR REVIEW AND APPROVAL BY THE ABOVE JURISDICTIONS PRIOR TO COMMENCEMENT.
10. THE LANDSCAPE ARCHITECT IS NOT RESPONSIBLE FOR THE CONSTRUCTION MEANS, METHODS, TECHNIQUES, SEQUENCES UTILIZED OR FOR SAFETY PRECAUTIONS OR PROBLEMS IN CONNECTION WITH THE WORK. THE LANDSCAPE ARCHITECT IS NOT RESPONSIBLE FOR THE CONTRACTOR'S FAILURE TO CARRY OUT THE WORK IN ACCORDANCE WITH THE CONTRACT DOCUMENTS. CONTRACT DOCUMENTS INCLUDE THE CONSTRUCTION DOCUMENT DRAWING SET AND TECHNICAL SPECIFICATIONS.
11. CONTRACTOR TO VERIFY ALL QUANTITIES. IN CASE OF ANY DISCREPANCIES, CONTACT LANDSCAPE ARCHITECT AND OWNER'S REPRESENTATIVE FOR CLARIFICATION PRIOR TO PURCHASING. GRAPHICALLY SHOWN MATERIAL QUANTITIES SHALL TAKE PRECEDENCE OVER LISTED QUANTITIES.
12. A SYSTEM OF DIAGRAMMATIC SYMBOLS, HATCHES AND NOTATIONS IS USED IN THESE DRAWINGS. REVIEW NOTATIONS CAREFULLY, NOTIFY LANDSCAPE ARCHITECT AND REQUEST CLARIFICATION OF ANY UNCLEAR NOTATION OR DISCREPANCY PRIOR TO COMMENCING WORK.
13. PROVIDE SLEEVES AS REQUIRED FOR DRAINAGE, IRRIGATION AND ELECTRICAL LINES REGARDLESS OF WHETHER SLEEVE LOCATIONS ARE INDICATED. IRRIGATION AND ELECTRICAL SLEEVES AND SUBSURFACE DRAINAGE SYSTEMS SHALL BE CONSTRUCTED PRIOR TO HARDSCAPE AND LANDSCAPE WORK. UTILITY SLEEVES ARE REQUIRED IN ALL PLANT BEDS ISOLATED BY PAVEMENT OR ANY OTHER STRUCTURES.
14. SPECIAL CONSIDERATION IS GIVEN TO THE DESIGN AND INTENDED RELATIONSHIP BETWEEN ARCHITECTURE, PLANTING AREAS AND PAVING SYSTEMS. CONSTRUCTION OF PAVEMENT JOINTS, PAVERS, STONE, FINISHES AND GRADES SHALL BE WELL COORDINATED IN THE FIELD.
15. VEHICLES, EQUIPMENT, AND/OR MATERIALS SHALL NOT BE PARKED OR STORED IN AREAS OF EXISTING VEGETATION, INCLUDING WITHIN THE DRIPLINE OF EXISTING TREES TO REMAIN. REFER TO TEMPORARY TREE AND PLANT PROTECTION NOTES AND SPECIFICATIONS.
16. LANDSCAPE MATERIALS SHALL BE STORED UNDER SECURED TARPS OR SHEETING PRIOR TO USE TO PROTECT AGAINST WIND, RAIN OR OTHER DAMAGE.
17. CONSTRUCTION WASTE, INCLUDING BUT NOT LIMITED TO: PLANT MATERIAL, BUILDING MATERIALS, DEMOLISHED MATERIALS, PACKAGING, LEFTOVER PAINT AND CONCRETE SLURRY SHOULD BE PROPERLY REUSED, RECYCLED, DISPOSED OF LEGALLY OFF-SITE OR IN DESIGNATED WASH-OUT AREAS DETERMINED BY THE GENERAL CONTRACTOR.
18. RECYCLING AND TRASH BINS TO BE PROVIDED ON SITE. SEPARATE BINS FOR CARDBOARD, CO-MINGLED, AND OTHER RECYCLABLE/REUSABLE MATERIALS IDENTIFIED BY THE LOCAL JURISDICTION SHALL BE MAINTAINED. ALL BINS TO BE WILDLIFE-PROOF.
19. ON-SITE FUEL STORAGE FOR CONSTRUCTION EQUIPMENT IS DISCOURAGED. CONSTRUCTION EQUIPMENT USED ON SITE TO BE CHECKED REGULARLY TO ASSURE CONTAMINATION CONCERNS FROM OILS AND GREASES ARE ELIMINATED. NO TOXIC MATERIALS SHALL BE STORED ON-SITE.
20. INSTALL AND MAINTAIN IN PROPER WORKING CONDITION SILT FENCING AND MUD TRACKING PADS THROUGHOUT THE DURATION OF CONSTRUCTION.
21. GREEN BUILDING PRACTICES SHALL BE EMPLOYED TO THE EXTENT FEASIBLE. SUCH PRACTICES INCLUDE: CARPOOLING/VANPOOLING TO JOB SITE, MINIMIZING MATERIALS PACKING BEFORE ARRIVAL TO JOB SITE, REDUCING MATERIAL/RESOURCE INEFFICIENCIES BY COORDINATING WORK.
22. IF SITE WORK IS DELAYED DUE TO ANY CIRCUMSTANCE, THE CONTRACTOR SHALL PROTECT EXPOSED SOIL FROM ALL TYPES OF EROSION.
23. EXISTING TREES TO BE PRESERVED SHALL BEAR SAME RELATIONSHIP TO FINISH GRADE PRE- AND POST-CONSTRUCTION, UNLESS CONSTRUCTION DOCUMENTS SPECIFICALLY INDICATE OTHERWISE.
24. EXISTING TREES TO BE PRESERVED SHALL BE PROTECTED WITH STURDY, WEATHERPROOF FENCING. MAINTAIN TREE PROTECTION FENCE IN WORKING ORDER DURING ALL PHASES OF CONSTRUCTION. MAINTAIN TREE PROTECTION ZONES FREE OF WEEDS AND TRASH. REFER TO TEMPORARY TREE AND PLANT PROTECTION DETAILS, NOTES AND SPECIFICATIONS.
25. NO WORK SHALL BE CONDUCTED WITHIN THE DRIPLINE OF EXISTING TREES, UNLESS REVIEWED AND APPROVED BY THE LANDSCAPE ARCHITECT. ALL WORK APPROVED WITHIN THE DRIPLINE SHALL BE COMPLETED BY HAND. PROTECT ROOT SYSTEMS FROM PONDING, ERODING, EXCESSIVE WETTING, AND COMPACTION.
26. THE PROJECT LIMIT OF CONSTRUCTION TO BE CLEARLY DEFINED BY STURDY, WEATHERPROOF FENCING. REFER TO ARCHITECT'S DRAWINGS FOR CONSTRUCTION FENCE EXTENT, TYPE AND INSTALLATION.
27. VERIFY THAT WATERPROOFING OF SUB-SURFACE ARCHITECTURAL STRUCTURES ADJACENT TO LANDSCAPE IMPROVEMENTS ARE IN PLACE, AND ADEQUATELY INSTALLED TO REPEL ALL WATER SOURCES INCLUDING, BUT NOT LIMITED TO: PRECIPITATION, STORM WATER RUNOFF, GROUND WATER, IRRIGATION, ROOF RUNOFF, GROUND WATER, AND PLUMBING LEAKS.

REFER TO G-SERIES FOR ACCESSIBLE PATH OF TRAVEL AND FIRE ACCESS

DEMOLITION NOTES

1. ALL ITEMS AND MATERIALS TO BE REMOVED SHALL BE DISPOSED OF ACCORDING TO STATE AND LOCAL CODES AND REGULARTIONS.
2. VERIFY LOCATIONS OF ABOVE-GROUND AND BELOW-GROUND UTILITIES PRIOR TO BEGINNING DEMOLITION WORK. VERIFICATION OF UTILITIES SHALL BE PERFORMED BY TRACING EQUIPMENT WHEREVER POSSIBLE, AND WHERE NOT POSSIBLE THROUGH THE STUDY OF ORIGINAL DRAWINGS AVAILABLE FROM PERALTA COMMUNITY DISTRICT. CONTRACTOR SHALL BE RESPONSIBLE FOR LOCATING UTILITIES DESIGNATED TO REMAIN WITHIN 5' OF WHERE SHOWN ON THE PLANS VIA POTHOLING. POTHOLING SHALL BE PERFORMED WITH VACUUM EXCAVATOR. REFER TO CIVIL DRAWINGS FOR UTILITY LOCATIONS, REFER TO MEP DRAWINGS FOR ELECTRICAL CONDUITS AND PLUMBING.
3. TAKE PRECAUTIONARY MEASURES NECESSARY TO PROTECT FROM DAMAGE ALL EXISTING SITE ELEMENTS, FEATURES, PLANTS AND UTILITIES TO REMAIN. EXPEDITIOUSLY REPAIR IN KIND ITEMS REMOVED OR DAMAGED BY THE CONTRACTOR'S OPERATIONS.
4. PROTECT DRAIN INLETS. PREVENT DEBRIS FROM ENTERING DRAINS DURING PROJECT. PREVENTION METHODS SHALL BE SECURE AND IMMOVABLE UNTIL CONTRACTOR REMOVES THEM AT THE END OF PROJECT CONSTRUCTION REFER TO EROSION AND SEDIMENT CONTROL PLAN, REFER TO CIVIL DRAWINGS AND SPECIFICATIONS.
5. CONCRETE AND ASPHALT PAVING SHALL BE CUT CLEANLY.
6. REMOVE FOOTINGS OF ALL REMOVED ITEMS, INCLUDING BUT NOT LIMITED TO BENCHES, LIGHT POLES, FENCES AND GATES.
7. REMOVE ALL EXISTING TREE STUMPS AND STUMPS OF TREES REMOVED DURING CONSTRUCTION. GRIND AND REMOVE STUMPS TO 12" BELOW FINISH GRADE.
8. REMOVE AND SALVAGE REMOTE CONTROL VALVES AND IRRIGATION HEADS WHENEVER POSSIBLE FOR FUTURE RE-USE BY OWNER.
9. CAP AND ABANDON IN PLACE EXISTING LATERAL LINES.
10. REFER TO SELECTIVE LANDSCAPE DEMOLITION SPECIFICATIONS FOR ITEMS TO BE PRESERVED AND/OR SALVAGED.

LAYOUT NOTES

1. LAYOUT AND VERIFY DIMENSIONS PRIOR TO CONSTRUCTION. NOTIFY LANDSCAPE ARCHITECT OF ANY DISCREPANCIES. LANDSCAPE ARCHITECT TO REVIEW AND APPROVE LAYOUT OF ALL PAVING, EDGING, TRELLIS FOOTINGS AND HARDSCAPE SHOWN IN THE CONSTRUCTION DOCUMENTS PRIOR TO CONSTRUCTION.
2. WRITTEN DIMENSIONS SHALL TAKE PRECEDENCE OVER SCALED DIMENSIONS. DO NOT SCALE DIMENSIONS FROM REDUCED DRAWINGS.
3. DIMENSIONS REFERRED TO AS "EQUAL" INDICATE SPACING WHICH IS EQUIDISTANT MEASURED TO THE CENTERLINES.
4. MEASUREMENTS ARE TO THE FINISHED FACE OF BUILDINGS, WALLS, CURBS, OR OTHER FIXED SITE IMPROVEMENTS. DIMENSIONS TO CENTERLINES OR REFERENCE LINES ARE IDENTIFIED AS SUCH.
5. INSTALL INTERSECTING ELEMENTS AT 90-DEGREE ANGLES, UNLESS OTHERWISE INDICATED. MAINTAIN HORIZONTAL ALIGNMENT OF ADJACENT ELEMENTS AS INDICATED IN CONTRACT DOCUMENTS.
6. PROVIDE A FULL-SCALE MOCKUP AND RECEIVE APPROVAL FROM THE LANDSCAPE ARCHITECT FOR ALL SYSTEMS AS CALLED FOR IN THE CONSTRUCTION DOCUMENTS PRIOR TO INSTALLATION.
7. EXPANSION JOINTS SHALL BE PROVIDED WHERE FLATWORK MEETS VERTICAL STRUCTURES, SUCH AS WALLS, CURBS, STEPS, AND OTHER HARDSCAPE ELEMENTS. EXPANSION JOINTS SHALL ALSO BE PROVIDED AT MATERIAL CHANGES BETWEEN RIGID PAVING SYSTEMS. EXPANSION JOINT MATERIALS SHALL BE SUBMITTED TO THE LANDSCAPE ARCHITECT FOR APPROVAL PRIOR TO INSTALLATION.
8. HOLD TOPS OF WALLS AND LANDSCAPE PARTITIONS LEVEL UNLESS OTHERWISE SPECIFIED.
9. DO NOT INSTALL WORK LOCATED ON TOP OF ARCHITECTURAL STRUCTURES WITHOUT FIRST REVIEWING ARCHITECTURAL DRAWINGS.

PLANTING NOTES

1. PLANT MATERIAL TO BE HEALTHY, FREE FROM DISEASE OR DAMAGE, AND IS TO BE MAINTAINED IN EXCELLENT CONDITION WHILE ON THE JOBSITE. LANDSCAPE ARCHITECT WILL INSPECT PLANT MATERIAL UPON ARRIVAL TO JOBSITE AND WILL REJECT PLANT MATERIAL THAT DOES NOT MEET THE STANDARDS DESCRIBED WITHIN THE CONTRACT DOCUMENTS.
2. THE LANDSCAPE ARCHITECT WILL PERIODICALLY INSPECT PLANT MATERIAL STOCKPILED AND/OR PLANTED ON SITE DURING THE COURSE OF CONSTRUCTION. PLANT MATERIAL NOT MEETING THE STANDARDS CONTAINED WITHIN CONTRACT DOCUMENTS SHALL BE REPLACED AT SOLE EXPENSE OF CONTRACTOR.
3. PROVIDE MATCHING SIZES AND FORMS FOR EACH PLANT OF THE SAME SPECIES UNLESS OTHERWISE INDICATED.
4. VERIFY ALL QUANTITIES. IN CASE OF DISCREPANCIES, GRAPHICALLY SHOWN QUANTITIES SHALL TAKE PRECEDENCE OVER LISTED QUANTITIES.
5. ALL MATERIALS USED SHALL CONFORM TO THE GUIDELINES ESTABLISHED BY THE CURRENT AMERICAN STANDARDS FOR NURSERY STOCK, PUBLISHED BY THE AMERICAN ASSOCIATION OF NURSERYMEN. REFER TO PLANT SPECIFICATIONS.
6. ALL PLANT MATERIAL SHALL BE INSTALLED PLUMB AND PER THE SPECIFICATIONS CONTAINED WITHIN THE CONTRACT DOCUMENTS. ANY NECESSARY STAKING AND/OR OTHER SUPPORTS MATERIALS/METHODS SHALL BE SUBMITTED TO THE LANDSCAPE ARCHITECT FOR REVIEW AND APPROVAL PRIOR TO INSTALLATION.
7. PRUNE TREES ONLY PER WRITTEN DIRECTION OF AN INDEPENDENT ARBORIST OR LANDSCAPE ARCHITECT.
8. STAKE THE LOCATIONS FOR LAYOUT OF ALL TREES AND 5-GAL OR LARGER SHRUBS FOR LANDSCAPE ARCHITECT REVIEW AND APPROVAL, PRIOR TO INSTALLATION.
9. ALL ROOT-WRAPPING MATERIALS THAT ARE NOT BIO-DEGRADABLE SHALL BE REMOVED FROM THE ROOT BALL JUST BEFORE PLANTING.
10. ROOT BALLS OF ALL NEW PLANTS SHALL BE FREE OF WEEDS.
11. SPECIFIED PLANT MATERIAL SIZES SHALL BE CONSIDERED MINIMUM SIZES. LARGER SIZES ARE GENERALLY ACCEPTABLE.
12. FINISH GRADE OF PLANTING BEDS SHALL BE ONE (1) INCH BELOW ADJACENT FLATWORK, UNLESS SPECIFIED OTHERWISE.
13. PLACE MULCH IN ALL PLANTING AREAS. MULCH OR PLANTING BED DRESSING SHALL NOT BE PLACED WITHIN TWELVE INCHES OF TREE TRUNKS OR WITHIN THREE TO SIX INCHES OF SHRUB STEMS.
14. ALL PLANT AMENDMENT MATERIALS AND FERTILIZERS SHALL BE ORGANIC. THE USE OF SYNTHETIC FERTILIZERS IS PROHIBITED ON THIS PROJECT.
15. EXCESS FERTILIZER SHALL BE DISPOSED OF PROPERLY OFF-SITE. IT SHALL NOT BE DISPOSED OF IN STORM DRAINS.
16. STOCKPILED PLANT MATERIAL TO BE PLACED IN THE SHADE AND PROPERLY HAND-WATERED UNTIL PLANTED.
17. PRESERVE AND PROTECT ALL EXISTING VEGETATION TO REMAIN THROUGHOUT THE DURATION OF CONSTRUCTION.

APPROVALS

IDENTIFICATION STAMP
DIV. OF THE STATE ARCHITECT
APP: 01-119409 INC:
REVIEWED FOR
SS ☑ FLS ☑ ACS ☑
DATE: 03/14/2022

NOLL & TAM ARCHITECTS
729 Heinz Avenue
Berkeley, CA 94710
tel 510.542.2200
fax 510.542.2201

SEAL

LICENSED LANDSCAPE ARCHITECT
SVETLANA MARIE VOLEJNIKOVA No. 6432
Signature 12.31.2023 Renewal Date
11.11.2021 Date
STATE OF CALIFORNIA

BASE LANDSCAPE ARCHITECTURE
SAN FRANCISCO / PORTLAND
www.baselandscape.com

PROJECT TITLE

Peralta Community College District
Merritt Landscape Horticulture Complex

12500 Campus Drive
Oakland, CA 94616

BID SET

ISSUE DATE	03/03/2022
N&T JOB NUMBER	22003

REVISIONS

	DATE	DESCRIPTION

DRAWN BY	TY, JR, SV	CHECKED BY	SV

SHEET TITLE

LANDSCAPE DRAWING INDEX, ABBREVIATIONS AND NOTES

SHEET NUMBER

L0.01

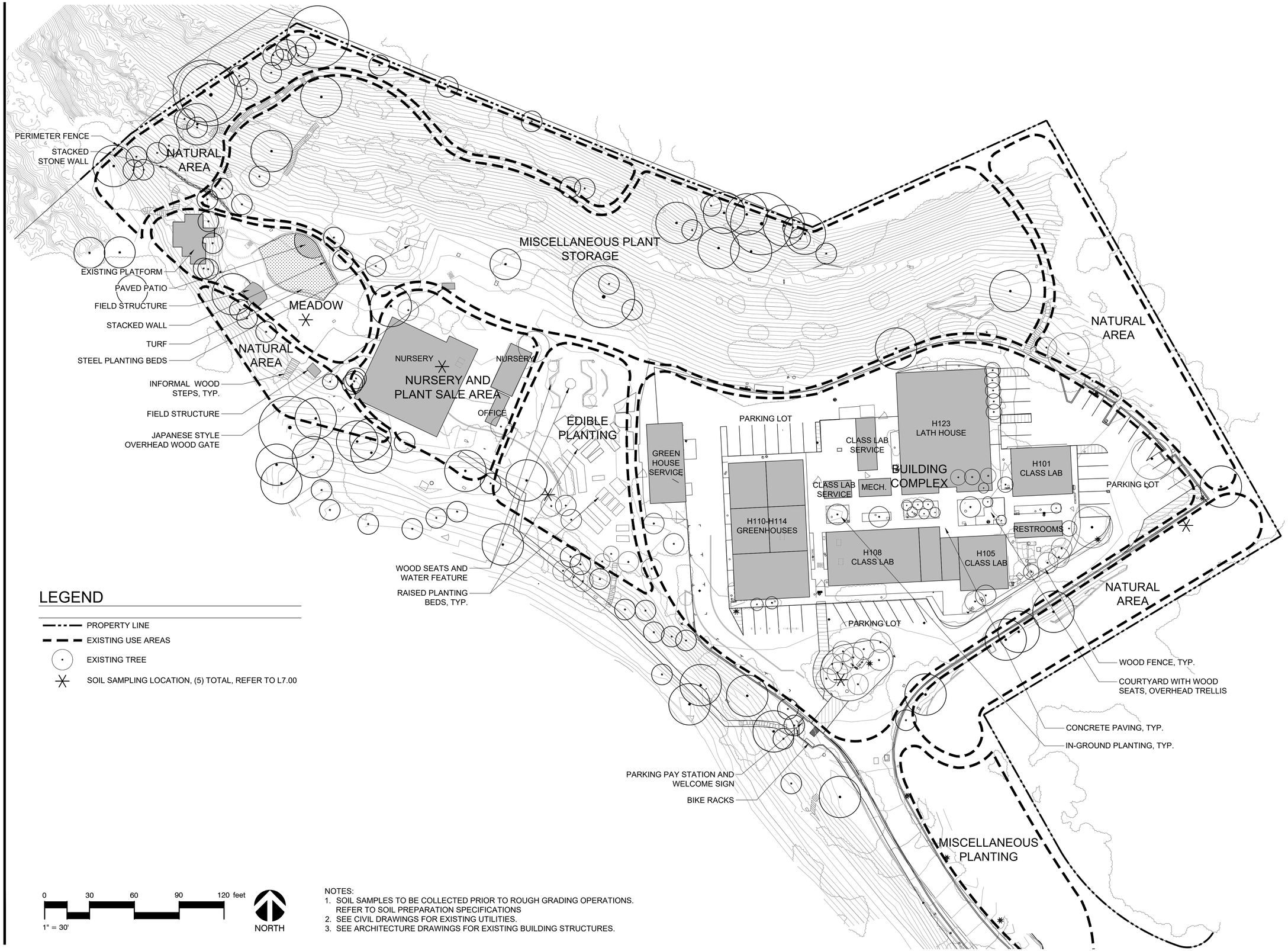

LEGEND

- PROPERTY LINE
- EXISTING USE AREAS
- EXISTING TREE
- SOIL SAMPLING LOCATION, (5) TOTAL, REFER TO L7.00

0 30 60 90 120 feet

1" = 30'

NORTH

NOTES:
1. SOIL SAMPLES TO BE COLLECTED PRIOR TO ROUGH GRADING OPERATIONS. REFER TO SOIL PREPARATION SPECIFICATIONS
2. SEE CIVIL DRAWINGS FOR EXISTING UTILITIES.
3. SEE ARCHITECTURE DRAWINGS FOR EXISTING BUILDING STRUCTURES.

APPROVALS

IDENTIFICATION STAMP
DIV. OF THE STATE ARCHITECT
APP: 01-119409 INC:
REVIEWED FOR
SS ☑ FLS ☑ ACS ☑
DATE: 03/14/2022

NOLL & TAM ARCHITECTS
729 Heinz Avenue
Berkeley, CA 94710
tel 510.542.2200
fax 510.542.2201

SEAL

BASE LANDSCAPE ARCHITECTURE
SAN FRANCISCO / PORTLAND
www.baselandscape.com

LICENSED LANDSCAPE ARCHITECT
SVETLANA MARIE VOLEJNIKOVA
Signature
12.31.2023
Renewal Date
11.11.2021
Date
STATE OF CALIFORNIA

PROJECT TITLE

Peralta Community College District
Merritt Landscape Horticulture Complex

12500 Campus Drive
Oakland, CA 94616

BID SET

ISSUE DATE	03/03/2022
N&T JOB NUMBER	22003

REVISIONS

#	DATE	DESCRIPTION

DRAWN BY TY, JR, SV | CHECKED BY SV

SHEET TITLE
EXISTING CONDITIONS SITE PLAN

SHEET NUMBER
L1.00

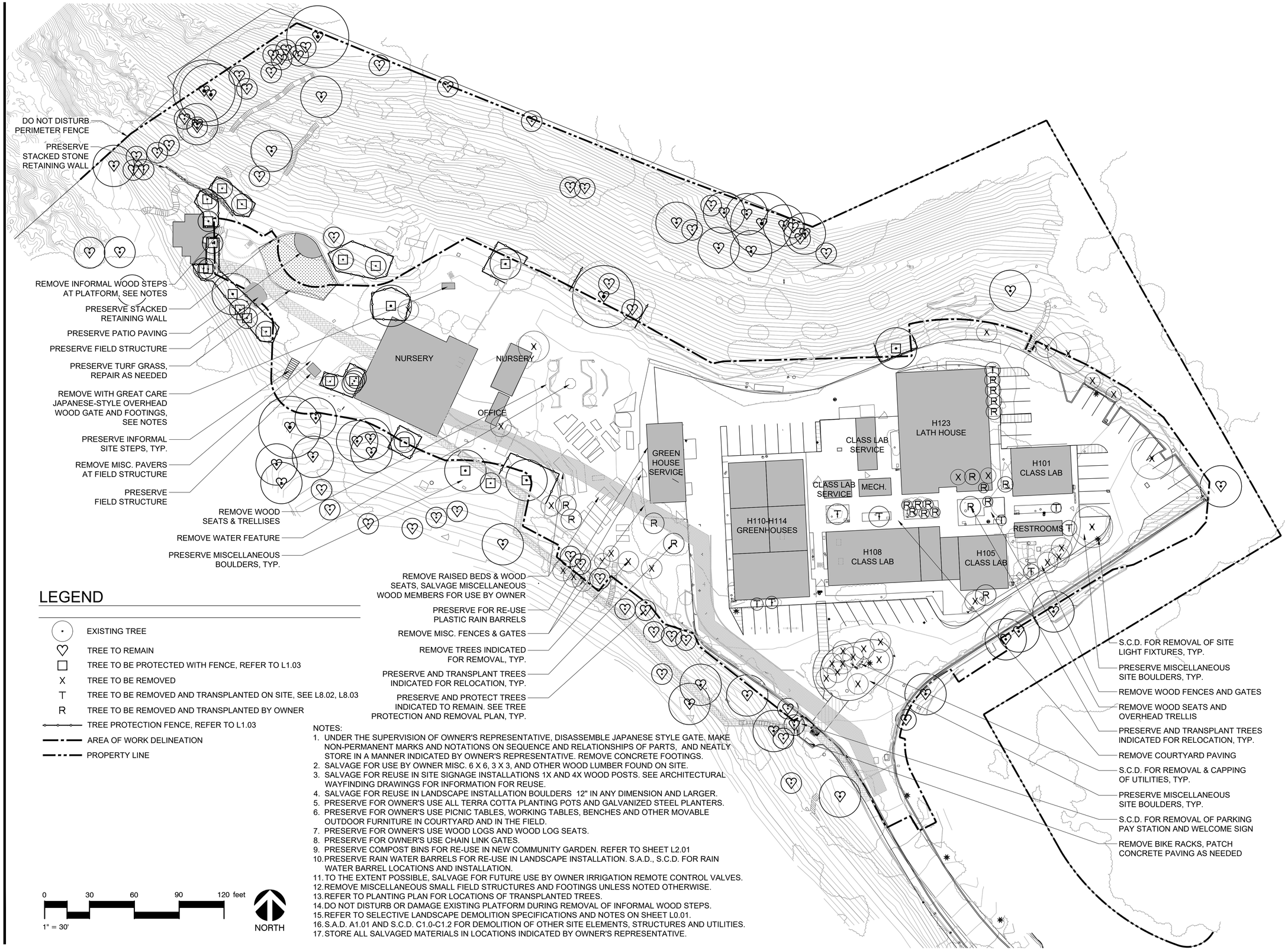

LEGEND

- EXISTING TREE
- TREE TO REMAIN
- TREE TO BE PROTECTED WITH FENCE, REFER TO L1.03
- X TREE TO BE REMOVED
- T TREE TO BE REMOVED AND TRANSPLANTED ON SITE, SEE L8.02, L8.03
- R TREE TO BE REMOVED AND TRANSPLANTED BY OWNER
- TREE PROTECTION FENCE, REFER TO L1.03
- AREA OF WORK DELINEATION
- PROPERTY LINE

0 30 60 90 120 feet

1" = 30'

NORTH

NOTES:

1. UNDER THE SUPERVISION OF OWNER'S REPRESENTATIVE, DISASSEMBLE JAPANESE STYLE GATE. MAKE NON-PERMANENT MARKS AND NOTATIONS ON SEQUENCE AND RELATIONSHIPS OF PARTS, AND NEATLY STORE IN A MANNER INDICATED BY OWNER'S REPRESENTATIVE. REMOVE CONCRETE FOOTINGS.
2. SALVAGE FOR USE BY OWNER MISC. 6 X 6, 3 X 3, AND OTHER WOOD LUMBER FOUND ON SITE.
3. SALVAGE FOR REUSE IN SITE SIGNAGE INSTALLATIONS 1X AND 4X WOOD POSTS. SEE ARCHITECTURAL WAYFINDING DRAWINGS FOR INFORMATION FOR REUSE.
4. SALVAGE FOR REUSE IN LANDSCAPE INSTALLATION BOULDERS 12" IN ANY DIMENSION AND LARGER.
5. PRESERVE FOR OWNER'S USE ALL TERRA COTTA PLANTING POTS AND GALVANIZED STEEL PLANTERS.
6. PRESERVE FOR OWNER'S USE PICNIC TABLES, WORKING TABLES, BENCHES AND OTHER MOVABLE OUTDOOR FURNITURE IN COURTYARD AND IN THE FIELD.
7. PRESERVE FOR OWNER'S USE WOOD LOGS AND WOOD LOG SEATS.
8. PRESERVE FOR OWNER'S USE CHAIN LINK GATES.
9. PRESERVE COMPOST BINS FOR RE-USE IN NEW COMMUNITY GARDEN. REFER TO SHEET L2.01
10. PRESERVE RAIN WATER BARRELS FOR RE-USE IN LANDSCAPE INSTALLATION. S.A.D., S.C.D. FOR RAIN WATER BARREL LOCATIONS AND INSTALLATION.
11. TO THE EXTENT POSSIBLE, SALVAGE FOR FUTURE USE BY OWNER IRRIGATION REMOTE CONTROL VALVES.
12. REMOVE MISCELLANEOUS SMALL FIELD STRUCTURES AND FOOTINGS UNLESS NOTED OTHERWISE.
13. REFER TO PLANTING PLAN FOR LOCATIONS OF TRANSPLANTED TREES.
14. DO NOT DISTURB OR DAMAGE EXISTING PLATFORM DURING REMOVAL OF INFORMAL WOOD STEPS.
15. REFER TO SELECTIVE LANDSCAPE DEMOLITION SPECIFICATIONS AND NOTES ON SHEET L0.01.
16. S.A.D. A1.01 AND S.C.D. C1.0-C1.2 FOR DEMOLITION OF OTHER SITE ELEMENTS, STRUCTURES AND UTILITIES.
17. STORE ALL SALVAGED MATERIALS IN LOCATIONS INDICATED BY OWNER'S REPRESENTATIVE.

APPROVALS

IDENTIFICATION STAMP
DIV. OF THE STATE ARCHITECT
APP: 01-119409 INC:
REVIEWED FOR
SS ☑ FLS ☑ ACS ☑
DATE: 03/14/2022

NOLL & TAM ARCHITECTS

729 Heinz Avenue
Berkeley, CA 94710
tel 510.542.2200
fax 510.542.2201

SEAL

BASE LANDSCAPE ARCHITECTURE
SAN FRANCISCO / PORTLAND
www.baselandscape.com

LICENSED LANDSCAPE ARCHITECT
SVETLANA MARIE VOLEJNIKOVA
Signature 12.31.2023
Renewal Date
11.11.2021
Date
STATE OF CALIFORNIA

PROJECT TITLE

Peralta Community College District
Merritt Landscape Horticulture Complex

12500 Campus Drive
Oakland, CA 94616

BID SET

ISSUE DATE	03/03/2022
N&T JOB NUMBER	22003

REVISIONS

	DATE	DESCRIPTION

DRAWN BY TY, JR, SV | CHECKED BY SV

SHEET TITLE

SELECTIVE LANDSCAPE DEMOLITION PLAN

SHEET NUMBER

L1.01

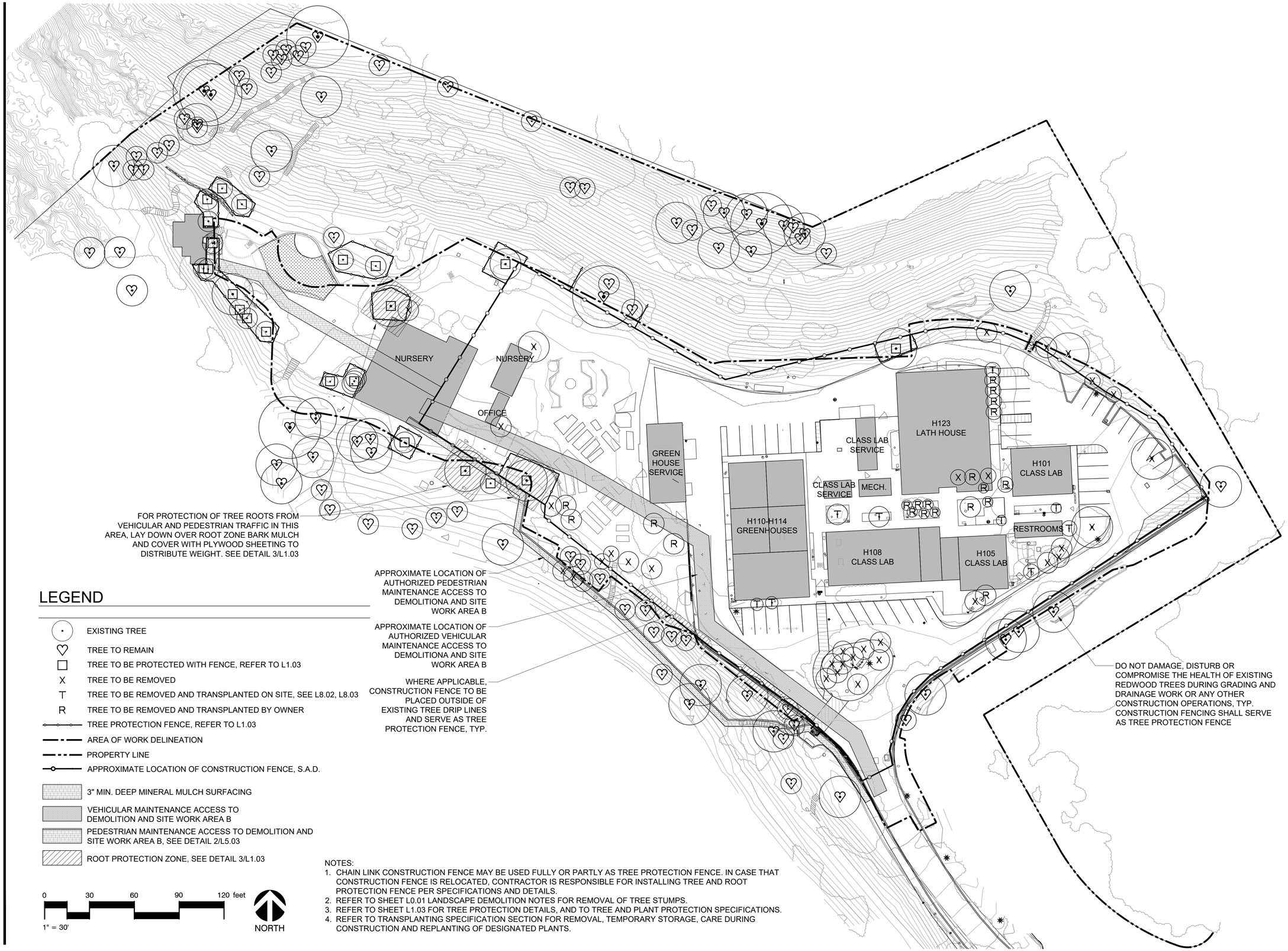

LEGEND

- EXISTING TREE
- TREE TO REMAIN
- TREE TO BE PROTECTED WITH FENCE, REFER TO L1.03
- X TREE TO BE REMOVED
- T TREE TO BE REMOVED AND TRANSPLANTED ON SITE, SEE L8.02, L8.03
- R TREE TO BE REMOVED AND TRANSPLANTED BY OWNER
- TREE PROTECTION FENCE, REFER TO L1.03
- AREA OF WORK DELINEATION
- PROPERTY LINE
- APPROXIMATE LOCATION OF CONSTRUCTION FENCE, S.A.D.
- 3" MIN. DEEP MINERAL MULCH SURFACING
- VEHICULAR MAINTENANCE ACCESS TO DEMOLITION AND SITE WORK AREA B
- PEDESTRIAN MAINTENANCE ACCESS TO DEMOLITION AND SITE WORK AREA B, SEE DETAIL 2/L5.03
- ROOT PROTECTION ZONE, SEE DETAIL 3/L1.03

0 30 60 90 120 feet

1" = 30'

NORTH

NOTES:
1. CHAIN LINK CONSTRUCTION FENCE MAY BE USED FULLY OR PARTLY AS TREE PROTECTION FENCE. IN CASE THAT CONSTRUCTION FENCE IS RELOCATED, CONTRACTOR IS RESPONSIBLE FOR INSTALLING TREE AND ROOT PROTECTION FENCE PER SPECIFICATIONS AND DETAILS.
2. REFER TO SHEET L0.01 LANDSCAPE DEMOLITION NOTES FOR REMOVAL OF TREE STUMPS.
3. REFER TO SHEET L1.03 FOR TREE PROTECTION DETAILS, AND TO TREE AND PLANT PROTECTION SPECIFICATIONS.
4. REFER TO TRANSPLANTING SPECIFICATION SECTION FOR REMOVAL, TEMPORARY STORAGE, CARE DURING CONSTRUCTION AND REPLANTING OF DESIGNATED PLANTS.

APPROVALS

IDENTIFICATION STAMP
DIV. OF THE STATE ARCHITECT
APP: 01-119409 INC:
REVIEWED FOR
SS ☑ FLS ☑ ACS ☑
DATE: 03/14/2022

NOLL & TAM ARCHITECTS
729 Heinz Avenue
Berkeley, CA 94710
tel 510.542.2200
fax 510.542.2201

SEAL

BASE LANDSCAPE ARCHITECTURE
SAN FRANCISCO / PORTLAND
www.baselandscape.com

LICENSED LANDSCAPE ARCHITECT
SVETLANA MARIE VOLEJNIKOVA
Signature
12.31.2023
Renewal Date
11.11.2021
Date
STATE OF CALIFORNIA

PROJECT TITLE

Peralta Community College District
Merritt Landscape Horticulture Complex

12500 Campus Drive
Oakland, CA 94616

BID SET

ISSUE DATE 03/03/2022
N&T JOB NUMBER 22003

REVISIONS

	DATE	DESCRIPTION

DRAWN BY TY, JR, SV | CHECKED BY SV

SHEET TITLE

EXISTING TREE PROTECTION AND REMOVAL PLAN

SHEET NUMBER

L1.02

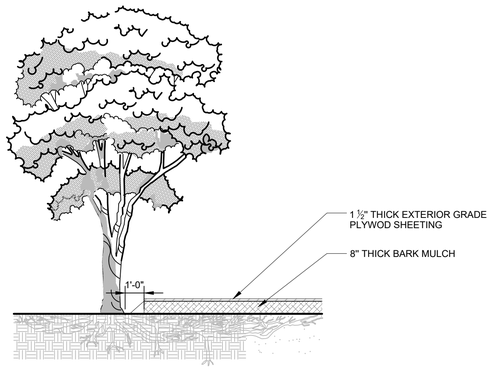

NOTES:
1. PROVIDE ROOT PROTECTION COVERING 4' BEYOND DRIPLINE OR AS DIRECTED BY ARBORIST OR LANDSCAPE ARCHITECT.
2. PROVIDE MULCH CUT SHEET AND SAMPLE TO LANDSCAPE ARCHITECT FOR APPROVAL PRIOR TO INSTALLATION.

3 ROOT PROTECTION

NTS

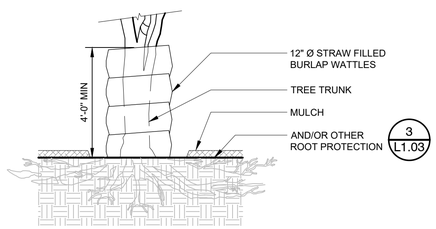

NOTES:
1. BURLAP TREE PROTECTION TO BE USED ONLY IN AREAS WHERE TREE PROTECTION FENCING IS NOT POSSIBLE TO INSTALL. BURLAP TREE PROTECTION TO BE APPROVED FOR EACH INDIVIDUAL TREE BY LANDSCAPE ARCHITECT PRIOR TO INSTALLATION.
2. INSTALL ADDITIONAL PROTECTION OF ROOTS WITH MULCH, PLYWOOD OR OTHER MEANS. ROOT PROTECTION, INCLUDING THICKNESS OF MULCH TO BE APPROVED BY LANDSCAPE ARCHITECT PRIOR TO INSTALLATION.

2 BURLAP TREE PROTECTION

3/8" = 1'-0"

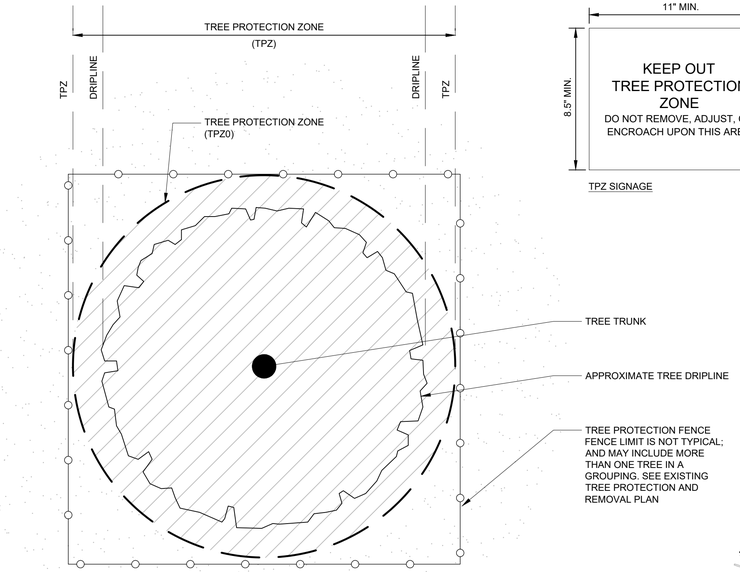

PLAN

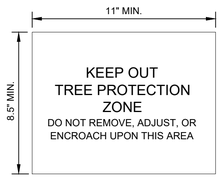

TPZ SIGNAGE

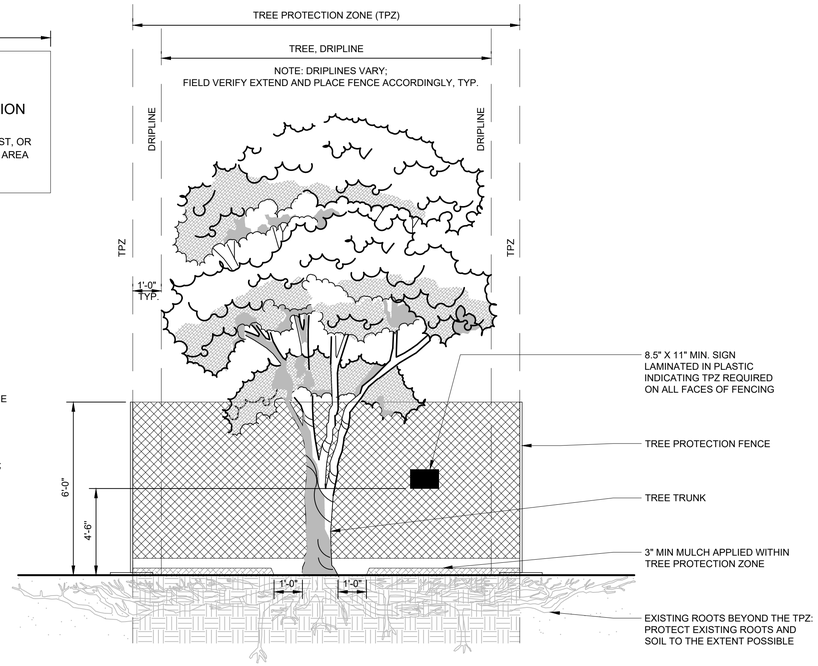

SECTION

NOTE:
1. SEE SPECIFICATIONS FOR ADDITIONAL TREE PROTECTION REQUIREMENTS.
2. PRUNE TREES ONLY PER WRITTEN DIRECTION OF AN INDEPENDENT ARBORIST OR LANDSCAPE ARCHITECT.
3. NO EQUIPMENT SHALL OPERATE INSIDE THE PROTECTIVE FENCING, INCLUDING DURING FENCE INSTALLATION AND REMOVAL.
4. REFER TO PLANTING SPEC FOR MULCH TYPE.
5. DO NOT CHANGE GRADE ELEVATION LEVEL IN TREE ROOT ZONE, UNLESS SPECIFICALLY CALLED FOR ON DRAWINGS.
6. DO NOT PRUNE ROOTS INSIDE TREE PROTECTION ZONE. DO NOT PRUNE ROOTS OUTSIDE TREE PROTECTION ZONE THAT ARE LARGER THAN 2" DIAMETER. USE ONLY CLEAN, SHARP HAND TOOLS TO PRUNE ROOTS.

1 TREE PROTECTION FENCE

NTS

APPROVALS

IDENTIFICATION STAMP
DIV. OF THE STATE ARCHITECT
APP: 01-119409 INC:
REVIEWED FOR
SS ☑ FLS ☑ ACS ☑
DATE: 03/14/2022

NOLL & TAM ARCHITECTS
729 Heinz Avenue
Berkeley, CA 94710
tel 510.542.2200
fax 510.542.2201

SEAL

BASE LANDSCAPE ARCHITECTURE
SAN FRANCISCO / PORTLAND
www.baselandscape.com

LICENSED LANDSCAPE ARCHITECT
SVETLANA MARIE VOLEJNIKOVA
Signature
12.31.2023
Renewal Date
11.11.2021
Date
STATE OF CALIFORNIA

PROJECT TITLE

Peralta Community College District
Merritt Landscape Horticulture Complex

12500 Campus Drive
Oakland, CA 94616

BID SET

ISSUE DATE	03/03/2022
N&T JOB NUMBER	22003

REVISIONS

	DATE	DESCRIPTION

DRAWN BY TY, JR, SV | CHECKED BY SV

SHEET TITLE

TREE PROTECTION DETAILS AND NOTES

SHEET NUMBER

L1.03

SCHEDULE OF MATERIALS AND SITE FURNISHINGS

HIGHLIGHTED NOTES ARE ADD ALTS TO BASE BID

PAVING

SYMBOL	DESCRIPTION	DETAIL	MODEL	MANUFACTURER	MATERIAL	COLOR	FINISH	NOTES	SPEC SECTION	PROD. SBMTL	SHOP DWGS	MOCK-UP
P-01	CONCRETE PAVING, VEHICULAR	1/L5.00	CAST-IN-PLACE CONCRETE		PORTLAND CEMENT	NATURAL	TOP CAST 05 - MICRO ETCH		32 13 14	X		X
P-02	CONCRETE PAVING, PEDESTRIAN	1/L5.00	CAST-IN-PLACE CONCRETE		PORTLAND CEMENT	NATURAL	TOP CAST 05 - MICRO ETCH		32 13 14	X		X
P-03	FLUSH CONCRETE CURB	12/L5.00	CAST-IN-PLACE CONCRETE		PORTLAND CEMENT	NATURAL	TOP CASE 05 - MICRO ETCH		03 30 00	X		
P-04	RAISED CONCRETE CURB		CAST-IN-PLACE CONCRETE		PORTLAND CEMENT	NATURAL	TOP CAST 05 - MICRO ETCH	S.C.D.	03 30 00	X		
P-05	UNIT PAVER, PEDESTRIAN -TYPE A1	4/L5.00	LARGE SCALE CALARC 6 X 24 X 2.5	STEPSTONE, 408.499.8658	CONCRETE	GRANADA WHITE W/SLAG 1401; PORCELAIN W/SLAG 1413; ALMOND W/SLAG 1406	LIGHT SANDBLAST; STACKED BOND AND RUNNING BOND PATTERN	SEE PLANS FOR PATTERNS AND SAND SET & MORTARED INSTALLATION	32 14 00	X		X
P-06	UNIT PAVER, PEDESTRIAN - TYPE A2	4/L5.00	LARGE SCALE CALARC 12 X 24 X 2.5	STEPSTONE, 408.499.8658	CONCRETE	GRANADA WHITE W/SLAG 1401	LIGHT SANDBLAST	SAND SET AND MORTARED INSTALLATION	32 14 00	X		X
P-07	UNIT PAVER, VEHICULAR - TYPE B1	4/L5.00	NARROW MODULAR 6 X 24 X 4	STEPSTONE, 408.499.8658	CONCRETE	GRANADA WHITE W/SLAG 1401; PORCELAIN W/SLAG 1413; ALMOND W/SLAG 1406	LIGHT SANDBLAST; STACKED BOND AND RUNNING BOND PATTERN	SEE PLANS FOR PATTERNS AND SAND SET & MORTARED INSTALLATION	32 14 00	X		X
P-08	CORE GRAVEL PAVING, VEHICULAR	4/L5.01	CORE GRAVEL 65-30	CORE LANDSCAPE PRODUCTS 855.777.2673	HDPE; INFILL WITH 3/8" CRUSHED YOSEMITE TAN FROM LYNGSO	BLACK		ADD ALT: FIRE TRUCK RATED GRASS CRETE, BIODEGRADABLE MOLDED PULP FORMER; 3" AT PARKING, 4" AT ROAD	32 14 43	X		X
P-09	GRANITECRETE PAVING	5/L5.00	PEDESTRIAN PROFILE	GRANITECRETE, 408.858.9635	DECOMPOSED GRANITE FINES IN CEMENTITIOUS BINDER	NATURAL GOLD			32 15 41	X		X
P-10	MULCH SURFACING	2/L5.03	ANGULAR 3/8" TAFFY	LYNGSO, 650.364.1730	CRUSHED STONE	TAN/YELLOW/BUFF		PROVIDE 3" MIN DEPTH, RAKE SMOOTH	32 93 00	X		
P-11	TRUNCATED DOME PAVER	4/L5.00	12" X 12" X 2" NOMINAL	STEPSTONE, 408.499.8658		BRICK RED 1816	LIGHT SAND BLAST	ADJACENT TO UNIT PAVER PAVING	32 17 26 32 14 00	X		X
P-12	TACTILE WARNING STRIP - S.C.D.		SURFACE APPLIED MAT		POLYURETHANE	BRICK RED		AT CONCRETE PAVING	32 17 26	X		
P-13	BOULDERS - TYPE A	6/L7.03	SONOMA FIELD STONE	LYNGSO, 650.364.1730	STONE	NATURAL	NATURAL WITH MOSSES AND LYCHENS	IN BIORETENTION AREAS; SUPPLEMENT TO EXISTING SITE BOULDERS	32 93 00	X		
P-14	BOULDERS - TYPE B	6/L7.03	ROSE GOLD BOULDER	LYNGSO, 650.364.1730	STONE	NATURAL PINKISH		IN MAIN ACADEMIC COURTYARD ONLY	32 93 00	X		
P-15	COBBLES	4/L7.03	POMO TAN COBBLES	WHEELER ZAMARONI, 707.543.8400	STONE	NATURAL	NATURAL	IN BIORETENTION AREA	32 93 00	X		
P-16	PEBBLES		2" - 3" BLACK LA PAZ PEBBLES	LYNGSO, 650.364.1730	STONE	BLACK / DARK GRAY	NATURAL	AT DOWNSPOUTS IN COURTYARD	32 93 00	X		
P-17	WOOD HEADER	7/L5.00							32 15 00	X		
P-18	WOOD LUMBER EDGING	6/L5.00			6 X 6 CONSTRUCTION HEART REDWOOD	NATURAL	NATURAL		06 10 63	X	X	

WALLS AND STAIRS

SYMBOL	DESCRIPTION	DETAIL	MODEL	MANUFACTURER	MATERIAL	COLOR	FINISH	NOTES	SPEC SECTION	PROD. SBMTL	SHOP DWGS	MOCK-UP
W-01	CMU RETAINING WALL	1/L5.02	6" W, 8" H, 16" L	BASALITE, 707.678.7939	CMU BLOCK	225 - LIGHT GRAY	COMB FACE	WITH CMU CAP	04 22 00	X	X	X
W-02	CMU CURVED WALL	2/L5.04	12" W, 8" H, 16" L	BASALITE, 707.678.7939	CMU BLOCK	225 - LIGHT GRAY	COMB FACE	WITH WOOD SLAT SEAT ON LOWER WALL	04 22 00	X	X	X
W-03	CMU LOW WALL, 6" WIDE	3/L5.02	6" W, 8" H, 16" L	BASALITE, 707.678.7939	CMU BLOCK	225 - LIGHT GREY	COMB FACE	WITH CMU CAP	04 22 00	X	X	X
W-04	CMU LOW WALL, 12" WIDE	2/L5.02	12" W, 8" H, 16" L	BASALITE, 707.678.7939	CMU BLOCK	225 - LIGHT GREY	COMB FACE	WITH CMU CAP	04 22 00	X	X	X
W-06	CMU CAP		4" H, 16" L	BASALITE, 707.678.7939	CMU BLOCK	225 - LIGHT GREY	PRECISION	WIDTH TO MATCH CMU WALL: 12" OR 6"	04 22 00	X	X	X
W-07	SITE WALL - S.S.D., S.C.D.		STEEL PILE WITH WOOD LAGGING					PIER TYPE A PER S4.03				
W-08	CONCRETE STAIRS WITH HANDRAILS	3/L5.01	CAST-IN-PLACE CONCRETE		PORTLAND CEMENT	NATURAL	TOP CAST 05 - MICRO ETCH		03 30 00	X	X	

SITE FURNISHING

SYMBOL	DESCRIPTION	DETAIL	MODEL	MANUFACTURER	MATERIAL	COLOR	FINISH	NOTES	SPEC SECTION	PROD. SBMTL	SHOP DWGS	MOCK-UP
S-01	MOVABLE PICNIC TABLE AND BENCHES	5/L5.07	MULTIPLICITY TABLE AND TWO BENCHES	LANDSCAPE FORMS, 800.430.6209	METAL AND THERMALLY MODIFIED ASH	METAL: TBD	POWDERCOATED STEEL	FREE-STANDING, MOVABLE	12 93 00	X		
S-02	WHEELCHAIR ACCESSIBLE RAISED BED	5/L5.03	FORWARD-FACING WHEELCHAIR ACCESSIBLE RAISED GARDEN BED	ACCESSIBLE GARDENS	CEDAR WOOD	NATURAL	NATURAL	PROVIDE REQUIRED TURNING CLEARANCES	12 93 00	X		
S-03	WOOD BENCH - TYPE A		LINK - PIANO KEY STRAIGHT, BACKED, NO ARMS	LANDSCAPE FORMS, 800.430.6206	METAL SUPPORT, WOOD SLAT SEAT	WOOD - NATURAL, METAL - TBD	POWDER COAT	FREE STANDING, THERMALLY MODIFIED ASH	12 93 00	X		
S-04	WOOD BENCH - TYPE B		LINK - PIANO KEY STRAIGHT, BACKLESS, NO ARMS	LANDSCAPE FORMS, 800.430.6206	METAL SUPPORT, WOOD SLAT SEAT	WOOD - NATURAL, METAL - TBD	POWDER COAT	TOP WALL MOUNT SUPPORT	12 93 00	X		
S-05	DRINKING FOUNTAIN	2/L5.01	LK4420EVG	ELKAY, 916.386.7500	STEEL	EVERGREEN	POWDER COAT	ADA COMPLIANT. FRONT APPROACH, TWO-LEVEL BOWL, SURFACE MOUNTED	12 93 00	X		
S-06	BOTTLE FILLER	2/L5.01	LK4410BFEVG	ELKAY, 916.386.7500	STEEL	EVERGREEN	POWDER COAT	ADA COMPLIANT, FRONT APPROACH, SURFACE MOUNTED	12N93 00	X		
S-07	BIKE RACK	2/L5.03	WELLE CIRCULAR WCR02-SQ-SF	BICYCLE PARKING, 800.637.0496	SQUARE STEEL TUBE		GALVANIZED	SURFACE MOUNTED	12 93 00	X		
S-08	GARDEN FOUNTAIN - TYPE A	3/L5.03	BASIN - LARGE / HURRICANE	CONCRETE WORKS, 510.534.7141	PRECAST CONCRETE	TBD	TBD	ADD ALT ONLY. SEE MEP DRAWINGS FOR PLUMBING AND ELECTRICAL CONNECTIONS; EXACT LOCATION TBD	13 12 13	X		
S-09	GARDEN FOUNTAIN - TYPE B	3/L5.03	SWIRL PATTER BASALT	LYNGSO, 650.364.1730	STONE	NATURAL	NATURAL, CARVED	ADD ALT ONLY. SEE MEP DRAWINGS FOR PLUMBING AND ELECTRICAL CONNECTIONS; EXACT LOCATION TBD	13 12 13	X		
S-10	GARDEN FOUNTAIN - TYPE C	3/L5.03	NATURAL BASALT COLUMN, ONE EACH 24" H, 36" H, 48" H	LYNGSO, 650.364.1730	STONE	NATURAL	NATURAL	ADD ALT ONLY. SEE MEP DRAWINGS FOR PLUMBING AND ELECTRICAL CONNECTIONS; EXACT LOCATION TBD	12 13 12	X		
S-11	FESTIVAL STRING LIGHTS - S.A.D. FOR ATTACHMENTS		LITOSPHERE TRUE RGB+E, LIST-BK-24-RGBW-OP-80-24	TIVOLI, 714.957.6101		BLACK CORD & END CAPS, OPAL GLOBE		24 V; LED BULB, 24" O.C.; SUSPENDED ON CATENARY CABLE; PROVIDE TWO STRANDS. S.A.D. FOR DETAIL	DIVISION 26	X		

STRUCTURES AND AMENITIES

SYMBOL	DESCRIPTION	DETAIL	MODEL	MANUFACTURER	MATERIAL	COLOR	FINISH	NOTES	SPEC SECTION	PROD. SBMTL	SHOP DWGS	MOCK-UP
A-01	RAISED VEGETABLE BED	1/L5.03		N/A	THERMALLY MODIFIED ASH	NATURAL	NATURAL	8` L, 4` W, 2` H	06 10 63	X	X	
A-02	WOOD SEAT WITH STORAGE	1/L5.07		N/A	THERMALLY MODIFIED ASH	NATURAL	NATURAL	HINGED TOP, 6` L, 2` W, 1.5` H	06 10 63	X	X	
A-03	OVERHEAD TRELLIS AT CAMPUS ENTRY	1/L5.06		N/A	STEEL, THERMALLY MODIFIED ASH		PAINTED STEEL	FIRE RATED WOOD COMPOSITE	05 50 10; 06 10 63	X	X	
A-04	OVERHEAD TRELLIS	1/L5.05		N/A	STEEL, THERMALLY MODIFIED ASH		PAINTED STEEL	FIRE RATED WOOD COMPOSITE	05 50 10; 06 10 63	X	X	
A-05	STRAW BALE PARTITION	4/L5.02	3-STRINGER 48" L, 24" W, 16" H		STRAW	NATURAL				X		
A-06	STACKED WOOD SEAT WALL	2/L5.07	PIANO KEY SLATS		4 X 4 CONSTRUCTION HEART REDWOOD	NATURAL	NATURAL		06 10 63	X	X	X
A-07	WOOD CAP SEAT	6/L5.02	PIANO KEY AND INLINE SLATS	THERMORY WOOD - MOUNT STORM FOREST PRODUCTS, 707.838.3177	2 X 4 STANDARD STOCK THERMALLY MODIFIED WHITE ASH	BROWN	UNOILED WOOD, PAINTED STEEL, COLOR TBD	MOUNTED TO TOP OF CMU WALLS	06 10 63	X	X	
A-08	CURVED WOOD CAP SEAT	1/L5.04	PIANO KEY SLATS	THERMORY WOOD - MOUNT STORM FOREST PRODUCTS, 707.838.3177	2 X 4 STANDARD STOCK THERMALLY MODIFIED WHITE ASH	BROWN	UNOILED WOOD, PAINTED STEEL, COLOR TBD	MOUNTED TO TOP OF CURVED CMU WALL	06 10 63	X	X	
A-09	WOOD BENCH, CUSTOM	3/L5.07	PIANO KEY AND INLINE SLATS	THERMORY WOOD - MOUNT STORM FOREST PRODUCTS, 707.838.3177	2 X 4 STANDARD STOCK THERMALLY MODIFIED WHITE ASH	BROWN	UNOILED WOOD, PAINTED STEEL, COLOR TBD	FREE-STANDING, IN COURTYARD	06 10 63	X	X	

APPROVALS

IDENTIFICATION STAMP
DIV. OF THE STATE ARCHITECT
APP: 01-119409 INC:
REVIEWED FOR
SS ☑ FLS ☑ ACS ☑
DATE: 03/14/2022

NOLL & TAM ARCHITECTS
729 Heinz Avenue
Berkeley, CA 94710
tel 510.542.2200
fax 510.542.2201

BASE LANDSCAPE ARCHITECTURE
SAN FRANCISCO / PORTLAND
www.baselandscape.com

SEAL

LICENSED LANDSCAPE ARCHITECT
SVETLANA MARIE VOLEJNIKOVA-BASE
Signature
12.31.2023
Renewal Date
11.11.2021
Date
STATE OF CALIFORNIA

PROJECT TITLE

Peralta Community College District
Merritt Landscape Horticulture Complex

12500 Campus Drive
Oakland, CA 94616

BID SET

ISSUE DATE 03/03/2022
N&T JOB NUMBER 22003

REVISIONS

	DATE	DESCRIPTION

DRAWN BY TY, JR, SV CHECKED BY SV

SHEET TITLE
LANDSCAPE MATERIALS SCHEDULE

SHEET NUMBER
L2.00

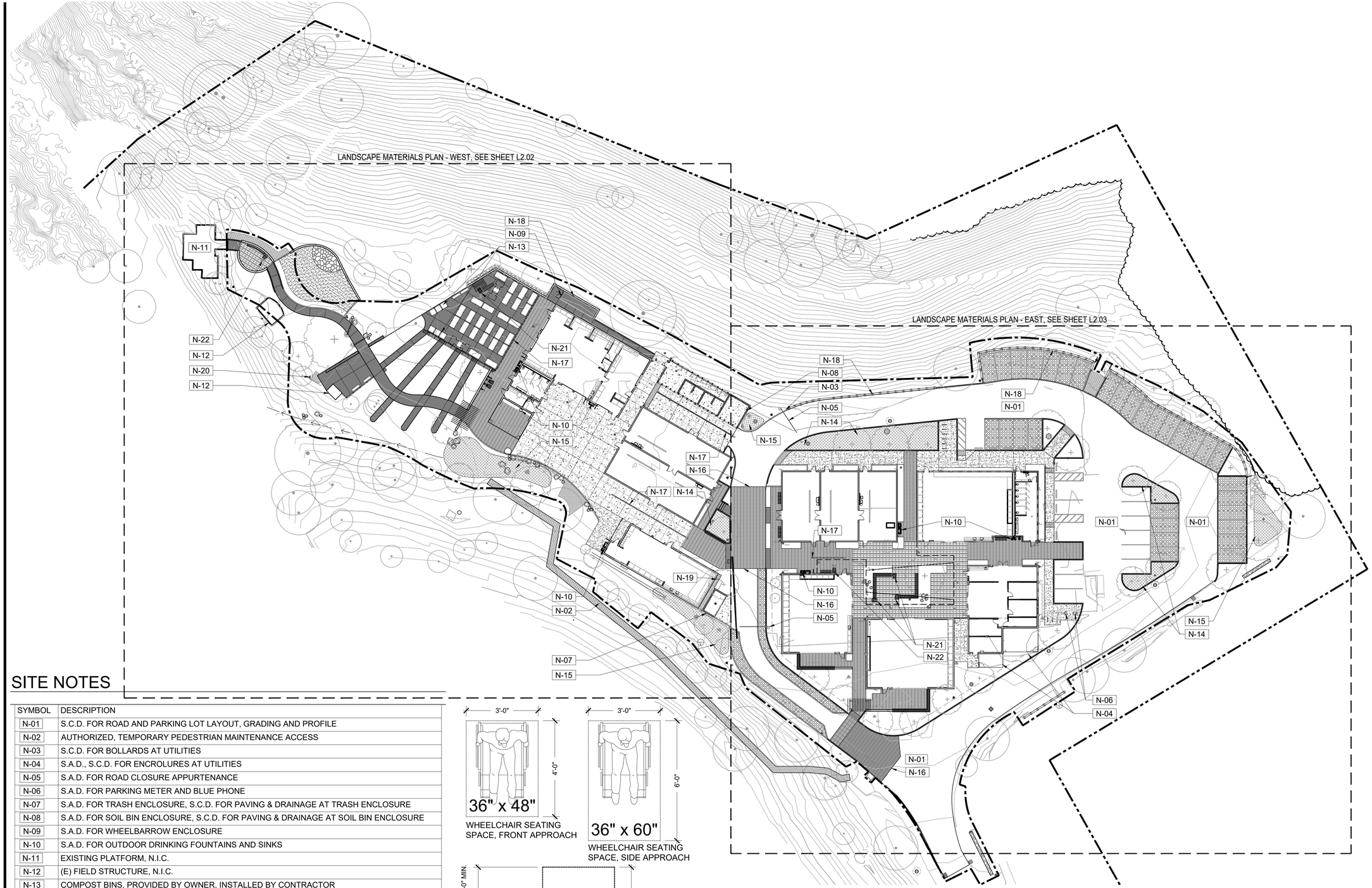

SITE NOTES

SYMBOL	DESCRIPTION
N-01	S.C.D. FOR ROAD AND PARKING LOT LAYOUT, GRADING AND PROFILE
N-02	AUTHORIZED, TEMPORARY PEDESTRIAN MAINTENANCE ACCESS
N-03	S.C.D. FOR BOLLARDS AT UTILITIES
N-04	S.A.D., S.C.D. FOR ENCROLURES AT UTILITIES
N-05	S.A.D. FOR ROAD CLOSURE APPURTENANCE
N-06	S.A.D. FOR PARKING METER AND BLUE PHONE
N-07	S.A.D. FOR TRASH ENCLOSURE, S.C.D. FOR PAVING & DRAINAGE AT TRASH ENCLOSURE
N-08	S.A.D. FOR SOIL BIN ENCLOSURE, S.C.D. FOR PAVING & DRAINAGE AT SOIL BIN ENCLOSURE
N-09	S.A.D. FOR WHEELBARROW ENCLOSURE
N-10	S.A.D. FOR OUTDOOR DRINKING FOUNTAINS AND SINKS
N-11	EXISTING PLATFORM, N.I.C.
N-12	(E) FIELD STRUCTURE, N.I.C.
N-13	COMPOST BINS, PROVIDED BY OWNER, INSTALLED BY CONTRACTOR
N-14	BIORETENTION PLANTER, S.C.D.
N-15	RAIN GARDEN, S.C.D. FOR GRADING AND PROFILE
N-16	RAISED ROAD BED, S.C.D. FOR GRADING AND PROFILE
N-17	S.C.D. FOR TRENNCH DRAIN OR SHALLOW CHANNEL
N-18	S.S.D. FOR RETAINING WALL DETAIL; PROVIDE WEEP HOLES +/- 6` O.C.
N-19	S.A.D., S.C.D. FOR RELOCATED RAIN WATER BARRELS
N-20	S.A.D. FOR SIGNAGE
N-21	36" X 48" WHEELCHAIR SEATING SPACE, FRONT APPROACH
N-22	36" X 60" WHEELCHAIR SEATING SPACE, SIDE APPROACH

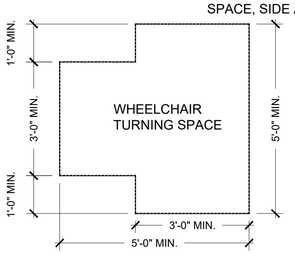

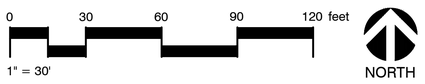

AREA OF WORK DELINEATION

PROPERTY LINE

NOTES:
1. REFER TO SHEET L0.01 FOR GENERAL NOTES AND ABBREVIATIONS.
2. REFER TO SHEET L2.00 FOR SCHEDULE OF MATERIALS AND SITE FURNISHINGS.
3. REFER TO G-SERIES FOR ACCESSIBLE PATH OF TRAVEL AND FIRE ACCESS.

APPROVALS

IDENTIFICATION STAMP
DIV. OF THE STATE ARCHITECT
APP: 01-119409 INC:
REVIEWED FOR
SS ☑ FLS ☑ ACS ☑
DATE: 03/14/2022

NOLL & TAM ARCHITECTS
729 Heinz Avenue
Berkeley, CA 94710
tel 510.542.2200
fax 510.542.2201

SEAL

BASE LANDSCAPE ARCHITECTURE
SAN FRANCISCO / PORTLAND
www.baselandscape.com

LICENSED LANDSCAPE ARCHITECT
SVETLANA MARIE VOLEJNIKOVA
Signature 12.31.2023
Renewal Date
11.11.2021
Date
STATE OF CALIFORNIA

PROJECT TITLE

Peralta Community College District
Merritt Landscape Horticulture Complex

12500 Campus Drive
Oakland, CA 94616

BID SET

ISSUE DATE	03/03/2022
N&T JOB NUMBER	22003

REVISIONS

	DATE	DESCRIPTION

DRAWN BY TY, JR, SV | CHECKED BY SV

SHEET TITLE

LANDSCAPE MATERIALS PLAN

SHEET NUMBER

L2.01

PAVING

SYMBOL	DESCRIPTION	DETAIL
P-01	CONCRETE PAVING, VEHICULAR	1/L5.00
P-02	CONCRETE PAVING, PEDESTRIAN	1/L5.00
P-03	FLUSH CONCRETE CURB	12/L5.00
P-04	RAISED CONCRETE CURB	
P-05	UNIT PAVER, PEDESTRIAN -TYPE A1	4/L5.00
P-06	UNIT PAVER, PEDESTRIAN - TYPE A2	4/L5.00
P-07	UNIT PAVER, VEHICULAR - TYPE B1	4/L5.00
P-08	CORE GRAVEL PAVING, VEHICULAR	4/L5.01
P-09	GRANITECRETE PAVING	5/L5.00
P-10	MULCH SURFACING	2/L5.03
P-11	TRUNCATED DOME PAVER	4/L5.00
P-12	TACTILE WARNING STRIP - S.C.D.	
P-13	BOULDERS - TYPE A	6/L7.03
P-14	BOULDERS - TYPE B	6/L7.03
P-15	COBBLES	4/L7.03
P-16	PEBBLES	
P-17	WOOD HEADER	7/L5.00
P-18	WOOD LUMBER EDGING	6/L5.00

WALLS AND STAIRS

SYMBOL	DESCRIPTION	DETAIL
W-01	CMU RETAINING WALL	1/L5.02
W-02	CMU CURVED WALL	2/L5.04
W-03	CMU LOW WALL, 6" WIDE	3/L5.02
W-04	CMU LOW WALL, 12" WIDE	2/L5.02
W-06	CMU CAP	
W-07	SITE WALL - S.S.D., S.C.D.	
W-08	CONCRETE STAIRS WITH HANDRAILS	3/L5.01

SITE FURNISHING

SYMBOL	DESCRIPTION	DETAIL
S-01	MOVABLE PICNIC TABLE AND BENCHES	5/L5.07
S-02	WHEELCHAIR ACCESSIBLE RAISED BED	5/L5.03
S-03	WOOD BENCH - TYPE A	
S-04	WOOD BENCH - TYPE B	
S-05	DRINKING FOUNTAIN	2/L5.01
S-06	BOTTLE FILLER	2/L5.01
S-07	BIKE RACK	2/L5.03
S-08	GARDEN FOUNTAIN - TYPE A	3/L5.03
S-09	GARDEN FOUNTAIN - TYPE B	3/L5.03
S-10	GARDEN FOUNTAIN - TYPE C	3/L5.03
S-11	FESTIVAL STRING LIGHTS - S.A.D. FOR ATTACHMENTS	

STRUCTURES AND AMENITIES

SYMBOL	DESCRIPTION	DETAIL
A-01	RAISED VEGETABLE BED	1/L5.03
A-02	WOOD SEAT WITH STORAGE	1/L5.07
A-03	OVERHEAD TRELLIS AT CAMPUS ENTRY	1/L5.06
A-04	OVERHEAD TRELLIS	1/L5.05
A-05	STRAW BALE PARTITION	4/L5.02
A-06	STACKED WOOD SEAT WALL	2/L5.07
A-07	WOOD CAP SEAT	6/L5.02
A-08	CURVED WOOD CAP SEAT	1/L5.04
A-09	WOOD BENCH, CUSTOM	3/L5.07

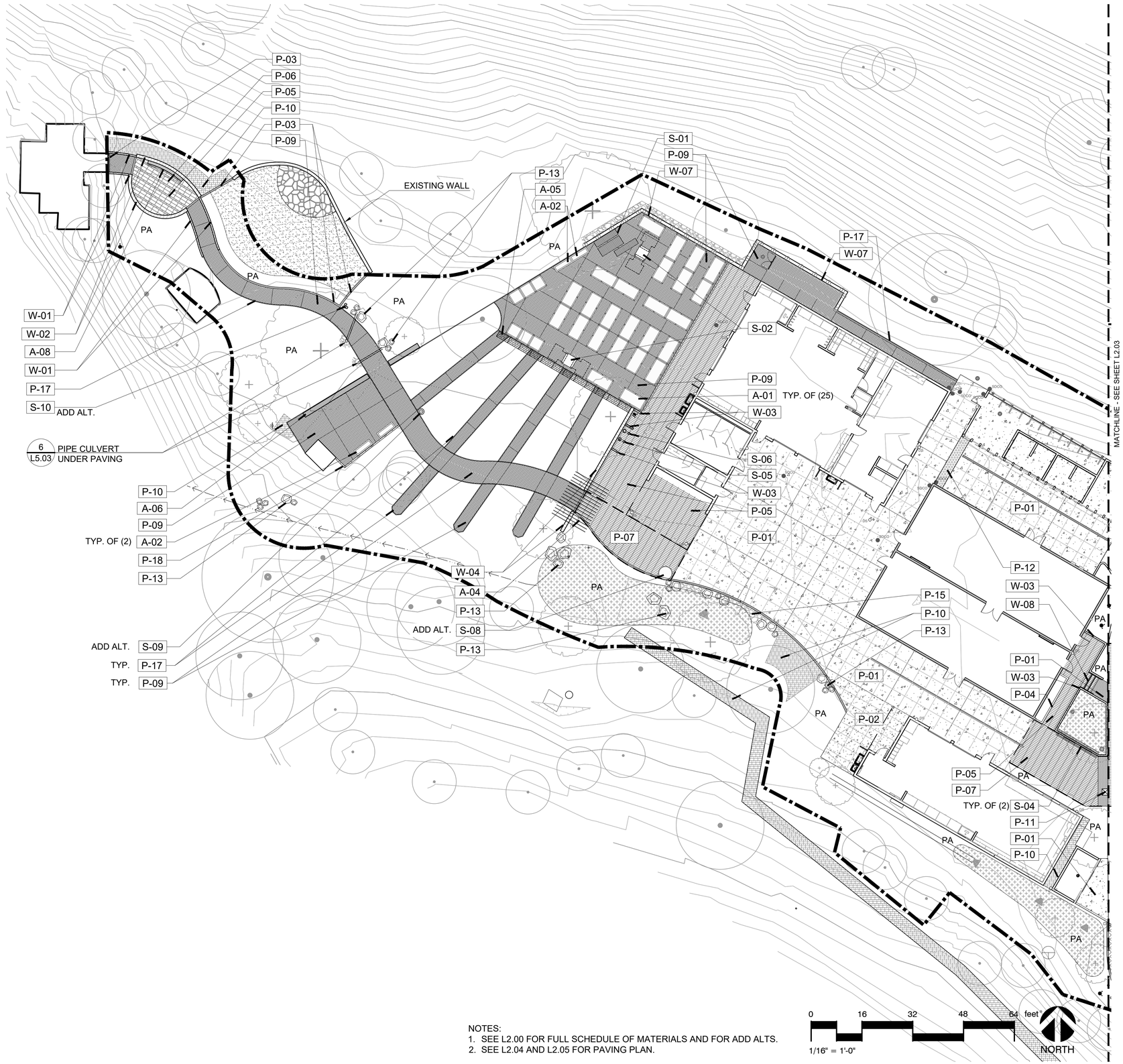

NOTES:
1. SEE L2.00 FOR FULL SCHEDULE OF MATERIALS AND FOR ADD ALTS.
2. SEE L2.04 AND L2.05 FOR PAVING PLAN.

0 16 32 48 64 feet
1/16" = 1'-0"
NORTH

APPROVALS

IDENTIFICATION STAMP
DIV. OF THE STATE ARCHITECT
APP: 01-119409 INC:
REVIEWED FOR
SS ☑ FLS ☑ ACS ☑
DATE: 03/14/2022

NOLL & TAM ARCHITECTS
729 Heinz Avenue
Berkeley, CA 94710
tel 510.542.2200
fax 510.542.2201

SEAL

BASE LANDSCAPE ARCHITECTURE
SAN FRANCISCO / PORTLAND
www.baselandscape.com

LICENSED LANDSCAPE ARCHITECT
SVETLANA MARIE VOLEJNIKOVA-VOE
Signature
12.31.2023
Renewal Date
11.11.2021
Date
STATE OF CALIFORNIA

PROJECT TITLE

Peralta Community College District
Merritt Landscape Horticulture Complex

12500 Campus Drive
Oakland, CA 94616

BID SET

ISSUE DATE 03/03/2022
N&T JOB NUMBER 22003

REVISIONS

	DATE	DESCRIPTION

DRAWN BY TY, JR, SV | CHECKED BY SV

SHEET TITLE

LANDSCAPE MATERIALS PLAN WEST

SHEET NUMBER

L2.02

PAVING

SYMBOL	DESCRIPTION	DETAIL
P-01	CONCRETE PAVING, VEHICULAR	1/L5.00
P-02	CONCRETE PAVING, PEDESTRIAN	1/L5.00
P-03	FLUSH CONCRETE CURB	12/L5.00
P-04	RAISED CONCRETE CURB	
P-05	UNIT PAVER, PEDESTRIAN -TYPE A1	4/L5.00
P-06	UNIT PAVER, PEDESTRIAN - TYPE A2	4/L5.00
P-07	UNIT PAVER, VEHICULAR - TYPE B1	4/L5.00
P-08	CORE GRAVEL PAVING, VEHICULAR	4/L5.01
P-09	GRANITECRETE PAVING	5/L5.00
P-10	MULCH SURFACING	2/L5.03
P-11	TRUNCATED DOME PAVER	4/L5.00
P-12	TACTILE WARNING STRIP - S.C.D.	
P-13	BOULDERS - TYPE A	6/L7.03
P-14	BOULDERS - TYPE B	6/L7.03
P-15	COBBLES	4/L7.03
P-16	PEBBLES	
P-17	WOOD HEADER	7/L5.00
P-18	WOOD LUMBER EDGING	6/L5.00

WALLS AND STAIRS

SYMBOL	DESCRIPTION	DETAIL
W-01	CMU RETAINING WALL	1/L5.02
W-02	CMU CURVED WALL	2/L5.04
W-03	CMU LOW WALL, 6" WIDE	3/L5.02
W-04	CMU LOW WALL, 12" WIDE	2/L5.02
W-06	CMU CAP	
W-07	SITE WALL - S.S.D., S.C.D.	
W-08	CONCRETE STAIRS WITH HANDRAILS	3/L5.01

SITE FURNISHING

SYMBOL	DESCRIPTION	DETAIL
S-01	MOVABLE PICNIC TABLE AND BENCHES	5/L5.07
S-02	WHEELCHAIR ACCESSIBLE RAISED BED	5/L5.03
S-03	WOOD BENCH - TYPE A	
S-04	WOOD BENCH - TYPE B	
S-05	DRINKING FOUNTAIN	2/L5.01
S-06	BOTTLE FILLER	2/L5.01
S-07	BIKE RACK	2/L5.03
S-08	GARDEN FOUNTAIN - TYPE A	3/L5.03
S-09	GARDEN FOUNTAIN - TYPE B	3/L5.03
S-10	GARDEN FOUNTAIN - TYPE C	3/L5.03
S-11	FESTIVAL STRING LIGHTS - S.A.D. FOR ATTACHMENTS	

STRUCTURES AND AMENITIES

SYMBOL	DESCRIPTION	DETAIL
A-01	RAISED VEGETABLE BED	1/L5.03
A-02	WOOD SEAT WITH STORAGE	1/L5.07
A-03	OVERHEAD TRELLIS AT CAMPUS ENTRY	1/L5.06
A-04	OVERHEAD TRELLIS	1/L5.05
A-05	STRAW BALE PARTITION	4/L5.02
A-06	STACKED WOOD SEAT WALL	2/L5.07
A-07	WOOD CAP SEAT	6/L5.02
A-08	CURVED WOOD CAP SEAT	1/L5.04
A-09	WOOD BENCH, CUSTOM	3/L5.07

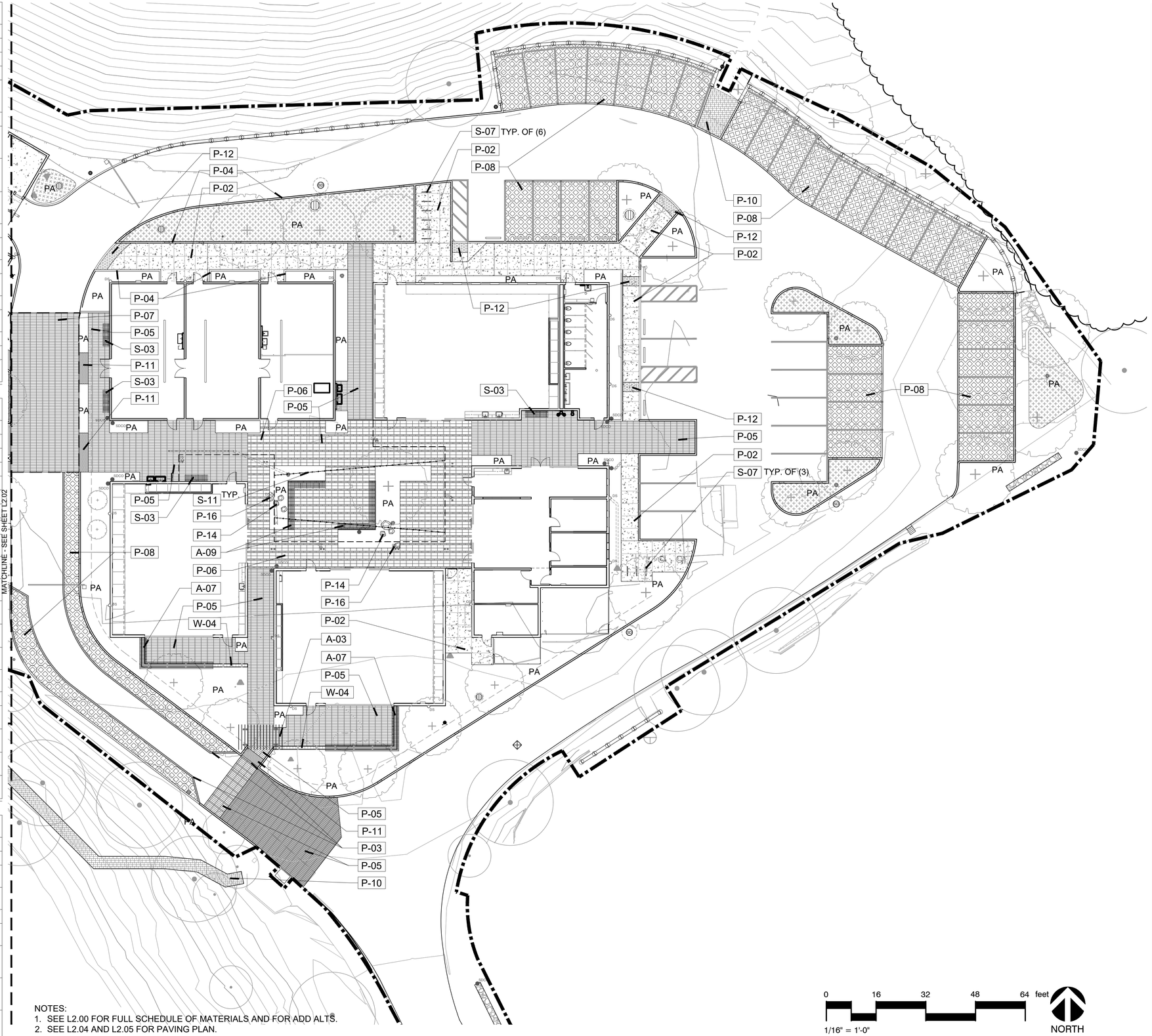

NOTES:
1. SEE L2.00 FOR FULL SCHEDULE OF MATERIALS AND FOR ADD ALTS.
2. SEE L2.04 AND L2.05 FOR PAVING PLAN.

0 16 32 48 64 feet
1/16" = 1'-0"
NORTH

APPROVALS

IDENTIFICATION STAMP
DIV. OF THE STATE ARCHITECT
APP: 01-119409 INC:
REVIEWED FOR
SS ☑ FLS ☑ ACS ☑
DATE: 03/14/2022

NOLL & TAM ARCHITECTS
729 Heinz Avenue
Berkeley, CA 94710
tel 510.542.2200
fax 510.542.2201

SEAL

BASE LANDSCAPE ARCHITECTURE
SAN FRANCISCO / PORTLAND
www.baselandscape.com

LICENSED LANDSCAPE ARCHITECT
SVETLANA MARIE VOLEJNIKOVA
Signature
12.31.2023
Renewal Date
11.11.2021
Date
STATE OF CALIFORNIA

PROJECT TITLE

Peralta Community College District
Merritt Landscape Horticulture Complex

12500 Campus Drive
Oakland, CA 94616

BID SET

ISSUE DATE 03/03/2022
N&T JOB NUMBER 22003

REVISIONS

	DATE	DESCRIPTION

DRAWN BY TY, JR, SV | CHECKED BY SV

SHEET TITLE

LANDSCAPE MATERIALS PLAN EAST

SHEET NUMBER

L2.03

SYMBOL	DESCRIPTION	DETAIL
P-01	CONCRETE PAVING, VEHICULAR	1/L5.00
P-02	CONCRETE PAVING, PEDESTRIAN	1/L5.00
P-03	FLUSH CONCRETE CURB	12/L5.00
P-04	RAISED CONCRETE CURB	
P-05	UNIT PAVER, PEDESTRIAN -TYPE A1	4/L5.00
P-06	UNIT PAVER, PEDESTRIAN - TYPE A2	4/L5.00
P-07	UNIT PAVER, VEHICULAR - TYPE B1	4/L5.00
P-08	CORE GRAVEL PAVING, VEHICULAR	4/L5.01
P-09	GRANITECRETE PAVING	5/L5.00
P-10	MULCH SURFACING	2/L5.03
P-11	TRUNCATED DOME PAVER	4/L5.00
P-12	TACTILE WARNING STRIP - S.C.D.	
P-13	BOULDERS - TYPE A	6/L7.03
P-14	BOULDERS - TYPE B	6/L7.03
P-15	COBBLES	4/L7.03
P-16	PEBBLES	
P-17	WOOD HEADER	7/L5.00
P-18	WOOD LUMBER EDGING	6/L5.00

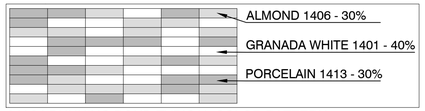

6 X 24 RUNNING BOND TYPICAL COLOR PATTERN
SCALE: 1/4" = 1'-0"

- AREA OF WORK DELINEATION
- EXTENT OF VEHICULAR UNIT PAVER
- FLUSH CONCRETE CURB
- BELOW SURFACE CURB EDGING AT PAVER
- TRANSITION BETWEEN VEHICULAR AND PEDESTRIAN PAVING

LEGEND

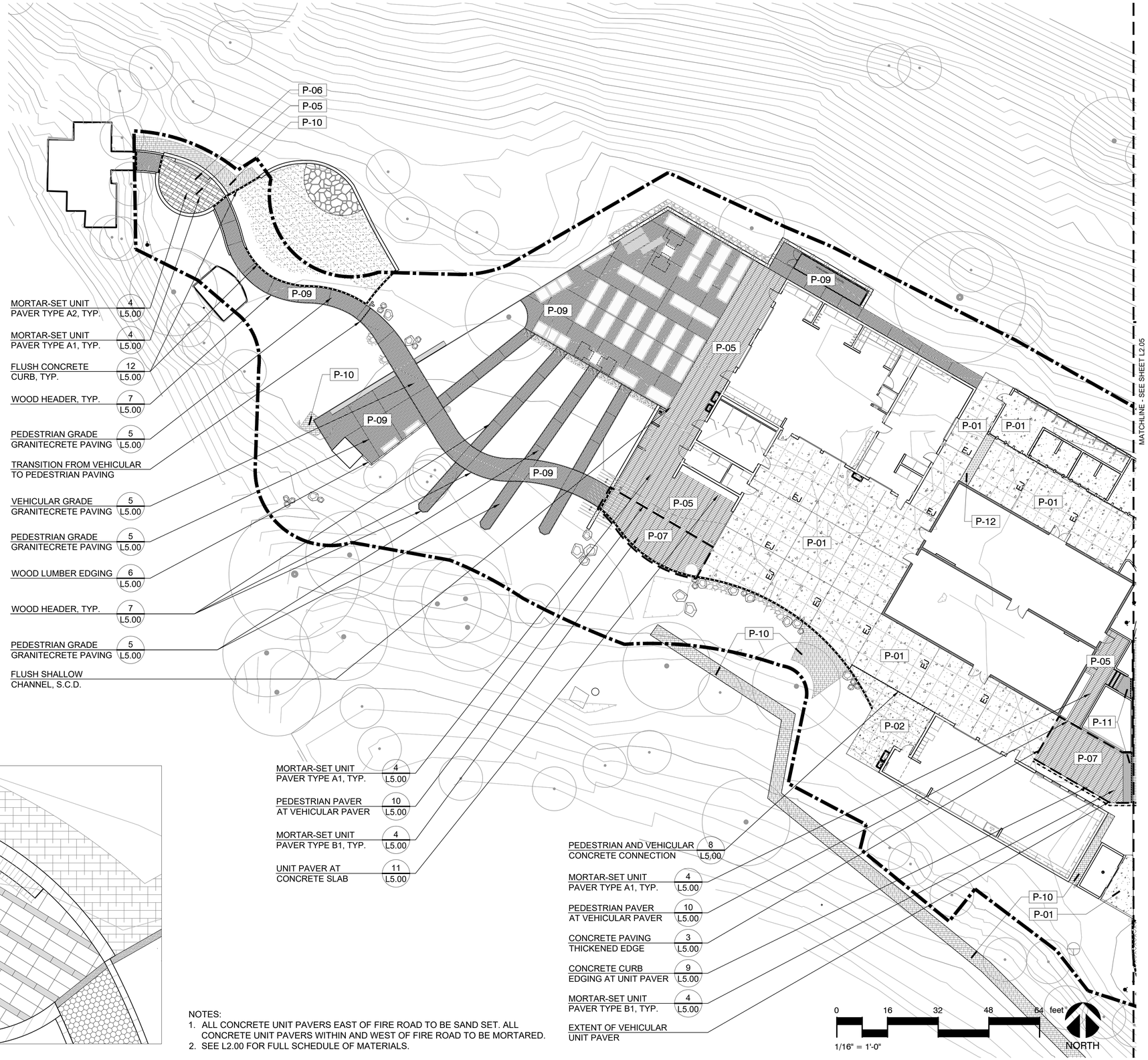

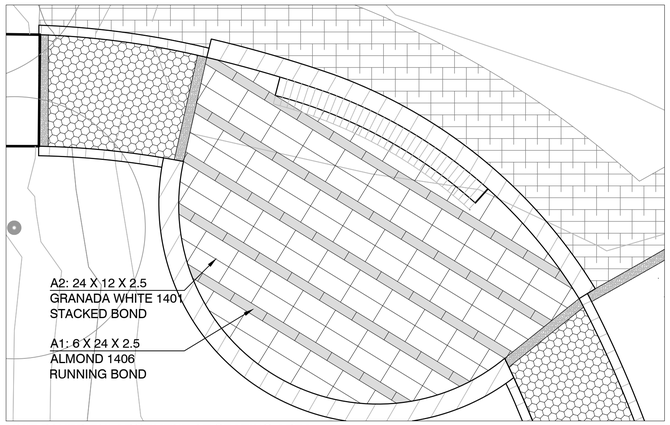

UNIT PAVER ENLARGEMENT AT SEATING AREA
SCALE: 1/4" = 1'-0"

NOTES:
1. ALL CONCRETE UNIT PAVERS EAST OF FIRE ROAD TO BE SAND SET. ALL CONCRETE UNIT PAVERS WITHIN AND WEST OF FIRE ROAD TO BE MORTARED.
2. SEE L2.00 FOR FULL SCHEDULE OF MATERIALS.

APPROVALS

IDENTIFICATION STAMP
DIV. OF THE STATE ARCHITECT
APP: 01-119409 INC:
REVIEWED FOR
SS ☑ FLS ☑ ACS ☑
DATE: 03/14/2022

NOLL & TAM ARCHITECTS
729 Heinz Avenue
Berkeley, CA 94710
tel 510.542.2200
fax 510.542.2201

SEAL

BASE LANDSCAPE ARCHITECTURE
SAN FRANCISCO / PORTLAND
www.baselandscape.com

LICENSED LANDSCAPE ARCHITECT
SVETLANA MARIE VOLEJNIKOVA
Signature
12.31.2023
Renewal Date
11.11.2021
Date
STATE OF CALIFORNIA

PROJECT TITLE

Peralta Community College District
Merritt Landscape Horticulture Complex

12500 Campus Drive
Oakland, CA 94616

BID SET

ISSUE DATE 03/03/2022
N&T JOB NUMBER 22003

REVISIONS

	DATE	DESCRIPTION

DRAWN BY TY, JR, SV | CHECKED BY SV

SHEET TITLE

LANDSCAPE PAVING PLAN WEST

SHEET NUMBER

L2.04

SYMBOL	DESCRIPTION	DETAIL
P-01	CONCRETE PAVING, VEHICULAR	1/L5.00
P-02	CONCRETE PAVING, PEDESTRIAN	1/L5.00
P-03	FLUSH CONCRETE CURB	12/L5.00
P-04	RAISED CONCRETE CURB	
P-05	UNIT PAVER, PEDESTRIAN -TYPE A1	4/L5.00
P-06	UNIT PAVER, PEDESTRIAN - TYPE A2	4/L5.00
P-07	UNIT PAVER, VEHICULAR - TYPE B1	4/L5.00
P-08	CORE GRAVEL PAVING, VEHICULAR	4/L5.01
P-09	GRANITECRETE PAVING	5/L5.00
P-10	MULCH SURFACING	2/L5.03
P-11	TRUNCATED DOME PAVER	4/L5.00
P-12	TACTILE WARNING STRIP - S.C.D.	
P-13	BOULDERS - TYPE A	6/L7.03
P-14	BOULDERS - TYPE B	6/L7.03
P-15	COBBLES	4/L7.03
P-16	PEBBLES	
P-17	WOOD HEADER	7/L5.00
P-18	WOOD LUMBER EDGING	6/L5.00

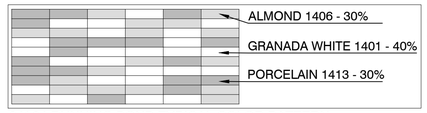

6 X 24 RUNNING BOND TYPICAL COLOR PATTERN
SCALE: 1/4" = 1'-0"

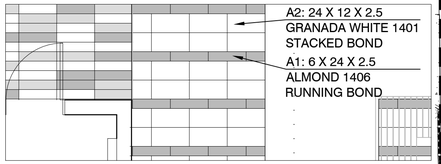

UNIT PAVER ENLARGEMENT AT COURTYARD
SCALE: 1/4" = 1'-0"

AREA OF WORK DELINEATION
EXTENT OF VEHICULAR UNIT PAVER
FLUSH CONCRETE CURB
BELOW SURFACE CURB EDGING AT PAVER
TRANSITION BETWEEN VEHICULAR AND PEDESTRIAN PAVING

LEGEND

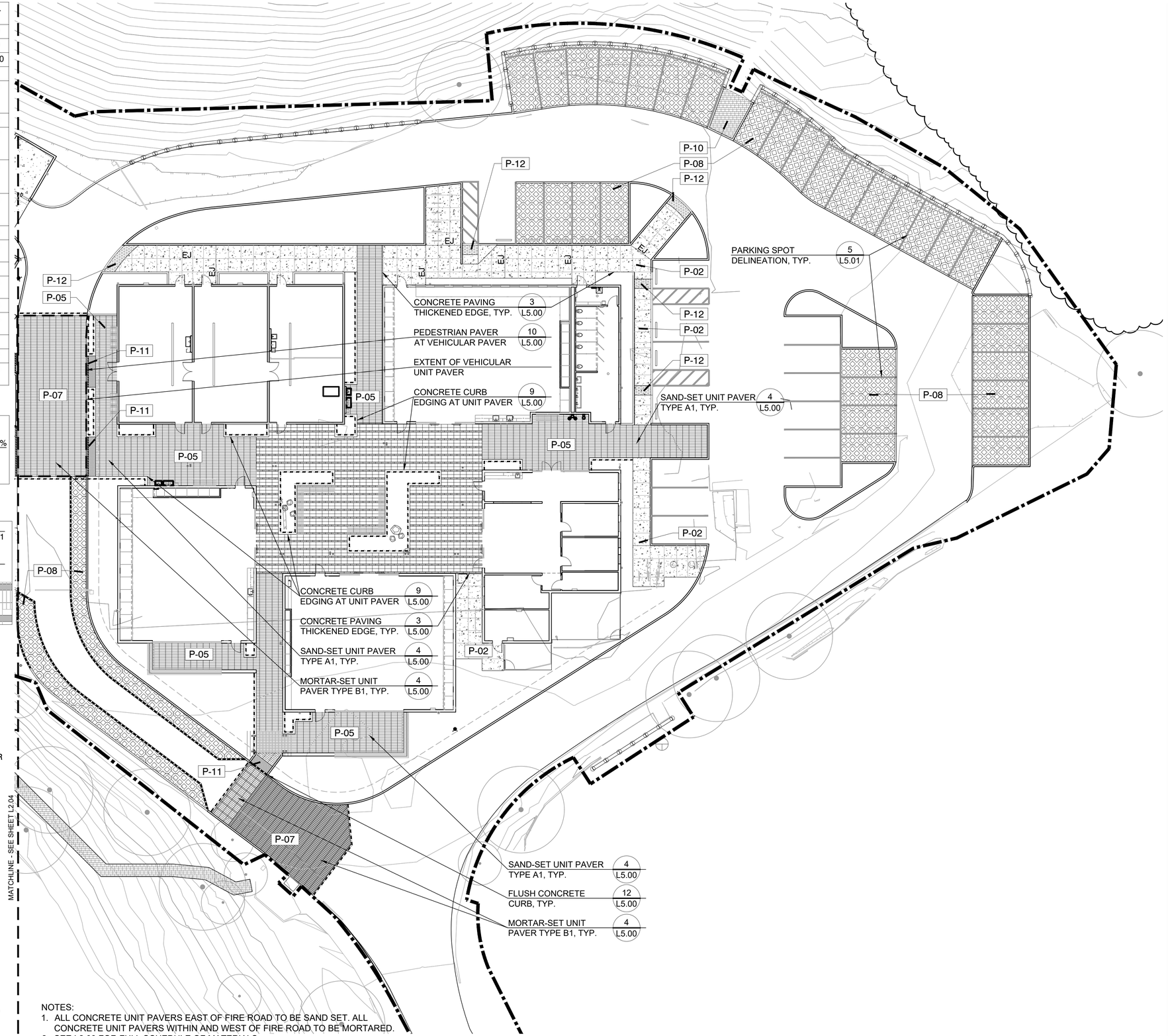

NOTES:
1. ALL CONCRETE UNIT PAVERS EAST OF FIRE ROAD TO BE SAND SET. ALL CONCRETE UNIT PAVERS WITHIN AND WEST OF FIRE ROAD TO BE MORTARED.
2. SEE L2.00 FOR FULL SCHEDULE OF MATERIALS.

0 16 32 48 64 feet
1/16" = 1'-0"
NORTH

APPROVALS

IDENTIFICATION STAMP
DIV. OF THE STATE ARCHITECT
APP: 01-119409 INC:
REVIEWED FOR
SS ☑ FLS ☑ ACS ☑
DATE: 03/14/2022

NOLL & TAM ARCHITECTS
729 Heinz Avenue
Berkeley, CA 94710
tel 510.542.2200
fax 510.542.2201

SEAL

BASE LANDSCAPE ARCHITECTURE
SAN FRANCISCO / PORTLAND
www.baselandscape.com

LICENSED LANDSCAPE ARCHITECT
SVETLANA MARIE VOLEJNIKOVA-BASE
Signature
12.31.2023
Renewal Date
11.11.2021
Date
STATE OF CALIFORNIA

PROJECT TITLE

Peralta Community College District
Merritt Landscape Horticulture Complex

12500 Campus Drive
Oakland, CA 94616

BID SET

ISSUE DATE 03/03/2022
N&T JOB NUMBER 22003

REVISIONS

	DATE	DESCRIPTION

DRAWN BY TY, JR, SV | CHECKED BY SV

SHEET TITLE

LANDSCAPE PAVING PLAN EAST

SHEET NUMBER

L2.05

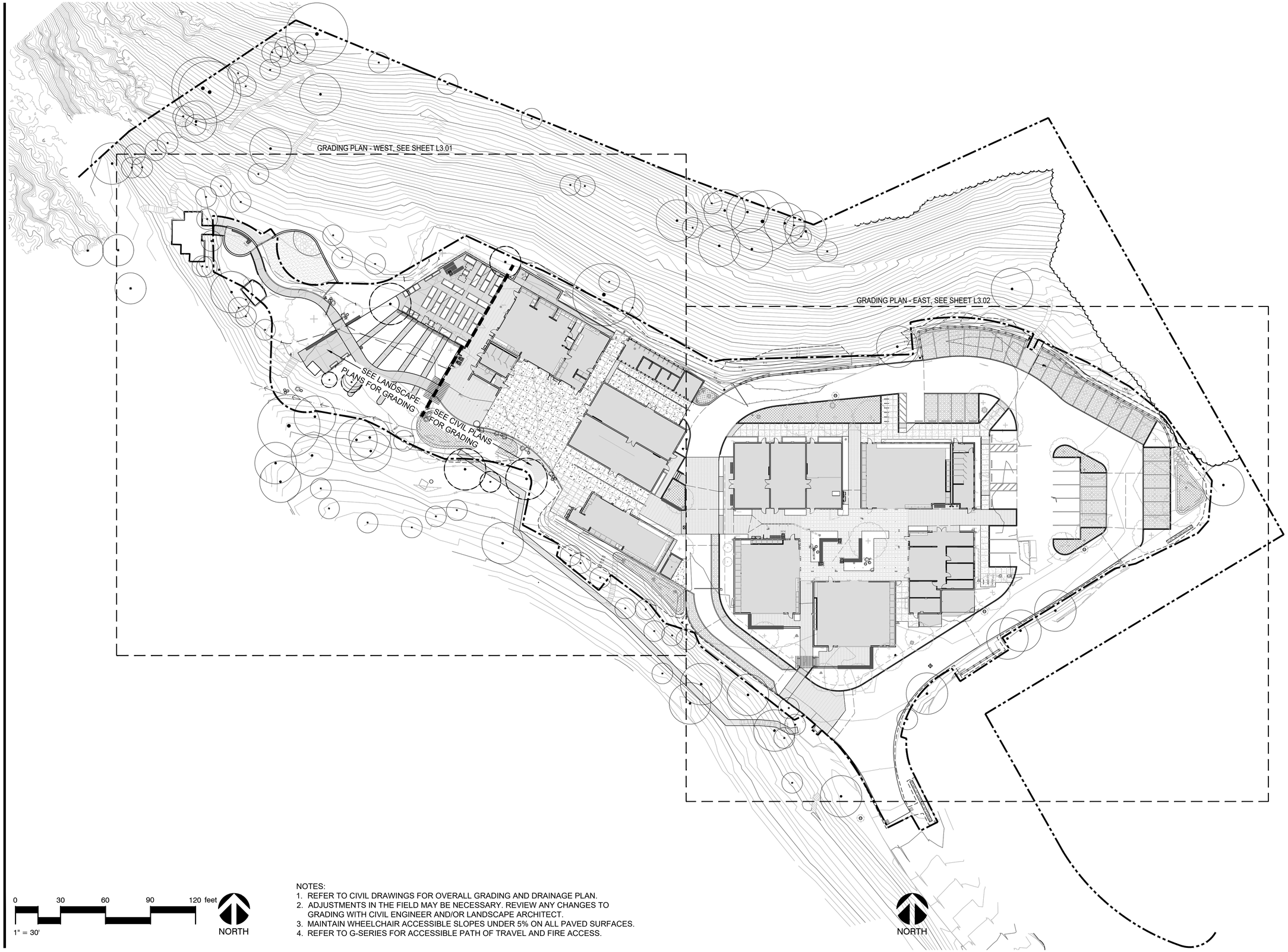

NOTES:
1. REFER TO CIVIL DRAWINGS FOR OVERALL GRADING AND DRAINAGE PLAN.
2. ADJUSTMENTS IN THE FIELD MAY BE NECESSARY. REVIEW ANY CHANGES TO GRADING WITH CIVIL ENGINEER AND/OR LANDSCAPE ARCHITECT.
3. MAINTAIN WHEELCHAIR ACCESSIBLE SLOPES UNDER 5% ON ALL PAVED SURFACES.
4. REFER TO G-SERIES FOR ACCESSIBLE PATH OF TRAVEL AND FIRE ACCESS.

APPROVALS

IDENTIFICATION STAMP
DIV. OF THE STATE ARCHITECT
APP: 01-119409 INC:
REVIEWED FOR
SS ☑ FLS ☑ ACS ☑
DATE: 03/14/2022

NOLL & TAM ARCHITECTS

729 Heinz Avenue
Berkeley, CA 94710
tel 510.542.2200
fax 510.542.2201

SEAL

BASE LANDSCAPE ARCHITECTURE
SAN FRANCISCO / PORTLAND
www.baselandscape.com

LICENSED LANDSCAPE ARCHITECT
SVETLANA MARIE VOLEJNIKOVA
Signature
12.31.2023
Renewal Date
11.11.2021
Date
STATE OF CALIFORNIA

PROJECT TITLE

Peralta Community College District

Merritt Landscape Horticulture Complex

12500 Campus Drive
Oakland, CA 94616

BID SET

ISSUE DATE	03/03/2022
N&T JOB NUMBER	22003

REVISIONS

	DATE	DESCRIPTION

DRAWN BY TY, JR, SV | CHECKED BY SV

SHEET TITLE

GRADING PLAN

SHEET NUMBER

L3.00

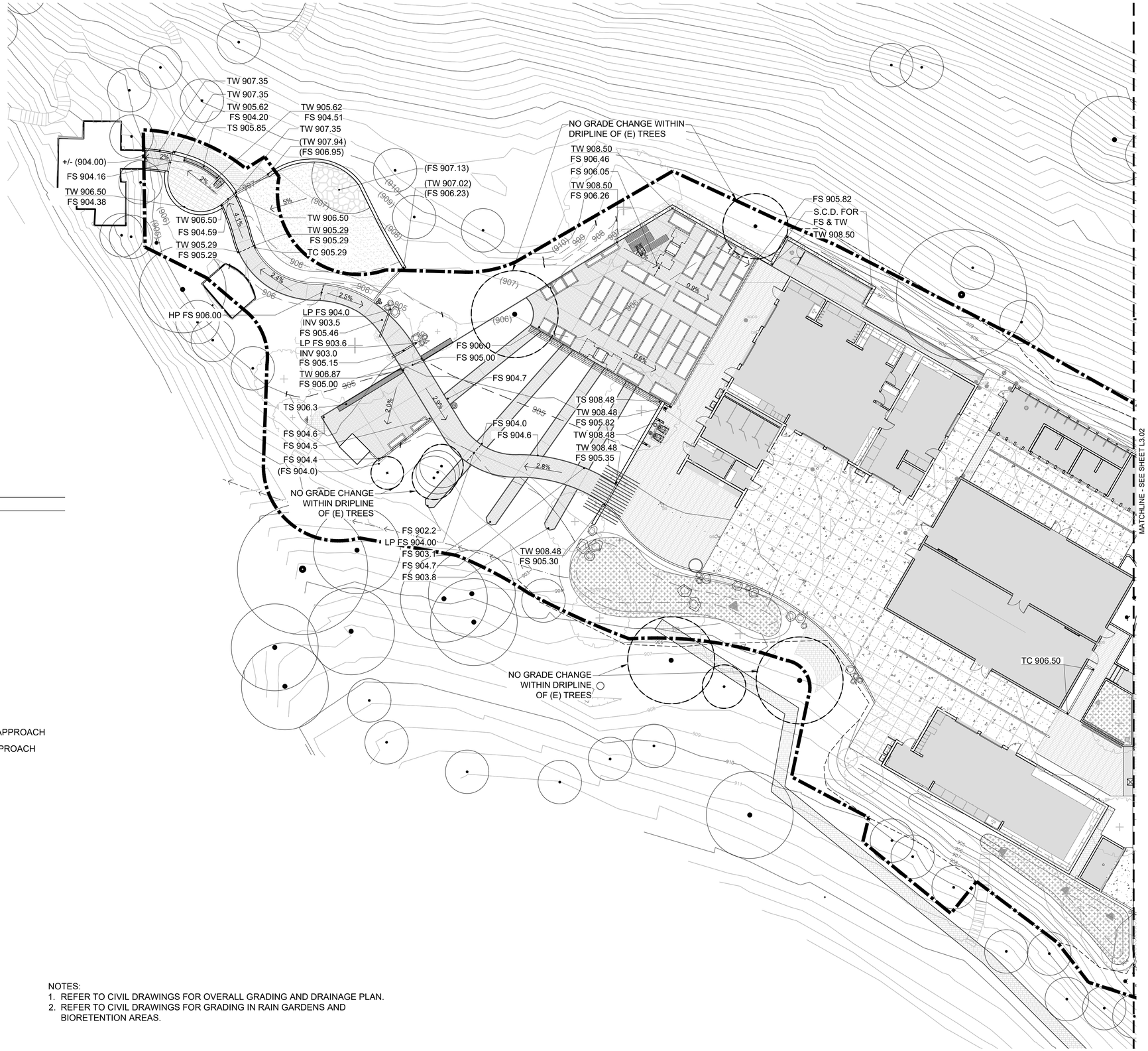

LEGEND

FS	FINISH SURFACE
HP	HIGH POINT
LP	LOW POINT
TC	TOP OF CURB
TS	TOP OF SURFACE
TW	TOP OF WALL
(904.00)	EXISTING SPOT ELEVATION
904.00	PROPOSED SPOT ELEVATION
(2%)	EXISTING SLOPE
2%	PROPOSED SLOPE
(905)	EXISTING CONTOUR LINE
905	PROPOSED CONTOUR LINE
-------	GRADE BREAK
	36" X 42" WHEELCHAIR SEATING SPACE, FRONT APPROACH
	36" X 60" WHEELCHAIR SEATING SPACE, SIDE APPROACH

0 16 32 48 64 feet

1/16" = 1'-0"

NORTH

NOTES:
1. REFER TO CIVIL DRAWINGS FOR OVERALL GRADING AND DRAINAGE PLAN.
2. REFER TO CIVIL DRAWINGS FOR GRADING IN RAIN GARDENS AND BIORETENTION AREAS.

APPROVALS

IDENTIFICATION STAMP
DIV. OF THE STATE ARCHITECT
APP: 01-119409 INC:
REVIEWED FOR
SS ☑ FLS ☑ ACS ☑
DATE: 03/14/2022

NOLL & TAM ARCHITECTS

729 Heinz Avenue
Berkeley, CA 94710
tel 510.542.2200
fax 510.542.2201

SEAL

BASE LANDSCAPE ARCHITECTURE
SAN FRANCISCO / PORTLAND
www.baselandscape.com

LICENSED LANDSCAPE ARCHITECT
SVEVA MARIE VOLEJNIKOVA
Signature
12.31.2023
Renewal Date
11.11.2021
Date
STATE OF CALIFORNIA

PROJECT TITLE

Peralta Community College District
Merritt Landscape Horticulture Complex

12500 Campus Drive
Oakland, CA 94616

BID SET

ISSUE DATE	03/03/2022
N&T JOB NUMBER	22003

REVISIONS

	DATE	DESCRIPTION

DRAWN BY TY, JR, SV | CHECKED BY SV

SHEET TITLE

GRADING PLAN WEST

SHEET NUMBER

L3.01

LEGEND

FS	FINISH SURFACE
HP	HIGH POINT
LP	LOW POINT
TC	TOP OF CURB
TS	TOP OF SURFACE
TW	TOP OF WALL
(904.00)	EXISTING SPOT ELEVATION
904.00	PROPOSED SPOT ELEVATION
(2%)	EXISTING SLOPE
2%	PROPOSED SLOPE
(905)	EXISTING CONTOUR LINE
905	PROPOSED CONTOUR LINE
-------	GRADE BREAK
	36" X 42" WHEELCHAIR SEATING SPACE,
	36" X 60" WHEELCHAIR SEATING SPACE,

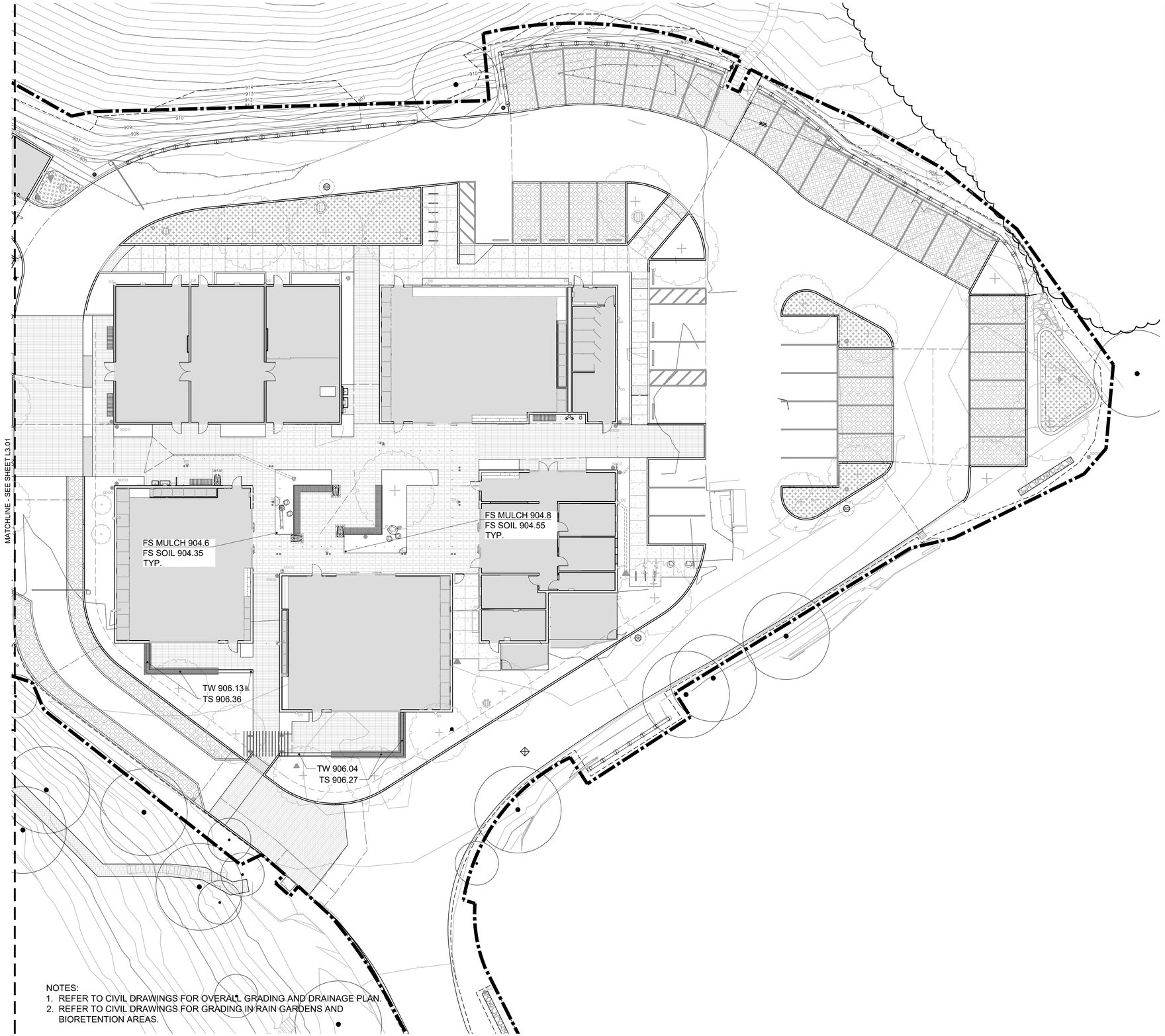

0 16 32 48 64 feet

1/16" = 1'-0"

NORTH

NOTES:
1. REFER TO CIVIL DRAWINGS FOR OVERALL GRADING AND DRAINAGE PLAN.
2. REFER TO CIVIL DRAWINGS FOR GRADING IN RAIN GARDENS AND BIORETENTION AREAS.

APPROVALS

IDENTIFICATION STAMP
DIV. OF THE STATE ARCHITECT
APP: 01-119409 INC:
REVIEWED FOR
SS ☑ FLS ☑ ACS ☑
DATE: 03/14/2022

NOLL & TAM ARCHITECTS

729 Heinz Avenue
Berkeley, CA 94710
tel 510.542.2200
fax 510.542.2201

SEAL

BASE LANDSCAPE ARCHITECTURE
SAN FRANCISCO / PORTLAND
www.baselandscape.com

LICENSED LANDSCAPE ARCHITECT
SVETLANA MARIE VOLEJNIKOVA-VOE
Signature
12.31.2023
Renewal Date
11.11.2021
Date
STATE OF CALIFORNIA

PROJECT TITLE

Peralta Community College District

Merritt Landscape Horticulture Complex

12500 Campus Drive
Oakland, CA 94616

BID SET

ISSUE DATE 03/03/2022
N&T JOB NUMBER 22003

REVISIONS

	DATE	DESCRIPTION

DRAWN BY TY, JR, SV | CHECKED BY SV

SHEET TITLE

GRADING PLAN EAST

SHEET NUMBER

L3.02

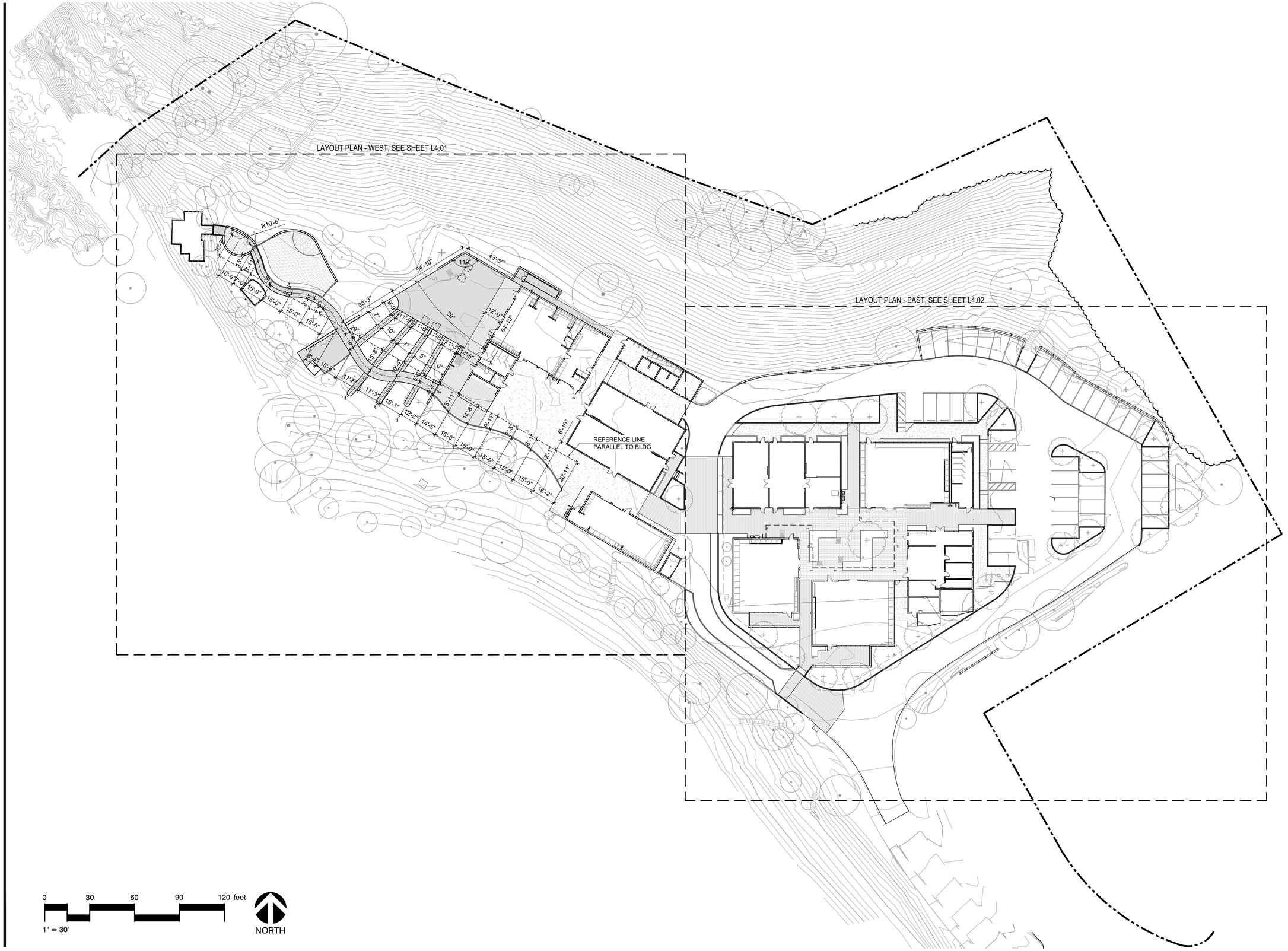

APPROVALS

IDENTIFICATION STAMP
DIV. OF THE STATE ARCHITECT
APP: 01-119409 INC:
REVIEWED FOR
SS ☑ FLS ☑ ACS ☑
DATE: 03/14/2022

NOLL & TAM ARCHITECTS

729 Heinz Avenue
Berkeley, CA 94710
tel 510.542.2200
fax 510.542.2201

SEAL

BASE LANDSCAPE ARCHITECTURE
SAN FRANCISCO / PORTLAND
www.baselandscape.com

LICENSED LANDSCAPE ARCHITECT
SVETLANA MARIE VOLEJNIKOVA
Signature
12.31.2023
Renewal Date
11.11.2021
Date
STATE OF CALIFORNIA

PROJECT TITLE

Peralta Community College District
Merritt Landscape Horticulture Complex

12500 Campus Drive
Oakland, CA 94616

BID SET

ISSUE DATE	03/03/2022
N&T JOB NUMBER	22003

REVISIONS

	DATE	DESCRIPTION

DRAWN BY TY, JR, SV | CHECKED BY SV

SHEET TITLE

LAYOUT PLAN

SHEET NUMBER

L4.00

0 16 32 48 64 feet

1/16" = 1'-0"

NORTH

APPROVALS

IDENTIFICATION STAMP
DIV. OF THE STATE ARCHITECT
APP: 01-119409 INC:
REVIEWED FOR
SS ☑ FLS ☑ ACS ☑
DATE: 03/14/2022

NOLL & TAM ARCHITECTS

729 Heinz Avenue
Berkeley, CA 94710
tel 510.542.2200
fax 510.542.2201

SEAL

BASE LANDSCAPE ARCHITECTURE
SAN FRANCISCO / PORTLAND
www.baselandscape.com

LICENSED LANDSCAPE ARCHITECT
SVETLANA MARIE VOLEJNIKOVA
Signature
12.31.2023
Renewal Date
11.11.2021
Date
STATE OF CALIFORNIA

PROJECT TITLE

Peralta Community College District
Merritt Landscape Horticulture Complex

12500 Campus Drive
Oakland, CA 94616

BID SET

ISSUE DATE 03/03/2022
N&T JOB NUMBER 22003

REVISIONS

	DATE	DESCRIPTION

DRAWN BY TY, JR, SV | CHECKED BY SV

SHEET TITLE

LAYOUT PLAN WEST

SHEET NUMBER

L4.01

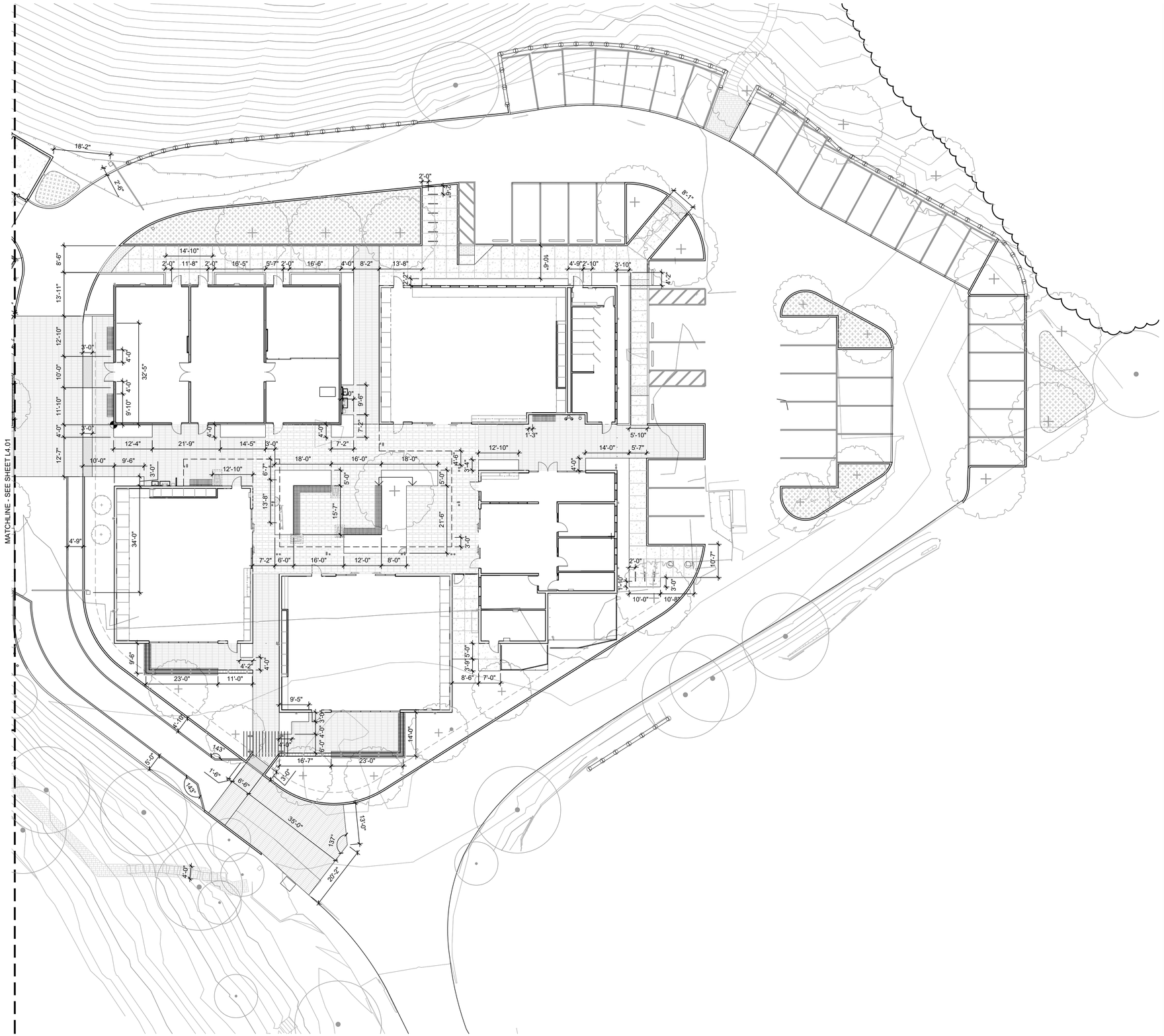

APPROVALS

IDENTIFICATION STAMP
DIV. OF THE STATE ARCHITECT
APP: 01-119409 INC:
REVIEWED FOR
SS ☑ FLS ☑ ACS ☑
DATE: 03/14/2022

NOLL & TAM ARCHITECTS

729 Heinz Avenue
Berkeley, CA 94710
tel 510.542.2200
fax 510.542.2201

SEAL

BASE LANDSCAPE ARCHITECTURE
SAN FRANCISCO / PORTLAND
www.baselandscape.com

LICENSED LANDSCAPE ARCHITECT
SVETLANA MARIE VOLEJNIKOVA
Signature
12.31.2023
Renewal Date
11.11.2021
Date
STATE OF CALIFORNIA

PROJECT TITLE

Peralta Community College District
Merritt Landscape Horticulture Complex

12500 Campus Drive
Oakland, CA 94616

BID SET

ISSUE DATE	03/03/2022
N&T JOB NUMBER	22003

REVISIONS

	DATE	DESCRIPTION

DRAWN BY TY, JR, SV | CHECKED BY SV

SHEET TITLE

LAYOUT PLAN EAST

SHEET NUMBER

L4.02

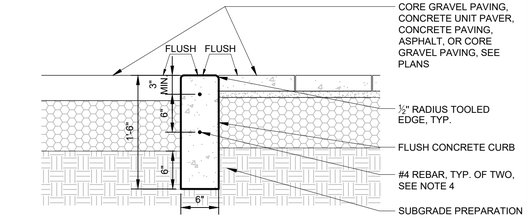

CORE GRAVEL PAVING, CONCRETE UNIT PAVER, CONCRETE PAVING, ASPHALT, OR CORE GRAVEL PAVING, SEE PLANS

½" RADIUS TOOLED EDGE, TYP.

FLUSH CONCRETE CURB

#4 REBAR, TYP. OF TWO, SEE NOTE 4

SUBGRADE PREPARATION PER GEOTECHNICAL ENGINEER RECOMMENDATIONS AND PROJECT SPECIFICATIONS

AT TWO TYPES OF HARDSCAPE PAVING

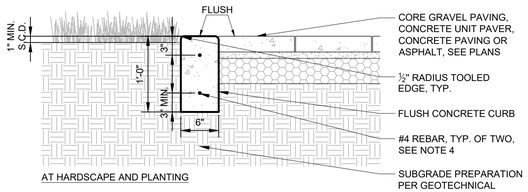

CORE GRAVEL PAVING, CONCRETE UNIT PAVER, CONCRETE PAVING OR ASPHALT, SEE PLANS

½" RADIUS TOOLED EDGE, TYP.

FLUSH CONCRETE CURB

#4 REBAR, TYP. OF TWO, SEE NOTE 4

SUBGRADE PREPARATION PER GEOTECHNICAL ENGINEER RECOMMENDATIONS AND PROJECT SPECIFICATIONS

AT HARDSCAPE AND PLANTING

NOTES:
1. ALL CONCRETE TO BE CLASS A CONCRETE.
2. PLACE ½" THICK EXPANSION JOINTS FULL WIDTH 20' O.C. MAX. SPACING. CONTROL JOINTS AT 10' MAX. SPACING.
3. S.C.D. FOR ASPHALT CONCRETE PAVEMENT AND CONCRETE SIDEWALK DETAILS FOR ADJACENT PAVING SECTIONS.
4. ALTERNATE REINFORCEMENT: USE FIBER MATRIX ADD MIXTURE PER SPECIFICATIONS.
5. EXTEND BOTTOM OF CURB 6" MIN. BELOW ASPHALT CONCRETE PAVING SUB-BASE.

12 FLUSH CONCRETE CURB

1" = 1'-0"

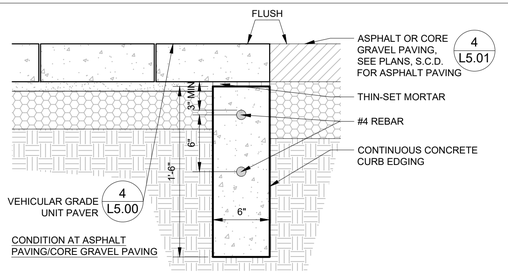

ASPHALT OR CORE GRAVEL PAVING, SEE PLANS, S.C.D. FOR ASPHALT PAVING (4 L5.01)

THIN-SET MORTAR

#4 REBAR

CONTINUOUS CONCRETE CURB EDGING

VEHICULAR GRADE UNIT PAVER (4 L5.00)

CONDITION AT ASPHALT PAVING/CORE GRAVEL PAVING

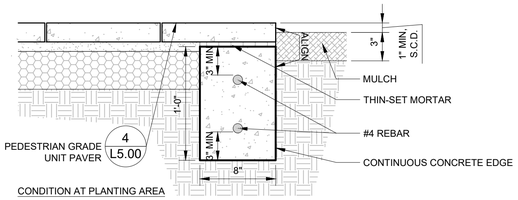

MULCH

THIN-SET MORTAR

#4 REBAR

CONTINUOUS CONCRETE EDGE

PEDESTRIAN GRADE UNIT PAVER (4 L5.00)

CONDITION AT PLANTING AREA

9 CONCRETE CURB EDGING AT UNIT PAVER

1 1/2" = 1'-0"

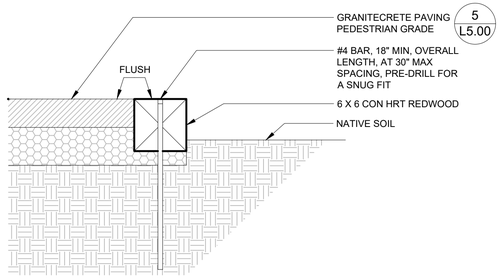

GRANITECRETE PAVING PEDESTRIAN GRADE (5 L5.00)

#4 BAR, 18" MIN, OVERALL LENGTH, AT 30" MAX SPACING, PRE-DRILL FOR A SNUG FIT

6 X 6 CON HRT REDWOOD

NATIVE SOIL

6 WOOD LUMBER EDGING

1 1/2" = 1'-0"

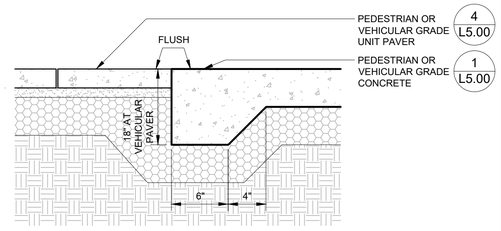

PEDESTRIAN OR VEHICULAR GRADE UNIT PAVER (4 L5.00)

PEDESTRIAN OR VEHICULAR GRADE CONCRETE (1 L5.00)

THICKENED EDGE AT UNIT PAVER

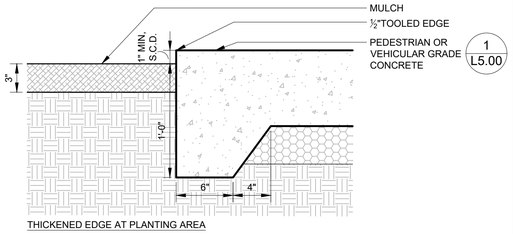

MULCH

½"TOOLED EDGE

PEDESTRIAN OR VEHICULAR GRADE CONCRETE (1 L5.00)

THICKENED EDGE AT PLANTING AREA

3 CONCRETE PAVING, THICKENED EDGE

1 1/2" = 1'-0"

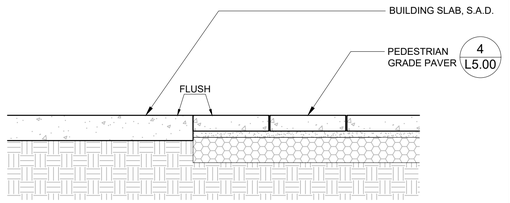

BUILDING SLAB, S.A.D.

PEDESTRIAN GRADE PAVER (4 L5.00)

11 UNIT PAVER AT CONRETE SLAB

1" = 1'-0"

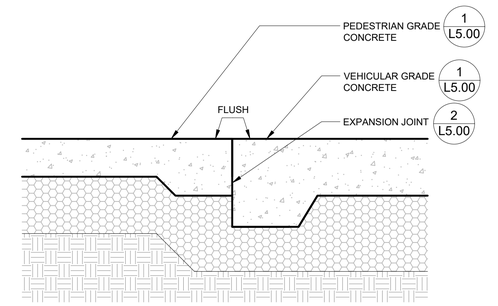

PEDESTRIAN GRADE CONCRETE (1 L5.00)

VEHICULAR GRADE CONCRETE (1 L5.00)

EXPANSION JOINT (2 L5.00)

8 PEDESTRIAN AND VEHICULAR CONCRETE CONNECTION

1 1/2" = 1'-0"

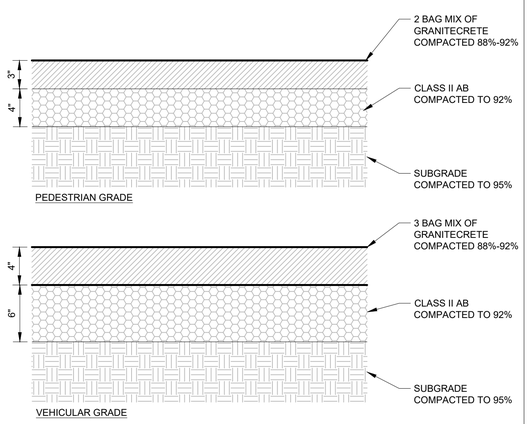

2 BAG MIX OF GRANITECRETE COMPACTED 88%-92%

CLASS II AB COMPACTED TO 92%

SUBGRADE COMPACTED TO 95%

PEDESTRIAN GRADE

3 BAG MIX OF GRANITECRETE COMPACTED 88%-92%

CLASS II AB COMPACTED TO 92%

SUBGRADE COMPACTED TO 95%

VEHICULAR GRADE

NOTES:
1. SEE SCHEDULE OF MATERIALS FOR COLOR AND FINISH.

5 GRANITECRETE PAVING

1 1/2" = 1'-0"

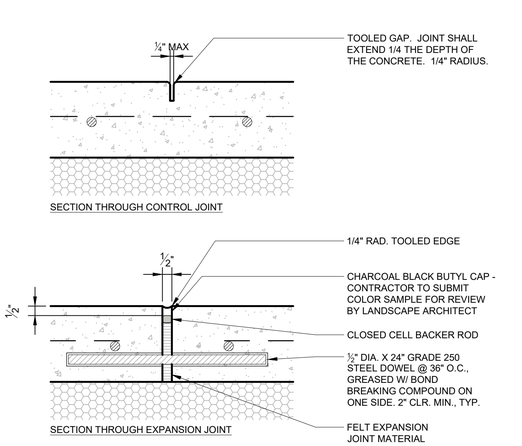

TOOLED GAP. JOINT SHALL EXTEND 1/4 THE DEPTH OF THE CONCRETE. 1/4" RADIUS.

SECTION THROUGH CONTROL JOINT

1/4" RAD. TOOLED EDGE

CHARCOAL BLACK BUTYL CAP - CONTRACTOR TO SUBMIT COLOR SAMPLE FOR REVIEW BY LANDSCAPE ARCHITECT

CLOSED CELL BACKER ROD

½" DIA. X 24" GRADE 250 STEEL DOWEL @ 36" O.C., GREASED W/ BOND BREAKING COMPOUND ON ONE SIDE. 2" CLR. MIN., TYP.

FELT EXPANSION JOINT MATERIAL

SECTION THROUGH EXPANSION JOINT

2 CONCRETE JOINTS

3" = 1'-0"

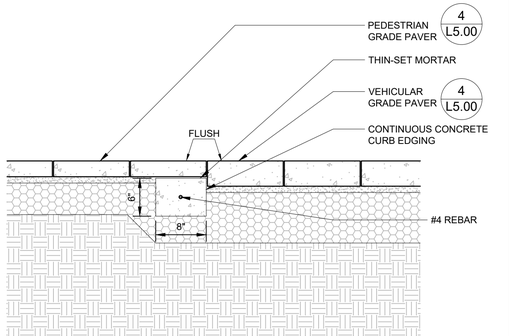

PEDESTRIAN GRADE PAVER (4 L5.00)

THIN-SET MORTAR

VEHICULAR GRADE PAVER (4 L5.00)

CONTINUOUS CONCRETE CURB EDGING

10 PEDESTRIAN UNIT PAVER AT VEHICULAR UNIT PAVER

1" = 1'-0"

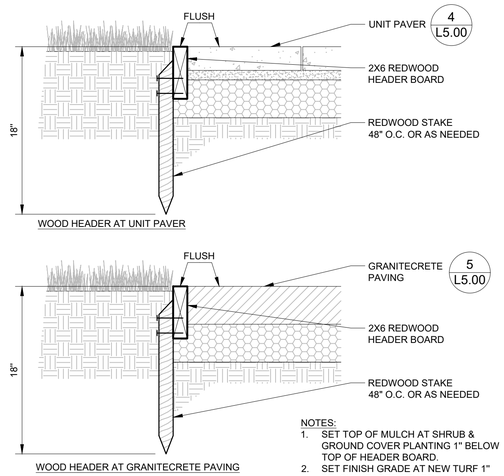

UNIT PAVER (4 L5.00)

2X6 REDWOOD HEADER BOARD

REDWOOD STAKE 48" O.C. OR AS NEEDED

WOOD HEADER AT UNIT PAVER

GRANITECRETE PAVING (5 L5.00)

2X6 REDWOOD HEADER BOARD

REDWOOD STAKE 48" O.C. OR AS NEEDED

WOOD HEADER AT GRANITECRETE PAVING

NOTES:
1. SET TOP OF MULCH AT SHRUB & GROUND COVER PLANTING 1" BELOW TOP OF HEADER BOARD.
2. SET FINISH GRADE AT NEW TURF 1" BELOW HEADER BOARD.

7 WOOD HEADER

1 1/2" = 1'-0"

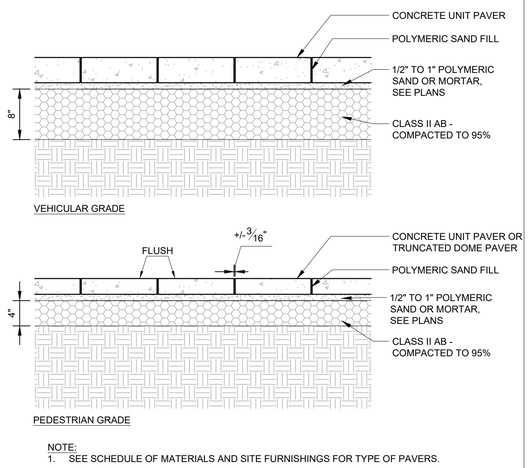

CONCRETE UNIT PAVER

POLYMERIC SAND FILL

1/2" TO 1" POLYMERIC SAND OR MORTAR, SEE PLANS

CLASS II AB - COMPACTED TO 95%

VEHICULAR GRADE

CONCRETE UNIT PAVER OR TRUNCATED DOME PAVER

POLYMERIC SAND FILL

1/2" TO 1" POLYMERIC SAND OR MORTAR, SEE PLANS

CLASS II AB - COMPACTED TO 95%

PEDESTRIAN GRADE

NOTE:
1. SEE SCHEDULE OF MATERIALS AND SITE FURNISHINGS FOR TYPE OF PAVERS.

4 UNIT PAVERS

1" = 1'-0"

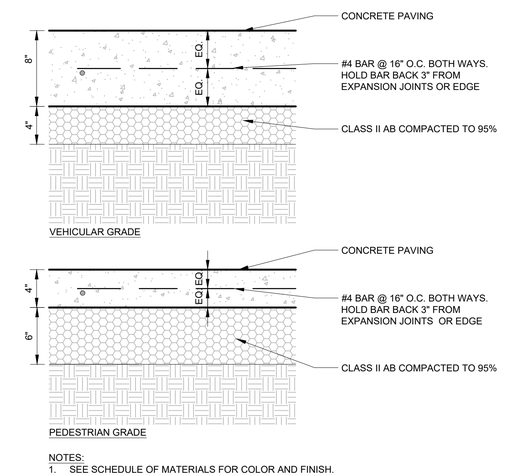

CONCRETE PAVING

#4 BAR @ 16" O.C. BOTH WAYS. HOLD BAR BACK 3" FROM EXPANSION JOINTS OR EDGE

CLASS II AB COMPACTED TO 95%

VEHICULAR GRADE

CONCRETE PAVING

#4 BAR @ 16" O.C. BOTH WAYS. HOLD BAR BACK 3" FROM EXPANSION JOINTS OR EDGE

CLASS II AB COMPACTED TO 95%

PEDESTRIAN GRADE

NOTES:
1. SEE SCHEDULE OF MATERIALS FOR COLOR AND FINISH.

1 CONCRETE PAVING

1 1/2" = 1'-0"

APPROVALS

IDENTIFICATION STAMP
DIV. OF THE STATE ARCHITECT
APP: 01-119409 INC:
REVIEWED FOR
SS ☑ FLS ☑ ACS ☑
DATE: 03/14/2022

NOLL & TAM ARCHITECTS

729 Heinz Avenue
Berkeley, CA 94710
tel 510.542.2200
fax 510.542.2201

SEAL

LICENSED LANDSCAPE ARCHITECT
SVETLANA MARIE VOLEJNIKOVA
Signature
12.31.2023
Renewal Date
11.11.2021
Date
STATE OF CALIFORNIA

BASE LANDSCAPE ARCHITECTURE
SAN FRANCISCO / PORTLAND
www.baselandscape.com

PROJECT TITLE

Peralta Community College District
Merritt Landscape Horticulture Complex

12500 Campus Drive
Oakland, CA 94616

BID SET

ISSUE DATE 03/03/2022

N&T JOB NUMBER 22003

REVISIONS

	DATE	DESCRIPTION

DRAWN BY TY, JR, SV | CHECKED BY SV

SHEET TITLE

LANDSCAPE CONSTRUCTION DETAILS

SHEET NUMBER

L5.00

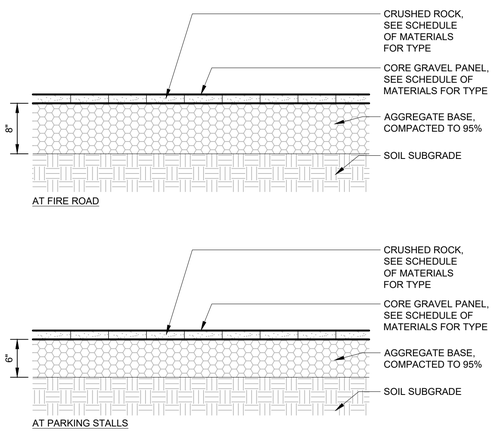

4 CORE GRAVEL PAVING

1" = 1'-0"

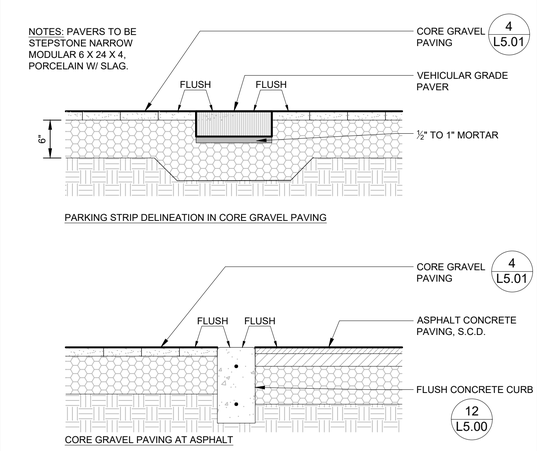

5 CORE GRAVEL PAVING EDGE CONDITIONS

1" = 1'-0"

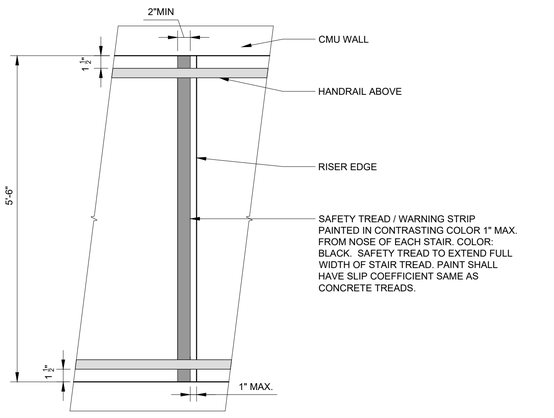

NOTE:
1. PROVIDE SHOP DRAWINGS.
2. STAIRS SHALL BE PITCHED 1% MAX FOR POSITIVE DRAINAGE
3. ENTIRE HANDRAIL ASSEMBLY TO BE SHOP GALVANIZED. WHERE MULTIPLE PIECES ARE REQUIRED, PROVIDE SLEEVED CONNECTIONS THAT ALLOW FOR FIELD FITTINGS.
4. PROVIDE 1/2" RADIUS TOOLED EDGE AT THE STAIR NOSE
5. RISERS TO HAVE UNIFORM HEIGHT, 4" MIN.
6. SEE S4.01 FOR REINFORCEMENT NEDS, HOOKS, DEVELOPMENT LENGTHS, LAP SLICES INFO.

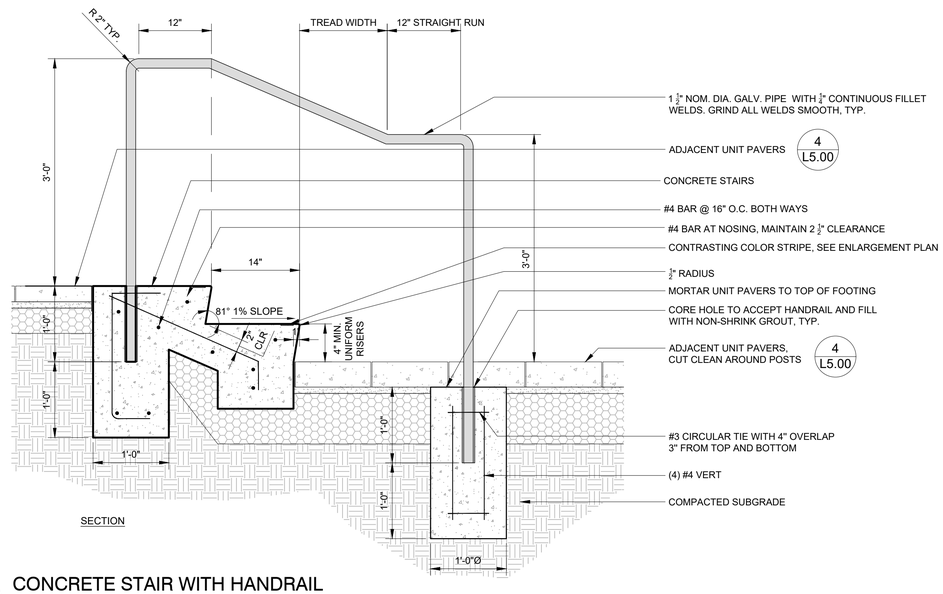

3 CONCRETE STAIR WITH HANDRAIL

1" = 1'-0"

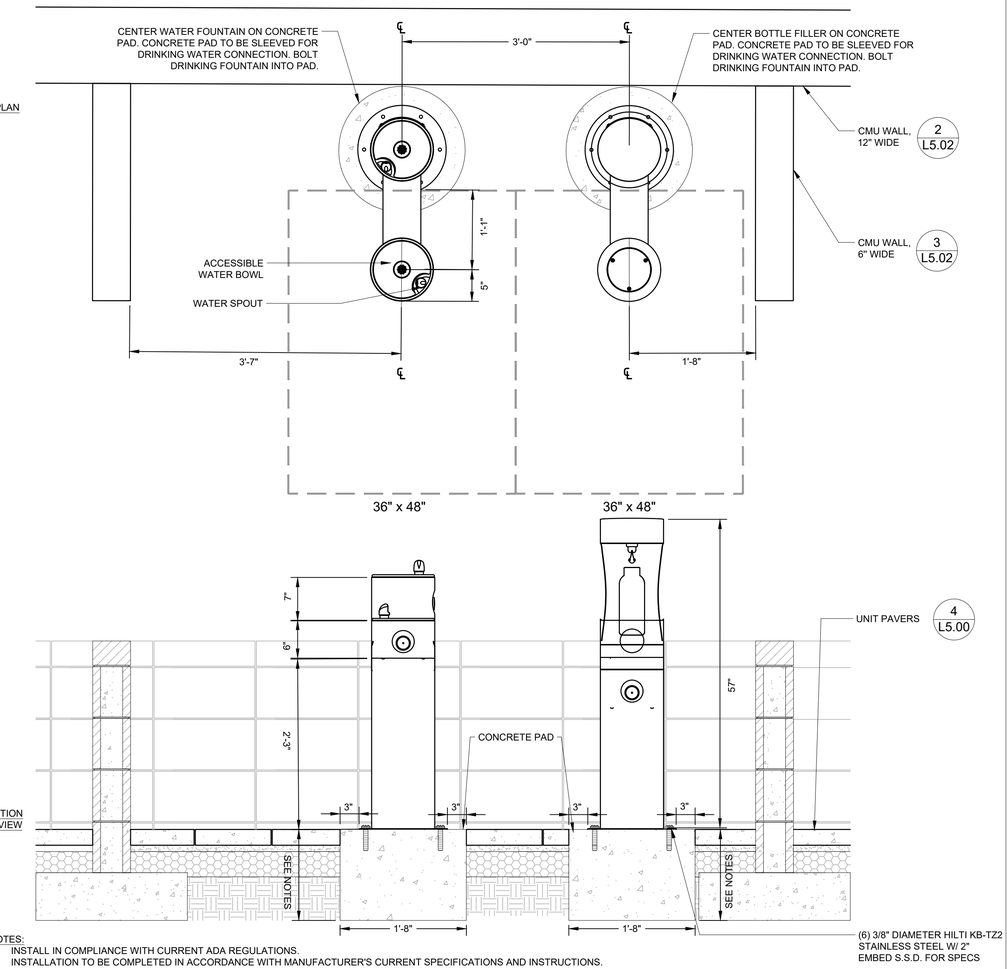

NOTES:
1. INSTALL IN COMPLIANCE WITH CURRENT ADA REGULATIONS.
2. INSTALLATION TO BE COMPLETED IN ACCORDANCE WITH MANUFACTURER'S CURRENT SPECIFICATIONS AND INSTRUCTIONS.
3. MODEL TO BE PROVIDED W/ ½" BALL VALVE INSIDE CENTER COLUMN.
4. SEE SCHEDULE OF MATERIALS AND SITE FURNISHINGS FOR MODELS AND COLOR.
5. PROVIDE (6) 3/8" MIN. FASTENERS PER EACH DRINKING FOUNTAIN AND BOTTLE FILLER.
6. REFER TO ARCHITECTURAL DETAIL 3/A7.82 FOR DEPTH OF FOOTING.

2 DRINKING FOUNTAIN AND BOTTLE FILLER

1" = 1'-0"

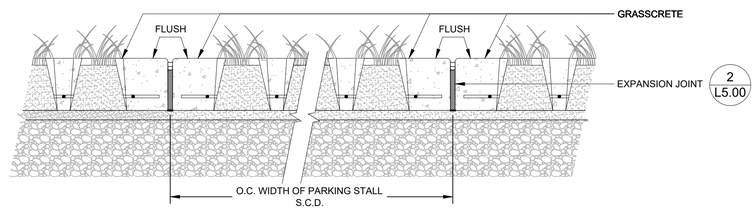

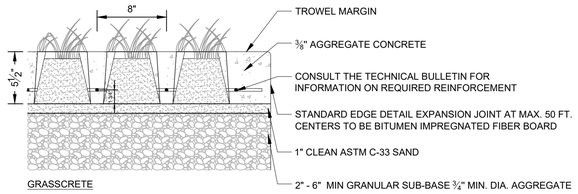

NOTES:
1. SINGLE USE 5 ½" MOLDED PULP VOID GRASSED SYSTEM.

1 GRASSCRETE - ADD ALT

1 1/2" = 1'-0"

P-MHORT-MAN-09

APPROVALS

IDENTIFICATION STAMP
DIV. OF THE STATE ARCHITECT
APP: 01-119409 INC:
REVIEWED FOR
SS ☑ FLS ☑ ACS ☑
DATE: 03/14/2022

NOLL & TAM ARCHITECTS
729 Heinz Avenue
Berkeley, CA 94710
tel 510.542.2200
fax 510.542.2201

SEAL

BASE LANDSCAPE ARCHITECTURE
SAN FRANCISCO / PORTLAND
www.baselandscape.com

LICENSED LANDSCAPE ARCHITECT
JESSICA MARIE VOLEJNIKOVA
Signature
12.31.2023
Renewal Date
11.11.2021
Date
STATE OF CALIFORNIA

PROJECT TITLE

Peralta Community College District
Merritt Landscape Horticulture Complex

12500 Campus Drive
Oakland, CA 94616

BID SET

ISSUE DATE	03/03/2022
N&T JOB NUMBER	22003

REVISIONS

	DATE	DESCRIPTION

DRAWN BY TY, JR, SV | CHECKED BY SV

SHEET TITLE

LANDSCAPE CONSTRUCTION DETAILS

SHEET NUMBER

L5.01

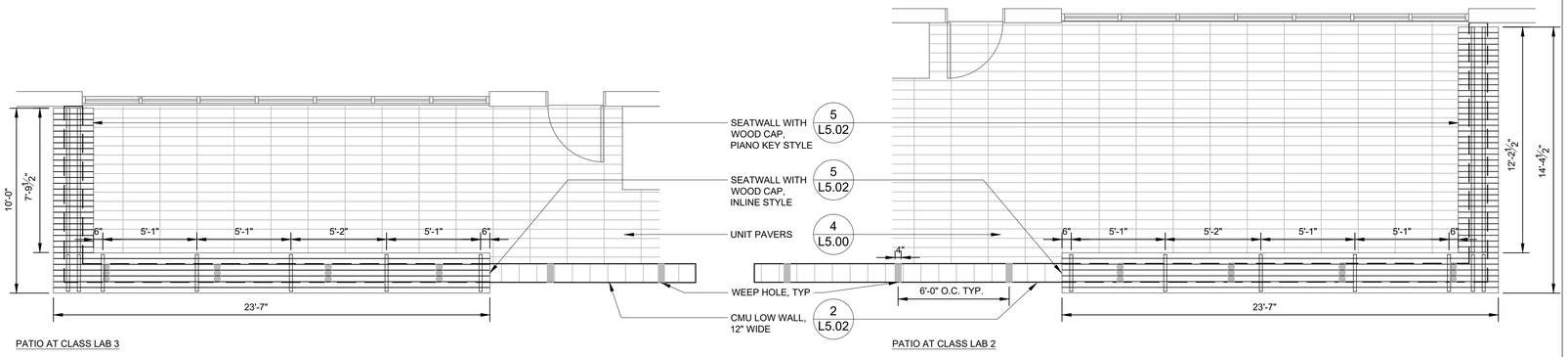

PATIO AT CLASS LAB 3

PATIO AT CLASS LAB 2

NOTES:
1. S.S.D. SHEET S4.01 FOR REINFORCEMENT BENDS, HOOKS, DEVELOPMENT LENGTHS AND LAP SLICES INFO.

6 WOOD CAP - PLAN

1/4" = 1'-0"

P-MHORT-SEA-02

CMU BLOCK SIZES:

W-01	CMU RETAINING WALL	1/L5.02	6" W, 8" H, 16" L
W-02	CMU CURVED WALL	2/L5.04	12" W, 8" H, 16" L
W-03	CMU LOW WALL, 6" WIDE	3/L5.02	6" W, 8" H, 16" L
W-04	CMU LOW WALL, 12" WIDE	2/L5.02	12" W, 8" H, 16" L
W-06	CMU CAP		4" H, 16" L

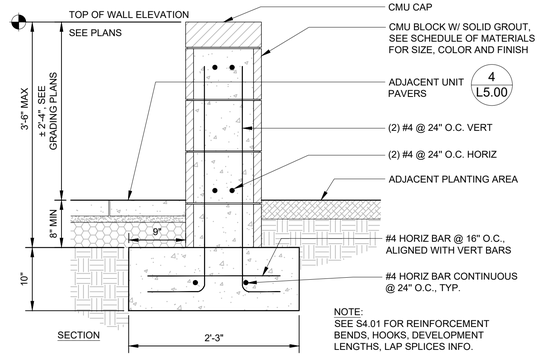

NOTE:
SEE S4.01 FOR REINFORCEMENT BENDS, HOOKS, DEVELOPMENT LENGTHS, LAP SPLICES INFO.

2 CMU LOW WALL, 12" WIDE

1" = 1'-0"

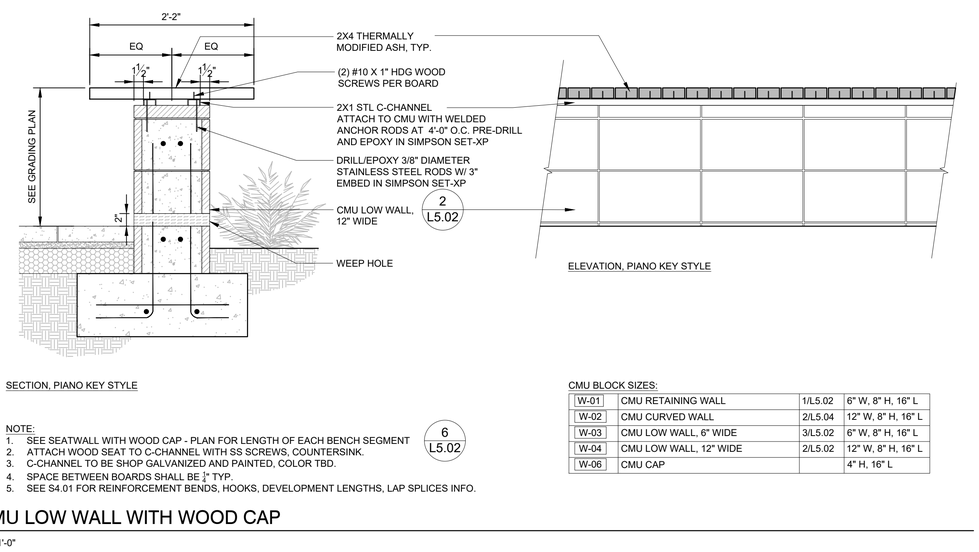

SECTION, INLINE STYLE

ELEVATION, INLINE STYLE

SECTION, PIANO KEY STYLE

ELEVATION, PIANO KEY STYLE

NOTE:
1. SEE SEATWALL WITH WOOD CAP - PLAN FOR LENGTH OF EACH BENCH SEGMENT
2. ATTACH WOOD SEAT TO C-CHANNEL WITH SS SCREWS, COUNTERSINK.
3. C-CHANNEL TO BE SHOP GALVANIZED AND PAINTED, COLOR TBD.
4. SPACE BETWEEN BOARDS SHALL BE ¼" TYP.
5. SEE S4.01 FOR REINFORCEMENT BENDS, HOOKS, DEVELOPMENT LENGTHS, LAP SPLICES INFO.

6 L5.02

CMU BLOCK SIZES:

W-01	CMU RETAINING WALL	1/L5.02	6" W, 8" H, 16" L
W-02	CMU CURVED WALL	2/L5.04	12" W, 8" H, 16" L
W-03	CMU LOW WALL, 6" WIDE	3/L5.02	6" W, 8" H, 16" L
W-04	CMU LOW WALL, 12" WIDE	2/L5.02	12" W, 8" H, 16" L
W-06	CMU CAP		4" H, 16" L

5 CMU LOW WALL WITH WOOD CAP

1" = 1'-0"

NOTE:
STACK STRAW BALES TO PROVIDE STABLE 2-HIGH PARTITION.

4 STRAW BALE PARTITION

1/2" = 1'-0"

CMU BLOCK SIZES:

W-01	CMU RETAINING WALL	1/L5.02	6" W, 8" H, 16" L
W-02	CMU CURVED WALL	2/L5.04	12" W, 8" H, 16" L
W-03	CMU LOW WALL, 6" WIDE	3/L5.02	6" W, 8" H, 16" L
W-04	CMU LOW WALL, 12" WIDE	2/L5.02	12" W, 8" H, 16" L
W-06	CMU CAP		4" H, 16" L

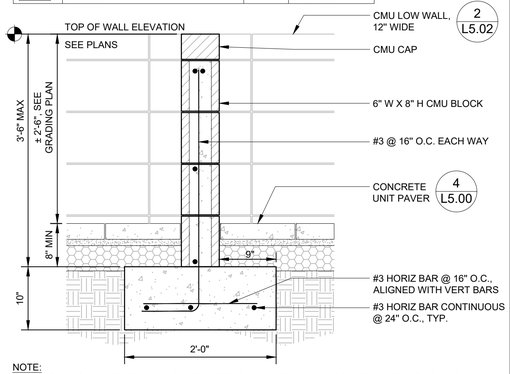

NOTE:
SEE S4.01 FOR REINFORCEMENT BENDS, HOOKS, DEVELOPMENT LENGTHS, LAP SPLICES INFO.

3 CMU LOW WALL, 6" WIDE

1" = 1'-0"

CMU BLOCK SIZES:

W-01	CMU RETAINING WALL	1/L5.02	6" W, 8" H, 16" L
W-02	CMU CURVED WALL	2/L5.04	12" W, 8" H, 16" L
W-03	CMU LOW WALL, 6" WIDE	3/L5.02	6" W, 8" H, 16" L
W-04	CMU LOW WALL, 12" WIDE	2/L5.02	12" W, 8" H, 16" L
W-06	CMU CAP		4" H, 16" L

NOTE: SEE S4.01 FOR REINFORCEMENT BENDS, HOOKS, DEVELOPMENT LENGTHS, LAP SPLICES INFO.

1 CMU RETAINING WALL

1" = 1'-0"

APPROVALS

IDENTIFICATION STAMP
DIV. OF THE STATE ARCHITECT
APP: 01-119409 INC:
REVIEWED FOR
SS ☑ FLS ☑ ACS ☑
DATE: 03/14/2022

NOLL & TAM ARCHITECTS
729 Heinz Avenue
Berkeley, CA 94710
tel 510.542.2200
fax 510.542.2201

SEAL

BASE LANDSCAPE ARCHITECTURE
SAN FRANCISCO / PORTLAND
www.baselandscape.com

LICENSED LANDSCAPE ARCHITECT
SVETLANA MARIE VOLEJNIKOVA-VOE
Signature
12.31.2023
Renewal Date
11.11.2021
Date
STATE OF CALIFORNIA

PROJECT TITLE

Peralta Community College District
Merritt Landscape Horticulture Complex

12500 Campus Drive
Oakland, CA 94616

BID SET

ISSUE DATE 03/03/2022
N&T JOB NUMBER 22003

REVISIONS

	DATE	DESCRIPTION

DRAWN BY TY, JR, SV | CHECKED BY SV

SHEET TITLE

LANDSCAPE CONSTRUCTION DETAILS

SHEET NUMBER

L5.02

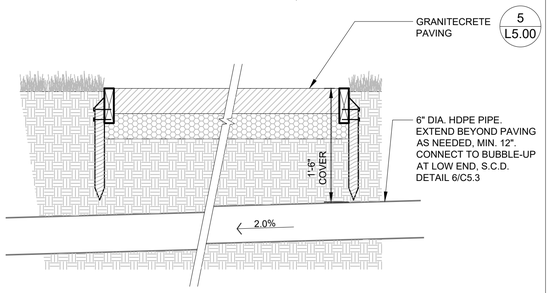

6 PIPE CULVERT UNDER PAVING

1" = 1'-0"

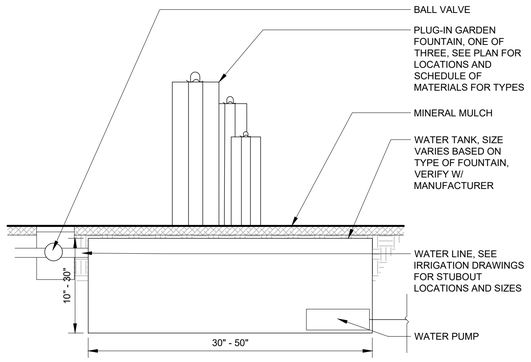

NOTES:
1. S.E.D FOR ELECTRICAL CONNECTION. LOCATE JUNCTION BOX W/IN 6' OF PUMP.

3 GARDEN WATER FOUNTAIN - ADD ALT

1 1/2" = 1'-0"

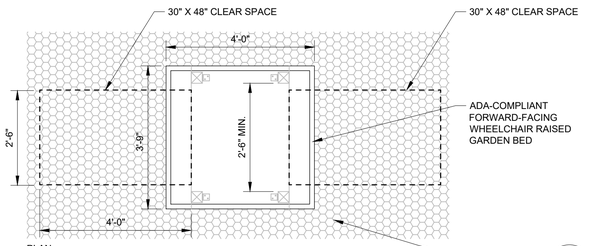

PLAN

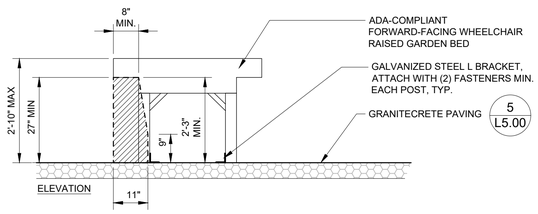

ELEVATION

ADA-COMPLIANT FORWARD-FACING WHEELCHAIR RAISED GARDEN BED

NOTE:
1. PLACE IN LOCATIONS INDICATED ON PLAN AND MAINTAN CLEARNACES AS SHOWN.

5 ACCESSIBLE RAISED PLANTER

1/2" = 1'-0"

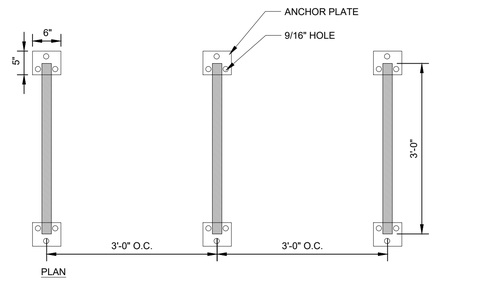

PLAN

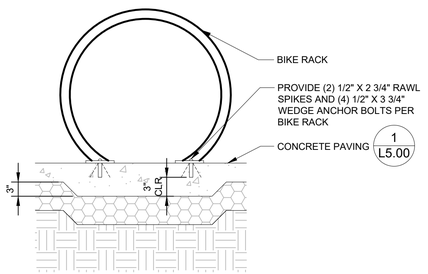

NOTES:
1. SEE SCHEDULE OF MATERIALS AND FURNISHINGS FOR MODEL AND FINISH.
2. SEE LAYOUT PLAN FOR LOCATIONS.

2 BIKE RACK

NTS

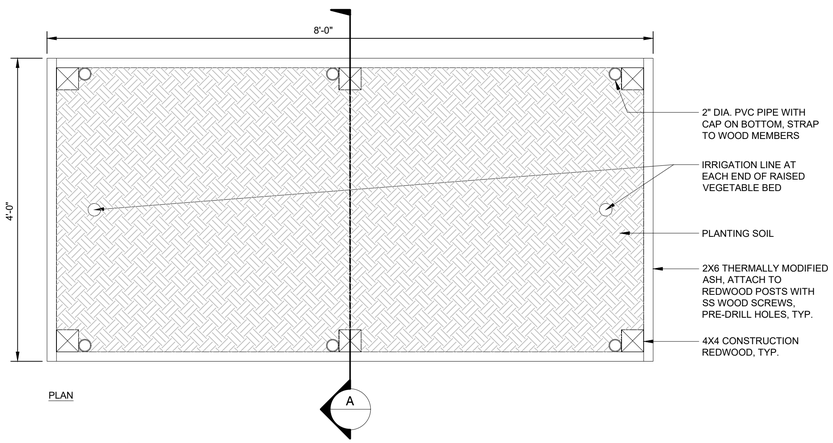

PLAN

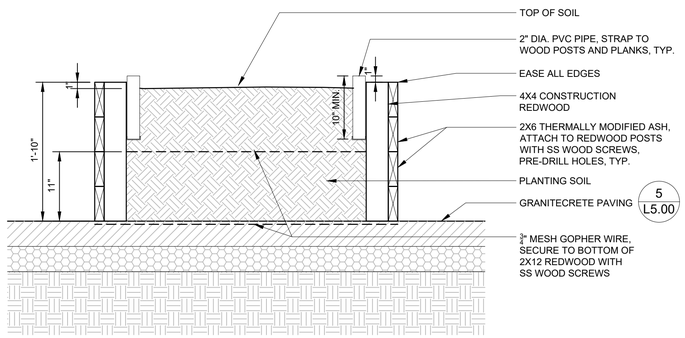

SECTION A

4 RAISED VEGETABLE BED

1" = 1'-0"

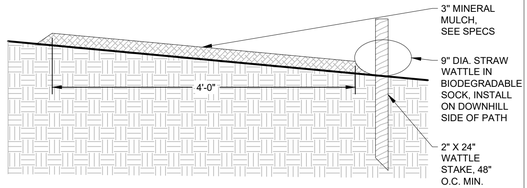

1 MULCH PATH

1" = 1'-0"

APPROVALS

IDENTIFICATION STAMP
DIV. OF THE STATE ARCHITECT
APP: 01-119409 INC:
REVIEWED FOR
SS ☑ FLS ☑ ACS ☑
DATE: 03/14/2022

NOLL & TAM ARCHITECTS
729 Heinz Avenue
Berkeley, CA 94710
tel 510.542.2200
fax 510.542.2201

SEAL

BASE LANDSCAPE ARCHITECTURE
SAN FRANCISCO / PORTLAND
www.baselandscape.com

LICENSED LANDSCAPE ARCHITECT
SASHA MARIE VOLEJNIKOVA
Signature 12.31.2023
Renewal Date
11.11.2021
Date
STATE OF CALIFORNIA

PROJECT TITLE

Peralta Community College District
Merritt Landscape Horticulture Complex

12500 Campus Drive
Oakland, CA 94616

BID SET

ISSUE DATE 03/03/2022
N&T JOB NUMBER 22003

REVISIONS

	DATE	DESCRIPTION

DRAWN BY TY, JR, SV | CHECKED BY SV

SHEET TITLE

LANDSCAPE CONSTRUCTION DETAILS

SHEET NUMBER

L5.03

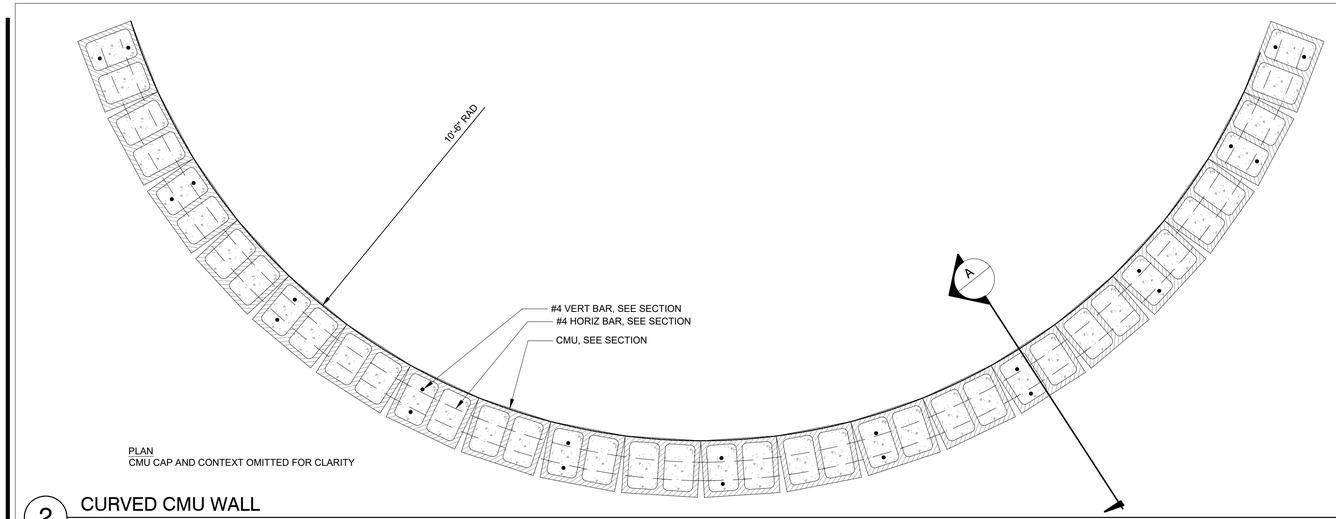

PLAN
CMU CAP AND CONTEXT OMITTED FOR CLARITY

CMU BLOCK SIZES:

W-01	CMU RETAINING WALL	1/L5.02	6" W, 8" H, 16" L
W-02	CMU CURVED WALL	2/L5.04	12" W, 8" H, 16" L
W-03	CMU LOW WALL, 6" WIDE	3/L5.02	6" W, 8" H, 16" L
W-04	CMU LOW WALL, 12" WIDE	2/L5.02	12" W, 8" H, 16" L
W-06	CMU CAP		4" H, 16" L

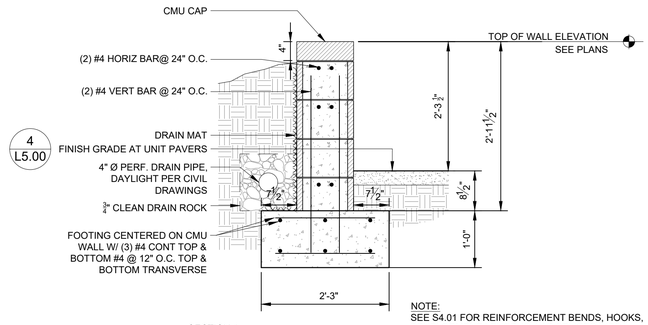

SECTION A

NOTE:
SEE S4.01 FOR REINFORCEMENT BENDS, HOOKS, DEVELOPMENT LENGTHS, LAP SPLICES INFO.

2 CURVED CMU WALL

3/4" = 1'-0"

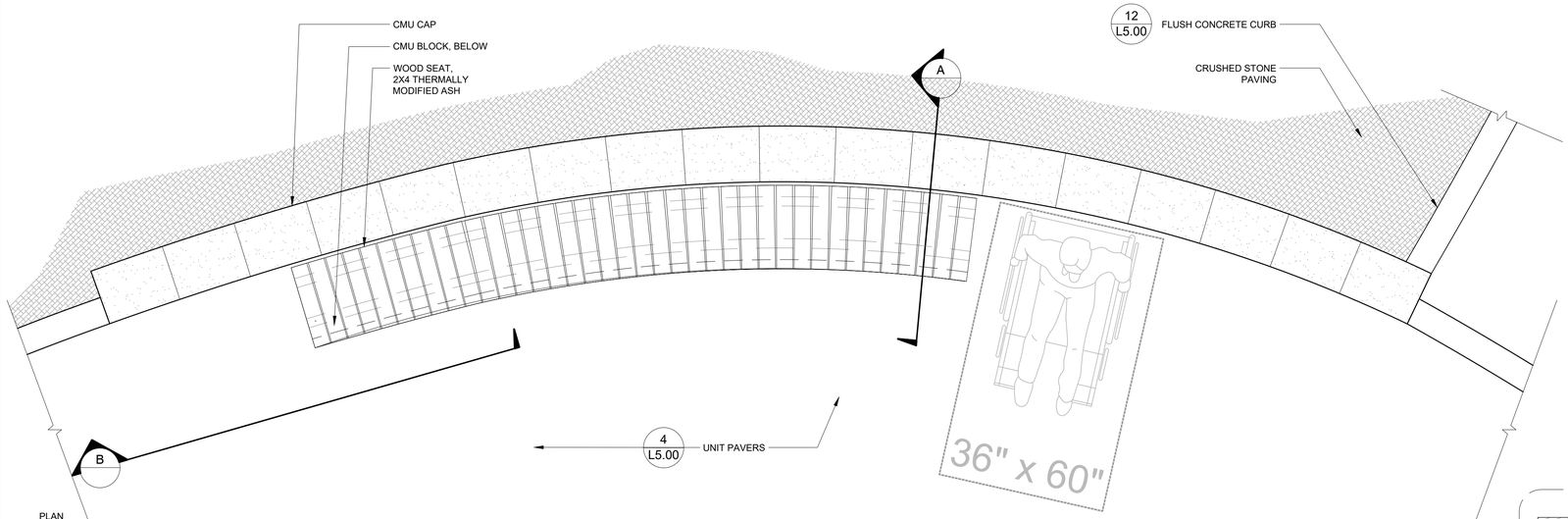

PLAN

CMU BLOCK SIZES:

W-01	CMU RETAINING WALL	1/L5.02	6" W, 8" H, 16" L
W-02	CMU CURVED WALL	2/L5.04	12" W, 8" H, 16" L
W-03	CMU LOW WALL, 6" WIDE	3/L5.02	6" W, 8" H, 16" L
W-04	CMU LOW WALL, 12" WIDE	2/L5.02	12" W, 8" H, 16" L
W-06	CMU CAP		4" H, 16" L

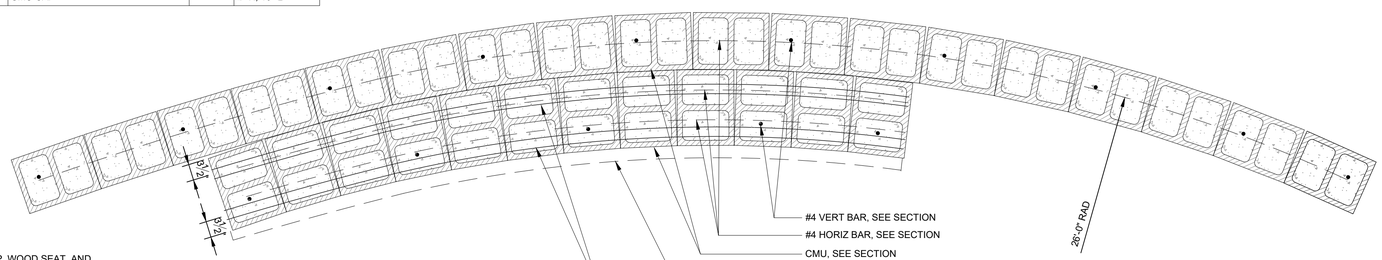

PLAN
CMU CAP, WOOD SEAT, AND CONTEXT OMITTED FOR CLARITY

1 CURVED CMU WALL WITH WOOD CAP SEAT

3/4" = 1'-0"

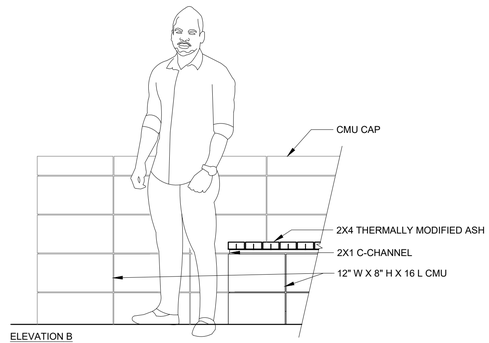

ELEVATION B

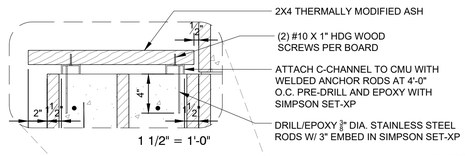

1 1/2" = 1'-0"

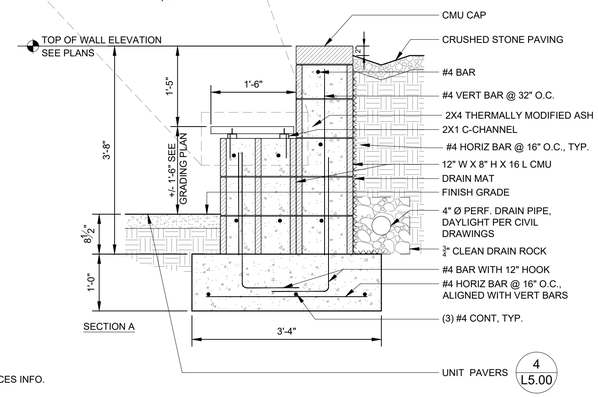

SECTION A

NOTE:
1. ATTACH WOOD SEAT TO C-CHANNEL WITH SS SCREWS FROM BOTTOM, 2 PER PLANK
2. C-CHANNEL TO BE SHOP GALVANIZED AND PAINTED, COLOR TBD.
3. SPACE BETWEEN BOARDS SHALL BE ¼" TYP AT NARROWEST SPACE.
4. SEE S4.01 FOR REINFORCEMENT BENDS, HOOKS, DEVELOPMENT LENGTHS, LAP SPLICES INFO.

APPROVALS

IDENTIFICATION STAMP
DIV. OF THE STATE ARCHITECT
APP: 01-119409 INC:
REVIEWED FOR
SS ☑ FLS ☑ ACS ☑
DATE: 03/14/2022

NOLL & TAM ARCHITECTS
729 Heinz Avenue
Berkeley, CA 94710
tel 510.542.2200
fax 510.542.2201

SEAL

BASE LANDSCAPE ARCHITECTURE
SAN FRANCISCO / PORTLAND
www.baselandscape.com

PROJECT TITLE

Peralta Community College District
Merritt Landscape Horticulture Complex

12500 Campus Drive
Oakland, CA 94616

BID SET

ISSUE DATE 03/03/2022
N&T JOB NUMBER 22003

REVISIONS

	DATE	DESCRIPTION

DRAWN BY TY, JR, SV | CHECKED BY SV

SHEET TITLE

LANDSCAPE CONSTRUCTION DETAILS

SHEET NUMBER

L5.04

P-MHORT-WAL-3

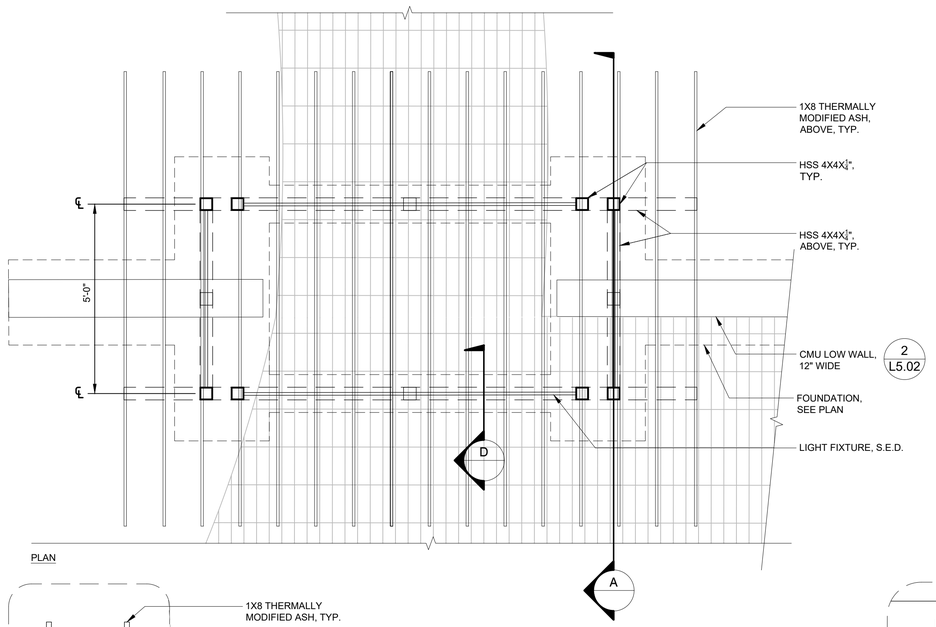

PLAN

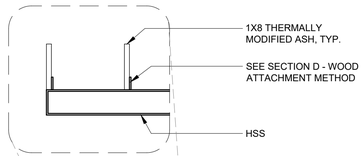

SECTION F - WOOD ATTACHMENT METHOD, TYP
1" = 1'-0"

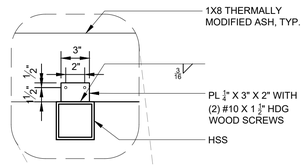

SECTION D - WOOD ATTACHMENT METHOD, TYP
1 1/2" = 1'-0"

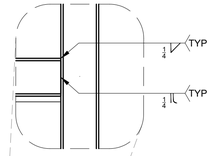

TYPICAL WELDING DETAIL
1 1/2" = 1'-0"

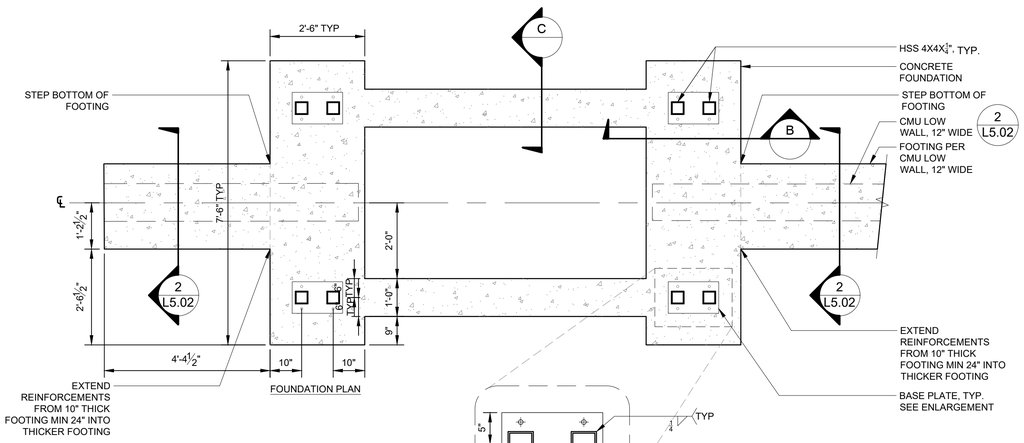

FOUNDATION PLAN

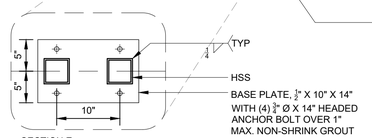

SECTION E - BASE PLATE DETAIL
1" = 1'-0"

PLAN VIEW

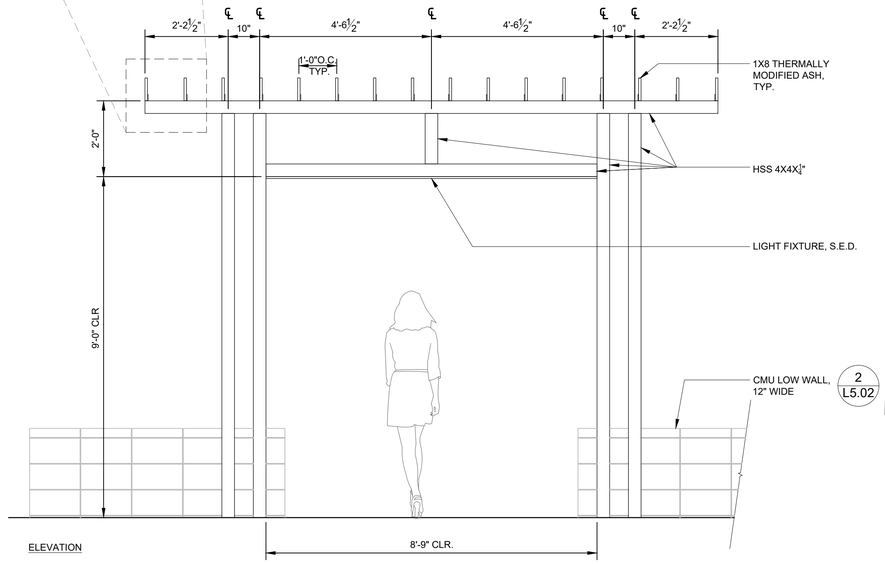

ELEVATION

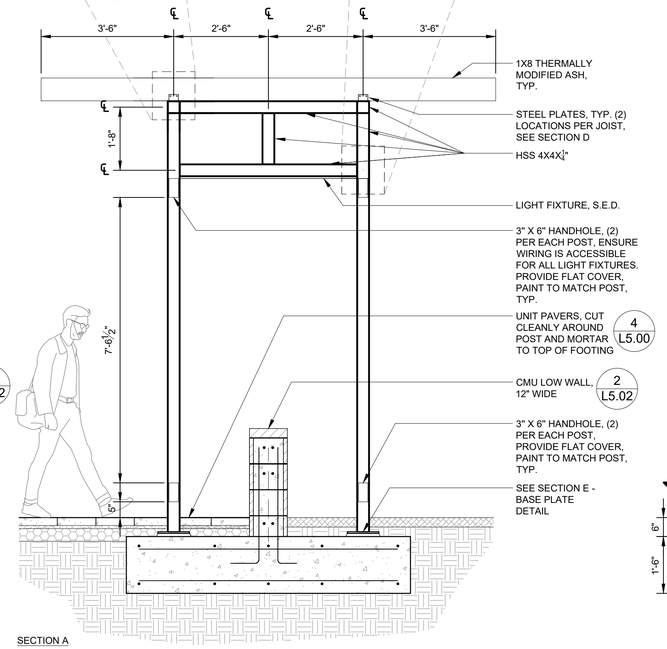

SECTION A

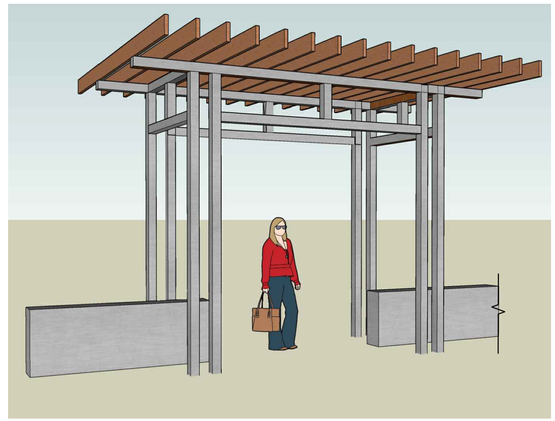

3D MODEL VIEW OF OVERHEAD TRELLIS , FOR REFERENCE ONLY

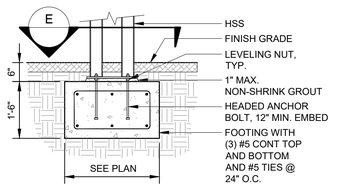

SECTION B - FOOTING DETAIL

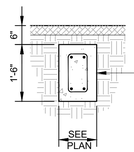

SECTION C - FOOTING DETAIL

NOTE:
1. 24 VDC WIRING FOR LIGHTING ROUTED THROUGH HOLLOW TUBE.
2. ALL STEEL TO BE SHOP GALVANIZED AND PAINTED, COLOR TBD.
3. ALL STEEL TO BE SHOP WELDED.
4. PROVIDE SHOP DRAWINGS.
5. SEE SPECS SECTION 05 12 00 STRUCTURAL STEEL FRAMING FOR FINISH INSTRUCTIONS FOR VISIBLE EXPOSED STEEL ELEMENTS.
6. SEE S4.01 FOR REINFORCEMENT BENDS, HOOKS, DEVELOPMENT LENGTHS, LAP SPLICES INFO.

1 OVERHEAD TRELLIS

1/2" = 1'-0"

APPROVALS

IDENTIFICATION STAMP
DIV. OF THE STATE ARCHITECT
APP: 01-119409 INC:
REVIEWED FOR
SS ☑ FLS ☑ ACS ☑
DATE: 03/14/2022

NOLL & TAM ARCHITECTS
729 Heinz Avenue
Berkeley, CA 94710
tel 510.542.2200
fax 510.542.2201

SEAL

BASE LANDSCAPE ARCHITECTURE
SAN FRANCISCO / PORTLAND
www.baselandscape.com

LICENSED LANDSCAPE ARCHITECT
SVETLANA MARIE VOLEJNIKOVA-BASE
Signature 12.31.2023
Renewal Date
11.11.2021
Date
STATE OF CALIFORNIA

PROJECT TITLE

Peralta Community College District
Merritt Landscape Horticulture Complex

12500 Campus Drive
Oakland, CA 94616

BID SET

ISSUE DATE 03/03/2022
N&T JOB NUMBER 22003

REVISIONS

	DATE	DESCRIPTION
1		

DRAWN BY TY, JR, SV | CHECKED BY SV

SHEET TITLE

LANDSCAPE CONSTRUCTION DETAILS

SHEET NUMBER

L5.05

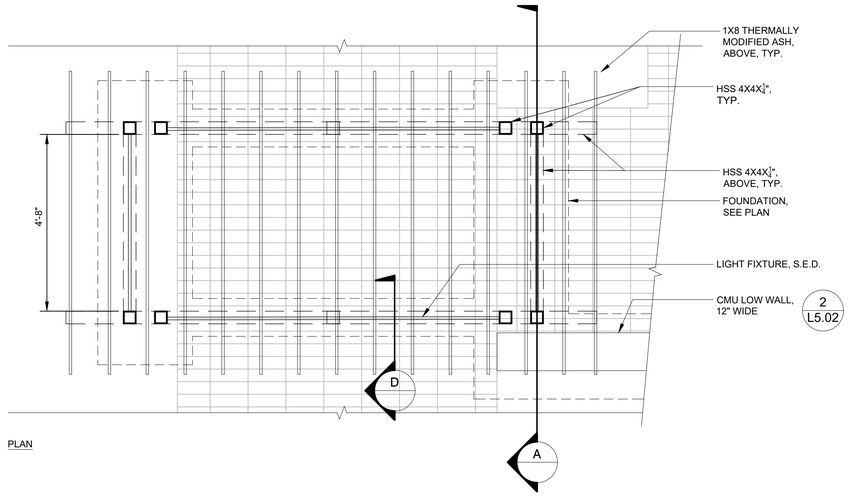

PLAN

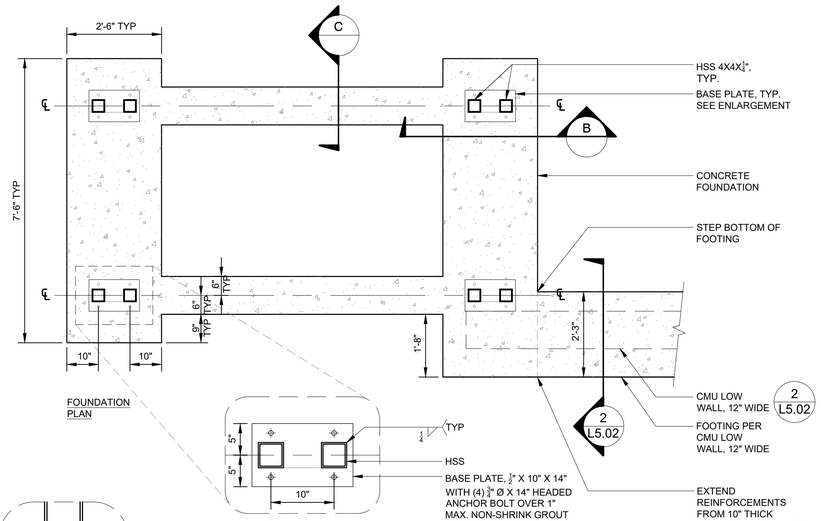

FOUNDATION PLAN

SECTION E - BASE PLATE DETAIL
1" = 1'-0"

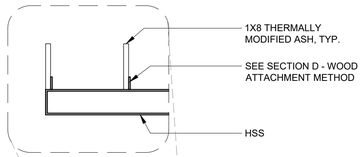

SECTION F - WOOD ATTACHMENT METHOD, TYP
1" = 1'-0"1" = 1'-0"

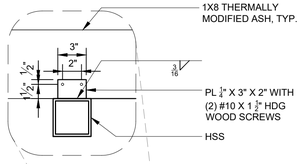

SECTION D - WOOD ATTACHMENT METHOD, TYP
1 1/2" = 1'-0"

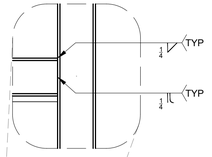

TYPICAL WELDING DETAIL
1 1/2" = 1'-0"

ELEVATION

SECTION A

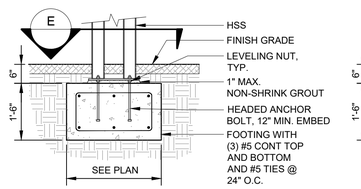

SECTION B - FOOTING DETAIL

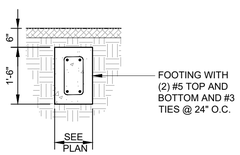

SECTION C - FOOTING DETAIL

NOTE:
1. 24 VDC WIRING FOR LIGHTING ROUTED THROUGH HOLLOW TUBE.
2. ALL STEEL TO BE SHOP GALVANIZED AND PAINTED, COLOR TBD.
3. ALL STEEL TO BE SHOP WELDED.
4. PROVIDE SHOP DRAWINGS.
5. SEE SPECS SECTION 05 12 00 STRUCTURAL STEEL FRAMING FOR FINISH INSTRUCTIONS FOR VISIBLE EXPOSED STEEL ELEMENTS.
6. SEE S4.01 FOR REINFORCEMENT BENDS, HOOKS, DEVELOPMENT LENGTHS, LAP SPLICES INFO.

1 OVERHEAD TRELLIS AT CAMPUS ENTRY

1/2" = 1'-0"

APPROVALS

IDENTIFICATION STAMP
DIV. OF THE STATE ARCHITECT
APP: 01-119409 INC:
REVIEWED FOR
SS ☑ FLS ☑ ACS ☑
DATE: 03/14/2022

NOLL & TAM ARCHITECTS
729 Heinz Avenue
Berkeley, CA 94710
tel 510.542.2200
fax 510.542.2201

SEAL

LICENSED LANDSCAPE ARCHITECT
SVETLANA MARIE VOLEJNIKOVA
Signature
12.31.2023
Renewal Date
11.11.2021
Date
STATE OF CALIFORNIA

BASE LANDSCAPE ARCHITECTURE
SAN FRANCISCO / PORTLAND
www.baselandscape.com

PROJECT TITLE

Peralta Community College District
Merritt Landscape Horticulture Complex

12500 Campus Drive
Oakland, CA 94616

BID SET

ISSUE DATE 03/03/2022
N&T JOB NUMBER 22003

REVISIONS

	DATE	DESCRIPTION

DRAWN BY TY, JR, SV | CHECKED BY SV

SHEET TITLE

LANDSCAPE CONSTRUCTION DETAILS

SHEET NUMBER

L5.06

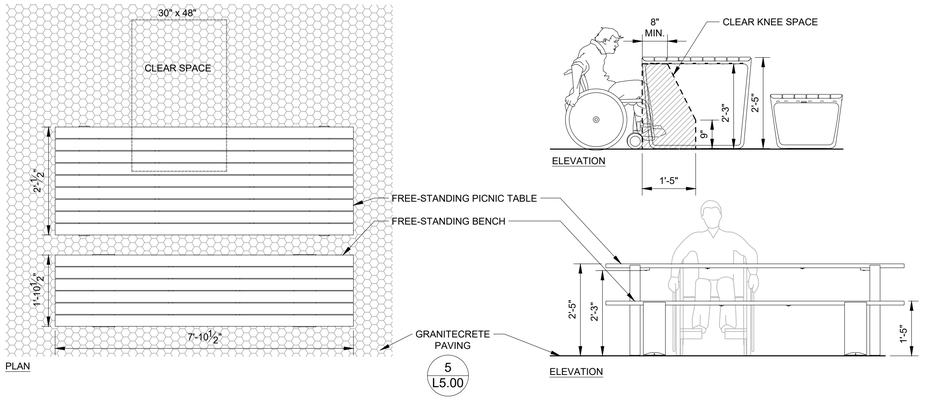

NOTES:
1. SEE SCHEDULE OF MATERIALS AND SITE FURNISHINGS FOR MODELS AND FINISH.
2. TABLE AND BENCHES ARE FREE STANDING, NOT MOUNTED.

5 MOVABLE PICNIC TABLE WITH BENCHES

1/2" = 1'-0" P-MHORT-MAN-12

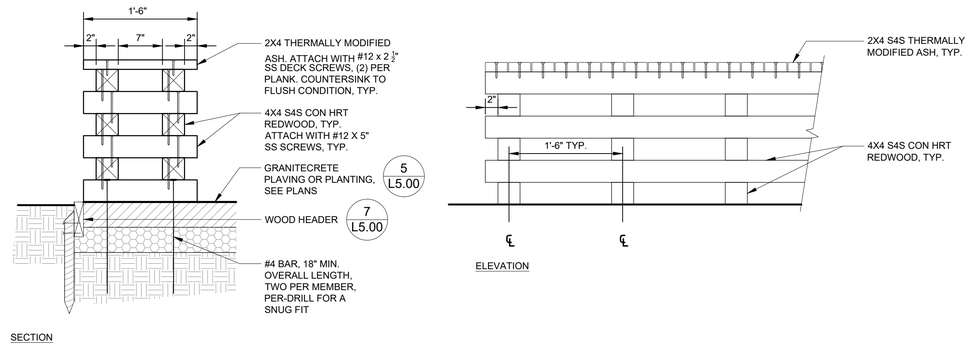

2 STACKED WOOD SEAT WALL

1" = 1'-0" P-MHORT-WAL-27

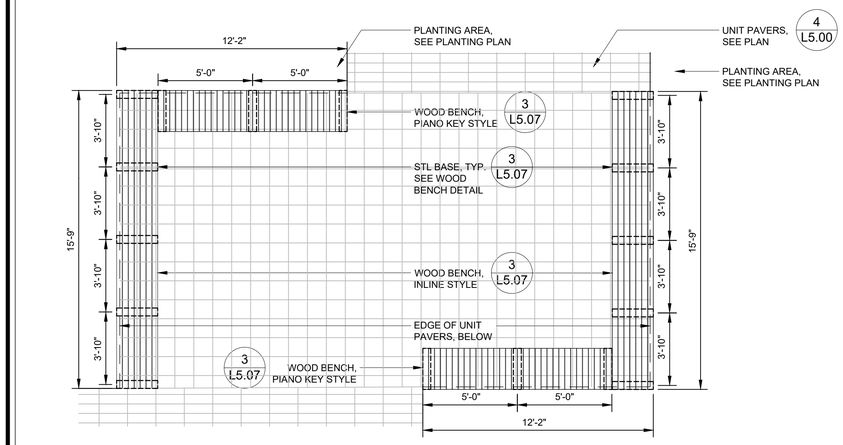

4 WOOD BENCH - PLAN

1/4" = 1'-0" P-MHORT-SEA-01

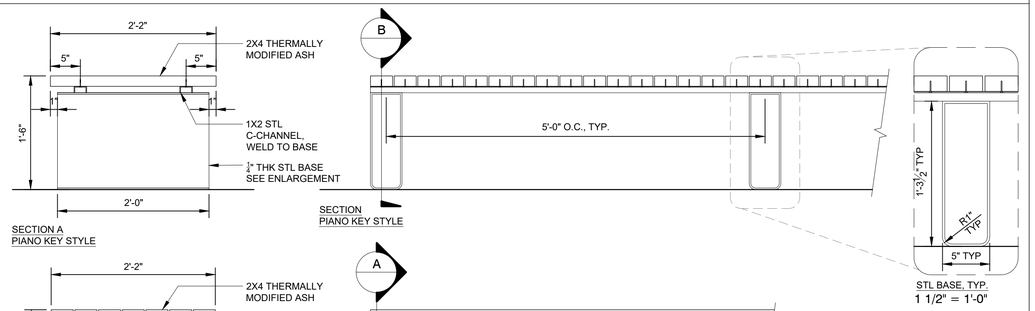

NOTE:
1. SEE WOOD BENCH - PLAN FOR LENGTH OF EACH BENCH SEGMENT. 4 L5.07
2. STEEL BASE AND FRAMING TO BE SHOP HOT DIP GALVANIZED AND PAINTED, COLOR TBD.
3. SPACE BETWEEN BOARDS SHALL BE ¼" TYP.
4. PROVIDE SHOP DRAWINGS.

3 WOOD BENCH

1" = 1'-0" P-MHORT-MAN-04

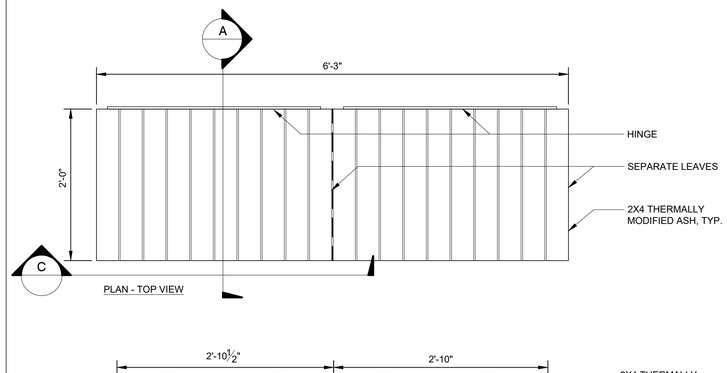

NOTE:
1. PROVIDE SHOP DRAWINGS
2. PROVIDE PRODUCT CUT SHEET FOR HINGE FOR APPROVAL PRIOR TO CONSTRUCTION

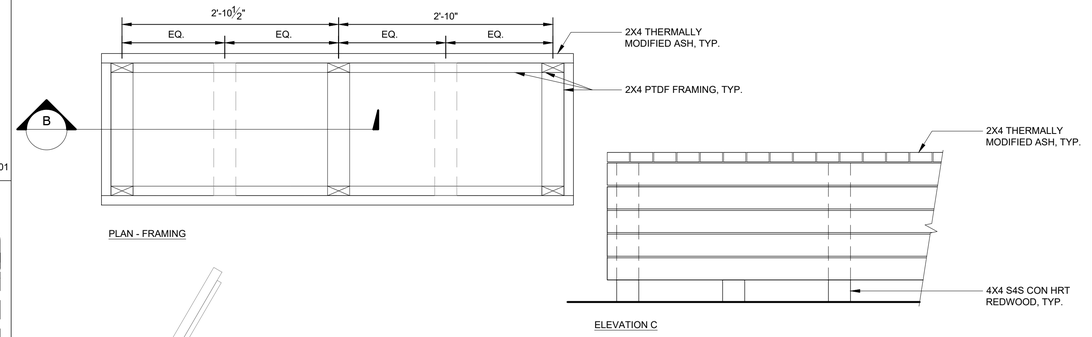

1 WOOD SEAT WITH STORAGE

1" = 1'-0" P-MHORT-WAL-30

APPROVALS

IDENTIFICATION STAMP
DIV. OF THE STATE ARCHITECT
APP: 01-119409 INC:
REVIEWED FOR
SS ☑ FLS ☑ ACS ☑
DATE: 03/14/2022

NOLL & TAM ARCHITECTS
729 Heinz Avenue
Berkeley, CA 94710
tel 510.542.2200
fax 510.542.2201

SEAL

BASE LANDSCAPE ARCHITECTURE
SAN FRANCISCO / PORTLAND
www.baselandscape.com

LICENSED LANDSCAPE ARCHITECT
SVETLANA MARIE VOLEJNIKOVA
Signature 12.31.2023
Renewal Date
11.11.2021
Date
STATE OF CALIFORNIA

PROJECT TITLE

Peralta Community College District
Merritt Landscape Horticulture Complex

12500 Campus Drive
Oakland, CA 94616

BID SET

ISSUE DATE 03/03/2022
N&T JOB NUMBER 22003
REVISIONS

	DATE	DESCRIPTION

DRAWN BY TY, JR, SV CHECKED BY SV

SHEET TITLE

LANDSCAPE CONSTRUCTION DETAILS

SHEET NUMBER

L5.07

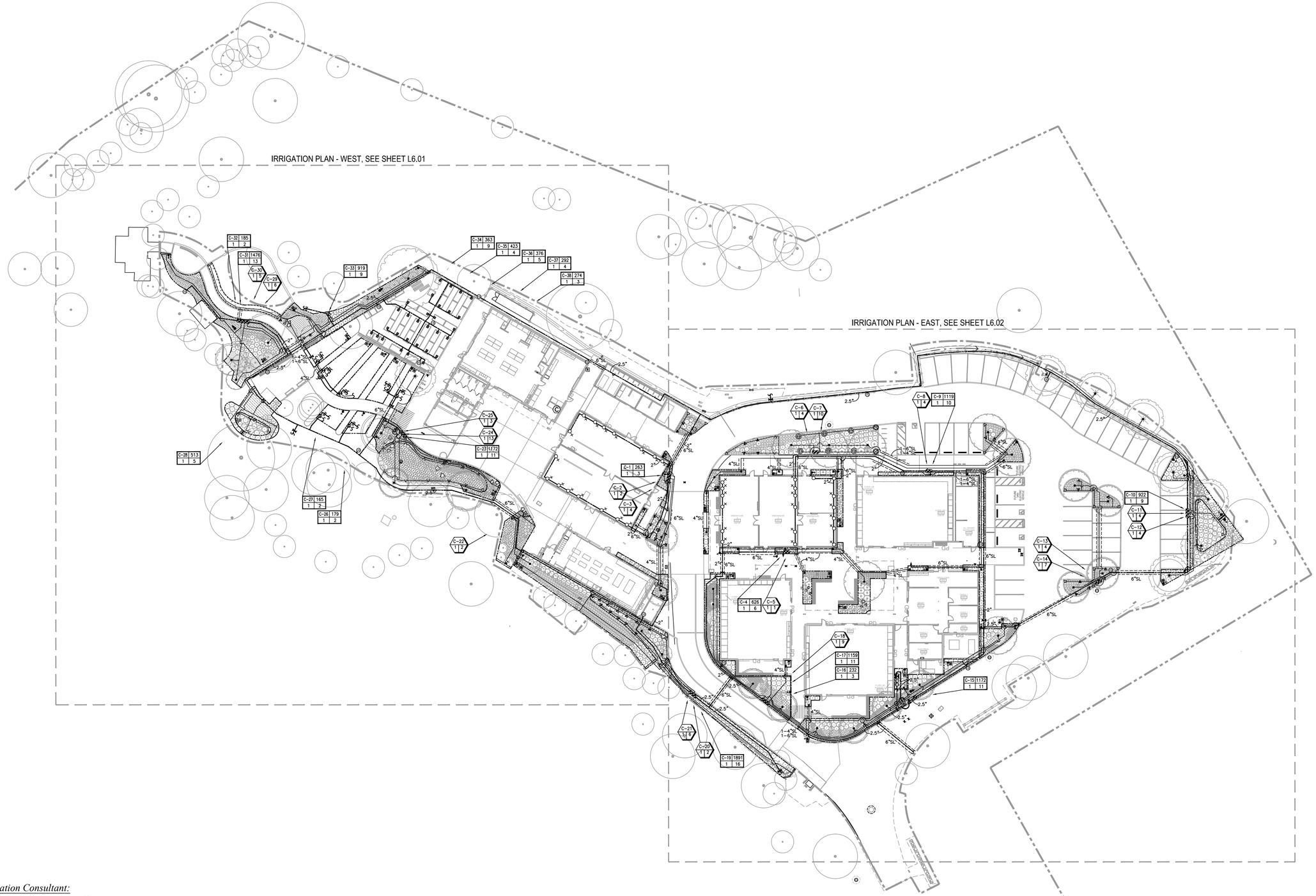

Irrigation Consultant:
Russell D. Mitchell Associates, Inc.
2760 Camino Diablo
Walnut Creek, CA 94597
tel 925.939.3985 ♦ fax 925.932.5671
www.rmairrigation.com

APPROVALS

IDENTIFICATION STAMP
DIV. OF THE STATE ARCHITECT
APP: 01-119409 INC:
REVIEWED FOR
SS ☑ FLS ☑ ACS ☑
DATE: 03/14/2022

NOLL & TAM ARCHITECTS
Berkeley, CA 94710
tel 510.542.2200
fax 510.542.2201

SEAL

BASE LANDSCAPE ARCHITECTURE
SAN FRANCISCO / PORTLAND
www.baselandscape.com

LICENSED LANDSCAPE ARCHITECT
SVETLANA MARIE VOLEJNIKOVA
Signature 12.31.2021
Expiration Date 3.26.2021
STATE OF CALIFORNIA

PROJECT TITLE

Peralta Community College District
Merritt Landscape Horticulture Complex

Oakland, CA 94616

BID SET

ISSUE DATE	03/03/2022
N&T JOB NUMBER	22003

REVISIONS

△	DATE	DESCRIPTION

DRAWN BY NM, TY | CHECKED BY SV

SHEET TITLE
IRRIGATION PLAN

SHEET NUMBER
L6.00

900 Campus Drive
729 Heinz Avenue

NOTES:

1. ONE BUBBLER SYMBOL IS SHOWN AT TREES FOR GRAPHIC CLARITY ONLY. INSTALL MINIMUM TWO BUBBLERS AT EACH TREE. INSTALL REQUIRED NUMBER OF BUBBLERS AS DETAILED.
2. IRRIGATION EQUIPMENT MAY BE SHOWN WITHIN HARDSCAPE FOR GRAPHIC CLARITY ONLY. INSTALL ALL IRRIGATION EQUIPMENT WITHIN PLANTED AREAS. IRRIGATION PIPE AND WIRE CROSSING BENEATH HARDSCAPE SURFACES SHALL BE CONTAINED WITHIN SLEEVING OR SCHEDULE 40 PVC CONDUIT. SLEEVING SIZE SHALL BE A MINIMUM OF TWO TIMES THE AGGREGATE DIAMETER OF ALL PIPES CONTAINED WITH SLEEVE. PROVIDE VERTICAL SWEEP FOR ALL ELECTRICAL CONDUIT ON EACH SIDE OF HARDSCAPE AND TERMINATE ENDS AT 12" MINIMUM DEPTH AND 12" FROM HARDSCAPE SURFACE.
3. UNSIZED LATERAL LINE PIPING LOCATED DOWN STREAM OF 1" PIPING SHALL BE 3/4" IN SIZE (TYPICAL).
4. SIZING OF LATERAL PIPE SHALL BE AS FOLLOWS:

0.75"	0–6 GPM
1"	7–12 GPM
1.25"	13–20 GPM
1.5"	21–32 GPM

5. SIZING OF LATERAL PIPE FOR DRIPLINE (12" O.C. GRID WITH 0.6 GPH OR LESS EMITTERS) SHALL BE AS FOLLOWS:

0.75	0–500 FT
1"	501–1100 FT
1.25"	1101–2000 FT
1.5"	2001–3000 FT

6. SIZING OF LATERAL PIPE FOR DRIPLINE (18" O.C. GRID WITH 0.6 GPH OR LESS EMITTERS) SHALL BE AS FOLLOW:

0.75"	0–1100 FT
1"	1101–2200 FT
1.25"	2201–3600 FT
1.5"	3601–4800 FT

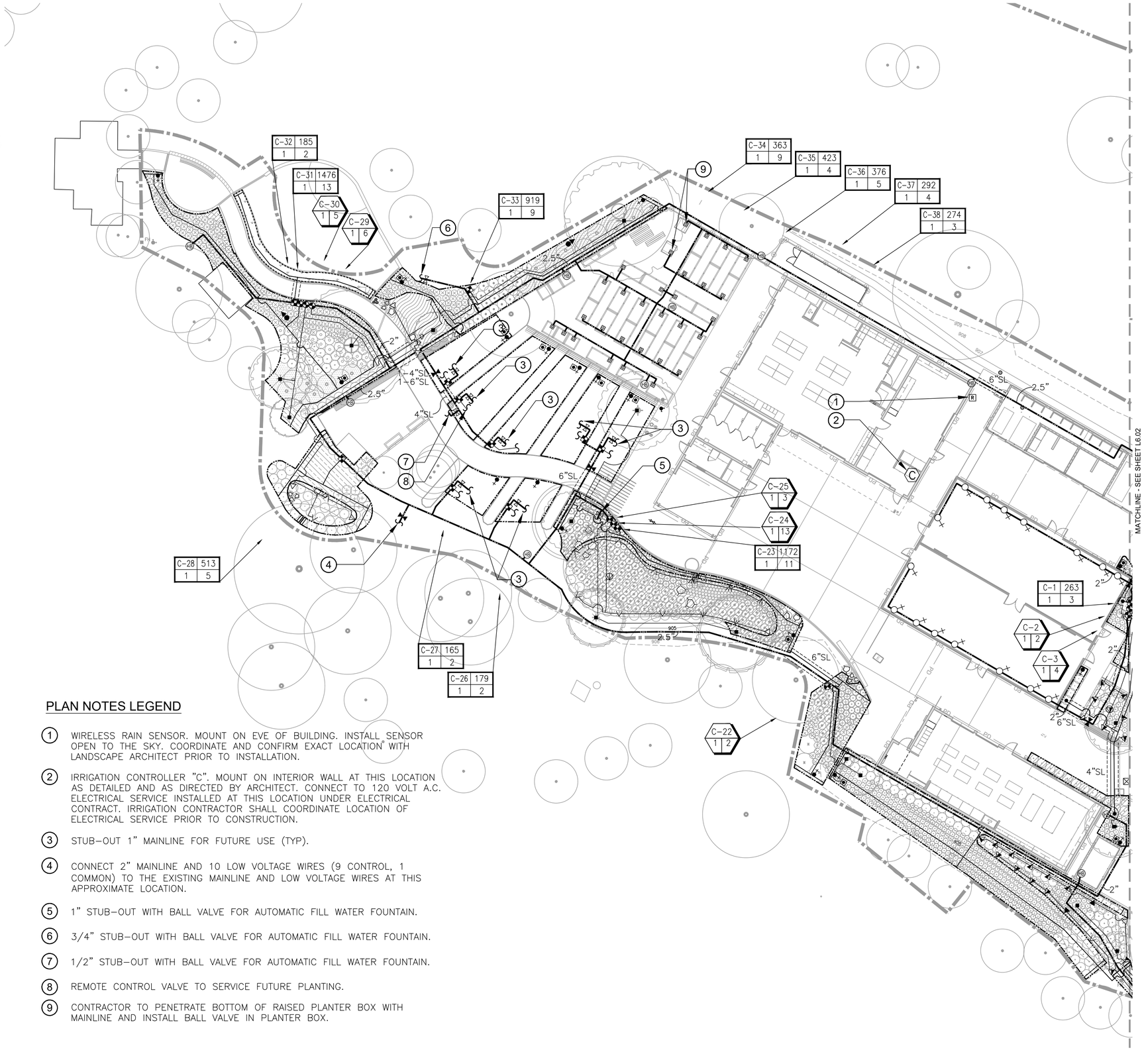

PLAN NOTES LEGEND

1. WIRELESS RAIN SENSOR. MOUNT ON EVE OF BUILDING. INSTALL SENSOR OPEN TO THE SKY. COORDINATE AND CONFIRM EXACT LOCATION WITH LANDSCAPE ARCHITECT PRIOR TO INSTALLATION.
2. IRRIGATION CONTROLLER "C". MOUNT ON INTERIOR WALL AT THIS LOCATION AS DETAILED AND AS DIRECTED BY ARCHITECT. CONNECT TO 120 VOLT A.C. ELECTRICAL SERVICE INSTALLED AT THIS LOCATION UNDER ELECTRICAL CONTRACT. IRRIGATION CONTRACTOR SHALL COORDINATE LOCATION OF ELECTRICAL SERVICE PRIOR TO CONSTRUCTION.
3. STUB–OUT 1" MAINLINE FOR FUTURE USE (TYP).
4. CONNECT 2" MAINLINE AND 10 LOW VOLTAGE WIRES (9 CONTROL, 1 COMMON) TO THE EXISTING MAINLINE AND LOW VOLTAGE WIRES AT THIS APPROXIMATE LOCATION.
5. 1" STUB–OUT WITH BALL VALVE FOR AUTOMATIC FILL WATER FOUNTAIN.
6. 3/4" STUB–OUT WITH BALL VALVE FOR AUTOMATIC FILL WATER FOUNTAIN.
7. 1/2" STUB–OUT WITH BALL VALVE FOR AUTOMATIC FILL WATER FOUNTAIN.
8. REMOTE CONTROL VALVE TO SERVICE FUTURE PLANTING.
9. CONTRACTOR TO PENETRATE BOTTOM OF RAISED PLANTER BOX WITH MAINLINE AND INSTALL BALL VALVE IN PLANTER BOX.

Irrigation Consultant:
Russell D. Mitchell Associates, Inc.
2760 Camino Diablo
Walnut Creek, CA 94597
tel 925.939.3985 ♦ fax 925.932.5671
www.rmairrigation.com

0 16 32 48 64 feet
1/16" = 1'-0"
NORTH

APPROVALS

IDENTIFICATION STAMP
DIV. OF THE STATE ARCHITECT
APP: 01-119409 INC:
REVIEWED FOR
SS ☑ FLS ☑ ACS ☑
DATE: 03/14/2022

NOLL & TAM ARCHITECTS
Berkeley, CA 94710
tel 510.542.2200
fax 510.542.2201

SEAL

BASE LANDSCAPE ARCHITECTURE
SAN FRANCISCO / PORTLAND
www.baselandscape.com

LICENSED LANDSCAPE ARCHITECT
SVETLANA MARIE VOLEJNIKOVA
Signature 12.31.2021
Expiration Date 3.26.2021
STATE OF CALIFORNIA

PROJECT TITLE

Peralta Community College District
Merritt Landscape Horticulture Complex

Oakland, CA 94616

BID SET

ISSUE DATE	03/03/2022
N&T JOB NUMBER	22003

REVISIONS

△	DATE	DESCRIPTION

DRAWN BY NM, TY | CHECKED BY SV

SHEET TITLE
IRRIGATION PLAN WEST

SHEET NUMBER
L6.01

900 Campus Drive
900 Heinz Avenue

NOTES:

1. ONE BUBBLER SYMBOL IS SHOWN AT TREES FOR GRAPHIC CLARITY ONLY. INSTALL MINIMUM TWO BUBBLERS AT EACH TREE. INSTALL REQUIRED NUMBER OF BUBBLERS AS DETAILED.
2. IRRIGATION EQUIPMENT MAY BE SHOWN WITHIN HARDSCAPE FOR GRAPHIC CLARITY ONLY. INSTALL ALL IRRIGATION EQUIPMENT WITHIN PLANTED AREAS. IRRIGATION PIPE AND WIRE CROSSING BENEATH HARDSCAPE SURFACES SHALL BE CONTAINED WITHIN SLEEVING OR SCHEDULE 40 PVC CONDUIT. SLEEVING SIZE SHALL BE A MINIMUM OF TWO TIMES THE AGGREGATE DIAMETER OF ALL PIPES CONTAINED WITH SLEEVE. PROVIDE VERTICAL SWEEP FOR ALL ELECTRICAL CONDUIT ON EACH SIDE OF HARDSCAPE AND TERMINATE ENDS AT 12" MINIMUM DEPTH AND 12" FROM HARDSCAPE SURFACE.
3. UNSIZED LATERAL LINE PIPING LOCATED DOWN STREAM OF 1" PIPING SHALL BE 3/4" IN SIZE (TYPICAL).
4. SIZING OF LATERAL PIPE SHALL BE AS FOLLOWS:

0.75"	0–6 GPM
1"	7–12 GPM
1.25"	13–20 GPM
1.5"	21–32 GPM

5. SIZING OF LATERAL PIPE FOR DRIPLINE (12" O.C. GRID WITH 0.6 GPH OR LESS EMITTERS) SHALL BE AS FOLLOWS:

0.75	0–500 FT
1"	501–1100 FT
1.25"	1101–2000 FT
1.5"	2001–3000 FT

6. SIZING OF LATERAL PIPE FOR DRIPLINE (18" O.C. GRID WITH 0.6 GPH OR LESS EMITTERS) SHALL BE AS FOLLOW:

0.75"	0–1100 FT
1"	1101–2200 FT
1.25"	2201–3600 FT
1.5"	3601–4800 FT

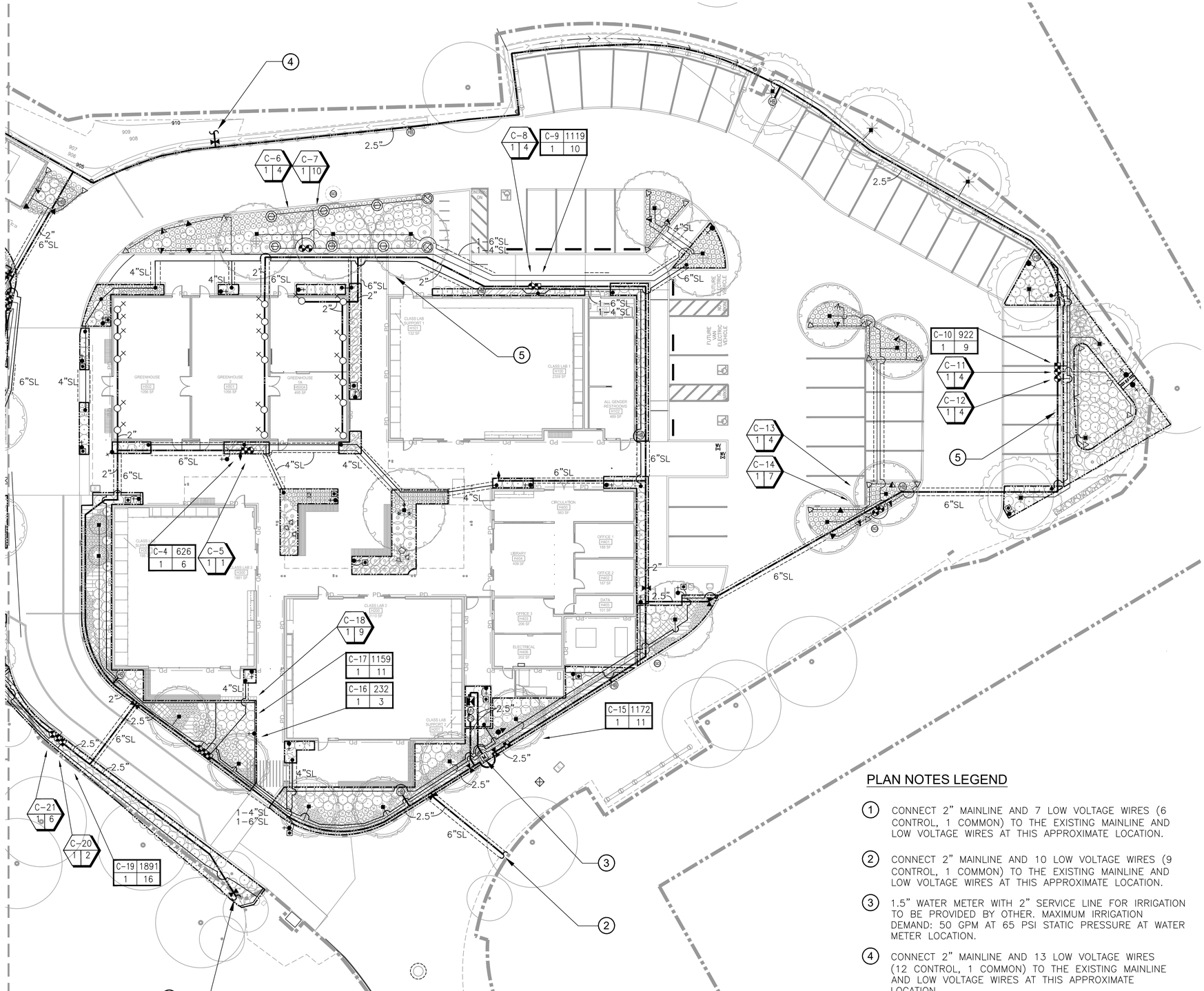

PLAN NOTES LEGEND

1. CONNECT 2" MAINLINE AND 7 LOW VOLTAGE WIRES (6 CONTROL, 1 COMMON) TO THE EXISTING MAINLINE AND LOW VOLTAGE WIRES AT THIS APPROXIMATE LOCATION.
2. CONNECT 2" MAINLINE AND 10 LOW VOLTAGE WIRES (9 CONTROL, 1 COMMON) TO THE EXISTING MAINLINE AND LOW VOLTAGE WIRES AT THIS APPROXIMATE LOCATION.
3. 1.5" WATER METER WITH 2" SERVICE LINE FOR IRRIGATION TO BE PROVIDED BY OTHER. MAXIMUM IRRIGATION DEMAND: 50 GPM AT 65 PSI STATIC PRESSURE AT WATER METER LOCATION.
4. CONNECT 2" MAINLINE AND 13 LOW VOLTAGE WIRES (12 CONTROL, 1 COMMON) TO THE EXISTING MAINLINE AND LOW VOLTAGE WIRES AT THIS APPROXIMATE LOCATION.
5. FOR GRAPHIC CLARITY IRRIGATION LINEWORK IS SHOW OUTSIDE PLANTING AREA. IRRIGATION LATERAL LINES, MAINLINE AND OR EQUIPMENT TO BE INSTALLED INSIDE PLANTERS.

Irrigation Consultant:
Russell D. Mitchell Associates, Inc.
2760 Camino Diablo
Walnut Creek, CA 94597
tel 925.939.3985 ♦ fax 925.932.5671
www.rmairrigation.com

0 16 32 48 64 feet
1/16" = 1'-0"
NORTH

APPROVALS

IDENTIFICATION STAMP
DIV. OF THE STATE ARCHITECT
APP: 01-119409 INC:
REVIEWED FOR
SS ☑ FLS ☑ ACS ☑
DATE: 03/14/2022

NOLL & TAM ARCHITECTS
Berkeley, CA 94710
tel 510.542.2200
fax 510.542.2201

SEAL

BASE LANDSCAPE ARCHITECTURE
SAN FRANCISCO / PORTLAND
www.baselandscape.com

LICENSED LANDSCAPE ARCHITECT
LENKA MARIE VOLEJNIKOVA
Signature 12.31.2021
Expiration Date 3.26.2021
STATE OF CALIFORNIA

PROJECT TITLE

Peralta Community College District
Merritt Landscape Horticulture Complex

Oakland, CA 94616

BID SET

ISSUE DATE	03/03/2022
N&T JOB NUMBER	22003

REVISIONS

△	DATE	DESCRIPTION

DRAWN BY NM, TY | CHECKED BY SV

SHEET TITLE
IRRIGATION PLAN EAST

SHEET NUMBER
L6.02

3000 Campus Drive
MAT LINE

IRRIGATION NOTES

1. THESE IRRIGATION DRAWINGS ARE DIAGRAMMATIC AND INDICATIVE OF THE WORK TO BE INSTALLED. ALL PIPING, VALVES, AND OTHER IRRIGATION COMPONENTS MAY BE SHOWN WITHIN PAVED AREAS FOR GRAPHIC CLARITY ONLY AND ARE TO BE INSTALLED WITHIN PLANTING AREAS. DUE TO THE SCALE OF THE DRAWINGS, IT IS NOT POSSIBLE TO INDICATE ALL OFFSETS, FITTINGS, SLEEVES, CONDUIT, AND OTHER ITEMS WHICH MAY BE REQUIRED. INVESTIGATE THE STRUCTURAL AND FINISHED CONDITION AFFECTING THE CONTRACT WORK INCLUDING OBSTRUCTIONS, GRADE DIFFERENCES OR AREA DIMENSIONAL DIFFERENCES. IN THE EVENT OF FIELD DISCREPANCY WITH CONTRACT DOCUMENTS, PLAN THE INSTALLATION WORK ACCORDINGLY BY NOTIFICATION AND APPROVAL OF THE OWNER'S AUTHORIZED REPRESENTATIVE AND ACCORDING TO THE CONTRACT SPECIFICATIONS. NOTIFY AND COORDINATE IRRIGATION CONTRACT WORK WITH APPLICABLE CONTRACTORS FOR THE LOCATION AND INSTALLATION OF PIPE, CONDUIT OR SLEEVES THROUGH OR UNDER WALLS, ROADWAYS, PAVING AND STRUCTURES BEFORE CONSTRUCTION. IN THE EVENT THESE NOTIFICATIONS ARE NOT PERFORMED, THE CONTRACTOR ASSUMES FULL RESPONSIBILITY FOR REQUIRED REVISIONS.

2. THE CONTRACTOR SHALL COMPLY WITH ALL APPLICABLE CODES, STANDARDS, AND REGULATIONS. ALL WORK AND MATERIALS SHALL BE IN FULL ACCORDANCE WITH THE LATEST RULES AND REGULATIONS OF THE NATIONAL ELECTRIC CODE; THE UNIFORM PLUMBING CODE, PUBLISHED BY THE WESTERN PLUMBING OFFICIALS ASSOCIATION; AND OTHER STATE OR LOCAL LAWS OR REGULATIONS. NOTHING IN THESE DRAWINGS IS TO BE CONSTRUED TO PERMIT WORK NOT CONFORMING TO THESE CODES OR REGULATIONS. THE CONTRACTOR SHALL FURNISH WITHOUT ANY EXTRA CHARGE, ANY ADDITIONAL MATERIAL AND LABOR WHEN REQUIRED BY THE COMPLIANCE WITH THESE CODES AND REGULATIONS.

3. THE CONTRACTOR SHALL COORDINATE INSTALLATION OF IRRIGATION SYSTEM WITH LAYOUT AND INSTALLATION OF THE PLANT MATERIALS TO INSURE THAT THERE WILL BE COMPLETE AND UNIFORM IRRIGATION COVERAGE OF PLANTING IN ACCORDANCE WITH THESE DRAWINGS, AND CONTRACT DOCUMENTS. THE IRRIGATION LAYOUT SHALL BE CHECKED BY THE CONTRACTOR AND OWNER'S AUTHORIZED REPRESENTATIVE PRIOR TO CONSTRUCTION TO DETERMINE IF ANY CHANGES, DELETIONS, OR ADDITIONS ARE REQUIRED. IRRIGATION SYSTEM SHALL BE INSTALLED AND TESTED PRIOR TO INSTALLATION OF PLANT MATERIAL.

4. THE INTENT OF THIS IRRIGATION SYSTEM IS TO PROVIDE THE MINIMUM AMOUNT OF WATER REQUIRED TO SUSTAIN GOOD PLANT HEALTH.

5. IT IS THE RESPONSIBILITY OF THE MAINTENANCE CONTRACTOR AND/OR OWNER TO PROGRAM THE IRRIGATION CONTROLLER(S) TO PROVIDE THE MINIMUM AMOUNT OF WATER NEEDED TO SUSTAIN GOOD PLANT HEALTH. THIS INCLUDES MAKING ADJUSTMENTS TO THE PROGRAM FOR SEASONAL WEATHER CHANGES, PLANT MATERIAL, WATER REQUIREMENTS, MOUNDS, SLOPES, SUN, SHADE AND WIND EXPOSURE.

6. IT IS THE RESPONSIBILITY OF A LICENSED ELECTRICAL CONTRACTOR TO PROVIDE 120 VOLT A.C. (2.5 AMP DEMAND PER CONTROLLER) ELECTRICAL SERVICE TO THE CONTROLLER LOCATION(S). IT IS THE RESPONSIBILITY OF THE IRRIGATION CONTRACTOR TO COORDINATE THE ELECTRICAL SERVICE STUB-OUT TO THE CONTROLLER(S). PROVIDE PROPER GROUNDING PER CONTROLLER MANUFACTURER'S INSTRUCTIONS AND IN ACCORDANCE WITH LOCAL CODES.

7. SCHEDULE A MEETING WHICH INCLUDES REPRESENTATIVES OF THE IRRIGATION CONTROLLER MANUFACTURER, THE MAINTENANCE CONTRACTOR, THE OWNER AND THE IRRIGATION CONTRACTOR AT THE SITE FOR INSTRUCTION ON THE PROPER PROGRAMMING AND OPERATION OF THE IRRIGATION CONTROLLER.

8. INSTALL 3" DETECTABLE TAPE ABOVE ALL PRESSURIZED MAIN LINES AS DETAILED. USE CHRISTY MODEL #TA-DT-3-BIRR FOR POTABLE IRRIGATION SYSTEMS OR #TA-DT-3-PRW FOR RECYCLED IRRIGATION WATER SYSTEMS.

9. PROVIDE EACH IRRIGATION CONTROLLER WITH ITS OWN INDEPENDENT LOW VOLTAGE COMMON GROUND WIRE.

10. IRRIGATION CONTROL WIRES: SOLID COPPER WITH U.L. APPROVAL FOR DIRECT BURIAL IN GROUND. COMMON GROUND WIRE: SIZE #12-1 WIRE WITH A WHITE INSULATING JACKET. CONTROL WIRE SERVICING REMOTE CONTROL VALVES: SIZE #14-1 WIRE WITH INSULATING JACKET OF COLOR OTHER THAN WHITE. SPLICES SHALL BE MADE WITH 3M-DBY SEAL PACKS OR APPROVED EQUAL.

11. INSTALL TWO SPARE CONTROL WIRES OF A DIFFERENT COLOR ALONG THE ENTIRE MAIN LINE. LOOP 36" EXCESS WIRE INTO EACH SINGLE VALVE BOX AND INTO ONE VALVE BOX IN EACH GROUP OF VALVES.

12. SPLICING OF LOW VOLTAGE WIRES IS PERMITTED IN VALVE BOXES ONLY. LEAVE A 36" LONG, 1" DIAMETER COIL OF EXCESS WIRE AT EACH SPLICE AND A 36" LONG EXPANSION LOOP EVERY 100 FEET ALONG WIRE RUN. TAPE WIRES TOGETHER EVERY TEN FEET. DO NOT TAPE WIRES TOGETHER WHERE CONTAINED WITHIN SLEEVING OR CONDUIT.

13. INSTALL BLACK PLASTIC VALVE BOXES WITH BOLT DOWN, NON HINGED COVER MARKED "IRRIGATION CONTROL VALVE". BOX BODY SHALL HAVE KNOCK OUTS. ACCEPTABLE VALVE BOX MANUFACTURER'S INCLUDE NDS, CARSON OR APPROVED EQUAL.

14. INSTALL REMOTE CONTROL VALVE BOXES 12" FROM WALK, CURB, BUILDING OR LANDSCAPE FEATURE. AT MULTIPLE VALVE BOX GROUPS, INSTALL EACH BOX AN EQUAL DISTANCE FROM THE WALK, CURB, BUILDING OR LANDSCAPE FEATURE AND PROVIDE 12" BETWEEN BOX TOPS. ALIGN THE SHORT SIDE OF RECTANGULAR VALVE BOXES PARALLEL TO WALK, CURB, BUILDING OR LANDSCAPE FEATURE.

15. VALVE LOCATIONS SHOWN ARE DIAGRAMMATIC. INSTALL IN GROUND COVER/SHRUB AREAS (AVOID LAWN AREAS WHERE POSSIBLE).

16. THE CONTRACTOR SHALL LABEL CONTROL LINE WIRE AT EACH REMOTE CONTROL VALVE WITH A 2 1/4" X 2 3/4" POLYURETHANE I.D. TAG, INDICATING IDENTIFICATION NUMBER OF VALVE (CONTROLLER AND STATION NUMBER). ATTACH LABEL TO CONTROL WIRE. THE CONTRACTOR SHALL PERMANENTLY STAMP ALL VALVE BOX LIDS WITH APPROPRIATE IDENTIFICATION AS NOTED IN CONSTRUCTION DETAILS.

17. THE REMOTE CONTROL VALVES SPECIFIED ON THE DRAWINGS IS A PRESSURE REDUCING TYPE. SET THE DISCHARGE PRESSURE AS FOLLOWS:

A. SPRAY HEADS=40 PSI
B. DRIP EMITTERS=35 PSI
C. BUBBLERS= 30 PSI

18. FLUSH AND ADJUST IRRIGATION OUTLETS AND NOZZLES FOR OPTIMUM PERFORMANCE AND TO PREVENT OVER SPRAY ONTO WALKS, ROADWAYS, AND/OR BUILDINGS. SELECT THE BEST DEGREE OF THE ARC AND RADIUS TO FIT THE EXISTING SITE CONDITIONS AND THROTTLE THE FLOW CONTROL AT EACH VALVE TO OBTAIN THE OPTIMUM OPERATING PRESSURE FOR EACH CONTROL ZONE.

19. SET SPRINKLER HEADS PERPENDICULAR TO FINISH GRADE.

20. LOCATE EMITTER OUTLETS ON UPHILL SIDE OF PLANT OR TREE.

21. LOCATE BUBBLERS ON UPHILL SIDE OF PLANT OR TREE.

22. INSTALL A HUNTER HCV SERIES, KBI CV SERIES, OR APPROVED EQUAL SPRING LOADED CHECK VALVE IN SPRINKLER RISER ASSEMBLIES WHERE LOW OUTLET DRAINAGE WILL CAUSE EROSION AND/OR EXCESS WATER.

23. WHERE IT IS NECESSARY TO EXCAVATE ADJACENT TO EXISTING TREES, USE CAUTION TO AVOID INJURY TO TREES AND TREE ROOTS. EXCAVATE BY HAND IN AREAS WHERE TWO (2) INCH AND LARGER ROOTS OCCUR. BACK FILL TRENCHES ADJACENT TO TREE WITHIN TWENTY-FOUR (24) HOURS. WHERE THIS IS NOT POSSIBLE, SHADE THE SIDE OF THE TRENCH ADJACENT TO THE TREE WITH WET BURLAP OR CANVAS. REFER TO TREE AND PLANT PROTECTION SPECS.

24. NOTIFY LOCAL JURISDICTIONS FOR INSPECTION AND TESTING OF INSTALLED BACKFLOW PREVENTION DEVICE.

25. THE IRRIGATION SYSTEM DESIGN IS BASED ON THE MINIMUM OPERATING PRESSURE SHOWN ON THE IRRIGATION DRAWINGS. VERIFY WATER PRESSURE PRIOR TO CONSTRUCTION. REPORT ANY DIFFERENCE BETWEEN THE WATER PRESSURE INDICATED ON THE DRAWINGS AND THE ACTUAL PRESSURE READING AT THE IRRIGATION POINT OF CONNECTION TO THE OWNER'S AUTHORIZED REPRESENTATIVE.

26. IRRIGATION DEMAND: REFER TO PLANS.

27. THE EXISTING MAIN LINE SHOWN ON THE DRAWINGS IS DIAGRAMMATIC. VERIFY AND LOCATE EXISTING MAIN LINE IN FIELD. REPORT TO ARCHITECT IN WRITING ANY DEVIATION OF EXISTING MAIN LINE LOCATION FROM THAT SHOWN ON THE DRAWINGS.

28. AT POINTS OF CONNECTION BETWEEN EXISTING SOLVENT WELD MAIN LINE AND A NEW MAIN LINE BRANCH, USE THE FOLLOWING PROCEDURE:

A. REMOVE A PORTION OF EXISTING MAINLINE.
B. FABRICATE A TEE WITH TWO 12" SECTIONS OF PIPE ON EACH SIDE OF A SCH 80 TEE. USE A SCH 80 COUPLING ON ONE SIDE OF PIPE TO CONNECT NEW SECTION TO OLD. USE A ROMAC, HYMAX OR SMITH BLAIR REPAIR COUPLING WITHOUT A CENTER STOP ON OTHER SIDE OF TEE TO CONNECT EXISTING MAINLINE. NO SLIP FIXES ARE ALLOWED.

29. PIPE SIZING SHOWN ON THE DRAWINGS IS TYPICAL. AS CHANGES IN LAYOUT OCCUR DURING STAKING AND CONSTRUCTION THE SIZE MAY NEED TO BE ADJUSTED ACCORDINGLY.

30. PIPE THREAD SEALANT COMPOUND SHALL BE RECTOR SEAL #5.

31. THE LANDSCAPE CONTRACTOR SHALL BE RESPONSIBLE FOR MINOR CHANGES IN THE IRRIGATION LAYOUT DUE TO OBSTRUCTIONS NOT SHOWN ON THE IRRIGATION DRAWINGS SUCH AS LIGHTS, FIRE HYDRANTS, SIGNS, ELECTRICAL ENCLOSURES, ETC.

32. THE LANDSCAPE CONTRACTOR SHALL BE RESPONSIBLE FOR CHANGES IN THE IRRIGATION LAYOUT AND VALVE ZONING DUE TO VARIATIONS IN THE EXISTING SITE CONDITIONS SUCH AS EXPOSURE FROM BUILDINGS, TRELLISES, TREES, ETC., AS WELL AS SLOPE AND SOIL CONDITIONS. THE CONTRACTOR SHALL NOTIFY THE LANDSCAPE ARCHITECT AND IRRIGATION CONSULTANT OF THE PROPOSED CHANGES PRIOR TO INSTALLATION FOR APPROVAL.

33. THE LANDSCAPE CONTRACTOR IS RESPONSIBLE FOR ADJUSTING THE IRRIGATION SYSTEM DESIGN IF THE PLANTING DESIGN CHANGES FROM THE ORIGINAL PLAN AND NEEDS TO ADAPT TO THE NEW PLANTING DESIGN. THE LANDSCAPE CONTRACTOR NEEDS TO NOTIFY THE LANDSCAPE ARCHITECT AND IRRIGATION CONSULTANT OF PROPOSED CHANGES PRIOR TO INSTALLATION FOR APPROVAL.

34. WHEN WORK OF THIS SECTION HAS BEEN COMPLETED AND SUCH OTHER TIMES AS MAY BE DIRECTED, REMOVE ALL TRASH, DEBRIS, SURPLUS MATERIALS AND EQUIPMENT FROM SITE.

35. CONTRACTOR SHALL BE RESPONSIBLE FOR SUPPLEMENTAL HAND WATERING OF ALL PLANT MATERIAL WITHIN DRIPLINE AREAS UNTIL THE PLANTS ARE SUFFICIENTLY ESTABLISHED.

36. VERIFY LOCATIONS OF ALL IRRIGATION COMPONENTS INSTALLED WITHIN A VALVE BOX WITH LANDSCAPE ARCHITECT PRIOR TO INSTALLATION. DO NOT INSTALL UNTIL LANDSCAPE ARCHITECT PROVIDES ACCEPTABLE LOCATIONS.

Irrigation Consultant:
Russell D. Mitchell Associates, Inc.
2760 Camino Diablo
Walnut Creek, CA 94597
tel 925.939.3985 ♦ fax 925.932.5671
www.rmairrigation.com

APPROVALS

IDENTIFICATION STAMP
DIV. OF THE STATE ARCHITECT
APP: 01-119409 INC:
REVIEWED FOR
SS ☑ FLS ☑ ACS ☑
DATE: 03/14/2022

NOLL & TAM ARCHITECTS
Berkeley, CA 94710
tel 510.542.2200
fax 510.542.2201

SEAL

BASE LANDSCAPE ARCHITECTURE
SAN FRANCISCO / PORTLAND
www.baselandscape.com

LICENSED LANDSCAPE ARCHITECT
SVETLANA MARIE VOLEJNIKOVA
Signature 12.31.2021
Expiration Date 3.26.2021
STATE OF CALIFORNIA

PROJECT TITLE

Peralta Community College District
Merritt Landscape Horticulture Complex

Oakland, CA 94616

BID SET

ISSUE DATE	03/03/2022
N&T JOB NUMBER	22003

REVISIONS

△	DATE	DESCRIPTION

DRAWN BY	CHECKED BY
NM, TY	SV

SHEET TITLE
IRRIGATION NOTES

SHEET NUMBER
L6.03

00 Campus Drive
729 Heinz Avenue

IRRIGATION LEGEND

SYMBOL	DESCRIPTION
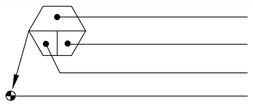	CONTROLLER AND STATION NUMBER FLOW (GPM) REMOTE CONTROL VALVE SIZE (IN INCHES) ASSOCIATED REMOTE CONTROL VALVE
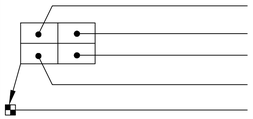	CONTROLLER AND STATION NUMBER AREA (SQ. FT.) FLOW (GPM) REMOTE CONTROL VALVE SIZE (IN INCHES) ASSOCIATED REMOTE CONTROL VALVE
	MAIN LINE: 2 1/2" AND SMALLER: 1120–SCHEDULE 40 PVC PLASTIC PIPE WITH SCHEDULE 40 PVC SOLVENT WELD FITTINGS. 18" COVER.
	LATERAL LINE: 3/4" AND LARGER: 1120–SCHEDULE 40 PVC PLASTIC PIPE WITH SCHEDULE 40 PVC SOLVENT WELD FITTINGS. 12" COVER.
	DRIPLINE LATERAL LINE: 3/4" AND LARGER: 1120–SCHEDULE 40 PVC PLASTIC PIPE WITH SCHEDULE 40 PVC SOLVENT WELD FITTINGS. 12" COVER.
	SLEEVING: SCHEDULE 40 PVC PLASTIC PIPE. COVER TO BE AS INDICATED IN SPECIFICATIONS OR AS INDICATED ABOVE FOR PIPE DEPTH OF COVER.
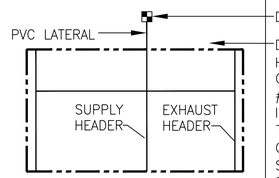	DRIPLINE REMOTE CONTROL VALVE DRIP ZONE: HUNTER HDL SERIES DRIPLINE WITH BUILT IN PRESSURE COMPENSATION AND CHECK VALVE, PART #HDL–06–12–250–CV. USE PLD FITTINGS. TUBING TO BE INSTALLED 4" BELOW GRADE IN A 12" O.C. GRID ACCORDING TO DETAILS. SIZE EXHAUST HEADERS AS FOLLOWS: 1": 0–10 GPM, 1.25": 11–20 GPM. ALL EXHAUST HEADERS SHALL BE 1" SCH 40 PVC OR 1" SCH 40 FLEXIBLE PVC. USE SCH. 40 PVC SOLVENT WELD FITTINGS. EXTEND PVC HEADERS TO THE ENDS OF ALL DRIP ZONES TO BALANCE FLOW IF REQUIRED. SEE DETAILS FOR FURTHER INFORMATION.
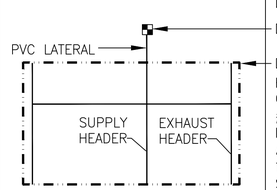	DRIPLINE REMOTE CONTROL VALVE DRIP ZONE: HUNTER HDL SERIES DRIPLINE WITH BUILT IN PRESSURE COMPENSATION AND CHECK VALVE, PART #HDL–06–12–250–CV. USE PLD FITTINGS. TUBING TO BE INSTALLED 6"–8" BELOW GRADE IN A 12" O.C. GRID ACCORDING TO DETAILS. SIZE EXHAUST HEADERS AS FOLLOWS: 1": 0–10 GPM, 1.25": 11–20 GPM. ALL EXHAUST HEADERS SHALL BE 1" SCH 40 PVC OR 1" SCH 40 FLEXIBLE PVC. USE SCH. 40 PVC SOLVENT WELD FITTINGS. EXTEND PVC HEADERS TO THE ENDS OF ALL DRIP ZONES TO BALANCE FLOW IF REQUIRED. SEE DETAILS FOR FURTHER INFORMATION.
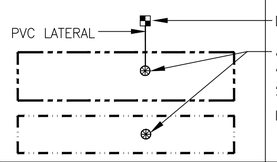	DRIPLINE REMOTE CONTROL VALVE APPROXIMATE CONNECTION POINT BETWEEN DRIPLINE TUBING AND PVC SUPPLY WHEN DRIP ZONE IS LESS THAN 3 GPM AND NO PVC SUPPLY/EXHUST HEADERS ARE NEEDED. REFER TO DRIPLINE TUBING CONNECTION DETAIL FOR MORE INFORMATION.

IRRIGATION LEGEND

SYMBOL	MODEL NUMBER	DESCRIPTION	NOZZLE GPM	OPERATING PSI	OPERATING RADIUS (FEET)
	570Z–12P–XF–COM/ PRN–TF (360°)	TORO POP–UP STREAM ROTATING SPRINKLER (SHRUB/GC)	2.56	40	16–20
	570Z–12P–XF–COM/ PRN–TA (45°–270°)	TORO POP–UP STREAM ROTATING SPRINKLER (SHRUB/GC)	1.22,0.62	40	16–20
	570Z–12P–PRX–COM/ O–T–15FP,15HP,15QP	TORO POP–UP SPRAY SPRINKLER (SHRUB/GC)	1.2,0.6	30	12–15
	570Z–12P–PRX–COM/ O–T–12FP,12HP,12QP	TORO POP–UP SPRAY SPRINKLER (SHRUB/GC)	1.5,0.75,.37	30	10–12
	570Z–12P–PRX–COM/ O–T–10FP,10HP,10QP	TORO POP–UP SPRAY SPRINKLER (SHRUB/GC)	0.23	30	8–10
	570Z–12P–PRX–COM/ O–T–8FP,8HP,8QP	TORO POP–UP SPRAY SPRINKLER (SHRUB/GC)	0.33,0.17	30	6–8
	570Z–12P–PRX–COM/ O–T–5HP,5QP	TORO POP–UP SPRAY SPRINKLER (SHRUB/GC)	0.13,0.06	30	4–5
	DB–15–PC–CV	TORO BUBBLER, 1 PER SHRUB	0.25	30	TRICKLE
	DB–15–PC–CV	TORO BUBBLER, MIN. 2 PER TREE. REFER TO BUBBLER DETAIL FOR QUANTITY OF BUBBLERS PER TREE SIZE.	0.25	30	TRICKLE
	PLD–AVR	HUNTER DRIPLINE AIR RELIEF VALVE			
	WLT–0500–T	NDS SCH 40 BALL VALVE OR APPROVED EQUAL (FLUSH VALVE AT DRIP)			
	ECO–ID	HUNTER POP–UP DRIPLINE INDICATOR			
	ICV SERIES	HUNTER REMOTE CONTROL VALVE			
	ICZ–101–40	HUNTER DRIP ZONE KIT WITH REMOTE CONTROL VALVE, PRESSURE REGULATOR (40 PSI) AND A 1" FILTER			
CV	KC OR KSC	NDS KSC SERIES CHECK VALVE FOR UPHILL FLOW DIRECTION OR KC SERIES SPRING CHECK VALVE FOR DOWNHILL FLOW DIRECTION (LINE SIZE)			
	WLT–0500–T	NDS SCH 40 BALL VALVE AT GARDEN BEDS			
	T–FP600A–LF–X"	NIBCO BRASS BALL VALVE AT GREEN HOUSES (LINE SIZE)			
	44–LRC	RAIN BIRD 1" TWO–PIECE QUICK COUPLING VALVE			
HB	108–004NL	ZORO 3/4" HOSE BIB			
	T–FP600A–LF–X"	NIBCO BRASS BALL VALVE			
	T113–K SERIES	NIBCO BRASS GATE VALVE (LINE SIZE)–2.5" AND SMALLER			
	975XLSEU–2"/PBB–30	WILKINS REDUCED PRESSURE BACKFLOW ASSEMBLY WITH VIT STRONGBOX ALUMINUM ENCLOSURE AND FREEZE BLANKET.			
MV	WT–MV–150G–SNO	WeatherTRAK 1" BRASS MASTER VALVE (NORMALLY OPEN)			
FS	WT–FS–100–CST	WeatherTRAK 1" FLOW SENSOR (1–40 GPM)			
C	WTPRO3–C–96–SWM	WeatherTRAK ET PRO3 96 STATION CONTROLLER IN A STAINLESS STEEL WALL MOUNTED ENCLOSURE.			
—	CIM–5YA	5 YEAR EXTENSION OF WeatherTRAK Central.			
R	WT–WRS	WIRELESS RAIN SENSOR SYSTEM. AUTOMATICALLY SHUTS THE SYSTEM OFF AS SOON AS IT STARTS RAINING.			

Irrigation Consultant:
Russell D. Mitchell Associates, Inc.
2760 Camino Diablo
Walnut Creek, CA 94597
tel 925.939.3985 ♦ fax 925.932.5671
www.rmairrigation.com

APPROVALS

IDENTIFICATION STAMP
DIV. OF THE STATE ARCHITECT
APP: 01-119409 INC:
REVIEWED FOR
SS ☑ FLS ☑ ACS ☑
DATE: 03/14/2022

NOLL & TAM ARCHITECTS
Berkeley, CA 94710
tel 510.542.2200
fax 510.542.2201

SEAL

BASE LANDSCAPE ARCHITECTURE
SAN FRANCISCO / PORTLAND
www.baselandscape.com

LICENSED LANDSCAPE ARCHITECT
SVETLANA MARIE VOLEJNIKOVA No. 5854
Signature 12.31.2021
Expiration Date 3.26.2021
STATE OF CALIFORNIA

PROJECT TITLE

Peralta Community College District
Merritt Landscape Horticulture Complex

Oakland, CA 94616

BID SET

ISSUE DATE	03/03/2022
N&T JOB NUMBER	22003

REVISIONS

	DATE	DESCRIPTION

DRAWN BY NM, TY | CHECKED BY SV

SHEET TITLE
IRRIGATION LEGEND

SHEET NUMBER
L6.04

00 Campus Dri e
729 Heinz Avenue

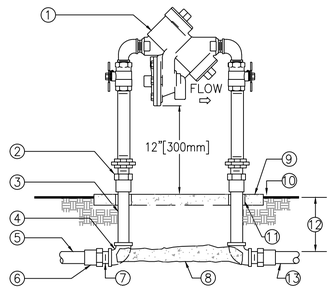

① REDUCED PRESSURE BACKFLOW ASSEMBLY.
② WROUGHT COPPER MALE ADAPTER–2 TOTAL (SOLDER x THREAD CONNECTION).
③ COPPER TYPE "K" PIPE (LENGTH AS REQUIRED).
④ WROUGHT COPPER 90° ELBOW–2 TOTAL (SOLDER x THREAD CONNECTION).
⑤ PVC MAIN LINE TO POINT OF CONNECTION.
⑥ BUSH AS NECESSARY FOR SIZE TRANSITION.
⑦ SCHEDULE 40 PVC MALE ADAPTER–2 TOTAL.
⑧ CONCRETE SUPPORT BLOCK.
⑨ CONCRETE PAD–SEE ENCLOSURE DETAIL.
⑩ FINISH GRADE.
⑪ PVC SLEEVE BOTH SIDES.
⑫ REFER TO IRRIGATION LEGEND.
⑬ PVC MAIN LINE TO IRRIGATION SYSTEM.

NOTES:
1. INSTALL A FREEZE PREVENTATIVE BLANKET AROUND BACKFLOW ASSEMBLY. BLANKET SHALL BE GREEN.
2. DO NOT SOLDER CONNECT FITTINGS WHILE THREADED INTO BACKFLOW ASSEMBLY. THIS MAY CAUSE DAMAGE TO DEVICE.
3. NIPPLES AND FITTINGS TO BE SAME IPT SIZE AS BACKFLOW ASSEMBLY.
4. PROVIDE A STAINLESS STEEL ENCLOSURE TO COMPLETELY ENCLOSE DEVICE. INSTALL ENCLOSURE TO CONCRETE BASE AS DIRECTED BY MANUFACTURER.

1 REDUCED PRESSURE BACKFLOW ASSEMBLY
SCALE: NONE

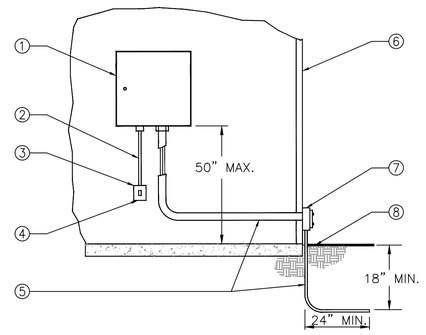

①IRRIGATION CONTROLLER
②120 VOLT SERVICE IN RIGID STEEL CONDUIT
③120 VOLT LOCKABLE ON/OFF SWITCH PROVIDED UNDER IRRIGATION CONTRACT
④120 VOLT SERVICE TO CONTROLLER LOCATION PROVIDED BY ELECTRICAL CONTRACTOR
⑤SCHEDULE 40 GREY PVC ELECTRICAL CONDUIT FOR LOW VOLTAGE WIRE
⑥EXTERIOR WALL
⑦ELECTRICAL PULL BOX PER ELECTRICAL CODE
⑧FINISH GRADE

2 INTERIOR MOUNTED CONTROLLER
SCALE: NONE

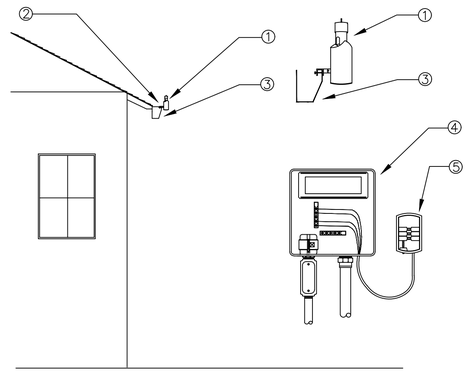

NOTE: MAXIMUM LINE OF SIGHT FROM RAIN SENSOR TO RECEIVER IS 300 FT. DISTANCE IS LESS IF OBSTRUCTIONS EXIST. SENSOR MUST BE INSTALLED IN "CLEAR SPACE" WHERE IT IS EXPOSED TO UNOBSTRUCTED RAINFALL AND IS CLEAR OF IRRIGATION SPRAY.

① WIRELESS RAIN SENSOR TRANSMITTER (GUTTER MOUNTED)
② MOUNT RAIN SENSOR ON GUTTER/EVE
③ GUTTER
④ CONTROLLER
⑤ RAIN SENSOR RECEIVER

3 WIRELESS RAIN SENSOR–GUTTER MOUNT
SCALE: NONE

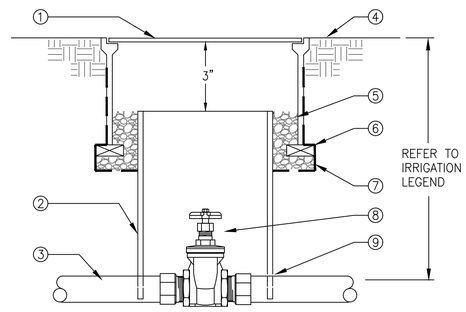

① 10" ROUND PLASTIC VALVE BOX WITH BOLT DOWN LID.
② 8" CLASS 160 OR SCHEDULE 40 PVC PIPE (NOTCH TO FIT OVER MAIN LINE PIPE).
③ PVC MAIN LINE.
④ FINISH GRADE.
⑤ PEA GRAVEL OR 3/4" DRAIN ROCK – 4" DEEP (NO SOIL IN VALVE BOX).
⑥ BRICK–2 TOTAL.
⑦ 19 GAUGE 1/2" SQUARE WIRE MESH. WRAP UP SIDES OF BOX.
⑧ GATE VALVE WITH X–TOP HANDLE.
⑨ MALE ADAPTER. REFER TO LEGEND FOR FITTING TYPE.

4 GATE VALVE – 3" [75mm] AND SMALLER
SCALE: NONE

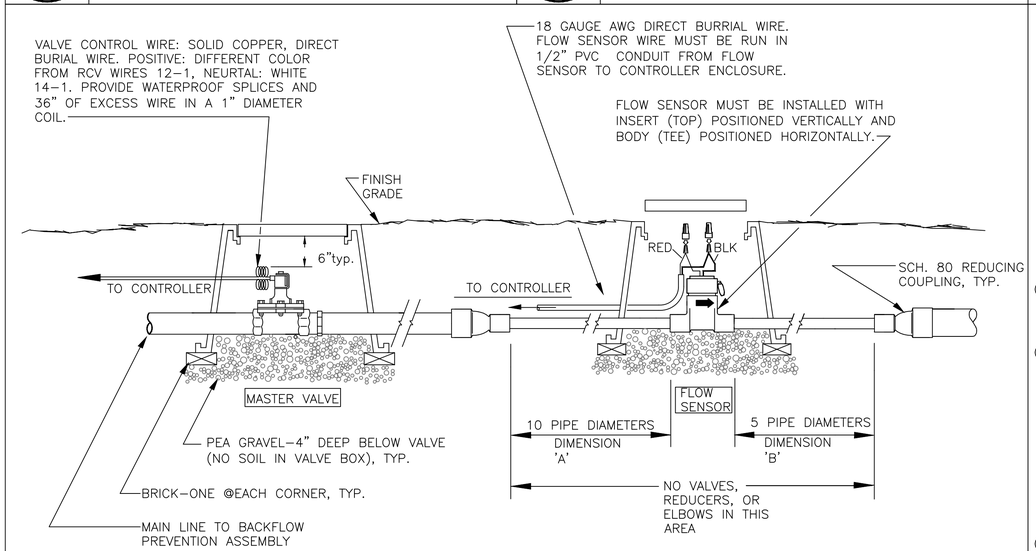

5 INSTALLATION DETAIL – MASTER VALVE/FLOW SENSOR
SCALE: NONE

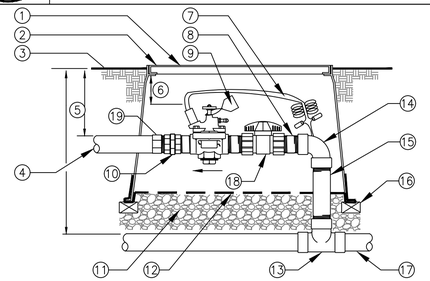

① REMOTE CONTROL VALVE WITH FLOW CONTROL AND MANUAL BLEED (PRESSURE REGULATOR WHERE SHOWN ON PLANS).
② USE A NDS PRO SERIES 14" X 19" RECTANGULAR PLASTIC VALVE BOX WITH BOLT DOWN LID FOR 1" VALVES. FOR 1.5" AND LARGER VALVES INSTALL BALL VALVE WITHIN A SEPARATE 10" ROUND BOX OR ONE BALL VALVE PER MANIFOLD OF VALVES. GATE VALVE SIZE SHALL BE SAME AS LARGEST VALVE WITHIN MANIFOLD. ONE VALVE PER BOX– NO EXCEPTIONS. INSTALL BOX AS SHOWN IN BOX INSTALLATION DETAIL.
③ FINISH GRADE.
④ PVC LATERAL LINE.
⑤ REFER TO IRRIGATION SPECS.
⑥ 3" [75mm] MIN, 6" [150mm] MAX.
⑦ VALVE CONTROL WIRE– PROVIDE SEAL PACKS AT ALL SPLICES AND 3' [1m] OF EXCESS UF WIRE IN A 1" [25mm] DIAMETER COIL.
⑧ SCHEDULE 80 PVC NIPPLE (3 TOTAL).
⑨ VALVE I.D. TAG (CONTROLLER AND STATION NUMBER).
⑩ SCHEDULE 80 PVC THREADED UNION.
⑪ PEA GRAVEL OR 3/4" DRAIN ROCK– 4" [100mm] DEEP BELOW VALVE (NO SOIL IN VALVE BOX).
⑫ 19 GAUGE 1/2" [12mm] SQUARE WIRE MESH.
⑬ SCHEDULE 40 OR 80 PVC TEE. REFER TO LEGEND FOR TYPE.
⑭ SCHEDULE 80 PVC 90° ELBOW (TxT).
⑮ SCHEDULE 80 PVC NIPPLE– LENGTH AS REQUIRED.
⑯ BRICK–1 EACH CORNER.
⑰ PVC MAIN LINE.
⑱ SCHEDULE 80 PVC UNION BALL VALVE (ONE PER VALVE).
⑲ SCHEDULE 40 MALE ADAPTER

6 REMOTE CONTROL VALVE
SCALE: NONE

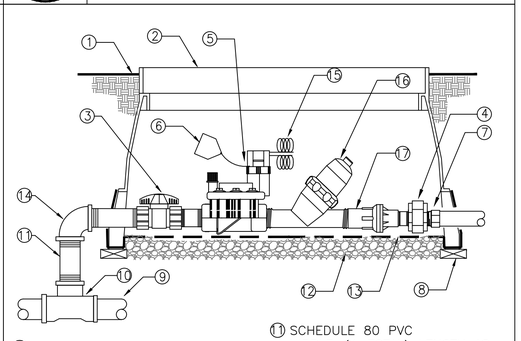

①FINISH GRADE
②RECTANGULAR JUMBO PLASTIC VALVE BOX WITH BOLT DOWN LID. ONE VALVE PER BOX– NO EXCEPTIONS. INSTALL BOX AS SHOWN IN BOX INSTALLATION DETAIL.
③SCHEDULE 80 PVC UNION BALL VALVE (ONE PER VALVE)
④SCHEDULE 80 PVC THREADED UNION
⑤REMOTE CONTROL VALVE
⑥VALVE I.D. TAG (CONTROLLER AND STATION NUMBER).
⑦SCHEDULE 40 MALE ADAPTER
⑧BRICK–1 EACH CORNER.
⑨PVC MAIN LINE.
⑩SCHEDULE 40 OR 80 PVC TEE. REFER TO LEGEND FOR TYPE.
⑪SCHEDULE 80 PVC NIPPLE–(4–TOTAL) LENGTH AS REQUIRED.
⑫PEA GRAVEL OR 3/4" [20mm] DRAIN ROCK – 4" [102mm] DEEP BELOW VALVE (NO SOIL IN VALVE BOX).
⑬19 GAUGE 1/2" [13mm] SQUARE WIRE MESH.
⑭SCHEDULE 80 PVC 90° ELBOW (TxT).
⑮VALVE CONTROL WIRE– PROVIDE 3M–DBY SEAL PACKS AT ALL SPLICES AND 3' [1m] OF EXCESS UF WIRE IN A 1" [25mm] DIAMETER COIL.
⑯DISC FILTER
⑰PRESSURE REGULATOR (40 PSI)

7 REMOTE CONTROL VALVE (DRIPZONE)
SCALE: NONE

APPROVALS

IDENTIFICATION STAMP
DIV. OF THE STATE ARCHITECT
APP: 01-119409 INC:
REVIEWED FOR
SS ☑ FLS ☑ ACS ☑
DATE: 03/14/2022

NOLL & TAM ARCHITECTS
Berkeley, CA 94710
tel 510.542.2200
fax 510.542.2201

SEAL

LICENSED LANDSCAPE ARCHITECT
SVETLANA MARIE VOLEJNIKOVA
Signature
12.31.2021
Expiration Date
3.26.2021
Date
STATE OF CALIFORNIA

BASE LANDSCAPE ARCHITECTURE
SAN FRANCISCO / PORTLAND
www.baselandscape.com

PROJECT TITLE

Peralta Community College District
Merritt Landscape Horticulture Complex

Oakland, CA 94616

BID SET

ISSUE DATE	03/03/2022
N&T JOB NUMBER	22003

REVISIONS

	DATE	DESCRIPTION

DRAWN BY NM, TY | CHECKED BY SV

SHEET TITLE

IRRIGATION DETAILS

SHEET NUMBER

L6.05

500 Campus Drive
729 Heinz Ave

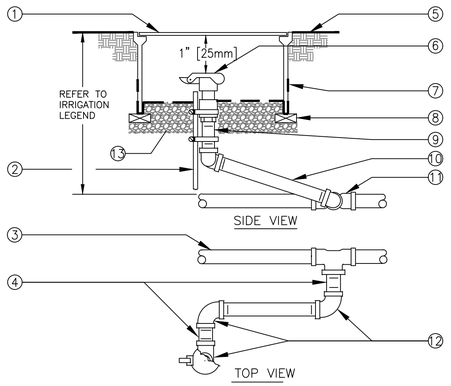

① 10" ROUND PLASTIC VALVE BOX WITH BOLT DOWN LID.
② 1 1/4" x 1 1/4" x 3/16" [30mm x 30mm x 5mm] ANGLE IRON 30" [760mm] LONG W/2 STAINLESS STEEL STRAPS (ONE AROUND QCV).
③ PVC MAIN LINE.
④ 3" [75mm] LONG SCHEDULE 80 PVC THREADED NIPPLE.
⑤ FINISH GRADE.
⑥ QUICK COUPLING VALVE.
⑦ 19 GAUGE 1/2" [13mm] SQUARE WIRE MESH.
⑧ BRICK – 2 TOTAL.
⑨ SCHEDULE 80 PVC THREADED NIPPLE.
⑩ 10" [250mm] LONG SCHEDULE 80 PVC THREADED NIPPLE.
⑪ UPC APPROVED SCHEDULE 40 PVC TEE OR ELBOW.
⑫ SCHEDULE 80 PVC THREADED 90° ELL.
⑬ PEA GRAVEL OR 3/4" DRAIN ROCK– 4" [100mm] DEEP BELOW VALVE (NO SOIL IN VALVE BOX).

NOTE:
NIPPLES AND FITTINGS TO BE SAME SIZE AS VALVE IPT INLET THREAD SIZE.

1 QUICK COUPLING VALVE
SCALE: NONE

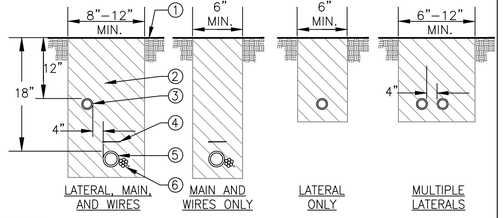

NOTES:
1. ALL MAIN SUPPLY LINES AND LATERAL LINES SHALL BE PLACED IN SLEEVES UNDER PAVED SURFACES. INSTALL LOW VOLTAGE WIRES WITHIN A SEPARATE CONDUIT UNDER PAVED SURFACES. DO NOT TAPE WIRES WITHIN CONDUIT.
2. REUSE SALVAGED EXCAVATED FILL AND COMPACT TO ORIGINAL DENSITY IN LANDSCAPE AREAS. ALL OTHER AREAS SHALL BE AT 95% COMPACTION. BACKFILL MATERIAL SHALL BE THE EARTH EXCAVATED FROM THE TRENCHES, FREE FROM ROCKS (ANYTHING LARGER THAN 2"), CONCRETE CHUNKS, AND OTHER FOREIGN OR COARSE MATERIALS.
3. WHEN 12" POP–UP SPRINKLER HEADS ARE USED, INCREASE THE DEPTH OF LATERAL TO 18" AT THE SPRINKLER LOCATION ONLY.

① FINISH GRADE.
② CLEAN BACKFILL MATERIAL.
③ LATERAL LINE.
④ 3" DETECTABLE WARNING TAPE OVER MAIN LINE. INSTALL 3" ABOVE MAIN LINE. USE CHRISTY MODEL #TA–DT–3–BIRR FOR POTABLE IRRIGATION SYSTEMS OR #TA–DT–3–PRW FOR RECYCLED IRRIGATION WATER SYSTEMS
⑤ MAIN LINE.
⑥ LOW VOLTAGE CONTROL WIRES, TWO–WIRE CABLE, OR CONDUIT WITH WIRES. FOR MULTIPLE WIRES, TAPE AND BUNDLE WIRES AT 10 FT. INTERVALS. WIRING SHALL BE LAID OUT LOOSELY IN THE TRENCH.

2 TRENCHING
SCALE: NONE

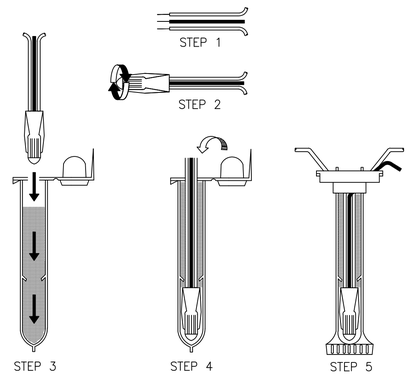

NOTE:
MAXIMUM # OF WIRES PER CONNECTOR:
- 3–#14 GAUGE
- 2–#12 GAUGE

INSTRUCTIONS:
1. STRIP WIRES APPROXIMATELY 1/2" FROM ENDS TO EXPOSE WIRE.
2. TWIST CONNECTOR AROUND WIRES CLOCKWISE UNTIL HAND TIGHT, DO NOT OVERTIGHTEN.
3. INSERT WIRE ASSEMBLY TO BOTTOM OF GEL–FILLED TUBE. CHECK TO MAKE SURE CONNECTOR HAS BEEN PUSHED PAST LOCKING FINGERS AND IS SEATED AT THE BOTTOM OF THE TUBE.
4. PLACE WIRES WHICH EXIT TUBE IN WIRE EXIT HOLES AND CLOSE CAP UNTIL IT SNAPS.
5. INSPECT FINAL SPLICE ASSEMBLY THAT IT IS SECURED.

3 WEATHERPROOF WIRE SPLICE ASSEMBLY
SCALE: NONE

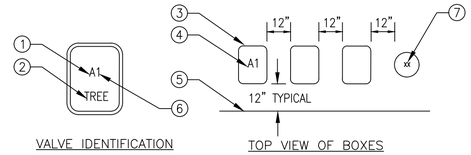

① CONTROLLER ID.
② ALL TREE VALVES TO HAVE TREE BRANDED INTO LID.
③ RECTANGULAR VALVE BOX.
④ HEAT BRAND VALVE TYPE PER TABLE OR CONTROLLER ID AND STATION NUMBER INTO LID.
⑤ EDGE OF LAWN, WALK, FENCE, CURB, ETC.
⑥ STATION NUMBER.
⑦ ROUND VALVE BOX FOR QCV AND GATE VALVE. HEAT BRAND VALVE TYPE INTO INTO LID PER TABLE.

ITEMS TO BRAND:	BRAND CODE
GATE VALVE	GV
PRESSURE REDUCER	PRV
MASTER VALVE	MV
FLOW SENSOR	FS
HYDROMETER	HM
MAIN LINE AIR RELIEF	ARV
REMOTE CONTROL VALVE	A___
QUICK COUPLER	QC
SPLICE BOX	SB
PULL BOX	PB
LIGHTNING ARRESTOR	LA
GROUND ROD	GR

INSTRUCTIONS:
1. CENTER VALVE BOX OVER REMOTE CONTROL VALVE TO FACILITATE SERVICING VALVE.
2. SET BOXES 1" ABOVE FINISH GRADE OR MULCH COVER IN GROUND COVER/SHRUB AREA AND FLUSH WITH FINISH GRADE IN TURF AREA.
3. SET RCV AND VALVE BOX ASSEMBLY IN GROUND COVER/SHRUB AREA WHERE POSSIBLE. INSTALL IN LAWN ONLY IF GROUND COVER DOES NOT EXIST ADJACENT TO LAWN.
4. SET BOXES PARALLEL TO EACH OTHER AND PERPENDICULAR TO EDGE OF LAWN, WALK, FENCE, CURB, ETC.
5. AVOID HEAVILY COMPACTING SOIL AROUND VALVE BOXES TO PREVENT COLLAPSE AND DEFORMATION OF VALVE BOX SIDES.
6. INSTALL EXTENSION BY VALVE BOX MANUFACTURER AS REQUIRED TO COMPLETELY ENCLOSE ASSEMBLY FOR EASY ACCESS.

4 VALVE BOX INSTALLATION
SCALE: NONE

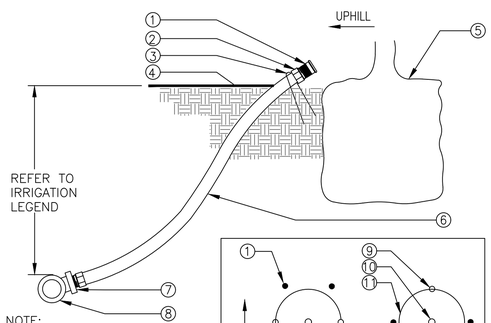

NOTE:
SUGGESTED QUANTITY OF BUBBLERS PER TREES AND SHRUBS SIZE:
- SHRUBS = 1 BUBBLER
- 15 GAL OR 24" BOX = 2 BUBBLERS
- 36" OR 48" BOX = 4 BUBBLERS

① BUBBLER (TO BE INSTALLED ON TOP OF ROOTBALL).
② 1/2" SCH. 40 MALE ADAPTER (2 TOTAL).
③ 6" STAPLE.
④ FINISH GRADE.
⑤ TREE OR SHRUB ROOTBALL.
⑥ 1/2" IPS FLEXIBLE PVC. USE WELD–ON 795 SOLVENT CEMENT OR EQUAL WHEN BONDING PVC HOSE TO FITTINGS.
⑦ PVC TEE (SST), ELBOW (ST) OR FEMALE ADAPTER.
⑧ PVC LATERAL LINE.
⑨ TREE STAKES.
⑩ TREE OR SHRUB.
⑪ EDGE OF ROOTBALL (TYPICAL).

5 TREE AND SHRUB BUBBLER
SCALE: NONE

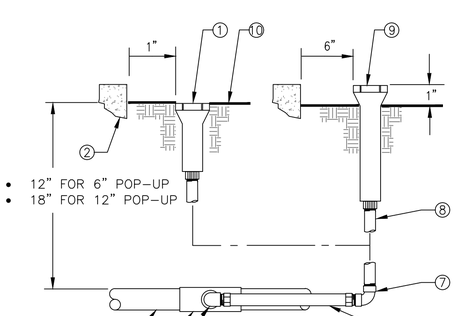

① POP–UP LAWN.
② WALL, WALK, CURB OR BUILDING.
③ PVC LATERAL LINE.
④ SCH. 40 PVC TEE OR ELBOW.
⑤ 1/2" SCH. 40 PVC STREET ELL.
⑥ 1/2" FLEXIBLE IPS HOSE 6" LONG WITH MALE ADAPTERS.
⑦ 1/2" SCH. 40 PVC THREADED 90° ELL.
⑧ 1/2" SCH. 80 PVC THREADED NIPPLE (LENGTH AS REQUIRED).
⑨ POP–UP SHRUB SPRAY SPRINKLER OR BUBBLER.
⑩ FINISH GRADE.

6 POP–UP SPRAY SPRINKLER RISER
SCALE: NONE

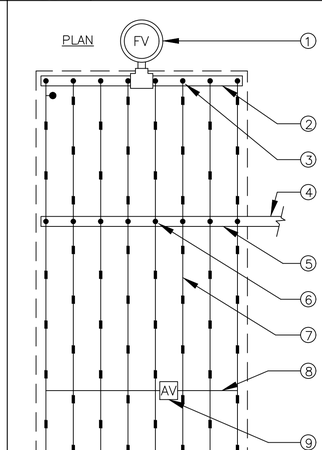

① FLUSH VALVE PLUMBED TO FLUSH MANIFOLD AT LOW POINT
② 1" FLEXIBLE PVC IPS HOSE FLUSH MANIFOLD.
③ MANIFOLD–TO–ELBOW CONNECTION (TYP).
④ PVC LATERAL LINE FROM VALVE. MINIMUM SIZE TO BE 1" UNLESS OTHERWISE NOTED.
⑤ PVC SUPPLY MANIFOLD.
⑥ MANIFOLD–TO–TEE CONNECTION.
⑦ DRIPLINE LATERAL.
⑧ AIR/VACUUM RELIEF LATERAL, BLANK POLY TUBING CENTERED ON MOUND OR BERM.
⑨ AIR/VACUUM RELIEF PLUMBED TO BLANK 5/8" POLY TUBING AT EACH HIGH POINT.
⑩ PERIMETER LATERALS 2" [50mm] TO 4" [100mm] FROM EDGE.
⑪ AREA PERIMETER.
⑫ DRIPLINE OPERATION INDICATOR LOCATED AT THE ENDS OF EACH DRIPLINE ZONE.

NOTE:
1. THE TOTAL LENGTH OF ALL INTERCONNECTED DRIP LINE OFF A SINGLE PVC SUPPLY LINE CONNECTION OR A SINGLE RUN OF DRIPLINE SHALL NOT EXCEED 300 FT.
2. INSTALL DRIPLINE ON GRADE AND STAKE DOWN EVERY 4' OR AS REQUIRED.

7 HLD DRIPLINE CENTER FEED LAYOUT
SCALE: NONE

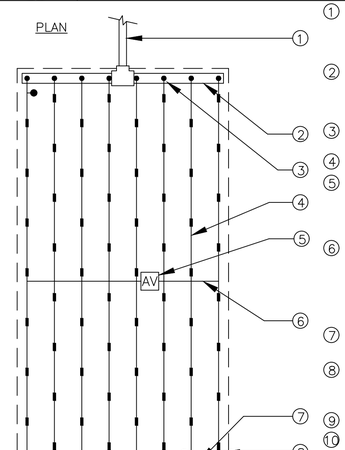

① PVC LATERAL LINE FROM VALVE. MINIMUM SIZE TO BE 1" UNLESS OTHERWISE NOTED.
② PVC FLUSH MANIFOLD. MINIMUM SIZE TO BE 1" UNLESS OTHERWISE NOTED.
③ MANIFOLD–TO–ELBOW CONNECTION (TYP).
④ DRIPLINE LATERAL.
⑤ AIR/VACUUM RELIEF VALVE PLUMBED TO BLANK 5/8" TUBING AT EACH HIGH POINT.
⑥ AIR/VACUUM RELIEF LATERAL, BLANK 5/8" POLY TUBING CENTERED ON MOUND OR BERM.
⑦ 1" FLEXIBLE PVC IPS HOSE FLUSH MANIFOLD.
⑧ PERIMETER LATERALS 2" [50mm] TO 4" [100mm] FROM EDGE.
⑨ AREA PERIMETER.
⑩ DRIP OPERATION INDICATOR LOCATED AT THE ENDS OF EACH DRIPLINE ZONES.
⑪ AUTOMATIC FLUSH VALVE PLUMBED TO FLUSH MANIFOLD AT LOW POINT.

NOTE:
1. THE TOTAL LENGTH OF ALL INTERCONNECTED DRIP LINE OFF A SINGLE PVC SUPPLY LINE CONNECTION OR A SINGLE RUN OF DRIPLINE SHALL NOT EXCEED 300 FT.
2. INSTALL DRIPLINE ON GRADE AND STAKE DOWN EVERY 4' OR AS REQUIRED.

8 HLD DRIPLINE END FEED LAYOUT
SCALE: NONE

APPROVALS

IDENTIFICATION STAMP
DIV. OF THE STATE ARCHITECT
APP: 01-119409 INC:
REVIEWED FOR
SS ☑ FLS ☑ ACS ☑
DATE: 03/14/2022

NOLL & TAM ARCHITECTS
Berkeley, CA 94710
tel 510.542.2200
fax 510.542.2201

SEAL

BASE LANDSCAPE ARCHITECTURE
SAN FRANCISCO / PORTLAND
www.baselandscape.com

LICENSED LANDSCAPE ARCHITECT
SVETLANA MARIE VOLEJNIKOVA-VOLEC
Signature 12.31.2021
Expiration Date 3.26.2021
STATE OF CALIFORNIA

PROJECT TITLE

Peralta Community College District
Merritt Landscape Horticulture Complex

Oakland, CA 94616

BID SET

ISSUE DATE	03/03/2022
N&T JOB NUMBER	22003

REVISIONS

△	DATE	DESCRIPTION

DRAWN BY NM, TY | CHECKED BY SV

SHEET TITLE
IRRIGATION DETAILS

SHEET NUMBER
L6.06

729 Heinz Avenue 00 Campus Dri e

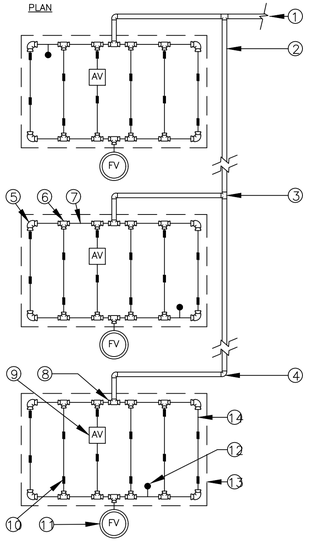

1. PVC LATERAL LINE FROM VALVE. MINIMUM SIZE TO BE 1" UNLESS OTHERWISE NOTED.
2. PVC FLUSH MANIFOLD. MINIMUM SIZE TO BE 1" UNLESS OTHERWISE NOTED.
3. PVC TEE (SxSxS).
4. PVC ELL (SxS).
5. PLD–LOC–ELB
6. PLD–LOC TEE FITTING
7. BLANK 5/8" [16mm] POLY TUBING AT SUPPLY AND FLUSH END OF EACH ISLAND.
8. PLD–LOC–075 (3/4" MIPT ADAPTER), W/ 8" OF BLANK PLD TUBING
9. AIR/VACUUM RELIEF VALVE PLUMBED TO TUBING AT HIGH POINT.
10. DRIPLINE LATERAL.
11. MANUAL FLUSH VALVE PLUMBED TO TUBING AT LOW POINT.
12. DRIPLINE OPERATION INDICATOR LOCATED AT THE ENDS OF EACH DRIPLINE ZONE.
13. ISLAND PERIMETER.
14. PERIMETER LATERALS 2" [50mm] TO 4" [100mm] FROM EDGE.

NOTE:
1. THE TOTAL LENGTH OF ALL INTERCONNECTED DRIP LINE OFF A SINGLE PVC SUPPLY LINE CONNECTION OR A SINGLE RUN OF DRIPLINE SHALL NOT EXCEED 300 FT.
2. INSTALL DRIPLINE ON GRADE AND STAKE DOWN EVERY 4' OR AS REQUIRED.

1 HLD DRIPLINE ISLAND LAYOUT
SCALE: NONE

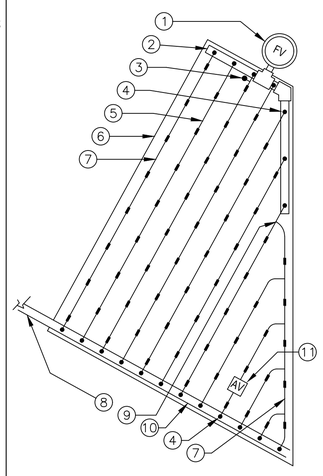

1. FLUSH VALVE PLUMBED TO FLUSH MANIFOLD AT LOW POINT
2. 1" FLEXIBLE PVC IPS HOSE FLUSH MANIFOLD.
3. DRIPLINE OPERATION INDICATOR LOCATED AT THE ENDS OF EACH DRIPLINE ZONE.
4. MANIFOLD–TO–ELBOW CONNECTION.
5. DRIPLINE LATERAL.
6. AREA PERIMETER.
7. PERIMETER LATERALS 2" [50mm] TO 4" [100mm] FROM EDGE.
8. PVC LATERAL LINE FROM VALVE. MINIMUM SIZE TO BE 1" UNLESS OTHERWISE NOTED.
9. PLD–LOC TEE FITTING
10. PVC SUPPLY MANIFOLD.
11. HUNTER AIR/VACUUM RELIEF VALVE (PLD–AVR) PLUMBED TO TUBING AT HIGH POINT.

NOTE:
1. THE TOTAL LENGTH OF ALL INTERCONNECTED DRIP LINE OFF A SINGLE PVC SUPPLY LINE CONNECTION OR A SINGLE RUN OF DRIPLINE SHALL NOT EXCEED 300 FT.
2. INSTALL DRIPLINE ON GRADE AND STAKE DOWN EVERY 4' OR AS REQUIRED.

2 HLD DRIPLINE TRIANGULAR LAYOUT
SCALE: NONE

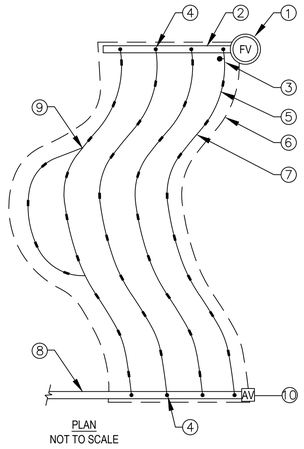

1. FLUSH VALVE PLUMBED TO FLUSH MANIFOLD AT LOW POINT
2. 1" SCH 40 PVC OR FLEXIBLE PVC IPS HOSE FLUSH/EXHAUST MANIFOLD.
3. DRIPLINE OPERATION INDICATOR LOCATED AT THE ENDS OF EACH DRIPLINE ZONE.
4. MANIFOLD–TO–ELBOW CONNECTION.
5. DRIPLINE LATERAL.
6. AREA PERIMETER.
7. PERIMETER LATERALS 2" [50mm] TO 4" [100mm] FROM EDGE.
8. PVC SUPPLY LINE/HEADER FROM VALVE. MINIMUM SIZE TO BE 1" UNLESS OTHERWISE NOTED.
9. HUNTER PLD–LOC TEE (PLD–LOC–TEE)
10. HUNTER PLD AIR/VACUUM RELIEF VALVE (PLD–AVR) PLUMBED TO SUPPLY MANIFOLD AT HIGH POINT.

NOTE:
1. THE TOTAL LENGTH OF ALL INTERCONNECTED DRIP LINE OFF A SINGLE PVC SUPPLY LINE CONNECTION OR A SINGLE RUN OF DRIPLINE SHALL NOT EXCEED 300 FT.
2. INSTALL DRIPLINE ON GRADE AND STAKE DOWN EVERY 4' OR AS REQUIRED.

3 HLD DRIPLINE ODD CURVE LAYOUT
SCALE: NONE

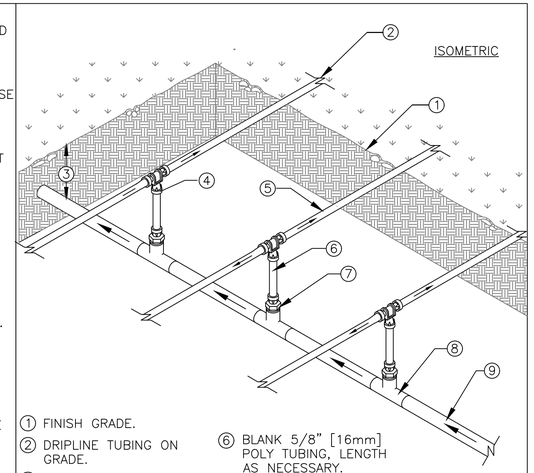

1. FINISH GRADE.
2. DRIPLINE TUBING ON GRADE.
3. DEPTH OF PVC LATERAL LINE PER IRRIGATION LEGEND
4. HUNTER PLD–LOC TEE (PLD–LOC–TEE)
5. DRIPLINE TUBING.
6. BLANK 5/8" [16mm] POLY TUBING, LENGTH AS NECESSARY.
7. HUNTER PLD–LOC MPT ADAPTER (PLD–LOC–050)
8. PVC TEE (SxSxT) WITH 1/2" [13mm] FPT OUTLET.
9. PVC LATERAL LINE FROM REMOTE CONTROL VALVE.

NOTES:
1. THE TOTAL LENGTH OF A SINGLE DRIP LINE RUN SHALL NOT EXCEED 250 FT.
2. INSTALL HUNTER PLD DRIPLINE ON GRADE AND STAKE DOWN EVERY 4' AND COVERED WITH MINIMUM 2" OF BARK MULCH.
3. SCHEDULE 40 PVC LATERAL LINE–STUB INTO EACH PLANTING AREA.
4. CONVERT SCH 40 PVC LATERAL LINE TO DRIPLINE WITH A HUNTER 3/4" FEMALE T ADAPTER.

4 HLD DRIPLINE CENTER FEED MANIFOLD
SCALE: NONE

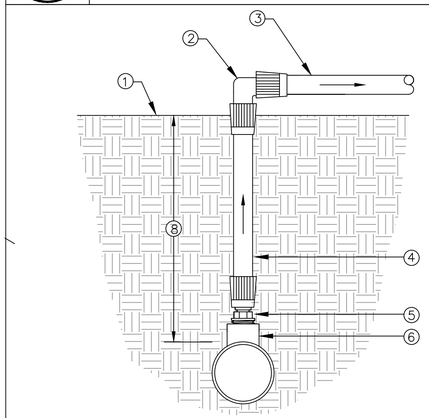

1. FINISH GRADE
2. HUNTER PLD–LOC ELL (PLD–LOC–ELB)
3. DRIPLINE TUBING
4. DEPTH OF TUBING PER IRRIGATION LEGEND.
5. BLANK 5/8" [16mm] POLY TUBING, LENGTH AS NECESSARY.
6. HUNTER PLD–LOC MPT ADAPTER (PLD–LOC–050)
7. SCH 40 PVC TEE (SxSxT) WITH 1/2" FPT OUTLET.
8. DEPTH OF PVC LATERAL LINE PER IRRIGATION LEGEND

5 DRIPLINE MANIFOLD TO ELBOW CONNECTION
SCALE: NONE

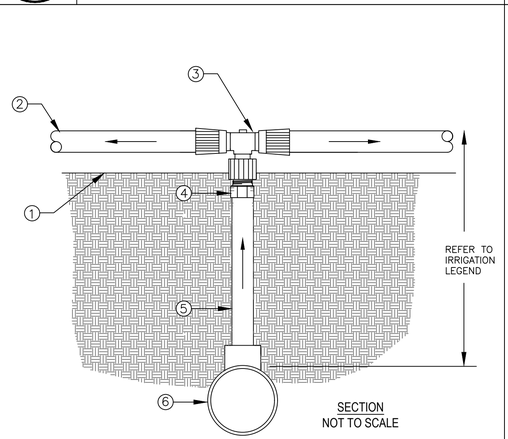

1. FINISH GRADE
2. DRIPLINE TUBING
3. HUNTER PLD–LOC TEE X 1/2" FPT ADAPTER
4. 3/4" SCH 40 MALE ADAPTER.
5. 3/4" SCH 40 PVC (LENGTH AS REQUIRED)
6. PVC LATERAL LINE SUPPLY. MINIMUM SIZE TO BE 1" UNLESS SIZED DIFFERENTLY ON DRAWINGS. USE SCH 40 PVC 1"x1"x3/4" TEE OR 90° ELBOW.

6 DRIPLINE TO PVC CONNECTION
SCALE: NONE

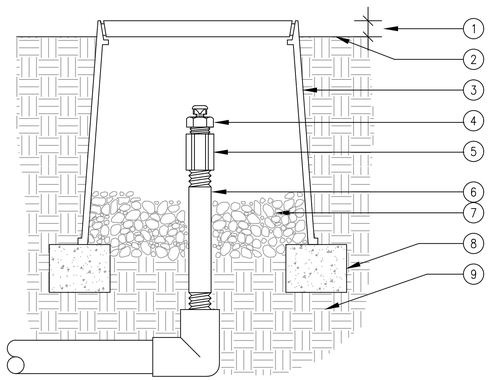

SECTION/ELEVATION

NOTE:
USE ONE AIR/RELIEF VALVE FOR EVERY 7 GPM PER ZONE.
LOCATE AT HIGH POINTS.

1. 1" ABOVE FINISH GRADE.
2. FINISH GRADE.
3. 6" ROUND PLASTIC VALVE BOX. HEAT BRAND "AR" ON LID IN 1" HIGH CHARACTERS.
4. HUNTER PLD AIR/VACUUM RELIEF VALVE (PLD–AVR).
5. 1/2" SCH 40 PVC COUPLING (TxT)
6. 1/2" SCH 80 PVC NIPPLE (LENGTH AS REQUIRED).
7. PEA GRAVEL (4" DEEP).
8. BRICK SUPPORTS (2 COMMON BRICKS REQUIRED).
9. NATIVE SOIL PER SPECIFICATIONS.

7 AIR VACUUM RELIEF VALVE ON PVC ELL
SCALE: NONE

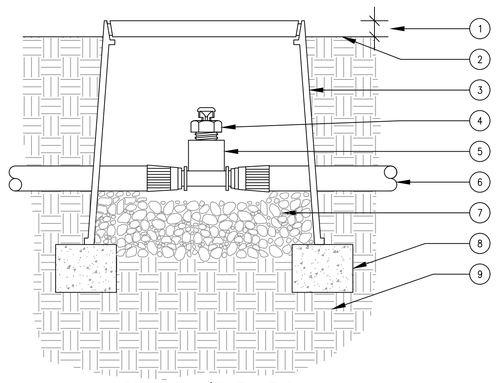

SECTION/ELEVATION

NOTE:
USE ONE AIR/RELIEF VALVE FOR EVERY 7 GPM PER ZONE.
LOCATE AT HIGH POINTS.

1. 1" ABOVE FINISH GRADE.
2. FINISH GRADE.
3. 6" ROUND PLASTIC VALVE BOX. HEAT BRAND "AR" ON LID IN 1" HIGH CHARACTERS.
4. HUNTER AIR/VACUUM RELIEF VALVE PLD–AVR.
5. HUNTER 17mm BARB TEE X 3/4" ADAPTER (PLD–075–TBTEE)
6. PLD TUBING
7. PEA GRAVEL (4" DEEP).
8. BRICK SUPPORTS (2 COMMON BRICKS REQUIRED).
9. NATIVE SOIL PER SPECIFICATIONS.

8 AIR VACUUM RELIEF VALVE IN DRIPLINE
SCALE: NONE

APPROVALS

IDENTIFICATION STAMP
DIV. OF THE STATE ARCHITECT
APP: 01-119409 INC:
REVIEWED FOR
SS ☑ FLS ☑ ACS ☑
DATE: 03/14/2022

NOLL & TAM ARCHITECTS
Berkeley, CA 94710
tel 510.542.2200
fax 510.542.2201

SEAL

BASE LANDSCAPE ARCHITECTURE
SAN FRANCISCO / PORTLAND
www.baselandscape.com

LICENSED LANDSCAPE ARCHITECT
STEVEN MARIE VOLEJNIKOVA
Signature 12.31.2021
Expiration Date 3.26.2021
STATE OF CALIFORNIA

PROJECT TITLE

Peralta Community College District
Merritt Landscape Horticulture Complex

Oakland, CA 94616

BID SET

ISSUE DATE	03/03/2022
N&T JOB NUMBER	22003

REVISIONS

△	DATE	DESCRIPTION

DRAWN BY	CHECKED BY
NM, TY	SV

SHEET TITLE
IRRIGATION DETAILS

SHEET NUMBER
L6.07

900 Campus Drive
729 Heinz Avenue

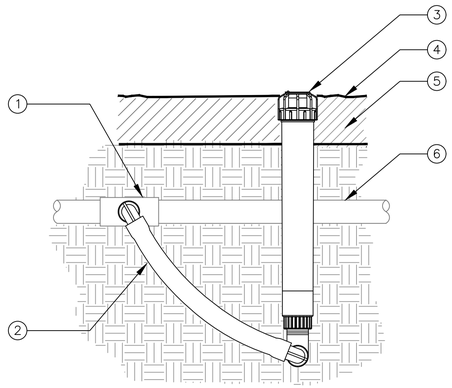

1. UPC APPROVED SCHEDULE 40 PVC TEE, ELBOW OR BARB x THREAD DRIP FITTING TEE OR ELBOW WITH 3/4" OUTLET.
2. 1/2" X 3/4" X 6" HUNTER SWING JOINT (SJ-7506)
3. ECO INDICATOR
4. FINISHED GRADE
5. MULCH
6. PVC LATERAL PIPE OR DRIPLINE

1 DRIPLINE OPERATION INDICATOR
SCALE: NONE

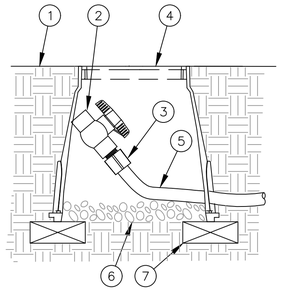

NOTE:
ALLOW A MINIMUM OF PVC HOSE IN VALVE BOX IN ORDER TO DIRECT FLUSHED WATER OUTSIDE VALVE BOX.

1. FINISH GRADE
2. 1/2" SCH 40 THREADED BALL VALVE.
3. 1/2" SCH 40 MALE ADAPTER.
4. 6" ROUND PLASTIC VALVE BOX.
5. 1" IPS PVC HOSE FROM EXHAUST HEADER.
6. PEA GRAVEL SUMP (6" DEEP).
7. BRICK (1 OF 2)

2 DRIPLINE-FLUSH POINT
SCALE: NONE

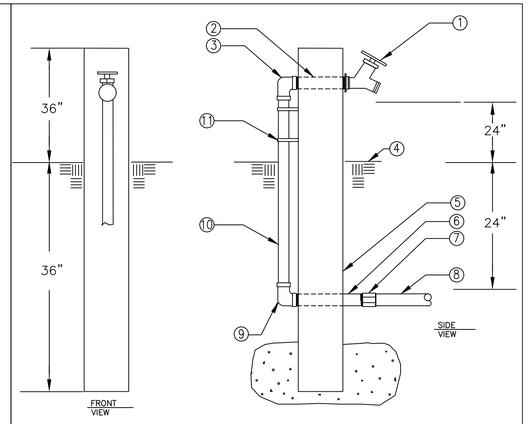

1. ZORO 3/4" HOSE BIB (108-004NL)
2. 3/4" TYPE "K" COPPER PIPE NIPPLE. LENGTH AS NEEDED.
3. 3/4" 90° DROP ELBOW (TXS)
4. FINISH GRADE
5. PRESSURE TREATED (REDWOOD COLOR) 4"X4"X72". SET IN CONCRETE FOR STABILITY
6. 3/4" TYPE "K" COPPER NIPPLE. LENGTH AS NEEDED.
7. SCHEDULE 40 FEMALE ADAPTER (TxS)
8. SCH 40 PVC MAIN LINE
9. 3/4" 90° DROP ELBOW (TXS)
10. 3/4" TYPE "K" COPPER PIPE. LENGTH AS NEEDED.
11. STAINLESS STEEL STRAPS

3 HOSE BIB RISER
SCALE: NONE
DET:

IRRIGATION NOTES

WATER USE ESTIMATION

WATER TYPE	POTABLE
SITE ETO=	41.8

REGULAR LANDSCAPE AREAS

HYDROZONE #	HYDROZONE NAME	PLANT WATER USE TYPE	PLANT FACTOR (PF)	IRRIGATION METHOD	IRRIGATION EFFICIENCY	ETAF (PF/IE)	AREA (SQ. FT) (HA)	ETAF X AREA (HA)	ETWU (GAL/YR)	ACRE FEET/ YEAR	HCF/ YEAR	PERCENTAGE OF LANDSCAPE
1	SHRUBS/GC	LOW	0.3	DRIP	0.81	0.370	10,327	**3,825**	99,124	0.30	132.52	63%
2	SHRUBS/GC	LOW	0.3	SPRAY	0.75	0.400	400	**160**	4,147	0.01	5.54	2%
3	SHRUBS/GC	MOD	0.4	DRIP	0.81	0.494	1,500	**741**	19,197	0.06	25.66	9%
4	BIOSWALES	MOD	0.4	SPRAY	0.75	0.533	4,036	**2,153**	55,785	0.17	74.58	24%
5	TEES	MOD	0.4	BUBBLER	0.81	0.494	50	**25**	640	0.00	0.86	0%
6	TURF	HIGH	0.8	DRIP	0.81	0.988	185	**183**	4,735	0.01	6.33	1%
					TOTALS		**16,498**	**6,903**	**183,628**	**0.56**	**245.49**	**100%**

SPECIAL LANDSCAPE AREAS

HYDROZONE #	HYDROZONE NAME											
-						1						0%
						TOTALS	0					**0%**

MAWA	**GALLONS/YR**	**192,403**
	ACRE FEET/YR	**0.59**
	HCF/YR	**257.22**

ETWU	**GALLONS/YR**	**183,628**
	ACRE FEET/YR	**0.56**
	HCF/YR	**245.49**

SITE IRRIGATION EFFICIENCY	SITE PLANT FACT0R	MAWA COMPLIANT
78.5%	**0.33**	**YES**

MAWA FORMULA

MAXIMUM APPLIED WATER ALLOWANCE (MAWA) GALLONS PER YEAR
MAWA = (ETo)(0.62)[(LA x 0.45) + (0.55 x SLA)]

ETo = REFERENCE EVAPOTRANSPIRATION
0.55= ET ADJUSTMENT FACTOR
LA=LANDSCAPED AREA (SQUARE FEET)
0.62 = CONVERSION FACTOR (GALLONS/SQ.FT/YR)

ETWU FORMULA

ESTIMATED TOTAL WATER USE (ETWU) GALLONS PER YEAR
ETWU= ((ETO)(.62)(ETAF x LA))

ETo = REFERENCE EVAPOTRANSPIRATION
PF = PLANT FACTOR FOR HYDROZONES
HA = HYDROZONE AREA (SQ.FT)
0.62 = CONVERSION FACTOR (GALLONS/SQ.FT/YR)

IE = IRRIGATION EFFICIENCY (0.81)-BUBBLER/DRIP

IE = IRRIGATION EFFICIENCY (0.75)-ROTORS/SPRAY

ETAF Calculations	
REGULAR LANDSCAPE AREAS	
TOTAL ETAF x AREA	6,903
TOTAL AREA	16,498
AVG. ETAF	41.84%

APPROVALS

IDENTIFICATION STAMP
DIV. OF THE STATE ARCHITECT
APP: 01-119409 INC:
REVIEWED FOR
SS ☑ FLS ☑ ACS ☑
DATE: 03/14/2022

NOLL & TAM ARCHITECTS

Berkeley, CA 94710
tel 510.542.2200
fax 510.542.2201

SEAL

LICENSED LANDSCAPE ARCHITECT
SVETLANA MARIE VOLEJNIKOVA
Signature 12.31.2021
Expiration Date 3.26.2021
STATE OF CALIFORNIA

PROJECT TITLE

Peralta Community College District
Merritt Landscape Horticulture Complex

Oakland, CA 94616

BID SET

ISSUE DATE 03/03/2022
N&T JOB NUMBER 22003

REVISIONS

△	DATE	DESCRIPTION

DRAWN BY NM, TY | CHECKED BY SV

SHEET TITLE
IRRIGATION DETAILS

SHEET NUMBER
L6.08

00 Campus Dri e
729 Heinz Avenue

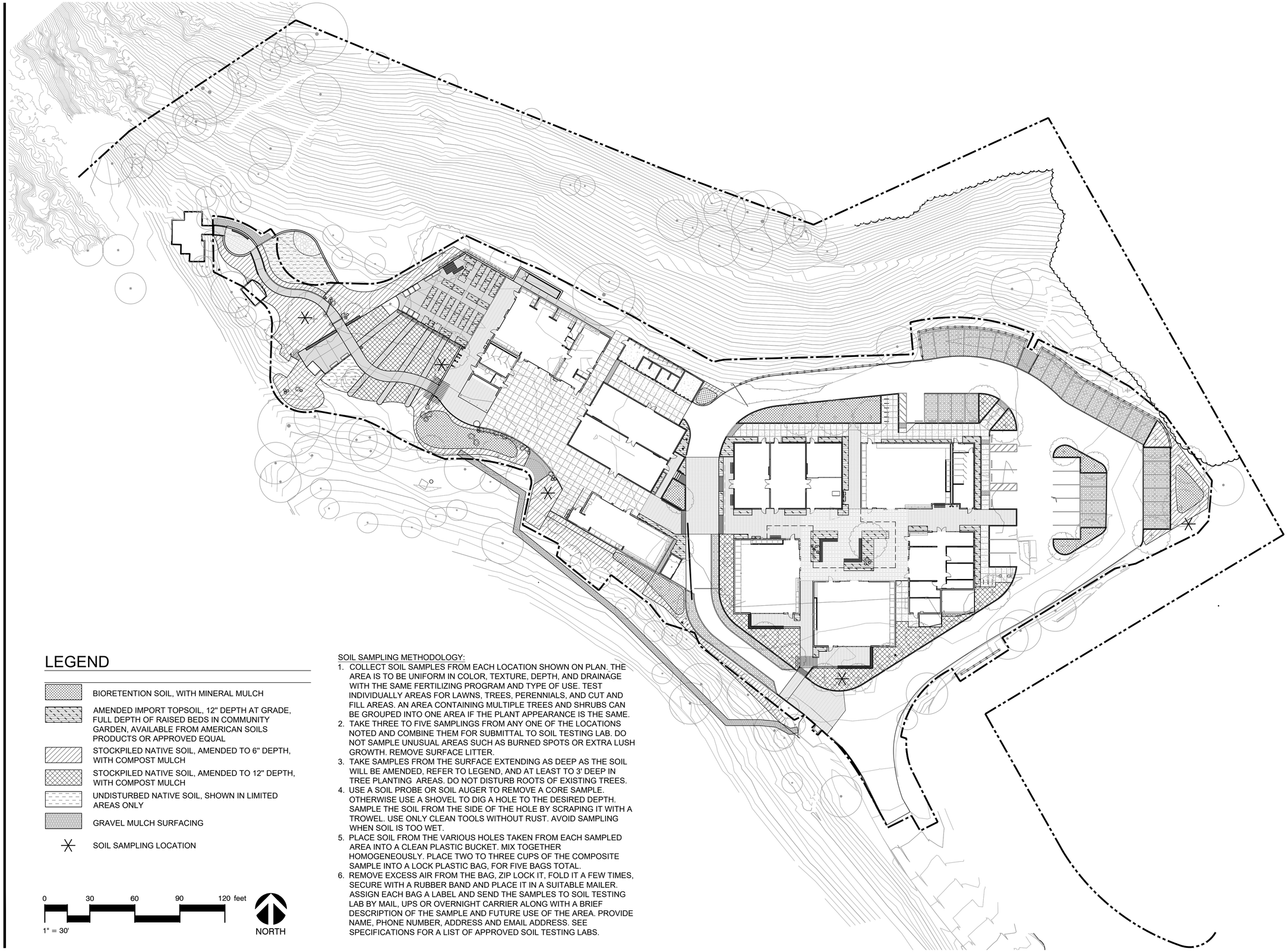

LEGEND

- BIORETENTION SOIL, WITH MINERAL MULCH
- AMENDED IMPORT TOPSOIL, 12" DEPTH AT GRADE, FULL DEPTH OF RAISED BEDS IN COMMUNITY GARDEN, AVAILABLE FROM AMERICAN SOILS PRODUCTS OR APPROVED EQUAL
- STOCKPILED NATIVE SOIL, AMENDED TO 6" DEPTH, WITH COMPOST MULCH
- STOCKPILED NATIVE SOIL, AMENDED TO 12" DEPTH, WITH COMPOST MULCH
- UNDISTURBED NATIVE SOIL, SHOWN IN LIMITED AREAS ONLY
- GRAVEL MULCH SURFACING
- SOIL SAMPLING LOCATION

0 30 60 90 120 feet

1" = 30'

NORTH

SOIL SAMPLING METHODOLOGY:

1. COLLECT SOIL SAMPLES FROM EACH LOCATION SHOWN ON PLAN. THE AREA IS TO BE UNIFORM IN COLOR, TEXTURE, DEPTH, AND DRAINAGE WITH THE SAME FERTILIZING PROGRAM AND TYPE OF USE. TEST INDIVIDUALLY AREAS FOR LAWNS, TREES, PERENNIALS, AND CUT AND FILL AREAS. AN AREA CONTAINING MULTIPLE TREES AND SHRUBS CAN BE GROUPED INTO ONE AREA IF THE PLANT APPEARANCE IS THE SAME.
2. TAKE THREE TO FIVE SAMPLINGS FROM ANY ONE OF THE LOCATIONS NOTED AND COMBINE THEM FOR SUBMITTAL TO SOIL TESTING LAB. DO NOT SAMPLE UNUSUAL AREAS SUCH AS BURNED SPOTS OR EXTRA LUSH GROWTH. REMOVE SURFACE LITTER.
3. TAKE SAMPLES FROM THE SURFACE EXTENDING AS DEEP AS THE SOIL WILL BE AMENDED, REFER TO LEGEND, AND AT LEAST TO 3' DEEP IN TREE PLANTING AREAS. DO NOT DISTURB ROOTS OF EXISTING TREES.
4. USE A SOIL PROBE OR SOIL AUGER TO REMOVE A CORE SAMPLE. OTHERWISE USE A SHOVEL TO DIG A HOLE TO THE DESIRED DEPTH. SAMPLE THE SOIL FROM THE SIDE OF THE HOLE BY SCRAPING IT WITH A TROWEL. USE ONLY CLEAN TOOLS WITHOUT RUST. AVOID SAMPLING WHEN SOIL IS TOO WET.
5. PLACE SOIL FROM THE VARIOUS HOLES TAKEN FROM EACH SAMPLED AREA INTO A CLEAN PLASTIC BUCKET. MIX TOGETHER HOMOGENEOUSLY. PLACE TWO TO THREE CUPS OF THE COMPOSITE SAMPLE INTO A LOCK PLASTIC BAG, FOR FIVE BAGS TOTAL.
6. REMOVE EXCESS AIR FROM THE BAG, ZIP LOCK IT, FOLD IT A FEW TIMES, SECURE WITH A RUBBER BAND AND PLACE IT IN A SUITABLE MAILER. ASSIGN EACH BAG A LABEL AND SEND THE SAMPLES TO SOIL TESTING LAB BY MAIL, UPS OR OVERNIGHT CARRIER ALONG WITH A BRIEF DESCRIPTION OF THE SAMPLE AND FUTURE USE OF THE AREA. PROVIDE NAME, PHONE NUMBER, ADDRESS AND EMAIL ADDRESS. SEE SPECIFICATIONS FOR A LIST OF APPROVED SOIL TESTING LABS.

APPROVALS

IDENTIFICATION STAMP
DIV. OF THE STATE ARCHITECT
APP: 01-119409 INC:
REVIEWED FOR
SS ☑ FLS ☑ ACS ☑
DATE: 03/14/2022

NOLL & TAM ARCHITECTS

729 Heinz Avenue
Berkeley, CA 94710
tel 510.542.2200
fax 510.542.2201

SEAL

LICENSED LANDSCAPE ARCHITECT
SVETLANA MARIE VOLEJNIKOVA
Signature
12.31.2023
Renewal Date
11.11.2021
Date
STATE OF CALIFORNIA

BASE LANDSCAPE ARCHITECTURE
SAN FRANCISCO / PORTLAND
www.baselandscape.com

PROJECT TITLE

Peralta Community College District
Merritt Landscape Horticulture Complex

12500 Campus Drive
Oakland, CA 94616

BID SET

ISSUE DATE	03/03/2022
N&T JOB NUMBER	22003

REVISIONS

	DATE	DESCRIPTION

DRAWN BY TY, JR, SV | CHECKED BY SV

SHEET TITLE

SOILS PLAN

SHEET NUMBER

L7.00

SCHEDULE OF PLANTS

TREES	CODE	QTY	BOTANICAL NAME	COMMON NAME	SIZE	WATER USAGE
	ACER	1	ACER	GREEN MAPLE	TRANSPLANTED	MEDIUM
	ACE MAC	2	ACER MACROPHYLLUM	BIG LEAF MAPLE	36"BOX	MEDIUM
	ACE PAL	1	ACER PALMATUM `SANGO-KAKU`	SANGO-KAKU JAPANESE MAPLE	TRANSPLANTED	MEDIUM
	ACE RBR	1	ACER RUBRUM	RED MAPLE	TRANSPLANTED	MEDIUM
	CER CAN	1	CERCIS CANADENSIS	EASTERN REDBUD MULTI-TRUNK	48"BOX	MEDIUM
	CIT LIM	2	CITRUS X LIMON	LEMON ESPALIERS	TRANSPLANTED	MEDIUM
	FAG ASP	5	FAGUS SYLVATICA `ASPLENIFOLIA`	CUTLEAF EUROPEAN BEECH	24"BOX	MEDIUM
	GAR ELL	1	GARRYA ELLIPTICA	COAST SILKTASSEL	36"BOX	LOW
	LAG YAR	6	LAGERSTROEMIA FAURIEI `NATCHEZ`	NATCHEZ CRAPE MYRTLE	48"BOX	LOW
	MAG DEN	1	MAGNOLIA DENUDATA	YULAN MAGNOLIA	TRANSPLANTED	MEDIUM
	MAG STE	1	MAGNOLIA STELLATA	STAR MAGNOLIA MULTI-TRUNK	TRANSPLANTED	MEDIUM
	MET GLY	1	METASEQUOIA GLYPTOSTROBOIDES	DAWN REDWOOD	36"BOX	HIGH
	PIS CHI	5	PISTACIA CHINENSIS `KEITH DAVEY`	KEITH DAVEY CHINESE PISTACHE	24"BOX	LOW
	PIS CHI	1	PISTACIA CHINENSIS `KEITH DAVEY`	KEITH DAVEY CHINESE PISTACHE	48"BOX	LOW
	POD MAC	1	PODOCARPUS MACROPHYLLUS `MAKI`	MAKI SHRUBBY YEW PODOCARPUS	TRANSPLANTED	MEDIUM

TREES	CODE	QTY	BOTANICAL NAME	COMMON NAME	SIZE	WATER USAGE
	QUE HYP	1	QUERCUS HYPOLEUCOIDES	SILVERLEAF OAK	24"BOX	LOW
	QUE HYP	1	QUERCUS HYPOLEUCOIDES	SILVERLEAF OAK	36"BOX	LOW
	QUE TOM	3	QUERCUS TOMENTELLA	ISLAND LIVE OAK	24"BOX	LOW
	STE PSE	4	STEWARTIA PSEUDOCAMELLIA	JAPANESE STEWARTIA	24"BOX	MEDIUM

SHRUBS, VINES AND FERNS	QTY	BOTANICAL NAME	COMMON NAME	SIZE	WATER USAGE
AGA ATT	15	AGAVE ATTENUATA	FOXTAIL AGAVE	15 GAL	LOW
GAR COA	3	GARRYA ELLIPTICA	COAST SILKTASSEL	15 GAL	LOW
POL PSE	113	POLYPODIUM PSEUDOAREUM `BLUE RABBIT`S FOOT FERN`	BLUE RABBIT`S FOOT FERN	1 GAL	MEDIUM
POL MUN	11	POLYSTICHUM MUNITUM	WESTERN SWORD FERN	5 GAL	MEDIUM
RHA CAL	57	RHAMNUS CALIFORNICA `MOUND SAN BRUNO`	CALIFORNIA COFFEEBERRY	5 GAL	LOW
ROS OFF	3	ROSMARINUS OFFICINALIS `ARP`	ARP ROSEMARY	5 GAL	LOW
SAL POZ	26	SALVIA X `POZO BLUE`	POZO BLUE SAGE	5 GAL	LOW
VIT CHA	3	VITEX AGNUS-CASTUS	CHASTE TREE	15 GAL	LOW
YUC ROS	4	YUCCA ROSTRATA	BEAKED YUCCA	15 GAL	LOW
YUC ROS	9	YUCCA ROSTRATA	BEAKED YUCCA	24"BOX	LOW
PERENNIALS	**QTY**	**BOTANICAL NAME**	**COMMON NAME**	**SIZE**	**WATER USAGE**
EPI CAN	67	EPILOBIUM 'SILVER SELECT'	CALIFORNIA FUCHSIA	1 GAL	LOW
SAL MEX	88	SALVIA CHAMAEDRYOIDES	MEXICAN BLUE SAGE	5 GAL	LOW
SAL BEE	27	SALVIA X `BEE`S BLISS`	BEE`S BLISS SAGE	5 GAL	LOW
WES FRU	80	WESTRINGIA FRUTICOSA `GREY BOX`	DWARF COAST ROSEMARY	5 GAL	LOW
ECH ELE	156	ECHEVERIA ELEGANS	MEXICAN SNOWBALL	4"POT	LOW
HEL NUM	47	HELIANTHEMUM NUMMULARIUM `THE BRIDE`	THE BRIDE SUNROSE	1 GAL	LOW
IRI BAM	148	IRIS CONFUSA	BAMBOO IRIS	1 GAL	MEDIUM
IRI PCH	98	IRIS PCH HYBRIDS MIX + BLECHNUM SPICANT	PACIFIC COAST HYBRID IRIS DEER FERN	1 GAL 5 GAL	MEDIUM MEDIUM
LIB GRA	71	LIBERTIA GRANDIFLORA	NEW ZEALAND IRIS	1 GAL	LOW
GRASSES	**QTY**	**BOTANICAL NAME**	**COMMON NAME**	**SIZE**	**WATER USAGE**
CAR DIV	315	CAREX DIVULSA	EUROPEAN GREY SEDGE	1 GAL	LOW
CAR PAN	994	CAREX PANSA + ZEPHYRANTHES CANDIDA	CALIFORNIA MEADOW SEDGE RAIN LILY	1 GAL BULB	MEDIUM MEDIUM
CHO TEC	291	CHONDROPETALUM TECTORUM `EL CAMPO`	EL CAMPO SMALL CAPE REED	5 GAL	LOW
FES SIS	1,204	FESTUCA IDAHOENSIS `SISKIYOU BLUE` + BRODIAEA LAXA	SISKIYOU BLUE FESCUE COMMON TRITELEIA	1 GAL BULB	LOW LOW
LEY CON	165	LEYMUS CONDENSATUS `CANYON PRINCE`	CANYON PRINCE BLUE RYE	5 GAL	LOW
LOM LON	345	LOMANDRA LONGIFOLIA `NYALLA` + HESPERANTHA COCCINEA	NYALLA DWARF MAT RUSH RIVER LILY	5 GAL BULB	LOW MEDIUM
TURF	233 SF	SOD, DELTA BLUEGRASS MIX: KOELERIA MACRANTHA, DESCHAMPSIA ELONGATA, FESTUCA CUBRA.		SOD	
SEED MIX - ADD ALT FOR GRASS PAVE		BOLERO SEED MIX, DELTA BLUEGRASS			
GROUND COVERS	**QTY**	**BOTANICAL NAME**	**COMMON NAME**	**SIZE**	**WATER USAGE**
ARC MIS	17	ARCTOSTAPHYLOS X `PACIFIC MIST`	PACIFIC MIST MANZANITA	5 GAL	LOW
BUL FAN	137	BULBINE FRUTESCENS `ORANGE`	ORANGE STALKED BULBINE	1 GAL	LOW
SAR HOO	32	SARCOCOCCA HOOKERIANA VAR. HUMILIS	SWEET BOX	5 GAL	LOW
TRA ASI	40	TRACHELOSPERMUM ASIATICUM	ASIAN JASMINE	5 GAL	MEDIUM
ESC CAL	68	ESCHSCHOLZIA CALIFORNICA	CALIFORNIA POPPY	1 GAL	LOW
FRA CHI	313	FRAGARIA CHILOENSIS	BEACH STRAWBERRY	1 GAL	MEDIUM
RIB VIB	81	RIBES VIBURNIFOLIUM	EVERGREEN CURRANT	5 GAL	LOW
SAL SON	13	SALVIA SONOMENSIS	CREEPING SAGE	5 GAL	LOW

APPROVALS

IDENTIFICATION STAMP
DIV. OF THE STATE ARCHITECT
APP: 01-119409 INC:
REVIEWED FOR
SS ☑ FLS ☑ ACS ☑
DATE: 03/14/2022

NOLL & TAM ARCHITECTS

729 Heinz Avenue
Berkeley, CA 94710
tel 510.542.2200
fax 510.542.2201

SEAL

BASE LANDSCAPE ARCHITECTURE
SAN FRANCISCO / PORTLAND
www.baselandscape.com

LICENSED LANDSCAPE ARCHITECT
SVETLANA MARIE VOLEJNIKOVA-BASE
Signature
12.31.2023
Renewal Date
11.11.2021
Date
STATE OF CALIFORNIA

PROJECT TITLE

Peralta Community College District
Merritt Landscape Horticulture Complex

12500 Campus Drive
Oakland, CA 94616

BID SET

ISSUE DATE 03/03/2022

N&T JOB NUMBER 22003

REVISIONS

	DATE	DESCRIPTION

DRAWN BY TY, JR, SV | CHECKED BY SV

SHEET TITLE

PLANT SCHEDULE

SHEET NUMBER

L8.00

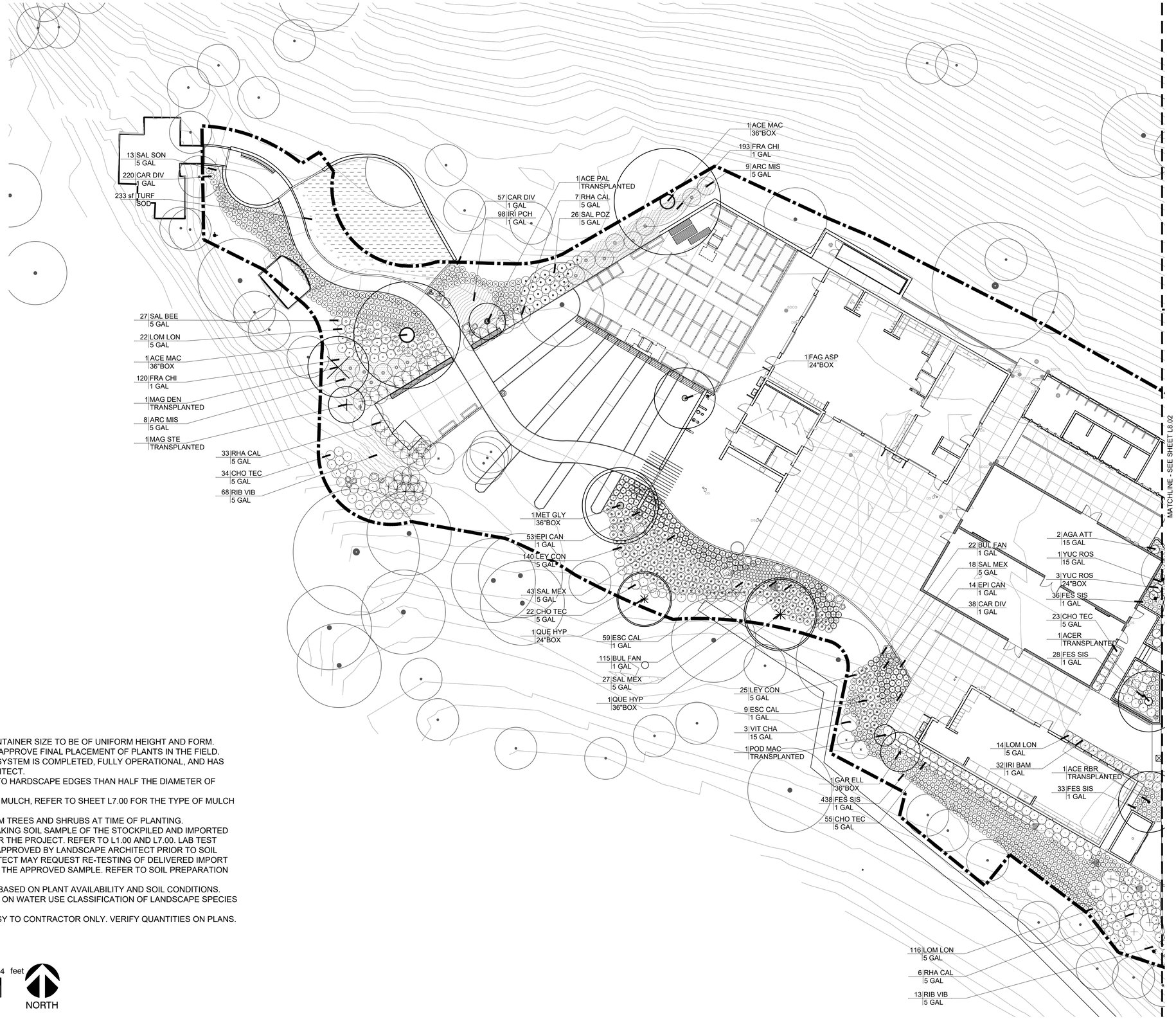

NOTES:

1. ALL TREES OF THE SAME SPECIES AND CONTAINER SIZE TO BE OF UNIFORM HEIGHT AND FORM.
2. LANDSCAPE ARCHITECT WILL REVIEW AND APPROVE FINAL PLACEMENT OF PLANTS IN THE FIELD.
3. INSTALL ALL PLANTING AFTER IRRIGATION SYSTEM IS COMPLETED, FULLY OPERATIONAL, AND HAS BEEN REVIEWED BY THE LANDSCAPE ARCHITECT.
4. DO NOT PLANT GROUND COVERS CLOSER TO HARDSCAPE EDGES THAN HALF THE DIAMETER OF PLANT SIZE AT MATURITY.
5. MULCH ALL PLANTING AREAS WITH 3" DEEP MULCH, REFER TO SHEET L7.00 FOR THE TYPE OF MULCH FOR EACH PLANTING AREA.
6. REMOVE NURSERY STAKES AND TAGS FROM TREES AND SHRUBS AT TIME OF PLANTING.
7. THE CONTRACTOR IS RESPONSIBLE FOR TAKING SOIL SAMPLE OF THE STOCKPILED AND IMPORTED SOIL TO BE USED AS PLANTING MEDIUM FOR THE PROJECT. REFER TO L1.00 AND L7.00. LAB TEST RESULTS AND RECOMMENDATIONS TO BE APPROVED BY LANDSCAPE ARCHITECT PRIOR TO SOIL DELIVERY TO SITE. THE LANDSCAPE ARCHITECT MAY REQUEST RE-TESTING OF DELIVERED IMPORT TOPSOIL TO VERIFY ITS CONFORMANCE TO THE APPROVED SAMPLE. REFER TO SOIL PREPARATION SPECIFICATIONS.
8. PLANT SCHEDULE IS SUBJECT TO CHANGE BASED ON PLANT AVAILABILITY AND SOIL CONDITIONS.
9. LISTED WATER REQUIREMENTS ARE BASED ON WATER USE CLASSIFICATION OF LANDSCAPE SPECIES (WUCOLS IV, JANUARY 2014).
10. PLANT QUANTITIES ARE GIVEN AS COURTESY TO CONTRACTOR ONLY. VERIFY QUANTITIES ON PLANS.

0 16 32 48 64 feet

1/16" = 1'-0"

NORTH

APPROVALS

IDENTIFICATION STAMP
DIV. OF THE STATE ARCHITECT
APP: 01-119409 INC:
REVIEWED FOR
SS ☑ FLS ☑ ACS ☑
DATE: 03/14/2022

NOLL & TAM ARCHITECTS

729 Heinz Avenue
Berkeley, CA 94710
tel 510.542.2200
fax 510.542.2201

SEAL

BASE LANDSCAPE ARCHITECTURE
SAN FRANCISCO / PORTLAND
www.baselandscape.com

LICENSED LANDSCAPE ARCHITECT
SVETLANA MARIE VOLEJNIKOVA
Signature
Renewal Date 12.31.2023
11.11.2021
Date
STATE OF CALIFORNIA

PROJECT TITLE

Peralta Community College District

Merritt Landscape Horticulture Complex

12500 Campus Drive
Oakland, CA 94616

BID SET

ISSUE DATE	03/03/2022
N&T JOB NUMBER	22003

REVISIONS

	DATE	DESCRIPTION

DRAWN BY TY, JR, SV | CHECKED BY SV

SHEET TITLE

PLANTING PLAN WEST

SHEET NUMBER

L8.01

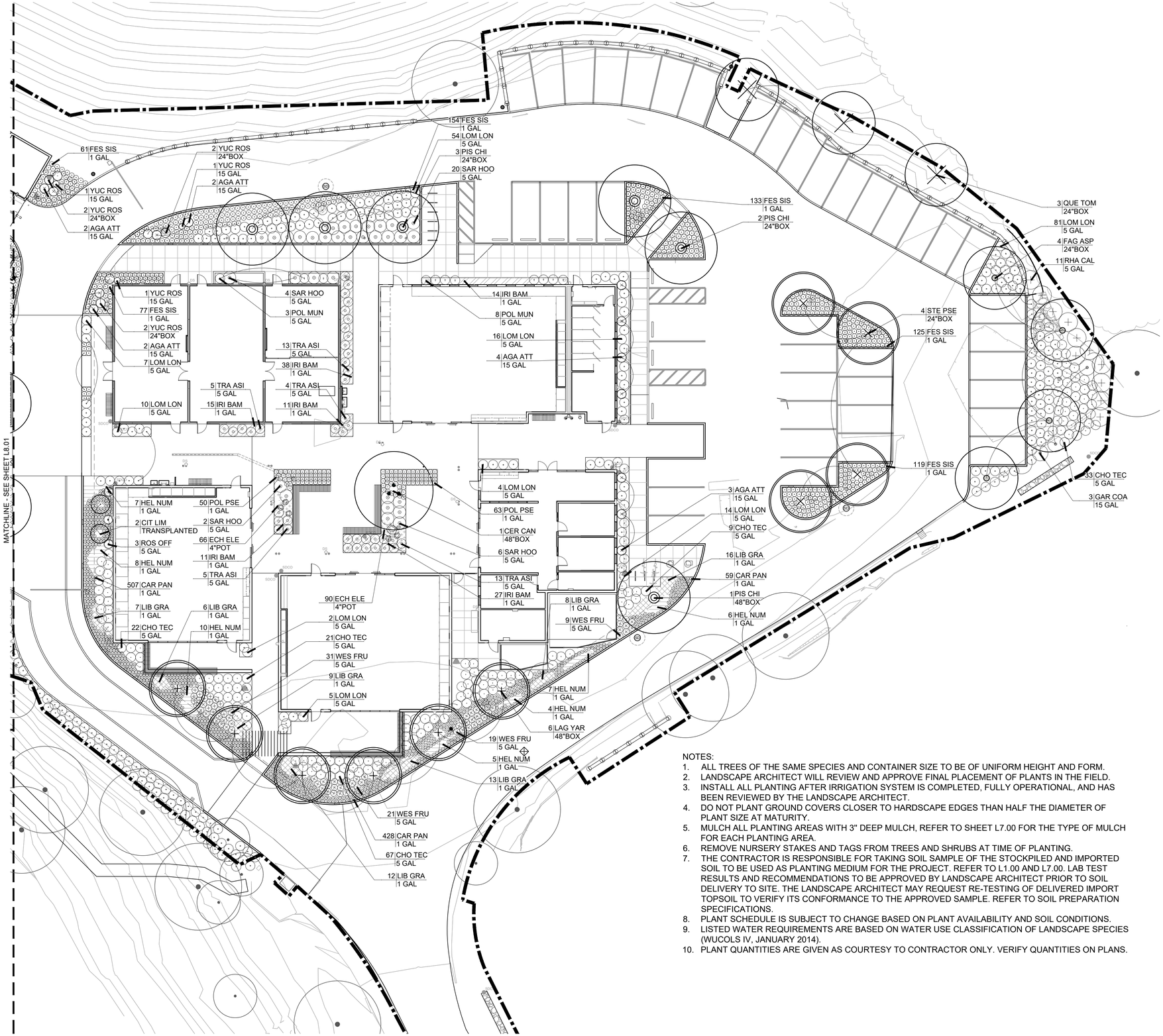

NOTES:

1. ALL TREES OF THE SAME SPECIES AND CONTAINER SIZE TO BE OF UNIFORM HEIGHT AND FORM.
2. LANDSCAPE ARCHITECT WILL REVIEW AND APPROVE FINAL PLACEMENT OF PLANTS IN THE FIELD.
3. INSTALL ALL PLANTING AFTER IRRIGATION SYSTEM IS COMPLETED, FULLY OPERATIONAL, AND HAS BEEN REVIEWED BY THE LANDSCAPE ARCHITECT.
4. DO NOT PLANT GROUND COVERS CLOSER TO HARDSCAPE EDGES THAN HALF THE DIAMETER OF PLANT SIZE AT MATURITY.
5. MULCH ALL PLANTING AREAS WITH 3" DEEP MULCH, REFER TO SHEET L7.00 FOR THE TYPE OF MULCH FOR EACH PLANTING AREA.
6. REMOVE NURSERY STAKES AND TAGS FROM TREES AND SHRUBS AT TIME OF PLANTING.
7. THE CONTRACTOR IS RESPONSIBLE FOR TAKING SOIL SAMPLE OF THE STOCKPILED AND IMPORTED SOIL TO BE USED AS PLANTING MEDIUM FOR THE PROJECT. REFER TO L1.00 AND L7.00. LAB TEST RESULTS AND RECOMMENDATIONS TO BE APPROVED BY LANDSCAPE ARCHITECT PRIOR TO SOIL DELIVERY TO SITE. THE LANDSCAPE ARCHITECT MAY REQUEST RE-TESTING OF DELIVERED IMPORT TOPSOIL TO VERIFY ITS CONFORMANCE TO THE APPROVED SAMPLE. REFER TO SOIL PREPARATION SPECIFICATIONS.
8. PLANT SCHEDULE IS SUBJECT TO CHANGE BASED ON PLANT AVAILABILITY AND SOIL CONDITIONS.
9. LISTED WATER REQUIREMENTS ARE BASED ON WATER USE CLASSIFICATION OF LANDSCAPE SPECIES (WUCOLS IV, JANUARY 2014).
10. PLANT QUANTITIES ARE GIVEN AS COURTESY TO CONTRACTOR ONLY. VERIFY QUANTITIES ON PLANS.

APPROVALS

IDENTIFICATION STAMP
DIV. OF THE STATE ARCHITECT
APP: 01-119409 INC:
REVIEWED FOR
SS ☑ FLS ☑ ACS ☑
DATE: 03/14/2022

NOLL & TAM ARCHITECTS
729 Heinz Avenue
Berkeley, CA 94710
tel 510.542.2200
fax 510.542.2201

SEAL

BASE LANDSCAPE ARCHITECTURE
SAN FRANCISCO / PORTLAND
www.baselandscape.com

LICENSED LANDSCAPE ARCHITECT
SVEJKA MARIE VOLEJNIKOVA-VOE
Signature 12.31.2023
Renewal Date
11.11.2021
Date
STATE OF CALIFORNIA

PROJECT TITLE

Peralta Community College District
Merritt Landscape Horticulture Complex

12500 Campus Drive
Oakland, CA 94616

BID SET

ISSUE DATE	03/03/2022
N&T JOB NUMBER	22003

REVISIONS

	DATE	DESCRIPTION

DRAWN BY TY, JR, SV | CHECKED BY SV

SHEET TITLE

PLANTING PLAN EAST

SHEET NUMBER

L8.02

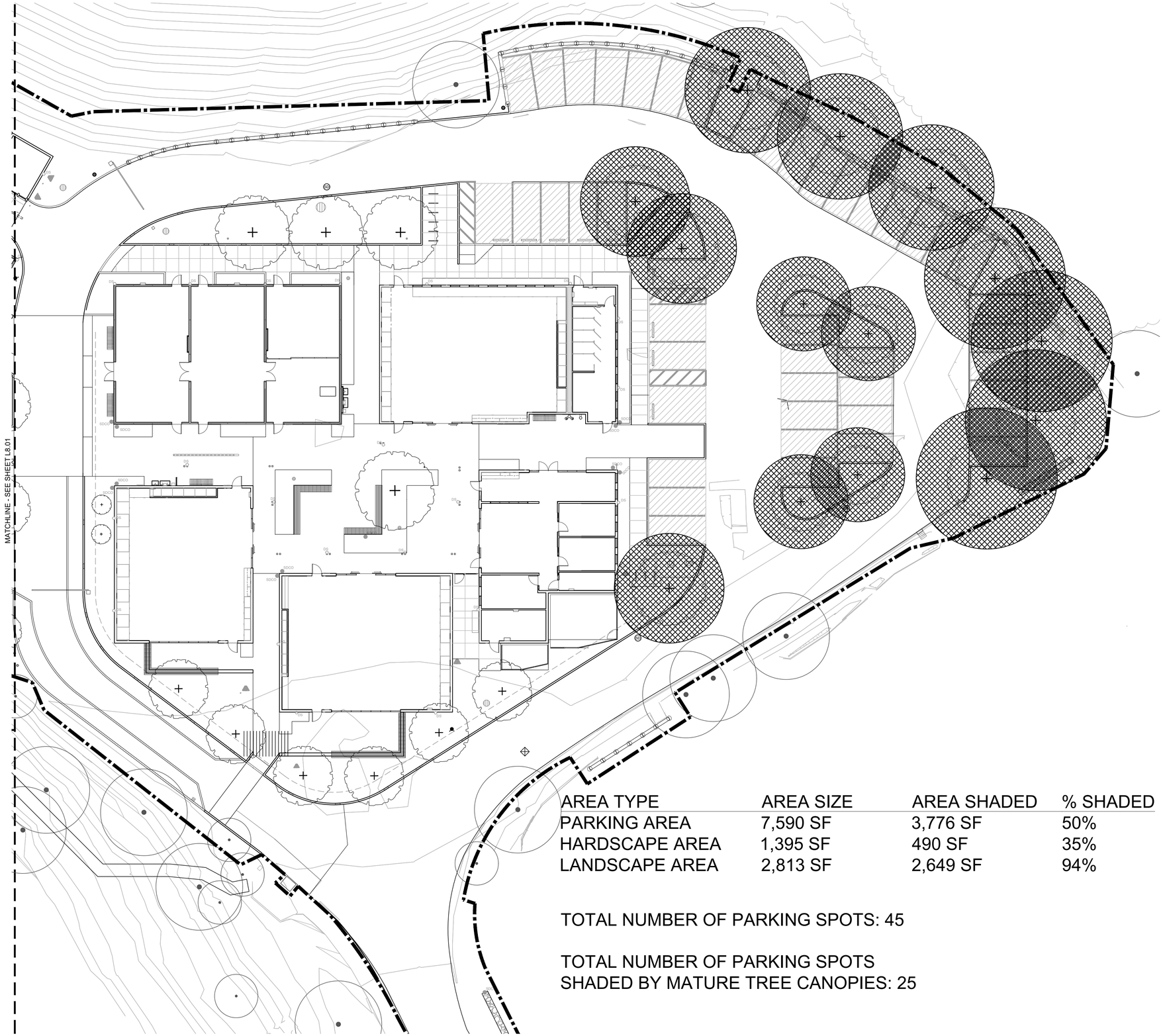

AREA TYPE	AREA SIZE	AREA SHADED	% SHADED
PARKING AREA	7,590 SF	3,776 SF	50%
HARDSCAPE AREA	1,395 SF	490 SF	35%
LANDSCAPE AREA	2,813 SF	2,649 SF	94%

TOTAL NUMBER OF PARKING SPOTS: 45

TOTAL NUMBER OF PARKING SPOTS
SHADED BY MATURE TREE CANOPIES: 25

0 16 32 48 64 feet

1/16" = 1'-0"

NORTH

APPROVALS

IDENTIFICATION STAMP
DIV. OF THE STATE ARCHITECT
APP: 01-119409 INC:
REVIEWED FOR
SS ☑ FLS ☑ ACS ☑
DATE: 03/14/2022

NOLL & TAM ARCHITECTS

729 Heinz Avenue
Berkeley, CA 94710
tel 510.542.2200
fax 510.542.2201

SEAL

BASE LANDSCAPE ARCHITECTURE
SAN FRANCISCO / PORTLAND
www.baselandscape.com

LICENSED LANDSCAPE ARCHITECT
SASKIA MARIE VOLEJNIKOVA-VOE
Signature
12.31.2023
Renewal Date
11.11.2021
Date
STATE OF CALIFORNIA

PROJECT TITLE

Peralta Community College District
Merritt Landscape Horticulture Complex

12500 Campus Drive
Oakland, CA 94616

BID SET

ISSUE DATE 03/03/2022
N&T JOB NUMBER 22003
REVISIONS
| | DATE | DESCRIPTION |

DRAWN BY TY, JR, SV | CHECKED BY SV

SHEET TITLE
PARKING LOT SHADING DIAGRAM

SHEET NUMBER
L8.03

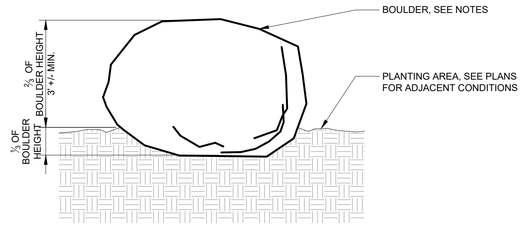

NOTES:
1. BOULDERS SHALL BE SET FIRMLY INTO THE SOIL SO THAT THEY WILL NOT ROLL, ROTATE OR SETTLE.
2. FINAL BOULDER SELECTION TO BE APPROVED BY LANDSCAPE ARCHITECT.
3. SEE SCHEDULE OF MATERIALS AND SITE FURNISHING FOR BOULDER TYPE.

4 BOULDER INSTALLATION

NTS

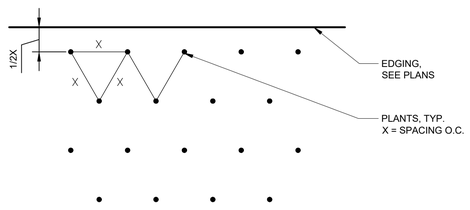

NOTE:
PLANTS TO BE SPACED IN TRIANGULAR PATTERN UNLESS OTHERWISE SHOWN ON PLANS

5 GROUNDCOVER SPACING

NTS

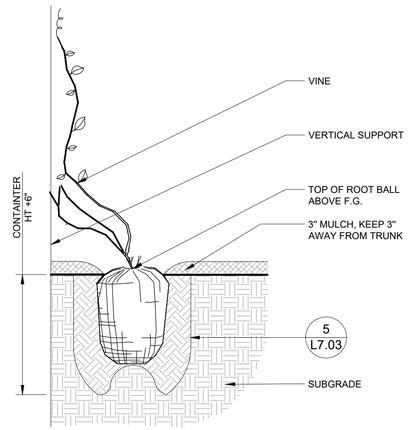

6 VINE PLANTING

NTS

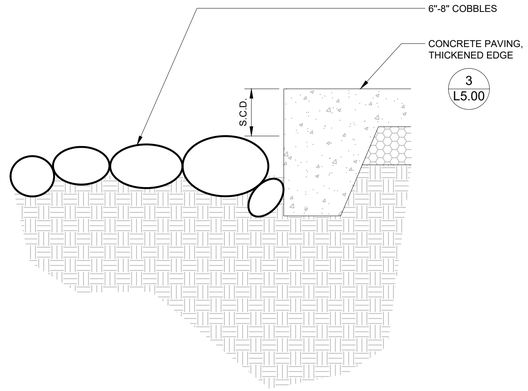

NOTES:
1. SEE SCHEDULE OF MATERIALS FOR TYPE AND SOURCE OF COBBLES.

7 DISSIPATION COBBLES

1 1/2" = 1'-0"

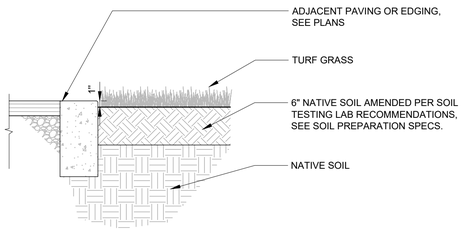

SECTION

3 TURF - SOD

1" = 1'-0"

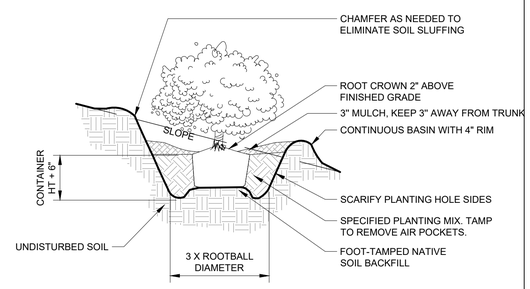

SLOPED SURFACE ELEVATION VIEW

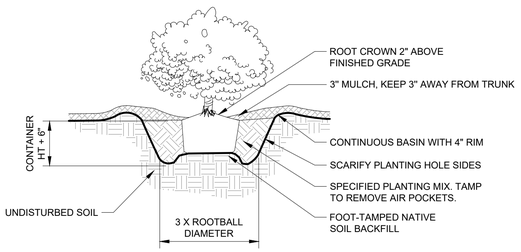

LEVEL SURFACE ELEVATION VIEW

2 SHRUB PLANTING

NTS

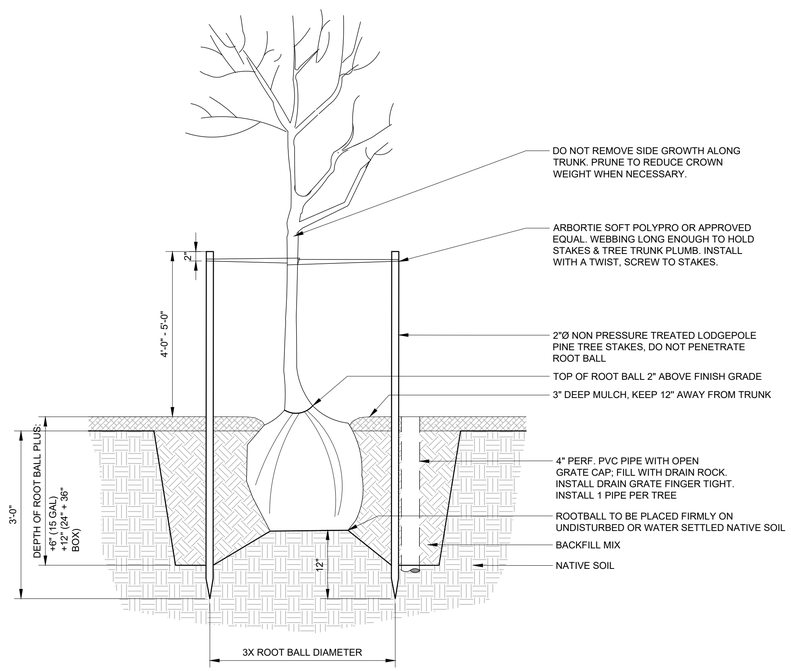

LEVEL SURFACE ELEVATION VIEW

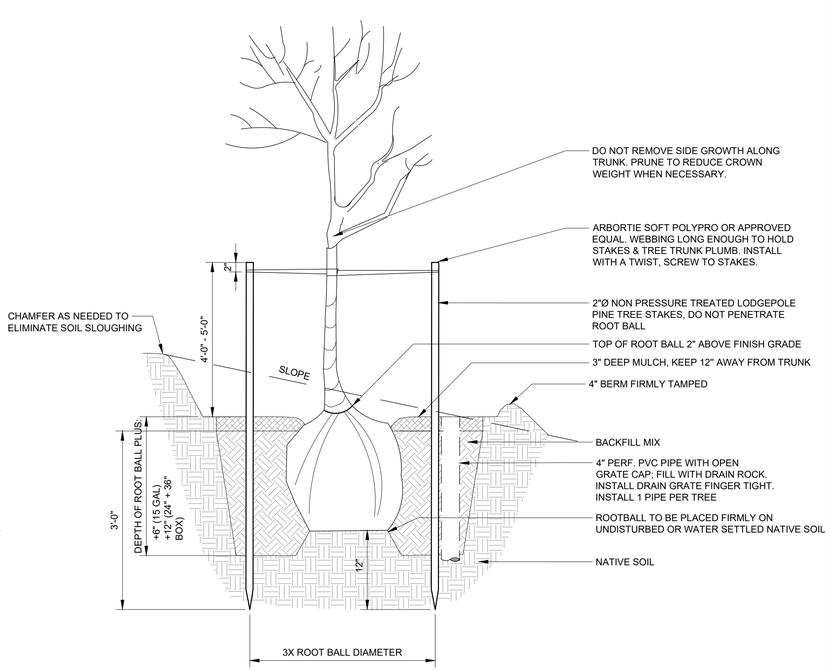

SLOPE SURFACE ELEVATION VIEW

NOTE:
1. BUILD SOIL BERM MIN. 4" HIGH AND 3' FROM TREE TUNK IN PLANTER STRIP. PROVIDE LOAM TOPSOIL NEEDED TO FORM BERM AND FILL HOLES.
2. SOIL, CONCRETE, AND OTHER MATERIALS SPILLED ON HARDSCAPE AND PLANTING AREA SHALL BE CLEANED UP IMMEDIATELY BY THE CONTRACTOR.
3. IF TREE PLANTING IS DELAYED AFTER TREE WELLS ARE CONSTRUCTED, HOLES WILL BE FILLED IN WITH SOIL UNTIL TREES ARE AVAILABLE.
4. TREE PLANTING PIT DRAINAGE TEST TO BE: AUGER HOLE 18" DEEP 6" DIA., FILL WITH WATER, LET DRAIN, FILL WITH WATER AGAIN AND HAVE LASD ARBORIST ON SITE TO REVIEW DRAINAGE AND MAKE NECESSARY RECOMMENDATIONS AT THAT TIME.

1 TREE PLANTING

NTS

APPROVALS

IDENTIFICATION STAMP
DIV. OF THE STATE ARCHITECT
APP: 01-119409 INC:
REVIEWED FOR
SS ☑ FLS ☑ ACS ☑
DATE: 03/14/2022

NOLL & TAM ARCHITECTS
729 Heinz Avenue
Berkeley, CA 94710
tel 510.542.2200
fax 510.542.2201

SEAL

BASE LANDSCAPE ARCHITECTURE
SAN FRANCISCO / PORTLAND
www.baselandscape.com

LICENSED LANDSCAPE ARCHITECT
SVETLANA MARIE VOLEJNIKOVA-VOE
Signature
12.31.2023
Expiration Date
11.11.2021
Date
STATE OF CALIFORNIA

PROJECT TITLE

Peralta Community College District
Merritt Landscape Horticulture Complex

12500 Campus Drive
Oakland, CA 94616

BID SET

ISSUE DATE	03/03/2022
N&T JOB NUMBER	22003

REVISIONS

	DATE	DESCRIPTION

DRAWN BY TY, JR, SV | CHECKED BY SV

SHEET TITLE

PLANTING DETAILS

SHEET NUMBER

L8.04

ABBREVIATIONS

	SINGLE HUNG
&	AND
(E)	EXISTING
(N)	NEW
@	AT
AB	ANCHOR BOLT
AC	ASPHALTIC CONCRETE
ACC	ACCESS
ACOUS	ACOUSTICAL
ACT	ACOUSTIC CEIILING TILE
AD	AREA DRAIN
ADDL	ADDITIONAL
ADJ	ADJACENT/ADJUSTABLE
AESS	ARCHITECTURAL EXPOSED STRUCTURAL STEEL
AFF	ABOVE FINISHED FLOOR
AGG	AGGREGATE
ALT	ALTERNATE
ALUM	ALUMINUM
ANOD	ANODIZED
APPROX	APPROXIMATE
AV	AUDIO VISUAL
BD	BOARD
BLDG	BUILDING
BLK	BLOCK
BLKG	BLOCKING
BM	BEAM
BO	BOTTOM OF
BOD	BASIS OF DESIGN
BOT	BOTTOM
BUR	BUILT UP ROOF
CAB	CABINET
CB	CARRIAGE BOLT
CE	CIVIL ENGINEER
CEM	CEMENT/CEMENTITIOUS
CER	CERAMIC
CFMF	COLD FORMED METAL FRAMING
CI	CAST IRON
CJ	CONTROL JOINT
CLG	CEILING
CLKG	CAULKING
CLO	CLOSET
CLR	CLEAR
CMU	CONCRETE MASONRY UNIT
CNTR	COUNTER
CO	CLEAN OUT
COL	COLUMN
CONC	CONCRETE
CONN	CONNECTION
CONT	CONTINUOUS
CONTR	CONTRACTOR
CORR	CORRIDOR
CPT	CARPET
CSMT	CASEMENT
CTR	CENTER
CTSK	COUNTERSINK
D	DEPTH
DBL	DOUBLE
DEMO	DEMOLITION
DEPT	DEPARTMENT
DF	DOUGLAS FIR/DRINKING FOUNTAIN
DH	DOUBLE HUNG
DIA	DIAMETER
DIM	DIMENSION
DISP	DISPOSAL
DN	DOWN
DR	DOOR
DS	DOWNSPOUT
DTL	DETAIL
DWG	DRAWING
DWR	DRAWER
E	EAST
EA	EACH
EJ	EXPANSION JOINT
ELEC	ELECTRICAL
ELEV	ELEVATION/ELEVATOR
ENLG	ENLARGED
EOS	EDGE OF SLAB
EP	ELECTRICAL PANEL
EQ	EQUAL
EQUIP	EQUIPMENT
EWC	ELECTRIC WATER COOLER
EXH	EXHAUST
EXP	EXPANSION
EXT	EXTERIOR
FA	FIRE ALARM
FD	FLOOR DRAIN
FDN	FOUNDATION
FE	FIRE EXTINGUISHER
FEC	FIRE EXTINGUISHER CABINET
FHC	FIRE HOSE CABINET
FIN	FINISH
FIN FLR	FINISH FLOOR
FIXT	FIXTURE
FLR	FLOOR
FLRG	FLOORING
FLUOR	FLUORESCENT
FOC	FACE OF CONCRETE
FOF	FACE OF FINISH
FOS	FACE OF STUD
FR	FIRE RESISTANT/FIRE RETARDANT
FRP	FIBERGLASS REINFORCED PANEL
FRT	FIRE RETARDANT TREATED
FSP	FIBERGLASS SANDWICH PANEL
FT	FOOT/FEET
FTG	FOOTING
FURN	FURNITURE
FX	FIXED
GA	GAUGE
GALV	GALVANIZED
GB	GRAB BAR
GC	GENERAL CONTRACTOR
GFI	GROUND FAULT INTERRUPT
GH	GREENHOUSE
GI	GALVANIZED IRON
GL	GLASS/GLAZING
GLAM	GLUE LAMINATED
GR	GRADE
GSM	GALVANIZED SHEET METAL
GWB	GYPSUM WALL BOARD
GYP	GYPSUM
H	HIGH / HEIGHT
HB	HOSE BIB
HC	HOLLOW CORE
HD	HEAD
HDR	HEADER
HDW	HARDWARE
HDWD	HARDWOOD
HM	HOLLOW METAL
HORIZ	HORIZONTAL
HR	HOUR
HT	HEIGHT
HVAC	HEATING VENTILATION & AIR CONDITIONING
ID	INSIDE DIAMETER
IF	INSIDE FACE
INC	INCANDESCENT
INCL	INCLUDE/INCLUDING
INSUL	INSULATION
INT	INTERIOR
JAN	JANITOR
JBOX	JUNCTION BOX
JST	JOIST
JT	JOINT
LAM	LAMINATE
LAV	LAVATORY
LB	LAG BOLT
LF	LINEAR FEET
LKR	LOCKER
LT	LIGHT
MAS	MASONRY
MATL	MATERIAL
MAX	MAXIMUM
MB	MACHINE BOLT
MECH	MECHANICAL
MET	METAL
MFR	MANUFACTURER
MH	MANHOLE
MIN	MINIMUM
MISC	MISCELLANEOUS
MTD	MOUNTED
MTL	METAL
MUL	MULLION
N	NORTH
NA	NOT APPLICABLE
NIC	NOT IN CONTRACT
NO	NUMBER
NOM	NOMINAL
NTS	NOT TO SCALE
OA	OVERALL
OC	ON CENTER
OCC	OCCUPANT
OD	OUTSIDE DIAMETER/OVERFLOW DRAIN
OF	OUTSIDE FACE
OFCI	OWNER FURNISHED CONTRACTOR INSTALLED
OFD	OVERFLOW DRAIN
OFF	OFFICE
OP	OPERABLE
OPNG	OPENING
OPP	OPPOSITE
OPP HD	OPPOSITE HAND
OWSJ	OPEN WEB STEEL JOIST
PA	PUBLIC ADDRESS
PARTN	PARTITION
PCP	PORTLAND CEMENT PLASTER
PL	PLATE
PLAM	PLASTIC LAMINATE
PLAS	PLASTIC
PLY	PLYWOOD
PR	PAIR
PROJ	PROJECT/PROJECTOR
PT	POINT/PRESSURE TREATED
PTD	PAINTED
PVC	POLYVINYLCHLORIDE
QTY	QUANTITY
R	RISER
RAD	RADIUS
RD	ROOF DRAIN
REC	RECOMMENDATION
REF	REFERENCE
REFR	REFRIGERATOR
REG	REGISTER
REINF	REINFORCE/REINFORCING
REQD	REQUIRED
REQT	REQUIREMENTS
RES	RESILIENT
REV	REVISION
RM	ROOM
RO	ROUGH OPENING
RWL	RAIN WATER LEADER
S	SOUTH
SASF	SELF ADHERING SHEET FLASHING
SASM	SELF ADHERING SHEET MEMBRANE
SC	SOLID CORE
SCD	SEE CIVIL DRAWINGS
SCHED	SCHEDULE
SE	STRUCTURAL ENGINEER
SEC	SECTION
SED	SEE ELECTRICAL DRAWINGS
SF	SUPPLY FAN
SFRM	SPRAY-APPLIED FIRE RESISTIVE MATERIAL
SGHD	SEE GREENHOUSE DRAWINGS
SHT	SHEET
SHTG	SHEATHING
SIM	SIMILAR
SLD	SEE LANDSCAPE DRAWINGS
SMD	SEE MECHANICAL DRAWINGS
SOG	SLAB ON GRADE
SP	SPACE
SPA	SANDWICH PANEL ASSEMBLY
SPD	SEE PLUMBING DRAWINGS
SPEC	SPECIFICATION
SQ	SQUARE
SS	STAINLESS STEEL
SSD	SEE STRUCTURAL DRAWINGS
SSK	SERVICE SINK
SSTL	STAINLESS STEEL
STCHD	SEE TECHNOLOGY DRAWINGS
STD	STANDARD
STED	SEE TELECOM DRAWINGS
STL	STEEL
STOR	STORAGE
STRUC	STRUCTURAL
SUSP	SUSPENDED
SWD	SEE WAYFINDING DRAWINGS
SYS	SYSTEM
T	TREAD
T&G	TONGUE & GROOVE
TBD	TO BE DETERMINED
TEL	TELEPHONE
TEMP	TEMPERED
THK	THICK/THICKNESS
THRESH	THRESHOLD
TJI	TRUSS JOIST
TO	TOP OF
TOC	TOP OF CONCRETE/CURB
TOP	TOP OF PAVING
TOS	TOP OF STEEL
TOW	TOP OF WALL
TS	TUBE STEEL
TYP	TYPICAL
UON	UNLESS OTHERWISE NOTED
UR	URINAL
VCT	VINYL COMPOSITION TILE
VENT	VENTILATION
VERT	VERTICAL
VEST	VESTIBULE
VIF	VERIFY IN FIELD
W	WEST / WIDTH / WIDE
W/	WITH
W/O	WITHOUT
WC	WATER CLOSET
WD	WOOD
WH	WATER HEATER
WIN	WINDOW
WO	WHERE OCCURS
WP	WORK POINT
WR	WATER RESISTANT
WT	WEIGHT

SYMBOLS LEGEND

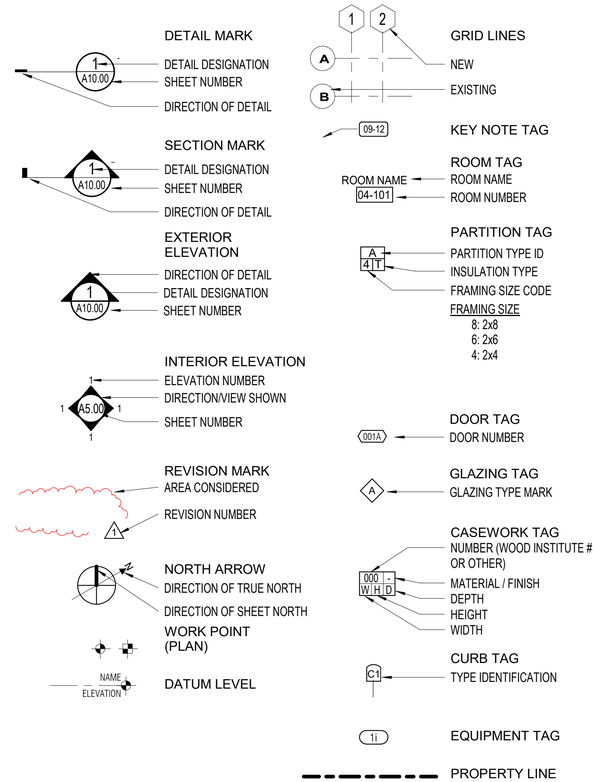

APPROVALS

IDENTIFICATION STAMP
DIV. OF THE STATE ARCHITECT
APP: 01-119409 INC:
REVIEWED FOR
SS ☑ FLS ☑ ACS ☑
DATE: 03/14/2022

NOLL & TAM ARCHITECTS
729 Heinz Avenue
Berkeley, CA 94710
tel 510.542.2200
fax 510.542.2201

SEAL

LICENSED ARCHITECT
CHRISTOPHER NOLL
No. C15916
REN. 12-31-23
STATE OF CALIFORNIA

PROJECT TITLE

Peralta Community College District

MERRITT COLLEGE NEW LANDSCAPE HORTICULTURE COMPLEX

12500 Campus Drive
Oakland, CA 94619

BID SET

ISSUE DATE **03/03/2022**
N&T JOB NUMBER **22003**

REVISIONS

	DATE	DESCRIPTION

DRAWN BY **Author** CHECKED BY **Checker**

SHEET TITLE

ABBREVIATIONS AND SYMBOLS

SHEET NUMBER

A0.01

3/3/2022 11:27:22 AM BIM 360://PCCD Merritt Horticulture/Merritt Horticulture_2020.rvt

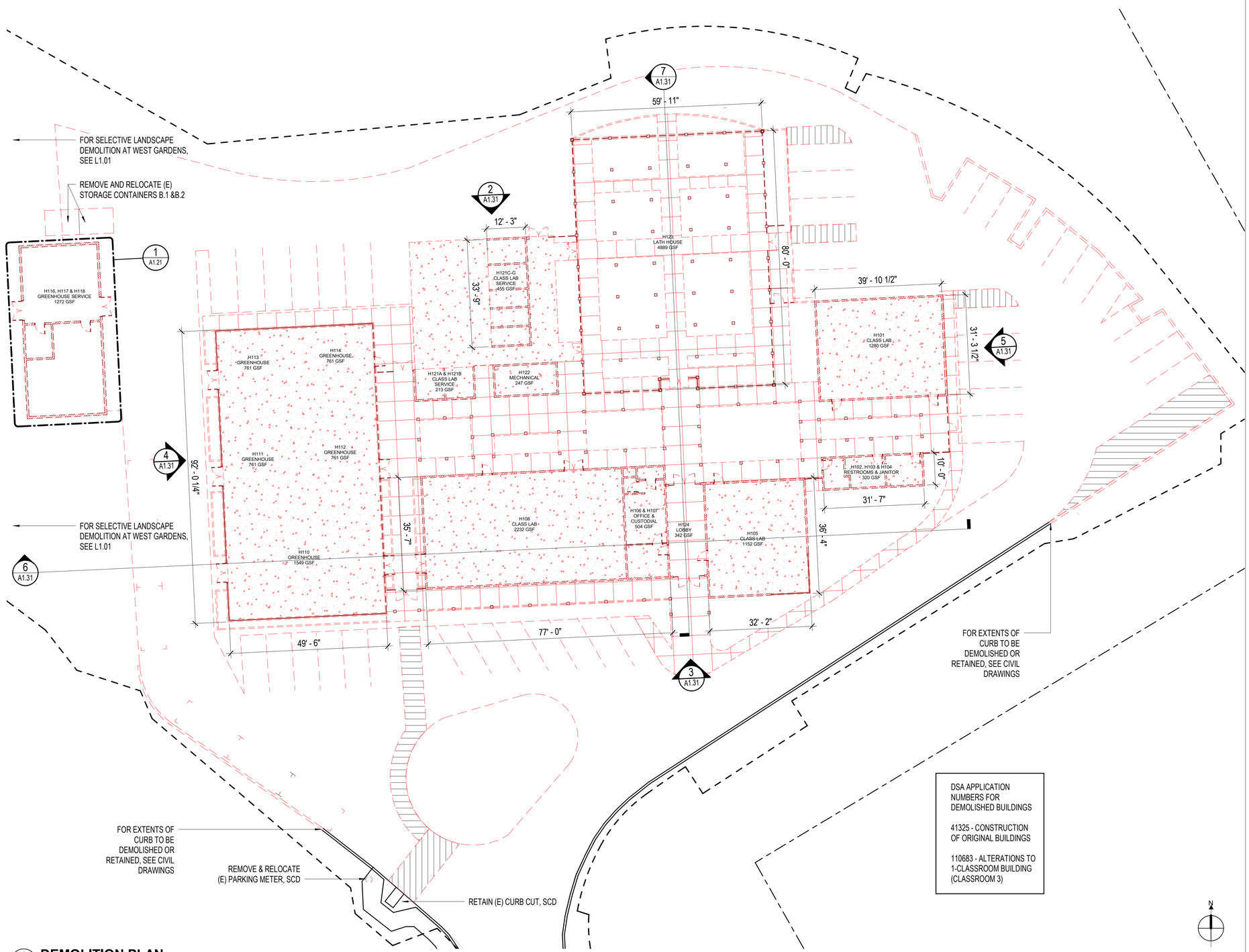

1 A1.01 **DEMOLITION PLAN**
1/16" = 1'-0"

GENERAL NOTES

1. EXISTING BUILDING AND SITE DOCUMENTATION IS BASED ON AVAILABLE DOCUMENTATION PROVIDED BY THE OWNER AND LIMITED SITE OBSERVATION INVESTIGATIONS. AS BUILT CONDITIONS MAY VARY. CONTRACTOR IS TO USE CAUTION IN DEMOLITION AND IS TO NOTIFY ARCHITECT IMMEDIATELY IF ANY VARIATIONS OR DISCREPANCIES ARE UNCOVERED.
2. A COMPLETE SET OF 1978 DRAWINGS IS AVAILABLE FROM THE DISTRICT.
3. FOR SITE DEMOLITION SEE 1 / G1.51, CIVIL AND LANDSCAPE DRAWINGS.
4. REFER TO SHEETS A1.01, 1.21 AND A1.31 FOR INTERIOR LAYOUT AND EXTERIOR ELEVATIONS OF BUILDINGS TO BE DEMOLISHED.
5. ENTIRE STRUCTURE TO BE REMOVED UON, INCLUDING FOUNDATIONS AND/OR SUB-BASE AS REQUIRED TO MEET REQUIREMENTS FOR NEW CONSTUCTION TO FOLLOW DEMOLITION.
6. COORDINATE ALL UTILITY SHUT OFFS WITH OWNER IN ADVANCE.
7. IF IRRIGATION LINES ARE DISRUPTED BY CONSTRUCTION ACTIVITIES, IRRIGATION LINES TO BE RE-CONNECTED OR AN EQUIVALENT METHOD FOR IRRIGATION SHALL BE SUPPLIED BY CONTRACTOR.

LEGEND

- SCOPE OF GENERAL WORK BOUNDARY
- PROPERTY LINE
- DEMOLISH

APPROVALS

IDENTIFICATION STAMP
DIV. OF THE STATE ARCHITECT
APP: 01-119409 INC:
REVIEWED FOR
SS ☑ FLS ☑ ACS ☑
DATE: 03/14/2022

NOLL & TAM ARCHITECTS
729 Heinz Avenue
Berkeley, CA 94710
tel 510.542.2200
fax 510.542.2201

SEAL

LICENSED ARCHITECT
CHRISTOPHER NOLL
No. C15916
REN. 12-31-23
STATE OF CALIFORNIA

PROJECT TITLE

Peralta Community College District
MERRITT COLLEGE NEW LANDSCAPE HORTICULTURE COMPLEX

12500 Campus Drive
Oakland, CA 94619

BID SET

ISSUE DATE	03/03/2022
N&T JOB NUMBER	22003

REVISIONS

	DATE	DESCRIPTION

DRAWN BY **Author** | CHECKED BY **Checker**

SHEET TITLE
DEMOLITION PLAN

SHEET NUMBER
A1.01

3/3/2022 11:27:24 AM BIM 360://PCCD Merritt Horticulture/Merritt Horticulture_2020.rvt

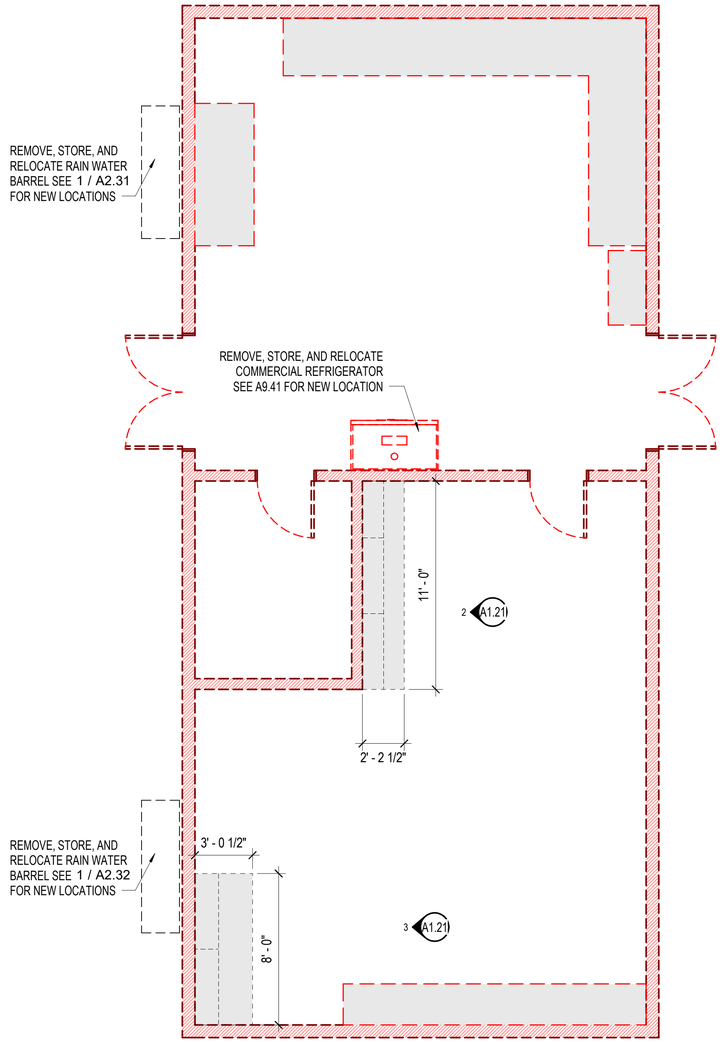

1 A1.21 **DEMOLITION PLAN - GREENHOUSE SUPPORT**
1/4" = 1'-0"

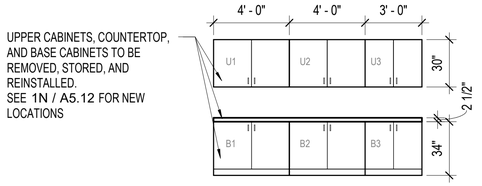

2 A1.21 **CASEWORK TO BE REINSTALLED - WORKSHOP N**
1/4" = 1'-0"

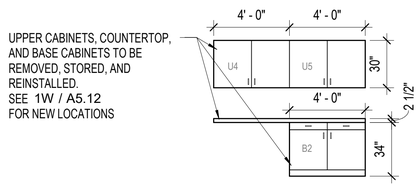

3 A1.21 **CASEWORK TO BE REINSTALLED - WORKSHOP W**
1/4" = 1'-0"

GENERAL NOTES

1. EXISTING BUILDING AND SITE DOCUMENTATION IS BASED ON AVAILABLE DOCUMENTATION PROVIDED BY THE OWNER AND LIMITED SITE OBSERVATION INVESTIGATIONS. AS BUILT CONDITIONS MAY VARY. CONTRACTOR IS TO USE CAUTION IN DEMOLITION AND IS TO NOTIFY ARCHITECT IMMEDIATELY IF ANY VARIATIONS OR DISCREPANCIES ARE UNCOVERED.
2. A COMPLETE SET OF 1978 DRAWINGS IS AVAILABLE FROM THE DISTRICT.
3. FOR SITE DEMOLITION SEE 1 / G1.51, CIVIL AND LANDSCAPE DRAWINGS.
4. REFER TO SHEETS A1.01, 1.21 AND A1.31 FOR INTERIOR LAYOUT AND EXTERIOR ELEVATIONS OF BUILDINGS TO BE DEMOLISHED.
5. ENTIRE STRUCTURE TO BE REMOVED UON, INCLUDING FOOTINGS, FOUNDATIONS AND/OR SUB-BASE AS REQUIRED TO MEET REQUIREMENTS FOR NEW CONSTUCTION TO FOLLOW DEMOLITION.
6. COORDINATE ALL UTILITY SHUT OFFS WITH OWNER IN ADVANCE.
7. IF IRRIGATION LINES ARE DISRUPTED BY CONSTRUCTION ACTIVITIES, IRRIGATION LINES TO BE RE-CONNECTED OR AN EQUIVALENT METHOD FOR IRRIGATION SHALL BE SUPPLIED BY CONTRACTOR.

LEGEND

- SCOPE OF GENERAL WORK BOUNDARY
- PROPERTY LINE
- DEMOLISH

APPROVALS

IDENTIFICATION STAMP
DIV. OF THE STATE ARCHITECT
APP: 01-119409 INC:
REVIEWED FOR
SS ☑ FLS ☑ ACS ☑
DATE: 03/14/2022

NOLL & TAM ARCHITECTS
729 Heinz Avenue
Berkeley, CA 94710
tel 510.542.2200
fax 510.542.2201

SEAL

LICENSED ARCHITECT
CHRISTOPHER NOLL
No. C15916
REN. 12-31-23
STATE OF CALIFORNIA

PROJECT TITLE

Peralta Community College District
MERRITT COLLEGE NEW LANDSCAPE HORTICULTURE COMPLEX

12500 Campus Drive
Oakland, CA 94619

BID SET

ISSUE DATE	03/03/2022
N&T JOB NUMBER	22003

REVISIONS

	DATE	DESCRIPTION

DRAWN BY **Author** | CHECKED BY **Checker**

SHEET TITLE

ENLARGED DEMOLITION PLAN & ELEVATIONS

SHEET NUMBER

A1.21

3/3/2022 11:27:25 AM BIM 360://PCCD Merritt Horticulture/Merritt Horticulture_2020.rvt

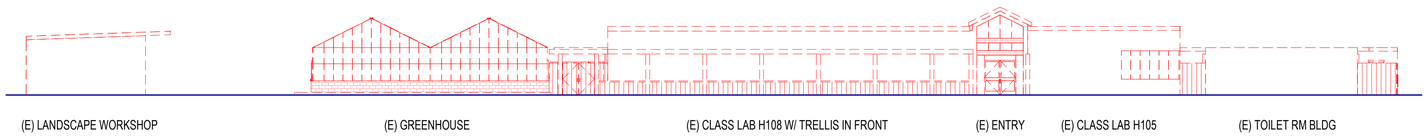

3 A1.31 DEMOLITION ELEVATION - SOUTH

1/16" = 1'-0"

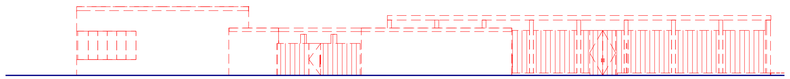

5 A1.31 DEMOLITION ELEVATION - EAST

1/16" = 1'-0"

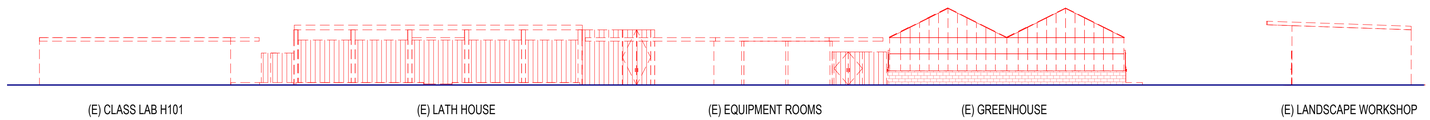

2 A1.31 DEMOLITION ELEVATION - NORTH

1/16" = 1'-0"

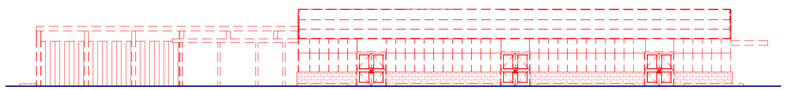

4 A1.31 DEMOLITION ELEVATION - WEST

1/16" = 1'-0"

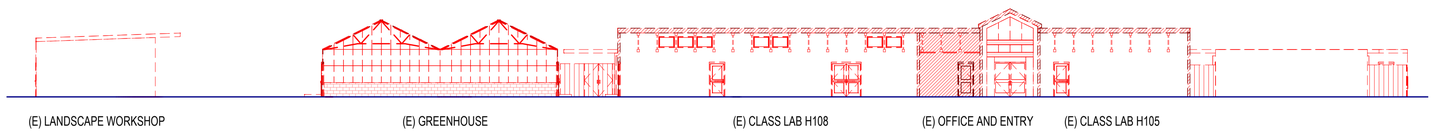

6 A1.31 DEMOLITION SECTION - E/W

1/16" = 1'-0"

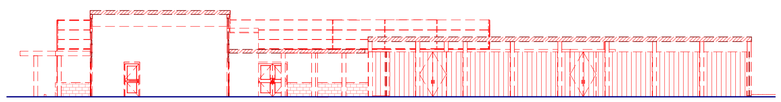

7 A1.31 DEMOLITION SECTION - N/S

1/16" = 1'-0"

GENERAL NOTES

1. EXISTING BUILDING AND SITE DOCUMENTATION IS BASED ON AVAILABLE DOCUMENTATION PROVIDED BY THE OWNER AND LIMITED SITE OBSERVATION INVESTIGATIONS. AS BUILT CONDITIONS MAY VARY. CONTRACTOR IS TO USE CAUTION IN DEMOLITION AND IS TO NOTIFY ARCHITECT IMMEDIATELY IF ANY VARIATIONS OR DISCREPANCIES ARE UNCOVERED.
2. A COMPLETE SET OF 1978 DRAWINGS IS AVAILABLE FROM THE DISTRICT.
3. FOR SITE DEMOLITION SEE 1 / G1.51, CIVIL AND LANDSCAPE DRAWINGS.
4. REFER TO SHEETS A1.01, 1.21 AND A1.31 FOR INTERIOR LAYOUT AND EXTERIOR ELEVATIONS OF BUILDINGS TO BE DEMOLISHED.
5. ENTIRE STRUCTURE TO BE REMOVED UON, INCLUDING FOOTINGS, FOUNDATIONS AND/OR SUB-BASE AS REQUIRED TO MEET REQUIREMENTS FOR NEW CONSTUCTION TO FOLLOW DEMOLITION.
6. COORDINATE ALL UTILITY SHUT OFFS WITH OWNER IN ADVANCE.
7. IF IRRIGATION LINES ARE DISRUPTED BY CONSTRUCTION ACTIVITIES, IRRIGATION LINES TO BE RE-CONNECTED OR AN EQUIVALENT METHOD FOR IRRIGATION SHALL BE SUPPLIED BY CONTRACTOR.

LEGEND

- SCOPE OF GENERAL WORK BOUNDARY
- PROPERTY LINE
- DEMOLISH

APPROVALS

IDENTIFICATION STAMP
DIV. OF THE STATE ARCHITECT
APP: 01-119409 INC:
REVIEWED FOR
SS ☑ FLS ☑ ACS ☑
DATE: 03/14/2022

NOLL & TAM ARCHITECTS
729 Heinz Avenue
Berkeley, CA 94710
tel 510.542.2200
fax 510.542.2201

SEAL

LICENSED ARCHITECT
CHRISTOPHER NOLL
No. C15916
REN. 12-31-23
STATE OF CALIFORNIA

PROJECT TITLE

Peralta Community College District

MERRITT COLLEGE NEW LANDSCAPE HORTICULTURE COMPLEX

12500 Campus Drive
Oakland, CA 94619

BID SET

ISSUE DATE	03/03/2022
N&T JOB NUMBER	22003

REVISIONS

	DATE	DESCRIPTION

DRAWN BY **Author** | CHECKED BY **Checker**

SHEET TITLE

DEMOLITION ELEVATIONS

SHEET NUMBER

A1.31

3/3/2022 11:27:28 AM BIM 360://PCCD Merritt Horticulture/Merritt Horticulture_2020.rvt

GENERAL NOTES

1. REFER TO LANDSCAPE AND CIVIL DRAWINGS FOR DIMENSIONED LAYOUT OF ALL EXTERIOR PAVED SURFACES.
2. ALL WALKWAYS AND CROSSWALKS SHALL HAVE MIN CLR WIDTH OF 48" AND SHALL HAVE 5% MAX RUNNING SLOPE AND 2% MAX CROSS SLOPE, PER CBC 11B-403; SEE LANDSCAPE AND CIVIL DRAWINGS.
3. ALL WALKING SURFACES SHALL BE SLIP RESISTANT PER CBC 11B 302.1; SEE LANDSCAPE AND CIVIL DRAWINGS.
4. REFER TO SHEET G1.11 FOR EMERGENCY VEHICLE ACCESS LAYOUT AND DIMENSIONS.
5. THIS CAMPUS IS LOCATED WITHIN THE WILDLAND / URBAN INTERFACE (WUI).

EXISTING PLATFORM
NOT IN SCOPE

1 A2.31

WORKSHOP H800
STORAGE 2 H803
STORAGE 3 H802
STORAGE 1 H801
ALL GENDER RESTROOMS H804
FIELD SUPPORT H806
GROUNDS H805
COMMUNITY GARDEN SUPPORT H807
SOIL BIN 4 H605
SOIL BIN 3 H604
SOIL BIN 2 H603
SOIL BIN 1 H602
GREENHOUSE 5 H601
GREENHOUSE 4 H600
HEAD HOUSE H700
TRASH & RECYCLING H701

5 A7.82

GREENHOUSE 2 H501
GREENHOUSE 1B H500B
GREENHOUSE 3 H502
GREENHOUSE 1A H500A
CLASS LAB SUPPORT 1 H101
JANITORIAL H103
CLASS LAB 1 H100
ALL GENDER RESTROOMS H102
CLASS LAB SUPPORT 3 H301
CLASS LAB 3 H300
CLASS LAB 2 H200
CLASS LAB SUPPORT 2 H201
CIRCULATION H400
LIBRARY H404
OFFICE 1 H401
OFFICE 2 H402
OFFICE 3 H403
ELECTRICAL H406
TRANSFORMER & GENERATOR H407
DATA H405
MECHANICAL YARD H408

PROJECT COORDINATION POINT, SCD

3 A7.82
3 G3.25
2 A7.82
1 A2.32

ELECTRICAL, TECHNOLOGY & WAYFINDING IMPROVEMENTS ONLY, SEE CONSULTANT DRAWINGS

0' 15' 30' 60'

N

LEGEND

— — — SCOPE OF GENERAL WORK BOUNDARY

— - — PROPERTY LINE

1 A2.01 **SITE PLAN - FLOOR LEVEL**
1" = 30'-0"

APPROVALS

IDENTIFICATION STAMP
DIV. OF THE STATE ARCHITECT
APP: 01-119409 INC:
REVIEWED FOR
SS ☑ FLS ☑ ACS ☑
DATE: 03/14/2022

NOLL & TAM ARCHITECTS
729 Heinz Avenue
Berkeley, CA 94710
tel 510.542.2200
fax 510.542.2201

SEAL

LICENSED ARCHITECT
CHRISTOPHER NOLL
No. C15916
REN. 12-31-23
STATE OF CALIFORNIA

PROJECT TITLE

Peralta Community College District
MERRITT COLLEGE NEW LANDSCAPE HORTICULTURE COMPLEX

12500 Campus Drive
Oakland, CA 94619

BID SET

ISSUE DATE 03/03/2022
N&T JOB NUMBER 22003

REVISIONS

#	DATE	DESCRIPTION

DRAWN BY Author | CHECKED BY Checker

SHEET TITLE
SITE PLAN - FLOOR LEVEL

SHEET NUMBER
A2.01

3/3/2022 11:27:35 AM BIM 360://PCCD Merritt Horticulture/Merritt Horticulture_2020.rvt

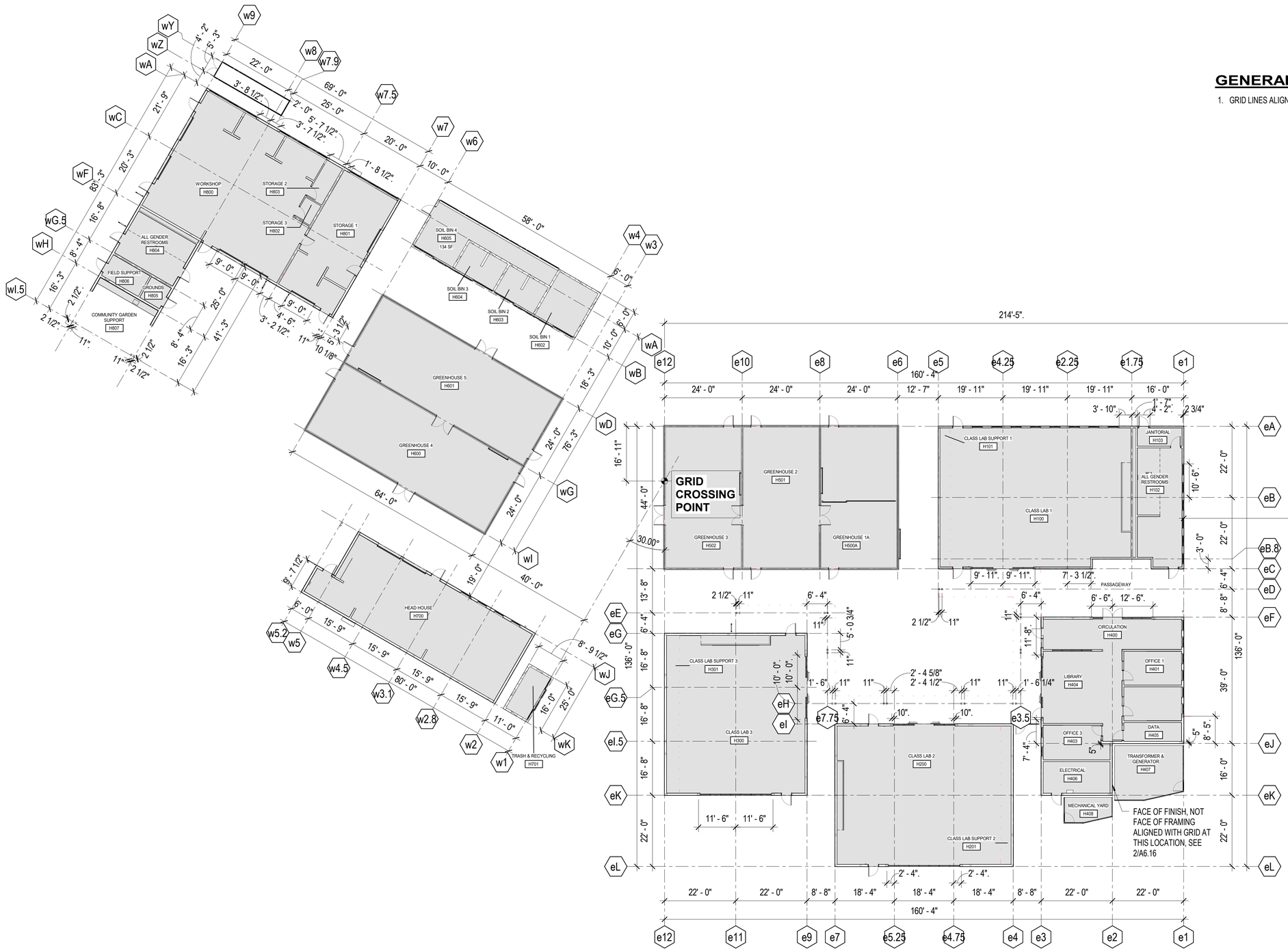

GENERAL NOTES

1. GRID LINES ALIGN TO FACE OF FRAMING, TYP.

1 / A2.10 **GRID LAYOUT PLAN**
1/16" = 1'-0"

APPROVALS

IDENTIFICATION STAMP
DIV. OF THE STATE ARCHITECT
APP: 01-119409 INC:
REVIEWED FOR
SS ☑ FLS ☑ ACS ☑
DATE: 03/14/2022

NOLL & TAM ARCHITECTS
729 Heinz Avenue
Berkeley, CA 94710
tel 510.542.2200
fax 510.542.2201

SEAL

LICENSED ARCHITECT
CHRISTOPHER NOLL
No. C15916
REN. 12-31-23
STATE OF CALIFORNIA

PROJECT TITLE

Peralta Community College District
MERRITT COLLEGE NEW LANDSCAPE HORTICULTURE COMPLEX

12500 Campus Drive
Oakland, CA 94619

BID SET

ISSUE DATE	03/03/2022
N&T JOB NUMBER	22003

REVISIONS

	DATE	DESCRIPTION

DRAWN BY **Author** | CHECKED BY **Checker**

SHEET TITLE
GRID LAYOUT PLAN

SHEET NUMBER
A2.10

3/3/2022 11:27:39 AM BIM 360://PCCD Merritt Horticulture/Merritt Horticulture_2020.rvt

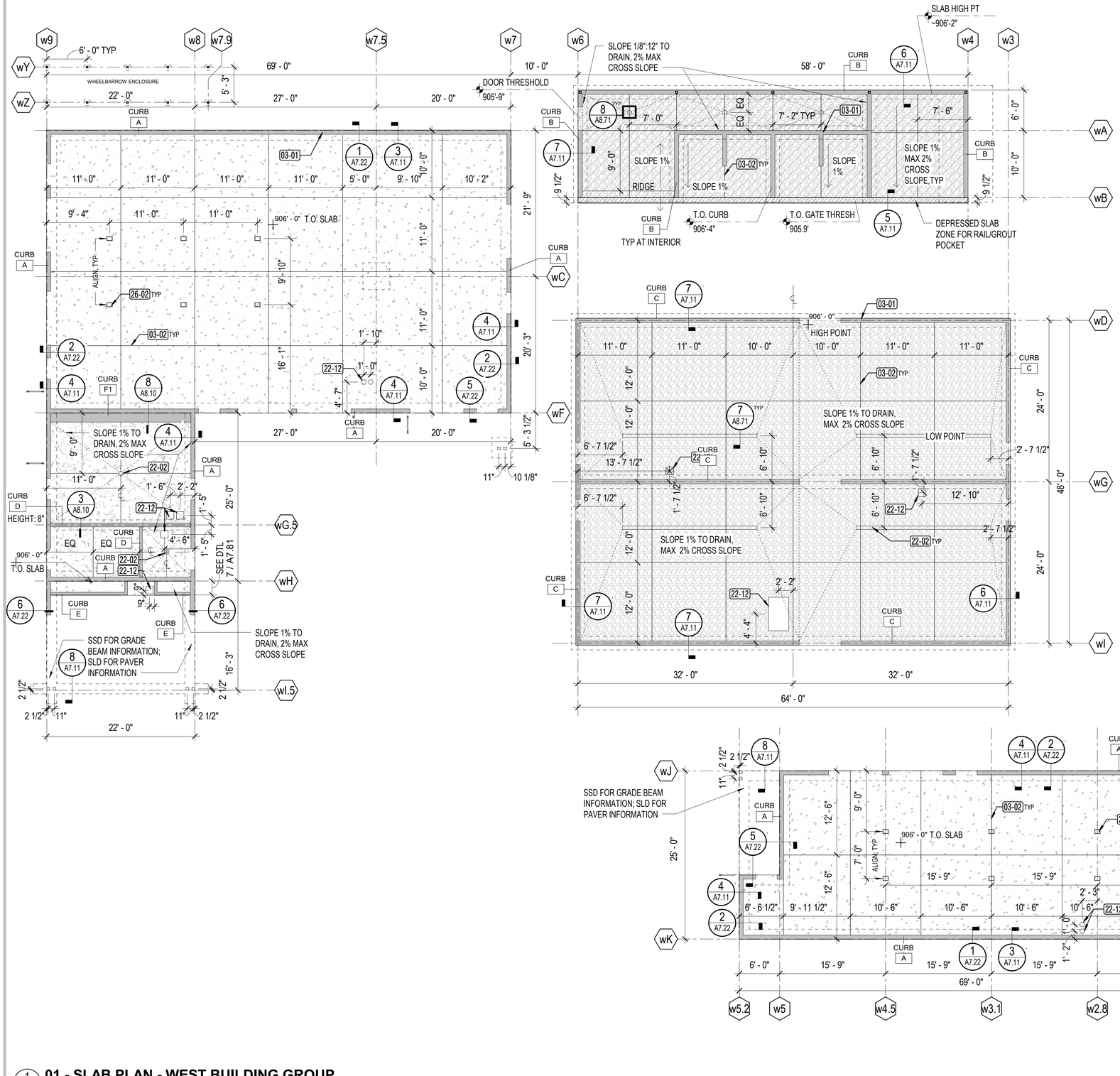

1 A2.11 **01 - SLAB PLAN - WEST BUILDING GROUP**
1/8" = 1'-0"

GENERAL NOTES

1. TOP OF STRUCTURAL SLAB DATUM ELEVATION 0'-0" = 905.00, SCD, UON
2. SSD,SCD FOR ADDITIONAL INFORMATION
3. SEE LAYOUT PLANS FOR PARTITION LAYOUT AND ADDITIONAL DIMENSIONAL INFORMATION
4. SEE FINISH PLANS AND SCHEDULE FOR ADDITIONAL INFORMATION
5. SEE LAYOUT PLANS AND FLOOR PLANS FOR ROOM NAMES
6. SPD FOR FLOOR DRAIN TYPES AND CONNECTIONS
7. WHERE FLOOR DRAINS ARE INDICATED, SLOPE FLOORS TO DRAIN NO LESS THAN 1% IN DIRECTION OF TRAVEL. CROSS SLOPE SHALL NOT EXCEED 2%
8. FOR TYPICAL FLOOR ASSEMBLY, SEE 1 / A7.11
9. GENERAL DIMENSIONS ARE PROVIDED FOR FLOOR BOXES, DRAINS AND EXPOSED SLAB CONTROL JOINTS. SUBJECT TO CONFIRMATION BY ARCHITECT PRIOR TO CONCRETE PLACEMENT.
10. SEE LANDSCAPE AND CIVIL DRAWINGS FOR TYPICAL SITE HARDSCAPE AND EXTERIOR SLAB ELEVATIONS
11. SEE THRESHOLD DETAILS FOR COORDINATION OF EDGE OF SLAB WITH OPENINGS

KEYNOTE LEGEND	
Key Value	**Keynote Text**
03-01	CONCRETE CURB, SSD
03-02	EXPOSED CONTROL JOINT
22-02	FLOOR DRAIN, SPD
22-12	SEDIMENT TRAP, SPD
26-02	FLOOR OUTLET BOX, SEE ELECTRICAL AND TECHNOLOGY DRAWINGS

SLAB PLAN LEGEND

- STRUCTURAL CONCRETE SLAB, SSD SMOOTH FLOAT FINISH, TO BE POLISHED
- STRUCTURAL CONCRETE SLAB, SSD SMOOTH FLOAT FINISH, TO RECEIVE FLUID-APPLIED FLOORING
- STRUCTURAL CONCRETE SLAB, SSD SMOOTH FLOAT FINISH, TO BE CLR SEALED IF EXPOSED
- STRUCTURAL CONCRETE SLAB, SSD LIGHT BROOM FINISH, SWIRL PATTERN
- STRUCTURAL CONCRETE SLAB, SSD LIGHT BROOM FINISH, LINED PATTERN
- CONCRETE CURB, MATCH LOCATION UON
- SLAB DEPRESSION

CURB TYPE LEGEND

CURB TYPE	HEIGHT	WIDTH
A	8"	5 3/4", 7 1/2", 8 1/4"
B	+/- 5" VIF	7 5/8"
C	2"	7 5/8"
D	6" UON	3", 5", 6 3/4"
E	6"	5"
F	8" / 2"	SEE DTL 8 / A8.10 9 / A8.10

FOR ADDITIONAL DETAILS REFERENCE A7.11

APPROVALS

IDENTIFICATION STAMP
DIV. OF THE STATE ARCHITECT
APP: 01-119409 INC:
REVIEWED FOR
SS ☑ FLS ☑ ACS ☑
DATE: 03/14/2022

NOLL & TAM ARCHITECTS
729 Heinz Avenue
Berkeley, CA 94710
tel 510.542.2200
fax 510.542.2201

SEAL

LICENSED ARCHITECT
CHRISTOPHER NOLL
No. C15916
REN. 12-31-23
STATE OF CALIFORNIA

PROJECT TITLE

Peralta Community College District
MERRITT COLLEGE NEW LANDSCAPE HORTICULTURE COMPLEX

12500 Campus Drive
Oakland, CA 94619

BID SET

ISSUE DATE	03/03/2022
N&T JOB NUMBER	22003

REVISIONS

	DATE	DESCRIPTION

DRAWN BY **Author** CHECKED BY **Checker**

SHEET TITLE
SLAB PLAN - WEST BUILDING GROUP

SHEET NUMBER
A2.11

3/3/2022 11:27:42 AM BIM 360://PCCD Merritt Horticulture/Merritt Horticulture_2020.rvt

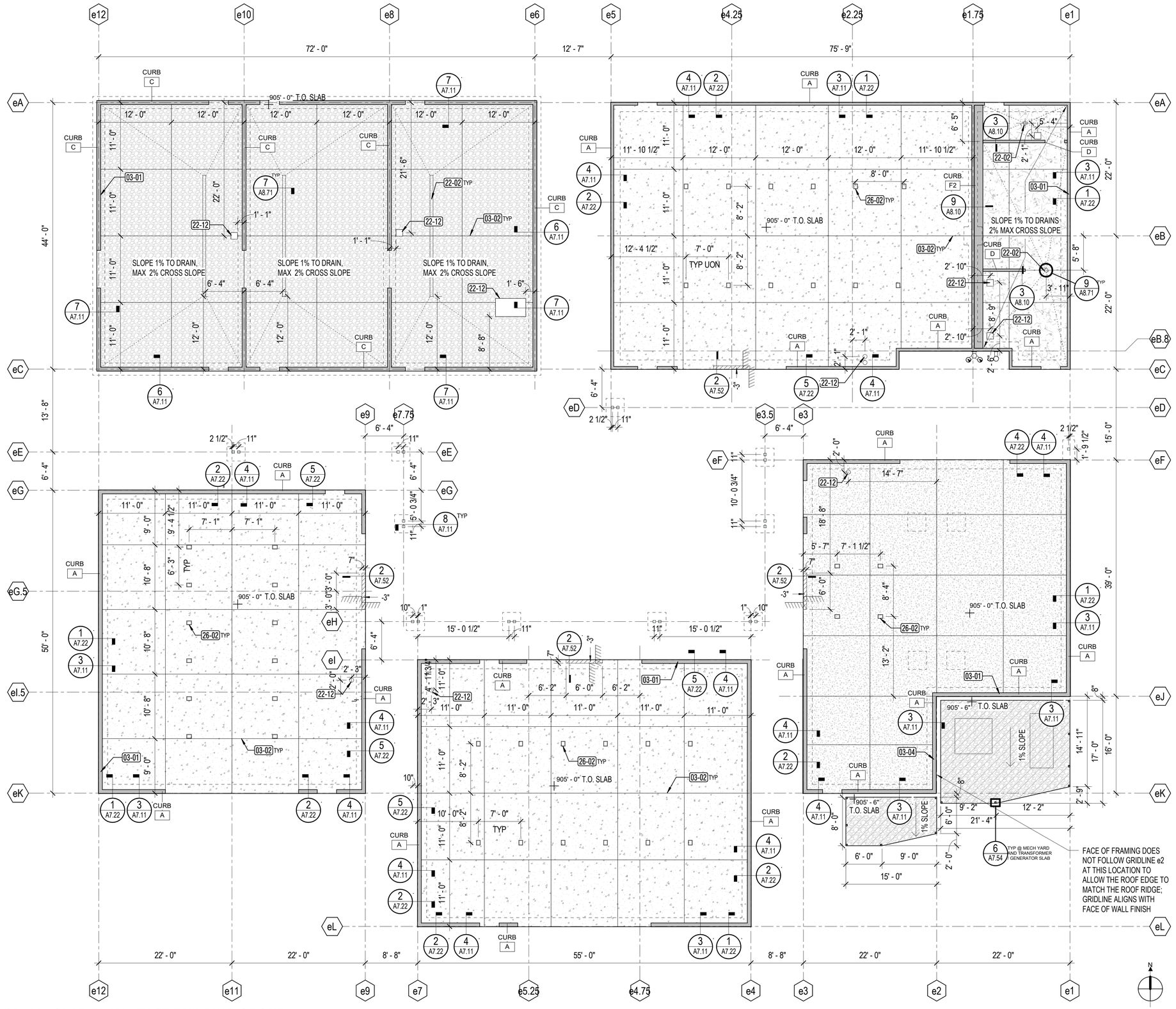

1 A2.12 **01 - SLAB PLAN - EAST BUILDING GROUP**
1/8" = 1'-0"

GENERAL NOTES

1. TOP OF STRUCTURAL SLAB DATUM ELEVATION 0'-0" = 905.00, SCD, UON
2. SSD,SCD FOR ADDITIONAL INFORMATION
3. SEE LAYOUT PLANS FOR PARTITION LAYOUT AND ADDITIONAL DIMENSIONAL INFORMATION
4. SEE FINISH PLANS AND SCHEDULE FOR ADDITIONAL INFORMATION
5. SEE LAYOUT PLANS AND FLOOR PLANS FOR ROOM NAMES
6. SPD FOR FLOOR DRAIN TYPES AND CONNECTIONS
7. WHERE FLOOR DRAINS ARE INDICATED, SLOPE FLOORS TO DRAIN NO LESS THAN 1% IN DIRECTION OF TRAVEL. CROSS SLOPE SHALL NOT EXCEED 2%
8. FOR TYPICAL FLOOR ASSEMBLY, SEE 1 / A7.11
9. GENERAL DIMENSIONS ARE PROVIDED FOR FLOOR BOXES, DRAINS AND EXPOSED SLAB CONTROL JOINTS. SUBJECT TO CONFIRMATION BY ARCHITECT PRIOR TO CONCRETE PLACEMENT.
10. SEE LANDSCAPE AND CIVIL DRAWINGS FOR TYPICAL SITE HARDSCAPE AND EXTERIOR SLAB ELEVATIONS
11. SEE THRESHOLD DETAILS FOR COORDINATION OF EDGE OF SLAB WITH OPENINGS

KEYNOTE LEGEND	
Key Value	**Keynote Text**
03-01	CONCRETE CURB, SSD
03-02	EXPOSED CONTROL JOINT
03-04	SLAB EDGE IS OFFSET FROM GRID LINE
22-02	FLOOR DRAIN, SPD
22-12	SEDIMENT TRAP, SPD
26-02	FLOOR OUTLET BOX, SEE ELECTRICAL AND TECHNOLOGY DRAWINGS

SLAB PLAN LEGEND

- STRUCTURAL CONCRETE SLAB, SSD SMOOTH FLOAT FINISH, TO BE POLISHED
- STRUCTURAL CONCRETE SLAB, SSD SMOOTH FLOAT FINISH, TO RECEIVE FLUID-APPLIED FLOORING
- STRUCTURAL CONCRETE SLAB, SSD SMOOTH FLOAT FINISH, TO BE CLR SEALED IF EXPOSED
- STRUCTURAL CONCRETE SLAB, SSD LIGHT BROOM FINISH, SWIRL PATTERN
- STRUCTURAL CONCRETE SLAB, SSD LIGHT BROOM FINISH, LINED PATTERN
- CONCRETE CURB, MATCH LOCATION UON
- SLAB DEPRESSION

CURB TYPE LEGEND

CURB TYPE	HEIGHT	WIDTH
A	8"	5 3/4", 7 1/2", 8 1/4"
B	+/- 5" VIF	7 5/8"
C	2"	7 5/8"
D	6" UON	3", 5", 6 3/4"
E	6"	5"
F	8" / 2"	SEE DTL 8 / A8.10 9 / A8.10

FOR ADDITIONAL DETAILS REFERENCE A7.11

APPROVALS

IDENTIFICATION STAMP
DIV. OF THE STATE ARCHITECT
APP: 01-119409 INC:
REVIEWED FOR
SS ☑ FLS ☑ ACS ☑
DATE: 03/14/2022

NOLL & TAM ARCHITECTS
729 Heinz Avenue
Berkeley, CA 94710
tel 510.542.2200
fax 510.542.2201

SEAL

LICENSED ARCHITECT
CHRISTOPHER NOLL
No. C15916
REN. 12-31-23
STATE OF CALIFORNIA

PROJECT TITLE

Peralta Community College District
MERRITT COLLEGE NEW LANDSCAPE HORTICULTURE COMPLEX

12500 Campus Drive
Oakland, CA 94619

BID SET

ISSUE DATE 03/03/2022
N&T JOB NUMBER 22003

REVISIONS

#	DATE	DESCRIPTION

DRAWN BY Author CHECKED BY Checker

SHEET TITLE
SLAB PLAN - EAST BUILDING GROUP

SHEET NUMBER
A2.12

3/3/2022 11:27:45 AM BIM 360://PCCD Merritt Horticulture/Merritt Horticulture_2020.rvt

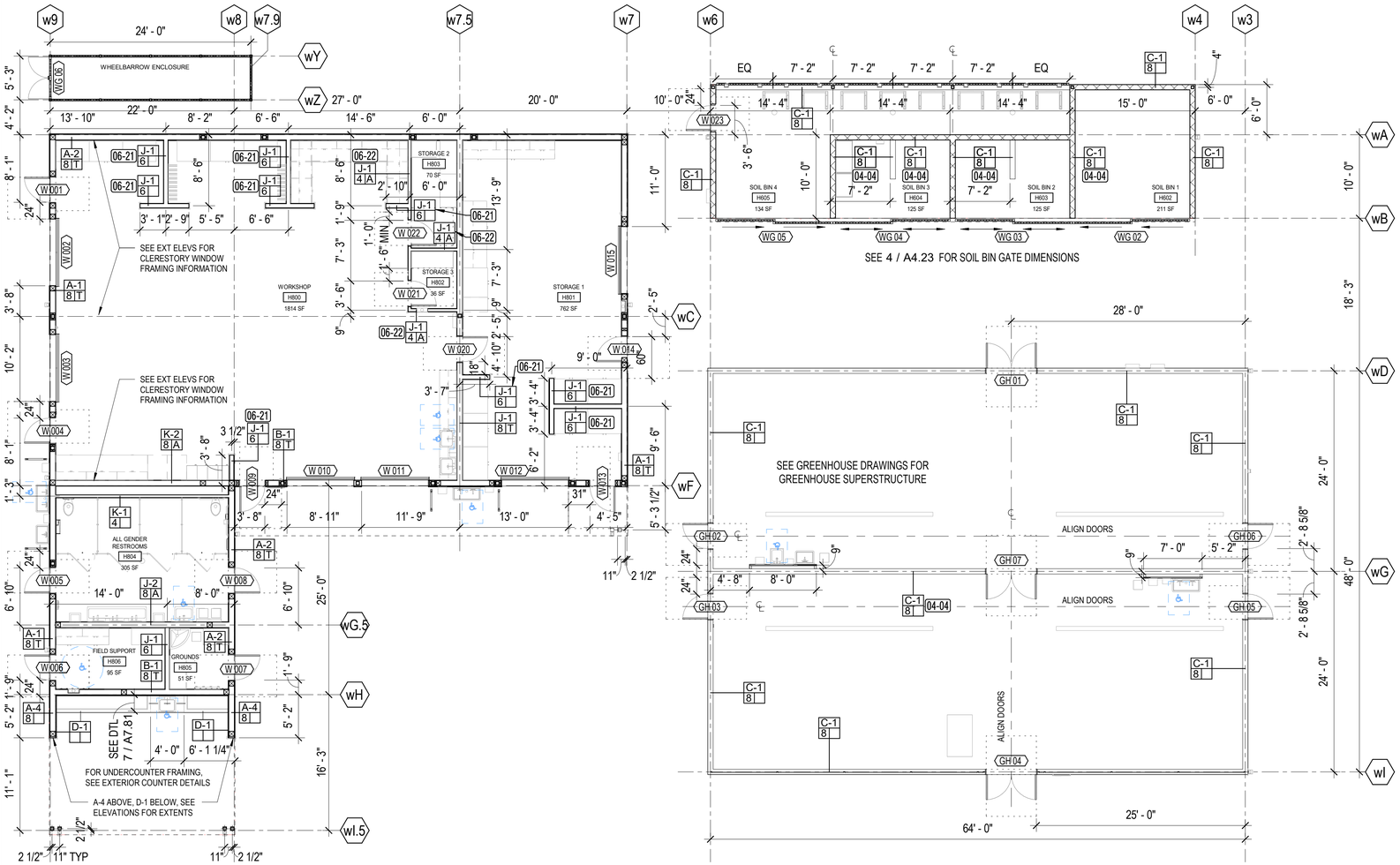

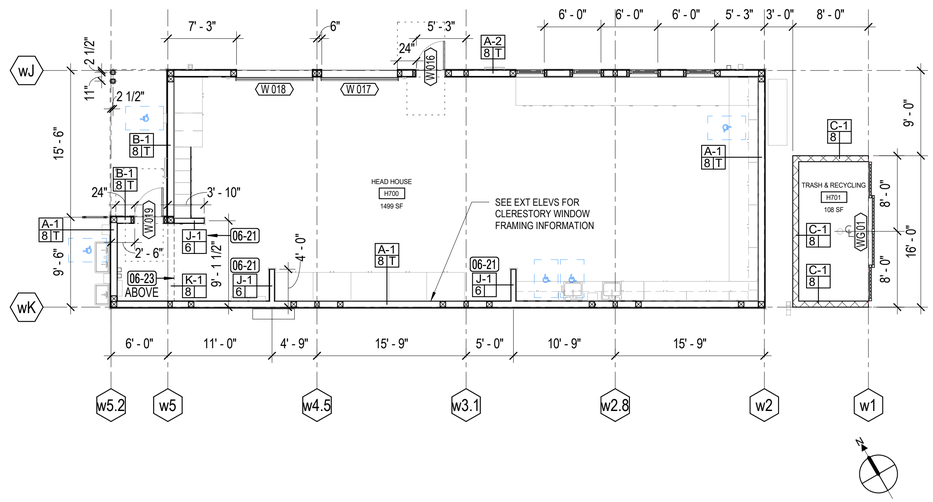

1 A2.21 **01 - LAYOUT PLAN - WEST BUILDING GROUP**
1/8" = 1'-0"

GENERAL NOTES

1. REFER TO SHEET G0.02 FOR GENERAL DIMENSIONING REQUIREMENTS.
2. SEE ROOF PLANS A2.41 AND A2.42 FOR LAYOUT OF CLERESTORY WALLS.
3. FOR EXTERIOR WALL TYPES, SEE A7.21.
4. FOR INTERIOR PARTITION TYPES, SEE A8.10.
5. SEE EXTERIOR ELEVATIONS FOR WINDOW TAGS.
6. FOR CLERESTORY WINDOW LOCATING DIMENSIONS, SEE EXT ELEVATIONS.
7. SEE A2.71 FOR WINDOW SIZES.
8. ALL INTERIOR DOORS TO BE LOCATED 4" FROM ADJACENT WALL FINISH @ HINGE SIDE, UON.
9. ALL INT PARTITIONS ARE FULL-HEIGHT EXTENDING UP TO BO ROOF STRUCTURE, UON.
10. ALL CMU WALLS ARE DECORATIVE CMU, UON.

PARTITION TAG

A / 4 | T
- PARTITION TYPE ID
- INSULATION TYPE (T - THERMAL OR A - ACOUSTIC)
- FRAMING SIZE CODE

FRAMING SIZE
- 8: 2x8 or 3x8 SSD
- 6: 2x6 or 3x6 SSD
- 4: 2x4 or 3x4 SSD

KEYNOTE LEGEND	
Key Value	**Keynote Text**
04-04	CMU AT THIS WALL TO BE STANDARD PRECISION TYPE (NOT DECORATIVE TYPE).
06-21	PARTIAL HT CANTILEVERED INT PARTN, SEE INT ELEVS FOR HT. SEE 3, 4, 5/A8.12 FOR DTLS.
06-22	PARTIAL HT INT PARTN EXTENDING UP TO LOWER CLG, SEE INT ELEVS.

APPROVALS

IDENTIFICATION STAMP
DIV. OF THE STATE ARCHITECT
APP: 01-119409 INC:
REVIEWED FOR
SS ☑ FLS ☑ ACS ☑
DATE: 03/14/2022

NOLL & TAM ARCHITECTS
729 Heinz Avenue
Berkeley, CA 94710
tel 510.542.2200
fax 510.542.2201

SEAL

LICENSED ARCHITECT
CHRISTOPHER NOLL
No. C15916
REN. 12-31-23
STATE OF CALIFORNIA

PROJECT TITLE

Peralta Community College District
MERRITT COLLEGE NEW LANDSCAPE HORTICULTURE COMPLEX

12500 Campus Drive
Oakland, CA 94619

BID SET

ISSUE DATE	03/03/2022
N&T JOB NUMBER	22003

REVISIONS

#	DATE	DESCRIPTION

DRAWN BY **Author** CHECKED BY **Checker**

SHEET TITLE
LAYOUT PLAN - WEST BUILDING GROUP

SHEET NUMBER
A2.21

3/3/2022 11:27:51 AM BIM 360://PCCD Merritt Horticulture/Merritt Horticulture_2020.rvt

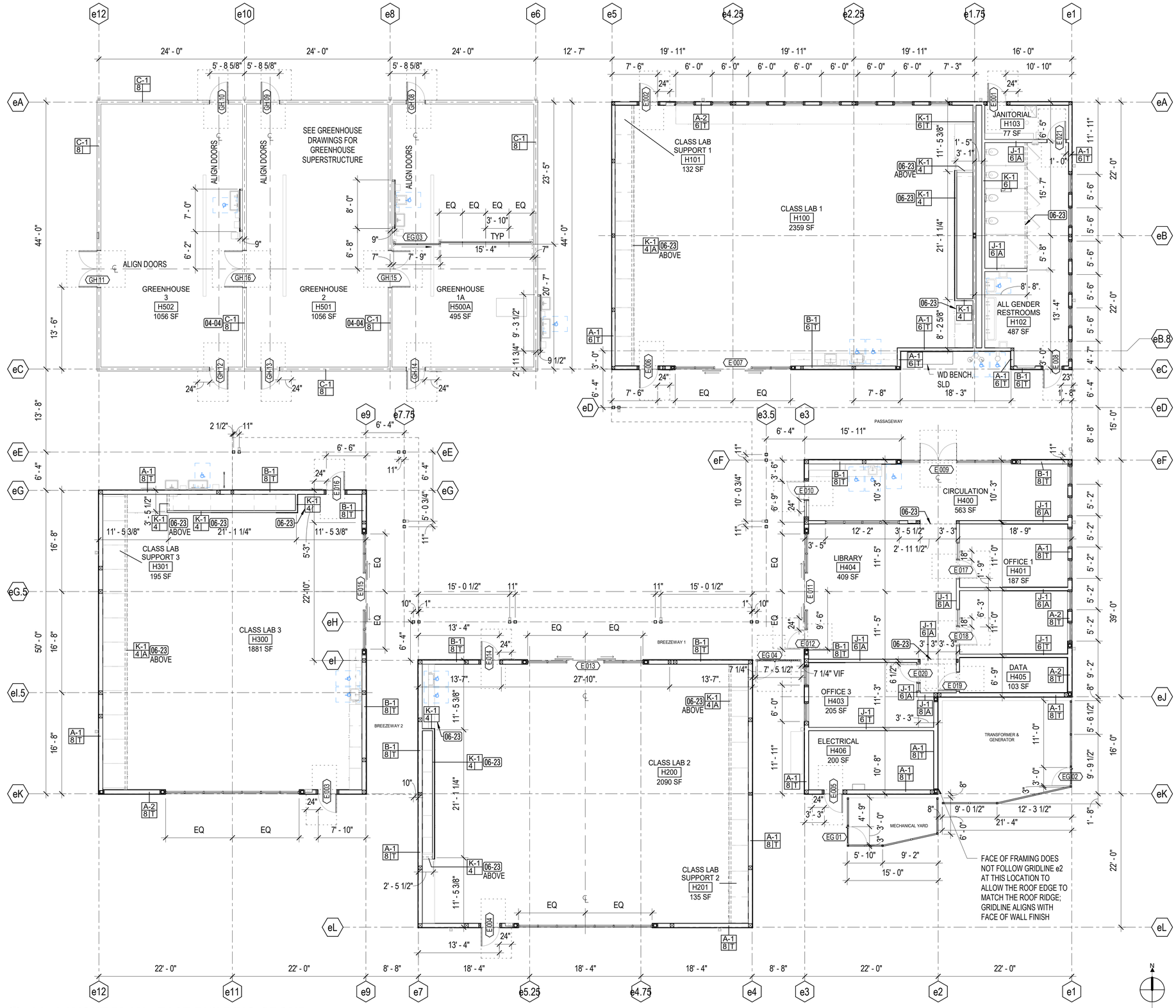

1 A2.22 **01 - LAYOUT PLAN - EAST BUILDING GROUP**
1/8" = 1'-0"

GENERAL NOTES

1. REFER TO SHEET G0.02 FOR GENERAL DIMENSIONING REQUIREMENTS.
2. SEE ROOF PLANS A2.41 AND A2.42 FOR LAYOUT OF CLERESTORY WALLS.
3. FOR EXTERIOR WALL TYPES, SEE A7.21.
4. FOR INTERIOR PARTITION TYPES, SEE A8.10.
5. SEE EXTERIOR ELEVATIONS FOR WINDOW TAGS.
6. FOR CLERESTORY WINDOW LOCATING DIMENSIONS, SEE EXT ELEVATIONS.
7. SEE A2.71 FOR WINDOW SIZES.
8. ALL INTERIOR DOORS TO BE LOCATED 4" FROM ADJACENT WALL FINISH @ HINGE SIDE, UON.
9. ALL INT PARTITIONS ARE FULL-HEIGHT EXTENDING UP TO BO ROOF STRUCTURE, UON.
10. ALL CMU WALLS ARE DECORATIVE CMU, UON.

PARTITION TAG
A 4 T
- PARTITION TYPE ID
- INSULATION TYPE (T - THERMAL OR A - ACOUSTIC)
- FRAMING SIZE CODE

FRAMING SIZE
- 8: 2x8 or 3x8 SSD
- 6: 2x6 or 3x6 SSD
- 4: 2x4 or 3x4 SSD

KEYNOTE LEGEND	
Key Value	**Keynote Text**
04-04	CMU AT THIS WALL TO BE STANDARD PRECISION TYPE (NOT DECORATIVE TYPE).
06-23	SOFFIT WALL, SEE INT ELEVS.

APPROVALS

IDENTIFICATION STAMP
DIV. OF THE STATE ARCHITECT
APP: 01-119409 INC:
REVIEWED FOR
SS ☑ FLS ☑ ACS ☑
DATE: 03/14/2022

NOLL & TAM ARCHITECTS
729 Heinz Avenue
Berkeley, CA 94710
tel 510.542.2200
fax 510.542.2201

SEAL

LICENSED ARCHITECT
CHRISTOPHER NOLL
No. C15916
REN. 12-31-23
STATE OF CALIFORNIA

PROJECT TITLE

Peralta Community College District
MERRITT COLLEGE NEW LANDSCAPE HORTICULTURE COMPLEX

12500 Campus Drive
Oakland, CA 94619

BID SET

ISSUE DATE	03/03/2022
N&T JOB NUMBER	22003

REVISIONS

	DATE	DESCRIPTION

DRAWN BY **Author** CHECKED BY **Checker**

SHEET TITLE
LAYOUT PLAN - EAST BUILDING GROUP

SHEET NUMBER
A2.22

3/3/2022 11:27:55 AM BIM 360://PCCD Merritt Horticulture/Merritt Horticulture_2020.rvt

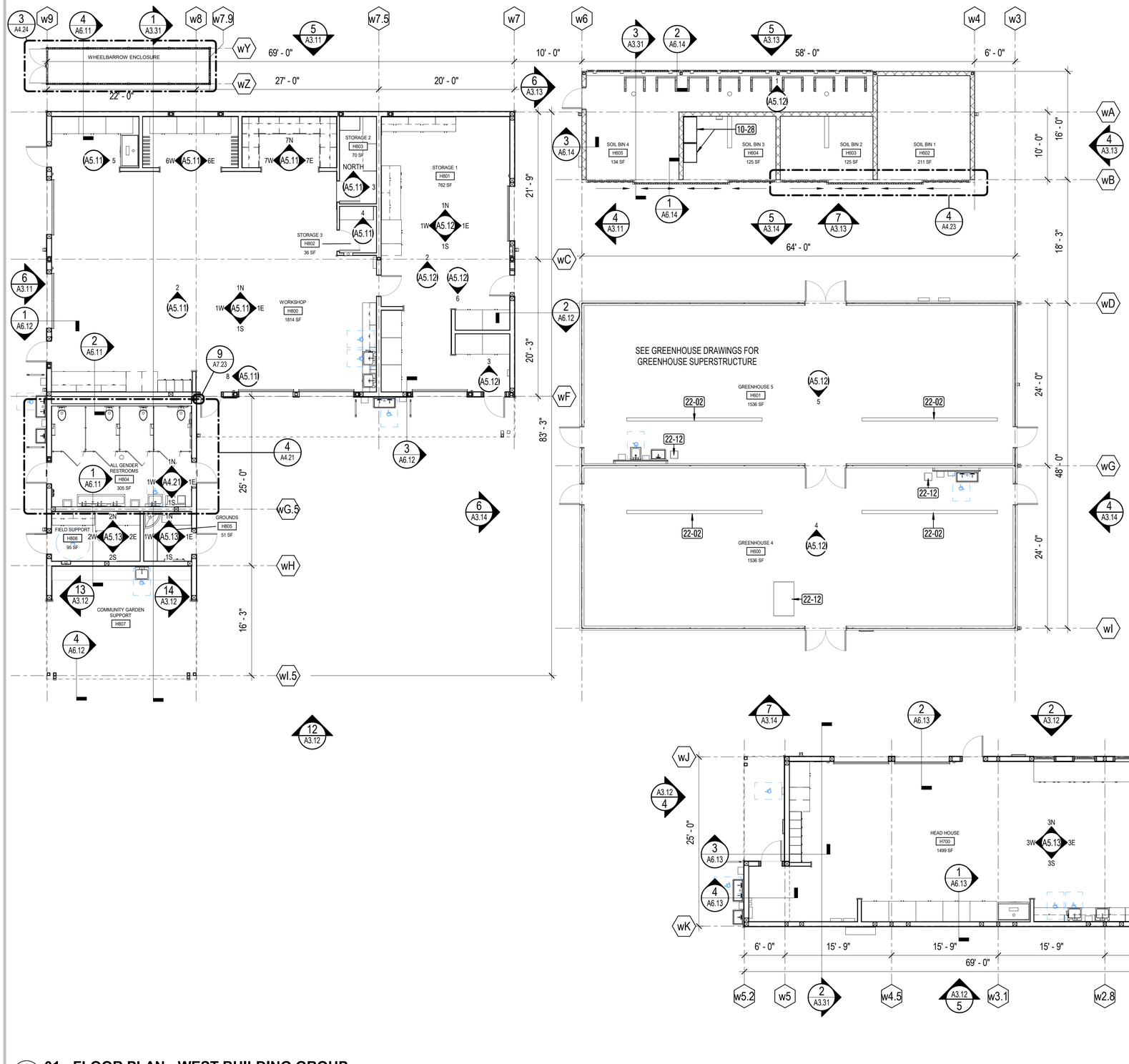

1 A2.31 **01 - FLOOR PLAN - WEST BUILDING GROUP**
1/8" = 1'-0"

GENERAL NOTES

1. REFER TO LAYOUT PLANS A2.21, A2.22 FOR DIMENSIONS AND DOOR TAGS.
2. REFER TO EXTERIOR ELEVATIONS FOR WINDOW TAGS
3. REFER TO INTERIOR ELEVATIONS FOR CASEWORK IDENTIFICATION
4. SEE A2.21 AND A2.22 FOR ACCESSIBILITY NOTES AND DIMENSIONS

KEYNOTE LEGEND	
Key Value	**Keynote Text**
10-28	30 MIN RATED SAFETY CABINET
22-02	FLOOR DRAIN, SPD
22-12	SEDIMENT TRAP, SPD

APPROVALS

IDENTIFICATION STAMP
DIV. OF THE STATE ARCHITECT
APP: 01-119409 INC:
REVIEWED FOR
SS ☑ FLS ☑ ACS ☑
DATE: 03/14/2022

NOLL & TAM ARCHITECTS
729 Heinz Avenue
Berkeley, CA 94710
tel 510.542.2200
fax 510.542.2201

SEAL

LICENSED ARCHITECT
CHRISTOPHER NOLL
No. C15916
REN. 12-31-23
STATE OF CALIFORNIA

PROJECT TITLE

Peralta Community College District
MERRITT COLLEGE NEW LANDSCAPE HORTICULTURE COMPLEX

12500 Campus Drive
Oakland, CA 94619

BID SET

ISSUE DATE 03/03/2022
N&T JOB NUMBER 22003

REVISIONS

#	DATE	DESCRIPTION

DRAWN BY **Author** CHECKED BY **Checker**

SHEET TITLE
FLOOR PLAN - WEST BUILDING GROUP

SHEET NUMBER
A2.31

3/3/2022 11:28:00 AM BIM 360://PCCD Merritt Horticulture/Merritt Horticulture_2020.rvt

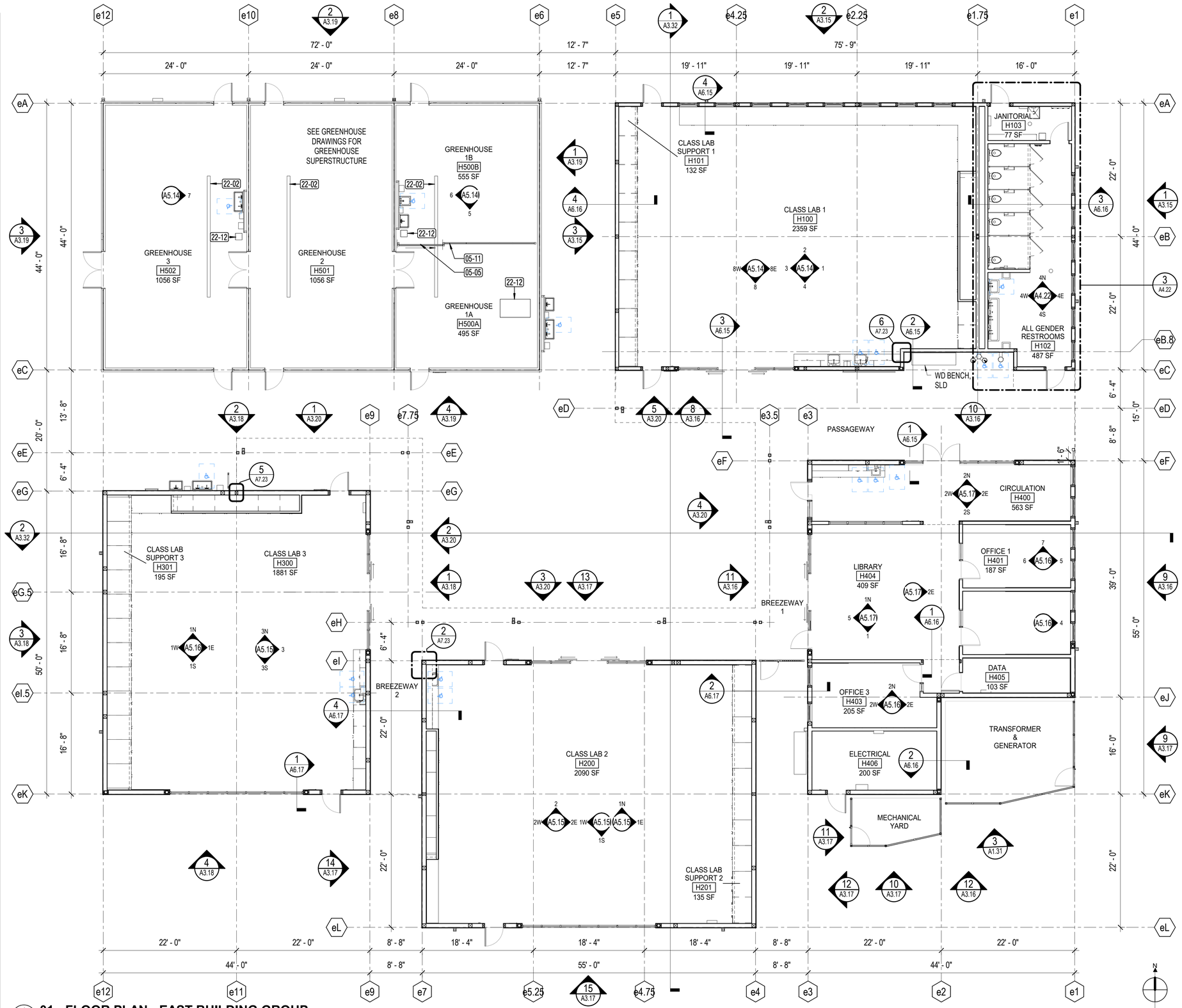

1 A2.32 **01 - FLOOR PLAN - EAST BUILDING GROUP**
1/8" = 1'-0"

GENERAL NOTES

1. REFER TO LAYOUT PLANS A2.21, A2.22 FOR DIMENSIONS AND DOOR TAGS.
2. REFER TO EXTERIOR ELEVATIONS FOR WINDOW TAGS
3. REFER TO INTERIOR ELEVATIONS FOR CASEWORK IDENTIFICATION
4. SEE A2.21 AND A2.22 FOR ACCESSIBILITY NOTES AND DIMENSIONS

KEYNOTE LEGEND	
Key Value	**Keynote Text**
05-05	METAL-FRAMED SLIDING GATE WITH POLYCARBONATE INFILL
05-11	METAL-FRAMED FENCE WITH POLYCARB INFILL
22-02	FLOOR DRAIN, SPD
22-12	SEDIMENT TRAP, SPD

APPROVALS

IDENTIFICATION STAMP
DIV. OF THE STATE ARCHITECT
APP: 01-119409 INC:
REVIEWED FOR
SS ☑ FLS ☑ ACS ☑
DATE: 03/14/2022

NOLL & TAM ARCHITECTS
729 Heinz Avenue
Berkeley, CA 94710
tel 510.542.2200
fax 510.542.2201

SEAL

LICENSED ARCHITECT
CHRISTOPHER NOLL
No. C15916
REN. 12-31-23
STATE OF CALIFORNIA

PROJECT TITLE

Peralta Community College District
MERRITT COLLEGE NEW LANDSCAPE HORTICULTURE COMPLEX

12500 Campus Drive
Oakland, CA 94619

BID SET

ISSUE DATE	03/03/2022
N&T JOB NUMBER	22003

REVISIONS

#	DATE	DESCRIPTION

DRAWN BY **Author** CHECKED BY **Checker**

SHEET TITLE
FLOOR PLAN - EAST BUILDING GROUP

SHEET NUMBER
A2.32

BIM 360://PCCD Merritt Horticulture/Merritt Horticulture_2020.rvt
3/3/2022 11:28:04 AM

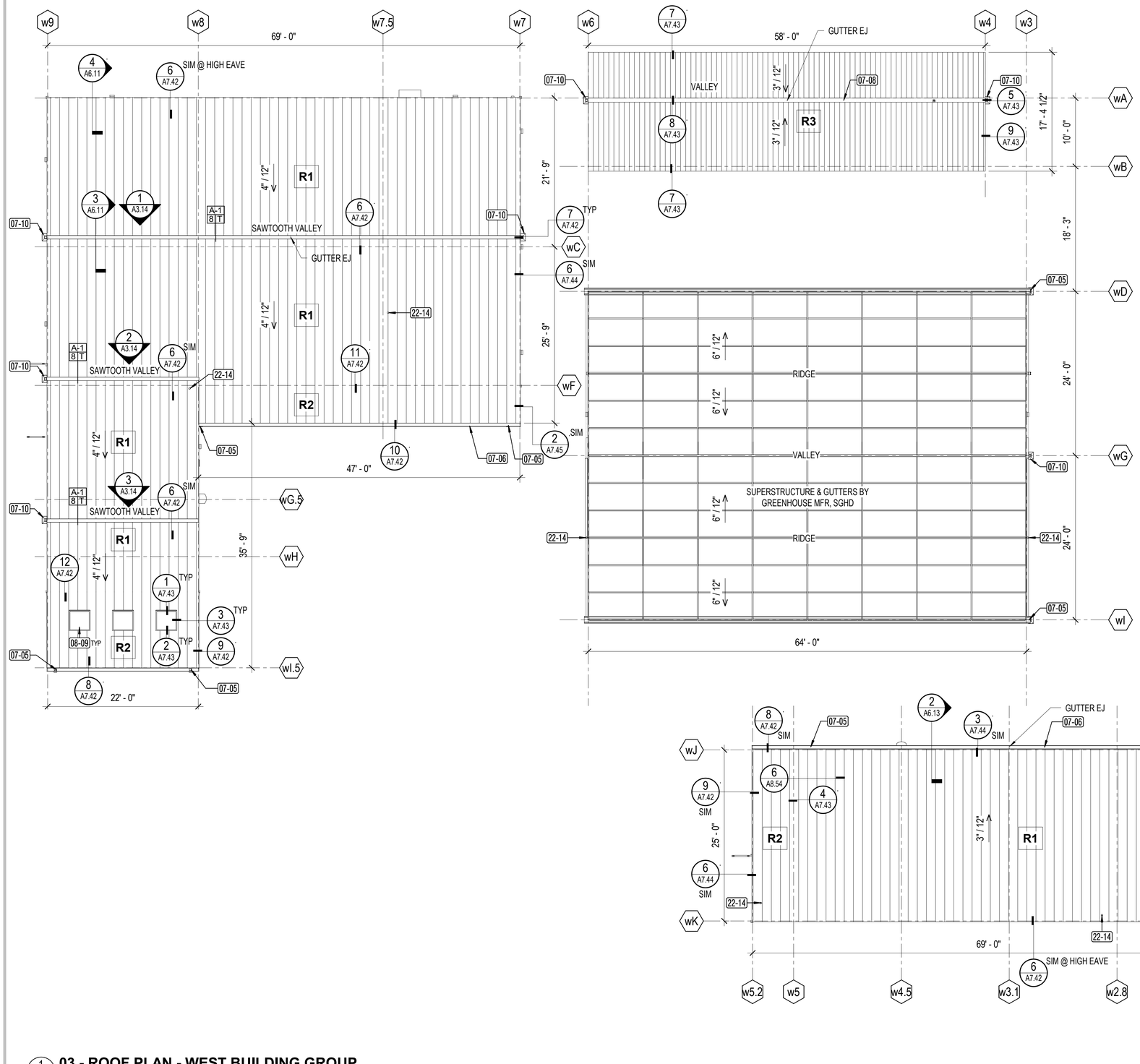

1 A2.41 03 - ROOF PLAN - WEST BUILDING GROUP

1/8" = 1'-0"

GENERAL NOTES

1. GREENHOUSE ROOF; SEE GREENHOUSE DRAWINGS.
2. SEE SHEET A7.41 FOR TYPICAL ROOF ASSEMBLIES.
3. DIMENSIONS FOR CLERESTORY WALLS ARE TO CENTERLINE OF WALL FRAMING.
4. CLERESTORY WINDOWS AND LOCATING DIMENSIONS ARE SHOWN ON EXTERIOR ELEVATIONS.

KEYNOTE LEGEND	
Key Value	**Keynote Text**
07-05	GSM DOWNSPOUT, PREFINISHED
07-06	EXTERNAL GSM GUTTER, PREFINISHED
07-08	INTERNAL GSM GUTTER
07-10	GSM BOX SCUPPER AND DOWNSPOUT, PREFINISHED
08-09	ALUMINUM FRAMED SKYLIGHT, PREFINISHED 36" x 36"
22-14	SANITARY SEWER VENT, SPD

ROOF LEGEND

- STANDING SEAM METAL ROOFING, PREFINISHED
- POLYCARBONATE GREENHOUSE ROOFING, BY GREENHOUSE MFR.
- CORRUGATED BOX RIB METAL ROOFING, PREFINISHED
- SEISMIC JOINTS
- R1 TYP ROOF ASSEMBLY TYPE, SEE A7.41

APPROVALS

IDENTIFICATION STAMP
DIV. OF THE STATE ARCHITECT
APP: 01-119409 INC:
REVIEWED FOR
SS ☑ FLS ☑ ACS ☑
DATE: 03/14/2022

NOLL & TAM ARCHITECTS
729 Heinz Avenue
Berkeley, CA 94710
tel 510.542.2200
fax 510.542.2201

SEAL

LICENSED ARCHITECT
CHRISTOPHER NOLL
No. C15916
REN. 12-31-23
STATE OF CALIFORNIA

PROJECT TITLE

Peralta Community College District
MERRITT COLLEGE NEW LANDSCAPE HORTICULTURE COMPLEX

12500 Campus Drive
Oakland, CA 94619

BID SET

ISSUE DATE	03/03/2022
N&T JOB NUMBER	22003

REVISIONS

#	DATE	DESCRIPTION

DRAWN BY **Author** CHECKED BY **Checker**

SHEET TITLE

ROOF PLAN - WEST BUILDING GROUP

SHEET NUMBER

A2.41

3/3/2022 11:28:09 AM BIM 360://PCCD Merritt Horticulture/Merritt Horticulture_2020.rvt

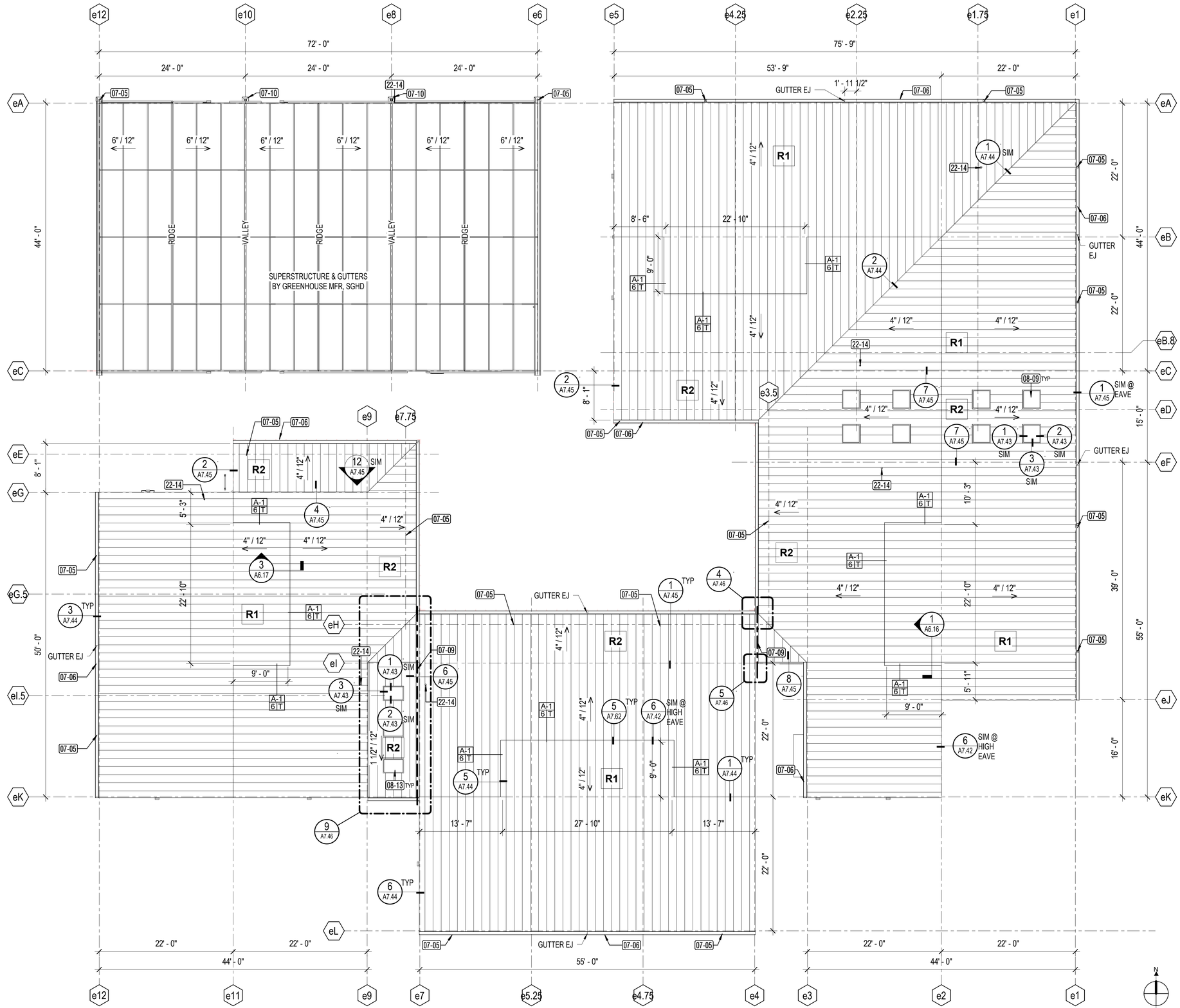

1 A2.42 **03 - ROOF PLAN - EAST BUILDING GROUP**
1/8" = 1'-0"

GENERAL NOTES

1. GREENHOUSE ROOF; SEE GREENHOUSE DRAWINGS.
2. SEE SHEET A7.41 FOR TYPICAL ROOF ASSEMBLIES.
3. DIMENSIONS FOR CLERESTORY WALLS ARE TO CENTERLINE OF WALL FRAMING.
4. CLERESTORY WINDOWS AND LOCATING DIMENSIONS ARE SHOWN ON EXTERIOR ELEVATIONS.

KEYNOTE LEGEND	
Key Value	**Keynote Text**
07-05	GSM DOWNSPOUT, PREFINISHED
07-06	EXTERNAL GSM GUTTER, PREFINISHED
07-09	SEISMIC JOINT, SSD
07-10	GSM BOX SCUPPER AND DOWNSPOUT, PREFINISHED
08-09	ALUMINUM FRAMED SKYLIGHT, PREFINISHED 36" x 36"
08-13	ALUMINUM FRAMED SKYLIGHT, PREFINISHED 24" x 36"
22-14	SANITARY SEWER VENT, SPD

ROOF LEGEND

- STANDING SEAM METAL ROOFING, PREFINISHED
- POLYCARBONATE GREENHOUSE ROOFING, BY GREENHOUSE MFR.
- CORRUGATED BOX RIB METAL ROOFING, PREFINISHED
- SEISMIC JOINTS
- R1 — TYP ROOF ASSEMBLY TYPE, SEE A7.41

APPROVALS

IDENTIFICATION STAMP
DIV. OF THE STATE ARCHITECT
APP: 01-119409 INC:
REVIEWED FOR
SS ☑ FLS ☑ ACS ☑
DATE: 03/14/2022

NOLL & TAM ARCHITECTS
729 Heinz Avenue
Berkeley, CA 94710
tel 510.542.2200
fax 510.542.2201

SEAL

LICENSED ARCHITECT
CHRISTOPHER NOLL
No. C15916
REN. 12-31-23
STATE OF CALIFORNIA

PROJECT TITLE

Peralta Community College District
MERRITT COLLEGE NEW LANDSCAPE HORTICULTURE COMPLEX

12500 Campus Drive
Oakland, CA 94619

BID SET

ISSUE DATE 03/03/2022
N&T JOB NUMBER 22003

REVISIONS

	DATE	DESCRIPTION

DRAWN BY Author | CHECKED BY Checker

SHEET TITLE
ROOF PLAN - EAST BUILDING GROUP

SHEET NUMBER
A2.42

3/3/2022 11:28:12 AM BIM 360://PCCD Merritt Horticulture/Merritt Horticulture_2020.rvt

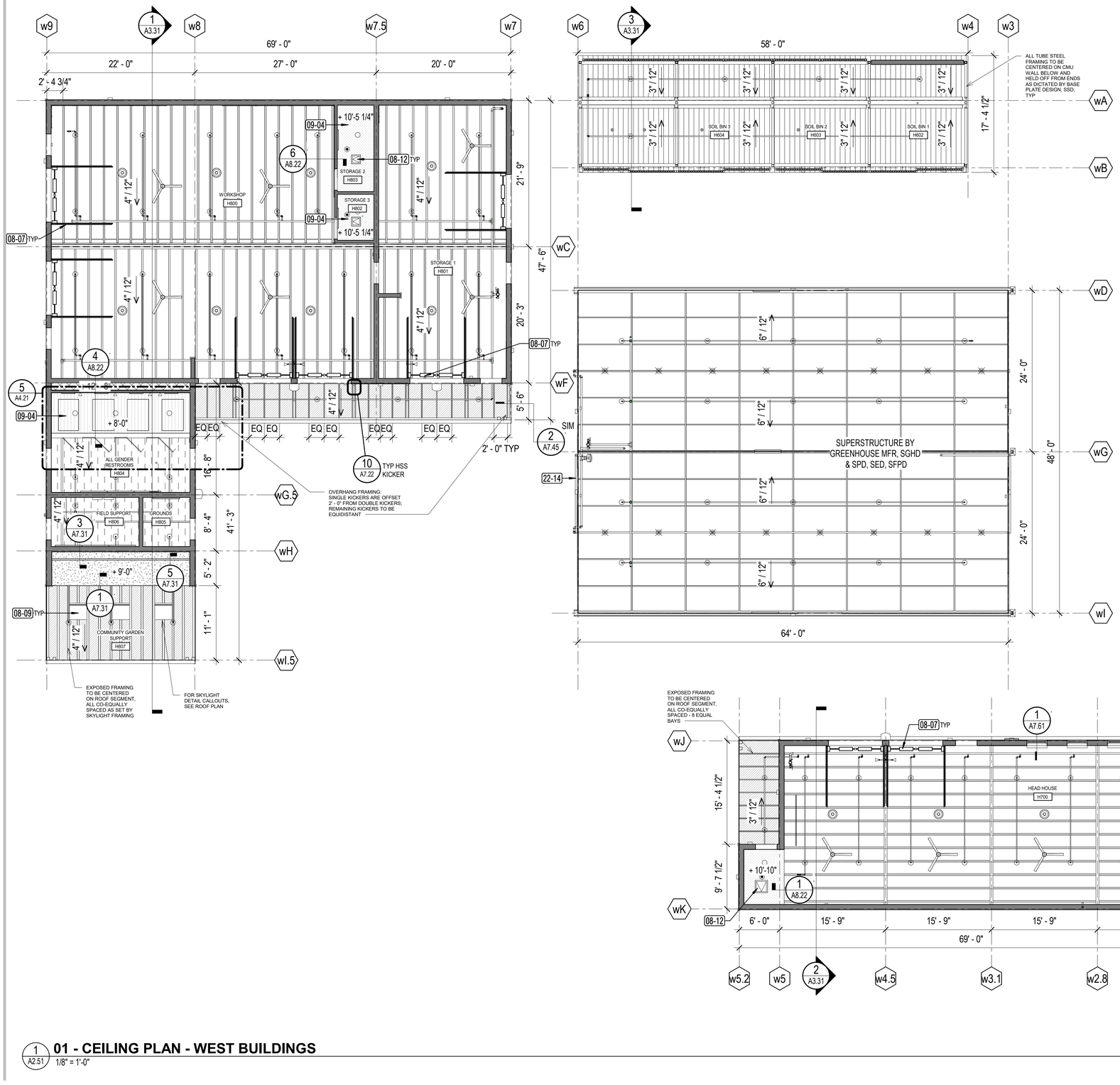

GENERAL NOTES

1. SEE ROOM FINISH SCHEDULE FOR ADDITIONAL INFORMATION.
2. SEE ELECTRICAL DRAWINGS FOR ADDITIONAL INFORMATION.
3. SEE MECHANICAL DRAWINGS FOR ADDITIONAL INFORMATION.
4. WHERE STRUCTURE FRAMING PENETRATES GWB, CUT GWB TIGHT TO STRUCTURE AND SEAL PRIOR TO PAINTING.
5. PAINT ALL EXPOSED ROOF DECKS, ACOUSTICAL CEILING PANELS, FRAMING, PIPES, DUCTS, AND CONDUIT.
6. REFER TO A8.21 AND 8.22 FOR GWB CEILING AND SOFFIT DETAILS AND FRAMING REQUIREMENTS
7. CONDUIT GOES IN KNOCK OUTS, UON.

KEYNOTE LEGEND	
Key Value	**Keynote Text**
08-07	HIGH-LIFT OVERHEAD DOOR TRACKS
08-09	ALUMINUM FRAMED SKYLIGHT, PREFINISHED 36" x 36"
08-12	ACCESS DOOR
09-04	EXPOSED CEILING ABOVE EXTENDS BEYOND LOWER CEILING SHOWN
12-02	MANUAL ROLLER SHADES, 3% OPENNESS
22-14	SANITARY SEWER VENT, SPD

RCP FINISH LEGEND

- EXPOSED TO STRUCTURE W/ ACOUSTIC CEILING TILES @ ROOF SHEATHING BETWEEN JOISTS, PAINT ALL STRUCTURE, TILES, CONDUITS, PIPING, ETC. (SEE DETAIL R1 / A7.41
- STAIN @ EXPOSED DIMENSIONAL WOOD FRAMING WITH FIELD PAINT @ FIBER CEMENT PANEL INFILL (SEE DETAIL R2 / A7.41
- POLYCARBONATE ROOF ASSEMBLY PER GREENHOUSE MFR
- EXPOSED UNDERSIDE OF FRAMED LID
- EXPOSED TO PREFINISHED METAL PANEL ROOF STRUCTURE ABOVE
- FRAMED GYPSUM, (SEE DETAIL 1 / A8.21)
- EXTERIOR POLYASH SOFFIT
- EXTERIOR CEMENT PLASTER SOFFIT
- DIRECT-APPLIED GYPSUM, (SEE DETAIL 4 / A8.21)

APPROVALS

IDENTIFICATION STAMP
DIV. OF THE STATE ARCHITECT
APP: 01-119409 INC:
REVIEWED FOR
SS ☑ FLS ☑ ACS ☑
DATE: 03/14/2022

NOLL & TAM ARCHITECTS
729 Heinz Avenue
Berkeley, CA 94710
tel 510.542.2200
fax 510.542.2201

SEAL

LICENSED ARCHITECT
CHRISTOPHER NOLL
No. C15916
REN. 12-31-23
STATE OF CALIFORNIA

PROJECT TITLE

Peralta Community College District
MERRITT COLLEGE NEW LANDSCAPE HORTICULTURE COMPLEX

12500 Campus Drive
Oakland, CA 94619

BID SET

ISSUE DATE 03/03/2022
N&T JOB NUMBER 22003

REVISIONS

#	DATE	DESCRIPTION

DRAWN BY Author | CHECKED BY Checker

SHEET TITLE
REFLECTED CEILING PLAN - WEST BUILDING GROUP

SHEET NUMBER
A2.51

1 A2.51 **01 - CEILING PLAN - WEST BUILDINGS**
1/8" = 1'-0"

3/3/2022 11:28:19 AM BIM 360://PCCD Merritt Horticulture/Merritt Horticulture_2020.rvt

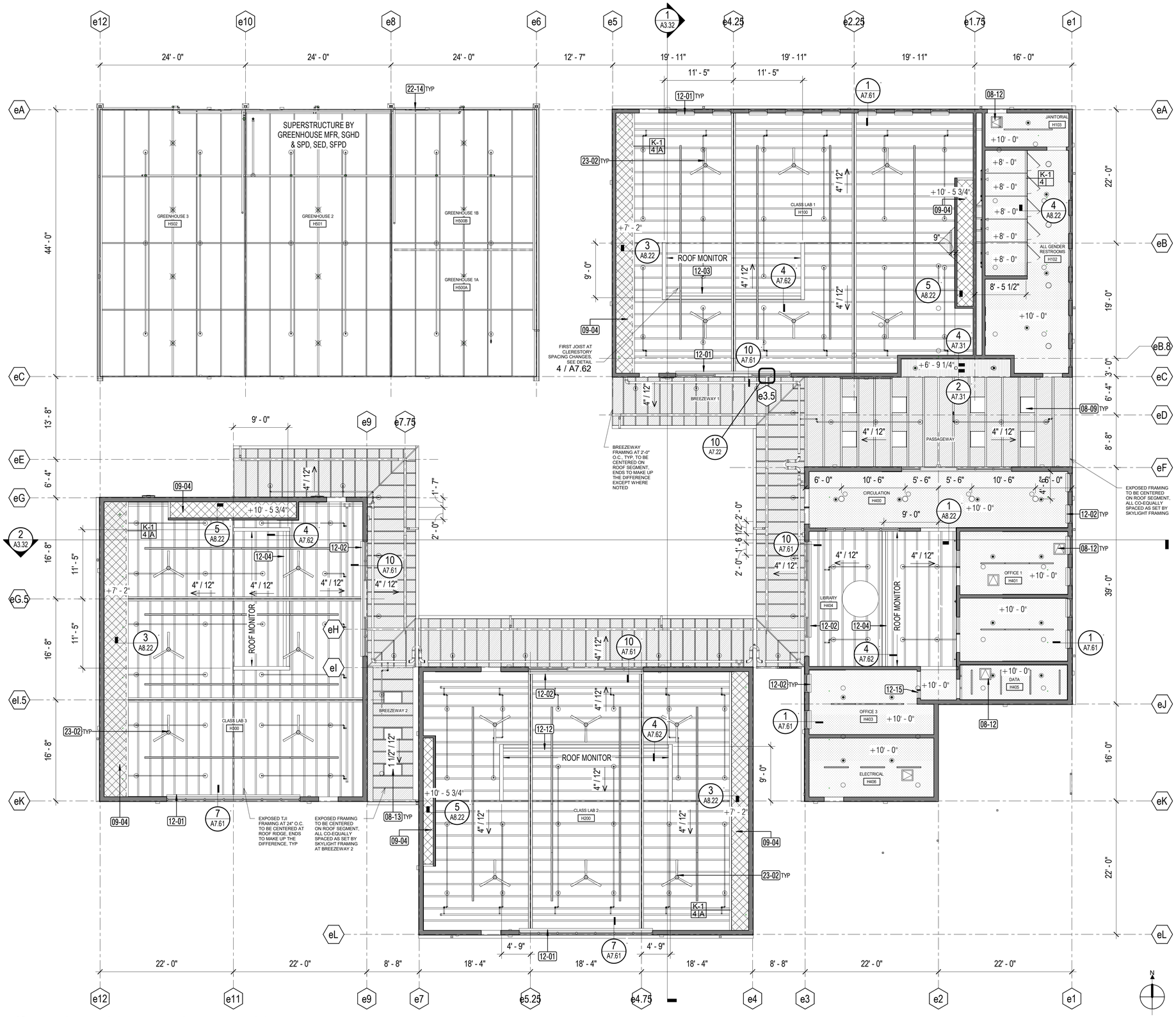

1 A2.52 **01 - CEILING PLAN - EAST BUILDINGS**
1/8" = 1'-0"

3/3/2022 11:28:24 AM BIM 360://PCCD Merritt Horticulture/Merritt Horticulture_2020.rvt

GENERAL NOTES

1. SEE ROOM FINISH SCHEDULE FOR ADDITIONAL INFORMATION.
2. SEE ELECTRICAL DRAWINGS FOR ADDITIONAL INFORMATION.
3. SEE MECHANICAL DRAWINGS FOR ADDITIONAL INFORMATION.
4. WHERE STRUCTURE FRAMING PENETRATES GWB, CUT GWB TIGHT TO STRUCTURE AND SEAL PRIOR TO PAINTING.
5. PAINT ALL EXPOSED ROOF DECKS, ACOUSTICAL CEILING PANELS, FRAMING, PIPES, DUCTS, AND CONDUIT.
6. REFER TO A8.21 AND 8.22 FOR GWB CEILING AND SOFFIT DETAILS AND FRAMING REQUIREMENTS
7. CONDUIT GOES IN KNOCK OUTS, UON.

KEYNOTE LEGEND	
Key Value	**Keynote Text**
08-09	ALUMINUM FRAMED SKYLIGHT, PREFINISHED 36" x 36"
08-12	ACCESS DOOR
08-13	ALUMINUM FRAMED SKYLIGHT, PREFINISHED 24" x 36"
09-04	EXPOSED CEILING ABOVE EXTENDS BEYOND LOWER CEILING SHOWN
12-01	MANUAL ROLLER SHADES, 1% OPENNESS
12-02	MANUAL ROLLER SHADES, 3% OPENNESS
12-03	ELECTRICALLY ACTUATED DOUBLE ROLLER SHADES: 1% & 3% OPENNESS
12-04	ELECTRICALLY ACTUATED ROLLER SHADES, 1% OPENNESS
12-12	ELECTRICALLY ACTUATED ROLLER SHADES, 3% OPENNESS
12-15	HORIZONTAL LOUVER BLINDS
22-14	SANITARY SEWER VENT, SPD
23-02	CEILING FAN, SMD

RCP FINISH LEGEND

- EXPOSED TO STRUCTURE W/ ACOUSTIC CEILING TILES @ ROOF SHEATHING BETWEEN JOISTS, PAINT ALL STRUCTURE, TILES, CONDUITS, PIPING, ETC. (SEE DETAIL R1 / A7.41
- STAIN @ EXPOSED DIMENSIONAL WOOD FRAMING WITH FIELD PAINT @ FIBER CEMENT PANEL INFILL (SEE DETAIL R2 / A7.41
- POLYCARBONATE ROOF ASSEMBLY PER GREENHOUSE MFR
- EXPOSED UNDERSIDE OF FRAMED LID
- EXPOSED TO PREFINISHED METAL PANEL ROOF STRUCTURE ABOVE
- FRAMED GYPSUM, (SEE DETAIL 1 / A8.21)
- EXTERIOR POLYASH SOFFIT
- EXTERIOR CEMENT PLASTER SOFFIT
- DIRECT-APPLIED GYPSUM, (SEE DETAIL 4 / A8.21)

APPROVALS

IDENTIFICATION STAMP
DIV. OF THE STATE ARCHITECT
APP: 01-119409 INC:
REVIEWED FOR
SS ☑ FLS ☑ ACS ☑
DATE: 03/14/2022

NOLL & TAM ARCHITECTS
729 Heinz Avenue
Berkeley, CA 94710
tel 510.542.2200
fax 510.542.2201

SEAL

LICENSED ARCHITECT
CHRISTOPHER NOLL
No. C15916
REN. 12-31-23
STATE OF CALIFORNIA

PROJECT TITLE

Peralta Community College District
MERRITT COLLEGE NEW LANDSCAPE HORTICULTURE COMPLEX

12500 Campus Drive
Oakland, CA 94619

BID SET

ISSUE DATE	03/03/2022
N&T JOB NUMBER	22003

REVISIONS

#	DATE	DESCRIPTION

DRAWN BY **Author** CHECKED BY **Checker**

SHEET TITLE
REFLECTED CEILING PLAN - EAST BUILDING GROUP

SHEET NUMBER
A2.52

DOOR TYPE LEGEND

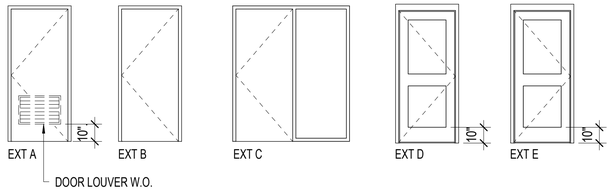

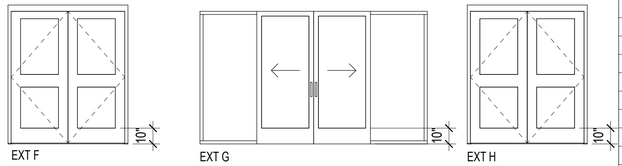

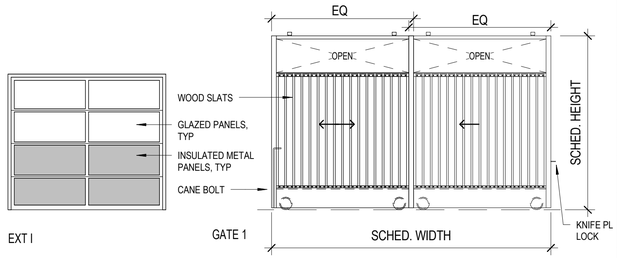

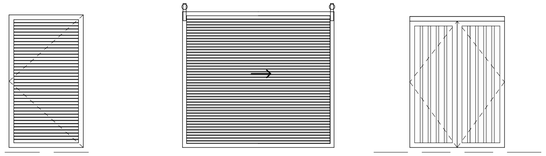

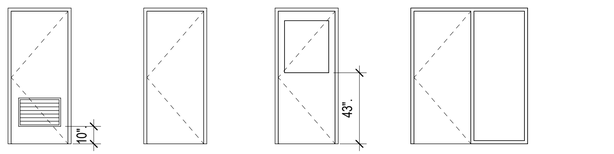

GENERAL NOTES

1. ALL EXIT DOORS SHALL BE OPENABLE FROM THE INSIDE WITHOUT THE USE OF KEY, CARD READER, OR ANY SPECIAL KNOWLEDGE OR EFFORT.
2. HINGED DOORS AND GATES SHALL HAVE AN OPERATING FORCE NO GREATER THAN 5 LBS.
3. DOOR OPERATING HARDWARE SHALL BE MOUNTED AT MIN 34" AFF AND MAX 44" AFF.
4. PROVIDE SMOOTH SURFACE AT BOTTOM 10" OF FACE OF DOOR AT JAMB MOUNTED SWINGING DOORS AND GATES.
5. SEE SPECIFICATIONS FOR HARDWARE SETS.
6. FOR ADDITIONAL FLASHING INFORMATION, SEE A7.71
7. FOR FURTHER INFORMATION ON THRESHOLDS AND EXIT DEVICES AT GLASS DOORS, SEE DETAIL 8 / A8.31

DOOR SCHEDULE

Door Number	Type	Alternates	Hardware	Door Width	Door Height	Door Thickness	Door Material	Door Finish	Frame Material	Frame Finish	Details Head Detail	Details Jamb Detail	Details Sill Detail	Comments
E 001	EXT A		1	3' - 0"	7' - 0"	0' - 1 3/4"	HOLLOW METAL	PTD	HOLLOW METAL	PTD	4 / A7.51	6 / A7.51	2 / A7.51	DOOR LOUVER: 24x12 w/ WUI COMPLIANT MTL SCREEN
E 002	EXT B		5	3' - 0"	7' - 0"	0' - 1 3/4"	FRP		HOLLOW METAL	PTD	4 / A7.51	6 / A7.51	2 / A7.51	EXIT DEVICE
E 003	EXT B		5	3' - 0"	7' - 0"	0' - 1 3/4"	FRP		HOLLOW METAL	PTD	4 / A7.51	6 / A7.51	2 / A7.51	EXIT DEVICE
E 004	EXT B		5	3' - 0"	7' - 0"	0' - 1 3/4"	FRP		HOLLOW METAL	PTD	4 / A7.51	6 / A7.51	2 / A7.51	EXIT DEVICE
E 005	EXT A		1	3' - 0"	7' - 0"	0' - 1 3/4"	HOLLOW METAL	PTD	HOLLOW METAL	PTD	4 / A7.51	6 / A7.51	2 / A7.51	DOOR LOUVER: 24x12 w/ WUI COMPLIANT MTL SCREEN
E 006	EXT B		6	3' - 0"	7' - 0"	0' - 1 3/4"	FRP		HOLLOW METAL	PTD	1 / A7.51	3 / A7.51	2 / A7.51	EXIT DEVICE
E 007	EXT G	SEE A2.71 FOR ALT. #1	17	6' - 0"	7' - 0"		ALUM STOREFRONT		ALUMINUM STOREFRONT		1 / A7.52	SEE MFR DETAIL	2 / A7.52	TEMPERED GLAZING
E 008	EXT A		4	3' - 0"	7' - 0"	0' - 1 3/4"	HOLLOW METAL	PTD	HOLLOW METAL	PTD	1 / A7.51	3 / A7.51	2 / A7.51	DOOR LOUVER: 24x12 w/ WUI COMPLIANT MTL SCREEN
E 009	EXT F		8	6' - 0"	7' - 0"		ALUM STOREFRONT		ALUMINUM STOREFRONT		10 / A7.51	12 / A7.51	11 / A7.51	AUTO DOOR OPERATOR, TEMPERED GLAZING, EXIT DEVICE
E 010	EXT C		3	3' - 0"	7' - 0"	0' - 1 3/4"	FRP		HOLLOW METAL	PTD	1 / A7.51 7 / A7.51	9 / A7.51	2 / A7.51 8 / A7.51	TEMPERED GLAZING, SIDELITE WIDTH: 3'-0"
E 011	EXT G	SEE A2.71 FOR ALT. #1	17	6' - 0"	7' - 0"		ALUM STOREFRONT		ALUMINUM STOREFRONT		1 / A7.52	SEE MFR DETAIL	2 / A7.52	TEMPERED GLAZING
E 012	EXT D	SEE A2.71 FOR ALT. #1	5	3' - 0"	7' - 0"		ALUM STOREFRONT		ALUMINUM STOREFRONT		10 / A7.51	12 / A7.51	11 / A7.51	TEMPERED GLAZING, EXIT DEVICE
E 013	EXT G	SEE A2.71 FOR ALT. #1	17	6' - 0"	7' - 0"		ALUM STOREFRONT		ALUMINUM STOREFRONT		1 / A7.52	SEE MFR DETAIL	2 / A7.52	TEMPERED GLAZING
E 014	EXT B		6	3' - 0"	7' - 0"	0' - 1 3/4"	FRP		HOLLOW METAL	PTD	1 / A7.51	3 / A7.51	2 / A7.51	EXIT DEVICE
E 015	EXT G	SEE A2.71 FOR ALT. #1	17	6' - 0"	7' - 0"		ALUM STOREFRONT		ALUMINUM STOREFRONT		1 / A7.52	SEE MFR DETAIL	2 / A7.52	TEMPERED GLAZING
E 016	EXT B		6	3' - 0"	7' - 0"	0' - 1 3/4"	FRP		HOLLOW METAL	PTD	1 / A7.51	3 / A7.51	2 / A7.51	EXIT DEVICE
E 017	INT D		12	3' - 0"	7' - 0"	0' - 1 3/4"	WOOD	PTD	HOLLOW METAL	PTD	1 / A8.31 4 / A8.31	3 / A8.31 6 / A8.31	2 / A8.31 5 / A8.31	TEMPERED GLAZING, SIDELITE WIDTH: 3'-0"
E 018	INT D		12	3' - 0"	7' - 0"	0' - 1 3/4"	WOOD	PTD	HOLLOW METAL	PTD	1 / A8.31 4 / A8.31	3 / A8.31 6 / A8.31	2 / A8.31 5 / A8.31	TEMPERED GLAZING, SIDELITE WIDTH: 3'-0"
E 019	INT B		14	3' - 0"	7' - 0"	0' - 1 3/4"	FRP		HOLLOW METAL	PTD	1 / A8.31	3 / A8.31	2 / A8.31	TEMPERED GLAZING
E 020	INT D		13	3' - 0"	7' - 0"	0' - 1 3/4"	WOOD	PTD	HOLLOW METAL	PTD	1 / A8.31 4 / A8.31	3 / A8.31 6 / A8.31	2 / A8.31 5 / A8.31	TEMPERED GLAZING, SIDELITE WIDTH: 1'-7"
E 021	INT B		16	3' - 0"	7' - 0"	0' - 1 3/4"	FRP		HOLLOW METAL	PTD	7 / A8.31	9 / A8.31	2 / A8.31	
EG 01	GATE 2		21	3' - 0"	6' - 2"	0' - 3"	METAL GRILL		GALVANIZED STEEL		7 / A7.54	3 / A7.54	6 / A7.54	
EG 02	GATE 2		21	3' - 0"	6' - 2"	0' - 3"	METAL GRILL		GALVANIZED STEEL		7 / A7.54	3 / A7.54	6 / A7.54	
EG 03	GATE 3		22	7' - 9 1/2"	10' - 0"	0' - 3"	WOOD INFILL		GALVANIZED STEEL		10 / A7.54	11 / A7.54	12 / A7.54	
EG 04	GATE 2		21	3' - 0"	6' - 8"	0' - 3"	WOOD INFILL		GALVANIZED STEEL		7 / A7.54	1 / A7.54	8 / A7.54	
GH 01	EXT H		9	6' - 0"	7' - 0"	0' - 1 3/4"	ALUM STOREFRONT		PER GREENHOUSE MFR		6 / A7.52	8 / A7.52	7 / A7.52	TEMPERED GLAZING, EXIT DEVICE
GH 02	EXT E		7A	3' - 0"	7' - 0"	0' - 1 3/4"	ALUM STOREFRONT		PER GREENHOUSE MFR		6 / A7.52	8 / A7.52	7 / A7.52	TEMPERED GLAZING, EXIT DEVICE
GH 03	EXT E		7A	3' - 0"	7' - 0"	0' - 1 3/4"	ALUM STOREFRONT		PER GREENHOUSE MFR		6 / A7.52	8 / A7.52	7 / A7.52	TEMPERED GLAZING, EXIT DEVICE
GH 04	EXT H		9	6' - 0"	7' - 0"	0' - 1 3/4"	ALUM STOREFRONT		PER GREENHOUSE MFR		6 / A7.52	8 / A7.52	7 / A7.52	TEMPERED GLAZING, EXIT DEVICE
GH 05	EXT E		7	3' - 0"	7' - 0"	0' - 1 3/4"	ALUM STOREFRONT		PER GREENHOUSE MFR		6 / A7.52	8 / A7.52	7 / A7.52	TEMPERED GLAZING, EXIT DEVICE
GH 06	EXT E		7	3' - 0"	7' - 0"	0' - 1 3/4"	ALUM STOREFRONT		PER GREENHOUSE MFR		6 / A7.52	8 / A7.52	7 / A7.52	TEMPERED GLAZING, EXIT DEVICE
GH 07	EXT H		9	6' - 0"	7' - 0"	0' - 1 3/4"	ALUM STOREFRONT		PER GREENHOUSE MFR		6 / A7.52	8 / A7.52	7 / A7.52	TEMPERED GLAZING, EXIT DEVICE
GH 08	EXT E		7	3' - 0"	7' - 0"	0' - 1 3/4"	ALUM STOREFRONT		PER GREENHOUSE MFR		6 / A7.52	8 / A7.52	7 / A7.52	TEMPERED GLAZING, EXIT DEVICE
GH 09	EXT E		7	3' - 0"	7' - 0"	0' - 1 3/4"	ALUM STOREFRONT		PER GREENHOUSE MFR		6 / A7.52	8 / A7.52	7 / A7.52	TEMPERED GLAZING, EXIT DEVICE
GH 10	EXT E		7	3' - 0"	7' - 0"	0' - 1 3/4"	ALUM STOREFRONT		PER GREENHOUSE MFR		6 / A7.52	8 / A7.52	7 / A7.52	TEMPERED GLAZING, EXIT DEVICE
GH 11	EXT H		9	6' - 0"	7' - 0"	0' - 1 3/4"	ALUM STOREFRONT		PER GREENHOUSE MFR		6 / A7.52	8 / A7.52	7 / A7.52	TEMPERED GLAZING, EXIT DEVICE
GH 12	EXT E		7A	3' - 0"	7' - 0"	0' - 1 3/4"	ALUM STOREFRONT		PER GREENHOUSE MFR		6 / A7.52	8 / A7.52	7 / A7.52	TEMPERED GLAZING, EXIT DEVICE
GH 13	EXT E		7A	3' - 0"	7' - 0"	0' - 1 3/4"	ALUM STOREFRONT		PER GREENHOUSE MFR		6 / A7.52	8 / A7.52	7 / A7.52	TEMPERED GLAZING, EXIT DEVICE
GH 14	EXT E		7A	3' - 0"	7' - 0"	0' - 1 3/4"	ALUM STOREFRONT		PER GREENHOUSE MFR		6 / A7.52	8 / A7.52	7 / A7.52	TEMPERED GLAZING, EXIT DEVICE
GH 15	EXT H		9	6' - 0"	7' - 0"	0' - 1 3/4"	ALUM STOREFRONT		PER GREENHOUSE MFR		6 / A7.52	8 / A7.52	7 / A7.52	TEMPERED GLAZING, EXIT DEVICE
GH 16	EXT H		9	6' - 0"	7' - 0"	0' - 1 3/4"	ALUM STOREFRONT		PER GREENHOUSE MFR		6 / A7.52	8 / A7.52	7 / A7.52	TEMPERED GLAZING, EXIT DEVICE
W 001	EXT A		1	3' - 0"	7' - 0"	0' - 1 3/4"	HOLLOW METAL	PTD	HOLLOW METAL	PTD	4 / A7.51	6 / A7.51	2 / A7.51	DOOR LOUVER: 24x12 w/ WUI COMPLIANT MTL SCREEN
W 002	EXT I		19	8' - 0"	7' - 0"	0' - 2 1/8"	METAL PANEL W/LITES		HOLLOW METAL	PTD	3 / A7.52	5 / A7.52	4 / A7.52	PUSH BUTTON OPERATOR, TEMPERED GLAZING
W 003	EXT I		19	8' - 0"	7' - 0"	0' - 2 1/8"	METAL PANEL W/LITES		HOLLOW METAL	PTD	3 / A7.52	5 / A7.52	4 / A7.52	PUSH BUTTON OPERATOR, TEMPERED GLAZING
W 004	EXT A		1	3' - 0"	7' - 0"	0' - 1 3/4"	HOLLOW METAL	PTD	HOLLOW METAL	PTD	4 / A7.51	6 / A7.51	2 / A7.51	DOOR LOUVER: 24x12 w/ WUI COMPLIANT MTL SCREEN
W 005	EXT A		4	3' - 0"	7' - 0"	0' - 1 3/4"	HOLLOW METAL	PTD	HOLLOW METAL	PTD	4 / A7.51	6 / A7.51	2 / A7.51	DOOR LOUVER: 24x12 w/ WUI COMPLIANT MTL SCREEN
W 006	EXT A		1	3' - 0"	7' - 0"	0' - 1 3/4"	HOLLOW METAL	PTD	HOLLOW METAL	PTD	4 / A7.51	6 / A7.51	2 / A7.51	DOOR LOUVER: 24x12 w/ WUI COMPLIANT MTL SCREEN
W 007	EXT A		1	3' - 0"	7' - 0"	0' - 1 3/4"	HOLLOW METAL	PTD	HOLLOW METAL	PTD	4 / A7.51	6 / A7.51	2 / A7.51	DOOR LOUVER: 24x12 w/ WUI COMPLIANT MTL SCREEN
W 008	EXT A		4	3' - 0"	7' - 0"	0' - 1 3/4"	HOLLOW METAL	PTD	HOLLOW METAL	PTD	4 / A7.51	6 / A7.51	2 / A7.51	
W 009	EXT A		6	3' - 0"	7' - 0"	0' - 1 3/4"	HOLLOW METAL	PTD	HOLLOW METAL	PTD	1 / A7.51	3 / A7.51	2 / A7.51	EXIT DEVICE
W 010	EXT I		19	8' - 0"	7' - 0"	0' - 2 1/8"	METAL PANEL W/LITES		HOLLOW METAL	PTD	3 / A7.52	5 / A7.52	4 / A7.52	PUSH BUTTON OPERATOR, TEMPERED GLAZING
W 011	EXT I		19	8' - 0"	7' - 0"	0' - 2 1/8"	METAL PANEL W/LITES		HOLLOW METAL	PTD	3 / A7.52	5 / A7.52	4 / A7.52	PUSH BUTTON OPERATOR, TEMPERED GLAZING
W 012	EXT I		19	8' - 0"	7' - 0"	0' - 2 1/8"	METAL PANEL W/LITES		HOLLOW METAL	PTD	3 / A7.52	5 / A7.52	4 / A7.52	PUSH BUTTON OPERATOR, TEMPERED GLAZING
W 013	EXT A		6	3' - 0"	7' - 0"	0' - 1 3/4"	HOLLOW METAL	PTD	HOLLOW METAL	PTD	1 / A7.51	3 / A7.51	2 / A7.51	EXIT DEVICE
W 014	EXT A		1	3' - 0"	7' - 0"	0' - 1 3/4"	HOLLOW METAL	PTD	HOLLOW METAL	PTD	1 / A7.51	3 / A7.51	2 / A7.51	
W 015	EXT I		19	8' - 0"	7' - 0"	0' - 2 1/8"	METAL PANEL W/LITES		HOLLOW METAL	PTD	3 / A7.52	5 / A7.52	4 / A7.52	PUSH BUTTON OPERATOR, TEMPERED GLAZING
W 016	EXT A		1	3' - 0"	7' - 0"	0' - 1 3/4"	HOLLOW METAL	PTD	HOLLOW METAL	PTD	4 / A7.51	6 / A7.51	2 / A7.51	
W 017	EXT I		19	8' - 0"	7' - 0"	0' - 2 1/8"	METAL PANEL W/LITES		HOLLOW METAL	PTD	3 / A7.52	5 / A7.52	4 / A7.52	PUSH BUTTON OPERATOR, TEMPERED GLAZING
W 018	EXT I		19	8' - 0"	7' - 0"	0' - 2 1/8"	METAL PANEL W/LITES		HOLLOW METAL	PTD	3 / A7.52	5 / A7.52	4 / A7.52	PUSH BUTTON OPERATOR, TEMPERED GLAZING
W 019	EXT A		6	3' - 0"	7' - 0"	0' - 1 3/4"	HOLLOW METAL	PTD	HOLLOW METAL	PTD	1 / A7.51	3 / A7.51	2 / A7.51	EXIT DEVICE
W 020	INT A		15	3' - 0"	7' - 0"	0' - 1 3/4"	HOLLOW METAL	PTD	HOLLOW METAL	PTD	1 / A8.31	3 / A8.31	2 / A8.31	
W 021	INT C		14	3' - 0"	7' - 0"	0' - 1 3/4"	HOLLOW METAL	PTD	HOLLOW METAL	PTD	1 / A8.31	3 / A8.31	2 / A8.31	
W 022	INT A		14	3' - 0"	7' - 0"	0' - 1 3/4"	HOLLOW METAL	PTD	HOLLOW METAL	PTD	1 / A8.31	3 / A8.31	2 / A8.31	
W 023	EXT A		1	3' - 0"	7' - 0"	0' - 1 3/4"	HOLLOW METAL	PTD	HOLLOW METAL	PTD	5 / A7.51	11 / A7.52	2 / A7.51	
WG 01	GATE 1		23	16' - 0"	9' - 0"	0' - 3"	WOOD INFILL		GALVANIZED STEEL		1 / A7.53	10 / A7.53 & 6 / A7.53 & 14 / A7.53	3 / A7.53	
WG 02	GATE 1		23	14' - 0"	9' - 9"	0' - 3"	WOOD INFILL		GALVANIZED STEEL		1 / A7.53	10 / A7.53 & 6 / A7.53 & 14 / A7.53	3 / A7.53	
WG 03	GATE 1		23	14' - 0"	9' - 9"	0' - 3"	WOOD INFILL		GALVANIZED STEEL		1 / A7.53	10 / A7.53 & 6 / A7.53 & 14 / A7.53	3 / A7.53	
WG 04	GATE 1		23	14' - 0"	9' - 9"	0' - 3"	WOOD INFILL		GALVANIZED STEEL		1 / A7.53	10 / A7.53 & 6 / A7.53 & 14 / A7.53	3 / A7.53	
WG 05	GATE 1		23	14' - 0"	9' - 9"	0' - 3"	WOOD INFILL		GALVANIZED STEEL		1 / A7.53	10 / A7.53 & 6 / A7.53 & 14 / A7.53	3 / A7.53	
WG 06	GATE 4		20	5' - 0"	6' - 8"	0' - 3"	WOOD INFILL		GALVANIZED STEEL		7 / A7.54	2 / A7.54	9 / A7.54	

APPROVALS

IDENTIFICATION STAMP
DIV. OF THE STATE ARCHITECT
APP: 01-119409 INC:
REVIEWED FOR
SS ☑ FLS ☑ ACS ☑
DATE: 03/14/2022

NOLL & TAM ARCHITECTS
729 Heinz Avenue
Berkeley, CA 94710
tel 510.542.2200
fax 510.542.2201

SEAL

LICENSED ARCHITECT
CHRISTOPHER NOLL
No. C15916
REN. 12-31-23
STATE OF CALIFORNIA

PROJECT TITLE

Peralta Community College District
MERRITT COLLEGE NEW LANDSCAPE HORTICULTURE COMPLEX

12500 Campus Drive
Oakland, CA 94619

BID SET

ISSUE DATE 03/03/2022
N&T JOB NUMBER 22003

REVISIONS

	DATE	DESCRIPTION

DRAWN BY Author CHECKED BY Checker

SHEET TITLE
DOOR SCHEDULE AND TYPES

SHEET NUMBER
A2.61

3/3/2022 11:28:28 AM BIM 360://PCCD Merritt Horticulture/Merritt Horticulture_2020.rvt

WINDOW SCHEDULE

WINDOW NUMBER	TYPE	Width	Height	Glazing	Frame Material	Head Detail	Jamb Detail	Sill Detail	SHADES	Comments
E 001	Standard A	3' - 0"	4' - 0"	DOUBLE GLAZED, LOW-E	KYNAR COATED ALUMINUM	1 / A7.61	3 / A7.61	2 / A7.61	MANUAL	
E 002	Standard A	3' - 0"	4' - 0"	DOUBLE GLAZED, LOW-E	KYNAR COATED ALUMINUM	1 / A7.61	3 / A7.61	2 / A7.61	MANUAL	
E 003	Standard A	3' - 0"	4' - 0"	DOUBLE GLAZED, LOW-E	KYNAR COATED ALUMINUM	1 / A7.61	3 / A7.61	2 / A7.61	MANUAL	
E 004	Standard A	3' - 0"	4' - 0"	DOUBLE GLAZED, LOW-E	KYNAR COATED ALUMINUM	1 / A7.61	3 / A7.61	2 / A7.61	MANUAL	
E 005	Standard A	3' - 0"	4' - 0"	DOUBLE GLAZED, LOW-E	KYNAR COATED ALUMINUM	1 / A7.61	3 / A7.61	2 / A7.61	MANUAL	
E 006	Standard A	3' - 0"	4' - 0"	DOUBLE GLAZED, LOW-E	KYNAR COATED ALUMINUM	1 / A7.61	3 / A7.61	2 / A7.61	MANUAL	
E 007	Standard A	3' - 0"	4' - 0"	DOUBLE GLAZED, LOW-E	KYNAR COATED ALUMINUM	1 / A7.61	3 / A7.61	2 / A7.61	MANUAL	
E 008	Standard A	3' - 0"	4' - 0"	DOUBLE GLAZED, LOW-E	KYNAR COATED ALUMINUM	1 / A7.61	3 / A7.61	2 / A7.61	MANUAL	LIMITERS, SEE 3 / A7.62
E 009	East E	22' - 2"	3' - 8"	DOUBLE GLAZED, LOW-E	KYNAR COATED ALUMINUM	4 / A7.62	6 / A7.62	5 / A7.62	MOTORIZED	
E 010	Standard A	3' - 0"	4' - 0"	INSULATING GLASS - OBSCURE	KYNAR COATED ALUMINUM	4 / A7.61	6 / A7.61	5 / A7.61	MANUAL	
E 011	Standard A	3' - 0"	4' - 0"	INSULATING GLASS - OBSCURE	KYNAR COATED ALUMINUM	4 / A7.61	6 / A7.61	5 / A7.61	MANUAL	
E 012	Standard A	3' - 0"	4' - 0"	INSULATING GLASS - OBSCURE	KYNAR COATED ALUMINUM	4 / A7.61	6 / A7.61	5 / A7.61	MANUAL	
E 013	Standard A	3' - 0"	4' - 0"	INSULATING GLASS - OBSCURE	KYNAR COATED ALUMINUM	4 / A7.61	6 / A7.61	5 / A7.61	MANUAL	
E 014	Standard A	3' - 0"	4' - 0"	INSULATING GLASS - OBSCURE	KYNAR COATED ALUMINUM	4 / A7.61	6 / A7.61	5 / A7.61	MANUAL	
E 015	Standard A	3' - 0"	4' - 0"	INSULATING GLASS - OBSCURE	KYNAR COATED ALUMINUM	4 / A7.61	6 / A7.61	5 / A7.61	MANUAL	
E 016	East B	18' - 2"	7' - 2"	DOUBLE GLAZED, LOW-E	KYNAR COATED ALUMINUM	10 / A7.61	12 / A7.61	8 / A7.61		
E 017	Standard A	3' - 0"	4' - 0"	DOUBLE GLAZED, LOW-E	KYNAR COATED ALUMINUM	1 / A7.61	3 / A7.61	2 / A7.61	MANUAL	LIMITERS, SEE 3 / A7.62
E 018	Standard A	3' - 0"	4' - 0"	DOUBLE GLAZED, LOW-E	KYNAR COATED ALUMINUM	1 / A7.61	3 / A7.61	2 / A7.61	MANUAL	LIMITERS, SEE 3 / A7.62
E 019	Standard A	3' - 0"	4' - 0"	DOUBLE GLAZED, LOW-E	KYNAR COATED ALUMINUM	1 / A7.61	3 / A7.61	2 / A7.61	MANUAL	
E 020	Standard A	3' - 0"	4' - 0"	DOUBLE GLAZED, LOW-E	KYNAR COATED ALUMINUM	1 / A7.61	3 / A7.61	2 / A7.61	MANUAL	
E 021	Standard A	3' - 0"	4' - 0"	DOUBLE GLAZED, LOW-E	KYNAR COATED ALUMINUM	1 / A7.61	3 / A7.61	2 / A7.61	MANUAL	
E 022	Standard A	3' - 0"	4' - 0"	DOUBLE GLAZED, LOW-E	KYNAR COATED ALUMINUM	1 / A7.61	3 / A7.61	2 / A7.61	MANUAL	
E 023	Standard A	3' - 0"	4' - 0"	DOUBLE GLAZED, LOW-E	KYNAR COATED ALUMINUM	1 / A7.61	3 / A7.61	2 / A7.61	MANUAL	
E 024	Standard A	3' - 0"	4' - 0"	DOUBLE GLAZED, LOW-E	KYNAR COATED ALUMINUM	1 / A7.61	3 / A7.61	2 / A7.61	MANUAL	
E 025	East E	22' - 2"	3' - 8"	DOUBLE GLAZED, LOW-E	KYNAR COATED ALUMINUM	4 / A7.62	6 / A7.62	5 / A7.62	MOTORIZED	

WINDOW SCHEDULE

WINDOW NUMBER	TYPE	Width	Height	Glazing	Frame Material	Head Detail	Jamb Detail	Sill Detail	SHADES	Comments
E 026	East A	22' - 0"	7' - 2"	DOUBLE GLAZED, LOW-E	KYNAR COATED ALUMINUM	7 / A7.61	9 / A7.61	8 / A7.61	MANUAL	
E 027	East F	27' - 2"	3' - 8"	DOUBLE GLAZED, LOW-E	KYNAR COATED ALUMINUM	4 / A7.62	6 / A7.62	5 / A7.62		
E 028	East A	22' - 0"	7' - 2"	DOUBLE GLAZED, LOW-E	KYNAR COATED ALUMINUM	7 / A7.61	9 / A7.61	8 / A7.61	MANUAL	
E 029	East E	22' - 2"	3' - 8"	DOUBLE GLAZED, LOW-E	KYNAR COATED ALUMINUM	4 / A7.62	6 / A7.62	5 / A7.62	MOTORIZED	
E 030	Int A	12' - 2"	4' - 0"	MONOLITHIC INTERIOR VISION GLAZING	KYNAR COATED ALUMINUM	10 / A8.31	11 / A8.31	12 / A8.31		INTERIOR
E 031	East C	19' - 0"	7' - 2"	DOUBLE GLAZED, LOW-E	KYNAR COATED ALUMINUM	10 / A7.61	12 / A7.61	8 / A7.61	MANUAL	
E 032	East D	19' - 0"	7' - 2"	DOUBLE GLAZED, LOW-E	KYNAR COATED ALUMINUM	10 / A7.61	12 / A7.61	8 / A7.61	MANUAL	
E 033	East C	19' - 0"	7' - 2"	DOUBLE GLAZED, LOW-E	KYNAR COATED ALUMINUM	10 / A7.61	12 / A7.61	8 / A7.61	MANUAL	
E 034	East C	19' - 0"	7' - 2"	DOUBLE GLAZED, LOW-E	KYNAR COATED ALUMINUM	10 / A7.61	12 / A7.61	8 / A7.61	MANUAL	
W 001	West A	16' - 10"	4' - 3"	DOUBLE GLAZED, LOW-E	KYNAR COATED ALUMINUM	8 / A7.62	7 / A7.62	9 / A7.62		
W 002	West A	16' - 10"	4' - 3"	DOUBLE GLAZED, LOW-E	KYNAR COATED ALUMINUM	8 / A7.62	7 / A7.62	9 / A7.62		
W 003	West A	16' - 10"	4' - 3"	DOUBLE GLAZED, LOW-E	KYNAR COATED ALUMINUM	8 / A7.62	7 / A7.62	9 / A7.62		
W 004	West B	16' - 10"	3' - 4"	DOUBLE GLAZED, LOW-E	KYNAR COATED ALUMINUM	8 / A7.62	7 / A7.62	9 / A7.62		
W 005	West B	16' - 10"	3' - 4"	DOUBLE GLAZED, LOW-E	KYNAR COATED ALUMINUM	8 / A7.62	7 / A7.62	9 / A7.62		
W 006	West B	16' - 10"	3' - 4"	DOUBLE GLAZED, LOW-E	KYNAR COATED ALUMINUM	8 / A7.62	7 / A7.62	9 / A7.62		
W 007	West B	16' - 10"	3' - 4"	DOUBLE GLAZED, LOW-E	KYNAR COATED ALUMINUM	8 / A7.62	7 / A7.62	9 / A7.62		
W 009	Standard A	3' - 0"	4' - 0"	DOUBLE GLAZED, LOW-E	KYNAR COATED ALUMINUM	1 / A7.61	3 / A7.61	2 / A7.61	MANUAL	
W 010	Standard A	3' - 0"	4' - 0"	DOUBLE GLAZED, LOW-E	KYNAR COATED ALUMINUM	1 / A7.61	3 / A7.61	2 / A7.61	MANUAL	
W 011	Standard A	3' - 0"	4' - 0"	DOUBLE GLAZED, LOW-E	KYNAR COATED ALUMINUM	1 / A7.61	3 / A7.61	2 / A7.61	MANUAL	
W 012	Standard A	3' - 0"	4' - 0"	DOUBLE GLAZED, LOW-E	KYNAR COATED ALUMINUM	1 / A7.61	3 / A7.61	2 / A7.61	MANUAL	
W 013	West C	10' - 0 1/2"	4' - 3"	DOUBLE GLAZED, LOW-E	KYNAR COATED ALUMINUM	1 / A7.61	3 / A7.61	2 / A7.61		
W 014	West C	10' - 0"	4' - 3"	DOUBLE GLAZED, LOW-E	KYNAR COATED ALUMINUM	1 / A7.61	3 / A7.61	2 / A7.61		
W 015	West C	10' - 0"	4' - 3"	DOUBLE GLAZED, LOW-E	KYNAR COATED ALUMINUM	1 / A7.61	3 / A7.61	2 / A7.61		
W 016	West C	10' - 0"	4' - 3"	DOUBLE GLAZED, LOW-E	KYNAR COATED ALUMINUM	1 / A7.61	3 / A7.61	2 / A7.61		

GENERAL NOTES

1. ALL GLASS TO BE TEMPERED.
2. ALL OPENINGS TO BE FIELD VERIFIED BY CONTRACTOR PRIOR TO FABRICATION.
3. OPENING DIMENSIONS ARE TO DIMENSION POINTS INDICATED ON PLANS AND INDICATE "NET DIMENSION" AS DEFINED BY SPECIFIED MFR.
4. FOR ADDITIONAL FLASHING INFORMATION, SEE A7.71.

KEYNOTE LEGEND	
Key Value	**Keynote Text**
08-01	ALUMINUM FRAMED STOREFRONT WINDOWS, PREFINISHED
08-02	OPERABLE WINDOW PANEL
09-03	WALL FINISH EXTENDS TO TOP OF WALL BEYOND EAVE

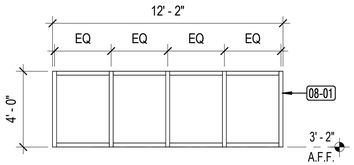

2 A2.71 **WINDOW TYPE Int A**
1/4" = 1'-0"

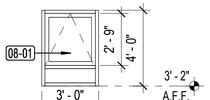

1 A2.71 **WINDOW TYPE Standard A**
1/4" = 1'-0"

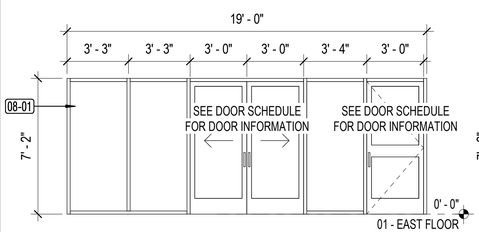

10 A2.71 **WINDOW TYPE East D**
1/4" = 1'-0"

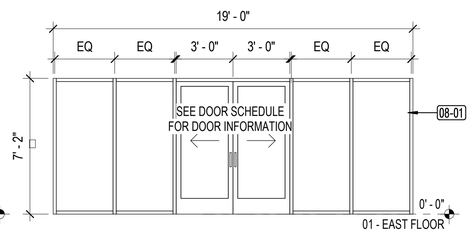

9 A2.71 **WINDOW TYPE East C**
1/4" = 1'-0"

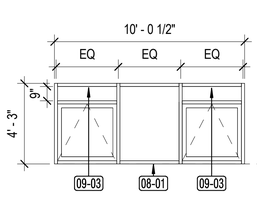

5 A2.71 **WINDOW TYPE West C**
1/4" = 1'-0"

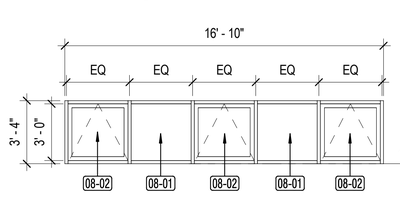

4 A2.71 **WINDOW TYPE West B**
1/4" = 1'-0"

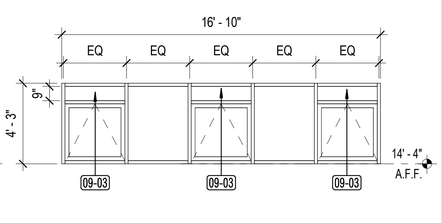

3 A2.71 **WINDOW TYPE West A**
1/4" = 1'-0"

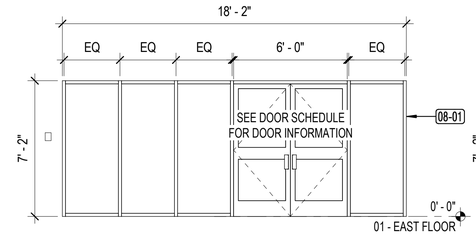

8 A2.71 **WINDOW TYPE East B**
1/4" = 1'-0"

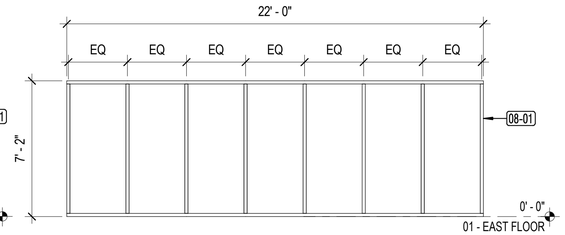

7 A2.71 **WINDOW TYPE East A**
1/4" = 1'-0"

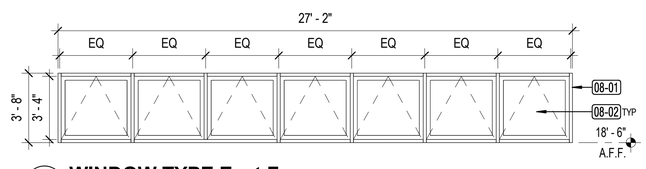

12 A2.71 **WINDOW TYPE East F**
1/4" = 1'-0"

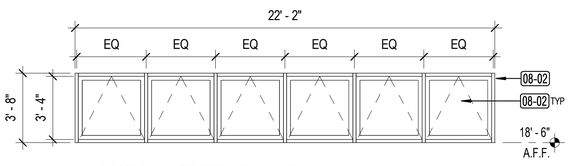

11 A2.71 **WINDOW TYPE East E**
1/4" = 1'-0"

APPROVALS

IDENTIFICATION STAMP
DIV. OF THE STATE ARCHITECT
APP: 01-119409 INC:
REVIEWED FOR
SS ☑ FLS ☑ ACS ☑
DATE: 03/14/2022

NOLL & TAM ARCHITECTS
729 Heinz Avenue
Berkeley, CA 94710
tel 510.542.2200
fax 510.542.2201

SEAL

LICENSED ARCHITECT
CHRISTOPHER NOLL
No. C15916
REN. 12-31-23
STATE OF CALIFORNIA

PROJECT TITLE

Peralta Community College District
MERRITT COLLEGE NEW LANDSCAPE HORTICULTURE COMPLEX

12500 Campus Drive
Oakland, CA 94619

BID SET

ISSUE DATE	03/03/2022
N&T JOB NUMBER	22003

REVISIONS

#	DATE	DESCRIPTION

DRAWN BY **Author** | CHECKED BY **Checker**

SHEET TITLE
WINDOW SCHEDULE & TYPES

SHEET NUMBER
A2.71

3/3/2022 11:28:33 AM BIM 360://PCCD Merritt Horticulture/Merritt Horticulture_2020.rvt

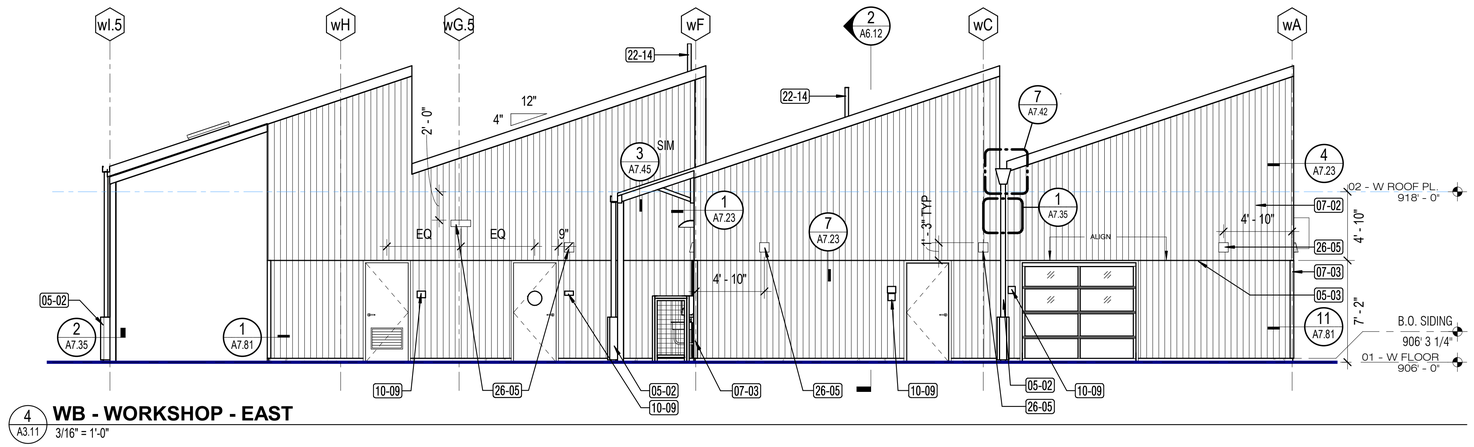

4 A3.11 **WB - WORKSHOP - EAST**
3/16" = 1'-0"

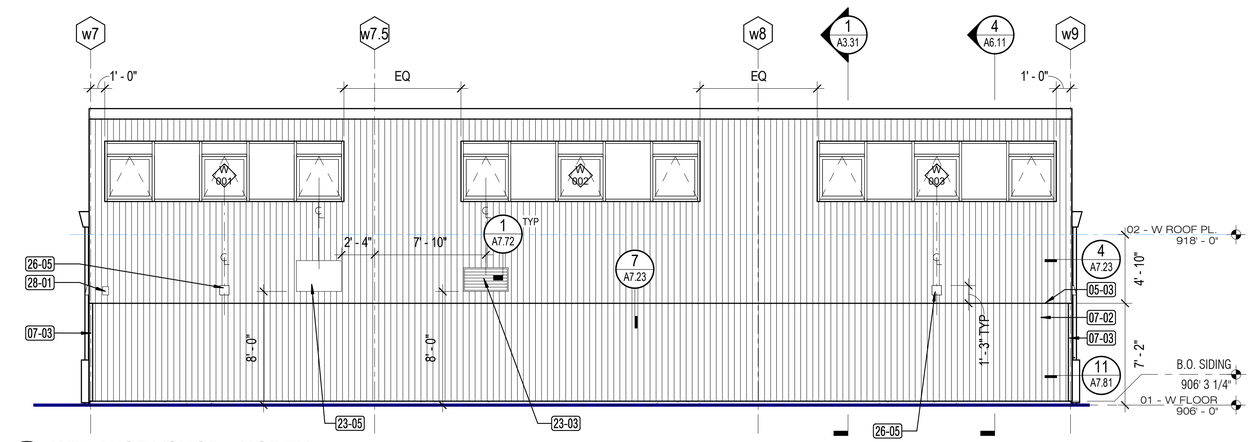

5 A3.11 **WB - WORKSHOP - NORTH**
3/16" = 1'-0"

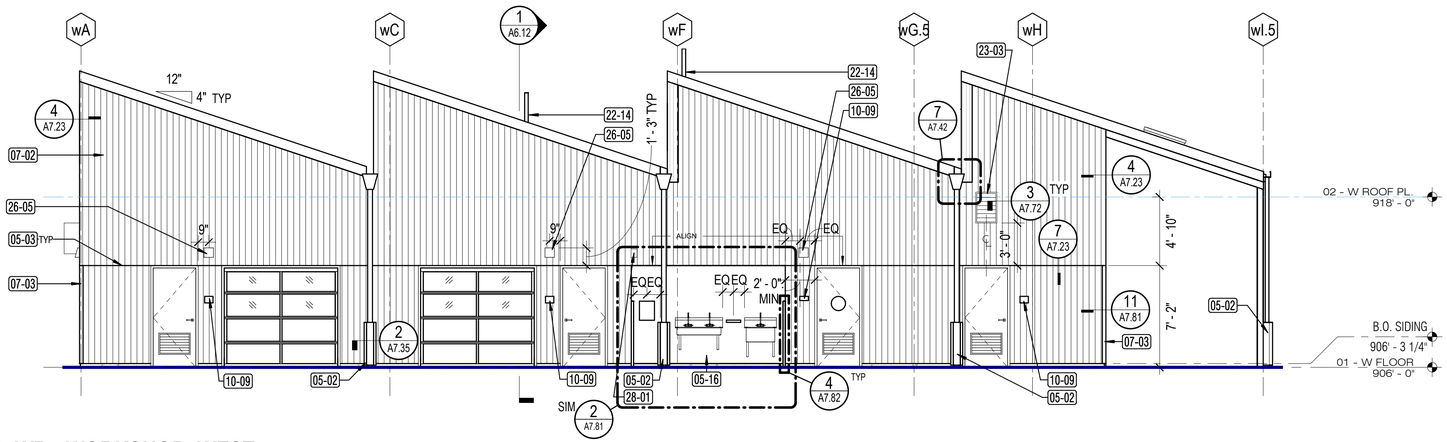

6 A3.11 **WB - WORKSHOP- WEST**
3/16" = 1'-0"

GENERAL NOTES

1. FOR WINDOW SCHEDULE AND TYPES, REFER TO SHEET A2.71
2. FOR WALL ASSEMBLY BASE DETAILS REFER TO SHEET A7.22
3. ALL STRUCTURAL AND NON-STRUCTURAL STEEL, EXPOSED AND CONCEALED, INCLUDING PLATES, CONNECTIONS, ETC. TO RECEIVE HIGH PERFORMANCE COATING, UON
4. EXPOSED STEEL COLUMNS TO BE WRAPPED IN SHOP PRIOR TO SHIPPING
5. FOR RULES FOR POLYASH SIDING ALIGNMENTS, SEE DETAIL 2 / A3.21

KEYNOTE LEGEND	
Key Value	**Keynote Text**
05-02	PREFINISHED STL RAINWATER LEADER GUARD
05-03	CONTROL JOINT, POLYASH
05-16	GALVANIZED STEEL WALL COVERING
07-02	POLYASH SIDING
07-03	GALVANIZED STEEL CORNER OR WALL END GUARD
10-09	SIGN, SWD
22-14	SANITARY SEWER VENT, SPD
23-03	EXTERIOR LOUVER, SMD
23-05	WALL-MOUNTED HVAC UNIT, SMD
26-05	LIGHT FIXTURE, SED; CENTER ON POLYASH SEAM WO, UON
28-01	FIRE ALARM SPEAKER, SFAD

APPROVALS

IDENTIFICATION STAMP
DIV. OF THE STATE ARCHITECT
APP: 01-119409 INC:
REVIEWED FOR
SS ☑ FLS ☑ ACS ☑
DATE: 03/14/2022

NOLL & TAM ARCHITECTS
729 Heinz Avenue
Berkeley, CA 94710
tel 510.542.2200
fax 510.542.2201

SEAL

LICENSED ARCHITECT
CHRISTOPHER NOLL
No. C15916
REN. 12-31-23
STATE OF CALIFORNIA

PROJECT TITLE

Peralta Community College District
MERRITT COLLEGE NEW LANDSCAPE HORTICULTURE COMPLEX

12500 Campus Drive
Oakland, CA 94619

BID SET

ISSUE DATE **03/03/2022**
N&T JOB NUMBER **22003**

REVISIONS

	DATE	DESCRIPTION

DRAWN BY **Author** CHECKED BY **Checker**

SHEET TITLE
EXTERIOR ELEVATIONS - WEST BUILDING GROUP

SHEET NUMBER
A3.11

3/3/2022 11:28:37 AM BIM 360://PCCD Merritt Horticulture/Merritt Horticulture_2020.rvt

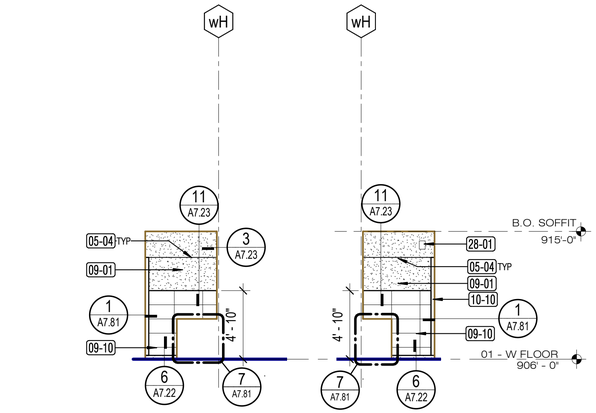

13 A3.12 **GARDEN SUPPORT - WEST**
3/16" = 1'-0"

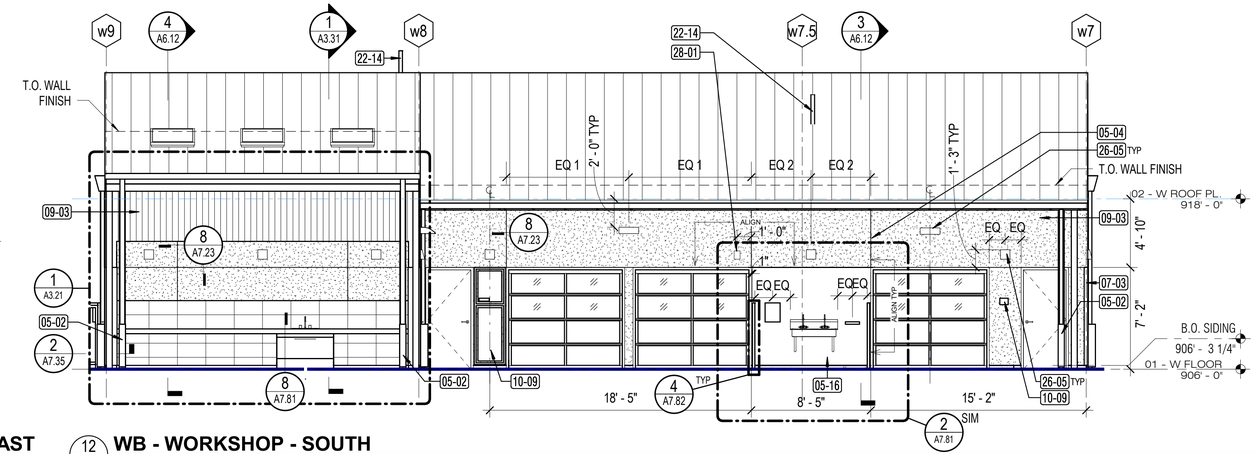

12 A3.12 **WB - WORKSHOP - SOUTH**
3/16" = 1'-0"

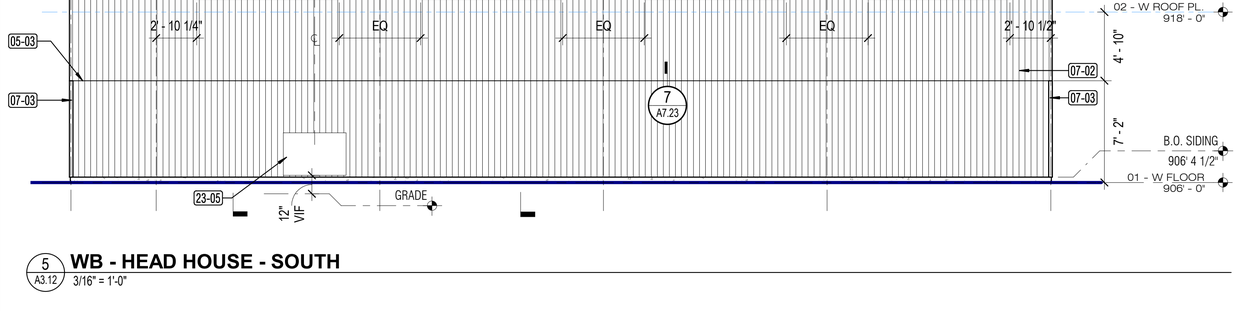

2 A3.12 **WB - HEAD HOUSE - NORTH**
3/16" = 1'-0"

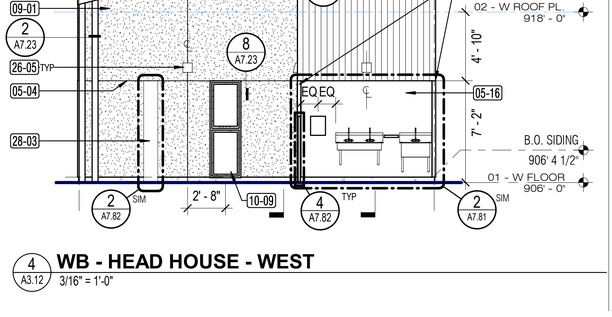

1 A3.12 **WB - HEAD HOUSE - EAST**
3/16" = 1'-0"

5 A3.12 **WB - HEAD HOUSE - SOUTH**
3/16" = 1'-0"

4 A3.12 **WB - HEAD HOUSE - WEST**
3/16" = 1'-0"

GENERAL NOTES

1. FOR WINDOW SCHEDULE AND TYPES, REFER TO SHEET A2.71
2. FOR WALL ASSEMBLY BASE DETAILS REFER TO SHEET A7.22
3. ALL STRUCTURAL AND NON-STRUCTURAL STEEL, EXPOSED AND CONCEALED, INCLUDING PLATES, CONNECTIONS, ETC. TO RECEIVE HIGH PERFORMANCE COATING, UON
4. EXPOSED STEEL COLUMNS TO BE WRAPPED IN SHOP PRIOR TO SHIPPING
5. FOR RULES FOR POLYASH SIDING ALIGNMENTS, SEE DETAIL 2 / A3.21

KEYNOTE LEGEND

Key Value	Keynote Text
05-02	PREFINISHED STL RAINWATER LEADER GUARD
05-03	CONTROL JOINT, POLYASH
05-04	CONTROL JOINT, CEMENT PLASTER
05-16	GALVANIZED STEEL WALL COVERING
06-19	50 GAL PLASTIC RAINWATER BARREL OFCI. SECURE TO WALL WITH (2) 3" WIDE 16 GAUGE GSM BELLY STRAPS LOCATED TOP AND BOTTOM OF TANK. SECURE TO TYPE 3 BACKING W/ (2) 3/8" DIA X 4" GALV LB
07-02	POLYASH SIDING
07-03	GALVANIZED STEEL CORNER OR WALL END GUARD
07-05	GSM DOWNSPOUT, PREFINISHED
09-01	CEMENT PLASTER EXTERIOR WALL FINISH
09-03	WALL FINISH EXTENDS TO TOP OF WALL BEYOND EAVE
09-10	EXTERIOR PORCELAIN TILE
10-09	SIGN, SWD
10-10	CORK TACKABLE PANEL
22-14	SANITARY SEWER VENT, SPD
23-03	EXTERIOR LOUVER, SMD
23-05	WALL-MOUNTED HVAC UNIT, SMD
26-05	LIGHT FIXTURE, SED; CENTER ON POLYASH SEAM WO, UON
28-01	FIRE ALARM SPEAKER, SFAD
28-02	FIRE ALARM MONITOR MODULE, SFAD
28-03	EMERGENCY TELEPHONE, OFOI

APPROVALS

IDENTIFICATION STAMP
DIV. OF THE STATE ARCHITECT
APP: 01-119409 INC:
REVIEWED FOR
SS ☑ FLS ☑ ACS ☑
DATE: 03/14/2022

NOLL & TAM ARCHITECTS
729 Heinz Avenue
Berkeley, CA 94710
tel 510.542.2200
fax 510.542.2201

SEAL

LICENSED ARCHITECT
CHRISTOPHER NOLL
No. C15916
REN. 12-31-23
STATE OF CALIFORNIA

PROJECT TITLE

Peralta Community College District
MERRITT COLLEGE NEW LANDSCAPE HORTICULTURE COMPLEX

12500 Campus Drive
Oakland, CA 94619

BID SET

ISSUE DATE 03/03/2022
N&T JOB NUMBER 22003

REVISIONS

#	DATE	DESCRIPTION

DRAWN BY Author | CHECKED BY Checker

SHEET TITLE
EXTERIOR ELEVATIONS - WEST BUILDING GROUP

SHEET NUMBER
A3.12

3/3/2022 11:28:41 AM BIM 360://PCCD Merritt Horticulture/Merritt Horticulture_2020.rvt

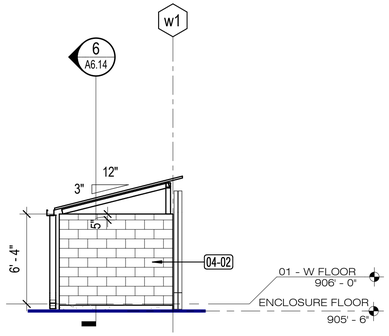

3 A3.13 **WB - TRASH ENCLOSURE - SOUTH (NORTH SIM.)**
3/16" = 1'-0"

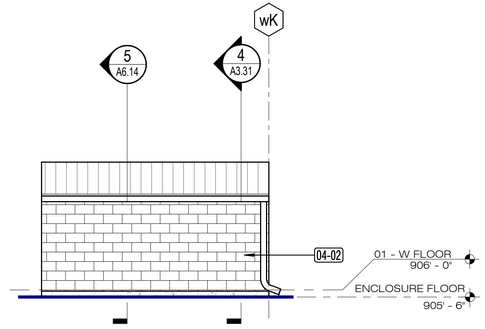

2 A3.13 **WB - TRASH ENCLOSURE - WEST**
3/16" = 1'-0"

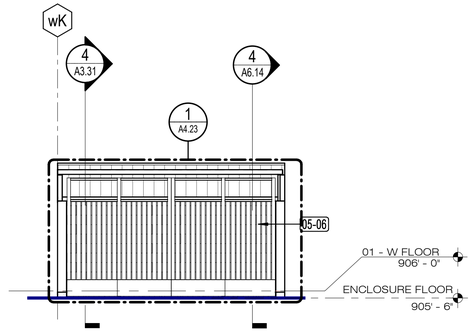

1 A3.13 **WB - TRASH ENCLOSURE - EAST**
3/16" = 1'-0"

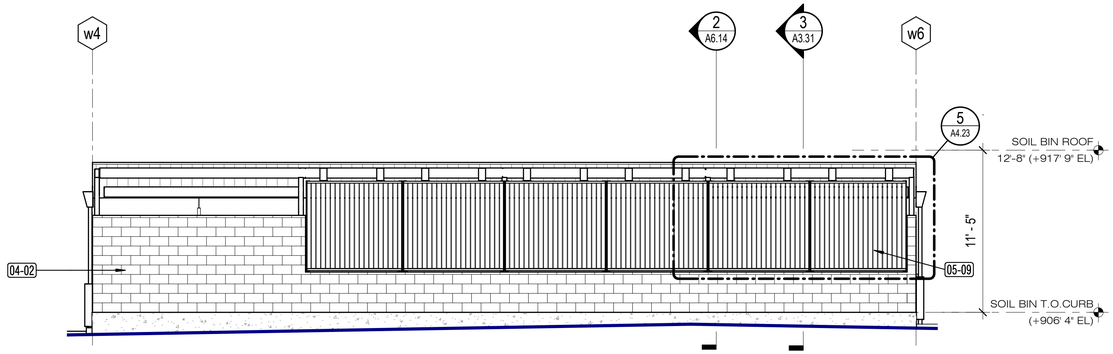

5 A3.13 **WB - SOIL BINS - NORTH**
3/16" = 1'-0"

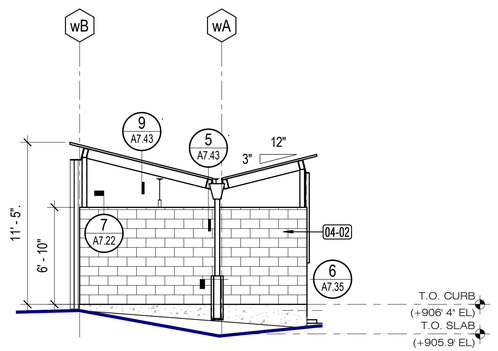

4 A3.13 **WB - SOIL BINS - EAST**
3/16" = 1'-0"

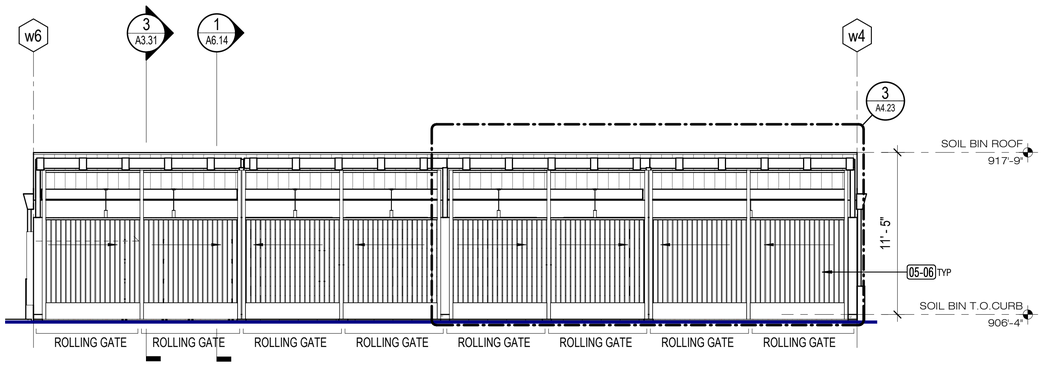

7 A3.13 **WB - SOILS BINS - SOUTH**
3/16" = 1'-0"

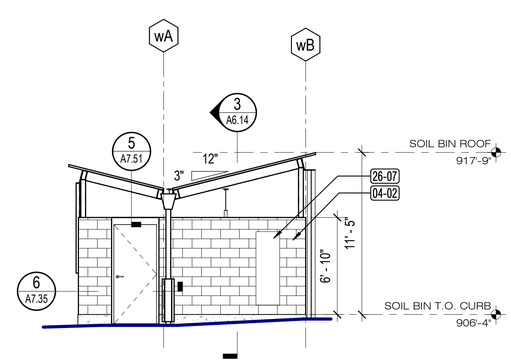

6 A3.13 **WB - SOIL BINS - WEST**
3/16" = 1'-0"

GENERAL NOTES

1. FOR WINDOW SCHEDULE AND TYPES, REFER TO SHEET A2.71
2. FOR WALL ASSEMBLY BASE DETAILS REFER TO SHEET A7.22
3. ALL STRUCTURAL AND NON-STRUCTURAL STEEL, EXPOSED AND CONCEALED, INCLUDING PLATES, CONNECTIONS, ETC. TO RECEIVE HIGH PERFORMANCE COATING, UON
4. EXPOSED STEEL COLUMNS TO BE WRAPPED IN SHOP PRIOR TO SHIPPING
5. FOR RULES FOR POLYASH SIDING ALIGNMENTS, SEE DETAIL 2 / A3.21

KEYNOTE LEGEND	
Key Value	**Keynote Text**
04-02	COMB-FACED CONCRETE MASONRY UNIT WALL
05-06	METAL-FRAMED SLIDING GATE WITH WOOD INFILL
05-09	METAL-FRAMED FENCE WITH WOOD INFILL
26-07	ELECTRICAL PANEL, SED

APPROVALS

IDENTIFICATION STAMP
DIV. OF THE STATE ARCHITECT
APP: 01-119409 INC:
REVIEWED FOR
SS ☑ FLS ☑ ACS ☑
DATE: 03/14/2022

NOLL & TAM ARCHITECTS
729 Heinz Avenue
Berkeley, CA 94710
tel 510.542.2200
fax 510.542.2201

SEAL

LICENSED ARCHITECT
CHRISTOPHER NOLL
No. C15916
REN. 12-31-23
STATE OF CALIFORNIA

PROJECT TITLE

Peralta Community College District
MERRITT COLLEGE NEW LANDSCAPE HORTICULTURE COMPLEX

12500 Campus Drive
Oakland, CA 94619

BID SET

ISSUE DATE **03/03/2022**
N&T JOB NUMBER **22003**

REVISIONS

#	DATE	DESCRIPTION

DRAWN BY **Author** CHECKED BY **Checker**

SHEET TITLE
EXTERIOR ELEVATIONS - WEST BUILDING GROUP

SHEET NUMBER
A3.13

3/3/2022 11:28:46 AM BIM 360://PCCD Merritt Horticulture/Merritt Horticulture_2020.rvt

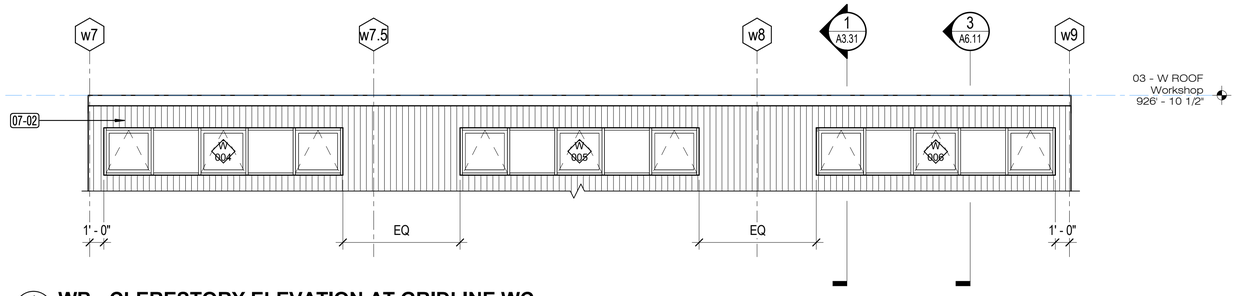

1 A3.14 **WB - CLERESTORY ELEVATION AT GRIDLINE WC**
3/16" = 1'-0"

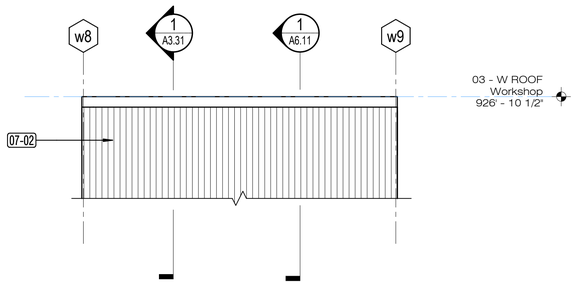

3 A3.14 **WB - CLERESTORY ELEVATION AT GRIDLINE WH**
3/16" = 1'-0"

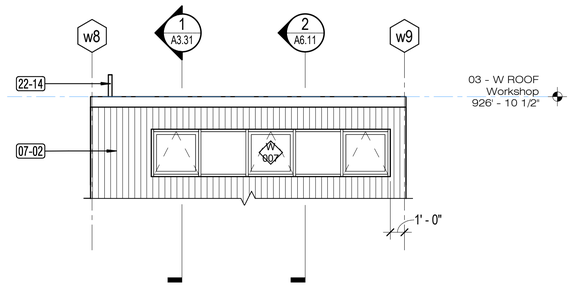

2 A3.14 **WB - CLERESTORY ELEVATION AT GRIDLINE WF**
3/16" = 1'-0"

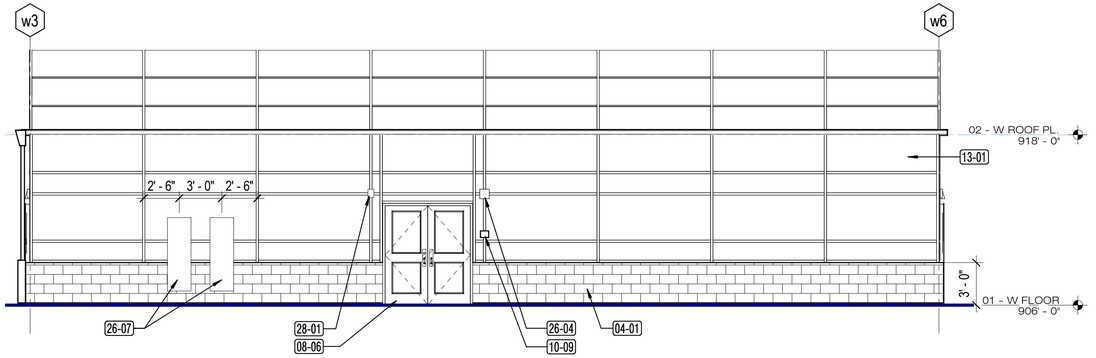

5 A3.14 **WB - GREENHOUSE TYPE 2 - NORTH**
3/16" = 1'-0"

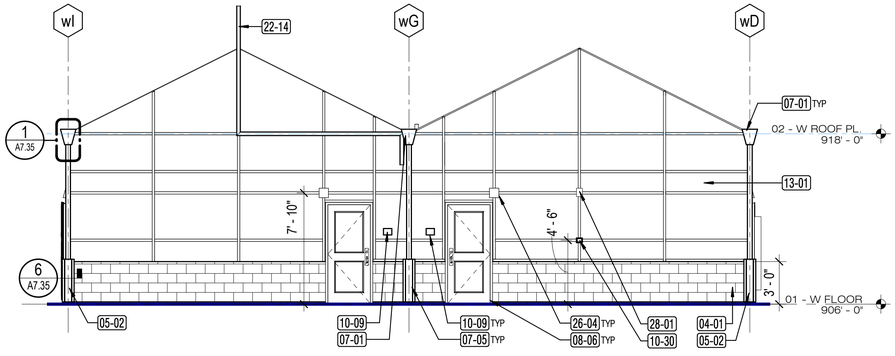

4 A3.14 **WB - GREENHOUSE TYPE 2 - EAST**
3/16" = 1'-0"

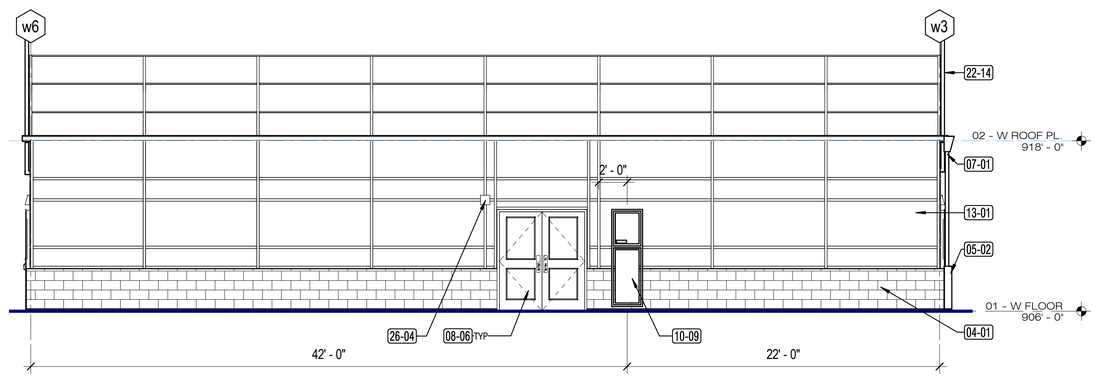

7 A3.14 **WB - GREENHOUSE TYPE 2 - SOUTH**
3/16" = 1'-0"

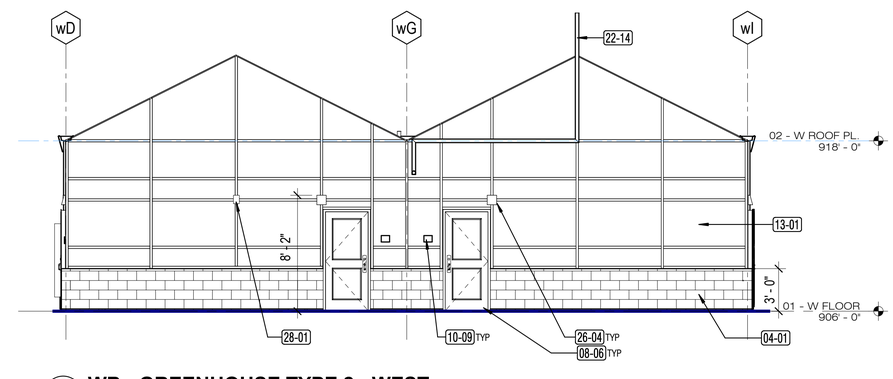

6 A3.14 **WB - GREENHOUSE TYPE 2 - WEST**
3/16" = 1'-0"

GENERAL NOTES

1. FOR WINDOW SCHEDULE AND TYPES, REFER TO SHEET A2.71
2. FOR WALL ASSEMBLY BASE DETAILS REFER TO SHEET A7.22
3. ALL STRUCTURAL AND NON-STRUCTURAL STEEL, EXPOSED AND CONCEALED, INCLUDING PLATES, CONNECTIONS, ETC. TO RECEIVE HIGH PERFORMANCE COATING, UON
4. EXPOSED STEEL COLUMNS TO BE WRAPPED IN SHOP PRIOR TO SHIPPING
5. FOR RULES FOR POLYASH SIDING ALIGNMENTS, SEE DETAIL 2 / A3.21

KEYNOTE LEGEND

Key Value	Keynote Text
04-01	CONCRETE MASONRY UNIT STEM WALL, SSD
05-02	PREFINISHED STL RAINWATER LEADER GUARD
07-01	BOX SCUPPER, DOWNSPOUT AND GUARD BY GC, NOT BY GREENHOUSE MFR
07-02	POLYASH SIDING
07-05	GSM DOWNSPOUT, PREFINISHED
08-06	DOORS AND HARDWARE BY GC, NOT BY GREENHOUSE MFR
10-09	SIGN, SWD
10-30	
13-01	SUPERSTRUCTURE BY GREENHOUSE MANUFACTURER
22-14	SANITARY SEWER VENT, SPD
26-04	SED, EXTERIOR AND EGRESS LIGHT FIXTURES BY GC, NOT BY GREENHOUSE MFR
26-07	ELECTRICAL PANEL, SED
28-01	FIRE ALARM SPEAKER, SFAD

APPROVALS

IDENTIFICATION STAMP
DIV. OF THE STATE ARCHITECT
APP: 01-119409 INC:
REVIEWED FOR
SS ☑ FLS ☑ ACS ☑
DATE: 03/14/2022

NOLL & TAM ARCHITECTS
729 Heinz Avenue
Berkeley, CA 94710
tel 510.542.2200
fax 510.542.2201

SEAL

LICENSED ARCHITECT
CHRISTOPHER NOLL
No. C15916
REN. 12-31-23
STATE OF CALIFORNIA

PROJECT TITLE

Peralta Community College District
MERRITT COLLEGE NEW LANDSCAPE HORTICULTURE COMPLEX

12500 Campus Drive
Oakland, CA 94619

BID SET

ISSUE DATE **03/03/2022**
N&T JOB NUMBER **22003**

REVISIONS

	DATE	DESCRIPTION

DRAWN BY **Author** CHECKED BY **Checker**

SHEET TITLE
EXTERIOR ELEVATIONS - WEST BUILDING GROUP

SHEET NUMBER
A3.14

3/3/2022 11:28:50 AM BIM 360://PCCD Merritt Horticulture/Merritt Horticulture_2020.rvt

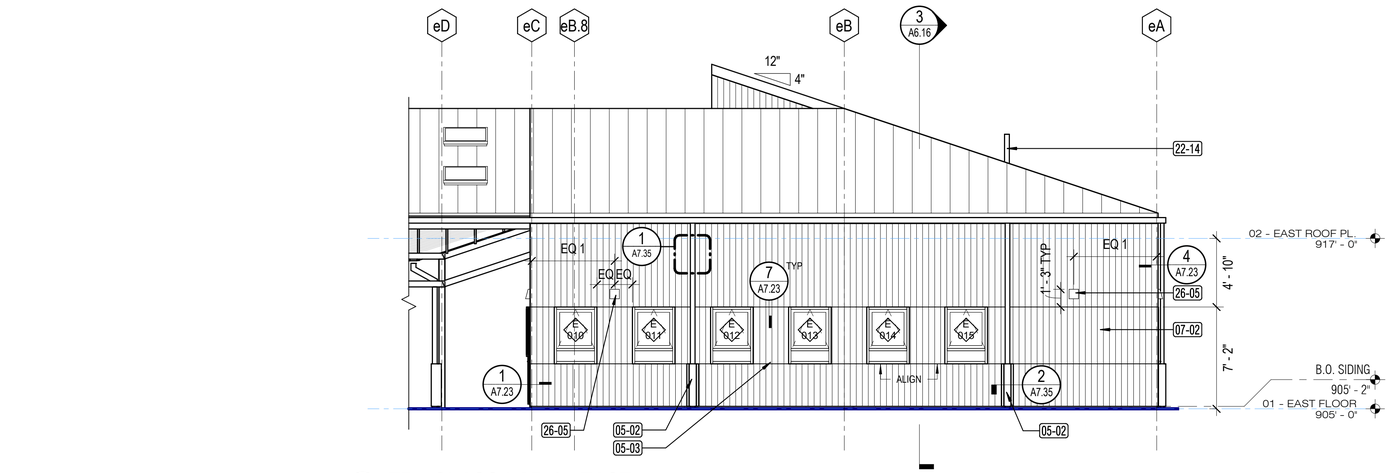

1 A3.15 **EB - CLASS LAB 1 - EAST**
3/16" = 1'-0"

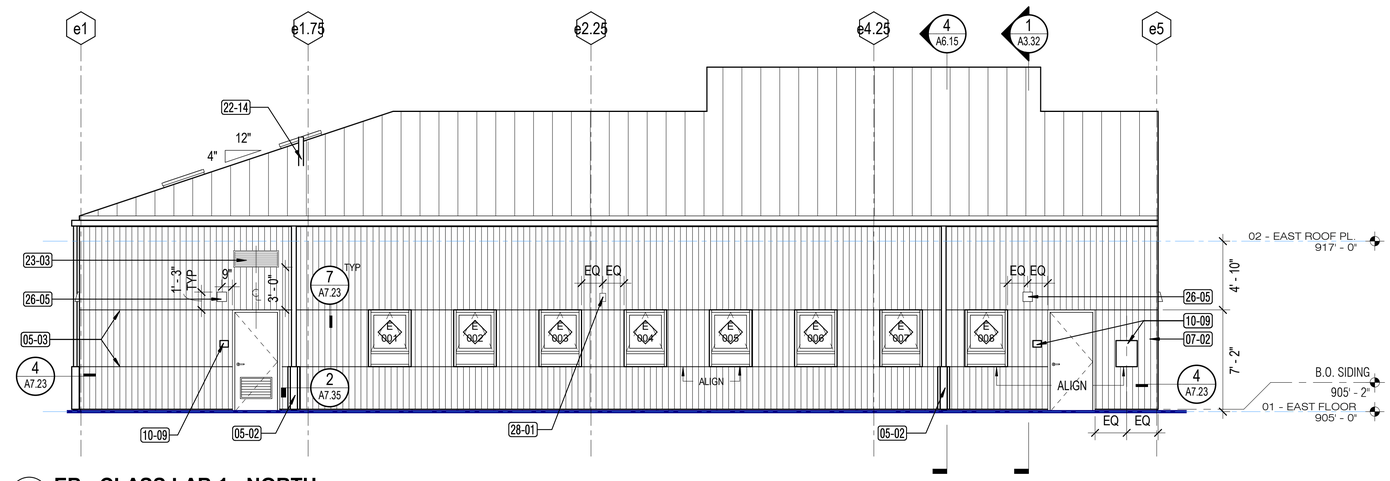

2 A3.15 **EB - CLASS LAB 1 - NORTH**
3/16" = 1'-0"

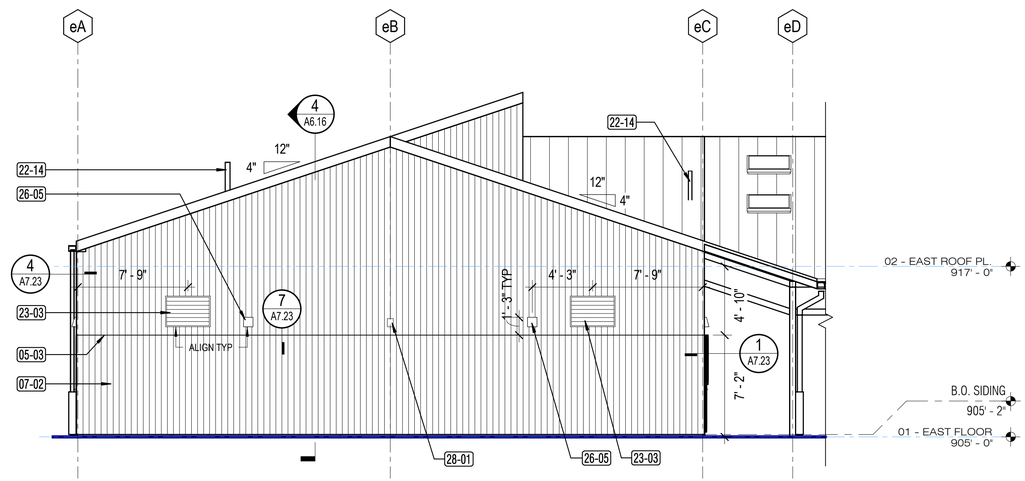

3 A3.15 **EB - CLASS LAB 1 - WEST**
3/16" = 1'-0"

GENERAL NOTES

1. FOR WINDOW SCHEDULE AND TYPES, REFER TO SHEET A2.71
2. FOR WALL ASSEMBLY BASE DETAILS REFER TO SHEET A7.22
3. ALL STRUCTURAL AND NON-STRUCTURAL STEEL, EXPOSED AND CONCEALED, INCLUDING PLATES, CONNECTIONS, ETC. TO RECEIVE HIGH PERFORMANCE COATING, UON
4. EXPOSED STEEL COLUMNS TO BE WRAPPED IN SHOP PRIOR TO SHIPPING
5. FOR RULES FOR POLYASH SIDING ALIGNMENTS, SEE DETAIL 2 / A3.21

KEYNOTE LEGEND	
Key Value	**Keynote Text**
05-02	PREFINISHED STL RAINWATER LEADER GUARD
05-03	CONTROL JOINT, POLYASH
07-02	POLYASH SIDING
10-09	SIGN, SWD
22-14	SANITARY SEWER VENT, SPD
23-03	EXTERIOR LOUVER, SMD
26-05	LIGHT FIXTURE, SED; CENTER ON POLYASH SEAM WO, UON
28-01	FIRE ALARM SPEAKER, SFAD

APPROVALS

IDENTIFICATION STAMP
DIV. OF THE STATE ARCHITECT
APP: 01-119409 INC:
REVIEWED FOR
SS ☑ FLS ☑ ACS ☑
DATE: 03/14/2022

NOLL & TAM ARCHITECTS
729 Heinz Avenue
Berkeley, CA 94710
tel 510.542.2200
fax 510.542.2201

SEAL

LICENSED ARCHITECT
CHRISTOPHER NOLL
No. C15916
REN. 12-31-23
STATE OF CALIFORNIA

PROJECT TITLE

Peralta Community College District
MERRITT COLLEGE NEW LANDSCAPE HORTICULTURE COMPLEX

12500 Campus Drive
Oakland, CA 94619

BID SET

ISSUE DATE **03/03/2022**
N&T JOB NUMBER **22003**

REVISIONS

	DATE	DESCRIPTION

DRAWN BY **Author** CHECKED BY **Checker**

SHEET TITLE
EXTERIOR ELEVATIONS - EAST BUILDING GROUP

SHEET NUMBER
A3.15

3/3/2022 11:41:53 AM BIM 360://PCCD Merritt Horticulture/Merritt Horticulture_2020.rvt

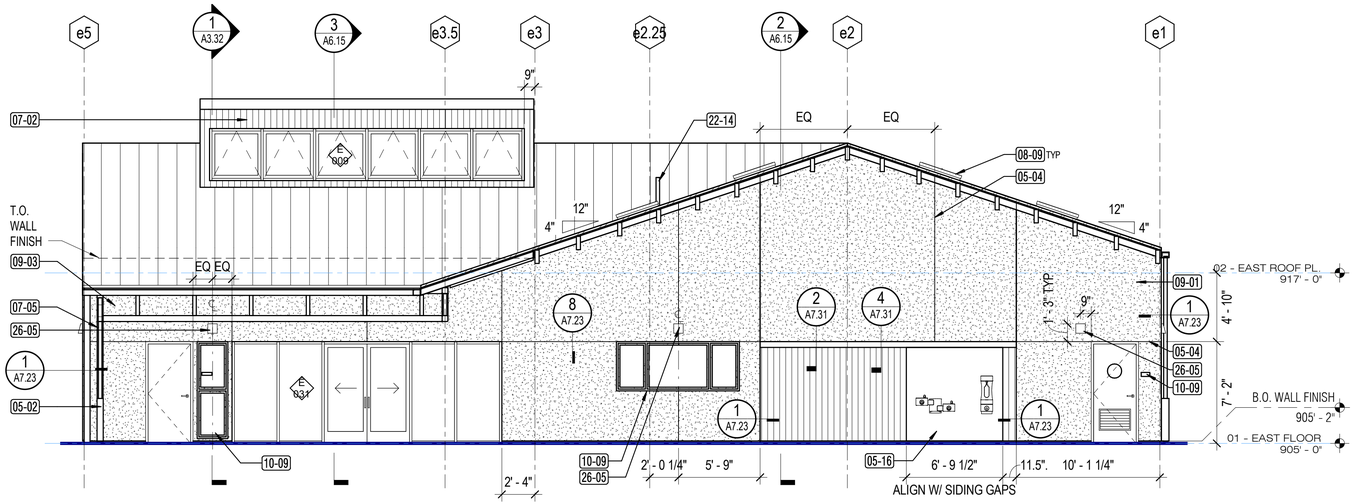

8 A3.16 **EB - CLASS LAB 1 - SOUTH**
3/16" = 1'-0"

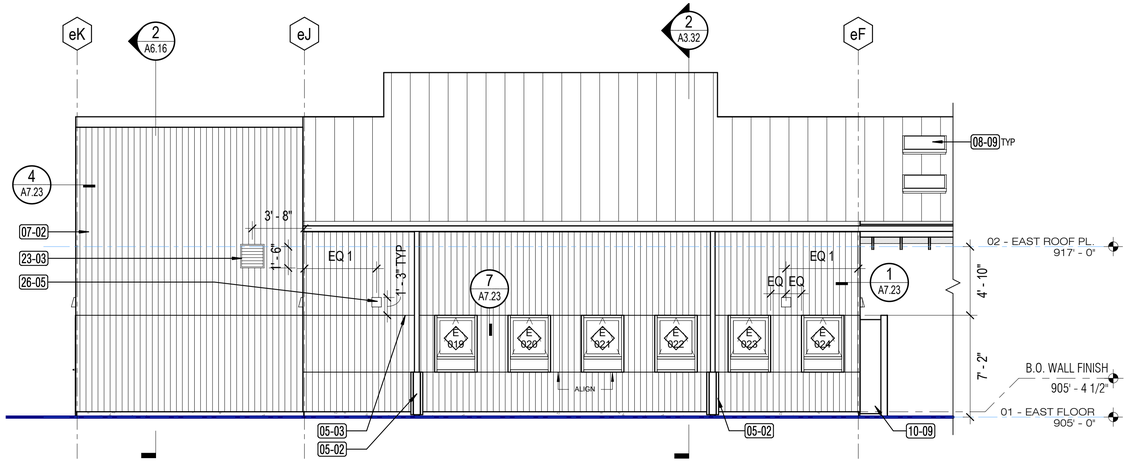

9 A3.16 **EB - STUDENT/FACULTY - EAST**
3/16" = 1'-0"

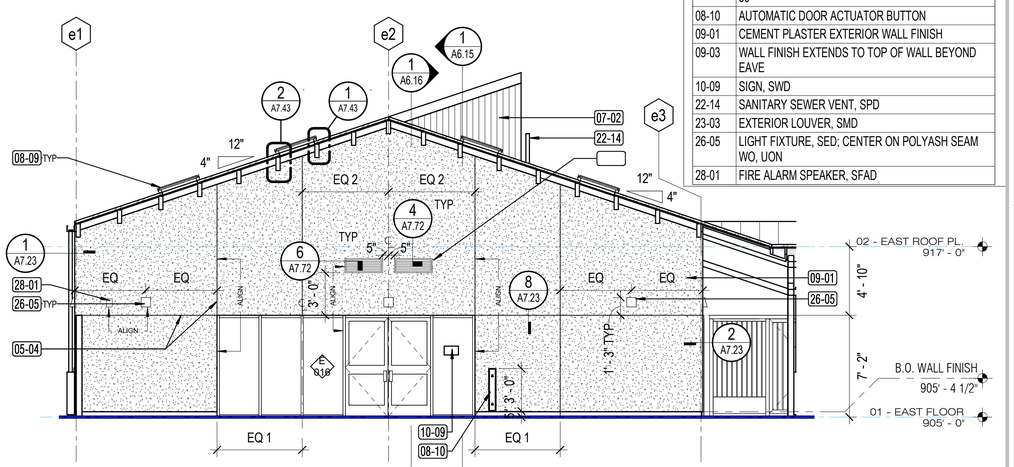

10 A3.16 **EB - STUDENT/FACULTY - NORTH**
3/16" = 1'-0"

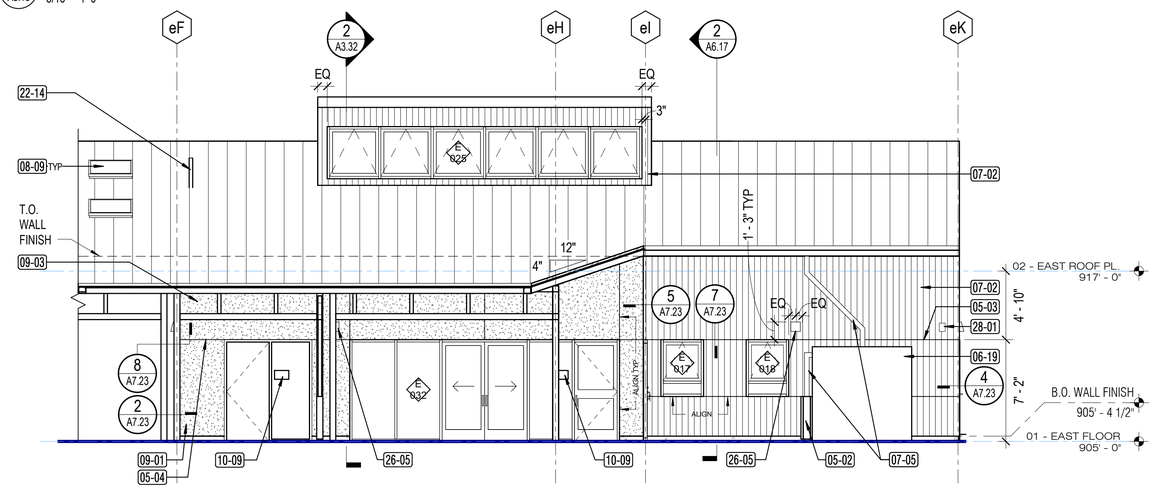

11 A3.16 **EB - STUDENT/FACULTY - WEST**
3/16" = 1'-0"

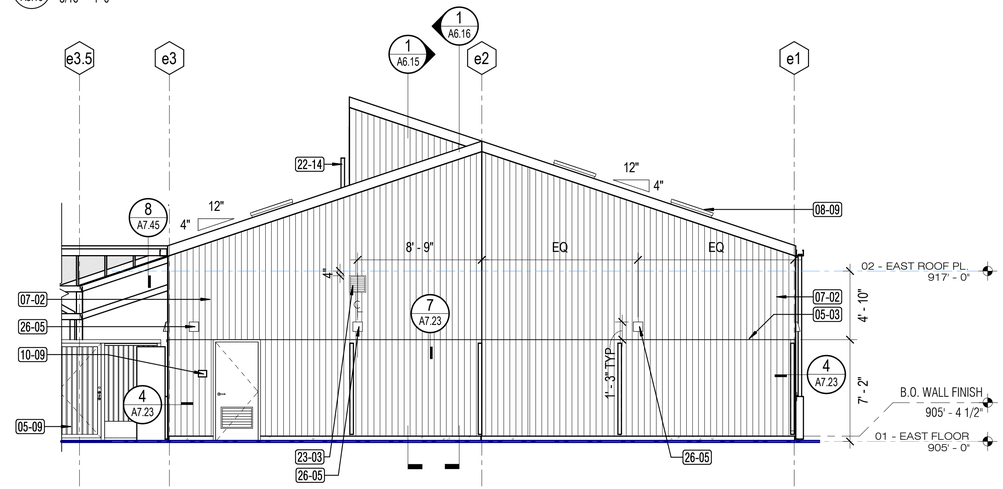

12 A3.16 **EB - STUDENT/FACULTY - SOUTH**
3/16" = 1'-0"

GENERAL NOTES

1. FOR WINDOW SCHEDULE AND TYPES, REFER TO SHEET A2.71
2. FOR WALL ASSEMBLY BASE DETAILS REFER TO SHEET A7.22
3. ALL STRUCTURAL AND NON-STRUCTURAL STEEL, EXPOSED AND CONCEALED, INCLUDING PLATES, CONNECTIONS, ETC. TO RECEIVE HIGH PERFORMANCE COATING, UON
4. EXPOSED STEEL COLUMNS TO BE WRAPPED IN SHOP PRIOR TO SHIPPING
5. FOR RULES FOR POLYASH SIDING ALIGNMENTS, SEE DETAIL 2 / A3.21

KEYNOTE LEGEND

Key Value	Keynote Text
05-02	PREFINISHED STL RAINWATER LEADER GUARD
05-03	CONTROL JOINT, POLYASH
05-04	CONTROL JOINT, CEMENT PLASTER
05-09	METAL-FRAMED FENCE WITH WOOD INFILL
05-16	GALVANIZED STEEL WALL COVERING
06-19	50 GAL PLASTIC RAINWATER BARREL OFCI. SECURE TO WALL WITH (2) 3" WIDE 16 GAUGE GSM BELLY STRAPS LOCATED TOP AND BOTTOM OF TANK. SECURE TO TYPE 3 BACKING W/ (2) 3/8" DIA X 4" GALV LB
07-02	POLYASH SIDING
07-05	GSM DOWNSPOUT, PREFINISHED
08-09	ALUMINUM FRAMED SKYLIGHT, PREFINISHED 36" x 36"
08-10	AUTOMATIC DOOR ACTUATOR BUTTON
09-01	CEMENT PLASTER EXTERIOR WALL FINISH
09-03	WALL FINISH EXTENDS TO TOP OF WALL BEYOND EAVE
10-09	SIGN, SWD
22-14	SANITARY SEWER VENT, SPD
23-03	EXTERIOR LOUVER, SMD
26-05	LIGHT FIXTURE, SED; CENTER ON POLYASH SEAM WO, UON
28-01	FIRE ALARM SPEAKER, SFAD

APPROVALS

IDENTIFICATION STAMP
DIV. OF THE STATE ARCHITECT
APP: 01-119409 INC:
REVIEWED FOR
SS ☑ FLS ☑ ACS ☑
DATE: 03/14/2022

NOLL & TAM ARCHITECTS
729 Heinz Avenue
Berkeley, CA 94710
tel 510.542.2200
fax 510.542.2201

SEAL

LICENSED ARCHITECT
CHRISTOPHER NOLL
No. C15916
REN. 12-31-23
STATE OF CALIFORNIA

PROJECT TITLE

Peralta Community College District
MERRITT COLLEGE NEW LANDSCAPE HORTICULTURE COMPLEX

12500 Campus Drive
Oakland, CA 94619

BID SET

ISSUE DATE 03/03/2022
N&T JOB NUMBER 22003

REVISIONS

#	DATE	DESCRIPTION

DRAWN BY Author | CHECKED BY Checker

SHEET TITLE
EXTERIOR ELEVATIONS - EAST BUILDING GROUP

SHEET NUMBER
A3.16

3/3/2022 1:27:42 PM BIM 360://PCCD Merritt Horticulture/Merritt Horticulture_2020.rvt

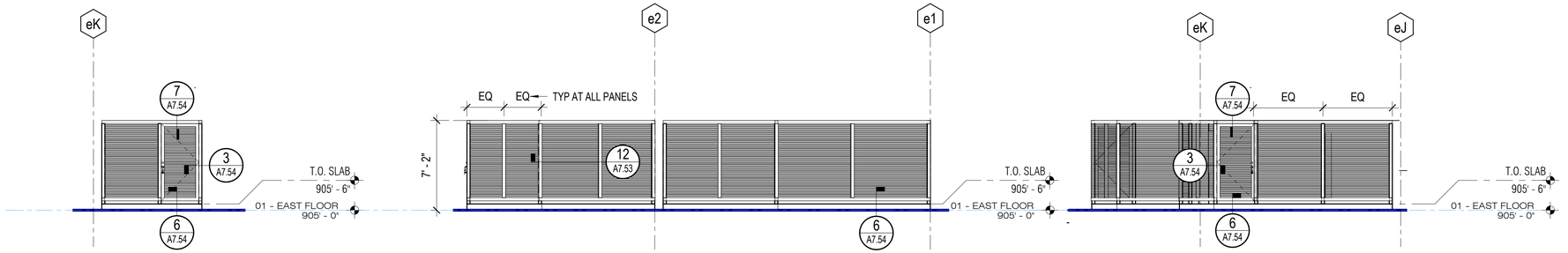

11 A3.17 **EB - MECHANICAL YARD - WEST**
3/16" = 1'-0"

10 A3.17 **EB - TRANSFORMER/MECH YARD - SOUTH**
3/16" = 1'-0"

9 A3.17 **EB - TRANSFORMER/MECH YARD - EAST**
3/16" = 1'-0"

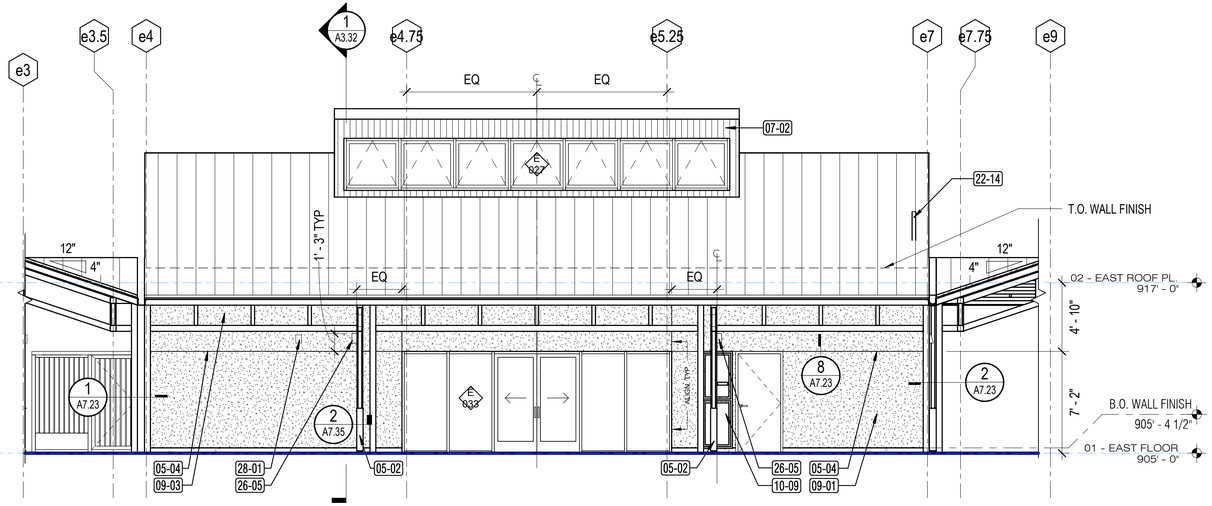

13 A3.17 **EB - CLASS LAB 2 - NORTH**
3/16" = 1'-0"

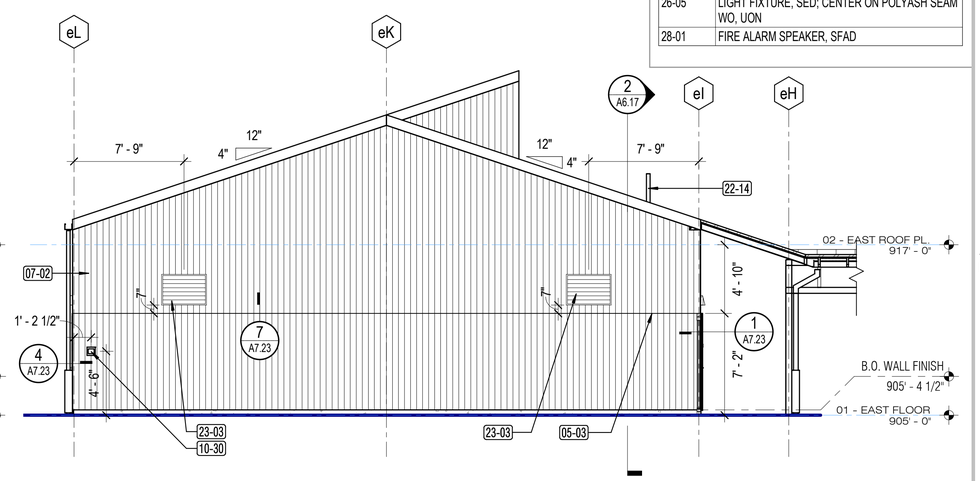

12 A3.17 **EB - CLASS LAB 2 - EAST**
3/16" = 1'-0"

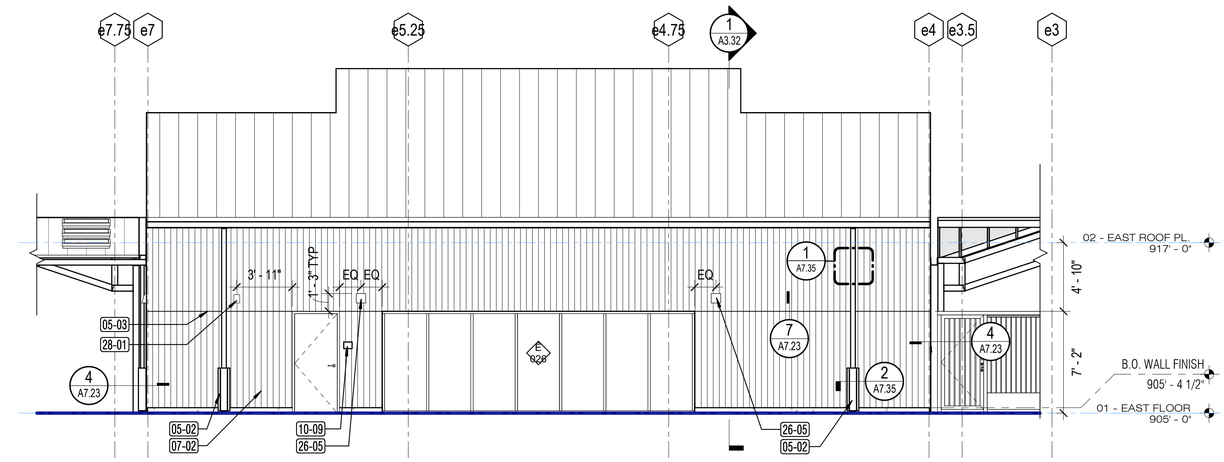

15 A3.17 **EB - CLASS LAB 2 - SOUTH**
3/16" = 1'-0"

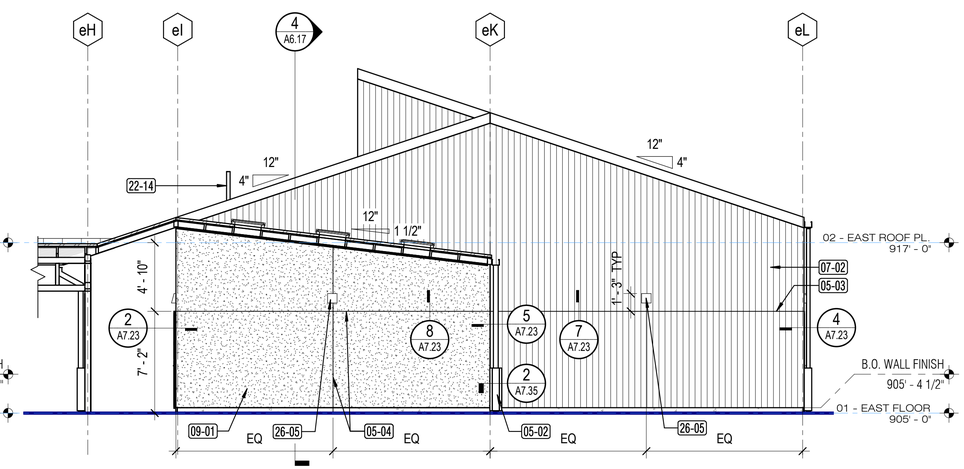

14 A3.17 **EB - CLASS LAB 2 - WEST**
3/16" = 1'-0"

GENERAL NOTES

1. FOR WINDOW SCHEDULE AND TYPES, REFER TO SHEET A2.71
2. FOR WALL ASSEMBLY BASE DETAILS REFER TO SHEET A7.22
3. ALL STRUCTURAL AND NON-STRUCTURAL STEEL, EXPOSED AND CONCEALED, INCLUDING PLATES, CONNECTIONS, ETC. TO RECEIVE HIGH PERFORMANCE COATING, UON
4. EXPOSED STEEL COLUMNS TO BE WRAPPED IN SHOP PRIOR TO SHIPPING
5. FOR RULES FOR POLYASH SIDING ALIGNMENTS, SEE DETAIL 2 / A3.21

KEYNOTE LEGEND	
Key Value	**Keynote Text**
05-02	PREFINISHED STL RAINWATER LEADER GUARD
05-03	CONTROL JOINT, POLYASH
05-04	CONTROL JOINT, CEMENT PLASTER
07-02	POLYASH SIDING
09-01	CEMENT PLASTER EXTERIOR WALL FINISH
09-03	WALL FINISH EXTENDS TO TOP OF WALL BEYOND EAVE
10-09	SIGN, SWD
10-30	
22-14	SANITARY SEWER VENT, SPD
23-03	EXTERIOR LOUVER, SMD
26-05	LIGHT FIXTURE, SED; CENTER ON POLYASH SEAM WO, UON
28-01	FIRE ALARM SPEAKER, SFAD

APPROVALS

IDENTIFICATION STAMP
DIV. OF THE STATE ARCHITECT
APP: 01-119409 INC:
REVIEWED FOR
SS ☑ FLS ☑ ACS ☑
DATE: 03/14/2022

NOLL & TAM ARCHITECTS
729 Heinz Avenue
Berkeley, CA 94710
tel 510.542.2200
fax 510.542.2201

SEAL

LICENSED ARCHITECT
CHRISTOPHER NOLL
No. C15916
REN. 12-31-23
STATE OF CALIFORNIA

PROJECT TITLE

Peralta Community College District
MERRITT COLLEGE NEW LANDSCAPE HORTICULTURE COMPLEX

12500 Campus Drive
Oakland, CA 94619

BID SET

ISSUE DATE **03/03/2022**
N&T JOB NUMBER **22003**

REVISIONS

#	DATE	DESCRIPTION

DRAWN BY **Author** CHECKED BY **Checker**

SHEET TITLE
EXTERIOR ELEVATIONS - EAST BUILDING GROUP

SHEET NUMBER
A3.17

3/3/2022 1:27:46 PM BIM 360://PCCD Merritt Horticulture/Merritt Horticulture_2020.rvt

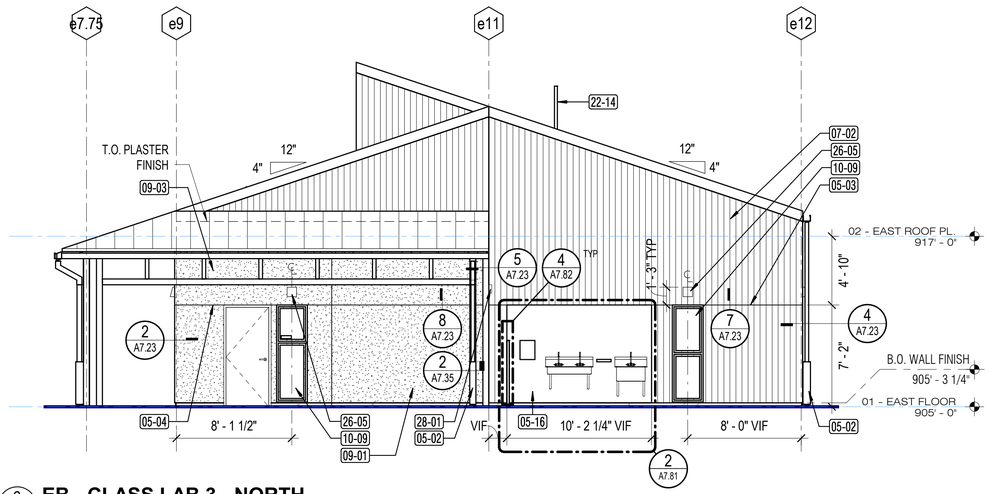

2 A3.18 **EB - CLASS LAB 3 - NORTH**

3/16" = 1'-0"

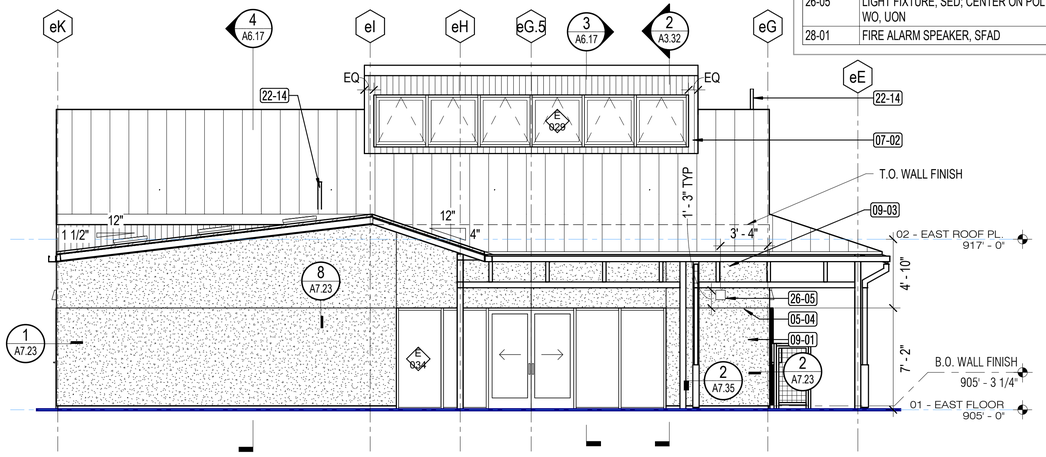

1 A3.18 **EB - CLASS LAB 3 - EAST**

3/16" = 1'-0"

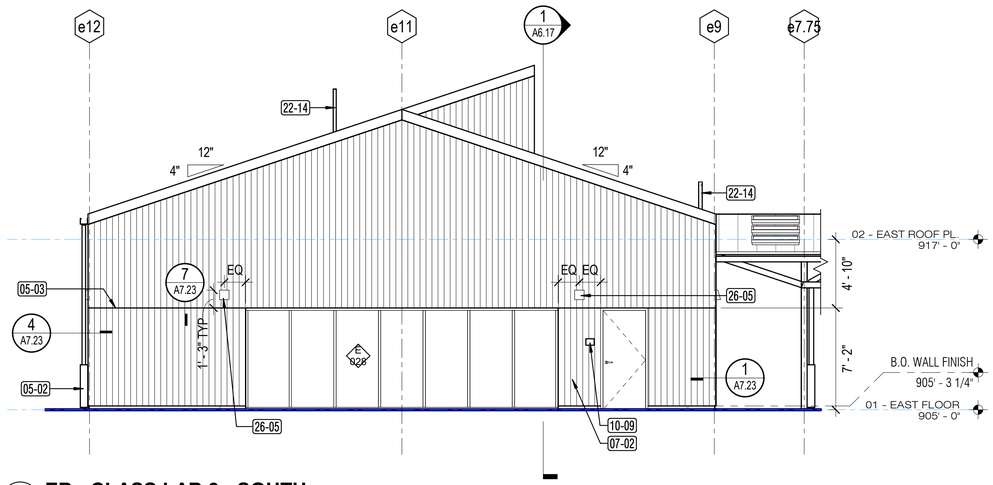

4 A3.18 **EB - CLASS LAB 3 - SOUTH**

3/16" = 1'-0"

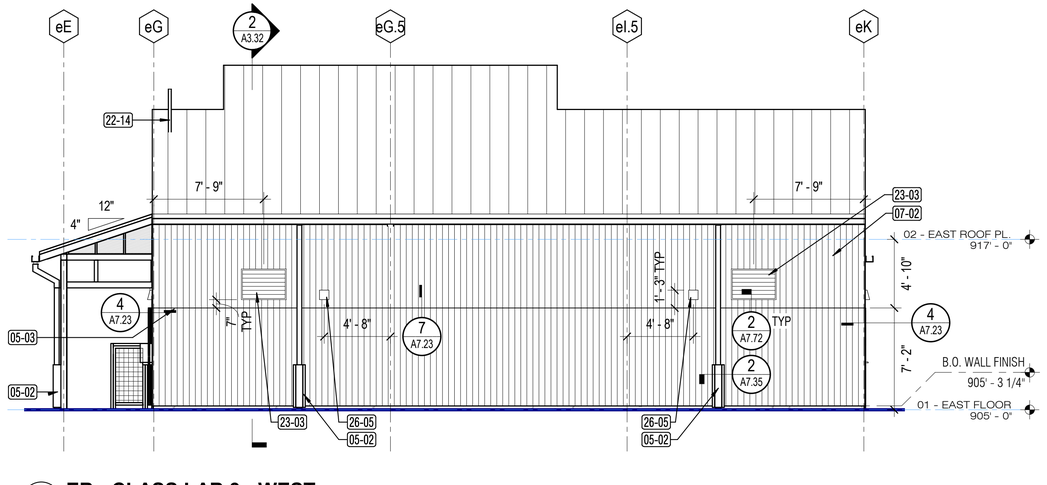

3 A3.18 **EB - CLASS LAB 3 - WEST**

3/16" = 1'-0"

GENERAL NOTES

1. FOR WINDOW SCHEDULE AND TYPES, REFER TO SHEET A2.71
2. FOR WALL ASSEMBLY BASE DETAILS REFER TO SHEET A7.22
3. ALL STRUCTURAL AND NON-STRUCTURAL STEEL, EXPOSED AND CONCEALED, INCLUDING PLATES, CONNECTIONS, ETC. TO RECEIVE HIGH PERFORMANCE COATING, UON
4. EXPOSED STEEL COLUMNS TO BE WRAPPED IN SHOP PRIOR TO SHIPPING
5. FOR RULES FOR POLYASH SIDING ALIGNMENTS, SEE DETAIL 2 / A3.21

KEYNOTE LEGEND	
Key Value	**Keynote Text**
05-02	PREFINISHED STL RAINWATER LEADER GUARD
05-03	CONTROL JOINT, POLYASH
05-04	CONTROL JOINT, CEMENT PLASTER
05-16	GALVANIZED STEEL WALL COVERING
07-02	POLYASH SIDING
09-01	CEMENT PLASTER EXTERIOR WALL FINISH
09-03	WALL FINISH EXTENDS TO TOP OF WALL BEYOND EAVE
10-09	SIGN, SWD
22-14	SANITARY SEWER VENT, SPD
23-03	EXTERIOR LOUVER, SMD
26-05	LIGHT FIXTURE, SED; CENTER ON POLYASH SEAM WO, UON
28-01	FIRE ALARM SPEAKER, SFAD

APPROVALS

IDENTIFICATION STAMP
DIV. OF THE STATE ARCHITECT
APP: 01-119409 INC:
REVIEWED FOR
SS ☑ FLS ☑ ACS ☑
DATE: 03/14/2022

NOLL & TAM ARCHITECTS

729 Heinz Avenue
Berkeley, CA 94710
tel 510.542.2200
fax 510.542.2201

SEAL

LICENSED ARCHITECT
CHRISTOPHER NOLL
No. C15916
REN. 12-31-23
STATE OF CALIFORNIA

PROJECT TITLE

Peralta Community College District
MERRITT COLLEGE NEW LANDSCAPE HORTICULTURE COMPLEX

12500 Campus Drive
Oakland, CA 94619

BID SET

ISSUE DATE	03/03/2022
N&T JOB NUMBER	22003

REVISIONS

#	DATE	DESCRIPTION

DRAWN BY **Author** CHECKED BY **Checker**

SHEET TITLE

EXTERIOR ELEVATIONS - EAST BUILDING GROUP

SHEET NUMBER

A3.18

3/3/2022 1:27:50 PM BIM 360://PCCD Merritt Horticulture/Merritt Horticulture_2020.rvt

GENERAL NOTES

1. FOR WINDOW SCHEDULE AND TYPES, REFER TO SHEET A2.71
2. FOR WALL ASSEMBLY BASE DETAILS REFER TO SHEET A7.22
3. ALL STRUCTURAL AND NON-STRUCTURAL STEEL, EXPOSED AND CONCEALED, INCLUDING PLATES, CONNECTIONS, ETC. TO RECEIVE HIGH PERFORMANCE COATING, UON
4. EXPOSED STEEL COLUMNS TO BE WRAPPED IN SHOP PRIOR TO SHIPPING
5. FOR RULES FOR POLYASH SIDING ALIGNMENTS, SEE DETAIL 2 / A3.21

KEYNOTE LEGEND	
Key Value	**Keynote Text**
04-01	CONCRETE MASONRY UNIT STEM WALL, SSD
05-02	PREFINISHED STL RAINWATER LEADER GUARD
07-01	BOX SCUPPER, DOWNSPOUT AND GUARD BY GC, NOT BY GREENHOUSE MFR
07-05	GSM DOWNSPOUT, PREFINISHED
08-06	DOORS AND HARDWARE BY GC, NOT BY GREENHOUSE MFR
10-09	SIGN, SWD
13-01	SUPERSTRUCTURE BY GREENHOUSE MANUFACTURER
13-02	SEED CONTROLLER, SGHD
22-08	WALL-MOUNTED SSTL SINK, SPD
22-09	WALL-MOUNTED ADA SSTL SINK, SPD
22-14	SANITARY SEWER VENT, SPD
26-04	SED, EXTERIOR AND EGRESS LIGHT FIXTURES BY GC, NOT BY GREENHOUSE MFR
26-07	ELECTRICAL PANEL, SED
28-01	FIRE ALARM SPEAKER, SFAD

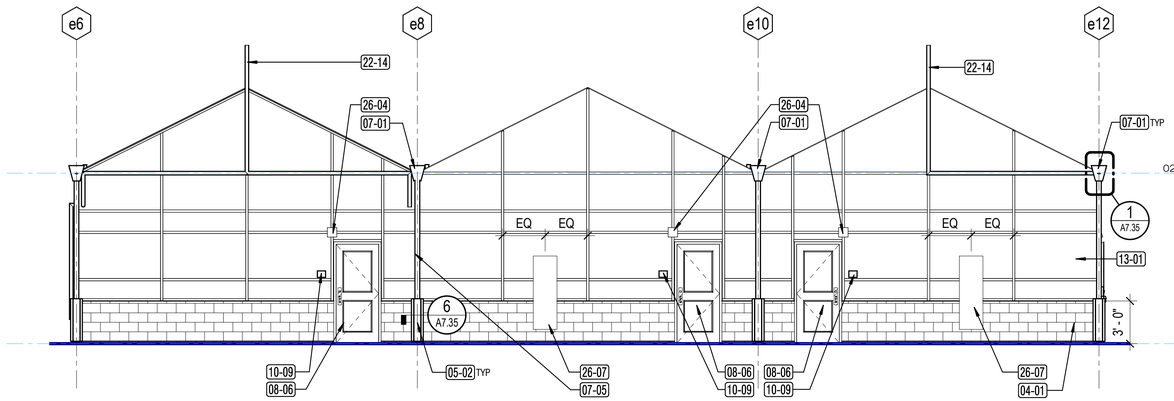

2 A3.19 **EB - GREENHOUSE TYPE 1 - NORTH**
3/16" = 1'-0"

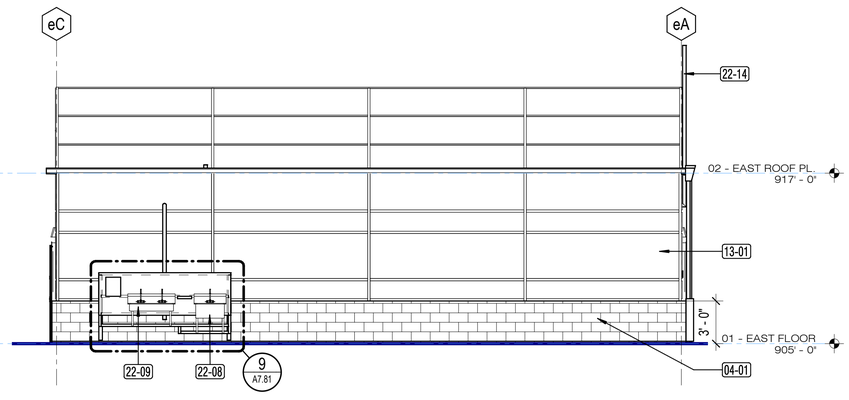

1 A3.19 **EB - GREENHOUSE TYPE 1 - EAST**
3/16" = 1'-0"

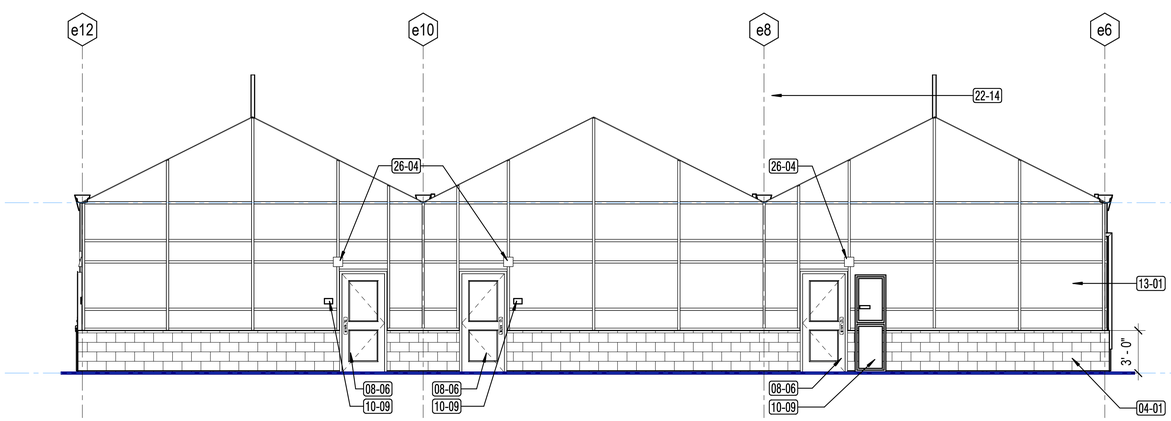

4 A3.19 **EB - GREENHOUSE TYPE 1 - SOUTH**
3/16" = 1'-0"

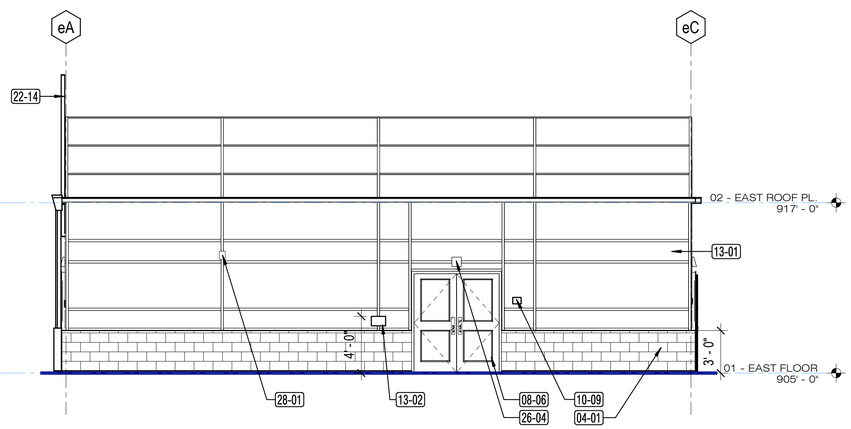

3 A3.19 **EB - GREENHOUSE TYPE 1 - WEST**
3/16" = 1'-0"

APPROVALS

IDENTIFICATION STAMP
DIV. OF THE STATE ARCHITECT
APP: 01-119409 INC:
REVIEWED FOR
SS ☑ FLS ☑ ACS ☑
DATE: 03/14/2022

NOLL & TAM ARCHITECTS
729 Heinz Avenue
Berkeley, CA 94710
tel 510.542.2200
fax 510.542.2201

SEAL

LICENSED ARCHITECT
CHRISTOPHER NOLL
No. C15916
REN. 12-31-23
STATE OF CALIFORNIA

PROJECT TITLE

Peralta Community College District
MERRITT COLLEGE NEW LANDSCAPE HORTICULTURE COMPLEX

12500 Campus Drive
Oakland, CA 94619

BID SET

ISSUE DATE **03/03/2022**
N&T JOB NUMBER **22003**

REVISIONS

	DATE	DESCRIPTION

DRAWN BY **Author** CHECKED BY **Checker**

SHEET TITLE
EXTERIOR ELEVATIONS - EAST BUILDING GROUP

SHEET NUMBER
A3.19

3/3/2022 11:29:08 AM BIM 360://PCCD Merritt Horticulture/Merritt Horticulture_2020.rvt

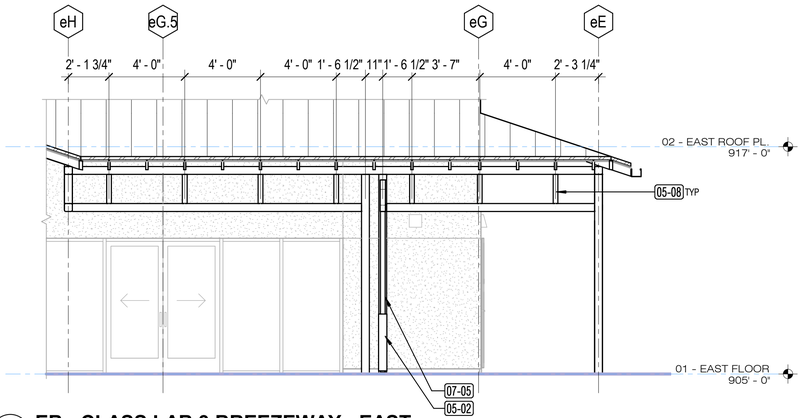

2 A3.20 **EB - CLASS LAB 3 BREEZEWAY - EAST**
1/4" = 1'-0"

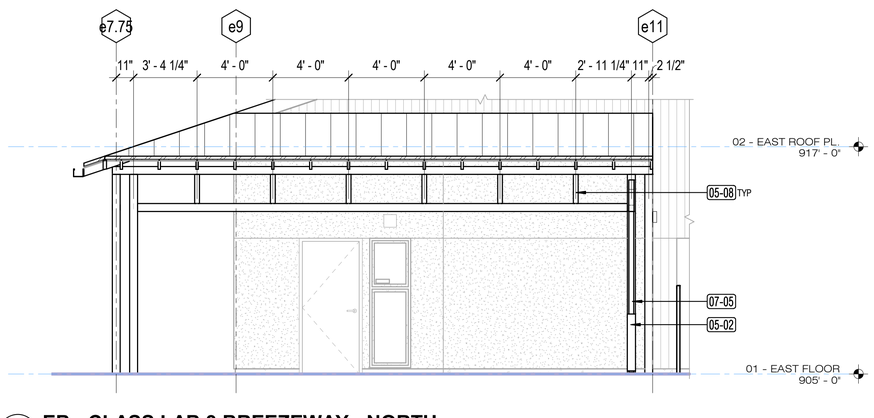

1 A3.20 **EB - CLASS LAB 3 BREEZEWAY - NORTH**
1/4" = 1'-0"

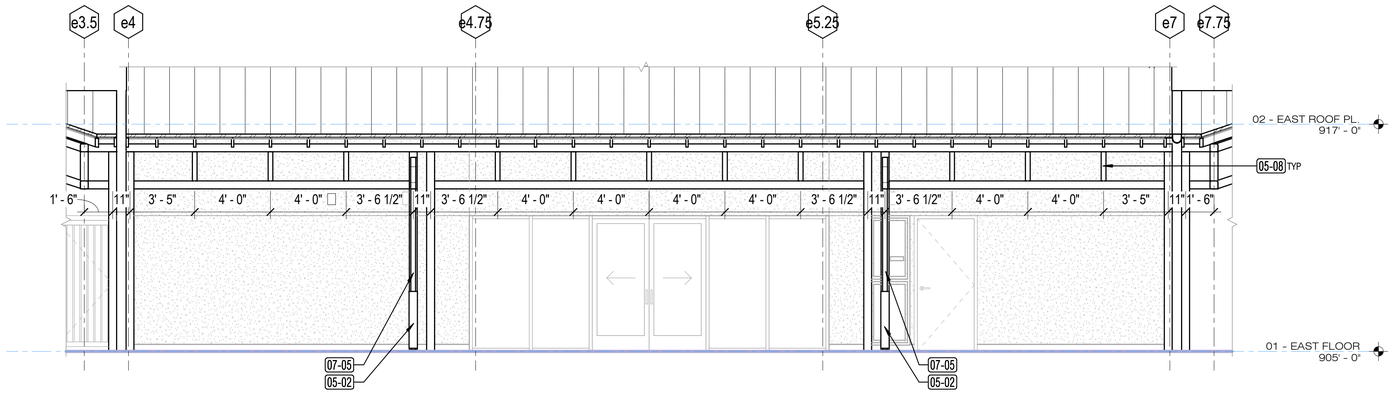

3 A3.20 **EB - CLASS LAB 2 BREEZEWAY - NORTH**
1/4" = 1'-0"

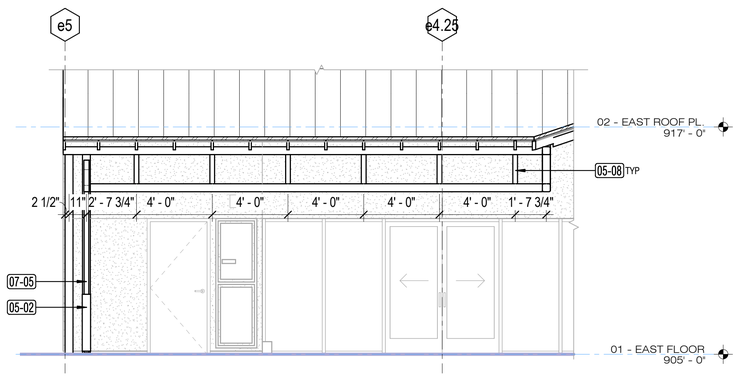

5 A3.20 **EB - CLASS LAB 1 BREEZEWAY - SOUTH**
1/4" = 1'-0"

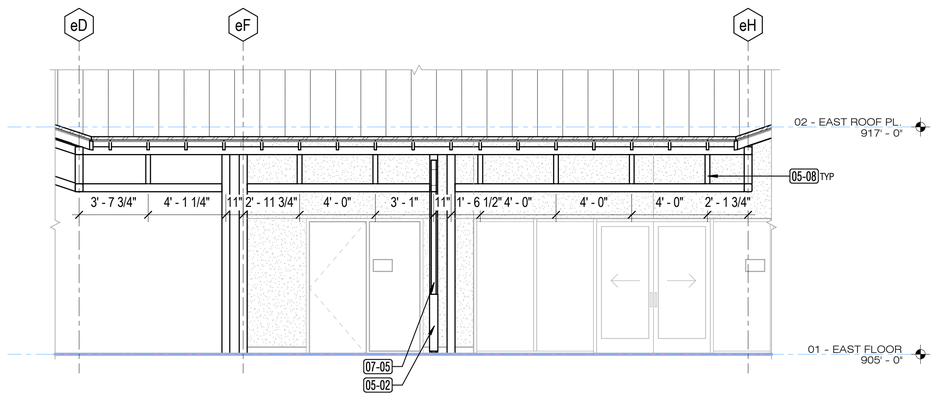

4 A3.20 **EB - STUDENT/FACULTY BREEZEWAY - WEST**
1/4" = 1'-0"

GENERAL NOTES

1. FOR WINDOW SCHEDULE AND TYPES, REFER TO SHEET A2.71
2. FOR WALL ASSEMBLY BASE DETAILS REFER TO SHEET A7.22
3. ALL STRUCTURAL AND NON-STRUCTURAL STEEL, EXPOSED AND CONCEALED, INCLUDING PLATES, CONNECTIONS, ETC. TO RECEIVE HIGH PERFORMANCE COATING, UON
4. EXPOSED STEEL COLUMNS TO BE WRAPPED IN SHOP PRIOR TO SHIPPING
5. FOR RULES FOR POLYASH SIDING ALIGNMENTS, SEE DETAIL 2 / A3.21

KEYNOTE LEGEND	
Key Value	**Keynote Text**
05-02	PREFINISHED STL RAINWATER LEADER GUARD
05-08	PTD HSS 3X3, NON-STRUCTURAL
07-05	GSM DOWNSPOUT, PREFINISHED

APPROVALS

IDENTIFICATION STAMP
DIV. OF THE STATE ARCHITECT
APP: 01-119409 INC:
REVIEWED FOR
SS ☑ FLS ☑ ACS ☑
DATE: 03/14/2022

NOLL & TAM ARCHITECTS
729 Heinz Avenue
Berkeley, CA 94710
tel 510.542.2200
fax 510.542.2201

SEAL

LICENSED ARCHITECT
CHRISTOPHER NOLL
No. C15916
REN. 12-31-23
STATE OF CALIFORNIA

PROJECT TITLE

Peralta Community College District
MERRITT COLLEGE NEW LANDSCAPE HORTICULTURE COMPLEX

12500 Campus Drive
Oakland, CA 94619

BID SET

ISSUE DATE **03/03/2022**
N&T JOB NUMBER **22003**

REVISIONS

	DATE	DESCRIPTION

DRAWN BY **Author** CHECKED BY **Checker**

SHEET TITLE
EXTERIOR ENLARGED ELEVATIONS

SHEET NUMBER
A3.20

3/3/2022 11:29:11 AM BIM 360://PCCD Merritt Horticulture/Merritt Horticulture_2020.rvt

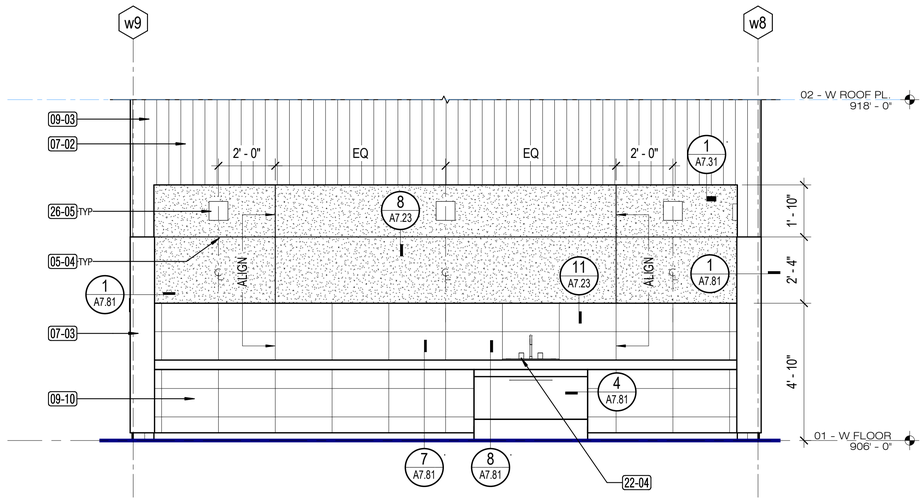

1 A3.21 WB - WORKSHOP - SOUTH ENLARGED

3/8" = 1'-0"

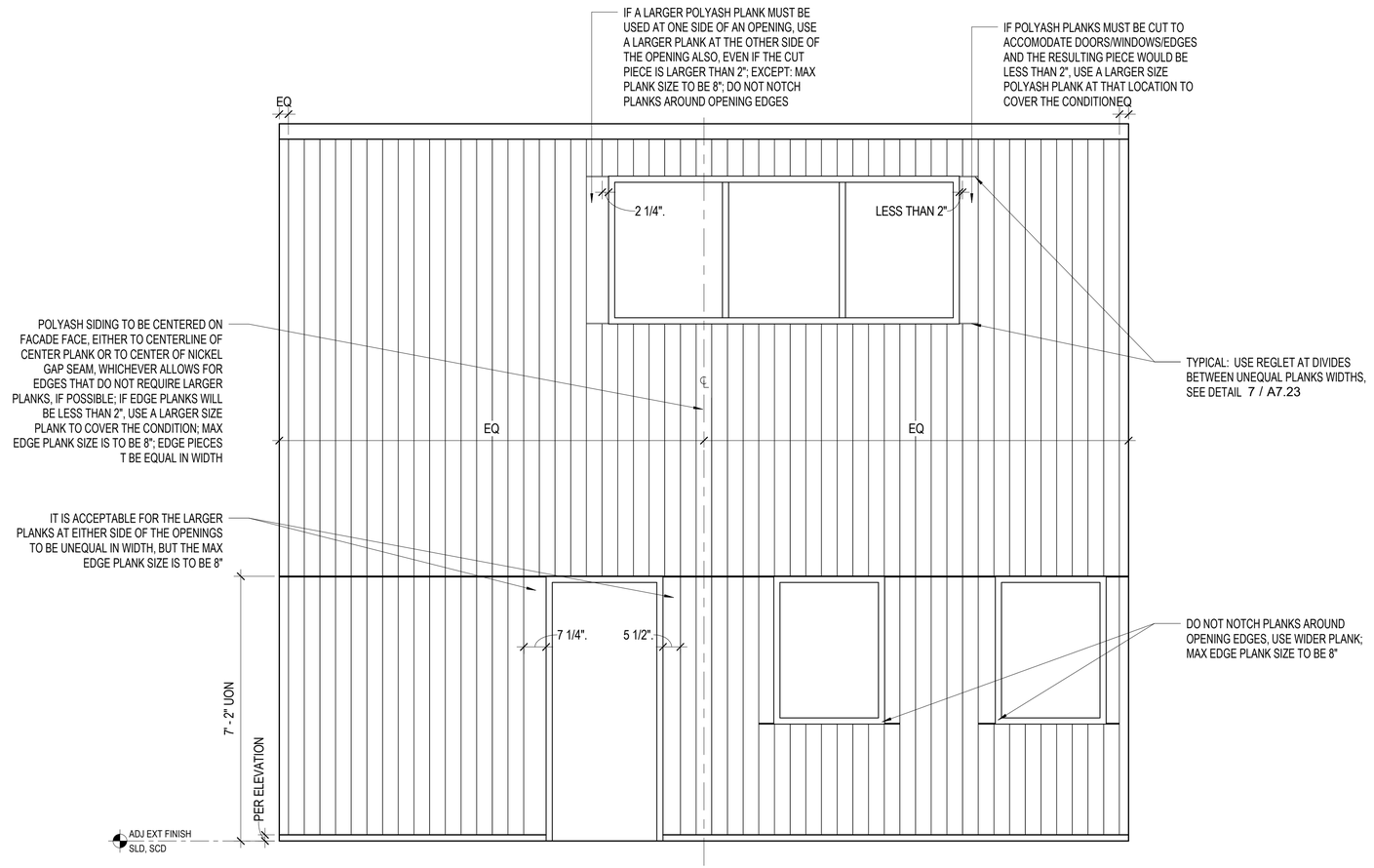

2 A3.21 POLYASH SIDING ALIGNMENTS

1/2" = 1'-0"

GENERAL NOTES

1. FOR WINDOW SCHEDULE AND TYPES, REFER TO SHEET A2.71
2. FOR WALL ASSEMBLY BASE DETAILS REFER TO SHEET A7.22
3. ALL STRUCTURAL AND NON-STRUCTURAL STEEL, EXPOSED AND CONCEALED, INCLUDING PLATES, CONNECTIONS, ETC. TO RECEIVE HIGH PERFORMANCE COATING, UON
4. EXPOSED STEEL COLUMNS TO BE WRAPPED IN SHOP PRIOR TO SHIPPING
5. FOR RULES FOR POLYASH SIDING ALIGNMENTS, SEE DETAIL 2 / A3.21

KEYNOTE LEGEND	
Key Value	**Keynote Text**
05-04	CONTROL JOINT, CEMENT PLASTER
07-02	POLYASH SIDING
07-03	GALVANIZED STEEL CORNER OR WALL END GUARD
09-03	WALL FINISH EXTENDS TO TOP OF WALL BEYOND EAVE
09-10	EXTERIOR PORCELAIN TILE
22-04	SSTL ACCESSIBLE SINK, SPD
26-05	LIGHT FIXTURE, SED; CENTER ON POLYASH SEAM WO, UON

APPROVALS

IDENTIFICATION STAMP
DIV. OF THE STATE ARCHITECT
APP: 01-119409 INC:
REVIEWED FOR
SS ☑ FLS ☑ ACS ☑
DATE: 03/14/2022

NOLL & TAM ARCHITECTS
729 Heinz Avenue
Berkeley, CA 94710
tel 510.542.2200
fax 510.542.2201

SEAL

LICENSED ARCHITECT
CHRISTOPHER NOLL
No. C15916
REN. 12-31-23
STATE OF CALIFORNIA

PROJECT TITLE

Peralta Community College District
MERRITT COLLEGE NEW LANDSCAPE HORTICULTURE COMPLEX

12500 Campus Drive
Oakland, CA 94619

BID SET

ISSUE DATE **03/03/2022**
N&T JOB NUMBER **22003**

REVISIONS

	DATE	DESCRIPTION

DRAWN BY **Author** CHECKED BY **Checker**

SHEET TITLE
EXTERIOR ENLARGED ELEVATIONS

SHEET NUMBER
A3.21

3/3/2022 11:29:13 AM BIM 360://PCCD Merritt Horticulture/Merritt Horticulture_2020.rvt

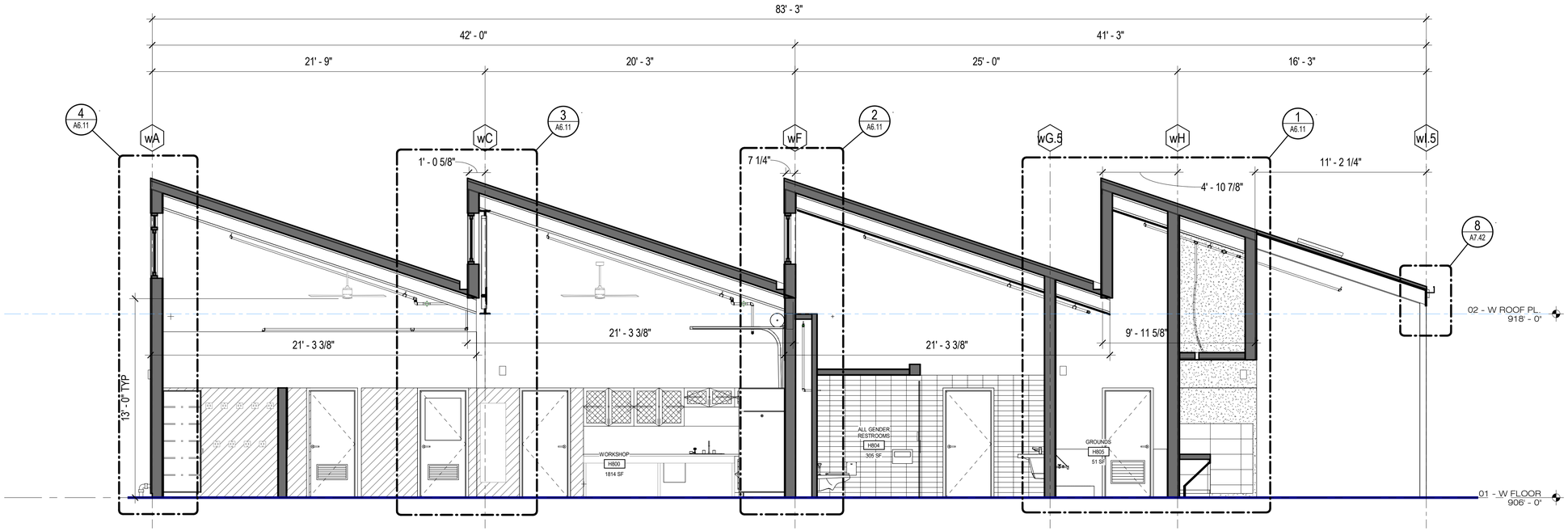

1 A3.31 WB - TOOLSHED / RESTROOMS / FIELD BUILDING

1/4" = 1'-0"

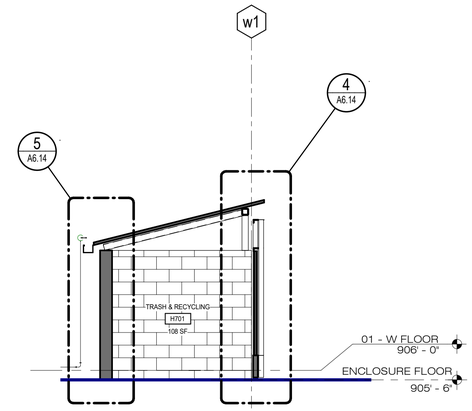

4 A3.31 WB - TRASH ENCLOSURE

1/4" = 1'-0"

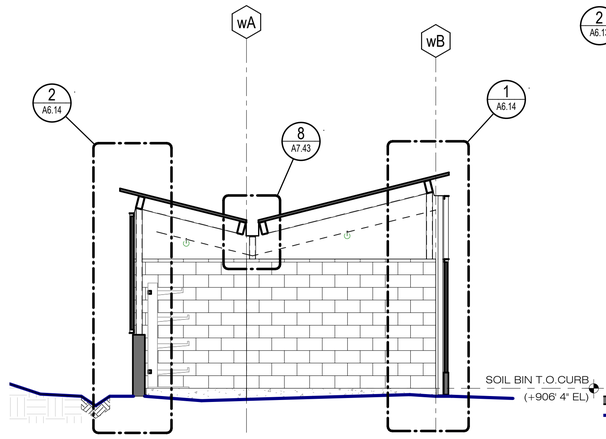

3 A3.31 WB - SOIL BINS

1/4" = 1'-0"

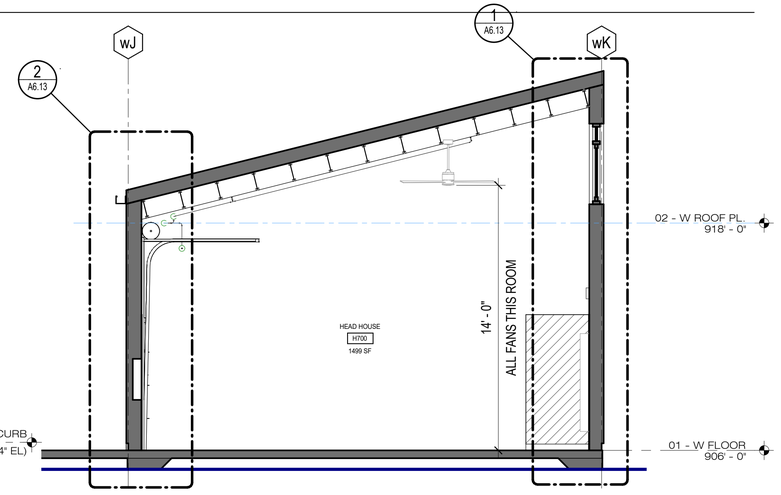

2 A3.31 WB - HEAD HOUSE

1/4" = 1'-0"

APPROVALS

IDENTIFICATION STAMP
DIV. OF THE STATE ARCHITECT
APP: 01-119409 INC:
REVIEWED FOR
SS ☑ FLS ☑ ACS ☑
DATE: 03/14/2022

NOLL & TAM ARCHITECTS
729 Heinz Avenue
Berkeley, CA 94710
tel 510.542.2200
fax 510.542.2201

SEAL

LICENSED ARCHITECT
CHRISTOPHER NOLL
No. C15916
REN. 12-31-23
STATE OF CALIFORNIA

PROJECT TITLE

Peralta Community College District
MERRITT COLLEGE NEW LANDSCAPE HORTICULTURE COMPLEX

12500 Campus Drive
Oakland, CA 94619

BID SET

ISSUE DATE	03/03/2022
N&T JOB NUMBER	22003

REVISIONS

	DATE	DESCRIPTION

DRAWN BY **Author** | CHECKED BY **Checker**

SHEET TITLE

BUILDING SECTIONS - WEST BUILDING GROUP

SHEET NUMBER

A3.31

3/3/2022 11:29:16 AM BIM 360://PCCD Merritt Horticulture/Merritt Horticulture_2020.rvt

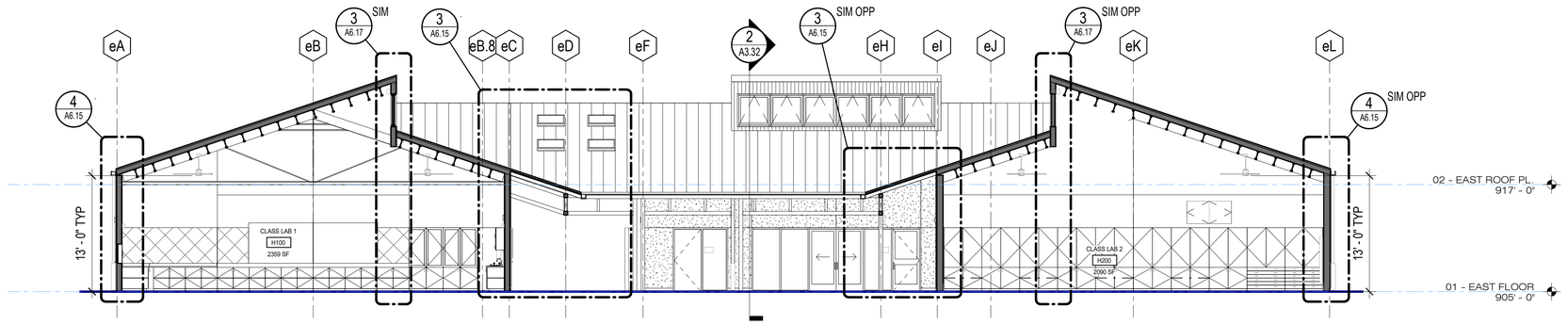

1 A3.32 **EB - CLASS LAB 1 / CLASS LAB 3**
1/8" = 1'-0"

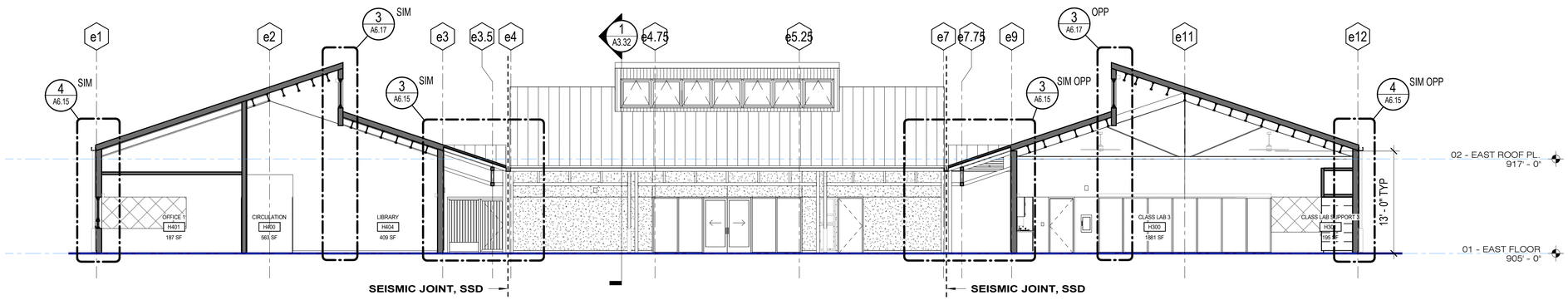

2 A3.32 **EB - CLASS LAB 2 / LIBRARY / OFFICES**
1/8" = 1'-0"

APPROVALS

IDENTIFICATION STAMP
DIV. OF THE STATE ARCHITECT
APP: 01-119409 INC:
REVIEWED FOR
SS ☑ FLS ☑ ACS ☑
DATE: 03/14/2022

NOLL & TAM ARCHITECTS
729 Heinz Avenue
Berkeley, CA 94710
tel 510.542.2200
fax 510.542.2201

SEAL

LICENSED ARCHITECT
CHRISTOPHER NOLL
No. C15916
REN. 12-31-23
STATE OF CALIFORNIA

PROJECT TITLE

Peralta Community College District
MERRITT COLLEGE NEW LANDSCAPE HORTICULTURE COMPLEX

12500 Campus Drive
Oakland, CA 94619

BID SET

ISSUE DATE 03/03/2022
N&T JOB NUMBER 22003

REVISIONS

	DATE	DESCRIPTION

DRAWN BY Author | CHECKED BY Checker

SHEET TITLE
BUILDING SECTIONS - EAST BUILDING GROUP

SHEET NUMBER
A3.32

3/3/2022 11:29:19 AM BIM 360://PCCD Merritt Horticulture/Merritt Horticulture_2020.rvt

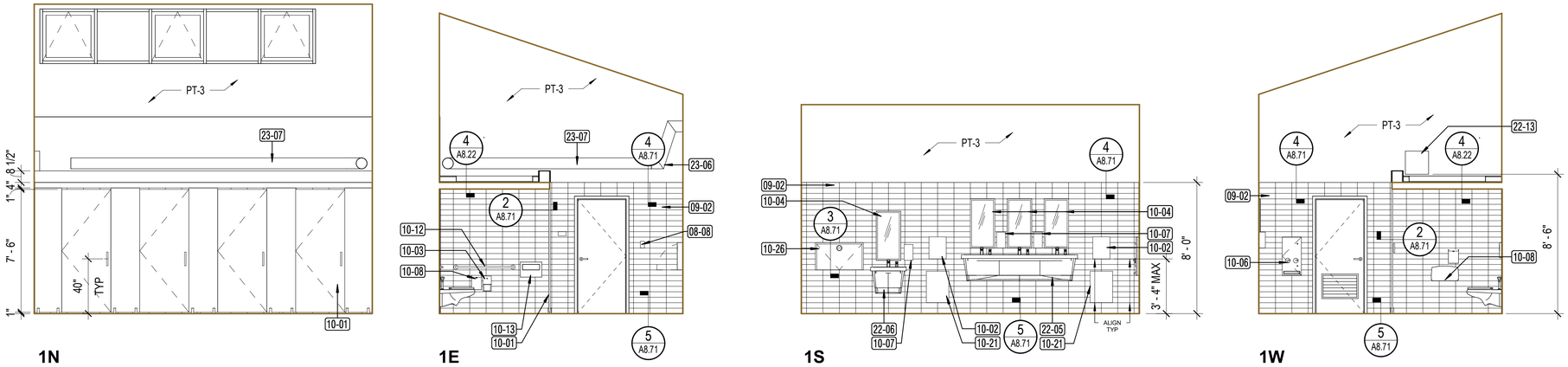

1N 1E 1S 1W

1N WB - RESTROOMS - INT NORTH

1N / A4.21 — 1/4" = 1'-0"

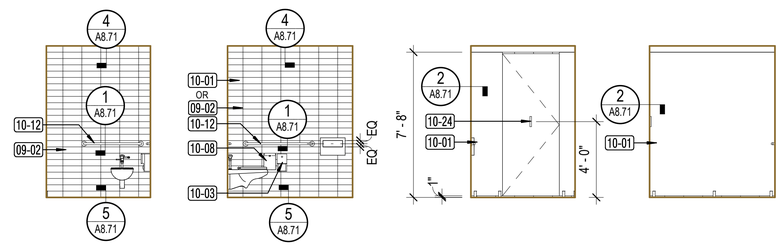

3N 3E 3S 3W

3N WB - ACCESSIBLE STALL

3N / A4.21 — 1/4" = 1'-0"

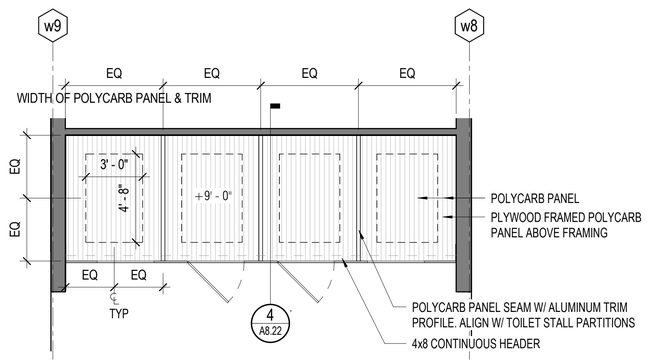

5 ENLARGED RCP @ WEST RESTROOM POLYCARB LID

5 / A4.21 — 1/4" = 1'-0"

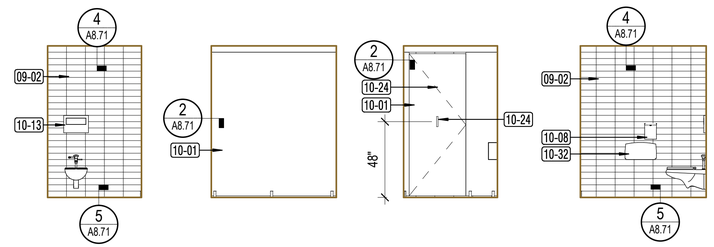

2N 2E 2S 2W

2N WB - TYPICAL RESTROOM STALL

2N / A4.21 — 1/4" = 1'-0"

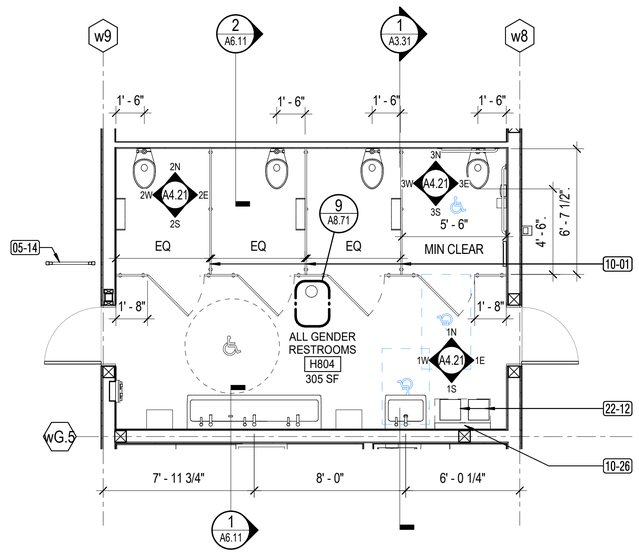

4 01 - ENLARGED RESTROOM - WEST BUILDING GROUP

4 / A4.21 — 1/4" = 1'-0"

GENERAL NOTES

1. RESTROOM DIMENSIONS ON THIS SHEET ARE TO F.O. FINISH, UON.
2. FOR ACCESSIBLE FIXTURE AND ACCESSORY MOUNTING HEIGHTS AND REQUIRED MANEUVERING CLEARANCES, SEE G3.21 AND G3.22.
3. REFER TO PLUMBING DRAWINGS FOR FIXTURES AND DRAINS AND FIXTURE CARRIERS.
4. PROVIDE DOOR PULLS AT BOTH SIDES OF ALL TOILET COMPARTMENT DOORS.

KEYNOTE LEGEND	
Key Value	**Keynote Text**
05-14	METAL SIDE GUARD AT OUTDOOR SINKS
08-08	MANUAL WINDOW ACTUATOR CONTROLS, 48" AFF TO CL
09-02	INTERIOR CERAMIC TILE
10-01	FULL HEIGHT PHENOLIC TOILET COMPARTMENTS
10-02	PAPER TOWEL DISPENSER, SURFACE MOUNTED, OFCI
10-03	TOILET PAPER DISPENSER, TPD-1, SURFACE MOUNTED, OFCI
10-04	FRAMED GLASS MIRROR
10-06	SANITARY DISPENSER, RECESSED
10-07	SOAP DISPENSER, OFCI
10-08	SURFACE MOUNTED SANITARY TRASH RECEPTACLE
10-12	ADA GRAB BAR
10-13	SEAT COVER DISPENSER, SURFACE MOUNTED, OFCI
10-21	WALL MOUNTED WASTE RECEPTACLE
10-24	COAT HOOK
10-26	BABY-CHANGING STATION, SURFACE MOUNTED
10-32	TOILET PAPER DISPENSER JUMBO ROLL, TPD-3, SURFACE MOUNTED, OFCI
22-05	SOLID SURFACE WALL-HUNG LAVATORY, SPD
22-06	SOLID SURFACE ACCESSIBLE WALL-HUNG LAVATORY, SPD
22-12	SEDIMENT TRAP, SPD
22-13	WALL-MOUNTED TANKLESS HOT WATER HEATER, SPD
23-06	MECHANICAL DUCT, SMD
23-07	EXPOSED MECHANICAL DUCT AND/OR EQUIPMENT, SMD, PAINT

APPROVALS

IDENTIFICATION STAMP
DIV. OF THE STATE ARCHITECT
APP: 01-119409 INC:
REVIEWED FOR
SS ☑ FLS ☑ ACS ☑
DATE: 03/14/2022

NOLL & TAM ARCHITECTS
729 Heinz Avenue
Berkeley, CA 94710
tel 510.542.2200
fax 510.542.2201

SEAL

LICENSED ARCHITECT
CHRISTOPHER NOLL
No. C15916
REN. 12-31-23
STATE OF CALIFORNIA

PROJECT TITLE

Peralta Community College District
MERRITT COLLEGE NEW LANDSCAPE HORTICULTURE COMPLEX

12500 Campus Drive
Oakland, CA 94619

BID SET

ISSUE DATE 03/03/2022
N&T JOB NUMBER 22003

REVISIONS

#	DATE	DESCRIPTION

DRAWN BY Author CHECKED BY Checker

SHEET TITLE
ENLARGED PLANS - WEST RESTROOMS

SHEET NUMBER
A4.21

3/3/2022 11:29:24 AM BIM 360://PCCD Merritt Horticulture/Merritt Horticulture_2020.rvt

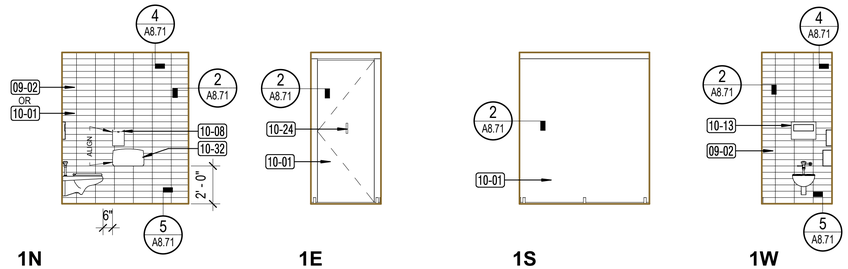

1N EB - TYP RESTROOM STALL

1N A4.22 1/4" = 1'-0"

1N 1E 1S 1W

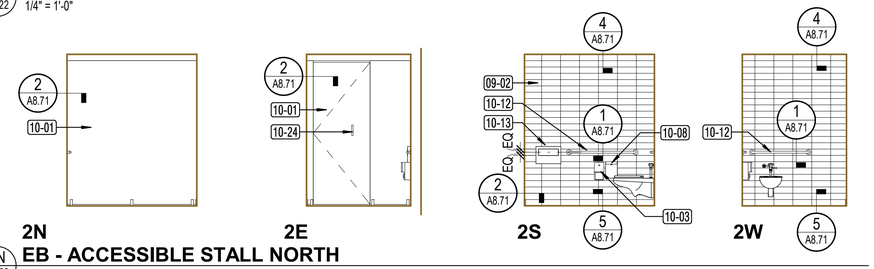

2N EB - ACCESSIBLE STALL NORTH

2N A4.22 1/4" = 1'-0"

2N 2E 2S 2W

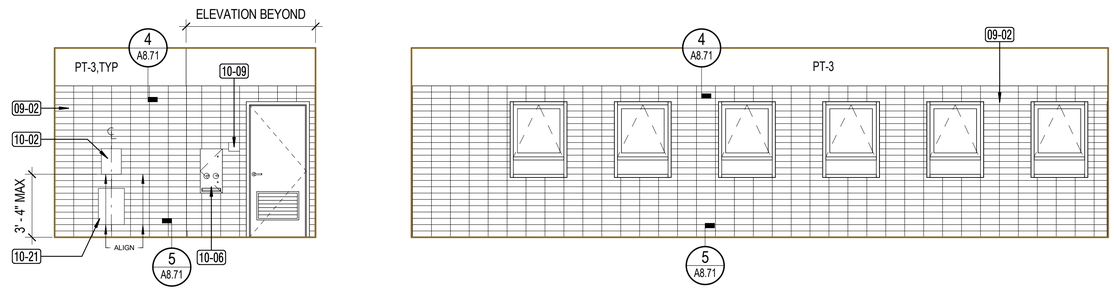

4N 4E

4N EB - RESTROOMS - INT NORTH

4N A4.22 1/4" = 1'-0"

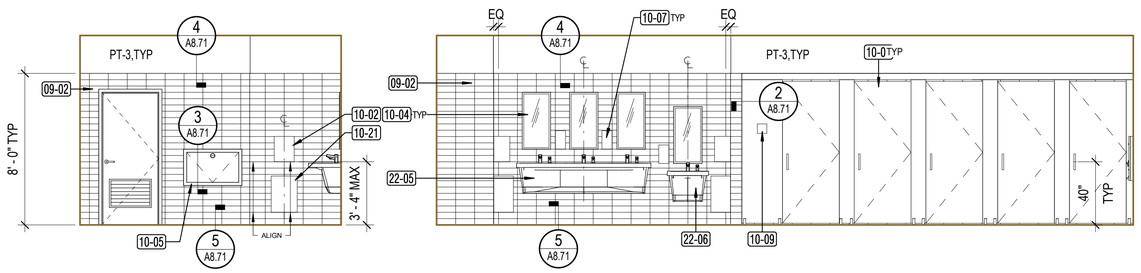

4S 4W

4S EB - RESTROOMS - INT

4S A4.22 1/4" = 1'-0"

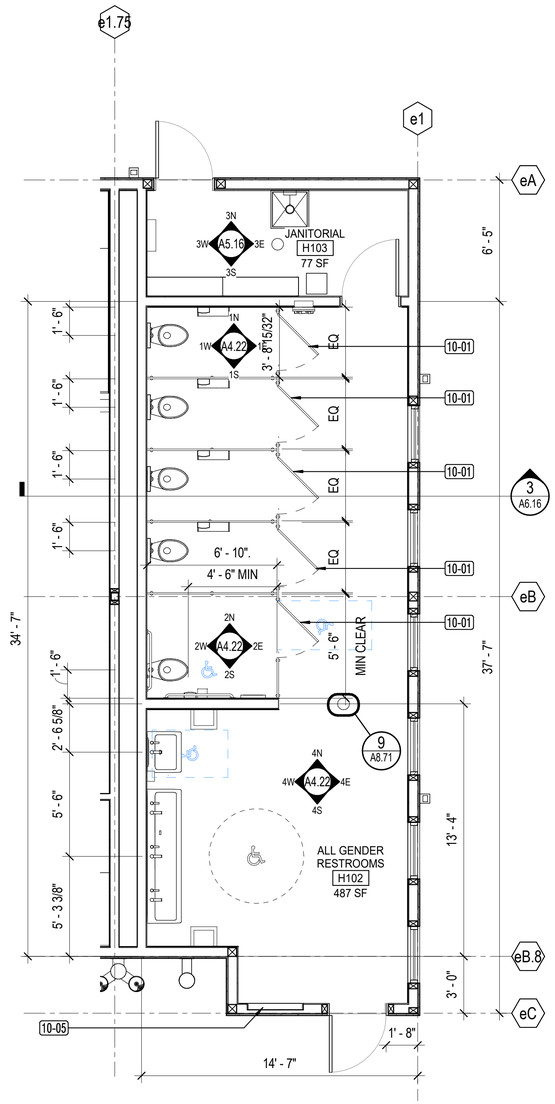

3 A4.22 01 - ENLARGED RESTROOM - EAST BUILDING GROUP

3 A4.22 1/4" = 1'-0"

GENERAL NOTES

1. RESTROOM DIMENSIONS ON THIS SHEET ARE TO F.O. FINISH, UON.
2. FOR ACCESSIBLE FIXTURE AND ACCESSORY MOUNTING HEIGHTS AND REQUIRED MANEUVERING CLEARANCES, SEE G3.21 AND G3.22.
3. REFER TO PLUMBING DRAWINGS FOR FIXTURES AND DRAINS AND FIXTURE CARRIERS.
4. PROVIDE DOOR PULLS AT BOTH SIDES OF ALL TOILET COMPARTMENT DOORS.

KEYNOTE LEGEND

Key Value	Keynote Text
09-02	INTERIOR CERAMIC TILE
10-01	FULL HEIGHT PHENOLIC TOILET COMPARTMENTS
10-02	PAPER TOWEL DISPENSER, SURFACE MOUNTED, OFCI
10-03	TOILET PAPER DISPENSER, TPD-1, SURFACE MOUNTED, OFCI
10-04	FRAMED GLASS MIRROR
10-05	BABY-CHANGING STATION, SEMI-RECESSED
10-06	SANITARY DISPENSER, RECESSED
10-07	SOAP DISPENSER, OFCI
10-08	SURFACE MOUNTED SANITARY TRASH RECEPTACLE
10-09	SIGN, SWD
10-12	ADA GRAB BAR
10-13	SEAT COVER DISPENSER, SURFACE MOUNTED, OFCI
10-21	WALL MOUNTED WASTE RECEPTACLE
10-24	COAT HOOK
10-32	TOILET PAPER DISPENSER JUMBO ROLL, TPD-3, SURFACE MOUNTED, OFCI
22-05	SOLID SURFACE WALL-HUNG LAVATORY, SPD
22-06	SOLID SURFACE ACCESSIBLE WALL-HUNG LAVATORY, SPD

APPROVALS

IDENTIFICATION STAMP
DIV. OF THE STATE ARCHITECT
APP: 01-119409 INC:
REVIEWED FOR
SS ☑ FLS ☑ ACS ☑
DATE: 03/14/2022

NOLL & TAM ARCHITECTS
729 Heinz Avenue
Berkeley, CA 94710
tel 510.542.2200
fax 510.542.2201

SEAL

LICENSED ARCHITECT
CHRISTOPHER NOLL
No. C15916
REN. 12-31-23
STATE OF CALIFORNIA

PROJECT TITLE

Peralta Community College District
MERRITT COLLEGE NEW LANDSCAPE HORTICULTURE COMPLEX

12500 Campus Drive
Oakland, CA 94619

BID SET

ISSUE DATE 03/03/2022
N&T JOB NUMBER 22003

REVISIONS

	DATE	DESCRIPTION

DRAWN BY Author CHECKED BY Checker

SHEET TITLE
ENLARGED PLANS - EAST RESTROOMS

SHEET NUMBER
A4.22

3/3/2022 11:29:28 AM BIM 360://PCCD Merritt Horticulture/Merritt Horticulture_2020.rvt

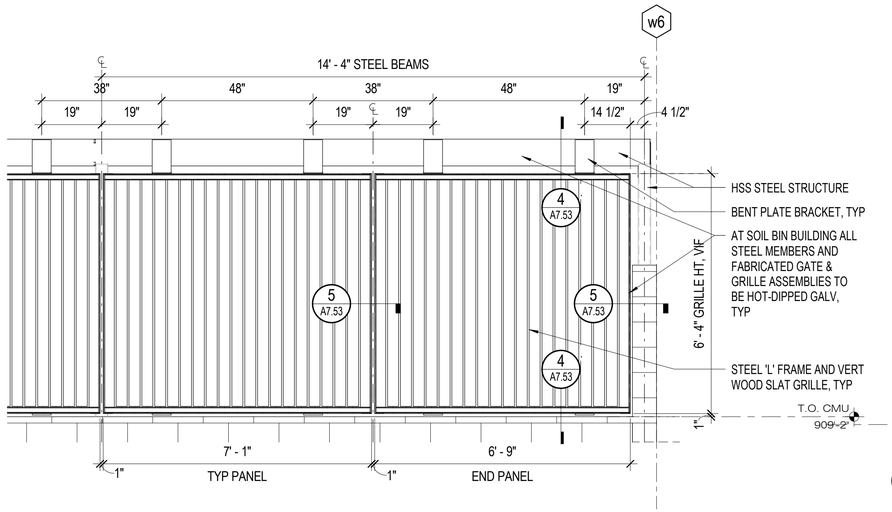

5 A4.23 GRILLE ELEV
1/2" = 1'-0"

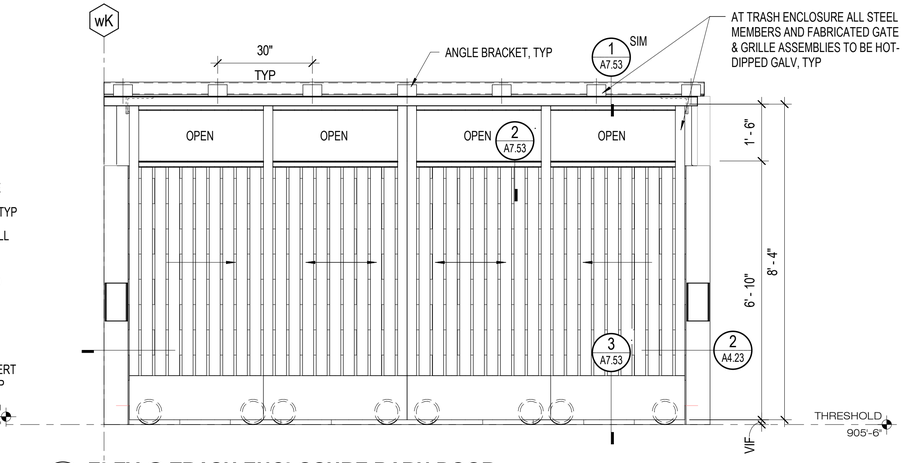

1 A4.23 ELEV @ TRASH ENCLOSURE BARN DOOR
1/2" = 1'-0"

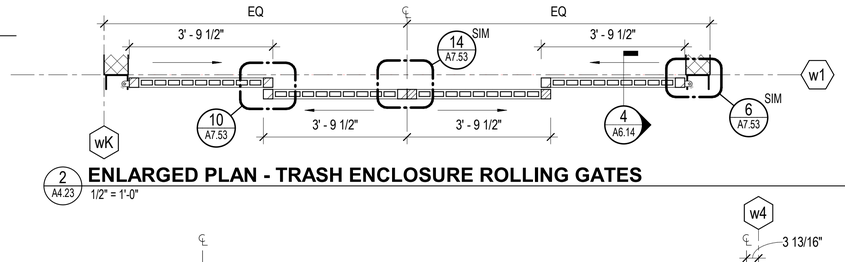

2 A4.23 ENLARGED PLAN - TRASH ENCLOSURE ROLLING GATES
1/2" = 1'-0"

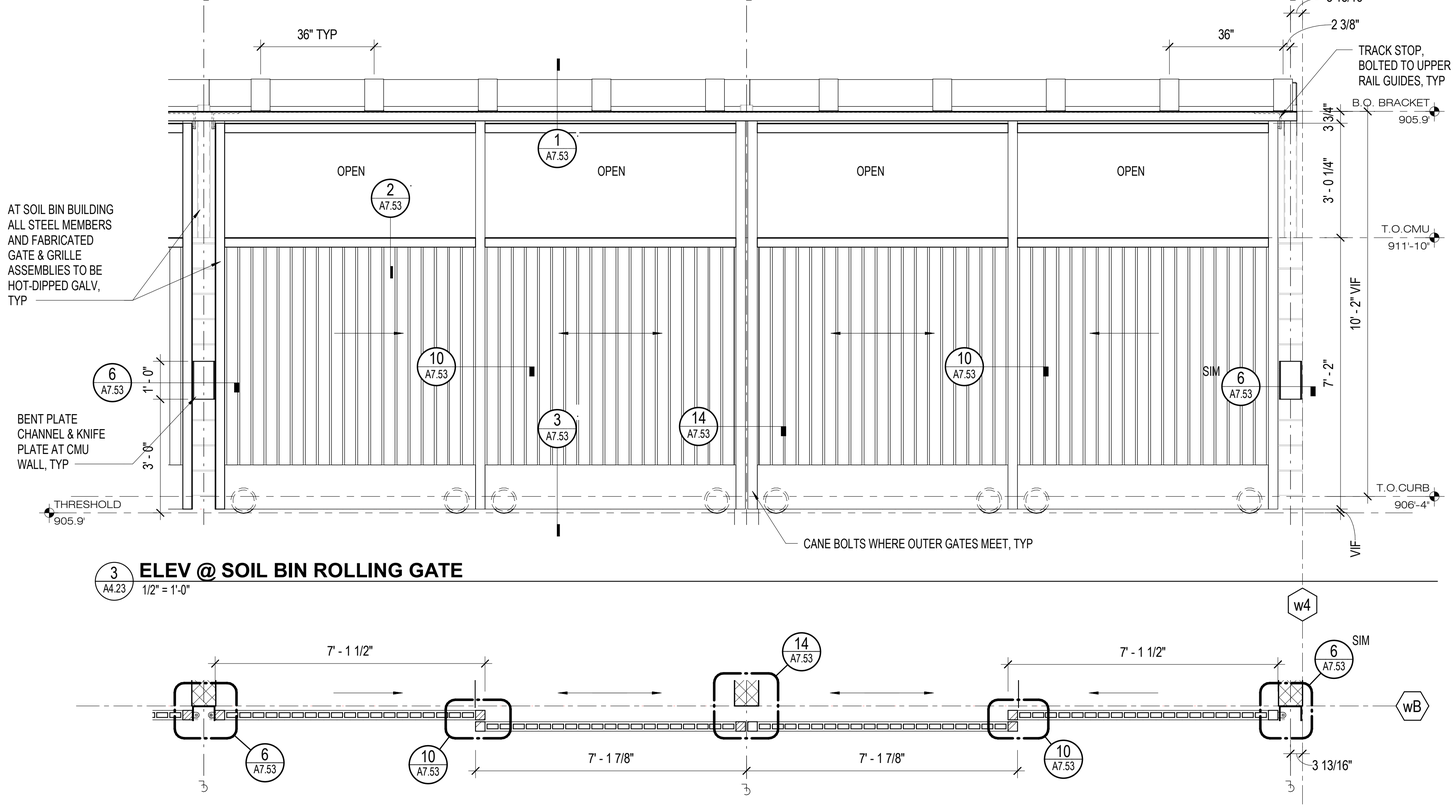

3 A4.23 ELEV @ SOIL BIN ROLLING GATE
1/2" = 1'-0"

4 A4.23 ENLARGED PLAN - SOIL BIN ROLLING GATE
1/2" = 1'-0"

KEYNOTE LEGEND	
Key Value	**Keynote Text**

GENERAL NOTES

1. FOR WINDOW SCHEDULE AND TYPES, REFER TO SHEET A2.71
2. FOR WALL ASSEMBLY BASE DETAILS REFER TO SHEET A7.22
3. ALL STRUCTURAL AND NON-STRUCTURAL STEEL, EXPOSED AND CONCEALED, INCLUDING PLATES, CONNECTIONS, ETC. TO BE HOT-DIPPED GALV, UON
4. EXPOSED STEEL COLUMNS TO BE WRAPPED IN SHOP PRIOR TO SHIPPING
5. FOR RULES FOR POLYASH SIDING ALIGNMENTS, SEE DETAIL 2 / A3.21

APPROVALS

IDENTIFICATION STAMP
DIV. OF THE STATE ARCHITECT
APP: 01-119409 INC:
REVIEWED FOR
SS ☑ FLS ☑ ACS ☑
DATE: 03/14/2022

NOLL & TAM ARCHITECTS
729 Heinz Avenue
Berkeley, CA 94710
tel 510.542.2200
fax 510.542.2201

SEAL

LICENSED ARCHITECT
CHRISTOPHER NOLL
No. C15916
REN. 12-31-23
STATE OF CALIFORNIA

PROJECT TITLE

Peralta Community College District
MERRITT COLLEGE NEW LANDSCAPE HORTICULTURE COMPLEX

12500 Campus Drive
Oakland, CA 94619

BID SET

ISSUE DATE 03/03/2022
N&T JOB NUMBER 22003

REVISIONS

	DATE	DESCRIPTION

DRAWN BY Author | CHECKED BY Checker

SHEET TITLE
ENLARGED PLANS - GATES & FENCES

SHEET NUMBER
A4.23

3/3/2022 11:29:32 AM BIM 360://PCCD Merritt Horticulture/Merritt Horticulture_2020.rvt

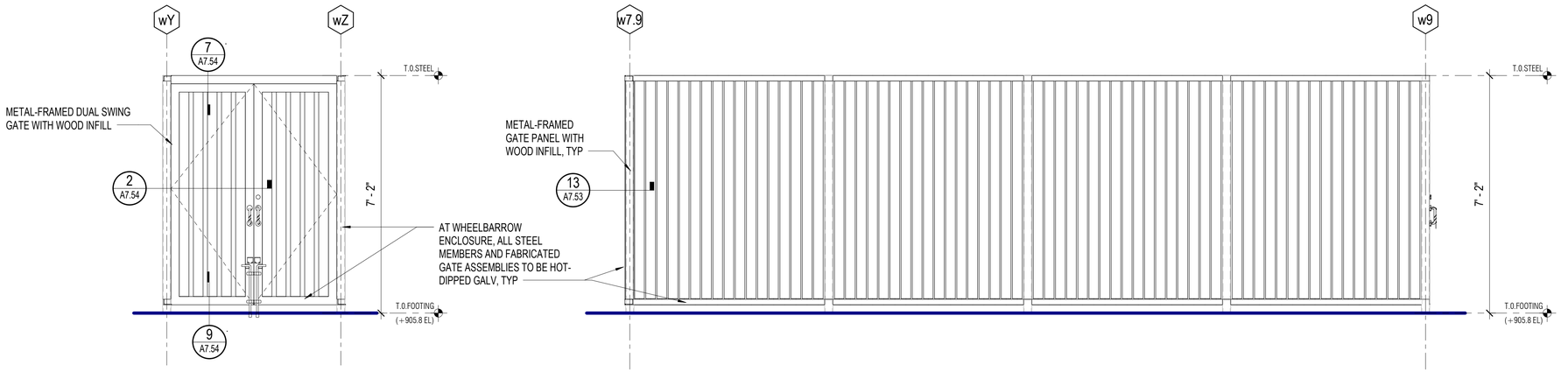

1 A4.24 WHEELBARROW ENCLOSURE E, W SIM

1/2" = 1'-0"

2 A4.24 WHEELBARROW ENCLOSURE N, S SIM

1/2" = 1'-0"

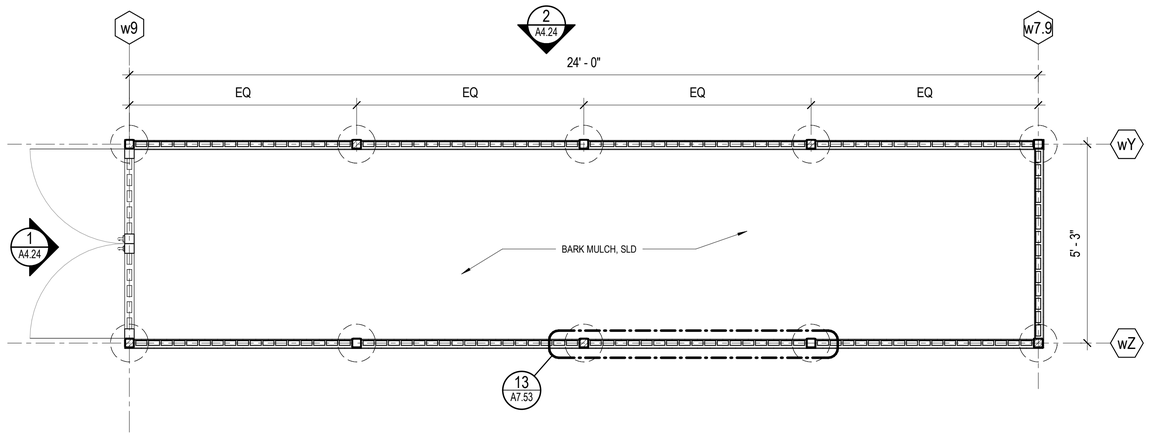

3 A4.24 WHEELBARROW ENCLOSURE ENLARGED PLAN

1/2" = 1'-0"

APPROVALS

IDENTIFICATION STAMP
DIV. OF THE STATE ARCHITECT
APP: 01-119409 INC:
REVIEWED FOR
SS ☑ FLS ☑ ACS ☑
DATE: 03/14/2022

NOLL & TAM ARCHITECTS
729 Heinz Avenue
Berkeley, CA 94710
tel 510.542.2200
fax 510.542.2201

SEAL

LICENSED ARCHITECT
CHRISTOPHER NOLL
No. C15916
REN. 12-31-23
STATE OF CALIFORNIA

PROJECT TITLE

Peralta Community College District
MERRITT COLLEGE NEW LANDSCAPE HORTICULTURE COMPLEX

12500 Campus Drive
Oakland, CA 94619

BID SET

ISSUE DATE 03/03/2022
N&T JOB NUMBER 22003

REVISIONS

#	DATE	DESCRIPTION

DRAWN BY Author | CHECKED BY Checker

SHEET TITLE
ENLARGED PLANS - WHEELBARROW ENCLOSURE

SHEET NUMBER
A4.24

3/3/2022 11:29:33 AM BIM 360://PCCD Merritt Horticulture/Merritt Horticulture_2020.rvt

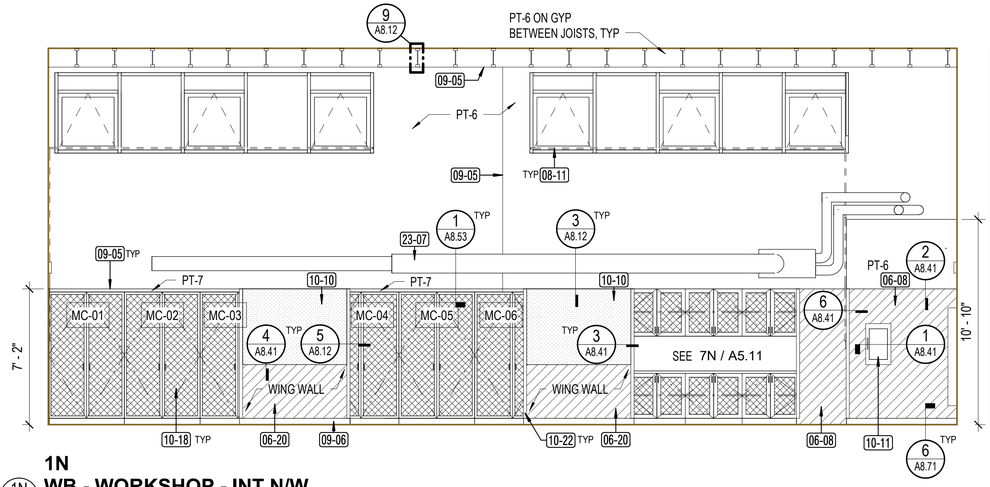

1N

WB - WORKSHOP - INT N/W

1/4" = 1'-0"

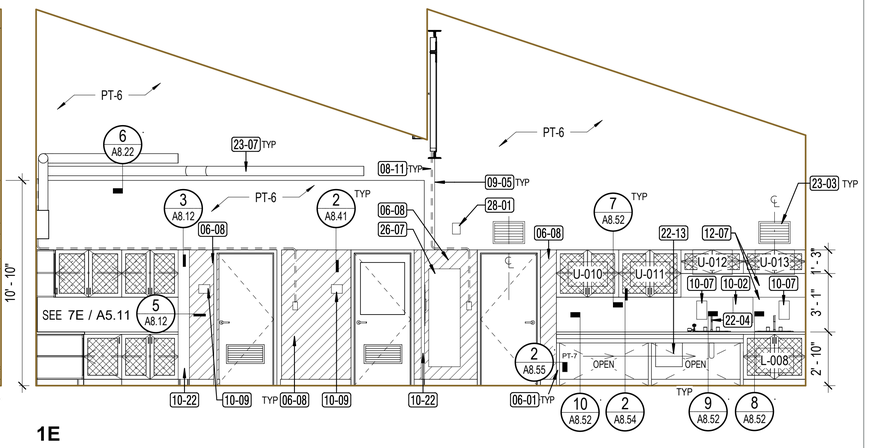

1E

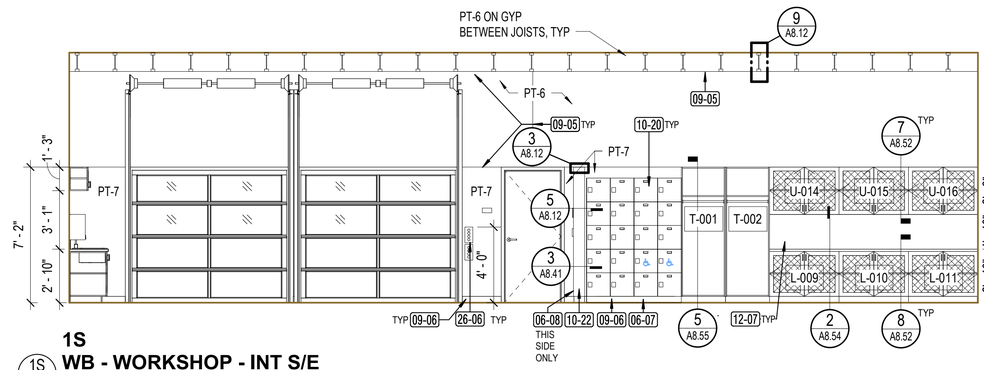

1S

WB - WORKSHOP - INT S/E

1/4" = 1'-0"

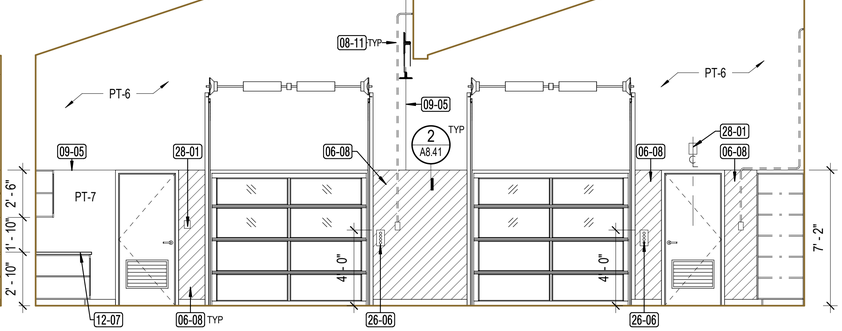

1W

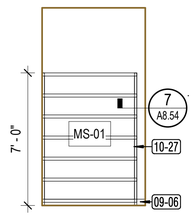

WB - STOR 3 - INT NORTH

1/4" = 1'-0"

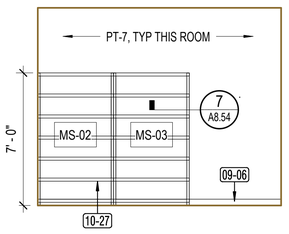

3

WB - STORAGE 2 - INT

1/4" = 1'-0"

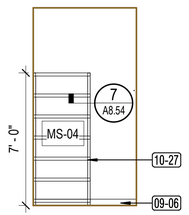

NORTH

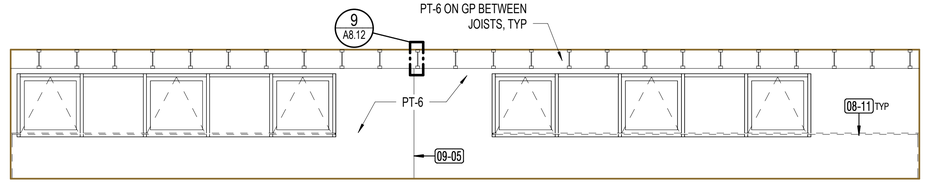

WB - WORKSHOP - INT CLERESTORY

1/4" = 1'-0"

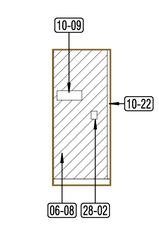

WB - WORKSHOP WING WALL

1/4" = 1'-0"

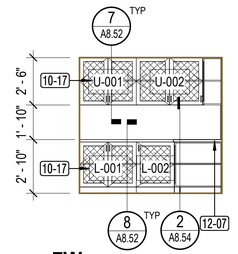

7W

WB - WORKSHOP ALCOVE - EAST

1/4" = 1'-0"

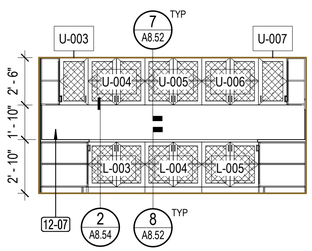

7N

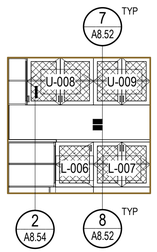

7E

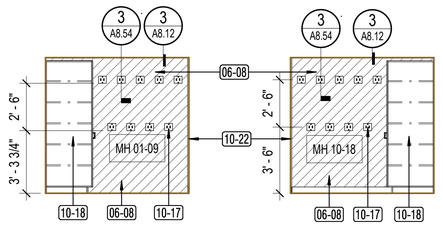

6E 6W

WB - WORKSHOP ALCOVE - MIDDLE

1/4" = 1'-0"

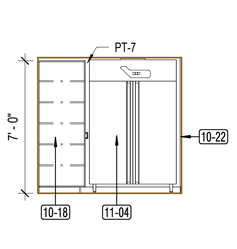

WB - WORKSHOP ALCOVE - WEST

1/4" = 1'-0"

GENERAL NOTES

1. ALL CABINET DOORS AND DRAWERS TO HAVE CABINET LOCKS, SEE SPECIFICATIONS
2. REFER TO 4 / G3.21 AND 7 / G3.21 FOR FEC, ELECTRICAL DEVICES AND GENERAL MOUNTING HEIGHT REQUIREMENTS.
3. ALL GLASS IN CABINET DOORS TO BE LAMINATED
4. FOR PARTITION ANCHORAGE DETAILS, SEE A8.12

PAINT COLOR KEY

	COLOR	FINISH
PT - 1	TBD	FLAT
PT - 2	TBD	FLAT
PT - 3	TBD	EGGSHELL
PT - 4	TBD	FLAT
PT - 5	TBD	EGGSHELL
PT - 6	TBD	FLAT
PT - 7	TBD	EGGSHELL
PT - 8	TBD	EGGSHELL
PT - 9	TBD	SEMI-GLOSS

KEYNOTE LEGEND

Key Value	Keynote Text
06-01	PLYWOOD BACKED PLAM SUPPORT LEG
06-07	4" HIGH CUSTOM PEDESTAL
06-08	PLYWOOD WAINSCOT, 7'-2" AFF TO TOP
06-20	PLYWOOD WAINSCOT, 38" AFF TO TOP
08-11	WINDOW ACTUATOR CONDUIT PATH
09-05	GYPSUM WALLBOARD CONTROL JOINT
09-06	RUBBER BASE
10-02	PAPER TOWEL DISPENSER, SURFACE MOUNTED, OFCI
10-07	SOAP DISPENSER, OFCI
10-09	SIGN, SWD
10-10	CORK TACKABLE PANEL
10-11	FIRE EXTINGUISHER CABINET
10-17	TOOL STORAGE RACK - METAL
10-18	FULLY VENTILATED METAL STORAGE CABINET
10-20	PHENOLIC LOCKERS
10-22	STAINLESS STEEL WALL GUARD
10-27	OPEN METAL STORAGE SHELVING
11-04	REINSTALL RELOCATED COMMERCIAL REFRIGERATOR, OFCI
12-07	SSTL COUNTERTOP WITH FULL HEIGHT BACKSPLASH
22-04	SSTL ACCESSIBLE SINK, SPD
22-13	WALL-MOUNTED TANKLESS HOT WATER HEATER, SPD
23-03	EXTERIOR LOUVER, SMD
23-07	EXPOSED MECHANICAL DUCT AND/OR EQUIPMENT, SMD, PAINT
26-06	OVERHEAD DOOR ACTUATOR CONTROLS
26-07	ELECTRICAL PANEL, SED
28-01	FIRE ALARM SPEAKER, SFAD
28-02	FIRE ALARM MONITOR MODULE, SFAD

APPROVALS

IDENTIFICATION STAMP
DIV. OF THE STATE ARCHITECT
APP: 01-119409 INC:
REVIEWED FOR
SS ☑ FLS ☑ ACS ☑
DATE: 03/14/2022

NOLL & TAM ARCHITECTS
729 Heinz Avenue
Berkeley, CA 94710
tel 510.542.2200
fax 510.542.2201

SEAL

LICENSED ARCHITECT
CHRISTOPHER NOLL
No. C15916
REN. 12-31-23
STATE OF CALIFORNIA

PROJECT TITLE

Peralta Community College District

MERRITT COLLEGE NEW LANDSCAPE HORTICULTURE COMPLEX

12500 Campus Drive
Oakland, CA 94619

BID SET

ISSUE DATE 03/03/2022
N&T JOB NUMBER 22003

REVISIONS

	DATE	DESCRIPTION

DRAWN BY Author CHECKED BY Checker

SHEET TITLE

INTERIOR ELEVATIONS - WEST BUILDING GROUP

SHEET NUMBER

A5.11

3/3/2022 11:29:41 AM BIM 360://PCCD Merritt Horticulture/Merritt Horticulture_2020.rvt

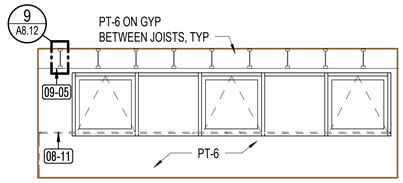

2 WB - STORAGE - INT CLERESTORY
2 / A5.12 — 1/4" = 1'-0"

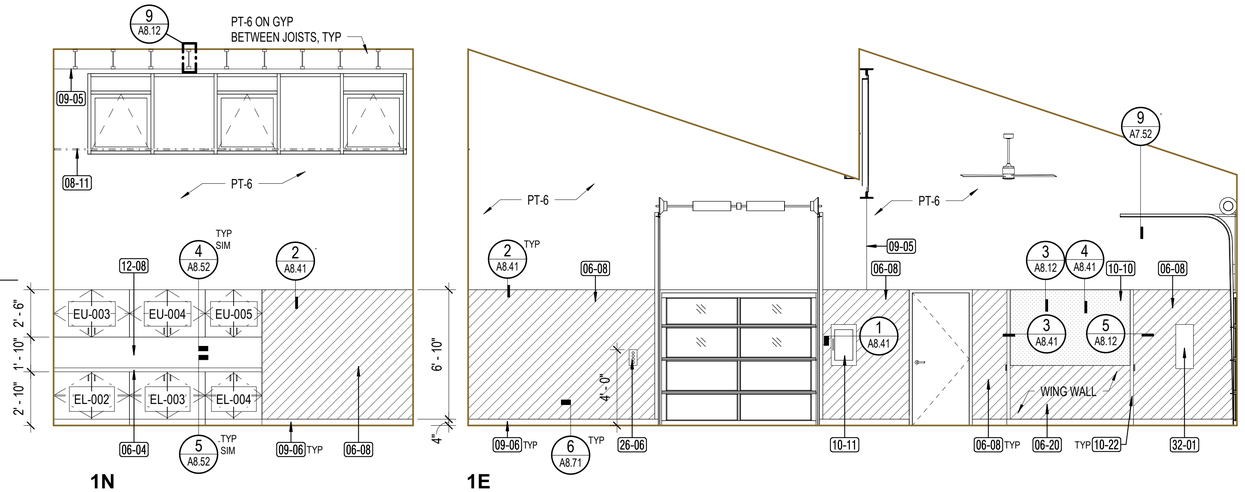

1N WB - STORAGE - INT N/E
1N / A5.12 — 1/4" = 1'-0"

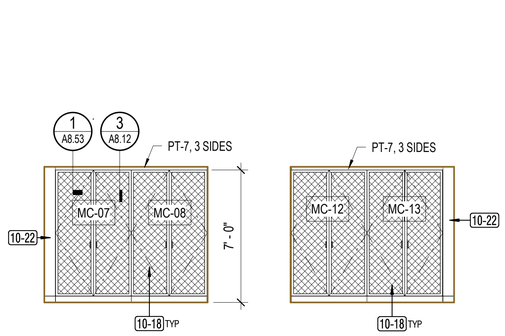

3 WB - STORAGE SHELVING - NORTH & SOUTH
3 / A5.12 — 1/4" = 1'-0"

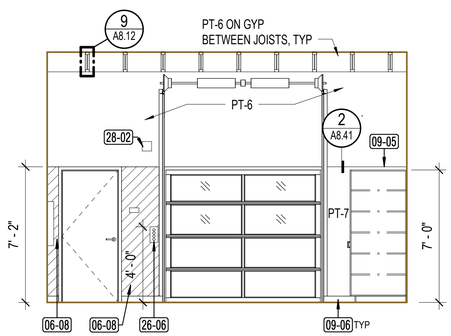

1S WB - STORAGE - INT S/W
1S / A5.12 — 1/4" = 1'-0"

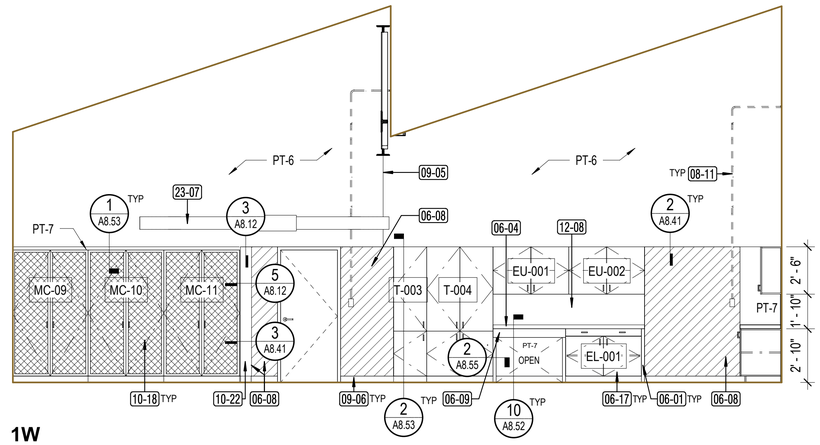

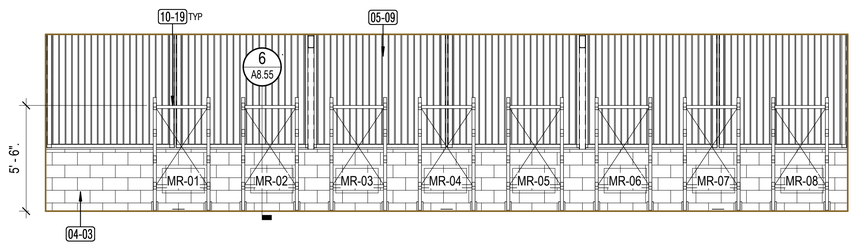

1 WB - SOIL BINS - INT NORTH
1 / A5.12 — 1/4" = 1'-0"

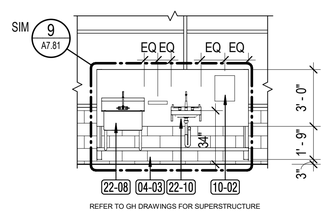

REFER TO GH DRAWINGS FOR SUPERSTRUCTURE

5 WB - GREENHOUSE 5 - S
5 / A5.12 — 1/4" = 1'-0"

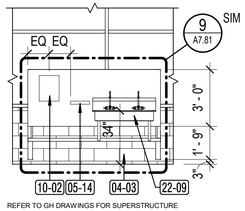

REFER TO GH DRAWINGS FOR SUPERSTRUCTURE

4 WB - GREENHOUSE 4 - N
4 / A5.12 — 1/4" = 1'-0"

GENERAL NOTES

1. ALL CABINET DOORS AND DRAWERS TO HAVE CABINET LOCKS, SEE SPECIFICATIONS
2. REFER TO 4 / G3.21 AND 7 / G3.21 FOR FEC, ELECTRICAL DEVICES AND GENERAL MOUNTING HEIGHT REQUIREMENTS.
3. ALL GLASS IN CABINET DOORS TO BE LAMINATED
4. FOR PARTITION ANCHORAGE DETAILS, SEE A8.12

PAINT COLOR KEY

	COLOR	FINISH
PT - 1	TBD	FLAT
PT - 2	TBD	FLAT
PT - 3	TBD	EGGSHELL
PT - 4	TBD	FLAT
PT - 5	TBD	EGGSHELL
PT - 6	TBD	FLAT
PT - 7	TBD	EGGSHELL
PT - 8	TBD	EGGSHELL
PT - 9	TBD	SEMI-GLOSS

KEYNOTE LEGEND

Key Value	Keynote Text
04-03	SMOOTH-FACE SIDE OF CONCRETE MASONRY UNIT WALL
05-09	METAL-FRAMED FENCE WITH WOOD INFILL
05-14	METAL SIDE GUARD AT OUTDOOR SINKS
06-01	PLYWOOD BACKED PLAM SUPPORT LEG
06-04	REINSTALLED RELOCATED WOOD BLOCK COUNTERTOP
06-08	PLYWOOD WAINSCOT, 7'-2" AFF TO TOP
06-09	PLAM APRON VALANCE
06-17	REINSTALLED RELOCATED WOOD CABINET
06-20	PLYWOOD WAINSCOT, 38" AFF TO TOP
08-11	WINDOW ACTUATOR CONDUIT PATH
09-05	GYPSUM WALLBOARD CONTROL JOINT
09-06	RUBBER BASE
10-02	PAPER TOWEL DISPENSER, SURFACE MOUNTED, OFCI
10-10	CORK TACKABLE PANEL
10-11	FIRE EXTINGUISHER CABINET
10-18	FULLY VENTILATED METAL STORAGE CABINET
10-19	CANTILEVERED METAL RACK
10-22	STAINLESS STEEL WALL GUARD
12-08	NEW BACKSPLASH, SSTL
22-08	WALL-MOUNTED SSTL SINK, SPD
22-09	WALL-MOUNTED ADA SSTL SINK, SPD
22-10	SSTL ADA HANDWASHING SINK, SPD
23-07	EXPOSED MECHANICAL DUCT AND/OR EQUIPMENT, SMD, PAINT
26-06	OVERHEAD DOOR ACTUATOR CONTROLS
28-02	FIRE ALARM MONITOR MODULE, SFAD
32-01	IRRIGATION CONTROLS PANEL, SLD

APPROVALS

IDENTIFICATION STAMP
DIV. OF THE STATE ARCHITECT
APP: 01-119409 INC:
REVIEWED FOR
SS ☑ FLS ☑ ACS ☑
DATE: 03/14/2022

NOLL & TAM ARCHITECTS
729 Heinz Avenue
Berkeley, CA 94710
tel 510.542.2200
fax 510.542.2201

SEAL

LICENSED ARCHITECT
CHRISTOPHER NOLL
No. C15916
REN. 12-31-23
STATE OF CALIFORNIA

PROJECT TITLE

Peralta Community College District
MERRITT COLLEGE NEW LANDSCAPE HORTICULTURE COMPLEX

12500 Campus Drive
Oakland, CA 94619

BID SET

ISSUE DATE 03/03/2022
N&T JOB NUMBER 22003

REVISIONS

#	DATE	DESCRIPTION

DRAWN BY Author | CHECKED BY Checker

SHEET TITLE
INTERIOR ELEVATIONS - WEST BUILDING GROUP

SHEET NUMBER
A5.12

3/3/2022 11:29:45 AM BIM 360://PCCD Merritt Horticulture/Merritt Horticulture_2020.rvt

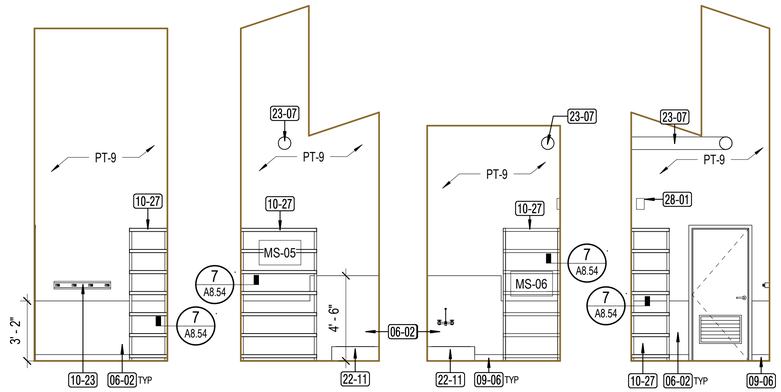

1S WB - JANITORIAL

1S / A5.13 — 1/4" = 1'-0"

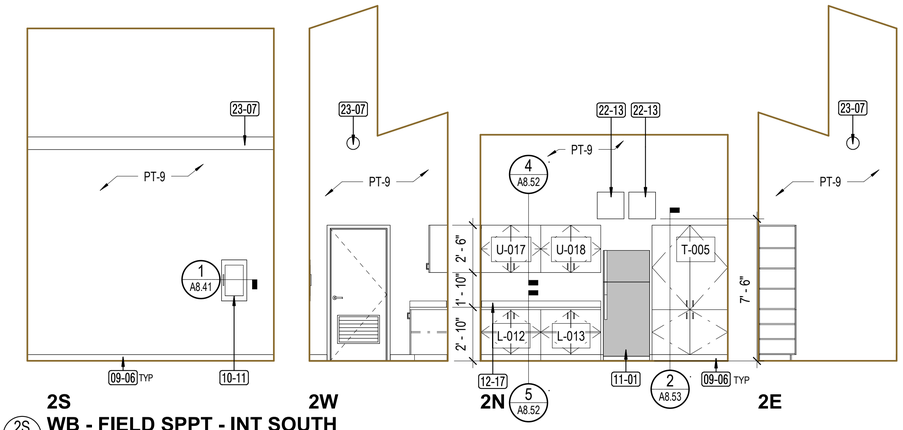

2S WB - FIELD SPPT - INT SOUTH

2S / A5.13 — 1/4" = 1'-0"

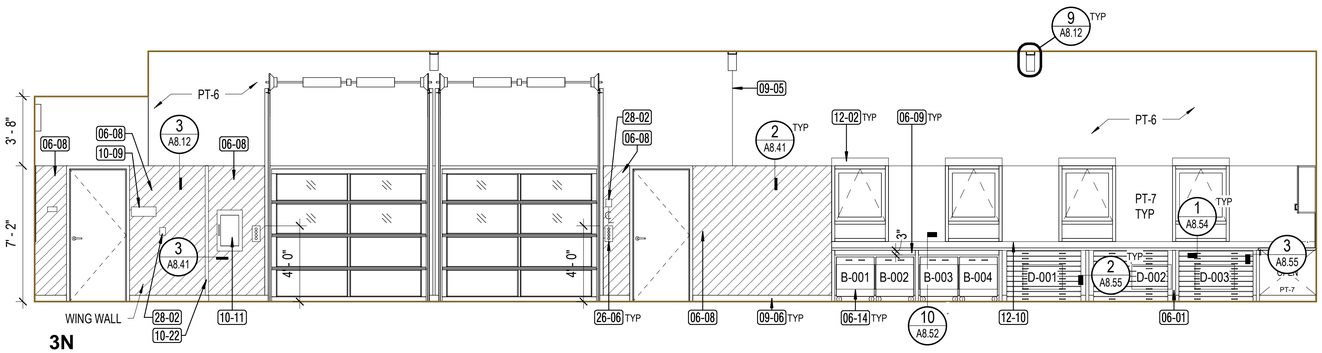

3N WB - HEAD HOUSE - INT N/E

3N / A5.13 — 1/4" = 1'-0"

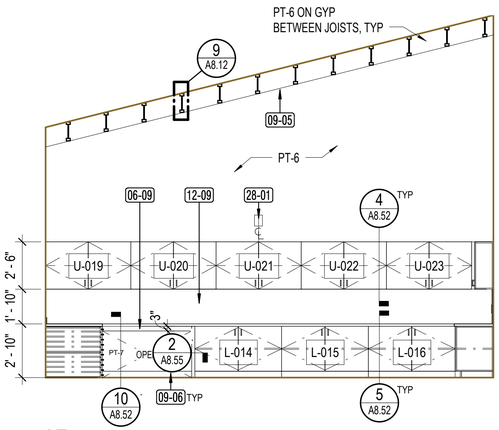

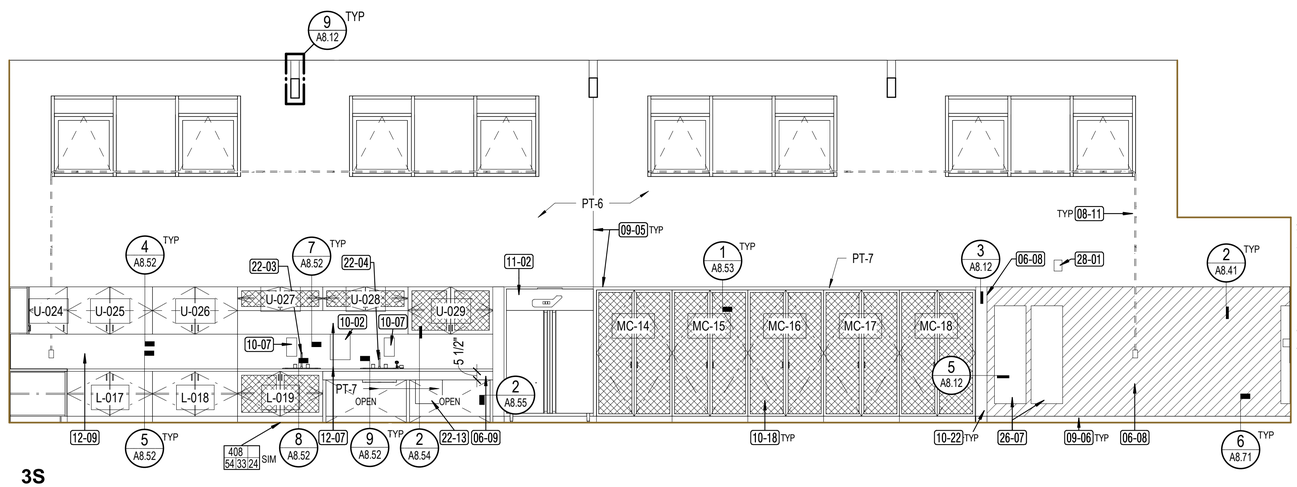

3S WB - HEAD HOUSE - INT S/W

3S / A5.13 — 1/4" = 1'-0"

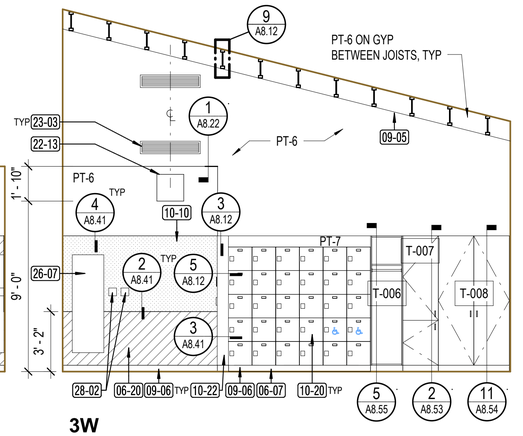

3W

GENERAL NOTES

1. ALL CABINET DOORS AND DRAWERS TO HAVE CABINET LOCKS, SEE SPECIFICATIONS
2. REFER TO 4 / G3.21 AND 7 / G3.21 FOR FEC, ELECTRICAL DEVICES AND GENERAL MOUNTING HEIGHT REQUIREMENTS.
3. ALL GLASS IN CABINET DOORS TO BE LAMINATED
4. FOR PARTITION ANCHORAGE DETAILS, SEE A8.12

PAINT COLOR KEY

	COLOR	FINISH
PT - 1	TBD	FLAT
PT - 2	TBD	FLAT
PT - 3	TBD	EGGSHELL
PT - 4	TBD	FLAT
PT - 5	TBD	EGGSHELL
PT - 6	TBD	FLAT
PT - 7	TBD	EGGSHELL
PT - 8	TBD	EGGSHELL
PT - 9	TBD	SEMI-GLOSS

KEYNOTE LEGEND

Key Value	Keynote Text
06-01	PLYWOOD BACKED PLAM SUPPORT LEG
06-02	FIBERGLASS REINFORCED PANELING
06-07	4" HIGH CUSTOM PEDESTAL
06-08	PLYWOOD WAINSCOT, 7'-2" AFF TO TOP
06-09	PLAM APRON VALANCE
06-14	SOIL BINS ON METAL CASTERS
06-20	PLYWOOD WAINSCOT, 38" AFF TO TOP
08-11	WINDOW ACTUATOR CONDUIT PATH
09-05	GYPSUM WALLBOARD CONTROL JOINT
09-06	RUBBER BASE
10-02	PAPER TOWEL DISPENSER, SURFACE MOUNTED, OFCI
10-07	SOAP DISPENSER, OFCI
10-09	SIGN, SWD
10-10	CORK TACKABLE PANEL
10-11	FIRE EXTINGUISHER CABINET
10-18	FULLY VENTILATED METAL STORAGE CABINET
10-20	PHENOLIC LOCKERS
10-22	STAINLESS STEEL WALL GUARD
10-23	MOP AND BROOM HOLDER
10-27	OPEN METAL STORAGE SHELVING
11-01	RESIDENTIAL REFRIGERATOR, OFCI
11-02	COMMERCIAL REFRIGERATOR, OFCI
12-02	MANUAL ROLLER SHADES, 3% OPENNESS
12-07	SSTL COUNTERTOP WITH FULL HEIGHT BACKSPLASH
12-09	SOLID SURFACE COUNTERTOP WITH FULL HEIGHT BACKSPLASH
12-10	SOLID SURFACE COUNTERTOP WITH 4" BACKSPLASH
12-17	SSTL COUNTERTOP WITH 4" BACKSPLASH
22-03	SSTL SINK, SPD
22-04	SSTL ACCESSIBLE SINK, SPD
22-11	FLOOR MOP SINK, SPD
22-13	WALL-MOUNTED TANKLESS HOT WATER HEATER, SPD
23-03	EXTERIOR LOUVER, SMD
23-07	EXPOSED MECHANICAL DUCT AND/OR EQUIPMENT, SMD, PAINT
26-06	OVERHEAD DOOR ACTUATOR CONTROLS
26-07	ELECTRICAL PANEL, SED
28-01	FIRE ALARM SPEAKER, SFAD
28-02	FIRE ALARM MONITOR MODULE, SFAD

APPROVALS

IDENTIFICATION STAMP
DIV. OF THE STATE ARCHITECT
APP: 01-119409 INC:
REVIEWED FOR
SS ☑ FLS ☑ ACS ☑
DATE: 03/14/2022

NOLL & TAM ARCHITECTS
729 Heinz Avenue
Berkeley, CA 94710
tel 510.542.2200
fax 510.542.2201

SEAL

LICENSED ARCHITECT
CHRISTOPHER NOLL
No. C15916
REN. 12-31-23
STATE OF CALIFORNIA

PROJECT TITLE

Peralta Community College District
MERRITT COLLEGE NEW LANDSCAPE HORTICULTURE COMPLEX

12500 Campus Drive
Oakland, CA 94619

BID SET

ISSUE DATE 03/03/2022
N&T JOB NUMBER 22003

REVISIONS

	DATE	DESCRIPTION

DRAWN BY Author | CHECKED BY Checker

SHEET TITLE
INTERIOR ELEVATIONS - WEST BUILDING GROUP

SHEET NUMBER
A5.13

3/3/2022 11:29:50 AM BIM 360://PCCD Merritt Horticulture/Merritt Horticulture_2020.rvt

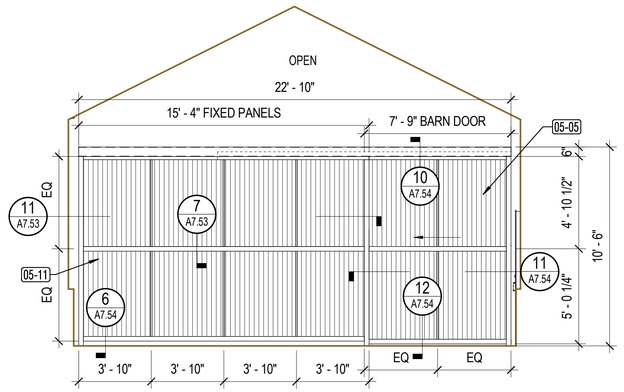

5 A5.14 **EB - GREENHOUSE 1 - GATE/FENCE**
1/4" = 1'-0"

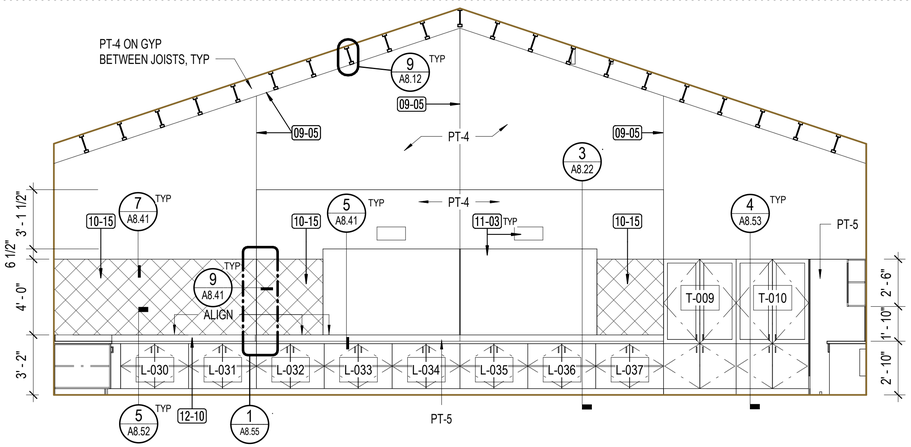

1 A5.14 **EB - CLASS LAB 1 - INT EAST**
1/4" = 1'-0"

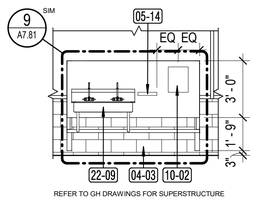

REFER TO GH DRAWINGS FOR SUPERSTRUCTURE

7 A5.14 **EB - GREENHOUSE 3 - E**
1/4" = 1'-0"

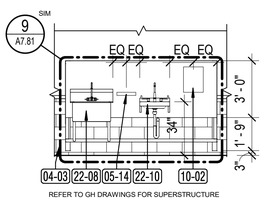

REFER TO GH DRAWINGS FOR SUPERSTRUCTURE

6 A5.14 **EB - GREENHOUSE 1 - W**
1/4" = 1'-0"

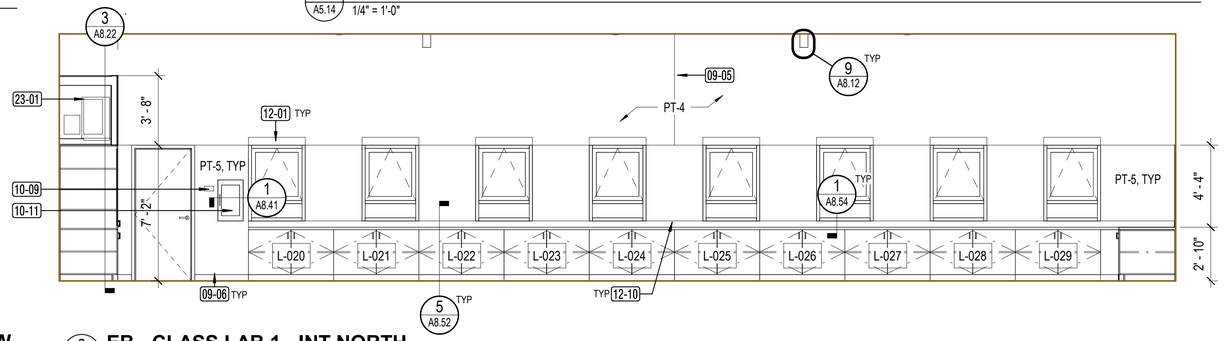

2 A5.14 **EB - CLASS LAB 1 - INT NORTH**
1/4" = 1'-0"

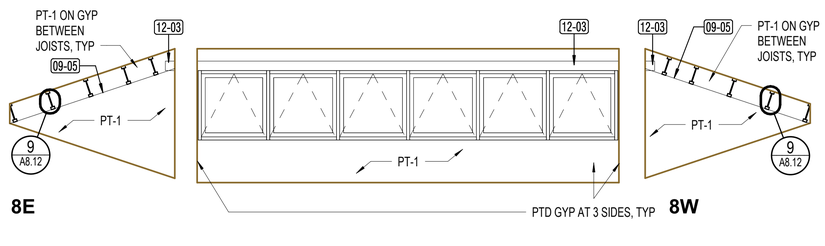

8E 8W

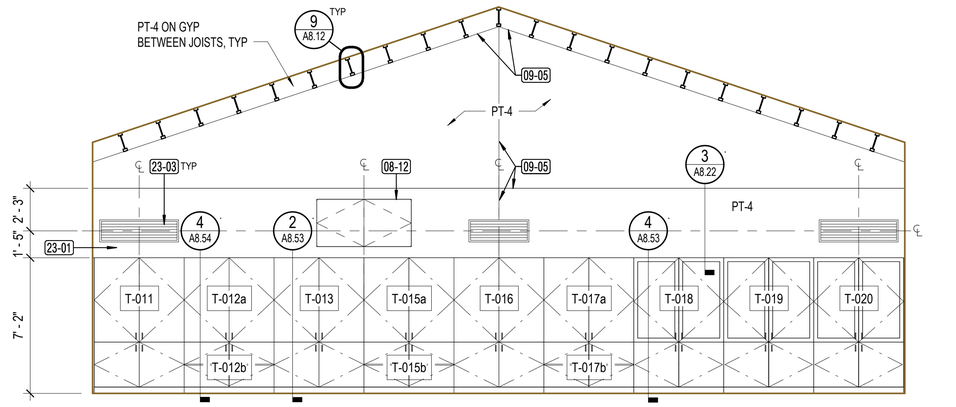

8 A5.14 **EB - ROOF MONITOR AT CLASS LAB 1**
1/4" = 1'-0"

3 A5.14 **EB - CLASS LAB 1 - INT WEST**
1/4" = 1'-0"

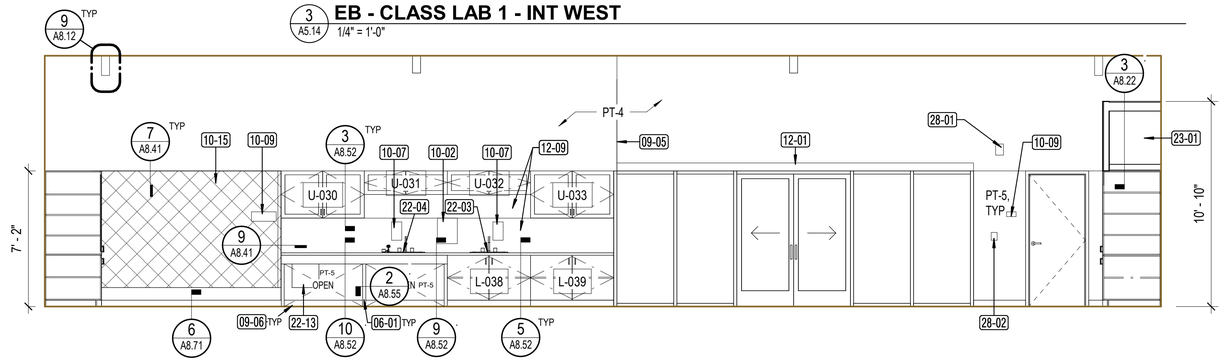

4 A5.14 **EB - CLASS LAB 1 - INT SOUTH**
1/4" = 1'-0"

GENERAL NOTES

1. ALL CABINET DOORS AND DRAWERS TO HAVE CABINET LOCKS, SEE SPECIFICATIONS
2. REFER TO 4 / G3.21 AND 7 / G3.21 FOR FEC, ELECTRICAL DEVICES AND GENERAL MOUNTING HEIGHT REQUIREMENTS.
3. ALL GLASS IN CABINET DOORS TO BE LAMINATED
4. FOR PARTITION ANCHORAGE DETAILS, SEE A8.12

PAINT COLOR KEY

	COLOR	FINISH
PT - 1	TBD	FLAT
PT - 2	TBD	FLAT
PT - 3	TBD	EGGSHELL
PT - 4	TBD	FLAT
PT - 5	TBD	EGGSHELL
PT - 6	TBD	FLAT
PT - 7	TBD	EGGSHELL
PT - 8	TBD	EGGSHELL
PT - 9	TBD	SEMI-GLOSS

KEYNOTE LEGEND

Key Value	Keynote Text
04-03	SMOOTH-FACE SIDE OF CONCRETE MASONRY UNIT WALL
05-05	METAL-FRAMED SLIDING GATE WITH POLYCARBONATE INFILL
05-11	METAL-FRAMED FENCE WITH POLYCARB INFILL
05-14	METAL SIDE GUARD AT OUTDOOR SINKS
06-01	PLYWOOD BACKED PLAM SUPPORT LEG
08-12	ACCESS DOOR
09-05	GYPSUM WALLBOARD CONTROL JOINT
09-06	RUBBER BASE
10-02	PAPER TOWEL DISPENSER, SURFACE MOUNTED, OFCI
10-07	SOAP DISPENSER, OFCI
10-09	SIGN, SWD
10-11	FIRE EXTINGUISHER CABINET
10-15	FABRIC-WRAPPED TACKABLE PANEL
11-03	PROJECTOR AND PROJECTION SURFACE
12-01	MANUAL ROLLER SHADES, 1% OPENNESS
12-03	ELECTRICALLY ACTUATED DOUBLE ROLLER SHADES: 1% & 3% OPENNESS
12-09	SOLID SURFACE COUNTERTOP WITH FULL HEIGHT BACKSPLASH
12-10	SOLID SURFACE COUNTERTOP WITH 4" BACKSPLASH
22-03	SSTL SINK, SPD
22-04	SSTL ACCESSIBLE SINK, SPD
22-08	WALL-MOUNTED SSTL SINK, SPD
22-09	WALL-MOUNTED ADA SSTL SINK, SPD
22-10	SSTL ADA HANDWASHING SINK, SPD
22-13	WALL-MOUNTED TANKLESS HOT WATER HEATER, SPD
23-01	MECHANICAL SOFFIT
23-03	EXTERIOR LOUVER, SMD
28-01	FIRE ALARM SPEAKER, SFAD
28-02	FIRE ALARM MONITOR MODULE, SFAD

APPROVALS

IDENTIFICATION STAMP
DIV. OF THE STATE ARCHITECT
APP: 01-119409 INC:
REVIEWED FOR
SS ☑ FLS ☑ ACS ☑
DATE: 03/14/2022

NOLL & TAM ARCHITECTS
729 Heinz Avenue
Berkeley, CA 94710
tel 510.542.2200
fax 510.542.2201

SEAL

LICENSED ARCHITECT
CHRISTOPHER NOLL
No. C15916
REN. 12-31-23
STATE OF CALIFORNIA

PROJECT TITLE

Peralta Community College District
MERRITT COLLEGE NEW LANDSCAPE HORTICULTURE COMPLEX

12500 Campus Drive
Oakland, CA 94619

BID SET

ISSUE DATE 03/03/2022
N&T JOB NUMBER 22003

REVISIONS

	DATE	DESCRIPTION

DRAWN BY Author CHECKED BY Checker

SHEET TITLE
INTERIOR ELEVATIONS - EAST BUILDING GROUP

SHEET NUMBER
A5.14

3/3/2022 11:29:54 AM BIM 360://PCCD Merritt Horticulture/Merritt Horticulture_2020.rvt

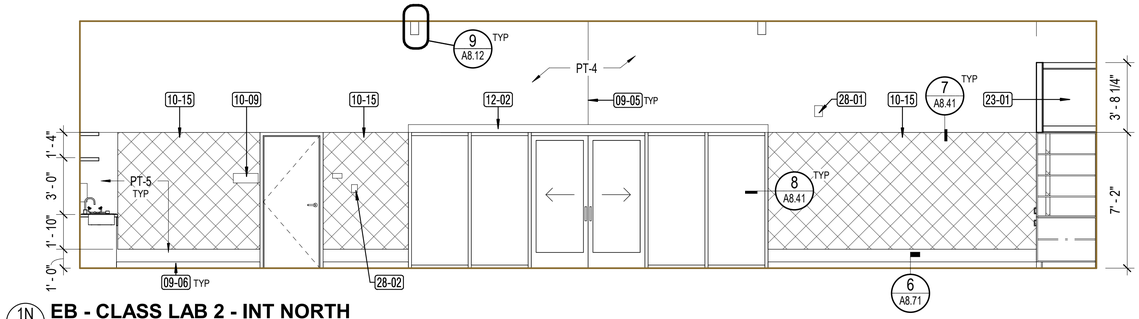

1N A5.15 **EB - CLASS LAB 2 - INT NORTH**
1/4" = 1'-0"

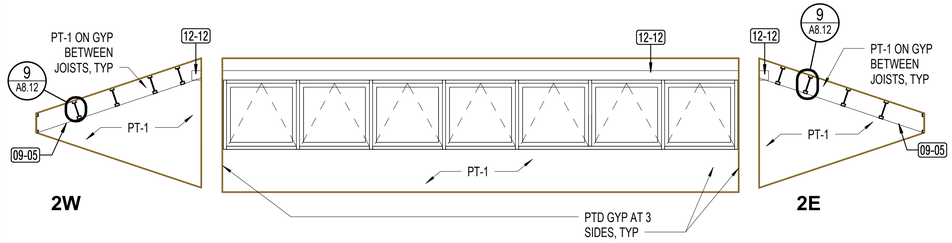

2 A5.15 **EB - ROOF MONITOR AT CLASS LAB 2**
1/4" = 1'-0"

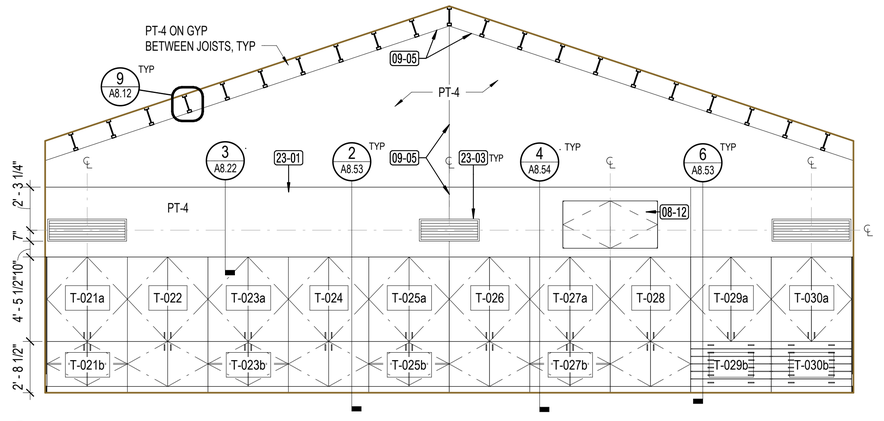

1E A5.15 **EB - CLASS LAB 2 - INT EAST**
1/4" = 1'-0"

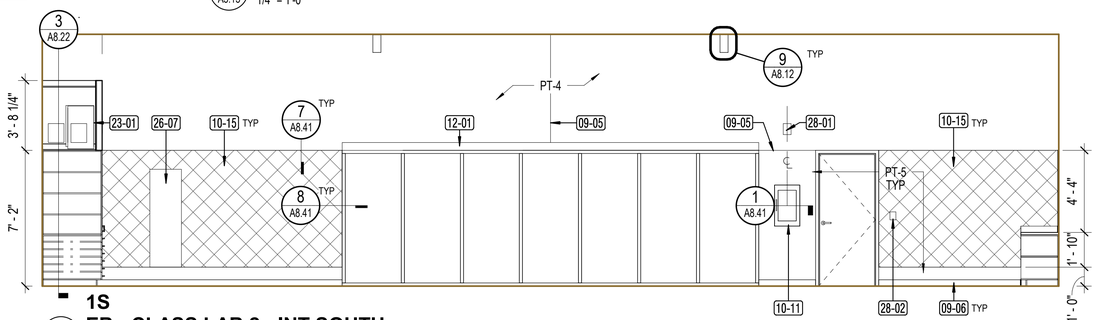

1S A5.15 **EB - CLASS LAB 2 - INT SOUTH**
1/4" = 1'-0"

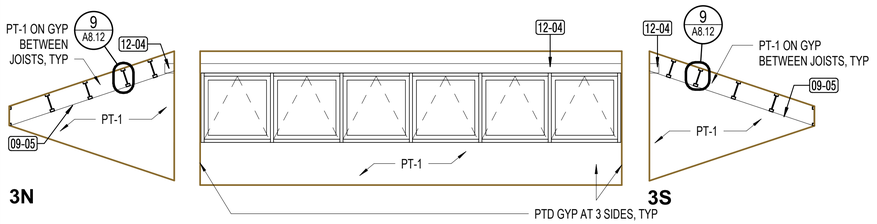

3 A5.15 **EB - ROOF MONITOR AT CLASS LAB 3**
1/4" = 1'-0"

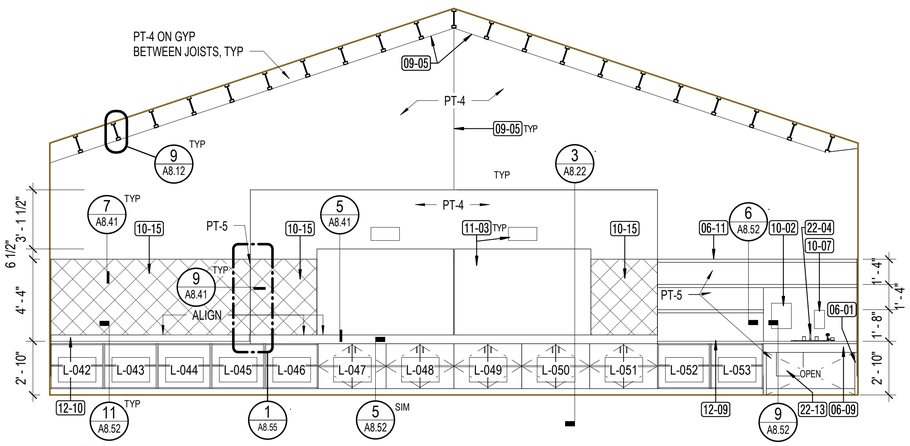

1W A5.15 **EB - CLASS LAB 2 - INT WEST**
1/4" = 1'-0"

GENERAL NOTES

1. ALL CABINET DOORS AND DRAWERS TO HAVE CABINET LOCKS, SEE SPECIFICATIONS
2. REFER TO 4 / G3.21 AND 7 / G3.21 FOR FEC, ELECTRICAL DEVICES AND GENERAL MOUNTING HEIGHT REQUIREMENTS.
3. ALL GLASS IN CABINET DOORS TO BE LAMINATED
4. FOR PARTITION ANCHORAGE DETAILS, SEE A8.12

PAINT COLOR KEY

	COLOR	FINISH
PT - 1	TBD	FLAT
PT - 2	TBD	FLAT
PT - 3	TBD	EGGSHELL
PT - 4	TBD	FLAT
PT - 5	TBD	EGGSHELL
PT - 6	TBD	FLAT
PT - 7	TBD	EGGSHELL
PT - 8	TBD	EGGSHELL
PT - 9	TBD	SEMI-GLOSS

KEYNOTE LEGEND

Key Value	Keynote Text
06-01	PLYWOOD BACKED PLAM SUPPORT LEG
06-09	PLAM APRON VALANCE
06-11	WALL MOUNTED LAMINATED SHELVES
08-12	ACCESS DOOR
09-05	GYPSUM WALLBOARD CONTROL JOINT
09-06	RUBBER BASE
10-02	PAPER TOWEL DISPENSER, SURFACE MOUNTED, OFCI
10-07	SOAP DISPENSER, OFCI
10-09	SIGN, SWD
10-11	FIRE EXTINGUISHER CABINET
10-15	FABRIC-WRAPPED TACKABLE PANEL
11-03	PROJECTOR AND PROJECTION SURFACE
12-01	MANUAL ROLLER SHADES, 1% OPENNESS
12-02	MANUAL ROLLER SHADES, 3% OPENNESS
12-04	ELECTRICALLY ACTUATED ROLLER SHADES, 1% OPENNESS
12-09	SOLID SURFACE COUNTERTOP WITH FULL HEIGHT BACKSPLASH
12-10	SOLID SURFACE COUNTERTOP WITH 4" BACKSPLASH
12-12	ELECTRICALLY ACTUATED ROLLER SHADES, 3% OPENNESS
22-04	SSTL ACCESSIBLE SINK, SPD
22-13	WALL-MOUNTED TANKLESS HOT WATER HEATER, SPD
23-01	MECHANICAL SOFFIT
23-03	EXTERIOR LOUVER, SMD
26-07	ELECTRICAL PANEL, SED
28-01	FIRE ALARM SPEAKER, SFAD
28-02	FIRE ALARM MONITOR MODULE, SFAD

APPROVALS

IDENTIFICATION STAMP
DIV. OF THE STATE ARCHITECT
APP: 01-119409 INC:
REVIEWED FOR
SS ☑ FLS ☑ ACS ☑
DATE: 03/14/2022

NOLL & TAM ARCHITECTS
729 Heinz Avenue
Berkeley, CA 94710
tel 510.542.2200
fax 510.542.2201

SEAL

LICENSED ARCHITECT
CHRISTOPHER NOLL
No. C15916
REN. 12-31-23
STATE OF CALIFORNIA

PROJECT TITLE

Peralta Community College District
MERRITT COLLEGE NEW LANDSCAPE HORTICULTURE COMPLEX

12500 Campus Drive
Oakland, CA 94619

BID SET

ISSUE DATE 03/03/2022
N&T JOB NUMBER 22003

REVISIONS

	DATE	DESCRIPTION

DRAWN BY Author | CHECKED BY Checker

SHEET TITLE
INTERIOR ELEVATIONS - EAST BUILDING GROUP

SHEET NUMBER
A5.15

3/3/2022 11:29:58 AM BIM 360://PCCD Merritt Horticulture/Merritt Horticulture_2020.rvt

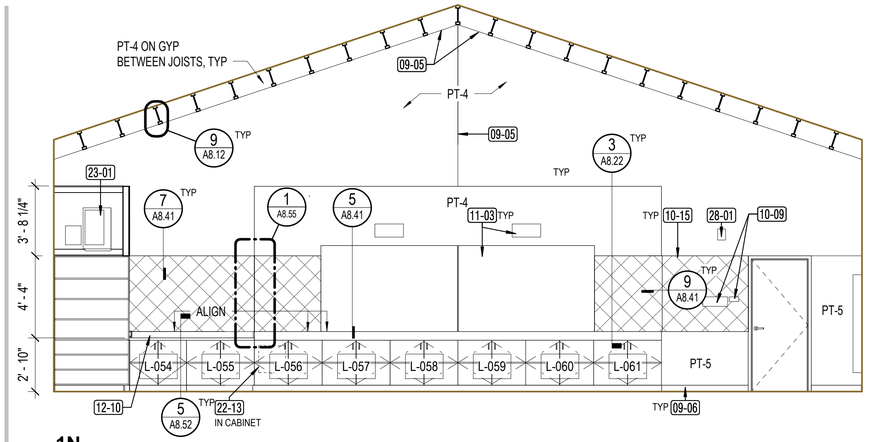

1N

EB - CLASS LAB 3 - INT N/E

1N A5.16 1/4" = 1'-0"

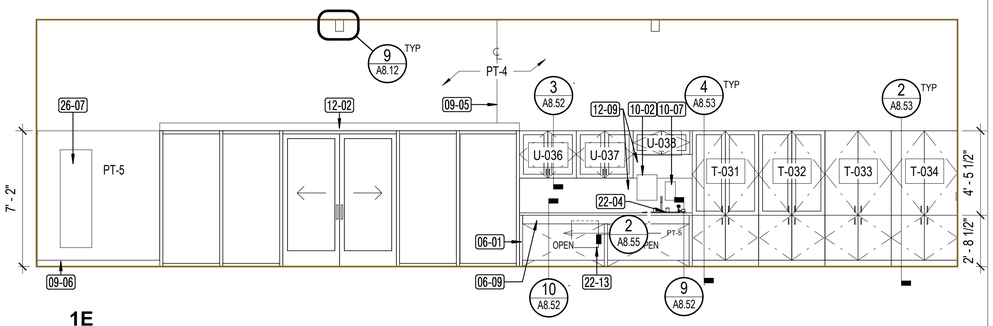

1E

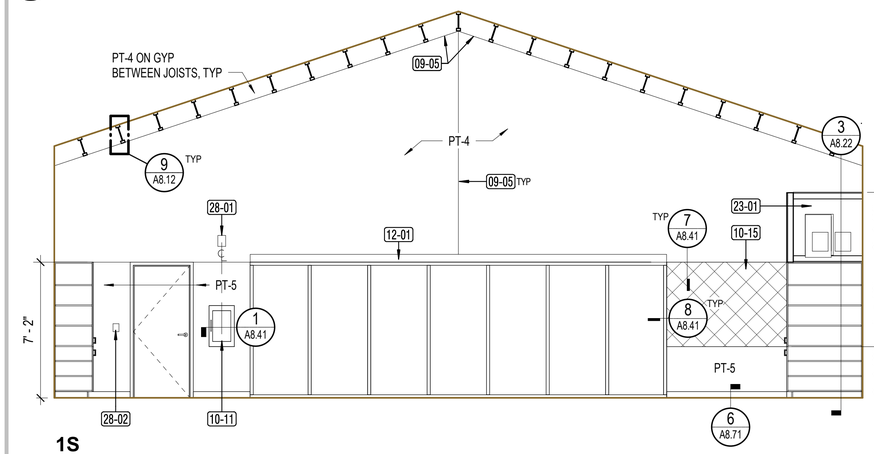

1S

EB - CLASS LAB 3 - INT SW

1S A5.16 1/4" = 1'-0"

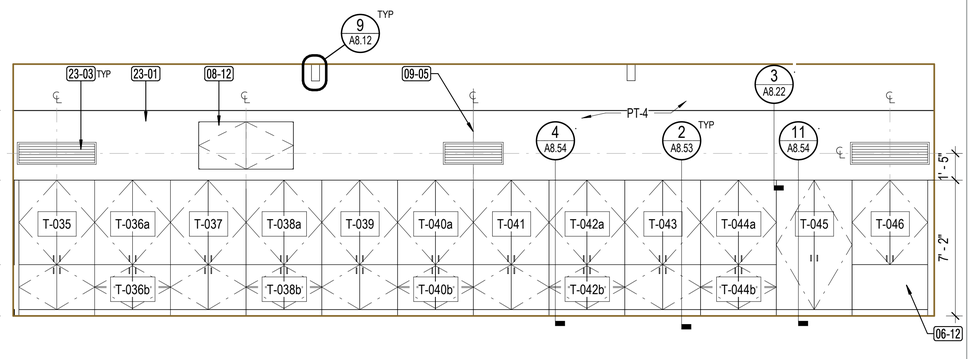

1W

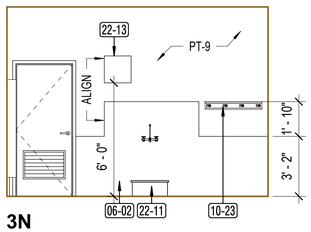

3N

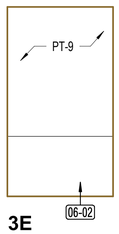

3E

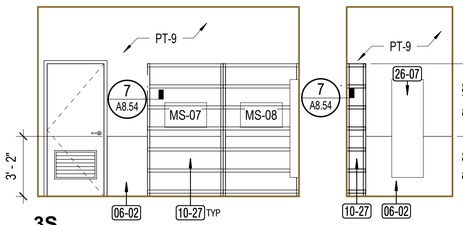

3S

3W

EB - JANITORIAL ROOM - NORTH

3N A5.16 1/4" = 1'-0"

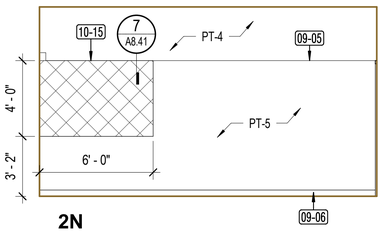

2N

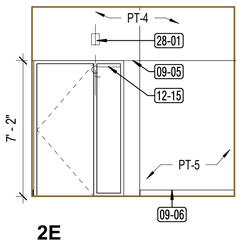

2E

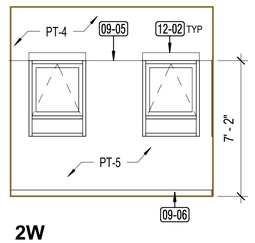

2W

EB - OFFICE 3 - INT NORTH

2N A5.16 1/4" = 1'-0"

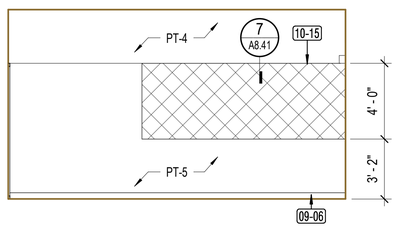

EB - OFFICE 1 / 2 - INT NORTH (SOUTH SIM)

7 A5.16 1/4" = 1'-0"

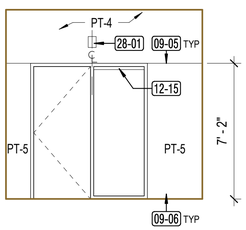

EB - OFFICE 1 / 2 - INT WEST

6 A5.16 1/4" = 1'-0"

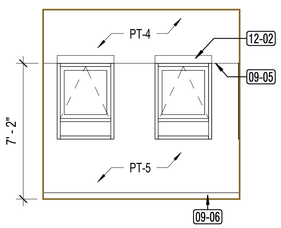

EB - OFFICE 1 - INT EAST

5 A5.16 1/4" = 1'-0"

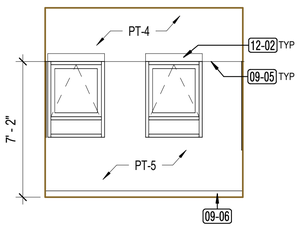

EB - OFFICE 2 - INT EAST

4 A5.16 1/4" = 1'-0"

GENERAL NOTES

1. ALL CABINET DOORS AND DRAWERS TO HAVE CABINET LOCKS, SEE SPECIFICATIONS
2. REFER TO 4 / G3.21 AND 7 / G3.21 FOR FEC, ELECTRICAL DEVICES AND GENERAL MOUNTING HEIGHT REQUIREMENTS.
3. ALL GLASS IN CABINET DOORS TO BE LAMINATED
4. FOR PARTITION ANCHORAGE DETAILS, SEE A8.12

PAINT COLOR KEY

	COLOR	FINISH
PT - 1	TBD	FLAT
PT - 2	TBD	FLAT
PT - 3	TBD	EGGSHELL
PT - 4	TBD	FLAT
PT - 5	TBD	EGGSHELL
PT - 6	TBD	FLAT
PT - 7	TBD	EGGSHELL
PT - 8	TBD	EGGSHELL
PT - 9	TBD	SEMI-GLOSS

KEYNOTE LEGEND

Key Value	Keynote Text
06-01	PLYWOOD BACKED PLAM SUPPORT LEG
06-02	FIBERGLASS REINFORCED PANELING
06-09	PLAM APRON VALANCE
06-12	BLANK PLAM PANEL FOR FACING COUNTER END
08-12	ACCESS DOOR
09-05	GYPSUM WALLBOARD CONTROL JOINT
09-06	RUBBER BASE
10-02	PAPER TOWEL DISPENSER, SURFACE MOUNTED, OFCI
10-07	SOAP DISPENSER, OFCI
10-09	SIGN, SWD
10-11	FIRE EXTINGUISHER CABINET
10-15	FABRIC-WRAPPED TACKABLE PANEL
10-23	MOP AND BROOM HOLDER
10-27	OPEN METAL STORAGE SHELVING
11-03	PROJECTOR AND PROJECTION SURFACE
12-01	MANUAL ROLLER SHADES, 1% OPENNESS
12-02	MANUAL ROLLER SHADES, 3% OPENNESS
12-09	SOLID SURFACE COUNTERTOP WITH FULL HEIGHT BACKSPLASH
12-10	SOLID SURFACE COUNTERTOP WITH 4" BACKSPLASH
12-15	HORIZONTAL LOUVER BLINDS
22-04	SSTL ACCESSIBLE SINK, SPD
22-11	FLOOR MOP SINK, SPD
22-13	WALL-MOUNTED TANKLESS HOT WATER HEATER, SPD
23-01	MECHANICAL SOFFIT
23-03	EXTERIOR LOUVER, SMD
26-07	ELECTRICAL PANEL, SED
28-01	FIRE ALARM SPEAKER, SFAD
28-02	FIRE ALARM MONITOR MODULE, SFAD

APPROVALS

IDENTIFICATION STAMP
DIV. OF THE STATE ARCHITECT
APP: 01-119409 INC:
REVIEWED FOR
SS ☑ FLS ☑ ACS ☑
DATE: 03/14/2022

NOLL & TAM ARCHITECTS
729 Heinz Avenue
Berkeley, CA 94710
tel 510.542.2200
fax 510.542.2201

SEAL

LICENSED ARCHITECT
CHRISTOPHER NOLL
No. C15916
REN. 12-31-23
STATE OF CALIFORNIA

PROJECT TITLE

Peralta Community College District
MERRITT COLLEGE NEW LANDSCAPE HORTICULTURE COMPLEX

12500 Campus Drive
Oakland, CA 94619

BID SET

ISSUE DATE 03/03/2022
N&T JOB NUMBER 22003

REVISIONS

	DATE	DESCRIPTION

DRAWN BY Author CHECKED BY Checker

SHEET TITLE
INTERIOR ELEVATIONS - EAST BUILDING GROUP

SHEET NUMBER
A5.16

3/3/2022 11:30:02 AM BIM 360://PCCD Merritt Horticulture/Merritt Horticulture_2020.rvt

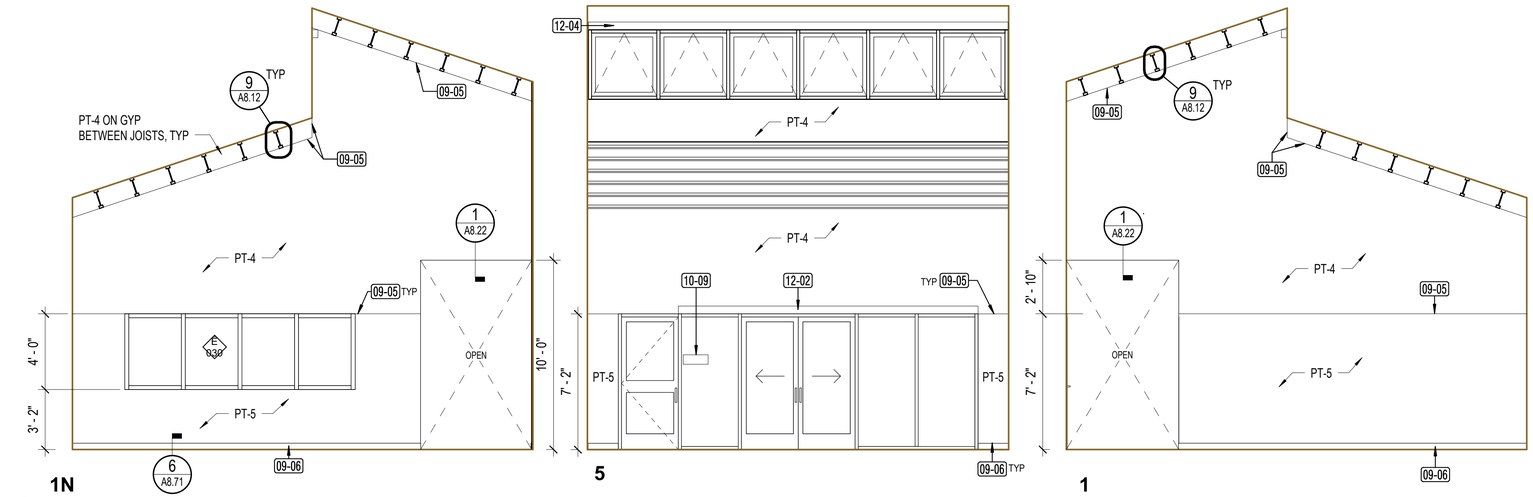

1N

EB - LIBRARY - INT NORTH

1N / A5.17 — 1/4" = 1'-0"

5

1

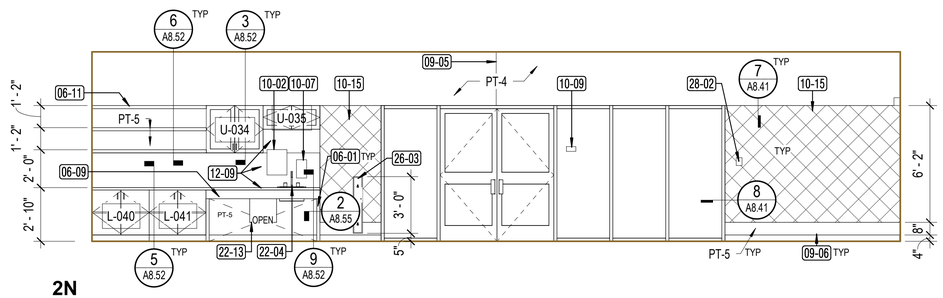

2N

EB - HALLWAY - INT N/E

2N / A5.17 — 1/4" = 1'-0"

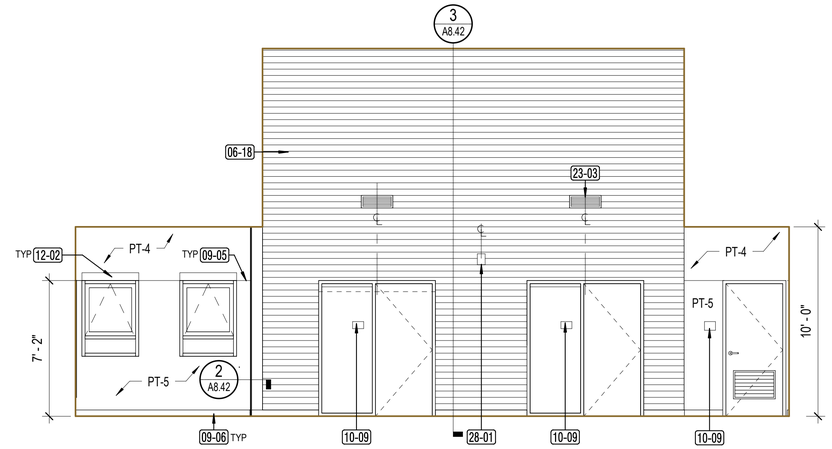

2E

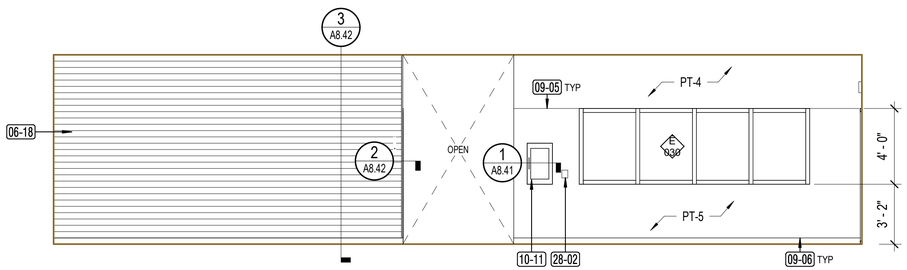

2S

EB - HALLWAY - INT S/W

2S / A5.17 — 1/4" = 1'-0"

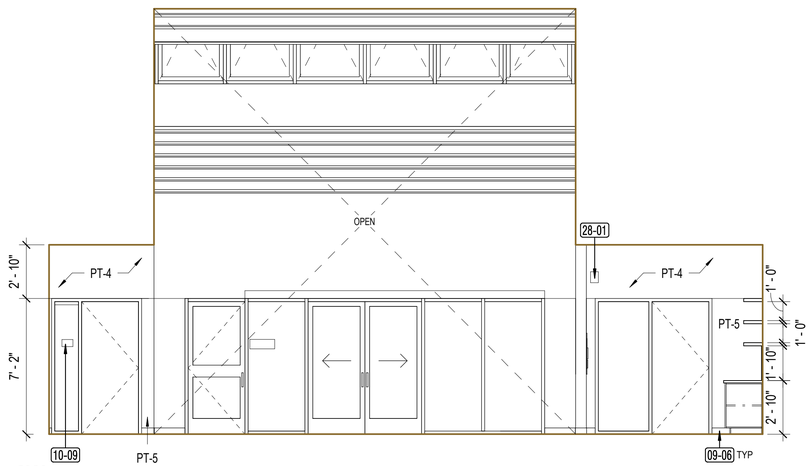

2W

GENERAL NOTES

1. ALL CABINET DOORS AND DRAWERS TO HAVE CABINET LOCKS, SEE SPECIFICATIONS
2. REFER TO 4 / G3.21 AND 7 / G3.21 FOR FEC, ELECTRICAL DEVICES AND GENERAL MOUNTING HEIGHT REQUIREMENTS.
3. ALL GLASS IN CABINET DOORS TO BE LAMINATED
4. FOR PARTITION ANCHORAGE DETAILS, SEE A8.12

PAINT COLOR KEY

	COLOR	FINISH
PT - 1	TBD	FLAT
PT - 2	TBD	FLAT
PT - 3	TBD	EGGSHELL
PT - 4	TBD	FLAT
PT - 5	TBD	EGGSHELL
PT - 6	TBD	FLAT
PT - 7	TBD	EGGSHELL
PT - 8	TBD	EGGSHELL
PT - 9	TBD	SEMI-GLOSS

KEYNOTE LEGEND

Key Value	Keynote Text
06-01	PLYWOOD BACKED PLAM SUPPORT LEG
06-09	PLAM APRON VALANCE
06-11	WALL MOUNTED LAMINATED SHELVES
06-18	SLATWALL W/ WOOD PLANK INSERTS
09-05	GYPSUM WALLBOARD CONTROL JOINT
09-06	RUBBER BASE
10-02	PAPER TOWEL DISPENSER, SURFACE MOUNTED, OFCI
10-07	SOAP DISPENSER, OFCI
10-09	SIGN, SWD
10-11	FIRE EXTINGUISHER CABINET
10-15	FABRIC-WRAPPED TACKABLE PANEL
12-02	MANUAL ROLLER SHADES, 3% OPENNESS
12-04	ELECTRICALLY ACTUATED ROLLER SHADES, 1% OPENNESS
12-09	SOLID SURFACE COUNTERTOP WITH FULL HEIGHT BACKSPLASH
22-04	SSTL ACCESSIBLE SINK, SPD
22-13	WALL-MOUNTED TANKLESS HOT WATER HEATER, SPD
23-03	EXTERIOR LOUVER, SMD
26-03	ADA AUTO DOOR OPERATOR
28-01	FIRE ALARM SPEAKER, SFAD
28-02	FIRE ALARM MONITOR MODULE, SFAD

APPROVALS

IDENTIFICATION STAMP
DIV. OF THE STATE ARCHITECT
APP: 01-119409 INC:
REVIEWED FOR
SS ☑ FLS ☑ ACS ☑
DATE: 03/14/2022

NOLL & TAM ARCHITECTS

729 Heinz Avenue
Berkeley, CA 94710
tel 510.542.2200
fax 510.542.2201

SEAL

LICENSED ARCHITECT
CHRISTOPHER NOLL
No. C15916
REN. 12-31-23
STATE OF CALIFORNIA

PROJECT TITLE

Peralta Community College District

MERRITT COLLEGE NEW LANDSCAPE HORTICULTURE COMPLEX

12500 Campus Drive
Oakland, CA 94619

BID SET

ISSUE DATE 03/03/2022
N&T JOB NUMBER 22003

REVISIONS

#	DATE	DESCRIPTION

DRAWN BY Author | CHECKED BY Checker

SHEET TITLE

INTERIOR ELEVATIONS - EAST BUILDING GROUP

SHEET NUMBER

A5.17

3/3/2022 11:30:06 AM BIM 360://PCCD Merritt Horticulture/Merritt Horticulture_2020.rvt

GENERAL NOTES

1. SEE SLAB PLANS A2.11 AND A2.12 AND STRUCTURAL DRAWINGS FOR CONCRETE CURB AND DEPRESSION DIMENSIONAL INFORMATION.
2. SEE LAYOUT PLANS A2.21 AND A2.22 FOR WALL DIMENSIONS AND WALL/PARTITION ASSEMBLY IDENTIFICATION.
3. SEE EXTERIOR ELEVATIONS FOR EXTENT OF EXTERIOR WALL ASSEMBLIES.
4. SEE A7.11, A7.21 AND A7.41 FOR TYPICAL WALL, SLAB AND ROOF ASSEMBLIES.
5. SEE A2.61 FOR DOOR TYPES AND SCHEDULE.
6. SEE A2.71 FOR WINDOW AND STOREFRONT TYPES AND SCHEDULE.

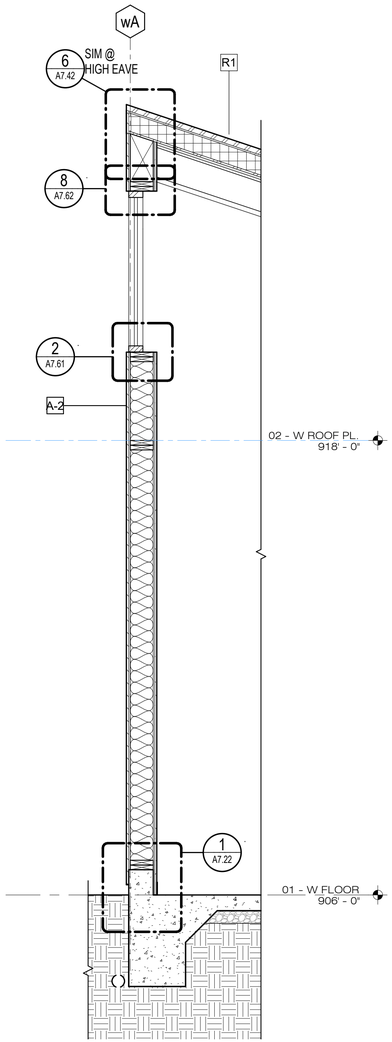

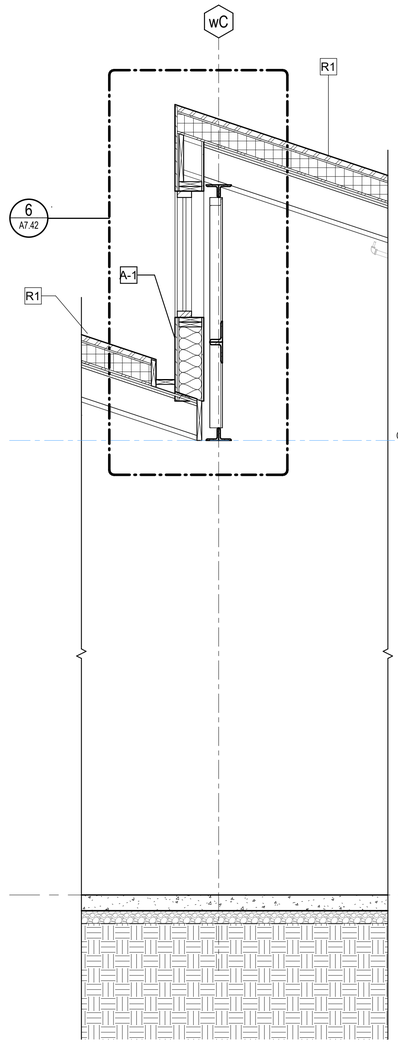

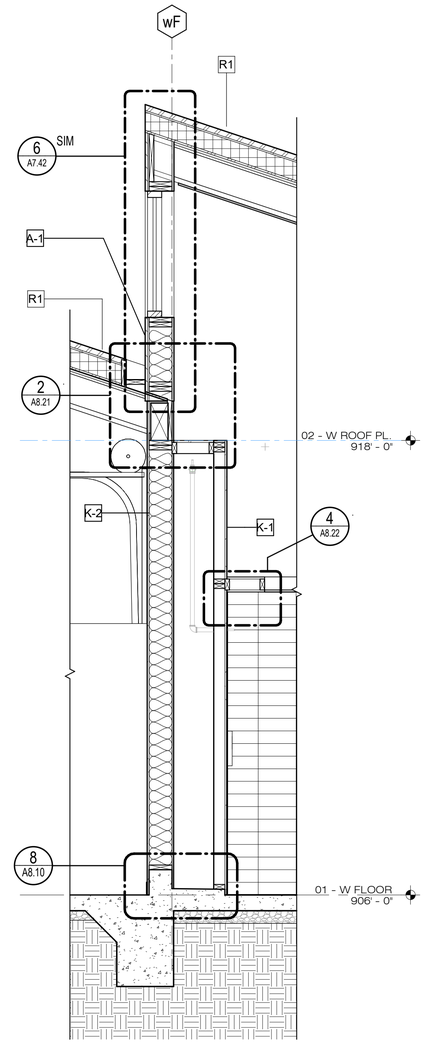

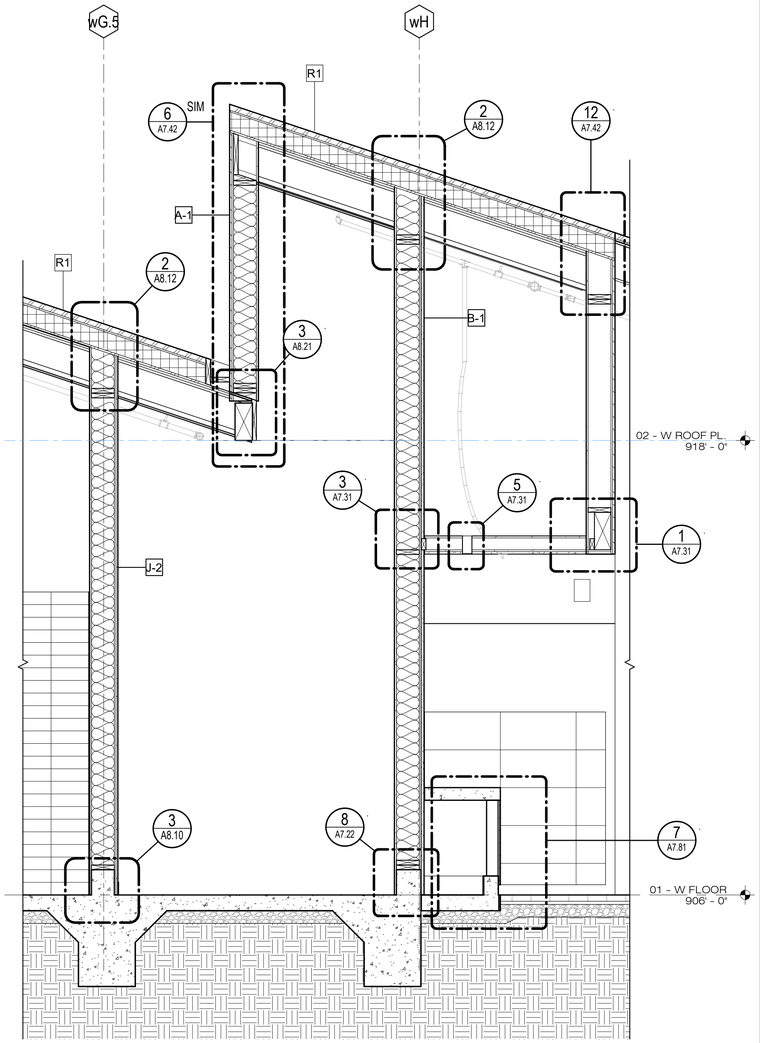

4 A6.11 **WB - WORKSHOP BLDG - NORTH WALL**
1/2" = 1'-0"

3 A6.11 **WB - WORKSHOP BLDG - N CLERESTORY**
1/2" = 1'-0"

2 A6.11 **WB - WORKSHOP BLDG - MID CLERESTORY**
1/2" = 1'-0"

1 A6.11 **WB - WORKSHOP BLDG - SOUTH CLERESTORY**
1/2" = 1'-0"

APPROVALS

IDENTIFICATION STAMP
DIV. OF THE STATE ARCHITECT
APP: 01-119409 INC:
REVIEWED FOR
SS ☑ FLS ☑ ACS ☑
DATE: 03/14/2022

NOLL & TAM ARCHITECTS
729 Heinz Avenue
Berkeley, CA 94710
tel 510.542.2200
fax 510.542.2201

SEAL

LICENSED ARCHITECT
CHRISTOPHER NOLL
No. C15916
REN. 12-31-23
STATE OF CALIFORNIA

PROJECT TITLE

Peralta Community College District
MERRITT COLLEGE NEW LANDSCAPE HORTICULTURE COMPLEX

12500 Campus Drive
Oakland, CA 94619

BID SET

ISSUE DATE 03/03/2022
N&T JOB NUMBER 22003

REVISIONS

#	DATE	DESCRIPTION

DRAWN BY Author | CHECKED BY Checker

SHEET TITLE
WALL SECTIONS - WEST BUILDING GROUP

SHEET NUMBER
A6.11

3/3/2022 11:30:08 AM BIM 360://PCCD Merritt Horticulture/Merritt Horticulture_2020.rvt

GENERAL NOTES

1. SEE SLAB PLANS A2.11 AND A2.12 AND STRUCTURAL DRAWINGS FOR CONCRETE CURB AND DEPRESSION DIMENSIONAL INFORMATION.
2. SEE LAYOUT PLANS A2.21 AND A2.22 FOR WALL DIMENSIONS AND WALL/PARTITION ASSEMBLY IDENTIFICATION.
3. SEE EXTERIOR ELEVATIONS FOR EXTENT OF EXTERIOR WALL ASSEMBLIES.
4. SEE A7.11, A7.21 AND A7.41 FOR TYPICAL WALL, SLAB AND ROOF ASSEMBLIES.
5. SEE A2.61 FOR DOOR TYPES AND SCHEDULE.
6. SEE A2.71 FOR WINDOW AND STOREFRONT TYPES AND SCHEDULE.

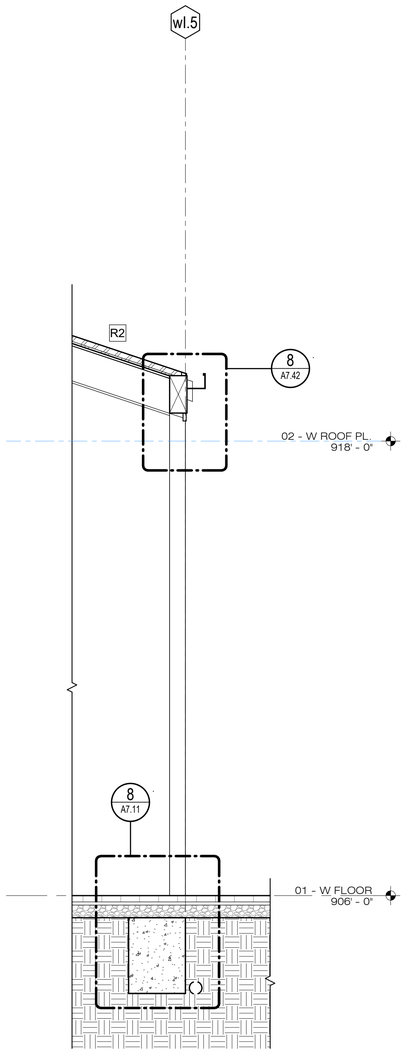

4 A6.12 **WB - WORKSHOP BLDG - SOUTH EDGE**
1/2" = 1'-0"

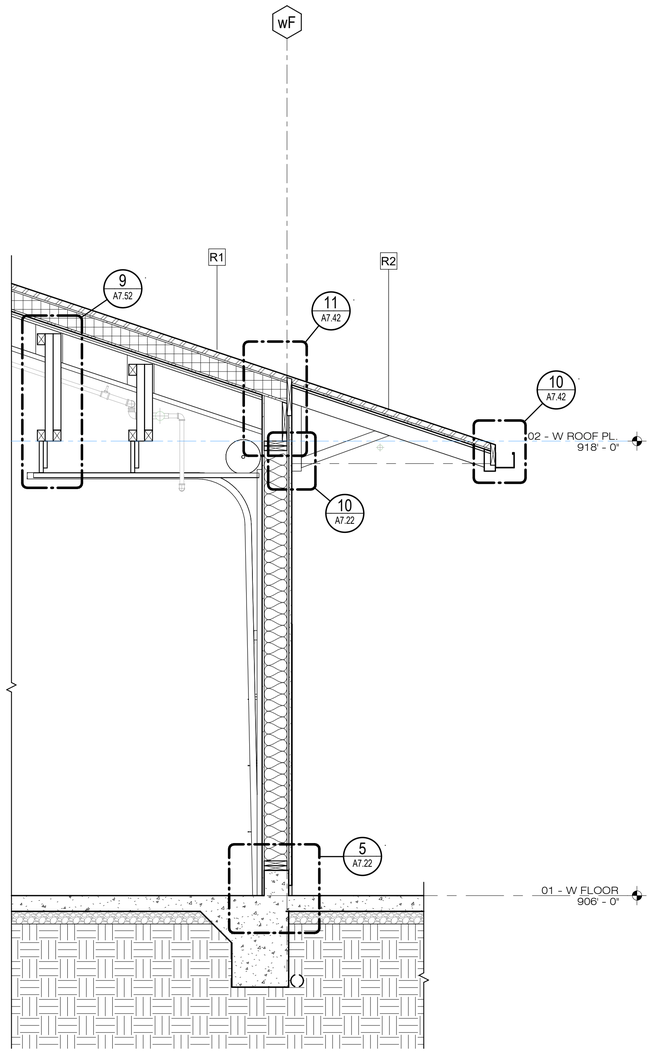

3 A6.12 **WB - WORKSHOP BUILDING - SOUTH WALL AT wF**
1/2" = 1'-0"

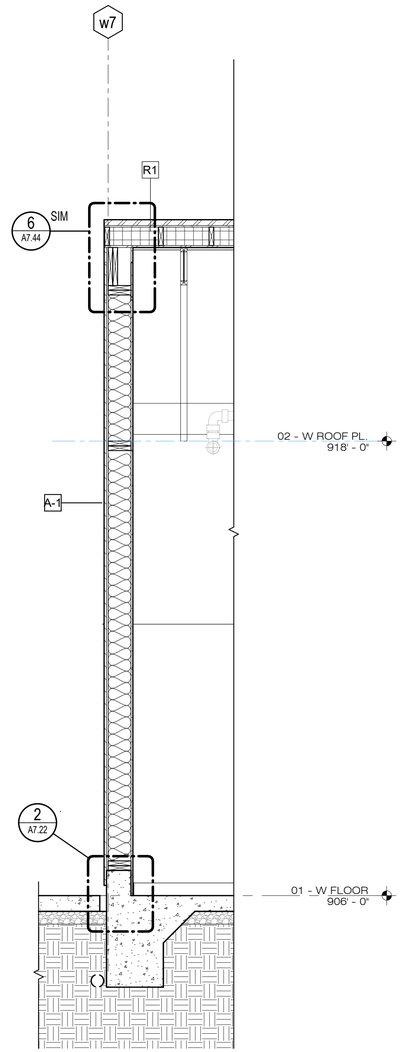

2 A6.12 **WB - WORKSHOP BLDG - EAST WALL**
1/2" = 1'-0"

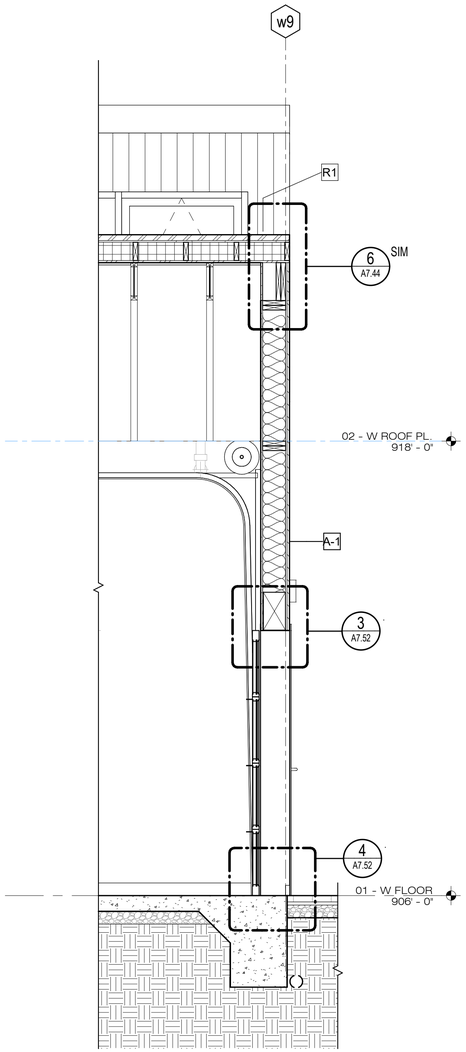

1 A6.12 **WB - WORKSHOP BLDG - WEST WALL**
1/2" = 1'-0"

APPROVALS

IDENTIFICATION STAMP
DIV. OF THE STATE ARCHITECT
APP: 01-119409 INC:
REVIEWED FOR
SS ☑ FLS ☑ ACS ☑
DATE: 03/14/2022

NOLL & TAM ARCHITECTS
729 Heinz Avenue
Berkeley, CA 94710
tel 510.542.2200
fax 510.542.2201

SEAL

LICENSED ARCHITECT
CHRISTOPHER NOLL
No. C15916
REN. 12-31-23
STATE OF CALIFORNIA

PROJECT TITLE

Peralta Community College District
MERRITT COLLEGE NEW LANDSCAPE HORTICULTURE COMPLEX

12500 Campus Drive
Oakland, CA 94619

BID SET

ISSUE DATE 03/03/2022
N&T JOB NUMBER 22003

REVISIONS

	DATE	DESCRIPTION

DRAWN BY Author | CHECKED BY Checker

SHEET TITLE
WALL SECTIONS - WEST BUILDING GROUP

SHEET NUMBER
A6.12

3/3/2022 11:30:10 AM BIM 360://PCCD Merritt Horticulture/Merritt Horticulture_2020.rvt

GENERAL NOTES

1. SEE SLAB PLANS A2.11 AND A2.12 AND STRUCTURAL DRAWINGS FOR CONCRETE CURB AND DEPRESSION DIMENSIONAL INFORMATION.
2. SEE LAYOUT PLANS A2.21 AND A2.22 FOR WALL DIMENSIONS AND WALL/PARTITION ASSEMBLY IDENTIFICATION.
3. SEE EXTERIOR ELEVATIONS FOR EXTENT OF EXTERIOR WALL ASSEMBLIES.
4. SEE A7.11, A7.21 AND A7.41 FOR TYPICAL WALL, SLAB AND ROOF ASSEMBLIES.
5. SEE A2.61 FOR DOOR TYPES AND SCHEDULE.
6. SEE A2.71 FOR WINDOW AND STOREFRONT TYPES AND SCHEDULE.

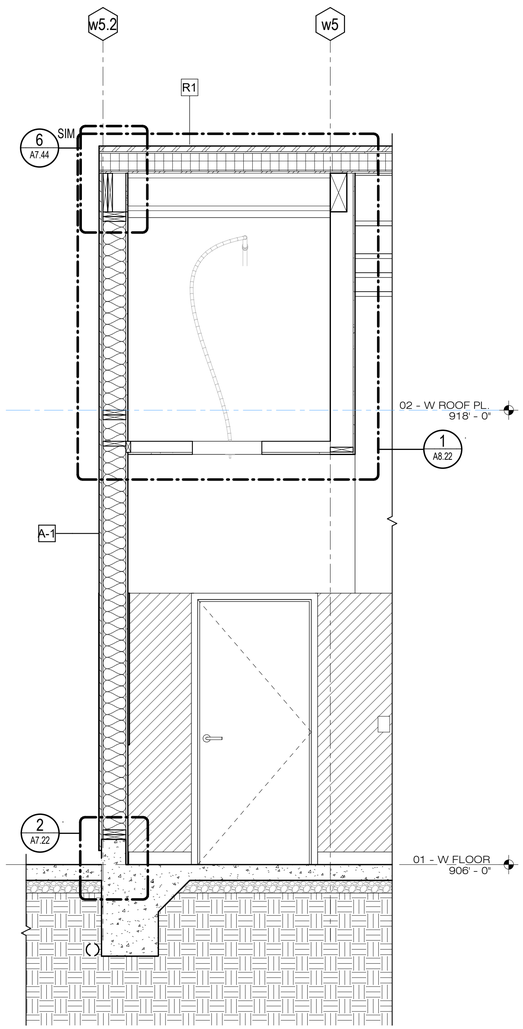

4 A6.13 WB - HEAD HOUSE - WEST WALL 1
1/2" = 1'-0"

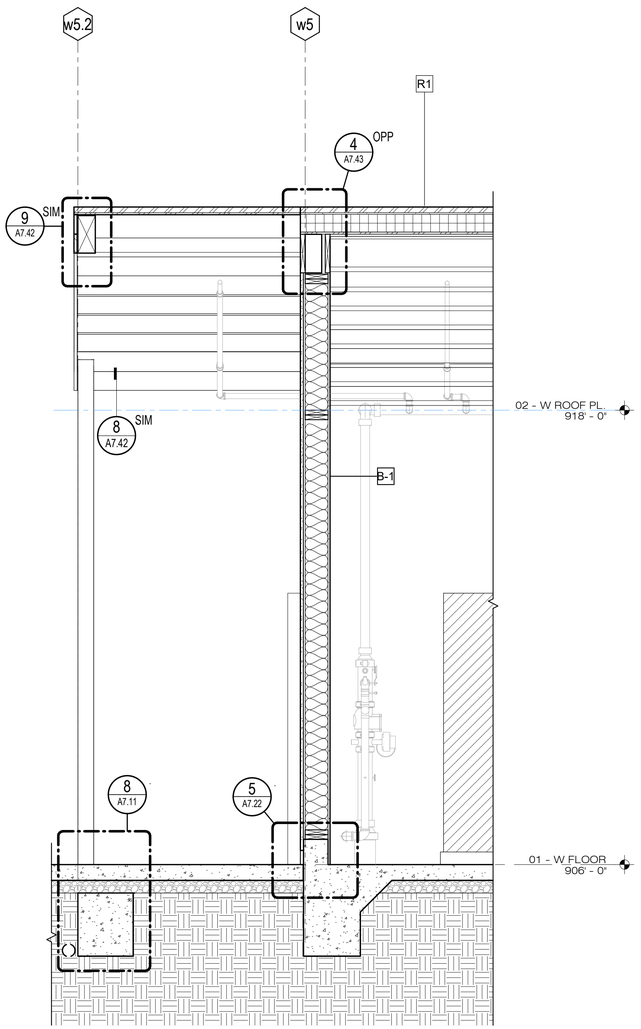

3 A6.13 WB - HEAD HOUSE - WEST WALL 2
1/2" = 1'-0"

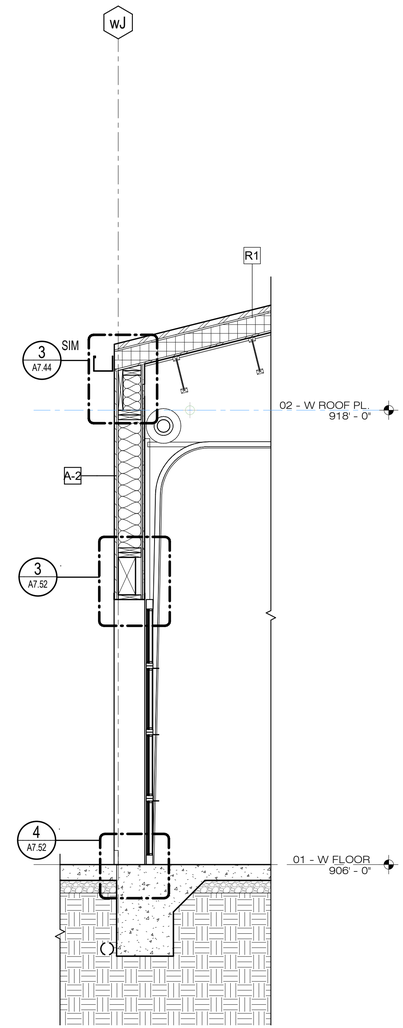

2 A6.13 WB - HEAD HOUSE - NORTH WALL
1/2" = 1'-0"

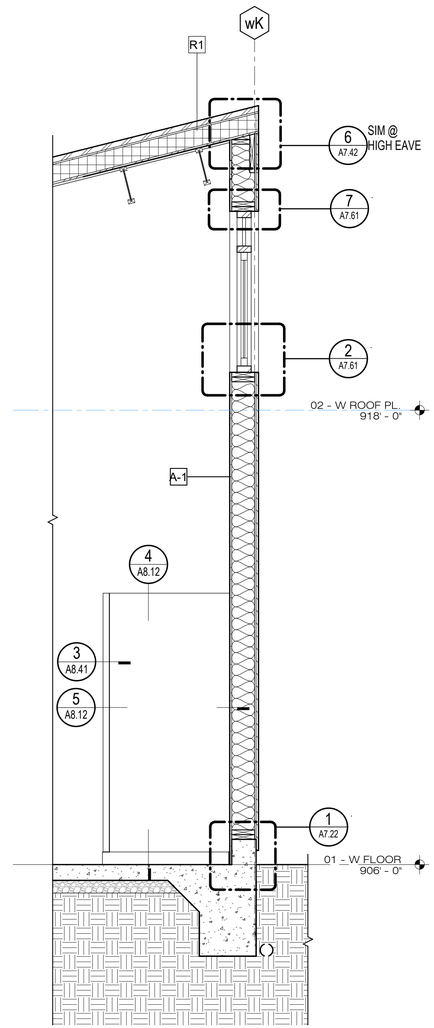

1 A6.13 WB - HEAD HOUSE - SOUTH WALL
1/2" = 1'-0"

APPROVALS

IDENTIFICATION STAMP
DIV. OF THE STATE ARCHITECT
APP: 01-119409 INC:
REVIEWED FOR
SS ☑ FLS ☑ ACS ☑
DATE: 03/14/2022

NOLL & TAM ARCHITECTS
729 Heinz Avenue
Berkeley, CA 94710
tel 510.542.2200
fax 510.542.2201

SEAL

LICENSED ARCHITECT
CHRISTOPHER NOLL
No. C15916
REN. 12-31-23
STATE OF CALIFORNIA

PROJECT TITLE

Peralta Community College District
MERRITT COLLEGE NEW LANDSCAPE HORTICULTURE COMPLEX

12500 Campus Drive
Oakland, CA 94619

BID SET

ISSUE DATE 03/03/2022
N&T JOB NUMBER 22003

REVISIONS

#	DATE	DESCRIPTION

DRAWN BY Author | CHECKED BY Checker

SHEET TITLE
WALL SECTIONS - WEST BUILDING GROUP

SHEET NUMBER
A6.13

3/3/2022 11:30:13 AM BIM 360://PCCD Merritt Horticulture/Merritt Horticulture_2020.rvt

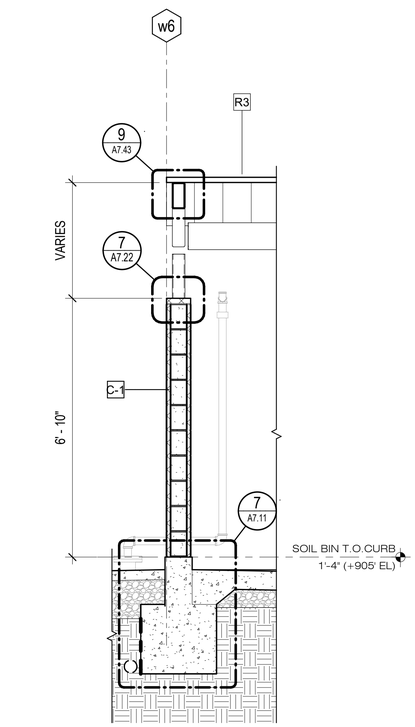

3 A6.14 **WB - SOIL BINS - WEST WALL**
1/2" = 1'-0"

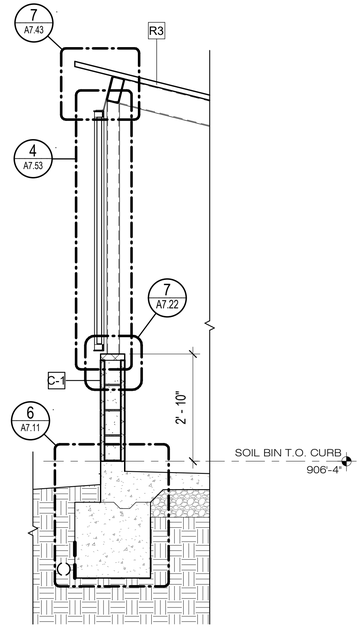

2 A6.14 **WB - SOIL BINS - NORTH EDGE**
1/2" = 1'-0"

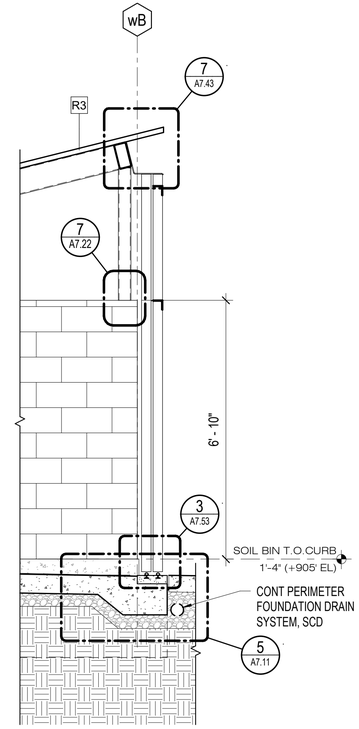

1 A6.14 **WB - SOIL BINS - SOUTH EDGE**
1/2" = 1'-0"

GENERAL NOTES

1. SEE SLAB PLANS A2.11 AND A2.12 AND STRUCTURAL DRAWINGS FOR CONCRETE CURB AND DEPRESSION DIMENSIONAL INFORMATION.
2. SEE LAYOUT PLANS A2.21 AND A2.22 FOR WALL DIMENSIONS AND WALL/PARTITION ASSEMBLY IDENTIFICATION.
3. SEE EXTERIOR ELEVATIONS FOR EXTENT OF EXTERIOR WALL ASSEMBLIES.
4. SEE A7.11, A7.21 AND A7.41 FOR TYPICAL WALL, SLAB AND ROOF ASSEMBLIES.
5. SEE A2.61 FOR DOOR TYPES AND SCHEDULE.
6. SEE A2.71 FOR WINDOW AND STOREFRONT TYPES AND SCHEDULE.

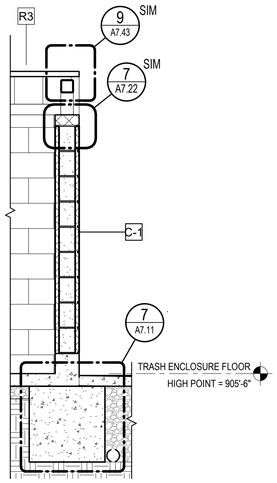

6 A6.14 **WB - TRASH ENCL - NORTH WALL**
1/2" = 1'-0"

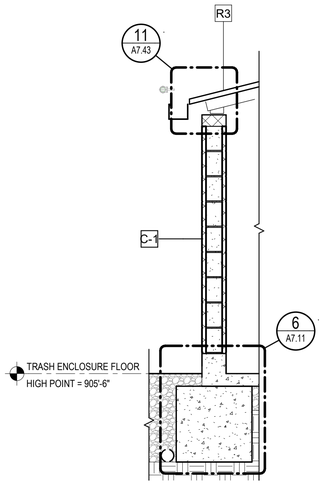

5 A6.14 **WB - TRASH ENCL - WEST WALL**
1/2" = 1'-0"

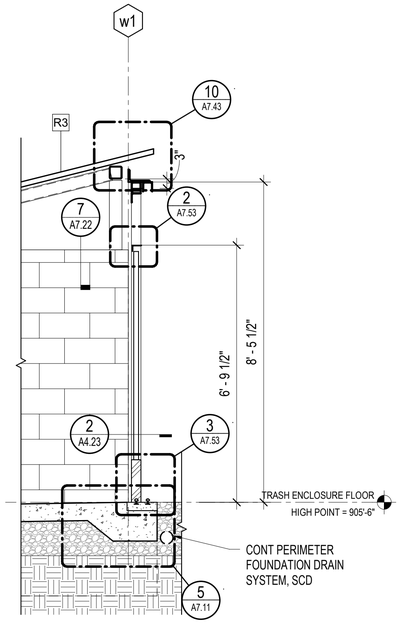

4 A6.14 **WB - TRASH ENCL - EAST WALL**
1/2" = 1'-0"

APPROVALS

IDENTIFICATION STAMP
DIV. OF THE STATE ARCHITECT
APP: 01-119409 INC:
REVIEWED FOR
SS ☑ FLS ☑ ACS ☑
DATE: 03/14/2022

NOLL & TAM ARCHITECTS
729 Heinz Avenue
Berkeley, CA 94710
tel 510.542.2200
fax 510.542.2201

SEAL

LICENSED ARCHITECT
CHRISTOPHER NOLL
No. C15916
REN. 12-31-23
STATE OF CALIFORNIA

PROJECT TITLE

Peralta Community College District
MERRITT COLLEGE NEW LANDSCAPE HORTICULTURE COMPLEX

12500 Campus Drive
Oakland, CA 94619

BID SET

ISSUE DATE	03/03/2022
N&T JOB NUMBER	22003

REVISIONS

	DATE	DESCRIPTION

DRAWN BY **Author** CHECKED BY **Checker**

SHEET TITLE
WALL SECTIONS - WEST BUILDING GROUP

SHEET NUMBER
A6.14

3/3/2022 11:30:16 AM BIM 360://PCCD Merritt Horticulture/Merritt Horticulture_2020.rvt

GENERAL NOTES

1. SEE SLAB PLANS A2.11 AND A2.12 AND STRUCTURAL DRAWINGS FOR CONCRETE CURB AND DEPRESSION DIMENSIONAL INFORMATION.
2. SEE LAYOUT PLANS A2.21 AND A2.22 FOR WALL DIMENSIONS AND WALL/PARTITION ASSEMBLY IDENTIFICATION.
3. SEE EXTERIOR ELEVATIONS FOR EXTENT OF EXTERIOR WALL ASSEMBLIES.
4. SEE A7.11, A7.21 AND A7.41 FOR TYPICAL WALL, SLAB AND ROOF ASSEMBLIES.
5. SEE A2.61 FOR DOOR TYPES AND SCHEDULE.
6. SEE A2.71 FOR WINDOW AND STOREFRONT TYPES AND SCHEDULE.

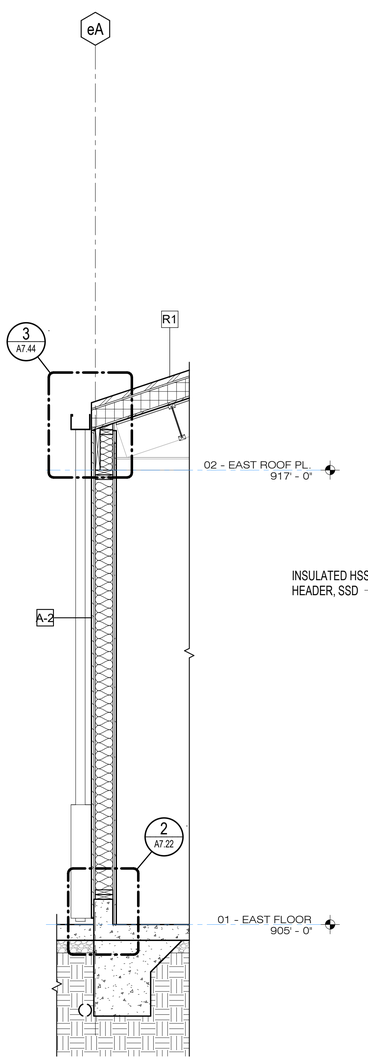

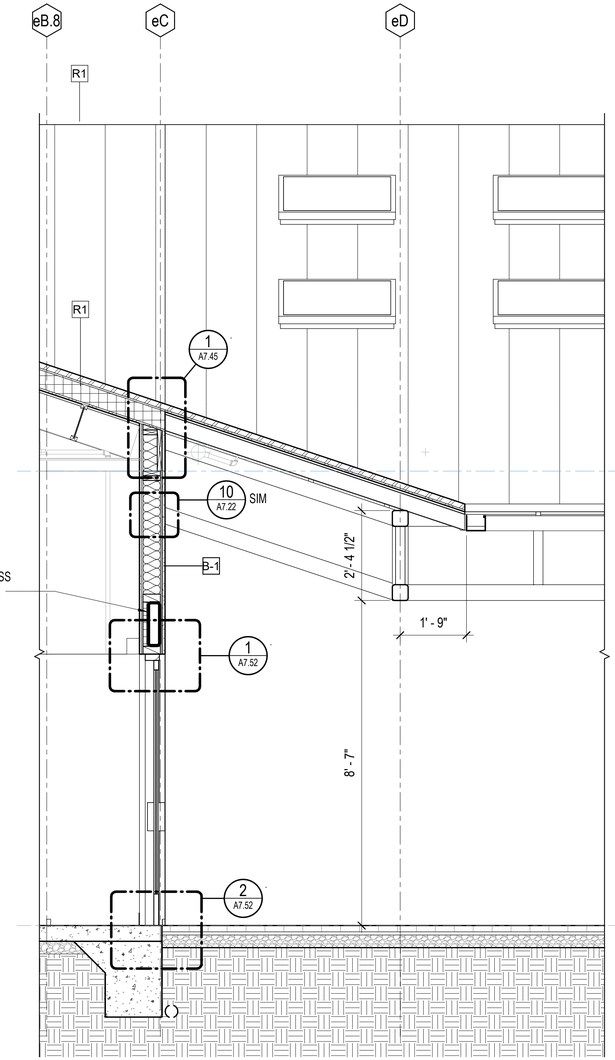

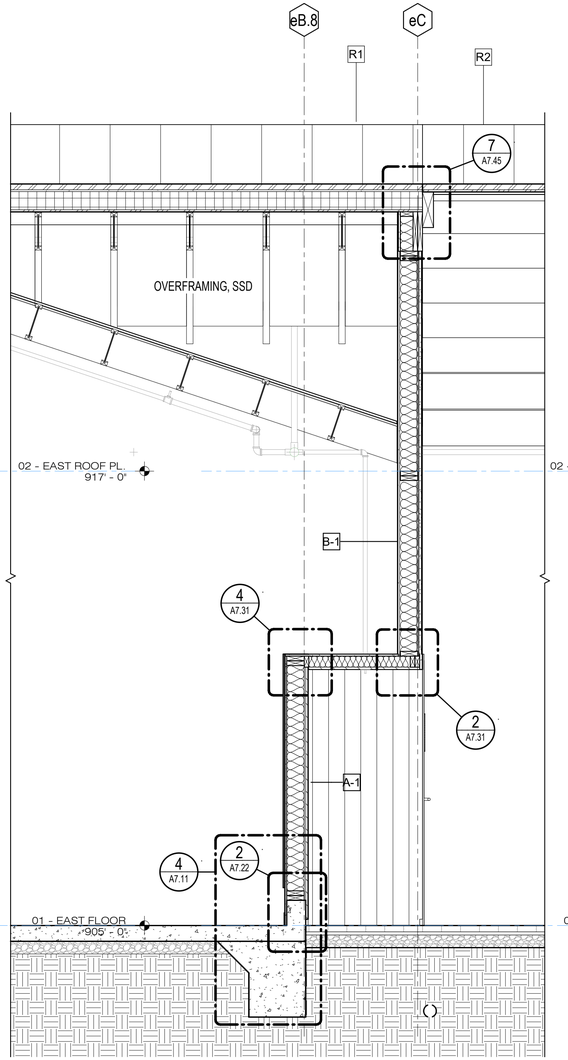

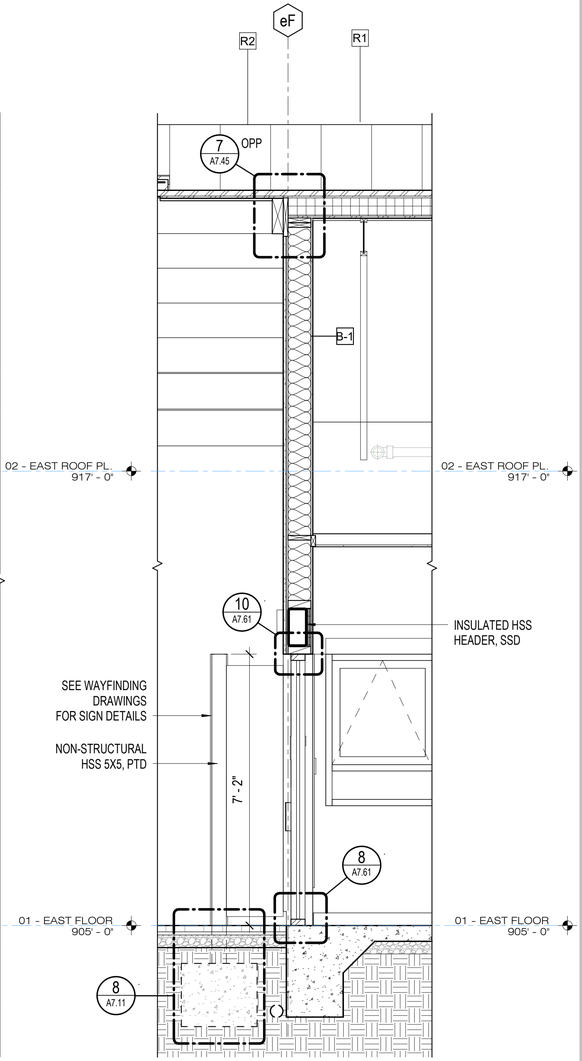

4 / A6.15 EB - CLASS LAB 1 - NORTH WALL
1/2" = 1'-0"

3 / A6.15 EB - CLASS LAB 1 - BREEZEWAY 1
1/2" = 1'-0"

2 / A6.15 EB - CLASS LAB 1 - PASSAGEWAY
1/2" = 1'-0"

1 / A6.15 EB - STUDENT/FACULTY - PASSAGEWAY
1/2" = 1'-0"

APPROVALS

IDENTIFICATION STAMP
DIV. OF THE STATE ARCHITECT
APP: 01-119409 INC:
REVIEWED FOR
SS ☑ FLS ☑ ACS ☑
DATE: 03/14/2022

NOLL & TAM ARCHITECTS
729 Heinz Avenue
Berkeley, CA 94710
tel 510.542.2200
fax 510.542.2201

SEAL

LICENSED ARCHITECT
CHRISTOPHER NOLL
No. C15916
REN. 12-31-23
STATE OF CALIFORNIA

PROJECT TITLE

Peralta Community College District
MERRITT COLLEGE NEW LANDSCAPE HORTICULTURE COMPLEX

12500 Campus Drive
Oakland, CA 94619

BID SET

ISSUE DATE 03/03/2022
N&T JOB NUMBER 22003

REVISIONS

#	DATE	DESCRIPTION

DRAWN BY Author | CHECKED BY Checker

SHEET TITLE
WALL SECTIONS - EAST BUILDING GROUP

SHEET NUMBER
A6.15

3/3/2022 11:30:18 AM BIM 360://PCCD Merritt Horticulture/Merritt Horticulture_2020.rvt

GENERAL NOTES

1. SEE SLAB PLANS A2.11 AND A2.12 AND STRUCTURAL DRAWINGS FOR CONCRETE CURB AND DEPRESSION DIMENSIONAL INFORMATION.
2. SEE LAYOUT PLANS A2.21 AND A2.22 FOR WALL DIMENSIONS AND WALL/PARTITION ASSEMBLY IDENTIFICATION.
3. SEE EXTERIOR ELEVATIONS FOR EXTENT OF EXTERIOR WALL ASSEMBLIES.
4. SEE A7.11, A7.21 AND A7.41 FOR TYPICAL WALL, SLAB AND ROOF ASSEMBLIES.
5. SEE A2.61 FOR DOOR TYPES AND SCHEDULE.
6. SEE A2.71 FOR WINDOW AND STOREFRONT TYPES AND SCHEDULE.

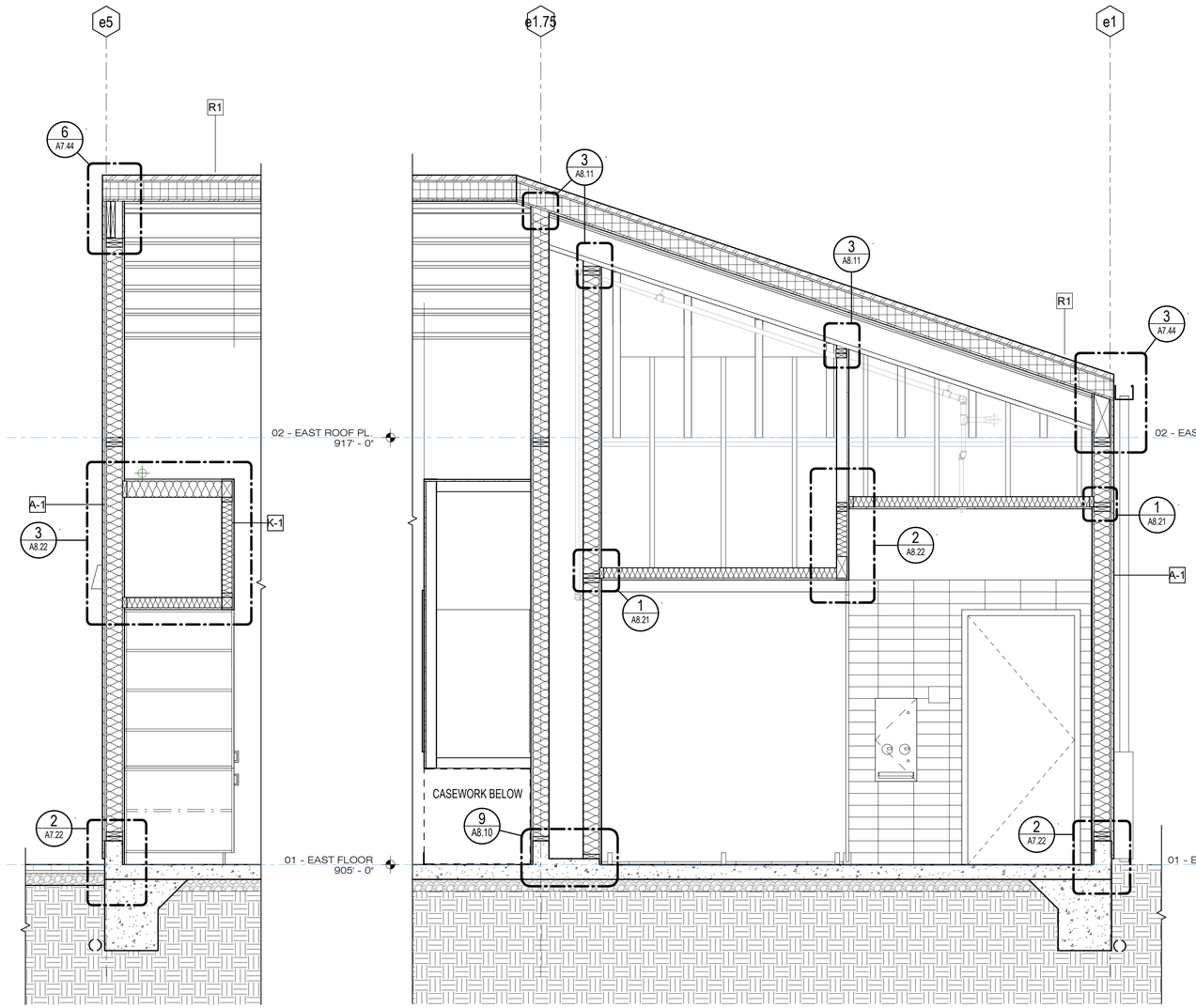

4 EB - CLASS LAB 1 - WEST WALL
A6.16 1/2" = 1'-0"

3 EB - RESTROOMS - EAST WALL
A6.16 1/2" = 1'-0"

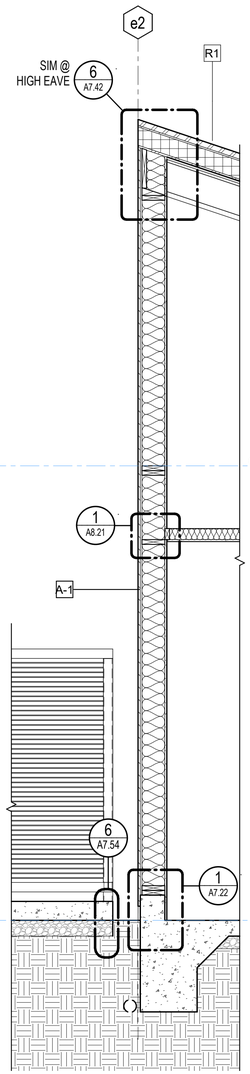

2 EB - STUDENT/FACULTY - EAST WALL 2
A6.16 1/2" = 1'-0"

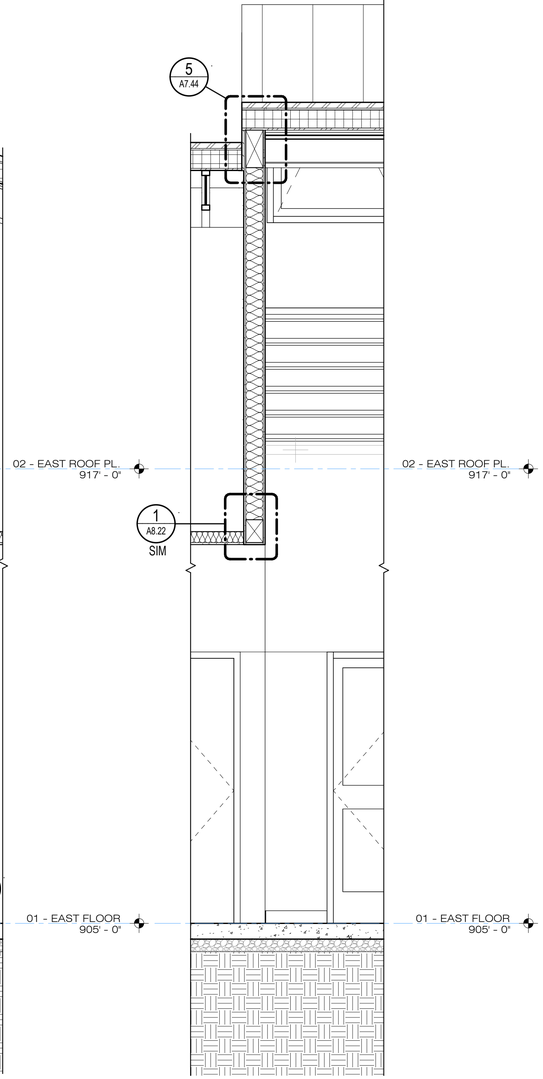

1 EB - STUDENT/FACULTY, CLERESTORY
A6.16 1/2" = 1'-0"

APPROVALS

IDENTIFICATION STAMP
DIV. OF THE STATE ARCHITECT
APP: 01-119409 INC:
REVIEWED FOR
SS ☑ FLS ☑ ACS ☑
DATE: 03/14/2022

NOLL & TAM ARCHITECTS
729 Heinz Avenue
Berkeley, CA 94710
tel 510.542.2200
fax 510.542.2201

SEAL

LICENSED ARCHITECT
CHRISTOPHER NOLL
No. C15916
REN. 12-31-23
STATE OF CALIFORNIA

PROJECT TITLE

Peralta Community College District
MERRITT COLLEGE NEW LANDSCAPE HORTICULTURE COMPLEX

12500 Campus Drive
Oakland, CA 94619

BID SET

ISSUE DATE	03/03/2022
N&T JOB NUMBER	22003

REVISIONS

	DATE	DESCRIPTION

DRAWN BY Author | CHECKED BY Checker

SHEET TITLE
WALL SECTIONS - EAST BUILDING GROUP

SHEET NUMBER
A6.16

3/3/2022 11:30:21 AM BIM 360://PCCD Merritt Horticulture/Merritt Horticulture_2020.rvt

GENERAL NOTES

1. SEE SLAB PLANS A2.11 AND A2.12 AND STRUCTURAL DRAWINGS FOR CONCRETE CURB AND DEPRESSION DIMENSIONAL INFORMATION.
2. SEE LAYOUT PLANS A2.21 AND A2.22 FOR WALL DIMENSIONS AND WALL/PARTITION ASSEMBLY IDENTIFICATION.
3. SEE EXTERIOR ELEVATIONS FOR EXTENT OF EXTERIOR WALL ASSEMBLIES.
4. SEE A7.11, A7.21 AND A7.41 FOR TYPICAL WALL, SLAB AND ROOF ASSEMBLIES.
5. SEE A2.61 FOR DOOR TYPES AND SCHEDULE.
6. SEE A2.71 FOR WINDOW AND STOREFRONT TYPES AND SCHEDULE.

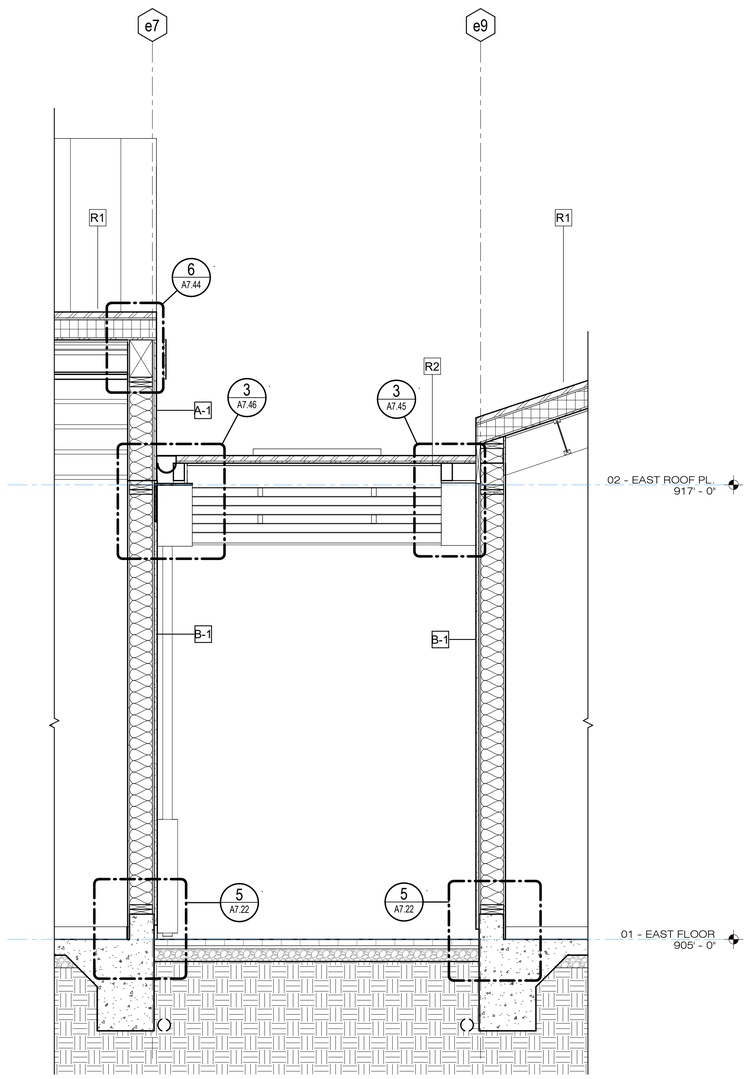

4 A6.17 **EB - CLASS LAB 2, 3 - BREEZEWAY 2**
1/2" = 1'-0"

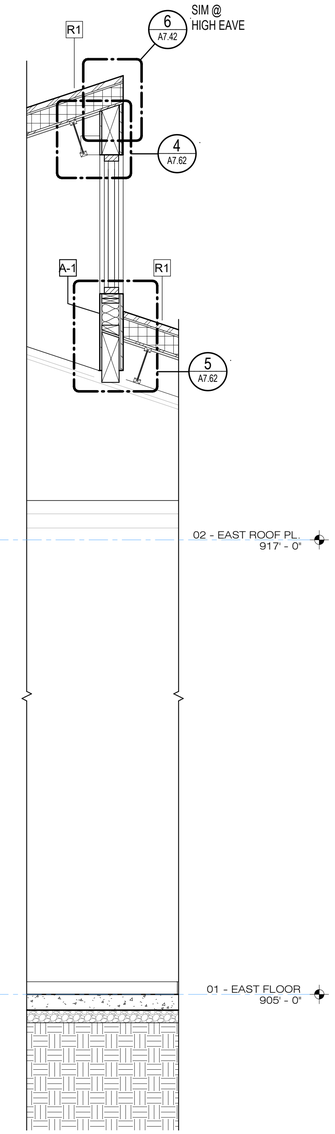

3 A6.17 **EB - CLASS LAB 3 - ROOF MONITOR 2**
1/2" = 1'-0"

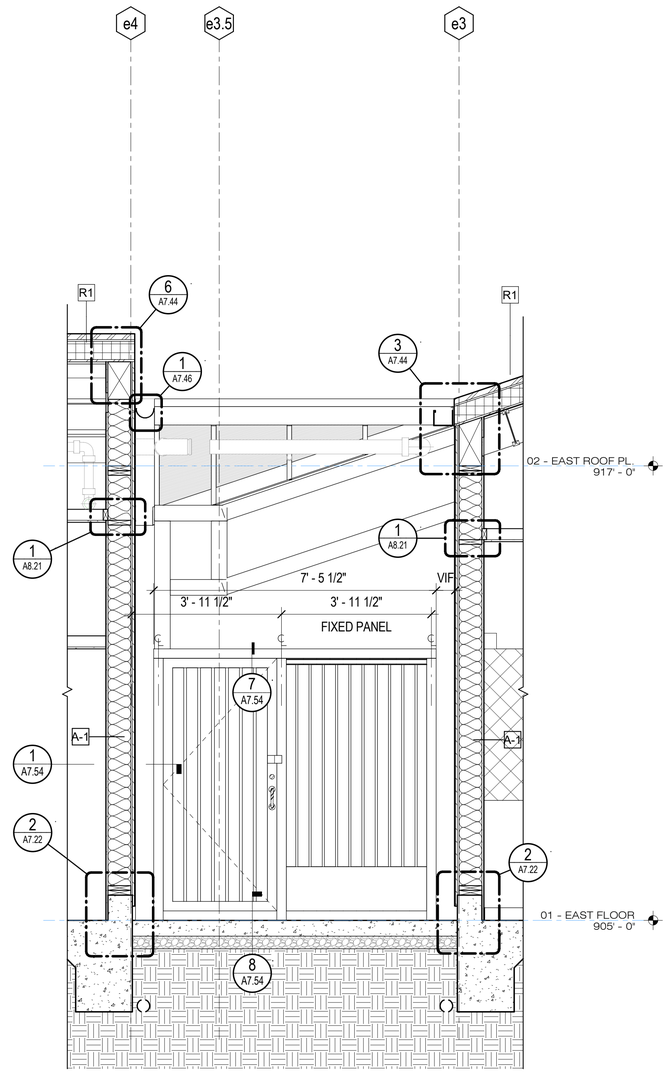

2 A6.17 **EB - STUDENT/FACULTY, CLASS LAB 2 - BREEZEWAY 3**
1/2" = 1'-0"

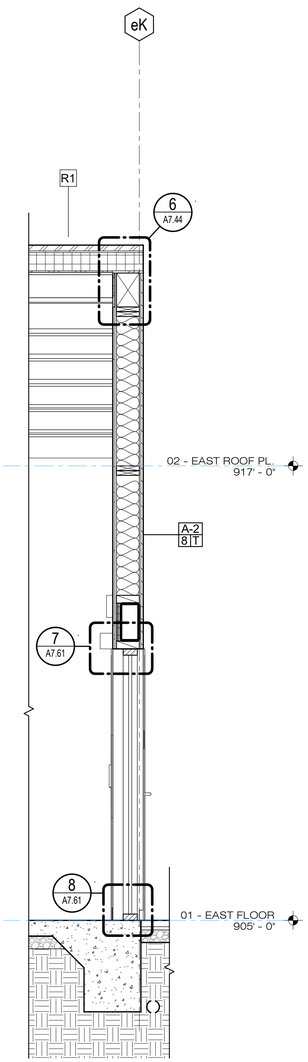

1 A6.17 **EB - CLASS LAB 3 - SOUTH WALL**
1/2" = 1'-0"

APPROVALS

IDENTIFICATION STAMP
DIV. OF THE STATE ARCHITECT
APP: 01-119409 INC:
REVIEWED FOR
SS ☑ FLS ☑ ACS ☑
DATE: 03/14/2022

NOLL & TAM ARCHITECTS
729 Heinz Avenue
Berkeley, CA 94710
tel 510.542.2200
fax 510.542.2201

SEAL

LICENSED ARCHITECT
CHRISTOPHER NOLL
No. C15916
REN. 12-31-23
STATE OF CALIFORNIA

PROJECT TITLE

Peralta Community College District
MERRITT COLLEGE NEW LANDSCAPE HORTICULTURE COMPLEX

12500 Campus Drive
Oakland, CA 94619

BID SET

ISSUE DATE	03/03/2022
N&T JOB NUMBER	22003

REVISIONS

	DATE	DESCRIPTION

DRAWN BY **Author** CHECKED BY **Checker**

SHEET TITLE
WALL SECTIONS - EAST BUILDING GROUP

SHEET NUMBER
A6.17

3/3/2022 11:30:23 AM BIM 360://PCCD Merritt Horticulture/Merritt Horticulture_2020.rvt

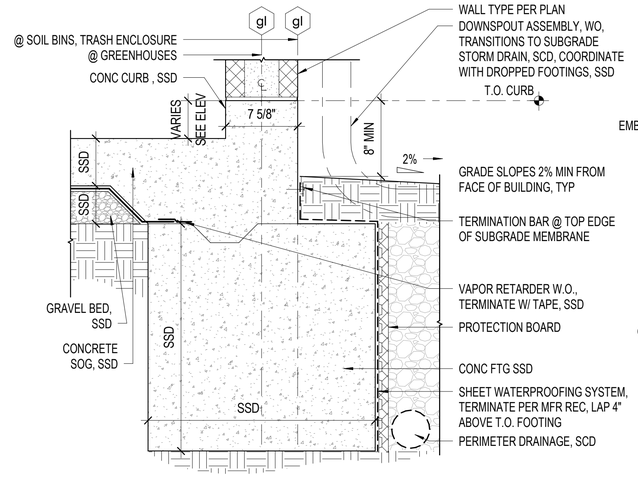

6 A7.11 CMU PERIMETER FOUNDATION @ GRADE

1 1/2" = 1'-0"

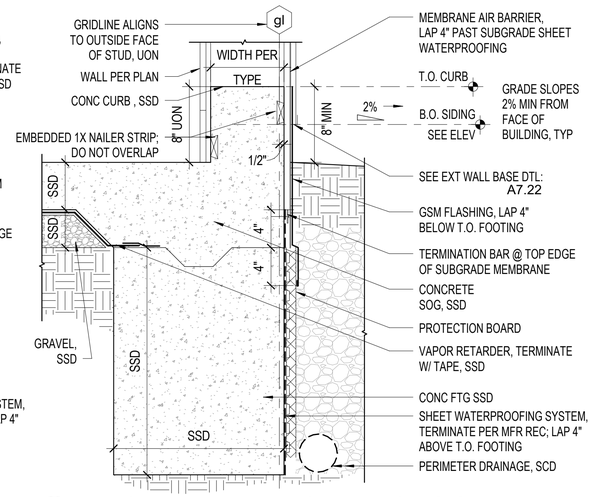

3 A7.11 TYPICAL PERIMETER FOUNDATION @ GRADE

1 1/2" = 1'-0"

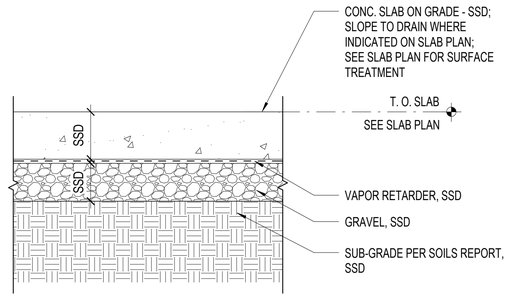

1 A7.11 TYPICAL SLAB ASSEMBLY - EXPOSED CONC SLAB

1 1/2" = 1'-0"

7 A7.11 CMU PERIMETER FOUNDATION @ PAVING

1 1/2" = 1'-0"

4 A7.11 TYPICAL PERIMETER FOUNDATION @ PAVING

1 1/2" = 1'-0"

FOR GATE AND FENCE FOOTINGS, SEE:

8 / A7.54

9 / A7.54

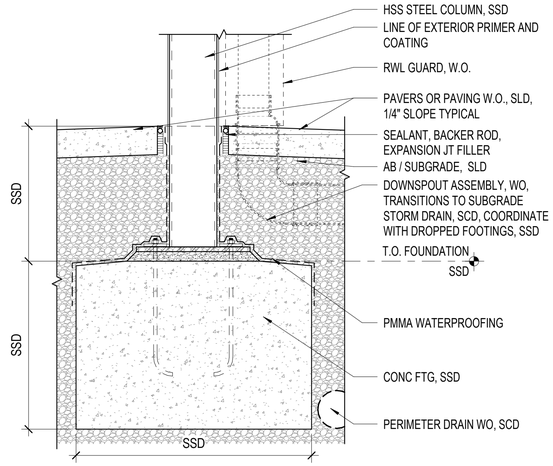

8 A7.11 COLUMN FOOTING @ PAVERS

1 1/2" = 1'-0"

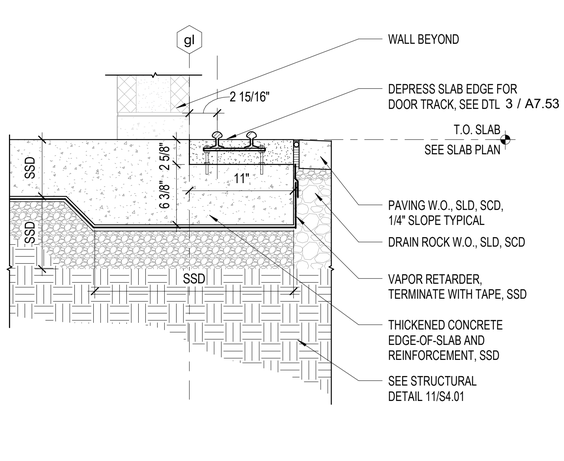

5 A7.11 CMU PERIMETER DEPRESSED SLAB - FOOTING

1 1/2" = 1'-0"

TYPE A

3 / A7.11

4 / A7.11

TYPE B

6 / A7.11

7 / A7.11

TYPE C

6 / A7.11

7 / A7.11

TYPE D

3 / A8.10

TYPE E

9 / A7.22

4 / A7.11

TYPE F

8 / A8.10

9 / A8.10

2 A7.11 CURB SIZE TYPES

1 1/2" = 1'-0"

APPROVALS

IDENTIFICATION STAMP
DIV. OF THE STATE ARCHITECT
APP: 01-119409 INC:
REVIEWED FOR
SS ☑ FLS ☑ ACS ☑
DATE: 03/14/2022

NOLL & TAM ARCHITECTS

729 Heinz Avenue
Berkeley, CA 94710
tel 510.542.2200
fax 510.542.2201

SEAL

LICENSED ARCHITECT
CHRISTOPHER NOLL
No. C15916
REN. 12-31-23
STATE OF CALIFORNIA

PROJECT TITLE

Peralta Community College District

MERRITT COLLEGE NEW LANDSCAPE HORTICULTURE COMPLEX

12500 Campus Drive
Oakland, CA 94619

BID SET

ISSUE DATE	03/03/2022
N&T JOB NUMBER	22003

REVISIONS

	DATE	DESCRIPTION

DRAWN BY **Author** CHECKED BY **Checker**

SHEET TITLE

EXTERIOR - FLOOR & CURB DETAILS

SHEET NUMBER

A7.11

3/3/2022 11:30:25 AM BIM 360://PCCD Merritt Horticulture/Merritt Horticulture_2020.rvt

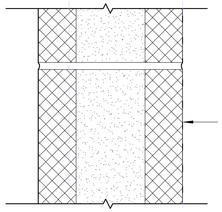

C-1 T — TYPICAL CONCRETE MASONRY WALL

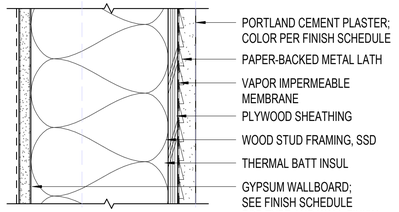

B-1 T — TYPICAL CEMENT PLASTER SINGLE SIDED SHEAR WALL ASSEMBLY

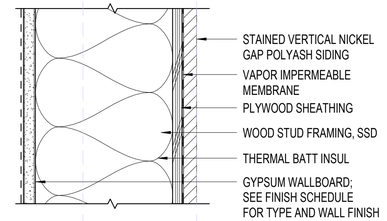

A-1 T — TYPICAL POLYASH SINGLE SIDED SHEAR WALL ASSEMBLY

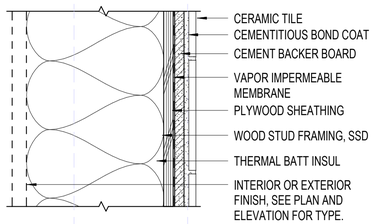

D-1 T — TYPICAL EXTERIOR TILE - ONE SIDE

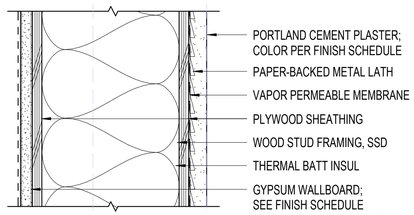

B-2 T — CEMENT PLASTER DOUBLE SIDED SHEAR WALL ASSEMBLY

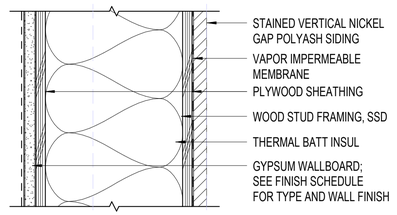

A-2 T — POLYASH DOUBLE SIDED SHEAR WALL ASSEMBLY

EXTERIOR WALL ASSEMBLY NOTES

1. FOR TYPICAL WALL FRAMING DETAILS, SEE STRUCTURAL DRAWINGS
2. PROVIDE BACKING FOR FULL WIDTH OF ALL WALL ATTACHED EQUIPMENT, CASEWORK AND ACCESSORIES. SEE TYPICAL BACKING DETAILS: 6 / A8.12 7 / A8.12 8 / A8.12
3. ALL GWB TO BE 5/8" TYPE X UON. SEE FINISH SCHEDULE FOR WATER RESISTANT BOARD AND TILE BACKER.
4. SEE SLAB PLANS AND SHEET A7.11 FOR CURBS.
5. REFER TO SPECIFICATION FOR INSULATION REQUIREMENTS
6. SEE A8.10 FOR TYPICAL INTERIOR PARTITIONS
7. PLYWD SHEATHING RUNS COMPLETE SURFACE OF WALL. SSD FOR LOCATIONS OF STRUCTURAL PLYWD SHEATHING.

PARTITION TYPE LEGEND

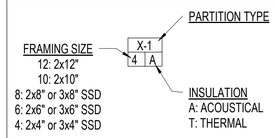

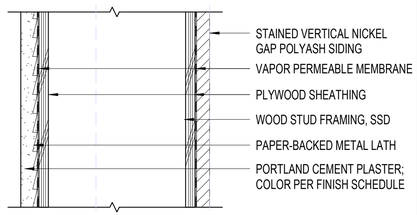

A-4 T — POLYASH DOUBLE SIDED SHEAR WALL W/ CEMENT PLASTER REVERSE

APPROVALS

IDENTIFICATION STAMP
DIV. OF THE STATE ARCHITECT
APP: 01-119409 INC:
REVIEWED FOR
SS ☑ FLS ☑ ACS ☑
DATE: 03/14/2022

NOLL & TAM ARCHITECTS
729 Heinz Avenue
Berkeley, CA 94710
tel 510.542.2200
fax 510.542.2201

SEAL

LICENSED ARCHITECT
CHRISTOPHER NOLL
No. C15916
REN. 12-31-23
STATE OF CALIFORNIA

PROJECT TITLE

Peralta Community College District
MERRITT COLLEGE NEW LANDSCAPE HORTICULTURE COMPLEX

12500 Campus Drive
Oakland, CA 94619

BID SET

ISSUE DATE	03/03/2022
N&T JOB NUMBER	22003

REVISIONS

	DATE	DESCRIPTION

DRAWN BY Author | CHECKED BY Checker

SHEET TITLE
EXTERIOR - TYPICAL WALL ASSEMBLIES

SHEET NUMBER
A7.21

3/3/2022 11:30:27 AM BIM 360://PCCD Merritt Horticulture/Merritt Horticulture_2020.rvt

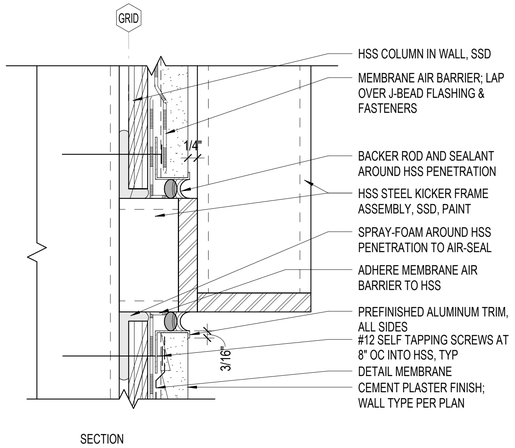

10 A7.22 CEM PLASTER HSS FLASHING

6" = 1'-0"

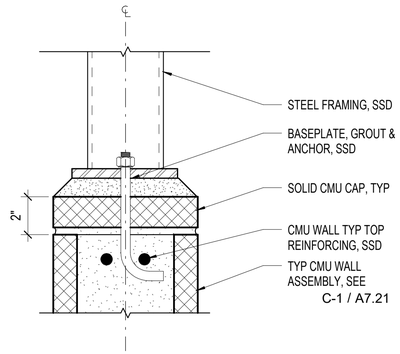

7 A7.22 SOIL BINS, HSS @ CMU

3" = 1'-0"

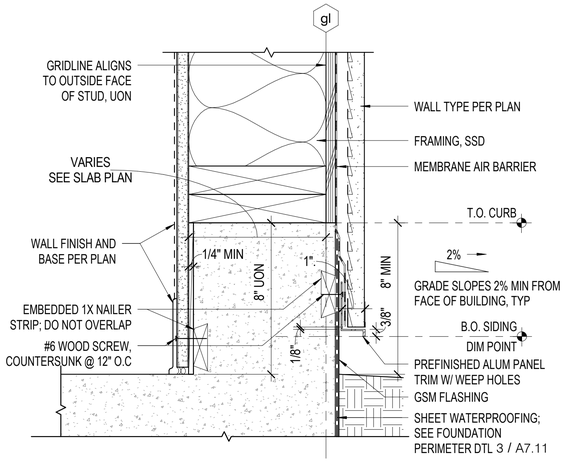

4 A7.22 WALL TYPE B EXT BASE @ GRADE

3" = 1'-0"

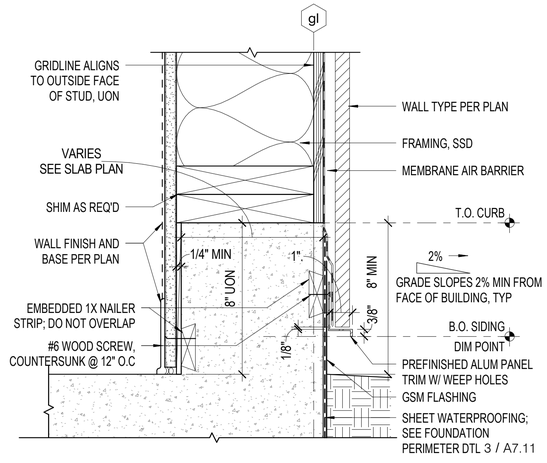

1 A7.22 WALL TYPE A EXT BASE @ GRADE

3" = 1'-0"

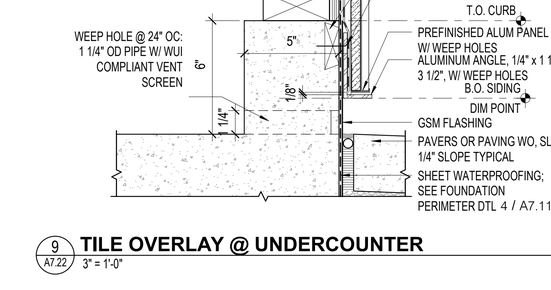

8 A7.22 CONCRETE CURB @ wH

3" = 1'-0"

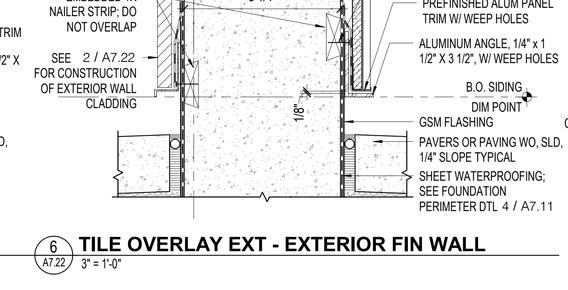

5 A7.22 WALL TYPE B EXT BASE @ PAVING

3" = 1'-0"

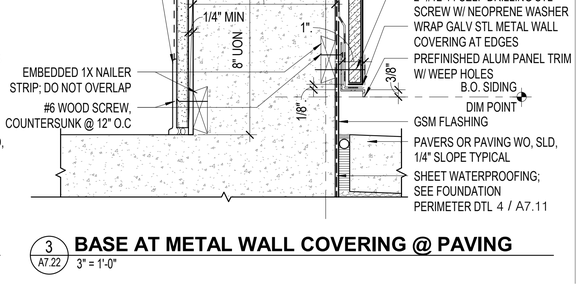

2 A7.22 WALL TYPE A EXT BASE @ PAVING

3" = 1'-0"

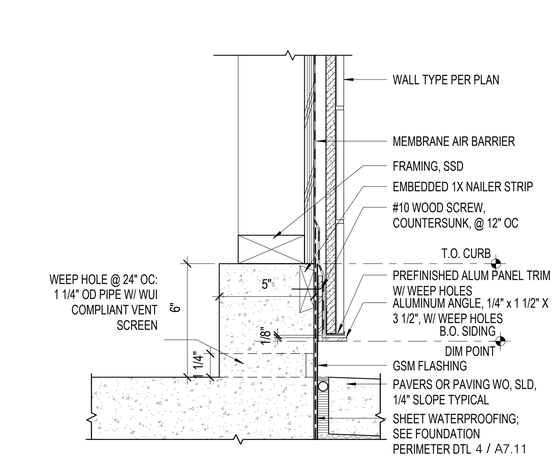

9 A7.22 TILE OVERLAY @ UNDERCOUNTER

3" = 1'-0"

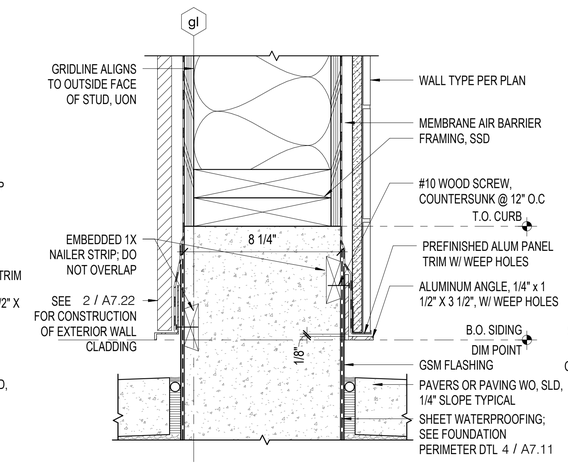

6 A7.22 TILE OVERLAY EXT - EXTERIOR FIN WALL

3" = 1'-0"

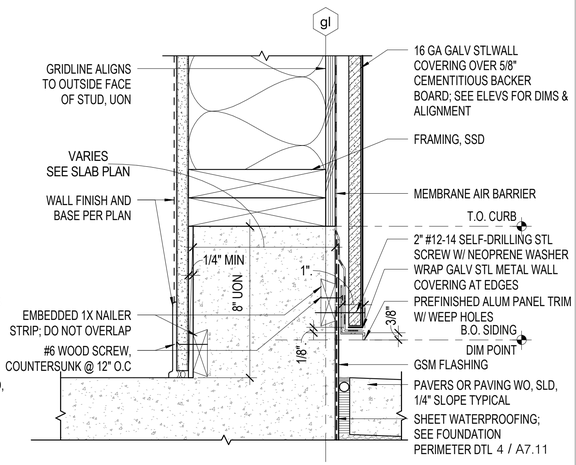

3 A7.22 BASE AT METAL WALL COVERING @ PAVING

3" = 1'-0"

APPROVALS

IDENTIFICATION STAMP
DIV. OF THE STATE ARCHITECT
APP: 01-119409 INC:
REVIEWED FOR
SS ☑ FLS ☑ ACS ☑
DATE: 03/14/2022

NOLL & TAM ARCHITECTS
729 Heinz Avenue
Berkeley, CA 94710
tel 510.542.2200
fax 510.542.2201

SEAL

LICENSED ARCHITECT
CHRISTOPHER NOLL
No. C15916
REN. 12-31-23
STATE OF CALIFORNIA

PROJECT TITLE

Peralta Community College District

MERRITT COLLEGE NEW LANDSCAPE HORTICULTURE COMPLEX

12500 Campus Drive
Oakland, CA 94619

BID SET

ISSUE DATE	03/03/2022
N&T JOB NUMBER	22003

REVISIONS

#	DATE	DESCRIPTION

DRAWN BY Author | CHECKED BY Checker

SHEET TITLE

EXTERIOR - WALL ASSEMBLY DETAILS

SHEET NUMBER

A7.22

3/3/2022 11:30:29 AM BIM 360://PCCD Merritt Horticulture/Merritt Horticulture_2020.rvt

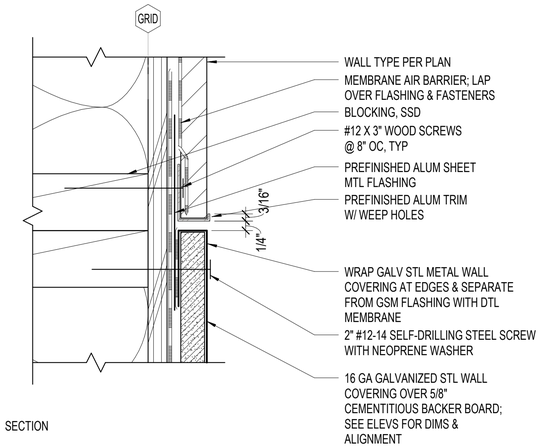

SECTION

10 A7.23 HEAD @ METAL WALL COVERING

6" = 1'-0"

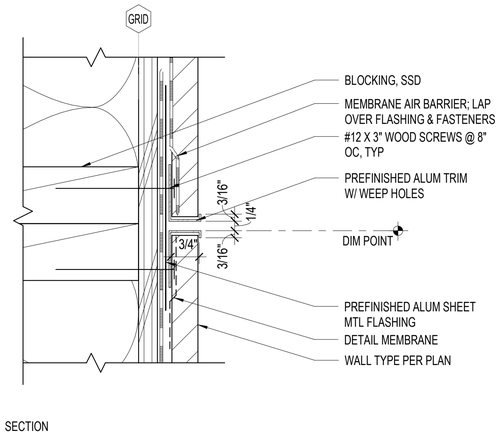

SECTION

7 A7.23 EXPANSION JT @ POLYASH - HORIZ

6" = 1'-0"

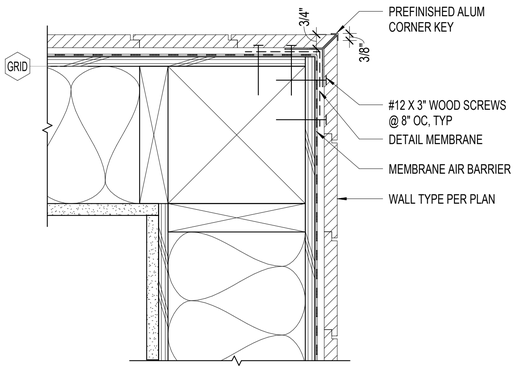

PLAN

4 A7.23 POLYASH, EXT CORNER

3" = 1'-0"

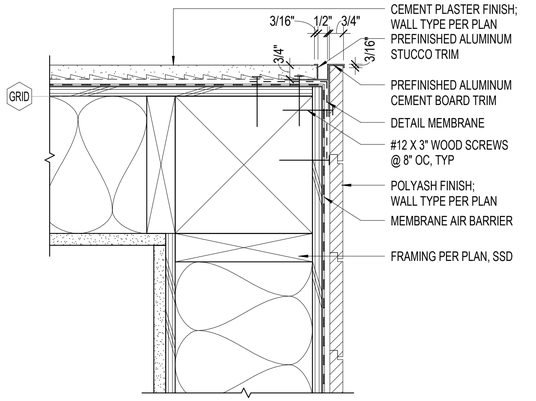

PLAN

1 A7.23 CORNER TRANSITION @ POLYASH/CEM PLASTER

3" = 1'-0"

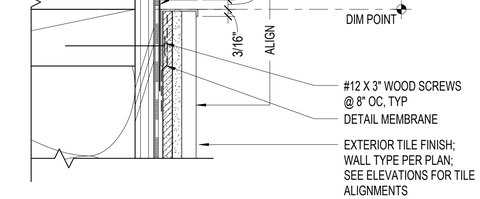

SECTION

11 A7.23 CEMENT PLASTER / EXT TILE TRANSITION

6" = 1'-0"

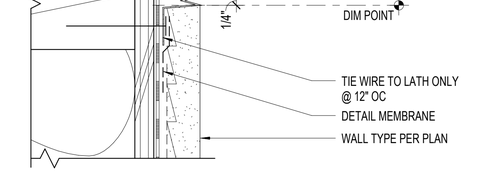

SECTION

8 A7.23 EXPANSION JT @ CEMENT PLASTER

6" = 1'-0"

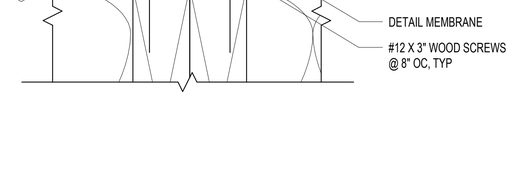

PLAN

5 A7.23 POLYASH/CEM PLASTER TRANSITION - VERT

6" = 1'-0"

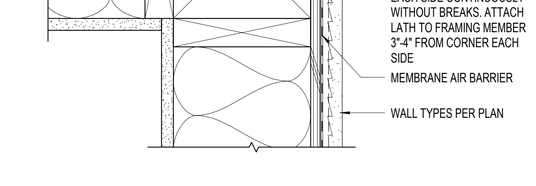

PLAN

2 A7.23 OUTSIDE CORNER @ CEMENT PLASTER

3" = 1'-0"

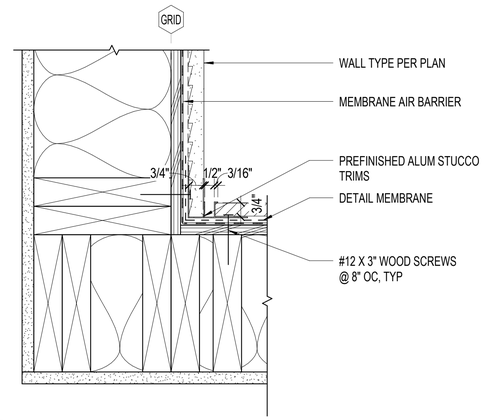

PLAN

9 A7.23 INSIDE CORNER @ POLYASH TO CEM PLASTER

3" = 1'-0"

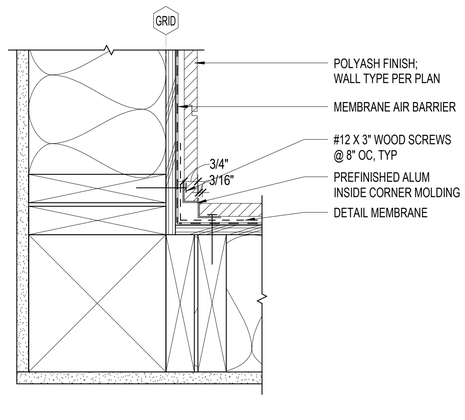

PLAN

6 A7.23 INSIDE CORNER @ POLYASH

3" = 1'-0"

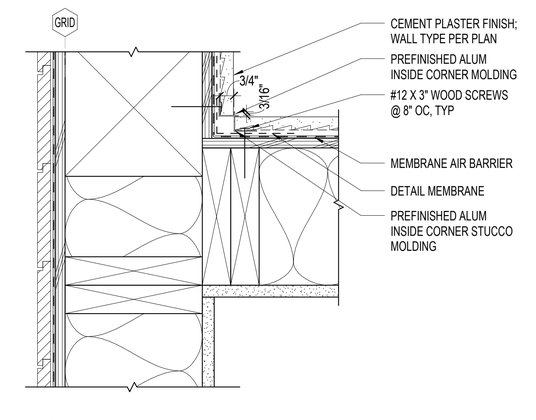

PLAN

3 A7.23 INSIDE CORNER @ CEMENT PLASTER

3" = 1'-0"

APPROVALS

IDENTIFICATION STAMP
DIV. OF THE STATE ARCHITECT
APP: 01-119409 INC:
REVIEWED FOR
SS ☑ FLS ☑ ACS ☑
DATE: 03/14/2022

NOLL & TAM ARCHITECTS
729 Heinz Avenue
Berkeley, CA 94710
tel 510.542.2200
fax 510.542.2201

SEAL

LICENSED ARCHITECT
CHRISTOPHER NOLL
No. C15916
REN. 12-31-23
STATE OF CALIFORNIA

PROJECT TITLE

Peralta Community College District
MERRITT COLLEGE NEW LANDSCAPE HORTICULTURE COMPLEX

12500 Campus Drive
Oakland, CA 94619

BID SET

ISSUE DATE	03/03/2022
N&T JOB NUMBER	22003

REVISIONS

#	DATE	DESCRIPTION

DRAWN BY **Author** CHECKED BY **Checker**

SHEET TITLE

EXTERIOR - WALL ASSEMBLY DETAILS

SHEET NUMBER

A7.23

3/3/2022 11:30:31 AM BIM 360://PCCD Merritt Horticulture/Merritt Horticulture_2020.rvt

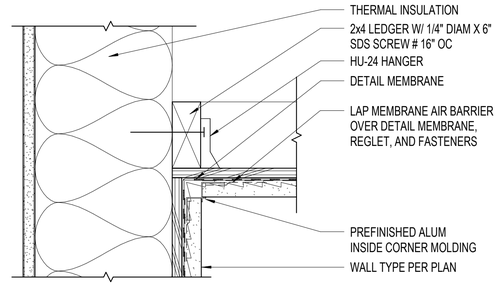

3 A7.31 **SOFFIT AT OUTDOOR KITCHEN RETURN**
3" = 1'-0"

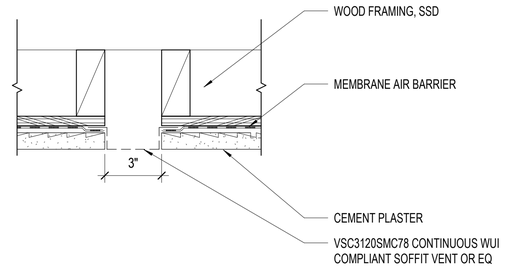

5 A7.31 **SOFFIT VENT @ OUTDOOR KITCHEN**
3" = 1'-0"

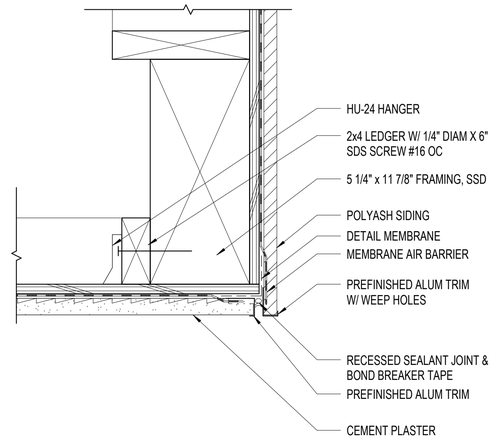

1 A7.31 **SOFFIT AT OUTDOOR KITCHEN**
3" = 1'-0"

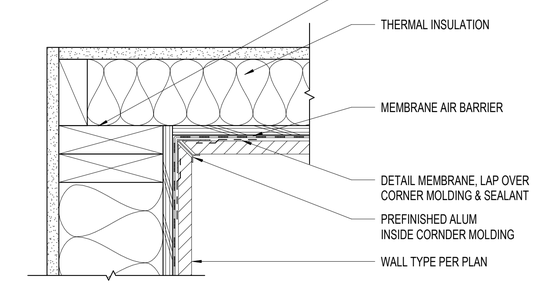

4 A7.31 **SOFFIT AT PASSAGEWAY RETURN**
3" = 1'-0"

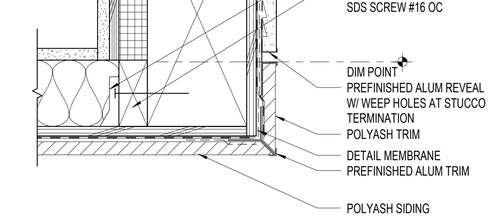

2 A7.31 **SOFFIT AT PASSAGEWAY**
3" = 1'-0"

APPROVALS

IDENTIFICATION STAMP
DIV. OF THE STATE ARCHITECT
APP: 01-119409 INC:
REVIEWED FOR
SS ☑ FLS ☑ ACS ☑
DATE: 03/14/2022

NOLL & TAM ARCHITECTS
729 Heinz Avenue
Berkeley, CA 94710
tel 510.542.2200
fax 510.542.2201

SEAL

LICENSED ARCHITECT
CHRISTOPHER NOLL
No. C15916
REN. 12-31-23
STATE OF CALIFORNIA

PROJECT TITLE

Peralta Community College District
MERRITT COLLEGE NEW LANDSCAPE HORTICULTURE COMPLEX

12500 Campus Drive
Oakland, CA 94619

BID SET

ISSUE DATE 03/03/2022
N&T JOB NUMBER 22003

REVISIONS

#	DATE	DESCRIPTION

DRAWN BY Author | CHECKED BY Checker

SHEET TITLE
EXTERIOR - SOFFIT DETAILS

SHEET NUMBER
A7.31

3/3/2022 11:30:32 AM BIM 360://PCCD Merritt Horticulture/Merritt Horticulture_2020.rvt

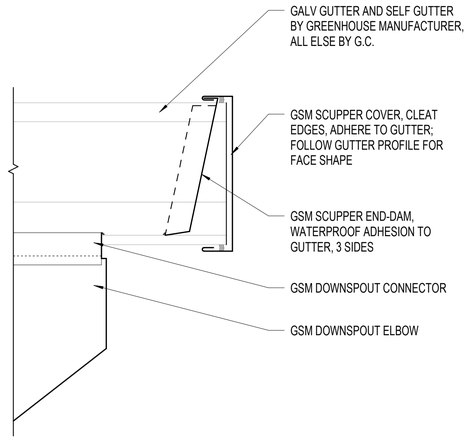

7 / A7.35 GREENHOUSE SCUPPER
3" = 1'-0"

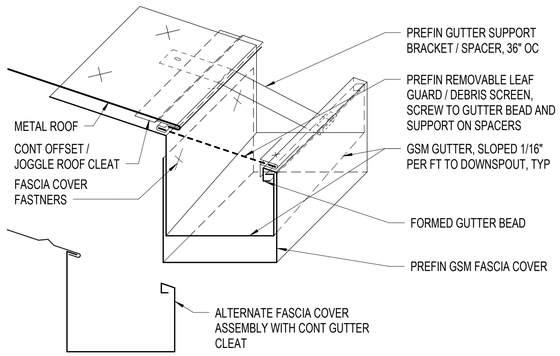

4 / A7.35 GUTTER, TYPICAL ASSEMBLY
3" = 1'-0"

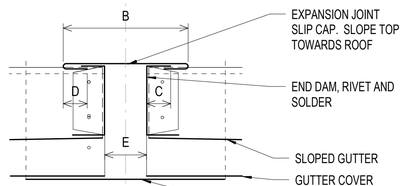

5 / A7.35 GUTTER EXPANSION JOINT
3" = 1'-0"

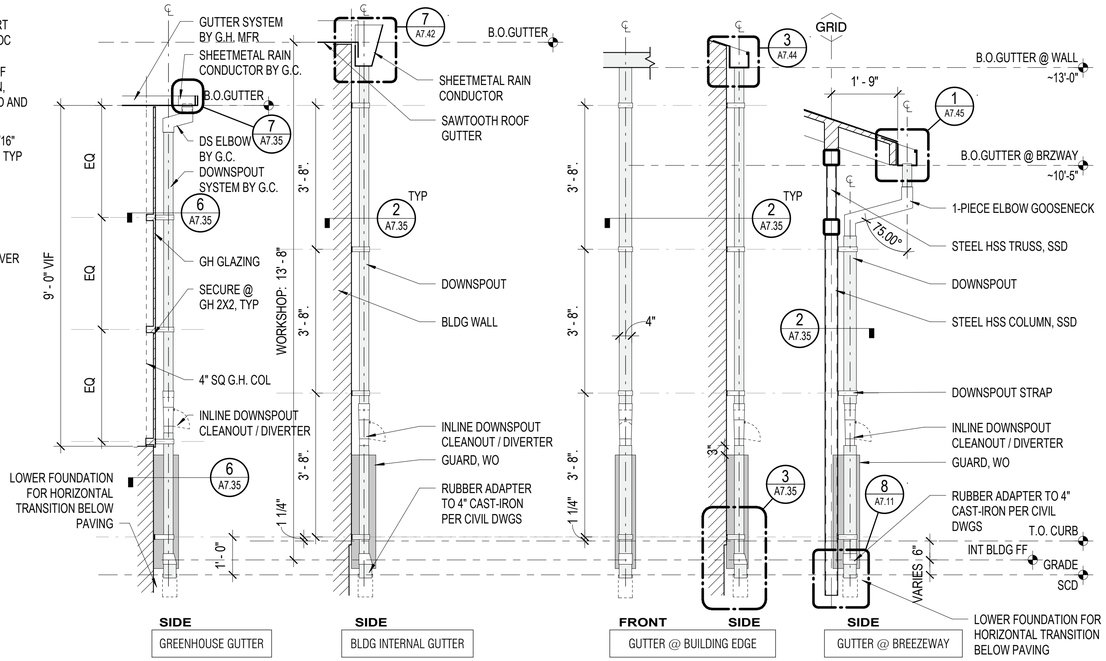

1 / A7.35 DOWNSPOUT ELEVATIONS
1/2" = 1'-0"

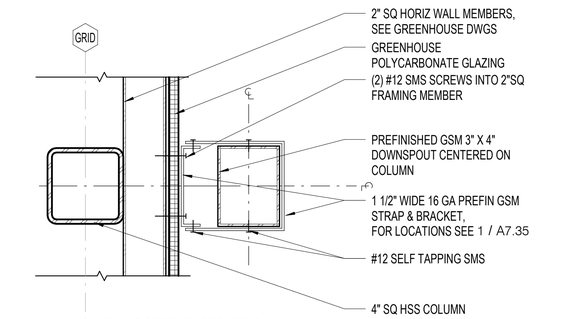

PLAN @ GREENHOUSE GLAZING

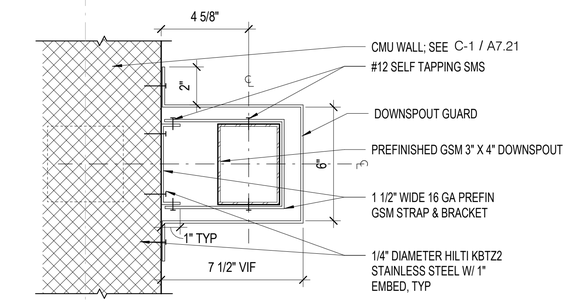

PLAN @ GREENHOUSE CMU

6 / A7.35 DOWNSPOUT STRAP @ GREENHOUSE
3" = 1'-0"

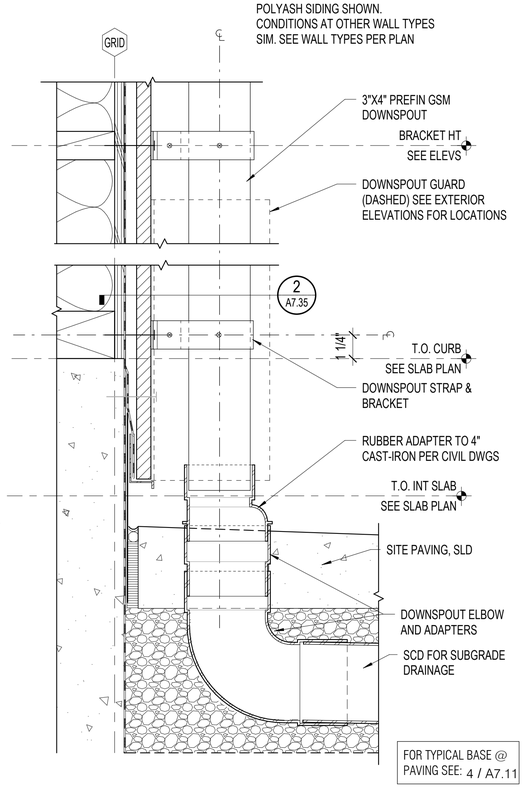

3 / A7.35 DOWNSPOUT BASE @ EXT WALL - SECTION
3" = 1'-0"

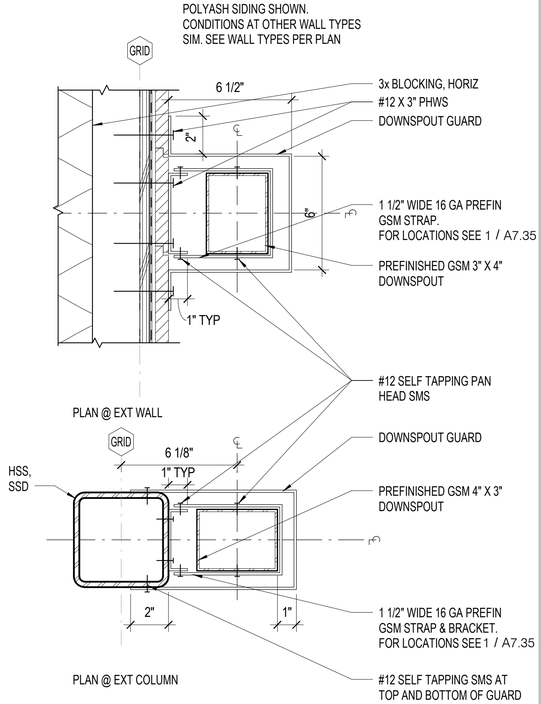

PLAN @ EXT WALL

PLAN @ EXT COLUMN

2 / A7.35 DOWNSPOUT STRAP @ EXT WALL & COL
3" = 1'-0"

APPROVALS

IDENTIFICATION STAMP
DIV. OF THE STATE ARCHITECT
APP: 01-119409 INC:
REVIEWED FOR
SS ☑ FLS ☑ ACS ☑
DATE: 03/14/2022

NOLL & TAM ARCHITECTS
729 Heinz Avenue
Berkeley, CA 94710
tel 510.542.2200
fax 510.542.2201

SEAL

LICENSED ARCHITECT
CHRISTOPHER NOLL
No. C15916
REN. 12-31-23
STATE OF CALIFORNIA

PROJECT TITLE

Peralta Community College District
MERRITT COLLEGE NEW LANDSCAPE HORTICULTURE COMPLEX

12500 Campus Drive
Oakland, CA 94619

BID SET

ISSUE DATE 03/03/2022
N&T JOB NUMBER 22003

REVISIONS

	DATE	DESCRIPTION

DRAWN BY Author | CHECKED BY Checker

SHEET TITLE
EXTERIOR - GUTTER & DRAIN DETAILS

SHEET NUMBER
A7.35

3/3/2022 11:30:34 AM BIM 360://PCCD Merritt Horticulture/Merritt Horticulture_2020.rvt

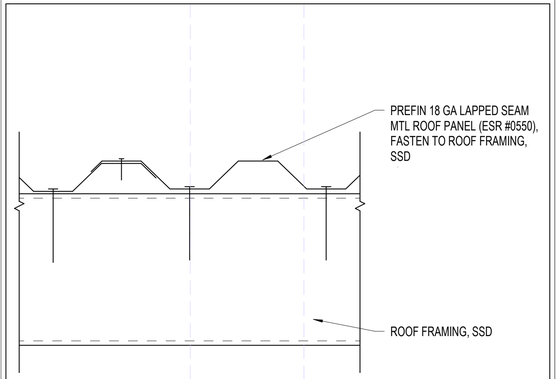

R3 TYPICAL ROOF ASSEMBLY - BOX RIB MTL ROOF

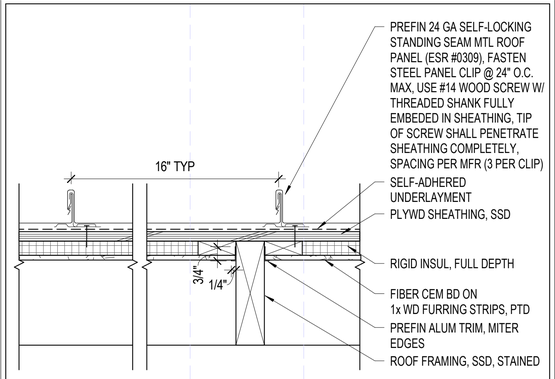

R2 TYPICAL ROOF ASSEMBLY - BREEZEWAY/PASSAGEWAY

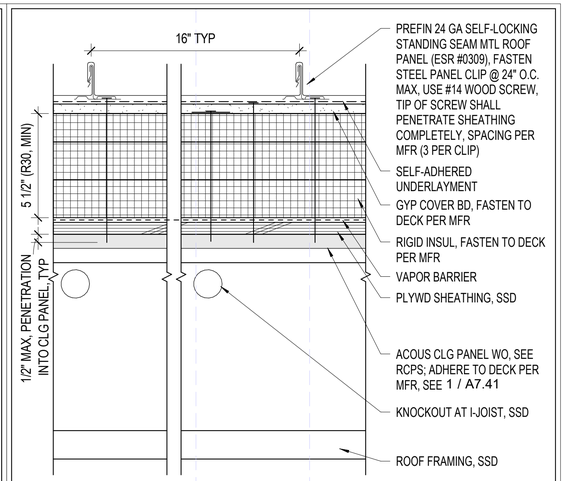

R1 TYPICAL ROOF ASSEMBLY - STANDING SEAM MTL ROOF

ROOFING NOTES

1. ROOF COVERINGS TO BE FIRE-RETARDANT, CLASS A PER CBC SECTION 705A AND 1501.1.1.
2. ALL EXPOSED STL TO BE PRIMED AND WRAPPED IN THE SHOP PRIOR TO TRANSPORT, AND FIELD PAINTED. GRIND ALL WELDS SMOOTH AT EXPOSED STL.

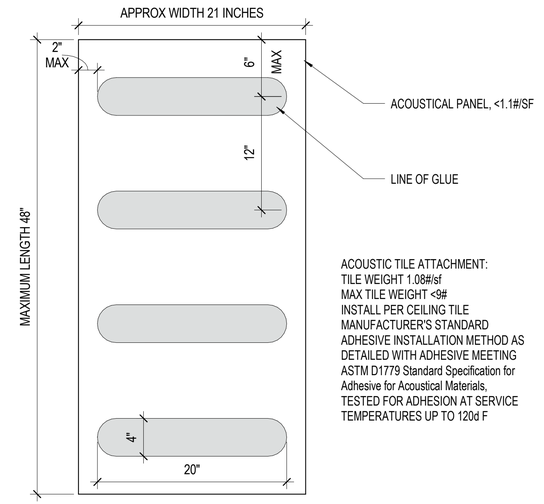

ACOUSTIC TILE ATTACHMENT:
TILE WEIGHT 1.08#/sf
MAX TILE WEIGHT <9#
INSTALL PER CEILING TILE MANUFACTURER'S STANDARD ADHESIVE INSTALLATION METHOD AS DETAILED WITH ADHESIVE MEETING ASTM D1779 Standard Specification for Adhesive for Acoustical Materials, TESTED FOR ADHESION AT SERVICE TEMPERATURES UP TO 120d F

1 / A7.41 **ACOUSTICAL TILE ATTACHMENT**
1 1/2" = 1'-0"

APPROVALS

IDENTIFICATION STAMP
DIV. OF THE STATE ARCHITECT
APP: 01-119409 INC:
REVIEWED FOR
SS ☑ FLS ☑ ACS ☑
DATE: 03/14/2022

NOLL & TAM ARCHITECTS
729 Heinz Avenue
Berkeley, CA 94710
tel 510.542.2200
fax 510.542.2201

SEAL

LICENSED ARCHITECT
CHRISTOPHER NOLL
No. C15916
REN. 12-31-23
STATE OF CALIFORNIA

PROJECT TITLE

Peralta Community College District
MERRITT COLLEGE NEW LANDSCAPE HORTICULTURE COMPLEX

12500 Campus Drive
Oakland, CA 94619

BID SET

ISSUE DATE 03/03/2022
N&T JOB NUMBER 22003

REVISIONS

	DATE	DESCRIPTION

DRAWN BY Author | CHECKED BY Checker

SHEET TITLE
EXTERIOR - TYPICAL ROOF ASSEMBLIES

SHEET NUMBER
A7.41

3/3/2022 11:30:35 AM BIM 360://PCCD Merritt Horticulture/Merritt Horticulture_2020.rvt

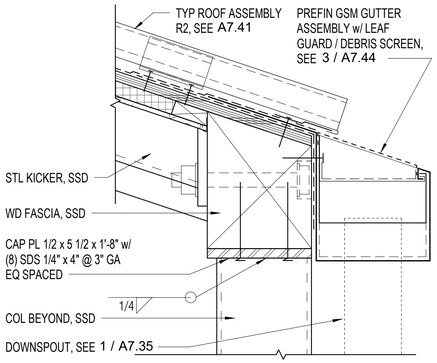

10 A7.42 **WORKSHOP, EAVE/GUTTER SOUTH OF LINE wF**
3" = 1'-0"

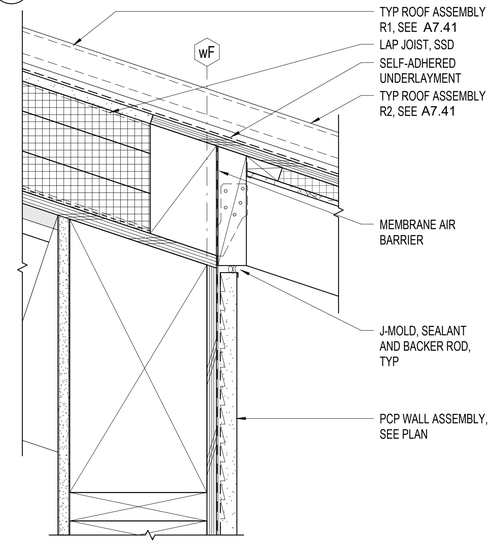

11 A7.42 **WORKSHOP, TRANSITION @ LINE wF**
3" = 1'-0"

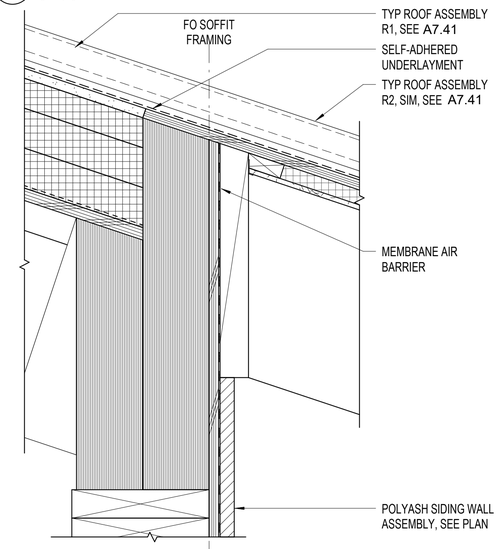

12 A7.42 **WORKSHOP, TRANSITION SOUTH OF LINE wH**
3" = 1'-0"

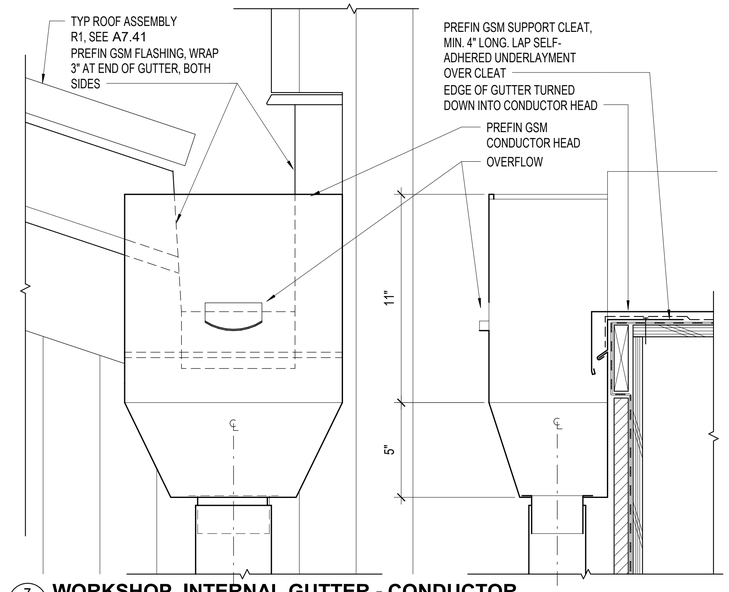

7 A7.42 **WORKSHOP, INTERNAL GUTTER - CONDUCTOR**
3" = 1'-0"

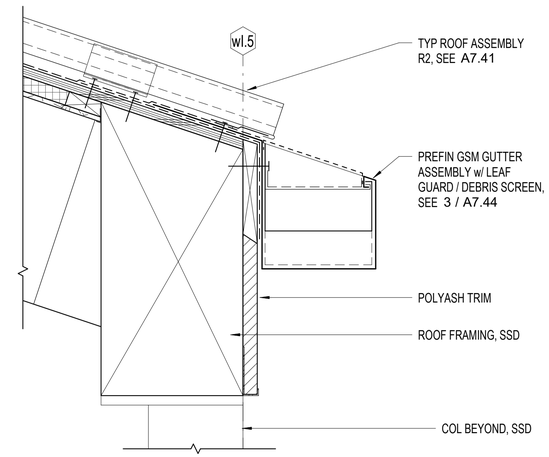

8 A7.42 **WORKSHOP, EAVE/GUTTER @ LINE wI.5**
3" = 1'-0"

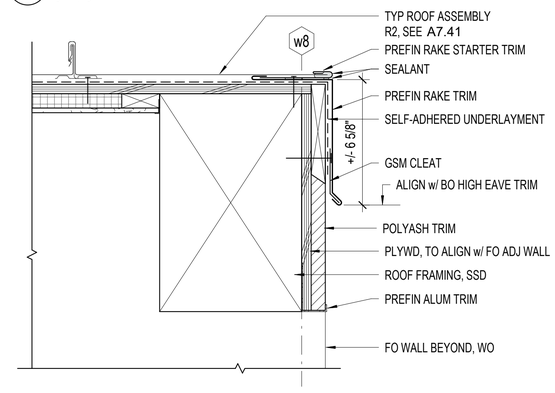

9 A7.42 **WORKSHOP, RAKE @ COMM GARDEN SUPPORT**
3" = 1'-0"

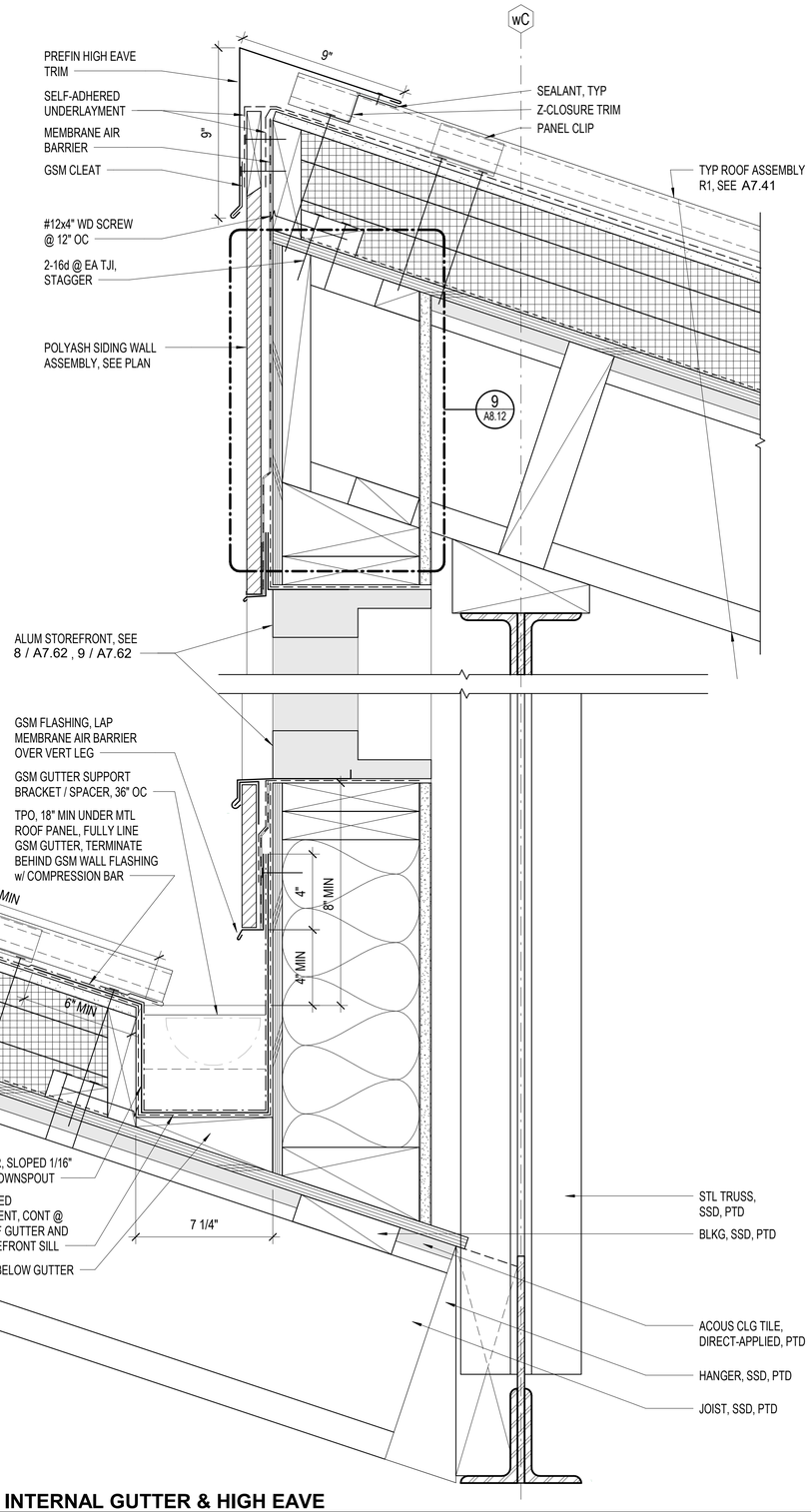

6 A7.42 **WORKSHOP, INTERNAL GUTTER & HIGH EAVE**
3" = 1'-0"

APPROVALS

IDENTIFICATION STAMP
DIV. OF THE STATE ARCHITECT
APP: 01-119409 INC:
REVIEWED FOR
SS ☑ FLS ☑ ACS ☑
DATE: 03/14/2022

NOLL & TAM ARCHITECTS
729 Heinz Avenue
Berkeley, CA 94710
tel 510.542.2200
fax 510.542.2201

SEAL

LICENSED ARCHITECT
CHRISTOPHER NOLL
No. C15916
REN. 12-31-23
STATE OF CALIFORNIA

PROJECT TITLE

Peralta Community College District
MERRITT COLLEGE NEW LANDSCAPE HORTICULTURE COMPLEX

12500 Campus Drive
Oakland, CA 94619

BID SET

ISSUE DATE	03/03/2022
N&T JOB NUMBER	22003

REVISIONS

	DATE	DESCRIPTION

DRAWN BY **Author** CHECKED BY **Checker**

SHEET TITLE
EXTERIOR - ROOF AND FASCIA DETAILS

SHEET NUMBER
A7.42

3/3/2022 11:30:37 AM BIM 360://PCCD Merritt Horticulture/Merritt Horticulture_2020.rvt

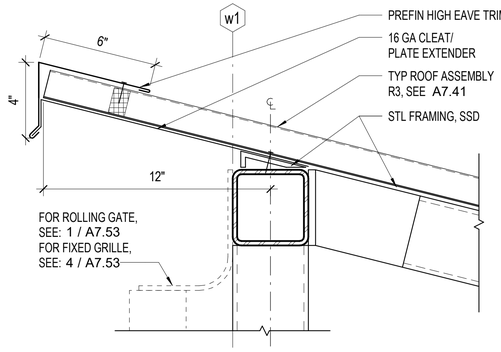

10 A7.43 **TRASH ENCLOSURE, HIGH EAVE**
3" = 1'-0"

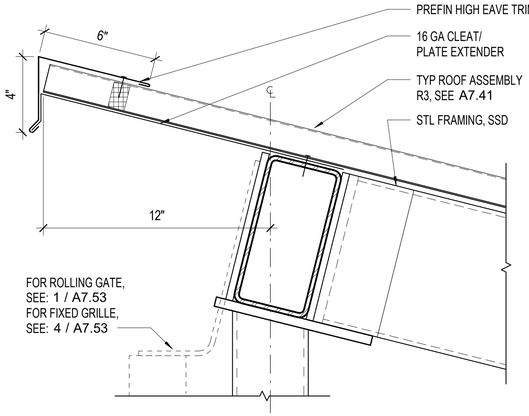

7 A7.43 **SOIL BINS, HIGH EAVE**
3" = 1'-0"

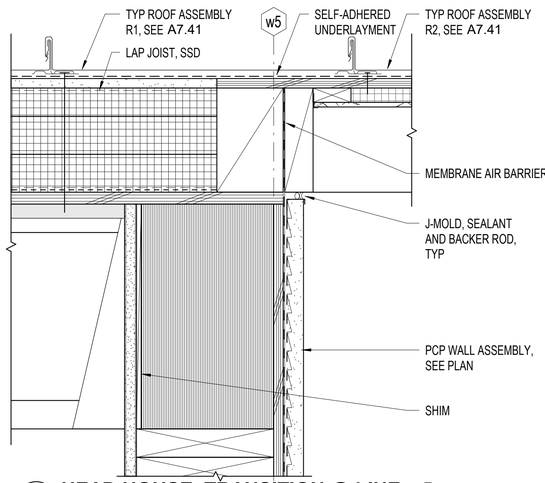

4 A7.43 **HEAD HOUSE, TRANSITION @ LINE w5**
3" = 1'-0"

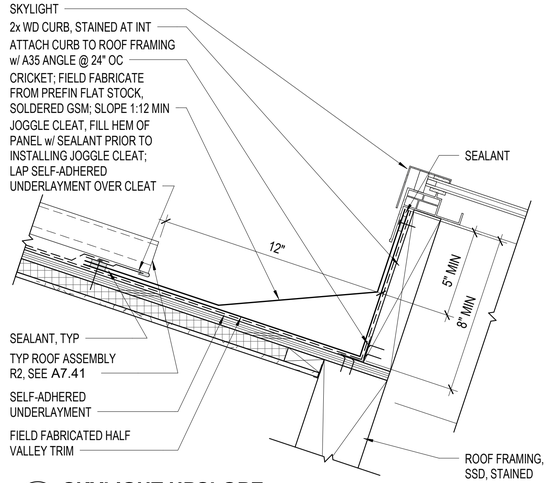

1 A7.43 **SKYLIGHT UPSLOPE**
3" = 1'-0"

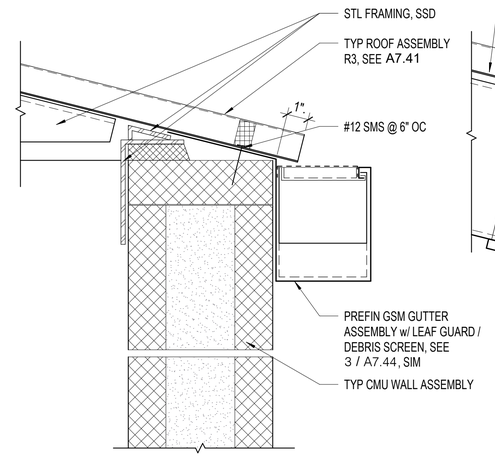

11 A7.43 **TRASH ENCLOSURE, HANGING GUTTER**
3" = 1'-0"

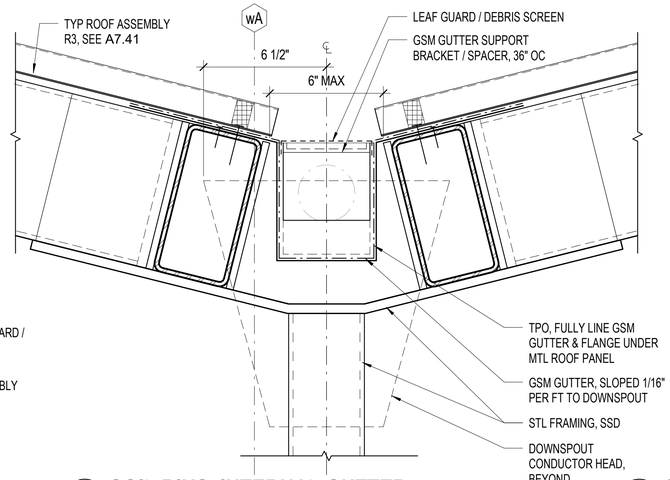

8 A7.43 **SOIL BINS, INTERNAL GUTTER**
3" = 1'-0"

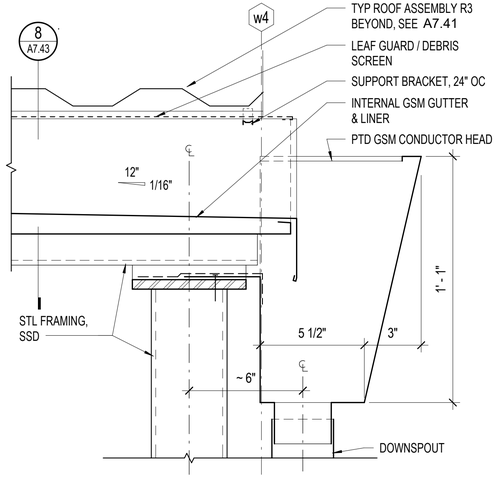

5 A7.43 **SOIL BINS, GUTTER CONDUCTOR HEAD**
3" = 1'-0"

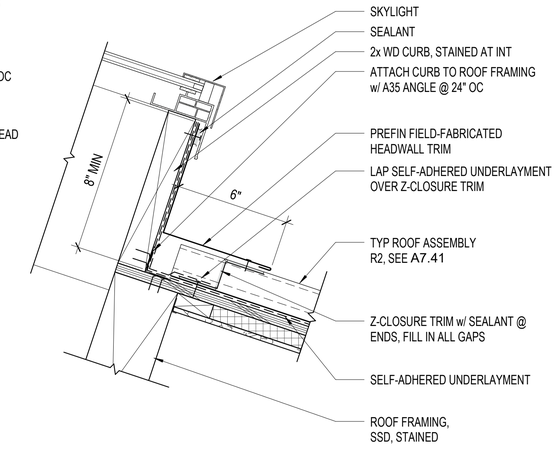

2 A7.43 **SKYLIGHT DOWNSLOPE**
3" = 1'-0"

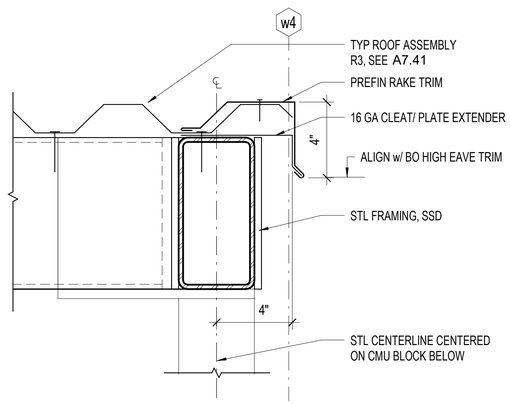

9 A7.43 **SOIL BINS, RAKE**
3" = 1'-0"

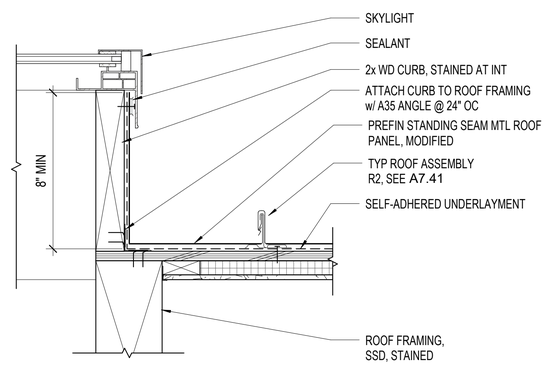

3 A7.43 **SKYLIGHT SIDEWALL**
3" = 1'-0"

APPROVALS

IDENTIFICATION STAMP
DIV. OF THE STATE ARCHITECT
APP: 01-119409 INC:
REVIEWED FOR
SS ☑ FLS ☑ ACS ☑
DATE: 03/14/2022

NOLL & TAM ARCHITECTS
729 Heinz Avenue
Berkeley, CA 94710
tel 510.542.2200
fax 510.542.2201

SEAL

LICENSED ARCHITECT
CHRISTOPHER NOLL
No. C15916
REN. 12-31-23
STATE OF CALIFORNIA

PROJECT TITLE

Peralta Community College District
MERRITT COLLEGE NEW LANDSCAPE HORTICULTURE COMPLEX

12500 Campus Drive
Oakland, CA 94619

BID SET

ISSUE DATE	03/03/2022
N&T JOB NUMBER	22003

REVISIONS

	DATE	DESCRIPTION

DRAWN BY **Author** CHECKED BY **Checker**

SHEET TITLE
EXTERIOR - ROOF AND FASCIA DETAILS

SHEET NUMBER
A7.43

3/3/2022 11:30:39 AM BIM 360://PCCD Merritt Horticulture/Merritt Horticulture_2020.rvt

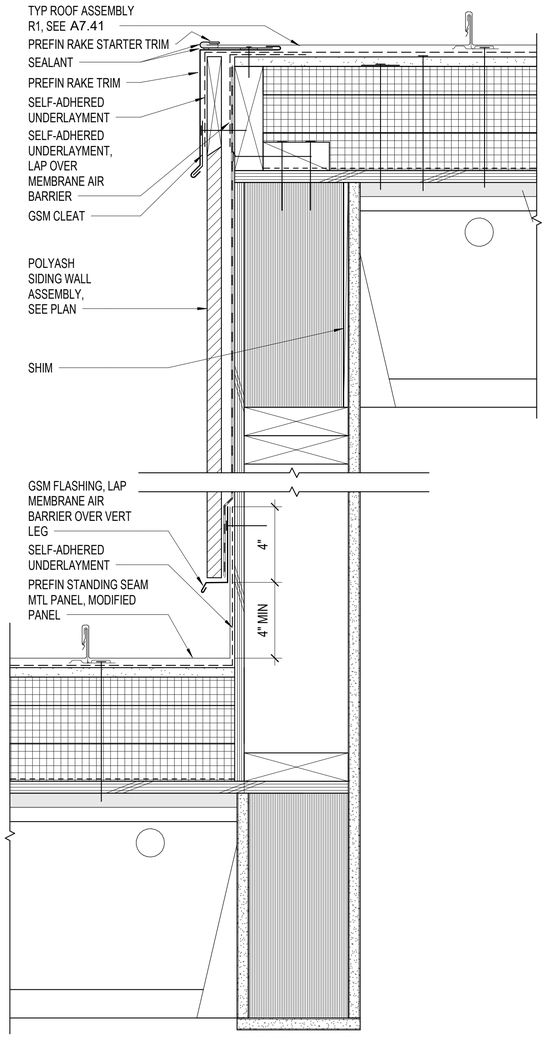

5 A7.44 **EAST BLDGS, CLERESTORY SIDEWALL**
3" = 1'-0"

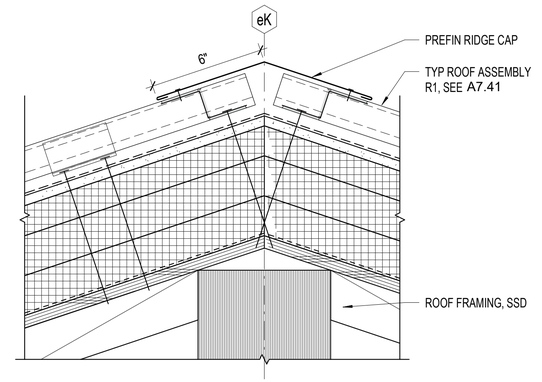

1 A7.44 **EAST BLDGS, RIDGE (HIP, SIM)**
3" = 1'-0"

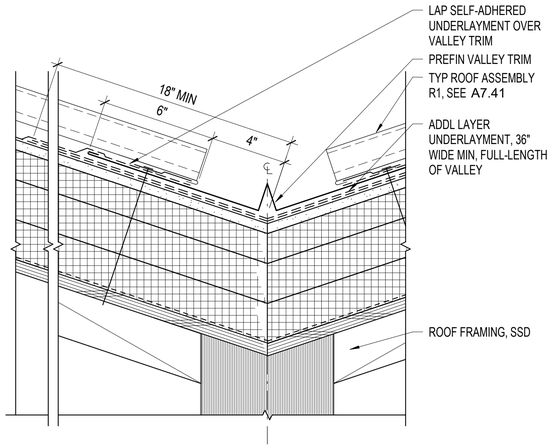

2 A7.44 **EAST BLDGS, VALLEY**
3" = 1'-0"

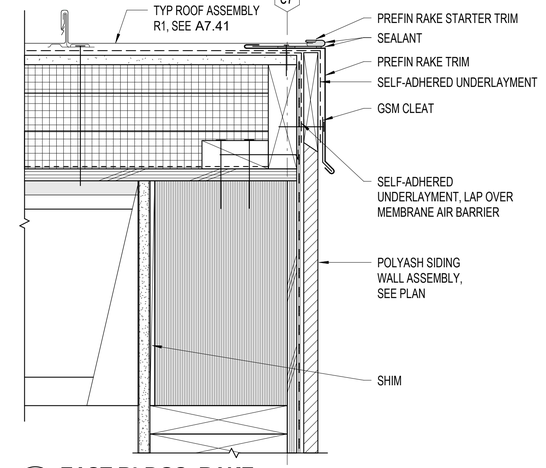

6 A7.44 **EAST BLDGS, RAKE**
3" = 1'-0"

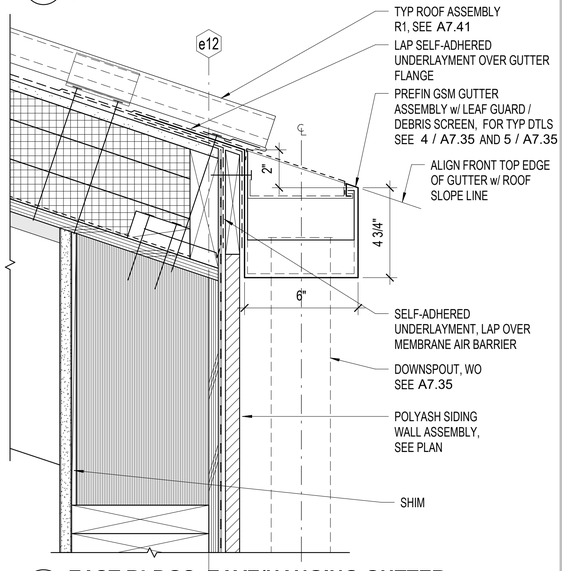

3 A7.44 **EAST BLDGS, EAVE/HANGING GUTTER**
3" = 1'-0"

APPROVALS

IDENTIFICATION STAMP
DIV. OF THE STATE ARCHITECT
APP: 01-119409 INC:
REVIEWED FOR
SS ☑ FLS ☑ ACS ☑
DATE: 03/14/2022

NOLL & TAM ARCHITECTS
729 Heinz Avenue
Berkeley, CA 94710
tel 510.542.2200
fax 510.542.2201

SEAL

LICENSED ARCHITECT
CHRISTOPHER NOLL
No. C15916
REN. 12-31-23
STATE OF CALIFORNIA

PROJECT TITLE

Peralta Community College District
MERRITT COLLEGE NEW LANDSCAPE HORTICULTURE COMPLEX

12500 Campus Drive
Oakland, CA 94619

BID SET

ISSUE DATE 03/03/2022
N&T JOB NUMBER 22003

REVISIONS

	DATE	DESCRIPTION

DRAWN BY Author | CHECKED BY Checker

SHEET TITLE
EXTERIOR - ROOF AND FASCIA DETAILS

SHEET NUMBER
A7.44

3/3/2022 11:30:40 AM BIM 360://PCCD Merritt Horticulture/Merritt Horticulture_2020.rvt

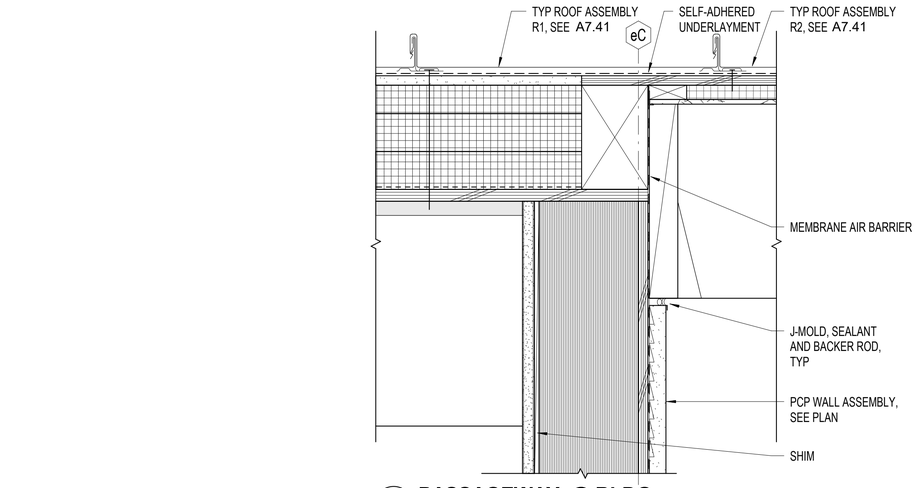

7 A7.45 **PASSAGEWAY, @ BLDG**
3" = 1'-0"

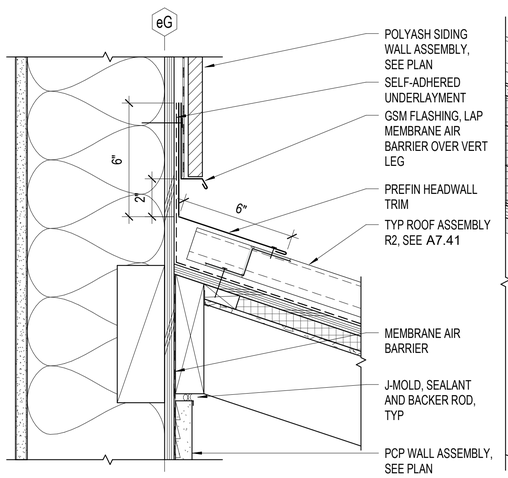

4 A7.45 **BREEZEWAY 1, @ LINE eG**
3" = 1'-0"

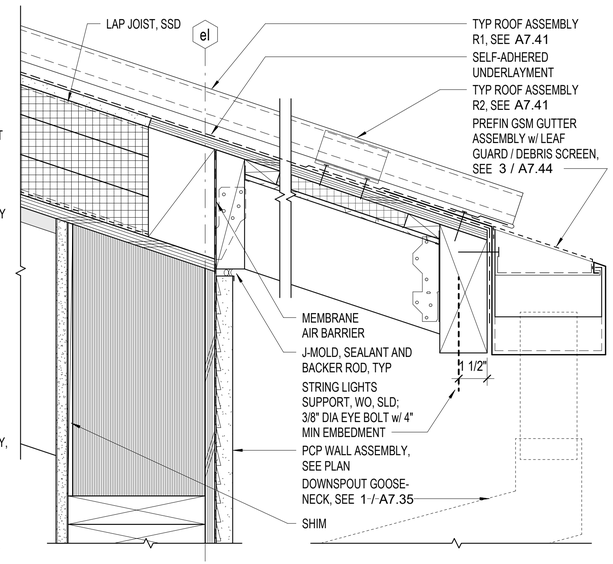

1 A7.45 **BREEZEWAY 1, @ BLDG & EAVE/GUTTER**
3" = 1'-0"

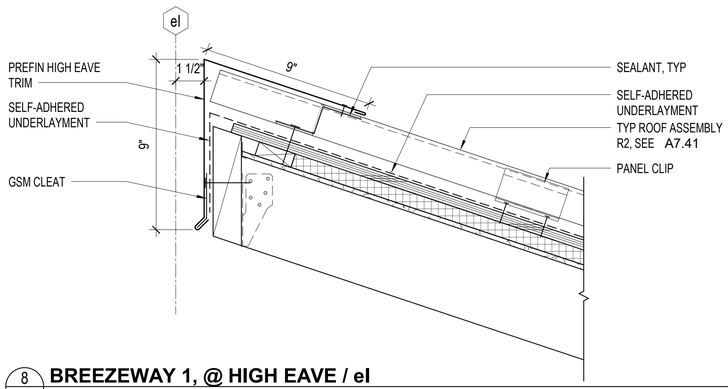

8 A7.45 **BREEZEWAY 1, @ HIGH EAVE / el**
3" = 1'-0"

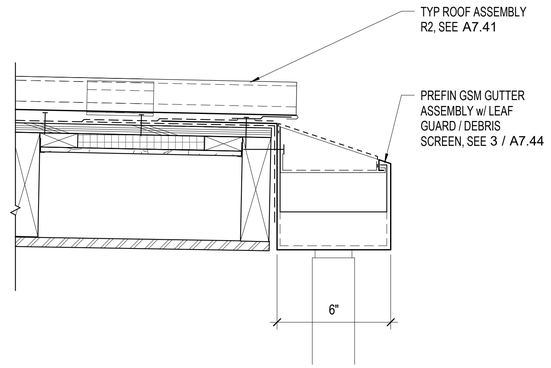

5 A7.45 **BREEZEWAY 2, HANGING GUTTER**
3" = 1'-0"

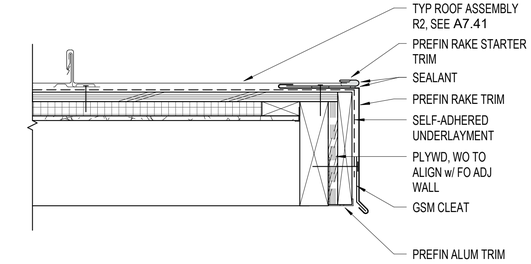

2 A7.45 **BREEZEWAY 1, RAKE**
3" = 1'-0"

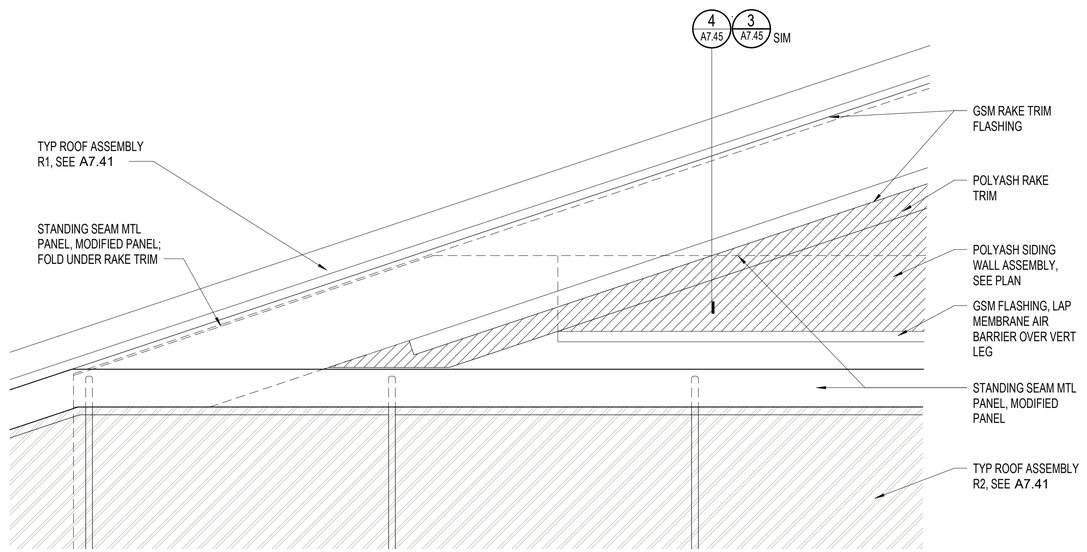

6 A7.45 **BREEZEWAY 2, ROOF @ WALL**
3" = 1'-0"

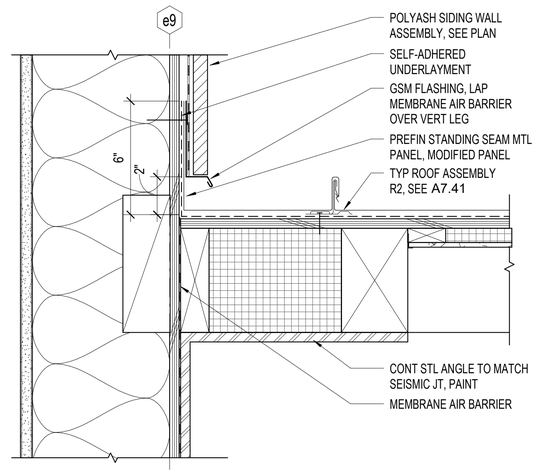

3 A7.45 **BREEZEWAY 2, @ LINE e9**
3" = 1'-0"

APPROVALS

IDENTIFICATION STAMP
DIV. OF THE STATE ARCHITECT
APP: 01-119409 INC:
REVIEWED FOR
SS ☑ FLS ☑ ACS ☑
DATE: 03/14/2022

NOLL & TAM ARCHITECTS
729 Heinz Avenue
Berkeley, CA 94710
tel 510.542.2200
fax 510.542.2201

SEAL

LICENSED ARCHITECT
CHRISTOPHER NOLL
No. C15916
REN. 12-31-23
STATE OF CALIFORNIA

PROJECT TITLE

Peralta Community College District
MERRITT COLLEGE NEW LANDSCAPE HORTICULTURE COMPLEX

12500 Campus Drive
Oakland, CA 94619

BID SET

ISSUE DATE 03/03/2022
N&T JOB NUMBER 22003

REVISIONS

	DATE	DESCRIPTION

DRAWN BY Author | CHECKED BY Checker

SHEET TITLE
EXTERIOR - ROOF AND FASCIA DETAILS

SHEET NUMBER
A7.45

3/3/2022 11:30:42 AM BIM 360://PCCD Merritt Horticulture/Merritt Horticulture_2020.rvt

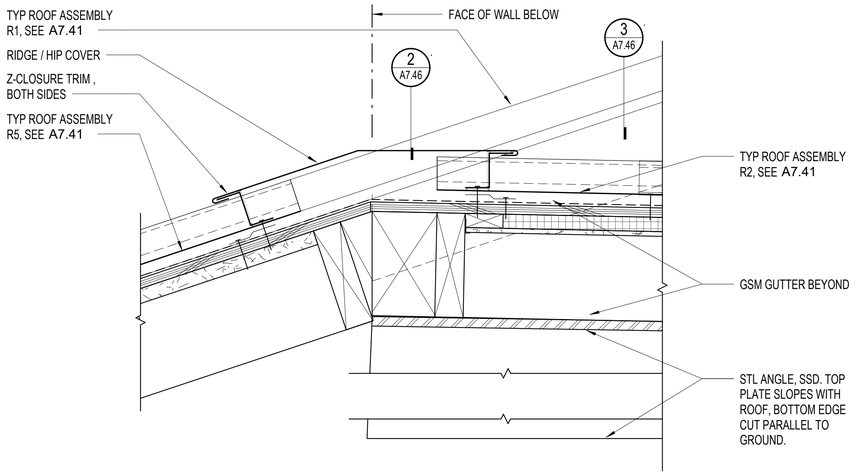

10 A7.46 BREEZEWAY 1-2, RIDGE

3" = 1'-0"

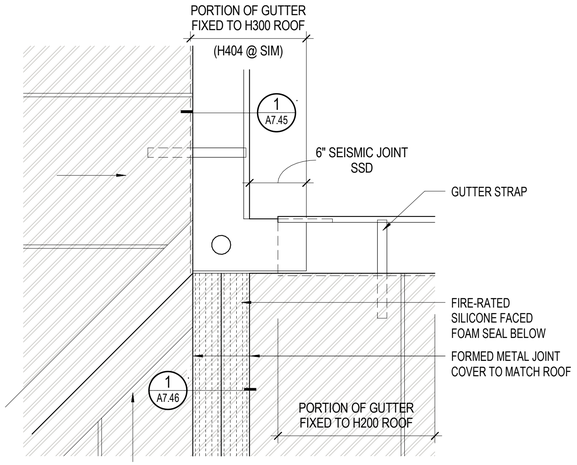

4 A7.46 BREEZEWAY 1, GUTTER @ CORNER- PLAN

1 1/2" = 1'-0"

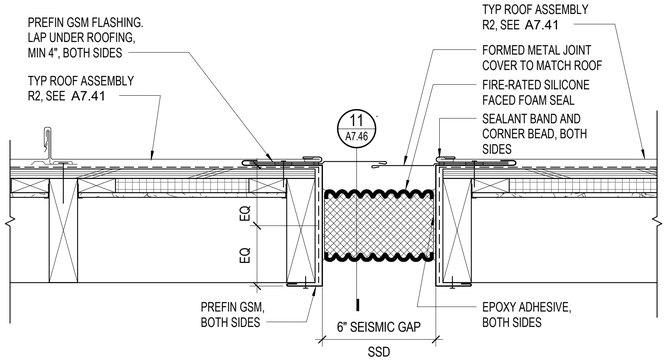

1 A7.46 BREEZEWAY 1, SEISMIC JOINT

3" = 1'-0"

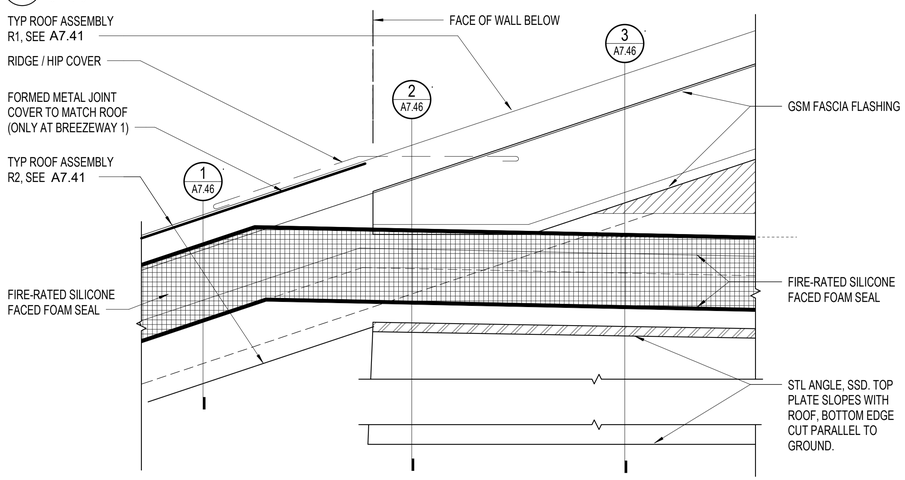

11 A7.46 BREEZEWAY 1-2, RIDGE @ SEISMIC JOINT

3" = 1'-0"

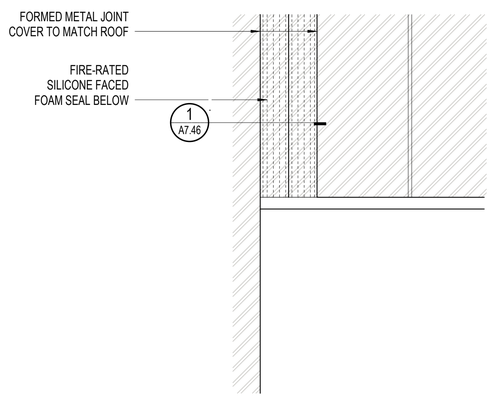

5 A7.46 BREEZEWAY 1, GUTTER @ JOINT- PLAN

1 1/2" = 1'-0"

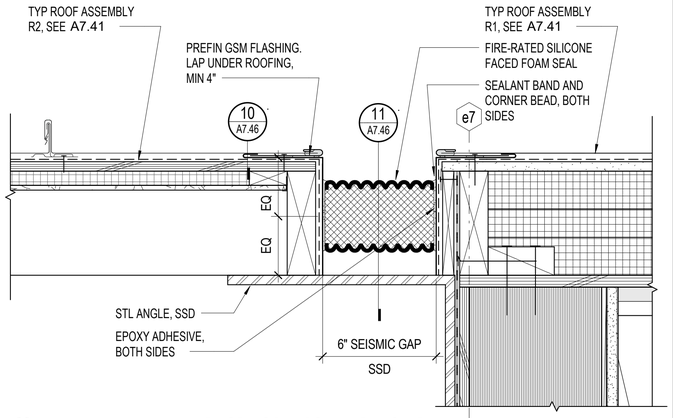

2 A7.46 BREEZEWAY 2, SEISMIC JOINT @ RIDGE

3" = 1'-0"

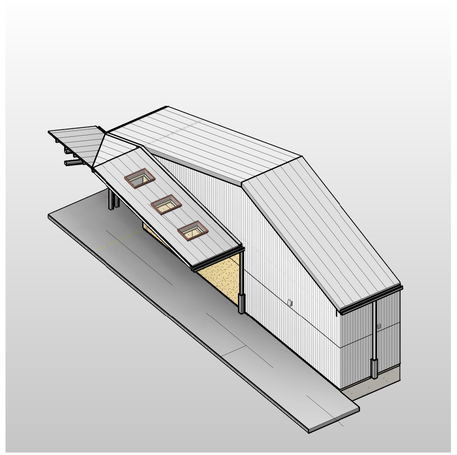

12 A7.46 BREEZEWAY 1-2, 3D VIEW

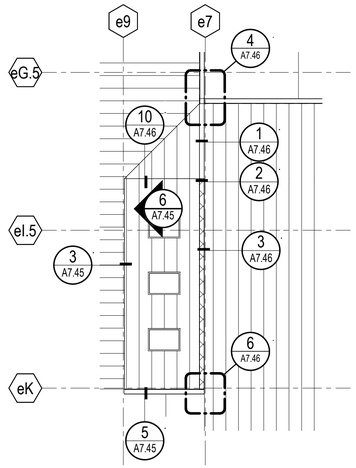

9 A7.46 BREEZEWAY 2, ROOF PLAN

1/8" = 1'-0"

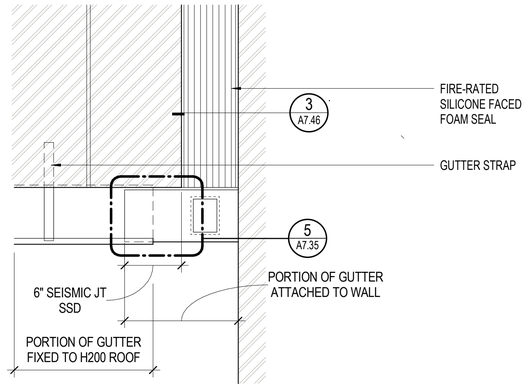

6 A7.46 BREEZEWAY 2, GUTTER @ JOINT- PLAN

1 1/2" = 1'-0"

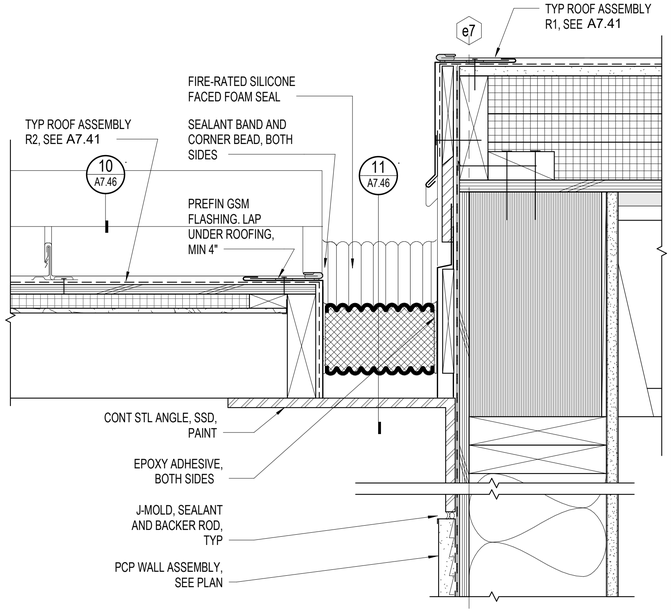

3 A7.46 BREEZEWAY 2, SEISMIC JOINT @ WALL

3" = 1'-0"

APPROVALS

IDENTIFICATION STAMP
DIV. OF THE STATE ARCHITECT
APP: 01-119409 INC:
REVIEWED FOR
SS ☑ FLS ☑ ACS ☑
DATE: 03/14/2022

NOLL & TAM ARCHITECTS
729 Heinz Avenue
Berkeley, CA 94710
tel 510.542.2200
fax 510.542.2201

SEAL

LICENSED ARCHITECT
CHRISTOPHER NOLL
No. C15916
REN. 12-31-23
STATE OF CALIFORNIA

PROJECT TITLE

Peralta Community College District
MERRITT COLLEGE NEW LANDSCAPE HORTICULTURE COMPLEX

12500 Campus Drive
Oakland, CA 94619

BID SET

ISSUE DATE	03/03/2022
N&T JOB NUMBER	22003

REVISIONS

	DATE	DESCRIPTION

DRAWN BY **Author** CHECKED BY **Checker**

SHEET TITLE
EXTERIOR - ROOF AND FASCIA DETAILS

SHEET NUMBER
A7.46

3/3/2022 11:30:45 AM BIM 360://PCCD Merritt Horticulture/Merritt Horticulture_2020.rvt

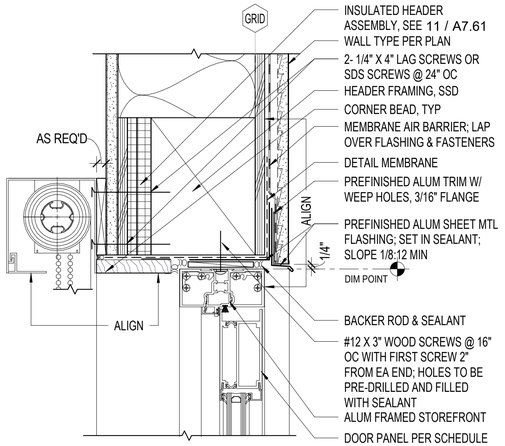

10 A7.51 **STOREFRONT DOOR HEAD @ CEM PLASTER**
3" = 1'-0"

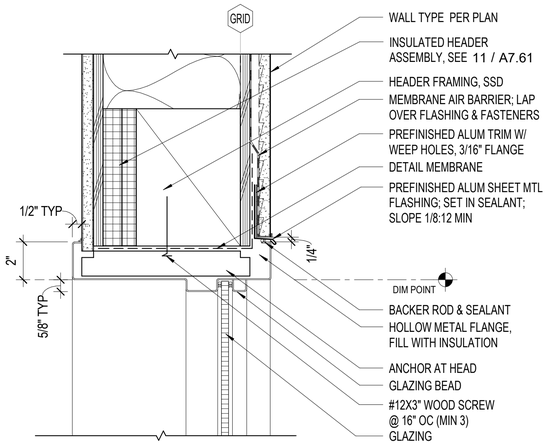

7 A7.51 **HOLLOW MTL DOOR HEAD @ SIDELITE**
3" = 1'-0"

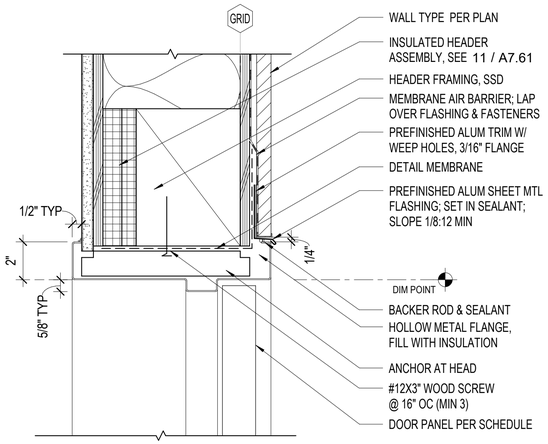

4 A7.51 **HOLLOW MTL DOOR HEAD @ POLYASH**
3" = 1'-0"

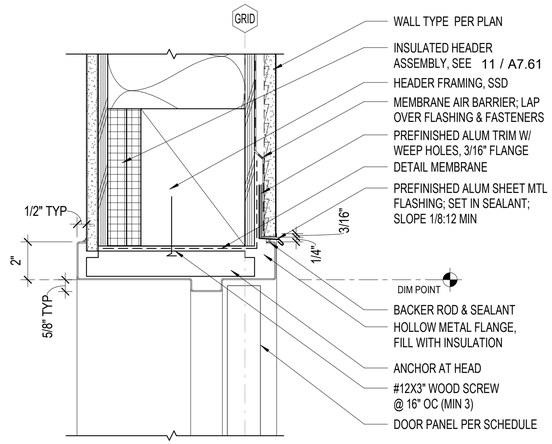

1 A7.51 **HOLLOW MTL DOOR HEAD @ CEMENT PLASTER**
3" = 1'-0"

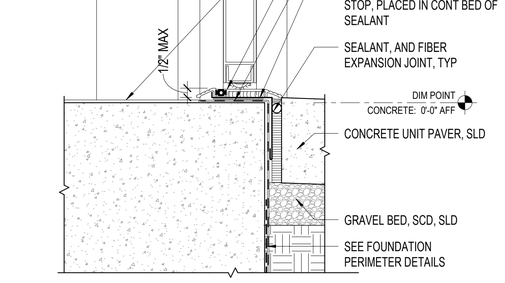

11 A7.51 **STOREFRONT DOOR SILL @ CEM PLASTER**
3" = 1'-0"

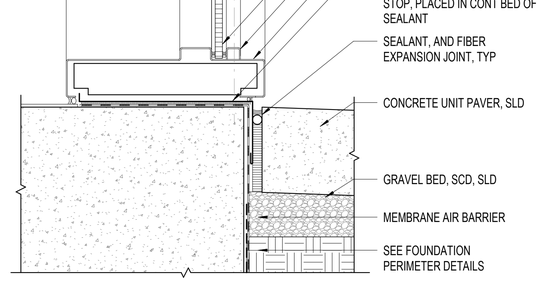

8 A7.51 **HOLLOW MTL DOOR SILL @ SIDELITE**
3" = 1'-0"

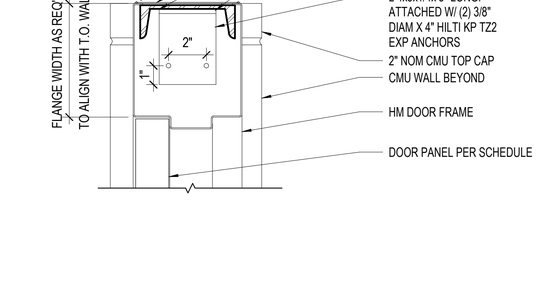

5 A7.51 **HM DOOR HEAD @ CMU**
3" = 1'-0"

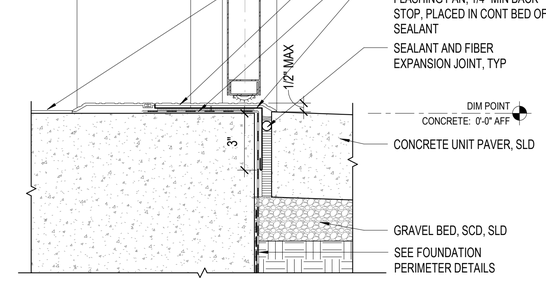

2 A7.51 **HOLLOW MTL DOOR SILL @ EXTERIOR PAVING**
3" = 1'-0"

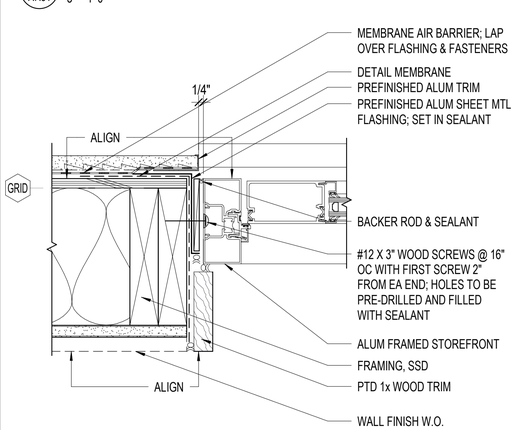

12 A7.51 **STOREFRONT DOOR JAMB @ CEM PLASTER**
3" = 1'-0"

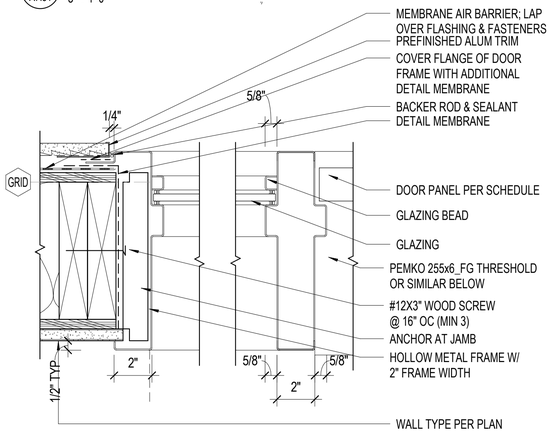

9 A7.51 **HOLLOW MTL JAMB @ SIDELITE**
3" = 1'-0"

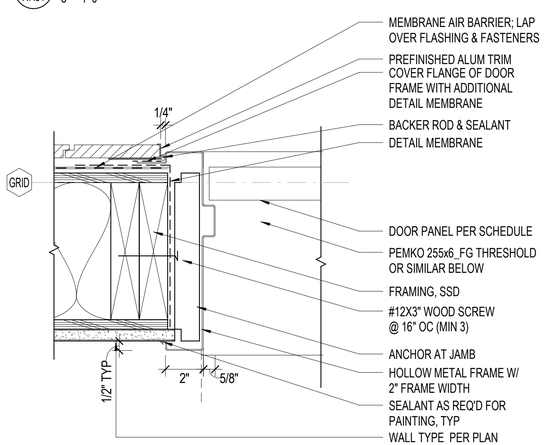

6 A7.51 **HOLLOW MTL DOOR JAMB @ POLYASH**
3" = 1'-0"

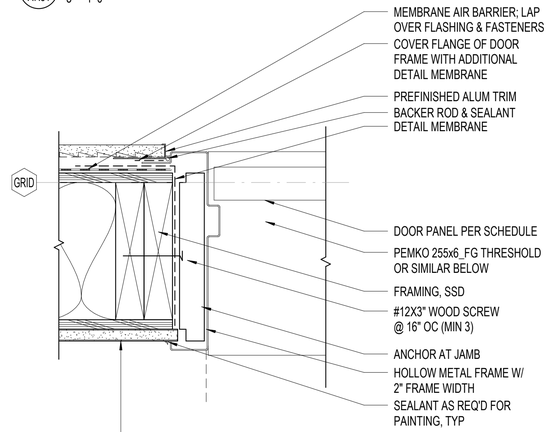

3 A7.51 **HOLLOW MTL DOOR JAMB @ CEMENT PLASTER**
3" = 1'-0"

APPROVALS

IDENTIFICATION STAMP
DIV. OF THE STATE ARCHITECT
APP: 01-119409 INC:
REVIEWED FOR
SS ☑ FLS ☑ ACS ☑
DATE: 03/14/2022

NOLL & TAM ARCHITECTS
729 Heinz Avenue
Berkeley, CA 94710
tel 510.542.2200
fax 510.542.2201

SEAL

LICENSED ARCHITECT
CHRISTOPHER NOLL
No. C15916
REN. 12-31-23
STATE OF CALIFORNIA

PROJECT TITLE

Peralta Community College District
MERRITT COLLEGE NEW LANDSCAPE HORTICULTURE COMPLEX

12500 Campus Drive
Oakland, CA 94619

BID SET

ISSUE DATE 03/03/2022
N&T JOB NUMBER 22003

REVISIONS

#	DATE	DESCRIPTION

DRAWN BY **Author** CHECKED BY **Checker**

SHEET TITLE

EXTERIOR - DOOR DETAILS

SHEET NUMBER

A7.51

3/3/2022 11:30:48 AM BIM 360://PCCD Merritt Horticulture/Merritt Horticulture_2020.rvt

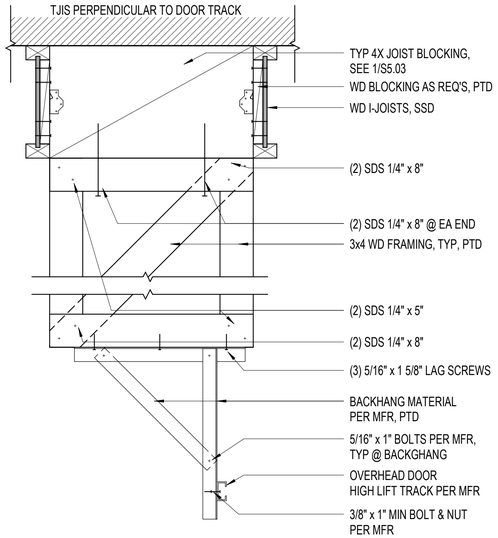

9 A7.52 **HIGH LIFT TRACK CEILING ATTACHMENT**
1 1/2" = 1'-0"

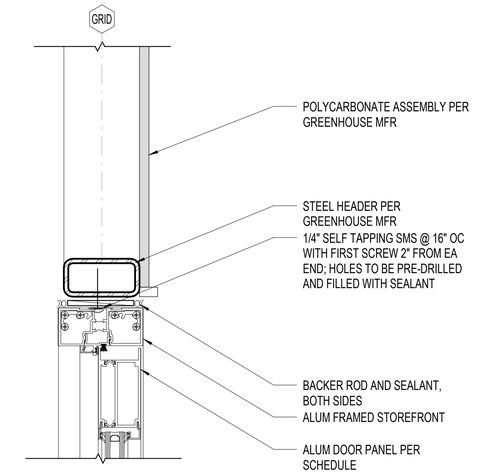

6 A7.52 **STOREFRONT DOOR HEAD @ GREEN HOUSE**
3" = 1'-0"

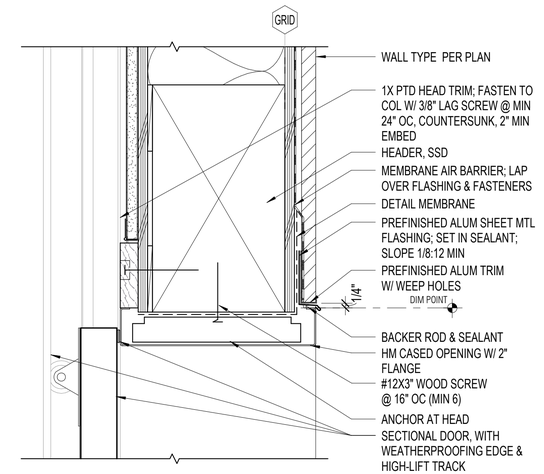

3 A7.52 **HM CASED OPENING @ SECTIONAL DOOR HEAD**
3" = 1'-0"

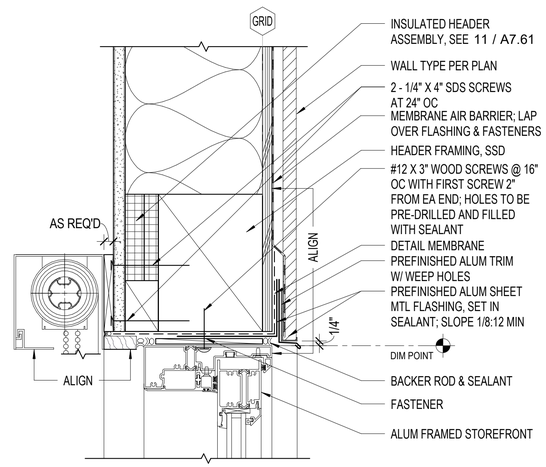

1 A7.52 **SLIDING DOOR HEAD**
3" = 1'-0"

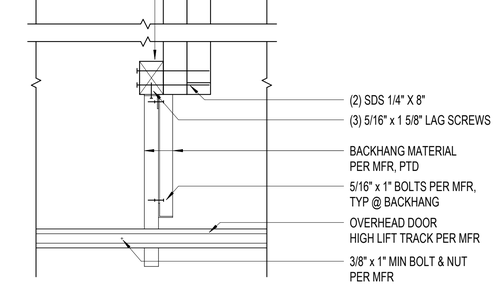

10 A7.52 **STOREFRONT DOOR JAMB @ GREENHOUSE CMU**
3" = 1'-0"

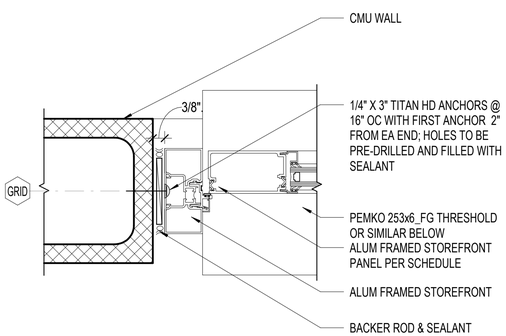

7 A7.52 **STOREFRONT DOOR SILL @ GREENHOUSE**
3" = 1'-0"

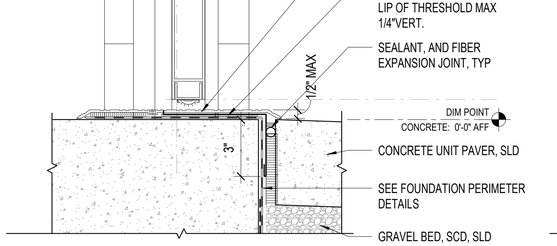

4 A7.52 **HM CASED OPENING @ SECTIONAL DOOR SILL**
3" = 1'-0"

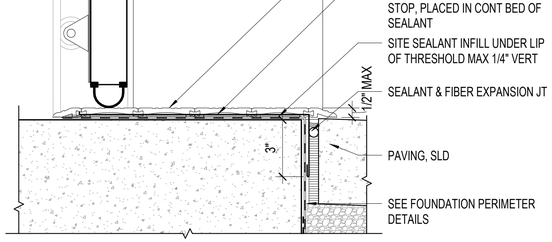

2 A7.52 **SLIDING DOOR SILL**
3" = 1'-0"

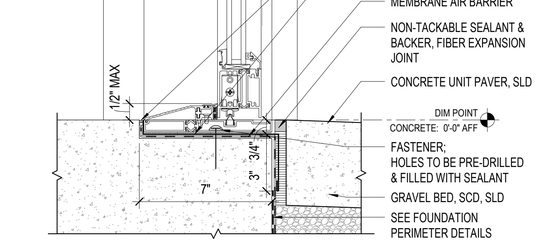

8 A7.52 **STOREFRONT DOOR JAMB @ GREENHOUSE**
3" = 1'-0"

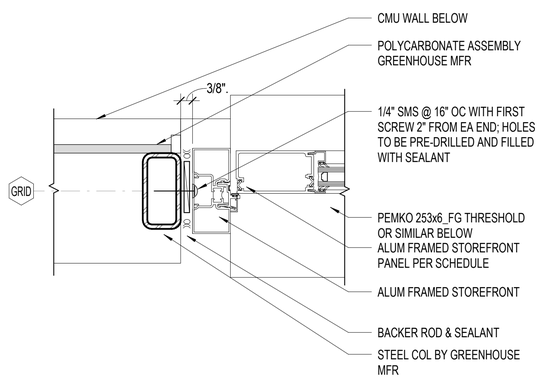

5 A7.52 **HM CASED OPENING @ SECTIONAL DOOR JAMB**
3" = 1'-0"

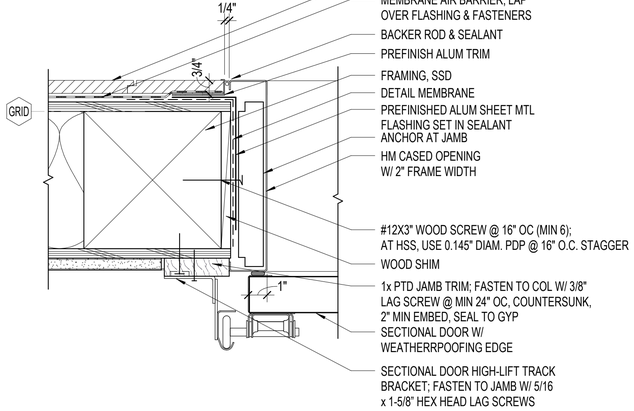

11 A7.52 **HOLOW METAL DOOR JAMB @ CMU**
3" = 1'-0"

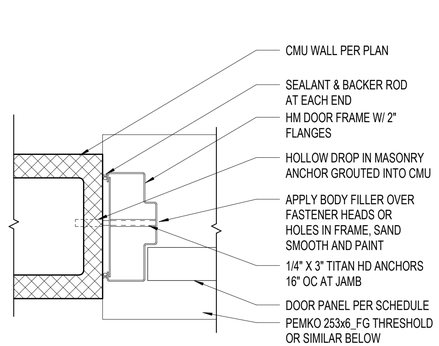

APPROVALS

IDENTIFICATION STAMP
DIV. OF THE STATE ARCHITECT
APP: 01-119409 INC:
REVIEWED FOR
SS ☑ FLS ☑ ACS ☑
DATE: 03/14/2022

NOLL & TAM ARCHITECTS
729 Heinz Avenue
Berkeley, CA 94710
tel 510.542.2200
fax 510.542.2201

SEAL

LICENSED ARCHITECT
CHRISTOPHER NOLL
No. C15916
REN. 12-31-23
STATE OF CALIFORNIA

PROJECT TITLE

Peralta Community College District
MERRITT COLLEGE NEW LANDSCAPE HORTICULTURE COMPLEX

12500 Campus Drive
Oakland, CA 94619

BID SET

ISSUE DATE	03/03/2022
N&T JOB NUMBER	22003

REVISIONS

	DATE	DESCRIPTION

DRAWN BY **Author** | CHECKED BY **Checker**

SHEET TITLE

EXTERIOR - DOOR DETAILS

SHEET NUMBER

A7.52

3/3/2022 11:30:50 AM BIM 360://PCCD Merritt Horticulture/Merritt Horticulture_2020.rvt

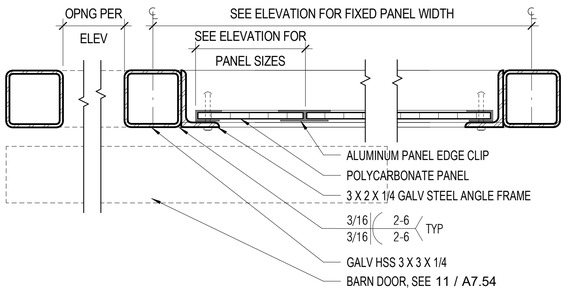

11 A7.53 GATE PANELS - POLYCARB
3" = 1'-0"

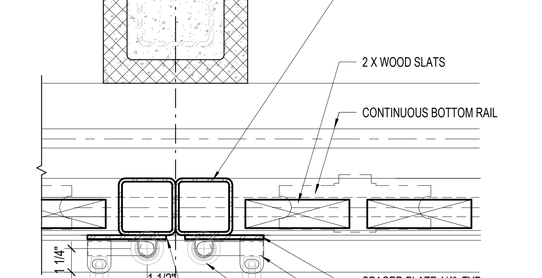

12 A7.53 GATE PANELS - METAL GRILL
3" = 1'-0"

13 A7.53 GATE PANELS - WOOD SLAT SPACING
3" = 1'-0"

14 A7.53 ROLLING GATES - JAMB @ CANEBOLT
3" = 1'-0"

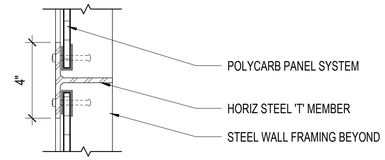

7 A7.53 POLYCARBONATE FENCE CENTER RAIL
3" = 1'-0"

8 A7.53 TYPICAL GATE HARDWARE MOUNTING
3/4" = 1'-0"

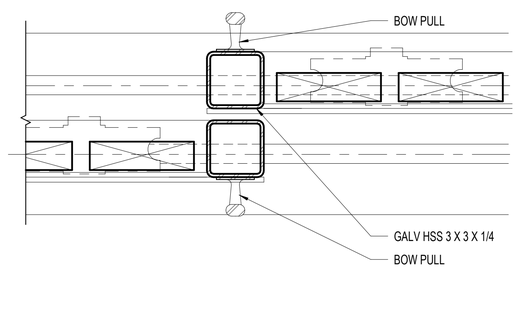

10 A7.53 ROLLING GATES - JAMB OVERLAP & HANDLES
3" = 1'-0"

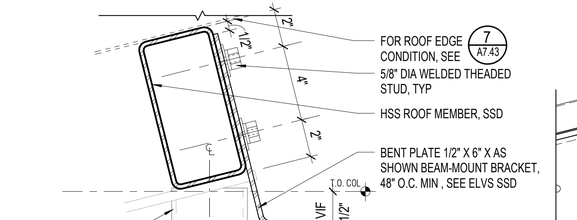

4 A7.53 SOIL BINS FIXED GRILLE - SECT DETAILS
3" = 1'-0"

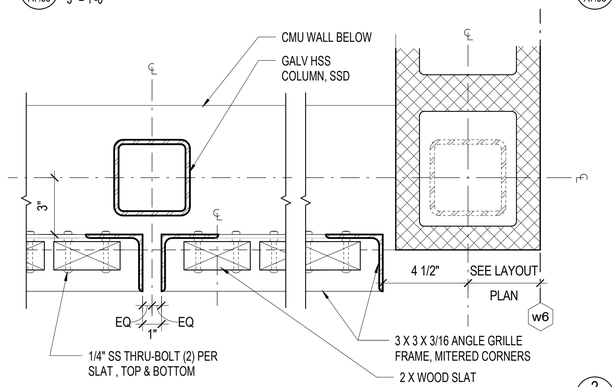

5 A7.53 SOIL BINS FIXED GRILLE - JAMB DETAILS
3" = 1'-0"

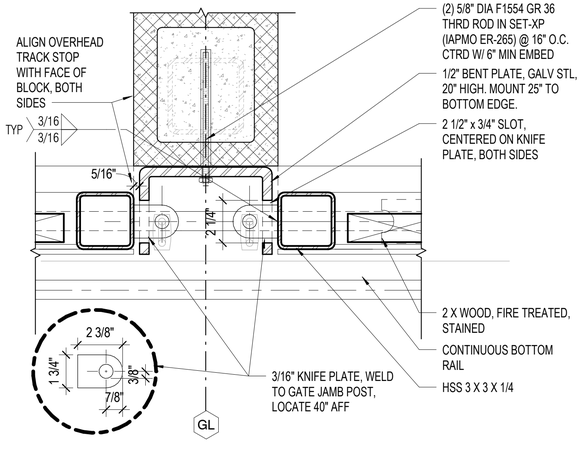

6 A7.53 ROLLING GATES - JAMB @ 'C' PLATE LOCK
3" = 1'-0"

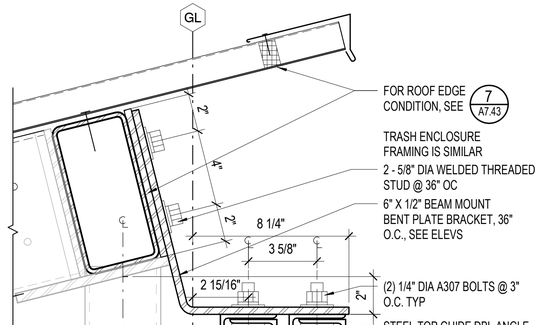

1 A7.53 ROLLING GATES - HEAD
3" = 1'-0"

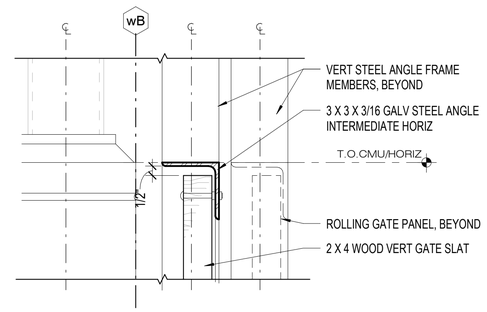

2 A7.53 ROLLING GATES - INT. HORIZ
3" = 1'-0"

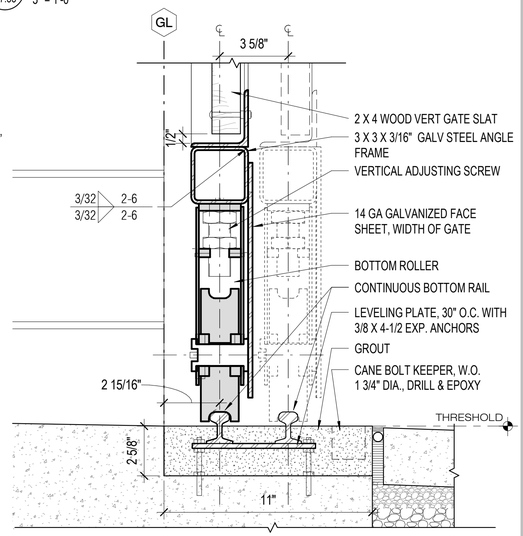

3 A7.53 ROLLING GATES - SILL
3" = 1'-0"

APPROVALS

IDENTIFICATION STAMP
DIV. OF THE STATE ARCHITECT
APP: 01-119409 INC:
REVIEWED FOR
SS ☑ FLS ☑ ACS ☑
DATE: 03/14/2022

NOLL & TAM ARCHITECTS
729 Heinz Avenue
Berkeley, CA 94710
tel 510.542.2200
fax 510.542.2201

SEAL

LICENSED ARCHITECT
CHRISTOPHER NOLL
No. C15916
REN. 12-31-23
STATE OF CALIFORNIA

PROJECT TITLE

Peralta Community College District
MERRITT COLLEGE NEW LANDSCAPE HORTICULTURE COMPLEX

12500 Campus Drive
Oakland, CA 94619

BID SET

ISSUE DATE 03/03/2022
N&T JOB NUMBER 22003

REVISIONS

	DATE	DESCRIPTION

DRAWN BY Author | CHECKED BY Checker

SHEET TITLE
INTERIOR / EXTERIOR - GATE DETAILS

SHEET NUMBER
A7.53

3/3/2022 11:30:52 AM BIM 360://PCCD Merritt Horticulture/Merritt Horticulture_2020.rvt

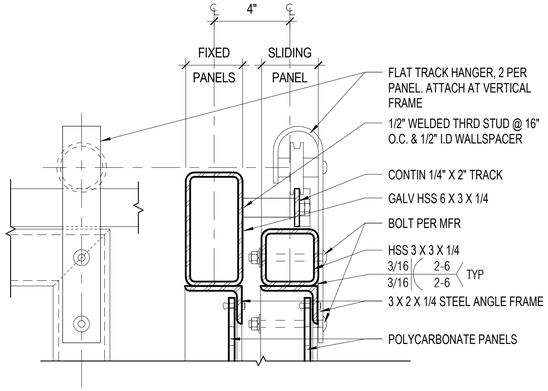

10 A7.54 BARN DOOR GATES - HEAD

3" = 1'-0"

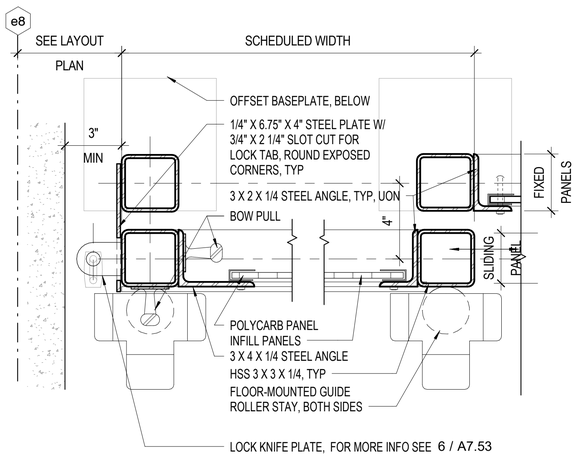

11 A7.54 BARN DOOR GATES - JAMB

3" = 1'-0"

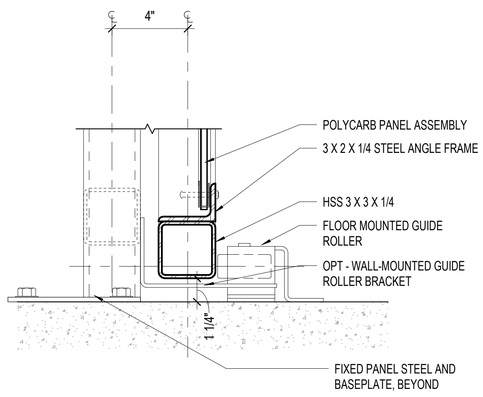

12 A7.54 BARN DOOR GATES - SILL

3" = 1'-0"

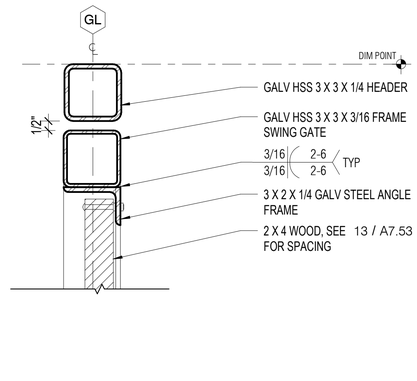

7 A7.54 SWING GATE - HEAD

3" = 1'-0"

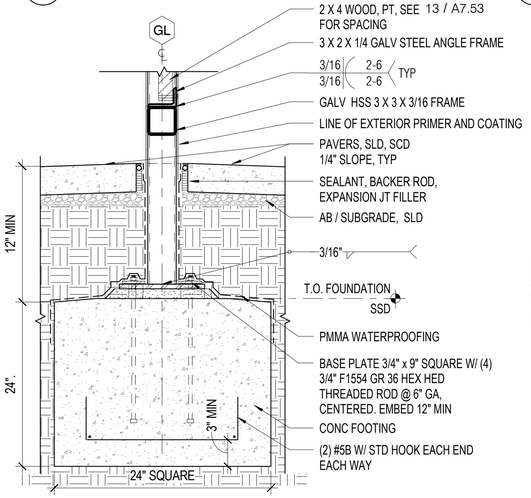

8 A7.54 SWING GATE SILL / FOOTING AT PAVERS

1 1/2" = 1'-0"

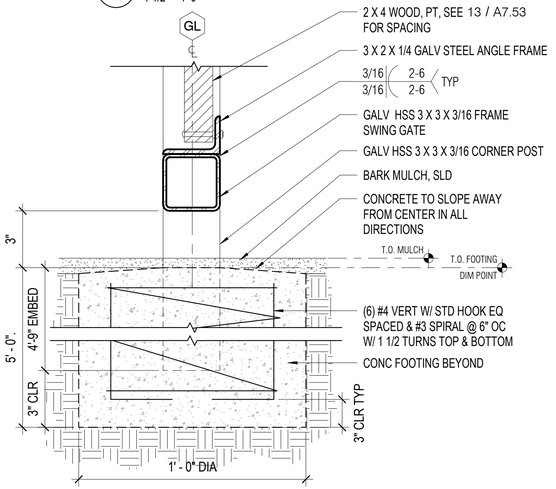

9 A7.54 SWING GATE SILL AT GRADE

3" = 1'-0"

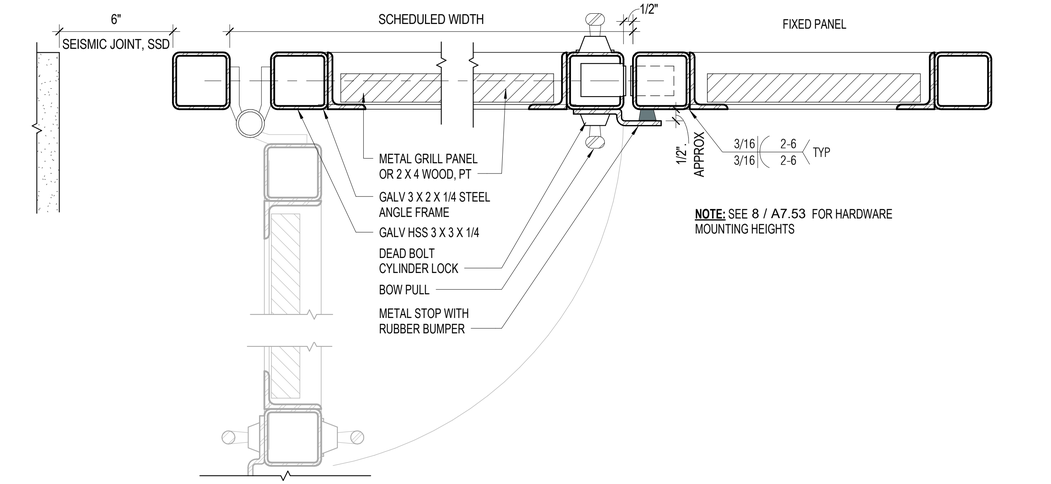

1 A7.54 SWING GATES - JAMB 1

3" = 1'-0"

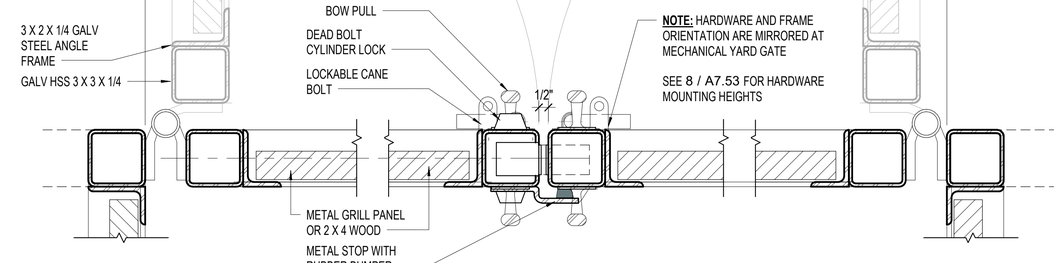

2 A7.54 SWING GATES - JAMB 2

3" = 1'-0"

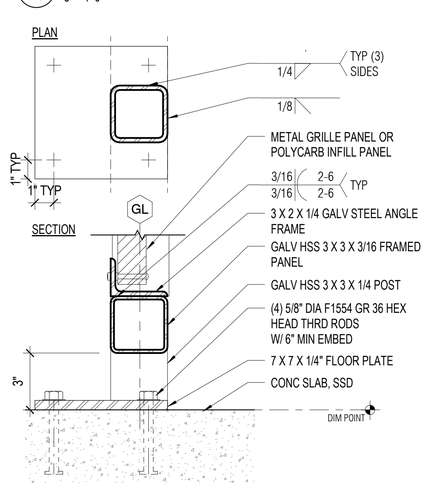

6 A7.54 SURFACE MOUNTED FENCE & GATE BASE

3" = 1'-0"

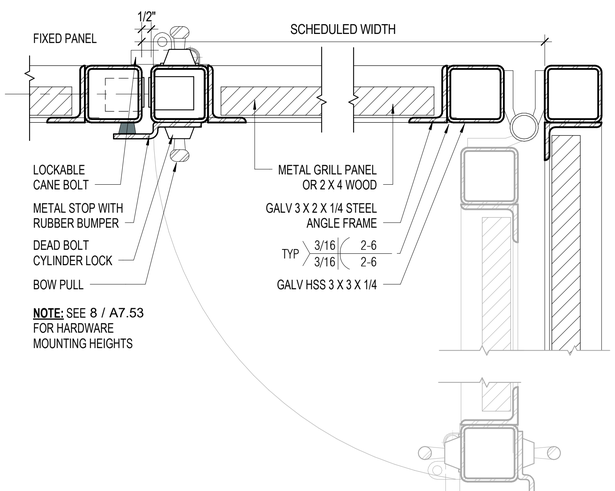

3 A7.54 SWING GATES - JAMB 3

3" = 1'-0"

APPROVALS

IDENTIFICATION STAMP
DIV. OF THE STATE ARCHITECT
APP: 01-119409 INC:
REVIEWED FOR
SS ☑ FLS ☑ ACS ☑
DATE: 03/14/2022

NOLL & TAM ARCHITECTS
729 Heinz Avenue
Berkeley, CA 94710
tel 510.542.2200
fax 510.542.2201

SEAL

LICENSED ARCHITECT
CHRISTOPHER NOLL
No. C15916
REN. 12-31-23
STATE OF CALIFORNIA

PROJECT TITLE

Peralta Community College District
MERRITT COLLEGE NEW LANDSCAPE HORTICULTURE COMPLEX

12500 Campus Drive
Oakland, CA 94619

BID SET

ISSUE DATE	03/03/2022
N&T JOB NUMBER	22003

REVISIONS

#	DATE	DESCRIPTION

DRAWN BY **Author** CHECKED BY **Checker**

SHEET TITLE
INTERIOR / EXTERIOR - GATE DETAILS

SHEET NUMBER
A7.54

3/3/2022 11:30:54 AM BIM 360://PCCD Merritt Horticulture/Merritt Horticulture_2020.rvt

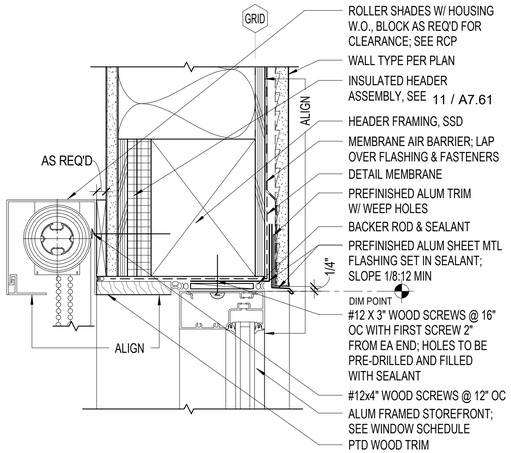

10 A7.61 **East B/C/D WINDOW HEAD @ CEMENT PLASTER**
3" = 1'-0"

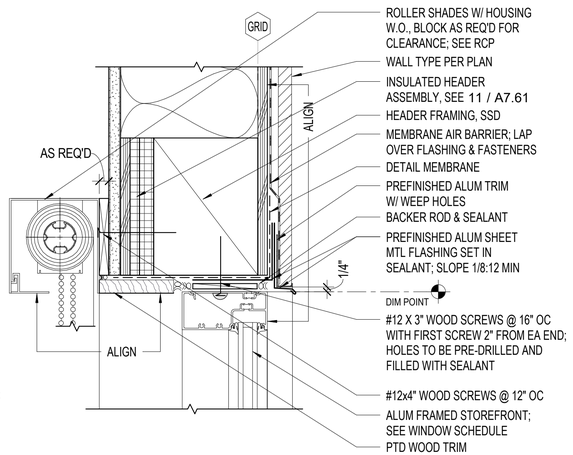

7 A7.61 **East A WINDOW HEAD @ POLYASH**
3" = 1'-0"

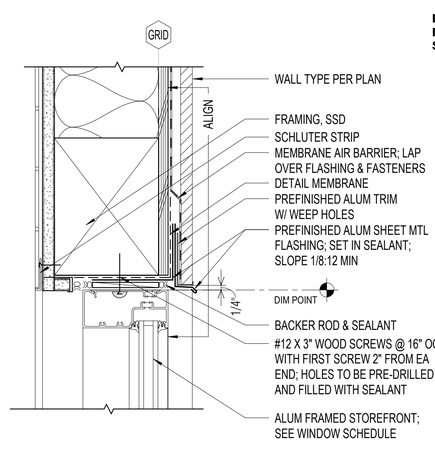

4 A7.61 **STD A TYPICAL WINDOW HEAD @ INT TILE**
3" = 1'-0"

FOR ADDITIONAL FLASHING INFORMATION, SEE 2 / A7.71

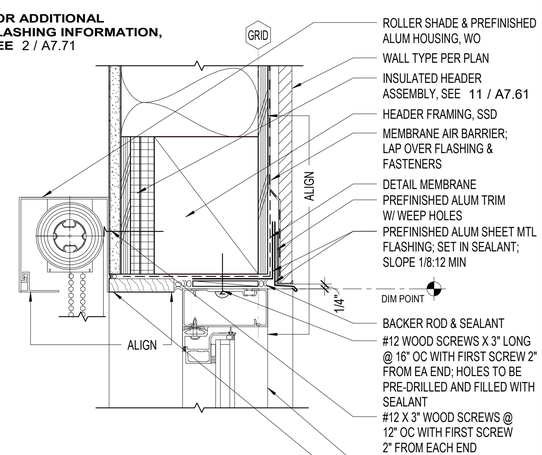

1 A7.61 **TYPICAL WINDOW HEAD**
3" = 1'-0"

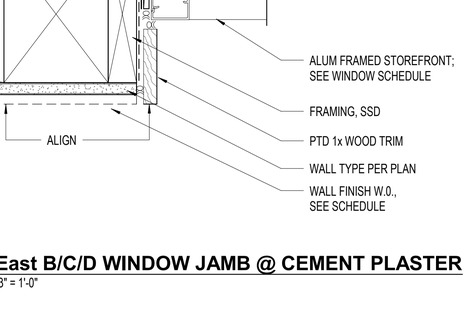

11 A7.61 **TYP INSULATED HEADERS**
1 1/2" = 1'-0"

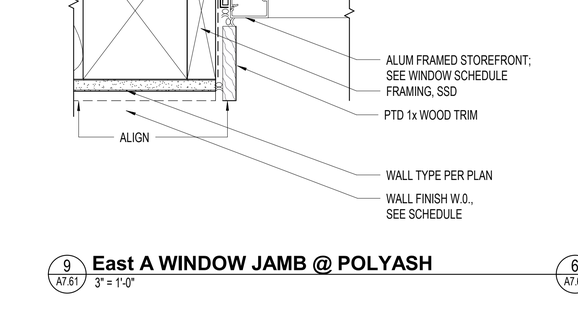

8 A7.61 **East A/B/C/D WINDOW SILL @ PAVING**
3" = 1'-0"

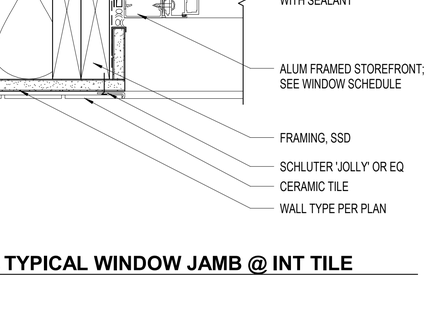

5 A7.61 **STD A TYPICAL WINDOW SILL @ INT TILE**
3" = 1'-0"

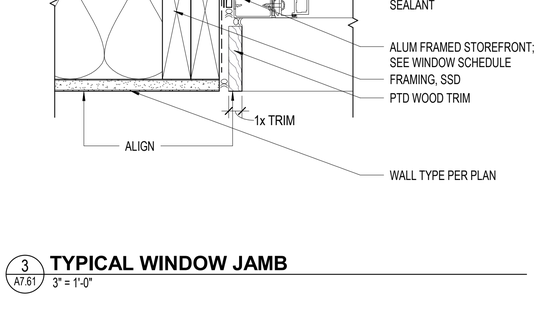

2 A7.61 **TYPICAL WINDOW SILL**
3" = 1'-0"

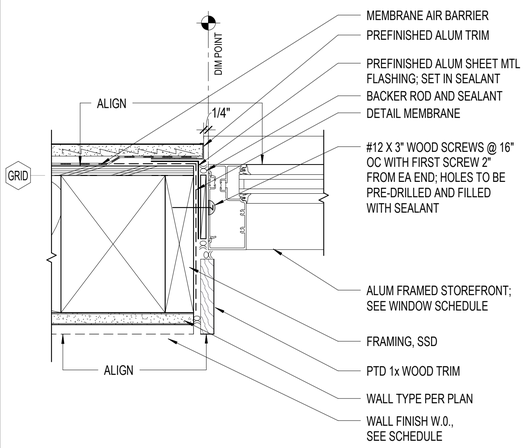

12 A7.61 **East B/C/D WINDOW JAMB @ CEMENT PLASTER**
3" = 1'-0"

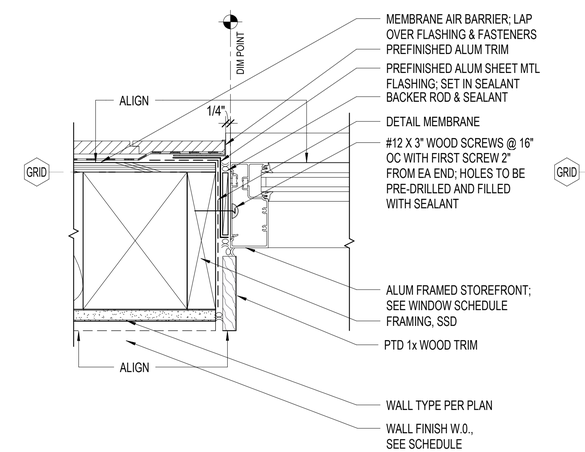

9 A7.61 **East A WINDOW JAMB @ POLYASH**
3" = 1'-0"

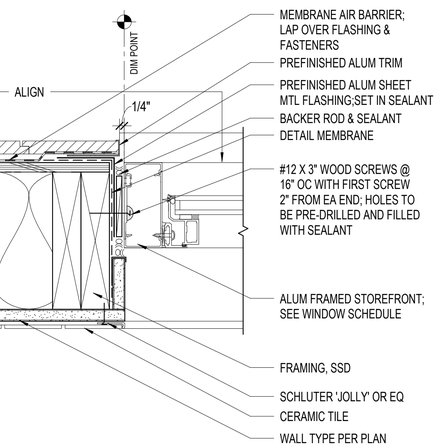

6 A7.61 **STD A TYPICAL WINDOW JAMB @ INT TILE**
3" = 1'-0"

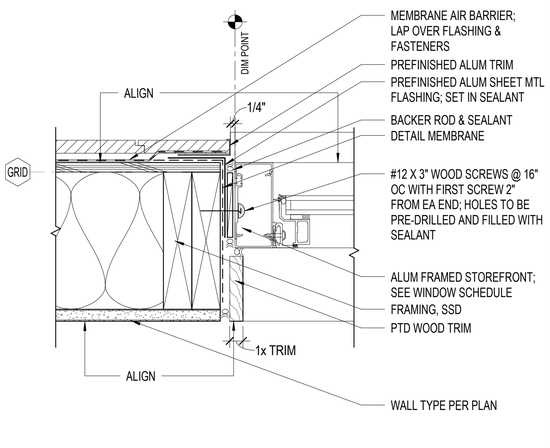

3 A7.61 **TYPICAL WINDOW JAMB**
3" = 1'-0"

APPROVALS

IDENTIFICATION STAMP
DIV. OF THE STATE ARCHITECT
APP: 01-119409 INC:
REVIEWED FOR
SS ☑ FLS ☑ ACS ☑
DATE: 03/14/2022

NOLL & TAM ARCHITECTS
729 Heinz Avenue
Berkeley, CA 94710
tel 510.542.2200
fax 510.542.2201

SEAL

LICENSED ARCHITECT
CHRISTOPHER NOLL
No. C15916
REN. 12-31-23
STATE OF CALIFORNIA

PROJECT TITLE

Peralta Community College District
MERRITT COLLEGE NEW LANDSCAPE HORTICULTURE COMPLEX

12500 Campus Drive
Oakland, CA 94619

BID SET

ISSUE DATE 03/03/2022
N&T JOB NUMBER 22003

REVISIONS

	DATE	DESCRIPTION

DRAWN BY Author CHECKED BY Checker

SHEET TITLE
EXTERIOR - WINDOW & STOREFRONT DETAILS

SHEET NUMBER
A7.61

3/3/2022 11:30:57 AM BIM 360://PCCD Merritt Horticulture/Merritt Horticulture_2020.rvt

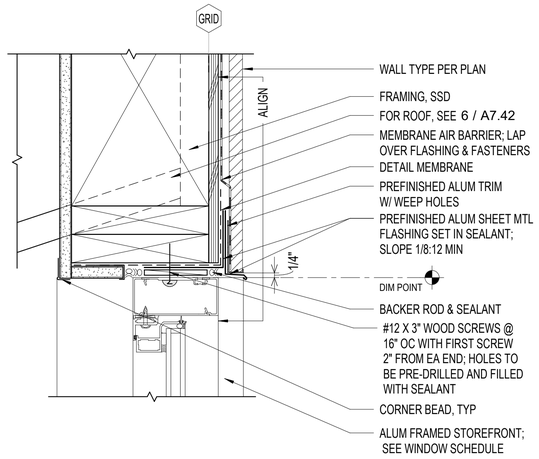

8 A7.62 **West A/B WINDOW HEAD**
3" = 1'-0"

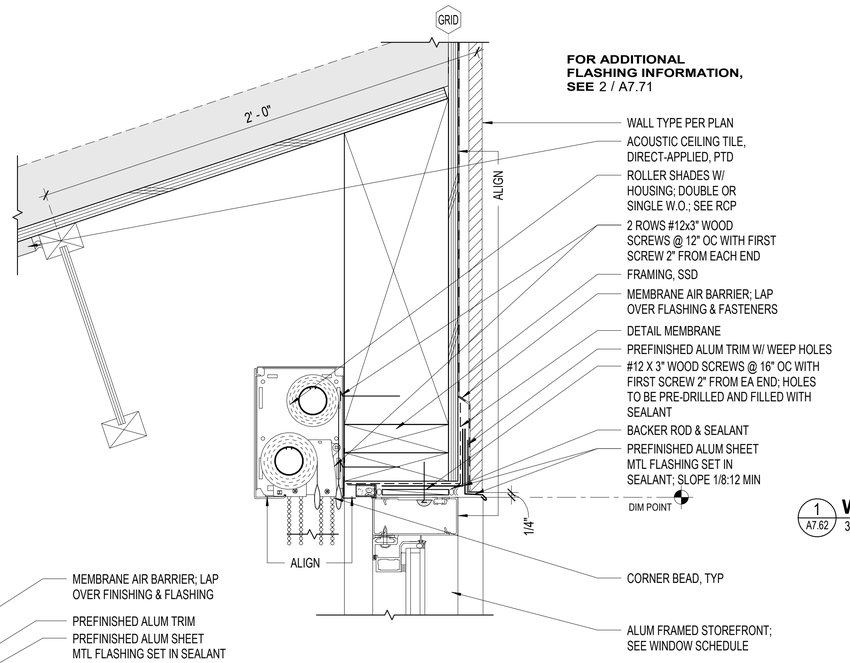

4 A7.62 **East E/F WINDOW HEAD @ ROOF MONITOR**
3" = 1'-0"

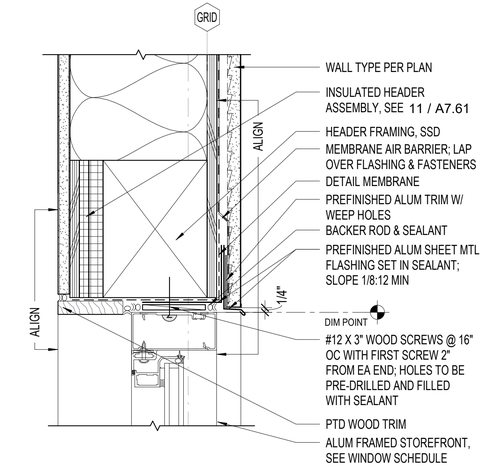

1 A7.62 **West D WINDOW HEAD @ CEMENT PLASTER**
3" = 1'-0"

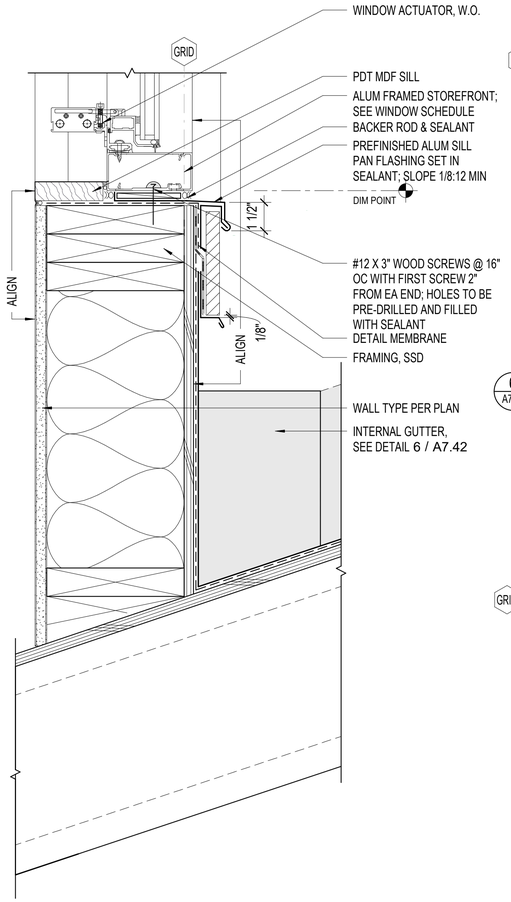

9 A7.62 **West A/B WINDOW SILL @ SAWTOOTH**
3" = 1'-0"

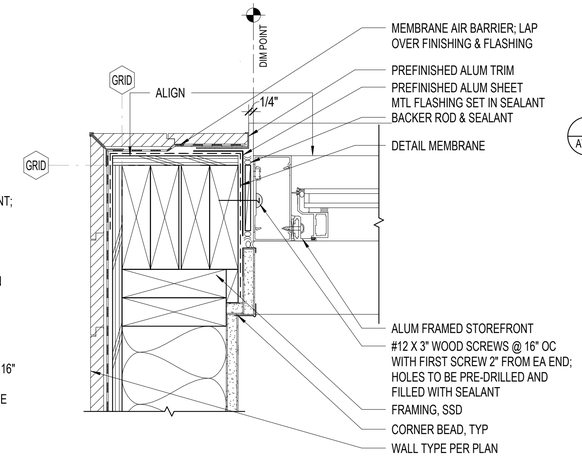

6 A7.62 **East E/F WINDOW JAMB @ ROOF MONITOR**
3" = 1'-0"

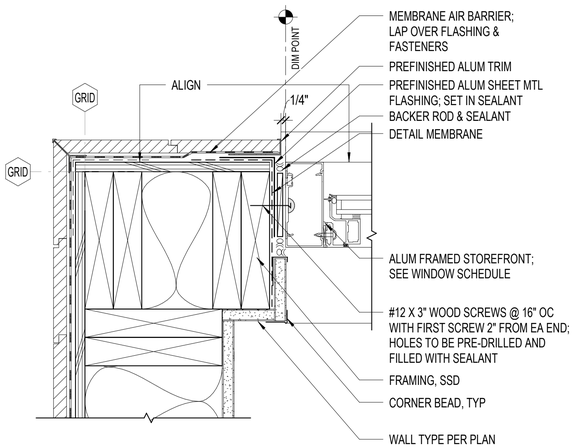

7 A7.62 **West A/B WINDOW JAMB @ CORNER**
3" = 1'-0"

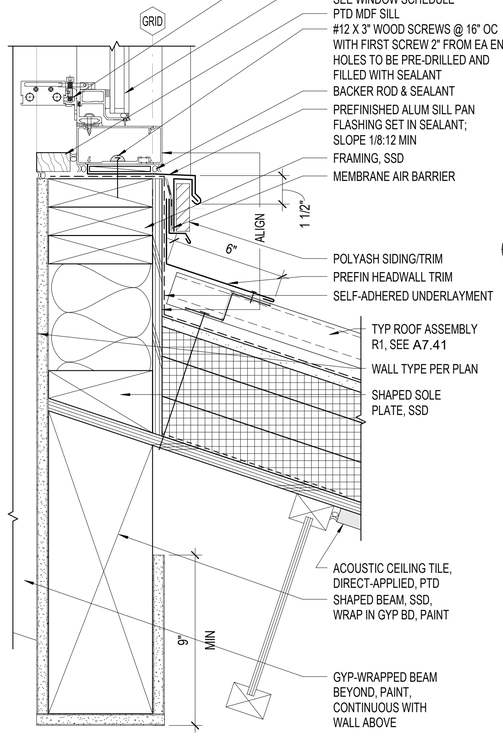

5 A7.62 **East E/F WINDOW SILL @ ROOF MONITOR**
3" = 1'-0"

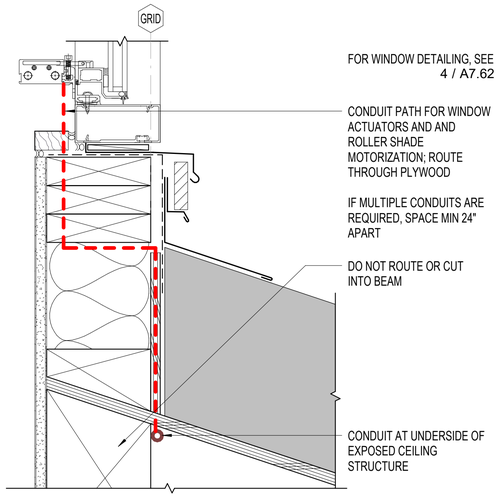

2 A7.62 **ROOF MONITOR CONDUIT PATH**
3" = 1'-0"

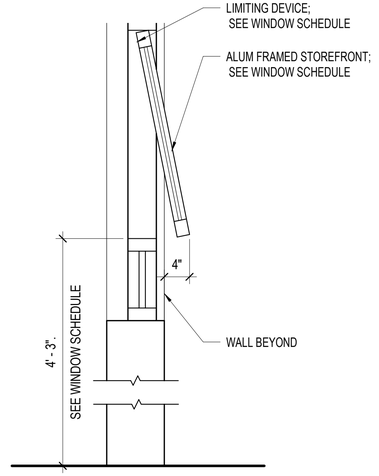

3 A7.62 **TYPICAL LIMITER**
1" = 1'-0"

APPROVALS

IDENTIFICATION STAMP
DIV. OF THE STATE ARCHITECT
APP: 01-119409 INC:
REVIEWED FOR
SS ☑ FLS ☑ ACS ☑
DATE: 03/14/2022

NOLL & TAM ARCHITECTS
729 Heinz Avenue
Berkeley, CA 94710
tel 510.542.2200
fax 510.542.2201

SEAL

LICENSED ARCHITECT
CHRISTOPHER NOLL
No. C15916
REN. 12-31-23
STATE OF CALIFORNIA

PROJECT TITLE

Peralta Community College District
MERRITT COLLEGE NEW LANDSCAPE HORTICULTURE COMPLEX

12500 Campus Drive
Oakland, CA 94619

BID SET

ISSUE DATE 03/03/2022
N&T JOB NUMBER 22003

REVISIONS

#	DATE	DESCRIPTION

DRAWN BY Author | CHECKED BY Checker

SHEET TITLE
EXTERIOR - WINDOW & STOREFRONT DETAILS

SHEET NUMBER
A7.62

3/3/2022 11:30:59 AM BIM 360://PCCD Merritt Horticulture/Merritt Horticulture_2020.rvt

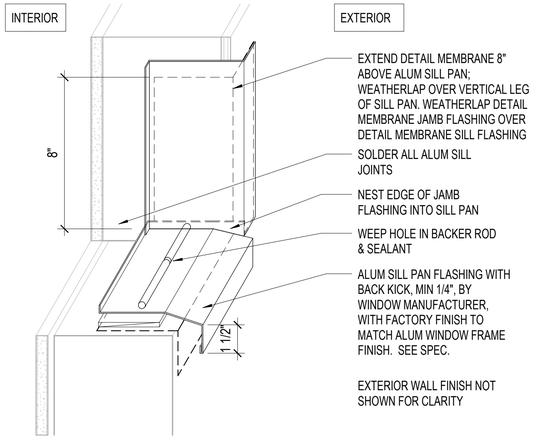

4 A7.71 **JAMB/SILL AXO**
3" = 1'-0"

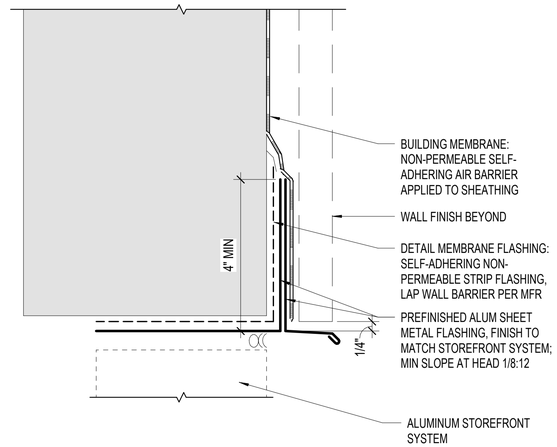

3 A7.71 **WATERPROOFING - HEAD**
6" = 1'-0"

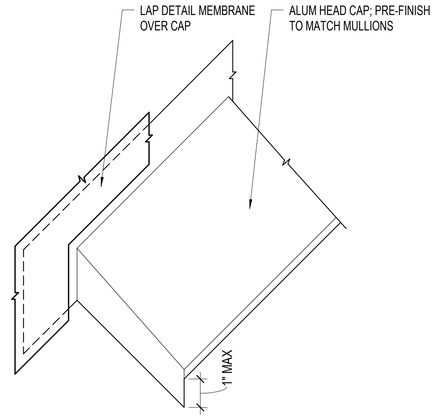

1 A7.71 **ALUMINUM HEAD CAP FLASHING**
3" = 1'-0"

OPENING FLASHING NOTES

1. FLEXIBLE MEMBRANE DETAIL FLASHING SHALL BE INSTALLED AS PER MANUFACTURER'S RECOMMENDATIONS, INCLUDING OVERLAP DIMENSIONS, CORNER PATCHING, SUITABILITY OF SUBSTRATE AND MECHANICAL ROLLIG FOR ADHESION.
2. PRIMING OF ALUM., SHEET METAL AND SUBSTRATE MAY BE REQUIRED FOR PROPER ADHESIONS; CONSULT MANUFACTURER REPRESENTATIVE.
3. PROVIDE SPACE FOR MULTIPLE LAYERS OF FLASHING, INCLUDING SEALANT.
4. SEALANTS IN CONTACT WITH FLEXIBLE MEMBRANE ARE TO BE APPROVED BY MEMBRANE MANUFACTURER AND TESTED FOR COMPATIBILITY.
5. FASTENERS USED FOR ATTACHMENT OF METAL TRIM, WINDOW AND METAL FLASHING ARE TO BE APPROVED AS SELF-SEALING IN THE FLEXIBLE MEMBRANE.
6. CORNER LAPS OF SHEET METAL FLASHING ARE TO BE LAPPED AND SOLDERED.
7. TUCK FLEXIBLE DETAIL MEMBRANE HEAD FLASHING UNDER MEMBRANE AIR BARRIER, ADHERE TO SUBSTRATE AND PATCH INSERTION SLITS WITH FLEXIBLE DETAIL MEMBRANE PATCHING STRIPS.

5 A7.71 **JAMB/SILL AXO @ SLAB EDGE**
3" = 1'-0"

2 A7.71 **FLASHING AT EXTERIOR WALL OPENINGS**
1 1/2" = 1'-0"

LEGEND

A. SILL FLASHING: FLEXBILE DETAIL MEMBRANE LAPPED UP JAMBS, OVER MEMBRANE AIR BARRIER AND UP JAMB FLASHING.
B. CORNER PATCH: FLEXBILE DETAIL MEMBRANE CORNER PATCH AS RECOMMENDED BY MANUFACTURER.
C. SILL PAN: ALUMINUM PAN WITH LAPPED AND SEALED END DAMS. STRIP IN WITH FLEXIBLE DETAIL MEMBRANE. TURN ANGLED METAL LAPS UP AT TYPICAL EXTERIOR FINISHES, DOWN AT CONCRETE WALLS.
D. JAMB FLASHING: FLEXIBLE DETAIL MEMBRANE LAPPED AT HEAD AND SILL.
E. JAMB PAN: ALUMINUM PAN WITH LAPPED AND SEALED END DAMS. STRIP IN WTIH FLEXIBLE DETAIL MEMBRANE.
F. HEAD FLASHING: ALUMINUM FLASHING WITH LAPPED AND SEALED END DAMS. STRIP IN WITH FLEXIBLE DETAIL MEMBRANE.
G. HEAD FLASHING: FLEXIBLE DETAIL MEMBRANE LAPPED AT JAMBS AND TUCKED UNDER BUILDING PAPER.
H. DRIP SCREED WITH END CLOSURE: LAP UNDER TOP LAYER OF MEMBRANE AIR BARRIER, PLACE OVER FLEXIBLE DETAIL MEMBRANE FLASHING.
I. LINE OF UNDERLAYMENT: FLEXIBLE DETAIL MEMBRANE LAPPED OVER BUILDING PAPER.

APPROVALS

IDENTIFICATION STAMP
DIV. OF THE STATE ARCHITECT
APP: 01-119409 INC:
REVIEWED FOR
SS ☑ FLS ☑ ACS ☑
DATE: 03/14/2022

NOLL & TAM ARCHITECTS
729 Heinz Avenue
Berkeley, CA 94710
tel 510.542.2200
fax 510.542.2201

SEAL

LICENSED ARCHITECT
CHRISTOPHER NOLL
No. C15916
REN. 12-31-23
STATE OF CALIFORNIA

PROJECT TITLE

Peralta Community College District
MERRITT COLLEGE NEW LANDSCAPE HORTICULTURE COMPLEX

12500 Campus Drive
Oakland, CA 94619

BID SET

ISSUE DATE 03/03/2022
N&T JOB NUMBER 22003

REVISIONS

	DATE	DESCRIPTION

DRAWN BY Author | CHECKED BY Checker

SHEET TITLE
EXTERIOR - FLASHING DETAILS

SHEET NUMBER
A7.71

3/3/2022 11:31:00 AM BIM 360://PCCD Merritt Horticulture/Merritt Horticulture_2020.rvt

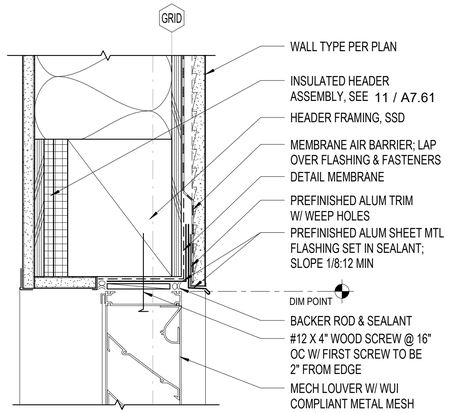

4 A7.72 MECHANICAL LOUVER HEAD @ CEMENT PLASTER

3" = 1'-0"

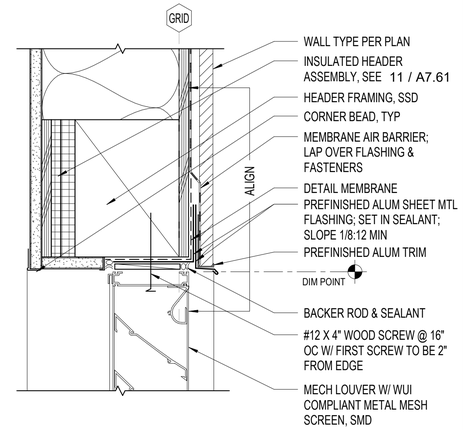

1 A7.72 MECHANICAL LOUVER HEAD @ POLYASH

3" = 1'-0"

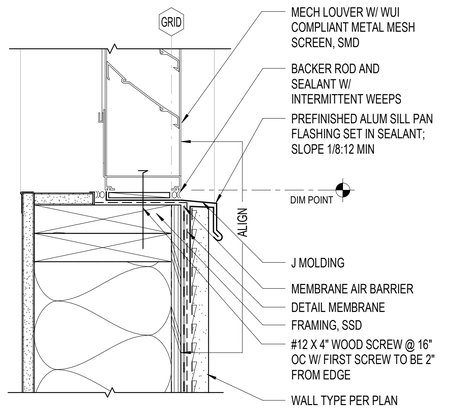

5 A7.72 MECH LOUVER SILL @ CEMENT PLASTER

3" = 1'-0"

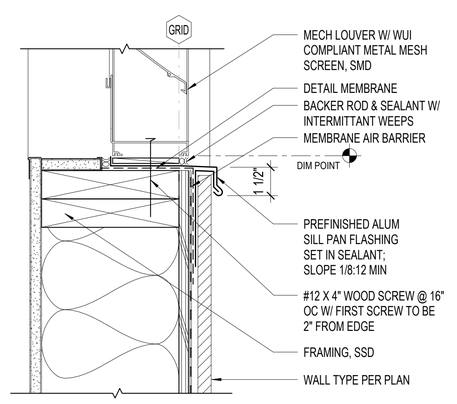

2 A7.72 MECH LOUVER SILL @ POLYASH

3" = 1'-0"

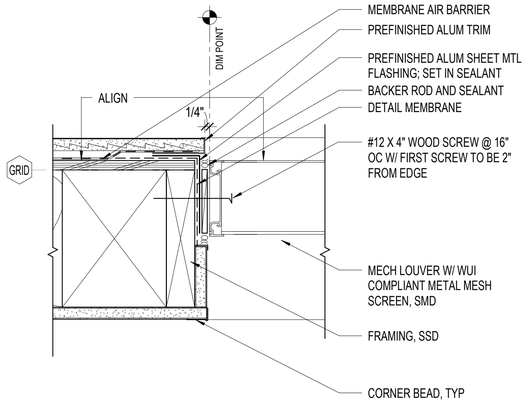

6 A7.72 MECH LOUVER JAMB @ CEMENT PLASTER

3" = 1'-0"

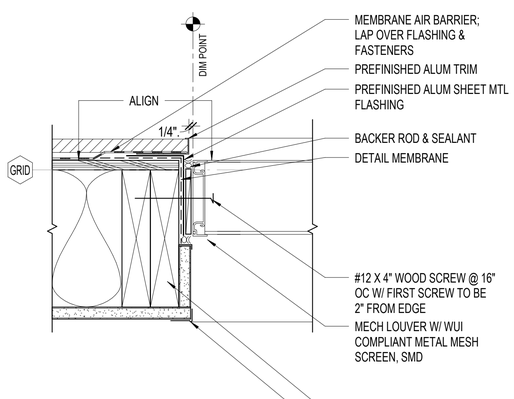

3 A7.72 MECHANICAL LOUVER JAMB @ POLYASH

3" = 1'-0"

APPROVALS

IDENTIFICATION STAMP
DIV. OF THE STATE ARCHITECT
APP: 01-119409 INC:
REVIEWED FOR
SS ☑ FLS ☑ ACS ☑
DATE: 03/14/2022

NOLL & TAM ARCHITECTS
729 Heinz Avenue
Berkeley, CA 94710
tel 510.542.2200
fax 510.542.2201

SEAL

LICENSED ARCHITECT
CHRISTOPHER NOLL
No. C15916
REN. 12-31-23
STATE OF CALIFORNIA

PROJECT TITLE

Peralta Community College District
MERRITT COLLEGE NEW LANDSCAPE HORTICULTURE COMPLEX

12500 Campus Drive
Oakland, CA 94619

BID SET

ISSUE DATE 03/03/2022
N&T JOB NUMBER 22003

REVISIONS

#	DATE	DESCRIPTION

DRAWN BY Author | CHECKED BY Checker

SHEET TITLE

EXTERIOR - FLASHING DETAILS

SHEET NUMBER

A7.72

3/3/2022 11:31:01 AM BIM 360://PCCD Merritt Horticulture/Merritt Horticulture_2020.rvt

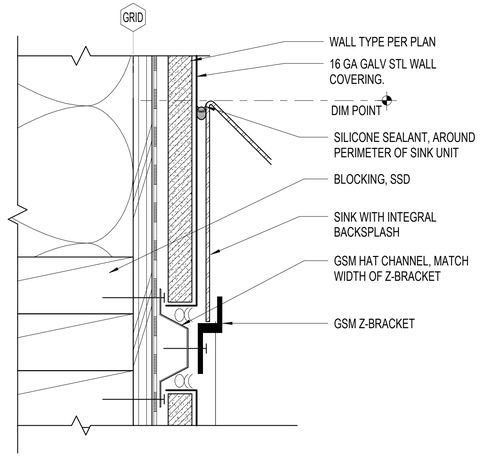

10 A7.81 SHEET MTL OVERLAY - BLOCKING
6" = 1'-0"

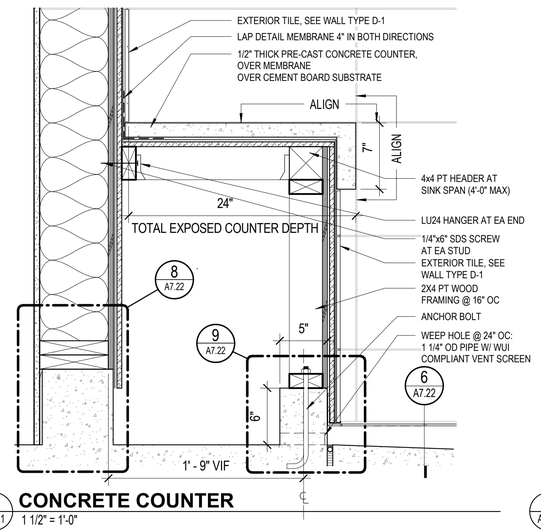

7 A7.81 CONCRETE COUNTER
1 1/2" = 1'-0"

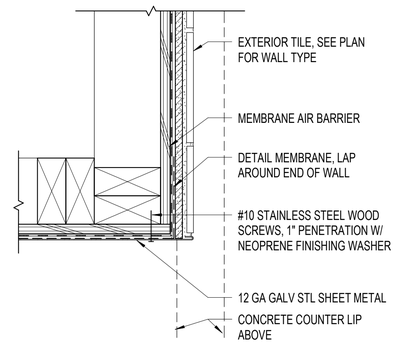

4 A7.81 CORNER @ OUTDOOR CONC SINK
3" = 1'-0"

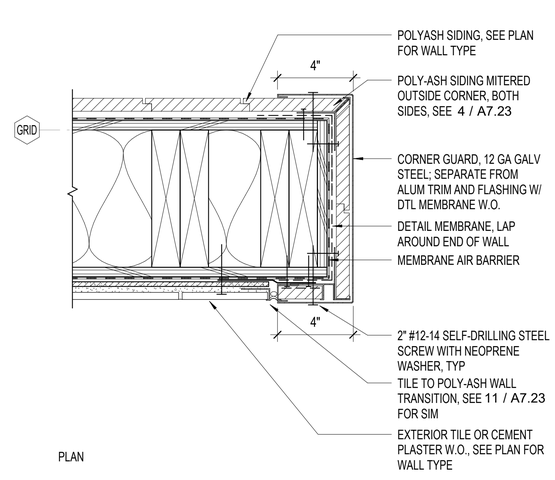

1 A7.81 CORNER GUARD @ PLASTER / TILE
3" = 1'-0"

11 A7.81 CORNER GUARD @ EXTERIOR WALL
3" = 1'-0"

8 A7.81 CONCRETE COUNTER - SECTION @ SINK
1 1/2" = 1'-0"

5 A7.81 SECTION - EXT WALL MTD SINKS
1/2" = 1'-0"

2 A7.81 ELEVATION - EXT WALL MTD SINKS
1/2" = 1'-0"

12 A7.81 SOAP TRAY
12" = 1'-0"

9 A7.81 ELEVATION - EXT FRAME MTD SINKS
1/2" = 1'-0"

6 A7.81 SECTION - EXT FRAME MTD SINKS
1/2" = 1'-0"

3 A7.81 ENLARGED PLAN, EXT SINKS - TYPICAL
1/2" = 1'-0"

APPROVALS

IDENTIFICATION STAMP
DIV. OF THE STATE ARCHITECT
APP: 01-119409 INC:
REVIEWED FOR
SS ☑ FLS ☑ ACS ☑
DATE: 03/14/2022

NOLL & TAM ARCHITECTS
729 Heinz Avenue
Berkeley, CA 94710
tel 510.542.2200
fax 510.542.2201

SEAL

LICENSED ARCHITECT
CHRISTOPHER NOLL
No. C15916
REN. 12-31-23
STATE OF CALIFORNIA

PROJECT TITLE

Peralta Community College District
MERRITT COLLEGE NEW LANDSCAPE HORTICULTURE COMPLEX

12500 Campus Drive
Oakland, CA 94619

BID SET

ISSUE DATE	03/03/2022
N&T JOB NUMBER	22003

REVISIONS

	DATE	DESCRIPTION

DRAWN BY **Author** | CHECKED BY **Checker**

SHEET TITLE

EXTERIOR - SPECIALTY AND MISCELLANEOUS DETAILS

SHEET NUMBER

A7.81

3/3/2022 11:31:04 AM BIM 360://PCCD Merritt Horticulture/Merritt Horticulture_2020.rvt

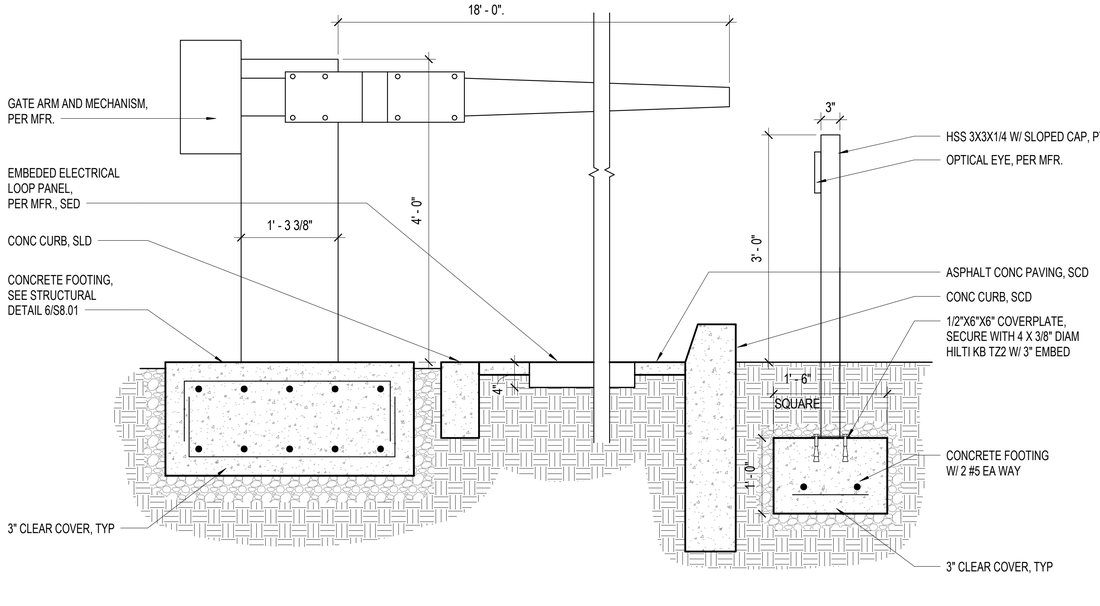

5 A7.82 VEHICLE ACCESS GATE
1" = 1'-0"

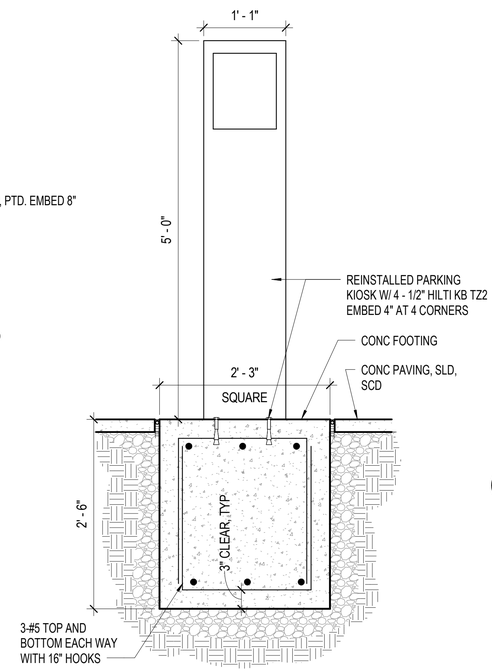

3 A7.82 PARKING RECEIPT FOOTING (SITE DRINKING FOUNTAIN SIMILAR)
1" = 1'-0"

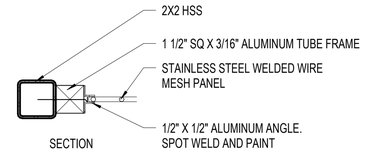

1 A7.82 SIDE GUARD SECTION
3" = 1'-0"

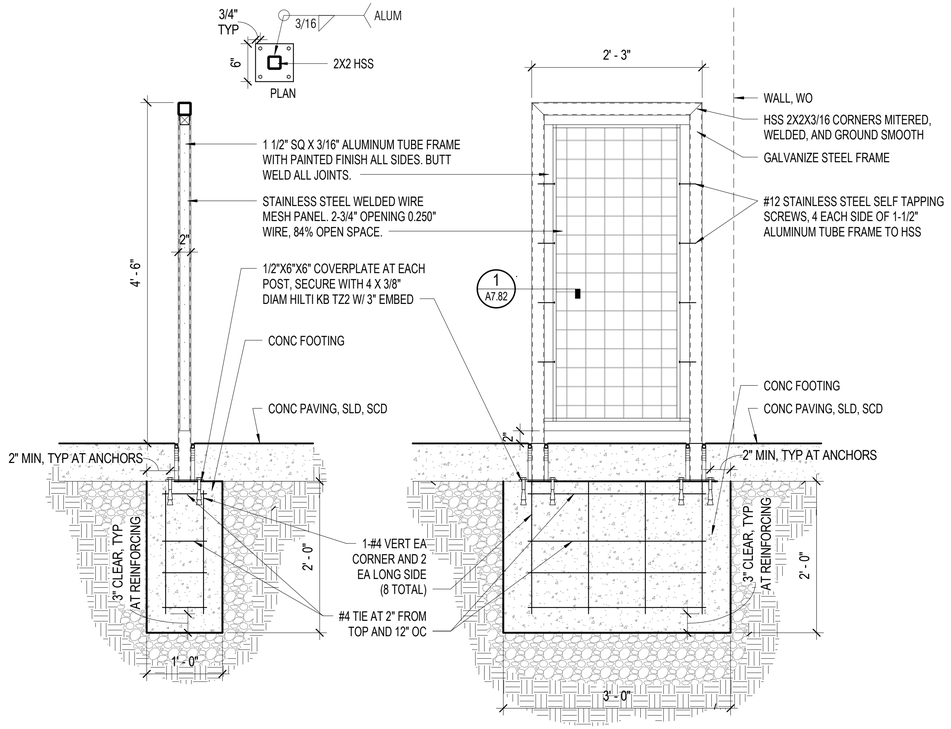

4 A7.82 SIDE GUARD AT OUTDOOR SINKS
1" = 1'-0"

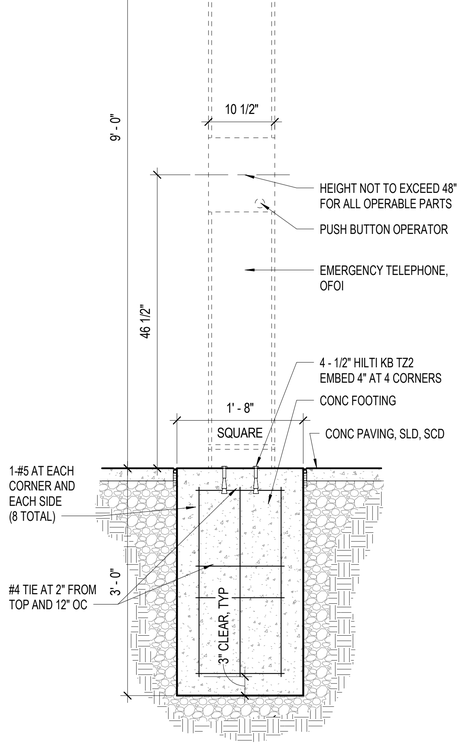

2 A7.82 EMERGENCY TELEPHONE
1" = 1'-0"

APPROVALS

IDENTIFICATION STAMP
DIV. OF THE STATE ARCHITECT
APP: 01-119409 INC:
REVIEWED FOR
SS ☑ FLS ☑ ACS ☑
DATE: 03/14/2022

NOLL & TAM ARCHITECTS
729 Heinz Avenue
Berkeley, CA 94710
tel 510.542.2200
fax 510.542.2201

SEAL

LICENSED ARCHITECT
CHRISTOPHER NOLL
No. C15916
REN. 12-31-23
STATE OF CALIFORNIA

PROJECT TITLE

Peralta Community College District
MERRITT COLLEGE NEW LANDSCAPE HORTICULTURE COMPLEX

12500 Campus Drive
Oakland, CA 94619

BID SET

ISSUE DATE	03/03/2022
N&T JOB NUMBER	22003

REVISIONS

#	DATE	DESCRIPTION

DRAWN BY **Author** CHECKED BY **Checker**

SHEET TITLE
EXTERIOR - SPECIALTY AND MISCELLANEOUS DETAILS

SHEET NUMBER
A7.82

3/3/2022 11:31:06 AM BIM 360://PCCD Merritt Horticulture/Merritt Horticulture_2020.rvt

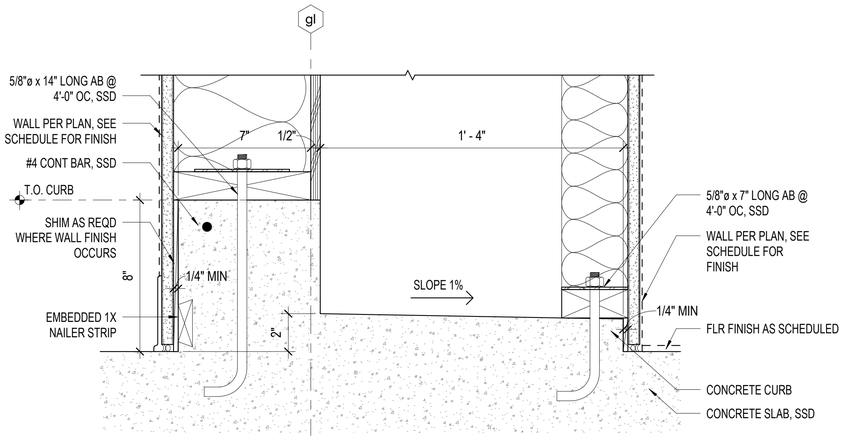

8 A8.10 PARTITION SILL PLATE @ EXTENDED CONC CURB F1

3" = 1'-0"

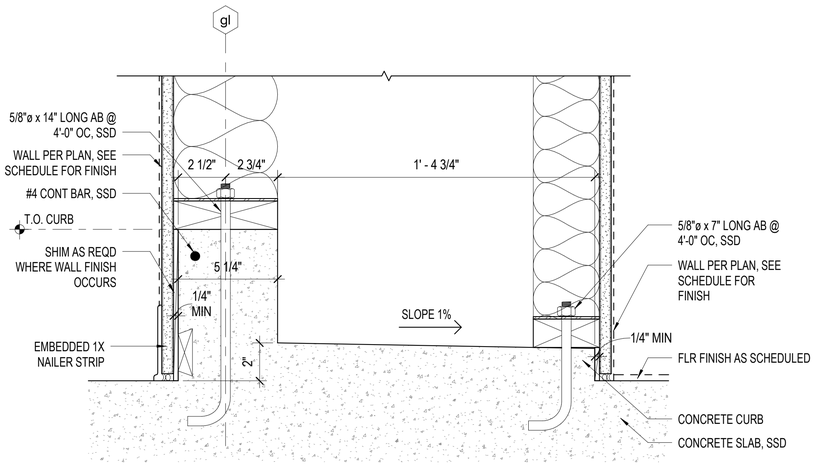

9 A8.10 PARTITION SILL PLATE @ EXTENDED CONC CURB F2

3" = 1'-0"

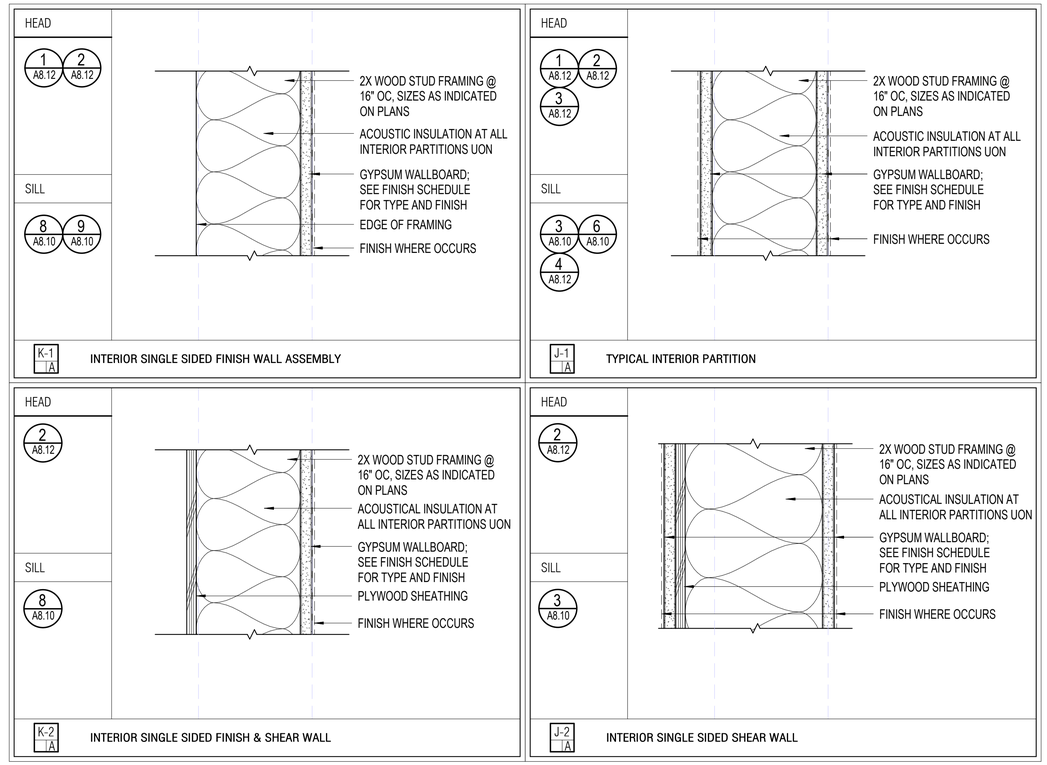

INTERIOR PARTITION NOTES

1. ALL INTERIOR PARTITION FRAMING TO BE 16" OC UON.
2. FOR TYPICAL WALL FRAMING DETAILS, SEE STRUCTURAL DRAWINGS AND SHEETS A8.11 AND A8.12.
3. ALL INTERIOR PARTITIONS TO BE FULL HEIGHT, UON. SEE INT ELEVS FOR LOCATIONS AND HEIGHTS OF TYPE J-1 PARTIAL HEIGHT PARTITIONS.
4. WALL FINISHES TO EXTEND TO UNDERSIDE OF ROOF SHEATHING, UON.
5. PROVIDE BACKING FOR FULL WIDTH OF ALL WALL ATTACHED EQUIPMENT, CASEWORK, AND ACCESSORIES. SEE TYPICAL BACKING DETAILS: 6 / A8.12 7 / A8.12 8 / A8.12
6. ALL GWB TO BE 5/8" TYPE X, UON. SEE FINISH SCHEDULE FOR WATER RESISTANT BOARD AND TILE BACKER.
7. WHERE PENETRATIONS ARE REQ'D THROUGH PARTITIONS, THE SOUND INSULATION PERFORMANCE OF THE ASSEMBLY BEING PENETRATED SHALL BE MAINTAINED. PENETRATIONS SHALL BE OVERSIZED BY A MIN OF 1/4" AND SEALED AIRTIGHT W/ ACOUSTICAL SEALANT. ALL PENETRATIONS, INCLUDING WIRING, SHALL BE SEALED AIR-TIGHT.
8. THE GWB AT PARTITIONS SHALL BE HELD BACK 1/4" AT ALL INTERSECTIONS (EXCEPT OUTSIDE CORNERS) & THE GAP CAULKED AIRTIGHT W/ ACOUSTICAL SEALANT SUCH AS TREMCO OR USG BRAND ACOUSTICAL SEALANT. SEALANT JOINTS AT PARTITION INTERSECTIONS SHALL BE TAPED & FINISHED.
9. SEE SLAB PLAN FOR INTERIOR PARTITIONS ON CURBS.
10. REFER TO SPECIFICATION FOR INSULATION TYPES AND PERFORMANCE REQUIREMENTS.
11. FOR ALL PARTITION HEAD CONNECTIONS, BOTH BEARING AND NON-BEARING, SEE STRUCTURAL DETAILS.
12. PLYWD SHEATHING WO RUNS COMPLETE SURFACE OF WALL. SSD FOR LOCATIONS OF STRUCTURAL PLYWD SHEATHING.

PARTITION TYPE LEGEND

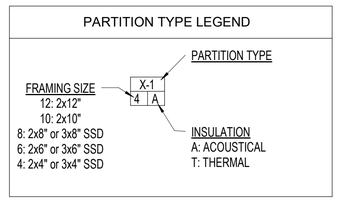

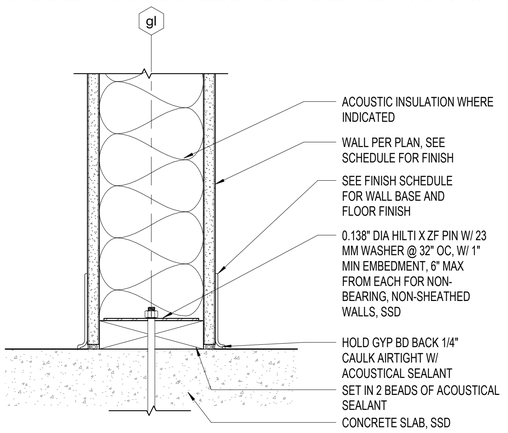

6 A8.10 PARTITION SILL PLATE - NO CURB

3" = 1'-0"

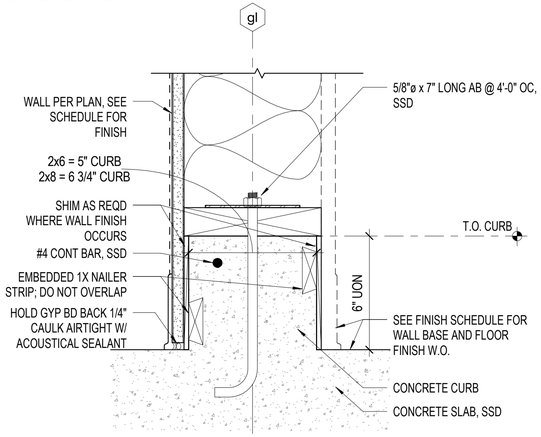

3 A8.10 PARTITION SILL PLATE @ CONC CURB

3" = 1'-0"

APPROVALS

IDENTIFICATION STAMP
DIV. OF THE STATE ARCHITECT
APP: 01-119409 INC:
REVIEWED FOR
SS ☑ FLS ☑ ACS ☑
DATE: 03/14/2022

NOLL & TAM ARCHITECTS
729 Heinz Avenue
Berkeley, CA 94710
tel 510.542.2200
fax 510.542.2201

SEAL

LICENSED ARCHITECT
CHRISTOPHER NOLL
No. C15916
REN. 12-31-23
STATE OF CALIFORNIA

PROJECT TITLE

Peralta Community College District
MERRITT COLLEGE NEW LANDSCAPE HORTICULTURE COMPLEX

12500 Campus Drive
Oakland, CA 94619

BID SET

ISSUE DATE	03/03/2022
N&T JOB NUMBER	22003

REVISIONS

#	DATE	DESCRIPTION

DRAWN BY **Author** CHECKED BY **Checker**

SHEET TITLE

INTERIOR - TYPICAL PARTITIONS

SHEET NUMBER

A8.10

3/3/2022 11:31:08 AM BIM 360://PCCD Merritt Horticulture/Merritt Horticulture_2020.rvt

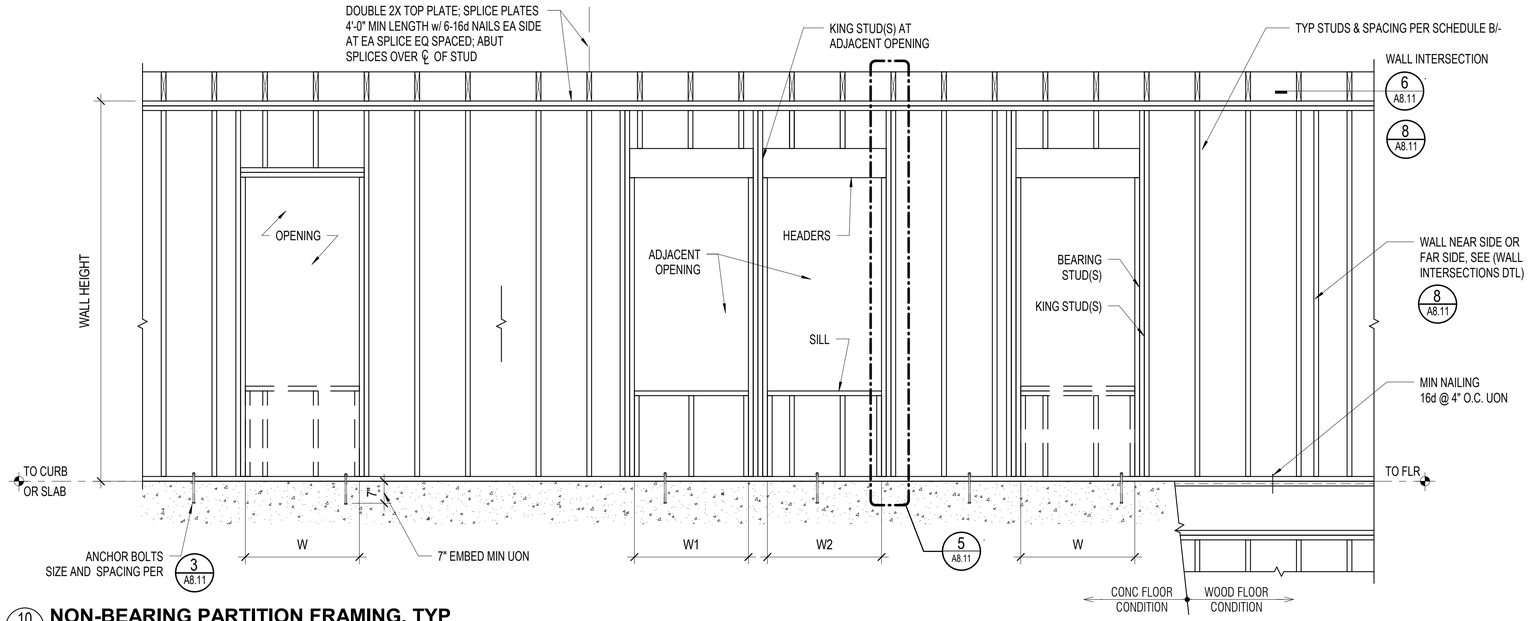

10 A8.11 NON-BEARING PARTITION FRAMING, TYP

1/2" = 1'-0"

SCHEDULE A: NON-BEARING PARTITION WALL OPENING						
OPENING WIDTH	KING STUD(S)	ADJACENT OPENINGS		HEADER SIZE	BEARING STUD(S)	SILL SIZE
		COMBINED WIDTH W1+W2	KING STUD(S)			
H<6'-0"	2-2X SW	6'-0" MAX	3-2X SW	2-2X SW	1-2X SW	2-2X SW
H<10'-0"	2-2X SW	10'-0" MAX	3-2X SW	4-2X SW	1-2X SW	2-2X SW

NOTES:
1. SW IS DEFINED AS STUD WIDTH.
2. INTERNAIL 2X HEADER & SILL WITH 10d @ 6" MINIMUM.

SCHEDULE B: NON-BEARING PARTITION		
WALL HEIGHT	STUD SIZE	SPACING
H<10'-0"	2X4	16"
H<15'-0"	2X6	16"
H<20'-0"	2X8	16"
15'-0"<H<24'-0"	2X6	8"
15'-0"<H<24'-0"	2-2X6	16"

NOTES:
1. FOR HEADERS, SILL, KING STUDS AND BEARING STUDS, SEE SCHEDULE A/-.

SCHEDULE C: NON-BEARING PARTITION ANCHORAGE				
TYPE	NO CURB		CURB	
	ANCHOR SIZE	SPACING	ANCHOR SIZE	SPACING
ANCHOR BOLT	1/2" DIA	4'-0"	3/8" DIA	2'-8"
EXPANSION ANCHOR [1]	1/2" DIA	4'-0"	3/8" DIA	2'-8"
PAF [2]	0.145" DIA	2'-8"	NOT ALLOWED	N/A

NOTES:
1. HILTI KB TZ2 EXPANSION ANCHOR, ICC ESR #4266.
2. SIMPSON PDPA 0.157" x 2 7/8" LONG, ICC ESR #2138.

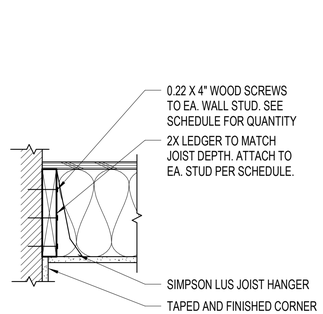

CEILING JOIST ATTACHMENT	
JOIST SPAN	QUANTITY OF 0.22" X 4" WOOD SCREWS TO EACH STUD
9'-0"	2
14'-0"	3
19'-0"	4

11 A8.11 CEILING EDGE CONDITION, TYP

1 1/2" = 1'-0"

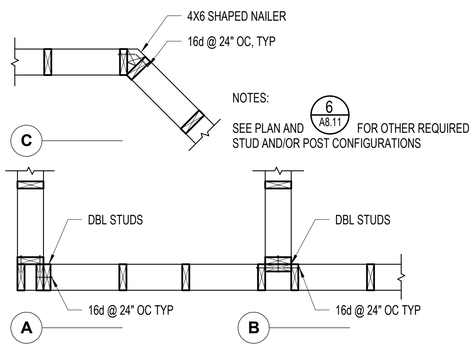

8 A8.11 PARTITION INTERSECTIONS - PLAN

3/4" = 1'-0"

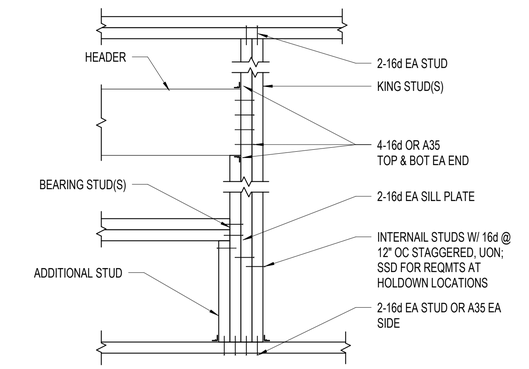

5 A8.11 NAILING AT PARTITION OPENING

1/2" = 1'-0"

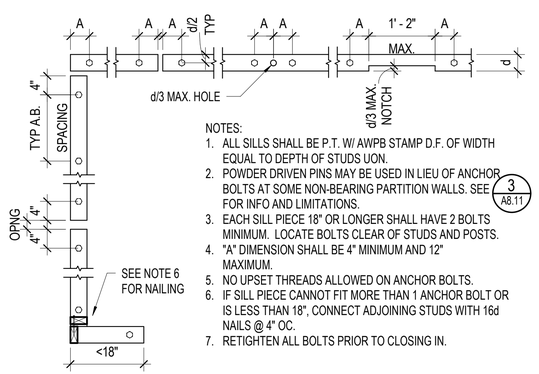

NOTES:
1. ALL SILLS SHALL BE P.T. W/ AWPB STAMP D.F. OF WIDTH EQUAL TO DEPTH OF STUDS UON.
2. POWDER DRIVEN PINS MAY BE USED IN LIEU OF ANCHOR BOLTS AT SOME NON-BEARING PARTITION WALLS. SEE 3 A8.11 FOR INFO AND LIMITATIONS.
3. EACH SILL PIECE 18" OR LONGER SHALL HAVE 2 BOLTS MINIMUM. LOCATE BOLTS CLEAR OF STUDS AND POSTS.
4. "A" DIMENSION SHALL BE 4" MINIMUM AND 12" MAXIMUM.
5. NO UPSET THREADS ALLOWED ON ANCHOR BOLTS.
6. IF SILL PIECE CANNOT FIT MORE THAN 1 ANCHOR BOLT OR IS LESS THAN 18", CONNECT ADJOINING STUDS WITH 16d NAILS @ 4" OC.
7. RETIGHTEN ALL BOLTS PRIOR TO CLOSING IN.

2 A8.11 ANCHOR BOLT AND SILL PLATE

3/4" = 1'-0"

MAXIMUM CEILING JOIST SPANS FOR UNINHABITED SPACES / LIMITED STORAGE DOUGLAS FIR - LARCH #2				
CEILING JOIST SPACING	MAXIMUM SPAN (DEFLECTION IS A MAX OF L/240)			
	MAXIMUM = 10 PSF DEAD LOAD /20 PSF LIVE LOAD			
	PROVIDE MID-SPAN BLOCKING TYP			
	2 X 4	2 X 6	2 X 8	2 X 10
12"	9'-10"	14'-10"	18'-9"	22'-11"
16"	8'-9"	12'-10"	16'-3"	19'-10"
24"	7'-2"	10'-6"	13'-3"	16'-3"

FOR SPANS GREATER THAN 12'-0", PROVIDE HANGERS PER DETAIL C ON 1 / A8.21

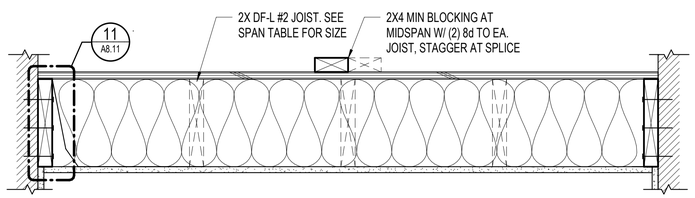

12 A8.11 CEILING JOIST SCHEDULES, TYP

NOT TO SCALE

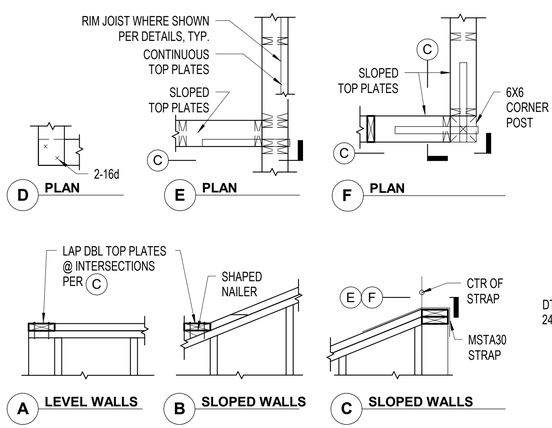

6 A8.11 TOP PLATE INTERSECTIONS

NOT TO SCALE

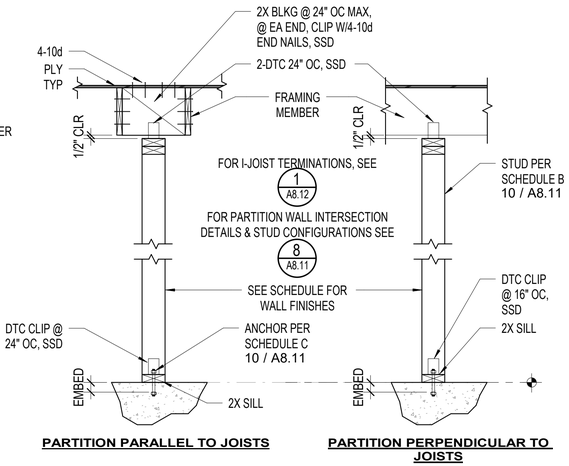

3 A8.11 NON-BEARING PARTITION CONNECTIONS

1/2" = 1'-0"

APPROVALS

IDENTIFICATION STAMP
DIV. OF THE STATE ARCHITECT
APP: 01-119409 INC:
REVIEWED FOR
SS ☑ FLS ☑ ACS ☑
DATE: 03/14/2022

NOLL & TAM ARCHITECTS
729 Heinz Avenue
Berkeley, CA 94710
tel 510.542.2200
fax 510.542.2201

SEAL

LICENSED ARCHITECT
CHRISTOPHER NOLL
No. C15916
REN. 12-31-23
STATE OF CALIFORNIA

PROJECT TITLE

Peralta Community College District
MERRITT COLLEGE NEW LANDSCAPE HORTICULTURE COMPLEX

12500 Campus Drive
Oakland, CA 94619

BID SET

ISSUE DATE	03/03/2022
N&T JOB NUMBER	22003

REVISIONS

	DATE	DESCRIPTION

DRAWN BY | CHECKED BY Checker

SHEET TITLE
INTERIOR - PARTITION DETAILS

SHEET NUMBER
A8.11

3/3/2022 11:31:10 AM BIM 360://PCCD Merritt Horticulture/Merritt Horticulture_2020.rvt

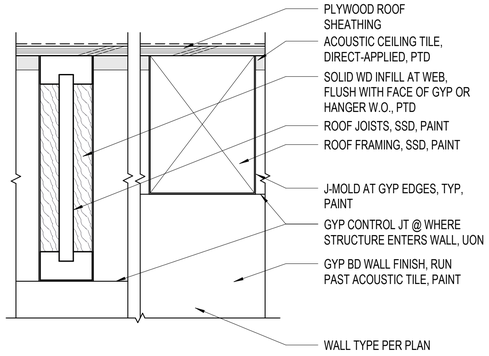

ELEVATION

9 A8.12 INTERIOR FINISH TERMINATION AT ROOF

3" = 1'-0"

NOTES:
1. USE FOR MISC ITEMS INCLUDING SURFACE MOUNTED MIRRORS, SANITARY WASTE RECEPTACLES, TOWEL DISPENSERS, WALL MOUNTED DOOR STOPS, MAX. WT. IS 50 LBS/ LIN. FT.
2. LENGTH, HEIGHT AND LOCATION TO SUIT ITEMS BEING FASTENED. SEE ANCHORAGE DETAIL OF SPECIFIC ITEMS FOR ADDITIONAL INFORMATION.
3. ATTACH TO THREE STUDS MIN.

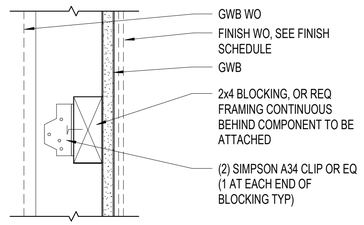

NOTE:
PROVIDE DOUBLE STUDS AT ENTIRE LENGTH OF SEGMENT OF WALL WHERE BLOCKING IS INSTALLED.

6 A8.12 ANCHOR DETAIL TYPE 1 - MAX 50 LBS/LF LOAD

3" = 1'-0"

NOTES:
1. USE FOR MISC ITEMS INCLUDING LIGHT SHELVING, RACKS, HOOKS, WALL MOUNTED TOWEL WASTE RECEPTACLES, MAX. WT. IS 200 LBS/ LIN. FT.
2. LENGTH, HEIGHT AND LOCATION TO SUIT ITEMS BEING FASTENED. SEE ANCHORAGE DETAIL OF SPECIFIC ITEMS FOR ADDITIONAL INFORMATION.
3. ATTACH TO THREE STUDS MIN.

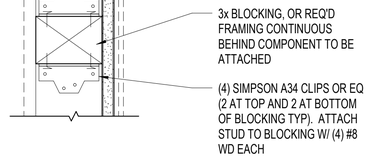

NOTE:
PROVIDE DOUBLE STUDS AT ENTIRE LENGTH OF SEGMENT OF WALL WHERE BLOCKING IS INSTALLED.

7 A8.12 ANCHOR DETAIL TYPE 2 - MAX 200 LBS/LF LOAD

3" = 1'-0"

NOTES:
1. USE FOR GRAB BARS FIXTURES, EQUIPMENT, TOILET PARTITIONS, AND EQUIPMENT MAX. WT.IS 300 LBS/ LIN. FT.
2. LENGTH, HEIGHT AND LOCATION TO SUIT ITEMS BEING FASTENED. SEE ANCHORAGE DETAIL OF SPECIFIC ITEMS FOR ADDITIONAL INFORMATION.
3. ATTACH TO THREE STUDS MIN.

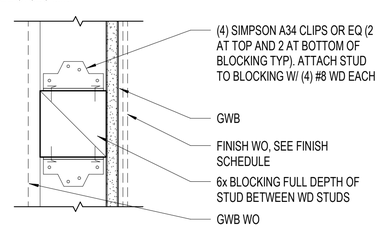

NOTE:
PROVIDE DOUBLE STUDS AT ENTIRE LENGTH OF SEGMENT OF WALL WHERE BLOCKING IS INSTALLED.

8 A8.12 ANCHOR DETAIL TYPE 3 - MAX 300 LBS/LF LOAD

3" = 1'-0"

REFER TO PARTN TYPES SCHED FOR ADDL REQMTS

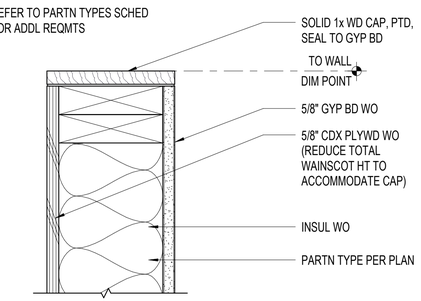

SECTION

3 A8.12 PARTIAL HT WALL CAP

3" = 1'-0"

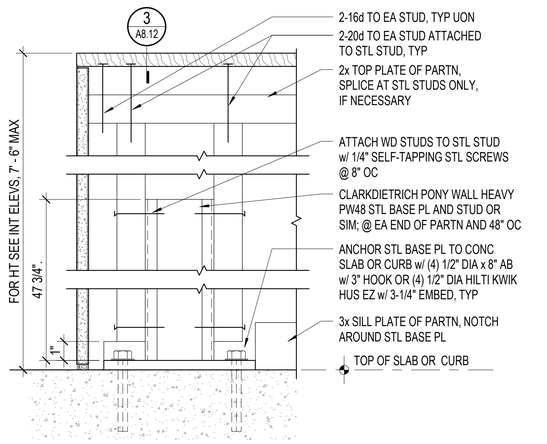

4 A8.12 PARTIAL HT PARTITION, SECTION

3" = 1'-0"

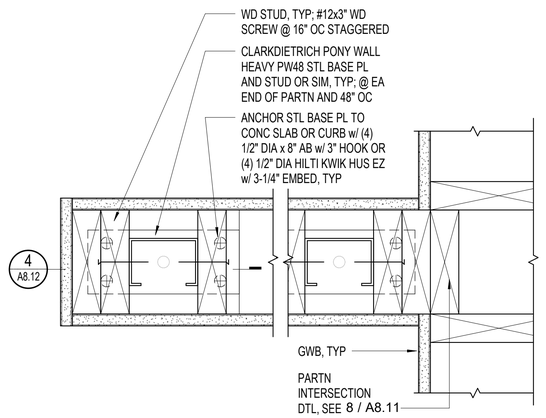

5 A8.12 PARTIAL HT PARTITION, PLAN

3" = 1'-0"

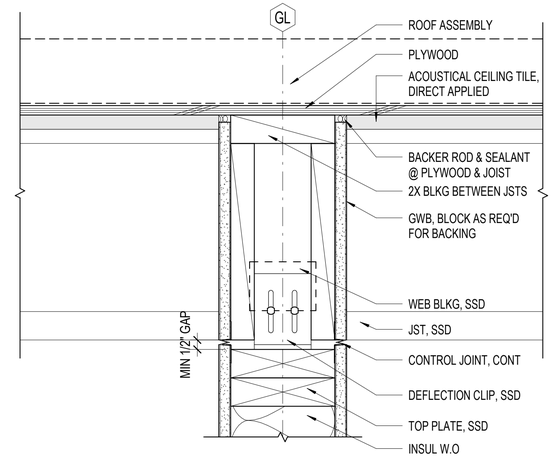

PERPENDICULAR TO JOISTS

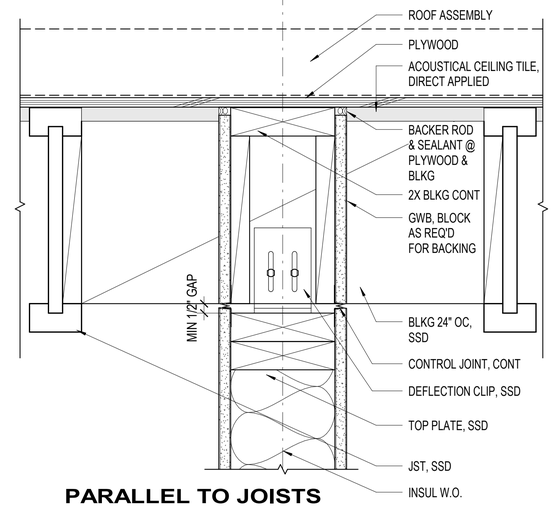

PARALLEL TO JOISTS

1 A8.12 PARTITION TOP PLATE, TYP FOR TJI FRAMING

3" = 1'-0"

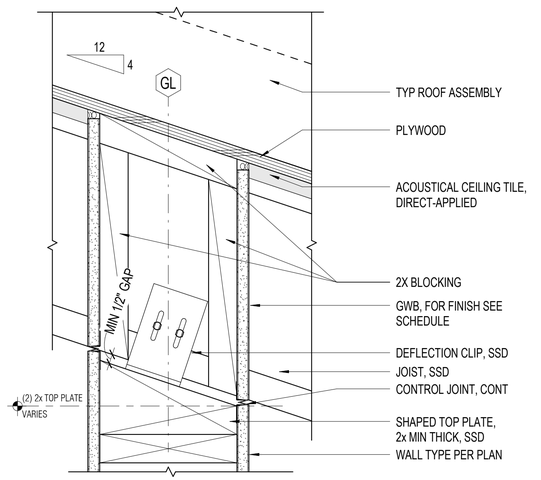

2 A8.12 PARTITION TERMINATION AT ROOF

3" = 1'-0"

APPROVALS

IDENTIFICATION STAMP
DIV. OF THE STATE ARCHITECT
APP: 01-119409 INC:
REVIEWED FOR
SS ☑ FLS ☑ ACS ☑
DATE: 03/14/2022

NOLL & TAM ARCHITECTS
729 Heinz Avenue
Berkeley, CA 94710
tel 510.542.2200
fax 510.542.2201

SEAL

LICENSED ARCHITECT
CHRISTOPHER NOLL
No. C15916
REN. 12-31-23
STATE OF CALIFORNIA

PROJECT TITLE

Peralta Community College District
MERRITT COLLEGE NEW LANDSCAPE HORTICULTURE COMPLEX

12500 Campus Drive
Oakland, CA 94619

BID SET

ISSUE DATE	03/03/2022
N&T JOB NUMBER	22003

REVISIONS

	DATE	DESCRIPTION

DRAWN BY **Author** CHECKED BY **Checker**

SHEET TITLE
INTERIOR - PARTITION DETAILS

SHEET NUMBER
A8.12

3/3/2022 11:31:12 AM BIM 360://PCCD Merritt Horticulture/Merritt Horticulture_2020.rvt

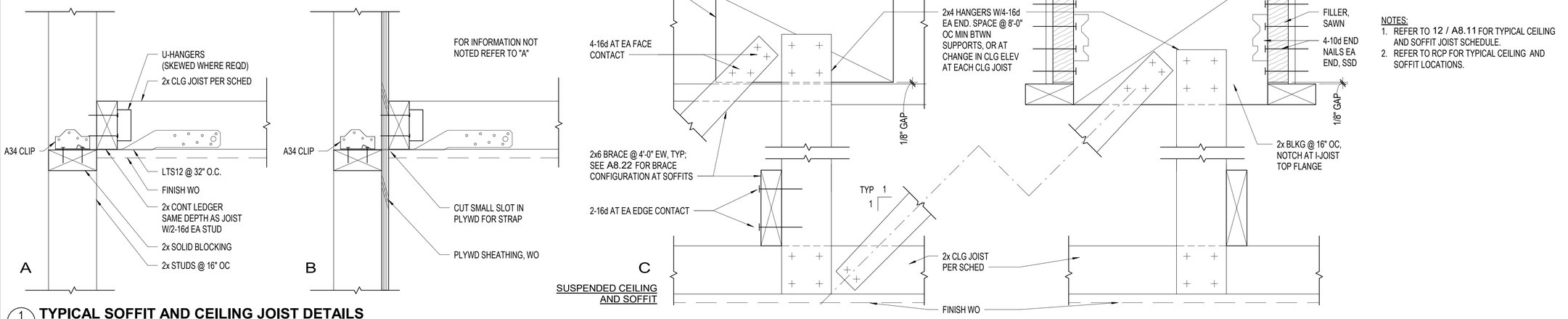

NOTES:
1. REFER TO 12 / A8.11 FOR TYPICAL CEILING AND SOFFIT JOIST SCHEDULE.
2. REFER TO RCP FOR TYPICAL CEILING AND SOFFIT LOCATIONS.

1 / A8.21 TYPICAL SOFFIT AND CEILING JOIST DETAILS
NOT TO SCALE

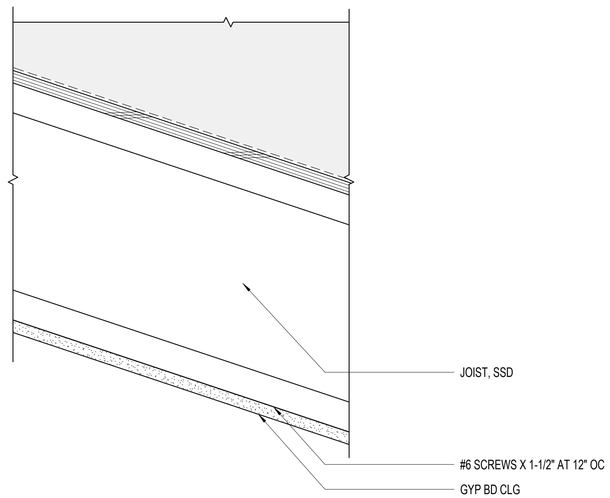

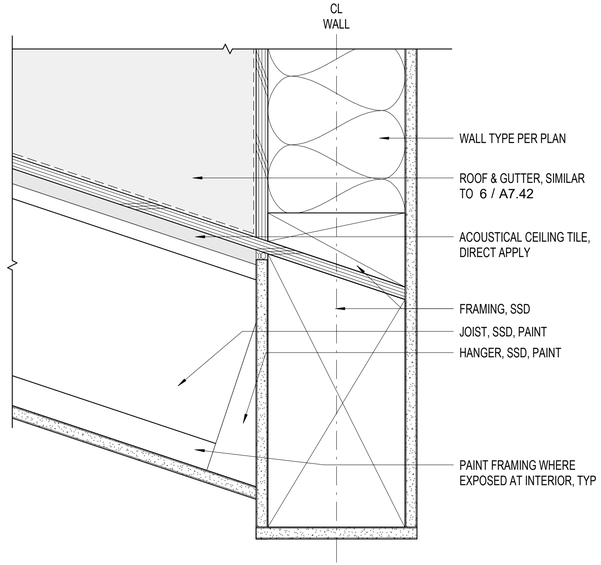

3 / A8.21 LOWER BEAM SOUTH OF wG.5
3" = 1'-0"

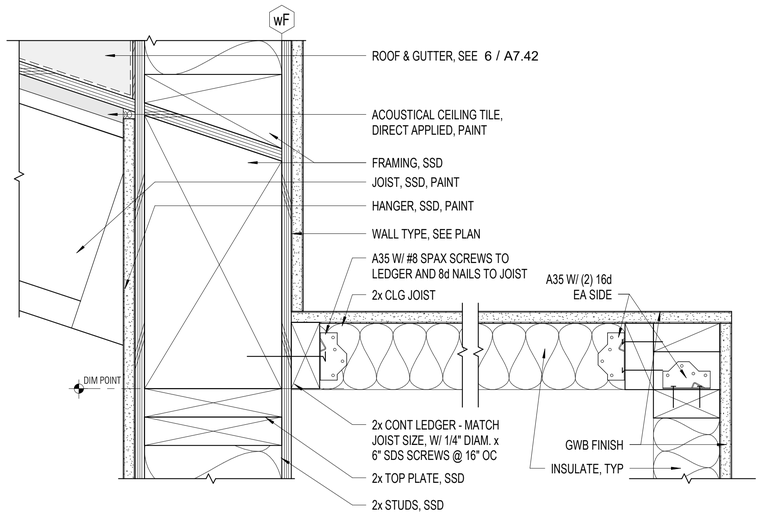

2 / A8.21 RESTROOM WET WALL TOP TERMINATION
3" = 1'-0"

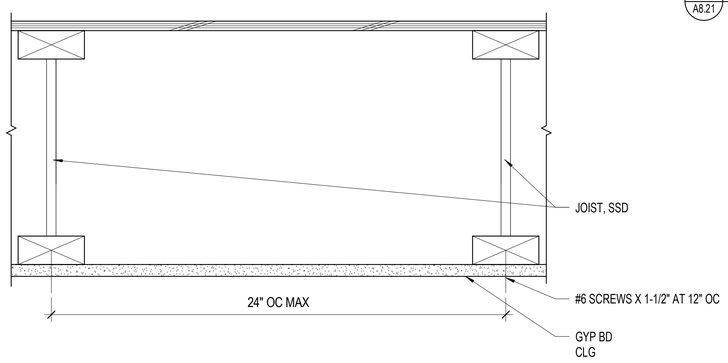

4 / A8.21 WEST RESTROOM CEILING
3" = 1'-0"

3/3/2022 11:31:13 AM BIM 360://PCCD Merritt Horticulture/Merritt Horticulture_2020.rvt

APPROVALS

IDENTIFICATION STAMP
DIV. OF THE STATE ARCHITECT
APP: 01-119409 INC:
REVIEWED FOR
SS ☑ FLS ☑ ACS ☑
DATE: 03/14/2022

NOLL & TAM ARCHITECTS
729 Heinz Avenue
Berkeley, CA 94710
tel 510.542.2200
fax 510.542.2201

SEAL

LICENSED ARCHITECT
CHRISTOPHER NOLL
No. C15916
REN. 12-31-23
STATE OF CALIFORNIA

PROJECT TITLE

Peralta Community College District
MERRITT COLLEGE NEW LANDSCAPE HORTICULTURE COMPLEX

12500 Campus Drive
Oakland, CA 94619

BID SET

ISSUE DATE	03/03/2022
N&T JOB NUMBER	22003

REVISIONS

	DATE	DESCRIPTION

DRAWN BY	CHECKED BY Checker

SHEET TITLE
INTERIOR - CEILING DETAILS

SHEET NUMBER
A8.21

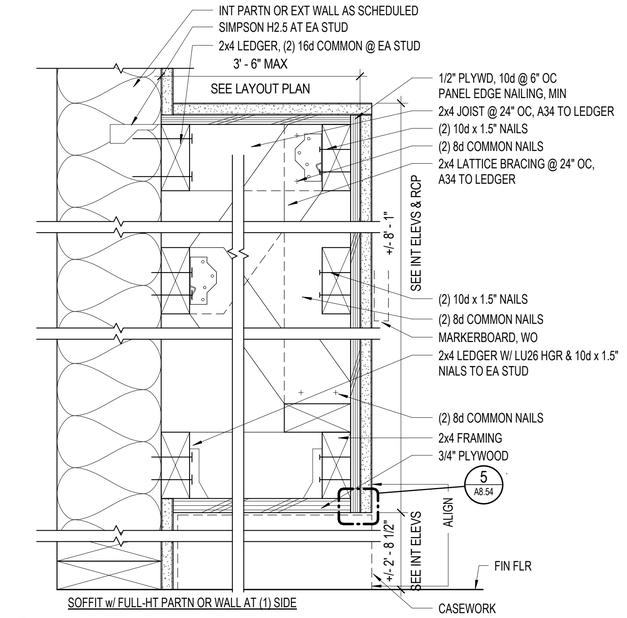

5 A8.22 **SOFFIT @ CASEWORK, WALL AT 1 SIDE**
3" = 1'-0"

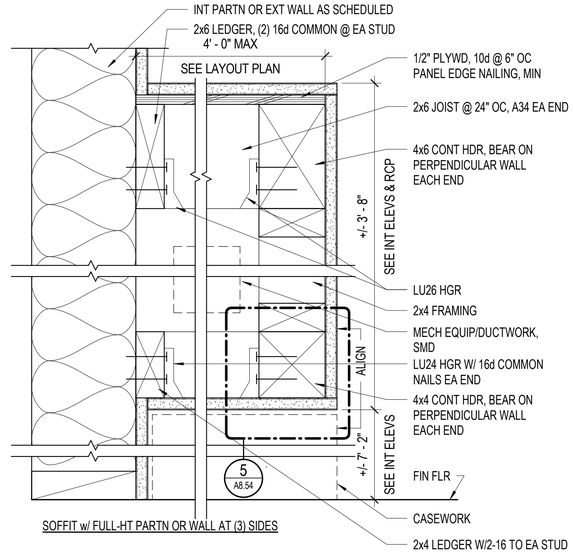

3 A8.22 **SOFFIT @ CASEWORK, WALL AT 3 SIDES**
3" = 1'-0"

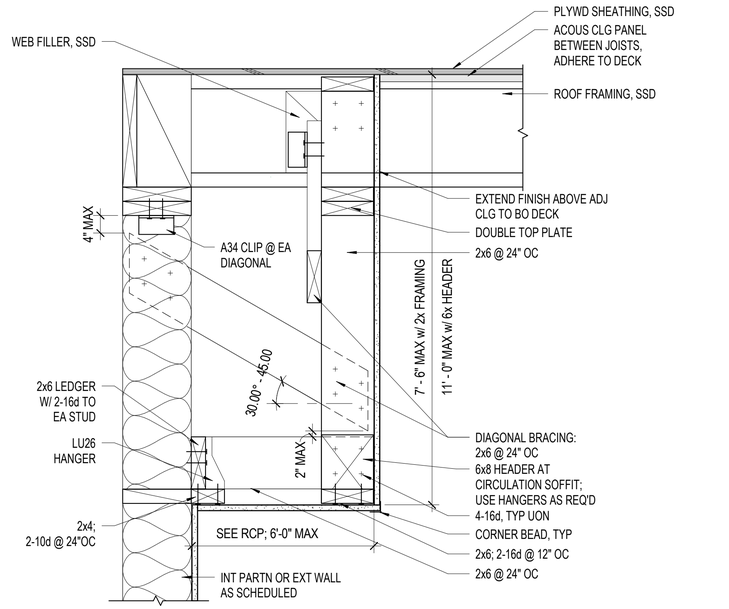

1 A8.22 **TYPICAL SOFFIT**
1 1/2" = 1'-0"

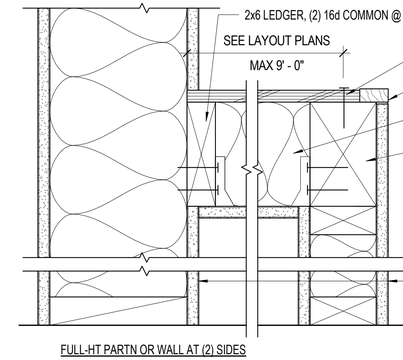

6 A8.22 **GYP BD LID @ STORAGE**
3" = 1'-0"

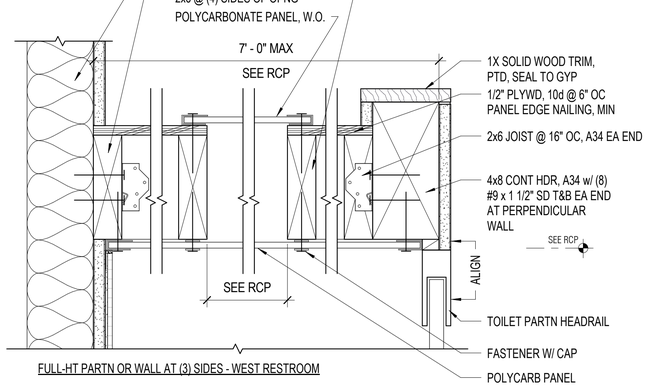

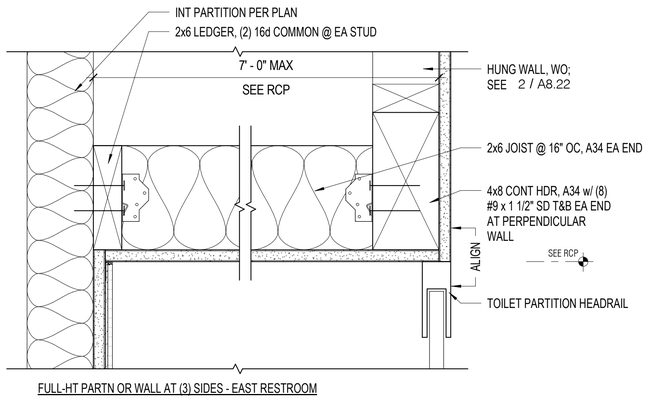

4 A8.22 **SOFFIT / LID @ RESTROOM STALLS**
3" = 1'-0"

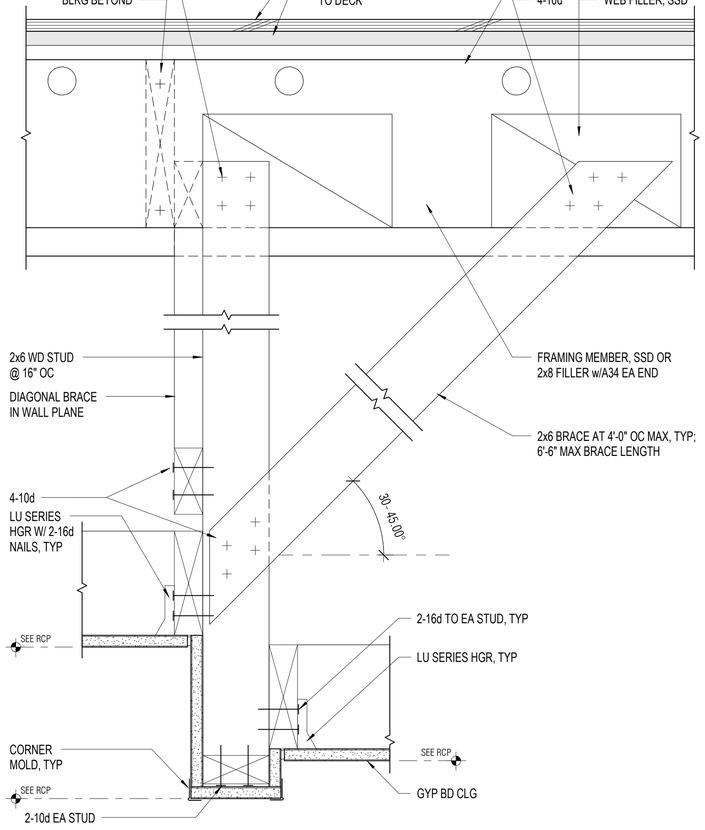

2 A8.22 **CEILING HUNG WALL, TYP**
3" = 1'-0"

APPROVALS

IDENTIFICATION STAMP
DIV. OF THE STATE ARCHITECT
APP: 01-119409 INC:
REVIEWED FOR
SS ☑ FLS ☑ ACS ☑
DATE: 03/14/2022

NOLL & TAM ARCHITECTS
729 Heinz Avenue
Berkeley, CA 94710
tel 510.542.2200
fax 510.542.2201

SEAL

LICENSED ARCHITECT
CHRISTOPHER NOLL
No. C15916
REN. 12-31-23
STATE OF CALIFORNIA

PROJECT TITLE

Peralta Community College District
MERRITT COLLEGE NEW LANDSCAPE HORTICULTURE COMPLEX

12500 Campus Drive
Oakland, CA 94619

BID SET

ISSUE DATE	03/03/2022
N&T JOB NUMBER	22003

REVISIONS

#	DATE	DESCRIPTION

DRAWN BY **Author** | CHECKED BY **Checker**

SHEET TITLE
INTERIOR - SOFFIT DETAILS

SHEET NUMBER
A8.22

3/3/2022 11:31:15 AM BIM 360://PCCD Merritt Horticulture/Merritt Horticulture_2020.rvt

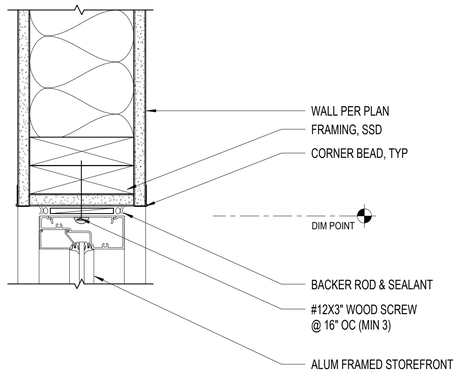

10 A8.31 E5 INT WINDOW HEAD
3" = 1'-0"

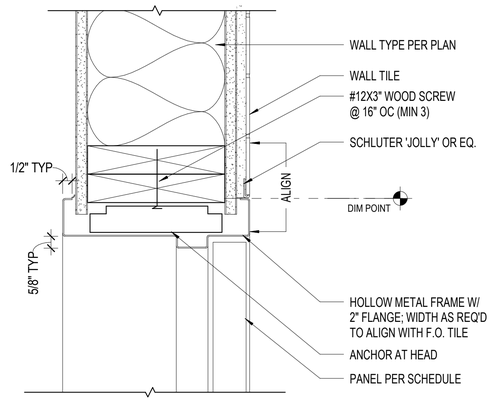

7 A8.31 HOLLOW MTL DOOR HEAD @ TILE
3" = 1'-0"

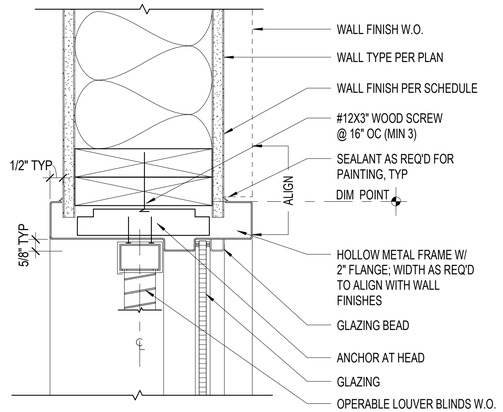

4 A8.31 HOLLOW MTL DOOR HEAD @ SIDELITE, INT
3" = 1'-0"

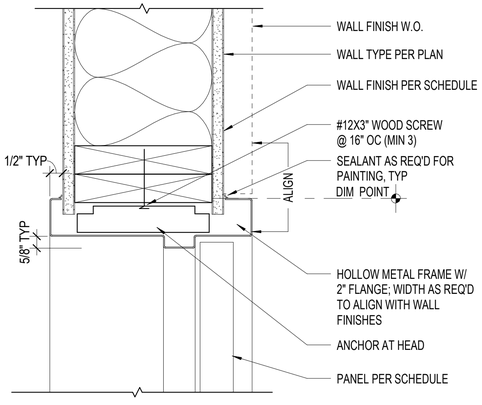

1 A8.31 HOLLOW MTL DOOR HEAD, INTERIOR
3" = 1'-0"

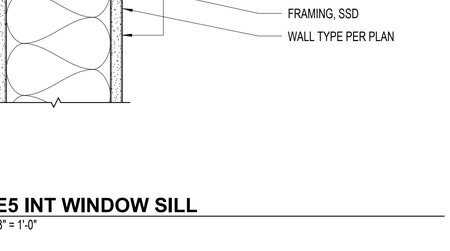

11 A8.31 E5 INT WINDOW JAMB
3" = 1'-0"

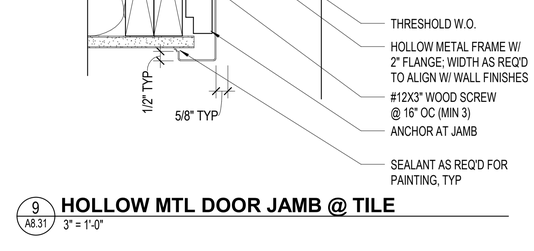

8 A8.31 THRESHOLDS/ GLASS DOORS
1/4" = 1'-0"

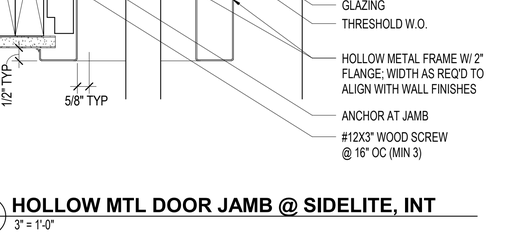

5 A8.31 HOLLOW MTL DOOR SILL @ SIDELITE, INT
3" = 1'-0"

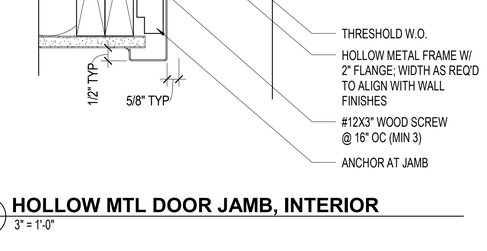

2 A8.31 HOLLOW MTL DOOR SILL, INTERIOR
3" = 1'-0"

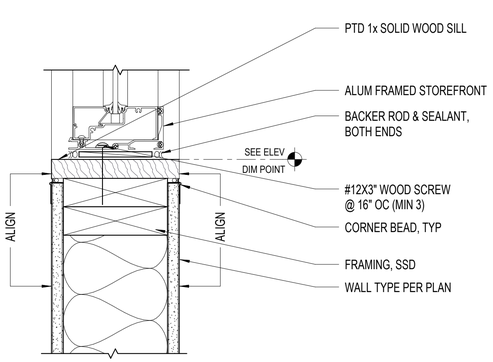

12 A8.31 E5 INT WINDOW SILL
3" = 1'-0"

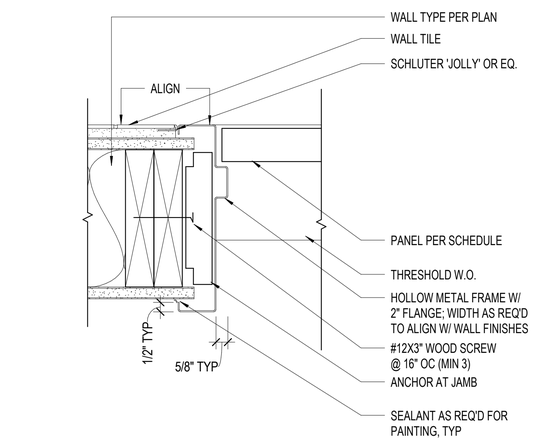

9 A8.31 HOLLOW MTL DOOR JAMB @ TILE
3" = 1'-0"

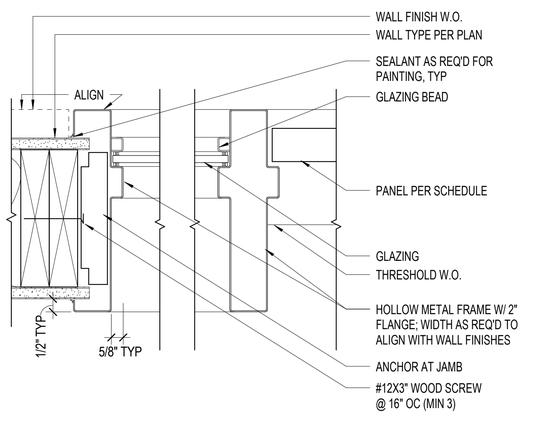

6 A8.31 HOLLOW MTL DOOR JAMB @ SIDELITE, INT
3" = 1'-0"

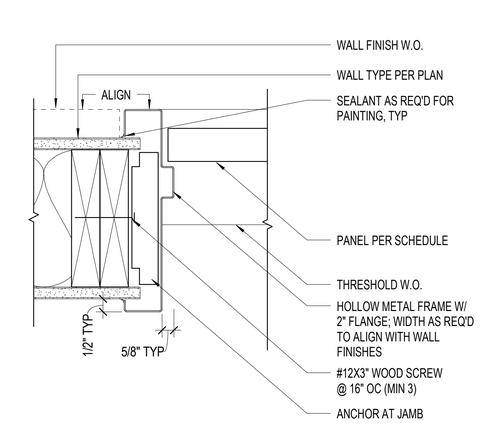

3 A8.31 HOLLOW MTL DOOR JAMB, INTERIOR
3" = 1'-0"

BIM 360://PCCD Merritt Horticulture/Merritt Horticulture_2020.rvt
3/3/2022 11:31:17 AM

APPROVALS

IDENTIFICATION STAMP
DIV. OF THE STATE ARCHITECT
APP: 01-119409 INC:
REVIEWED FOR
SS ☑ FLS ☑ ACS ☑
DATE: 03/14/2022

NOLL & TAM ARCHITECTS
729 Heinz Avenue
Berkeley, CA 94710
tel 510.542.2200
fax 510.542.2201

SEAL

LICENSED ARCHITECT
CHRISTOPHER NOLL
No. C15916
REN. 12-31-23
STATE OF CALIFORNIA

PROJECT TITLE

Peralta Community College District
MERRITT COLLEGE NEW LANDSCAPE HORTICULTURE COMPLEX

12500 Campus Drive
Oakland, CA 94619

BID SET

ISSUE DATE	03/03/2022
N&T JOB NUMBER	22003

REVISIONS

#	DATE	DESCRIPTION

DRAWN BY **Author** | CHECKED BY **Checker**

SHEET TITLE
INTERIOR - DOOR AND WINDOW DETAILS

SHEET NUMBER
A8.31

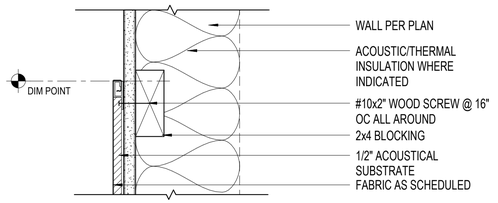

PLAN OR SECTION, EITHER SIDE

7 / A8.41 FABRIC WRAPPED PANEL

3" = 1'-0"

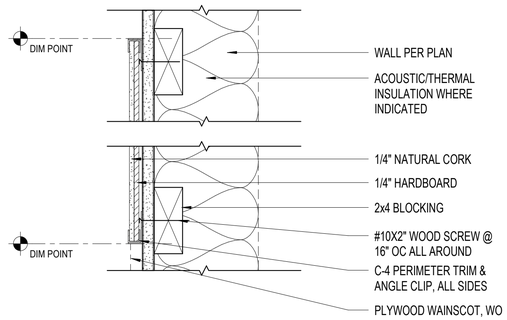

4 / A8.41 TACKABLE WALL SURFACE - CORK

3" = 1'-0"

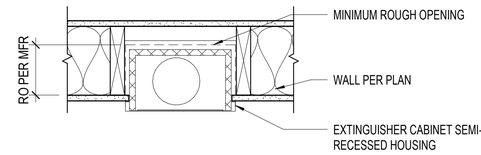

1 / A8.41 FIRE EXTINGUISHER CABINET

1 1/2" = 1'-0"

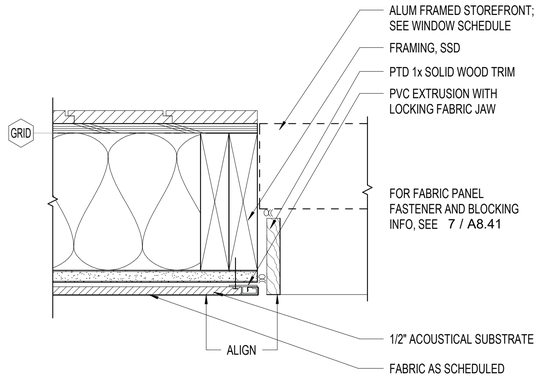

8 / A8.41 FABRIC WRAPPED PANEL @ WINDOW/DOOR

3" = 1'-0"

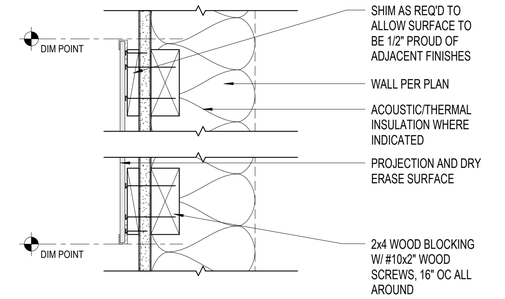

5 / A8.41 WALL MOUNTED PROJECTION SURFACE

3" = 1'-0"

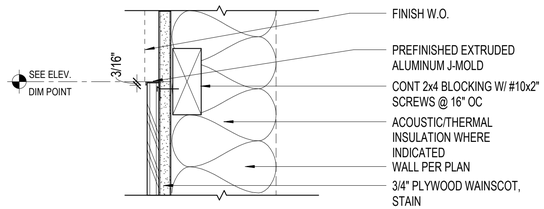

PLAN OR SECTION

2 / A8.41 PLYWOOD WAINSCOT

3" = 1'-0"

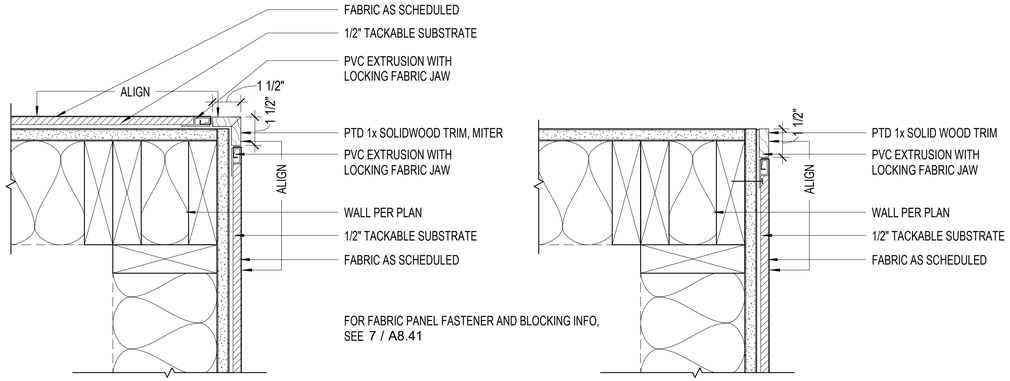

FOR FABRIC PANEL FASTENER AND BLOCKING INFO, SEE 7 / A8.41

9 / A8.41 FABRIC WRAPPED PANEL - CORNER

3" = 1'-0"

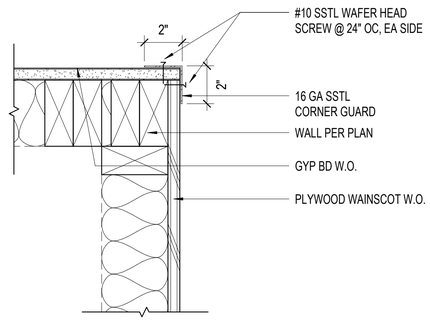

6 / A8.41 STAINLESS STEEL CORNER GUARD

3" = 1'-0"

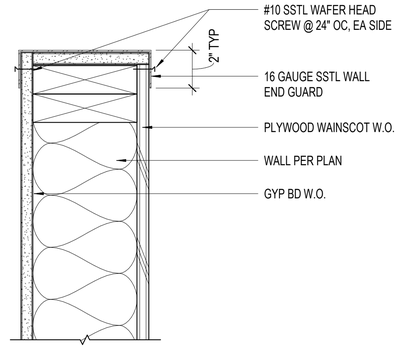

3 / A8.41 STAINLESS STEEL END GUARD

3" = 1'-0"

APPROVALS

IDENTIFICATION STAMP
DIV. OF THE STATE ARCHITECT
APP: 01-119409 INC:
REVIEWED FOR
SS ☑ FLS ☑ ACS ☑
DATE: 03/14/2022

NOLL & TAM ARCHITECTS
729 Heinz Avenue
Berkeley, CA 94710
tel 510.542.2200
fax 510.542.2201

SEAL

LICENSED ARCHITECT
CHRISTOPHER NOLL
No. C15916
REN. 12-31-23
STATE OF CALIFORNIA

PROJECT TITLE

Peralta Community College District
MERRITT COLLEGE NEW LANDSCAPE HORTICULTURE COMPLEX

12500 Campus Drive
Oakland, CA 94619

BID SET

ISSUE DATE	03/03/2022
N&T JOB NUMBER	22003

REVISIONS

	DATE	DESCRIPTION

DRAWN BY **Author** | CHECKED BY **Checker**

SHEET TITLE

INTERIOR - WALL FINISH DETAILS

SHEET NUMBER

A8.41

3/3/2022 11:31:19 AM BIM 360://PCCD Merritt Horticulture/Merritt Horticulture_2020.rvt

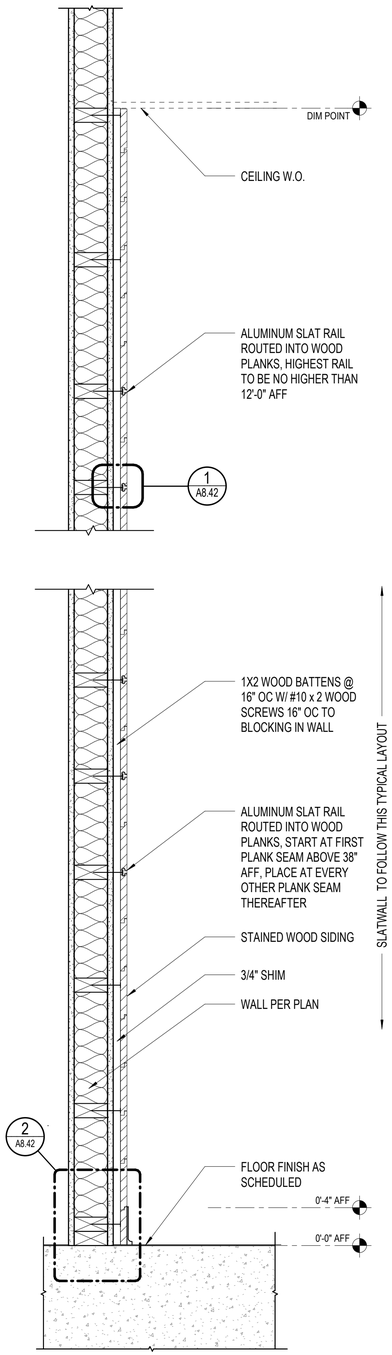

3 A8.42 **SLATWALL SPACING SECTION**
1 1/2" = 1'-0"

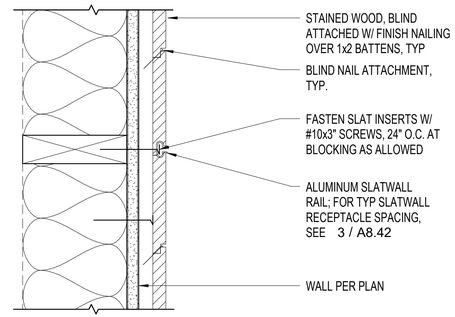

1 A8.42 **SLATWALL ASSEMBLY**
3" = 1'-0"

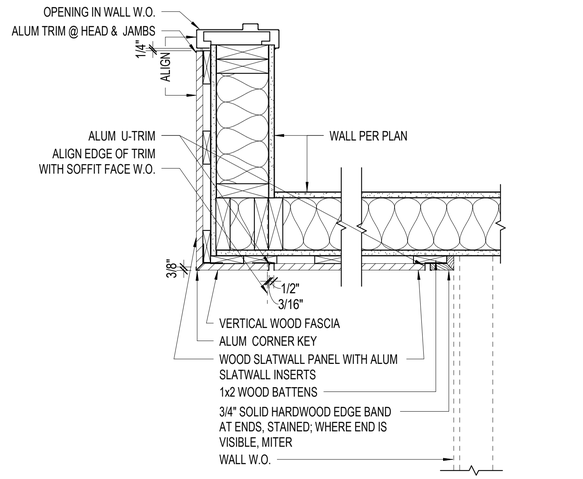

EDGE AND CORNER DETAILS

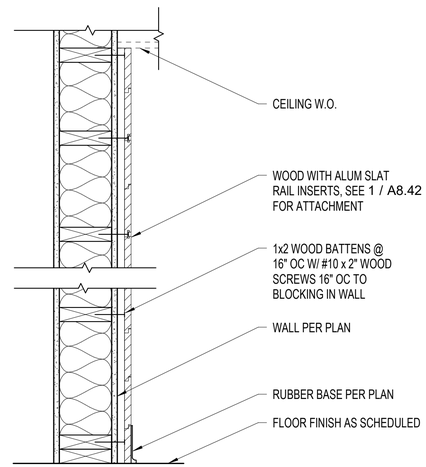

HEAD AND BASE DETAIL

2 A8.42 **SLATWALL HEAD, BASE AND EDGE DETAIL**
1 1/2" = 1'-0"

APPROVALS

IDENTIFICATION STAMP
DIV. OF THE STATE ARCHITECT
APP: 01-119409 INC:
REVIEWED FOR
SS ☑ FLS ☑ ACS ☑
DATE: 03/14/2022

NOLL & TAM ARCHITECTS
729 Heinz Avenue
Berkeley, CA 94710
tel 510.542.2200
fax 510.542.2201

SEAL

LICENSED ARCHITECT
CHRISTOPHER NOLL
No. C15916
REN. 12-31-23
STATE OF CALIFORNIA

PROJECT TITLE

Peralta Community College District
MERRITT COLLEGE NEW LANDSCAPE HORTICULTURE COMPLEX

12500 Campus Drive
Oakland, CA 94619

BID SET

ISSUE DATE	03/03/2022
N&T JOB NUMBER	22003

REVISIONS

	DATE	DESCRIPTION

DRAWN BY **Author** | CHECKED BY **Checker**

SHEET TITLE
INTERIOR - WALL FINISH DETAILS

SHEET NUMBER
A8.42

3/3/2022 11:31:20 AM BIM 360://PCCD Merritt Horticulture/Merritt Horticulture_2020.rvt

Casework Schedule

Mark	Nearest AWI Category	Depth	Width	Height
B-001	SIM 728 ROLLING SOIL BIN	2' - 6"	2' - 0"	1' - 9"
B-002	SIM 728 ROLLING SOIL BIN	2' - 6"	2' - 0"	1' - 9"
B-003	SIM 728 ROLLING SOIL BIN	2' - 6"	2' - 0"	1' - 9"
B-004	SIM 728 ROLLING SOIL BIN	2' - 6"	2' - 0"	1' - 9"
D-001	SIM 260 10-DRAWER UNIT	3' - 0"	3' - 11"	1' - 4"
D-002	SIM 260 10-DRAWER UNIT	3' - 0"	3' - 11"	1' - 4"
D-003	SIM 260 10-DRAWER UNIT	3' - 0"	3' - 11"	1' - 4"
EL-001	Existing Casework	2' - 10 1/2"	4' - 0"	2' - 10"
EL-002	Existing Casework	2' - 2 1/2"	4' - 0"	2' - 10"
EL-003	Existing Casework	2' - 2 1/2"	4' - 0"	2' - 10"
EL-004	Existing Casework	2' - 2 1/2"	3' - 0"	2' - 10"
EU-001	Existing Casework	1' - 3"	4' - 0"	2' - 6"
EU-002	Existing Casework	1' - 3"	4' - 0"	2' - 6"
EU-003	Existing Casework	1' - 1 1/2"	4' - 0"	2' - 6"
EU-004	Existing Casework	1' - 1 1/2"	4' - 0"	2' - 6"
EU-005	Existing Casework	1' - 1 1/2"	3' - 0"	2' - 6"
L-001	SIM 102 & 324 W/ METAL MESH AT DOOR INFILL	2' - 6"	3' - 0"	2' - 8 1/2"
L-002	SIM 101 & 324 W/ METAL MESH AT DOOR INFILL	2' - 6"	2' - 0"	2' - 8 1/2"
L-003	SIM 102 & 324 W/ METAL MESH AT DOOR INFILL	2' - 6"	3' - 0"	2' - 8 1/2"
L-004	SIM 102 & 324 W/ METAL MESH AT DOOR INFILL	2' - 6"	3' - 0"	2' - 8 1/2"
L-005	SIM 102 & 324 W/ METAL MESH AT DOOR INFILL	2' - 6"	3' - 0"	2' - 8 1/2"
L-006	SIM 101 & 324 W/ METAL MESH AT DOOR INFILL	2' - 6"	2' - 0"	2' - 8 1/2"
L-007	SIM 102 & 324 W/ METAL MESH AT DOOR INFILL	2' - 6"	3' - 0"	2' - 8 1/2"
L-008	SIM 102 & 324 W/ METAL MESH AT DOOR INFILL	2' - 0"	3' - 3 1/2"	2' - 8 1/2"
L-009	SIM 102 & 324 W/ METAL MESH AT DOOR INFILL	2' - 11 1/4"	3' - 8"	2' - 8 1/2"
L-010	SIM 102 & 324 W/ METAL MESH AT DOOR INFILL	2' - 11 1/4"	3' - 8"	2' - 8 1/2"
L-011	SIM 102 & 324 W/ METAL MESH AT DOOR INFILL	2' - 11 1/4"	3' - 8"	2' - 8 1/2"
L-012	102	2' - 0"	3' - 2"	2' - 8 1/2"
L-013	102	2' - 0"	3' - 2"	2' - 8 1/2"
L-014	102	3' - 0"	4' - 7"	2' - 8 1/2"
L-015	102	3' - 0"	4' - 7"	2' - 8 1/2"
L-016	102	3' - 0"	4' - 7"	2' - 8 1/2"
L-017	102	2' - 0"	4' - 6"	2' - 8 1/2"
L-018	102	2' - 0"	4' - 6"	2' - 8 1/2"
L-019	SIM 102 & 324 W/ METAL MESH AT DOOR INFILL	2' - 0"	4' - 6"	2' - 8 1/2"
L-020	102	3' - 0"	4' - 6"	2' - 8 1/2"
L-021	102	3' - 0"	4' - 6"	2' - 8 1/2"
L-022	102	3' - 0"	4' - 6"	2' - 8 1/2"
L-023	102	3' - 0"	4' - 6"	2' - 8 1/2"
L-024	102	3' - 0"	4' - 6"	2' - 8 1/2"
L-025	102	3' - 0"	4' - 6"	2' - 8 1/2"
L-026	102	3' - 0"	4' - 6"	2' - 8 1/2"
L-027	102	3' - 0"	4' - 6"	2' - 8 1/2"
L-028	102	3' - 0"	4' - 6"	2' - 8 1/2"
L-029	102	3' - 0"	4' - 6"	2' - 8 1/2"
L-030	102	3' - 0"	3' - 7"	2' - 8 1/2"
L-031	102	3' - 0"	3' - 7"	2' - 8 1/2"
L-032	102	3' - 0"	3' - 7"	2' - 8 1/2"
L-033	102	3' - 0"	3' - 7"	2' - 8 1/2"
L-034	102	3' - 0"	3' - 7"	2' - 8 1/2"
L-035	102	3' - 0"	3' - 7"	2' - 8 1/2"
L-036	102	3' - 0"	3' - 7"	2' - 8 1/2"
L-037	102	3' - 0"	3' - 7"	2' - 8 1/2"
L-038	102	2' - 0"	4' - 4 3/4"	2' - 8 1/2"
L-039	102	2' - 0"	4' - 4 3/4"	2' - 8 1/2"
L-040	102	2' - 0"	3' - 0"	2' - 8 1/2"
L-041	102	2' - 0"	3' - 0"	2' - 8 1/2"
L-042	100	2' - 0"	2' - 10"	2' - 8 1/2"
L-043	100	2' - 0"	2' - 10"	2' - 8 1/2"
L-044	100	2' - 0"	2' - 10"	2' - 8 1/2"
L-045	100	2' - 0"	2' - 10"	2' - 8 1/2"
L-046	100	2' - 0"	2' - 10"	2' - 8 1/2"
L-047	102	2' - 0"	3' - 7"	2' - 8 1/2"
L-048	102	2' - 0"	3' - 7"	2' - 8 1/2"
L-049	102	2' - 0"	3' - 7"	2' - 8 1/2"
L-050	102	2' - 0"	3' - 7"	2' - 8 1/2"
L-051	102	2' - 0"	3' - 7"	2' - 8 1/2"
L-052	100	2' - 0"	2' - 9 1/2"	2' - 8 1/2"
L-053	100	2' - 0"	2' - 9 1/2"	2' - 8 1/2"
L-054	102	3' - 0"	3' - 0"	2' - 8 1/2"
L-055	102	3' - 0"	3' - 7"	2' - 8 1/2"
L-056	102	3' - 0"	3' - 7"	2' - 8 1/2"
L-057	102	3' - 0"	3' - 7"	2' - 8 1/2"
L-058	102	3' - 0"	3' - 7"	2' - 8 1/2"
L-059	102	3' - 0"	3' - 7"	2' - 8 1/2"
L-060	102	3' - 0"	3' - 7"	2' - 8 1/2"
L-061	102	3' - 0"	3' - 7"	2' - 8 1/2"
T-001	500	3' - 0"	2' - 4"	7' - 2"
T-002	500	3' - 0"	2' - 4"	7' - 2"
T-003	SIM 401 W/ 2 DOORS	3' - 0"	1' - 9"	7' - 2"
T-004	SIM 402 W/ 4 DOORS	3' - 0"	3' - 6"	7' - 2"

Casework Schedule

Mark	Nearest AWI Category	Depth	Width	Height
T-005	SIM 402 W/ 4 DOORS	2' - 0"	4' - 0"	7' - 2"
T-006	500	3' - 0"	1' - 8 1/2"	7' - 2"
T-007	SIM 401 W/ 2 DOORS	3' - 0"	1' - 10 1/2"	7' - 2"
T-008	SIM 402 W/ REINFORCMENT, SEE DETAIL	3' - 0"	3' - 9"	7' - 2"
T-009	SIM 402 W/ 4 DOORS, LAM GLASS AT UPPER DOORS	3' - 0"	3' - 10"	7' - 2"
T-010	SIM 402 W/ 4 DOORS, LAM GLASS AT UPPER DOORS	3' - 0"	3' - 10"	7' - 2"
T-011	SIM 402 W/ 4 DOORS	3' - 1"	4' - 9"	7' - 2"
T-012a	SIM 441	3' - 1"	4' - 9"	7' - 2"
T-012b	SIM 102	3' - 1"	4' - 9"	2' - 8 1/2"
T-013	SIM 402 W/ 4 DOORS	3' - 1"	4' - 9"	7' - 2"
T-015a	SIM 441	3' - 1"	4' - 9"	7' - 2"
T-015b	SIM 102	3' - 1"	4' - 9"	2' - 8 1/2"
T-016	SIM 402 W/ 4 DOORS	3' - 1"	4' - 9"	7' - 2"
T-017a	SIM 441	3' - 1"	4' - 9"	7' - 2"
T-017b	SIM 102	3' - 1"	4' - 9"	2' - 8 1/2"
T-018	SIM 402 W/ 4 DOORS, LAM GLASS AT UPPER DOORS	3' - 1"	4' - 9"	7' - 2"
T-019	SIM 402 W/ 4 DOORS, LAM GLASS AT UPPER DOORS	3' - 1"	4' - 9"	7' - 2"
T-020	SIM 402 W/ 4 DOORS, LAM GLASS AT UPPER DOORS	3' - 1"	4' - 9"	7' - 2"
T-021a	SIM 441	3' - 2"	4' - 3"	7' - 2"
T-021b	SIM 102	3' - 2"	4' - 3"	2' - 8 1/2"
T-022	SIM 402 W/ 4 DOORS	3' - 2"	4' - 3"	7' - 2"
T-023a	SIM 441	3' - 2"	4' - 3"	7' - 2"
T-023b	SIM 102	3' - 2"	4' - 3"	2' - 8 1/2"
T-024	SIM 402 W/ 4 DOORS	3' - 2"	4' - 3"	7' - 2"
T-025a	SIM 441	3' - 2"	4' - 3"	7' - 2"
T-025b	SIM 102	3' - 2"	4' - 3"	2' - 8 1/2"
T-026	SIM 402 W/ 4 DOORS	3' - 2"	4' - 3"	7' - 2"
T-027a	SIM 441	3' - 2"	4' - 3"	7' - 2"
T-027b	SIM 102	3' - 2"	4' - 3"	2' - 8 1/2"
T-028	SIM 402 W/ 4 DOORS	3' - 2"	4' - 3"	7' - 2"
T-029a	SIM 441	3' - 2"	4' - 3"	7' - 2"
T-029b	SIM 260	3' - 2"	4' - 3"	2' - 8 1/2"
T-030a	SIM 441	3' - 2"	4' - 3"	7' - 2"
T-030b	SIM 260	3' - 2"	4' - 3"	2' - 8 1/2"
T-031	SIM 402 W/ 4 DOORS, LAM GLASS AT UPPER DOORS	2' - 0 3/4"	3' - 6"	7' - 2"
T-032	SIM 402 W/ 4 DOORS, LAM GLASS AT UPPER DOORS	2' - 0 3/4"	3' - 6"	7' - 2"
T-033	SIM 402 W/ 4 DOORS	2' - 0 3/4"	3' - 6"	7' - 2"
T-034	SIM 402 W/ 4 DOORS	2' - 0 3/4"	3' - 6"	7' - 2"
T-035	SIM 402 W/ 4 DOORS	4' - 0"	4' - 0"	7' - 2"
T-036a	SIM 441	4' - 0"	4' - 0"	7' - 2"
T-036b	SIM 102	4' - 0"	4' - 0"	2' - 8 1/2"
T-037	SIM 402 W/ 4 DOORS	4' - 0"	4' - 0"	7' - 2"
T-038a	SIM 441	4' - 0"	4' - 0"	7' - 2"
T-038b	SIM 102	4' - 0"	4' - 0"	2' - 8 1/2"
T-039	SIM 402 W/ 4 DOORS	4' - 0"	4' - 0"	7' - 2"
T-040a	SIM 441	4' - 0"	4' - 0"	7' - 2"
T-040b	SIM 102	4' - 0"	4' - 0"	2' - 8 1/2"
T-041	SIM 402 W/ 4 DOORS	4' - 0"	4' - 0"	7' - 2"
T-042a	SIM 441	4' - 0"	4' - 0"	7' - 2"
T-042b	SIM 102	4' - 0"	4' - 0"	2' - 8 1/2"
T-043	SIM 402 W/ 4 DOORS	4' - 0"	4' - 0"	7' - 2"
T-044a	SIM 441	4' - 0"	4' - 0"	7' - 2"
T-044b	SIM 102	4' - 0"	4' - 0"	2' - 8 1/2"
T-045	SIM 402 W/ 4 DOORS	4' - 0"	4' - 0"	7' - 2"
T-046	SIM 441	4' - 0"	4' - 0"	7' - 2"
U-001	SIM 324 W/ METAL MESH AT DOOR INFILL	1' - 0"	3' - 0"	2' - 6"
U-002	SIM 324 W/ METAL MESH AT DOOR INFILL	1' - 0"	3' - 6"	2' - 6"
U-003	SIM 324 & 301 W/ METAL MESH AT DOOR INFILL	1' - 0"	1' - 6"	2' - 6"
U-004	SIM 324 W/ METAL MESH AT DOOR INFILL	1' - 0"	3' - 0"	2' - 6"
U-005	SIM 324 W/ METAL MESH AT DOOR INFILL	1' - 0"	3' - 0"	2' - 6"
U-006	SIM 324 W/ METAL MESH AT DOOR INFILL	1' - 0"	3' - 0"	2' - 6"
U-007	SIM 324 & 301 W/ METAL MESH AT DOOR INFILL	1' - 0"	1' - 6"	2' - 6"
U-008	SIM 324 W/ METAL MESH AT DOOR INFILL	1' - 0"	3' - 6"	2' - 6"
U-009	SIM 324 W/ METAL MESH AT DOOR INFILL	1' - 0"	3' - 0"	2' - 6"
U-010	SIM 324 W/ METAL MESH AT DOOR INFILL	1' - 0"	3' - 3 1/2"	2' - 6"
U-011	SIM 324 W/ METAL MESH AT DOOR INFILL	1' - 0"	3' - 3 1/2"	2' - 6"
U-012	HALF HEIGHT SIM 324 W/ METAL MESH AT DOOR INFILL	1' - 0"	3' - 3 1/2"	1' - 3"
U-013	HALF HEIGHT SIM 324 W/ METAL MESH AT DOOR INFILL	1' - 0"	3' - 3 1/2"	1' - 3"
U-014	SIM 324 W/ METAL MESH AT DOOR INFILL	1' - 0"	3' - 8"	2' - 6"
U-015	SIM 324 W/ METAL MESH AT DOOR INFILL	1' - 0"	3' - 8"	2' - 6"
U-016	SIM 324 W/ METAL MESH AT DOOR INFILL	1' - 0"	3' - 8"	2' - 6"
U-017	302	1' - 0"	3' - 2"	2' - 6"
U-018	302	1' - 0"	3' - 2"	2' - 6"
U-019	302	1' - 0"	4' - 6"	2' - 6"
U-020	302	1' - 0"	4' - 6"	2' - 6"
U-021	302	1' - 0"	4' - 6"	2' - 6"
U-022	302	1' - 0"	4' - 6"	2' - 6"
U-023	302	1' - 0"	4' - 6"	2' - 6"
U-024	301	1' - 0"	2' - 0"	2' - 6"
U-025	302	1' - 0"	4' - 6"	2' - 6"
U-026	302	1' - 0"	4' - 6"	2' - 6"

Casework Schedule

Mark	Nearest AWI Category	Depth	Width	Height
U-027	HALF HEIGHT SIM 324 W/ METAL MESH AT DOOR INFILL	1' - 0"	4' - 6"	1' - 3"
U-028	HALF HEIGHTSIM 324 W/ METAL MESH AT DOOR INFILL	1' - 0"	4' - 6"	1' - 3"
U-029	SIM 324 W/ METAL MESH AT DOOR INFILL	1' - 0"	4' - 6"	2' - 6"
U-030	324	1' - 0"	4' - 4 3/4"	2' - 6"
U-031	HALF HEIGHT SIM 324	1' - 0"	4' - 4 3/4"	1' - 3"
U-032	HALF HEIGHT SIM 324	1' - 0"	4' - 4 3/4"	1' - 3"
U-033	324	1' - 0"	4' - 4 3/4"	2' - 6"
U-034	324	1' - 0"	3' - 0"	2' - 6"
U-035	HALF HEIGHT SIM 324	1' - 0"	3' - 0"	1' - 3"
U-036	324	1' - 0"	3' - 0"	2' - 6"
U-037	324	1' - 0"	3' - 0"	2' - 6"
U-038	HALF HEIGHT SIM 324	1' - 0"	3' - 0"	1' - 3"

CASEWORK SCHEDULE NOTES

1. THIS SCHEDULE IS FOR COORDINATION PURPOSES ONLY, AND IS NOT AN EXHAUSTIVE LIST OF ALL CASEWORK ITEMS.
2. COUNTERS, FLOATING SHELVES, FILLER AND END PANELS, APRONS, ETC. ARE NOT LISTED HERE; REFER TO SPECIFICATIONS, PLANS, ELEVATIONS AND DETAILS FOR INFORMATION ON THESE ITEMS.
3. AWI NUMBERS ARE USED FOR EASE OF REFERENCE, BUT DO NOT CORRESPOND EXACTLY TO THE AWI CABINETS LISTED. SEE SPECIFICATIONS AND DETAILS FOR FURTHER INFORMATION.
4. ALL SIZES LISTED ARE APPROXIMATE, AND ARE TO BE VERIFIED IN FIELD PRIOR TO THE PRODUCTION OF SHOP DRAWINGS.

APPROVALS

IDENTIFICATION STAMP
DIV. OF THE STATE ARCHITECT
APP: 01-119409 INC:
REVIEWED FOR
SS ☑ FLS ☑ ACS ☑
DATE: 03/14/2022

NOLL & TAM ARCHITECTS
729 Heinz Avenue
Berkeley, CA 94710
tel 510.542.2200
fax 510.542.2201

SEAL

LICENSED ARCHITECT
CHRISTOPHER NOLL
No. C15916
REN. 12-31-23
STATE OF CALIFORNIA

PROJECT TITLE

Peralta Community College District
MERRITT COLLEGE NEW LANDSCAPE HORTICULTURE COMPLEX

12500 Campus Drive
Oakland, CA 94619

BID SET

ISSUE DATE 03/03/2022
N&T JOB NUMBER 22003

REVISIONS

	DATE	DESCRIPTION

DRAWN BY Author | CHECKED BY Checker

SHEET TITLE
INTERIOR - CASEWORK SCHEDULE

SHEET NUMBER
A8.50

3/3/2022 11:31:22 AM BIM 360://PCCD Merritt Horticulture/Merritt Horticulture_2020.rvt

Prefabricated Storage Schedule

Mark	Depth	Width	Height	Comments
MC-01	2' - 6"	4' - 0"	7' - 0"	
MC-02	2' - 6"	4' - 0"	7' - 0"	
MC-03	2' - 6"	4' - 0"	7' - 0"	
MC-04	2' - 6"	4' - 0"	7' - 0"	
MC-05	2' - 6"	4' - 0"	7' - 0"	
MC-06	2' - 6"	4' - 0"	7' - 0"	
MC-07	3' - 0"	4' - 0"	7' - 0"	
MC-08	3' - 0"	4' - 0"	7' - 0"	
MC-09	3' - 0"	4' - 0"	7' - 0"	
MC-10	3' - 0"	4' - 0"	7' - 0"	
MC-11	3' - 0"	4' - 0"	7' - 0"	
MC-12	3' - 0"	4' - 0"	7' - 0"	
MC-13	3' - 0"	4' - 0"	7' - 0"	
MC-14	3' - 0"	4' - 0"	7' - 0"	
MC-15	3' - 0"	4' - 0"	7' - 0"	
MC-16	3' - 0"	4' - 0"	7' - 0"	
MC-17	3' - 0"	4' - 0"	7' - 0"	
MC-18	3' - 0"	4' - 0"	7' - 0"	
MH-01				METAL HOOKS - SIZE PER MFR
MH-02				METAL HOOKS - SIZE PER MFR
MH-03				METAL HOOKS - SIZE PER MFR
MH-04				METAL HOOKS - SIZE PER MFR
MH-05				METAL HOOKS - SIZE PER MFR
MH-06				METAL HOOKS - SIZE PER MFR
MH-07				METAL HOOKS - SIZE PER MFR
MH-08				METAL HOOKS - SIZE PER MFR
MH-09				METAL HOOKS - SIZE PER MFR
MH-10				METAL HOOKS - SIZE PER MFR
MH-11				METAL HOOKS - SIZE PER MFR
MH-12				METAL HOOKS - SIZE PER MFR
MH-13				METAL HOOKS - SIZE PER MFR
MH-14				METAL HOOKS - SIZE PER MFR
MH-15				METAL HOOKS - SIZE PER MFR
MH-16				METAL HOOKS - SIZE PER MFR
MH-17				METAL HOOKS - SIZE PER MFR
MH-18				METAL HOOKS - SIZE PER MFR
MR-01	2' - 2"	3' - 0"	6' - 0"	
MR-02	2' - 2"	3' - 0"	6' - 0"	
MR-03	2' - 2"	3' - 0"	6' - 0"	
MR-04	2' - 2"	3' - 0"	6' - 0"	
MR-05	2' - 2"	3' - 0"	6' - 0"	
MR-06	2' - 2"	3' - 0"	6' - 0"	
MR-07	2' - 2"	3' - 0"	6' - 0"	
MR-08	2' - 2"	3' - 0"	6' - 0"	
MS-01	2' - 0"	5' - 0"	7' - 0"	
MS-02	2' - 0"	4' - 0"	7' - 0"	
MS-03	2' - 0"	4' - 0"	7' - 0"	
MS-04	2' - 0"	3' - 0"	7' - 0"	
MS-05	2' - 0"	4' - 0"	7' - 0"	
MS-06	2' - 0"	3' - 0"	7' - 0"	
MS-07	1' - 0"	4' - 0"	7' - 0"	LOCATED IN H103
MS-08	1' - 0"	4' - 0"	7' - 0"	LOCATED IN H103
MSC-01	2' - 0"	3' - 10"	6' - 4"	LOCATED IN H604
MSC-02	2' - 0"	2' - 10"	6' - 4"	LOCATED IN H604

CASEWORK SCHEDULE NOTES

1. THIS SCHEDULE IS FOR COORDINATION PURPOSES ONLY, AND IS NOT AN EXHAUSTIVE LIST OF ALL CASEWORK ITEMS.
2. COUNTERS, FLOATING SHELVES, FILLER AND END PANELS, APRONS, ETC. ARE NOT LISTED HERE; REFER TO SPECIFICATIONS, PLANS, ELEVATIONS AND DETAILS FOR INFORMATION ON THESE ITEMS.
3. AWI NUMBERS ARE USED FOR EASE OF REFERENCE, BUT DO NOT CORRESPOND EXACTLY TO THE AWI CABINETS LISTED. SEE SPECIFICATIONS AND DETAILS FOR FURTHER INFORMATION.
4. ALL SIZES LISTED ARE APPROXIMATE, AND ARE TO BE VERIFIED IN FIELD PRIOR TO THE PRODUCTION OF SHOP DRAWINGS.

APPROVALS

IDENTIFICATION STAMP
DIV. OF THE STATE ARCHITECT
APP: 01-119409 INC:
REVIEWED FOR
SS ☑ FLS ☑ ACS ☑
DATE: 03/14/2022

NOLL & TAM ARCHITECTS
729 Heinz Avenue
Berkeley, CA 94710
tel 510.542.2200
fax 510.542.2201

SEAL

LICENSED ARCHITECT
CHRISTOPHER NOLL
No. C15916
REN. 12-31-23
STATE OF CALIFORNIA

PROJECT TITLE

Peralta Community College District
MERRITT COLLEGE NEW LANDSCAPE HORTICULTURE COMPLEX

12500 Campus Drive
Oakland, CA 94619

BID SET

ISSUE DATE 03/03/2022
N&T JOB NUMBER 22003

REVISIONS

	DATE	DESCRIPTION

DRAWN BY Author | CHECKED BY Checker

SHEET TITLE
INTERIOR - STORAGE SCHEDULE

SHEET NUMBER
A8.51

3/3/2022 11:31:23 AM BIM 360://PCCD Merritt Horticulture/Merritt Horticulture_2020.rvt

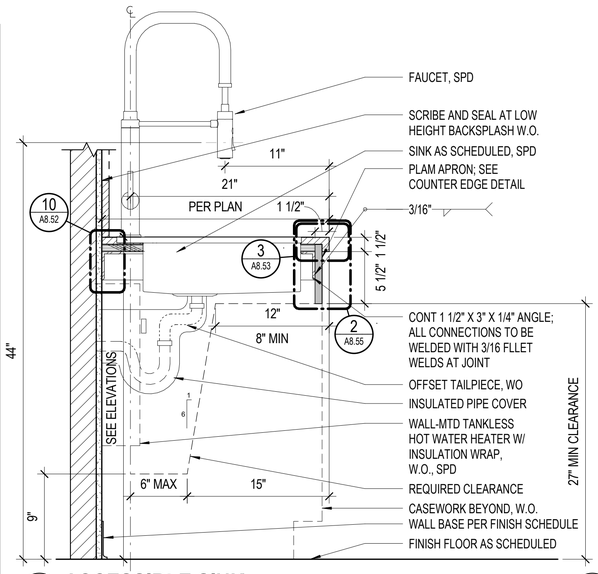

9 A8.52 ACCESSIBLE SINK
1 1/2" = 1'-0"

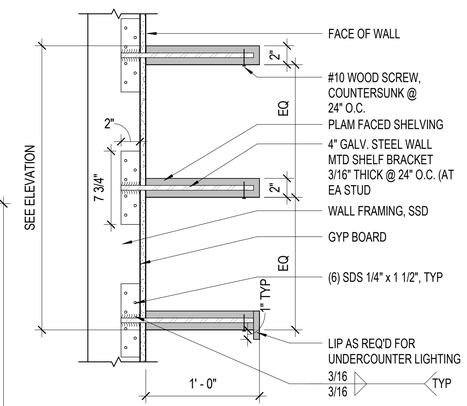

6 A8.52 WALL SHELVING
1 1/2" = 1'-0"

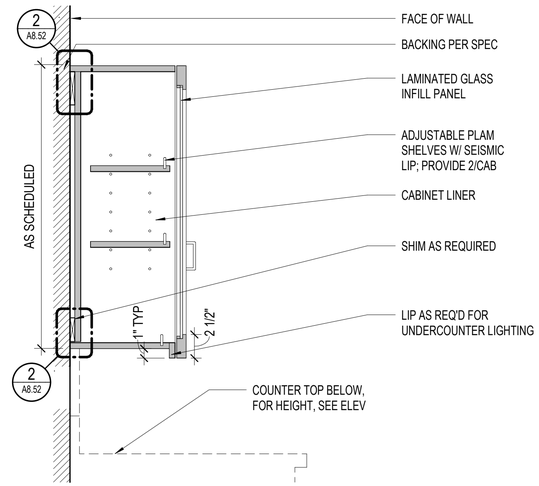

3 A8.52 UPPER CABINET W/ GLASS INFILL PANELS
1 1/2" = 1'-0"

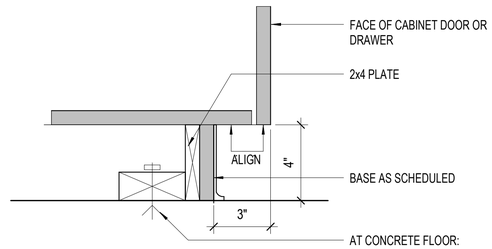

1 A8.52 TOEKICK ANCHORAGE
3" = 1'-0"

KEY TO ANCHORAGE NOTES

1. CASEWORK (FRONT) (BACK) (TOP) (BOTTOM)
2. FACE OF WALL
3. 1x4 CONTINUOUS WOOD CLEAT
4. ANCHORAGE - WOOD STUD FRAMING - #10 X 3 1/2" FLAT HEAD WD SCREW @ 16" OC, 2" MAXIMUM FROM EACH END AT STUD OR BLOCKING, MINIMUM 2 PER CABINET
5. 2X SKIRT - BASE AS SCHEDULED
6. 2X PLATE
7. CONTINUOUS BACKING DETAILS, SEE A8.12
8. FOR PARTITION ANCHORAGE DETAILS, SEE A8.12

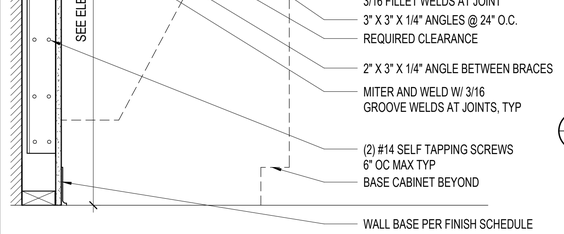

10 A8.52 OPEN COUNTER
1 1/2" = 1'-0"

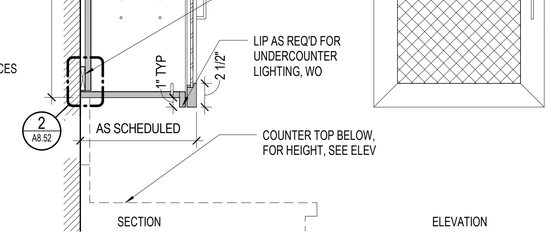

7 A8.52 UPPER CABINET W/ MTL MESH INFILL PANELS
1 1/2" = 1'-0"

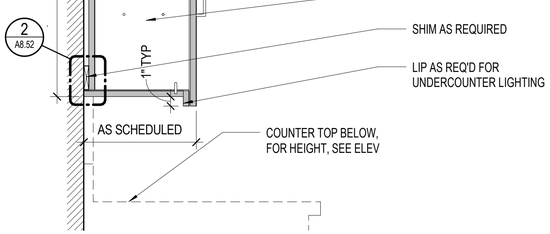

4 A8.52 WALL CABINET WITH S.S. ROD LIP
1 1/2" = 1'-0"

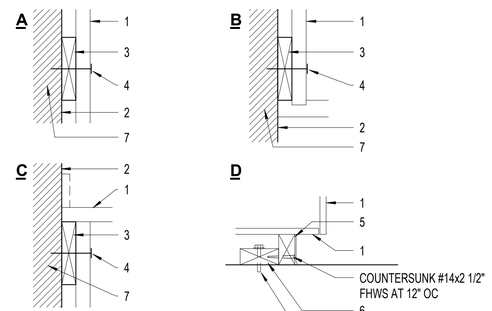

2 A8.52 TYPICAL CASEWORK ANCHORAGE
1/2" = 1'-0"

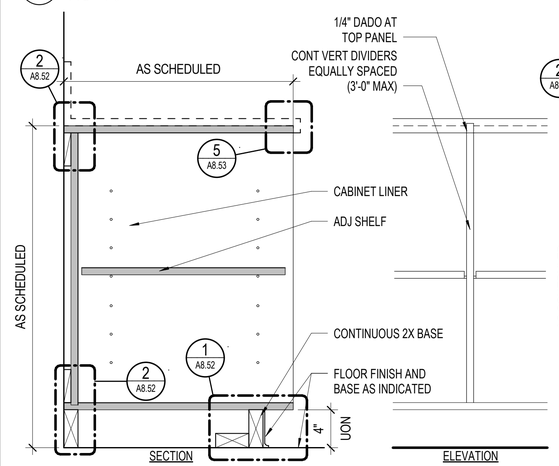

11 A8.52 OPEN SHELVING
1 1/2" = 1'-0"

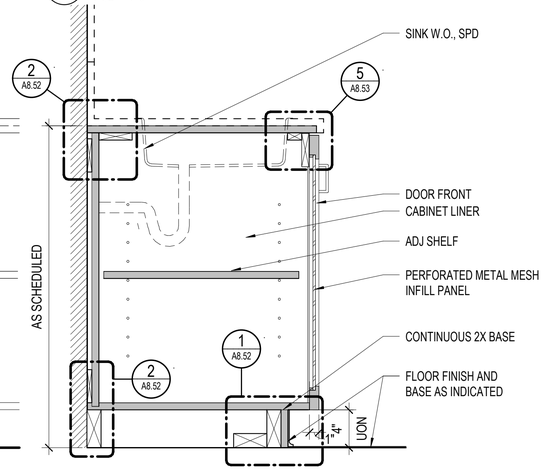

8 A8.52 PLAM FACED BASE CABINET W/ METAL MESH
1 1/2" = 1'-0"

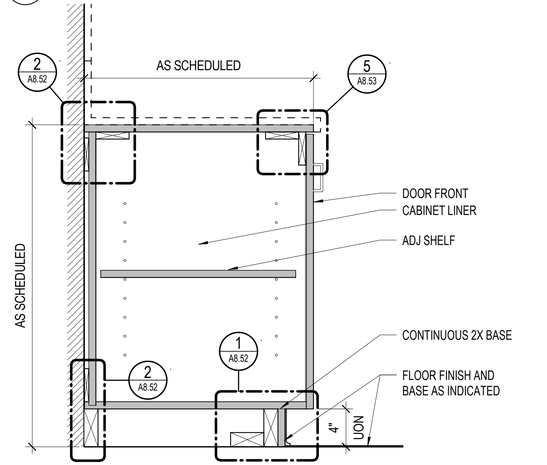

5 A8.52 PLAM FACED BASE CABINET
1 1/2" = 1'-0"

APPROVALS

IDENTIFICATION STAMP
DIV. OF THE STATE ARCHITECT
APP: 01-119409 INC:
REVIEWED FOR
SS ☑ FLS ☑ ACS ☑
DATE: 03/14/2022

NOLL & TAM ARCHITECTS
729 Heinz Avenue
Berkeley, CA 94710
tel 510.542.2200
fax 510.542.2201

SEAL

LICENSED ARCHITECT
CHRISTOPHER NOLL
No. C15916
REN. 12-31-23
STATE OF CALIFORNIA

PROJECT TITLE

Peralta Community College District
MERRITT COLLEGE NEW LANDSCAPE HORTICULTURE COMPLEX

12500 Campus Drive
Oakland, CA 94619

BID SET

ISSUE DATE	03/03/2022
N&T JOB NUMBER	22003

REVISIONS

	DATE	DESCRIPTION

DRAWN BY **Author** | CHECKED BY **Checker**

SHEET TITLE
INTERIOR - CASEWORK DETAILS

SHEET NUMBER
A8.52

3/3/2022 11:31:25 AM BIM 360://PCCD Merritt Horticulture/Merritt Horticulture_2020.rvt

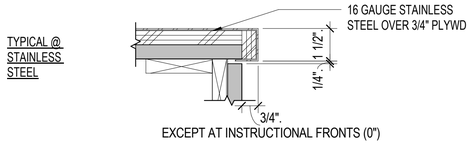

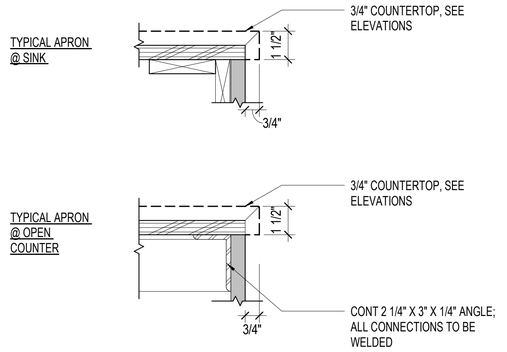

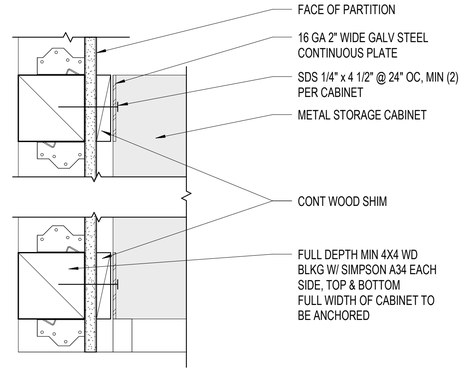

5 A8.53 **COUNTERTOP EDGE DETAILS**
3" = 1'-0"

3 A8.53 **COUNTERTOP APRON DETAILS**
3" = 1'-0"

1 A8.53 **METAL STORAGE CABINET ANCHORAGE**
3" = 1'-0"

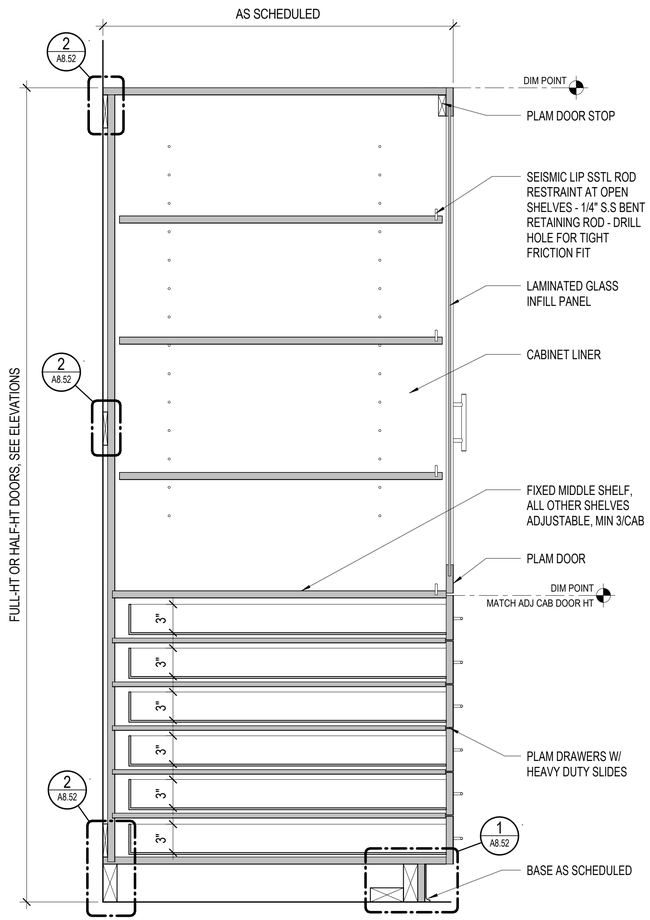

6 A8.53 **FULL HEIGHT CABINET W/ MAP DRAWERS**
1 1/2" = 1'-0"

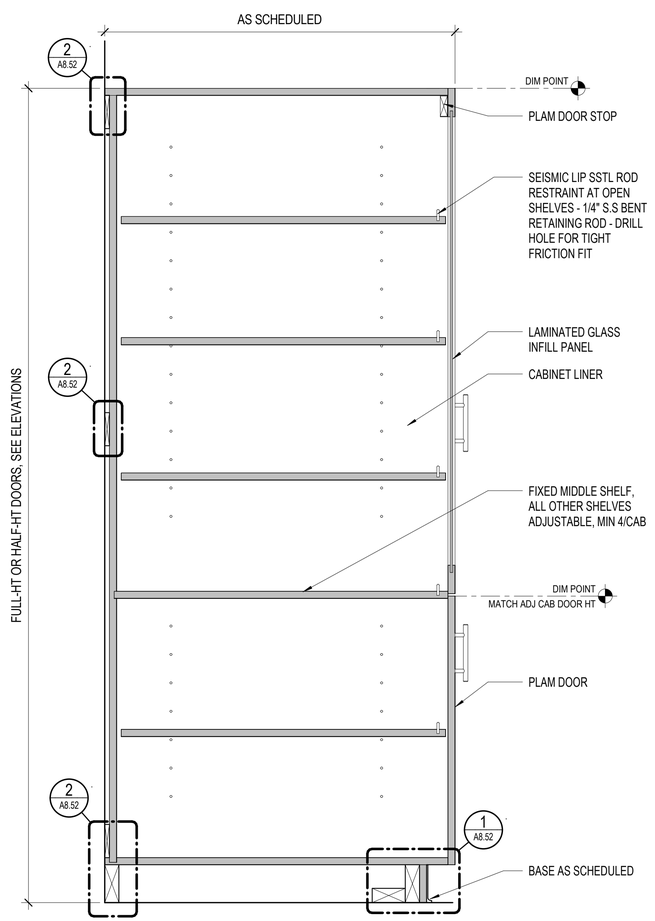

4 A8.53 **FULL HEIGHT CABINET W/ GLASS INFILL PANELS**
1 1/2" = 1'-0"

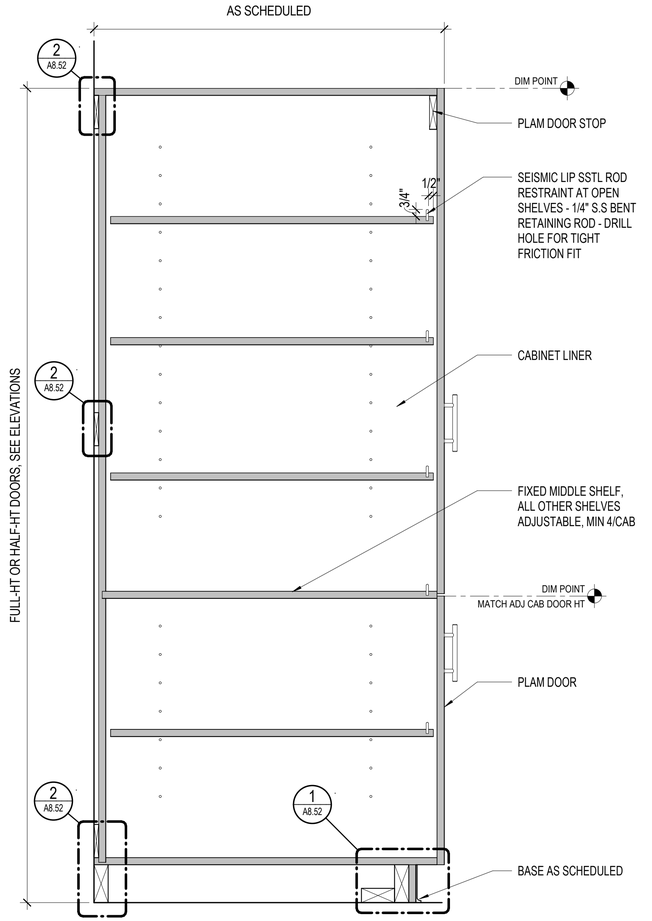

2 A8.53 **FULL-HT CABINET**
1 1/2" = 1'-0"

APPROVALS

IDENTIFICATION STAMP
DIV. OF THE STATE ARCHITECT
APP: 01-119409 INC:
REVIEWED FOR
SS ☑ FLS ☑ ACS ☑
DATE: 03/14/2022

NOLL & TAM ARCHITECTS
729 Heinz Avenue
Berkeley, CA 94710
tel 510.542.2200
fax 510.542.2201

SEAL

LICENSED ARCHITECT
CHRISTOPHER NOLL
No. C15916
REN. 12-31-23
STATE OF CALIFORNIA

PROJECT TITLE

Peralta Community College District
MERRITT COLLEGE NEW LANDSCAPE HORTICULTURE COMPLEX

12500 Campus Drive
Oakland, CA 94619

BID SET

ISSUE DATE **03/03/2022**
N&T JOB NUMBER **22003**

REVISIONS

	DATE	DESCRIPTION

DRAWN BY **Author** CHECKED BY **Checker**

SHEET TITLE
INTERIOR - CASEWORK DETAILS

SHEET NUMBER
A8.53

3/3/2022 11:31:27 AM BIM 360://PCCD Merritt Horticulture/Merritt Horticulture_2020.rvt

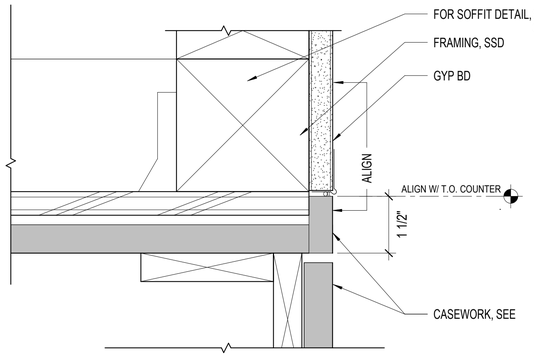

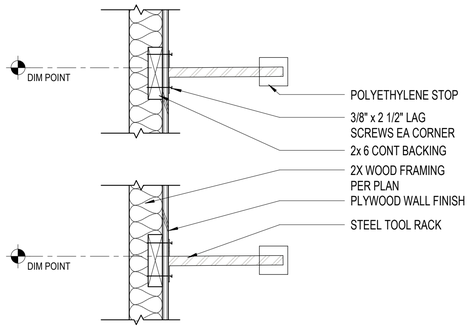

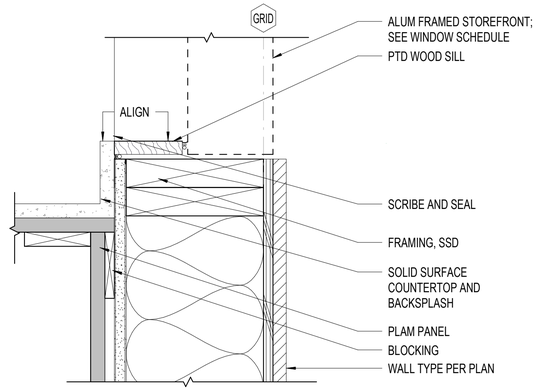

5 A8.54 CASEWORK TO SOFFIT TRANSITION
6" = 1'-0"

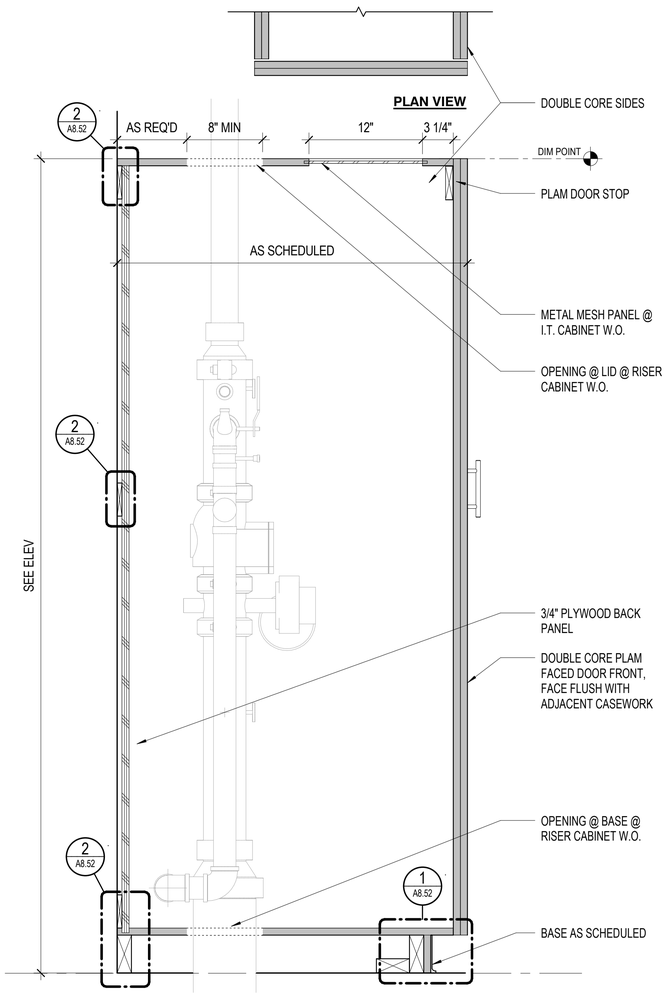

11 A8.54 FULL-HT I.T. RACK/RISER CABINET
1 1/2" = 1'-0"

3 A8.54 WALL MOUNTED TOOL RACK
1 1/2" = 1'-0"

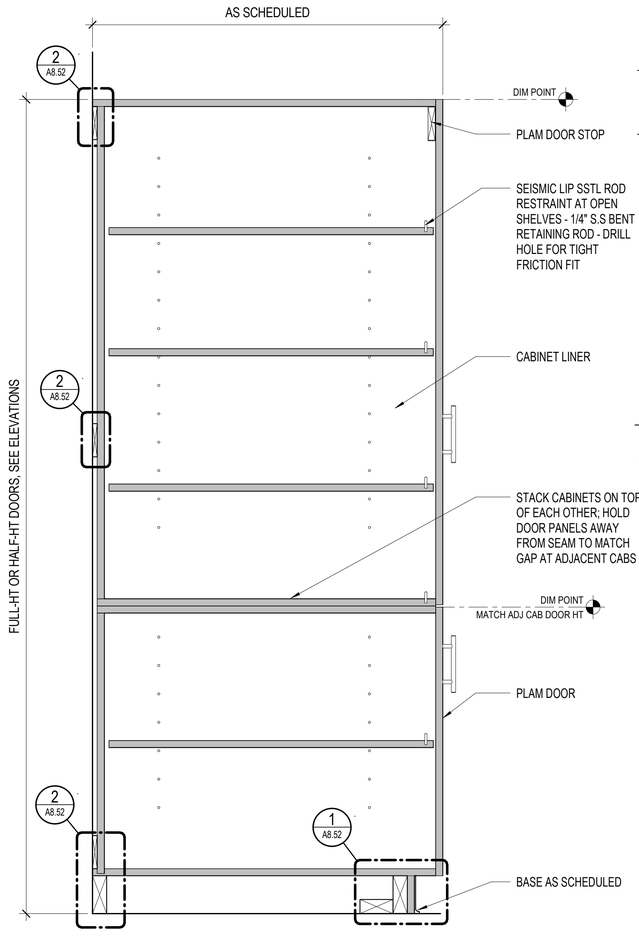

4 A8.54 STACKED CABINETS
1 1/2" = 1'-0"

1 A8.54 SOLID SURFACE BACKSPLASH @ SILL
3" = 1'-0"

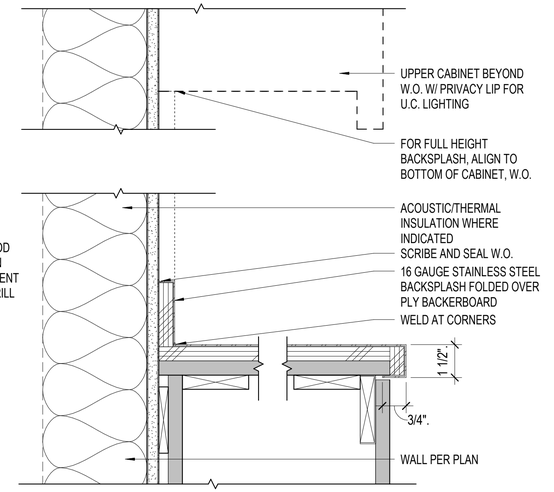

2 A8.54 STAINLESS STEEL BACKSPLASH/COUNTER
3" = 1'-0"

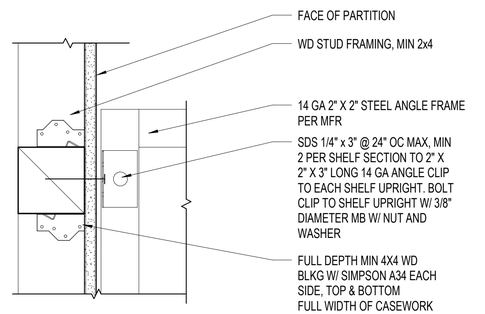

7 A8.54 OPEN METAL STORAGE SHELVING ANCHORAGE
3" = 1'-0"

APPROVALS

IDENTIFICATION STAMP
DIV. OF THE STATE ARCHITECT
APP: 01-119409 INC:
REVIEWED FOR
SS ☑ FLS ☑ ACS ☑
DATE: 03/14/2022

NOLL & TAM ARCHITECTS
729 Heinz Avenue
Berkeley, CA 94710
tel 510.542.2200
fax 510.542.2201

SEAL

LICENSED ARCHITECT
CHRISTOPHER NOLL
No. C15916
REN. 12-31-23
STATE OF CALIFORNIA

PROJECT TITLE

Peralta Community College District
MERRITT COLLEGE NEW LANDSCAPE HORTICULTURE COMPLEX

12500 Campus Drive
Oakland, CA 94619

BID SET

ISSUE DATE	03/03/2022
N&T JOB NUMBER	22003

REVISIONS

	DATE	DESCRIPTION

DRAWN BY **Author** | CHECKED BY **Checker**

SHEET TITLE
INTERIOR - CASEWORK DETAILS

SHEET NUMBER
A8.54

3/3/2022 11:31:29 AM BIM 360://PCCD Merritt Horticulture/Merritt Horticulture_2020.rvt

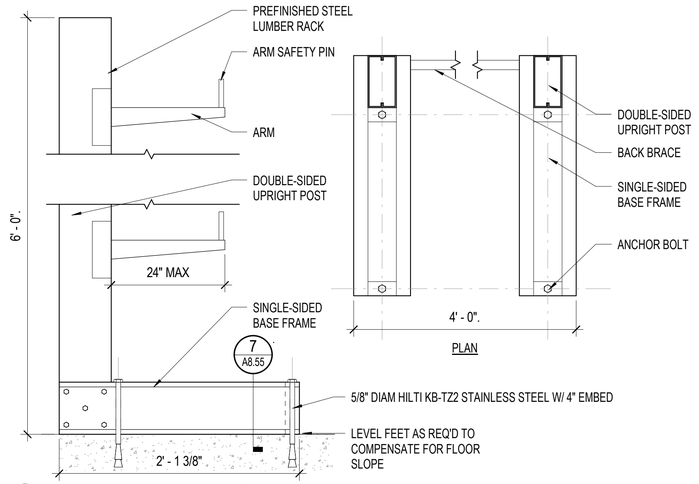

6 A8.55 STEEL LUMBER RACK
1 1/2" = 1'-0"

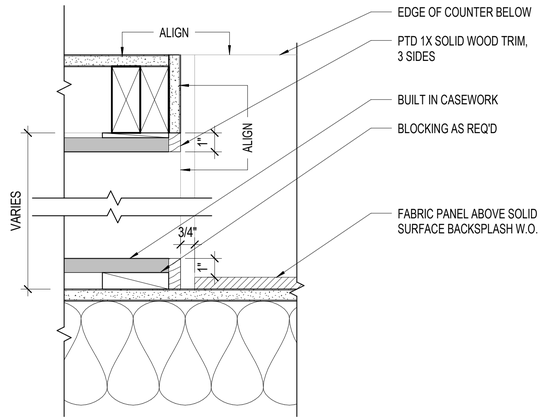

4 A8.55 CLASSROOM BUMPOUT SHELF
3" = 1'-0"

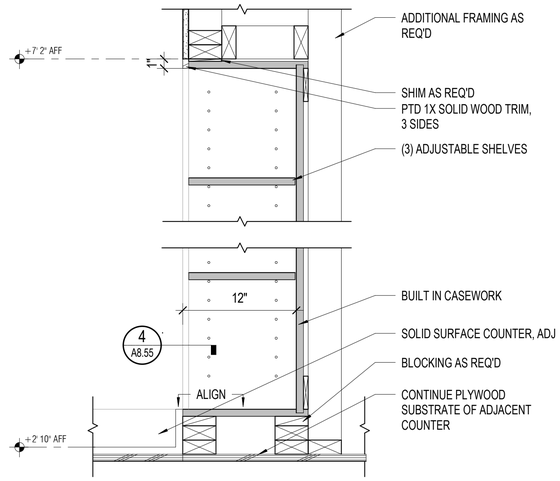

1 A8.55 CLASSROOM BUMPOUT SHELF SECTION
1 1/2" = 1'-0"

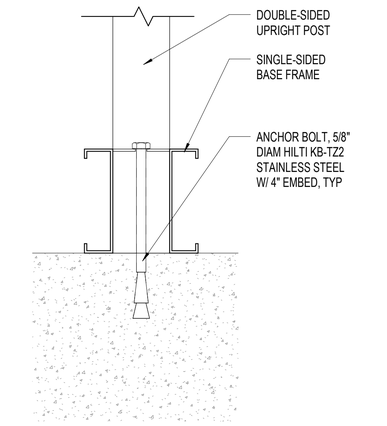

7 A8.55 LUMBER RACK ANCHORAGE
3" = 1'-0"

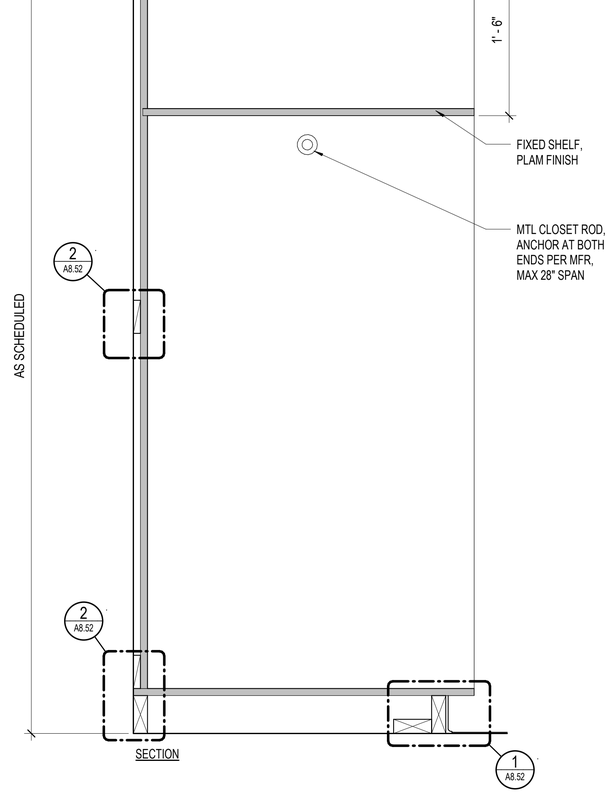

5 A8.55 CASED COAT RACK
1 1/2" = 1'-0"

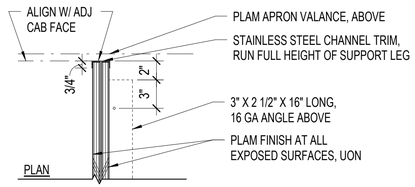

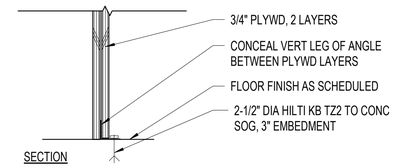

2 A8.55 OPEN COUNTER WITH SUPPORT
1 1/2" = 1'-0"

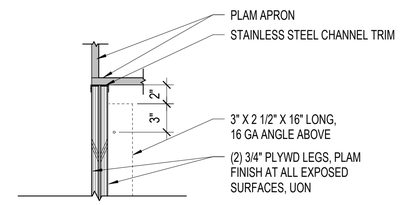

3 A8.55 APRON & LEG AT CORNER
1 1/2" = 1'-0"

APPROVALS

IDENTIFICATION STAMP
DIV. OF THE STATE ARCHITECT
APP: 01-119409 INC:
REVIEWED FOR
SS ☑ FLS ☑ ACS ☑
DATE: 03/14/2022

NOLL & TAM ARCHITECTS
729 Heinz Avenue
Berkeley, CA 94710
tel 510.542.2200
fax 510.542.2201

SEAL

LICENSED ARCHITECT
CHRISTOPHER NOLL
No. C15916
REN. 12-31-23
STATE OF CALIFORNIA

PROJECT TITLE

Peralta Community College District
MERRITT COLLEGE NEW LANDSCAPE HORTICULTURE COMPLEX

12500 Campus Drive
Oakland, CA 94619

BID SET

ISSUE DATE 03/03/2022
N&T JOB NUMBER 22003

REVISIONS

	DATE	DESCRIPTION

DRAWN BY Author | CHECKED BY Checker

SHEET TITLE
INTERIOR - CASEWORK DETAILS

SHEET NUMBER
A8.55

3/3/2022 11:31:31 AM BIM 360://PCCD Merritt Horticulture/Merritt Horticulture_2020.rvt

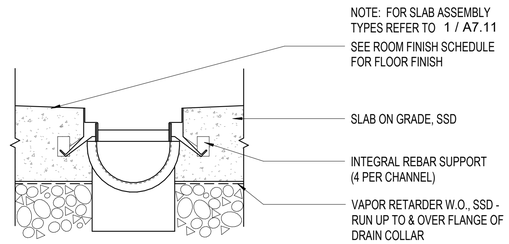

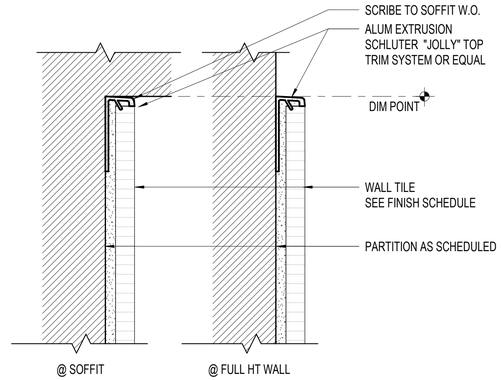

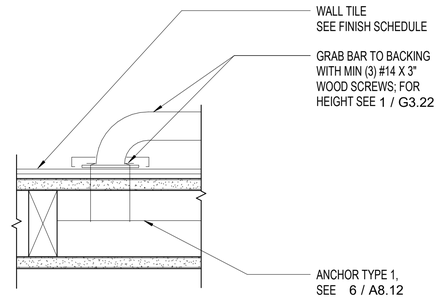

7 A8.71 TRENCH DRAIN - SOG
3" = 1'-0"

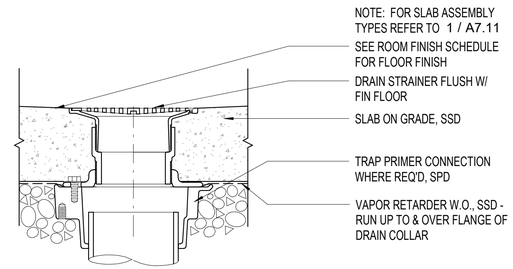

8 A8.71 FLOOR DRAIN - SOG
3" = 1'-0"

4 A8.71 TILE WAINSCOT HEAD
12" = 1'-0"

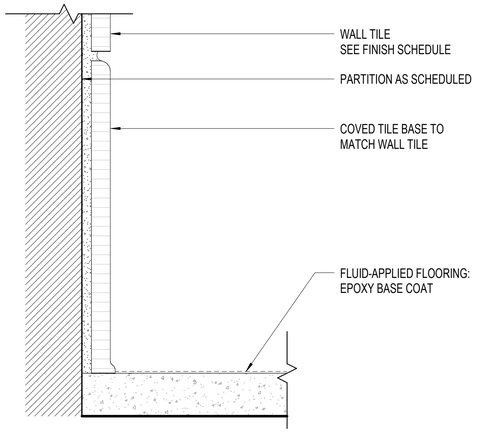

5 A8.71 TILE WAINSCOT BASE
12" = 1'-0"

1 A8.71 GRAB BAR BACKING
3" = 1'-0"

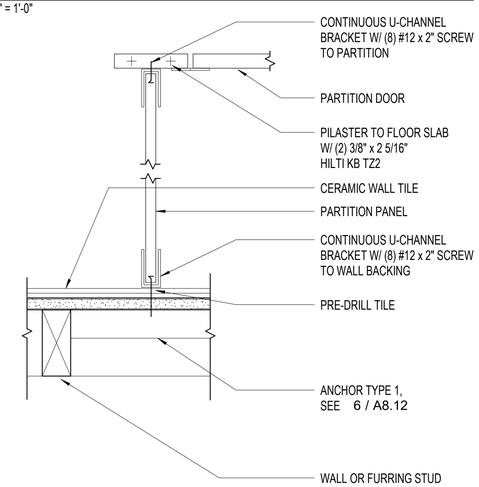

2 A8.71 TOILET PARTITION ANCHOR BLOCKING
3" = 1'-0"

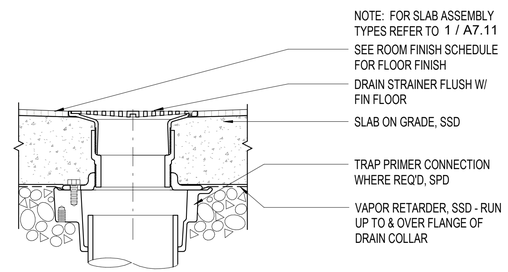

9 A8.71 FLOOR DRAIN - SOG W/ EPOXY FINISH
3" = 1'-0"

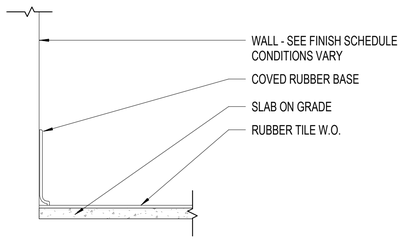

6 A8.71 RUBBER BASE
3" = 1'-0"

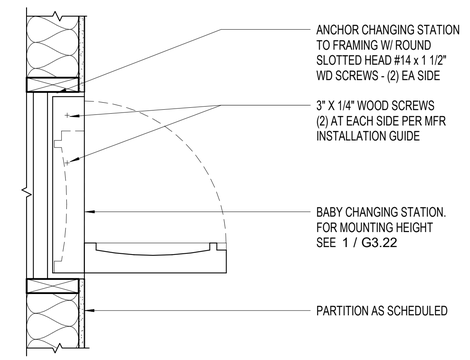

3 A8.71 RECESSED BABY CHANGING STATION BACKING
1 1/2" = 1'-0"

APPROVALS

IDENTIFICATION STAMP
DIV. OF THE STATE ARCHITECT
APP: 01-119409 INC:
REVIEWED FOR
SS ☑ FLS ☑ ACS ☑
DATE: 03/14/2022

NOLL & TAM ARCHITECTS
729 Heinz Avenue
Berkeley, CA 94710
tel 510.542.2200
fax 510.542.2201

SEAL

LICENSED ARCHITECT
CHRISTOPHER NOLL
No. C15916
REN. 12-31-23
STATE OF CALIFORNIA

PROJECT TITLE

Peralta Community College District
MERRITT COLLEGE NEW LANDSCAPE HORTICULTURE COMPLEX

12500 Campus Drive
Oakland, CA 94619

BID SET

ISSUE DATE	03/03/2022
N&T JOB NUMBER	22003

REVISIONS

	DATE	DESCRIPTION

DRAWN BY Author | CHECKED BY Checker

SHEET TITLE
INTERIOR - FLOOR & RESTROOM DETAILS

SHEET NUMBER
A8.71

3/3/2022 11:31:33 AM BIM 360://PCCD Merritt Horticulture/Merritt Horticulture_2020.rvt

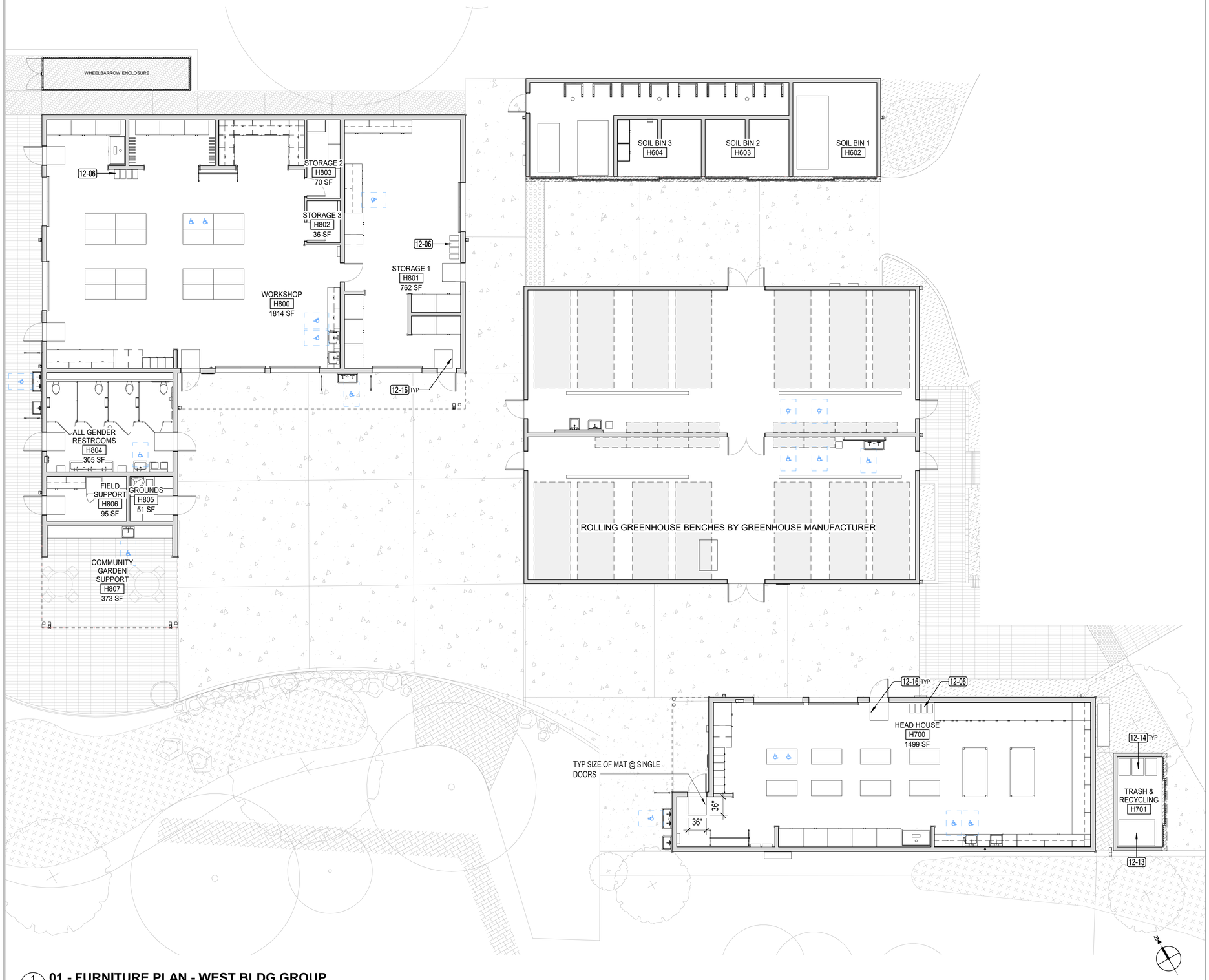

1 A9.41 **01 - FURNITURE PLAN - WEST BLDG GROUP**
1/8" = 1'-0"

3/3/2022 11:31:37 AM BIM 360://PCCD Merritt Horticulture/Merritt Horticulture_2020.rvt

GENERAL NOTES

1. FURNITURE IS NIC AND SHOWN FOR LAYOUT PURPOSES ONLY.
2. GREENHOUSE WORK BENCHES BY GREENHOUSE MANUFACTURER.
3. REFER TO A3.21, A2.32 AND INTERIOR ELEVATIONS FOR EQUIPMENT, STORAGE CABINETS, RACKS AND SHELVING TO BE PROVIDED BY THIS CONSTRUCTION CONTACT.

APPROVALS

IDENTIFICATION STAMP
DIV. OF THE STATE ARCHITECT
APP: 01-119409 INC:
REVIEWED FOR
SS ☑ FLS ☑ ACS ☑
DATE: 03/14/2022

NOLL & TAM ARCHITECTS
729 Heinz Avenue
Berkeley, CA 94710
tel 510.542.2200
fax 510.542.2201

SEAL

LICENSED ARCHITECT
CHRISTOPHER NOLL
No. C15916
REN. 12-31-23
STATE OF CALIFORNIA

PROJECT TITLE

Peralta Community College District
MERRITT COLLEGE NEW LANDSCAPE HORTICULTURE COMPLEX

12500 Campus Drive
Oakland, CA 94619

BID SET

ISSUE DATE	03/03/2022
N&T JOB NUMBER	22003

REVISIONS

	DATE	DESCRIPTION

DRAWN BY **Author** CHECKED BY **Checker**

SHEET TITLE
FURNITURE PLAN - WEST BUILDING GROUP

SHEET NUMBER
A9.41

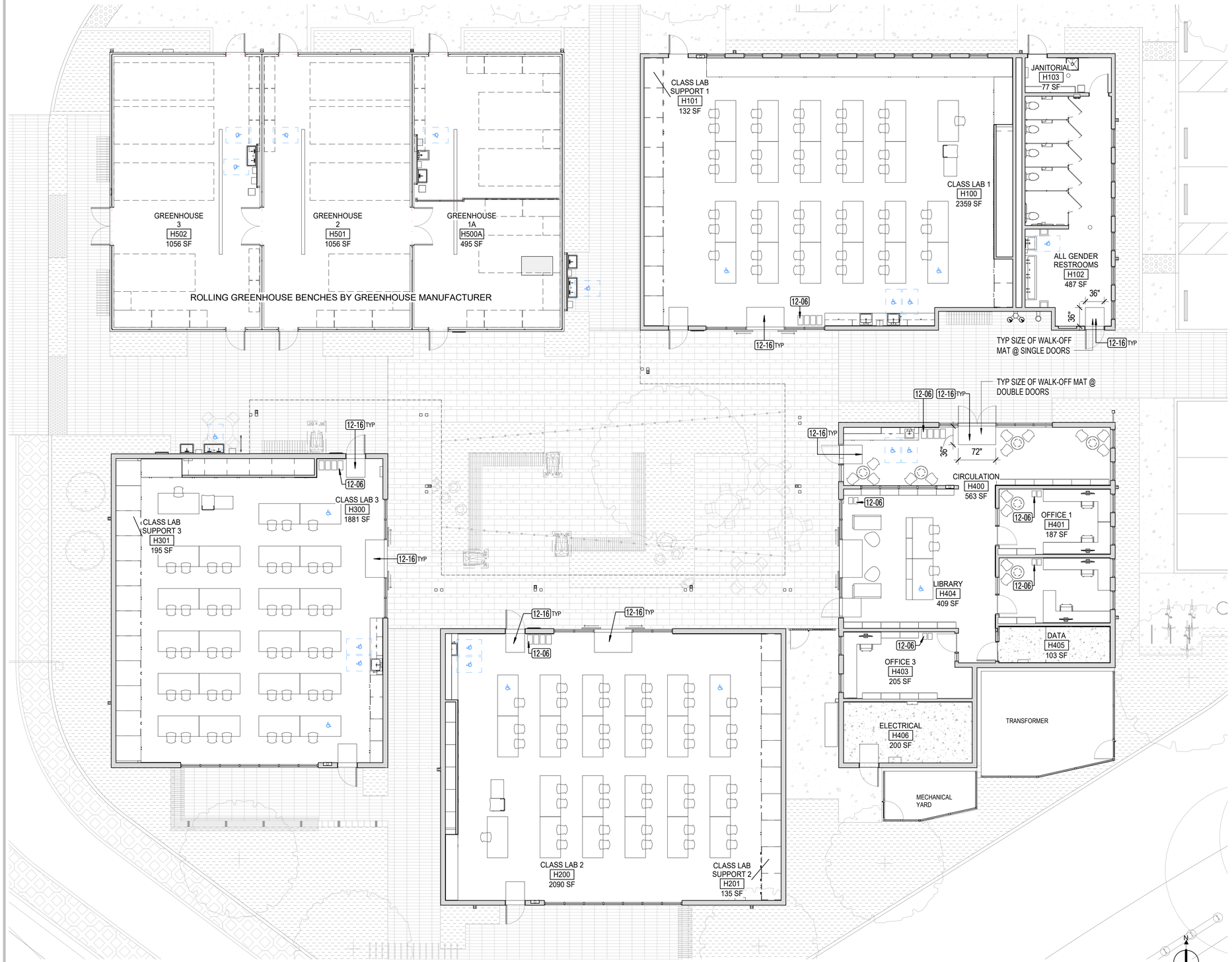

1 A9.42 **01 - FURNITURE PLAN - EAST BLDG GROUP**
1/8" = 1'-0"

GENERAL NOTES

1. FURNITURE IS NIC AND SHOWN FOR LAYOUT PURPOSES ONLY.
2. GREENHOUSE WORK BENCHES BY GREENHOUSE MANUFACTURER.
3. REFER TO A3.21, A2.32 AND INTERIOR ELEVATIONS FOR EQUIPMENT, STORAGE CABINETS, RACKS AND SHELVING TO BE PROVIDED BY THIS CONSTRUCTION CONTACT.

APPROVALS

IDENTIFICATION STAMP
DIV. OF THE STATE ARCHITECT
APP: 01-119409 INC:
REVIEWED FOR
SS ☑ FLS ☑ ACS ☑
DATE: 03/14/2022

NOLL & TAM ARCHITECTS
729 Heinz Avenue
Berkeley, CA 94710
tel 510.542.2200
fax 510.542.2201

SEAL

LICENSED ARCHITECT
CHRISTOPHER NOLL
No. C15916
REN. 12-31-23
STATE OF CALIFORNIA

PROJECT TITLE

Peralta Community College District
MERRITT COLLEGE NEW LANDSCAPE HORTICULTURE COMPLEX

12500 Campus Drive
Oakland, CA 94619

BID SET

ISSUE DATE	03/03/2022
N&T JOB NUMBER	22003

REVISIONS

	DATE	DESCRIPTION

DRAWN BY **Author** CHECKED BY **Checker**

SHEET TITLE
FURNITURE PLAN - EAST BUILDING GROUP

SHEET NUMBER
A9.42

3/3/2022 11:31:40 AM BIM 360://PCCD Merritt Horticulture/Merritt Horticulture_2020.rvt

ROOM FINISH SCHEDULE

#	Name	Floor Finish	Base Finish	Wall Finishes			Ceiling Finishes			Comments
				Wall - Gyp Type	Wall - Paint	Wall - Wainscot	Clg - Gyp Type	Clg - Acoustic	Clg - Paint	
H100	CLASS LAB 1	CONC-4	RB-1	GB-4	PTW			ACP	PTF-1	TACKABLE STRETCHED FABRIC WALL PANELS, W.O.
H101	CLASS LAB SUPPORT 1	CONC-4	RB-1	GB-4	PTW			ACP	PTF-1	
H102	ALL GENDER RESTROOMS	FLA-1	CTB-1	GBT	PTW	CT-1	GBC-4		PTE	
H103	JANITORIAL	FLA-1	RB-1	GB-3	PTW	FRP-1	GBC-3		PTE	
H200	CLASS LAB 2	CONC-4	RB-1	GB-4	PTW			ACP	PTF-1	TACKABLE STRETCHED FABRIC WALL PANELS, W.O.
H201	CLASS LAB SUPPORT 2	CONC-4	RB-1	GB-4	PTW			ACP	PTF-1	
H300	CLASS LAB 3	CONC-4	RB-1	GB-4	PTW			ACP	PTF-1	TACKABLE STRETCHED FABRIC WALL PANELS, W.O.
H301	CLASS LAB SUPPORT 3	CONC-4	RB-1	GB-4	PTW			ACP	PTF-1	
H400	CIRCULATION	RES-1	RB-2	GB-4	PTW	SLT-1	GBC-4	ACP	PTF-1 & PTF-2	TACKABLE STRETCHED FABRIC WALL PANELS, W.O.
H401	OFFICE 1	RES-1	RB-2	GB-4	PTW		GBC-4		PTF-2	TACKABLE STRETCHED FABRIC WALL PANELS, W.O.
H402	OFFICE 2	RES-1	RB-2	GB-4	PTW		GBC-4		PTF-2	TACKABLE STRETCHED FABRIC WALL PANELS, W.O.
H403	OFFICE 3	RES-1	RB-2	GB-4	PTW		GBC-4		PTF-2	TACKABLE STRETCHED FABRIC WALL PANELS, W.O.
H404	LIBRARY	RES-1	RB-2	GB-4	PTW			ACP	PTF-1	
H405	DATA	CONC-3	RB-2	GB-3	PTW	FRT-1	GBC-3		PTE	8'X4' FRT-PLYWOOD ABOVE BASE
H406	ELECTRICAL	CONC-3	RB-2	GB-3	PTW		GBC-3		PTE	
H500A	GREENHOUSE 1A	CONC-1								POLYCARBONATE SUPERSTRUCTURE BY MFR
H500B	GREENHOUSE 1B	CONC-1								POLYCARBONATE SUPERSTRUCTURE BY MFR
H501	GREENHOUSE 2	CONC-1								POLYCARBONATE SUPERSTRUCTURE BY MFR
H502	GREENHOUSE 3	CONC-1								POLYCARBONATE SUPERSTRUCTURE BY MFR
H600	GREENHOUSE 4	CONC-1								POLYCARBONATE SUPERSTRUCTURE BY MFR
H601	GREENHOUSE 5	CONC-1								POLYCARBONATE SUPERSTRUCTURE BY MFR
H602	SOIL BIN 1	CONC-2								
H603	SOIL BIN 2	CONC-2								
H604	SOIL BIN 3	CONC-2								
H605	SOIL BIN 4	CONC-2								
H700	HEAD HOUSE	CONC-4	RB-3	GB-4	PTW	PWD-1		ACP	PTF-1	CORK TACKABLE PANELS, W.O.
H701	TRASH & RECYCLING	CONC-2								
H800	WORKSHOP	CONC-4	RB-3	GB-4	PTW	PWD-1		ACP	PTF-1	CORK TACKABLE PANELS, W.O.
H801	STORAGE 1	CONC-4	RB-3	GB-4	PTW	PWD-1		ACP	PTF-1	CORK TACKABLE PANELS, W.O.
H802	STORAGE 3	CONC-4	RB-3	GB-4	PTW		GBC-4		PTF-2	
H803	STORAGE 2	CONC-4	RB-3	GB-4	PTW		GBC-4		PTF-2	
H804	ALL GENDER RESTROOMS	FLA-2	CTB-2	GBT	PTW	CT-2	GBC-4		PTE	
H805	GROUNDS	FLA-2	RB-3	GB-3	PTW	FRP-1	GBC-3		PTE	
H806	FIELD SUPPORT	FLA-2	RB-3	GB-3	PTW		GBC-3		PTE	

SCHEDULE OF INTERIOR FINISHES

FLOOR FINISHES

CONC-1: LIQUID FLOOR TREATMENT, SWIRLED PATTERN FINISH
CONC-2: LIQUID FLOOR TREATMENT, MEDIUM BROOM FINISH, STRAIGHT LINE PATTERN
CONC-3: LIQUID FLOOR TREATMENT, SMOOTH TROWELED
CONC-4: POLISHED CONRETE
FLA-1: FLUID APPLIED FLOORING; NON-SLIP EPOXY, COLOR 1
FLA-2: FLUID APPLIED FLOORING; NON-SLIP EPOXY, COLOR 2
RES-1: RESILIENT TILE - RUBBER, COLOR 1

BASE FINISHES

CTB-1: CERAMIC COVED TILE BASE TO MATCH CT-1
CTB-2: CERAMIC COVED TILE BASE TO MATCH CT-2
RB-1: 4" RUBBER, COVED, COLOR 1
RB-2: 4" RUBBER, COVED, COLOR 2
RB-3: 4" RUBBER, COVED, COLOR 3

WALL FINISHES

CT-1: 4" x 12" CERAMIC WALL TILE, STACKED BOND, COLOR 1
CT-2: 4" x 12" CERAMIC WALL TILE, STACKED BOND, COLOR 2
GB-3: GYPSUM BOARD, LEVEL 3 FINISH
GB-4: GYPSUM BOARD, LEVEL 4 FINISH
GB-5: GYPSUM BOARD, LEVEL 5 FINISH
GBT: GYPSUM BOARD TILE BACKER
FRP-1: FIBERGLASS REINFORCED PANELING
FRT-1: FIRE RETARDANT TREATED PLYWOOD
PWD-1: FINISH PLYWOOD, STAINED
SLT-1: WOOD SLATWALL, STAINED

PAINT

PTW: WALL PAINT; REFER TO INTERIOR ELEVATIONS FOR KEY TO WALL PAINT COLORS AND SHEENS
PTF-1: CEILING PAINT; PAINT EXPOSED STRUCTURE, ACOUSTIC TILES, AND ALL DUCTS, CONDUIT, PIPING, HANGERS, ETC.
PTF-2: CEILING PAINT; PAINT GYP BOARD CEILING FLAT SHEEN
PTE: CEILING PAINT; PAINT GYP BOARD CEILING EGGSHELL SHEEN

CEILING FINISHES

ACP: DIRECT-ADHERED ACOUSTIC TILES AT UNDERSIDE OF ROOF SHEATHING
GBC-3: FRAMED GYPSUM BOARD CEILING, LEVEL 3 FINISH
GBC-4: FRAMED GYPSUM BOARD CEILING, LEVEL 4 FINISH
GBC-5: FRAMED GYPSUM BOARD CEILING, LEVEL 5 FINISH

FINISH NOTES

1. ALL FLOOR SURFACES SHALL BE STABLE, FIRM, & SLIP RESISTANT.
2. FOR LIQUID FLOOR TREATMENT FOR CONCRETE SLABS, SEE SECTION 03 30 00.
3. WALLS MAY BE DIVIDED INTO AREAS WITH DIFFERENT WALL PAINT COLORS AND SHEENS. REFER TO INTERIOR ELEVATIONS FOR KEY TO PAINT COLORS AND SHEENS.
4. WHERE PORTIONS OF GYP BOARD WALLS ARE CONCEALED BEHIND WAINSCOT OR CASEWORK, LEVEL 3 FINISH IS ACCEPTABLE.
5. REFER TO SPECIFICATION FOR LOCATIONS WHERE WATER RESISTIVE GYPSUM BOARD IS REQUIRED.
6. WHERE GBT IS INDICATED, PROVIDE MINIMUM LEVEL 2 FINISH BEHIND TILE WAINSCOT. ANY PORTION LEFT EXPOSED AND PAINTED TO RECIEVE LEVEL 5 FINISH.

3/3/2022 11:31:43 AM BIM 360://PCCD Merritt Horticulture/Merritt Horticulture_2020.rvt

APPROVALS

IDENTIFICATION STAMP
DIV. OF THE STATE ARCHITECT
APP: 01-119409 INC:
REVIEWED FOR
SS ☑ FLS ☑ ACS ☑
DATE: 03/14/2022

NOLL & TAM ARCHITECTS
729 Heinz Avenue
Berkeley, CA 94710
tel 510.542.2200
fax 510.542.2201

SEAL

LICENSED ARCHITECT
CHRISTOPHER NOLL
No. C15916
REN. 12-31-23
STATE OF CALIFORNIA

PROJECT TITLE

Peralta Community College District
MERRITT COLLEGE NEW LANDSCAPE HORTICULTURE COMPLEX

12500 Campus Drive
Oakland, CA 94619

BID SET

ISSUE DATE 03/03/2022
N&T JOB NUMBER 22003

REVISIONS

	DATE	DESCRIPTION

DRAWN BY Author | CHECKED BY Checker

SHEET TITLE
FINISH SCHEDULE

SHEET NUMBER
A9.90

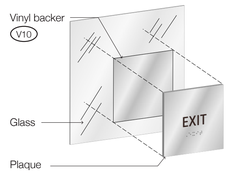

Glass Installation
NTS

Sidelight Signage Installation Location
3/8"=1'-0"

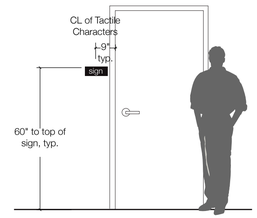

Tactile Room Sign Installation Location
3/8"=1'-0"

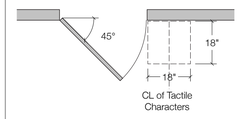

Tactile Room Sign Location
3/8"=1'-0"

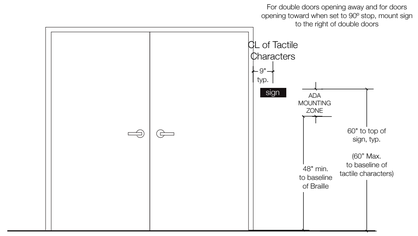

Double Door Sign Installation Location
3/8"=1'-0"

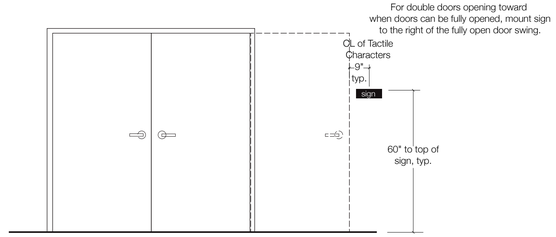

Double Door Full Swing Sign Installation Location
3/8"=1'-0"

Installation Guidelines

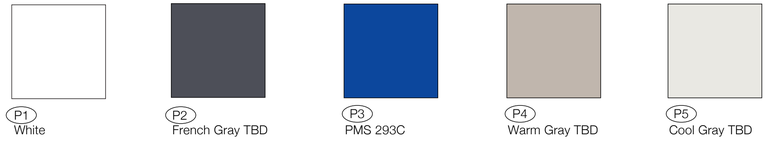

NOTE: All paints finishes to be satin

Paint

Note: The color rendering index shall be 80 or greater.

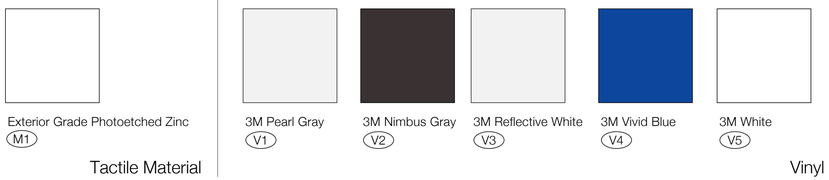

Tactile Material

Vinyl

Wood

Material

INSPECTIONS REQUIRED:
Signs and identification devices shall be field inspected after installation and approved by the enforcing agency prior to the issuance of a final certificate of occupancy per Chapter 1, Division II, Section 111, or final approval where no certificate of occupancy is issued.

The inspection shall include, but not be limited to, verification that Braille dots and cells are properly spaced and the size, proportion and type of raised characters are in compliance with these regulations.

APPROVALS

IDENTIFICATION STAMP
DIV. OF THE STATE ARCHITECT
APP: 01-119409 INC:
REVIEWED FOR
SS ☑ FLS ☑ ACS ☑
DATE: 03/14/2022

NOLL & TAM ARCHITECTS
729 Heinz Avenue
Berkeley, CA 94710
tel 510.542.2200
fax 510.542.2201

SEAL

LICENSED ARCHITECT
CHRISTOPHER NOLL
No. C15916
REN. 12-31-23
STATE OF CALIFORNIA

SIGNAGE CONSULTANT

ROSS+LUTHIN CREATIVE
707.573.7359
creative@rossluthin.com

PROJECT TITLE

Peralta Community College District
Merritt College New Landscape Horticulture Complex

12500 Campus Drive
Oakland, CA 94616

BID SET

ISSUE DATE	03/03/2022
N&T JOB NUMBER	22003

REVISIONS

	DATE	DESCRIPTION

DRAWN BY	TL	CHECKED BY	GR

SHEET TITLE
SIGNAGE GENERAL

SHEET NUMBER
W0.1

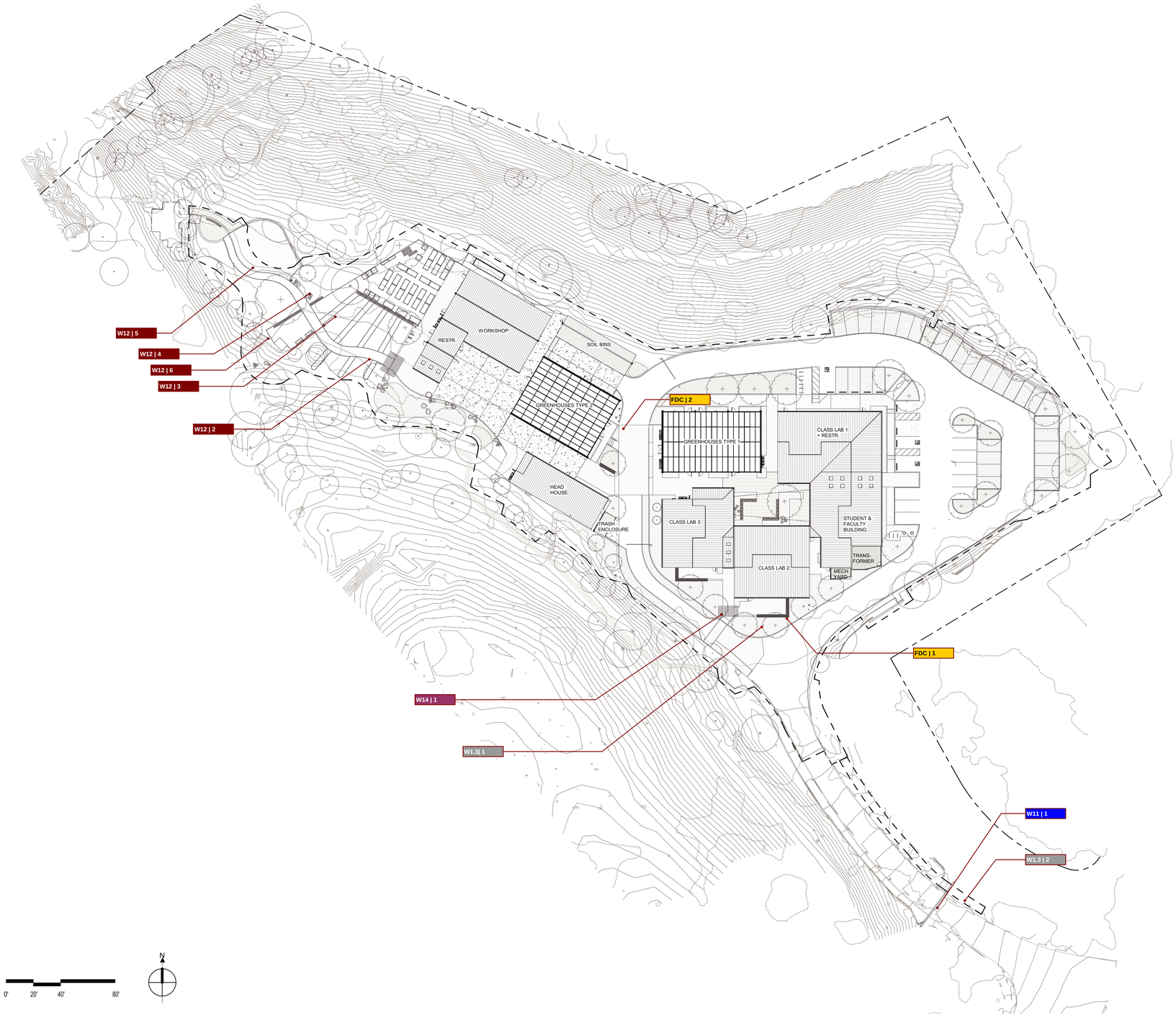

SIGNAGE LOCATIONS - SITE

LEGEND

W1.3	Main Entry Sign
W3	Building Directory
W4	Directional Sign
W5.1	Building Entry ID
W6	Small Directional
W11	Gate Sign
W12	Destination Marker
W14	Trellis Entry Sign
R1	Primary Room ID
R2.1	Tactile Restroom Sign
R2.2	Geometric Restroom Sign
R5	Tactile Egress Sign
R6	Int. Symbol of Access.
R7	Assitive Listening Sign
R8	Misc. Message Sign
R9	Tactile Utility Room Sign
R12	Room ID with Frame
FDC	Fire Department Connection

APPROVALS

IDENTIFICATION STAMP
DIV. OF THE STATE ARCHITECT
APP: 01-119409 INC:
REVIEWED FOR
SS ☑ FLS ☑ ACS ☑
DATE: 03/14/2022

NOLL & TAM ARCHITECTS

729 Heinz Avenue
Berkeley, CA 94710
tel 510.542.2200
fax 510.542.2201

SEAL

LICENSED ARCHITECT
CHRISTOPHER NOLL
No. C15916
REN. 12-31-23
STATE OF CALIFORNIA

SIGNAGE CONSULTANT

ROSS+LUTHIN CREATIVE
707.573.7359
creative@rossluthin.com

PROJECT TITLE

Peralta Community College District
Merritt College New Landscape Horticulture Complex

12500 Campus Drive
Oakland, CA 94616

BID SET

ISSUE DATE	03.03.2022
N&T JOB NUMBER	22003

REVISIONS

	DATE	DESCRIPTION

DRAWN BY	TL	CHECKED BY	GR

SHEET TITLE

SIGNAGE LOCATIONS SITE

SHEET NUMBER

W1.1

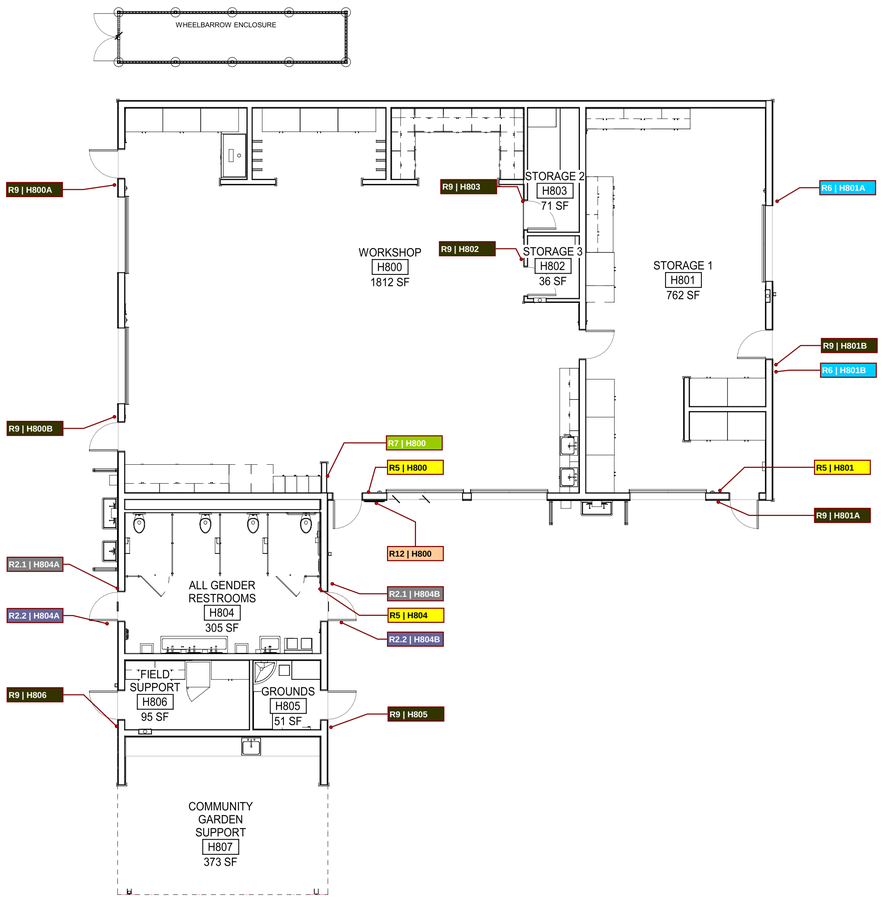

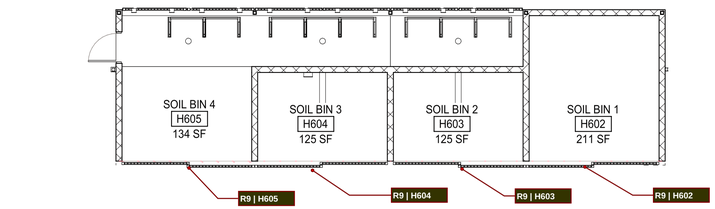

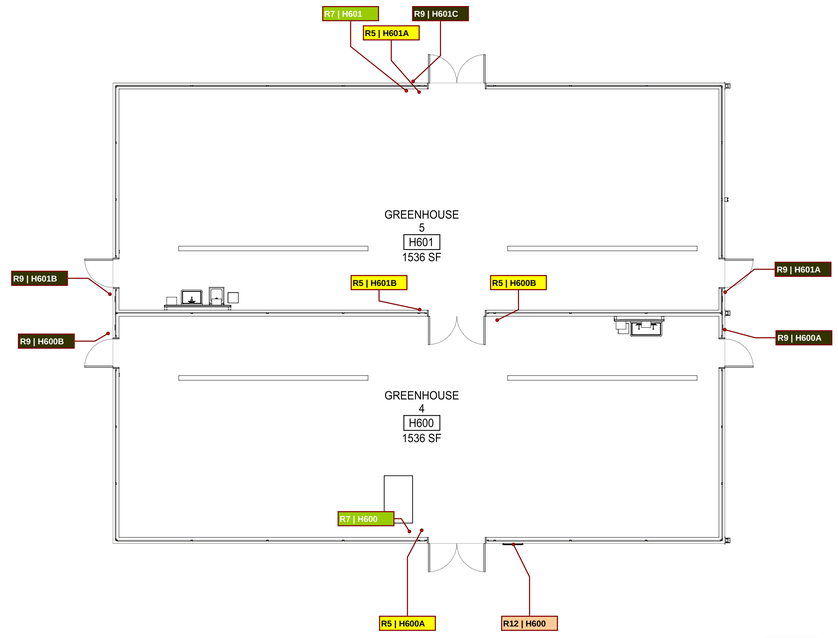

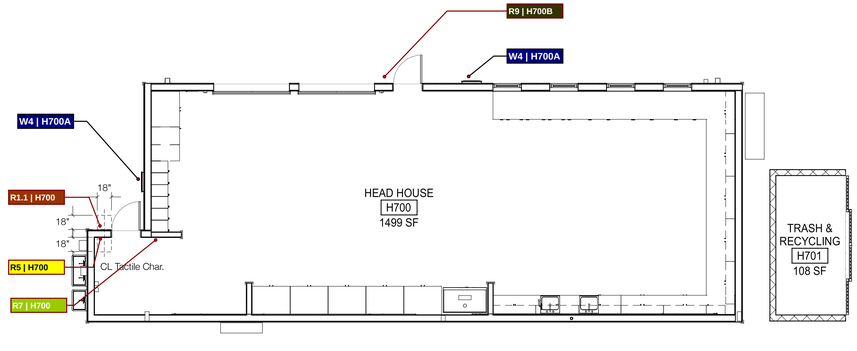

SIGNAGE LOCATIONS - WEST BUILDING GROUP

1/8"=1'-0"

LEGEND

W1.3	Main Entry Sign
W3	Building Directory
W4	Directional Sign
W5.1	Building Entry ID
W6	Small Directional
W12	Destination Marker
W14	Trellis Entry Sign
R1	Primary Room ID
R2.1	Tactile Restroom Sign
R2.2	Geometric Restroom Sign
R5	Tactile Egress Sign
R6	Int. Symbol of Access.
R7	Assitive Listening Sign
R8	Misc. Message Sign
R9	Tactile Utility Room Sign
R12	Room ID with Frame

APPROVALS

IDENTIFICATION STAMP
DIV. OF THE STATE ARCHITECT
APP: 01-119409 INC:
REVIEWED FOR
SS ☑ FLS ☑ ACS ☑
DATE: 03/14/2022

NOLL & TAM ARCHITECTS
729 Heinz Avenue
Berkeley, CA 94710
tel 510.542.2200
fax 510.542.2201

SEAL

LICENSED ARCHITECT
CHRISTOPHER NOLL
No. C15916
REN. 12-31-23
STATE OF CALIFORNIA

SIGNAGE CONSULTANT

ROSS+LUTHIN CREATIVE
707.573.7359
creative@rossluthin.com

PROJECT TITLE

Peralta Community College District
Merritt College New Landscape Horticulture Complex

12500 Campus Drive
Oakland, CA 94616

BID SET

ISSUE DATE	03.03.2022
N&T JOB NUMBER	22003

REVISIONS

	DATE	DESCRIPTION

DRAWN BY	TL	CHECKED BY	GR

SHEET TITLE

SIGNAGE LOCATIONS WEST BUILDING GROUP

SHEET NUMBER

W1.2

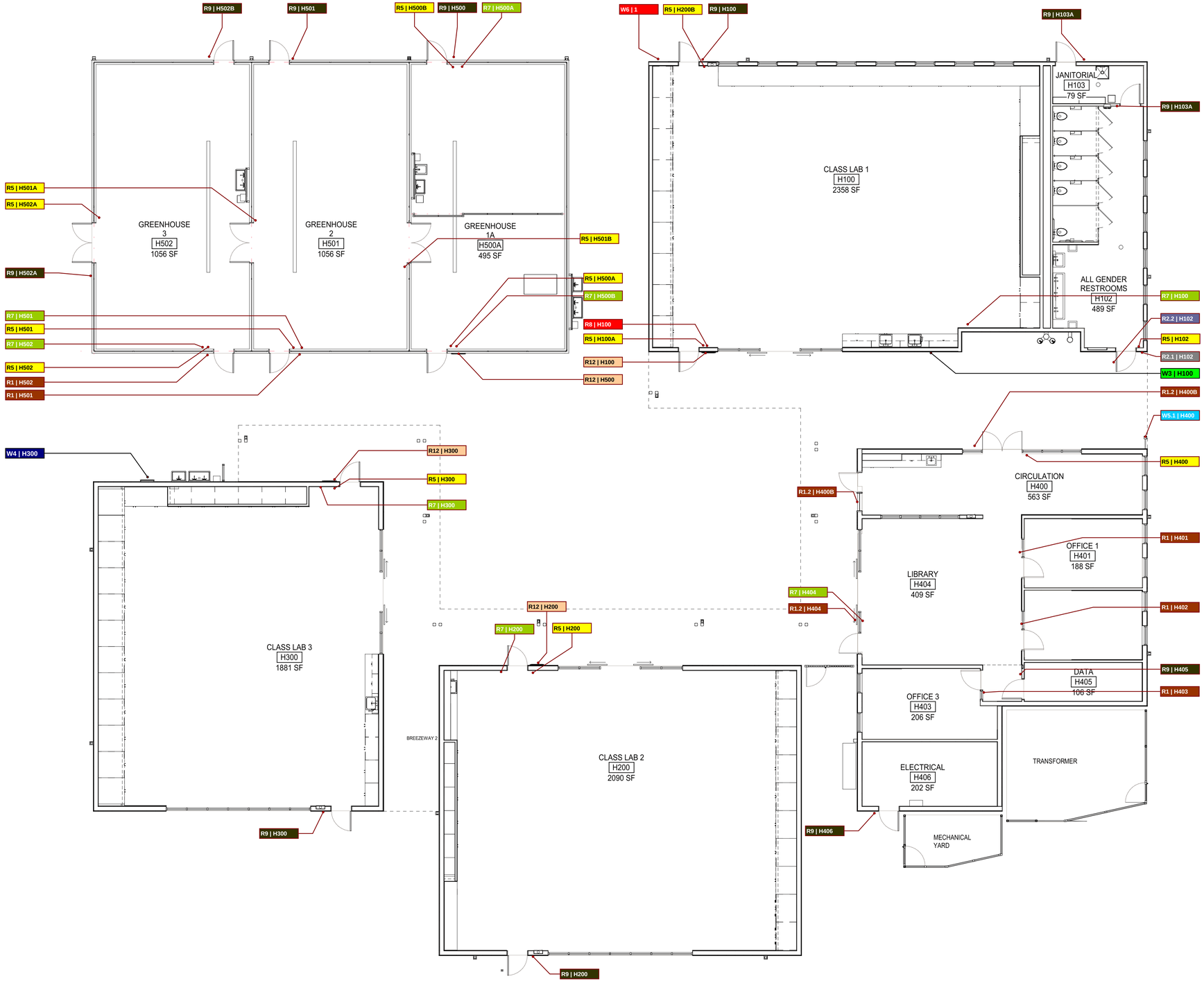

LEGEND

W1.3	Main Entry Sign
W3	Building Directory
W4	Directional Sign
W5.1	Building Entry ID
W6	Small Directional
W12	Destination Marker
W14	Trellis Entry Sign
R1	Primary Room ID
R2.1	Tactile Restroom Sign
R2.2	Geometric Restroom Sign
R5	Tactile Egress Sign
R6	Int. Symbol of Access.
R7	Assitive Listening Sign
R8	Misc. Message Sign
R9	Tactile Utility Room Sign
R12	Room ID with Frame

SIGNAGE LOCATIONS - EAST BUILDING GROUP

APPROVALS

IDENTIFICATION STAMP
DIV. OF THE STATE ARCHITECT
APP: 01-119409 INC:
REVIEWED FOR
SS ☑ FLS ☑ ACS ☑
DATE: 03/14/2022

NOLL & TAM ARCHITECTS
729 Heinz Avenue
Berkeley, CA 94710
tel 510.542.2200
fax 510.542.2201

SEAL

LICENSED ARCHITECT
CHRISTOPHER NOLL
No. C15916
REN. 12-31-23
STATE OF CALIFORNIA

SIGNAGE CONSULTANT

ROSS+LUTHIN CREATIVE
707.573.7359
creative@rossluthin.com

PROJECT TITLE

Peralta Community College District
Merritt College New Landscape Horticulture Complex

12500 Campus Drive
Oakland, CA 94616

BID SET

ISSUE DATE	03.03.2022
N&T JOB NUMBER	22003

REVISIONS

	DATE	DESCRIPTION

DRAWN BY	TL	CHECKED BY	GR

SHEET TITLE

SIGNAGE LOCATIONS EAST BUILDING GROUP

SHEET NUMBER

W1.3

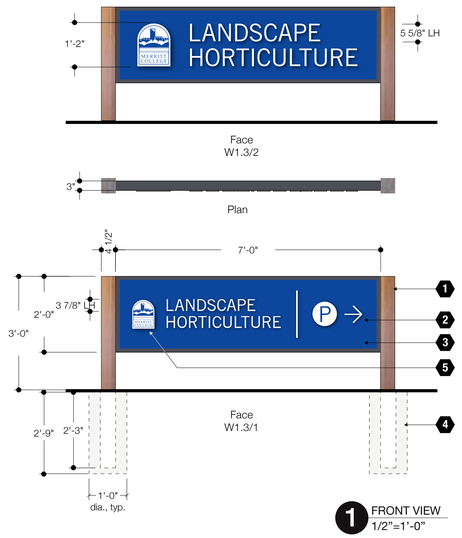

1 FRONT VIEW
1/2"=1'-0"

1. Repurposed redwood posts, natural patina.
2. 1/4" deep laser cut acrylic letters w/ painted finish. Mount flush to face. Color: P1
3. 3" deep fabricated aluminum panel. Color: P2 & P3
4. Post in 12" dia. concrete footing
5. 1/4" deep acrylic logo face w/ painted finish & direct print logo graphics. Color: P1 & P3

Campus Monument Sign W1.3

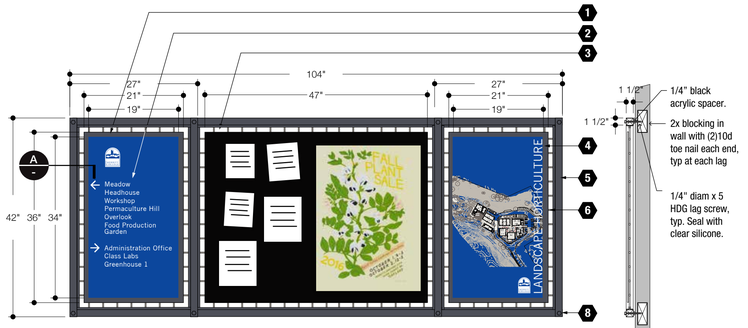

1 FRONT
3/4"=1'-0"

2 SECTION

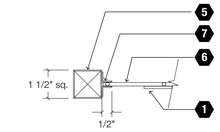

A SECTION
3"=1'-0"

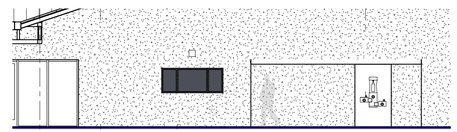

3 ELEVATION
1/8"=1'-0"

1. 1/8" aluminum panel with painted finish. Color: P2
2. Digital print color block, logo, text and directional arrows. Color: P1 & P3 Vinyl text & arrows Color: V1
3. Recycled rubber bulletin board mounted to alum. backer. Color: black
4. 1/8" aluminum panel with painted finish. Digital print map and graphics. Colors: P1, P2, P3, P5
5. 1-1/2" sq. aluminum tube frame with painted finish. Butt weld all joints, all around. Wall mount with mechanical fasteners. Color: P2
6. Stainless steel welded wire mesh panel. 2.8120" opening, 0.188" dia., 87% open area. Color: M2
7. 1/2" x 1/2" aluminum angle. Spot weld and paint. Color: P2
8. Hex Head Cap Screw. Color: P2

Note:
1. Map artwork to be provided by designer.
2. Poster and notes on middle panel shown for example only.
3. See message schedule for exact copy.

Directional w/Bulletin Board W3

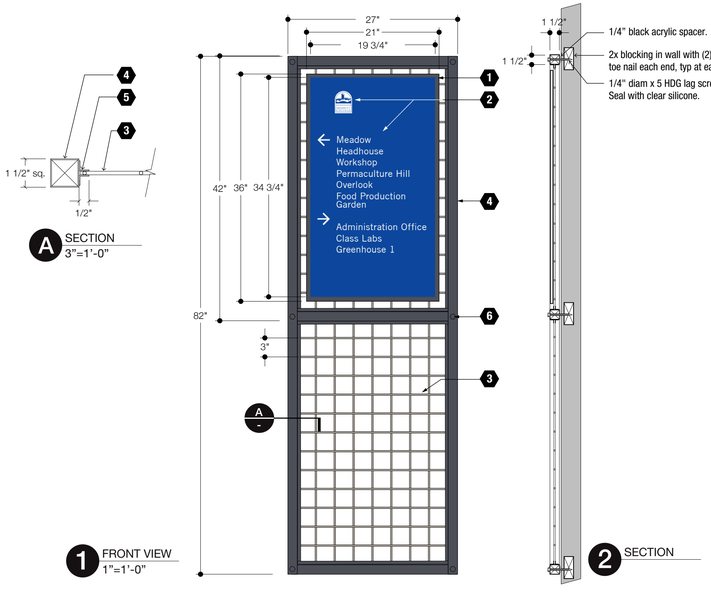

A SECTION
3"=1'-0"

1 FRONT VIEW
1"=1'-0"

2 SECTION

1. 1/8" aluminum panel with painted finish. Color: P2
2. Digital print color block, logo, text and directional arrows. Color: P1 & P3 Vinyl text & arrows Color: V1
3. Stainless steel welded wire mesh panel. 2.8120" opening, 0.188" dia., 87% open area. Color: M2
4. 1-1/2" sq. aluminum tube frame with painted finish. Butt weld all joints, all around. Wall mount with mechanical fasteners. Color: P2
5. 1/2" x 1/2" aluminum angle. Spot weld and paint. Color: P2
6. Hex Head Cap Screw (6). Color: P2

Note:
1. See message schedule for exact copy.

Wall Mounted Directional W4

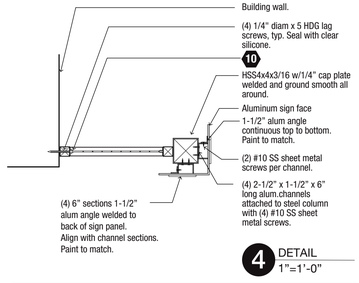

4 DETAIL
1"=1'-0"

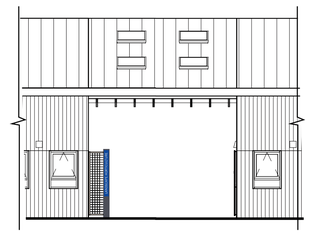

3 ELEVATION
1/8"=1'-0"

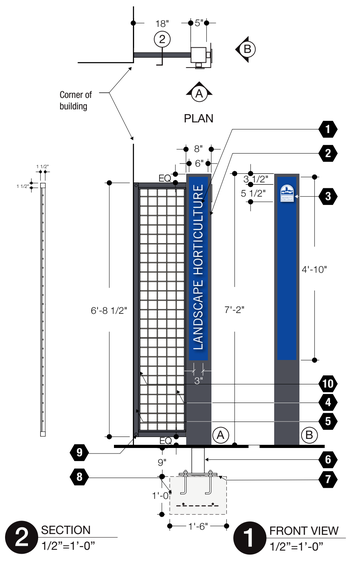

2 SECTION
1/2"=1'-0"

1 FRONT VIEW
1/2"=1'-0"

1. 1/4" deep laser cut acrylic letters w/ painted finish. Mount flush to face of beam. Color: P1
2. 1/4" aluminum panel w/ painted finish. V-groove and fold to 90°. Stand off existing post 1 1/2". No visible screws or fasteners. Color: P2 & P3
3. 1/4" deep acrylic logo face w/ painted finish & direct print logo graphics. Color: P1 & P3
4. Stainless steel welded wire mesh panel. 2.8120" opening, 0.188" dia., 87% open area. Color: M2
5. 1-1/2" sq. aluminum tube frame with painted finish. Butt weld all joints, all around. Wall mount with mechanical fasteners. Color: P2
6. Extend steel column and weld with 1/4" fillet all around to base plate.
7. 1/2" x 1/2" x 12" steel base plate w/(4) 1/2" dia. x 12" anchor bolts. Non shrink grout or leveling nuts below.
8. Conc. ftg. w/(2) #5 each way 3" clear from bottom.
9. Hex Head Cap Screw. Color: P2
10. 1/2" x 1/2" aluminum angle. Spot weld and paint. Color: P2

Entry Sign W5.1

APPROVALS

IDENTIFICATION STAMP
DIV. OF THE STATE ARCHITECT
APP: 01-119409 INC:
REVIEWED FOR
SS ☑ FLS ☑ ACS ☑
DATE: 03/14/2022

NOLL & TAM ARCHITECTS
729 Heinz Avenue
Berkeley, CA 94710
tel 510.542.2200
fax 510.542.2201

SEAL

LICENSED ARCHITECT
CHRISTOPHER NOLL
No. C15916
REN. 12-31-23
STATE OF CALIFORNIA

SIGNAGE CONSULTANT

ROSS+LUTHIN CREATIVE
707.573.7359
creative@rossluthin.com

PROJECT TITLE

Peralta Community College District
Merritt College New Landscape Horticulture Complex

12500 Campus Drive
Oakland, CA 94616

BID SET

ISSUE DATE	03/03/2022
N&T JOB NUMBER	22003

REVISIONS

	DATE	DESCRIPTION

DRAWN BY	TL	CHECKED BY	GR

SHEET TITLE

SIGNAGE DESIGN WAYFINDING W1-W5

SHEET NUMBER

W2.1

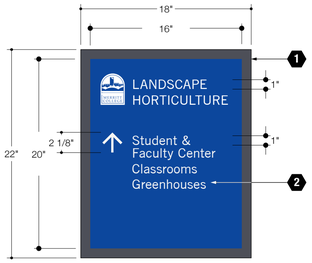

1 FRONT VIEW
1-1/2"=1'-0"

1. 1/16" aluminum panel with painted finish.
   Mount to wall with double stick tape and silicone adhesive.
   Color: P2 & P3
2. Adhesive vinyl logo, text and directional arrows.
   Color: V5

Note:
1. See message schedule for exact copy.

Directional Wall Panel W6

San Rafael Food Production

Sunset Modern Permaculture Hill

Sunnyvale Meadow

Palm Springs Overlook

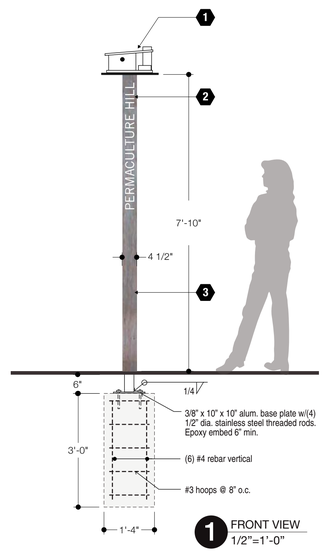

1 FRONT VIEW
1/2"=1'-0"

1. Custom built birdhouse, each unique.
   www.sourgrassbuilt.com
2. Routed and paint filled letters.
   Color: P1
3. 3x3" alum. post with 18" square x 1/2" thick top plate
   welded all sides. 1/4" chamfer top edges of plate.
   Wrap with repurposed 1x redwood boards,
   natural patina.

Destination Marker Sign W12

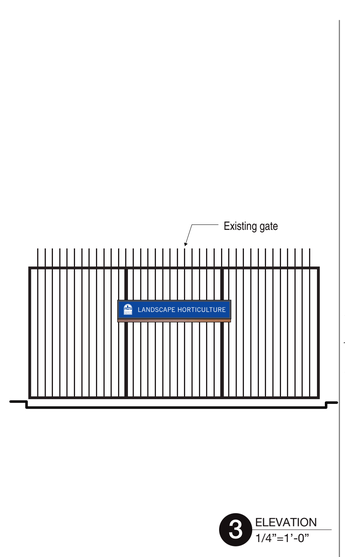

3 ELEVATION
1/4"=1'-0"

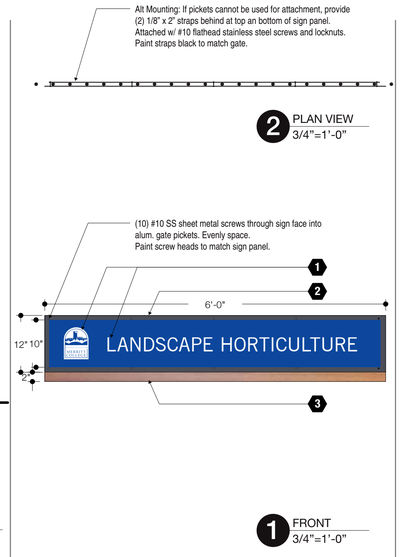

2 PLAN VIEW
3/4"=1'-0"

1 FRONT
3/4"=1'-0"

1. Adhesive vinyl graphics applied to one face.
   Color: V5
2. 1/8" aluminum panel w/ painted finish front and back.
   Attached to existing metal gate with stainless steel
   flathead mechanical fasteners painted to match sign face.
   Color: P2 & P3
3. Re-purposed 3/4" thick redwood boards, natural patina.
   Attach to sign face with stainless steel screws from
   the back of the sign panel.

Gate Sign W11

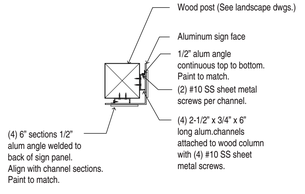

3 ATTACHMENT
1"=1'-0"

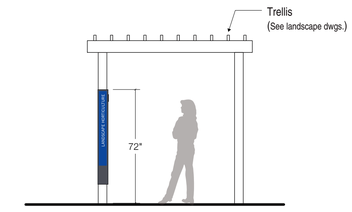

2 ELEVATION
1/4"=1'-0"

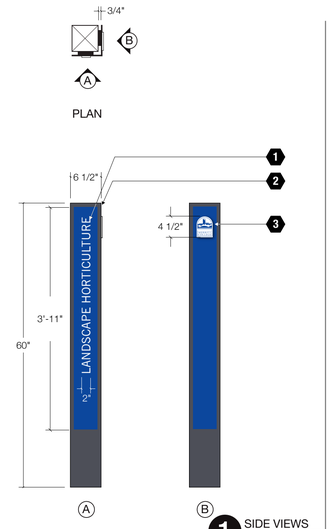

1 SIDE VIEWS
3/4"=1'-0"

1. 1/4" deep laser cut acrylic letters w/ painted finish.
   Mount flush to face.
   Color: P1
2. 1/4" aluminum panel w/ painted finish.
   V-groove and fold to 90°. Stand off existing post 3/4".
   No visible screws or fasteners.
   Color: P2 & P3
3. 1/4" deep acrylic logo face w/ painted finish & direct
   print logo graphics. Mount flush to face of beam.
   Color: P1, P3

Trellis Sign W14

APPROVALS

IDENTIFICATION STAMP
DIV. OF THE STATE ARCHITECT
APP: 01-119409 INC:
REVIEWED FOR
SS ☑ FLS ☑ ACS ☑
DATE: 03/14/2022

NOLL & TAM ARCHITECTS
729 Heinz Avenue
Berkeley, CA 94710
tel 510.542.2200
fax 510.542.2201

SEAL

LICENSED ARCHITECT
CHRISTOPHER NOLL
No. C15916
REN. 12-31-23
STATE OF CALIFORNIA

SIGNAGE CONSULTANT

ROSS+LUTHIN CREATIVE
707.573.7359
creative@rossluthin.com

PROJECT TITLE

Peralta Community College District
Merritt College New Landscape Horticulture Complex

12500 Campus Drive
Oakland, CA 94616

BID SET

ISSUE DATE	03/03/2022
N&T JOB NUMBER	22003

REVISIONS

	DATE	DESCRIPTION

DRAWN BY	TL	CHECKED BY	GR

SHEET TITLE

SIGNAGE DESIGN WAYFINDING W6-W14

SHEET NUMBER

W2.2

1 FRONT VIEW
1/2 Size

2 SIDE VIEW
1/2 Size

1. 1/2" Thick wood plaque with satin clear coat finish..
   Material: W1
2. 1 1/2" tall tactile room number.
   Color: P3
3. Digital print Merritt College logo.
   Color: P1 & P3
4. California Grade II Braille.
   Color: Clear
5. Advantus Grip-A-Strip note holder bar. Painted finish.
   Color: P3

Room ID with Note Holder R1.1

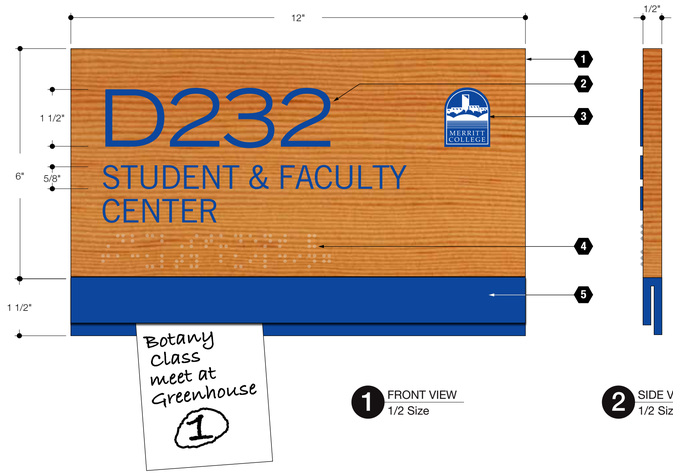

1 FRONT VIEW
1/2 Size

2 SIDE VIEW
1/2 Size

1. 1/2" Thick wood plaque with satin clear coat finish..
   Material: W1
2. Tactile room name and number.
   Color: P3
3. Digital print Merritt College logo.
   Color: P1 & P3
4. California Grade II Braille.
   Color: Clear
5. Advantus Grip-A-Strip note holder bar. Painted finish.
   Color: P3

Large Room ID w/Note Holder R1.2

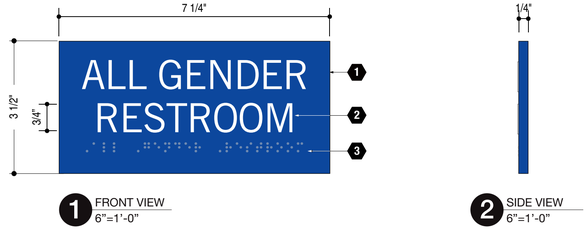

1 FRONT VIEW
6"=1'-0"

2 SIDE VIEW
6"=1'-0"

1. 1/4" Thick exterior grade photoetched plaque with painted finish.
   Color: P3
2. 3/4" Tall tactile text
   Font: Trade Gothic Roman
   Color: P1
3. California Grade II Braille
   Color: P3

Mount to wall with double-stick tape and silicone adhesive.

Tactile Restroom R2.1

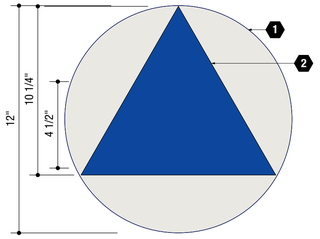

1 FRONT VIEW - ALL GENDER
3"=1'-0"

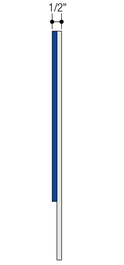

2 SIDE VIEW
3"=1'-0"

1. 1/4" thick acrylic equilateral triangle with painted finish.
   Color: P3
2. 1/4" thick acrylic circle with painted finish.
   Color: P2

Circle and triangle edges shall be rounded or eased or chamfered min. 1/16" and max. 1/8".

Mount to door with double-stick tape and silicone adhesive.

Doors are French Gray (dark)

3 DOOR ELEVATION
3/8"=1'-0"

Geometric Restroom R2.2

APPROVALS

IDENTIFICATION STAMP
DIV. OF THE STATE ARCHITECT
APP: 01-119409 INC:
REVIEWED FOR
SS ☑ FLS ☑ ACS ☑
DATE: 03/14/2022

NOLL & TAM ARCHITECTS
729 Heinz Avenue
Berkeley, CA 94710
tel 510.542.2200
fax 510.542.2201

SEAL

LICENSED ARCHITECT
CHRISTOPHER NOLL
No. C15916
REN. 12-31-23
STATE OF CALIFORNIA

SIGNAGE CONSULTANT

ROSS+LUTHIN CREATIVE
707.573.7359
creative@rossluthin.com

PROJECT TITLE

Peralta Community College District
Merritt College New Landscape Horticulture Complex

12500 Campus Drive
Oakland, CA 94616

BID SET

ISSUE DATE	03/03/2022
N&T JOB NUMBER	22003

REVISIONS

	DATE	DESCRIPTION

DRAWN BY	TL	CHECKED BY	GR

SHEET TITLE

SIGNAGE DESIGN
ROOM SIGNS
R1-R2

SHEET NUMBER

W2.3

1 FRONT VIEW
6"=1'-0"

2 SIDE VIEW
6"=1'-0"

1. 1/4" Thick exterior grade photoetched plaque with painted finish.
   Color: P3
2. 5/8" Tall ADA text
   Font: Trade Gothic Roman
   Color: P1
3. California Grade II Braille
   Color: P3

   Mounting: Install on wall using silicone adhesive and double stick tape at 60" from finished floor to tops of plaques.

Tactile Egress R5

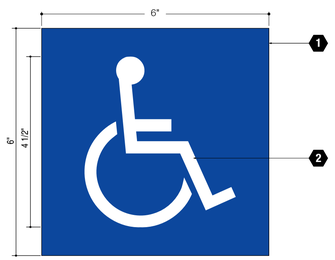

1 FRONT VIEW
6"=1'-0"

2 SIDE VIEW
6"=1'-0"

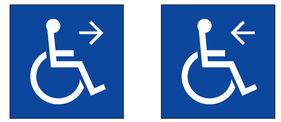

3 ALTERNATE LAYOUTS
3"=1'-0"

1. 1/8" thick acrylic with painted finish.
   Color: P3
2. 4 1/2" Tall digitally printed pictogram.
   Color: P1

   Mount to wall with double-stick tape and silicone adhesive.

International Symbol of Accessibility R6

1 FRONT VIEW
6"=1'-0"

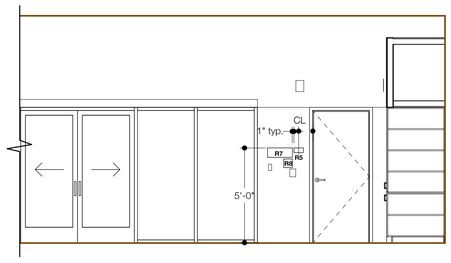

2 CLASS LAB 1
1/4"=1'-0"

1. 6" Tall x 15 3/4" wide x 1/8" thick acrylic with painted finish.
   Color: P3
2. Digitaly Printed Text
   Color: P1
3. Digitaly Printed Graphics
   Color: P1

   Mount to wall with double-stick tape and silicone adhesive.

Assistive Listening R7

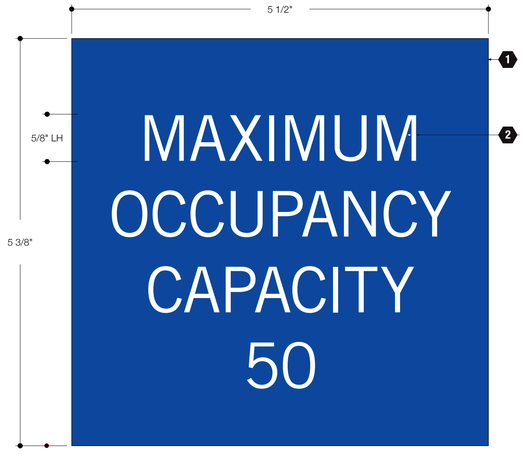

1 FRONT VIEW
Full Size

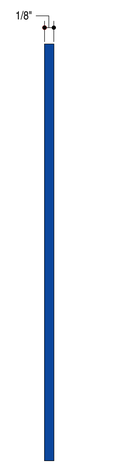

2 SIDE VIEW
Full Size

1. 5 3/8" Tall x 5 1/2" Wide x 1/8" painted acrylic.
   Color: P3
2. 5/8" Tall digital printed text.
   Font: Trade Gothic Regular
   Color: P1

   Mount to wall with double-stick tape and silicone adhesive.

Misc. Message Plaque R.8

APPROVALS

IDENTIFICATION STAMP
DIV. OF THE STATE ARCHITECT
APP: 01-119409 INC:
REVIEWED FOR
SS ☑ FLS ☑ ACS ☑
DATE: 03/14/2022

NOLL & TAM ARCHITECTS

729 Heinz Avenue
Berkeley, CA 94710
tel 510.542.2200
fax 510.542.2201

SEAL

LICENSED ARCHITECT
CHRISTOPHER NOLL
No. C15916
REN. 12-31-23
STATE OF CALIFORNIA

SIGNAGE CONSULTANT

ROSS+LUTHIN CREATIVE
707.573.7359
creative@rossluthin.com

PROJECT TITLE

Peralta Community College District
Merritt College New Landscape Horticulture Complex

12500 Campus Drive
Oakland, CA 94616

BID SET

ISSUE DATE	03/03/2022
N&T JOB NUMBER	22003

REVISIONS

#	DATE	DESCRIPTION

DRAWN BY	TL	CHECKED BY	GR

SHEET TITLE

SIGNAGE DESIGN ROOM SIGNS R5-R8

SHEET NUMBER

W2.4

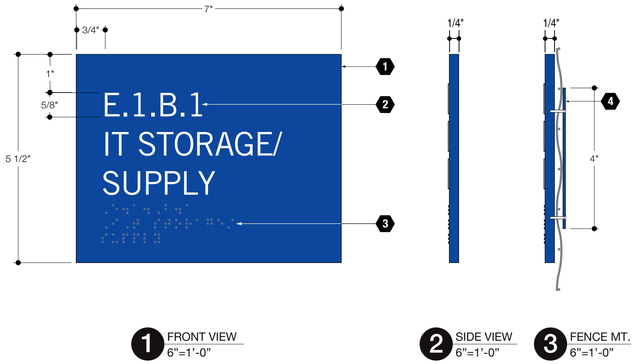

1 FRONT VIEW
6"=1'-0"

2 SIDE VIEW
6"=1'-0"

3 FENCE MT.
6"=1'-0"

1. 1/4" Thick exterior grade photoetched plaque with painted finish.
   Color: P3
2. 5/8" Tall ADA Text.
   Font: Trade Gothic Roman
   Color: P1
3. California Grade II Braille
   Color: P3
4. 1/8" alum. backer with painted finish on back of fence.
   Attach to sign face with (4) SS screws into sign face.
   Color: P3

Mounting: Install on wall using silicone adhesive and double stick tape at 60" from finished floor to top of plaque.

Utility Room Plaque R9

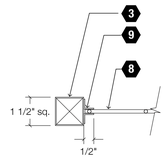

A SECTION
3"=1'-0"

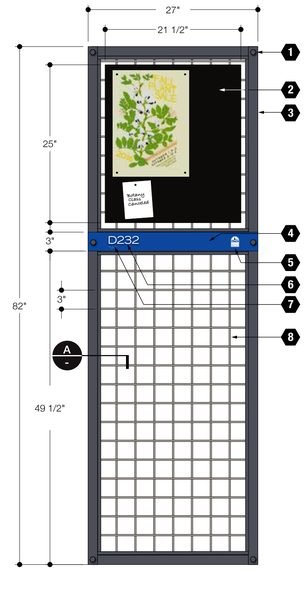

1 FRONT VIEW
1"=1'-0"

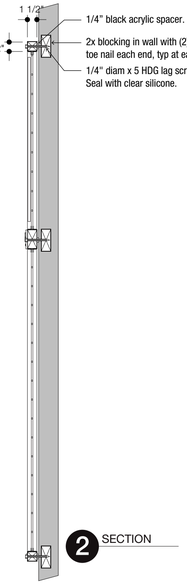

2 SECTION

1/4" black acrylic spacer.
2x blocking in wall with (2)10d toe nail each end, typ at each lag
1/4" diam x 5 HDG lag screw, typ. Seal with clear silicone.

1. Hex Head Cap Screw.
   Color: P2
2. Recycled rubber bulletin board mounted to alum. panel.
   Color: Black
3. 1-1/2" sq. aluminum tube frame with painted finish.
   Butt weld all joints, all around.
   Wall mount with mechanical fasteners.
   Color: P2
4. 1/4" Thick exterior grade photoetched plaque with painted finish.
   Color: P3
5. Digital print Merritt College logo.
   Color: P1
6. 1 1/4" Tall ADA text
   Font: Trade Gothic Roman
   Color: P1
7. California Grade II Braille
   Color: P3
8. Stainless steel welded wire mesh panel.
   2.8120" opening, 0.188" dia., 87% open area.
   Color: M2
9. 1/2" x 1/2" aluminum angle. Spot weld and paint.
   Color: P2

Wall Mounted Room ID/ Bulletin Board R12

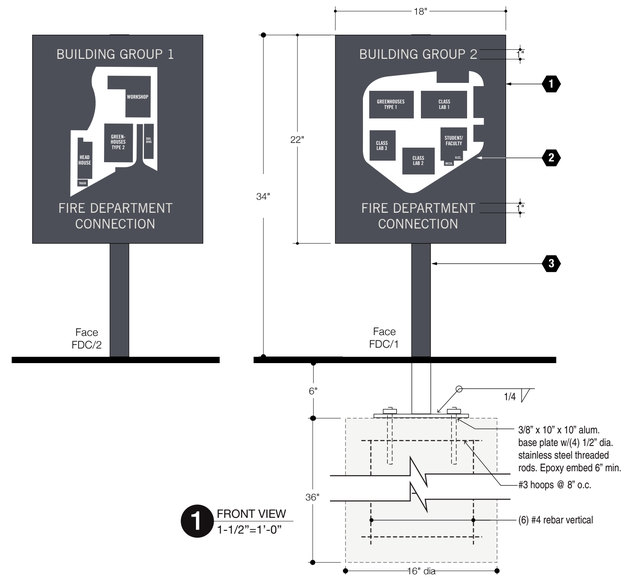

1 FRONT VIEW
1-1/2"=1'-0"

1. 1/8" aluminum panel with painted finish 2 sides.
   Color: P2
2. Adhesive vinyl map and text.
   Color: V1
3. 2" x 2" aluminum post with painted finish.
   Color: P2
4. Post in 12" dia. concrete footing

Fire Department Connection FDC

APPROVALS

IDENTIFICATION STAMP
DIV. OF THE STATE ARCHITECT
APP: 01-119409 INC:
REVIEWED FOR
SS ☑ FLS ☑ ACS ☑
DATE: 03/14/2022

NOLL & TAM ARCHITECTS
729 Heinz Avenue
Berkeley, CA 94710
tel 510.542.2200
fax 510.542.2201

SEAL

LICENSED ARCHITECT
CHRISTOPHER NOLL
No. C15916
REN. 12-31-23
STATE OF CALIFORNIA

SIGNAGE CONSULTANT

ROSS+LUTHIN CREATIVE
707.573.7359
creative@rossluthin.com

PROJECT TITLE

Peralta Community College District
Merritt College New Landscape Horticulture Complex

12500 Campus Drive
Oakland, CA 94616

BID SET

ISSUE DATE	03/03/2022
N&T JOB NUMBER	22003

REVISIONS

	DATE	DESCRIPTION

DRAWN BY	TL	CHECKED BY	GR

SHEET TITLE

SIGNAGE DESIGN ROOM SIGNS R9-R12, FDC

SHEET NUMBER

W2.5

	Area	Sign Type	Location	Description	Copy (Side A)	Notes	Mounting
▼ **SITE**							
	SITE	FDC	FDC | 1	Fire Connection Sign	See Layout		
	SITE	FDC	FDC | 2	Fire Connection Sign	See Layout		
	SITE	W1.3.A	W1.3 | 2	Monument Sign	SEE LAYOUT		Wall
	SITE	W1.3.A	W1.3| 1	Monument Sign	SEE LAYOUT		Wall
	SITE	W11	W11 | 1	Gate Sign	SEE LAYOUT		Wall
	SITE	W12	W12 | 2	Destination Marker	FOOD PRODCUTION		Wall
	SITE	W12	W12 | 3	Destination Marker	PERMACULTURE HILL		Wall
	SITE	W12	W12 | 4	Destination Marker	MEADOW		Wall
	SITE	W12	W12 | 5	Destination Marker	OVERLOOK		Wall
	SITE	W12	W12 | 6	Destination Marker	FOR MAINTENANCE ONLY		Wall
	SITE	W14	W14 | 1	Trellis ID	(MERRITT LOGO) LANDSCAPE HORTICULTURE		Wall
▼ **WEST**							
	WEST	R1.1	R1.1 | H700	Room ID with Note Bar	H700		Glass
	WEST	R12	R12 | H600	Room ID with Frame	H600		Glass
	WEST	R12	R12 | H800	Room ID with Frame	H800		Glass
	WEST	R2.1	R2.1 | H804A	Tactile Restroom Plaque	ALL GENDER		
	WEST	R2.1	R2.1 | H804B	Tactile Restroom Plaque	ALL GENDER		
	WEST	R2.2	R2.2 | H804A	Geometric Restroom Sign	ALL GENDER		Door
	WEST	R2.2	R2.2 | H804B	Geometric Restroom Sign	ALL GENDER		Door
	WEST	R5	R5 | H600A	Tactile Eggress	EXIT		Wall
	WEST	R5	R5 | H600B	Tactile Eggress	EXIT ROUTE		Glass
	WEST	R5	R5 | H601A	Tactile Eggress	EXIT		Glass
	WEST	R5	R5 | H601B	Tactile Eggress	EXIT ROUTE		Glass
	WEST	R5	R5 | H700	Tactile Eggress	EXIT		Wall
	WEST	R5	R5 | H800	Tactile Eggress	EXIT		Wall
	WEST	R5	R5 | H801	Tactile Eggress	EXIT		Wall
	WEST	R5	R5 | H804	Tactile Eggress	EXIT		Wall
	WEST	R6	R6 | H801A	International Symbol of Accessibility	ISA <		Glass
	WEST	R6	R6 | H801B	International Symbol of Accessibility	ISA <	Install at 60" tot op, 1" from left edge of R9.	Glass
	WEST	R7	R7 | H600	Assistive Listening Device	See layout		
	WEST	R7	R7 | H601	Assistive Listening Device	See layout		
	WEST	R7	R7 | H700	Assistive Listening Device	See layout		
	WEST	R7	R7 | H800	Assistive Listening Device	See layout		
	WEST	R9	R9 | H600A	Utility Room ID	H600 GREENHOUSE 4		Glass
	WEST	R9	R9 | H600B	Utility Room ID	H600 GREENHOUSE 4		Glass

MS.1

	Area	Sign Type	Location	Description	Copy (Side A)	Notes	Mounting
	WEST	R9	R9 | H601A	Utility Room ID	H601 GREENHOUSE 5		Glass
	WEST	R9	R9 | H601B	Utility Room ID	H601 GREENHOUSE 5		Glass
	WEST	R9	R9 | H601C	Utility Room ID	H601 GREENHOUSE 5		Glass
	WEST	R9	R9 | H602	Utility Room ID	SOIL BIN 1	Finish backs of signs for fence mount.	Wall
	WEST	R9	R9 | H603	Utility Room ID	SOIL BIN 2	Finish backs of signs for fence mount.	Wall
	WEST	R9	R9 | H604	Utility Room ID	SOIL BIN 3	Finish backs of signs for fence mount.	Wall
	WEST	R9	R9 | H605	Utility Room ID	SOIL BIN 4	Finish backs of signs for fence mount.	Wall
	WEST	R9	R9 | H700B	Utility Room ID	H700 HEAD HOUSE		Wall
	WEST	R9	R9 | H800A	Utility Room ID	H800 WORKSHOP		Wall
	WEST	R9	R9 | H800B	Utility Room ID	H800 WORKSHOP		Wall
	WEST	R9	R9 | H801A	Utility Room ID	H801 STORAGE 1		Wall
	WEST	R9	R9 | H801B	Utility Room ID	H801 STORAGE 1		Wall
	WEST	R9	R9 | H802	Utility Room ID	H802 STORAGE 2		Wall
	WEST	R9	R9 | H803	Utility Room ID	H803 STORAGE 3		Wall
	WEST	R9	R9 | H805	Utility Room ID	H805 JANITORIAL		Wall
	WEST	R9	R9 | H806	Utility Room ID	H806 FIELD SUPPORT		Wall
	WEST	W4	W4 | H700A	Directional Sign	> WORKSHOP > OUTDOOR KITCHEN > MEADOW > OVERLOOK > PERMACULTURE HILL > RESTROOMS --- < EAST BUILDINGS < CLASSROOMS < STUDENT & FACULTY CENTER		
	WEST	W4	W4 | H700A	Directional Sign	(UP LEFT) EAST BUILDINGS (UP LEFT) CLASSROOMS (UP LEFT) STUDENT & FACULTY CENTER		
▼ **EAST**							
	EAST	R1.1	R1 | H401	Room ID with Note Bar	H401		Glass
	EAST	R1.1	R1 | H402	Room ID with Note Bar	H402		Glass
	EAST	R1.1	R1 | H403	Room ID with Note Bar	H403		Glass
	EAST	R1.1	R1 | H501	Room ID with Note Bar	H501		Glass
	EAST	R1.1	R1 | H502	Room ID with Note Bar	H502		Glass

MS.2

	Area	Sign Type	Location	Description	Copy (Side A)	Notes	Mounting
	EAST	R1.2	R1.2 | H400B	Room ID, Large with Note Bar	H400 STUDENT AND FACULTY CENTER		Glass
	EAST	R1.2	R1.2 | H400B	Room ID, Large with Note Bar	H400 STUDENT AND FACULTY CENTER		Glass
	EAST	R1.2	R1.2 | H404	Room ID, Large with Note Bar	H404 LIBRARY		Glass
	EAST	R12	R12 | H100	Room ID with Frame	H100		Wall
	EAST	R12	R12 | H200	Room ID with Frame	H200		Wall
	EAST	R12	R12 | H300	Room ID with Frame	H300		Wall
	EAST	R12	R12 | H500	Room ID with Frame	H500		Glass
	EAST	R2.1	R2.1 | H102	Tactile Restroom Plaque	ALL GENDER		Wall
	EAST	R2.2	R2.2 | H102	Geometric Restroom Sign	ALL GENDER		Door
	EAST	R5	R5 | H100A	Tactile Eggress	EXIT		Wall
	EAST	R5	R5 | H102	Tactile Eggress	EXIT		Wall
	EAST	R5	R5 | H200	Tactile Eggress	EXIT		Wall
	EAST	R5	R5 | H200B	Tactile Eggress	EXIT		Wall
	EAST	R5	R5 | H300	Tactile Eggress	EXIT		Wall
	EAST	R5	R5 | H400	Tactile Eggress	EXIT		Glass
	EAST	R5	R5 | H500A	Tactile Eggress	EXIT		Glass
	EAST	R5	R5 | H500B	Tactile Eggress	EXIT		Glass
	EAST	R5	R5 | H501	Tactile Eggress	EXIT		Glass
	EAST	R5	R5 | H501A	Tactile Eggress	EXIT ROUTE		Glass
	EAST	R5	R5 | H501B	Tactile Eggress	EXIT ROUTE		Glass
	EAST	R5	R5 | H502	Tactile Eggress	EXIT		Glass
	EAST	R5	R5 | H502A	Tactile Eggress	EXIT		Glass
	EAST	R7	R7 | H100	Assistive Listening Device	See layout		Wall
	EAST	R7	R7 | H200	Assistive Listening Device	See layout		Wall
	EAST	R7	R7 | H300	Assistive Listening Device	See layout		Wall
	EAST	R7	R7 | H404	Assistive Listening Device	See layout	Mount back-to-back with R1.2.	Glass
	EAST	R7	R7 | H500A	Assistive Listening Device	See layout		Glass
	EAST	R7	R7 | H500B	Assistive Listening Device	See layout		Glass
	EAST	R7	R7 | H501	Assistive Listening Device	See layout		Glass
	EAST	R7	R7 | H502	Assistive Listening Device	See layout		Glass
	EAST	R8	R8 | H100	Misc. Message Sign	MAXIMUM OCCUPANCY 50		Wall
	EAST	R9	R9 | H100	Utility Room ID	H100 CLASS LAB 1		Wall
	EAST	R9	R9 | H103A	Utility Room ID	H103 JANITORIAL		Wall
	EAST	R9	R9 | H103A	Utility Room ID	H103 JANITORIAL		Wall

MS.3

	Area	Sign Type	Location	Description	Copy (Side A)	Notes	Mounting
	EAST	R9	R9 | H200	Utility Room ID	H200 CLASS LAB 2		Wall
	EAST	R9	R9 | H300	Utility Room ID	H300 CLASS LAB 3		Wall
	EAST	R9	R9 | H405	Utility Room ID	H405 DATA		Wall
	EAST	R9	R9 | H406	Utility Room ID	H406 ELECTRICAL		Wall
	EAST	R9	R9 | H500	Utility Room ID	H500 GREENHOUSE 1		Glass
	EAST	R9	R9 | H501	Utility Room ID	H501 GREENHOUSE 2		Glass
	EAST	R9	R9 | H502A	Utility Room ID	H502 GREENHOUSE 3		Glass
	EAST	R9	R9 | H502B	Utility Room ID	H502 GREENHOUSE 3		Glass
	EAST	W3	W3 | H100	Directional Sign/Bulletin Board	< CLASSROOMS < GREENHOUSES < WORKSHOP < OUTDOOR KITCHEN < MEADOW < OVERLOOK < PERMACULTURE HILL > RESTROOMS --- MAP		
	EAST	W4	W4 | H300	Directional Sign	< CLASSROOMS < STUDENT & FACULTY CENTER < RESTROOMS ------- > WORKSHOP > OUTDOOR KITCHEN > MEADOW > OVERLOOK > PERMACULTURE HILL		
	EAST	W5.1	W5.1 | H400	Building Entry ID	(MERRITT LOGO) LANDSCAPE HORTICULTURE		
	EAST	W6	W6 | 1	Pedestrian Directional,Small	(MERRITT LOGO) LANDSCAPE HORTICULTURE ^ STUDENT & FACULTY CENTER ^ CLASSROOMS		Wall

MS.4

APPROVALS

IDENTIFICATION STAMP
DIV. OF THE STATE ARCHITECT
APP: 01-119409 INC:
REVIEWED FOR
SS ☑ FLS ☑ ACS ☑
DATE: 03/14/2022

NOLL & TAM ARCHITECTS

729 Heinz Avenue
Berkeley, CA 94710
tel 510.542.2200
fax 510.542.2201

SEAL

LICENSED ARCHITECT
CHRISTOPHER NOLL
No. C15916
REN. 12-31-23
STATE OF CALIFORNIA

SIGNAGE CONSULTANT

ROSS+LUTHIN CREATIVE
707.573.7359
creative@rossluthin.com

PROJECT TITLE

Peralta Community College District
Merritt College New Landscape Horticulture Complex

12500 Campus Drive
Oakland, CA 94616

BID SET

ISSUE DATE **03/03/2022**
N&T JOB NUMBER **22003**

REVISIONS

	DATE	DESCRIPTION

DRAWN BY **TL** CHECKED BY **GR**

SHEET TITLE

SIGN MESSAGES

SHEET NUMBER

W3.0

GENERAL NOTES

1. ALL WORK SHALL BE DONE IN ACCORDANCE WITH THE 2019 CALIFORNIA BUILDING CODE AND THE SPECIFICATIONS.
2. THESE NOTES SHALL APPLY TO ALL STRUCTURAL DRAWINGS UNLESS OTHERWISE NOTED OR SHOWN.
3. FEATURES OF CONSTRUCTION SHOWN ARE TYPICAL AND SHALL APPLY GENERALLY THROUGHOUT SIMILAR CONDITIONS. ALL DETAILS REFERENCED, AND DETAILS NOT REFERENCED ON PLANS, SHALL BE CONSIDERED TYPICAL AND APPLY TO ALL SIMILAR CONDITIONS OF THE CONSTRUCTION.
4. UNLESS SHOWN OTHERWISE, DETAILS SHOWN ON "TYPICAL DETAIL" SHEETS SHALL BE USED WHEREVER APPLICABLE. SPECIFIC DETAILS ON THE STRUCTURAL DRAWINGS TAKE PRECEDENCE OVER "TYPICAL DETAILS". SPECIFIC NOTES ON STRUCTURAL DRAWINGS TAKE PRECEDENCE OVER NOTES SHOWN IN "GENERAL NOTES".
5. THE STRUCTURAL DRAWINGS SHOW STRUCTURAL FEATURES. EXACT CONFIGURATION OF INTERIOR PARTITION WALLS IS SHOWN ON ARCHITECTURAL DRAWINGS AND IS NOT NECESSARILY ALL SHOWN ON THE STRUCTURAL DRAWINGS. PROVIDE ANCHORAGE, INSERTS, ANCHOR BOLTS, ETC. FOR STRUCTURAL CONNECTIONS OF TOP, SIDES AND BOTTOM OF ALL PARTITION WALLS AS LOCATED ON THE ARCHITECTURAL DRAWINGS.
6. REFER TO THE ARCHITECTURAL DRAWINGS AND THE SPECIFICATIONS FOR THE FOLLOWING: FLOOR FINISHES; DEPRESSIONS AND CURBS ON FLOORS; OPENINGS REQUIRED FOR WINDOWS, DOORS, DUCTS, VENTS, PLUMBING, ETC.; FLASHING, INSERTS, ANCHORAGES, HANGERS ETC., EMBEDDED IN OR ATTACHED TO THE STRUCTURE; ROADWAY, WALKS, PAVING, STAIRS, RAMPS, TERRACES, EXTERIOR GRADES, ELEVATIONS OF ROOF SURFACE AND LOCATIONS OF DRAINS AND PARTITION WALLS.
7. THE CONTRACTOR SHALL COMPARE THE STRUCTURAL DRAWINGS WITH ARCHITECTURAL, PLUMBING, MECHANICAL, CIVIL, AND ELECTRICAL DRAWINGS AS TO ALL LAYOUTS, DIMENSIONS AND ELEVATIONS. ANY DISCREPANCIES SHALL BE REPORTED TO THE ARCHITECT FOR PROPER ADJUSTMENT BEFORE PROCEEDING WITH THE WORK.
8. IN THE EVENT THAT CERTAIN FEATURES OF THE CONSTRUCTION ARE NOT FULLY SHOWN ON THE DRAWINGS OR CALLED FOR IN THE GENERAL NOTES OR SPECIFICATIONS, THEIR CONSTRUCTION SHALL BE OF THE SAME CHARACTER AS SHOWN FOR SIMILAR CONDITIONS.
9. BEAMS, JOISTS AND ANY OTHER STRUCTURAL ELEMENTS SHALL NOT BE CUT OR PENETRATED, EXCEPT AS SHOWN IN STRUCTURAL DETAILS OR AS APPROVED BY THE ARCHITECT AND THE STRUCTURAL ENGINEER.
10. CONTRACTOR SHALL VERIFY ALL DIMENSIONS IN FIELD PRIOR TO POURING CONCRETE; ANY DISCREPANCIES SHALL BE CALLED TO THE ATTENTION OF THE ARCHITECT BEFORE PROCEEDING WITH THE WORK.
11. FEATURES OF EXISTING CONSTRUCTION SHALL BE VERIFIED BY THE CONTRACTOR IN THE FIELD AND DISCREPANCIES SHALL BE CALLED TO THE ATTENTION OF THE ARCHITECT.
12. THE CONTRACTOR SHALL BE RESPONSIBLE FOR ALL MEANS, METHODS, TECHNIQUES AND SEQUENCES OF CONSTRUCTION. THE CONTRACTOR SHALL BE RESPONSIBLE FOR ALL SAFETY PROGRAMS AND PROCEDURES DURING CONSTRUCTION.
13. IT SHALL BE THE RESPONSIBILITY OF THE CONTRACTOR TO ADEQUATELY SHORE AND BRACE BUILDING AS REQUIRED DURING CONSTRUCTION.
14. THE CONTRACTOR SHALL FOLLOW ALL INSTRUCTIONS, RECOMMENDATIONS AND SAFETY PRECAUTIONS PROVIDED BY THE MANUFACTURER OR SUPPLIER OF ANY MATERIAL OR PRODUCT NOTED IN GENERAL NOTES OR DRAWINGS.
15. SEE ARCHITECTURAL DRAWINGS FOR DETAILS ON REQUIRED VENTILATION OF ROOF JOISTS, FLOOR JOISTS, AND ATTIC SPACES.
16. GRADES SHOWN ON STRUCTURAL DRAWINGS ARE APPROXIMATE AND FOR GENERAL REFERENCE ONLY.
17. MECHANICAL UNIT LOCATIONS SHOWN ON STRUCTURAL DRAWINGS ARE SCHEMATIC ONLY. GENERAL CONTRACTOR TO COORDINATE STRUCTURAL TRADES WITH MECHANICAL CONTRACTOR TO DETERMINE EXACT LOCATION OF UNITS AND SUPPORTING STRUCTURE.
18. DO NOT SCALE DRAWINGS.

DESIGN CRITERIA

1. VERTICAL LOADS:
   - A. DEAD LOADS:
     - i. ROOF DEAD LOAD: PER LOADING DIAGRAM (INCLUDES 5 PSF FOR WEIGHT OF SOLAR PANELS AND SUPPORTS OVER ENTIRE ROOF.)
   - B. LIVE LOADS:
     - i. ROOF LIVE LOAD: PER LOADING DIAGRAM
   - C. SPRINKLER DESIGN LOADS: 250LBS + WEIGHT OF WATER FILLED PIPE
2. LATERAL LOADS:
   - A. WIND DESIGN LOADS – PER CBC SECTION 1609A:

BASIC WIND SPEED	95 MPH
EXPOSURE CATEGORY	C
INTERNAL PRESSURE COEFFICIENT	+/- 0.18
EXTERIOR COMPONENTS & CLADDING PRESSURE	43 PSF FOR ROOF (STRENGTH) 25 PSF FOR WALLS (STRENGTH)

   - B. SEISMIC DESIGN – PER CBC SECTION 1613A:

RISK CATEGORY	II
SEISMIC DESIGN CATEGORY	E
SITE CLASS	C
MAPPED SHORT PERIOD ACCELERATION	Ss = 2.48 g
SITE COEFFICIENT	Fa = 1.2
DESIGN SHORT PERIOD ACCELERATION	SDS = 1.59 g
MAPPED ONE SECOND PERIOD ACCELERATION	S1 = 0.95 g
SITE COEFFICIENT	Fv = 1.4
DESIGN ONE SECOND ACCELERATION	SD1 = 0.71 g
IMPORTANCE FACTOR	I = 1.0
ANALYSIS PROCEDURE	EQUIVALENT LATERAL FORCE

WORKSHOP/STORAGE BUILDING:

FUNDAMENTAL PERIOD	T = 0.200 SECONDS
BASIC LATERAL FORCE RESISTING SYSTEMS – LIGHT-FRAMED WALLS W/ WOOD STRUCTURAL PANELS STEEL SPECIAL CANTILEVER COLUMNS	
RESPONSE MODIFICATION FACTOR	R = 6.5, 2.5 (RESPECTIVELY)
SEISMIC RESPONSE COEFFICIENT, (SDS*I/R)	Cs = 0.25, 0.64 (RESPECTIVELY)
BASE SHEAR, V= Cs * W = (0.25)*W, (0.64)*W AT STRENGTH LEVEL (RESPECTIVELY)	
MAX BUILDING DRIFT	2.96"
HORIZONTAL STRUCTURAL IRREGULARITY	TYPE 2 - REENTRANT CORNER

HEAD HOUSE BUILDING:

FUNDAMENTAL PERIOD	T = 0.186 SECONDS
BASIC LATERAL FORCE RESISTING SYSTEMS – LIGHT-FRAMED WALLS W/ WOOD STRUCTURAL PANELS	
RESPONSE MODIFICATION FACTOR	R = 6.5
SEISMIC RESPONSE COEFFICIENT, (SDS*I/R)	Cs = 0.25
BASE SHEAR, V= Cs * W = (0.25)*W AT STRENGTH LEVEL	
MAX BUILDING DRIFT	4.56"

CLASS LAB 3 BUILDING:

FUNDAMENTAL PERIOD	T = 0.193 SECONDS
BASIC LATERAL FORCE RESISTING SYSTEMS – LIGHT-FRAMED WALLS W/ WOOD STRUCTURAL PANELS	
RESPONSE MODIFICATION FACTOR	R = 6.5
SEISMIC RESPONSE COEFFICIENT, (SDS*I/R)	Cs = 0.25
BASE SHEAR, V= Cs * W = (0.25)*W AT STRENGTH LEVEL	
MAX BUILDING DRIFT	2.48"

CLASS LAB 2 BUILDING:

FUNDAMENTAL PERIOD	T = 0.193 SECONDS
BASIC LATERAL FORCE RESISTING SYSTEMS – LIGHT-FRAMED WALLS W/ WOOD STRUCTURAL PANELS	
RESPONSE MODIFICATION FACTOR	R = 6.5
SEISMIC RESPONSE COEFFICIENT, (SDS*I/R)	Cs = 0.25
BASE SHEAR, V= Cs * W = (0.25)*W AT STRENGTH LEVEL	
MAX BUILDING DRIFT	2.84"

CLASS LAB 1 & STUDENT/FACULTY BUILDINGS:

FUNDAMENTAL PERIOD	T = 0.193 SECONDS
BASIC LATERAL FORCE RESISTING SYSTEMS – LIGHT-FRAMED WALLS W/ WOOD STRUCTURAL PANELS	
RESPONSE MODIFICATION FACTOR	R = 6.5
SEISMIC RESPONSE COEFFICIENT, (SDS*I/R)	Cs = 0.25
BASE SHEAR, V= Cs * W = (0.25)*W AT STRENGTH LEVEL	
MAX BUILDING DRIFT	3.56"
HORIZONTAL STRUCTURAL IRREGULARITY	TYPE 2 - REENTRANT CORNER

3. ALLOWABLE SOIL PRESSURES:

DEAD LOAD	2,500 PSF
DEAD + LIVE LOADS	3,000 PSF
DEAD + LIVE + LATERAL LOADS	4,000 PSF

FOUNDATION NOTES

1. THE SOIL REPORT APPLICABLE TO THIS PROJECT SITE IS BY TERRAPHASE ENGINEERING INC. (PROJECT NUMBER 0034.011.0001, REPORT DATED AUGUST 7, 2020) AND IS AVAILABLE FOR REVIEW AT THE ARCHITECT'S OFFICE. THE CONTRACTOR SHALL READ THE SOIL REPORT PREPARED FOR THIS PROJECT SITE AND SHALL BE RESPONSIBLE FOR PERFORMING ALL WORK DESCRIBED THEREIN. FOOTINGS SHALL BEAR ON UNDISTURBED NATURAL SOIL, OVER-EXCAVATED AND RECOMPACTED NATIVE SOIL, OR ENGINEERED FILL PER GEOTECHNICAL REPORT.
2. FOR BIDDING PURPOSES, THE ELEVATION OF THE BOTTOM OF FOOTINGS SHALL BE AS INDICATED ON THE FOUNDATION PLANS AND ON DETAILS. THESE FOOTING DEPTHS ARE MINIMUM AND SHALL IN NO CASE BE LESS THAN 24 INCHES. SLOPE BOTTOM OF FOOTINGS AT 1:10 MAXIMUM SLOPE AS REQUIRED TO SUIT GRADING AND ADJACENT FOOTING CONDITIONS. STEP BOTTOM OF FOOTINGS PER TYPICAL DETAIL FOR GREATER INCLINATIONS.
3. SOIL BEARING PRESSURES UNDER FOOTINGS AS DESIGNED DO NOT EXCEED ALLOWABLE SOIL PRESSURES DEFINED IN DESIGN CRITERIA ABOVE.
4. WHERE FOUNDATION WALL BACKFILL IS NECESSARY, THE BACKFILL SHALL BE PLACED SIMULTANEOUSLY ON EACH SIDE OF WALL, AND THE LEVEL ON ONE SIDE SHALL NOT EXCEED THE OTHER SIDE BY MORE THAN 6 INCHES DURING THIS OPERATION.
5. FOOTINGS SHALL BE CENTERED UNDER BEARING WALLS ABOVE UNLESS OTHERWISE NOTED.
6. SEE ARCHITECTURAL, PLUMBING, MECHANICAL, ELECTRICAL AND ANY OTHER INCLUDED DRAWINGS, AND CONSULT WITH THE RESPECTIVE TRADES FOR VERIFICATION OF ALL ITEMS SHOWN OR NOT SHOWN ON STRUCTURAL PLANS PRIOR TO POURING CONCRETE FOOTINGS AND FLOOR SLABS. PIPES OR ELECTRICAL CONDUITS SHALL NOT ROUTE UNDER FOOTINGS WITHOUT THE APPROVAL OF THE STRUCTURAL ENGINEER. IN ALL CASES, PIPES AND CONDUITS SHALL BE EMBEDDED IN TRENCHES FILLED WITH LEAN CONCRETE AND SPACED A MINIMUM 3 DIAMETERS BETWEEN EACH PIPE OR CONDUIT BASED ON THE LARGEST DIAMETER.
7. VERIFY LOCATIONS FOR OPENINGS OR PENETRATIONS THROUGH CONCRETE, CONCRETE CURBS, FLOOR DEPRESSIONS, FLOOR SLOPES AND DRAINS, INSERTS, ETC.

FOUNDATION NOTES - SOLDIER PILE SITE RETAINING WALLS

1. THE FOUNDATION SYSTEM FOR THE SITE RETAINING WALL IS A SOLDIER PILE AND DRILLED PIER SYSTEM.
2. FOR BIDDING PURPOSES, THE DEPTH OF DRILLED PIERS SHALL BE AS SHOWN ON THE DRAWINGS. THESE PIER DEPTHS ARE MINIMUM AND SHALL BE VERIFIED BY THE GEOTECHNICAL ENGINEER IN THE FIELD. IN NO CASE SHALL PIER DEPTHS BE LESS THAN 4'-0".
3. DESIGN PASSIVE PRESSURE IS 130 PCF OVER 2 PIER DIAMETERS WHERE PIERS ARE MORE THAN 2x PIER DIAMETER APART AND OVER 3 PIER DIAMETERS WHERE PIERS ARE MORE THAN 3x PIER DIAMETER APART.
4. MAINTAIN PROPER ALIGNMENT OF STEEL SOLDIER PIES WTHIN 1/2 INCH IN 10 FEET VERTICALLY.

CONCRETE NOTES

1. ALL CONCRETE SHALL BE REINFORCED UNLESS NOTED "NOT REINFORCED".
2. SEE THE CALIFORNIA BUILDING CODE AND THE SPECIFICATIONS FOR THE REQUIREMENTS IN THE PRODUCTION, TESTING AND INSTALLATION OF CONCRETE.
3. SEE ARCHITECTURAL DRAWINGS FOR THE LOCATION AND EXTENT OF EXTERIOR WALKS AND PAVEMENTS AND FOR REINFORCEMENT REQUIREMENTS.
4. REINFORCEMENT SHALL BE PER ASTM A615, GRADE 60 (UNLESS NOTED OTHERWISE IN DRAWINGS) WITH BAR MARKS LEGIBLY ROLLED INTO THE SURFACE INDICATING SIZE, TYPE OF STEEL, AND YIELD STRENGTH DESIGNATION.
5. REINFORCEMENT FOR WELDING SHALL BE PER ASTM A706, GRADE 60 WITH BAR MARKS LEGIBLY ROLLED INTO THE SURFACE INDICATING SIZE, TYPE OF STEEL, AND YIELD STRENGTH DESIGNATION.
6. CONCRETE SHALL CONFORM TO THE FOLLOWING CLASSES:

CONCRETE CLASS	USE	28 DAY STRENGTH (PSI)	MAX AGGREGATE SIZE (IN)	CONCRETE WEIGHT (PCF)	MAX W/C RATIO %	MIN/MAX FLYASH %
A	FOUNDATIONS	4000	1	145	0.50	30/50
B	WALLS (CIP)	4000	1	145	0.50	30/50
D	SLABS-ON-GRADE	4000	3/4	145	0.43	15/25

7. PORTLAND CEMENT SHALL BE PROPORTIONED IN ACCORDANCE WITH ASTM C94, TYPE I OR II.
8. PROVIDE 15 MIL VAPOR BARRIER CONFORMING TO ASTM E 1745 CLASS A UNDER ALL SLABS ON GRADE, UNLESS NOTED OTHERWISE IN DRAWINGS.
9. REPLACE CEMENT CONTENT WITH FLYASH CONFORMING TO ASTM C618 CLASS C OR F, OR GROUND GRANULATED BLAST FURNACE SLAG CONFORMING TO ASTM 989, CLASS 100 OR 120, PER TABLE ABOVE.
10. REINFORCEMENT, ANCHOR BOLTS, PIPE SLEEVES, AND OTHER INSERTS SHALL BE POSITIVELY SECURED IN PLACE BEFORE CONCRETE IS POURED. "WET-SETTING" WILL NOT BE ALLOWED.
11. REINFORCING BARS WELDED TO STRUCTURAL STEEL SHALL BE SUPPLIED BY REINFORCING BAR SUB-CONTRACTOR AND ALL WELDING SHALL BE DONE BY STRUCTURAL STEEL SUB-CONTRACTOR.
12. BAR COVERAGE TO FACE OF BAR, EXCEPT AS OTHERWISE SHOWN, SHALL BE:
    - 3" WHERE CONCRETE IS POURED AGAINST EARTH OR AGAINST GROUND CONTACT
    - 2" FOR BARS LARGER THAN #5, WHERE CONCRETE SURFACES ARE EXPOSED TO EARTH OR TO WEATHER AFTER REMOVAL OF FORMS.
    - 1-1/2" FOR #5 BARS OR SMALLER, WHERE CONCRETE SURFACES ARE EXPOSED TO EARTH OR TO WEATHER AFTER REMOVAL OF FORMS
    - 1-1/2" FOR COLUMN SPIRAL TIES*
    - 1" FOR WALL BARS (DOUBLE MAT)*
    - 3/4" FOR STRUCTURAL SLAB BARS, TOP AND BOTTOM*
    - *UNLESS GOVERNED ABOVE BY EXPOSURE OR NOTED ON DETAILS
13. INTERIOR SLAB ON GROUND SHALL BE REINFORCED AS SHOWN ON STRUCTURAL PLANS. LOCATIONS OF CONSTRUCTION JOINTS OTHER THAN SHOWN ON DRAWINGS MUST BE APPROVED BY THE ARCHITECT.
14. ALL CONCRETE CURBS ARE 6 INCHES HIGH UNLESS OTHERWISE NOTED.
15. HOLES FOR GROUTED ANCHORS SHALL BE DRILLED WITH ROTARY HAMMER OR OTHER SUITABLE METHODS TO ENSURE EXISTING REINFORCEMENT IS NOT DAMAGED. HOLE DIAMETER SHALL BE 1/8" GREATER THAN ANCHOR ROD DIAMETER, UNLESS OTHERWISE NOTED. GROUT SHALL BE NON-SHRINK EPOXY. LOCATE EXISTING REINFORCING BARS PRIOR TO DRILLING HOLES. DO NOT DAMAGE EXISTING REINFORCING. METHOD OF LOCATING EXISTING REINFORCING BARS SHALL BE APPROVED BY THE STRUCTURAL ENGINEER. ALL MIS-DRILLED OR UNACCEPTABLE HOLES SHALL BE GROUTED SOLID.
16. TERMINATION OF REINFORCEMENT:
    - A. TERMINATE ALL BARS IN LAPS, 90 DEGREE BENDS, OR DOWELS INTO FOOTINGS OR PERPENDICULAR WALLS OR COLUMNS.
    - B. BEND TOP FOOTING BARS DOWN TO BOTTOM REINFORCING.
    - C. BEND BOTTOM FOOTING BARS UP WITH STANDARD 90 DEGREE BENDS.
    - D. END WALLS WITH HORIZONTAL BARS BENT DOWN OR HORIZONTAL OR BENT INTO PERPENDICULAR WALLS, COLUMNS OR CORNERS.
    - E. PROVIDE DOWELS INTO FOOTINGS FOR WALLS AND COLUMNS OF THE SAME BAR SIZE AND SPACING AS IN WALLS AND COLUMNS. LAP DOWELS PER THE LAP SCHEDULE AT THE BASE OF THE WALL OR COLUMN.
    - F. ALL REINFORCEMENT SHALL LAP PER THE LAP SPLICE SCHEDULE. LAP NO MORE THAN EVERY OTHER BAR AT A SINGLE LOCATION (50% BARS), STAGGER LAPS 5'-0".
    - G. REINFORCEMENT LAPS MAY BE MADE WITH MECHANICAL COUPLERS, TYPE 1, WHICH CAN ACHIEVE 125% OF BAR STRENGTH OR GREATER. SUBMIT ICC EVALUATION REPORT TO STRUCTURAL ENGINEER FOR REVIEW.
17. ROUGHEN SURFACES AND KEY JOINTS AT HARDENED CONCRETE. ROUGHEN ALL SURFACES AT COLD JOINTS TO ¼ INCH AMPLITUDE UNLESS NOTED OTHERWISE IN DETAILS. ROUGHEN ALL JOINTS:
    - A. PROVIDE 1.5" X 3.5" KEY JOINTS AT BOTTOM OF WALLS AND AT ENDS OF WALLS AT COLUMNS, CROSS WALLS OR CORNERS.
    - B. PROVIDE 1.5" X 3.5" X 10" KEY JOINTS AT GRADE BEAMS.
    - C. ROUGHEN SURFACES AT TOPS OF FOOTINGS BELOW WALLS AND COLUMNS.
    - D. A ROUGHEN SURFACES AT TOPS OF ALL WALLS, COLUMNS AND JOINTS WITHIN ELEMENTS

CONCRETE MASONRY UNIT NOTES

1. CONCRETE BLOCKS SHALL CONFORM TO REQUIREMENTS OF ASTM C90 GRADE N SPECIFICATION FOR HOLLOW LOAD BEARING LIGHTWEIGHT CONCRETE MASONRY UNITS. THE REQUIRED ULTIMATE COMPRESSIVE STRENGTH (f'm) OF THE CONCRETE BLOCK ASSEMBLY IS 2000 PSI.
2. MORTAR SHALL CONFORM TO ASTM C270 PROPORTION SPECIFICATION TYPE S OR ASTM C387, TYPE S.
3. MORTAR SHALL TEST NOT LESS THAN 1800 PSI AT 28 DAYS.
4. GROUT SHALL CONFORM TO ASTM C476.
5. GROUT SHALL TEST NOT LESS THAN 2000 PSI AT 28 DAYS.
6. REINFORCEMENT SHALL BE PER ASTM A615-60. LAP ALL REINFORCING BARS 48 DIAMETERS AT SPLICES. MAINTAIN 1" MINIMUM CLEAR BETWEEN PARALLEL BARS (EXCEPT AT SPLICES), AND 1/2" CLEAR BETWEEN BAR AND ANY SURFACE OF A MASONRY UNIT.
7. ALL MASONRY BLOCK CELLS SHALL BE FILLED SOLID WITH GROUT.
8. ALL HORIZONTAL BARS SHALL BE PLACED IN BOND BEAM UNITS.
9. LAY ALL CONCRETE BLOCK UNITS IN RUNNING BOND.
10. CONCRETE MASONRY UNIT CONSTRUCTION SHALL HAVE SPECIAL INSPECTION.
11. SEE ARCHITECTURAL DRAWINGS FOR LOCATIONS OF DECORATIVE CONCRETE MASONRY UNITS.

CARPENTRY NOTES

1. SILLS ON CONCRETE OR MASONRY SHALL BE PRESSURE TREATED DOUGLAS FIR LARCH 3x THICK AT ALL EXTERIOR WALLS AND INTERIOR SHEAR WALLS NOTED ON PLAN. ALL OTHER SILLS ON CONCRETE OR MASONRY MAY BE PRESSURE TREATED DOUGLAS FIR LARCH 2x THICK. THEY SHALL BE ANCHORED WITH 3/4" DIAMETER MACHINE BOLTS WITH 7" EMBEDMENT (UNLESS NOTED OTHERWISE). AT SHEAR WALLS, BOLTS SHALL HAVE NUT, CUT WASHER AND BEARING PLATE THAT EXTENDS TO 1/2" OR CLOSER TO SHEATHING-SEE SHEAR WALL SCHEDULE AND DETAILS. AT NON-SHEAR WALLS, BEARING PLATE IS NOT REQUIRED. LOCATE BOLTS 6" MINIMUM AND 12" MAXIMUM (UNLESS NOTED OTHERWISE) FROM EACH END OF EACH STICK AND NOT OVER 48" ON CENTER BETWEEN. SEE SHEAR WALL SCHEDULE OR PLANS FOR SPECIFIC SPACING OF ANCHOR BOLTS WHICH MAY BE NOTED AS LESS THAN 48" ON CENTER. THERE SHALL BE AT LEAST 2 BOLTS IN EACH STICK, WHERE NOTCHES FOR PIPES, ETC., EXCEED 1/3 THE WIDTH OF THE SILL, PLACE A BOLT WITHIN 6" OF EACH SIDE OF NOTCH. TIEDOWN BOLTS SHALL NOT BE CONSIDERED AS SILL BOLTS.
2. FRAMING LUMBER: DOUGLAS FIR-LARCH, MANUFACTURED AND GRADED IN ACCORDANCE WITH THE WEST COAST LUMBER INSPECTION BUREAU "STANDARD GRADING RULES NO. 17", LATEST EDITION INCLUDING ALL SUPPLEMENTS.
3. STRUCTURAL LIGHT FRAMING: NO. 1, 2" TO 4" THICK
   - BEAMS: NO. 1, FREE OF HEART CENTER, 5" AND THICKER
   - POSTS: NO. 1
   - STUDS: 2x4 OR 3x4 – NO. 2
   - 2x6 AND LARGER - NO. 2
4. ALL FRAMING LUMBER SHALL BE HAVE A MAXIMUM MOISTURE CONTENT OF 19 PERCENT AT TIME OF INSTALLATION. LUMBER USED IN WALLS AND FLOORS SHALL HAVE A MAXIMUM MOISTURE CONTENT OF 19% AT THE TIME OF CLOSURE.
5. PIPES EXCEEDING ONE-THIRD OF THE PLATE WIDTH SHALL NOT BE PLACED IN PARTITIONS USED AS BEARING OR SHEAR WALLS, UNLESS OTHERWISE DETAILED OR COMPLETELY FURRED CLEAR OF THE STUDS. PIPES SHALL PASS THROUGH THE CENTER OF THE PLATES USING A NEATLY BORED HOLE. NO NOTCHING WILL BE ALLOWED.
6. LAG SCREWS SHALL BE SCREWED (NOT DRIVEN) INTO PLACE. DRILL HOLES SAME DIAMETER AND DEPTH AS SHANK. THEN DRILL HOLE 60-70% OF DIAMETER AT BASE OF THREAD FOR THE THREADED PORTION. USE STEEL PLATE WASHERS AS REQUIRED FOR THE SAME BOLT SIZE.
7. BOLTS IN WOOD SHALL BE MACHINE BOLTS UNLESS OTHERWISE NOTED. ALL MACHINE BOLTS SHALL HAVE CUT THREADS.
8. BOLT HOLES IN WOOD SHALL BE THE DIAMETER OF THE BOLT PLUS 1/16".
9. PROVIDE PLATE WASHER UNDER HEAD AND NUT OF BOLT WHERE BEARING IS AGAINST WOOD. LENGTH OF THREAD SHALL BE SUCH THAT THREADS DO NOT BEAR AGAINST WOOD. ALL NUTS SHALL BE TIGHTENED WHEN PLACED AND RE-TIGHTENED AT COMPLETION OF THE JOB IMMEDIATELY BEFORE CLOSING WITH FINISH CONSTRUCTION.
10. CONNECTORS FOR WOOD CONSTRUCTION NOTED ON PLANS AND DETAILS SHALL BE SIMPSON COMPANY STRONG-TIE CONNECTORS OR APPROVED EQUAL.
11. STUDS SHALL BE ONE PIECE BETWEEN FLOORS AND FROM FLOOR TO ROOF. ALIGN CENTERLINE OF STUDS WITH CENTERLINE OF FLOOR JOISTS. ALIGN CENTERLINE OF STUDS FOR FULL HEIGHT OF STRUCTURE TYPICAL.
12. ALL POSTS SHALL BE FULL HEIGHT FROM FOUNDATION TO ROOF. WHERE POSTS ARE DISCONTINUOUS AT JOIST SPACE AND/OR FROM TOP OF BEAMS/HEADERS TO LOWER TOP PLATE, BLOCK THIS SPACE WITH STUD POST.
13. JOISTS SUPPORTING MECHANICAL EQUIPMENT SHALL BE DOUBLE JOISTS (DJ) UNLESS NOTED OTHERWISE.
14. FASTENERS PENETRATING PRESSURE-PRESERVATIVE TREATED AND FIRE-RETARDANT TREATED WOOD SHALL BE HOT-DIPPED GALVANIZED PER ASTM A153, CLASS D.

SHEATHING NOTES

1. ROOF, FLOORS, ALL EXTERIOR WALLS AND INTERIOR SHEAR WALLS (WHERE NOTED ON STRUCTURAL PLANS) SHALL BE SHEATHED WITH DOUGLAS FIR SHEATHING WITH EXTERIOR GLUE AS FOLLOWS:
   - ROOF: 19/32" T&G APA STRUCTURAL I RATED PLYWOOD, 40/20, EXPOSURE 1
   - BREEZEWAY: 15/32" T&G APA STRUCTURAL I RATED (5-PLY) PLYWOOD, 40/20, EXPOSURE 1
   - COVERED WALKWAY: 15/32" T&G APA STRUCTURAL I RATED (5-PLY) PLYWOOD, 40/20, EXPOSURE 1
   - PASSAGEWAY: 15/32" T&G APA STRUCTURAL I RATED (5-PLY) PLYWOOD, 40/20, EXPOSURE 1
   - WALLS: 1/2", APA STRUCTURAL I RATED SHEATHING, 48/24, EXPOSURE 1
2. SHEATHING SHALL BE PLYWOOD.
3. ALL EXTERIOR WALLS SHALL BE SHEATHED.
4. ALL SHEATHING USED STRUCTURALLY SHALL EXTEND CONTINUOUSLY BEHIND ALL FINISH. WHERE IT IS TO BE PLASTERED, IT SHALL BE PROTECTED BY AN UNBROKEN LAYER OF MOISTURE-TIGHT PAPER UNDER LATHING.
5. IN GENERAL, SHEETS SHALL BE 4'-0" x 8'-0". MINIMUM SHEET DIMENSION IS 24 INCHES, UNLESS ALL EDGES ARE FULLY SUPPORTED BY FRAMING MEMBERS OR BLOCKING. THE LONG DIMENSION MAY BE LAID EITHER HORIZONTALLY OR VERTICALLY AT WALLS. ROOF AND FLOOR SHEETS SHALL BE LAID WITH FACE PLIES ACROSS JOISTS OR FRAMING MEMBERS AND WITH END JOINTS STAGGERED 4'-0". USE PLYCLIPS HALFWAY BETWEEN EACH SUPPORT AT UNBLOCKED ROOFS. ALL SHEATHING JOINTS SHALL BE ACCURATELY CENTERED ON SUPPORTING ELEMENTS. ROOF AND FLOOR SHEATHING MAY BE UNBLOCKED. GLUE FLOOR SHEATHING TO ALL SUPPORTS INCLUDING BLOCKING, WHERE NOTED, WITH AN ADHESIVE RECOMMENDED BY THE AMERICAN PLYWOOD ASSOCIATION FOR THIS PURPOSE.

NAILING NOTES

1. ALL NAILS SHALL BE COMMON WIRE NAILS. WHERE NAILS TEND TO SPLIT THE WOOD, NAIL HOLES SHALL BE PRE-DRILLED.
2. PROVIDE MINIMUM NAILING REQUIREMENTS AS SET FORTH IN FASTENING SCHEDULE SHEET S1.04.
3. PLYWOOD NAILING:
   - AT ROOF: 10d @ 4" ON CENTER, UNLESS NOTED OTHERWISE, ALONG SUPPORTED PANEL EDGES AND WHERE NOTED ON PLANS AND DETAILS AS EDGE NAILING (EN) AND 10d @ 12" ON CENTER ALONG INTERMEDIATE FRAMING MEMBERS. SEE PLANS FOR LOCATION OF BLOCKED DIAPHRAGMS.
   - AT WALLS: SEE SHEAR WALL SCHEDULE.
4. MAINTAIN ACCURATE NAIL SPACING AS INDICATED. NAIL SPACING CLOSER THAN SPECIFIED WILL BE CAUSE FOR REJECTION OF THE WORK.
5. NAILS PENETRATING PRESSURE-PRESERVATIVE TREATED AND FIRE-RETARDANT TREATED WOOD SHALL BE HOT-DIPPED GALVANIZED PER ASTM A153, CLASS D.

STRUCTURAL GLUED LAMINATED MEMBER NOTES

1. ALL STRUCTURAL GLUED LAMINATED MEMBERS SHALL BE COMBINATION 24F-V4 DF/DF (COMBINATION 24F-V8 DF/DF FOR CONTINUOUS OR CANTILEVER SPANS) FABRICATED AND ERECTED IN ACCORDANCE WITH ANSI/ASTM STANDARD A190.1 AND ASTM D3737.
2. ADHESIVE SHALL BE EXTERIOR TYPE ADHESIVE MEETING REQUIREMENTS OF U.S. COMMERCIAL STANDARD PS-56 AND ASTM 2559.
3. THE FABRICATOR SHALL FURNISH AITC CERTIFICATES AND A LAMINATING REPORT TO THE STRUCTURAL ENGINEER AND THE BUILDING INSPECTION DEPARTMENT PRIOR TO FRAMING INSPECTION.

ENGINEERED LUMBER NOTES

1. ALL TIMBERSTRAND LAMINATED STRAND LUMBER MEMBERS (LSL), MICROLLAM LAMINATED VENEER LUMBER (LVL), AND PARALLAM PARALLEL STRAND LUMBER (PSL), SHALL BE AS MANUFACTURED BY WEYERHAEUSER AND SHALL BE FABRICATED AND ERECTED IN ACCORDANCE WITH ICC ES ESR-1387.
2. TIMBERSTRAND MEMBERS (LSL) SHALL HAVE THE FOLLOWING PROPERTIES:
   - ALLOWABLE FLEXURAL STRESS: 2325 PSI
   - ALLOWABLE SHEAR STRESS: 310 PSI
   - MODULUS OF ELASTICITY: 1,550,000 PSI
3. MICROLLAM MEMBERS (LVL) SHALL HAVE THE FOLLOWING PROPERTIES:
   - ALLOWABLE FLEXURAL STRESS: 2600 PSI
   - ALLOWABLE SHEAR STRESS: 285 PSI
   - MODULUS OF ELASTICITY: 2,000,000 PSI
4. PARALLAM MEMBERS (PSL) SHALL HAVE THE FOLLOWING PROPERTIES:
   - ALLOWABLE FLEXURAL STRESS: 2900 PSI
   - ALLOWABLE SHEAR STRESS: 290 PSI
   - MODULUS OF ELASTICITY: 2,200,000 PSI
5. DO NOT USE PARALLAM, MICROLLAM OR TIMBERSTRAND MEMBERS WHERE THEY MAY BE EXPOSED TO THE WEATHER. PROTECT THESE MEMBERS FROM MOISTURE UNTIL CLOSED IN WITH FINISH CONSTRUCTION.

STRUCTURAL SHEET LIST

SHEET NUMBER	SHEET NAME
S1.01	GENERAL NOTES
S1.02	GENERAL NOTES CONTINUED AND ABBREVIATIONS
S1.03	ROOF LOADING DIAGRAMS
S1.04	FASTENING SCHEDULE
S2.31	WEST BUILDINGS - FOUNDATION / FIRST FLOOR FRAMING PLAN
S2.32	EAST BUILDINGS - FOUNDATION / FIRST FLOOR FRAMING PLAN
S2.41	WEST BUILDINGS - ROOF FRAMING PLAN
S2.42	EAST BUILDINGS - ROOF FRAMING PLAN
S3.01	WALL FRAMING ELEVATIONS - WEST BUILDING WORKSHOP/STORAGE
S3.02	WALL FRAMING ELEVATIONS - WEST BUILDING - HEAD HOUSE
S3.03	WALL FRAMING ELEVATIONS - EAST BUILDING - CLASS LAB 1
S3.04	WALL FRAMING ELEVATIONS - EAST BUILDING - STUDENT/FACULTY
S3.05	WALL FRAMING ELEVATIONS - EAST BLDG- CLASS LAB 2
S3.06	WALL FRAMING ELEVATIONS - EAST BLDG- CLASS LAB 3
S4.01	TYPICAL CONCRETE DETAILS
S4.02	TYPICAL CONCRETE DETAILS
S4.03

PRE-ENGINEERED WOOD I-JOIST NOTES

1. ALL PRE-ENGINEERED WOOD I-JOISTS SHALL BE AS MANUFACTURED BY WEYERHAUSER UNLESS OTHERWISE NOTED.
2. TJI JOIST SERIES SHALL CONFORM TO ICC ES ESR-1387 AND ICC ES ESR-1153.
3. APPROVED COPIES OF WOOD I-JOIST SHOP DRAWINGS SHALL BE FORWARDED TO THE BUILDING INSPECTION DEPARTMENT.
4. TEMPORARY BRACING AND BRIDGING PER MANUFACTURER'S RECOMMENDATIONS SHALL BE INSTALLED TO HOLD WOOD I-JOIST TRUE AND PLUMB UNTIL PERMANENT ROOF SHEATHING IS INSTALLED.

STRUCTURAL STEEL NOTES

1. STRUCTURAL STEEL SHALL BE ASTM A36 UNLESS OTHERWISE NOTED. ALL W AND WT SHAPES SHALL BE ASTM A992. ALL HOLLOW STEEL SECTIONS SHALL BE ASTM A500 GRADE B.
2. ALL STRUCTURAL STEEL SHALL BE FABRICATED AND ERECTED IN ACCORDANCE WITH AISC SPECIFICATIONS, LATEST EDITION.
3. ALL BOLTED CONNECTIONS STEEL TO STEEL SHALL BE MADE WITH 3/4" DIAMETER HIGH-STRENGTH (A325-X) BOLTS UNLESS OTHERWISE NOTED. BOLTED CONNECTIONS FOR SEISMIC APPLICATIONS SHALL BE MADE WITH 3/4" DIAMETER HIGH-STRENGTH (A-325-SC) BOLTS. ANCHOR BOLTS AND THREADED RODS SHALL BE ASTM F1554, GRADE 36 OR GRADE 55 WHEN NOTED.
4. ALL WELDING SHALL BE DONE BY CERTIFIED WELDERS.
5. ALL TESTING AND INSPECTION OF SHOP AND FIELD WELDING OPERATIONS SHALL BE MADE BY A CERTIFIED WELDING INSPECTOR.
6. ALL WELDS SHALL BE TESTED AND INSPECTED IN ACCORDANCE WITH
   A. FOR SCHOOLS: CAC TITLE 24 DIVISION T21 SECTION T21-2714
   B. THE SPECIFICATIONS
   C. THE CALIFORNIA BUILDING CODE
   D. AWS D1.1, AS WELL AS D1.8 FOR SEISMIC ELEMENTS, AND D1.4 FOR REINFORCING STEEL.
7. ALL WELDING ELECTRODES SHALL BE E70 SERIES. THE WELDING INSPECTOR SHALL CHECK THE WELDER'S CERTIFICATION, MATERIAL, EQUIPMENT, FIT UP AND PROCEDURES AS WELL AS THE WELDS. THE INSPECTOR SHALL USE ALL MEANS NECESSARY TO DETERMINE THE QUALITY OF THE WELDS, INCLUDING THE USE OF GAMMA RAY, MAGNAFLUX, TREPANNING, SONICS OR ANY OTHER AID TO VISUALLY INSPECT AND TO ASCERTAIN THE ADEQUACY OF THE WELDING. THE INSPECTOR SHALL FURNISH THE ARCHITECT AND THE STRUCTURAL ENGINEER WITH A REPORT VERIFYING THAT ALL WELDS HAVE BEEN DONE IN CONFORMITY WITH THE PLANS, SPECIFICATIONS, AWS D1.1 AND ANY APPLICABLE CODES. UNLESS NOTED OTHERWISE ON THE DRAWINGS, THE FABRICATION AND ERECTION REQUIREMENTS MAY DICTATE FIELD WELDING AND/OR SHOP WELDING. THE CONTRACTOR SHALL BE RESPONSIBLE FOR DETERMINING THE METHOD OF WELDING TO FULFILL THESE REQUIREMENTS. ALL ASSOCIATED COSTS SHALL BE INCLUDED IN THE CONTRACT PRICE. ALL WELDS USED IN MEMBERS AND CONNECTIONS IN THE SEISMIC LOAD RESISTING SYSTEM AS DEFINED ON THE PLANS SHALL BE MADE WITH A FILLER METAL THAT CAN PRODUCE WELDS THAT HAVE A MINIMUM CHARPY V-NOTCH TOUGHNESS OF 20 FT-LB AT 0 DEGREES FAHRENHEIT AS DETERMINED BY THE APPROPRIATE AWS A5 CLASSIFICATION TEST METHOD OR MANUFACTURER CERTIFICATION.
8. ALL WELDS DESIGNATED AS DEMAND CRITICAL SHALL BE MADE WITH A FILLER METAL THAT CAN PRODUCE WELDS THAT HAVE A MINIMUM CHARPY V-NOTCH TOUGHNESS OF 20 FT-LB AT -20 DEGREES FAHRENHEIT AS DETERMINED BY THE APPROPRIATE AWS A5 CLASSIFICATION TEST METHOD OR MANUFACTURER CERTIFICATION, AND 40 FT-LB AT 70 DEGREES FAHRENHEIT AS DETERMINED BY APPENDIX X OF AISC 341-16 OR OTHER APPROVED METHOD, WHEN THE STEEL FRAME IS NORMALLY ENCLOSED AND MAINTAINED AT A TEMPERATURE OF 50 DEGREES FAHRENHEIT OR HIGHER.
9. SUBMIT SHOP DRAWINGS TO ARCHITECT FOR REVIEW PRIOR TO FABRICATION. SHOP DRAWINGS SHALL INCLUDE ITEMS REQUIRED BY THE SPECIFICATIONS AND THE FOLLOWING:
   A. CONNECTION MATERIAL SPECIFICATIONS AND SIZES
   B. LOCATIONS OF DEMAND CRITICAL WELDS
   C. LOCATIONS AND DIMENSIONS OF PROTECTED ZONES
   D. GUSSET PLATES DRAWN TO SCALE
   E. WELDING REQUIREMENTS AS SPECIFIED IN APPENDIX W OF AISC 341-16.
10. WHERE CLOSER THAN AISC TOLERANCES ARE NECESSARY, SUCH AS FOR ALIGNMENT OF STEEL STUDS, MULLIONS, GFRC PANELS, ETC., FIELD WELDING WILL BE REQUIRED TO MEET THE NECESSARY TOLERANCES WITH NO ADDITIONAL COSTS TO THE OWNER.
11. USE ONE TYPE OF WELDING ELECTRODE THROUGHOUT ANY ONE CONNECTION.
12. WELDING OF REINFORCING STEEL TO STRUCTURAL STEEL SHALL BE DONE BY STRUCTURAL STEEL SUB-CONTRACTOR.
13. BOLT HOLES IN STEEL SHALL BE 1/16" OVERSIZE UNLESS OTHERWISE NOTED.
14. STRUCTURAL STEEL CONTRACTOR SHALL EXCHANGE SHOP DRAWINGS WITH STEEL DECK SUB-CONTRACTOR FOR COORDINATION.

STEEL DECKING NOTES

1. SEE STRUCTURAL DETAILS FOR TYPE OF STEEL DECKING FOR THIS PROJECT.
2. STEEL DECKING PANEL UNITS SHALL BE FORMED FROM ZINC COATED STEEL SHEETS WITH A MINIMUM YIELD STRENGTH OF 33,000 PSI. ZINC COATING SHALL BE G60 AND 0.5 OUNCE MINIMUM PER SQUARE FOOT OF STEEL SHEET.
3. SECTION PROPERTIES SHALL CONFORM TO THE AISI SPECIFICATIONS FOR THE DESIGN OF LIGHT GAGE COLD FORMED STEEL STRUCTURAL MEMBERS.
4. DECK PANELS SHALL SPAN OVER THREE OR MORE SUPPORTS WHERE STRUCTURAL FRAMING PERMITS AND AS SHOWN ON STRUCTURAL PLANS AND DETAILS AND SHALL INCLUDE ALL ACCESSORIES FOR THIS TYPE OF DECKING SUCH AS CLOSURES, FLASHING, COVER CAPS, ETC. PANELS SHALL BE ALIGNED AND PLACED IN ACCORDANCE WITH THE MANUFACTURER'S APPROVED STANDARD DETAILS AND SHOP DRAWINGS.
5. WELDING OF STEEL DECK PANELS TO SUPPORTING STRUCTURAL FRAMING AS NOTED ON STRUCTURAL DETAILS AND/OR AS CALLED FOR ON APPROVED SHOP DRAWINGS SHALL BE DONE BY CERTIFIED WELDERS.
6. STEEL DECKING SUB-CONTRACTOR SHALL EXCHANGE SHOP DRAWINGS WITH STRUCTURAL STEEL SUB-CONTRACTOR FOR COORDINATION.

EXPANSION ANCHORS IN HARDENED CONCRETE OR MASONRY UNIT NOTES

1. INSTALLATION: THE ANCHORS MUST BE INSTALLED IN ACCORDANCE WITH THE REQUIREMENTS GIVEN IN THE ESR REPORT RECOMMENDATIONS FOR THE SPECIFIC ANCHOR.
2. HOLES FOR EXPANSION ANCHORS SHALL BE DRILLED WITH ROTARY HAMMER OR OTHER SUITABLE METHODS TO ENSURE EXISTING REINFORCEMENT IS NOT DAMAGED. HOLE DIAMETER SHALL BE AS REQUIRED BY MANUFACTURER. LOCATE EXISTING REINFORCING BARS PRIOR TO DRILLING HOLES. DO NOT DAMAGE EXISTING REINFORCING. METHOD OF LOCATING EXISTING REINFORCING BARS SHALL BE APPROVED BY THE STRUCTURAL ENGINEER. ALL MIS-DRILLED OR UNACCEPTABLE HOLES SHALL BE GROUTED SOLID.
3. JOB TESTING AND INSPECTION: CONTINUOUS VISUAL INSPECTION OF ANCHOR INSTALLATION IS REQUIRED. TEST FIRST TEN INSTALLED ANCHORS OF EACH SIZE TO TENSION PROOF LOAD. IF ALL PASS, TEST 10% OF REMAINING ANCHORS. IF ANY ANCHOR FAILS, TEST ALL ANCHORS UNTIL 10 SUCCESSFUL CONSECUTIVE TESTS ARE MADE, THEN RESUME 10% TESTING FREQUENCY. THE LOAD TEST SHALL BE PERFORMED IN THE PRESENCE OF THE PROJECT INSPECTOR. THE LOAD MAY BE APPLIED BY ANY METHOD THAT WILL EFFECTIVELY MEASURE THE TENSION IN THE ANCHOR, SUCH AS DIRECT PULL WITH A HYDRAULIC JACK, A TORQUE WRENCH CALIBRATED USING THE SPECIFIC ANCHOR, CALIBRATED SPRING-LOADED DEVICES, ETC. ANCHORS IN WHICH THE TORQUE IS USED TO EXPAND THE ANCHOR WITHOUT APPLYING TENSION TO THE BOLT MAY NOT BE VERIFIED WITH A TORQUE WRENCH.
4. ALL EXPANSION ANCHORS IN CONCRETE SHALL BE HILTI KB-TZ2, (PER ESR-4266), SIMPSON STRONG-BOLT 2 (PER ESR 3037) OR APPROVED EQUAL.
5. ALL EXPANSION ANCHORS IN MASONRY SHALL BE HILTI KWIK BOLT-3, (PER ESR-1385), SIMPSON STRONG-BOLT 2 (PER IAPMO UES ER-240), OR APPROVED EQUAL.
6. TEST INSPECTOR SHALL VERIFY ALL EXPANSION ANCHORS NOT TENSION LOAD TESTED FOR MINIMUM INSTALLATION TORQUE NOTED IN SCHEDULE BELOW.
7. TENSION PROOF LOAD SHALL BE BY AN INDEPENDENT TESTING LABORATORY.

8. EXPANSION ANCHOR BOLT SCHEDULE:

A. CARBON STEEL (CS) AND STAINLESS STEEL (SS) HILTI KB-TZ2 IN NORMAL WEIGHT CONCRETE WITH f'c = 3000 psi:

CARBON STEEL (CS) AND STAINLESS STEEL (SS) HILTI KB-TZ2 IN NORMAL WEIGHT CONCRETE WITH f'c = 3000 psi					
ANCHOR DIAMETER	MINIMUM HOLE DEPTH	MINIMUM EFFECTIVE EMBEDMENT	ALLOWABLE STATIC LOAD (LBS)	TENSION-PROOF LOAD (LBS)	MINIMUM INSTALLATION TORQUE
3/8"	2.62"	2.00"	1054 (CS) /1086 (SS)	2108	25
1/2"	4.00"	3.25"	2500 (CS) /2533 (SS)	4648	40
5/8"	4.75"	4.00"	3458 (CS) /2970 (SS)	6916	60
3/4"	5.75"	4.75"	4475 (CS) /4475 (SS)	8950	110

B. CARBON STEEL HILTI KB3 INSTALLED IN FACE SHELL OF CONCRETE MASONRY UNIT WITH f'm = 1500 psi AND NO CLOSER THAN 4" TO EDGE OF WALL:

CARBON STEEL (CS) HILTI KB3 INSTALLED IN FACE SHELL OF CONCRETE MASONRY UNIT f'c = 1500 psi AND NO CLOSER THAN 4" TO EDGE OF WALL					
ANCHOR DIAMETER	MINIMUM HOLE DEPTH	MINIMUM EFFECTIVE EMBEDMENT	ALLOWABLE STATIC LOAD (LBS)	TENSION-PROOF LOAD (LBS)	MINIMUM INSTALLATION TORQUE
1/4"	*	2.00"	432	864	4
3/8"	*	2.00"	626	1252	15
1/2"	*	3.50"	724	1448	25
5/8"	*	4.00"	994	1988	65
3/4"	*	4.38"	1316	2632	120
*HOLE DEPTH SHALL BE LENGTH OF ANCHORS PLUS ONE DIAMETER					

EPOXY ANCHORS AND DOWELS IN HARDENED CONCRETE OR MASONRY UNIT NOTES

1. EPOXY FOR SETTING ANCHORS OR DOWELS IN HARDENED CONCRETE SHALL BE SIMPSON SET-3G PER ESR 4057, HILTI HIT-RE 500v3 PER ESR 3814, OR APPROVED EQUAL.
2. EPOXY FOR SETTING ANCHORS IN CONCRETE MASONRY SHALL BE SIMPSON SET-XP (PER IAMPO REPORT 265), HILTI HIT-HY 270 PER ESR 4143, OR APPROVED EQUAL.
3. HOLES FOR EPOXY ANCHORS SHALL BE DRILLED WITH ROTARY HAMMER OR OTHER SUITABLE METHODS TO ENSURE EXISTING REINFORCEMENT IS NOT DAMAGED. HOLE DIAMETER SHALL BE AS REQUIRED BY MANUFACTURER. LOCATE EXISTING REINFORCING BARS (AS REQUIRED USING X-RAY) PRIOR TO DRILLING HOLES. DO NOT DAMAGE EXISTING REINFORCING. METHOD OF LOCATING EXISTING REINFORCING BARS SHALL BE APPROVED BY THE STRUCTURAL ENGINEER. ALL MIS-DRILLED OR UNACCEPTABLE HOLES SHALL BE GROUTED SOLID.
4. JOB TESTING AND INSPECTION: CONTINUOUS SPECIAL INSPECTION OF ALL ANCHOR AND DOWEL INSTALLATION IS REQUIRED. TESTING SHALL BE AS FOLLOWS:
   A. THREADED RODS: TEST FIRST 5 INSTALLED RODS OF EACH SIZE TO TENSION PROOF LOAD SHOWN ON EPOXY ANCHOR SCHEDULE. IF ALL PASS, TEST 5% OF REMAINING RODS. IF ANY ROD FAILS, TEST ALL RODS UNTIL 10 SUCCESSFUL CONSECUTIVE TESTS ARE MADE, THEN RESUME 5% TESTING FREQUENCY. THE LOAD TEST SHALL BE PERFORMED IN THE PRESENCE OF THE PROJECT INSPECTOR.
   B. HOLDOWN ANCHORS: TEST 100% OF ANCHORS USED TO TENSION PROOF LOAD PER TABLE ON TYPICAL HOLDOWN DETAIL.
   C. REINFORCING BAR ANCHORS, #5 AND LARGER: TEST PER THREADED ROD REQUIREMENTS ABOVE
   D. REINFORCING BAR ANCHORS #4 AND SMALLER: NO TESTING REQUIRED. VISUAL OBSERVATION ONLY.
5. UNLESS OTHERWISE SHOWN IN THE DRAWINGS, ALL HOLES SHALL BE DRILLED PERPINDICULAR TO THE CONCRETE SURFACE.

TESTS, INSPECTIONS AND OBSERVATIONS NOTES

1. TESTS AND INSPECTIONS SHALL BE PROVIDED FOR ALL ITEMS AS REQUIRED BY THE CALIFORNIA BUILDING CODE.
2. SEE LIST OF REQUIRED TESTS AND SPECIAL INSPECTIONS, FORM DSA 103, FOR SPECIAL INSPECTION REQUIRMENTS. z
3. THE OWNER SHALL BE RESPONSIBLE FOR RETAINING AN INDEPENDENT TESTING AND INSPECTION LABORATORY TO PERFORM ALL REQUIRED TESTING AND INSPECTIONS.
4. THE CONTRACTOR SHALL BE RESPONSIBLE FOR PROVIDING THE TESTING AND INSPECTION LABORATORY WITH CONSTRUCTION SCHEDULES TO ENSURE PROPER COORDINATION OF WORK.
5. IN ADDITION TO SPECIAL INSPECTION, PERIODIC STRUCTURAL OBSERVATION BY THE STRUCTURAL ENGINEER OF RECORD SHALL BE PERFORMED PER THE STRUCURAL OBSERVATION REQUIREMENTS ON FORM DSA-103.

THE CONTRACTOR SHALL NOTIFY THE STRUCTURAL ENGINEER OR INSPECTOR A MINIMUM OF 48 HOURS (EXCLUDING WEEKEND DAYS) PRIOR TO THE TIME OF A REQUIRED INSPECTION OR OBSERVATION.

SYMBOLS AND ABBREVIATIONS

A/S2.1	SECTION A ON DRAWING S2.1
@	AT
&	AND
°	DEGREE
Ø OR DIA	DIAMETER
#	NUMBER OR POUND
(E)	EXISTING
(N)	NEW
AB	ANCHOR BOLT
ADDL	ADDITIONAL
ADJ	ADJACENT
AFF	ABOVE FINISH FLOOR
ALT	ALTERNATE
APPROX	APPROXIMATE
ARCH	ARCHITECT OR ARCHITECTURAL
ATTN	ATTENTION
BD	BOARD
BLDG	BUILDING
BLK	BLOCK
BLKG	BLOCKING
BM	BEAM
BO	BOTTOM OF
BOT	BOTTOM
BS	BOTH SIDES
BTWN	BETWEEN
C	COLLECTOR, OR CONTROL JOINT
CBC	CALIFORNIA BUILDING CODE
CJ	CONSTRUCTION JOINT
CL	CENTERLINE
CLG	CEILING
CLR	CLEAR
CMU	CONCRETE MASONRY UNIT
COL	COLUMN
CONC	CONCRETE OR CONCENTRATED
COND	CONDITION
CONN	CONNECTION
CONT	CONTINUOUS
CJP	COMPLETE JOINT PENETRATION WELD
CTSK	COUNTERSINK
d	PENNY
D	DEPTH
DB	DROP BEAM
DBL	DOUBLE
DCW	DEMAND CRITICAL WELD
DEMO	DEMOLISH
DET	DETAIL
DF	DOUGLAS FIR
DIAG	DIAGONAL
DIM(S)	DIMENSION(S)
DJ	DOUBLE JOIST
DL	DEAD LOAD
DN	DOWN
DO	DITTO
DP	DEEP
DTLS	DETAILS
DWG(S)	DRAWING(S)
EA	EACH
EB	EXPANSION BOLT
EE	EACH END
EF	EACH FACE
EJ	EXPANSION JOINT
EL	ELEVATION
ELEC	ELECTRICAL
EMBED	EMBEDMENT
EN	EDGE NAILING
ENGR	ENGINEER
EQ	EQUAL
EQUIP	EQUIPMENT
ES	EACH SIDE
ETC	ETCETERA
EW	EACH WAY
EXC	EXCAVATE
EXT	EXTERIOR
FDN	FOUNDATION
FF	FINISH FLOOR
FIN	FINISH
FLR	FLOOR
FOC	FACE OF CONCRETE
FOM	FACE OF MASONRY
FOS	FACE OF STUD
FS	FAR SIDE
FT	FEET
FTG	FOOTING
GA	GAGE, GAUGE
GALV	GALVANIZED
GB	GRADE BEAM
GLM	GLUED LAMINATED
GYP BD	GYPSUM BOARD
HD	HOLDOWN
HDG	HOT-DIPPED GALVANIZED
HDR	HEADER
HGR	HANGER
HOR	HORIZONTAL
HP	HIGH POINT
HSB	HIGH STRENGTH BOLT
HSS	HOLLOW STEEL SECTION
HT	HEIGHT
ID	INSIDE DIAMETER
IF	INSIDE FACE
INT	INTERIOR
INV	INVERT
JST	JOIST
JT(S)	JOINT(S)
K	KIPS (1000 LBS)
LBS	POUNDS
LG	LONG
LL	LIVE LOAD
LLH	LONG LEG HORIZONTAL
LLV	LONG LEG VERTICAL
LP	LOW POINT
LSL	TIMBERSTRAND LAMINATED STRAND LUMBER
LT	LIGHT
LTWT	LIGHTWEIGHT
LVL	MICROLLAM LAMINATED VENEER
MATL	MATERIAL
MAX	MAXIMUM
MB	MACHINE BOLT
MECH	MECHANICAL
MFR	MANUFACTURER
MIN	MINIMUM
MISC	MISCELLANEOUS
MTL	METAL
NIC	NOT IN CONTRACT
NOM	NOMINAL
NTS	NOT TO SCALE
NS	NEAR SIDE
OSB	ORIENTED STRAND BOARD
OC	ON CENTER
OD	OUTSIDE DIAMETER
OH	OPPOSITE HAND
OPNG	OPENING
OPP	OPPOSITE
P#	STEEL PIPE (# = NOMINAL DIAMETER)
PERF	PERFORATED
PDF	POWDER DRIVEN FASTENER
PDP	POWDER DRIVEN PIN
PHD	PREDEFLECTED HOLDOWN
PL	PLATE
PP	PARTIAL PENETRATION WELD
PROP	PROPERTY
PSF	POUNDS PER SQUARE FEET
PSI	POUNDS PER SQUARE INCH
PSL	PARALLAM PARALLEL STRAND LUMBER
PT	POINT
PTDF	PRESSURE TREATED DOUGLAS FIR LUMBER
PTN	PARTITION
PW	STRUCTURAL PLYWOOD
PW EN	PLYWOOD EDGE NAILING
QAP	QUALITY ASSURANCE PROGRAM
RAD	RADIUS
RBS	REDUCED BEAM SECTION
RDP	REGISTERED DESIGN PROFESSIONAL
REF	REFERENCE
RECT	RECTANGULAR
REINF	REINFORCING
REQD	REQUIRED
RET WALL	RETAINING WALL
RW	REDWOOD LUMBER
SAD	SEE ARCHITECTURAL DRAWING OR SEE ARCHITECTURAL DETAIL
SCD	SEE CIVIL/SITE DRAWINGS
SCHED	SCHEDULE
SEC	SECTION
SED	SEE ELECTRICAL DRAWINGS
SHT	SHEET
SHTG	SHEATHING
SIM	SIMILAR
SLD	SEE LANDSCAPE DRAWINGS
SLRS	SEISMIC LOAD RESISTING SYSTEM
SMD	SEE MECHANICAL DRAWINGS OR SEE MECHANICAL DETAIL
SMS	SHEET METAL SCREW
SOG	SLAB ON GRADE
SPD	SEE PLUMBING DRAWINGS
SPEC(S)	SPECIFICATION(S)
SQ	SQUARE
SS	SOLID SAWN
STAG	STAGGERED
STD	STANDARD
STIFF	STIFFENER
STL	STEEL
STRUCT	STRUCTURAL
SW	SHEAR WALL
SWL	SHEAR WALL LENGTH
SYM	SYMMETRICAL
TB	TIE BEAM
T&B	TOP & BOTTOM
TDS	TIEDOWN SYSTEM
T&G	TONGUE & GROOVE
THK	THICK
THRU	THROUGH
TN	TOENAIL
T.O.	TOP OF
TOC	TOP OF CONCRETE
TOF	TOP OF FOOTING
TO PW	TOP OF PLYWOOD
TOS	TOP OF STEEL OR SLAB
TOW	TOP OF WALL
TYP	TYPICAL
UON	UNLESS OTHERWISE NOTED
URM	UNREINFORCED MASONRY
VENT	VENTILATION
VERT	VERTICAL
VIF	VERIFY IN FIELD
W/	WITH
WD	WOOD
WF	WIDE FLANGE
W/O	WITHOUT
WP	WATERPROOF OR WORK POINT
WT	WEIGHT
WWF	WELDED WIRE FABRIC
WWM	WELDED WIRE MESH

APPROVALS

IDENTIFICATION STAMP
DIV. OF THE STATE ARCHITECT
APP: 01-119409 INC:
REVIEWED FOR
SS ☑ FLS ☑ ACS ☑
DATE: 03/14/2022

NOLL & TAM ARCHITECTS
729 Heinz Avenue
Berkeley, CA 94710
tel 510.542.2200
fax 510.542.2201

SEAL

REGISTERED PROFESSIONAL ENGINEER STEPHEN R. DITESSANTE No. S03527 STRUCTURAL STATE OF CALIFORNIA

IDA STRUCTURAL ENGINEERS
1629 Telegraph Ave
Suite 300
Oakland, CA 94612
tel: 510.834.1629
ida-se.com

IDA PROJECT NUMBER: 20012

PROJECT TITLE

Peralta Community College District
MERRITT LANDSCAPE HORTICULTURE COMPLEX

12500 Campus Drive
Oakland, CA 94616

BID SET

ISSUE DATE 03/03/2022
N&T JOB NUMBER 22003

REVISIONS

	DATE	DESCRIPTION

DRAWN BY AI CHECKED BY GE, SDJ

SHEET TITLE

GENERAL NOTES CONTINUED AND ABBREVIATIONS

SHEET NUMBER

S1.02

3/2/2022 5:58:14 PM BIM 360://PCCD Merritt Horticulture/IDA20012 Merritt Horticulture_R20.rvt

LOADING DIAGRAMS LEGEND

DL = 35 PSF (BUILDING ROOF)
LL = 20 PSF (BUILDING ROOF, REDUCIBLE)

DL = 25 PSF (COVERED WALKWAY ROOF)
LL = 20 PSF (COVERED WALKWAY ROOF, REDUCIBLE)

DL = 10 PSF (SITE STRUCTURE ROOF)
LL = 20 PSF (SITE STRUCTURE ROOF, REDUCIBLE)

DL = GREEHOUSE LOADING (BY OTHERS)
LL = GREEHOUSE LOADING (BY OTHERS)

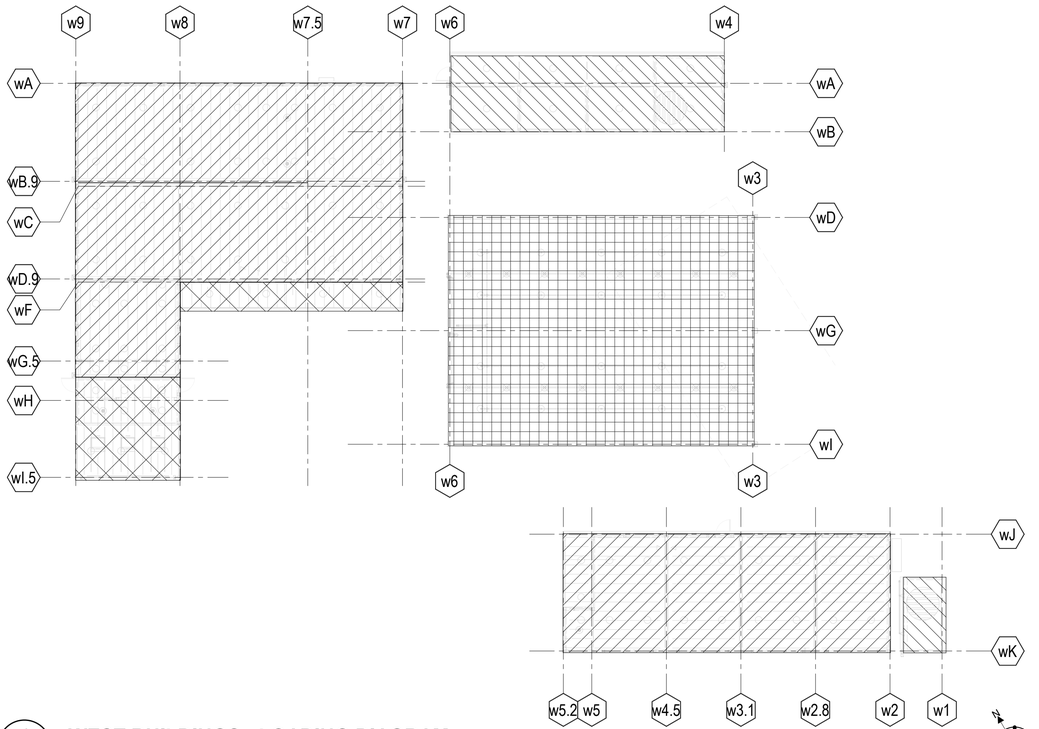

1 S1.03 **WEST BUILDINGS - LOADING DIAGRAM**
1/16" = 1'-0"

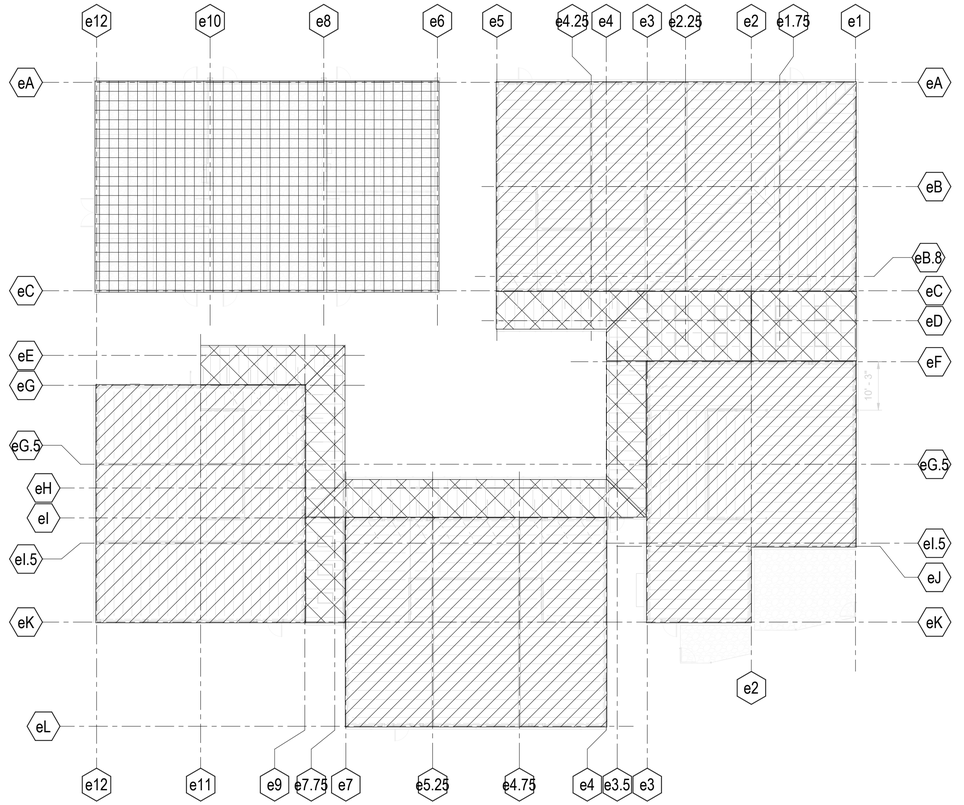

2 S1.03 **EAST BUILDINGS - LOADING DIAGRAM**
1/16" = 1'-0"

APPROVALS

IDENTIFICATION STAMP
DIV. OF THE STATE ARCHITECT
APP: 01-119409 INC:
REVIEWED FOR
SS ☑ FLS ☑ ACS ☑
DATE: 03/14/2022

NOLL & TAM ARCHITECTS
729 Heinz Avenue
Berkeley, CA 94710
tel 510.542.2200
fax 510.542.2201

SEAL

REGISTERED PROFESSIONAL ENGINEER
STEPHEN R. DEESSE
No. S03527
STRUCTURAL
STATE OF CALIFORNIA

IDA STRUCTURAL ENGINEERS
1629 Telegraph Ave
Suite 300
Oakland, CA 94612
tel: 510.834.1629
ida-se.com

IDA PROJECT NUMBER: 20012

PROJECT TITLE

Peralta Community College District
MERRITT LANDSCAPE HORTICULTURE COMPLEX

12500 Campus Drive
Oakland, CA 94616

BID SET

ISSUE DATE	03/03/2022
N&T JOB NUMBER	22003

REVISIONS

	DATE	DESCRIPTION

DRAWN BY	AI	CHECKED BY	GE, SDJ

SHEET TITLE

ROOF LOADING DIAGRAMS

SHEET NUMBER

S1.03

3/2/2022 5:58:18 PM BIM 360://PCCD Merritt Horticulture/IDA20012 Merritt Horticulture_R20.rvt

TABLE 2304.10.1
FASTENING SCHEDULE

DESCRIPTION OF BUILDING ELEMENTS	NUMBER AND TYPE OF FASTENER	SPACING AND LOCATION
ROOF		
1. BLOCKING BETWEEN CEILING JOISTS, RAFTERS OR TRUSSES TO TOP PLATE OR OTHER FRAMING BELOW	3-8d common (2 1/2" x 0.131"); or 3-10d box (3" x 0.128"); or 3-3" x 0.131" nails; or 3-3" 14 gage staples, 7/16" crown	Each end, toenail
BLOCKING BETWEEN RAFTERS OR TRUSS NOT AT THE WALL TOP PLATE, TO RAFTER OR TRUSS	2-8d common (2 1/2" x 0.131") 2-3" x o.131" nails 2-3" 14 gage staples	End nail, toenail
	2- 16 d common (3 1/2" x 0.162") 3- 3" x 0.131" nails ~ 3-3" 14 gage staples	End nail
FLAT BLOCKING TO TRUSS AND WEB FILLER	16d common (3 1/2" x 0.162") @ 6" o.c. 3" x 0.131" nails @ 6" o.c. 3" x 14 gage staples @ 6" o.c	Face nail
2. CEILING JOISTS TO TOP PLATE	3-8d common (2 1/2" x 0.131"); or 3-10d box (3" x 0.128"); or 3-3" x 0.131" nails; or 3-3" 14 gage staples, 7/16" crown	Each joist, toenail
3. CEILING JOIST NOT ATTACHED TO PARALLEL RAFTER, LAPS OVER PARTITIONS (NO THRUST) (SEE SECTION 2308.7.3.1, TABLE 2308.7.3.1)	3- 16d common (3 1/2 x 0.162"); or 4- 10d box (3" x 0.128"); or 4-3" x 0.131" nails; or 4-3" 14 gage staples, 7/16" crown	Face nail
4. CEILING JOIST ATTACHED TO PARALLEL RAFTER (HEEL JOINT) (SEE SECTION 2308.7.3.1, TABLE 2308.7.3.1	Per Table 2308.7.3.1	Face nail
5. RAFTER OR ROOF TRUSS TO TOP PLATE (SEE SECTION 2308.7.5. TABLE 2308.7.5)	3-10 common (3" x 0.148"); or 3- 16d box (3 1/2" x 0.135"); or 4- 10d box (3" x 0.128"); or 4-3" x 0.131 nails: or 4-3" 14 gage staples, 7/16" crown	Toenail[c]
6. ROOF RAFTERS TO RIDGE VALLEY OR HIP RAFTERS; OR ROOF RAFTER TO 2-INCH RIDGE BEAM	2- 16d common (3 1/2" x 0.162"); or 3- 10d box (3" x 0.128"); or 3 -3" x 0.131" nails; or 3-3" 14 gage staples, 7/16" crown; or	End nail
	3-10d common (3 1/2" x 0.148"); or 3-16d box (3 1/2" x 0.135"); or 4-10d box (3" x 0.128"); or 4-3" x 0,131" nails; or 4-3" 14 gage staples, 7/16" crown	Toenail
WALL		
7. STUD TO STUD (NOT AT BRACED WALL PANELS	16d common (3 1/2" x 0.162"):	24" o.c. face nail
	10d box (3" x 0.128"); or 3" x 0.131 "nails; or 3-3" 14 gage staples. 7/16" crown	16" o.c. face nail
8. STUD TO STUD AND ABUTTING STUDS AT INTERSECTING WALL CORNERS (AT BRACED WALL PANELS)	16d common (3 1/2" x 0.162"); or	16" o.c. face nail
	16d box (3 1/2" x 0.135"); or	12" o.c. face nail
	3" x 0.131" nails; or 3-3" 14 gage staples. 7/16" crown	12" o.c. face nail
9. BUILT-UP HEADER (2" TO 2" HEADER)	16d common (3 1/2" x 0.162"); or	16" o.c. each edge, face nail
	16d box (3 1/2" x 0.135")	12" o.c. each edge, face nail
10. CONTINUOUS HEADER TO STUD	4-8d common (2 1/2" x 0.131"); or 4-10d box (3" x 0.128")	Toenail
11. TOP PLATE TO TOP PLATE	16d common (3 1/2" x 0.162"); or	16" o.c. face nail
	10d box (3" x 0.128"); or 3" x 0.131" nails; or 3" 14 gage staples. 7/16" crown	12" o.c. face nail
12. TOP PLATE TO TOP PLATE, AT END JOINTS	8-16d common (3 1/2," x 0.162"); or 12-10d box (3"x 0.128"); or 12-3" x 0.131" nails; or 12-3" 14 gage staples, 7/16" crown	Each side of end joint, face nail (minimum 24" lap splice length each side of end joint)
13. BOTTOM PLATE TO JOIST, RIM JOIST, BAND JOIST OR BLOCKING (NOT AT BRACED WALL PANELS)	16d common (3 1/2" x 0.162"); or	16" o.c. face nail
	16d box (3 1/2" x 0.135"): or 3" x 0.131" nails; or 3" 14 gage staples, 7/16" crown	12" o.c. face nail
14. BOTTOM PLATE TO JOIST, RIM JOIST, BAND JOIST OR BLOCKING AT BRACED WALL PANELS	2-16d common (3 1/2" x 0.162"); or 3-16d box (3 1/2," x 0.135"); or 4-3" x0.131" nails; or 4-3" 14 gage staples, 7/16" crown	16" o.c. face nail
15. STUD TO TOP OR BOTTOM PLATE	4-8d common (2 1/2" x 0.131"); or 4-10d box (3" x 0.128"); or 4-3" x 0.131 "nails; or 4-3" 14 gage staples, 7/16" crown; or	Toenail
	2-16d common (3 1/2" x 0.162"); or 3-10d box (3" x 0.128"); or 3-3" x 0.131 "nails; or 3-3" 14 gage staples, 7/16" crown	End nail
16. TOP OR BOTTOM PLATE TO STUD	2-16d common (3 1/2" x 0.162"); or 3-10d box (3" x 0.128"); or 3-3" x 0.131 "nails; or 3-3" 14 gage staples, 7/16" crown	End nail
17. TOP PLATES, LAPS AT CORNERS AND INTERSECTIONS	2-16d common (3 1/2" x 0.162"); or 3-10d box (3" x 0.128"); or 3-3" x 0.131 "nails; or 3-3" 14 gage staples, 7/16" crown	Face nail
18. 1" BRACE TO EACH STUD AND PLATE	2-8d common (2 1/2" x 0.131"); or 2-10d box (3" x 0.128"); or 2-3" x 0.131" nails; or 2-3" 14 gage staples, 7/16" crown	Face nail
19. 1" X 6" SHEATHING TO EACH BEARING	2-8d common (2 1/2" x 0.131"); or 2-10d box (3" x 0.128")	Face nail
20. 1" X 8" AND WIDER SHEATHING TO EACH BEARING	3-8d common (2 1/2" x 0.131"); or 3-10d box(3"x 0.128")	Face nail

DESCRIPTION OF BUILDING ELEMENTS	NUMBER AND TYPE OF FASTENER	SPACING AND LOCATION
FLOOR		
21. JOIST TO SILL, TOP PLATE, OR GIRDER	3-8d common (2 1/2" x 0.131"); or floor 3-10d box (3" x 0.128"); or 3-3" x 0.131" nails; or 3-3" 14 gage staples, 7/16" crown	Toenail
22. RIM JOIST, BAND JOIST, OR BLOCKING TO TOP PLATE, SILL OR OTHER FRAMING BELOW	8d common (2 1/2" x 0.131"); or 10d box (3" x 0.128"); or 3" x 0.131" nails; or 3" 14 gage staples, 7/16" crown	6" o.c., toenail
23. LEDGER STRIP SUPPORTING JOISTS OR RAFTERS	3-16d common (3 1/2" x 0.162"); or 4-10d box (3" x 0.128"); or 4-3" x 0.131" nails; or 4-3" 14 gage staples, 7/16" crown	Each joist or rafter, face nail
24. JOIST TO BAND JOIST OR RIM JOIST	3-16d common (3 1/2" x 0.162"); or 4-10d box (3" x 0.128"); or 4-3" x 0.131" nails; or 4-3" 14 gage staples, 7/16" crown	End nail
25. BRIDGING OR BLOCKING TO JOIST, RAFTER OR TRUSS	2-8d common (2 1/2" x 0.131"); or 2-10d box (3" x 0.128"); or 2-3" x 0.131" nails; or 2-3" 14 gage staples, 7/16" crown	Each end, toenail

DESCRIPTION OF BUILDING ELEMENTS	NUMBER AND TYPE OF FASTENER	SPACING AND LOCATION	
Wood structural panels (WSP), subfloor, roof and interior wall sheathing to framing and particleboard wall sheathing to framing[a]			
		Edges (inches)	Intermediate supports (inches)
26. 3/8" - 1/2"	6d common or deformed (2" x 0.113") (subfloor and wall)	6	12
	8d box or deformed (2 1/2" x 0.113") (roof)	6	12
	2 3/8" x 0.113" nail (subfloor and wall)	6	12
	1 3/4" 16 gage staple, 7/16" crown (subfloor and wall)	4	8
	2 3/8" x 0.113" nail (roof)	4	8
	1 3/4" 16 gage staple, 7/16" crown (roof)	3	6
27. 19/32" - 3/4"	8d common (2 1/2" x 0.131"); or 6d deformed (2" x 0.113")	6	12
	2 3/8" x 0.113" nail; or 2" 16 gage staple, 7/16" crown	4	8
28. 7/8" - 1 1/4"	10d common (3" x 0.148"); or 8d deformed (2 1/2" x 0.131")	6	12
Other exterior wall sheathing			
29. 1/2" FIBERBOARD SHEATHING[b]	1 1/2" galvanized roofing nail (7/16" head diameter); or 1 1/4" 16 gage staple with 7/16" or 1" crown	3	6
30. 25/32" FIBERBOARD SHEATHING[b]	1 3/4" galvanized roofing nail (7/16" diameter head); or 1 1/2" 16 gage staple with 7/16" or 1" crown	3	6
Wood structural panels, combination subfioor underlayment to framing			
31. 3/4" AND LESS	8d common (2 1/2" x 0.131"); or 6d deformed (2" x 0.113")	6	12
32. 7/8" - 1"	8d common (2 1/2" x 0.131"); or 8d deformed (2 1/2" x 0.131")	6	12
33. 1 1/8" - 1 1/4"	10d common (3" x 0.148"); or 8d deformed (2 1/2" x 0.131")	6	12
Panel siding to framing			
34. 1/2" OR LESS	6d corrosion-resistant siding (1 7/8" x 0.106"); or 6d corrosion-resistant casing (2" x 0.099")	6	12
35. 5/8"	8d corrosion-resistant siding (2 3/8" x 0.128"); or 8d corrosion-resistant casing (2 1/2" x 0.113")	6	12
Interior paneling			
36. 1/4"	4d casing (l 1/22" x 0.080"); or 4d finish (l 1/2" x 0.072")	6	12
37. 3/8"	6d casing (2" x 0.099"); or 6d finish (Panel supports at 24 inches	6	12

a. Nails spaced at 6 inches at intermediate supports where spans are 48 inches or more. For nailing of wood structural panel and particleboard diaphragms and shear walls, refer to Section 2305. Nails for wall sheathing are permitted to be common, box or casing.
b. Spacing shall be 6 inches on center on the edges and 12 inches on center at intermediate supports for nonstructural applications. Panel supports at 16 inches
(20 inches if strength axis in the long direction of the panel, unless otherwise marked).
c. Where a rafter is fastened to an adjacent parallel ceiling joist in accordance with this schedule and the ceiling joist is fastened to the top plate in accordance with this schedule, the number of toenails in the rafter shall be permitted to be reduced by one nail.
d. Where plans and details specify fastening differs from what is shown in the schedule, use the more stringent connection.

APPROVALS

IDENTIFICATION STAMP
DIV. OF THE STATE ARCHITECT
APP: 01-119409 INC:
REVIEWED FOR
SS ☑ FLS ☑ ACS ☑
DATE: 03/14/2022

NOLL & TAM ARCHITECTS
729 Heinz Avenue
Berkeley, CA 94710
tel 510.542.2200
fax 510.542.2201

SEAL

REGISTERED PROFESSIONAL ENGINEER
STEPHEN R. DESSEL
No. S03527
STRUCTURAL
STATE OF CALIFORNIA

IDA STRUCTURAL ENGINEERS
1629 Telegraph Ave
Suite 300
Oakland, CA 94612
tel: 510.834.1629
ida-se.com

IDA PROJECT NUMBER: 20012

PROJECT TITLE

Peralta Community College District
MERRITT LANDSCAPE HORTICULTURE COMPLEX

12500 Campus Drive
Oakland, CA 94616

BID SET

ISSUE DATE **03/03/2022**
N&T JOB NUMBER **22003**

REVISIONS

	DATE	DESCRIPTION

DRAWN BY **AI** CHECKED BY **GE, SDJ**

SHEET TITLE
FASTENING SCHEDULE

SHEET NUMBER
S1.04

3/2/2022 5:58:18 PM BIM 360://PCCD Merritt Horticulture/IDA20012 Merritt Horticulture_R20.rvt

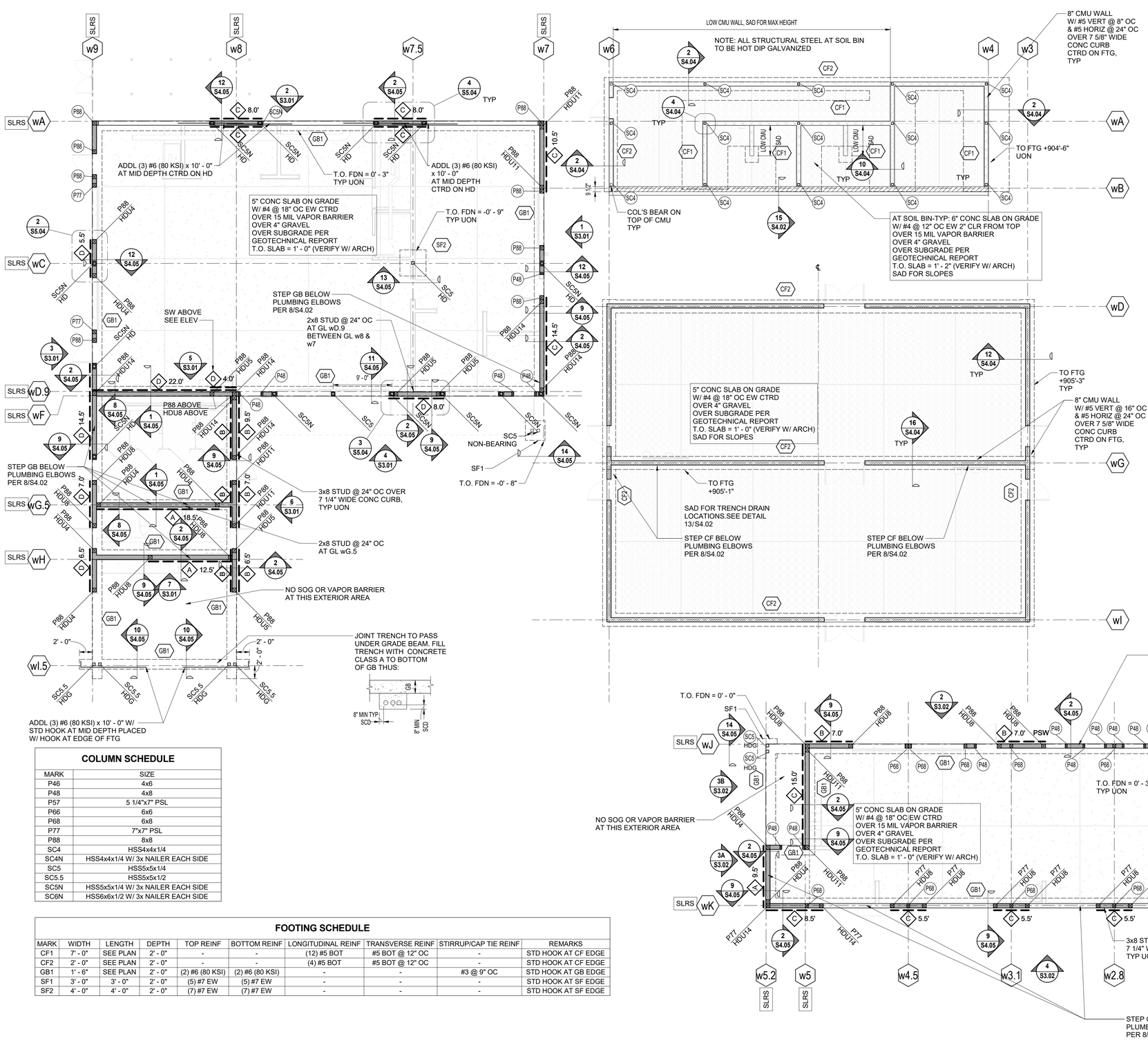

SHEET NOTES:

1. TOP OF FOOTING AT TOP OF SUBGRADE UON.
2. REFERENCE SHEET SERIES S1.0X FOR GENERAL NOTES, ABBREVIATIONS, TESTING/FASTENING SCHEDULES, LOADING DIAGRAMS, AND ADDITIONAL INFORMATION NOT SPECIFICALLY NOTED ON PLANS.
3. REFERENCE SHEET SERIES S3.0X FOR WALL FRAMING ELEVATIONS.
4. REFERENCE SHEET SERIES S4.0X FOR CONCRETE, SITE WALL, CMU, AND FOUNDATION DETAILS.
5. REFERENCE SHEET SERIES S5.0X FOR WOOD DETAILS.
6. REFERENCE SHEET SERIES S6.0X FOR TRUSS ELEVATIONS/DETAILS AND ROOF FRAMING DETAILS.
7. REFERENCE SHEET SERIES S7.0X FOR STEEL FRAMING DETAILS.
8. EXTERIOR STUD WALL SHEATHING TO BE 1/2" PLYWOOD UON.
9. WOOD STUD WALL IN PLAN.
10. PLYWOOD SHEAR WALL DESIGNATION. DASHED LINE REPRESENTS SHEATHING LOCATION, # REPRESENTS MINIMUM SHEAR WALL LENGTH (SAD FOR ACTUAL WALL AND SHEATHING EXTENT TO FLUSH OUT FINISHES), AND LETTER IN DIAMOND REPRESENTS SHEAR WALL FASTENERS AND CONNECTIONS; REFERENCE TYPICAL SHEAR WALL SCHEDULE.
11. COMPRESSION POST PER SCHEDULE FASTENED WITH SIMPSON HOLDOWN PER MANUFACTURER.
12. CMU WALL IN PLAN.
13. STEEL COLUMN PER SCHEDULE WITH WOOD NAILERS PER TYPICAL DETAIL.
14. STEEL HOLDOWN COLUMN PER SCHEDULE WITH ANCHORAGE PER TYPICAL DETAIL 12/S4.05
15. STEEL COLUMN PER SCHEDULE WITH ANCHORAGE PER TYPICAL DETAIL 10/S4.05
14. WOOD AND STEEL POST PER SCHEDULE, RESPECTIVELY.
15. HDG DENOTES COLUMNS TO BE HOT DIP GALVANIZED. BASE PLATES COMPLETELY EMBEDDED IN CONCRETE NEED NOT BE GALVANIZED.
16. SEE ARCHITECTURAL SLAB PLANS FOR SLOPES, STEPS AND CURBS ON FLOORS NOT SHOWN ON STRUCTURAL DRAWINGS.
17. ## DENOTES FOOTING OR GRADE BEAM. SEE SCHEDULES THIS SHEET.

COLUMN SCHEDULE

MARK	SIZE
P46	4x6
P48	4x8
P57	5 1/4"x7" PSL
P66	6x6
P68	6x8
P77	7"x7" PSL
P88	8x8
SC4	HSS4x4x1/4
SC4N	HSS4x4x1/4 W/ 3x NAILER EACH SIDE
SC5	HSS5x5x1/4
SC5.5	HSS5x5x1/2
SC5N	HSS5x5x1/4 W/ 3x NAILER EACH SIDE
SC6N	HSS6x6x1/2 W/ 3x NAILER EACH SIDE

FOOTING SCHEDULE

MARK	WIDTH	LENGTH	DEPTH	TOP REINF	BOTTOM REINF	LONGITUDINAL REINF	TRANSVERSE REINF	STIRRUP/CAP TIE REINF	REMARKS
CF1	7' - 0"	SEE PLAN	2' - 0"	-	-	(12) #5 BOT	#5 BOT @ 12" OC	-	STD HOOK AT CF EDGE
CF2	2' - 0"	SEE PLAN	2' - 0"	-	-	(4) #5 BOT	#5 BOT @ 12" OC	-	STD HOOK AT CF EDGE
GB1	1' - 6"	SEE PLAN	2' - 0"	(2) #6 (80 KSI)	(2) #6 (80 KSI)	-	-	#3 @ 9" OC	STD HOOK AT GB EDGE
SF1	3' - 0"	3' - 0"	2' - 0"	(5) #7 EW	(5) #7 EW	-	-	-	STD HOOK AT SF EDGE
SF2	4' - 0"	4' - 0"	2' - 0"	(7) #7 EW	(7) #7 EW	-	-	-	STD HOOK AT SF EDGE

1 S2.31 **WEST BUILDINGS - FOUNDATION / FIRST FLOOR FRAMING PLAN**

1/8" = 1'-0"

0 4' 8' 16'

APPROVALS

IDENTIFICATION STAMP
DIV. OF THE STATE ARCHITECT
APP: 01-119409 INC:
REVIEWED FOR
SS ☑ FLS ☑ ACS ☑
DATE: 03/14/2022

NOLL & TAM ARCHITECTS
729 Heinz Avenue
Berkeley, CA 94710
tel 510.542.2200
fax 510.542.2201

SEAL

REGISTERED PROFESSIONAL ENGINEER STEPHEN R. DITESSO STRUCTURAL No. S03527 STATE OF CALIFORNIA

IDA STRUCTURAL ENGINEERS
1629 Telegraph Ave
Suite 300
Oakland, CA 94612
tel: 510.834.1629
ida-se.com

IDA PROJECT NUMBER: 20012

PROJECT TITLE

Peralta Community College District
MERRITT LANDSCAPE HORTICULTURE COMPLEX

12500 Campus Drive
Oakland, CA 94616

BID SET

ISSUE DATE	03/03/2022
N&T JOB NUMBER	22003

REVISIONS

#	DATE	DESCRIPTION

DRAWN BY	AI	CHECKED BY	SDJ, GE

SHEET TITLE

WEST BUILDINGS - FOUNDATION / FIRST FLOOR FRAMING PLAN

SHEET NUMBER

S2.31

3/2/2022 5:58:23 PM BIM 360://PCCD Merritt Horticulture/IDA20012 Merritt Horticulture_R20.rvt

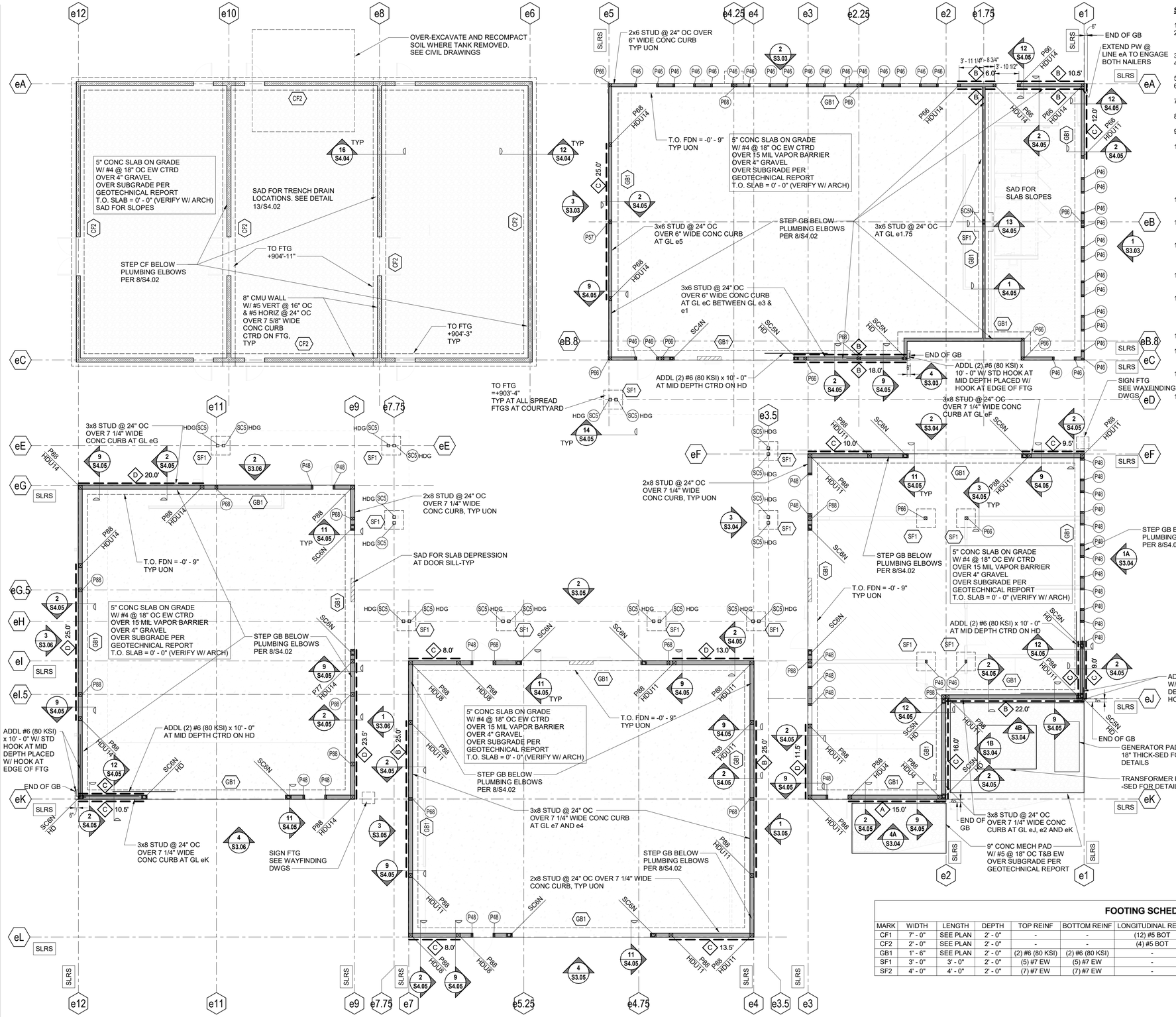

1 S2.32 **EAST BUILDINGS - FOUNDATION / FIRST FLOOR PLAN**

1/8" = 1'-0"

0 4' 8' 16'

SHEET NOTES:

1. TOP OF FOOTING AT TOP OF SUBGRADE UON.
2. REFERENCE SHEET SERIES S1.0X FOR GENERAL NOTES, ABBREVIATIONS, TESTING/FASTENING SCHEDULES, LOADING DIAGRAMS, AND ADDITIONAL INFORMATION NOT SPECIFICALLY NOTED ON PLANS.
3. REFERENCE SHEET SERIES S3.0X FOR WALL FRAMING ELEVATIONS.
4. REFERENCE SHEET SERIES S4.0X FOR CONCRETE, SITE WALL, CMU, AND FOUNDATION DETAILS.
5. REFERENCE SHEET SERIES S5.0X FOR WOOD DETAILS.
6. REFERENCE SHEET SERIES S6.0X FOR TRUSS ELEVATIONS/DETAILS AND ROOF FRAMING DETAILS.
7. REFERENCE SHEET SERIES S7.0X FOR STEEL FRAMING DETAILS.
8. EXTERIOR STUD WALL SHEATHING TO BE 1/2" PLYWOOD UON.
9. WOOD STUD WALL IN PLAN.
10. PLYWOOD SHEAR WALL DESIGNATION. DASHED LINE REPRESENTS SHEATHING LOCATION. # REPRESENTS MINIMUM SHEAR WALL LENGTH (SAD FOR ACTUAL WALL AND SHEATHING EXTENT TO FLUSH OUT FINISHES), AND LETTER IN DIAMOND REPRESENTS SHEAR WALL FASTENERS AND CONNECTIONS; REFERENCE TYPICAL SHEAR WALL SCHEDULE.
11. COMPRESSION POST PER SCHEDULE FASTENED WITH SIMPSON HOLDOWN PER MANUFACTURER.
12. CMU WALL IN PLAN.
13. STEEL COLUMN PER SCHEDULE WITH WOOD NAILERS PER TYPICAL DETAIL.
14. STEEL HOLDOWN COLUMN PER SCHEDULE WITH ANCHORAGE PER TYPICAL DETAIL 12/S4.05
15. STEEL COLUMN PER SCHEDULE WITH ANCHORAGE PER TYPICAL DETAIL 10/S4.05
16. WOOD AND STEEL POST PER SCHEDULE, RESPECTIVELY.
15. HDG DENOTES COLUMNS TO BE HOT DIP GALVANIZED. BASE PLATES COMPLETELY EMBEDDED IN CONCRETE NEED NOT BE GALVANIZED.
16. SEE ARCHITECTURAL SLAB PLANS FOR SLOPES, STEPS AND CURBS ON FLOORS NOT SHOWN ON STRUCTURAL DRAWINGS.
17. ## DENOTES FOOTING OR GRADE BEAM. SEE SCHEDULES THIS SHEET.

COLUMN SCHEDULE

MARK	SIZE
P46	4x6
P48	4x8
P57	5 1/4"x7" PSL
P66	6x6
P68	6x8
P77	7"x7" PSL
P88	8x8
SC4	HSS4x4x1/4
SC4N	HSS4x4x1/4 W/ 3x NAILER EACH SIDE
SC5	HSS5x5x1/4
SC5.5	HSS5x5x1/2
SC5N	HSS5x5x1/4 W/ 3x NAILER EACH SIDE
SC6N	HSS6x6x1/2 W/ 3x NAILER EACH SIDE

FOOTING SCHEDULE

MARK	WIDTH	LENGTH	DEPTH	TOP REINF	BOTTOM REINF	LONGITUDINAL REINF	TRANSVERSE REINF	STIRRUP/CAP TIE REINF	REMARKS
CF1	7' - 0"	SEE PLAN	2' - 0"	-	-	(12) #5 BOT	#5 BOT @ 12" OC	-	STD HOOK AT CF EDGE
CF2	2' - 0"	SEE PLAN	2' - 0"	-	-	(4) #5 BOT	#5 BOT @ 12" OC	-	STD HOOK AT CF EDGE
GB1	1' - 6"	SEE PLAN	2' - 0"	(2) #6 (80 KSI)	(2) #6 (80 KSI)	-	-	#3 @ 9" OC	STD HOOK AT GB EDGE
SF1	3' - 0"	3' - 0"	2' - 0"	(5) #7 EW	(5) #7 EW	-	-	-	STD HOOK AT SF EDGE
SF2	4' - 0"	4' - 0"	2' - 0"	(7) #7 EW	(7) #7 EW	-	-	-	STD HOOK AT SF EDGE

APPROVALS

IDENTIFICATION STAMP
DIV. OF THE STATE ARCHITECT
APP: 01-119409 INC:
REVIEWED FOR
SS ☑ FLS ☑ ACS ☑
DATE: 03/14/2022

NOLL & TAM ARCHITECTS
729 Heinz Avenue
Berkeley, CA 94710
tel 510.542.2200
fax 510.542.2201

SEAL

REGISTERED PROFESSIONAL ENGINEER STEPHEN R. DITESSENO No. S03527 STRUCTURAL STATE OF CALIFORNIA

IDA STRUCTURAL ENGINEERS
1629 Telegraph Ave
Suite 300
Oakland, CA 94612
tel: 510.834.1629
ida-se.com

IDA PROJECT NUMBER: 20012

PROJECT TITLE

Peralta Community College District
MERRITT LANDSCAPE HORTICULTURE COMPLEX

12500 Campus Drive
Oakland, CA 94616

BID SET

ISSUE DATE 03/03/2022
N&T JOB NUMBER 22003

REVISIONS

#	DATE	DESCRIPTION

DRAWN BY AI CHECKED BY SDJ, GE

SHEET TITLE
EAST BUILDINGS - FOUNDATION / FIRST FLOOR FRAMING PLAN

SHEET NUMBER
S2.32

BIM 360://PCCD Merritt Horticulture/IDA20012 Merritt Horticulture_R20.rvt
3/2/2022 5:58:28 PM

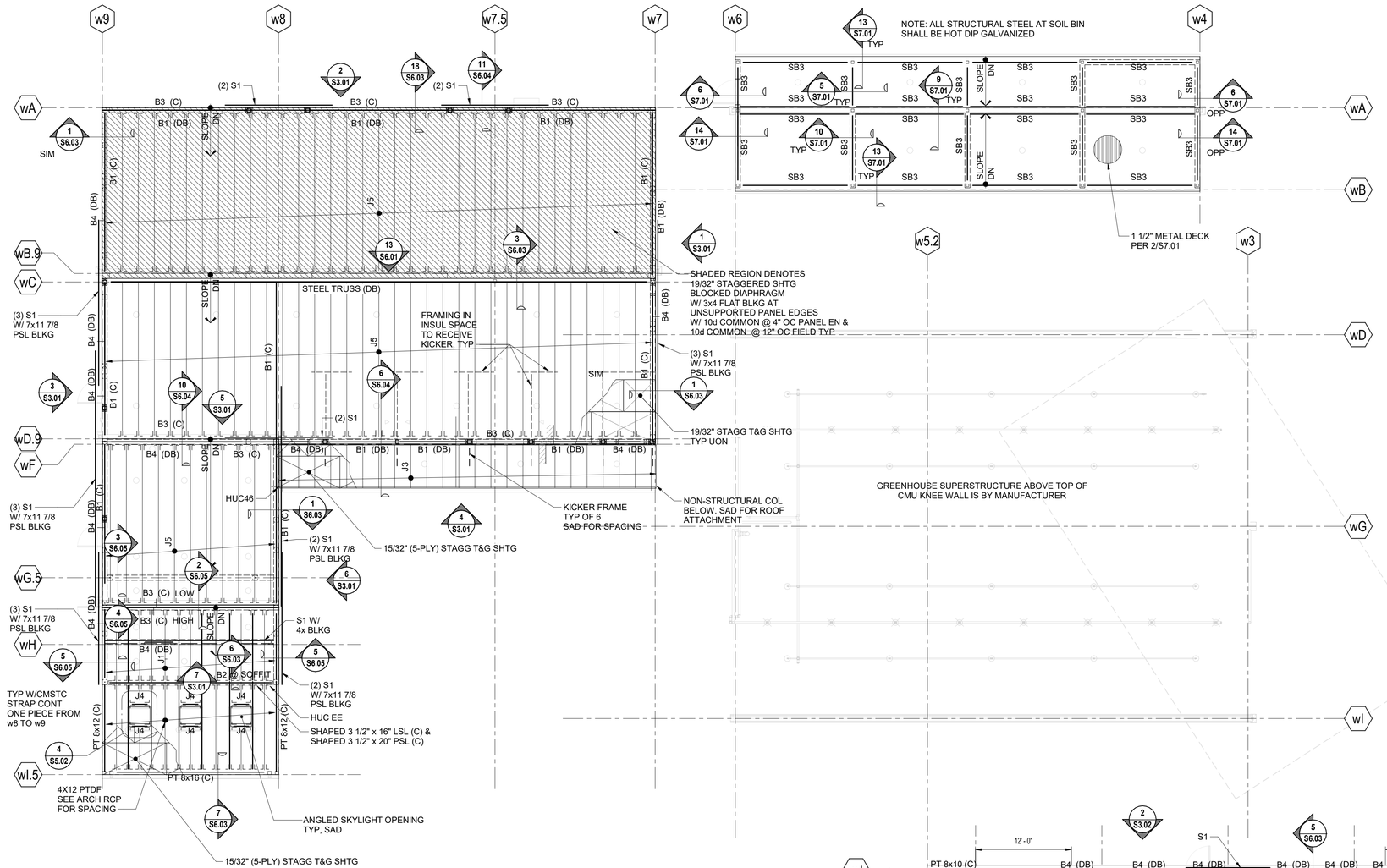

SHEET NOTES:

1. REFERENCE SHEET SERIES S1.0X FOR GENERAL NOTES, ABBREVIATIONS, TESTING/FASTENING SCHEDULES, LOADING DIAGRAMS, AND ADDITIONAL INFORMATION NOT SPECIFICALLY NOTED ON PLANS.
2. REFERENCE SHEET SERIES S3.0X FOR WALL FRAMING ELEVATIONS.
3. REFERENCE SHEET SERIES S4.0X FOR CONCRETE, SITE WALL, CMU, AND FOUNDATION DETAILS.
4. REFERENCE SHEET SERIES S5.0X FOR WOOD DETAILS.
5. REFERENCE SHEET SERIES S6.0X FOR TRUSS ELEVATIONS/DETAILS AND ROOF FRAMING DETAILS.
6. REFERENCE SHEET SERIES S7.0X FOR STEEL FRAMING DETAILS.
7. PT REPRESENTS PRESERVATIVE TREATMENT OF WOOD MEMBER.
8. TOP OF ROOF FRAMING IS FLUSH WITH UNDERSIDE OF ROOF SHEATHING UNLESS NOTED AS (DB), WHICH REPRESENTS A DROP BEAM (OR HEADER) BELOW TOP OF ROOF FRAMING ELEVATION.
9. (C) REPRESENTS COLLECTOR TO BE CONTINUOUS UNLESS NOTED OTHERWISE ON PLAN. PROVIDE (2) ROWS OF DIAPHRAGM SHEATHING PANEL EDGE NAILING AT INTERIOR COLLECTOR SPANS. PROVIDE (1) ROW OF DIAPHRAGM SHEATHING PANEL EDGE NAILING AT EXTERIOR COLLECTOR SPANS. DIAPHRAGM SHEATHING AND PANEL EDGE NAILING IS NOTED ON PLAN. LONG DIRECTION OF SHEATHING PANELS TO BE ORIENTED PERPENDICULAR TO ROOF JOIST SPANS, TYPICAL.
10. REFERENCE ARCHITECTURAL DRAWINGS FOR EXACT JOIST LOCATION.

COLUMN SCHEDULE

MARK	SIZE
P46	4x6
P48	4x8
P57	5 1/4"x7" PSL
P66	6x6
P68	6x8
P77	7"x7" PSL
P88	8x8
SC4	HSS4x4x1/4
SC4N	HSS4x4x1/4 W/ 3x NAILER EACH SIDE
SC5	HSS5x5x1/4
SC5.5	HSS5x5x1/2
SC5N	HSS5x5x1/4 W/ 3x NAILER EACH SIDE
SC6N	HSS6x6x1/2 W/ 3x NAILER EACH SIDE

FRAMING SCHEDULE

MARK	SIZE & SPACING	HANGER WHERE REQD
B1	7"x11 7/8" PSL	HHUS7.25/10
B2	5 1/4"x11 7/8" PSL	HHUS5.50/10
B3	7"x16" PSL (SHAPED)	HHUS7.25/10
B4	8x8	HUC88
B5	7"x14" PSL	HHUS7.25/14
B6	5 1/4"x16" PSL (SHAPED)	HHUS5.50/10
B7	PT 4x12	
B8	PT 8x12	
J1	11 7/8" TJI 230 @ 24" OC	IUS2.37/11.88
J2	PT 2x8 @ 24" OC	U28
J3	PT 2x6 @ 24" OC	U26
J4	PT 4x12 @ 24" OC	U410
J5	11 7/8" TJI 560 @ 24" OC	IUS3.56/11.88
J7	11 7/8" TJI 360 @ 24" OC	IUS2.37/11.88
SB1	HSS12x6x3/8 W/ 3x NAILER T&B	
SB2	HSS14x4x1/2 W/ 3x NAILER T&B	
SB3	HSS8x4x1/4	

STRAP SCHEDULE

MARK	STRAP	MIN END LENGTH	REMARKS
S1	CMST12 W/ 10d	6' - 8"	FILL ROUND HOLES ONLY
S2	CMST14 W/ 10d	5' - 3"	FILL ROUND HOLES ONLY
S3	CS22 W/ 10d	1' - 3"	FILL EVERY OTHER HOLE
S4	CS14 W/ 10d	2' - 6"	FILL EVERY OTHER HOLE

1 **S2.41** **WEST BUILDINGS - ROOF FRAMING PLAN**
1/8" = 1'-0"

0 4' 8' 16'

APPROVALS

IDENTIFICATION STAMP
DIV. OF THE STATE ARCHITECT
APP: 01-119409 INC:
REVIEWED FOR
SS ☑ FLS ☑ ACS ☑
DATE: 03/14/2022

NOLL & TAM ARCHITECTS
729 Heinz Avenue
Berkeley, CA 94710
tel 510.542.2200
fax 510.542.2201

SEAL

REGISTERED PROFESSIONAL ENGINEER STEPHEN R. DITESSO No. S03527 STRUCTURAL STATE OF CALIFORNIA

IDA STRUCTURAL ENGINEERS
1629 Telegraph Ave
Suite 300
Oakland, CA 94612
tel: 510.834.1629
ida-se.com

IDA PROJECT NUMBER: 20012

PROJECT TITLE

Peralta Community College District
MERRITT LANDSCAPE HORTICULTURE COMPLEX
12500 Campus Drive
Oakland, CA 94616

BID SET

ISSUE DATE 03/03/2022
N&T JOB NUMBER 22003

REVISIONS

#	DATE	DESCRIPTION

SHEET TITLE
WEST BUILDINGS - ROOF FRAMING PLAN

SHEET NUMBER
S2.41

3/2/2022 5:58:34 PM BIM 360://PCCD Merritt Horticulture/IDA/20012 Merritt Horticulture_R20.rvt

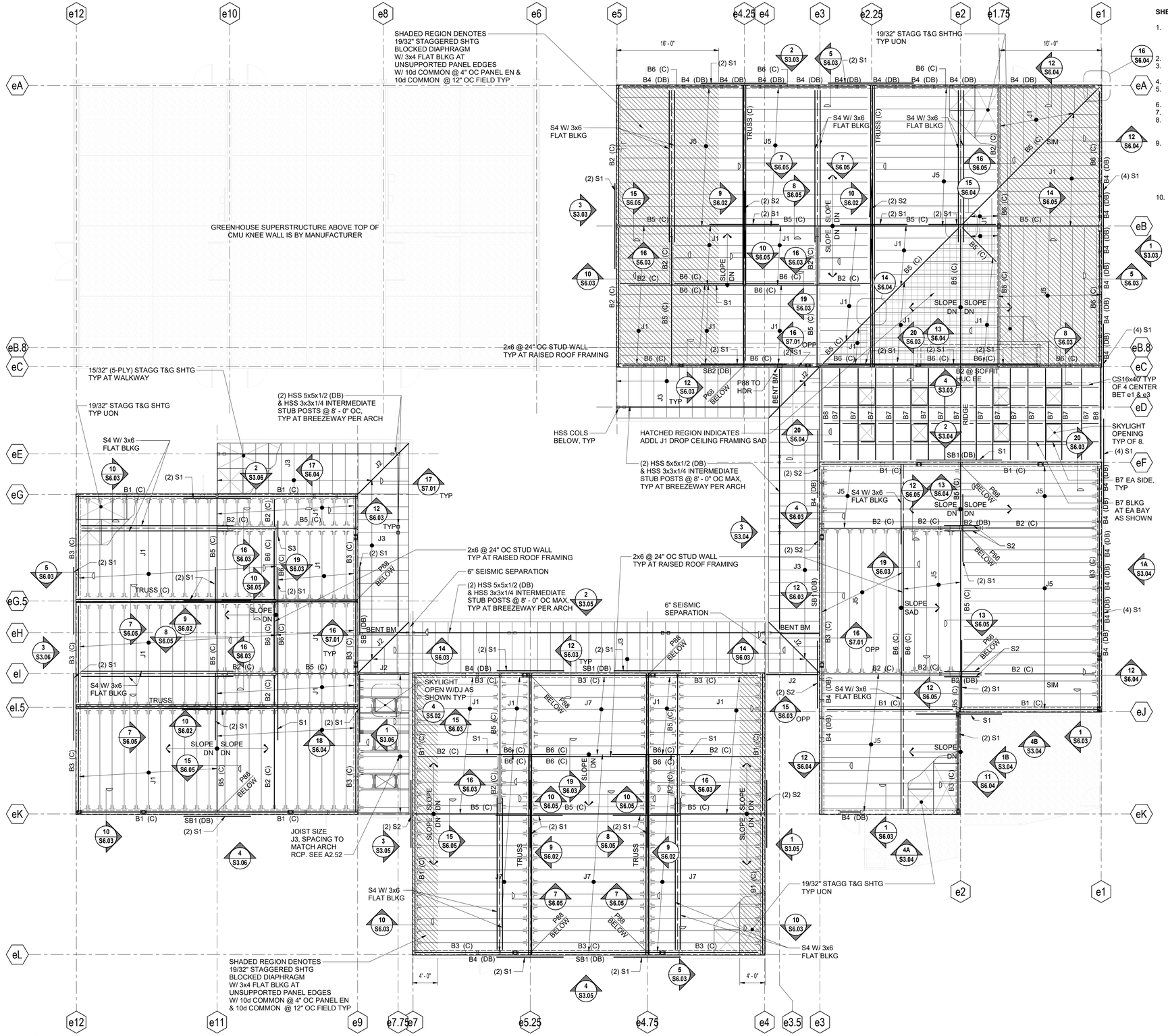

1 S2.42 **EAST BUILDINGS - ROOF FRAMING PLAN**

1/8" = 1'-0"

0 4' 8' 16'

SHEET NOTES:

1. REFERENCE SHEET SERIES S1.0X FOR GENERAL NOTES, ABBREVIATIONS, TESTING/FASTENING SCHEDULES, LOADING DIAGRAMS, AND ADDITIONAL INFORMATION NOT SPECIFICALLY NOTED ON PLANS.
2. REFERENCE SHEET SERIES S3.0X FOR WALL FRAMING ELEVATIONS.
3. REFERENCE SHEET SERIES S4.0X FOR CONCRETE, SITE WALL, CMU, AND FOUNDATION DETAILS.
4. REFERENCE SHEET SERIES S5.0X FOR WOOD DETAILS.
5. REFERENCE SHEET SERIES S6.0X FOR TRUSS ELEVATIONS/DETAILS AND ROOF FRAMING DETAILS.
6. REFERENCE SHEET SERIES S7.0X FOR STEEL FRAMING DETAILS.
7. PT REPRESENTS PRESERVATIVE TREATMENT OF WOOD MEMBER.
8. TOP OF ROOF FRAMING IS FLUSH WITH UNDERSIDE OF ROOF SHEATHING UNLESS NOTED AS (DB), WHICH REPRESENTS A DROP BEAM (OR HEADER) BELOW TOP OF ROOF FRAMING ELEVATION. (C) REPRESENTS COLLECTOR TO BE CONTINUOUS UNLESS NOTED OTHERWISE ON PLAN. PROVIDE (2) ROWS OF DIAPHRAGM SHEATHING PANEL EDGE NAILING AT INTERIOR COLLECTOR SPANS. PROVIDE (1) ROW OF DIAPHRAGM SHEATHING PANEL EDGE NAILING AT EXTERIOR COLLECTOR SPANS. DIAPHRAGM SHEATHING AND PANEL EDGE NAILING IS NOTED ON PLAN. LONG DIRECTION OF SHEATHING PANELS TO BE ORIENTED PERPENDICULAR TO ROOF JOIST SPANS, TYPICAL.
9. REFERENCE ARCHITECTURAL DRAWINGS FOR EXACT JOIST LOCATION.
10. REFERENCE SHEET SERIES S1.0X FOR GENERAL NOTES, ABBREVIATIONS, TESTING/FASTENING SCHEDULES, LOADING DIAGRAMS, AND ADDITIONAL INFORMATION NOT SPECIFICALLY NOTED ON PLANS.

COLUMN SCHEDULE

MARK	SIZE
P46	4x6
P48	4x8
P57	5 1/4"x7" PSL
P66	6x6
P68	6x8
P77	7"x7" PSL
P88	8x8
SC4	HSS4x4x1/4
SC4N	HSS4x4x1/4 W/ 3x NAILER EACH SIDE
SC5	HSS5x5x1/4
SC5.5	HSS5x5x1/2
SC5N	HSS5x5x1/4 W/ 3x NAILER EACH SIDE
SC6N	HSS6x6x1/2 W/ 3x NAILER EACH SIDE

FRAMING SCHEDULE

MARK	SIZE & SPACING	HANGER WHERE REQD
B1	7"x11 7/8" PSL	HHUS7.25/10
B2	5 1/4"x11 7/8" PSL	HHUS5.50/10
B3	7"x16" PSL (SHAPED)	HHUS7.25/10
B4	8x8	HUC88
B5	7"x14" PSL	HHUS7.25/14
B6	5 1/4"x16" PSL (SHAPED)	HHUS5.50/10
B7	PT 4x12	
B8	PT 8x12	
J1	11 7/8" TJI 230 @ 24" OC	IUS2.37/11.88
J2	PT 2x8 @ 24" OC	U28
J3	PT 2x6 @ 24" OC	U26
J4	PT 4x12 @ 24" OC	U410
J5	11 7/8" TJI 560 @ 24" OC	IUS3.56/11.88
J7	11 7/8" TJI 360 @ 24" OC	IUS2.37/11.88
SB1	HSS12x6x3/8 W/ 3x NAILER T&B	
SB2	HSS14x4x1/2 W/ 3x NAILER T&B	
SB3	HSS8x4x1/4	

STRAP SCHEDULE

MARK	STRAP	MIN END LENGTH	REMARKS
S1	CMST12 W/ 10d	6' - 8"	FILL ROUND HOLES ONLY
S2	CMST14 W/ 10d	5' - 3"	FILL ROUND HOLES ONLY
S3	CS22 W/ 10d	1' - 3"	FILL EVERY OTHER HOLE
S4	CS14 W/ 10d	2' - 6"	FILL EVERY OTHER HOLE

APPROVALS

IDENTIFICATION STAMP
DIV. OF THE STATE ARCHITECT
APP: 01-119409 INC:
REVIEWED FOR
SS ☑ FLS ☑ ACS ☑
DATE: 03/14/2022

NOLL & TAM ARCHITECTS
729 Heinz Avenue
Berkeley, CA 94710
tel 510.542.2200
fax 510.542.2201

SEAL

REGISTERED PROFESSIONAL ENGINEER STEPHEN R. DITESSO STRUCTURAL STATE OF CALIFORNIA
No. S03527

IDA STRUCTURAL ENGINEERS
1629 Telegraph Ave
Suite 300
Oakland, CA 94612
tel: 510.834.1629
ida-se.com

IDA PROJECT NUMBER: 20012

PROJECT TITLE

Peralta Community College District
MERRITT LANDSCAPE HORTICULTURE COMPLEX

12500 Campus Drive
Oakland, CA 94616

BID SET

ISSUE DATE 03/03/2022
N&T JOB NUMBER 22003

REVISIONS

#	DATE	DESCRIPTION

DRAWN BY AI CHECKED BY SDJ, GE

SHEET TITLE

EAST BUILDINGS - ROOF FRAMING PLAN

SHEET NUMBER

S2.42

3/2/2022 5:58:40 PM BIM 360://PCCD Merritt Horticulture/IDA20012 Merritt Horticulture_R20.rvt

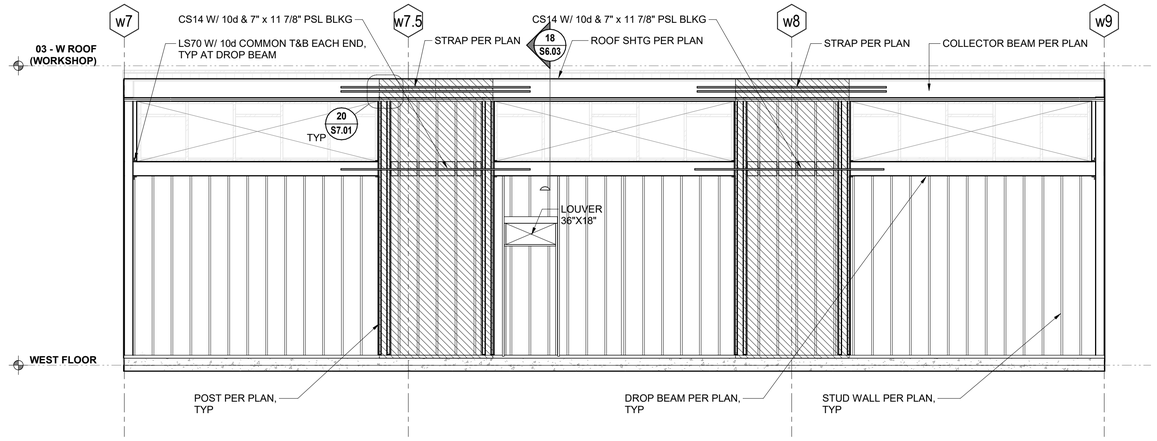

2 S3.01 WEST BUILDINGS - WORKSHOP / STORAGE BUILDING - NORTH ELEVATION

3/16" = 1'-0"

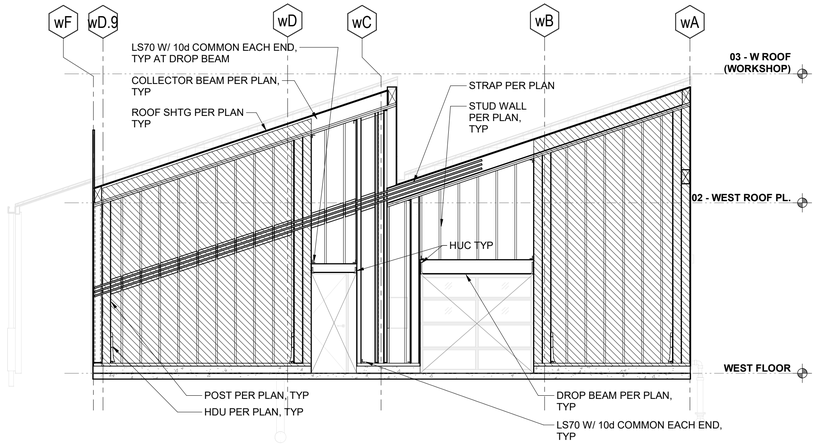

1 S3.01 WEST BUILDINGS - WORKSHOP / STORAGE BUILDING - EAST ELEVATION

3/16" = 1'-0"

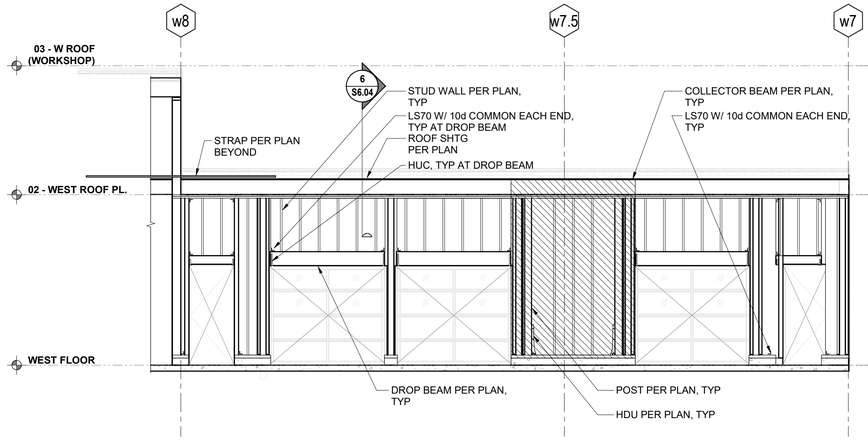

4 S3.01 WEST BUILDINGS - WORKSHOP / STORAGE BUILDING - SOUTH ELEVATION

3/16" = 1'-0"

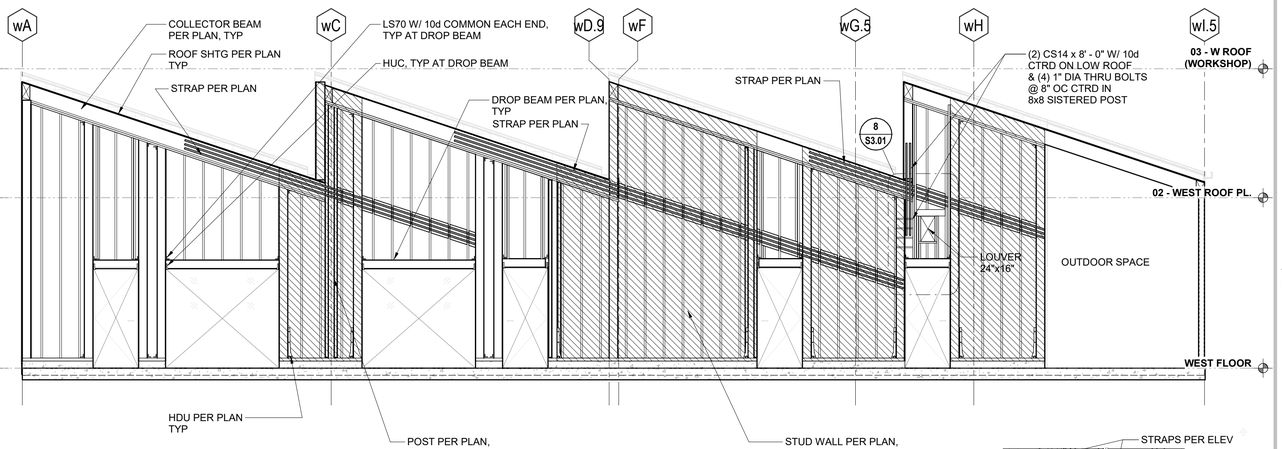

3 S3.01 WEST BUILDINGS - WORKSHOP / STORAGE BUILDING - WEST ELEVATION

3/16" = 1'-0"

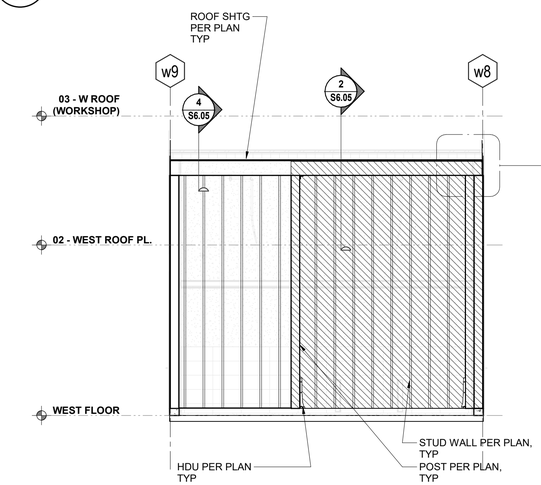

7 S3.01 WEST BUILDING - WORKSHOP STORAGE/STORAGE BUILDING - SOUTH ELEVATION

3/16" = 1'-0"

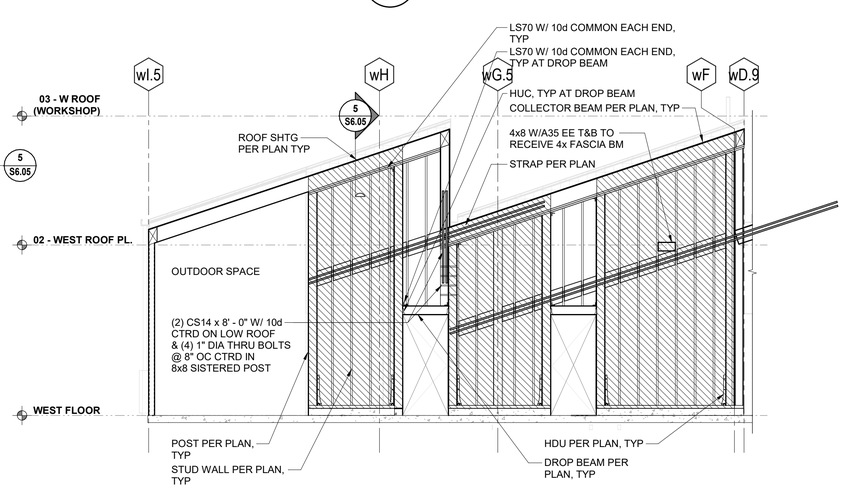

6 S3.01 WEST BUILDINGS - WORKSHOP / STORAGE BUILDING - EAST ELEVATION

3/16" = 1'-0"

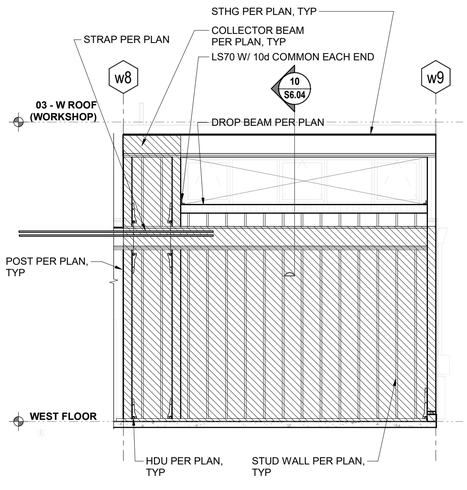

5 S3.01 WEST BUILDING - WORKSHOP STORAGE/STORAGE BUILDING -NORTH ELEVATION

3/16" = 1'-0"

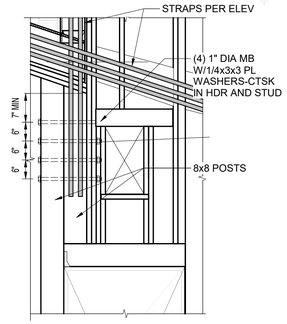

8 S3.01 DETAIL

1/2" = 1'-0"

SHEET NOTES:

1. WALL SHEATHING IS NOT SHOWN FOR CLARITY.
2. SEE PLANS FOR STUD SIZES AND SPACING.
3. SEE FOUNDATION PLAN FOR FOOTINGS NOT SHOWN HEREIN.
4. SEE ROOF FRAMING PLAN FOR ADDITIONAL INFORMATION NOT SHOWN HEREIN.
5. SEE PLANS FOR POST LOCATION AT EACH END OF TRUSS AND BEAMS.
6. SEE DETAIL 20/SS.01 FOR TYPICAL DOOR AND WINDOW FRAMING. APPLY ALL FRAMING, HARDWARE AND CLIPS SHOWN ON TYPICAL DETAIL TO ALL OPENINGS UNLESS SPECIFICALLY DETAILED OTHERWISE.
7. STRAPS OCCUR ONE SIDE UNLESS NOTED "ES."
8. STRAP SHALL BE APPLIED DIRECTLY TO FRAMING, UNDER SHEATHING UON.

APPROVALS

IDENTIFICATION STAMP
DIV. OF THE STATE ARCHITECT
APP: 01-119409 INC:
REVIEWED FOR
SS ☑ FLS ☑ ACS ☑
DATE: 03/14/2022

NOLL & TAM ARCHITECTS
729 Heinz Avenue
Berkeley, CA 94710
tel 510.542.2200
fax 510.542.2201

SEAL

REGISTERED PROFESSIONAL ENGINEER STEPHEN R. DESSER STRUCTURAL STATE OF CALIFORNIA
No. S03527

IDA STRUCTURAL ENGINEERS
1629 Telegraph Ave
Suite 300
Oakland, CA 94612
tel: 510.834.1629
ida-se.com

IDA PROJECT NUMBER: 20012

PROJECT TITLE

Peralta Community College District
MERRITT LANDSCAPE HORTICULTURE COMPLEX

12500 Campus Drive
Oakland, CA 94616

BID SET

ISSUE DATE	03/03/2022
N&T JOB NUMBER	22003

REVISIONS

#	DATE	DESCRIPTION

DRAWN BY	AI	CHECKED BY	GE, SDJ

SHEET TITLE

WALL FRAMING ELEVATIONS - WEST BUILDING WORKSHOP/STORAGE

SHEET NUMBER

S3.01

3/2/2022 5:58:45 PM BIM 360://PCCD Merritt Horticulture/IDA20012 Merritt Horticulture_R20.rvt

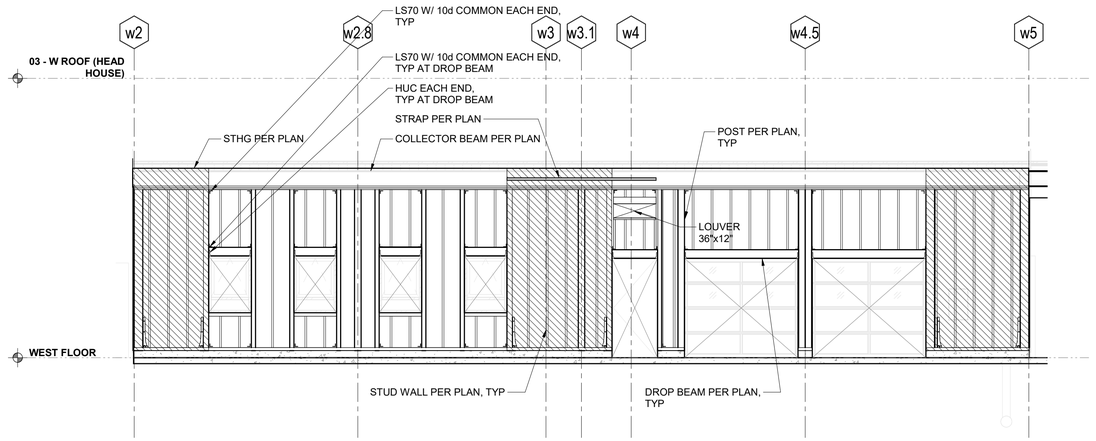

2 S3.02 **WEST BUILDINGS - HEAD HOUSE BUILDING - NORTH ELEVATION**

3/16" = 1'-0"

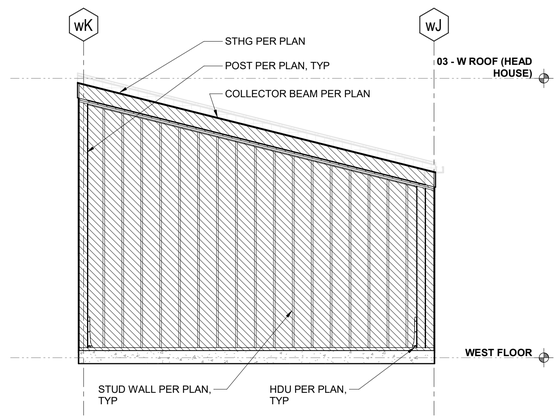

1 S3.02 **WEST BUILDINGS - HEAD HOUSE BUILDING - EAST ELEVATION**

3/16" = 1'-0"

SHEET NOTES:

1. WALL SHEATHING IS NOT SHOWN FOR CLARITY.
2. SEE PLANS FOR STUD SIZES AND SPACING.
3. SEE FOUNDATION PLAN FOR FOOTINGS NOT SHOWN HEREIN.
4. SEE ROOF FRAMING PLAN FOR ADDITIONAL INFORMATION NOT SHOWN HEREIN.
5. SEE PLANS FOR POST LOCATION AT EACH END OF TRUSS AND BEAMS.
6. SEE DETAIL 20/S5.01 FOR TYPICAL DOOR AND WINDOW FRAMING. APPLY ALL FRAMING, HARDWARE AND CLIPS SHOWN ON TYPICAL DETAIL TO ALL OPENINGS UNLESS SPECIFICALLY DETAILED OTHERWISE.
7. STRAPS OCCUR ONE SIDE UNLESS NOTED "ES."
8. STRAP SHALL BE APPLIED DIRECTLY TO FRAMING, UNDER SHEATHING UON.

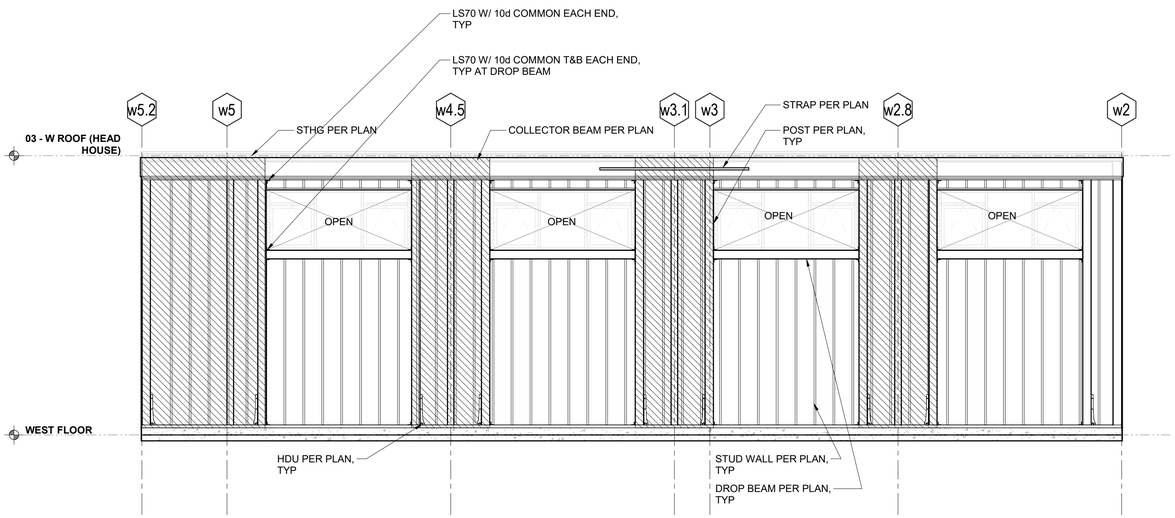

4 S3.02 **WEST BUILDINGS - HEAD HOUSE BUILDING - SOUTH ELEVATION**

3/16" = 1'-0"

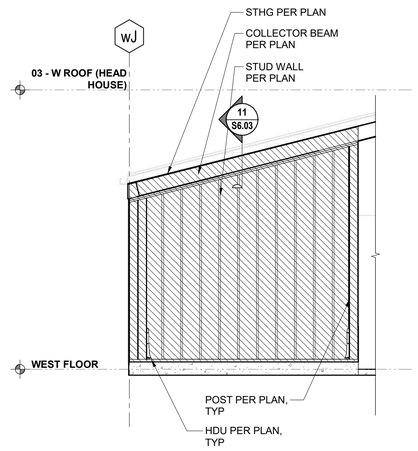

3B S3.02 **WEST BUILDINGS - HEAD HOUSE BUILDING - WEST ELEVATION**

3/16" = 1'-0"

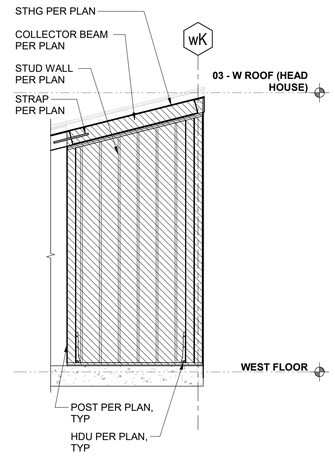

3A S3.02 **WEST BUILDINGS - HEAD HOUSE BUILDING - WEST ELEVATION**

3/16" = 1'-0"

APPROVALS

IDENTIFICATION STAMP
DIV. OF THE STATE ARCHITECT
APP: 01-119409 INC:
REVIEWED FOR
SS ☑ FLS ☑ ACS ☑
DATE: 03/14/2022

NOLL & TAM ARCHITECTS
729 Heinz Avenue
Berkeley, CA 94710
tel 510.542.2200
fax 510.542.2201

SEAL

IDA STRUCTURAL ENGINEERS
1629 Telegraph Ave
Suite 300
Oakland, CA 94612
tel: 510.834.1629
ida-se.com

IDA PROJECT NUMBER: 20012

PROJECT TITLE

Peralta Community College District
MERRITT LANDSCAPE HORTICULTURE COMPLEX

12500 Campus Drive
Oakland, CA 94616

BID SET

ISSUE DATE	03/03/2022
N&T JOB NUMBER	22003

REVISIONS

#	DATE	DESCRIPTION

DRAWN BY AI CHECKED BY GE, SDJ

SHEET TITLE

WALL FRAMING ELEVATIONS - WEST BUILDING - HEAD HOUSE

SHEET NUMBER

S3.02

3/2/2022 5:58:48 PM BIM 360://PCCD Merritt Horticulture/IDA20012 Merritt Horticulture_R20.rvt

SHEET NOTES:

1. WALL SHEATHING IS NOT SHOWN FOR CLARITY.
2. SEE PLANS FOR STUD SIZES AND SPACING.
3. SEE FOUNDATION PLAN FOR FOOTINGS NOT SHOWN HEREIN.
4. SEE ROOF FRAMING PLAN FOR ADDITIONAL INFORMATION NOT SHOWN HEREIN.
5. SEE PLANS FOR POST LOCATION AT EACH END OF TRUSS AND BEAMS.
6. SEE DETAIL 20/S5.01 FOR TYPICAL DOOR AND WINDOW FRAMING. APPLY ALL FRAMING, HARDWARE AND CLIPS SHOWN ON TYPICAL DETAIL TO ALL OPENINGS UNLESS SPECIFICALLY DETAILED OTHERWISE.
7. STRAPS OCCUR ONE SIDE UNLESS NOTED "ES."
8. STRAP SHALL BE APPLIED DIRECTLY TO FRAMING, UNDER SHEATHING UON.

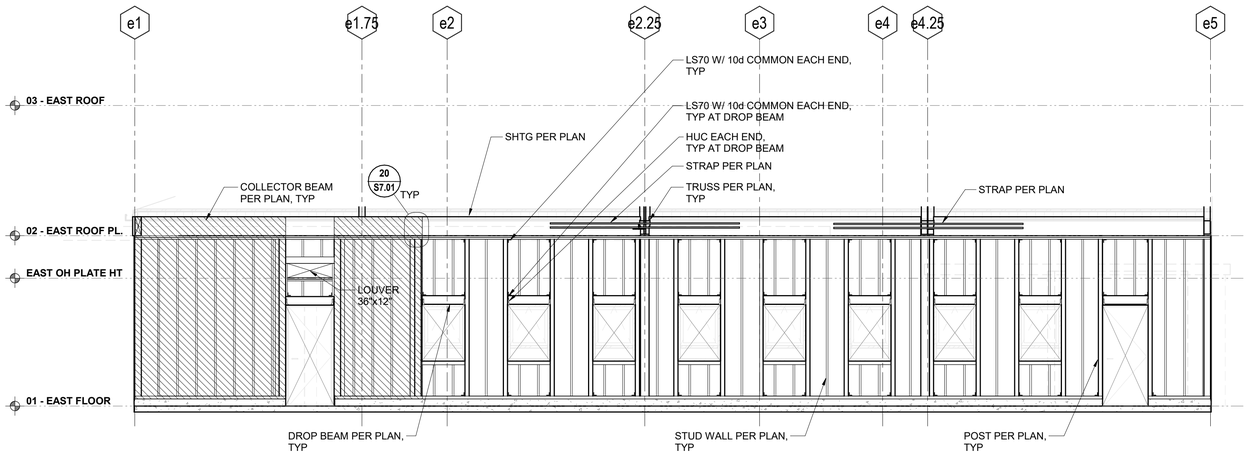

2 S3.03 EAST BUILDING - CLASS LAB 1 - NORTH ELEVATION

3/16" = 1'-0"

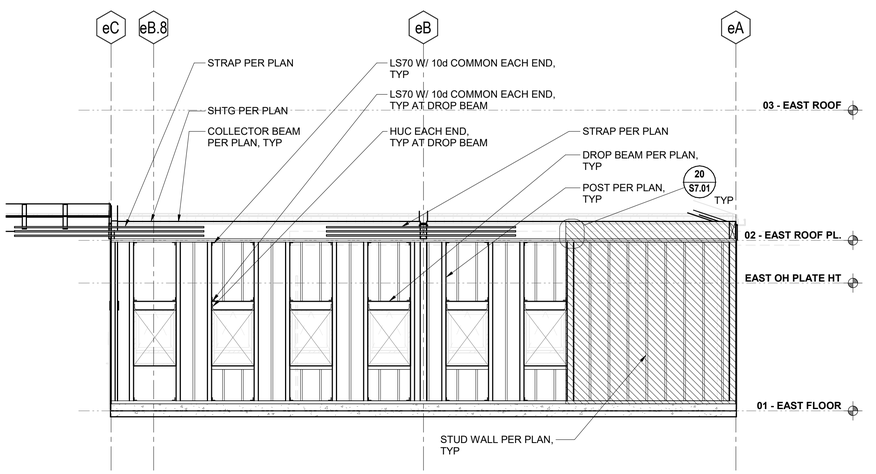

1 S3.03 EAST BUILDING - CLASS LAB 1 - EAST ELEVATION

3/16" = 1'-0"

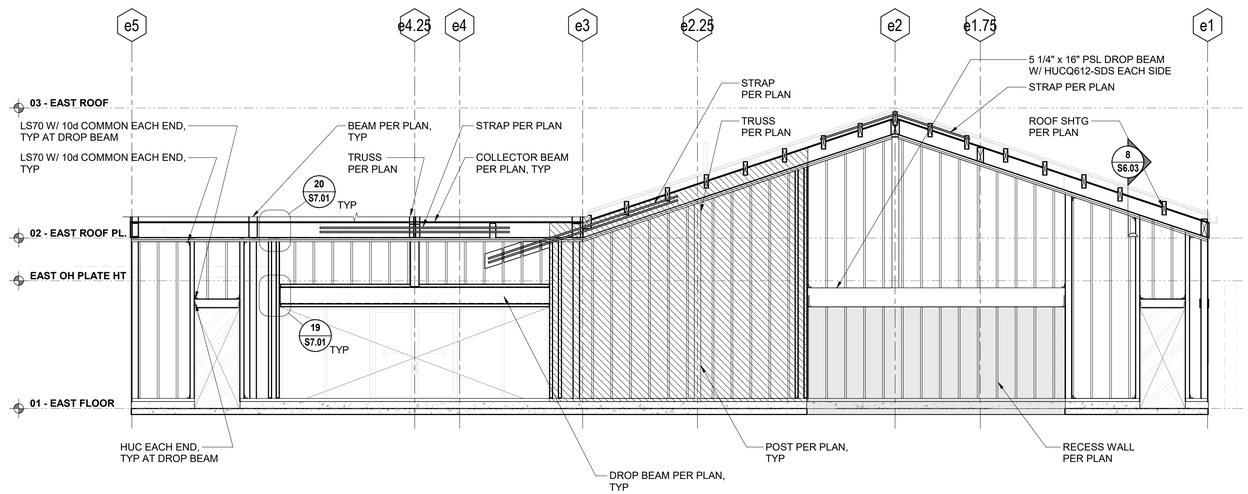

4 S3.03 EAST BUILDING - CLASS LAB 1 - SOUTH ELEVATION

3/16" = 1'-0"

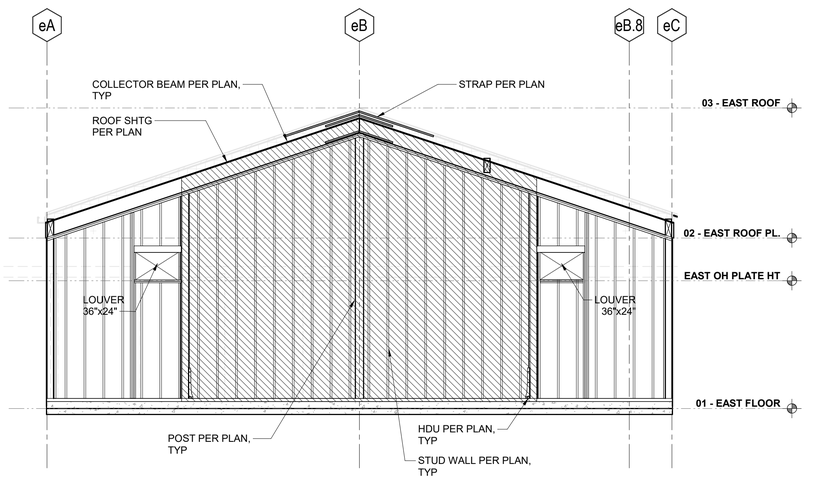

3 S3.03 EAST BUILDING - CLASS LAB 1 - WEST ELEVATION

3/16" = 1'-0"

BIM 360://PCCD Merritt Horticulture/IDA20012 Merritt Horticulture_R20.rvt
3/2/2022 5:58:52 PM

APPROVALS

IDENTIFICATION STAMP
DIV. OF THE STATE ARCHITECT
APP: 01-119409 INC:
REVIEWED FOR
SS ☑ FLS ☑ ACS ☑
DATE: 03/14/2022

NOLL & TAM ARCHITECTS
729 Heinz Avenue
Berkeley, CA 94710
tel 510.542.2200
fax 510.542.2201

SEAL

REGISTERED PROFESSIONAL ENGINEER
STEPHEN R. DITESSO
No. S03527
STRUCTURAL
STATE OF CALIFORNIA

IDA STRUCTURAL ENGINEERS
1629 Telegraph Ave
Suite 300
Oakland, CA 94612
tel: 510.834.1629
ida-se.com

IDA PROJECT NUMBER: 20012

PROJECT TITLE

Peralta Community College District
MERRITT LANDSCAPE HORTICULTURE COMPLEX

12500 Campus Drive
Oakland, CA 94616

BID SET

ISSUE DATE	03/03/2022
N&T JOB NUMBER	22003

REVISIONS

#	DATE	DESCRIPTION

DRAWN BY AI | CHECKED BY GE, SDJ

SHEET TITLE

WALL FRAMING ELEVATIONS - EAST BUILDING - CLASS LAB 1

SHEET NUMBER

S3.03

SHEET NOTES:

1. WALL SHEATHING IS NOT SHOWN FOR CLARITY.
2. SEE PLANS FOR STUD SIZES AND SPACING.
3. SEE FOUNDATION PLAN FOR FOOTINGS NOT SHOWN HEREIN.
4. SEE ROOF FRAMING PLAN FOR ADDITIONAL INFORMATION NOT SHOWN HEREIN.
5. SEE PLANS FOR POST LOCATION AT EACH END OF TRUSS AND BEAMS.
6. SEE DETAIL 20/S5.01 FOR TYPICAL DOOR AND WINDOW FRAMING. APPLY ALL FRAMING, HARDWARE AND CLIPS SHOWN ON TYPICAL DETAIL TO ALL OPENINGS UNLESS SPECIFICALLY DETAILED OTHERWISE.
7. STRAPS OCCUR ONE SIDE UNLESS NOTED "ES."
8. STRAP SHALL BE APPLIED DIRECTLY TO FRAMING, UNDER SHEATHING UON.

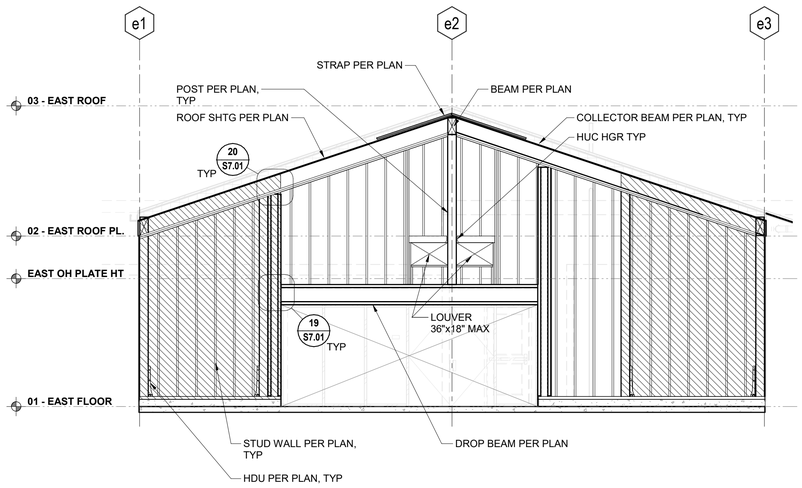

2 S3.04 EAST BUILDING - STUDENT/FACILITY - NORTH ELEVATION

3/16" = 1'-0"

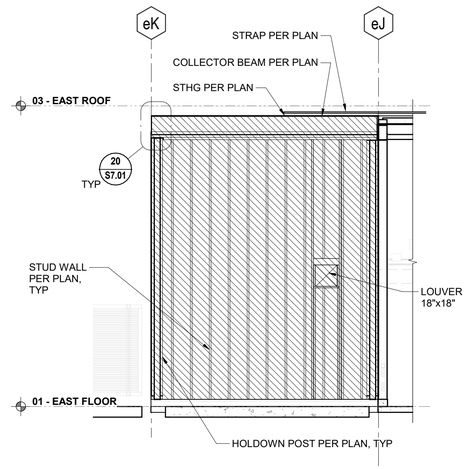

1B S3.04 EAST BUILDING - STUDENT/FACILITY - EAST ELEVATION

3/16" = 1'-0"

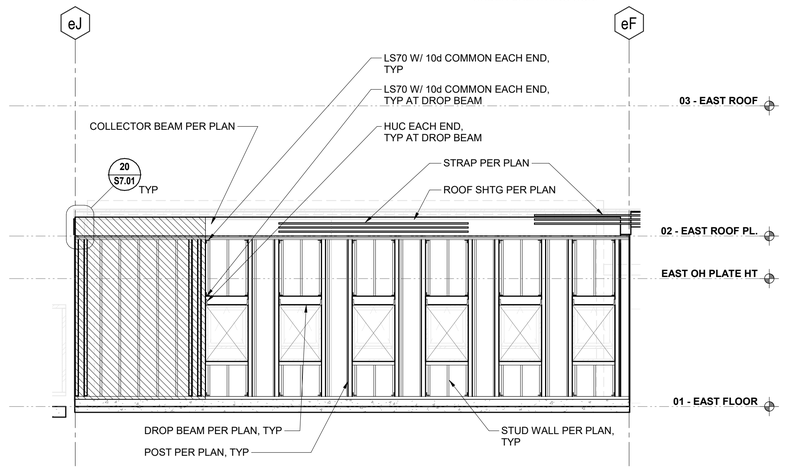

1A S3.04 EAST BUILDING - STUDENT/FACILITY - EAST ELEVATION

3/16" = 1'-0"

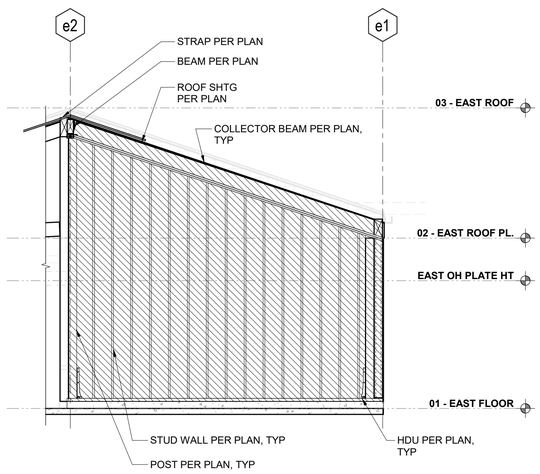

4B S3.04 EAST BUILDING - STUDENT/FACILITY - SOUTH ELEVATION

3/16" = 1'-0"

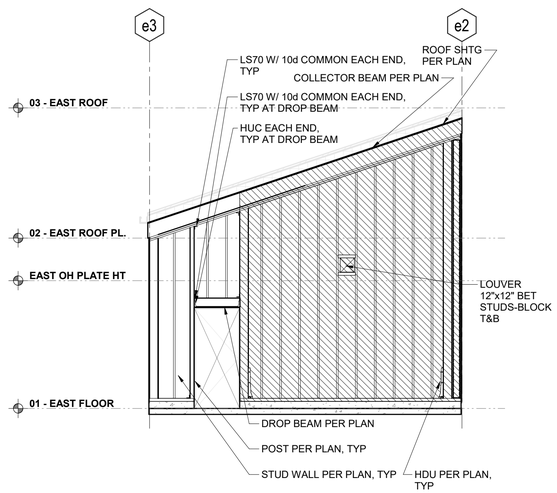

4A S3.04 EAST BUILDING - STUDENT/FACILITY - SOUTH ELEVATION

3/16" = 1'-0"

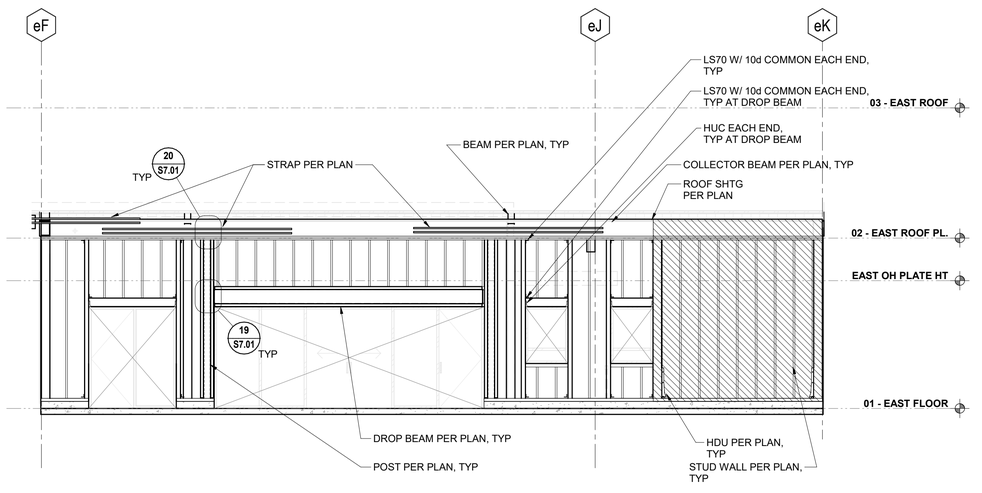

3 S3.04 EAST BUILDING - STUDENT/FACILITY - WEST ELEVATION

3/16" = 1'-0"

APPROVALS

IDENTIFICATION STAMP
DIV. OF THE STATE ARCHITECT
APP: 01-119409 INC:
REVIEWED FOR
SS ☑ FLS ☑ ACS ☑
DATE: 03/14/2022

NOLL & TAM ARCHITECTS
729 Heinz Avenue
Berkeley, CA 94710
tel 510.542.2200
fax 510.542.2201

SEAL

REGISTERED PROFESSIONAL ENGINEER
STEPHEN R. DITESSE
No. S03527
STRUCTURAL
STATE OF CALIFORNIA

IDA STRUCTURAL ENGINEERS
1629 Telegraph Ave
Suite 300
Oakland, CA 94612
tel: 510.834.1629
ida-se.com

IDA PROJECT NUMBER: 20012

PROJECT TITLE

Peralta Community College District

MERRITT LANDSCAPE HORTICULTURE COMPLEX

12500 Campus Drive
Oakland, CA 94616

BID SET

ISSUE DATE	03/03/2022
N&T JOB NUMBER	22003

REVISIONS

#	DATE	DESCRIPTION

DRAWN BY AI | CHECKED BY GE, SDJ

SHEET TITLE

WALL FRAMING ELEVATIONS - EAST BUILDING - STUDENT/FACULTY

SHEET NUMBER

S3.04

BIM 360://PCCD Merritt Horticulture/IDA20012 Merritt Horticulture_R20.rvt
3/2/2022 5:58:55 PM

SHEET NOTES:

1. WALL SHEATHING IS NOT SHOWN FOR CLARITY.
2. SEE PLANS FOR STUD SIZES AND SPACING.
3. SEE FOUNDATION PLAN FOR FOOTINGS NOT SHOWN HEREIN.
4. SEE ROOF FRAMING PLAN FOR ADDITIONAL INFORMATION NOT SHOWN HEREIN.
5. SEE PLANS FOR POST LOCATION AT EACH END OF TRUSS AND BEAMS.
6. SEE DETAIL 20/S5.01 FOR TYPICAL DOOR AND WINDOW FRAMING. APPLY ALL FRAMING, HARDWARE AND CLIPS SHOWN ON TYPICAL DETAIL TO ALL OPENINGS UNLESS SPECIFICALLY DETAILED OTHERWISE.
7. STRAPS OCCUR ONE SIDE UNLESS NOTED "ES."
8. STRAP SHALL BE APPLIED DIRECTLY TO FRAMING, UNDER SHEATHING UON.

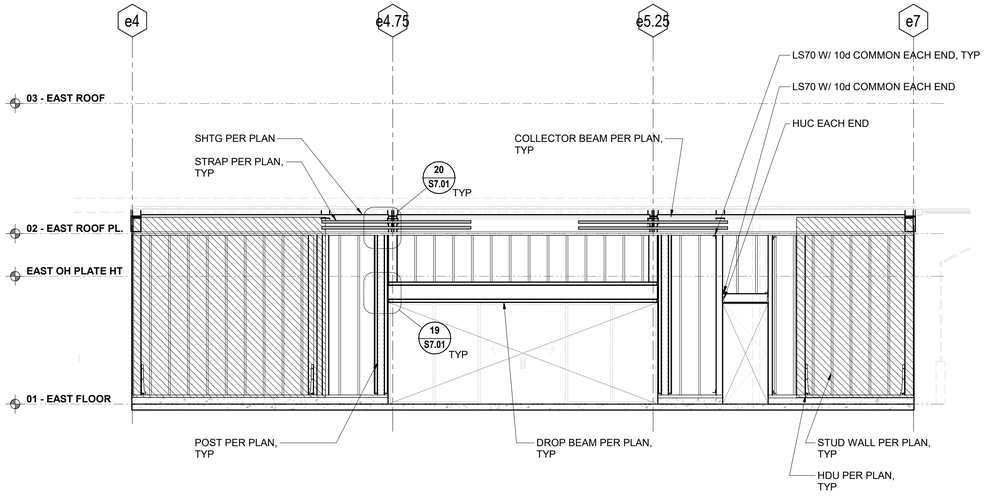

2 S3.05 **EAST BUILDING - CLASS LAB 2 - NORTH ELEVATION**
3/16" = 1'-0"

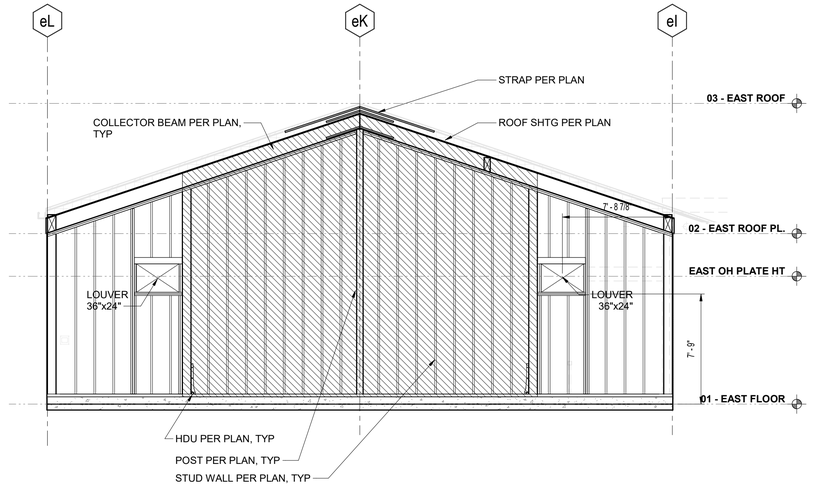

1 S3.05 **EAST BUILDING - CLASS LAB 2 - EAST ELEVATION**
3/16" = 1'-0"

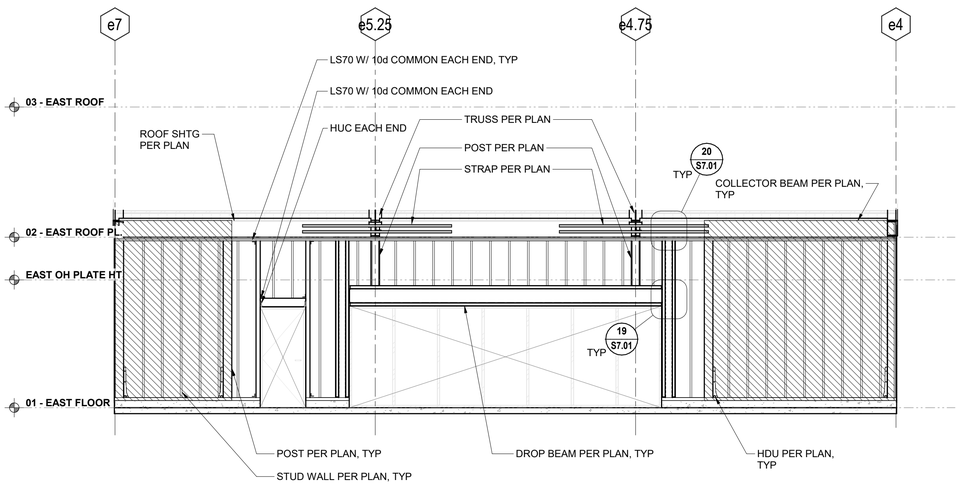

4 S3.05 **EAST BUILDING - CLASS LAB 2 - SOUTH ELEVATION**
3/16" = 1'-0"

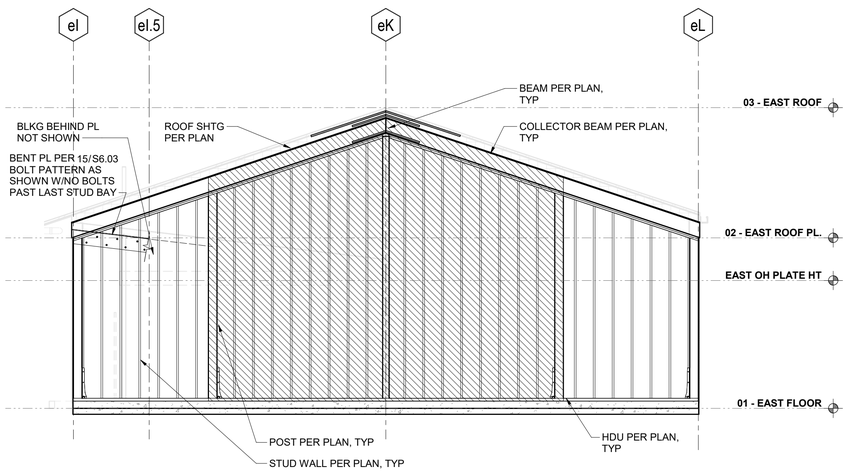

3 S3.05 **EAST BUILDING - CLASS LAB 2 - WEST ELEVATION**
3/16" = 1'-0"

APPROVALS

IDENTIFICATION STAMP
DIV. OF THE STATE ARCHITECT
APP: 01-119409 INC:
REVIEWED FOR
SS ☑ FLS ☑ ACS ☑
DATE: 03/14/2022

NOLL & TAM ARCHITECTS
729 Heinz Avenue
Berkeley, CA 94710
tel 510.542.2200
fax 510.542.2201

SEAL

REGISTERED PROFESSIONAL ENGINEER STEPHEN R. DITESSO STRUCTURAL STATE OF CALIFORNIA No. S03527

IDA STRUCTURAL ENGINEERS
1629 Telegraph Ave
Suite 300
Oakland, CA 94612
tel: 510.834.1629
ida-se.com

IDA PROJECT NUMBER: 20012

PROJECT TITLE

Peralta Community College District
MERRITT LANDSCAPE HORTICULTURE COMPLEX

12500 Campus Drive
Oakland, CA 94616

BID SET

ISSUE DATE	03/03/2022
N&T JOB NUMBER	22003

REVISIONS

	DATE	DESCRIPTION
2		

DRAWN BY AI | CHECKED BY GE, SDJ

SHEET TITLE

WALL FRAMING ELEVATIONS - EAST BLDG- CLASS LAB 2

SHEET NUMBER

S3.05

BIM 360://PCCD Merritt Horticulture/IDA20012 Merritt Horticulture_R20.rvt
3/2/2022 5:58:58 PM

SHEET NOTES:

1. WALL SHEATHING IS NOT SHOWN FOR CLARITY.
2. SEE PLANS FOR STUD SIZES AND SPACING.
3. SEE FOUNDATION PLAN FOR FOOTINGS NOT SHOWN HEREIN.
4. SEE ROOF FRAMING PLAN FOR ADDITIONAL INFORMATION NOT SHOWN HEREIN.
5. SEE PLANS FOR POST LOCATION AT EACH END OF TRUSS AND BEAMS.
6. SEE DETAIL 20/S5.01 FOR TYPICAL DOOR AND WINDOW FRAMING. APPLY ALL FRAMING, HARDWARE AND CLIPS SHOWN ON TYPICAL DETAIL TO ALL OPENINGS UNLESS SPECIFICALLY DETAILED OTHERWISE.
7. STRAPS OCCUR ONE SIDE UNLESS NOTED "ES."
8. STRAP SHALL BE APPLIED DIRECTLY TO FRAMING, UNDER SHEATHING UON.

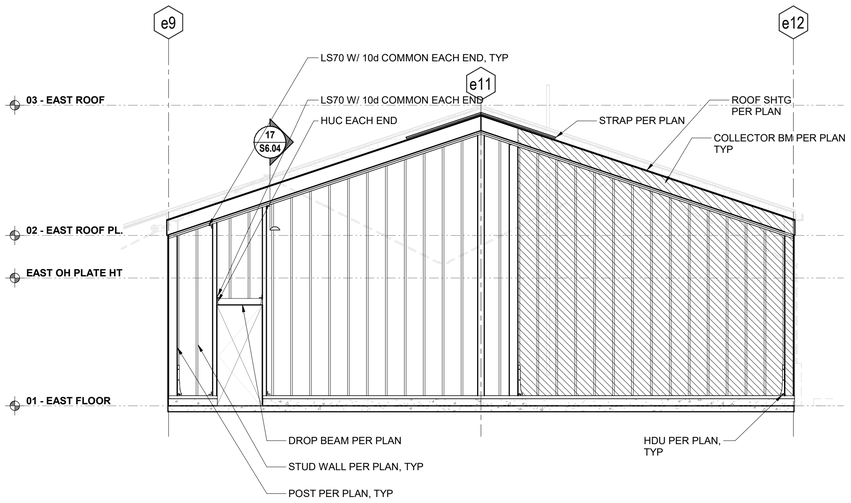

2 S3.06 EAST BUILDING - CLASS LAB 3 - NORTH ELEVATION

3/16" = 1'-0"

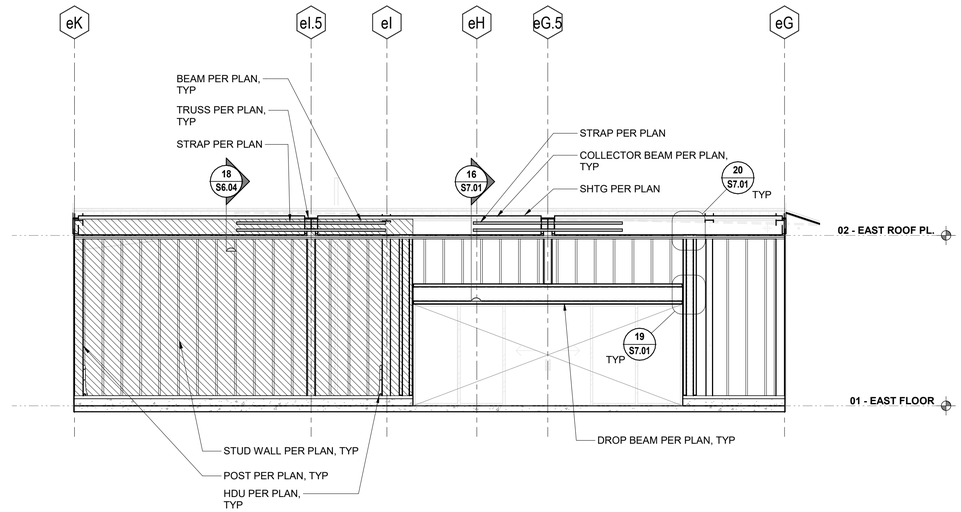

1 S3.06 EAST BUILDING - CLASS LAB 3 - EAST ELEVATION

3/16" = 1'-0"

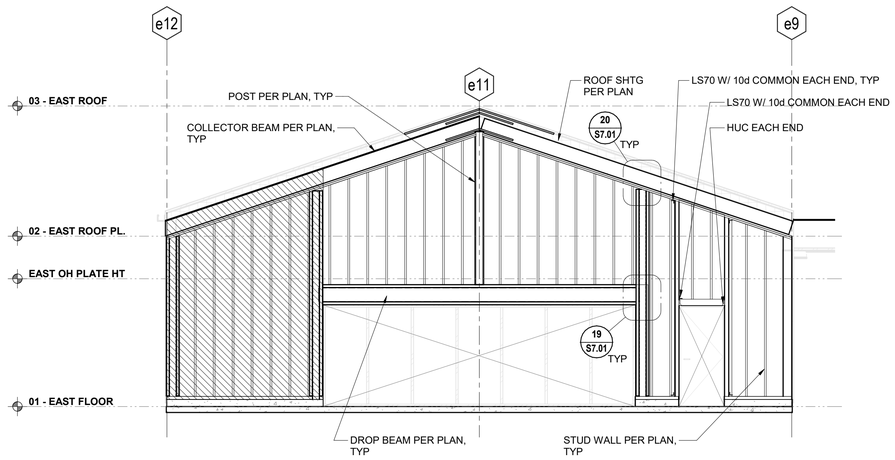

4 S3.06 EAST BUILDING - CLASS LAB 3 - SOUTH ELEVATION

3/16" = 1'-0"

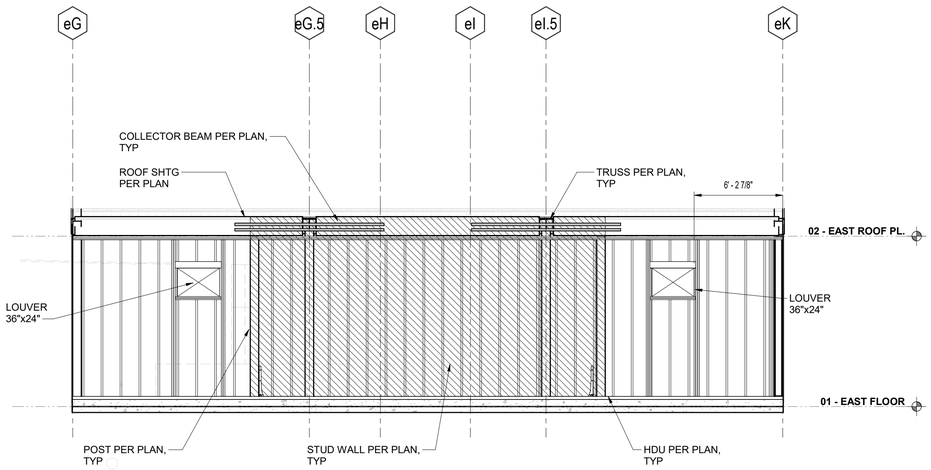

3 S3.06 EAST BUILDING - CLASS LAB 3 - WEST ELEVATION

3/16" = 1'-0"

APPROVALS

IDENTIFICATION STAMP
DIV. OF THE STATE ARCHITECT
APP: 01-119409 INC:
REVIEWED FOR
SS ☑ FLS ☑ ACS ☑
DATE: 03/14/2022

NOLL & TAM ARCHITECTS
729 Heinz Avenue
Berkeley, CA 94710
tel 510.542.2200
fax 510.542.2201

SEAL

REGISTERED PROFESSIONAL ENGINEER
STEPHEN R. DITESSO
No. S03527
STRUCTURAL
STATE OF CALIFORNIA

STRUCTURAL ENGINEERS
1629 Telegraph Ave
Suite 300
Oakland, CA 94612
tel: 510.834.1629
ida-se.com

IDA PROJECT NUMBER: 20012

PROJECT TITLE

Peralta Community College District
MERRITT LANDSCAPE HORTICULTURE COMPLEX

12500 Campus Drive
Oakland, CA 94616

BID SET

ISSUE DATE	03/03/2022
N&T JOB NUMBER	22003

REVISIONS

	DATE	DESCRIPTION

DRAWN BY AI CHECKED BY GE, SDJ

SHEET TITLE

WALL FRAMING ELEVATIONS - EAST BLDG- CLASS LAB 3

SHEET NUMBER

S3.06

3/2/2022 5:59:00 PM BIM 360://PCCD Merritt Horticulture/IDA20012 Merritt Horticulture_R20.rvt

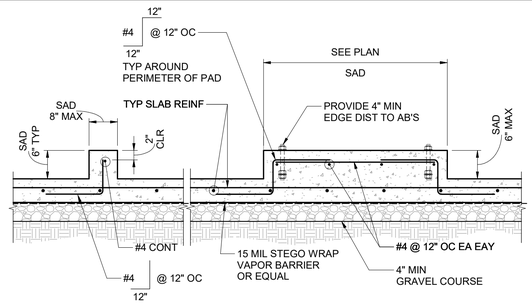

A TYPICAL AT CURB

B PAD OR WIDE CURB
MEP OR ARCH PAD
U.N.O ON FND PLAN

17 S4.01 TYP CURB AND PAD DETAIL

NTS

CONCRETE STRENGTH PSI	BAR TYPE	BAR SIZE																	
		#3		#4		#5		#6		#7		#8		#9		#10		#11	
		CLASS		CLASS		CLASS		CLASS		CLASS		CLASS		CLASS		CLASS		CLASS	
		A	B	A	B	A	B	A	B	A	B	A	B	A	B	A	B	A	B
3000	TOP BAR	22	28	29	37	36	47	43	56	63	81	72	93	81	105	91	118	101	131
	ALL OTHER BARS	17	22	22	29	28	36	33	43	48	63	55	72	62	81	70	91	78	101
4000	TOP BAR	19	24	25	33	31	41	37	49	54	71	62	81	70	91	79	102	87	113
	ALL OTHER BARS	15	19	19	25	24	31	29	37	42	54	48	62	54	70	61	79	67	87

NOTES:
1. SPLICE LENGTH IN INCHES.
2. USE CLASS B FOR ALL LAP SPLICES EXCEPT CLASS A MAY BE USED FOR NON-STRUCTURAL SLABS ON GRADE.
3. TOP BARS = HORIZONTAL BARS (OTHER THAN IN WALLS) PLACED WITH MORE THAN 12" OF FRESH CONCRETE CAST BELOW BARS.
4. TABLE IS BASED UPON MINIMUM CLEAR COVER GREATER THAN ONE BAR DIAMETER AND MINIMUM CLEAR SPACING GREATER THAN TWO BAR DIAMETERS. WHERE EITHER OF THESE REQUIREMENTS IS NOT MET, INCREASE LAP LENGTH BY 50%.
5. SEE 20/S4.01 FOR GRADE 80 REBAR LAPS.
6. AT CMU f'm=1500 psi, LAP BARS 50d AND AT CORNERS AND INTERSECTIONS.

9 S4.01 REINFORCING BAR (GRADE 60) LAP SPLICE SCHEDULE IN CONCRETE

NTS

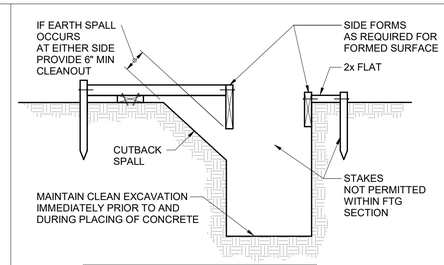

NOTE:
APPLICABLE WHERE SIDE FORMS CAN BE OMITTED AND APPROVED BY THE ARCHITECT

1 S4.01 TRENCHED FOOTING/GB DETAIL

NTS

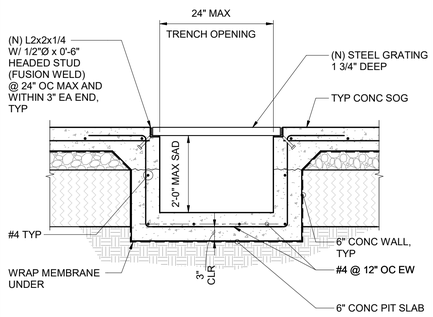

18 S4.01 TRENCH DETAIL

NTS

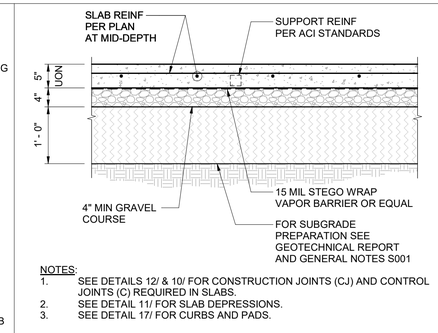

NOTES:
1. SEE DETAILS 12/ & 10/ FOR CONSTRUCTION JOINTS (CJ) AND CONTROL JOINTS (C) REQUIRED IN SLABS.
2. SEE DETAIL 11/ FOR SLAB DEPRESSIONS.
3. SEE DETAIL 17/ FOR CURBS AND PADS.

14 S4.01 TYP SLAB ON GRADE DETAIL

NTS

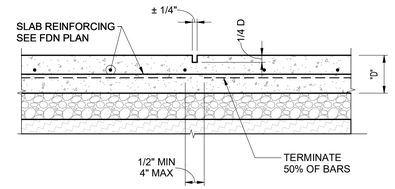

NOTES:
1. DO NOT SAWCUT CONTROL JOINTS - FORM JOINT IN FRESH CONCRETE.
2. FILL GROOVE WITH JOINT FILLER SEALANT.
3. WHERE POSSIBLE, APPLY FILLER WHILE BLDG IS UNDER PERMANENT TEMPERATURE CONTROL.
4. PLACE AT 30D OC MAX OR AS SHOWN ON FOUNDATION PLAN. SUBMIT JOINT LOCATIONS FOR ARCHITECT REVIEW.

10 S4.01 CONTROL JOINT (C) CONCRETE SLAB ON GRADE

NTS

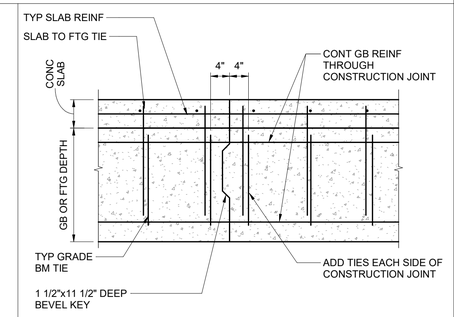

6 S4.01 TYPICAL GRADE BEAM & CONT FTG CONSTRUCTION JOINT

NTS

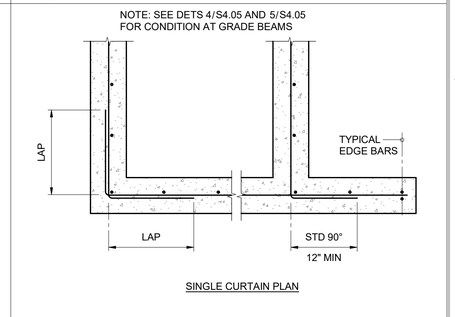

SINGLE CURTAIN PLAN

2 S4.01 TYPICAL REINFORCING AT CURB, FOOTING & GB CORNERS

NTS

BAR	ALL OTHER BARS		TOP BARS		STD HOOK
	Ld	LAP	Ld	LAP	
#3	19	25	25	33	10
#4	26	33	33	43	13
#5	32	42	42	54	16
#6	38	50	50	65	19
#7	56	72	72	94	23
#8	64	83	83	107	26
#9	72	93	93	121	29
#10	81	105	105	136	33
#11	90	116	116	151	36

GRADE 80 REINFORCEMENT WITH 4,000 PSI NWC

NOTES:
1. VALUES IN INCHES.
2. TOP BARS = HORIZONTAL BARS (OTHER THAN IN WALLS) PLACED WITH MORE THAN 12" OF FRESH CONCRETE CAST BELOW BARS.
3. TABLE IS BASED UPON MINIMUM CLEAR COVER GREATER THAN ONE BAR DIAMETER AND MINIMUM CLEAR SPACING GREATER THAN TWO BAR DIAMETERS. WHERE EITHER OF THESE REQUIREMENTS IS NOT MET, INCREASE LAP LENGTH BY 50%.
4. SEE 9/S4.01 FOR GRADE 60 REBAR LAPS.

20 S4.01 REINFORCING BAR (GRADE 80) LAP SPLICE SCHEDULE

NTS

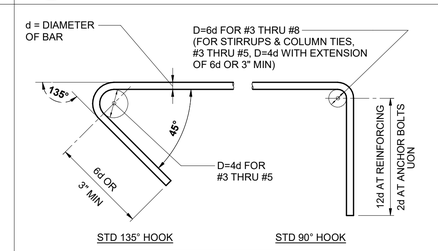

NOTES:
ALL GRADES OF STEEL
D = MINIMUM FINISHED INSIDE BEND DIA.
d = NOMINAL REBAR DIAMETR
TOL = TOLERANCE (PER ACI 117)

15 S4.01 TYPICAL REINFORCING BAR & ANCHOR BOLT HOOK

NTS

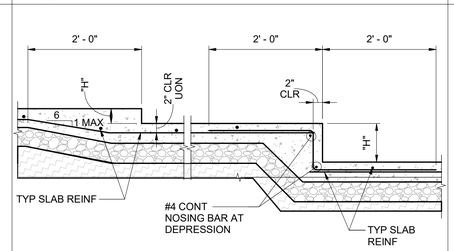

H ≤ 4" H > 4"

11 S4.01 SLAB ON GRADE DEPRESSION

NTS

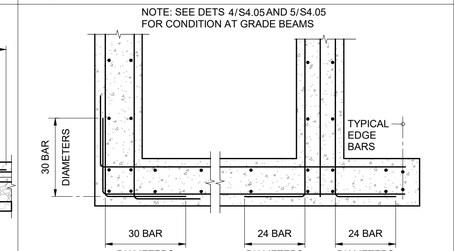

DOUBLE CURTAIN PLAN
MULT CURTAIN PLAN SIM

7 S4.01 TYPICAL REINFORCING AT CURB, CONT FOOTING & GB CORNERS

NTS

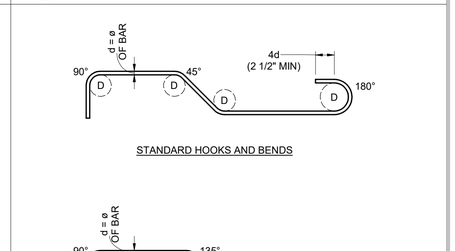

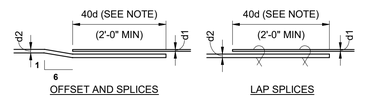

NOTE:
ALL LAP SPLICES ARE CLASS B LAP SPLICES

4 S4.01 TYPICAL REINFORCING BAR & ANCHOR BOLT BENDS

NTS

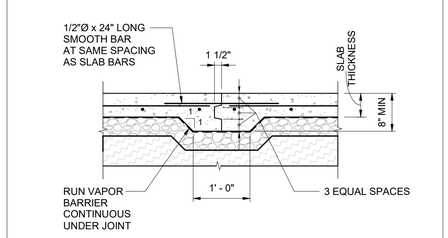

NOTE:
PROVIDE CONSTRUCTION JOINTS (CJ) AT LOCATIONS SHOWN ON PLANS OR (WITH ARCHITECT'S PRIOR APPROVAL).
USE KEYED COLD JOINTS.
SUBMIT SHOP DRAWING OF PROPOSED LOCATIONS.
THICKENED SLAB NOT REQUIRED AT SLAB THICKNESS >5"

12 S4.01 CONSTRUCTION JOINT (CJ) CONCRETE SLAB ON GRADE

NTS

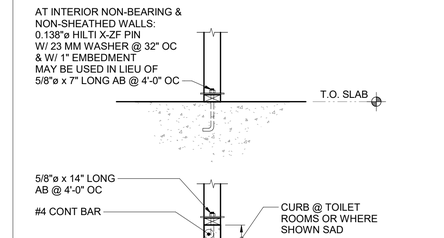

8 S4.01 TYP NON-BEARING STUD WALLS ON CONCRETE SLAB/FILL

NTS

APPROVALS

IDENTIFICATION STAMP
DIV. OF THE STATE ARCHITECT
APP: 01-119409 INC:
REVIEWED FOR
SS ☑ FLS ☑ ACS ☑
DATE: 03/14/2022

NOLL & TAM ARCHITECTS
729 Heinz Avenue
Berkeley, CA 94710
tel 510.542.2200
fax 510.542.2201

SEAL

REGISTERED PROFESSIONAL ENGINEER STEPHEN R. DITESSO STRUCTURAL STATE OF CALIFORNIA No. S03527

IDA STRUCTURAL ENGINEERS
1629 Telegraph Ave
Suite 300
Oakland, CA 94612
tel: 510.834.1629
ida-se.com

IDA PROJECT NUMBER: 20012

PROJECT TITLE

Peralta Community College District
MERRITT LANDSCAPE HORTICULTURE COMPLEX

12500 Campus Drive
Oakland, CA 94616

BID SET

ISSUE DATE 03/03/2022

N&T JOB NUMBER 22003

REVISIONS

	DATE	DESCRIPTION

DRAWN BY Author CHECKED BY Checker

SHEET TITLE

TYPICAL CONCRETE DETAILS

SHEET NUMBER

S4.01

3/2/2022 5:59:02 PM BIM 360://PCCD Merritt Horticulture/IDA20012 Merritt Horticulture_R20.rvt

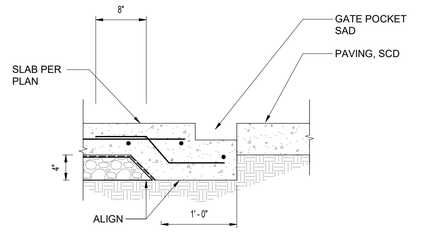

15 S4.02 **STEP SECTION NEAR SLAB EDGE**
1" = 1'-0"

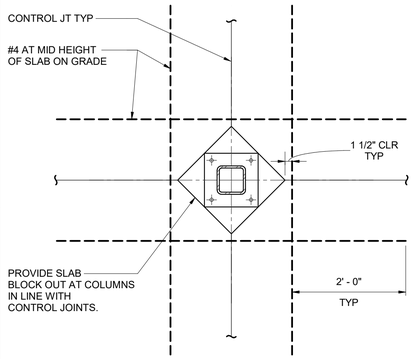

14 S4.02 **SLAB ON GRADE REINFORCING AT BASE OF COLUMNS**
NTS

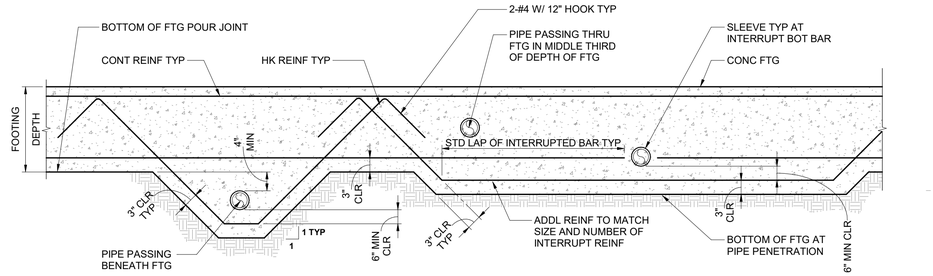

NOTES:
1. PROVIDE SLEEVES FOR ALL PIPES PASSING THROUGH OR BELOW CONT FOOTINGS OR WALLS. SLEEVE INSIDE DIAMETER SHALL BE GREATER THAN PIPE OUTSIDE DIAMETER BY 1 INCH; PROVIDE MINIMUIM CLEARANCES SHOWN.
2. CLEARANCE BETWEEN ADJACENT SLEEVES SHALL BE NO LESS THAN DIAMETER OF LARGER SLEEVE OR 6" MINIMUM.
3. DO NOT PASS PIPES THROUGH ISOLATED FOOTINGS. PASS AROUND AS REQUIRED.
4. LOCATE SLEEVES TO MAINTAIN MINIMUM CONCRETE COVER SHOWN AROUND REINFORCING.

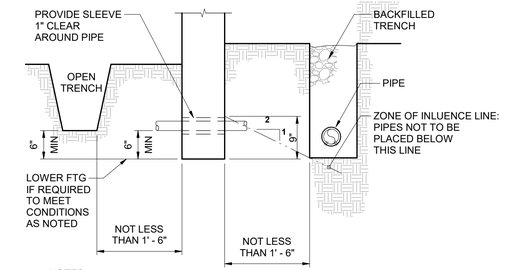

NOTES:
1. DEPTHS OF FTGS MAY BE DETERMINED BY LOCATIONS OF PIPES.
2. GENERAL CONTRACTOR SHALL CONSULT WITH MECH CONTRACTOR TO DETERMINE EXACT DEPTH AND LOCATIONS OF PIPES.
3. NO PIPES SHALL PASS UNDER FOOTINGS.

10 S4.02 **RELATION OF PIPES & TRENCHES TO SPREAD FOOTINGS & GB'S**
NTS

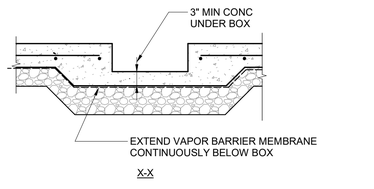

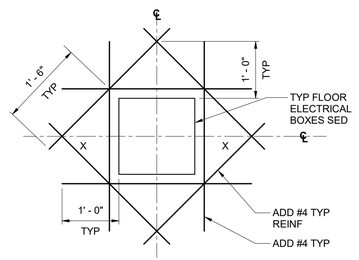

PLAN VIEW

11 S4.02 **TYPICAL FLOOR BOX BLOCKOUT DETAIL AT SLAB ON GRADE**
NTS

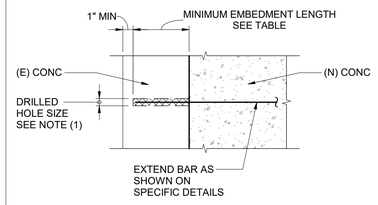

BAR SIZE	THREADED ROD SIZE	MINIMUM EMBEDMENT LENGTH (2), (3)	TENSION TEST LOAD (LBS)	
			REINFORCING BAR (LBS)	THREADED ROD
#3	3/8"ø	4"	-	5,100
#4	1/2"ø	5"	9,600	8,850
#5	5/8"ø	8"	14,880	13,360
#6	3/4"ø	12"	21,200	21,050
#7	7/8"ø	18"	28,800	24,580
#8	1"ø	24"	37,920	30,030

NOTES:
1. EMBEDMENT LENGTHS SHOWN ON SPECIFIC DETAILS SUPERCEDE SCHEDULE.
2. ANCHOR EMBEDMENT INTO WALLS AND SLABS SHALL NOT EXCEED THICKNESS (IN DIRECTION OF DRILLING) MINUS ONE INCH.
3. SEE GENERAL NOTES FOR EPOXY REQUIREMENTS. SUBMIT EPOXY TECHNICAL INFORMATION TO STRUCTURAL ENGINEER FOR APPROVAL.
4. THREADED RODS SHALL CONFORM TO ASTM A193, GRADE B7.
5. TENSION TEST LOAD IS 2x ALLOWABLE LOAD IN 3000 PSI CONCRETE BASED ON ALLOWABLE STRENGTH DESIGN (ASD).

7 S4.02 **GROUTED ANCHOR SCHEDULE**
NTS

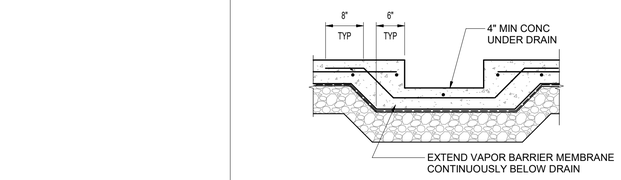

13 S4.02 **TRENCH DRAIN DETAIL**
3/4" = 1'-0"

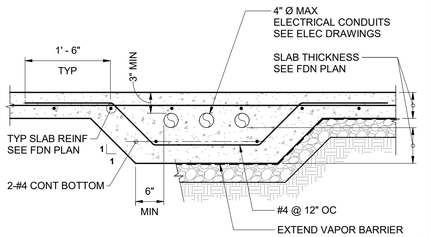

NOTE:
DETAIL APPLIES ONLY WHERE CONDUITS ARE EMBEDDED IN NON STRUCTURAL SLAB ON GRADE. THICKENED SLAB NOT REQUIRED WHERE CONDUITS ARE UNDER SLAB

12 S4.02 **CONDUIT PENETRATION IN SLAB ON GRADE**
NTS

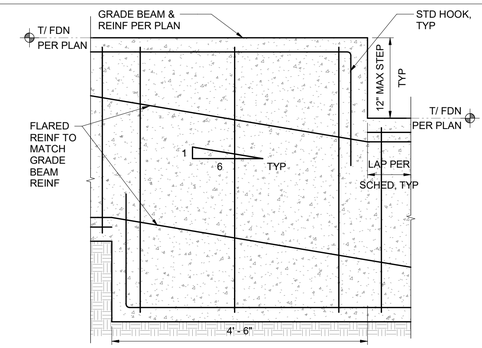

8 S4.02 **TYPICAL CONT FOOTING OR GRADE BEAM STEP**
NTS

APPROVALS

IDENTIFICATION STAMP
DIV. OF THE STATE ARCHITECT
APP: 01-119409 INC:
REVIEWED FOR
SS ☑ FLS ☑ ACS ☑
DATE: 03/14/2022

NOLL & TAM ARCHITECTS
729 Heinz Avenue
Berkeley, CA 94710
tel 510.542.2200
fax 510.542.2201

SEAL

REGISTERED PROFESSIONAL ENGINEER STEPHEN R. DESSECKER No. S03527 STRUCTURAL STATE OF CALIFORNIA

IDA STRUCTURAL ENGINEERS
1629 Telegraph Ave
Suite 300
Oakland, CA 94612
tel: 510.834.1629
ida-se.com

IDA PROJECT NUMBER: 20012

PROJECT TITLE

Peralta Community College District
MERRITT LANDSCAPE HORTICULTURE COMPLEX

12500 Campus Drive
Oakland, CA 94616

BID SET

ISSUE DATE	03/03/2022
N&T JOB NUMBER	22003

REVISIONS

	DATE	DESCRIPTION

DRAWN BY AI CHECKED BY GE, SDJ

SHEET TITLE
TYPICAL CONCRETE DETAILS

SHEET NUMBER
S4.02

3/2/2022 5:59:03 PM BIM 360://PCCD Merritt Horticulture/IDA20012 Merritt Horticulture_R20.rvt

MARK	MARK "H"	MAX SPACING NEXT PIER "L"	SOLDIER PILE SIZE	PIER DEPTH "D"
A	3' - 0"	5' - 0"	W8x15	4' - 6"
B	4' - 0"	5' - 0"	W8x15	6' - 0"
C	5' - 0"	5' - 0"	W8x21	7' - 0"
D	6' - 0"	4' - 6"	W8x21	9' - 0"
E	7' - 0"	4' - 6"	W8x21	11' - 0"
F	8' - 0"	4' - 6"	W8x28	12' - 0"

1 S4.03 SITE WALL SCHEDULE

NTS

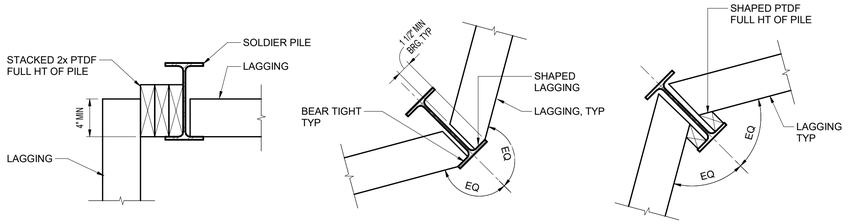

90° CORNER **OBTUSE CORNER** **ACUTE CORNER**

6 S4.03 TYPICAL PLANS DETAILS AT CORNERS

NTS

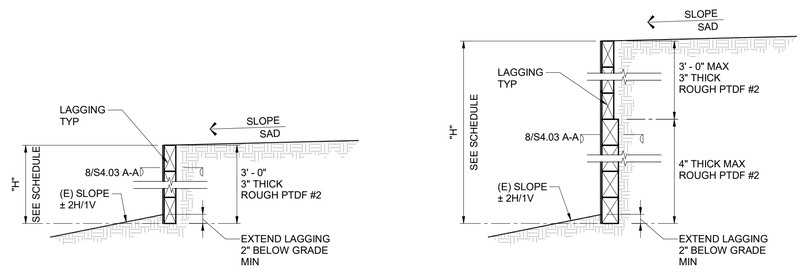

WALL TYPE A **WALL TYPE B, C, D, E**

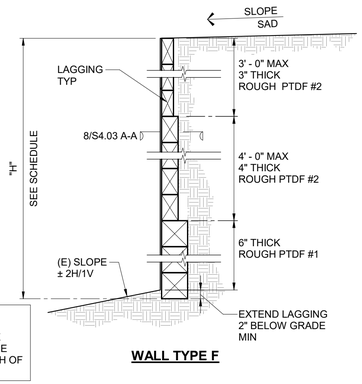

WALL TYPE F

NOTES:
1. ALL LAGGING IS FULL THICKNESS TIMBER.
2. CONTRACTOR MAY USE 8", 10" OR 12" WIDE MEMBERS. EACH WALL TYPE SHALL HAVE ONE WIDTH OF LAGGING BOARD FOR FULL LENGTH OF WALL.

16 S4.03 SITE WALL LAGGING SECTION

NTS

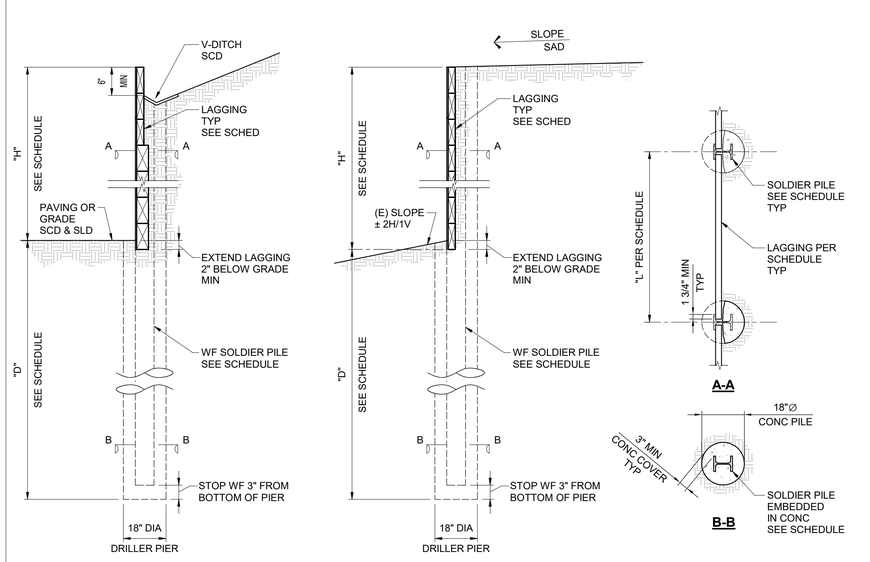

CONDITION AT TYPICAL SITE WALL **CONDITION AT FIRE LANE SITE WALL**

NOTES:
1. SEE CIVIL DRAWINGS FOR LOCATION AND EXTENT OF WALLS.
2. THIS DETAIL APPLIES TO ALL SITE WALLS EXCEPT THOSE SPECIFICALLY DETAILED ON LANDSCAPE DRAWINGS.

8 S4.03 SITE WALL SECTION

NTS

APPROVALS

IDENTIFICATION STAMP
DIV. OF THE STATE ARCHITECT
APP: 01-119409 INC:
REVIEWED FOR
SS ☑ FLS ☑ ACS ☑
DATE: 03/14/2022

NOLL & TAM ARCHITECTS
729 Heinz Avenue
Berkeley, CA 94710
tel 510.542.2200
fax 510.542.2201

SEAL

REGISTERED PROFESSIONAL ENGINEER STEPHEN R. OBTESSER No. S03527 STRUCTURAL STATE OF CALIFORNIA

IDA STRUCTURAL ENGINEERS
1629 Telegraph Ave
Suite 300
Oakland, CA 94612
tel: 510.834.1629
ida-se.com

IDA PROJECT NUMBER: 20012

PROJECT TITLE

Peralta Community College District
MERRITT LANDSCAPE HORTICULTURE COMPLEX

12500 Campus Drive
Oakland, CA 94616

BID SET

ISSUE DATE	03/03/2022
N&T JOB NUMBER	22003

REVISIONS

	DATE	DESCRIPTION

DRAWN BY AI CHECKED BY SDJ

SHEET TITLE

TYPICAL SITE WALL DETAILS

SHEET NUMBER

S4.03

3/2/2022 5:59:04 PM BIM 360://PCCD Merritt Horticulture/IDA20012 Merritt Horticulture_R20.rvt

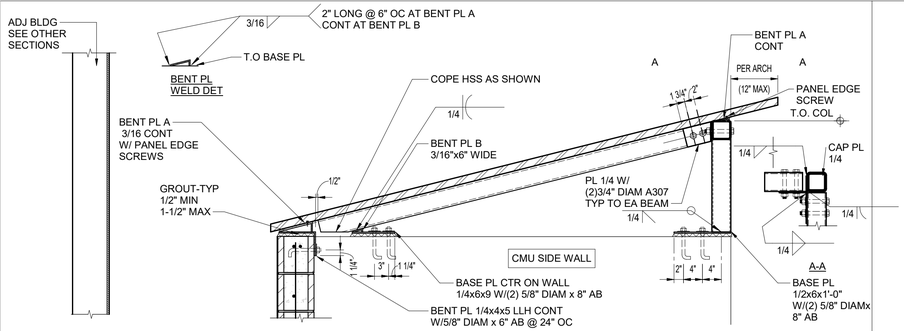

17 S4.04 **SECTION AT TRASH ENCLOSURE**

3/4" = 1'-0"

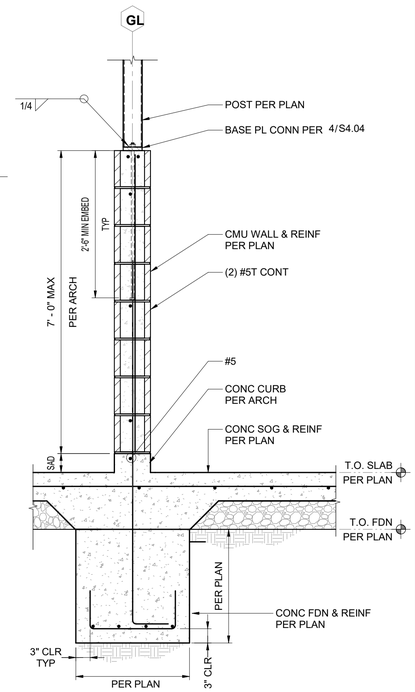

10 S4.04 **SECTION**

3/4" = 1'-0"

BAR TYPE	BAR SIZE						
	#3	#4	#5	#6	#7	#8	#9
TYPICAL SPLICE (48 BAR DIAMETERS)	18	24	30	36	42	28	54
BARS AT JAMBS, CORNERS, & INTERSECTIONS (72 BAR DIAMETERS)	27	36	45	54	63	72	81

NOTES:
1. SPLICE LENGTH IN INCHES.
2. MINIMUM f'm = 1500 PSI.
3. APPLIES TO VERTICAL AND HORIZONTAL BARS.

5 S4.04 **REINF BAR LAP SPLICE SCHEDULE FOR CMU WALLS**

3/4" = 1'-0"

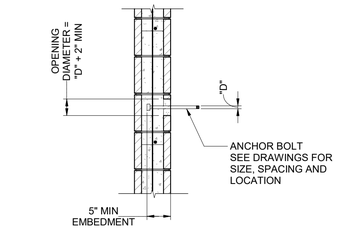

NOTES:
1. SET ANCHOR BOLTS WITH TEMPLATE.
2. CUT BLOCK WEB/SHELL AS REQUIRED TO ALLOW PLACEMENT OF ANCHOR BOLT TO PROVIDE 1" MINIMUM GROUT ALL AROUND ANCHOR BOLT AND BLOCK.

6 S4.04 **ANCHOR BOLTS IN CMU**

3/4" = 1'-0"

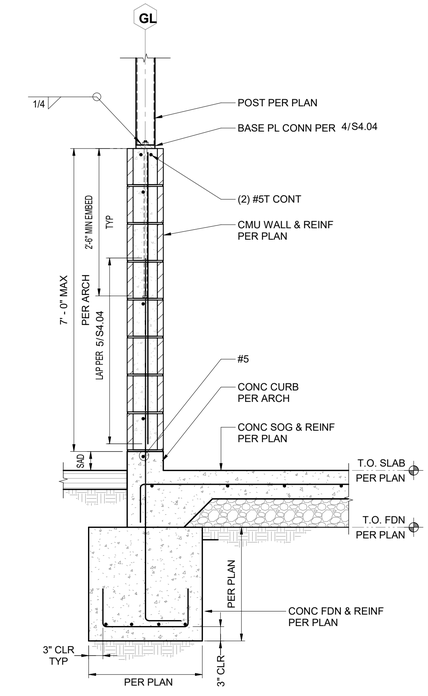

2 S4.04 **SECTION**

3/4" = 1'-0"

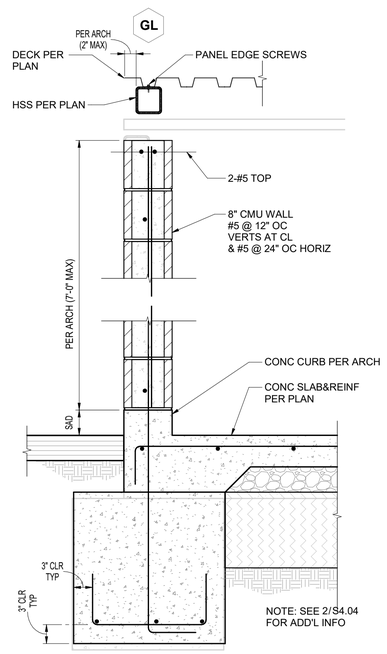

20 S4.04 **SECTION AT TRASH ENCLOSURE**

1" = 1'-0"

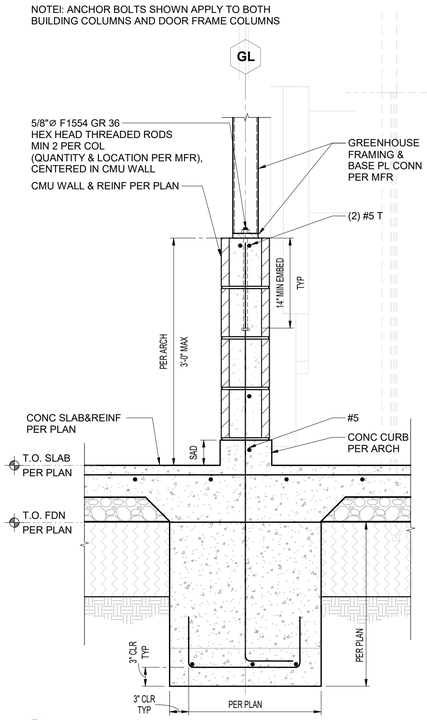

16 S4.04 **SECTION AT GREENHOUSE**

1" = 1'-0"

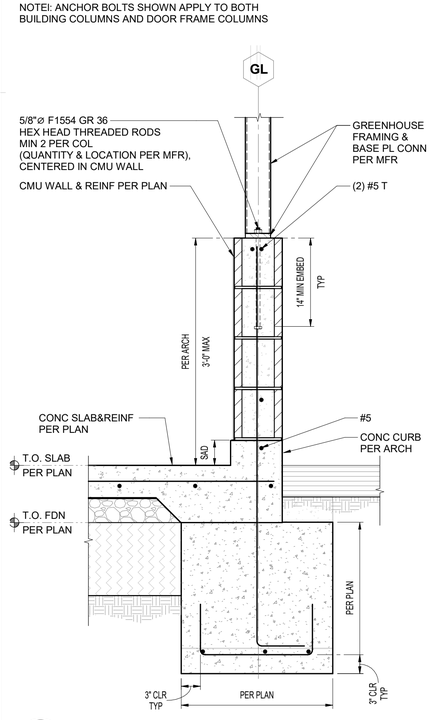

12 S4.04 **SECTION AT GREENHOUSE**

1" = 1'-0"

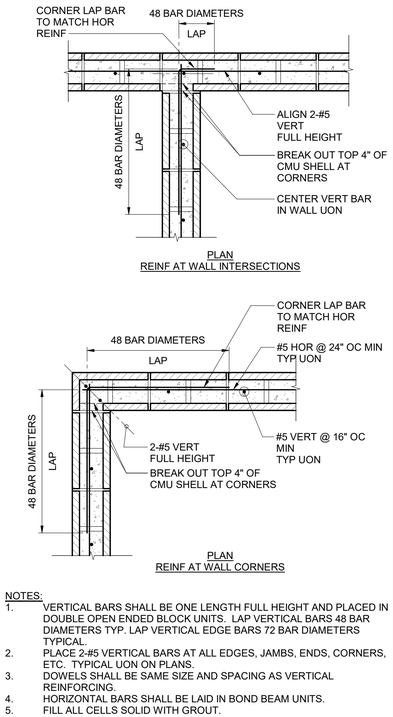

NOTES:
1. VERTICAL BARS SHALL BE ONE LENGTH FULL HEIGHT AND PLACED IN DOUBLE OPEN ENDED BLOCK UNITS. LAP VERTICAL BARS 48 BAR DIAMETERS TYP. LAP VERTICAL EDGE BARS 72 BAR DIAMETERS TYPICAL.
2. PLACE 2-#5 VERTICAL BARS AT ALL EDGES, JAMBS, ENDS, CORNERS, ETC. TYPICAL UON ON PLANS.
3. DOWELS SHALL BE SAME SIZE AND SPACING AS VERTICAL REINFORCING.
4. HORIZONTAL BARS SHALL BE LAID IN BOND BEAM UNITS.
5. FILL ALL CELLS SOLID WITH GROUT.

8 S4.04 **TYPICAL CMU WALL DETAIL**

3/4" = 1'-0"

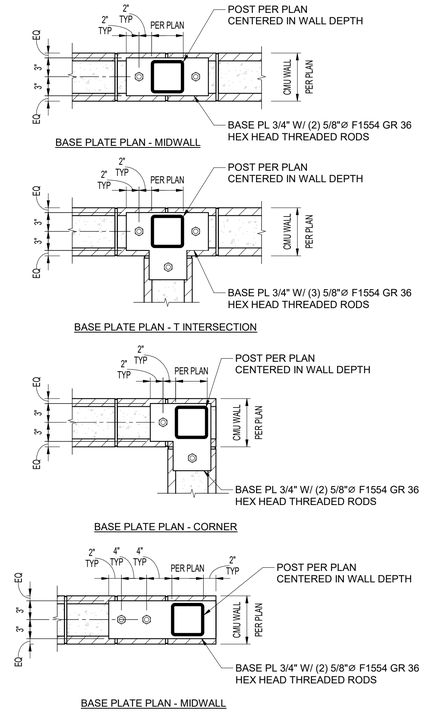

4 S4.04 **BASE PLATE CONNECTION**

1" = 1'-0"

APPROVALS

IDENTIFICATION STAMP
DIV. OF THE STATE ARCHITECT
APP: 01-119409 INC:
REVIEWED FOR
SS ☑ FLS ☑ ACS ☑
DATE: 03/14/2022

NOLL & TAM ARCHITECTS
729 Heinz Avenue
Berkeley, CA 94710
tel 510.542.2200
fax 510.542.2201

SEAL

REGISTERED PROFESSIONAL ENGINEER STEPHEN R. DITESSO No. S03527 STRUCTURAL STATE OF CALIFORNIA

IDA STRUCTURAL ENGINEERS
1629 Telegraph Ave
Suite 300
Oakland, CA 94612
tel: 510.834.1629
ida-se.com

IDA PROJECT NUMBER: 20012

PROJECT TITLE

Peralta Community College District
MERRITT LANDSCAPE HORTICULTURE COMPLEX

12500 Campus Drive
Oakland, CA 94616

BID SET

ISSUE DATE 03/03/2022
N&T JOB NUMBER 22003

REVISIONS

	DATE	DESCRIPTION

DRAWN BY AI CHECKED BY GE, SDJ

SHEET TITLE

TYPICAL CMU/TRASH/SOIL BIN DETAILS

SHEET NUMBER

S4.04

3/2/2022 5:59:07 PM BIM 360://PCCD Merritt Horticulture/IDA20012 Merritt Horticulture_R20.rvt

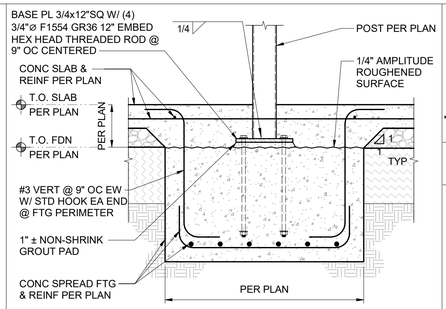

13 S4.05 INT SPREAD FTG SECTION AT STEEL POST

3/4" = 1'-0"

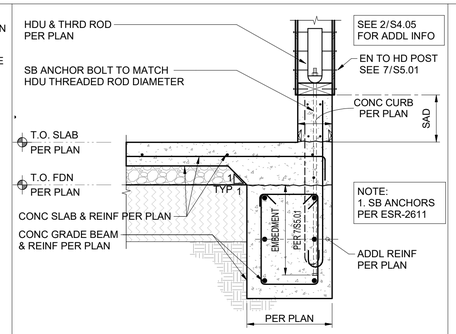

9 S4.05 TYP EXTERIOR HDU ANCHORAGE

3/4" = 1'-0"

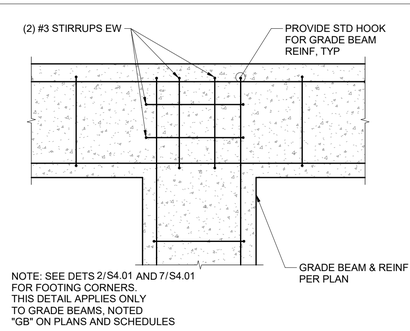

5 S4.05 TYP GRADE BM INTERSECTION

3/4" = 1'-0"

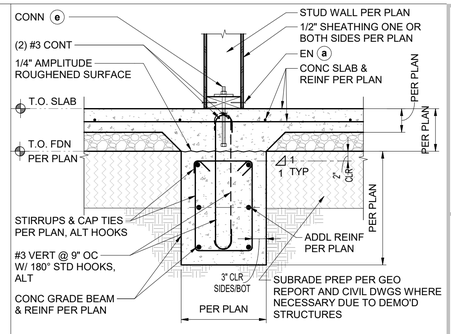

1 S4.05 TYP SECTION AT INT GRADE BM

3/4" = 1'-0"

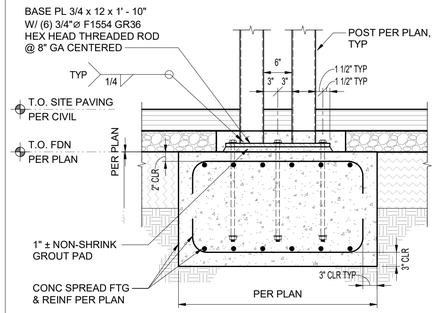

14 S4.05 EXT SPREAD FTG SECTION AT STEEL POST

3/4" = 1'-0"

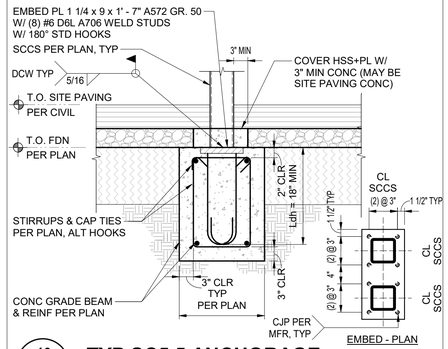

10 S4.05 TYP SC5.5 ANCHORAGE

3/4" = 1'-0"

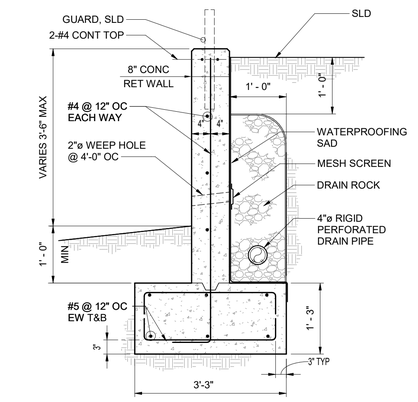

NOTE:
SEE LANDSCAPE DRAWINGS FOR LOCATION REFERENCE.

7 S4.05 RETAINING WALL

3/4" = 1'-0"

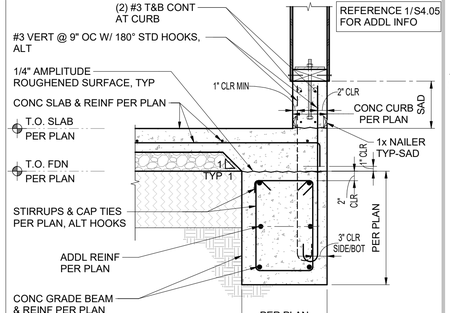

2 S4.05 TYP SECTION AT EXT GRADE BM

3/4" = 1'-0"

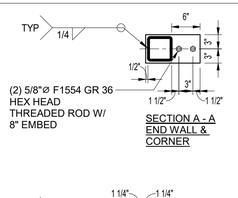

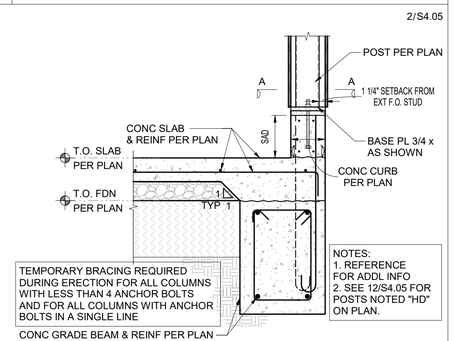

11 S4.05 TYP STEEL POST BASE CONN

3/4" = 1'-0"

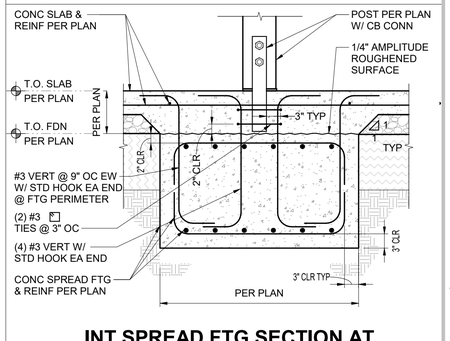

3 S4.05 INT SPREAD FTG SECTION AT WOOD POST

3/4" = 1'-0"

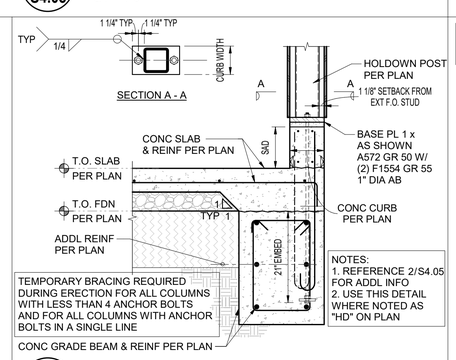

12 S4.05 TYP HOLDOWN POST BASE CONN

3/4" = 1'-0"

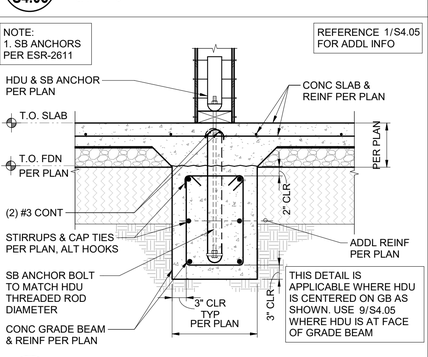

8 S4.05 TYP INTERIOR HDU ANCHORAGE

3/4" = 1'-0"

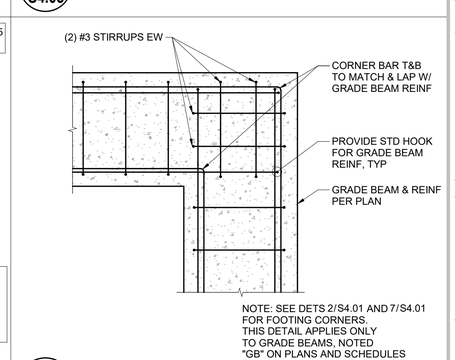

4 S4.05 TYP GRADE BM CORNER

3/4" = 1'-0"

APPROVALS

IDENTIFICATION STAMP
DIV. OF THE STATE ARCHITECT
APP: 01-119409 INC: 1
REVIEWED FOR
SS ☑ FLS ☑ ACS ☑
DATE: 03/14/2022

NOLL & TAM ARCHITECTS
729 Heinz Avenue
Berkeley, CA 94710
tel 510.542.2200
fax 510.542.2201

SEAL

REGISTERED PROFESSIONAL ENGINEER STEPHEN R. DITESSO No. S03527 STRUCTURAL STATE OF CALIFORNIA

IDA STRUCTURAL ENGINEERS
1629 Telegraph Ave
Suite 300
Oakland, CA 94612
tel: 510.834.1629
ida-se.com

IDA PROJECT NUMBER: 20012

PROJECT TITLE

Peralta Community College District
MERRITT LANDSCAPE HORTICULTURE COMPLEX

12500 Campus Drive
Oakland, CA 94616

BID SET

ISSUE DATE	03/03/2022
N&T JOB NUMBER	22003

REVISIONS

	DATE	DESCRIPTION

DRAWN BY AI CHECKED BY GE, SDJ

SHEET TITLE
FOUNDATION DETAILS

SHEET NUMBER
S4.05

3/2/2022 5:59:09 PM BIM 360://PCCD Merritt Horticulture/IDA20012 Merritt Horticulture_R20.rvt

MARK	15/32" WOOD STRUCT 1 PANEL SHEATHING	CONNECTIONS NOTED ON DETAILS							REMARKS
		(a) NAILING		(b)	(c)	(d)	(e)	MAX ALLOWABLE SHEAR CAPACITY (plf)	
		EDGES	FIELD	2x SOLE PLATE CONNECTION	TOP PLATE CONNECTION	JOIST OR BLKG	3x PTDF SILL PL W/ ANCHOR BOLT SIZE & SPACING		
A	1 SIDE	10d @ 6" OC	10d @ 12" OC	16d @ 6" OC STAGGERED	A35 @ 16" OC OR LTP5 @ 16" OC	3x SS OR 1 3/4" LSL	5/8"ø @ 48" OC	340	
B	1 SIDE	10d @ 4" OC	10d @ 12" OC	16d @ 4" OC STAGGERED	A35 @ 8" OC OR LTP5 @ 8" OC	3x SS OR 1 3/4" LSL	5/8"ø @ 32" OC	510	USE 3x STUDS @ SHEATHING PANEL JTS
	2 SIDES	10d @ 4" OC	10d @ 12" OC	1/4"ø x 6" SDS SCREWS @ 4" OC	A35 @ 6" OC OR LTP5 @ 4" OC	3x SS OR 1 3/4" LSL	5/8"ø @ 16" OC	1020	USE 3x STUDS @ SHEATHING PANEL JTS
C	1 SIDE	10d @ 3" OC	10d @ 12" OC	16d @ 3" OC STAGGERED	A35 @ 8" OC OR LTP5 @ 8" OC	3x SS OR 1 3/4" LSL	5/8"ø @ 16" OC	665	USE 3x STUDS @ SHEATHING PANEL JTS
	2 SIDES	10d @ 3" OC	10d @ 12" OC	1/4"ø x 6" SDS SCREWS @ 4" OC	A23 @ 4" OC OR LTP5 @ 4" OC	3x SS OR 1 3/4" LSL	5/8"ø @ 8" OC	1330	USE 3x STUDS @ SHEATHING PANEL JTS
D	1 SIDE	10d @ 2" OC	10d @ 12" OC	20d @ 3" OC STAGGERED	A35 @ 6" OC OR LTP5 @ 6" OC	3x SS OR 1 3/4" LSL	5/8"ø @ 16" OC	870	USE 3x STUDS @ SHEATHING PANEL JTS
	2 SIDES	10d @ 2" OC	10d @ 12" OC	1/4"ø x 6" SDS SCREWS @ 3" OC	A23 @ 6" OC EF OR LTP5 @ 6" OC EF	3x SS OR 1 3/4" LSL	5/8"ø @ 8" OC	1740	USE 3x STUDS @ SHEATHING PANEL JTS

NOTES:
1. ALL EXTERIOR WALLS SHALL BE SHEATHED WITH ORIENTED STRAND BOARD (OSB) SHEATHING WITH SHEAR WALL MARK (A) UON.
2. DO NOT LOCATE SHEATHING JOINTS ON THE SAME STUD WHERE SHEATHING OCCURS ON BOTH SIDES, UNLESS 3x STUDS ARE USED.
3. PROVIDE 2 ROWS OF SHEATHING EDGE NAILING (EN) FULL HEIGHT OF ALL POSTS WITH HOLDOWNS.
4. SHEATHING AT SHEAR WALLS SHALL EXTEND FULL LENGTH AND HEIGHT OF WALL.
5. USE 3x SILL PLATES AT ALL SHEAR WALLS AND EXTERIOR WALLS.
6. ANCHOR BOLTS SHALL HAVE 7" MINIMUM EMBEDMENT. EMBEDDED END SHALL HAVE 6 DIAMETER BEND WITH 2 DIAMETER EXTENSION PAST CENTER OF BEND.
7. SOLE PLATE NAILING AND SCREWS SHALL BE STAGGERED 5/8".
8. ANCHOR BOLTS (ø) SHALL HAVE CUT WASHER OVER BEARING PLATE
   * PLATE 3"x3"x1/4" AT 4" WALLS
   * PLATE 3/8"x3"x5" AT 8" WALLS
   * PLATE 3/8"x3"x7" AT 8" WALLS
   ORIENT LONG DIMENSION OF BEARING PLATE PERPENDICULAR TO WALL.
9. NAILS PENETRATING PRESSURE-PRESERVATIVE TREATED OR FIRE TREATED WOOD SHALL BE HOT-DIPPED GALVANIZED PER ASTM A153, CLASS D AND SDS SCREWS SHALL BE STAINLESS STEEL OR HAVE DOUBLE BARRIER COATING.
10. ANCHOR BOLTS SHALL BE LOCATED A MINIMUM OF 1 3/4" FROM EDGE OF THE CONCRETE PERPENDICULAR TO THE LENGTH OF THE WOOD SILL PLATE.
11. ANCHOR BOLTS SHALL BE LOCATED A MINIMUM OF 9 1/2" FROM EDGE OF THE CONCRETE PARALLEL TO THE LENGTH OF THE WOOD SILL PLATE.
12. WHERE SHEAR TRANSFER IS PROVIDED DIRECTLY BY SHEAR SHEATHING, THE TOP PLATE CONNECTION CLIP MAY BE OMITTED. AT 2 SIDED WALLS, TOP PLATE SHEAR TRANSFER MAY BE PROVIDED BY A COMBINATION OF SHEAR TRANSFER THROUGH SHEAR SHEATHING ON ONE SIDE AND TOP PLATE CONNECTION HARDWARE ON THE OTHER SIDE.
13. SEE 1/S5.04 FOR TYPICAL PLAN DETAIL OF SHEAR WALL. SEE 7/S5.01 FOR HDU DETAIL.
14. SEE 2/S5.02 FOR OPENINGS IN SHEAR WALLS.
15. FOR CONNECTIONS AT EXTERIOR NON-SHEAR WALLS USE SHEAR WALL MARK (A)

18 S5.01 WOOD SHEAR WALL SCHEDULE
3/4" = 1'-0"

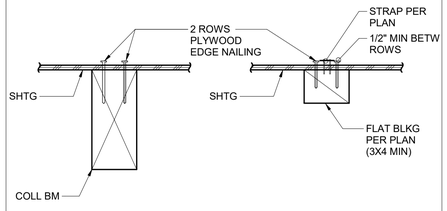

9 S5.01 TYP NAILING AT COLLECTOR
NTS

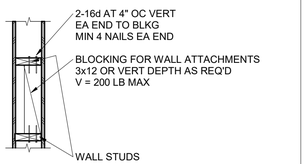

5 S5.01 BLOCKING BETWEEN STUDS FOR ATTACHMENTS
3/4" = 1'-0"

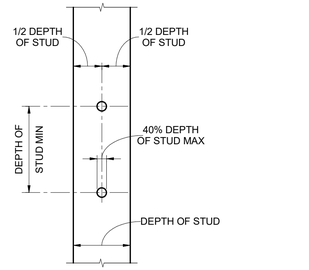

NOTE:
1. NOTCHING OF STUDS NOT PERMITTED EXCEPT AS DETAILED.
2. SEE CARPENTRY NOTES, S1.01, FOR PIPE & HOLES IN SHEAR WALL & BEARING WALL FRAMING.

1 S5.01 HOLES IN STUDS
NTS

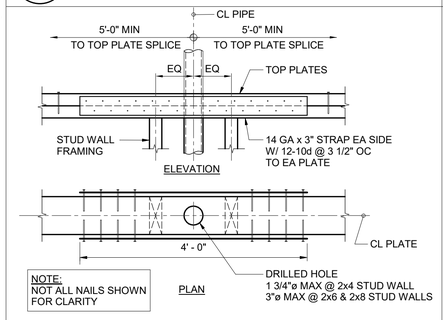

NOTE:
NOT ALL NAILS SHOWN FOR CLARITY

10 S5.01 PIPE PENETRATION AT STUD WALL TOP PLATES
NTS

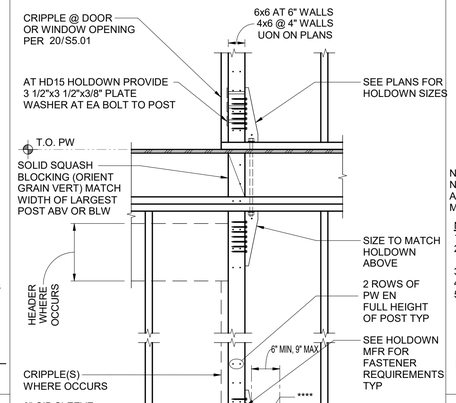

HOLDOWN SIZE	"L" MIN	ANCHOR BOLT
HDU2 HDU4 HDU5	21"	SB5/8 AB W/ 1 1/2"x1 1/2"x3/8" PLATE WASHER
HDU8	21"	SB7/8 AB W/ 2 1/4"x2 1/4"x3/8" PLATE WASHER
HDU11 HDU14	21"	SB1 AB W/ 2 1/2"x2 1/2"x3/8" PLATE WASHER

**** USE HEAVY HEX NUT AT HDU11 AND HDU14

NOTE:
1. PW SHEATHING NOT SHOWN FOR CLARITY OF DETAIL.
2. ANCHOR BOLT SHALL BE IN ACCORDANCE WITH ASTM F1554 GRADE 36, A36 OR A307.
3. SB ANCHORS PER ESR-2611

7 S5.01 TYPICAL HOLDOWN DETAIL
NTS

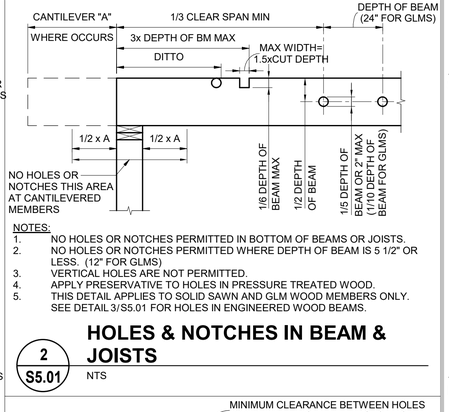

NOTES:
1. NO HOLES OR NOTCHES PERMITTED IN BOTTOM OF BEAMS OR JOISTS.
2. NO HOLES OR NOTCHES PERMITTED WHERE DEPTH OF BEAM IS 5 1/2" OR LESS. (12" FOR GLMS)
3. VERTICAL HOLES ARE NOT PERMITTED.
4. APPLY PRESERVATIVE TO HOLES IN PRESSURE TREATED WOOD.
5. THIS DETAIL APPLIES TO SOLID SAWN AND GLM WOOD MEMBERS ONLY. SEE DETAIL 3/S5.01 FOR HOLES IN ENGINEERED WOOD BEAMS.

2 S5.01 HOLES & NOTCHES IN BEAM & JOISTS
NTS

W* (OPNG WIDTH)	CRIPPLE	KING<12'	12'<KING<15'	15'<KING<17'
4'-0" TO 6'-0"	SINGLE 2x	DBL 2x	TPL 2x	4 - 2x
6'-0" TO 8'-0"	DBL 2x	DBL 2x	4 - 2x	NA
8'-0" TO 10'-0"	DBL 2x	TPL 2x	NA	NA

HEADER	W* (OPNG WIDTH)
6 X 6	4'-0" MAX.
6 X 8	6'-0" MAX.
SEE PLAN	>6'-0"

* WHERE W IS LESS THAN 4'-0" USE 2-2x6 BLOCKED APART

NOTE: SAD FOR FRAMING AT INTERIOR NON-BEARING/NON-SHEAR PARTITIONS

20 S5.01 TYPICAL FRAMING AT WINDOW / DOOR OPENING
NTS

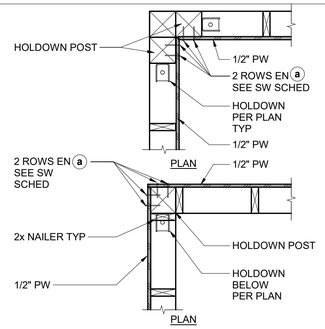

16 S5.01 SHEAR WALL FRAMING @ WALL CORNERS
NTS

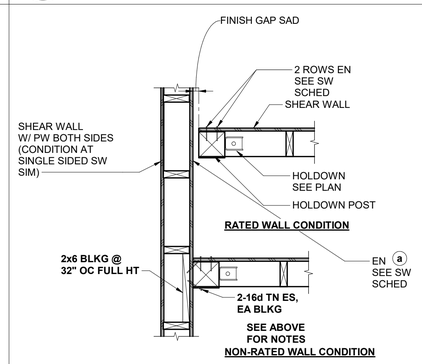

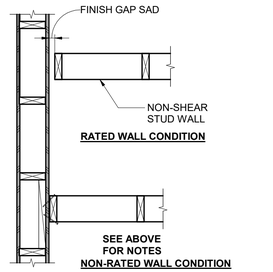

12 S5.01 SHEAR WALL FRAMING AT INTERSECTING WALLS-PLAN DETAILS
NTS

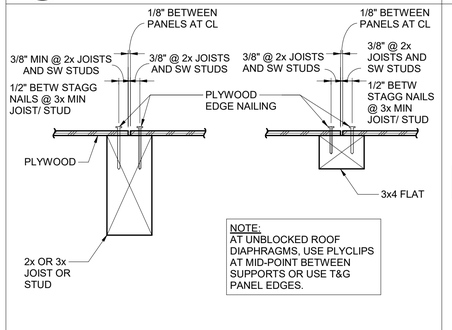

NOTE:
AT UNBLOCKED ROOF DIAPHRAGMS, USE PLYCLIPS AT MID-POINT BETWEEN SUPPORTS OR USE T&G PANEL EDGES.

8 S5.01 TYP PW PANEL EDGE DETAIL
NTS

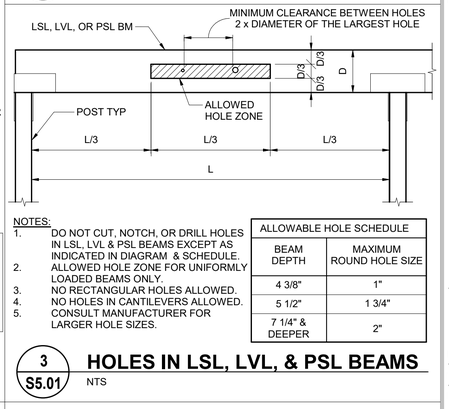

NOTES:
1. DO NOT CUT, NOTCH, OR DRILL HOLES IN LSL, LVL & PSL BEAMS EXCEPT AS INDICATED IN DIAGRAM & SCHEDULE.
2. ALLOWED HOLE ZONE FOR UNIFORMLY LOADED BEAMS ONLY.
3. NO RECTANGULAR HOLES ALLOWED.
4. NO HOLES IN CANTILEVERS ALLOWED.
5. CONSULT MANUFACTURER FOR LARGER HOLE SIZES.

ALLOWABLE HOLE SCHEDULE	
BEAM DEPTH	MAXIMUM ROUND HOLE SIZE
4 3/8"	1"
5 1/2"	1 3/4"
7 1/4" & DEEPER	2"

3 S5.01 HOLES IN LSL, LVL, & PSL BEAMS
NTS

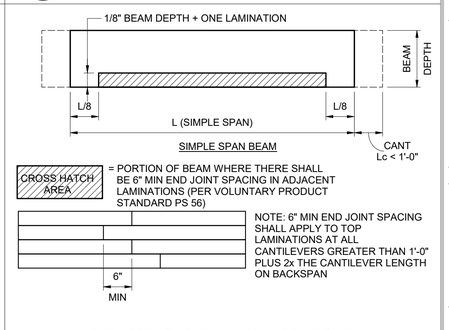

NOTE: 6" MIN END JOINT SPACING SHALL APPLY TO TOP LAMINATIONS AT ALL CANTILEVERS GREATER THAN 1'-0" PLUS 2x THE CANTILEVER LENGTH ON BACKSPAN

4 S5.01 SPACING OF END JOINTS IN LAMINATIONS OF GLM BEAMS
NTS

APPROVALS

IDENTIFICATION STAMP
DIV. OF THE STATE ARCHITECT
APP: 01-119409 INC:
REVIEWED FOR
SS ☑ FLS ☑ ACS ☑
DATE: 03/14/2022

NOLL & TAM ARCHITECTS
729 Heinz Avenue
Berkeley, CA 94710
tel 510.542.2200
fax 510.542.2201

SEAL

REGISTERED PROFESSIONAL ENGINEER STEPHEN R. DITESSEN No. S03527 STRUCTURAL STATE OF CALIFORNIA

IDA STRUCTURAL ENGINEERS
1629 Telegraph Ave
Suite 300
Oakland, CA 94612
tel: 510.834.1629
ida-se.com

IDA PROJECT NUMBER: 20012

PROJECT TITLE

Peralta Community College District
MERRITT LANDSCAPE HORTICULTURE COMPLEX

12500 Campus Drive
Oakland, CA 94616

BID SET

ISSUE DATE	03/03/2022
N&T JOB NUMBER	22003

REVISIONS

	DATE	DESCRIPTION

DRAWN BY AI | CHECKED BY GE, SDJ

SHEET TITLE

TYPICAL WOOD DETAILS

SHEET NUMBER

S5.01

BIM 360://PCCD Merritt Horticulture/IDA20012 Merritt Horticulture_R20.rvt
3/2/2022 5:59:11 PM

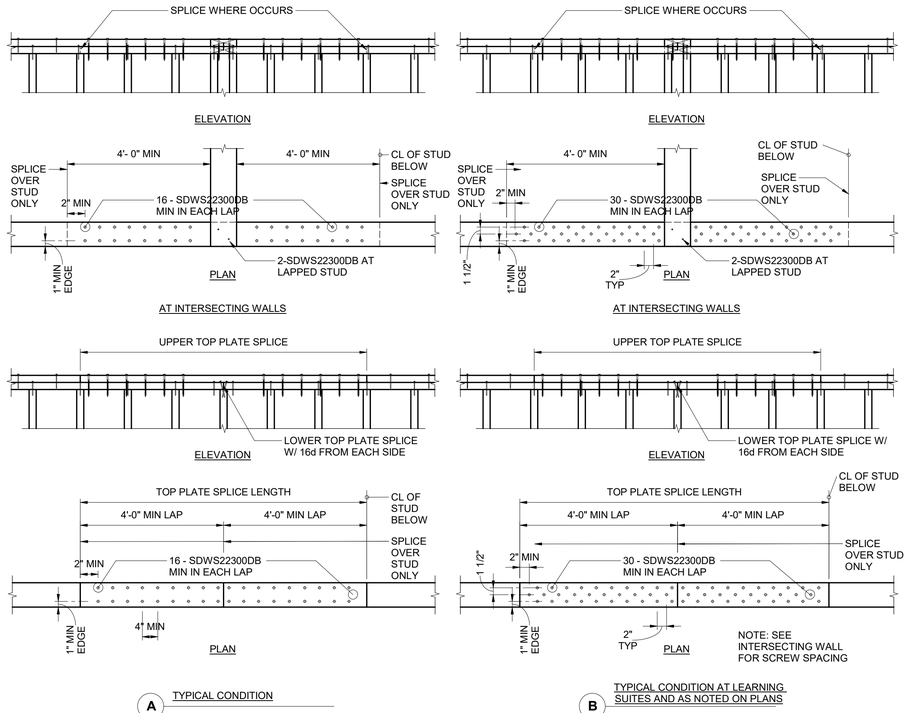

A TYPICAL CONDITION

B TYPICAL CONDITION AT LEARNING SUITES AND AS NOTED ON PLANS

14 S5.02 **TYPICAL TOP PLATE SPLICE**

NTS

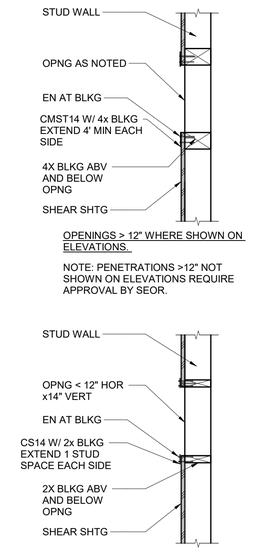

2 S5.02 **TYPICAL OPENINGS IN SHEAR WALLS**

NTS

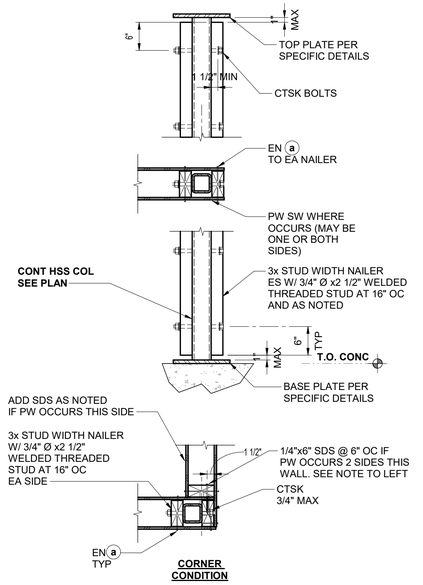

NOTES:
1. THIS DETAIL APPLIES AT ALL HSS COLUMNS WITHIN WOOD STUD WALLS.
2. APPLY NAILER TO BOTH SIDES OF HSS AT 2- SIDED SHEAR WALLS OR PROVIDE ONE SIDED NAILER WITH THREADED STUDS AT 1/2 SPACING (THREADED STUD AT 8" OC)
3. ACCEPTABLE TO COUNTERSINK BOLT WITH 1 1/2" MIN NAILER REMAINING

20 S5.02 **TYP NAILER TO HSS COLUMN**

NTS

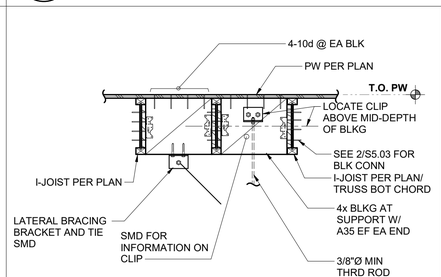

15 S5.02 **SUSPENDED MECHANICAL UNIT SUPPORTED ON FRAMING**

NTS

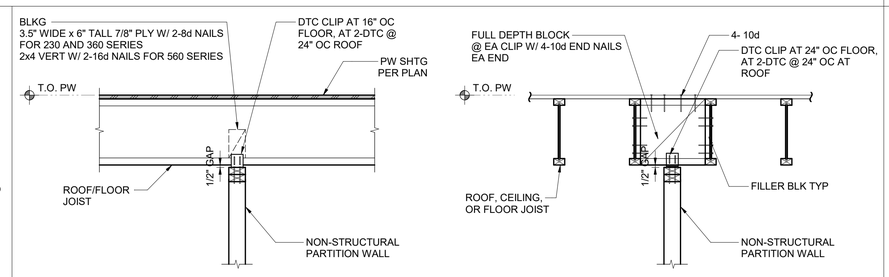

11 S5.02 **PARTITION WALL PARALLEL AND PERPENDICULAR TO JOIST FRAMING**

NTS

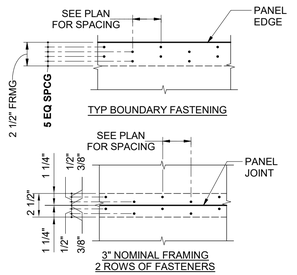

NOTES:
1. SPACE PANEL JOINTS WITH 1/8" GAP.
2. REDUCE SPACING BETWEEN ROWS OF FASTENERS AS NECESSARY TO MAINTAIN 3/8" MINIMUM EDGE DISTANCE.
3. MAINTAIN MINIMUM 3/8" BETWEEN ROWS OF FASTENERS.
4. PREDRILL LEAD HOLES WHERE SPLITTING IS A CONCERN.
5. SEE PLANS FOR FASTENER SIZE AND SPACING.
6. EMBED FASTENERS 1 1/2" MINIMUM INTO FRAMING.

16 S5.02 **HIGH LOAD DIAPHRAGM NAILING**

NTS

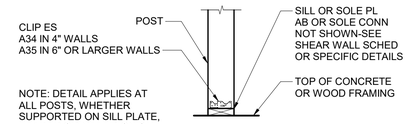

8 S5.02 **TYPICAL POST TO PLATE**

NTS

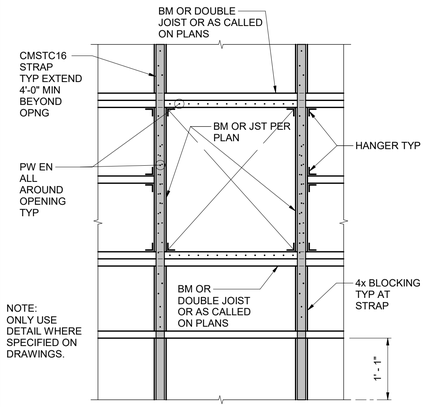

4 S5.02 **FRAMING AT ROOF OPENING**

NTS

APPROVALS

IDENTIFICATION STAMP
DIV. OF THE STATE ARCHITECT
APP: 01-119409 INC:
REVIEWED FOR
SS ☑ FLS ☑ ACS ☑
DATE: 03/14/2022

NOLL & TAM ARCHITECTS
729 Heinz Avenue
Berkeley, CA 94710
tel 510.542.2200
fax 510.542.2201

SEAL

REGISTERED PROFESSIONAL ENGINEER STEPHEN R. DEESSER No. S03527 STRUCTURAL STATE OF CALIFORNIA

STRUCTURAL ENGINEERS
1629 Telegraph Ave
Suite 300
Oakland, CA 94612
tel: 510.834.1629
ida-se.com

IDA PROJECT NUMBER: 20012

PROJECT TITLE

Peralta Community College District
MERRITT LANDSCAPE HORTICULTURE COMPLEX

12500 Campus Drive
Oakland, CA 94616

BID SET

ISSUE DATE	03/03/2022
N&T JOB NUMBER	22003

REVISIONS

	DATE	DESCRIPTION

DRAWN BY **Author** CHECKED BY **Checker**

SHEET TITLE

TYPICAL WOOD DETAILS

SHEET NUMBER

S5.02

3/2/2022 5:59:12 PM BIM 360://PCCD Merritt Horticulture/IDA20012 Merritt Horticulture_R20.rvt

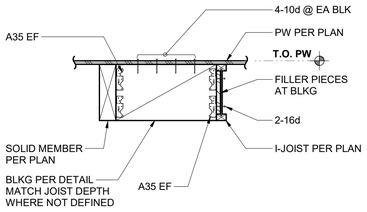

2 S5.03 TYPICAL STABILITY BLOCKING

NTS

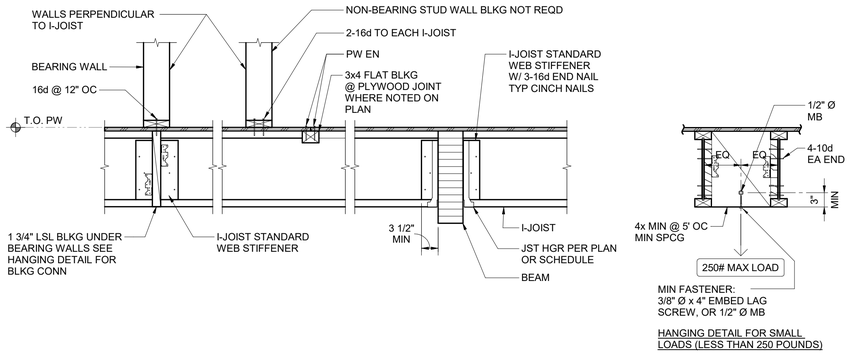

1 S5.03 TYPICAL I-JOIST FRAMING DETAILS

NTS

ALLOWABLE HOLES

9½"-16" JOISTS

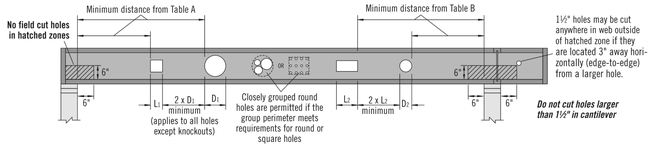

How to Use These Tables

1. Using **Table A, Table B,** or both if required, determine the hole shape/size and select the TJI® joist and depth.
2. Scan horizontally until you intersect the correct hole size column.
3. Measurement shown is minimum distance from edge of hole to support.
4. Maintain the required minimum distance from the end **and** the intermediate or cantilever support.

General Notes

- Holes may be located vertically anywhere within the web. Leave ⅛" of web (minimum) at top and bottom of hole.
- Knockouts are located in web at approximately 12° on-center; they do not affect hole placement and may be located in the hatched zone.
- For simple span (5' minimum) uniformly loaded joists meeting the requirements of this guide, one maximum size round hole may be located at the center of the joist span **provided that no other holes occur in the joist.**
- Distances are based on the maximum uniform loads shown in this guide. For other load conditions or hole configurations, use Forte® WEB software or contact your Weyerhaeuser representative.

Table A, End Support: Minimum distance from edge of hole to inside face of nearest end support

Depth	TJI®	● Round Hole Size								■ Square or Rectangular Hole Size							
		2"	3"	4"	5"	6½"	7"	8⅛"	11"	13"	2"	3"	4"	5"	6½"	7"	8⅛"	11"	13"
9½"	110	1'-0"	1'-6"	2'-0"	3'-0"	5'-0"					1'-0"	1'-6"	2'-6"	3'-6"	4'-6"				
	210	1'-0"	1'-6"	2'-6"	3'-0"	5'-6"					1'-0"	2'-0"	2'-6"	4'-0"	5'-0"				
	230	1'-6"	2'-0"	2'-6"	3'-6"	5'-6"					1'-0"	2'-0"	3'-0"	4'-6"	5'-0"				
11⅞"	110	1'-0"	1'-0"	1'-6"	2'-0"	2'-6"	3'-0"	5'-6"			1'-0"	1'-6"	2'-0"	2'-6"	4'-6"	5'-0"	6'-0"		
	210	1'-0"	1'-6"	2'-0"	2'-0"	3'-0"	3'-6"	6'-0"			1'-0"	1'-6"	2'-6"	3'-0"	5'-0"	5'-6"	6'-6"		
	230	1'-0"	1'-6"	2'-0"	2'-6"	3'-0"	3'-6"	6'-6"			1'-0"	2'-0"	2'-6"	3'-6"	5'-6"	5'-6"	7'-0"		
	360	1'-6"	2'-0"	3'-0"	3'-6"	4'-6"	5'-0"	7'-0"			1'-6"	2'-6"	3'-6"	4'-6"	6'-6"	6'-6"	7'-6"		
	560	1'-6"	2'-6"	3'-0"	4'-0"	5'-6"	6'-0"	8'-0"			2'-6"	3'-6"	4'-6"	5'-6"	7'-0"	7'-6"	8'-0"		
14"	110	1'-0"	1'-0"	1'-0"	1'-0"	1'-6"	2'-0"	3'-0"	5'-6"		1'-0"	1'-0"	1'-6"	2'-0"	3'-6"	4'-0"	6'-0"	8'-0"	
	210	1'-0"	1'-0"	1'-0"	1'-0"	1'-6"	2'-0"	2'-6"	3'-6"	6'-0"	1'-0"	1'-0"	2'-0"	2'-6"	4'-0"	4'-6"	6'-6"	8'-6"	
	230	1'-0"	1'-0"	1'-0"	1'-6"	2'-6"	2'-6"	4'-0"	7'-0"		1'-0"	1'-0"	2'-0"	3'-0"	4'-0"	5'-0"	7'-0"	9'-0"	
	360	1'-0"	1'-0"	1'-6"	2'-6"	3'-6"	4'-0"	5'-6"	8'-0"		1'-0"	1'-6"	2'-6"	4'-0"	6'-0"	6'-6"	8'-0"	9'-6"	
	560	1'-0"	1'-0"	2'-0"	3'-0"	4'-6"	5'-0"	6'-6"	9'-0"		1'-6"	3'-0"	4'-0"	5'-0"	7'-0"	7'-6"	9'-0"	10'-0"	
16"	110	1'-0"	1'-0"	1'-0"	1'-0"	1'-0"	1'-0"	2'-0"	3'-0"	5'-0"	1'-0"	1'-0"	1'-0"	1'-6"	3'-0"	3'-0"	5'-6"	7'-6"	10'-0"
	210	1'-0"	1'-0"	1'-0"	1'-0"	1'-0"	1'-6"	2'-6"	3'-6"	6'-0"	1'-0"	1'-0"	1'-0"	2'-0"	3'-0"	3'-6"	6'-6"	8'-0"	11'-0"
	230	1'-0"	1'-0"	1'-0"	1'-0"	1'-6"	1'-6"	3'-0"	4'-0"	7'-0"	1'-0"	1'-0"	1'-0"	2'-0"	3'-6"	4'-0"	7'-0"	9'-0"	11'-0"
	360	1'-0"	1'-0"	1'-0"	1'-0"	2'-6"	2'-6"	4'-6"	6'-6"	9'-0"	1'-0"	1'-0"	1'-6"	3'-0"	5'-0"	5'-6"	9'-0"	10'-0"	11'-6"
	560	1'-0"	1'-0"	1'-0"	1'-0"	2'-6"	3'-0"	5'-0"	7'-6"	10'-0"	1'-0"	2'-0"	3'-0"	4'-6"	6'-6"	7'-0"	10'-0"	11'-0"	12'-0"

Table B, Intermediate or Cantilever Support: Minimum distance from edge of hole to inside face of nearest intermediate or cantilever support

Depth	TJI®	● Round Hole Size								■ Square or Rectangular Hole Size							
		2"	3"	4"	5"	6½"	7"	8⅛"	11"	13"	2"	3"	4"	5"	6½"	7"	8⅛"	11"	13"
9½"	110	2'-0"	2'-6"	3'-6"	4'-6"	7'-6"					1'-6"	2'-6"	3'-6"	5'-6"	6'-6"				
	210	2'-0"	2'-6"	3'-6"	5'-0"	8'-0"					2'-0"	3'-0"	4'-0"	6'-6"	7'-6"				
	230	2'-6"	3'-0"	4'-0"	5'-6"	8'-6"					2'-0"	3'-6"	4'-6"	6'-6"	7'-6"				
11⅞"	110	1'-0"	1'-0"	1'-6"	2'-6"	4'-0"	4'-6"	8'-6"			1'-0"	1'-6"	2'-6"	4'-0"	7'-0"	7'-0"	9'-6"		
	210	1'-0"	1'-0"	1'-0"	2'-0"	3'-0"	4'-6"	5'-0"	9'-0"		1'-0"	2'-0"	3'-0"	4'-6"	8'-0"	8'-0"	10'-0"		
	230	1'-0"	2'-0"	2'-6"	3'-6"	5'-0"	5'-6"	10'-0"			1'-0"	2'-6"	3'-6"	5'-0"	8'-6"	9'-0"	10'-6"		
	360	2'-0"	3'-0"	4'-0"	5'-6"	7'-0"	7'-6"	11'-0"			2'-0"	3'-6"	5'-0"	7'-0"	9'-6"	9'-6"	11'-0"		
	560	1'-6"	3'-0"	4'-6"	5'-6"	8'-0"	8'-6"	12'-0"			3'-0"	4'-6"	6'-0"	8'-0"	10'-6"	11'-0"	12'-0"		
14"	110	1'-0"	1'-0"	1'-0"	1'-0"	2'-0"	2'-6"	4'-6"	8'-6"		1'-0"	1'-0"	1'-0"	2'-6"	5'-0"	6'-0"	9'-0"	12'-0"	
	210	1'-0"	1'-0"	1'-0"	1'-0"	2'-6"	3'-0"	5'-6"	9'-6"		1'-0"	1'-0"	2'-0"	3'-6"	6'-0"	7'-0"	10'-0"	13'-0"	
	230	1'-0"	1'-0"	1'-0"	2'-0"	3'-6"	4'-0"	6'-0"	10'-6"		1'-0"	1'-0"	2'-6"	4'-0"	6'-6"	7'-6"	11'-0"	13'-6"	
	360	1'-0"	1'-0"	2'-0"	3'-6"	5'-6"	6'-0"	8'-6"	12'-6"		1'-0"	2'-0"	4'-0"	5'-6"	9'-0"	10'-0"	12'-0"	14'-0"	
	560	1'-0"	1'-0"	1'-6"	3'-6"	5'-6"	6'-6"	9'-6"	13'-6"		1'-0"	3'-0"	5'-0"	7'-0"	10'-0"	11'-0"	13'-6"	15'-0"	
16"	110	1'-0"	1'-0"	1'-0"	1'-0"	1'-0"	1'-0"	2'-6"	5'-0"	8'-6"	1'-0"	1'-0"	1'-0"	1'-0"	3'-6"	4'-6"	8'-6"	11'-6"	15'-0"
	210	1'-0"	1'-0"	1'-0"	1'-0"	1'-0"	1'-0"	3'-6"	6'-0"	10'-0"	1'-0"	1'-0"	1'-0"	1'-6"	4'-6"	5'-6"	10'-0"	12'-6"	16'-0"
	230	1'-0"	1'-0"	1'-0"	1'-0"	1'-6"	2'-0"	4'-0"	6'-6"	11'-0"	1'-0"	1'-0"	1'-0"	2'-6"	5'-0"	6'-0"	10'-6"	13'-6"	16'-6"
	360	1'-0"	1'-0"	1'-0"	1'-0"	3'-0"	4'-0"	6'-6"	10'-0"	13'-6"	1'-0"	1'-0"	2'-0"	4'-0"	7'-6"	8'-6"	13'-0"	14'-6"	17'-0"
	560	1'-0"	1'-0"	1'-0"	1'-0"	2'-6"	3'-6"	7'-0"	11'-0"	15'-0"	1'-0"	1'-0"	3'-6"	5'-6"	9'-0"	10'-0"	14'-6"	16'-0"	18'-0"

• Rectangular holes based on measurement of longest side.

5 S5.03 ALLOWABLE HOLES

NTS

Depth	TJI®	Basic Properties				Reaction Properties					
		Joist Weight (lbs/ft)	Maximum Resistive Moment[1] (ft-lbs)	Joist Only EI x 10⁶ (in.²-lbs)	Maximum Vertical Shear (lbs)	1¾" End Reaction (lbs)	3½" End Reaction (lbs)	3½" Intermediate Reaction (lbs)		5¼" Intermediate Reaction (lbs)	
								No Web Stiffeners	With Web Stiffeners[2]	No Web Stiffeners	With Web Stiffeners[2]
9½"	110	2.3	2,500	157	1,220	910	1,220	1,935	N.A.	2,350	N.A.
	210	2.6	3,000	186	1,330	1,005	1,330	2,145	N.A.	2,565	N.A.
	230	2.7	3,330	206	1,330	1,060	1,330	2,410	N.A.	2,790	N.A.
11⅞"	110	2.5	3,160	267	1,560	910	1,375	1,935	2,295	2,350	2,705
	210	2.8	3,795	315	1,655	1,005	1,460	2,145	2,505	2,565	2,925
	230	3.0	4,215	347	1,655	1,060	1,485	2,410	2,765	2,790	3,150
	360	3.0	6,180	419	1,705	1,080	1,505	2,460	2,815	3,000	3,360
	560	4.0	9,500	636	2,050	1,265	1,725	3,000	3,475	3,455	3,930
14"	110	2.8	3,740	392	1,860	910	1,375	1,935	2,295	2,350	2,705
	210	3.1	4,490	462	1,945	1,005	1,460	2,145	2,505	2,565	2,925
	230	3.3	4,990	509	1,945	1,060	1,485	2,410	2,765	2,790	3,150
	360	3.3	7,335	612	1,955	1,080	1,505	2,460	2,815	3,000	3,360
	560	4.2	11,275	926	2,390	1,265	1,725	3,000	3,475	3,455	3,930
16"	110	3.0	4,280	535	2,145	910	1,375	1,935	2,295	2,350	2,705
	210	3.3	5,140	629	2,190	1,005	1,460	2,145	2,505	2,565	2,925
	230	3.5	5,710	691	2,190	1,060	1,485	2,410	2,765	2,790	3,150
	360	3.5	8,405	830	2,190	1,080	1,505	2,460	2,815	3,000	3,360
	560	4.5	12,925	1,252	2,710	1,265	1,725	3,000	3,475	3,455	3,930

General Notes

- Design reaction includes all loads on the joist. Design shear is computed at the inside face of supports and includes all loads on the span(s). Allowable shear may sometimes be increased at interior supports in accordance with ICC-ES ESR-1153, and these increases are reflected in span tables.

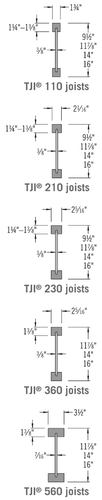

4 S5.03 TJI SIZES

NTS

APPROVALS

IDENTIFICATION STAMP
DIV. OF THE STATE ARCHITECT
APP: 01-119409 INC:
REVIEWED FOR
SS ☑ FLS ☑ ACS ☑
DATE: 03/14/2022

NOLL & TAM ARCHITECTS
729 Heinz Avenue
Berkeley, CA 94710
tel 510.542.2200
fax 510.542.2201

SEAL

STRUCTURAL ENGINEERS
1629 Telegraph Ave
Suite 300
Oakland, CA 94612
tel: 510.834.1629
ida-se.com

IDA PROJECT NUMBER: 20012

PROJECT TITLE

Peralta Community College District
MERRITT LANDSCAPE HORTICULTURE COMPLEX

12500 Campus Drive
Oakland, CA 94616

BID SET

ISSUE DATE 03/03/2022
N&T JOB NUMBER 22003

REVISIONS

	DATE	DESCRIPTION

DRAWN BY AI | CHECKED BY GE, SDJ

SHEET TITLE

TYPICAL WOOD DETAILS

SHEET NUMBER

S5.03

3/2/2022 5:59:14 PM BIM 360://PCCD Merritt Horticulture/IDA20012 Merritt Horticulture_R20.rvt

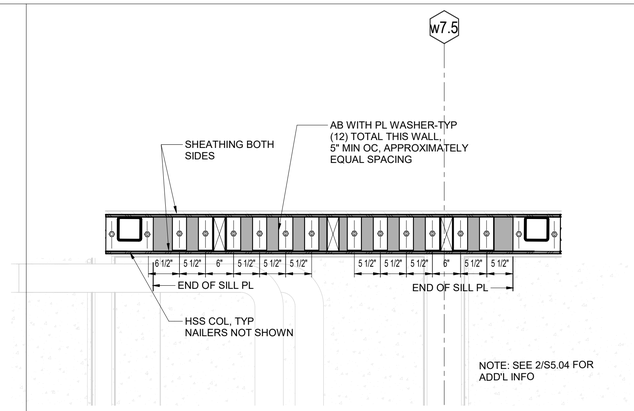

4 / S5.04 ENLARGED SHEAR WALL PLAN DETAIL

3/4" = 1'-0"

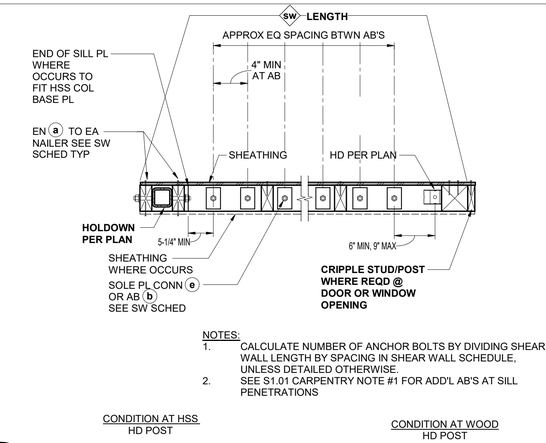

NOTES:
1. CALCULATE NUMBER OF ANCHOR BOLTS BY DIVIDING SHEAR WALL LENGTH BY SPACING IN SHEAR WALL SCHEDULE, UNLESS DETAILED OTHERWISE.
2. SEE S1.01 CARPENTRY NOTE #1 FOR ADD'L AB'S AT SILL PENETRATIONS

1 / S5.04 TYPICAL SHEAR WALL PLAN DETAIL

3/4" = 1'-0"

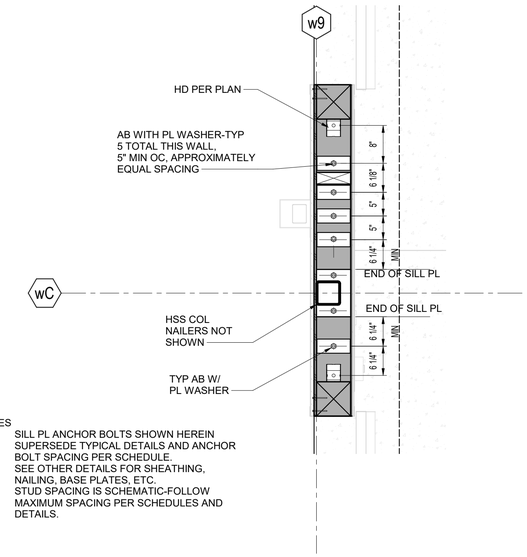

NOTES
1. SILL PL ANCHOR BOLTS SHOWN HEREIN SUPERSEDE TYPICAL DETAILS AND ANCHOR BOLT SPACING PER SCHEDULE.
2. SEE OTHER DETAILS FOR SHEATHING, NAILING, BASE PLATES, ETC.
3. STUD SPACING IS SCHEMATIC-FOLLOW MAXIMUM SPACING PER SCHEDULES AND DETAILS.

2 / S5.04 ENLARGED SHEAR WALL PLAN DETAIL

3/4" = 1'-0"

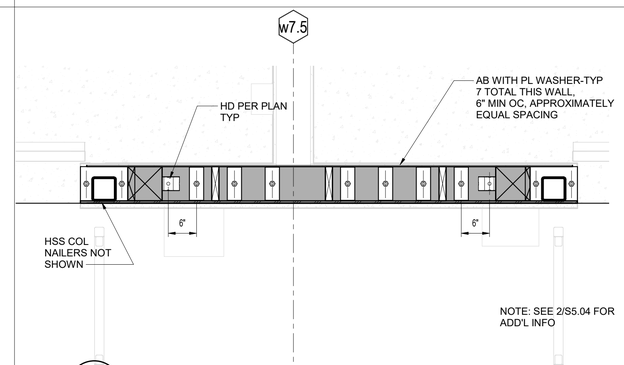

3 / S5.04 ENLARGED SHEAR WALL PLAN DETAIL

3/4" = 1'-0"

APPROVALS

IDENTIFICATION STAMP
DIV. OF THE STATE ARCHITECT
APP: 01-119409 INC:
REVIEWED FOR
SS ☑ FLS ☑ ACS ☑
DATE: 03/14/2022

NOLL & TAM ARCHITECTS
729 Heinz Avenue
Berkeley, CA 94710
tel 510.542.2200
fax 510.542.2201

SEAL

REGISTERED PROFESSIONAL ENGINEER
STEPHEN R. DEESSER
No. S03527
STRUCTURAL
STATE OF CALIFORNIA

STRUCTURAL ENGINEERS
1629 Telegraph Ave
Suite 300
Oakland, CA 94612
tel: 510.834.1629
ida-se.com

IDA PROJECT NUMBER: 20012

PROJECT TITLE

Peralta Community College District
MERRITT LANDSCAPE HORTICULTURE COMPLEX

12500 Campus Drive
Oakland, CA 94616

BID SET

ISSUE DATE	03/03/2022
N&T JOB NUMBER	22003

REVISIONS

	DATE	DESCRIPTION

SHEET TITLE

ENLARGED PLAN DETAILS

SHEET NUMBER

S5.04

3/2/2022 5:59:16 PM BIM 360://PCCD Merritt Horticulture/IDA20012 Merritt Horticulture_R20.rvt

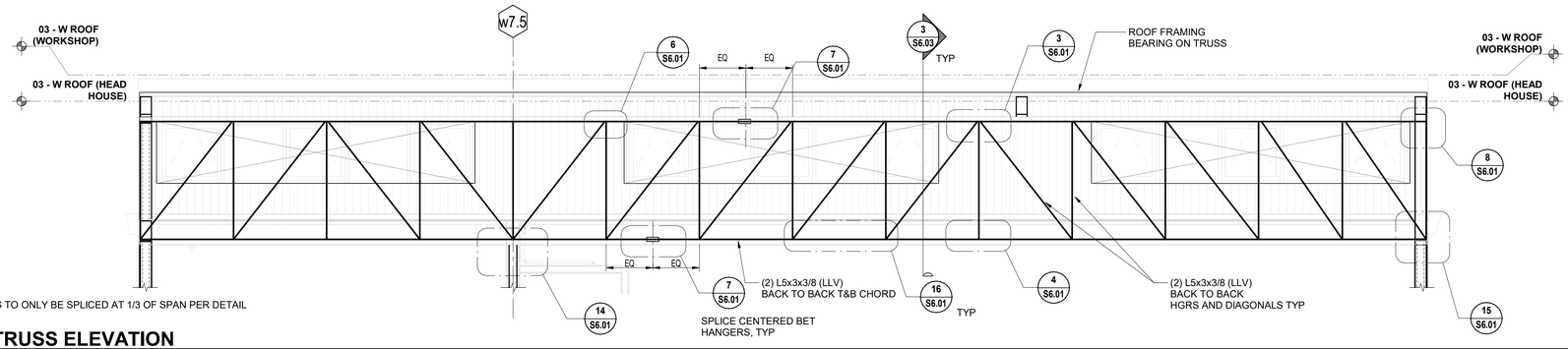

NOTE:

T&B CHORDS TO ONLY BE SPLICED AT 1/3 OF SPAN PER DETAIL

13 S6.01 TRUSS ELEVATION

1/4" = 1'-0"

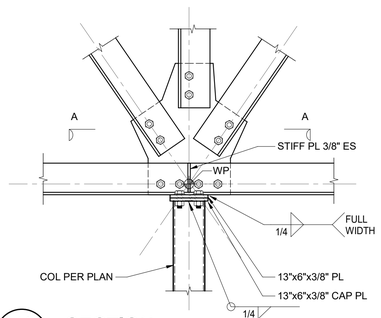

14 S6.01 SECTION

1" = 1'-0"

NOTE:
SEE 1/S6.01 FOR TYPICAL INFORMATION.
SEE 3/S6.03 FOR JOIST FRAMING INFORMATION.

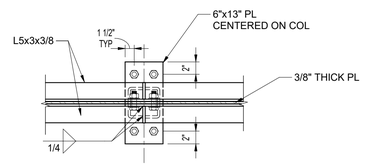

SECTION A - A

NOTE:
SEE 2/S6.01 FOR TYPICAL INFORMATION.
SEE 3/S6.03 FOR ROOF SHEATHING AND JOIST FRAMING INFORMATION.

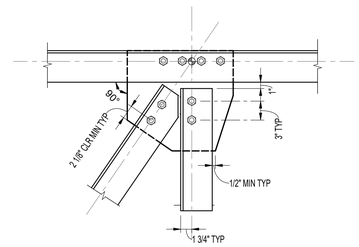

6 S6.01 SECTION

1" = 1'-0"

NOTES
1. ALL BOLTS 3/4" Ø.
2. ALL PLATES 3/8". SEE SPECIFIC DETAILS FOR SHAPE
3. SEE SPECIFIC DETAILS FOR CONDITIONS NOT SHOWN HERE

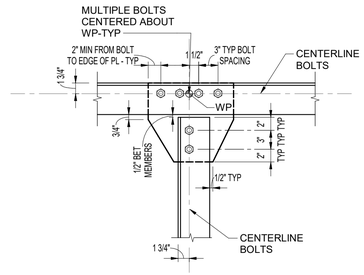

2 S6.01 TYP TRUSS DETAILING DIMENSIONS

1" = 1'-0"

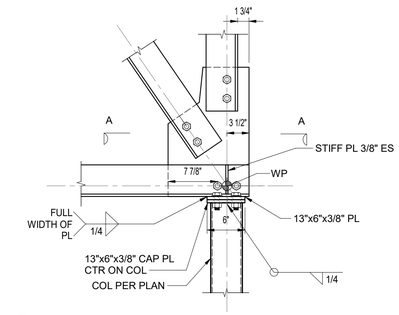

15 S6.01 SECTION

1" = 1'-0"

NOTE:
SEE 1/S6.01 FOR TYPICAL INFORMATION.
SEE 3/S6.03 FOR JOIST FRAMING INFORMATION.

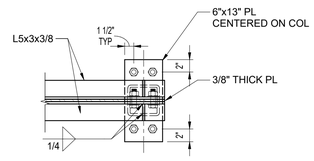

SECTION A - A

NOTE:

SEE 1/S6.01 FOR TYPICAL INFORMATION.
SEE 3/S6.03 FOR JOIST FRAMING INFORMATION

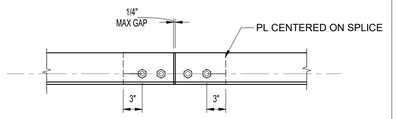

7 S6.01 CHORD SPLICE DETAIL

1" = 1'-0"

NOTE:

SEE 1/S6.01 FOR TYPICAL INFORMATION.
SEE 3/S6.03 FOR ROOF SHEATHING AND JOIST FRAMING INFORMATION

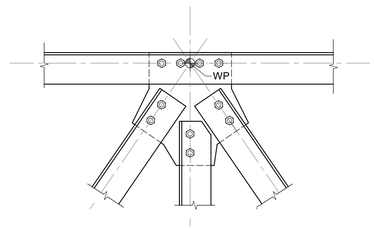

3 S6.01 SECTION

1" = 1'-0"

NOTE:
SEE 1/S6.01 FOR TYPICAL INFORMATION.
SEE 3/S6.03 FOR ROOF SHEATHING AND JOIST FRAMING INFORMATION.

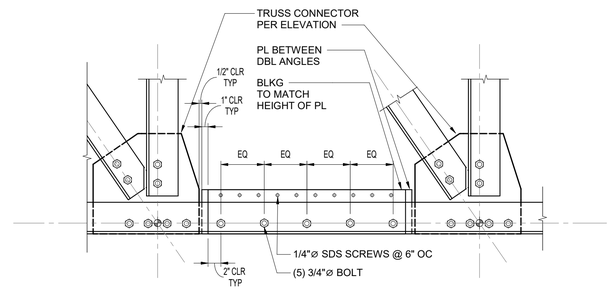

16 S6.01 LOWER ROOF JOIST FRAMING DETAIL

1" = 1'-0"

NOTE:

SEE 1/S6.01 FOR TYPICAL INFORMATION.
SEE 3/S6.03 FOR ROOF SHEATHING AND JOIST FRAMING INFORMATION.

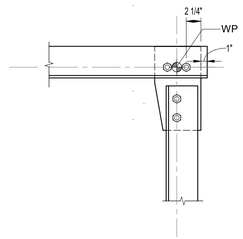

8 S6.01 SECTION

1" = 1'-0"

NOTE:

SEE 1/S6.01 FOR TYPICAL INFORMATION.
SEE 3/S6.03 FOR JOIST FRAMING INFORMATION.

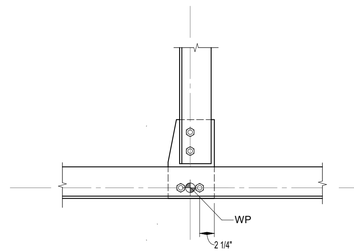

4 S6.01 SECTION

1" = 1'-0"

APPROVALS

IDENTIFICATION STAMP
DIV. OF THE STATE ARCHITECT
APP: 01-119409 INC:
REVIEWED FOR
SS ☑ FLS ☑ ACS ☑
DATE: 03/14/2022

NOLL & TAM ARCHITECTS
729 Heinz Avenue
Berkeley, CA 94710
tel 510.542.2200
fax 510.542.2201

SEAL

REGISTERED PROFESSIONAL ENGINEER STEPHEN R. DITESSO No. S03527 STRUCTURAL STATE OF CALIFORNIA

IDA STRUCTURAL ENGINEERS
1629 Telegraph Ave
Suite 300
Oakland, CA 94612
tel: 510.834.1629
ida-se.com

IDA PROJECT NUMBER: 20012

PROJECT TITLE

Peralta Community College District
MERRITT LANDSCAPE HORTICULTURE COMPLEX

12500 Campus Drive
Oakland, CA 94616

BID SET

ISSUE DATE	03/03/2022
N&T JOB NUMBER	22003

REVISIONS

	DATE	DESCRIPTION

DRAWN BY	AI	CHECKED BY	GE, SDJ

SHEET TITLE

TRUSS ELEVATIONS AND DETAILS

SHEET NUMBER

S6.01

3/2/2022 5:59:19 PM BIM 360://PCCD Merritt Horticulture/IDA20012 Merritt Horticulture_R20.rvt

NOTES
1. ALL BOLTS 3/4" ⌀.
2. ALL PLATES 3/8". SEE SPECIFIC DETAILS FOR SHAPE
3. SEE SPECIFIC DETAILS FOR CONDITIONS NOT SHOWN HERE

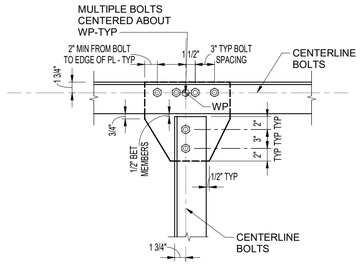

13 S6.02 **TYP TRUSS DETAILING DIMENSIONS**
1" = 1'-0"

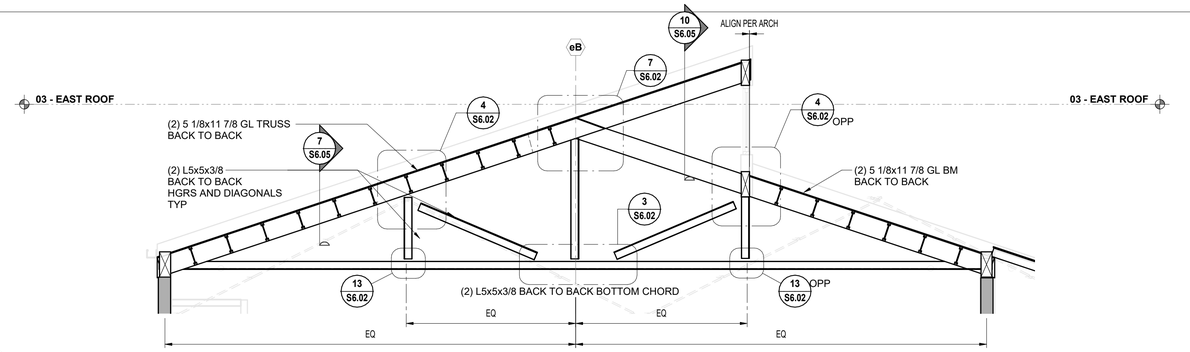

9 S6.02 **TRUSS ELEVATION**
1/4" = 1'-0"

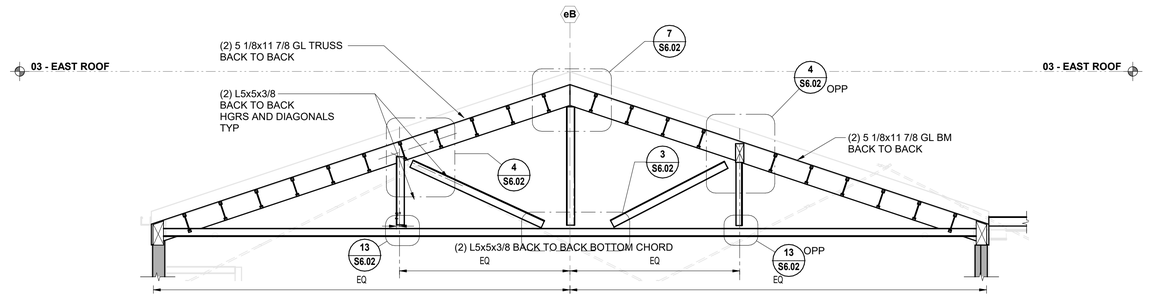

10 S6.02 **TRUSS ELEVATION**
1/4" = 1'-0"

NOTE:

SEE 1/S6.01 FOR TYPICAL INFORMATION.
SEE 3/S6.03 FOR JOIST FRAMING INFORMATION.

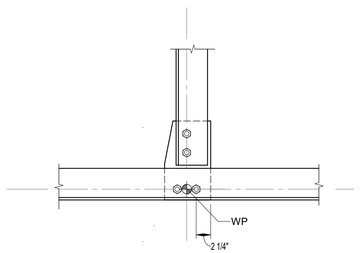

11 S6.02 **SECTION**
1" = 1'-0"

NOTE:

SEE 13/S6.02 FOR TYPICAL INFORMATION.
SEE 1/S5.03 FOR JOIST FRAMING INFORMATION.

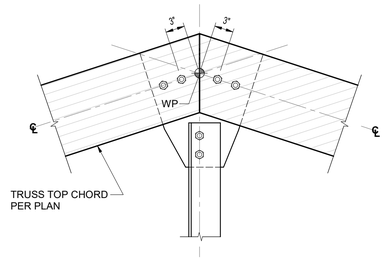

7 S6.02 **SECTION**
1" = 1'-0"

NOTE:

SEE 13/S6.02 FOR TYPICAL INFORMATION.

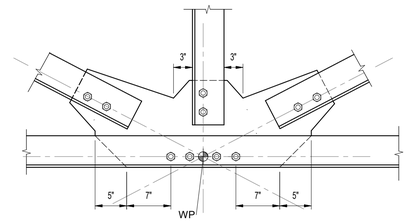

3 S6.02 **SECTION**
1" = 1'-0"

NOTE:

SEE 1/S5.03 FOR JOIST
FRAMING INFORMATION.

SEE 5/S6.03 FOR BLKG
INFORMATION.

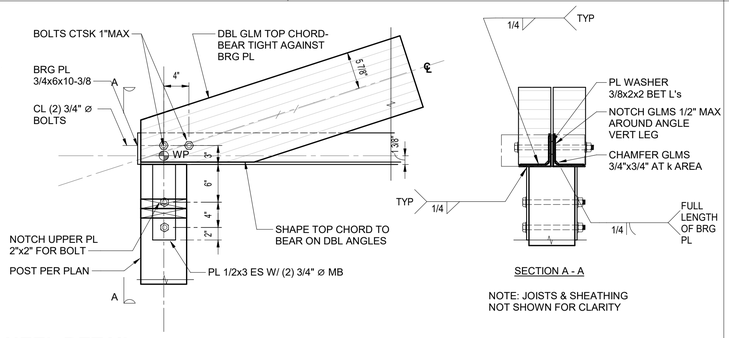

12 S6.02 **TRUSS HEEL DETAIL**
1" = 1'-0"

NOTE:

SEE 13/S6.02 FOR TYPICAL INFORMATION.
SEE 1/S5.03 FOR JOIST FRAMING INFORMATION.

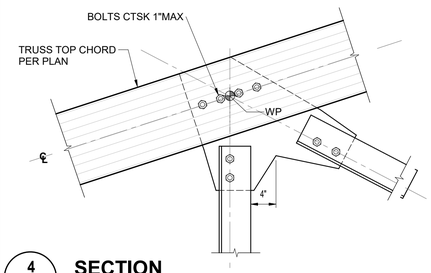

4 S6.02 **SECTION**
1" = 1'-0"

APPROVALS

IDENTIFICATION STAMP
DIV. OF THE STATE ARCHITECT
APP: 01-119409 INC:
REVIEWED FOR
SS ☑ FLS ☑ ACS ☑
DATE: 03/14/2022

NOLL & TAM ARCHITECTS
729 Heinz Avenue
Berkeley, CA 94710
tel 510.542.2200
fax 510.542.2201

SEAL

REGISTERED PROFESSIONAL ENGINEER
STEPHEN R. DESSER
No. S03527
STRUCTURAL
STATE OF CALIFORNIA

IDA STRUCTURAL ENGINEERS
1629 Telegraph Ave
Suite 300
Oakland, CA 94612
tel: 510.834.1629
ida-se.com

IDA PROJECT NUMBER: 20012

PROJECT TITLE

Peralta Community College District
MERRITT LANDSCAPE HORTICULTURE COMPLEX

12500 Campus Drive
Oakland, CA 94616

BID SET

ISSUE DATE 03/03/2022
N&T JOB NUMBER 22003

REVISIONS

	DATE	DESCRIPTION

DRAWN BY **Author** CHECKED BY **Checker**

SHEET TITLE
TRUSS ELEVATIONS AND DETAILS

SHEET NUMBER
S6.02

3/2/2022 5:59:21 PM BIM 360://PCCD Merritt Horticulture/IDA20012 Merritt Horticulture_R20.rvt

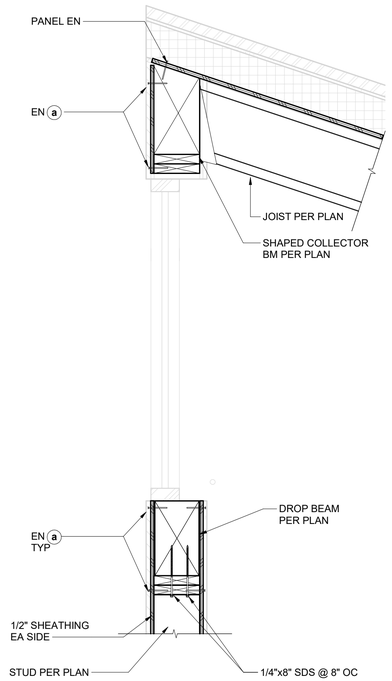

18 S6.03 **SECTION**
1" = 1'-0"

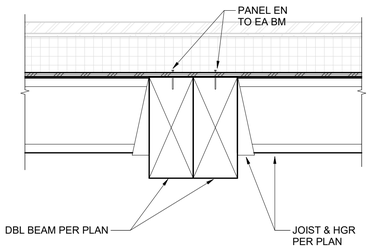

13 S6.03 **SECTION AT DBL BEAM**
1" = 1'-0"

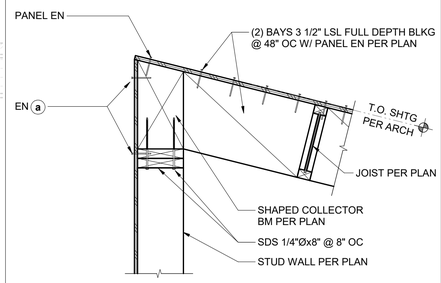

9 S6.03 **WALL SECTION - PARALLEL JOIST FRAMING**
NTS

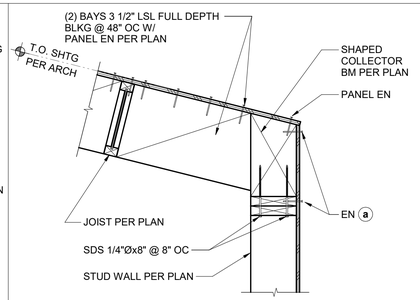

5 S6.03 **WALL SECTION - PARALLEL JOIST FRAMING**
1" = 1'-0"

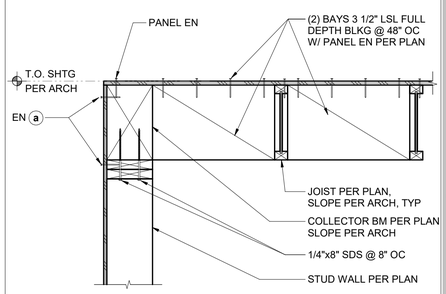

1 S6.03 **WALL SECTION - PARALLEL JOIST FRAMING**
1" = 1'-0"

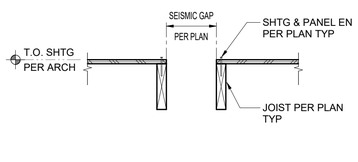

14 S6.03 **SEISMIC JOINT - BREEZEWAY**
1" = 1'-0"

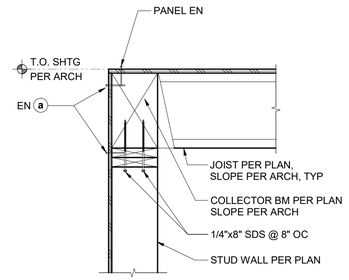

10 S6.03 **WALL SECTION - PERPENDICULAR WALL FRAMING**
1" = 1'-0"

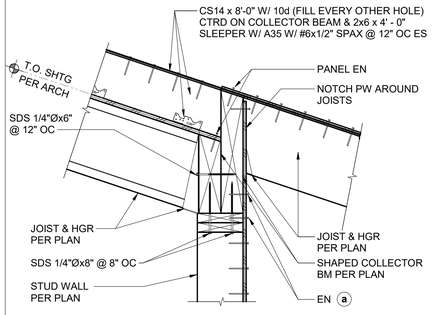

6 S6.03 **TRANSITION AT OUTDOOR KITCHEN**
1" = 1'-0"

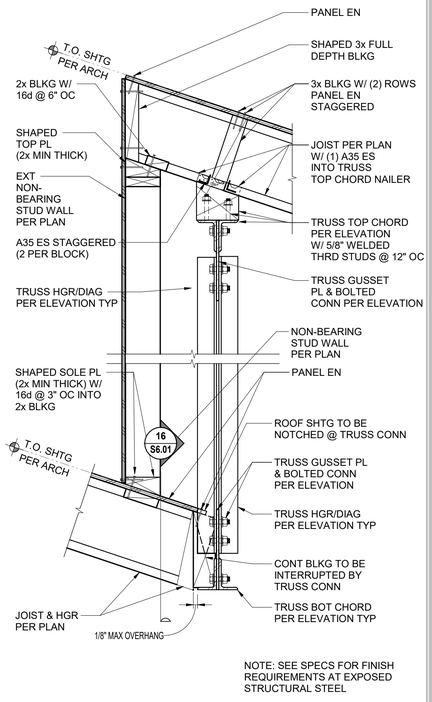

3 S6.03 **ROOF FRAMING AT TRUSS**
1" = 1'-0"

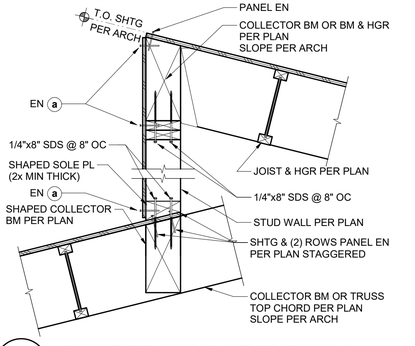

19 S6.03 **ROOF FRAMING AT ENDWALL**
1" = 1'-0"

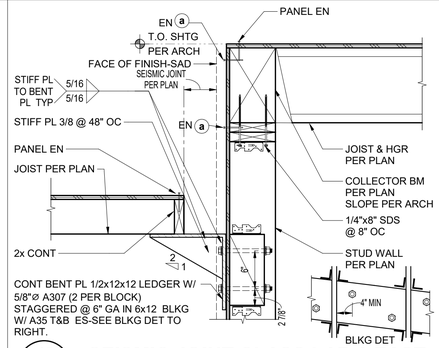

15 S6.03 **SEISMIC JOINT CLASS LAB 2 EAST**
1" = 1'-0"

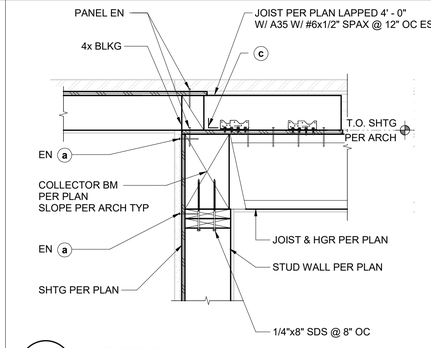

11 S6.03 **SECTION**
1" = 1'-0"

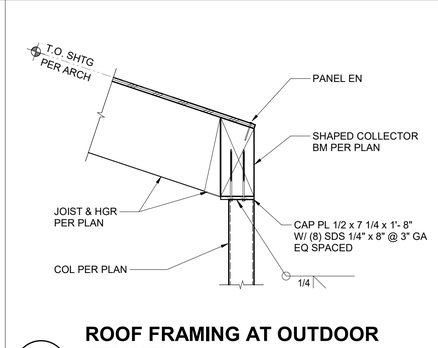

7 S6.03 **ROOF FRAMING AT OUTDOOR KITCHEN**
1" = 1'-0"

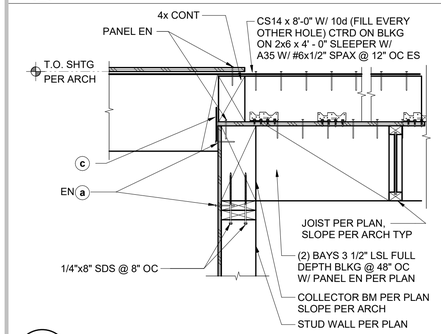

20 S6.03 **PASSAGEWAY ROOF FRAMING**
1" = 1'-0"

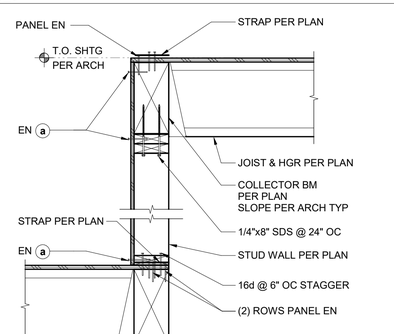

16 S6.03 **ROOF FRAMING AT SIDEWALL**
1" = 1'-0"

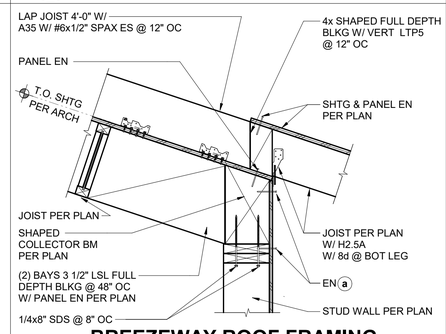

12 S6.03 **BREEZEWAY ROOF FRAMING TRANSITION**
1" = 1'-0"

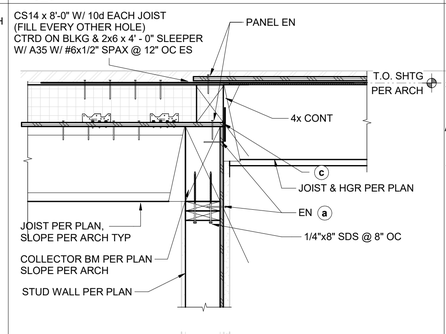

8 S6.03 **SECTION**
1" = 1'-0"

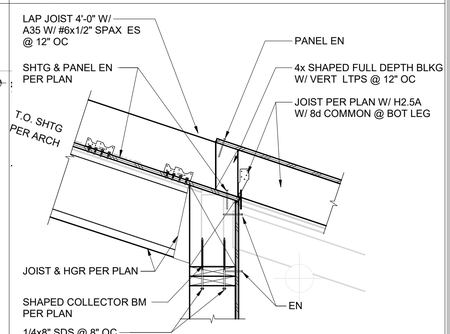

4 S6.03 **SECTION**
1" = 1'-0"

APPROVALS

IDENTIFICATION STAMP
DIV. OF THE STATE ARCHITECT
APP: 01-119409 INC:
REVIEWED FOR
SS ☑ FLS ☑ ACS ☑
DATE: 03/14/2022

NOLL & TAM ARCHITECTS
729 Heinz Avenue
Berkeley, CA 94710
tel 510.542.2200
fax 510.542.2201

SEAL

REGISTERED PROFESSIONAL ENGINEER
STEPHEN R. DITESSO
No. S03527
STRUCTURAL
STATE OF CALIFORNIA

IDA STRUCTURAL ENGINEERS
1629 Telegraph Ave
Suite 300
Oakland, CA 94612
tel: 510.834.1629
ida-se.com

IDA PROJECT NUMBER: 20012

PROJECT TITLE

Peralta Community College District
MERRITT LANDSCAPE HORTICULTURE COMPLEX

12500 Campus Drive
Oakland, CA 94616

BID SET

ISSUE DATE	03/03/2022
N&T JOB NUMBER	22003

REVISIONS

	DATE	DESCRIPTION

DRAWN BY AI | CHECKED BY GE, SDJ

SHEET TITLE
ROOF FRAMING DETAILS

SHEET NUMBER
S6.03

3/2/2022 5:59:25 PM BIM 360://PCCD Merritt Horticulture/IDA20012 Merritt Horticulture_R20.rvt

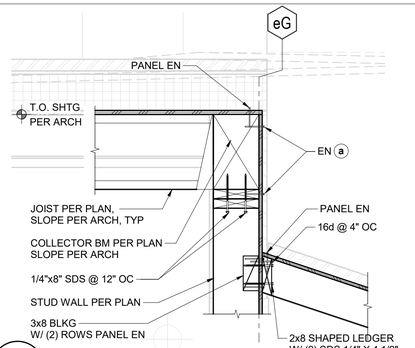

17 S6.04 **SECTION**
1" = 1'-0"

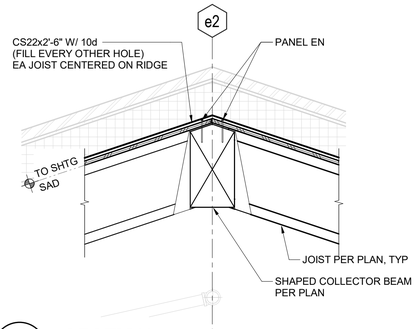

13 S6.04 **SECTION**
1" = 1'-0"

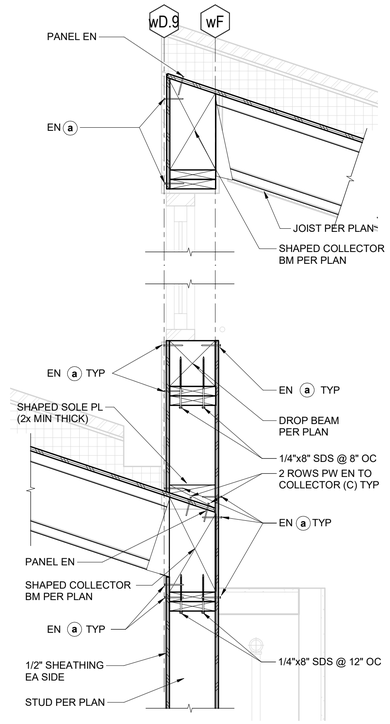

10 S6.04 **SECTION**
1" = 1'-0"

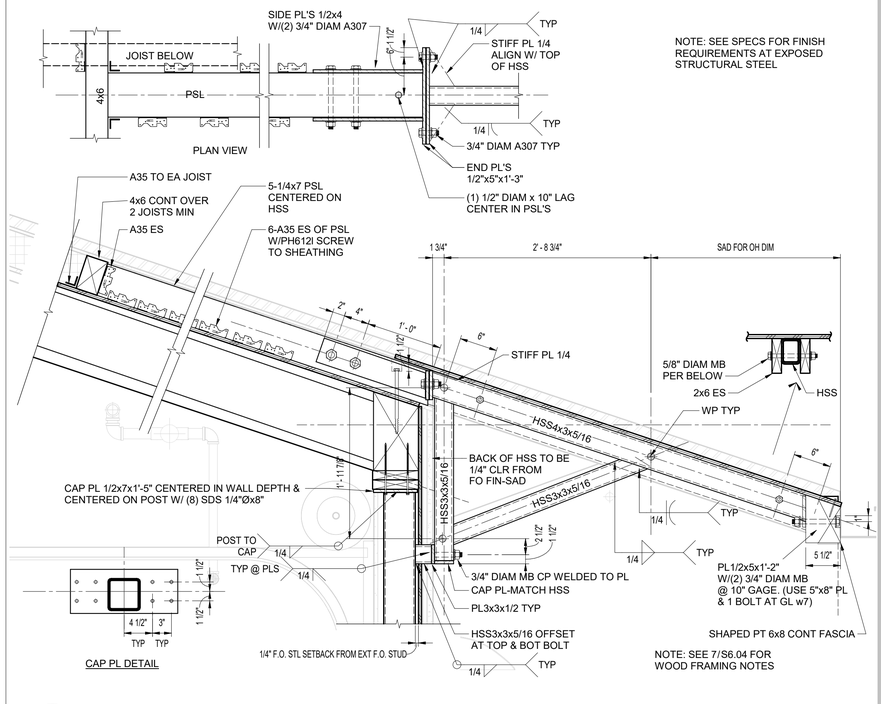

6 S6.04 **STEEL KICKER FRAME**
1" = 1'-0"

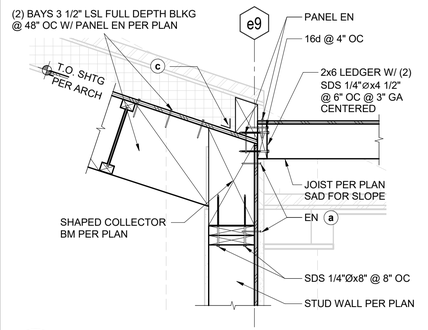

18 S6.04 **SECTION**
1" = 1'-0"

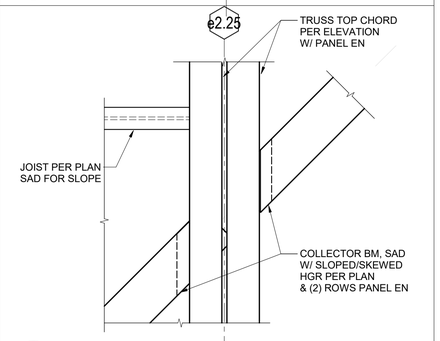

14 S6.04 **ENLARGED PLAN DETAIL**
1" = 1'-0"

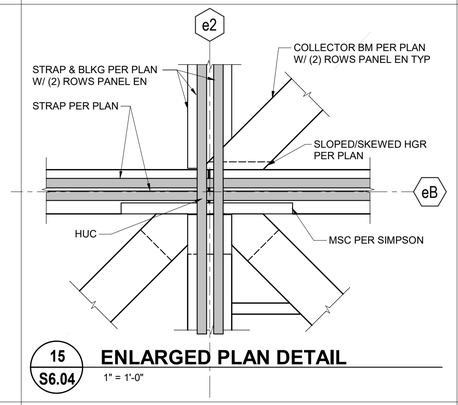

15 S6.04 **ENLARGED PLAN DETAIL**
1" = 1'-0"

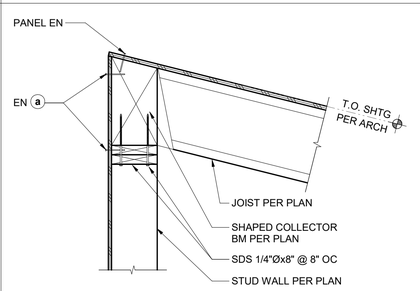

11 S6.04 **WALL SECTION - PERPENDICULAR JOIST FRAMING**
1" = 1'-0"

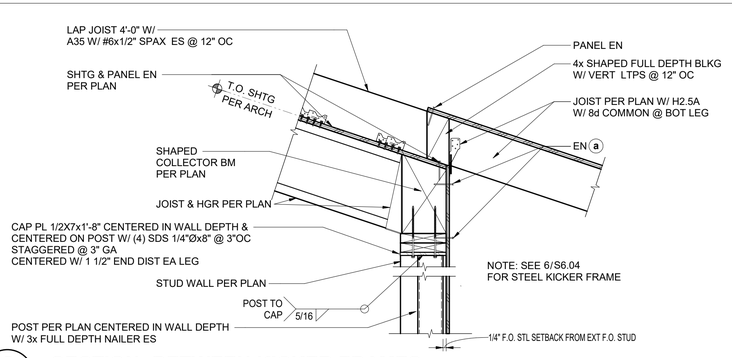

7 S6.04 **SECTION -BETWEEN KICKER FRAMES**
1" = 1'-0"

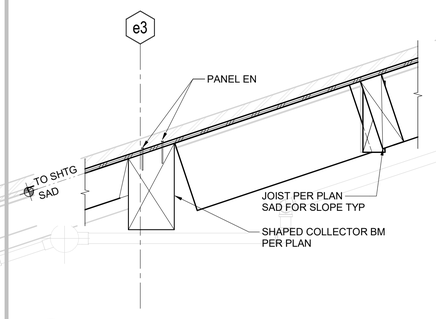

20 S6.04 **SECTION**
1" = 1'-0"

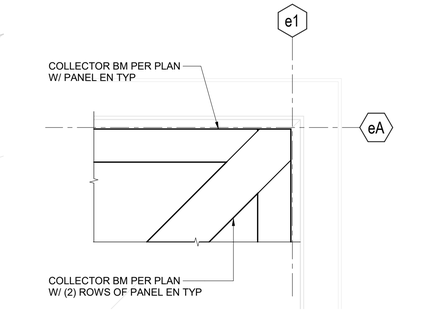

16 S6.04 **ENLARGED PLAN DETAIL**
1" = 1'-0"

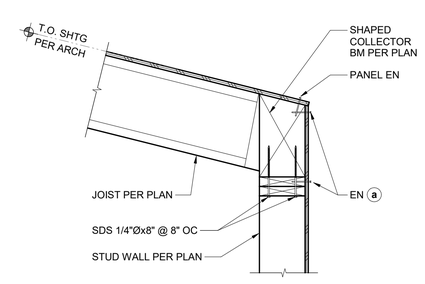

12 S6.04 **WALL SECTION - PERPENDICULAR JOIST FRAMING**
1" = 1'-0"

APPROVALS

IDENTIFICATION STAMP
DIV. OF THE STATE ARCHITECT
APP: 01-119409 INC:
REVIEWED FOR
SS ☑ FLS ☑ ACS ☑
DATE: 03/14/2022

NOLL & TAM ARCHITECTS
729 Heinz Avenue
Berkeley, CA 94710
tel 510.542.2200
fax 510.542.2201

SEAL

REGISTERED PROFESSIONAL ENGINEER
STEPHEN R. OBTSCHER
No. S03527
STRUCTURAL
STATE OF CALIFORNIA

IDA STRUCTURAL ENGINEERS
1629 Telegraph Ave
Suite 300
Oakland, CA 94612
tel: 510.834.1629
ida-se.com

IDA PROJECT NUMBER: 20012

PROJECT TITLE

Peralta Community College District
MERRITT LANDSCAPE HORTICULTURE COMPLEX

12500 Campus Drive
Oakland, CA 94616

BID SET

ISSUE DATE	03/03/2022
N&T JOB NUMBER	22003

REVISIONS

	DATE	DESCRIPTION

DRAWN BY **Author** CHECKED BY **Checker**

SHEET TITLE

ROOF FRAMING DETAILS

SHEET NUMBER

S6.04

3/2/2022 5:59:30 PM BIM 360://PCCD Merritt Horticulture/IDA20012 Merritt Horticulture_R20.rvt

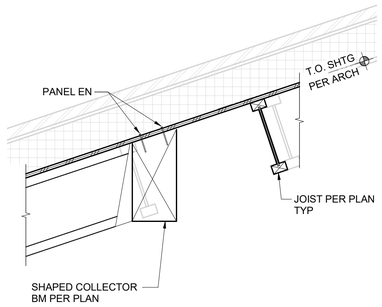

13 S6.05 **SECTION**
1" = 1'-0"

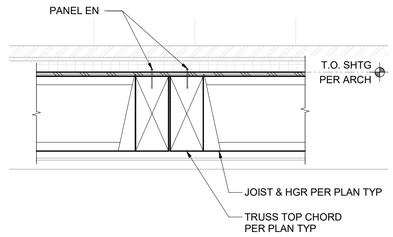

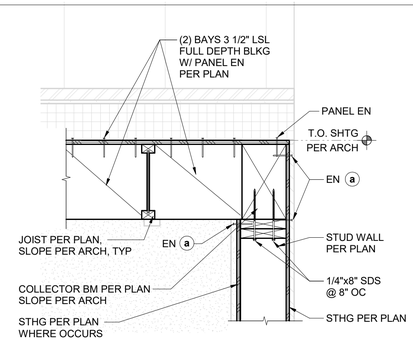

5 S6.05 **SECTION**
1" = 1'-0"

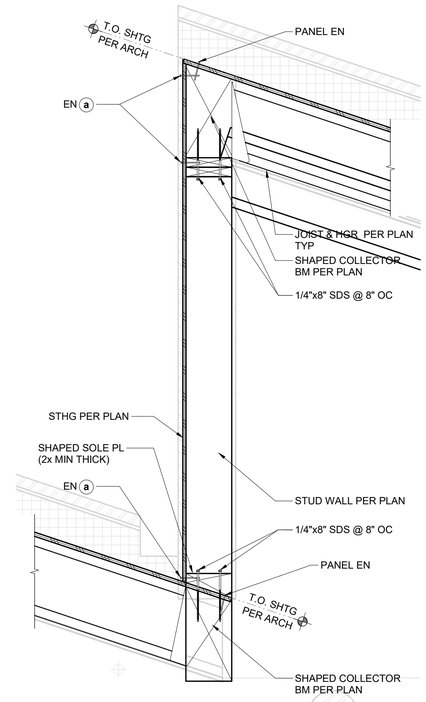

2 S6.05 **SECTION**
1" = 1'-0"

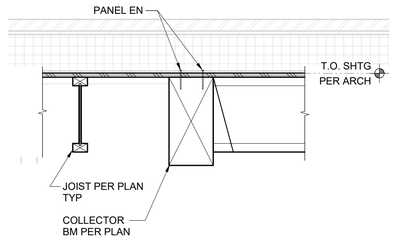

14 S6.05 **SECTION**
1" = 1'-0"

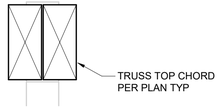

10 S6.05 **SECTION**
1" = 1'-0"

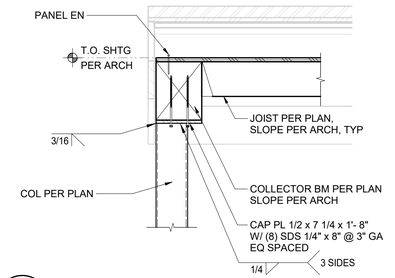

6 S6.05 **SECTION**
1" = 1'-0"

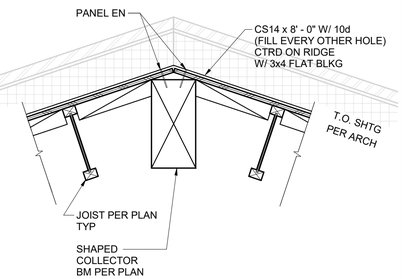

15 S6.05 **SECTION**
1" = 1'-0"

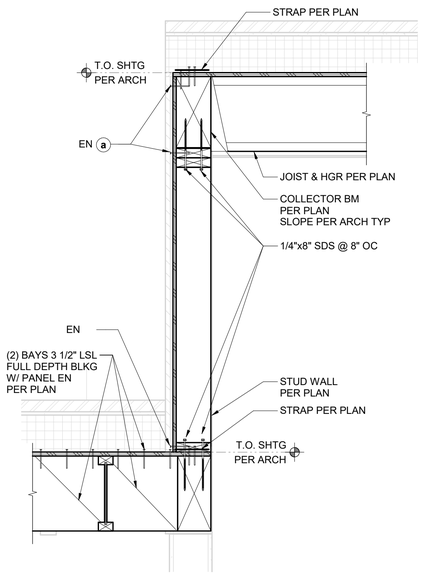

12 S6.05 **SECTION**
1" = 1'-0"

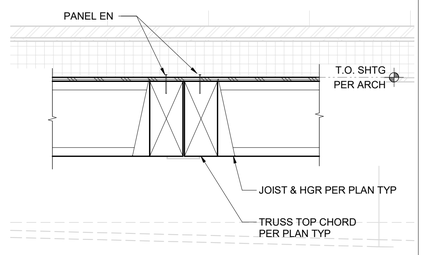

7 S6.05 **SECTION**
1" = 1'-0"

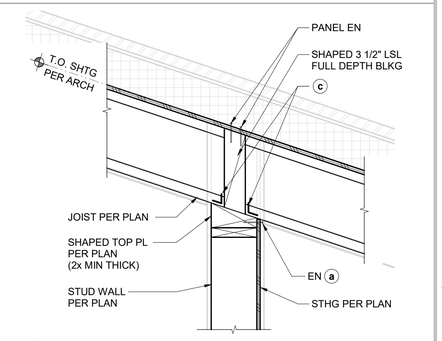

3 S6.05 **SECTION**
1" = 1'-0"

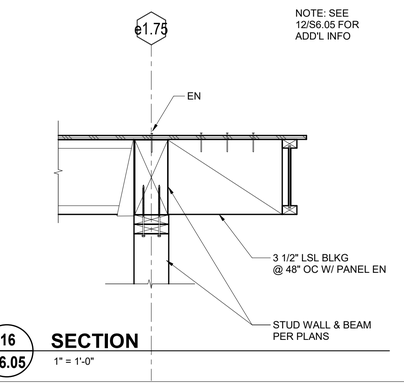

16 S6.05 **SECTION**
1" = 1'-0"

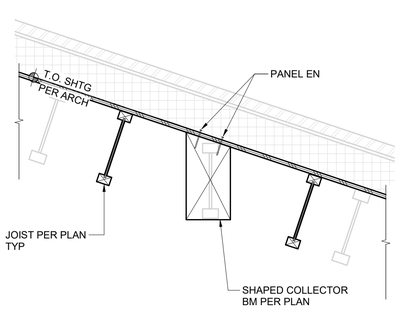

8 S6.05 **SECTION**
1" = 1'-0"

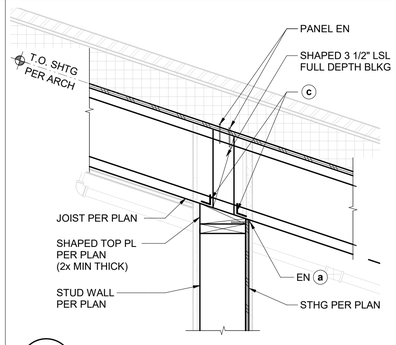

4 S6.05 **SECTION**
1" = 1'-0"

APPROVALS

IDENTIFICATION STAMP
DIV. OF THE STATE ARCHITECT
APP: 01-119409 INC:
REVIEWED FOR
SS ☑ FLS ☑ ACS ☑
DATE: 03/14/2022

NOLL & TAM ARCHITECTS
729 Heinz Avenue
Berkeley, CA 94710
tel 510.542.2200
fax 510.542.2201

SEAL

REGISTERED PROFESSIONAL ENGINEER
STEPHEN R. DESSER
No. S03527
STRUCTURAL
STATE OF CALIFORNIA

IDA STRUCTURAL ENGINEERS
1629 Telegraph Ave
Suite 300
Oakland, CA 94612
tel: 510.834.1629
ida-se.com

IDA PROJECT NUMBER: 20012

PROJECT TITLE

Peralta Community College District
MERRITT LANDSCAPE HORTICULTURE COMPLEX

12500 Campus Drive
Oakland, CA 94616

BID SET

ISSUE DATE 03/03/2022
N&T JOB NUMBER 22003

REVISIONS

	DATE	DESCRIPTION

DRAWN BY **Author** CHECKED BY **Checker**

SHEET TITLE

ROOF FRAMING DETAILS

SHEET NUMBER

S6.05

3/2/2022 5:59:35 PM BIM 360://PCCD Merritt Horticulture/IDA20012 Merritt Horticulture_R20.rvt

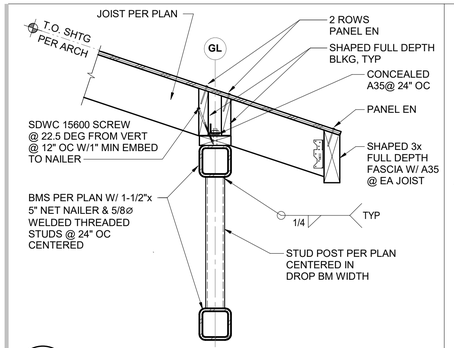

17 / S7.01 **BREEZEWAY ROOF FRAMING**
1" = 1'-0"

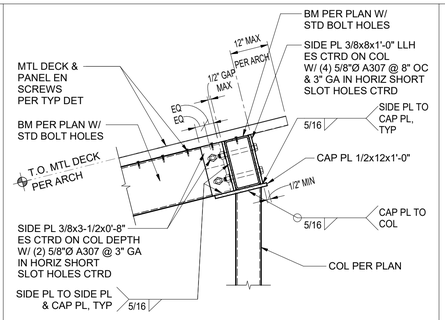

13 / S7.01 **SOIL BIN EXTERIOR BEAM TO COLUMN CONNECTION**
1" = 1'-0"

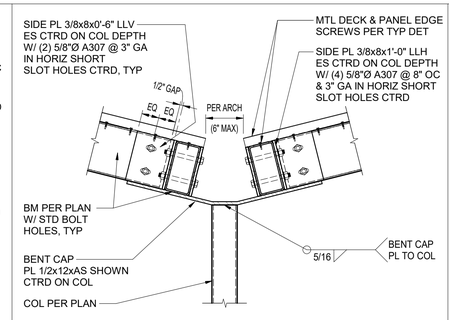

9 / S7.01 **SOIL BIN INTERIOR BEAM TO COLUMN CONNECTION**
1" = 1'-0"

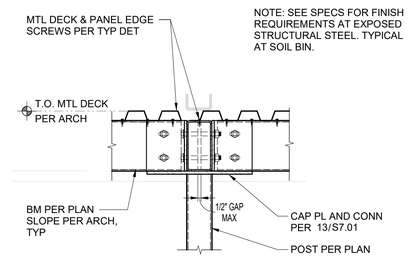

5 / S7.01 **SECTION**
1" = 1'-0"

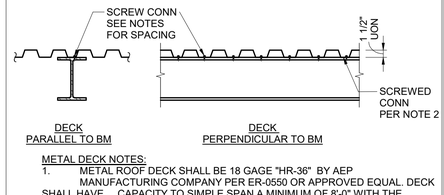

METAL DECK NOTES:
1. METAL ROOF DECK SHALL BE 18 GAGE "HR-36" BY AEP MANUFACTURING COMPANY PER ER-0550 OR APPROVED EQUAL. DECK SHALL HAVE CAPACITY TO SIMPLE SPAN A MINIMUM OF 8'-0" WITH THE FOLLOWING SUPERIMPOSED LOADS (ASD):
   DEAD LOAD: 10 PSF
   LIVE LOAD: 20 PSF
   GROSS WIND UPLIFT: 20 PSF
2. SCREW ATTACHMENT METAL DECK TO SUPPORTS:
   AT ENDS OF PANEL AND AT INTERMEDIATE TRANSVERSE SUPPORTS: #12 SMS W/ SEALING WASHERS @ 6"OC
   PERIMETER OF PANEL AND AT INTERMEDIATE PARALLEL SUPPORTS: #12 SMS W/ SEALING WASHERS @ 6"OC
   SEAM ATTACHMENT: #12 SMS W/ SEALING WASHERS @ 6"OC
3. MECHANICAL PIPING, DUCTS, CABLE TRAYS, ETC. SHALL BE SUPPORTED DIRECTLY BY STEEL FRAMING NOT METAL DECK.
4. MANUFACTURER SHALL PROVIDE SCREW CONNECTIONS TO ADEQUATELY TRANSFER LOADS TO SUPPORTS. MAXIMUM TOTAL DEFLECTION SHALL BE: SPAN/240. SEE SPECIFICATIONS FOR COLOR AND FINISH.
5. SEE GENERAL NOTES AND TYPICAL DETAILS FOR ADDITIONAL METAL DECK NOTES.

2 / S7.01 **TYP ROOF METAL DECK DETAILS**
3/4" = 1'-0"

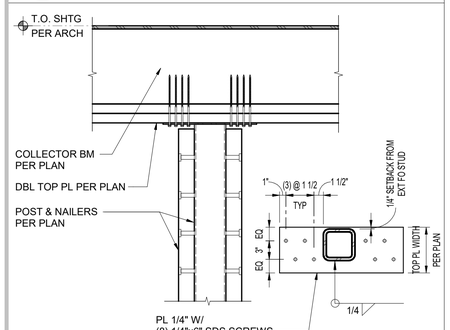

18 / S7.01 **TYP BREEZEWAY POST TO BM INTERIOR CONN**
1" = 1'-0"

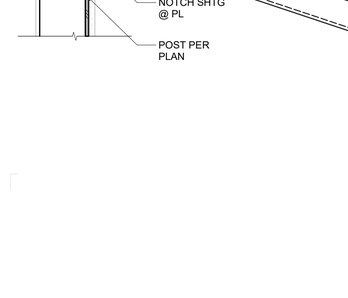

14 / S7.01 **SECTION**
1" = 1'-0"

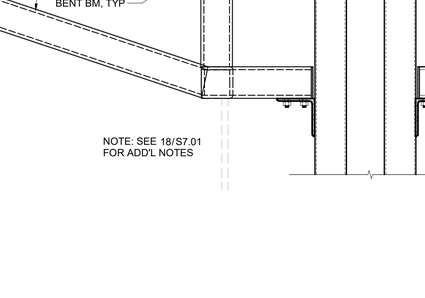

10 / S7.01 **SECTION**
1" = 1'-0"

6 / S7.01 **SECTION**
1" = 1'-0"

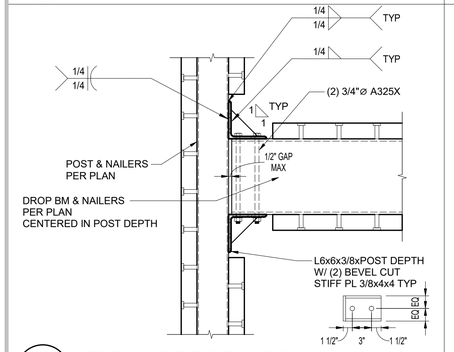

19 / S7.01 **TYP POST TO BM CONN**
1" = 1'-0"

20 / S7.01 **TYP POST CONN AT DBL TOP PL**
1" = 1'-0"

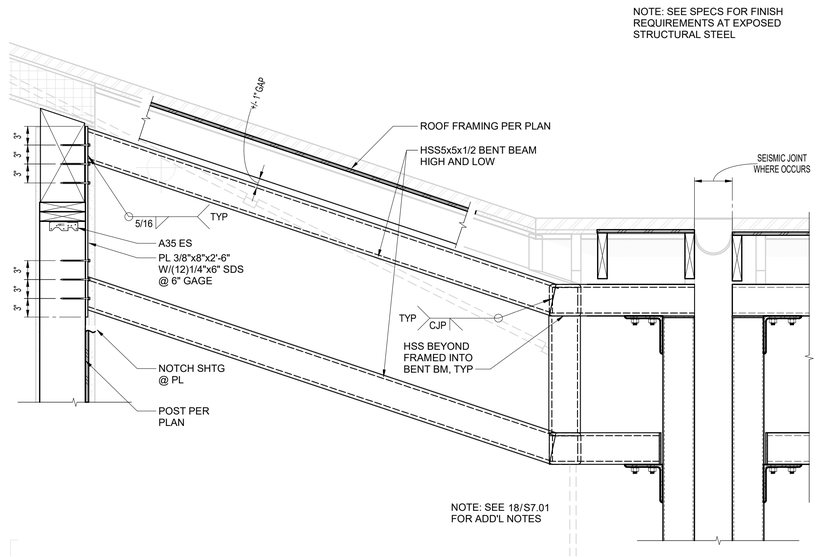

16 / S7.01 **TYP SECTION AT BENT BEAM**
1" = 1'-0"

APPROVALS

IDENTIFICATION STAMP
DIV. OF THE STATE ARCHITECT
APP: 01-119409 INC:
REVIEWED FOR
SS ☑ FLS ☑ ACS ☑
DATE: 03/14/2022

NOLL & TAM ARCHITECTS
729 Heinz Avenue
Berkeley, CA 94710
tel 510.542.2200
fax 510.542.2201

SEAL

REGISTERED PROFESSIONAL ENGINEER
STEPHEN R. DESCHENES
No. S03527
STRUCTURAL
STATE OF CALIFORNIA

IDA STRUCTURAL ENGINEERS
1629 Telegraph Ave
Suite 300
Oakland, CA 94612
tel: 510.834.1629
ida-se.com

IDA PROJECT NUMBER: 20012

PROJECT TITLE

Peralta Community College District
MERRITT LANDSCAPE HORTICULTURE COMPLEX

12500 Campus Drive
Oakland, CA 94616

BID SET

ISSUE DATE	03/03/2022
N&T JOB NUMBER	22003

REVISIONS

	DATE	DESCRIPTION

DRAWN BY AI CHECKED BY GE, SDJ

SHEET TITLE
STEEL FRAMING DETAILS

SHEET NUMBER
S7.01

BIM 360://PCCD Merritt Horticulture/IDA20012 Merritt Horticulture_R20.rvt
3/2/2022 5:59:39 PM

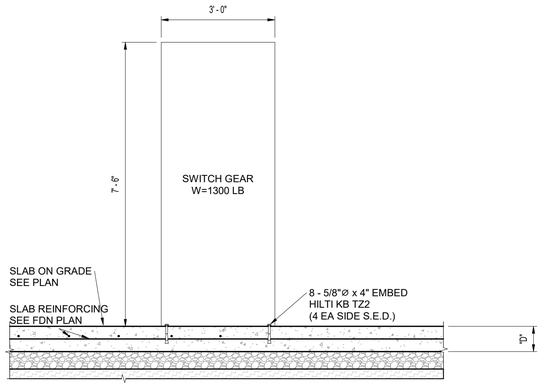

10 S8.01 ANCHORAGE OF ELECTRICAL SWITCHGEAR TO SLAB

1/2" = 1'-0"

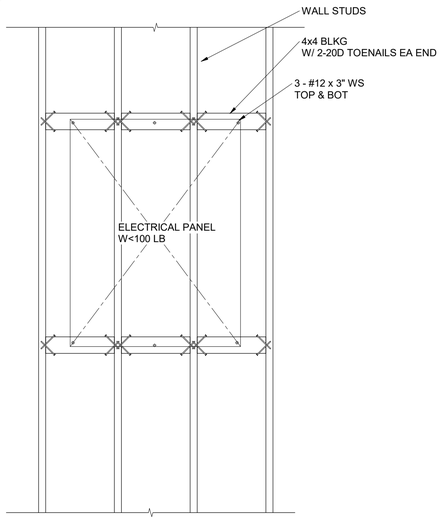

11 S8.01 TYPICAL ELECTRICAL PANEL & TANKLESS WH ATTACHMENT ON WALLS

3/4" = 1'-0"

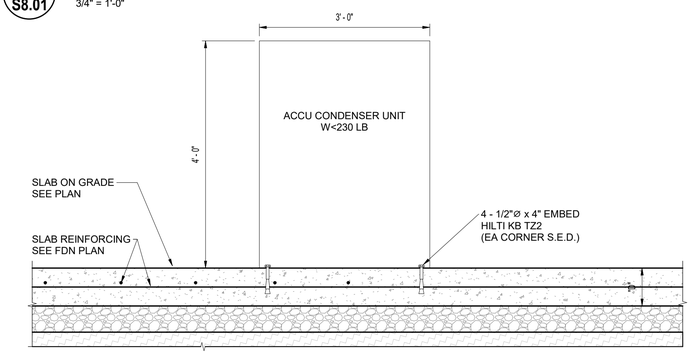

12 S8.01 ANCHORAGE OF ACCU UNIT TO SLAB

3/4" = 1'-0"

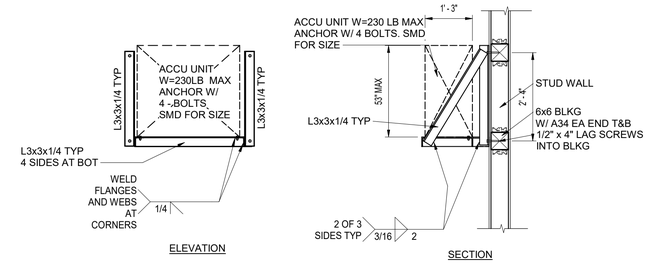

5 S8.01 MOUNTING ACCU UNIT TO STUD WALL

1/2" = 1'-0"

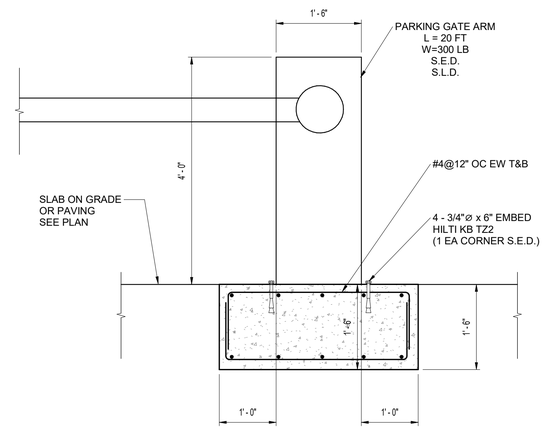

6 S8.01 MOUNTING OF PARKING GATE ARM

3/4" = 1'-0"

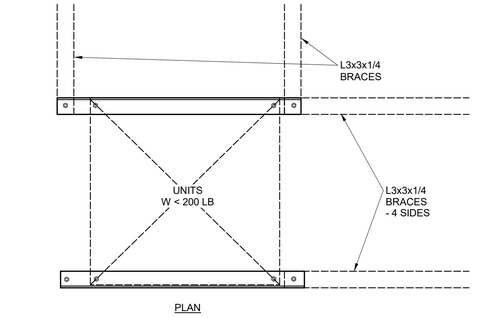

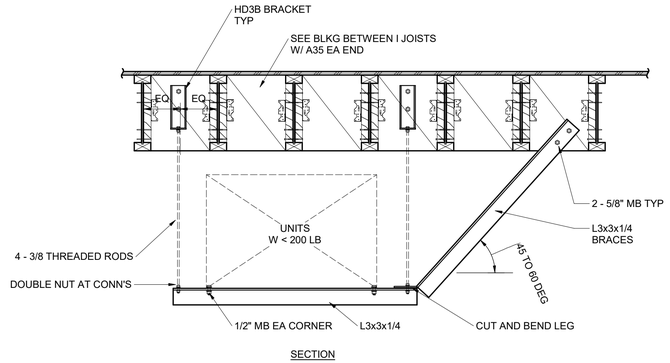

1 S8.01 TYPICAL MEP HANGING ANCHORAGE DETAIL

3/4" = 1'-0"

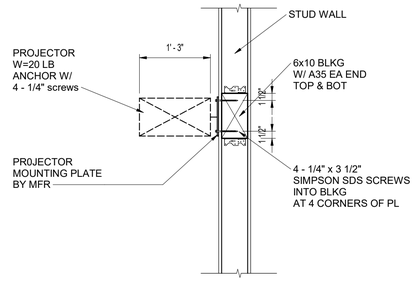

3 S8.01 TYPICAL PROJECTOR ANCHORAGE DETAIL TO WALL

3/4" = 1'-0"

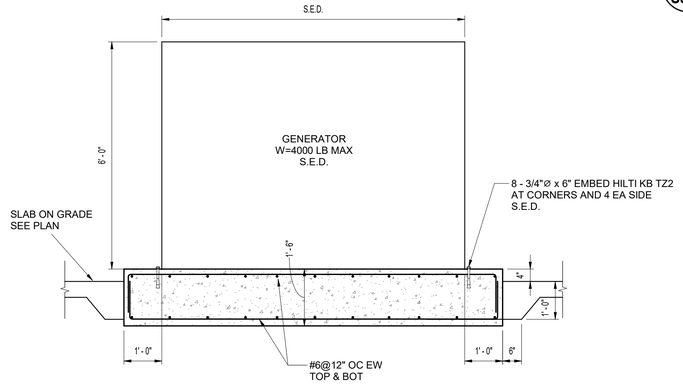

8 S8.01 ANCHORAGE OF GENERATOR TO SLAB

1/2" = 1'-0"

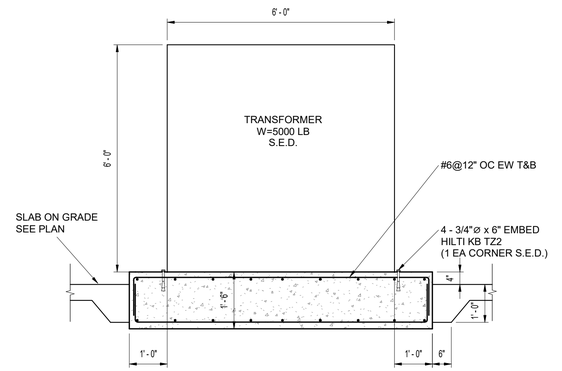

4 S8.01 ANCHORAGE OF TRANSFORMER TO SLAB

1/2" = 1'-0"

APPROVALS

IDENTIFICATION STAMP
DIV. OF THE STATE ARCHITECT
APP: 01-119409 INC:
REVIEWED FOR
SS ☑ FLS ☑ ACS ☑
DATE: 03/14/2022

NOLL & TAM ARCHITECTS
729 Heinz Avenue
Berkeley, CA 94710
tel 510.542.2200
fax 510.542.2201

SEAL

REGISTERED PROFESSIONAL ENGINEER
STEPHEN R. OLTESSEN
No. S03527
STRUCTURAL
STATE OF CALIFORNIA

IDA STRUCTURAL ENGINEERS
1629 Telegraph Ave
Suite 300
Oakland, CA 94612
tel: 510.834.1629
ida-se.com

IDA PROJECT NUMBER: 20012

PROJECT TITLE

Peralta Community College District
MERRITT LANDSCAPE HORTICULTURE COMPLEX

12500 Campus Drive
Oakland, CA 94616

BID SET

ISSUE DATE	03/03/2022
N&T JOB NUMBER	22003

REVISIONS

	DATE	DESCRIPTION
4		

DRAWN BY **Author** CHECKED BY **Checker**

SHEET TITLE

ANCHORAGE OF EQUIPMENT

SHEET NUMBER

S8.01

3/2/2022 5:59:40 PM BIM 360://PCCD Merritt Horticulture/IDA20012 Merritt Horticulture_R20.rvt

DSA REQUIRED NOTES:

ABOVEGROUND PIPING

- THE DESIGNER SHALL INDICATE ON THE PLANS ALL PIPING SUBJECT TO FREEZING (WHERE WATER TEMPERATURE CANNOT BE MAINTAINED ABOVE 40 DEGREES FAHRENHEIT) AND PROVIDE APPROVED PROTECTION.
- UNDERGROUND MAINS AND LEAD-IN CONNECTIONS TO SYSTEM RISERS SHALL BE COMPLETELY FLUSHED BEFORE CONNECTION IS MADE TO OVERHEAD SPRINKLER PIPING. WHERE UNDERGROUND PIPING IS FLUSHED AND NOT IMMEDIATELY CONNECTED TO THE OVERHEAD PIPING, THE RISER SHALL BE CAPPED OR OTHERWISE PROTECTED TO PREVENT DEBRIS, DIRT, OR ANIMALS FROM ENTERING INTO THE UNDERGROUND PIPING (WITNESSED BY THE PROJECT INSPECTOR).
- PROVIDE "WET SIGNED" WATER FLOW TEST DATA NO MORE THAN 12 MONTHS OLD AND INDICATE THE LOCATION AND HEIGHT ELEVATIONS OF THE TEST AND RESIDUAL FLOW HYDRANTS. WATER FLOW TEST DATA MUST BE PROVIDED BY OR WITNESSED BY THE LOCAL WATER PURVEYOR, UTILITIES COMPANY, OR LOCAL FIRE DEPARTMENT.
- ARCHITECT OF RECORD, MECHANICAL ENGINEER, AND FIRE PROTECTION CONTRACTOR (C-16) SHALL AFFIX THEIR SEAL, STAMP AND SIGN ALL SUBMITTALS, OR PROVIDE DOCUMENTATION PER DSA IR A-18.
- A COPY OF COMPLETED AND SIGNED "CONTRACTOR'S MATERIALS & TEST CERTIFICATE FOR UNDERGROUND PIPING" SHALL BE INCLUDED IN THE SUBMITTAL.
- ALL PIPING AND ATTACHED APPURTENANCES SUBJECTED TO WORKING PRESSURE SHALL BE HYDROSTATICALLY TESTED AT 200PSI, OR 50 PSI IN EXCESS OF THE SYSTEM WORKING PRESSURE, WHICHEVER IS GREATER, AND SHALL MAINTAIN THAT PRESSURE WITHOUT LOSS FOR 2 HOURS (WITNESSED BY PROJECT INSPECTOR).
- PROVIDE SPARE SPRINKLER HEAD CABINET, SPRINKLER WRENCHES, AND NO FEWER THAN 6 SPARE SPRINKLER HEADS MATCHING THE TYPES AND TEMPERATURE RATINGS IN EACH PROTECTED AREA FOR SYSTEMS LESS THAN 300 SPRINKLERS (12 SPARE SPRINKLERS FOR SYSTEMS 300 TO 1,000 SPRINKLERS).
- THE END SPRINKLER ON EACH LINE SHALL BE RESTRAINED AGAINST EXCESSIVE VERTICAL AND LATERAL MOVEMENT.
- APPROVED AUDIBLE DEVICES SHALL BE CONNECTED TO EVERY AUTOMATIC SPRINKLER SYSTEM. SUCH SPRINKLER WATER-FLOW ALARM DEVICES SHALL BE ACTIVATED BY WATER FLOW EQUIVALENT TO THE FLOW OF A SINGLE SPRINKLER OF THE SMALLEST ORIFICE SIZE INSTALLED IN THE SYSTEM. ALARM DEVICES SHALL BE PROVIDED ON THE EXTERIOR OF THE BUILDING IN AN APPROVED LOCATION. WHERE A FIRE ALARM SYSTEM IS INSTALLED, ACTUATION OF THE AUTOMATIC SPRINKLER SYSTEM SHALL ACTUATE THE BUILDING FIRE ALARM SYSTEM.
- THE SPRINKLER FLOW SWITCH SHALL BE TESTED TO CONFIRM THAT WHEN THE INSPECTOR'S TEST VALVE IS ACTIVATED AN ALARM WILL SOUND NO MORE THAN 90 SECONDS AFTER INITIAL FLOW (WITNESSED BY THE PROJECT INSPECTOR).
- CONNECTIONS TO PROTECTED PREMISES AND SUPERVISING STATION FIRE ALARM SYSTEMS SHALL BE TESTED TO VERIFY PROPER IDENTIFICATION AND TRANSMISSION OF ALARMS FROM AUTOMATIC FIRE EXTINGUISHING SYSTEMS (WITNESSED BY PROJECT INSPECTOR).
- SIGNAGE SHALL BE PROVIDED AS REQUIRED, INCLUDING "RISER ROOM" IDENTIFICATION.
- THE MAIN FIRE ALARM PANEL VALVE MONITORING AND WATERFLOW ALARM AND TROUBLE SIGNALS SHALL BE DISTINCTLY DIFFERENT AND SHALL BE AUTOMATICALLY TRANSMITTED TO AN APPROVED CENTRAL STATION MONITORING COMPANY.
- A PERMANENT HYDRAULIC CALCULATIONS DESIGN DATA PLACARD SHALL BE ATTACHED TO EACH RISER.
- FLOW SWITCH SHALL BE CONNECTED TO A 10 INCH OUTSIDE ALARM BELL OR OTHER AUDIBLE ALARM DEVICES AT EACH RISER. APPROVED IDENTIFICATION SIGNS SHALL BE PROVIDED ON THE OUTSIDE BELL "SPRINKLER FIRE ALARM - WHEN ALARM SOUNDS CALL 911 / FIRE DEPARTMENT".
- A LABEL OF THE SELF-ADHESIVE TYPE SHALL BE PLACED ON THE FIRE DEPARTMENT CONNECTION OR ON THE RISER FOR FIRE SPRINKLER SYSTEM AND SHALL INCLUDE THE DATE OF INSTALLATION AND/OR DATE SERVICE WAS PERFORMED AND LICENSE NUMBER OF PERSON PERFORMING SERVICE WORK.
- SPRINKLER CONTRACTOR SHALL COMPLETE AND SIGN CONTRACTOR'S MATERIAL & TEST CERTIFICATE FOR THE ABOVEGROUND PIPING. THIS FORM SHALL BE GIVEN TO THE PROJECT INSPECTOR WHO WILL FORWARD TO DSA FOR FILING IN PROJECT RECORDS.
- PROVIDE WELDING CERTIFICATIONS WITH WELDER'S STAMP AT PIPE WELDS.

UNDERGROUND PIPING

- ALL FERROUS METAL PIPE SHALL BE LINED, AND STEEL PIPE SHALL BE COATED AND WRAPPED WITH JOINTS FIELD-COATED AND WRAPPED AFTER ASSEMBLY. FOR BURIED PIPE, GALVANIZING, INTERNALLY OR EXTERNALLY, DOES NOT MEET THE REQUIREMENTS OF THIS SECTION.
- ALL BOLTED JOINT ACCESSORIES SHALL BE CLEANED AND THOROUGHLY COATED WITH ASPHALT OR OTHER CORROSION-RETARDING MATERIAL AFTER INSTALLATION.
- AFTER INSTALLATION, RODS, NUTS, BOLTS, WASHERS, CLAMPS, AND OTHER RESTRAINING DEVICES, EXCEPT THRUST BLOCKS, SHALL BE CLEANED AND THOROUGHLY COATED WITH A BITUMINOUS OR OTHER ACCEPTABLE CORROSION RETARDING MATERIAL.
- THRUST BLOCKS SHALL BE A CONCRETE MIX NOT LEANER THAN ONE PART CEMENT, TWO AND ONE-HALF PARTS SAND, AND FIVE PARTS STONE. THRUST BLOCKS SHALL BE PLACED BETWEEN UNDISTURBED EARTH AND THE FITTING TO BE RESTRAINED, AND SHALL BE BEARING AS TO ENSURE ADEQUATE RESISTANCE TO THE THRUST TO BE ENCOUNTERED. IN GENERAL, THRUST BLOCKS SHALL BE SO PLACED THAT THE JOINTS WILL BE ACCESSIBLE FOR INSPECTION AND REPAIR.
- UNDERGROUND MAINS SHALL BE COMPLETELY FLUSHED TO REMOVE FOREIGN MATERIALS THAT MIGHT HAVE ENTERED THE MAIN DURING THE COURSE OF THE INSTALLATION TO PRODUCE A VELOCITY OF 10 FEET PER SECOND IN PIPES (WITNESSED BY THE INSPECTOR OF RECORD). LOCAL FIRE JURISDICTION SHALL BE NOTIFIED OF DATE AND TIME OF TESTING SO THEY MAY OBSERVE THE TESTING WHEN DESIRED.
- ALL NEW PRIVATE UNDERGROUND FIRE SERVICE MAINS SHALL BE TESTED HYDROSTATICALLY AT NOT LESS THAN 200-PSI PRESSURE FOR A MINIMUM OF TWO HOURS (WITNESSED BY THE INSPECTOR OF RECORD). LOCAL FIRE JURISDICTION SHALL BE NOTIFIED OF DATE AND TIME OF TESTING AND SHALL OBSERVE AND/OR ASSIST IOR WHEN POSSIBLE. THE AMOUNT OF LEAKAGE IN BURIED PIPING SHALL BE MEASURED AT THE SPECIFIED TEST PRESSURE BY PUMPING FROM A CALIBRATED CONTAINER. FOR NEW PIPE, THE AMOUNT OF LEAKAGE AT THE JOINTS SHALL NOT EXCEED TWO-QUARTS PER HOUR PER 100 GASKETS OR JOINTS IRRESPECTIVE OF PIPE DIAMETER. NO VISIBLE LEAKAGE SHALL BE ALLOWED IN ABOVEGROUND PIPING. HYDROSTATIC TESTS SHALL BE MADE BEFORE THE JOINTS ARE COVERED SO THAT ANY LEAKS MAY BE DETECTED.
- BEFORE ASKING FINAL APPROVAL OF AN INSTALLATION BY THE IOR, RESTRAINING DEVICES, EXCEPT THRUST BLOCKS, SHALL BE CLEANED AND TESTED AND MATERIAL AND TEST CERTIFICATE SUBMITTED TO THE IOR. A TYPICAL CERTIFICATE IS SHOWN IN NFPA 24. THIS FORM SHALL BE GIVEN TO THE IOR.
- THE DEPTH OF COVERAGE OVER WATER PIPE SHALL NOT BE LESS THAN 2.5 FEET AND SHALL BE BURIED A MINIMUM OF 3 FEET UNDER DRIVEWAYS.
- THE METHOD USED FOR UNDERGROUND FIRELINES WHEN ENTERING BUILDINGS UNDER CONCRETE FOOTINGS SHALL HAVE THE STRUCTURAL ENGINEER OF RECORD APPROVAL. NFPA 24 REQUIRES A CLEARANCE BY A PIPE SLEEVE WITH A NOMINAL DIAMETER 4 INCH LARGER THAN THE NOMINAL DIAMETERS OF THE SUPPLY PIPING 4 INCH NOMINAL AND LARGER. (IE: FIRELINES NOMINAL 6 INCH REQUIRES IO INCH SLEEVE).
- PVC PIPING MAY BE INSTALLED TO 5 FEET OUTSIDE THE FOUNDATION OF ANY BUILDING OR STRUCTURE OR PARTS THEREOF. IT SHALL BE BURIED IN THE GROUND FOR ITS ENTIRE LENGTH. IT SHALL NOT BE INSTALLED WITHIN OR UNDER ANY BUILDING OR STRUCTURE. DUCTILE PIPE SHALL BE INSTALLED WITHIN 5 FEET OF BUILDING.

2/24/2022 10:51:45 AM

GENERAL NOTES:

1. IN GENERAL, WORK SHALL INCLUDE, BUT NOT BE LIMITED TO:
   - A. THE DETAILED DESIGN, COORDINATION, FABRICATION, PROCUREMENT, AND INSTALLATION OF THE COMPLETE FIRE PROTECTION SYSTEMS AS GENERALLY INDICATED ON THE CONTRACT DRAWINGS.
   - B. INSTALLATION OF FLEXIBLE CONNECTIONS AND SEISMIC BRACING.
   - C. ALL PENETRATIONS THROUGH WALLS, FLOORS AND CEILINGS NECESSARY FOR THE INSTALLATION OF THE FIRE PROTECTION SYSTEMS INCLUDING THE INSTALLATION OF APPROVED FIRESTOP ASSEMBLIES NECESSARY TO MAINTAIN THE DESIGNED FIRE RESISTANCE RATING OF THE WALL, CEILING, OR FLOOR ASSEMBLY.
   - D. SYSTEMS AND DEVICE TESTING.
   - E. ALL NECESSARY PERMITS AND FEES.
2. THE FIRE SPRINKLER SYSTEMS PROTECTING THE BUILDINGS SHALL BE HYDRAULICALLY DESIGNED WET PIPE SYSTEMS FOR GENERALLY ORDINARY HAZARD GROUP 1 OCCUPANCIES (EXCEPTION: RESTROOMS, OFFICES, LIBRARY, AND SIMILAR SPACES SHALL BE DESIGNED FOR A LIGHT HAZARD OCCUPANCY). CALCULATIONS SHALL BE IN ACCORDANCE WITH NFPA 13 - 2016 REQUIREMENTS. CALCULATIONS SHALL INCLUDE REQUIRED HOSE STREAM ALLOWANCES.
3. HYDRAULIC CALCULATIONS SHALL INCLUDE A MINIMUM 10% "SAFETY FACTOR" (I.E. REQUIRED HYDRAULIC DEMAND SHALLNOT EXCEED 90% OF THE AVAILABLE WATER SUPPLY).
4. PIPE SIZES INDICATED ON THE DRAWINGS SHALL NOT BE REDUCED.
5. ABOVE-CEILING (INTERSTITIAL) SPACES ARE COMBUSTIBLE. FIRE SPRINKLER PROTECTION IS REQUIRED (A LIGHT HAZARD OCCUPANCY).
6. THE CONTRACTOR SHALL BE RESPONSIBLE FOR ESTABLISHING AND IMPLEMENTING ALL SAFETY PROGRAMS AND PROCEDURES FOR THIS PROJECT AND SHALL COMPLY WITH ALL FEDERAL, STATE AND LOCAL SAFETY AND HEALTH REGULATIONS.
7. COOPERATION WITH OTHER TRADES: SCHEDULE WORK AND COOPERATE WITH OTHER DIVISIONS TO AVOID DELAYS, INTERFERENCES AND UNNECESSARY WORK, CONFORMING TO CONSTRUCTION SCHEDULE, MAKING INSTALLATION WHEN AND WHERE REQUIRED. A SPECIAL EFFORT SHALL BE MADE TO COORDINATE WITH THE MECHANICAL CONTRACTOR SO AS NOT TO BLOCK INSTALLATION OF THE MECHANICAL SYSTEMS. THE CLEARANCES ABOVE CEILINGS AND IN MECHANICAL ROOMS ON THIS PROJECT ARE LIMITED AND THE DUCTWORK AND MECHANICAL PIPING ARE TO HAVE THE HIGHEST PRIORITY. ALL FIRE SPRINKLER WORK IS TO BE COORDINATED WITH THE MECHANICAL CONTRACTOR SUCH THAT THE DUCTWORK AND MECHANICAL PIPING CAN BE INSTALLED IN THE LOCATIONS SHOWN ON THE MECHANICAL DRAWINGS. IF INSTALLED WORK IS LATER FOUND TO INTERFERE WITH WORK OF OTHER DIVISIONS, MAKE ALL NECESSARY CHANGES AT CONTRACTOR'S EXPENSE.
8. THE CONTRACT DRAWINGS ARE DIAGRAMMATIC ONLY. PIPE LENGTHS SHOWN ARE APPROXIMATE CENTER TO CENTER LENGTHS BETWEEN FITTINGS. CONTRACTOR SHALL DETERMINE THE ACTUAL MEASUREMENTS AND MAKE ANY AND ALL SUCH LENGTH AND OFFSET ADJUSTMENTS AS MAY BE NECESSARY TO COMPLETE THE INSTALLATION AT NO CHANGE IN THE CONTRACT PRICE. THE DRAWINGS ARE NOT INTENDED TO RELIEVE THE CONTRACTOR OF ANY RESPONSIBILITY FOR AVOIDING CONFLICTS OR OBSTRUCTIONS, OR FOR INSTALLING THE NUMBER OF SPRINKLERS AND SUPPLY PIPING AS REQUIRED TO PROVIDE COMPLETE PROTECTION OF THE DESIGNATED AREAS IN ACCORDANCE WITH THE REQUIREMENTS OF THE REFERENCED STANDARDS AND THESE SPECIFICATIONS. WRITTEN APPROVAL SHALL BE OBTAINED FROM THE OWNER'S REPRESENTATIVE PRIOR TO MAKING ANY MAJOR DEVIATIONS FROM THE ARRANGEMENT AND LAYOUT SHOWN ON THE DRAWINGS.
9. ALL EQUIPMENT SHALL BE NEW, AND APPROVED AND/OR LISTED BY UNDERWRITERS' LABORATORIES OR FACTORY MUTUAL.
10. SYSTEM, EQUIPMENT, INSTALLATION, AND MATERIALS AND METHODS USED SHALL COMPLY WITH THE FOLLOWING:
    - A. THE REQUIREMENTS OF THE CALIFORNIA DIVISION OF THE STATE ARCHITECT (DSA).
    - B. APPLICABLE REQUIREMENTS OF THE CITY OF OAKLAND, CALIFORNIA.
    - C. NATIONAL FIRE PROTECTION ASSOCIATION (NFPA) 13 STANDARD FOR THE INSTALLATION OF SPRINKLER SYSTEMS 2016 EDITION (INCLUDING CALIFORNIA AMENDMENTS).
    - D. CALIFORNIA BUILDING AND FIRE CODES, 2019 EDITION.
    - E. MANUFACTURER'S RECOMMENDATIONS AND GUIDELINES.
11. ALL PIPING SHALL BE SCHEDULE 40 BLACK STEEL PIPE. PIPE SHALL BE MANUFACTURED IN ACCORDANCE WITH SPECIFICATIONS ASTM A 135 AND A 53.
12. THIN-WALLED PIPING MATERIALS (SUCH AS SCHEDULE 5, 7, 10 AND THREADABLE THINWALLS, ETC.) WILL NOT BE PERMITTED.
13. SPRINKLER PIPING, FITTINGS, HANGERS AND APPURTENANCES EXPOSED TO WEATHER, USED IN A CORROSIVE ATMOSPHERE, OR AS NOTED ON DRAWINGS SHALL BE GALVANIZED.
    - A. ALL WET-PIPE (INTERIOR) FIRE SPRINKLER PIPING, FITTINGS, HANGERS, AND APPURTENANCES FOR THE GREENHOUSE STRUCTURES SHALL BE GALVANIZED.
    - B. ALL DELUGE (EXPOSURE PROTECTION SYSTEM) PIPING, FITTINGS, HANGERS, AND APPURTENANCES FOR THE GREENHOUSE STRUCTURES SHALL BE GALVANIZED.
    - C. ALL WET-PIPE FIRE SPRINKLER PIPING, FITTINGS, HANGERS, AND APPURTENANCES FOR THE SOIL BIN STRUCTURE SHALL BE GALVANIZED
    - D. ALL FIRE PROTECTION DRAIN AND DRAIN RISER PIPING AND FITTINGS SHALL BE GALVANIZED, AND INSTALLED PITCHED TO DRAIN (MINIMUM ½" PER 10 FOOT LENGTH)
14. ALL FIRE PROTECTION SYSTEM PIPING SHALL BE PROVIDED WITH FACTORY-APPLIED ANTIMICROBIAL COATINGS TO INHIBIT MICROBIOLOGICALLY-INFLUENCED CORROSION (MIC).
15. THREADED FITTINGS SHALL BE CLASS 125 CAST IRON, BLACK, AND IN ACCORDANCE WITH ANSI B 16.4, OR DUCTILE OR MALLEABLE IRON, 150 LB. CLASS, BLACK, AND IN ACCORDANCE WITH ANSI B 16.3. SCREWED JOINTS SHALL BE MADE UP WITH APPROVED TEFLON JOINT COMPOUND OR TAPE.
16. GROOVED COUPLINGS AND MECHANICAL FITTINGS SHALL BE UL LISTED OR FM APPROVED FOR FIRE PROTECTION SERVICE. PLAIN-END TYPE PIPE FITTINGS AND COUPLINGS SHALL NOT BE USED.
    - A. FLEXIBLE COUPLINGS SHALL BE USED TO CONNECT PIPE TO GROOVED ELBOW AND TEE FITTINGS.
    - B. RIGID COUPLINGS SHALL BE USED TO CONNECT STRAIGHT RUNS OF PIPE, ONLY.
    - C. FLEXIBLE COUPLINGS ARE PERMITTED TO CONNECT STRAIGHT RUNS OF PIPE WHERE THE PIPE PENETRATES A WALL, FLOOR, OR BEAM WHERE SUFFICIENT ANNULAR CLEARANCE IS NOT PROVIDED.
    - D. FLEXIBLE AND RIGID COUPLINGS SHALL BE OF THE SAME MANUFACTURER AS THE FITTINGS TO WHICH THEY ARE CONNECTED.
17. INSTALL HANGERS, FLEXIBLE CONNECTIONS, SWING JOINTS, AND SEISMIC BRACING IN ACCORDANCE WITH NFPA 13 (INCLUDING ANNEX).
18. SYSTEM PIPING SHALL BE INSTALLED SUCH THAT NO JOINTS, FITTINGS OR DEVICES OCCUR DIRECTLY OVER ELECTRICAL EQUIPMENT.
19. INSTALL PERMANENT VALVE IDENTIFICATION SIGNS AND HYDRAULIC NAMEPLATE DATA AS REQUIRED BY NFPA 13. SIGNS SHALL BE ATTACHED BY CHAIN OR OTHER DURABLE MEANS.
20. SUITABLE MEANS SHALL BE PROVIDED AT EACH HOLE OR PENETRATION TO MAINTAIN THE DESIGNED FIRE RESISTANCE RATING OF THE WALL, CEILING OR FLOOR ASSEMBLY.
21. INSTALL SPLIT WALL PLATES OR ESCUTCHEONS WHERE EXPOSED PIPING PASSES THROUGH A FINISHED FLOOR, WALL OR CEILING. THEY SHALL FIT SNUGLY AROUND PIPING. THE FINISH OF ESCUTCHEONS OR WALL PLATES SHALL MATCH THE COLOR OF ADJACENT WALLS, CEILINGS OR FLOORS.

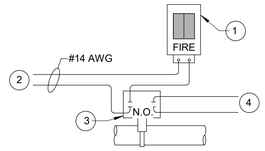

1. 120 VAC WEATHERPROOF EXTERIOR SPRINKLER SELECT-A-STROBE/HORN/SIGN COMBINATION, POTTER "SASH-120" OR APPROVED EQUAL. SEE PLANS FOR LOCATION.
2. 120 VAC FROM DEDICATED CIRCUIT BREAKER WITH LOCK. CIRCUIT SHALL BE IDENTIFIED AS "FIRE SPRINKLER ALARM".
3. RISER-MOUNTED WATERFLOW SWITCH WITH (2) SPDT CONTACTS.
4. TO/FROM FIRE ALARM CONTROL PANEL OR MONITORING SERVICE.

1 WIRING SCHEMATIC
NO SCALE

Sprinkler Count

SYMBOL	COUNT ±	LOCATION
○	18	EAST GREENHOUSE
⊠	12	EAST GREENHOUSE
◓	36	EAST GREENHOUSE
▷	5	EAST GROUP
◉	21	EAST GROUP
○ ⊛	143	EAST GROUP
▷	4	HEAD HOUSE
◉	1	HEAD HOUSE
○ ⊛	19	HEAD HOUSE
○	20	WEST GREENHOUSE
⊠	16	WEST GREENHOUSE
◓	32	WEST GREENHOUSE
▷	10	WEST GROUP
◉	8	WEST GROUP
○ ⊛	58	WEST GROUP
TOTAL COUNT: 403		

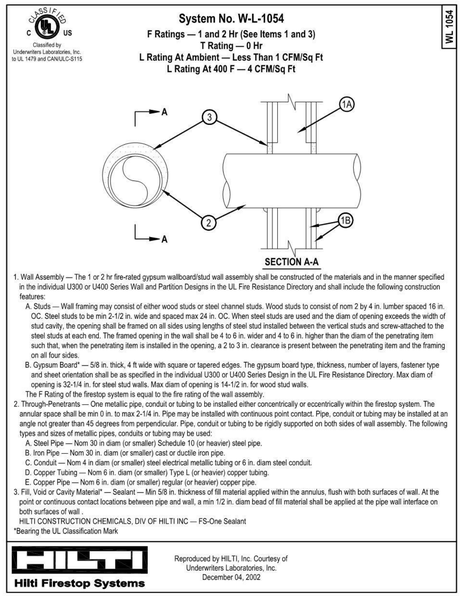

2 TYPICAL FIRESTOP DETAIL
NO SCALE

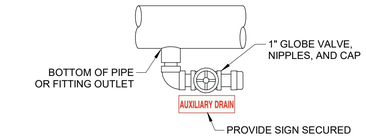

3 AUXILIARY DRAIN
NO SCALE

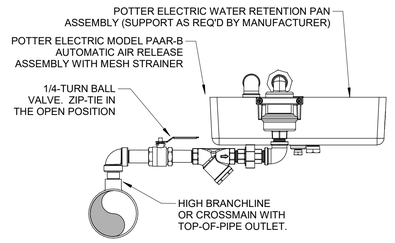

4 AUTOMATIC AIR RELEASE (WITH PAN)
NO SCALE

LEGEND:

- ◉ 1/2" QUICK RESPONSE, RECESSED PENDENT SPRINKLER, 200°F, k=5.6, WHITE POLYESTER FINISH, VIKING MICROFAST VK302 OR EQUAL, WITH MATCHING WHITE RECESSED ESCUTCHEON (THREAD-ON TYPE), VIKING MODEL E-2 OR EQUAL
- ⊠ 1/2" QUICK RESPONSE, PENDENT SPRINKLER, 200°F, k=5.6, WHITE POLYESTER FINISH, VIKING MICROFAST VK302 OR EQUAL, WITH WHITE #401 2-PIECE PENDENT ESCUTCHEON
- ◎ ○ 1/2" QUICK RESPONSE, UPRIGHT SPRINKLER, 200°F, k=5.6, CHROME FINISH, VIKING MICROFAST VK300 OR EQUAL (ON EXPOSED BRANCH PIPING OR RISER NIPPLE)
- ⊠ 17/32" UPRIGHT SPRINKLER (DELUGE - OPERATING ELEMENTS REMOVED), k=8.0, BRASS FINISH, VIKING MICROFAST VK350 OR EQUAL (ON EXPOSED RISER NIPPLE)
- ▷ 1/2" QUICK RESPONSE, HORIZONTAL SIDEWALL SPRINKLER, 200°F, K=5.6, VIKING VK350 OR EQUAL, CHROME FINISH. PROVIDE CHROME RECESSED ESCUTCHEON WHEN INSTALLED THROUGH A WALL
- ◓ VIKING MODEL C-1 EXPOSURE PROTECTION NOZZLE, 1/2" NPT, K=3.0. SEE PLAN FOR PROTECTED WALL SURFACE AREA. LOCATE AT TOP OF WALL AS GENERALLY INDICATED WITH NOZZLE ORIENTED PARALLEL TO ROOF
- 1 1/2 / 10-0 FIRE PROTECTION PIPING, SIZE AND APPROXIMATE LENGTH AS INDICATED. LOCATION APPROXIMATE.
- RISE OR DROP IN PIPING ELEVATION
- PIPE SUPPORT - SEE TYPICAL DETAILS
- R BRANCHLINE SEISMIC RESTRAINT, SEE DETAIL 9 / FP0.02
- GREENHOUSE RIDGE PIPE SUPPORT, SEE DETAIL 4 / FP0.05
- BREEZEWAY PIPE SUPPORT AND LATERAL BRACE, SEE DETAIL 8 / FP0.02
- SEISMIC BRACE ASSEMBLY, SEE TYPICAL DETAILS ON SHEET FP0.02
- FIRE PROTECTION RISER
- ## HYDRAULIC CALCULATION NODE
- METRAFLEX FIRELOOP SEISMIC SEPARATION ASSEMBLY, SEE DETAIL 9 / FP0.04

Hydrant Flow Test Report

Test Date 8/18/2020 **Test Time**

Location
Merritt Community College
Horticulture
12500 Campus Dr.
Oakland, CA 94619

Tested by
Matt Deadrich
Marquee Fire Protection
710 West Stadium Lane
Sacramento, CA 95843
916-641-7997

Notes
Test Hydrant - Northeast Corner of Tennis Courts
Flow Hydrant - Front of Building H

Read Hydrant
114 psi **static pressure**
70 psi **residual pressure**
886.9 ft **hydrant elevation**

Flow Hydrant(s)

Outlet	Elev	Size	C	Pitot Pressure	Flow
#1	895.33	4.5	.9	17	2242 gpm

Flow Graph

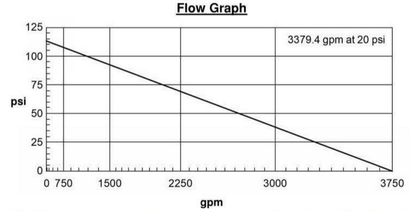

WATER SUPPLY TEST DATA SUMMARY:
- STATIC: 114 PSI
- RESIDUAL: 70 PSI
- FLOW: 2,242 GPM
- DATE: 08/18/2020

NOTE: HYDRAULIC CALCULATIONS SHALL INCLUDE A MINIMUM 10% "SAFETY FACTOR" (I.E. REQUIRED HYDRAULIC DEMAND SHALL NOT EXCEED 90% OF THE AVAILABLE WATER SUPPLY).

5 WATER SUPPLY TEST DATA
-

APPROVALS

IDENTIFICATION STAMP
DIV. OF THE STATE ARCHITECT
APP: 01-119409 INC:
REVIEWED FOR
SS ☑ FLS ☑ ACS ☑
DATE: 03/14/2022

NOLL & TAM ARCHITECTS
729 Heinz Avenue
Berkeley, CA 94710
tel 510.542.2200
fax 510.542.2201

SEAL

REGISTERED PROFESSIONAL ENGINEER
BRET B. TRESPALIS
No. 1165
Exp. 09/30/22
FIRE PROTECTION
STATE OF CALIFORNIA

HYT Corporation
3498 Clayton Road, Suite 101
Concord, CA 94519

PROJECT TITLE

Peralta Community College District
MERRITT COLLEGE NEW LANDSCAPE HORTICULTURE COMPLEX

12500 Campus Drive
Oakland, CA 94619

BID SET

ISSUE DATE 03/03/2022
N&T JOB NUMBER 22003

REVISIONS

	DATE	DESCRIPTION

DRAWN BY HYT CHECKED BY

SHEET TITLE

FIRE SPRINKLERS GENERAL NOTES, LEGEND, AND DETAILS

SHEET NUMBER

FP0.01

ASCE 7 Hazards Report

Address: No Address at This Location

Standard: ASCE/SEI 7-16
Risk Category: III
Soil Class: D - Default (see Section 11.4.3)

Elevation: 905.49 ft (NAVD 88)
Latitude: 37.793353
Longitude: -122.166813

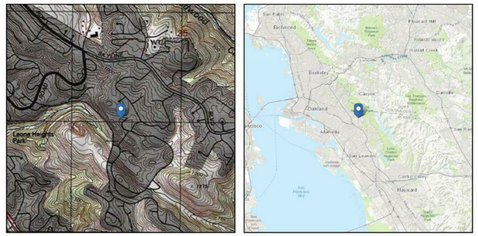

Seismic

Site Soil Class: D - Default (see Section 11.4.3)
Results:

S_S :	2.482	S_{D1} :	N/A
S_1 :	0.949	T_L :	8
F_a :	1.2	PGA :	1.038
F_v :	N/A	PGA_M :	1.246
S_{MS} :	2.978	F_{PGA} :	1.2
S_{M1} :	N/A	I_e :	1.25
S_{DS} :	1.985	C_v :	1.5

Ground motion hazard analysis may be required. See ASCE/SEI 7-16 Section 11.4.8.
Data Accessed: Tue Sep 08 2020
Date Source: USGS Seismic Design Maps

- IN ACCORDANCE WITH NFPA 13 - 2016 SECTION 9.3.5.9.3, THE HORIZONTAL FORCE ACTING ON THE SEISMIC BRACE SHALL BE: $F_{PW} = C_P * W_P$, WHERE C_P IS THE SEISMIC COEFFICIENT SELECTED FROM TABLE 9.3.5.9.3 OF NFPA 13 - 2016 UTILIZING THE SHORT PERIOD RESPONSE PARAMETER S_S OBTAINED FROM THE AUTHORITY HAVING JURISDICTION OR FROM SEISMIC HAZARD MAPS.
- THIS PROJECT IS LOCATED AT:
  - LATITUDE: 37.793353
  - LONGITUDE: -122.166813
- UTILIZING THE ABOVE LATITUDE/LONGITUDE DATA, AND THE ASCE 7 HAZARD TOOL OPERATED BY THE AMERICAN SOCIETY OF CIVIL ENGINEERS (ASCE.ORG), THE RESULTANT S_S FOR THIS LOCATION IS: **S_S = 2.482**
- PER NFPA 13 - 2016 TABLE 9.3.5.9.3, THE RESULTANT **C_P = 1.161**
- PER NFPA 13 (2016) SECTION 9.3.5.10, SEISMIC BRACE ASSEMBLIES WILL BE REQUIRED TO RESIST THE NET VERTICAL REACTION SINCE Cp IS GREATER THAN 0.5.

1 SEISMIC LOAD FACTOR
-

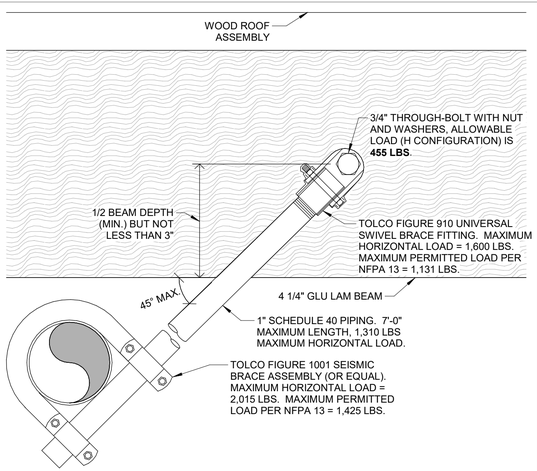

2 LATERAL BRACE TO GLU-LAM
NO SCALE

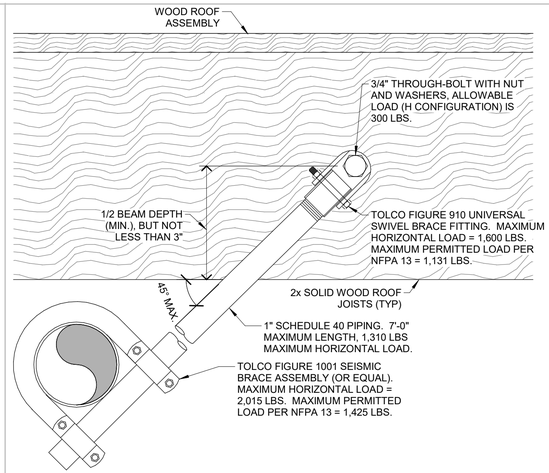

3 LATERAL BRACE TO 2x JOIST
NO SCALE

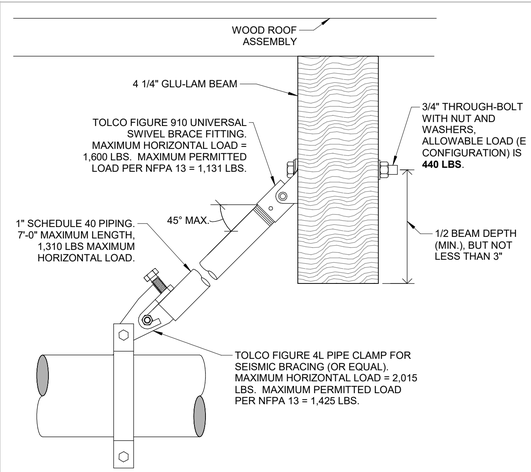

4 LONGITUDINAL BRACE TO GLU-LAM
NO SCALE

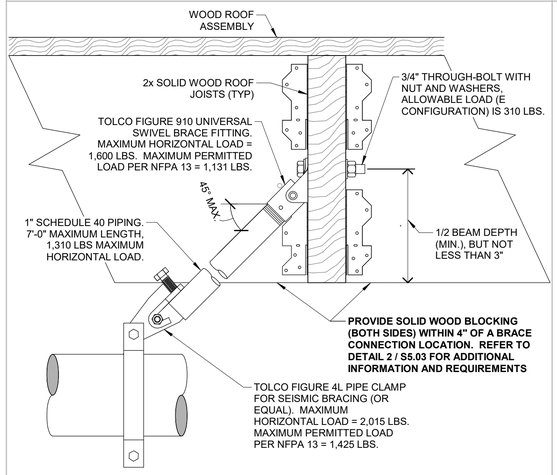

5 LONGITUDINAL BRACE TO 2x JOIST
NO SCALE

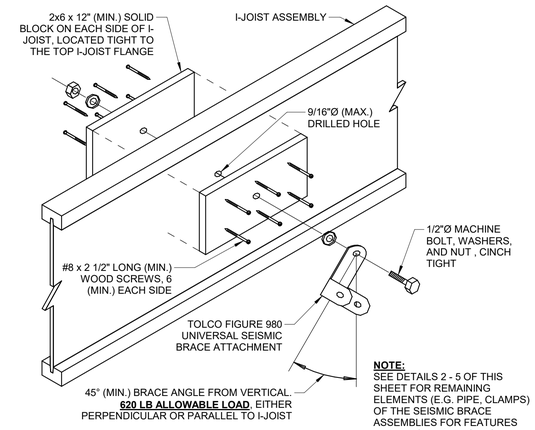

NOTE:
SEE DETAILS 2 - 5 OF THIS SHEET FOR REMAINING ELEMENTS (E.G. PIPE, CLAMPS) OF THE SEISMIC BRACE ASSEMBLIES FOR FEATURES AND ALLOWABLE LOADS.

6 I-JOIST SEISMIC ATTACHMENT
NO SCALE

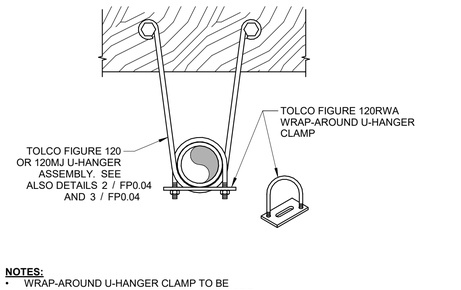

NOTES:
- WRAP-AROUND U-HANGER CLAMP TO BE PROVIDED AT ALL U-HANGER PIPE SUPPORTS WITHIN 24 INCHES OF A SEISMIC BRACE ASSEMBLY IN ORDER TO RESIST NET VERTICAL SEISMIC REACTION FORCES IN ACCORDANCE WITH NFPA 13 (2016) SECTION 9.3.5.10.
- SEE ASSOCIATED PIPE HANGER DETAILS FOR ADDITIONAL REQUIREMENTS.

7 SEISMIC BRACE VERTICAL RESTRAINT
NO SCALE

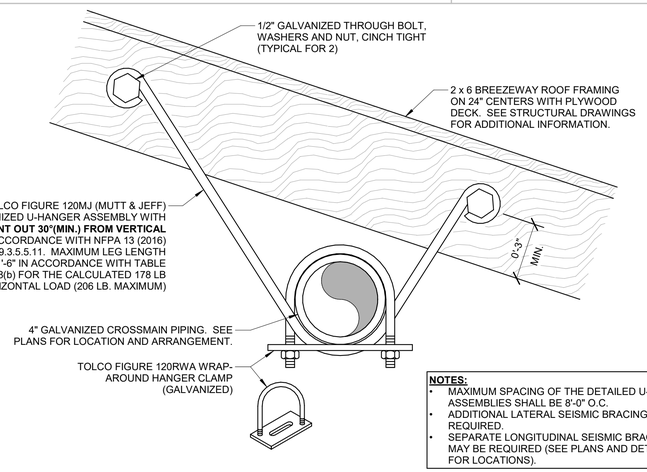

NOTES:
- MAXIMUM SPACING OF THE DETAILED U-HANGER ASSEMBLIES SHALL BE 8'-0" O.C.
- ADDITIONAL LATERAL SEISMIC BRACING IS NOT REQUIRED.
- SEPARATE LONGITUDINAL SEISMIC BRACING MAY BE REQUIRED (SEE PLANS AND DETAILS FOR LOCATIONS).

8 BREEZEWAY WRAP-AROUND U-HANGER AND SEISMIC BRACE
3" = 1'-0"

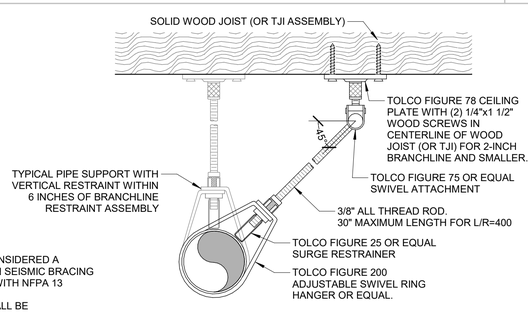

SEISMIC RESTRAINT NOTES:

1. SEISMIC RESTRAINT OF BRANCHLINES IS CONSIDERED A LESSER DEGREE OF RESISTING LOADS THAN SEISMIC BRACING AND SHALL BE PROVIDED IN ACCORDANCE WITH NFPA 13 SECTION 9.3.6.
2. THE END SPRINKLER ON A BRANCH LINE SHALL BE RESTRAINED.
3. DROPS AND ARMOVERS SHALL NOT REQUIRE RESTRAINT.
4. BRANCHLINES SUPPORTED BY SHORT HANGERS (6" OR LESS FROM THE ATTACHMENT POINT TO THE TOP OF PIPE) NEED NOT BE RESTRAINED.
5. BRANCH LINES SHALL BE LATERALLY RESTRAINED AT INTERVALS NOT EXCEEDING THOSE SPECIFIED BELOW:
   - MAXIMUM SPACING OF RESTRAINTS SHALL BE 43 FEET FOR CP < 0.50
   - MAXIMUM SPACING OF RESTRAINTS SHALL BE 39 FEET FOR 0.50 < CP < 0.71
   - **MAXIMUM SPACING OF RESTRAINTS SHALL BE 26 FEET FOR 0.71 < C_P < 1.40**
   - MAXIMUM SPACING OF RESTRAINTS SHALL BE 22 FEET FOR CP > 1.40

9 SEISMIC RESTRAINTS
-

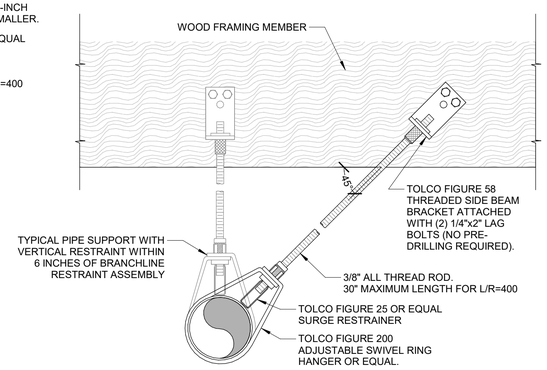

2/24/2022 10:51:46 AM

APPROVALS

IDENTIFICATION STAMP
DIV. OF THE STATE ARCHITECT
APP: 01-119409 INC:
REVIEWED FOR
SS ☑ FLS ☑ ACS ☑
DATE: 03/14/2022

NOLL & TAM ARCHITECTS
729 Heinz Avenue
Berkeley, CA 94710
tel 510.542.2200
fax 510.542.2201

SEAL

REGISTERED PROFESSIONAL ENGINEER BRET B. TRESIDDER No. 1165 Exp. 09/30/22 FIRE PROTECTION STATE OF CALIFORNIA

HYT Corporation
3498 Clayton Road, Suite 101
Concord, CA 94519

PROJECT TITLE

Peralta Community College District
MERRITT COLLEGE NEW LANDSCAPE HORTICULTURE COMPLEX

12500 Campus Drive
Oakland, CA 94619

BID SET

ISSUE DATE	03/03/2022
N&T JOB NUMBER	22003

REVISIONS

	DATE	DESCRIPTION

DRAWN BY HYT | CHECKED BY

SHEET TITLE
FIRE SPRINKLERS SEISMIC BRACING AND RESTRAINT DETAILS

SHEET NUMBER
FP0.02

TOLBrace™ Seismic Bracing Calculations

Project Address: Merritt Landscape Horticulture Comp
12500 Campus Drive
Oakland, California
Job # N&T 22003

Contractor: HYT Corporation
Address: 3498 Clayton Road, #101
Concord, CA 94519
Phone: (925) 681-2731
Licence: FPE #1165

Calculations based on 2016 NFPA Pamphlet #13

Brace Information

Maximum Brace Length	7' 0" (2.134 m)
Diameter of Brace	1"
Type of Brace	Sch.40
Angle of Brace	45° Min.
Least Rad. of Gyration	0.42" (11 mm)
L/R Value	200
Max Horizontal Load	1310 lbs (594 kg)

Fastener Information

Orientation to Connecting Surface	NFPA Type H
Fastener	
Type	I-Joist
Diameter	1/2"
Length	4 1/2"
Maximum Load	620 lbs (281 kg)
Prying Factor	

TOLCO™ Brace Components

TOLCO™ Component	Listed Load	Adjusted Load
Fig. 4L Clamp	2015 lbs (914 kg)	1425 lbs (646 kg)
Fig.910 Threaded Swivel	1600 lbs (726 kg)	1131 lbs (513 kg)

See Fastener Information

*Calculation Based on CONCENTRIC Loading
*Please Note: These calculations are for TOLCO™ components only. Use of any other components voids these calculations and the listing of the assembly.

Seismic Brace Assembly Detail

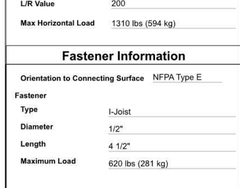

Brace Identification on Plans 2 1/2" Longitudinal to I-Joist
Brace Type Lateral [ ] Longitudinal [X] 4-Way [ ]

Sprinkler System Load Calculation (Fpw = CpWp)

Cp = 1.161

Diameter	Type	Length	Total Length	Weight Per Unit Length	Total Weight
2.5" (65 mm)	Sch. 40	58 ft (17.7 m)	58 ft (17.7 m)	7.89 lb/ft (11.74 kg/m)	458 lbs (208 kg)

NOTE:
REFER TO **DETAIL 6 / FP0.02** FOR ADDITIONAL INFORMATION AND REQUIREMENTS.

Subtotal Weight	458 lbs (208 kg)
Wp (incl. 15%)	527 lbs (239 kg)
Total (Fpw)	611 lbs (277 kg)
Maximum Fpw per 9.3.5.5.2 (if applicable)	N/A

Main Size	Type/Sch.	Spacing (ft)
2.5"	Sch. 40	58

(TOLBrace™ Version 8) Use of TOLBrace™ is subject to terms and conditions per the end user license agreement

TOLBrace™ Seismic Bracing Calculations

Project Address: Merritt Landscape Horticulture Comp
12500 Campus Drive
Oakland, California
Job # N&T 22003

Contractor: HYT Corporation
Address: 3498 Clayton Road, #101
Concord, CA 94519
Phone: (925) 681-2731
Licence: FPE #1165

Calculations based on 2016 NFPA Pamphlet #13

Brace Information

Maximum Brace Length	7' 0" (2.134 m)
Diameter of Brace	1"
Type of Brace	Sch.40
Angle of Brace	45° Min.
Least Rad. of Gyration	0.42" (11 mm)
L/R Value	200
Max Horizontal Load	1310 lbs (594 kg)

Fastener Information

Orientation to Connecting Surface	NFPA Type E
Fastener	
Type	I-Joist
Diameter	1/2"
Length	4 1/2"
Maximum Load	620 lbs (281 kg)
Prying Factor	

TOLCO™ Brace Components

TOLCO™ Component	Listed Load	Adjusted Load
Fig. 1001 Clamp	2015 lbs (914 kg)	1425 lbs (646 kg)
Fig.910 Threaded Swivel	1600 lbs (726 kg)	1131 lbs (513 kg)

See Fastener Information

*Calculation Based on CONCENTRIC Loading
*Please Note: These calculations are for TOLCO™ components only. Use of any other components voids these calculations and the listing of the assembly.

Seismic Brace Assembly Detail

Brace Identification on Plans Typical 2 1/2" Lateral to I-Joist
Brace Type Lateral [X] Longitudinal [ ] 4-Way [ ]

Sprinkler System Load Calculation (Fpw = CpWp)

Cp = 1.161

Diameter	Type	Length	Total Length	Weight Per Unit Length	Total Weight
2.5" (65 mm)	Sch. 40	25 ft (7.6 m)	25 ft (7.6 m)	7.89 lb/ft (11.74 kg/m)	197 lbs (89 kg)
1.25" (32 mm)	Sch. 40	36 ft (11 m)	36 ft (11 m)	2.93 lb/ft (4.36 kg/m)	105 lbs (48 kg)
1" (25 mm)	Sch. 40	32 ft (9.8 m)	32 ft (9.8 m)	2.05 lb/ft (3.05 kg/m)	66 lbs (30 kg)

NOTE:
REFER TO **DETAIL 6 / FP0.02** FOR ADDITIONAL INFORMATION AND REQUIREMENTS.

Subtotal Weight	368 lbs (167 kg)
Wp (incl. 15%)	423 lbs (192 kg)
Total (Fpw)	491 lbs (223 kg)
Maximum Fpw per 9.3.5.5.2 (if applicable)	787 lb (356 kg)

Main Size	Type/Sch.	Spacing (ft)
2.5"	Sch. 40	25

(TOLBrace™ Version 8) Use of TOLBrace™ is subject to terms and conditions per the end user license agreement

TOLBrace™ Seismic Bracing Calculations

Project Address: Merritt Landscape Horticulture Comp
12500 Campus Drive
Oakland, California
Job # N&T 22003

Contractor: HYT Corporation
Address: 3498 Clayton Road, #101
Concord, CA 94519
Phone: (925) 681-2731
Licence: FPE #1165

Calculations based on 2016 NFPA Pamphlet #13

Brace Information

Maximum Brace Length	7' 0" (2.134 m)
Diameter of Brace	1"
Type of Brace	Sch.40
Angle of Brace	45° Min.
Least Rad. of Gyration	0.42" (11 mm)
L/R Value	200
Max Horizontal Load	1310 lbs (594 kg)

Fastener Information

Orientation to Connecting Surface	NFPA Type E
Fastener	
Type	Through-Bolt
Diameter	3/4in.
Length	1-1/2in.
Maximum Load	310 lbs (141 kg)
Prying Factor	N/A

TOLCO™ Brace Components

TOLCO™ Component	Listed Load	Adjusted Load
Fig. 4L Clamp	2015 lbs (914 kg)	1425 lbs (646 kg)
Fig.910 Threaded Swivel	1600 lbs (726 kg)	1131 lbs (513 kg)

See Fastener Information

*Calculation Based on CONCENTRIC Loading
*Please Note: These calculations are for TOLCO™ components only. Use of any other components voids these calculations and the listing of the assembly.

Seismic Brace Assembly Detail

Brace Identification on Plans Breezeway Longitudinal to 2x Jois
Brace Type Lateral [ ] Longitudinal [X] 4-Way [ ]

Sprinkler System Load Calculation (Fpw = CpWp)

Cp = 1.161

Diameter	Type	Length	Total Length	Weight Per Unit Length	Total Weight
4" (100 mm)	Sch. 40	14 ft (4.3 m)	14 ft (4.3 m)	16.4 lb/ft (24.41 kg/m)	230 lbs (104 kg)

NOTE:
REFER TO **DETAIL 5 / FP0.02** FOR ADDITIONAL INFORMATION AND REQUIREMENTS.

Subtotal Weight	230 lbs (104 kg)
Wp (incl. 15%)	264 lbs (120 kg)
Total (Fpw)	307 lbs (139 kg)
Maximum Fpw per 9.3.5.5.2 (if applicable)	N/A

Main Size	Type/Sch.	Spacing (ft)
4"	Sch. 40	14

(TOLBrace™ Version 8) Use of TOLBrace™ is subject to terms and conditions per the end user license agreement

TOLBrace™ Seismic Bracing Calculations

Project Address: Merritt Landscape Horticulture Comp
12500 Campus Drive
Oakland, California
Job # N&T 22003

Contractor: HYT Corporation
Address: 3498 Clayton Road, #101
Concord, CA 94519
Phone: (925) 681-2731
Licence: FPE #1165

Calculations based on 2016 NFPA Pamphlet #13

Brace Information

Maximum Brace Length	7' 0" (2.134 m)
Diameter of Brace	1"
Type of Brace	Sch.40
Angle of Brace	45° Min.
Least Rad. of Gyration	0.42" (11 mm)
L/R Value	200
Max Horizontal Load	1310 lbs (594 kg)

Fastener Information

Orientation to Connecting Surface	NFPA Type H
Fastener	
Type	I-Joist
Diameter	1/2"
Length	4 1/2"
Maximum Load	620 lbs (281 kg)
Prying Factor	

TOLCO™ Brace Components

TOLCO™ Component	Listed Load	Adjusted Load
Fig. 4L Clamp	2015 lbs (914 kg)	1425 lbs (646 kg)
Fig.910 Threaded Swivel	1600 lbs (726 kg)	1131 lbs (513 kg)

See Fastener Information

*Calculation Based on CONCENTRIC Loading
*Please Note: These calculations are for TOLCO™ components only. Use of any other components voids these calculations and the listing of the assembly.

Seismic Brace Assembly Detail

Brace Identification on Plans 2 1/2" Longitudinal to I-Joist
Brace Type Lateral [ ] Longitudinal [X] 4-Way [ ]

Sprinkler System Load Calculation (Fpw = CpWp)

Cp = 1.161

Diameter	Type	Length	Total Length	Weight Per Unit Length	Total Weight
2.5" (65 mm)	Sch. 40	58 ft (17.7 m)	58 ft (17.7 m)	7.89 lb/ft (11.74 kg/m)	458 lbs (208 kg)

NOTE:
REFER TO **DETAIL 6 / FP0.02** FOR ADDITIONAL INFORMATION AND REQUIREMENTS.

Subtotal Weight	458 lbs (208 kg)
Wp (incl. 15%)	527 lbs (239 kg)
Total (Fpw)	611 lbs (277 kg)
Maximum Fpw per 9.3.5.5.2 (if applicable)	N/A

Main Size	Type/Sch.	Spacing (ft)
2.5"	Sch. 40	58

(TOLBrace™ Version 8) Use of TOLBrace™ is subject to terms and conditions per the end user license agreement

TOLBrace™ Seismic Bracing Calculations

Project Address: Merritt Landscape Horticulture Comp
12500 Campus Drive
Oakland, California
Job # N&T 22003

Contractor: HYT Corporation
Address: 3498 Clayton Road, #101
Concord, CA 94519
Phone: (925) 681-2731
Licence: FPE #1165

Calculations based on 2016 NFPA Pamphlet #13

Brace Information

Maximum Brace Length	7' 0" (2.134 m)
Diameter of Brace	1"
Type of Brace	Sch.40
Angle of Brace	45° Min.
Least Rad. of Gyration	0.42" (11 mm)
L/R Value	200
Max Horizontal Load	1310 lbs (594 kg)

Fastener Information

Orientation to Connecting Surface	NFPA Type E
Fastener	
Type	I-Joist
Diameter	1/2"
Length	4 1/2"
Maximum Load	620 lbs (281 kg)
Prying Factor	

TOLCO™ Brace Components

TOLCO™ Component	Listed Load	Adjusted Load
Fig. 4L Clamp	2015 lbs (914 kg)	1425 lbs (646 kg)
Fig.910 Threaded Swivel	1600 lbs (726 kg)	1131 lbs (513 kg)

See Fastener Information

*Calculation Based on CONCENTRIC Loading
*Please Note: These calculations are for TOLCO™ components only. Use of any other components voids these calculations and the listing of the assembly.

Seismic Brace Assembly Detail

Brace Identification on Plans 4" Longitudinal to I-Joist
Brace Type Lateral [ ] Longitudinal [X] 4-Way [ ]

Sprinkler System Load Calculation (Fpw = CpWp)

Cp = 1.161

Diameter	Type	Length	Total Length	Weight Per Unit Length	Total Weight
4" (100 mm)	Sch. 40	25 ft (7.6 m)	25 ft (7.6 m)	16.4 lb/ft (24.41 kg/m)	410 lbs (186 kg)

NOTE:
REFER TO **DETAIL 6 / FP0.02** FOR ADDITIONAL INFORMATION AND REQUIREMENTS.

Subtotal Weight	410 lbs (186 kg)
Wp (incl. 15%)	471 lbs (214 kg)
Total (Fpw)	547 lbs (248 kg)
Maximum Fpw per 9.3.5.5.2 (if applicable)	N/A

Main Size	Type/Sch.	Spacing (ft)
4"	Sch. 40	25

(TOLBrace™ Version 8) Use of TOLBrace™ is subject to terms and conditions per the end user license agreement

1 SEISMIC BRACING LOAD CALCULATIONS
NO SCALE

2/24/2022 10:51:47 AM

APPROVALS

IDENTIFICATION STAMP
DIV. OF THE STATE ARCHITECT
APP: 01-119409 INC:
REVIEWED FOR
SS ☑ FLS ☑ ACS ☑
DATE: 03/14/2022

NOLL & TAM ARCHITECTS
729 Heinz Avenue
Berkeley, CA 94710
tel 510.542.2200
fax 510.542.2201

SEAL

REGISTERED PROFESSIONAL ENGINEER
BRET B. TRESIDDER
No. 1165
Exp. 09/30/22
FIRE PROTECTION
STATE OF CALIFORNIA

HYT Corporation
3498 Clayton Road, Suite 101
Concord, CA 94519

PROJECT TITLE

Peralta Community College District
MERRITT COLLEGE NEW LANDSCAPE HORTICULTURE COMPLEX

12500 Campus Drive
Oakland, CA 94619

BID SET

ISSUE DATE 03/03/2022
N&T JOB NUMBER 22003

REVISIONS

	DATE	DESCRIPTION

DRAWN BY **Author** CHECKED BY **Checker**

SHEET TITLE
FIRE SPRINKLERS SEISMIC BRACE LOAD CALCULATIONS

SHEET NUMBER
FP0.03

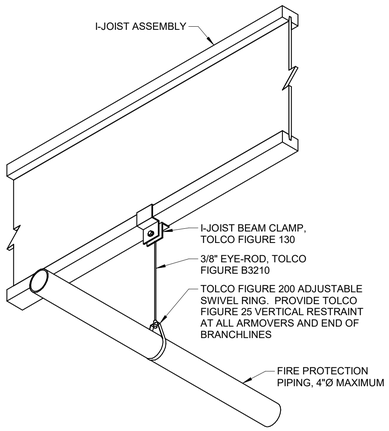

1 CLAMP HANGER TO I-JOIST
NO SCALE

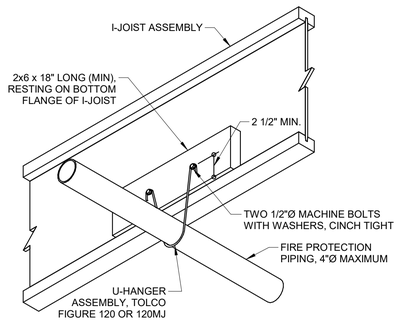

2 PIPE HANGER PERPENDICULAR TO I-JOIST
NO SCALE

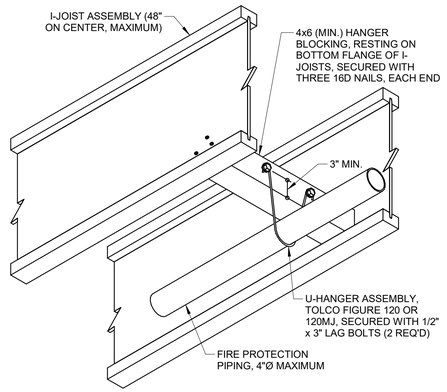

3 PIPE HANGER PARALLEL TO I-JOIST
NO SCALE

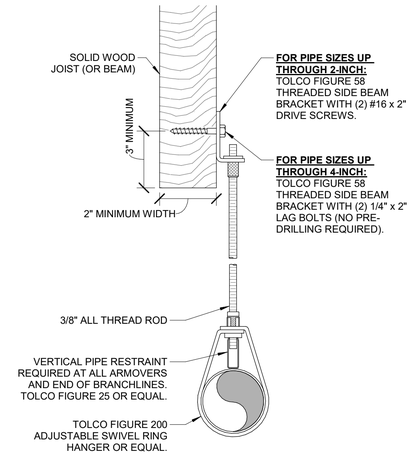

4 HANGER FOR PIPING UP THRU 4-INCHES
NO SCALE

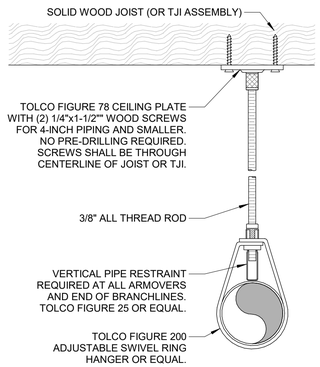

5 HANGER FOR PIPING UP THRU 2 -INCHES
NO SCALE

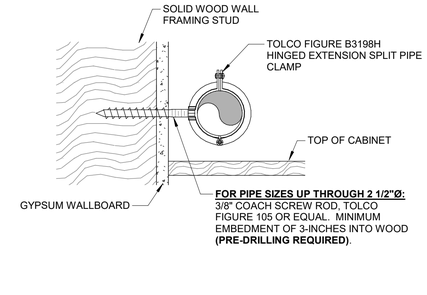

6 HANGER FOR LOW PIPING ABOVE CABINET
NO SCALE

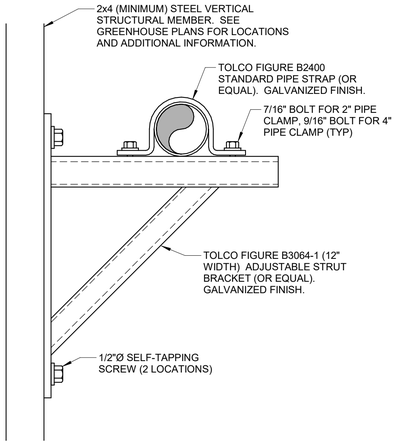

7 KNEE BRACE PIPE SUPPORT ASSEMBLY
NO SCALE

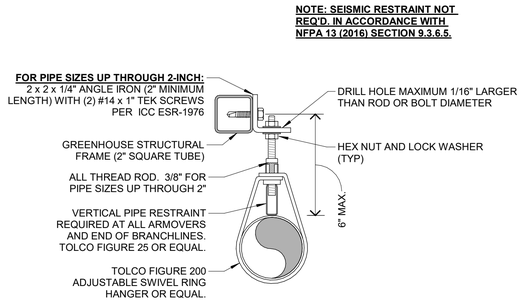

8 SIDE BEAM BRACKET TO STEEL
NO SCALE

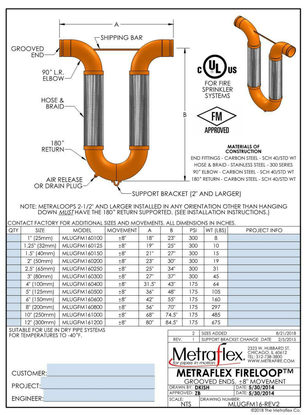

9 METRAFLEX FIRELOOP ASSEMBLY
NO SCALE

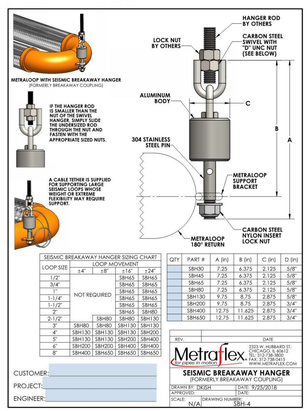

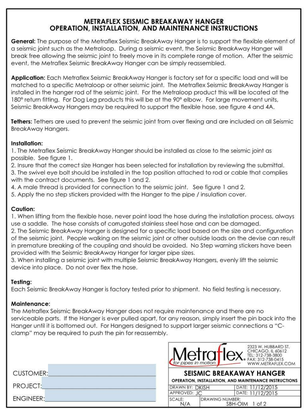

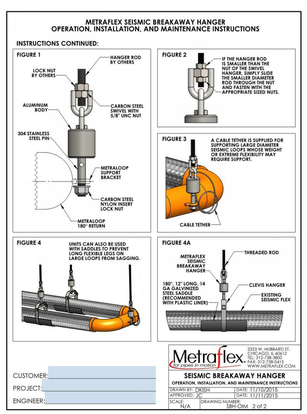

NOTES:

1. AN APPROVED SEISMIC SEPARATION ASSEMBLY SHALL BE INSTALLED WHERE SPRINKLER PIPING, REGARDLESS OF SIZE, CROSSES BUILDING SEISMIC SEPARATION JOINTS AT GROUND LEVEL AND ABOVE.
2. SEISMIC SEPARATION ASSEMBLIES SHALL CONSIST OF APPROVED FLEXIBLE PIPING ASSEMBLIES (METRAFLEX FIRELOOP, ONLY) SO AS TO ALLOW MOVEMENT SUFFICIENT TO ACCOMMODATE CLOSING OF THE SEPARATION, OPENING OF THE SEPARATION TO TWICE ITS NORMAL SIZE, AND MOVEMENT RELATIVE TO THE SEPARATION IN THE OTHER TWO DIMENSIONS IN AN AMOUNT EQUAL TOTHE SEPARATION DISTANCE.
3. THE METRAFLEX FIRELOOP SEISMIC SEPARATION ASSEMBLY SHALL INCLUDE FOURWAY SEISMIC BRACES UPSTREAM AND DOWNSTREAM WITHIN 6 FEET OF THE SEISMIC SEPARATION ASSEMBLY.
4. SEISMIC BRACING SHALL NOT BE ATTACHED TO THE SEISMIC SEPARATION ASSEMBLY.
5. ALL SEISMIC SEPERATION ASSEMBLIES SHALL BE EQUIPPED WITH METRAFLEX SEISMIC BREAKAWAY HANGER ASSEMBLIES

APPROVALS

IDENTIFICATION STAMP
DIV. OF THE STATE ARCHITECT
APP: 01-119409 INC:
REVIEWED FOR
SS ☑ FLS ☑ ACS ☑
DATE: 03/14/2022

NOLL & TAM ARCHITECTS
729 Heinz Avenue
Berkeley, CA 94710
tel 510.542.2200
fax 510.542.2201

SEAL

REGISTERED PROFESSIONAL ENGINEER
BRET B. TRESEDER
No. 1165
Exp. 09/30/22
FIRE PROTECTION
STATE OF CALIFORNIA

HYT Corporation
3498 Clayton Road, Suite 101
Concord, CA 94519

PROJECT TITLE

Peralta Community College District
MERRITT COLLEGE NEW LANDSCAPE HORTICULTURE COMPLEX

12500 Campus Drive
Oakland, CA 94619

BID SET

ISSUE DATE	03/03/2022
N&T JOB NUMBER	22003

REVISIONS

	DATE	DESCRIPTION

DRAWN BY	HYT	CHECKED BY

SHEET TITLE
FIRE SPRINKLER DETAILS

SHEET NUMBER
FP0.04

2/24/2022 10:51:47 AM

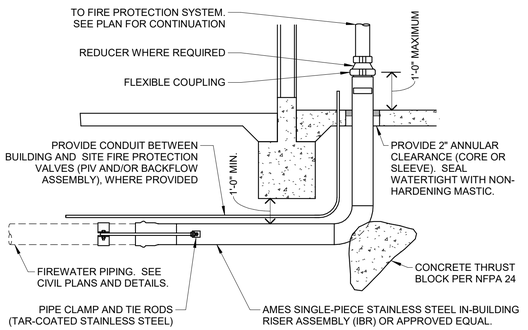

1 IN-BUILDING RISER ASSEMBLY DETAIL
NO SCALE

NOTES:
- THE BUILDING IS CONSIDERED "OBSTRUCTED CONSTRUCTION" IN ACCORDANCE WITH NFPA 13 - 2016, SECTION 3.7.1.
- AREAS ABOVE CEILINGS CONSIST OF COMBUSTIBLE CONSTRUCTION, FIRE SPRINKLER PROTECTION IS REQUIRED.

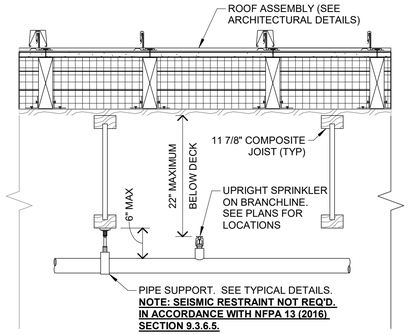

2 TYPICAL UPRIGHT SPRINKLER
NO SCALE

NOTE:
WHERE FLEXIBLE SPRINKLER HOSE ASSEMBLIES ARE INSTALLED AND SUPPORTED BY SUSPENDED CEILINGS, THE CEILING SHALL MEET ASTM C635 AND ASTM C636. ADDITIONALLY, A LABEL LIMITING RELOCATION OF THE SPRINKLER SHALL BE PROVIDED ON THE ANCHORING COMPONENT (NFPA 13, 2016, SECTION 9.2.1.3.3.4.).

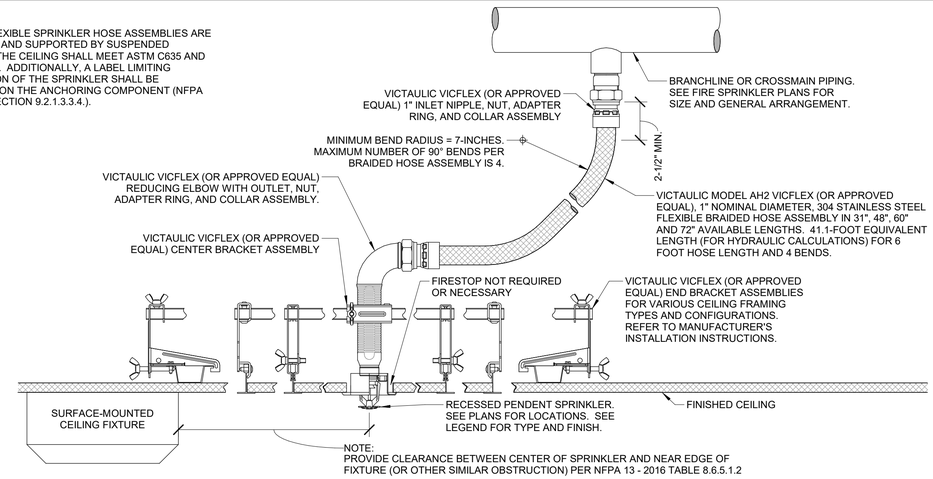

3 TYPICAL RECESSED PENDENT SPRINKLER
NO SCALE

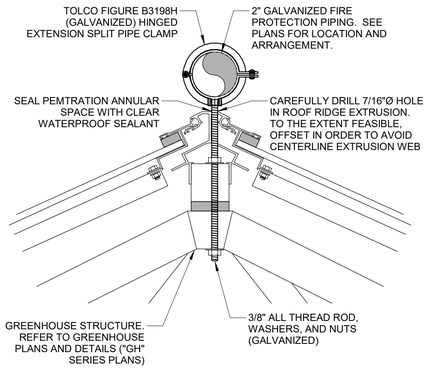

4 GREENHOUSE RIDGE PIPING SUPPORT
NO SCALE

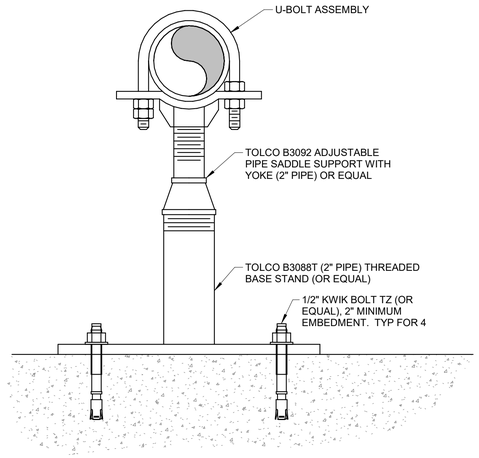

5 TYPICAL PIPE STAND
1 1/2" = 1'-0"

APPROVALS

IDENTIFICATION STAMP
DIV. OF THE STATE ARCHITECT
APP: 01-119409 INC:
REVIEWED FOR
SS ☑ FLS ☑ ACS ☑
DATE: 03/14/2022

NOLL & TAM ARCHITECTS
729 Heinz Avenue
Berkeley, CA 94710
tel 510.542.2200
fax 510.542.2201

SEAL

REGISTERED PROFESSIONAL ENGINEER
BRENT B. TRESSLER
No. 1165
Exp. 09/30/22
FIRE PROTECTION
STATE OF CALIFORNIA

HYT Corporation
3498 Clayton Road, Suite 101
Concord, CA 94519

PROJECT TITLE

Peralta Community College District
MERRITT COLLEGE NEW LANDSCAPE HORTICULTURE COMPLEX

12500 Campus Drive
Oakland, CA 94619

BID SET

ISSUE DATE	03/03/2022
N&T JOB NUMBER	22003

REVISIONS

	DATE	DESCRIPTION

DRAWN BY	CHECKED BY
HYT	

SHEET TITLE
FIRE SPRINKLERS DETAILS

SHEET NUMBER
FP0.05

2/24/2022 10:51:48 AM

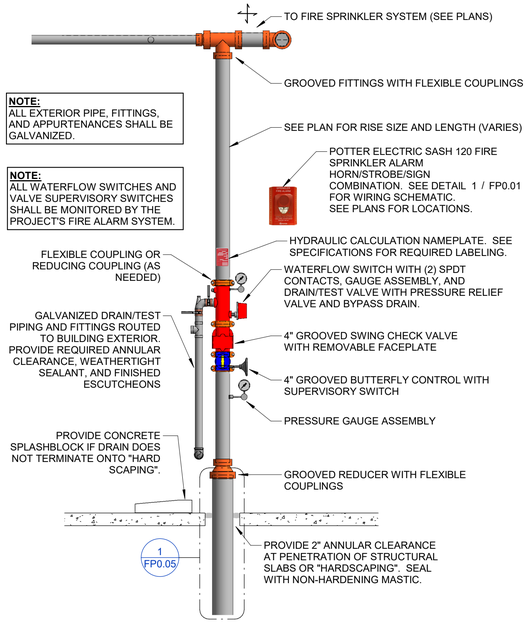

1 TYPICAL FIRE SPRINKLER RISER ASSEMBLY

NO SCALE

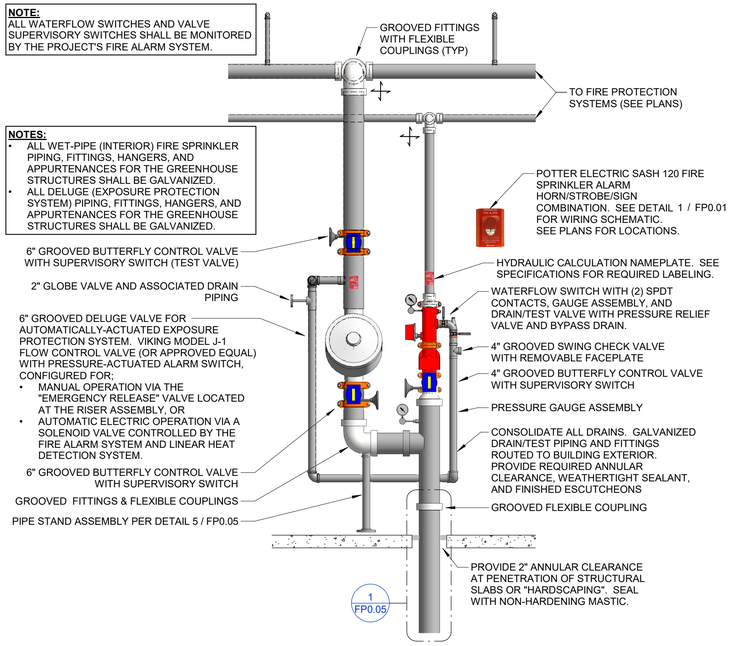

2 TYPICAL GREENHOUSE FIRE PROTECTION RISER ASSEMBLY

NO SCALE

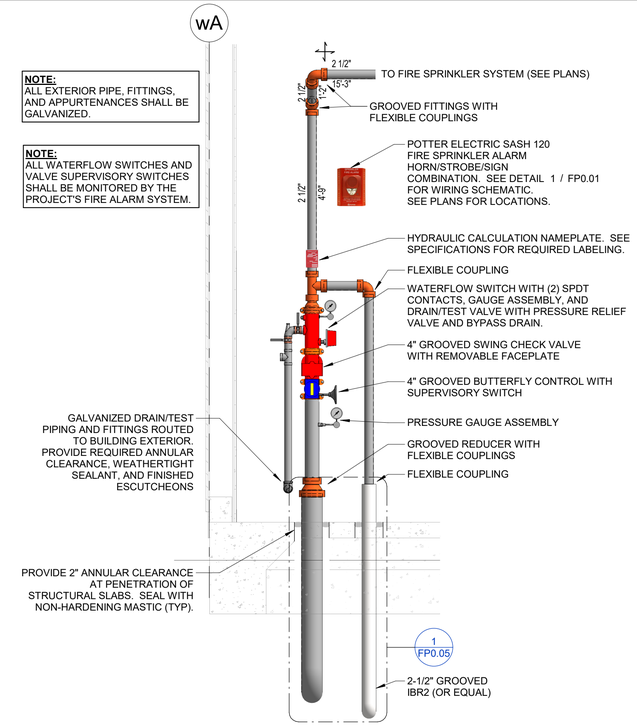

3 WORKSHOP AND SOIL BIN FIRE SPRINKLER RISER

1/2" = 1'-0"

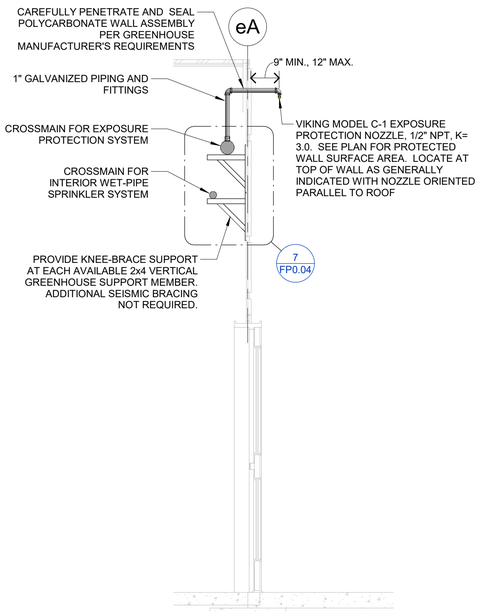

4 GREENHOUSE AT GABLE END

1/2" = 1'-0"

2/24/2022 10:51:54 AM

APPROVALS

IDENTIFICATION STAMP
DIV. OF THE STATE ARCHITECT
APP: 01-119409 INC:
REVIEWED FOR
SS ☑ FLS ☑ ACS ☑
DATE: 03/14/2022

NOLL & TAM ARCHITECTS
729 Heinz Avenue
Berkeley, CA 94710
tel 510.542.2200
fax 510.542.2201

SEAL

REGISTERED PROFESSIONAL ENGINEER
BRET B. TRESEDER
No. 1165
Exp. 09/30/22
FIRE PROTECTION
STATE OF CALIFORNIA

HYT Corporation
3498 Clayton Road, Suite 101
Concord, CA 94519

PROJECT TITLE

Peralta Community College District
MERRITT COLLEGE NEW LANDSCAPE HORTICULTURE COMPLEX

12500 Campus Drive
Oakland, CA 94619

BID SET

ISSUE DATE	03/03/2022
N&T JOB NUMBER	22003

REVISIONS

	DATE	DESCRIPTION

DRAWN BY **Author** | CHECKED BY **Checker**

SHEET TITLE

FIRE SPRINKLERS DETAILS

SHEET NUMBER

FP0.06

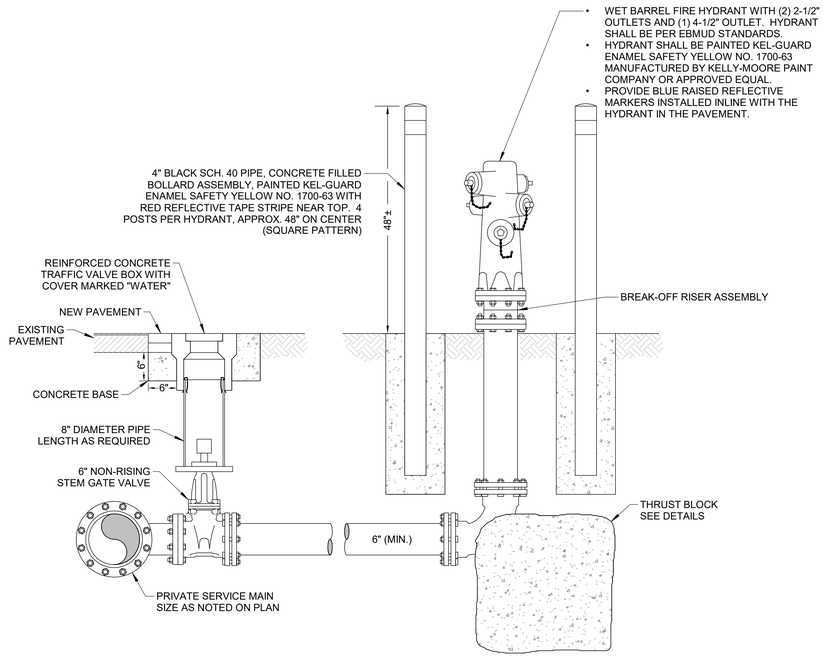

1 TYPICAL STANDARD FIRE HYDRANT

NO SCALE

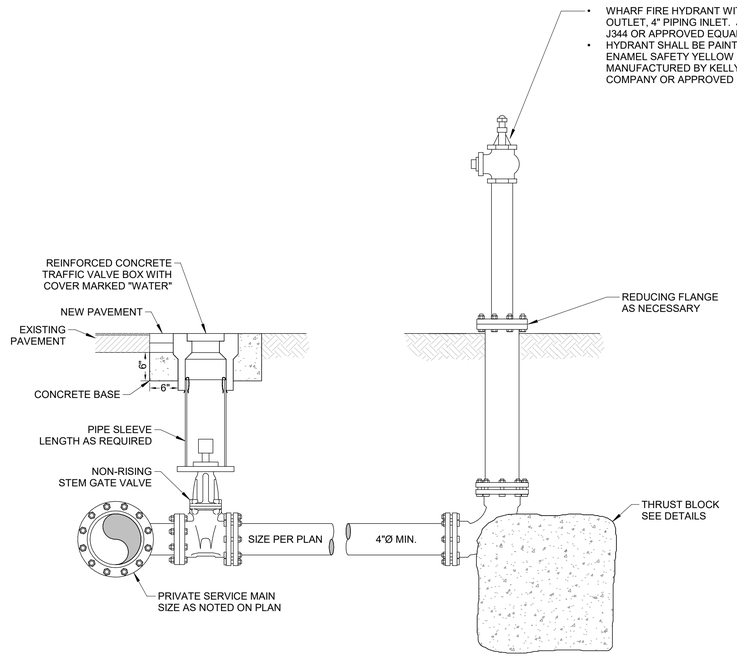

2 TYPICAL WHARF HYDRANT

NO SCALE

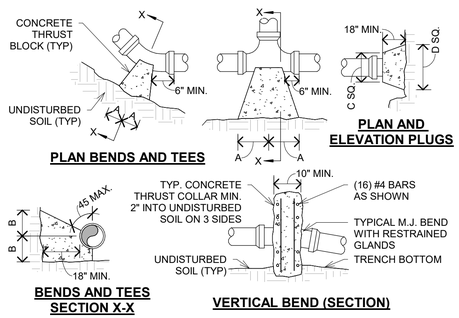

NOTES:

- FOR VERTICAL BEND DOWN IN EXCESS OF 11 1/4° BEND, ANCHORAGE SHALL BE DESIGNED BY ENGINEER.
- FOR VERTICAL BEND UPWARD, BLOCKING TO BE SIMILAR TO THAT FOR HORIZONTAL BEND.
- GLANDS AND BOLTS SHALL BE PROTECTED FROM CONCRETE BY PLASTIC SHEETING WHEN POURING THRUST BLOCKS.
- ALL CONCRETE THRUST BLOCKS AND SUPPORT CONCRETE SHALL BE 3000 PSI READY MIX CONCRETE (MINIMUM).
- RESTRAINED JOINTS MAY BE USED (ONLY) IN LIEU OF CONCRETE THRUST BLOCKS WHEN WORKING PRESSURE IS 100 PSI OR LESS. FOR WORKING PRESSURES GREATER THAN 100 PSI, RESTRAINED JOINTS **AND** CONCRETE THRUST BLOCKS ARE REQUIRED.
- THRUST BLOCK SIZES/DIMENSIONS ARE BASED ON; 200 PSI, A BEARING SOIL OF 2000 PSF, AND A "SAFETY FACTOR" OF 1.5. ADJUST ACCORDINGLY FOR OTHER PRESSURE AND SOIL CONDICTIONS.
- ALL UNDERGROUND PIPING SHALL BE RESTRAINED IN ACCORDANCE WITH THE REQUIREMENTS OF NFPA 24 (MINIMUM)

PIPE SIZE	90° BEND		45° BEND		22° BEND		11° BEND		TEE		PLUG	
	A	B	A	B	A	B	A	B	A	B	C	D
4"	8"	12"	8"	8"	6"	6"	6"	6"	11"	9"	6"	10"
6"	18"	12"	8"	10"	8"	8"	8"	8"	11"	10"	12"	18"
8"	18"	13"	10"	10"	8"	8"	8"	8"	11"	12"	12"	24"
10"	20"	16"	12"	14"	8"	12"	8"	12"	14"	16"	16"	30"

3 CONCRETE THRUST BLOCKS

NO SCALE

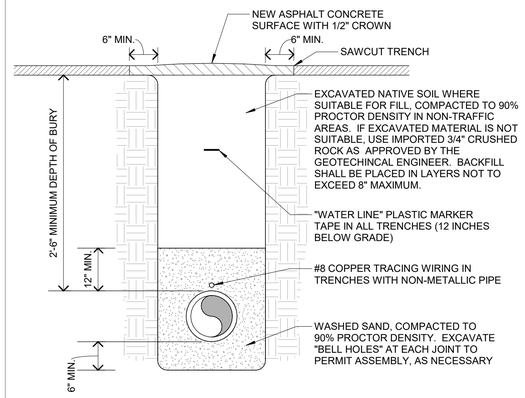

4 TRENCH DETAIL

NO SCALE

NOTE:
REFER TO WAYFINDING DRAWINGS (W- SERIES)AND ASSOCIATED SPECIFICATIONS FOR REQUIRED SIGNAGE AT PIV/FDC ASSEMBLIES

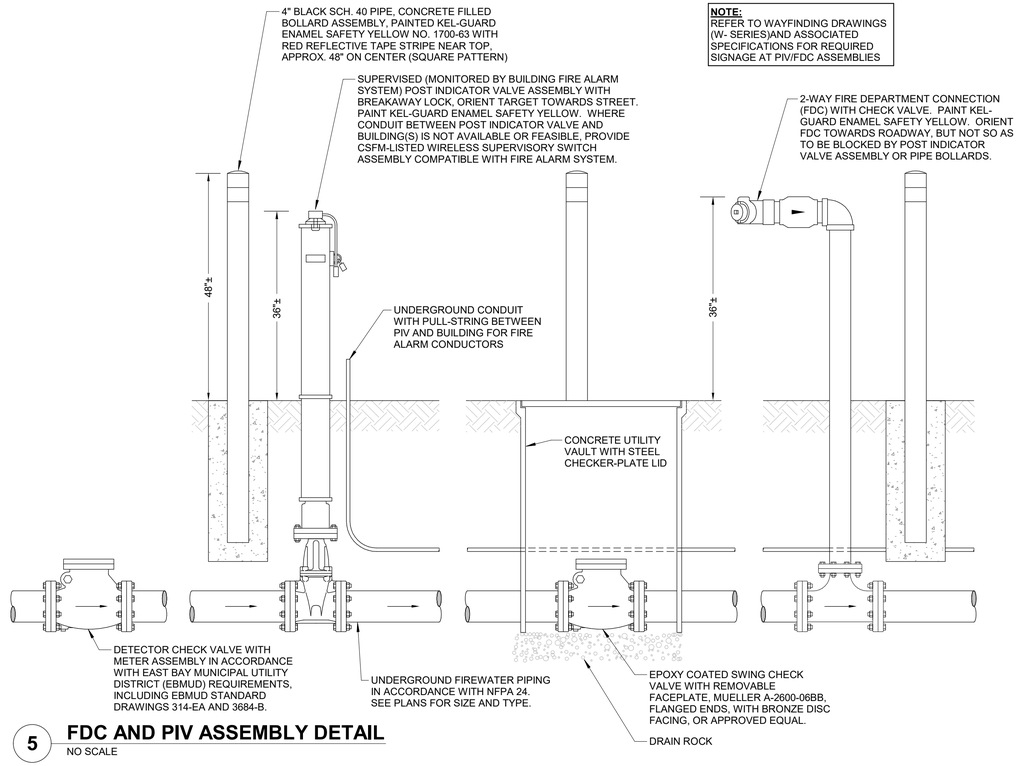

5 FDC AND PIV ASSEMBLY DETAIL

NO SCALE

APPROVALS

IDENTIFICATION STAMP
DIV. OF THE STATE ARCHITECT
APP: 01-119409 INC:
REVIEWED FOR
SS ☑ FLS ☑ ACS ☑
DATE: 03/14/2022

NOLL & TAM ARCHITECTS
729 Heinz Avenue
Berkeley, CA 94710
tel 510.542.2200
fax 510.542.2201

SEAL

REGISTERED PROFESSIONAL ENGINEER
BRET B. TRESPACHER
No. 1165
Exp. 09/30/22
FIRE PROTECTION
STATE OF CALIFORNIA

HYT Corporation
3498 Clayton Road, Suite 101
Concord, CA 94519

PROJECT TITLE

Peralta Community College District
MERRITT COLLEGE NEW LANDSCAPE HORTICULTURE COMPLEX

12500 Campus Drive
Oakland, CA 94619

BID SET

ISSUE DATE	03/03/2022
N&T JOB NUMBER	22003

REVISIONS

	DATE	DESCRIPTION

DRAWN BY HYT | CHECKED BY

SHEET TITLE

FIRE SPRINKLERS DETAILS

SHEET NUMBER

FP0.07

2/24/2022 10:51:56 AM

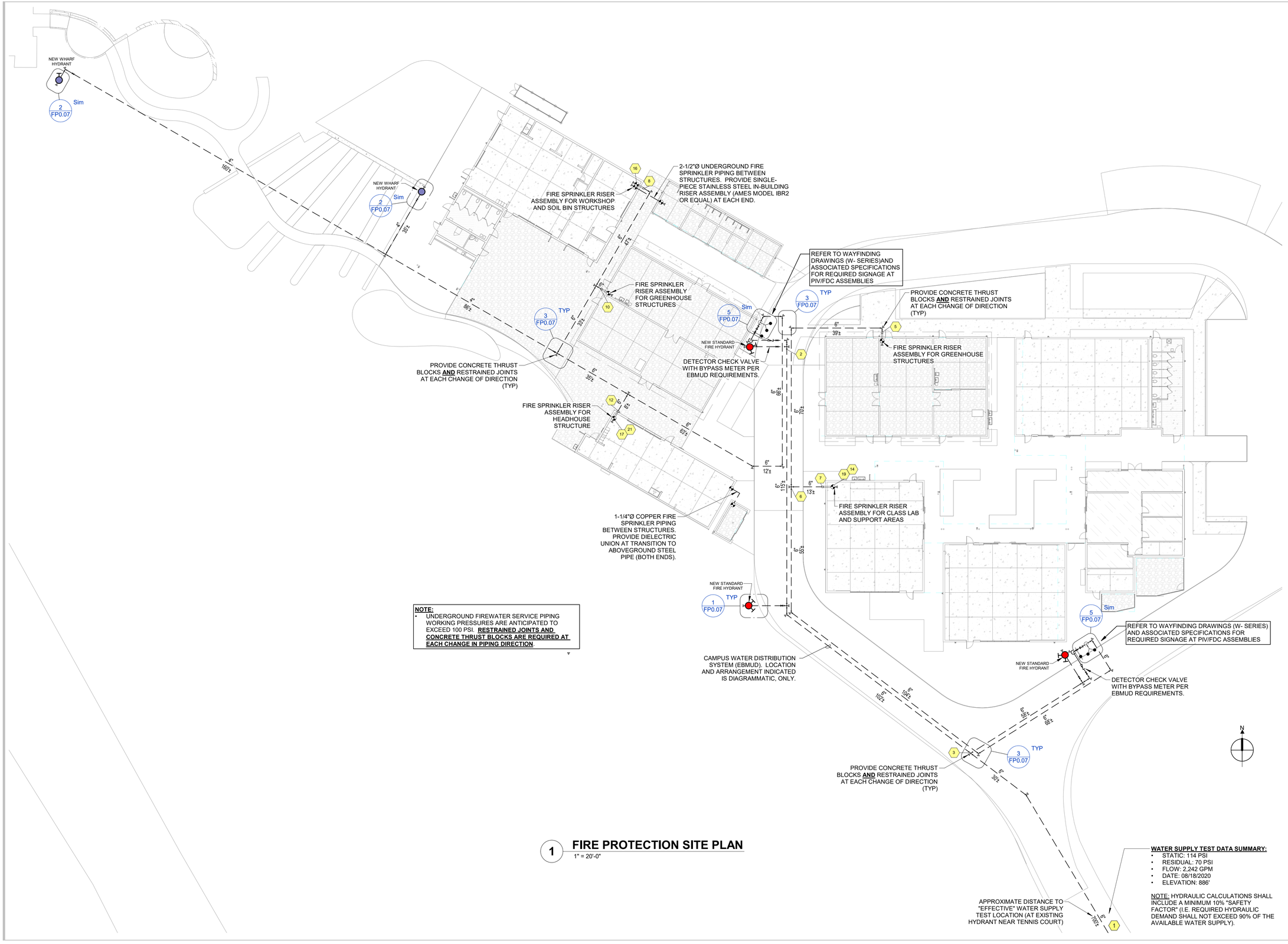

NOTE:
- UNDERGROUND FIREWATER SERVICE PIPING WORKING PRESSURES ARE ANTICIPATED TO EXCEED 100 PSI. **RESTRAINED JOINTS AND CONCRETE THRUST BLOCKS ARE REQUIRED AT EACH CHANGE IN PIPING DIRECTION**.

WATER SUPPLY TEST DATA SUMMARY:
- STATIC: 114 PSI
- RESIDUAL: 70 PSI
- FLOW: 2,242 GPM
- DATE: 08/18/2020
- ELEVATION: 886'

NOTE: HYDRAULIC CALCULATIONS SHALL INCLUDE A MINIMUM 10% "SAFETY FACTOR" (I.E. REQUIRED HYDRAULIC DEMAND SHALL NOT EXCEED 90% OF THE AVAILABLE WATER SUPPLY).

1 FIRE PROTECTION SITE PLAN
1" = 20'-0"

2/24/2022 10:52:00 AM

APPROVALS

IDENTIFICATION STAMP
DIV. OF THE STATE ARCHITECT
APP: 01-119409 INC:
REVIEWED FOR
SS ☑ FLS ☑ ACS ☑
DATE: 03/14/2022

NOLL & TAM ARCHITECTS
729 Heinz Avenue
Berkeley, CA 94710
tel 510.542.2200
fax 510.542.2201

SEAL

REGISTERED PROFESSIONAL ENGINEER
BRET B. TRESPACHER
No. 1165
Exp. 09/30/22
FIRE PROTECTION
STATE OF CALIFORNIA

HYT Corporation
3498 Clayton Road, Suite 101
Concord, CA 94519

PROJECT TITLE

Peralta Community College District
MERRITT COLLEGE NEW LANDSCAPE HORTICULTURE COMPLEX

12500 Campus Drive
Oakland, CA 94619

BID SET

ISSUE DATE	03/03/2022
N&T JOB NUMBER	22003

REVISIONS

	DATE	DESCRIPTION

DRAWN BY **HYT** | CHECKED BY

SHEET TITLE

FIRE SPRINKLERS SITE PLAN

SHEET NUMBER

FP2.01

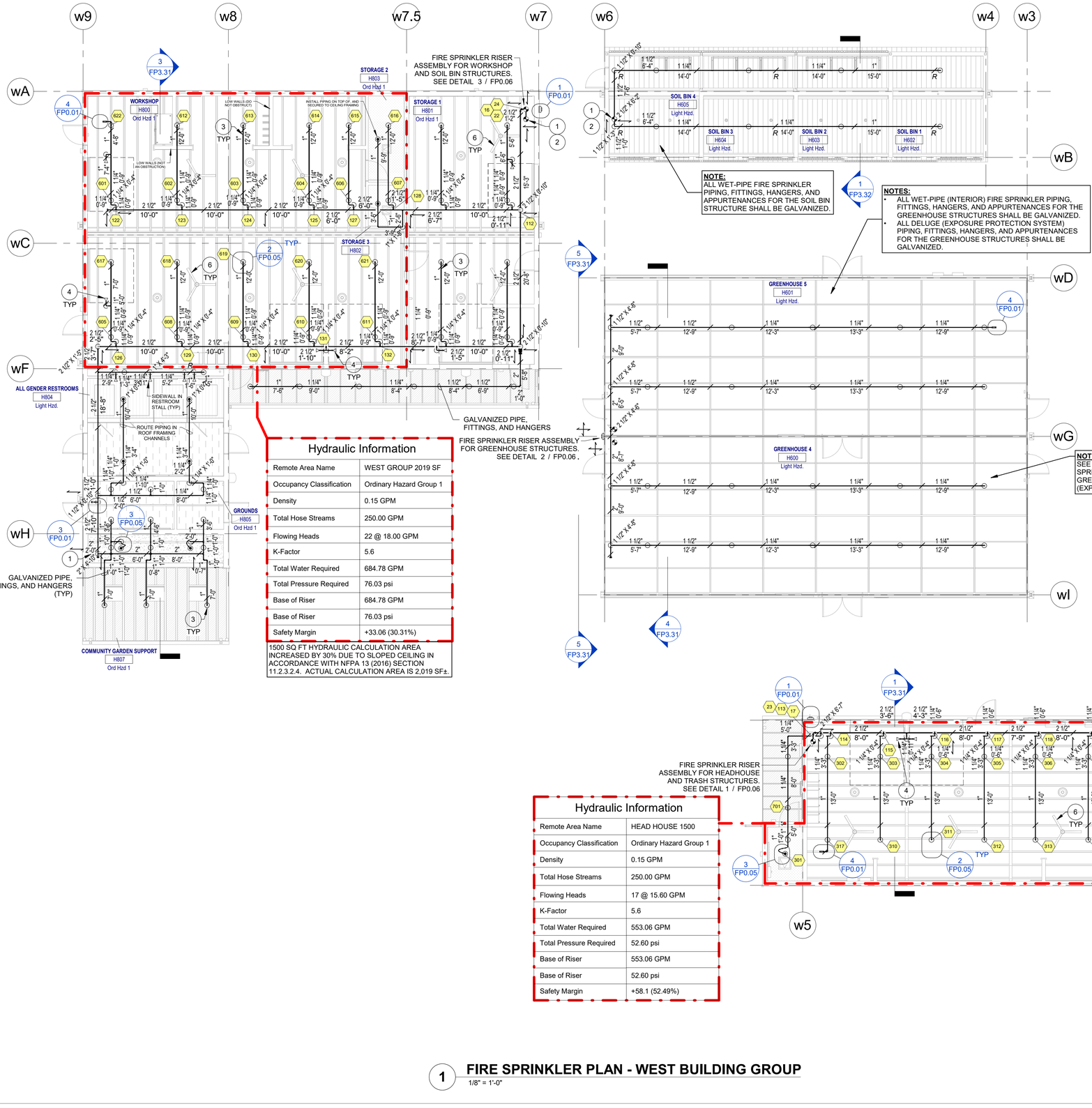

Hydraulic Information

Remote Area Name	WEST GROUP 2019 SF
Occupancy Classification	Ordinary Hazard Group 1
Density	0.15 GPM
Total Hose Streams	250.00 GPM
Flowing Heads	22 @ 18.00 GPM
K-Factor	5.6
Total Water Required	684.78 GPM
Total Pressure Required	76.03 psi
Base of Riser	684.78 GPM
Base of Riser	76.03 psi
Safety Margin	+33.06 (30.31%)

1500 SQ FT HYDRAULIC CALCULATION AREA INCREASED BY 30% DUE TO SLOPED CEILING IN ACCORDANCE WITH NFPA 13 (2016) SECTION 11.2.3.2.4. ACTUAL CALCULATION AREA IS 2,019 SF±.

Hydraulic Information

Remote Area Name	HEAD HOUSE 1500
Occupancy Classification	Ordinary Hazard Group 1
Density	0.15 GPM
Total Hose Streams	250.00 GPM
Flowing Heads	17 @ 15.60 GPM
K-Factor	5.6
Total Water Required	553.06 GPM
Total Pressure Required	52.60 psi
Base of Riser	553.06 GPM
Base of Riser	52.60 psi
Safety Margin	+58.1 (52.49%)

SHEET NOTES

1. PROVIDE FLEXIBLE COUPLINGS AT THE TOP, AND BOTTOM OF THE VERTICAL PIPING IN ACCORDANCE WITH NFPA 13 (2016) SECTION 9.3.2.3.1.
2. PROVIDE 2-1/2" SINGLE PIECE, STAINLESS STEEL IN-BUILDING RISER ASSEMBLY (AMES MODEL IBR2 OR EQUAL) FOR PIPING BENEATH FOUNDATION.
3. ALIGN FIRE SPRINKLER PIPING WITH STRUCTURAL FRAMING AS GENERALLY INDICATED. INSTALL PIPING WITH SHORT HANGERS (LESS THAN 6" FROM TOP OF PIPE TO POINT OF ATTACHMENT). SEISMIC RESTRAINT NOT REQUIRED IN ACCORDANCE WITH NFPA 13 (2016) SECTION 9.3.6.5.
4. SIDEWALL SPRINKLER WITH GUARD BENEATH OVERHEAD (GARAGE) DOOR IN ACCORDANCE WITH NFPA 13 (2016) SECTIONS 8.4.2(3) AND 8.5.5.3.1.
5. PROVIDE DIELECTRIC UNION AT THE TRANSITION FROM THE ABOVEGROUND STEEL PIPE TO THE UNDERGROUND 1-1/4"Ø COPPER PIPING BETWEEN THE HEAD HOUSE AND THE TRASH ENCLOSURE (TWO LOCATIONS).
6. SMALL AND OPEN CEILING FAN IN ACCORDANCE WITH NFPA 13 (2016) SECTION 8.6.5.2.10.

1 **FIRE SPRINKLER PLAN - WEST BUILDING GROUP**
1/8" = 1'-0"

0 4' 8' 16'

APPROVALS

IDENTIFICATION STAMP
DIV. OF THE STATE ARCHITECT
APP: 01-119409 INC:
REVIEWED FOR
SS ☑ FLS ☑ ACS ☑
DATE: 03/14/2022

NOLL & TAM ARCHITECTS
729 Heinz Avenue
Berkeley, CA 94710
tel 510.542.2200
fax 510.542.2201

SEAL

REGISTERED PROFESSIONAL ENGINEER
BRET B. TRESIDDER
No. 1165
Exp. 09/30/22
FIRE PROTECTION
STATE OF CALIFORNIA

HYT Corporation
3498 Clayton Road, Suite 101
Concord, CA 94519

PROJECT TITLE

Peralta Community College District
MERRITT COLLEGE NEW LANDSCAPE HORTICULTURE COMPLEX

12500 Campus Drive
Oakland, CA 94619

BID SET

ISSUE DATE	03/03/2022
N&T JOB NUMBER	22003

REVISIONS

	DATE	DESCRIPTION

DRAWN BY **HYT** CHECKED BY

SHEET TITLE
FIRE SPRINKLERS PLAN - WEST BUILDING GROUP

SHEET NUMBER
FP2.51

2/24/2022 10:52:10 AM

NOTE:
SEE ALSO SHEET FP2.53 FOR DELUGE SPRINKLER SYSTEM ARRANGEMENT FOR GREENHOUSE BUILDING EXTERIOR AREAS (EXPOSURE PROTECTION SYSTEM)

FIRE SPRINKLER RISER ASSEMBLY FOR GREENHOUSE STRUCTURES. SEE DETAIL 2 / FP0.06

Hydraulic Information

Remote Area Name	EAST GREENHOUSE LH
Occupancy Classification	Light Hazard
Density	0.10 GPM
Total Hose Streams	100.00 GPM
Flowing Heads	11 @ 22.50 GPM
K-Factor	5.6
Total Water Required	369.19 GPM
Total Pressure Required	67.15 psi
Base of Riser	369.19 GPM
Base of Riser	67.15 psi
Safety Margin	+45.29 (40.28%)

1500 SQ FT HYDRAULIC CALCULATION AREA INCREASED BY 30% DUE TO SLOPED CEILING IN ACCORDANCE WITH NFPA 13 (2016) SECTION 11.2.3.2.4. ACTUAL CALCULATION AREA IS 1,952 SF±.

GREENHOUSE 3 H502 Light Hzd.
GREENHOUSE 2 H501 Light Hzd.
GREENHOUSE 1A H500A Light Hzd.

INSTALL PIPING LOW, ON TOP OF CABINET. SEE DETAIL 6 / FP0.04

NOTES:
- ALL WET-PIPE (INTERIOR) FIRE SPRINKLER PIPING, FITTINGS, HANGERS, AND APPURTENANCES FOR THE GREENHOUSE STRUCTURES SHALL BE GALVANIZED.
- ALL DELUGE (EXPOSURE PROTECTION SYSTEM) PIPING, FITTINGS, HANGERS, AND APPURTENANCES FOR THE GREENHOUSE STRUCTURES SHALL BE GALVANIZED.

JANITORIAL H103 Ord Hzd 1
CLASS LAB 1 H100 Ord Hzd 1
ALL GENDER RESTROOMS H102 Light Hzd.
BREEZEWAY 1 Light Hzd.
PASSAGEWAY Light Hzd.
CIRCULATION H400 Light Hzd.

Hydraulic Information

Remote Area Name	EAST GROUP OH 1
Occupancy Classification	Ordinary Hazard Group 1
Density	0.15 GPM
Total Hose Streams	250.00 GPM
Flowing Heads	20 @ 18.00 GPM
K-Factor	5.6
Total Water Required	699.16 GPM
Total Pressure Required	90.11 psi
Base of Riser	699.16 GPM
Base of Riser	90.11 psi
Safety Margin	+18.79 (17.25%)

1500 SQ FT HYDRAULIC CALCULATION AREA INCREASED BY 30% DUE TO SLOPED CEILING IN ACCORDANCE WITH NFPA 13 (2016) SECTION 11.2.3.2.4. ACTUAL CALCULATION AREA IS 2,050 SF±.

FIRE SPRINKLER RISER ASSEMBLY FOR CLASS LAB AND SUPPORT AREAS. SEE DETAIL 1 / FP0.06

NOTE:
ALL EXTERIOR PIPE, FITTINGS, AND APPURTENANCES SHALL BE GALVANIZED (NOTE: INCLUDES BREEZEWAY AND PASSAGEWAY AREAS)

CLASS LAB 3 H300 Ord Hzd 1
BREEZEWAY 1 Light Hzd.
BREEZEWAY 2 Light Hzd.
CLASS LAB 2 H200 Ord Hzd 1
LIBRARY H404 Light Hzd.
OFFICE 1 H401 Light Hzd.
OFFICE 3 H403 Light Hzd.
ELECTRICAL H406 Light Hzd.
DATA H405 Light Hzd.
TRANSFORMER & GENERATOR H407 OPEN TO SKY, NO A.S.
MECHANICAL YARD H408 OPEN TO SKY, NO A.S.

INSTALL PIPING LOW, ON TOP OF CABINET/ENCLOSURE. SEE DETAIL 6 / FP0.04

1 FIRE SPRINKLER PLAN - EAST BUILDING GROUP
1/8" = 1'-0"

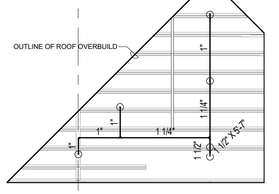

2 ROOF OVERBUILD
1/8" = 1'-0"

SHEET NOTES

1. PROVIDE FLEXIBLE COUPLINGS AT THE TOP, AND BOTTOM OF THE VERTICAL PIPING IN ACCORDANCE WITH NFPA 13 (2016) SECTION 9.3.2.3.1.
2. PROVIDE 2-1/2" SINGLE PIECE, STAINLESS STEEL IN-BUILDING RISER ASSEMBLY (AMES MODEL IBR2 OR EQUAL) FOR PIPING BENEATH FOUNDATION.
3. ALIGN FIRE SPRINKLER PIPING WITH STRUCTURAL FRAMING AS GENERALLY INDICATED. INSTALL PIPING WITH SHORT HANGERS (LESS THAN 6" FROM TOP OF PIPE TO POINT OF ATTACHMENT). SEISMIC RESTRAINT NOT REQUIRED IN ACCORDANCE WITH NFPA 13 (2016) SECTION 9.3.6.5.
4. SIDEWALL SPRINKLER WITH GUARD BENEATH OVERHEAD (GARAGE) DOOR IN ACCORDANCE WITH NFPA 13 (2016) SECTIONS 8.4.2(3) AND 8.5.5.3.1.
5. PROVIDE DIELECTRIC UNION AT THE TRANSITION FROM THE ABOVEGROUND STEEL PIPE TO THE UNDERGROUND 1-1/4"Ø COPPER PIPING BETWEEN THE HEAD HOUSE AND THE TRASH ENCLOSURE (TWO LOCATIONS).
6. SMALL AND OPEN CEILING FAN IN ACCORDANCE WITH NFPA 13 (2016) SECTION 8.6.5.2.10.

APPROVALS

IDENTIFICATION STAMP
DIV. OF THE STATE ARCHITECT
APP: 01-119409 INC:
REVIEWED FOR
SS ☑ FLS ☑ ACS ☑
DATE: 03/14/2022

NOLL & TAM ARCHITECTS
729 Heinz Avenue
Berkeley, CA 94710
tel 510.542.2200
fax 510.542.2201

SEAL

REGISTERED PROFESSIONAL ENGINEER BRET B. TRESEDER No. 1165 Exp. 09/30/22 FIRE PROTECTION STATE OF CALIFORNIA

HYT Corporation
3498 Clayton Road, Suite 101
Concord, CA 94519

PROJECT TITLE

Peralta Community College District
MERRITT COLLEGE NEW LANDSCAPE HORTICULTURE COMPLEX

12500 Campus Drive
Oakland, CA 94619

BID SET

ISSUE DATE	03/03/2022
N&T JOB NUMBER	22003

REVISIONS

	DATE	DESCRIPTION

DRAWN BY HYT CHECKED BY

SHEET TITLE
FIRE SPRINKLERS PLAN - EAST BUILDING GROUP

SHEET NUMBER
FP2.52

2/24/2022 10:52:23 AM

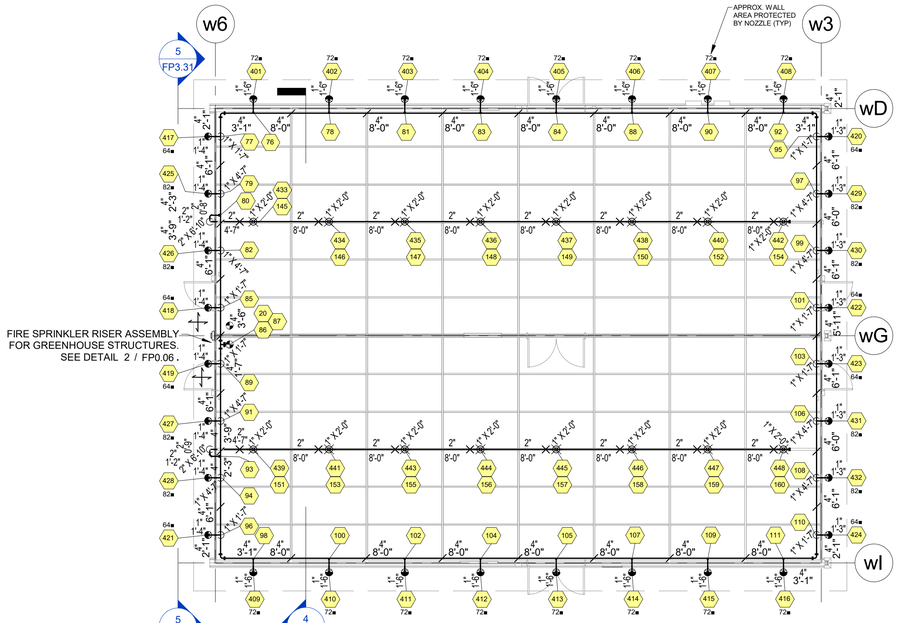

Hydraulic Information	
Remote Area Name	WEST GH DELUGE
Total Hose Streams	100.00 GPM
Flowing Heads	16 @ 24.00 GPM + 8 @ 12.70 GPM + 16 @ 14.40 GPM + 8 @ 16.32 GPM
Total Water Required	1063.04 GPM
Total Pressure Required	90.70 psi
Safety Margin	+12.24 (11.89%)

NOTE:
SEE ALSO SHEET FP2.51 FOR WET-PIPE SPRINKLER SYSTEM ARRANGEMENT FOR GREENHOUSE BUILDING INTERIOR AREAS.

1 FIRE SPRINKLER PLAN - WEST GREENHOUSE DELUGE

1/8" = 1'-0"

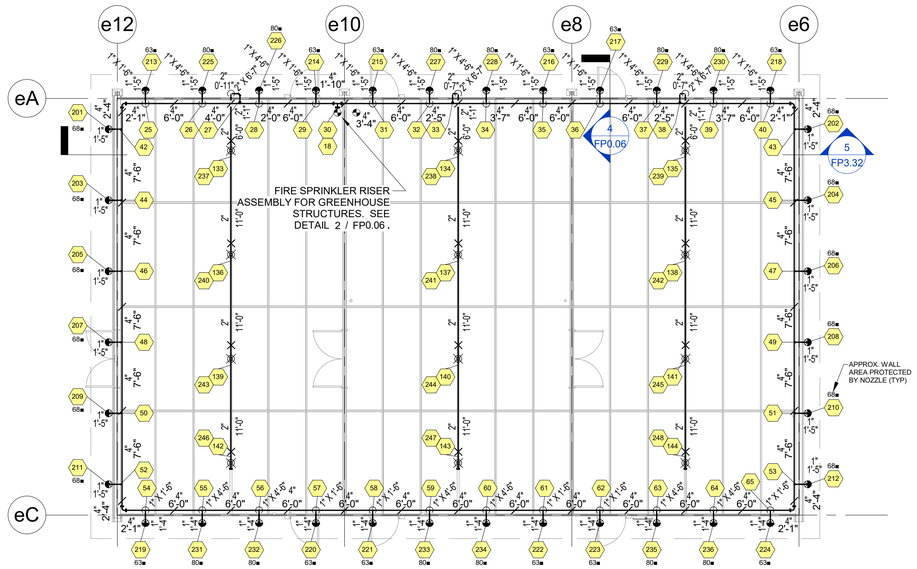

NOTE:
SEE ALSO SHEET FP2.52 FOR WET-PIPE SPRINKLER SYSTEM ARRANGEMENT FOR GREENHOUSE BUILDING INTERIOR AREAS.

Hydraulic Information	
Remote Area Name	EAST GH DELUGE
Total Hose Streams	100.00 GPM
Flowing Heads	12 @ 33.00 GPM + 12 @ 12.60 GPM + 12 @ 16.00 GPM + 12 @ 13.68 GPM
Total Water Required	1106.11 GPM
Total Pressure Required	89.82 psi
Safety Margin	+12.28 (12.02%)

2 FIRE SPRINKLER PLAN - EAST GREENHOUSE DELUGE

1/8" = 1'-0"

0 4' 8' 16'

2/24/2022 10:52:31 AM

APPROVALS

IDENTIFICATION STAMP
DIV. OF THE STATE ARCHITECT
APP: 01-119409 INC:
REVIEWED FOR
SS ☑ FLS ☑ ACS ☑
DATE: 03/14/2022

NOLL & TAM ARCHITECTS
729 Heinz Avenue
Berkeley, CA 94710
tel 510.542.2200
fax 510.542.2201

SEAL

REGISTERED PROFESSIONAL ENGINEER
BRET B. TRESIDDER
No. 1165
Exp. 09/30/22
FIRE PROTECTION
STATE OF CALIFORNIA

HYT Corporation
3498 Clayton Road, Suite 101
Concord, CA 94519

PROJECT TITLE

Peralta Community College District
MERRITT COLLEGE NEW LANDSCAPE HORTICULTURE COMPLEX

12500 Campus Drive
Oakland, CA 94619

BID SET

ISSUE DATE 03/03/2022
N&T JOB NUMBER 22003

REVISIONS

△	DATE	DESCRIPTION

DRAWN BY HYT CHECKED BY

SHEET TITLE

FIRE SPRINKLERS GREENHOUSE EXPOSURE PROTECTION DELUGE SYSTEMS

SHEET NUMBER

FP2.53

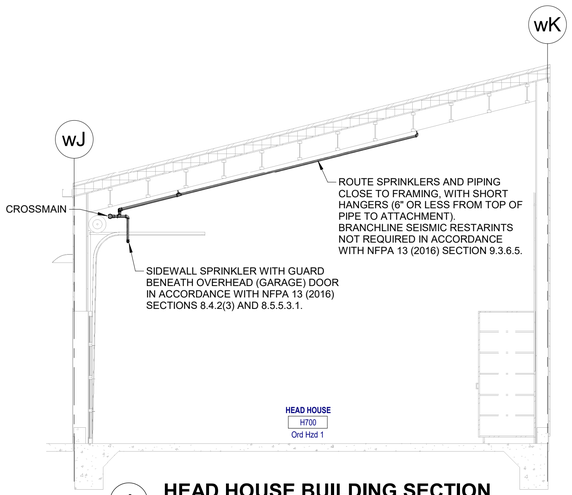

1 HEAD HOUSE BUILDING SECTION
1/4" = 1'-0"

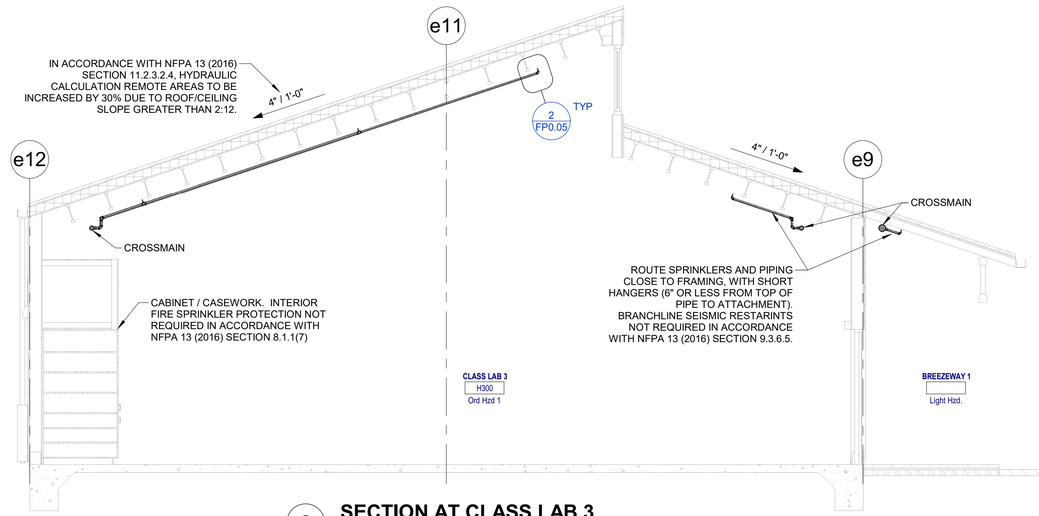

2 SECTION AT CLASS LAB 3
1/4" = 1'-0"

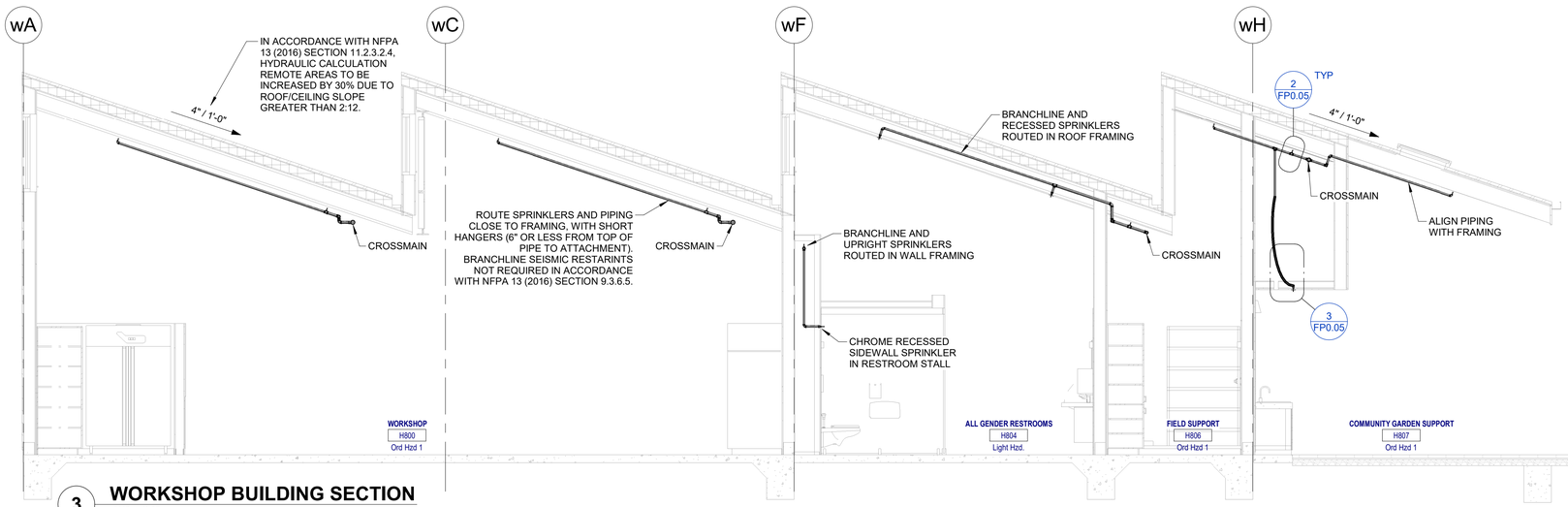

3 WORKSHOP BUILDING SECTION
1/4" = 1'-0"

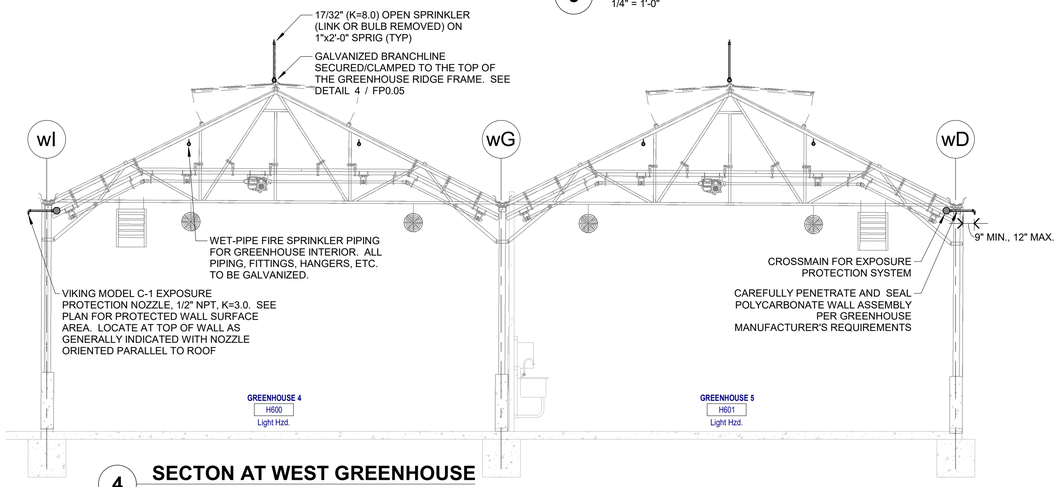

4 SECTON AT WEST GREENHOUSE
1/4" = 1'-0"

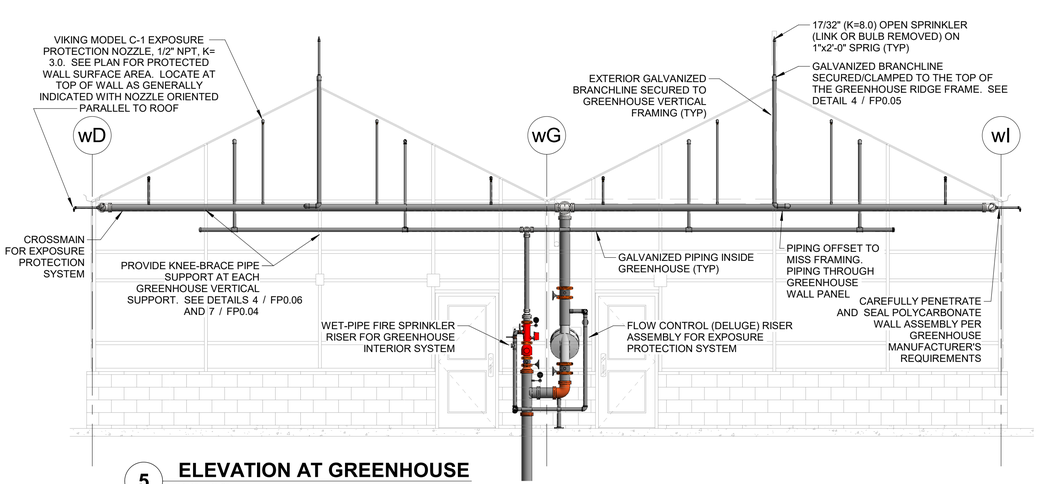

5 ELEVATION AT GREENHOUSE
1/4" = 1'-0"

2/24/2022 10:52:37 AM

APPROVALS

IDENTIFICATION STAMP
DIV. OF THE STATE ARCHITECT
APP: 01-119409 INC:
REVIEWED FOR
SS ☑ FLS ☑ ACS ☑
DATE: 03/14/2022

NOLL & TAM ARCHITECTS
729 Heinz Avenue
Berkeley, CA 94710
tel 510.542.2200
fax 510.542.2201

SEAL

REGISTERED PROFESSIONAL ENGINEER
BRET B. TRESEDER
No. 1165
Exp. 09/30/22
FIRE PROTECTION
STATE OF CALIFORNIA

HYT Corporation
3498 Clayton Road, Suite 101
Concord, CA 94519

PROJECT TITLE

Peralta Community College District
MERRITT COLLEGE NEW LANDSCAPE HORTICULTURE COMPLEX

12500 Campus Drive
Oakland, CA 94619

BID SET

ISSUE DATE	03/03/2022
N&T JOB NUMBER	22003

REVISIONS

	DATE	DESCRIPTION

DRAWN BY HYT | CHECKED BY

SHEET TITLE

FIRE SPRINKLER SECTIONS

SHEET NUMBER

FP3.31

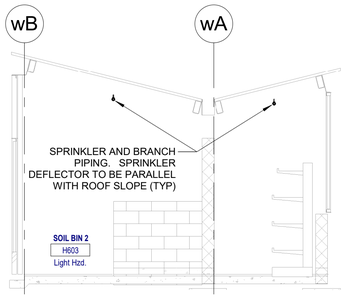

1 SECTION AT SOILS BIN
1/4" = 1'-0"

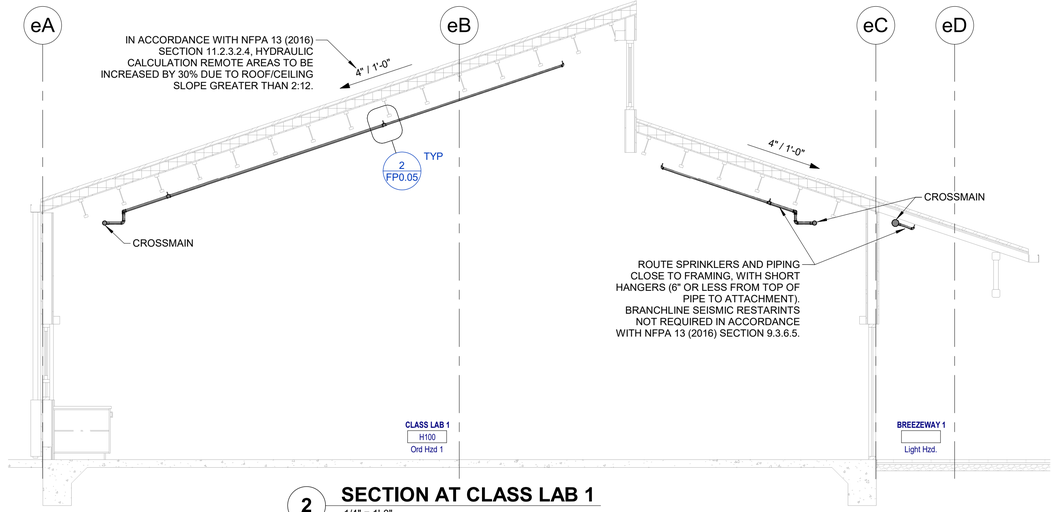

2 SECTION AT CLASS LAB 1
1/4" = 1'-0"

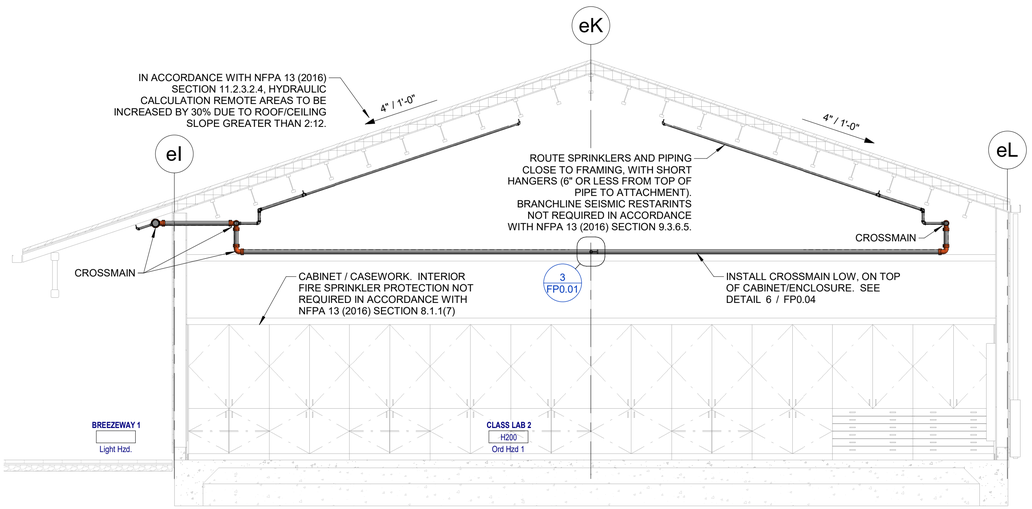

3 SECTION AT CLASS LAB 2
1/4" = 1'-0"

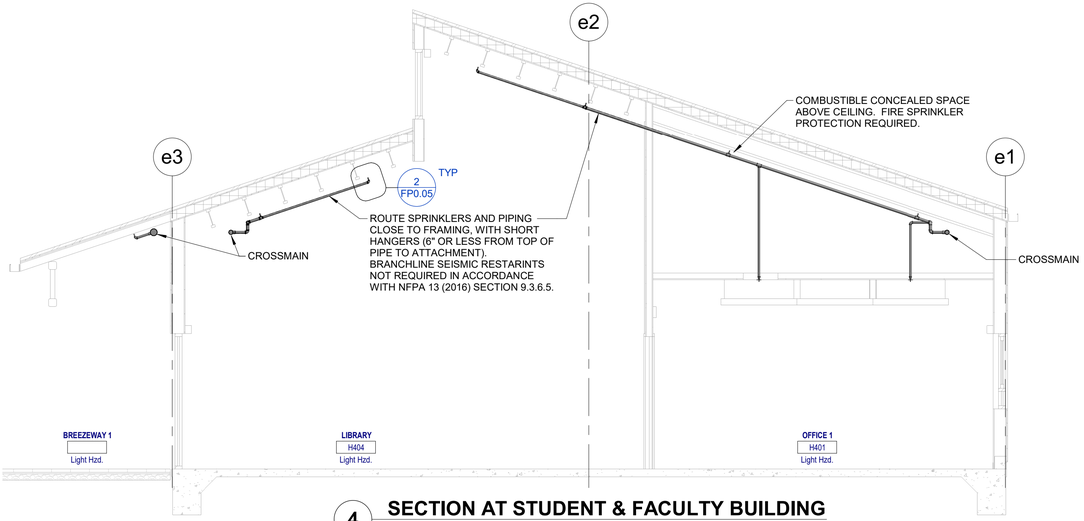

4 SECTION AT STUDENT & FACULTY BUILDING
1/4" = 1'-0"

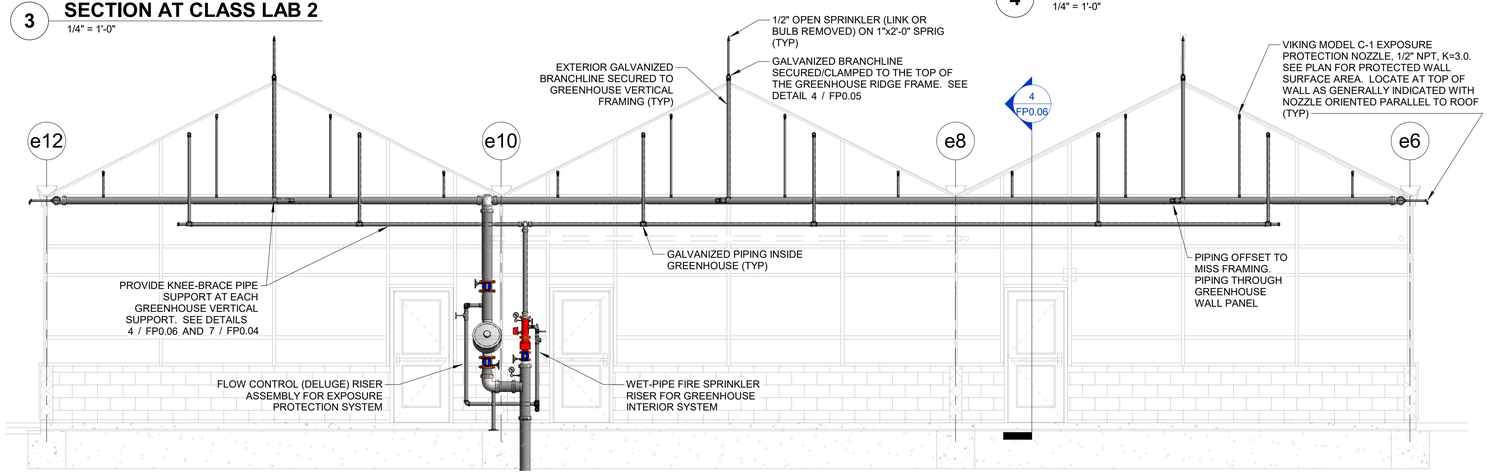

5 SECTION AT EAST GREENHOUSE
1/4" = 1'-0"

2/24/2022 10:52:42 AM

APPROVALS

IDENTIFICATION STAMP
DIV. OF THE STATE ARCHITECT
APP: 01-119409 INC:
REVIEWED FOR
SS ☑ FLS ☑ ACS ☑
DATE: 03/14/2022

NOLL & TAM ARCHITECTS
729 Heinz Avenue
Berkeley, CA 94710
tel 510.542.2200
fax 510.542.2201

SEAL

REGISTERED PROFESSIONAL ENGINEER
BRET B. TRESIDDER
No. 1165
Exp. 09/30/22
FIRE PROTECTION
STATE OF CALIFORNIA

HYT Corporation
3498 Clayton Road, Suite 101
Concord, CA 94519

PROJECT TITLE

Peralta Community College District
MERRITT COLLEGE NEW LANDSCAPE HORTICULTURE COMPLEX

12500 Campus Drive
Oakland, CA 94619

BID SET

ISSUE DATE 03/03/2022
N&T JOB NUMBER 22003

REVISIONS

	DATE	DESCRIPTION

DRAWN BY HYT | CHECKED BY

SHEET TITLE

FIRE SPRINKLER SECTIONS

SHEET NUMBER

FP3.32

ABBREVIATIONS

ABV	ABOVE
AFF	ABOVE FINISHED FLOOR
AP	ACCESS PANEL
-	-
BFP	BACK FLOW PREVENTOR
BLDG	BUILDING
BLW	BELOW
BSMT	BASEMENT
-	-
CFH	CUBIC FEET PER HOUR
CFM	CUBIC FEET PER MINUTE
CHP	CONCRETE HOUSEKEEPING PAD
CI	CAST IRON
℄	CENTER LINE
FCO	FLOOR CLEAN OUT
CO	CLEAN OUT
COL	COLUMN
COMP	COMPRESSOR
CONC	CONCRETE
CONN	CONNECTION
CONT	CONTINUED/CONTINUATION
CONTR	CONTRACTOR
CP	CONCRETE PIPE
CS	CUP SINK
CW	COLD WATER
°C	DEGREES CENTIGRADE
-	-
DCO	DOUBLE CLEAN OUT
DF	DRINKING FOUNTAIN
DIA	DIAMETER
DIAG	DIAGRAM
DISCH	DISCHARGE
DIW	DOWN IN WALL
DN	DOWN
DWG	DRAWING
-	-
(E)	EXISTING
EA	EACH
ELEV	ELEVATION
ENT	ENTERING
EQ	EQUAL
EQUIP	EQUIPMENT
EQUIV	EQUIVALENT
ETC	AND SO FORTH
EWC	ELECTRIC WATER COOLER
EW	EYE WASH
EXT	EXTERNAL
-	-
°F	DEGREES FAHRENHEIT
FA	FROM ABOVE
FB	FROM BELOW
FCO	FLOOR CLEAN OUT
FD	FLOOR DRAIN
FIN	FINISHED
FL	FLANGE
FLEX	FLEXIBLE
FLR	FLOOR
FP	FIRE PROTECTION
FPM	FEET PER MINUTE
FPS	FEET PER SECOND
FS	FLOW SWITCH
FT	FEET
FTB	FLOOR TO BOTTOM
FTC	FLOOR TO CENTERLINE
FPH	FROST PROOF HYDRANT
FXC	FLEXIBLE CONNECTION
-	-
GA	GAUGE
GALV	GALVANIZED
GC	GENERAL CONTRACTOR
GCO	GRADE CLEAN OUT
GPD	GALLONS PER DAY
GPH	GALLONS PER HOUR
GPM	GALLONS PER MINUTE
-	-
HT	HEIGHT
HB	HOSE BIBB
HD	HEAD (SEE SCHEDULES)
HR	HOUR
HTR	HEATER
HW	HOT WATER
HWR	HOT WATER RETURN
-	-
ID	INTERNAL DIAMETER
INCL	INCLUDING
INV	INVERT
-	-
K	TYPE OF COPPER TUBING
KGS	KITCHEN GREASE SANITARY
-	-
LT	LEVEL TRANSMITTER
LAV	LAVATORY
MAX	MAXIMUM
MC	MECHANICAL CONTRACTOR
MR	MOP RECEPTOR
MED	MEDIUM
MFR	MANUFACTURER
MIN	MINIMUM
MISC	MISCELLANEOUS
MTD	MOUNTED
M	TYPE OF COPPER TUBING
(N)	NEW
NC	NORMALLY CLOSED
NIC	NOT IN CONTRACT
NH	NO HUB
No	NUMBER
NO	NORMALLY OPEN
NPW	NON-POTABLE WATER
NOM	NOMINAL
NTS	NOT TO SCALE
OD	OUTSIDE DIMENSION
OPG	OPENING
OS	OPEN SITE
OT	OFF TOP
OZ	OUNCE
-	-
PART	PARTIAL
PDR	PLENUM DRAIN
PERF	PERFORATED
P-	PLUMBING FIXTURE IDENTIFICATION
PH	PHASE
PIV	POST INDICATOR VALVE
POS	POSITIVE
PRESS	PRESSURE
PS	PRESSURE SWITCH
PSI	POUNDS PER SQUARE INCH
PSIG	POUNDS PER SQUARE INCH GAUGE
PSIA	POUNDS PER SQUARE INCH ABSOLUTE
PT	PRESSURE TRANSMITTER
PV	PLUG VALVE
PVC	POLYVINYL CHLORIDE
PVS	POLYVINYL COATED STEEL
PC	PLUMBING CONTRACTOR
PI	PRESSURE INDICATOR
-	-
QUAN	QUANTITY
QD	QUICK DISCONNECT
-	-
RA	RETURN AIR
RAC	RUN ABOVE CEILING
RAF	RUN ABOVE FLOOR
RATC	RUN AT CEILING
RBC	RUN BELOW CEILING
RBF	RUN BELOW FLOOR
RBG	RUN BELOW GRADE
RBJ	RUN BETWEEN JOIST
RCP	REINFORCED CONCRETE PIPE
RD	ROOF DRAIN
REL	RELIEF
REQD	REQUIRED
RICW	RUN IN CASEWORK
RIE	RUN IN ENCLOSURE
RIW	RISE IN WALL
RM	ROOM
ROD	ROOF OVERFLOW DRAIN
-	-
SA	SHOCK ABSORBER
SAD	SEE ARCHITECTURAL DRAWINGS
SCH	SCHEDULE
SCHEM	SCHEMATIC
SED	SEE ELECTRICAL DRAWINGS
SH	SHOWER
SI/GI	SOLIDS/GREASE INTERCEPTOR
SK	SINK
S/S	SERVICE SINK
SPEC	SPECIFICATION
SQ	SQUARE
SS	STAINLESS STEEL
SSD	SEE STRUCTURAL DRAWINGS
SST	SUPPORT STEEL
STD	STANDARD
STL	STEEL
STR	STRUCTURAL
SUP	SUPPLY
SYS	SYSTEM
SIP	STEAM IN PLACE
S/SHO	SAFETY SHOWER
-	-
TDH	TOTAL DYNAMIC HEAD
TEMP	TEMPERATURE
TP	TOTAL PRESSURE
TT	TEMPERATURE TRANSMITTER
TYP	TYPICAL
TI	TEMPERATURE INDICATOR
-	-
UR	URINAL
-	-
VI	VIBRATION ISOLATOR
VTR	VENT THRU ROOF
-	-
W	WIDTH
W/	WITH
W/O	WITHOUT
WC	WATER CLOSET
WCO	WALL CLEAN OUT
WM	WATER METER
-	-

LINE DESIGNATIONS

(E)(NAME)	EXISTING PIPING TO REMAIN
(NAME)	EXISTING PIPING TO BE REMOVED
CW	DOMESTIC COLD WATER (CW)
	ALT. DOMESTIC COLD WATER (CW)
HW	DOMESTIC HOT WATER (HW)
	ALT. DOMESTIC HOT WATER (HW)
HWR	DOMESTIC HOT WATER RECIR. (HWR)
	ALT. DOMESTIC HOT WATER RECIR. (HWR)
SAN	SANITARY DRAIN
V	SANITARY VENT

GENERAL SYMBOLS

E	EXISTING EQUIPMENT TO REMAIN
R	EXISTING EQUIPMENT TO BE REMOVED
ER	EXISTING EQUIPMENT TO BE RELOCATED
RE	RELOCATED EXISTING EQUIPMENT
	TERMINATION POINT OF DEMOLITION
	CONNECT NEW TO EXISTING
	SHEET NOTE
	EQUIPMENT DESIGNATION

PLUMBING SYMBOLS

SYMBOL	DESCRIPTION
	TRAP FLOOR DRAIN
FCO	FLOOR CLEAN-OUT
WCO	WALL CLEAN-OUT
	HOT WATER HEATER

REFERENCE SYMBOLS

	CONNECT NEW TO EXISTING
	TERMINATION POINT OF DEMOLITION
	CONNECT TO MANUFACTURER'S PREPIPED CONNECTION
	POINT OF BEAM PENETRATION
	PREPURCHASED EQUIPMENT
X	STACK/VENT THRU ROOF NUMBER
X	SHEET NOTE NUMBER

REFERENCE SYMBOLS

X / X	EQUIPMENT (SEE SCHEDULE) / EQUIPMENT IDENTITY ABBREVIATION / EQUIPMENT NUMBER
X / X	INDICATES DETAIL LETTER (APPLIES ONLY WHERE INDICATED ON DRAWINGS) / INDICATES DRAWING ON WHICH DETAIL APPEARS
X / X	INDICATES SECTION NUMBER / INDICATES ON WHICH DRAWING SECTION APPEARS
X / X	INDICATES RISER DESIGNATION / INDICATES PIPE SIZE
X	INDICATES REVISION & NUMBER
X	LOCATION POINT FOR COORDINATION BETWEEN FLOOR PLANS & PIPING DIAGRAMS (NUMBER)

DRAWING INDEX

SHEET NUMBER	SHEET NAME
P0.01	PLUMBING - TITLE SHEET
P2.31	PLUMBING WATER FLOOR PLAN - WEST BUILDING GROUP
P2.32	PLUMBING WATER FLOOR PLAN - EAST BUILDING GROUP
P2.33	PLUMBING SANITARY FLOOR PLAN - WEST BUILDING GROUP
P2.34	PLUMBING SANITARY FLOOR PLAN - EAST BUILDING GROUP
P2.41	ROOF PLAN - WEST BUILDING GROUP
P2.42	ROOF PLAN - EAST BUILDING GROUP
P4.01	PLUMBING DETAILS
P4.02	PLUMBING DETAILS
P4.03	PLUMBING DETAILS
P4.04	PLUMBING DETAILS
P4.05	PLUMBING DETAILS
P6.01	PLUMBING - SCHEDULES
P6.02	PLUMBING SANITARY AND VENT ISOMETRIC

GENERAL PLUMBING NOTES

1. THE EXISTING PIPING INDICATED ON THESE PLANS SHALL BE VERIFIED IN THE FIELD FOR EXACT LOCATIONS, QUANTITY, AND PIPE SIZES.
2. THE PIPING INDICATED ON THESE PLANS ARE DIAGRAMATIC. ALL WORK SHALL BE COORDINATED WITH ALL OTHER TRADES PRIOR TO INSTALLATION. CONTRACTOR SHALL COORDINATE ROUTING OF ALL PIPING WITH EXISTING CONDITIONS AND SHALL PROVIDE ANY NECESSARY OFFSETS, REROUTING, TEES, ELBOWS, ETC. REQUIRED FOR A COMPLETE AND COORDINATED INSTALLATION.
3. ALL (SANITARY, GREASE) WASTE PIPING SHOWN IS BELOW SLAB, BELOW FLOOR, OR WITHIN WALLS UNLESS OTHERWISE NOTED.
4. ALL SANITARY VENT PIPING SHOWN IS ABOVE CEILING, EXPOSED OVERHEAD, OR WITHIN WALLS UNLESS OTHERWISE NOTED.
5. CONTRACTOR SHALL COORDINATE AND PROVIDE ALL NECESSARY PIPING & PLUMBING FITTINGS, PIPING, MISCELLANEOUS ITEMS REQUIRED FOR A COMPLETE INSTALLATION OF ALL PLUMBING RELATED ITEMS.
6. THE CONTRACTOR SHALL COORDINATE THE INSTALLATION OF UNDER SLAB PIPING WITH EXISTING SITE UTILITIES PIPING.
7. THE CONTRACTOR SHALL COORDINATE THE INSTALLATION OF ALL UNDER SLAB PIPING WITH THE STRUCTURAL FOUNDATION. REFER TO STRUCTURAL DRAWINGS FOR FURTHER COODINATION DETAILS INCLUDING BUT NOT LIMTED TO MINIMUM BURIAL DEPTHS, INFILL REQUIREMENTS, AND PENETRATION REQUIREMENTS.
8. UNDERGROUND UTILITY LOCATIONS SHALL BE VERIFIED PRIOR TO ANY WORK BEING PERFORMED. CONTRACTOR SHALL REPAIR OR REPLACE ALL PIPING NOT IN PROPER WORKING ORDER OR DAMAGED DURING INSTALLATION OF THE NEW UNDERGROUND PIPING.
9. ALL PLUMBING & PIPING SYSTEMS SHALL BE SUPPORTED AS REQUIRED BY THE LOCAL CODE REQUIREMENTS AND PER MANUFACTURER'S RECOMMENDATIONS.
10. ALL PIPING PENETRATIONS THROUGH NEW, EXISTING WALL, OR FLOOR SHALL BE SEALED TO EQUAL THE RATING AND FINISH OF THE NEW, EXISTING WALL OR FLOOR.
11. ALL COPPER WATER PIPING INSTALLED WITHIN BUILDING OR UNDER CONCRETE FLOOR SLAB SHALL BE INSTALLED WITHOUT JOINTS WHERE POSSIBLE. WHERE JOINTS ARE PERMITTED, THEY SHALL BE BRAZED AND FITTINGS SHALL BE WROUGHT COPPER.
12. THE PLUMBING SYSTEM SHALL BE TESTED AS REQUIRED BY LOCAL CODE OR BY THE REQUIREMENTS OF THE LOCAL PLUMBING INSPECTOR.
13. THE ENTIRE DOMESTIC WATER SYSTEM (EXISTING/NEW) SHALL BE DISINFECTED IN ACCORDANCE TO THE LOCAL CODE & HEALTH DEPARTMENT REQUIREMENTS.
14. EACH HORIZONTAL DRAINAGE PIPE SHALL BE PROVIDED WITH CLEANOUT AT ITS UPPER TERMINAL AND EACH RUN OF PIPING, THAT IS MORE THAN 50 FEET IN TOTAL DEVELOPED LENGHT, SHALL BE PROVIDED WITH CLEANOUT FOR EACH 50 FEET.
15. THE BACKFLOW PREVENTION DEVICE SHALL BE INSTALLED PER LOCAL CODE & PER AUTHORITY HAVING JURISDICTION REQUIREMENTS.
16. ALL (VTR'S) VENT THRU ROOF PENETRATIONS INDICATED ON PLANS ARE PRELIMINARY. FINAL LOCATIONS SHALL BE COORDINATED WITH ALL TRADES. ALL VTR'S SHALL BE A MINIMUM OF 10'-0" FROM ALL FRESH AIR INTAKE OPENINGS.
17. THE FULL PROJECT SCOPE FOR THIS PROJECT IS DESCRIBED IN THE PROJECT DRAWINGS, SPECIFICATIONS OR BOTH IN SOME SITUATIONS. WHEREVER A CONFLICT OCCURS BETWEEN THE PROJECT SPECIFICATIONS, DRAWINGS OR OTHER DESIGN DOCUMENTS, THE CONFLICT SHALL BE BROUGHT TO THE ARCHITECT'S ATTENTION. IN SUCH SITUATIONS, THE MOST STRINGENT CONDITION SHALL APPLY TO BIDDING AND DESIGN UNLESS OTHER DIRECTION IS PROVIDED BY THE ARCHITECTS OR ENGINEERS OF RECORD FOR THE PROJECT.
18. ALL ASPECTS OF THE PROJECT INSTALLATION SHALL COMPLY WITH APPLICABLE CODES AND LOCAL INSPECTOR REQUIREMENTS INCLUDING BUT NOT LIMITED TO:
    - 2019 CALIFORNIA BUILDING CODE (CBC)
    - 2019 CALIFORNIA ELECTRICAL CODE (CEC)
    - 2019 CALIFORNIA MECHANICAL CODE (CMC)
    - 2019 CALIFORNIA PLUMBING CODE (CPC)
    - 2019 CALIFORNIA ENERGY CONSERVATION CODE (CECC)
    - 2019 CALIFORNIA FIRE CODE (CFC)
    - 2019 CALIFORNIA GREEN BUILDING CODE (CBGC)
    - DIVISION OF STATE ARCHITECTS

MEP COMPONENT ANCHORAGE NOTE

ALL MECHANICAL, PLUMBING, AND ELECTRICAL COMPONENTS SHALL BE ANCHORED AND INSTALLED PER THE DETAILS ON THE DSA-APPROVED CONSTRUCTION DOCUMENTS. THE FOLLOWING COMPONENTS SHALL BE ANCHORED OR BRACED TO MEET THE FORCE AND DISPLACEMENT REQUIREMENTS PRESCRIBED IN THE 2019 CBC SECTIONS 1617A.1.18 THROUGH 1617A.1.26 AND ASCE 7-16 CHAPTERS 13, 26, AND 30:

1. ALL PERMANENT EQUIPMENT AND COMPONENTS.
2. TEMPORARY, MOVABLE OR MOBILE EQUIPMENT THAT IS PERMANENTLY ATTACHED (E.G. HARD WIRED) TO THE BUILDING UTILITY SERVICES SUCH AS ELECTRICITY, GAS OR WATER. "PERMANENTLY ATTACHED" SHALL INCLUDE ALL ELECTRICAL CONNECTIONS EXCEPT PLUGS FOR 110/220 VOLT RECEPTACLES HAVING A FLEXIBLE CABLE.
3. TEMPORARY, MOVABLE OR MOBILE EQUIPMENT WHICH IS HEAVIER THAN 400 POUNDS OR HAS A CENTER OF MASS LOCATED 4 FEET OR MORE ABOVE THE ADJACENT FLOOR OR ROOF LEVEL THAT DIRECTLY SUPPORT THE COMPONENT IS REQUIRED TO BE RESTRAINED IN A MANNER APPROVED BY DSA.

THE FOLLOWING MECHANICAL AND ELECTRICAL COMPONENTS SHALL BE POSITIVELY ATTACHED TO THE STRUCTURE BUT NEED NOT DEMONSTRATE DESIGN COMPLIANCE WITH THE REFERENCES NOTED ABOVE. THESE COMPONENTS SHALL HAVE FLEXIBLE CONNECTIONS PROVIDED BETWEEN THE COMPONENT AND ASSOCIATED DUCTWORK, PIPING, AND CONDUIT. FLEXIBLE CONNECTIONS MUST ALLOW MOVEMENT IN BOTH TRANSVERSE AND LONGITUDINAL DIRECTIONS:

A. COMPONENTS WEIGHING LESS THAN 400 POUNDS AND HAVING A CENTER OF MASS LOCATED 4 FEET OR LESS ABOVE THE ADJACENT FLOOR OR ROOF LEVEL THAT DIRECTLY SUPPORT THE COMPONENT.

B. COMPONENTS WEIGHING LESS THAN 20 POUNDS, OR IN THE CASE OF DISTRIBUTED SYSTEMS, LESS THAN 5 POUNDS PER FOOT, WHICH ARE SUSPENDED FROM A ROOF OR FLOOR OR HUNG FROM A WALL.

THE ANCHORAGE OF ALL MECHANICAL, ELECTRICAL AND PLUMBING COMPONENTS SHALL BE SUBJECT TO THE APPROVAL OF THE DESIGN PROFESSIONAL IN GENERAL RESPONSIBLE CHARGE OR STRUCTURAL ENGINEER DELEGATED RESPONSIBILITY AND ACCEPTANCE BY DSA. THE PROJECT INSPECTOR WILL VERIFY THAT ALL COMPONENTS AND EQUIPMENT HAVE BEEN ANCHORED IN ACCORDANCE WITH THE ABOVE REQUIREMENTS.

PIPING, DUCTWORK, AND ELECTRICAL DISTRIBUTION SYSTEM BRACING NOTE

PIPING, DUCTWORK, AND ELECTRICAL DISTRIBUTION SYSTEMS SHALL BE BRACED TO COMPLY WITH THE FORCES AND DISPLACEMENTS PRESCRIBED IN ASCE 7-16 SECTION 13.3 AS DEFINED IN ASCE 7-16 SECTIONS 13.6.5, 13.6.6, 13.6.7, 13.6.8; AND 2019 CBC, SECTIONS 1617A.1.24, 1617A.1.25 AND 1617A.1.26.

THE METHOD OF SHOWING BRACING AND ATTACHMENTS TO THE STRUCTURE FOR THE IDENTIFIED DISTRIBUTION SYSTEM ARE AS NOTED BELOW. WHEN BRACING AND ATTACHMENTS ARE BASED ON A PREAPPROVED INSTALLATION GUIDE (E.G., OSHPD OPM FOR 2013 CBC OR LATER), COPIES OF THE BRACING SYSTEM INSTALLATION GUIDE OR MANUAL SHALL BE AVAILABLE ON THE JOBSITE PRIOR TO THE START OF AND DURING THE HANGING AND BRACING OF THE DISTRIBUTION SYSTEMS. THE STRUCTURAL ENGINEER OF RECORD SHALL VERIFY THE ADEQUACY OF THE STRUCTURE TO SUPPORT THE HANGER AND BRACE LOADS.

MECHANICAL PIPING (MP), MECHANICAL DUCTS (MD), PLUMBING PIPING (PP), ELECTRICAL DISTRIBUTION SYSTEMS (E):

MP ☐ MD ☐ PP ☒ E ☐ OPTION 1: DETAILED ON THE APPROVED DRAWINGS WITH PROJECT SPECIFIC NOTES AND DETAILS.

MP ☐ MD ☐ PP ☐ E ☐ OPTION 2: SHALL COMPLY WITH THE APPLICABLE OSHPD PRE-APPROVAL (OPM #) #_____.

APPROVALS

IDENTIFICATION STAMP
DIV. OF THE STATE ARCHITECT
APP: 01-119409 INC:
REVIEWED FOR
SS ☑ FLS ☑ ACS ☑
DATE: 03/14/2022

NOLL & TAM ARCHITECTS
729 Heinz Avenue
Berkeley, CA 94710
tel 510.542.2200
fax 510.542.2201

SEAL

REGISTERED PROFESSIONAL ENGINEER
TYLER BRADSHAW
M33496
EXP. 06/30/2022
MECHANICAL
STATE OF CALIFORNIA

BLUE FOREST ENGINEERING
3622 Kingsley Street
Oakland, CA 94610
tel 510.925.8224

PROJECT TITLE

Peralta Community College District
MERRITT COLLEGE NEW LANDSCAPE HORTICULTURE COMPLEX

12500 Campus Drive
Oakland, CA 94619

BID SET

ISSUE DATE	03/03/2022
N&T JOB NUMBER	22003

REVISIONS

	DATE	DESCRIPTION

DRAWN BY	S.A.
CHECKED BY	T.B.

SHEET TITLE

PLUMBING TITLE SHEET

SHEET NUMBER

P0.01

7/13/2020 5:38:18 PM BIM 360://PCCD Merritt Horticulture/Merritt Horticulture_2020.rvt

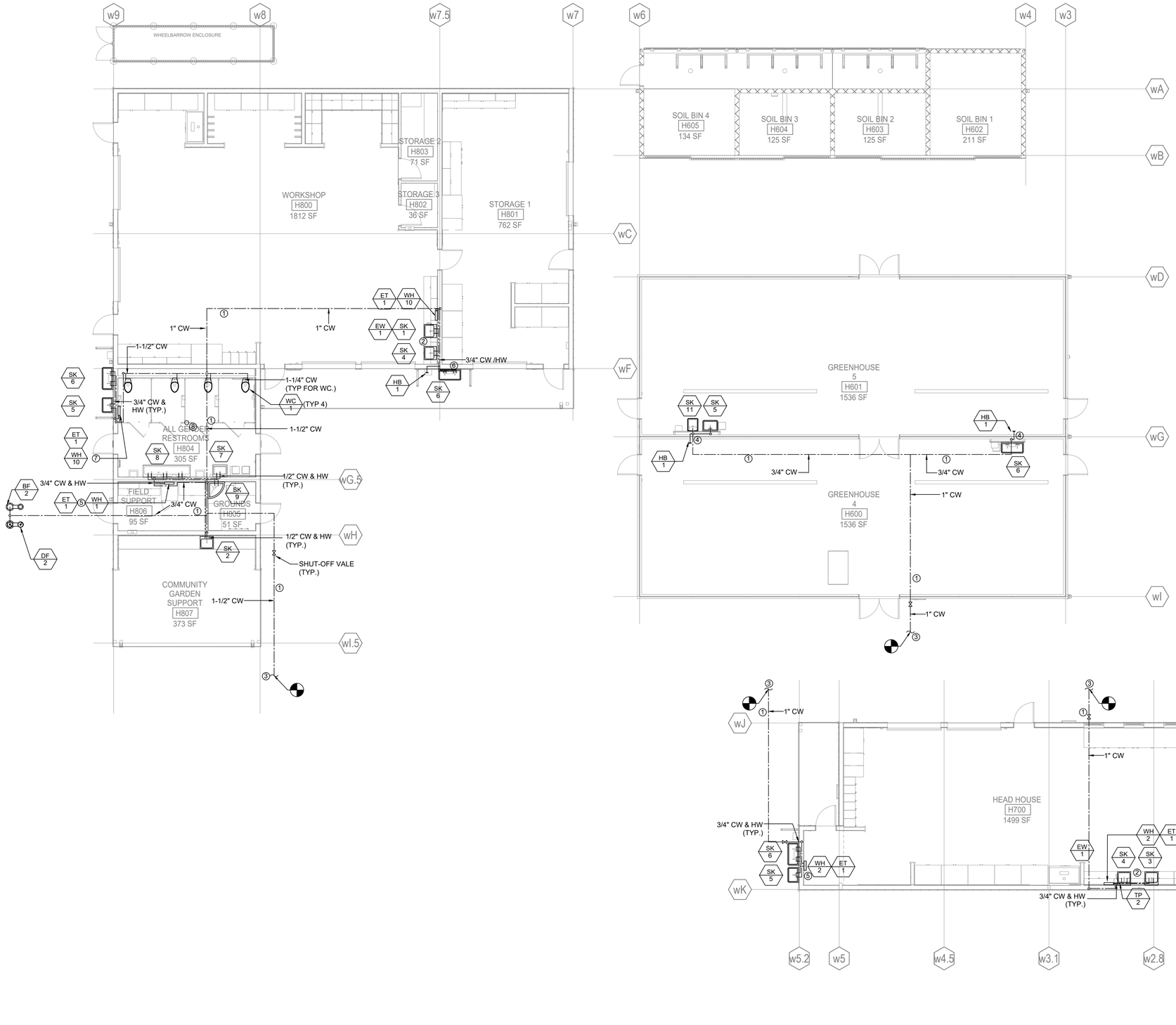

1 PLUMBING WATER FLOOR PLAN - WEST BUILDING GROUP
P2.31 1/8" = 1'-0"

GENERAL NOTES

1. DRAWINGS ARE DIAGRAMMATIC IN NATURE. PLEASE REFER TO PROJECT SPECIFICATIONS, DETAILS AND EQUIPMENT INSTALLATION MANUALS FOR ADDITIONAL INSTALLATION REQUIREMENTS.
2. COORDINATE ROUTING PRIOR TO INSTALLATION.
3. THE LAST PIPE BRANCH SIZE IS NOT SHOWN FOR DRAWING CLARITY. REFER TO THE "PLUMBING FIXTURE SCHEDULE" ON SHEET P0.02 FOR THE MINIMUM ALLOWED PIPE SIZE FOR FINAL BRANCHES TO EACH FIXTURE. WHERE A LARGER BRANCH SIZE IS INDICATED OTHERWISE ON DRAWINGS, THE LARGER INDICATED SIZE SHALL BE USED.

SHEET NOTES

1. PIPING IS RUNNING BELOW SLAB.
2. PIPING MAY BE ROUTED EXPOSED INSIDE CASEWORK, WHERE ABSOLUTELY NECESSARY TO AVOID STRUCTURAL POSTS AND OTHER ELEMENTS WITH PENETRATION PROHIBITIONS.
3. REFER TO CIVIL DRAWINGS FOR CONTINUATION OF WATER SITE CONNECTION.
4. EXPOSED PIPING, COORDINATE ROUTE WITH GREENHOUSE ELEMENTS AND ASSOCIATED STRUCTURE INCLUDING BUT NOT LIMITED TO MOVEABLE SHADE CLOTH SYSTEM, OPERABLE ROOF VENTS, LIGHTING AND MECHANICAL HEATING/VENTILATION SYSTEMS.
5. MOUNT WATER HEATER ON WALL WITH BOTTOM OF HEATER 7'6" AFF.
6. PIPING ROUTED WALL MOUNTED WHERE NEEDED TO AVOID POSTS AND SHEAR WALL. CONCEAL AS MUCH PIPING AS POSSIBLE BELOW OR BEHIND SINK WALL PLATES TO MINIMIZE EXTEND OF VISIBLE PIPING. HOLES MAY BE CUT INTO THE SIDE OF STAINLESS STEEL SINK BACKSPLASH TO HELP CONCEAL PIPING.
7. MOUNT WATER HEATER IN CEILING CAVITY ABOVE WITH 24X24 ACCESS DOOR, A MINIMUM OF 30" CLEARANCE IN FRONT OF WATER HEATER AND DISCONNECT. COORDINATE REQUIRED CLEARANCES AND ACCESS DOOR PLACEMENT WITH RCP AND OTHER TRADES PRIOR TO INSTALLING PIPING OR WATER HEATER.
8. ROUTE TRAP PRIMER TO THIS DRAIN.

APPROVALS

IDENTIFICATION STAMP
DIV. OF THE STATE ARCHITECT
APP: 01-119409 INC:
REVIEWED FOR
SS ☑ FLS ☑ ACS ☑
DATE: 03/14/2022

NOLL & TAM ARCHITECTS
729 Heinz Avenue
Berkeley, CA 94710
tel 510.542.2200
fax 510.542.2201

SEAL

REGISTERED PROFESSIONAL ENGINEER
TYLER BRADSHAW
M33496
EXP. 06/30/2022
MECHANICAL
STATE OF CALIFORNIA

BLUE FOREST ENGINEERING
3622 Kingsley Street
Oakland, CA 94610
tel 510.925.8224

PROJECT TITLE

Peralta Community College District
MERRITT COLLEGE NEW LANDSCAPE HORTICULTURE COMPLEX

12500 Campus Drive
Oakland, CA 94619

BID SET

ISSUE DATE	03/03/2022
N&T JOB NUMBER	22003

REVISIONS

#	DATE	DESCRIPTION

DRAWN BY S.A. | CHECKED BY T.B.

SHEET TITLE
PLUMBING WATER FLOOR PLAN - WEST BUILDING GROUP

SHEET NUMBER
P2.31

7/13/2020 5:38:18 PM BIM 360://PCCD Merritt Horticulture/Merritt Horticulture_2020.rvt

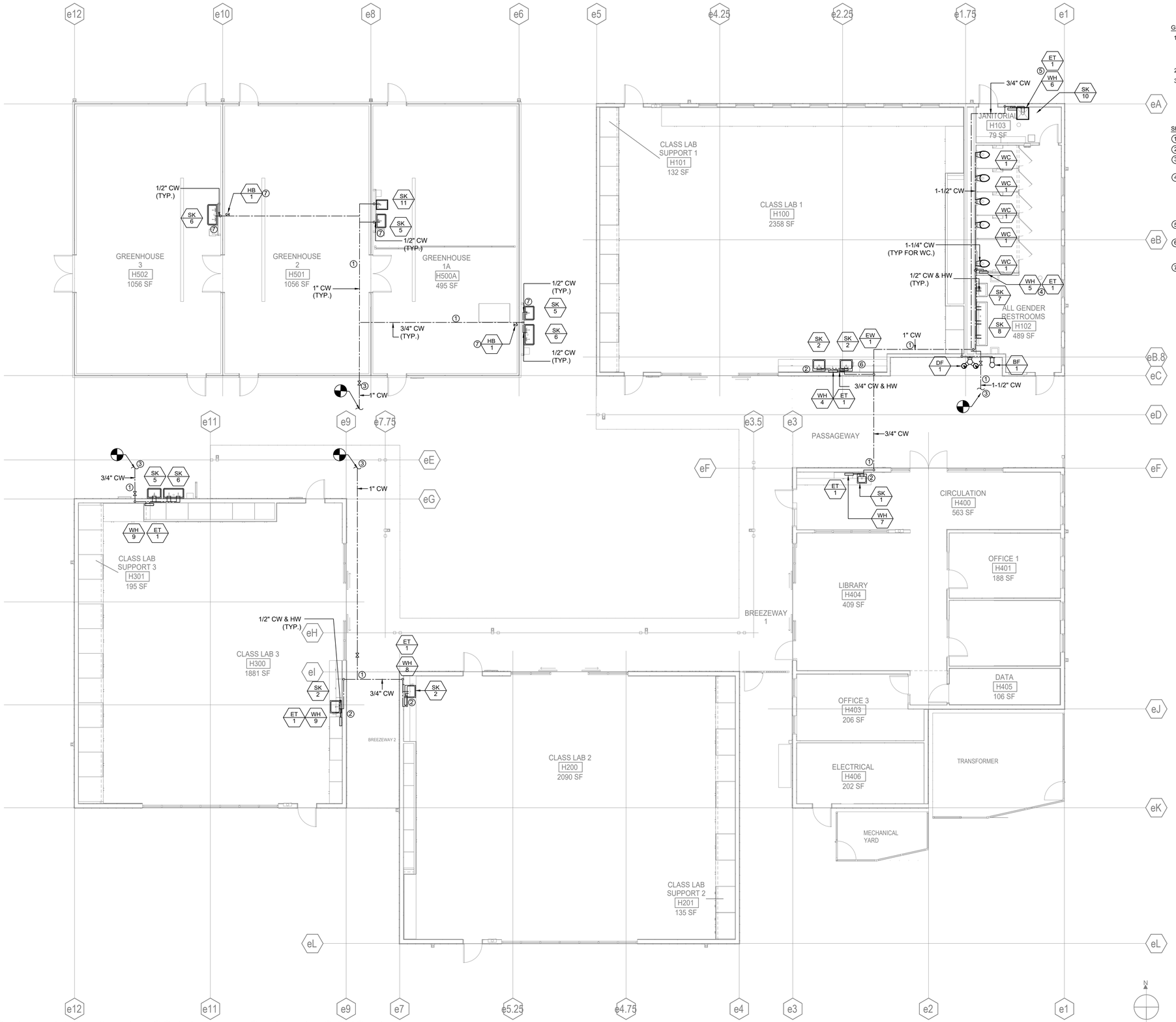

1. GENERAL NOTES

1. DRAWINGS ARE DIAGRAMMATIC IN NATURE. PLEASE REFER TO PROJECT SPECIFICATIONS, DETAILS AND EQUIPMENT INSTALLATION MANUALS FOR ADDITIONAL INSTALLATION REQUIREMENTS.
2. COORDINATE ROUTING PRIOR TO INSTALLATION.
3. THE LAST PIPE BRANCH SIZE IS NOT SHOWN FOR DRAWING CLARITY. REFER TO THE "PLUMBING FIXTURE SCHEDULE" ON SHEET P0.02 FOR THE MINIMUM ALLOWED PIPE SIZE FOR FINAL BRANCHES TO EACH FIXTURE. WHERE A LARGER BRANCH SIZE IS INDICATED OTHERWISE ON DRAWINGS, THE LARGER INDICATED SIZE SHALL BE USED.

SHEET NOTES

1. PIPING IS RUNNING BELOW SLAB.
2. PIPES RUNNING UNDER COUNTER.
3. REFER TO CIVIL DRAWINGS FOR CONTINUATION OF WATER SITE CONNECTION.
4. MOUNT WATER HEATER IN CEILING CAVITY ABOVE WITH 24X24 ACCESS DOOR. A MINIMUM OF 30" CLEARANCE IN FRONT OF WATER HEATER AND DISCONNECT. COORDINATE REQUIRED CLEARANCES AND ACCESS DOOR PLACEMENT WITH RCP AND OTHER TRADES PRIOR TO INSTALLING PIPING OR WATER HEATER.
5. MOUNT WATER HEATER ON WALL WITH BOTTOM OF HEATER 6'0" AFF.
6. PIPING MAY BE ROUTED EXPOSED INSIDE CASEWORK, ABSOLUTELY NECESSARY TO AVOID STRUCTURAL POSTS AND OTHER ELEMENTS WITH PENETRATION PROHIBITIONS.
7. EXPOSED PIPING, COORDINATE ROUTE WITH GREENHOUSE ELEMENTS AND ASSOCIATED STRUCTURE INCLUDING BUT NOT LIMITED TO MOVEABLE SHADE CLOTH SYSTEM, OPERABLE ROOF VENTS, LIGHTING AND MECHANICAL HEATING/VENTILATION SYSTEMS.

1 PLUMBING WATER FLOOR PLAN - EAST BUILDING GROUP

P2.32 1/8" = 1'-0"

APPROVALS

IDENTIFICATION STAMP
DIV. OF THE STATE ARCHITECT
APP: 01-119409 INC:
REVIEWED FOR
SS ☑ FLS ☑ ACS ☑
DATE: 03/14/2022

NOLL & TAM ARCHITECTS
729 Heinz Avenue
Berkeley, CA 94710
tel 510.542.2200
fax 510.542.2201

SEAL

REGISTERED PROFESSIONAL ENGINEER
TYLER BRADSHAW
M33496
EXP. 06/30/2022
MECHANICAL
STATE OF CALIFORNIA

BLUE FOREST ENGINEERING
3622 Kingsley Street
Oakland, CA 94610
tel 510.925.8224

PROJECT TITLE

Peralta Community College District
MERRITT COLLEGE NEW LANDSCAPE HORTICULTURE COMPLEX

12500 Campus Drive
Oakland, CA 94619

BID SET

ISSUE DATE	03/03/2022
N&T JOB NUMBER	22003

REVISIONS

#	DATE	DESCRIPTION

DRAWN BY S.A. | CHECKED BY T.B.

SHEET TITLE
PLUMBING WATER FLOOR PLAN - EAST BUILDING GROUP

SHEET NUMBER
P2.32

7/13/2020 5:38:18 PM BIM 360://PCCD Merritt Horticulture/Merritt Horticulture_2020.rvt

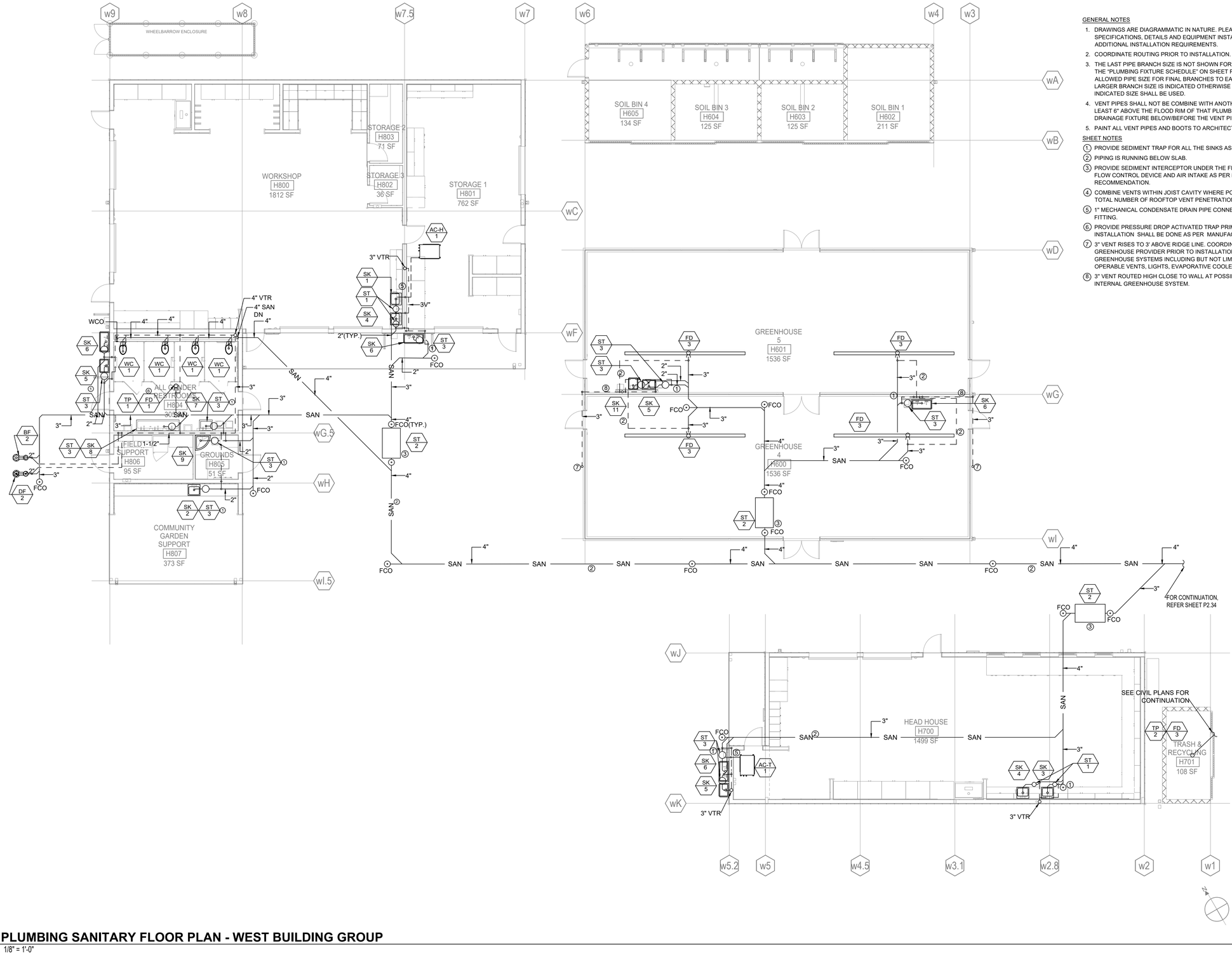

GENERAL NOTES

1. DRAWINGS ARE DIAGRAMMATIC IN NATURE. PLEASE REFER TO PROJECT SPECIFICATIONS, DETAILS AND EQUIPMENT INSTALLATION MANUALS FOR ADDITIONAL INSTALLATION REQUIREMENTS.
2. COORDINATE ROUTING PRIOR TO INSTALLATION.
3. THE LAST PIPE BRANCH SIZE IS NOT SHOWN FOR DRAWING CLARITY. REFER TO THE 'PLUMBING FIXTURE SCHEDULE' ON SHEET P0.02 FOR THE MINIMUM ALLOWED PIPE SIZE FOR FINAL BRANCHES TO EACH FIXTURE. WHERE A LARGER BRANCH SIZE IS INDICATED OTHERWISE ON DRAWINGS, THE LARGER INDICATED SIZE SHALL BE USED.
4. VENT PIPES SHALL NOT BE COMBINE WITH ANOTHER VENT PIPE UNTIL IT IS AT LEAST 6" ABOVE THE FLOOD RIM OF THAT PLUMBING FIXTURE.USE ONLY DRAINAGE FIXTURE BELOW/BEFORE THE VENT PIPES.
5. PAINT ALL VENT PIPES AND BOOTS TO ARCHITECT'S CHOICE OF COLORS.

SHEET NOTES

1. PROVIDE SEDIMENT TRAP FOR ALL THE SINKS AS SHOWN.
2. PIPING IS RUNNING BELOW SLAB.
3. PROVIDE SEDIMENT INTERCEPTOR UNDER THE FLOOR AS SHOWN. PROVIDE FLOW CONTROL DEVICE AND AIR INTAKE AS PER MANUFACTURER'S RECOMMENDATION.
4. COMBINE VENTS WITHIN JOIST CAVITY WHERE POSSIBLE TO MINIMIZE THE TOTAL NUMBER OF ROOFTOP VENT PENETRATION.
5. 1" MECHANICAL CONDENSATE DRAIN PIPE CONNECTED TO SINK WITH AIR GAP FITTING.
6. PROVIDE PRESSURE DROP ACTIVATED TRAP PRIMER FOR FLOOR DRAIN. INSTALLATION SHALL BE DONE AS PER MANUFACTURER'S RECOMMENDATION.
7. 3" VENT RISES TO 3' ABOVE RIDGE LINE. COORDINATE ALL VENT LINES WITH GREENHOUSE PROVIDER PRIOR TO INSTALLATION, ROUTING VENT TO AVOID GREENHOUSE SYSTEMS INCLUDING BUT NOT LIMITED TO SHADE SCREENS, OPERABLE VENTS, LIGHTS, EVAPORATIVE COOLERS AND HEATERS.
8. 3" VENT ROUTED HIGH CLOSE TO WALL AT POSSIBLE ELEVATION THAT AVOID INTERNAL GREENHOUSE SYSTEM.

1 P2.33 **PLUMBING SANITARY FLOOR PLAN - WEST BUILDING GROUP**
1/8" = 1'-0"

APPROVALS

IDENTIFICATION STAMP
DIV. OF THE STATE ARCHITECT
APP: 01-119409 INC:
REVIEWED FOR
SS ☑ FLS ☑ ACS ☑
DATE: 03/14/2022

NOLL & TAM ARCHITECTS
729 Heinz Avenue
Berkeley, CA 94710
tel 510.542.2200
fax 510.542.2201

SEAL

REGISTERED PROFESSIONAL ENGINEER
TYLER BRADSHAW
M33496
EXP. 06/30/2022
MECHANICAL
STATE OF CALIFORNIA

BLUE FOREST ENGINEERING
3622 Kingsley Street
Oakland, CA 94610
tel 510.925.8224

PROJECT TITLE

Peralta Community College District
MERRITT COLLEGE NEW LANDSCAPE HORTICULTURE COMPLEX

12500 Campus Drive
Oakland, CA 94619

BID SET

ISSUE DATE	03/03/2022
N&T JOB NUMBER	22003

REVISIONS

#	DATE	DESCRIPTION

DRAWN BY **S.A.** CHECKED BY **T.B.**

SHEET TITLE
PLUMBING SANITARY FLOOR PLAN - WEST BUILDING GROUP

SHEET NUMBER
P2.33

7/13/2020 5:38:18 PM BIM 360://PCCD Merritt Horticulture/Merritt Horticulture_2020.rvt

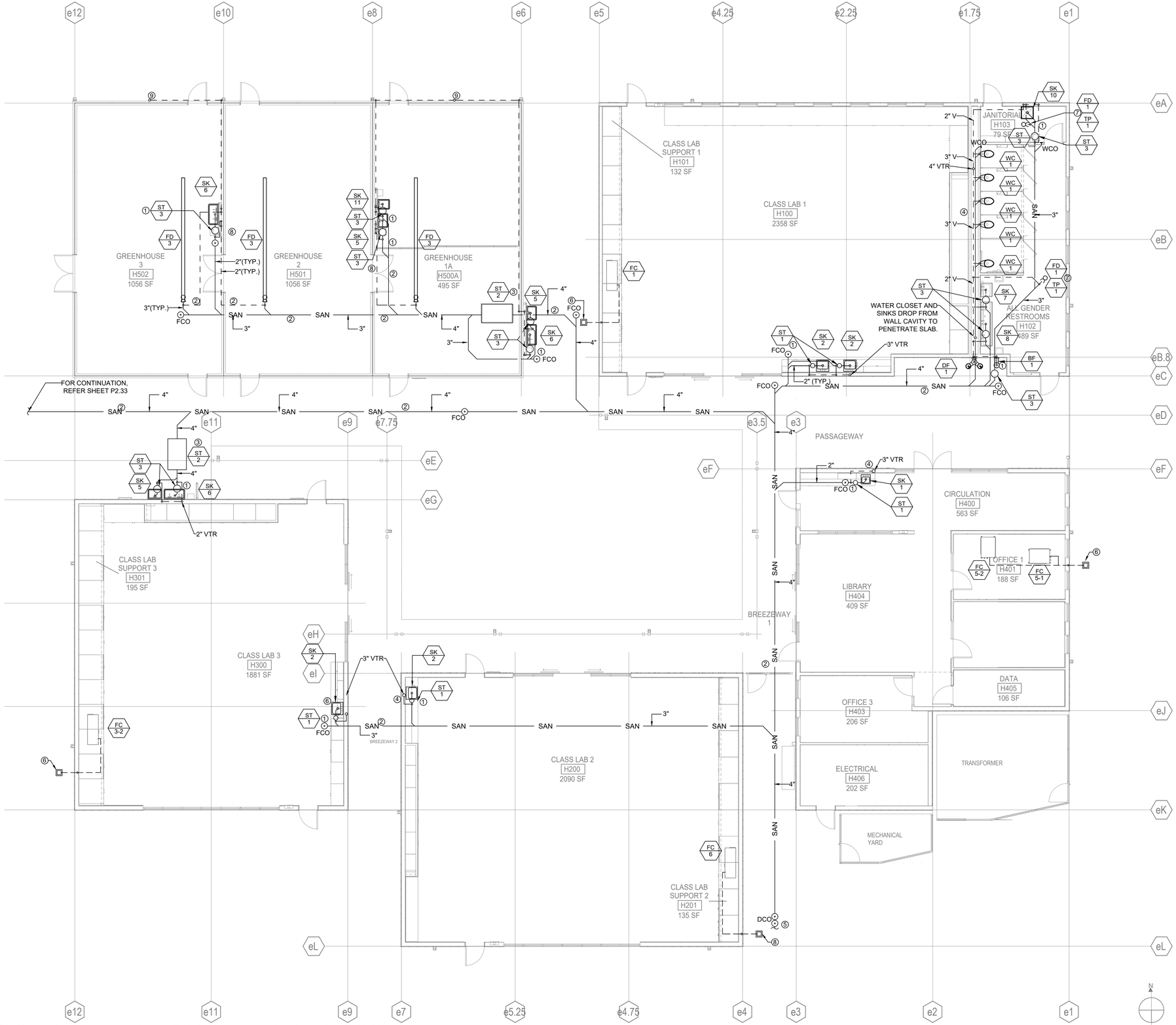

1 P2.34 **PLUMBING SANITARY FLOOR PLAN - EAST BUILDING GROUP**
1/8" = 1'-0"

7/13/2020 5:38:18 PM BIM 360://PCCD Merritt Horticulture/Merritt Horticulture_2020.rvt

GENERAL NOTES

1. DRAWINGS ARE DIAGRAMMATIC IN NATURE. PLEASE REFER TO PROJECT SPECIFICATIONS, DETAILS AND EQUIPMENT INSTALLATION MANUALS FOR ADDITIONAL INSTALLATION REQUIREMENTS.
2. COORDINATE ROUTING PRIOR TO INSTALLATION.
3. THE LAST PIPE BRANCH SIZE IS NOT SHOWN FOR DRAWING CLARITY. REFER TO THE "PLUMBING FIXTURE SCHEDULE" ON SHEET P0.02 FOR THE MINIMUM ALLOWED PIPE SIZE FOR FINAL BRANCHES TO EACH FIXTURE. WHERE A LARGER BRANCH SIZE IS INDICATED OTHERWISE ON DRAWINGS, THE LARGER INDICATED SIZE SHALL BE USED.
4. VENT PIPES SHALL NOT BE COMBINE WITH ANOTHER VENT PIPE UNTIL IT IS AT LEAST 6" ABOVE THE FLOOD RIM OF THAT PLUMBING FIXTURE.USE ONLY DRAINAGE FIXTURE BELOW/BEFORE THE VENT PIPES.
5. PAINT ALL EXPOSED VENT PIPES AND BOOTS TO ARCHITECT'S CHOICE OF COLORS.

SHEET NOTES

1. PROVIDE SEDIMENT TRAP FOR ALL THE SINKS AS SHOWN.
2. PIPE IS RUNNING BELOW SLAB.
3. PROVIDE SEDIMENT TRAP UNDER THE FLOOR AS SHOWN. PROVIDE FLOW CONTROL DEVICE AND AIR INTAKE AS PER MANUFACTURER'S RECOMMENDATION.
4. COMBINE VENTS WITHIN JOIST CAVITY WHERE POSSIBLE TO MINIMIZE THE TOTAL NUMBER OF ROOFTOP VENT PENETRATION.
5. REFER TO CIVIL DRAWINGS FOR CONTINUATION OF SEWER SITE CONNECTION.
6. PROVIDE CONDENSATE DRY WELL TO ACCEPT CONDENSATE FROM FANCOIL(S). SEE PLUMBING DETAILS FOR CONNECTION AND CONSTRUCTION DETAILING. SEE MECHANICAL PLANS FOR FANCOIL PLACEMENT AND ORIENTATION FOR EACH LOCATION.
7. PROVIDE PRESSURE DROP ACTIVATED TRAP PRIMER FOR FLOOR DRAIN. INSTALLATION SHALL BE DONE AS PER MANUFACTURER'S RECOMMENDATION.
8. EXPOSED PIPING, COORDINATE ROUTE WITH GREENHOUSE ELEMENTS AND ASSOCIATED STRUCTURE INCLUDING BUT NOT LIMITED TO MOVEABLE SHADE CLOTH SYSTEM, OPERABLE ROOF VENTS, LIGHTING AND MECHANICAL HEATING/VENTILATION SYSTEMS.
9. 3" VENT RISES TO 3' ABOVE RIDGE LINE. COORDINATE ALL VENT LINES WITH GREENHOUSE PROVIDER PRIOR TO INSTALLATION. ROUTING VENT TO AVOID GREENHOUSE SYSTEMS INCLUDING BUT NOT LIMITED TO SHADE SCREENS, OPERABLE VENTS, LIGHTS, EVAPORATIVE COOLERS AND HEATERS.

APPROVALS

IDENTIFICATION STAMP
DIV. OF THE STATE ARCHITECT
APP: 01-119409 INC:
REVIEWED FOR
SS ☑ FLS ☑ ACS ☑
DATE: 03/14/2022

NOLL & TAM ARCHITECTS
729 Heinz Avenue
Berkeley, CA 94710
tel 510.542.2200
fax 510.542.2201

SEAL

REGISTERED PROFESSIONAL ENGINEER
TYLER BRADSHAW
M33496
EXP. 06/30/2022
MECHANICAL
STATE OF CALIFORNIA

BLUE FOREST ENGINEERING
3622 Kingsley Street
Oakland, CA 94610
tel 510.925.8224

PROJECT TITLE

Peralta Community College District
MERRITT COLLEGE NEW LANDSCAPE HORTICULTURE COMPLEX

12500 Campus Drive
Oakland, CA 94619

BID SET

ISSUE DATE	03/03/2022
N&T JOB NUMBER	22003

REVISIONS

#	DATE	DESCRIPTION

DRAWN BY **S.A.** CHECKED BY **T.B.**

SHEET TITLE
PLUMBING SANITARY FLOOR PLAN - EAST BUILDING GROUP

SHEET NUMBER
P2.34

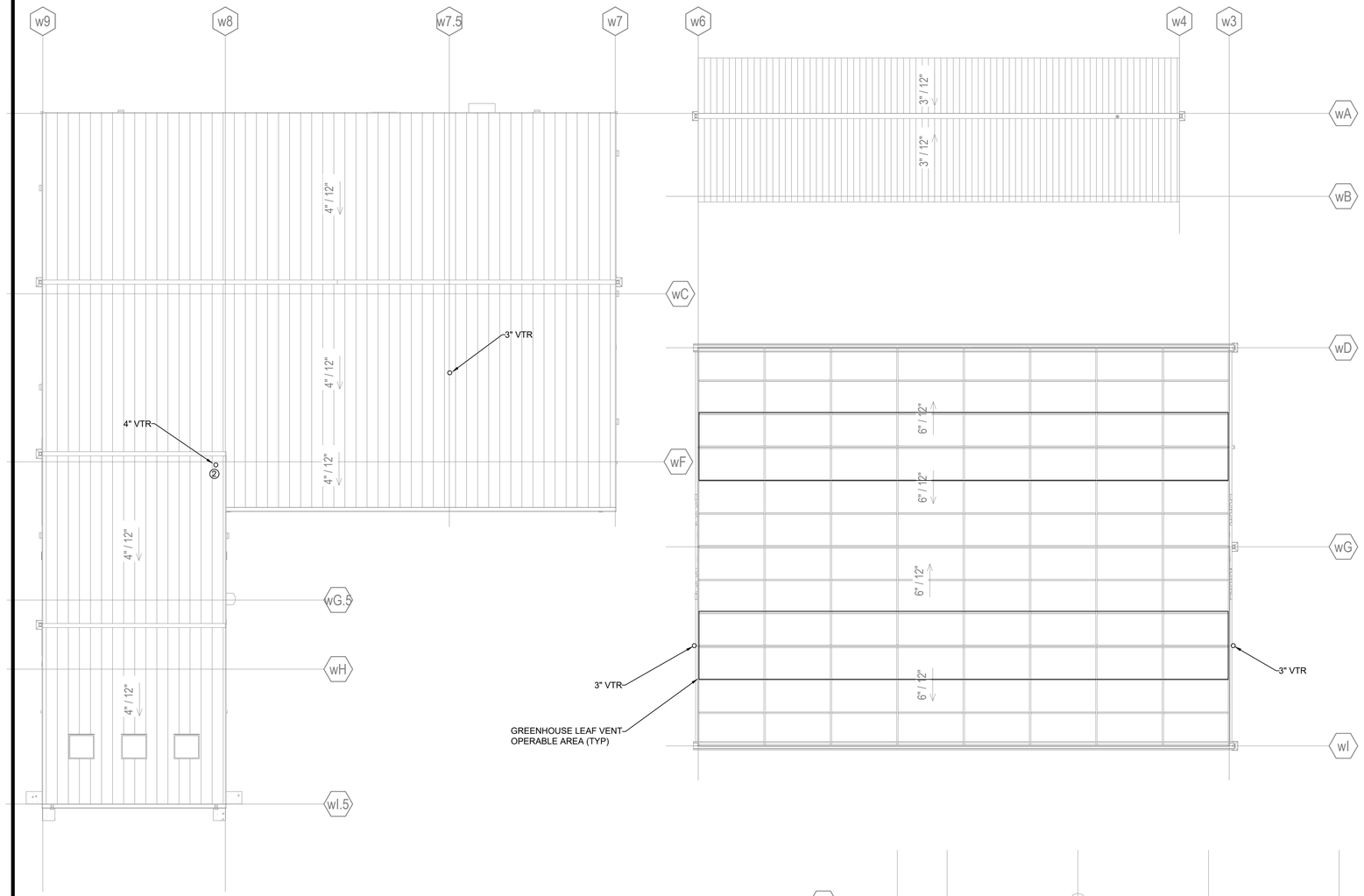

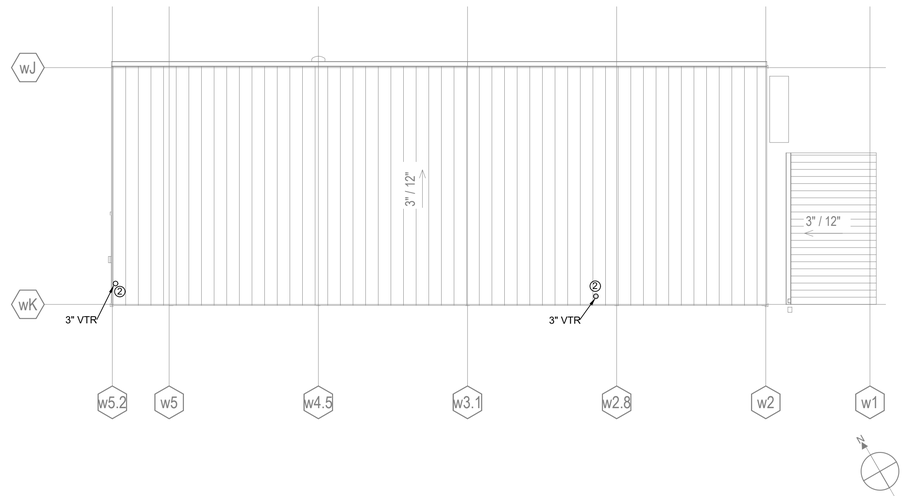

GENERAL NOTES

1. DRAWINGS ARE DIAGRAMMATIC IN NATURE. PLEASE REFER TO PROJECT SPECIFICATIONS, DETAILS AND EQUIPMENT INSTALLATION MANUALS FOR ADDITIONAL INSTALLATION REQUIREMENTS.
2. COORDINATE ROUTING PRIOR TO INSTALLATION.
3. THE LAST PIPE BRANCH SIZE IS NOT SHOWN FOR DRAWING CLARITY. REFER TO THE "PLUMBING FIXTURE SCHEDULE" ON SHEET P0.02 FOR THE MINIMUM ALLOWED PIPE SIZE FOR FINAL BRANCHES TO EACH FIXTURE. WHERE A LARGER BRANCH SIZE IS INDICATED OTHERWISE ON DRAWINGS, THE LARGER INDICATED SIZE SHALL BE USED.

SHEET NOTES

(1) MAINTAIN VENT CLEARANCES TO OPERABLE GREENHOUSE VENTS ON ROOF PER CPC SECTION 906.0 AND PLUMBING DETAILS.

(2) AT EXTERIOR WALLS, OFFSET BELOW ROOF AS NEEDED TO AVOID DIRECT PENETRATION CONFLICT WITH RIM JOISTS. SEE STRUCTURAL PLANS FOR PLACEMENT. COORDINATE WITH ARCHITECT PRIOR TO INSTALLATION ANYWHERE THIS CANNOT BE ACCOMPLISHED WITH CONCEALED PIPE ROUTING.

1 P2.41 **ROOF PLAN - WEST BUILDING GROUP**
1/8" = 1'-0"

7/13/2020 5:38:18 PM BIM 360://PCCD Merritt Horticulture/Merritt Horticulture_2020.rvt

APPROVALS

IDENTIFICATION STAMP
DIV. OF THE STATE ARCHITECT
APP: 01-119409 INC:
REVIEWED FOR
SS ☑ FLS ☑ ACS ☑
DATE: 03/14/2022

NOLL & TAM ARCHITECTS
729 Heinz Avenue
Berkeley, CA 94710
tel 510.542.2200
fax 510.542.2201

SEAL

REGISTERED PROFESSIONAL ENGINEER
TYLER BRADSHAW
M33496
EXP. 06/30/2022
MECHANICAL
STATE OF CALIFORNIA

BLUE FOREST ENGINEERING
3622 Kingsley Street
Oakland, CA 94610
tel 510.925.8224

PROJECT TITLE

Peralta Community College District
MERRITT COLLEGE NEW LANDSCAPE HORTICULTURE COMPLEX

12500 Campus Drive
Oakland, CA 94619

BID SET

ISSUE DATE	03/03/2022
N&T JOB NUMBER	22003

REVISIONS

#	DATE	DESCRIPTION

DRAWN BY **S.A.** CHECKED BY **T.B.**

SHEET TITLE
ROOF PLAN - WEST BUILDING GROUP

SHEET NUMBER
P2.41

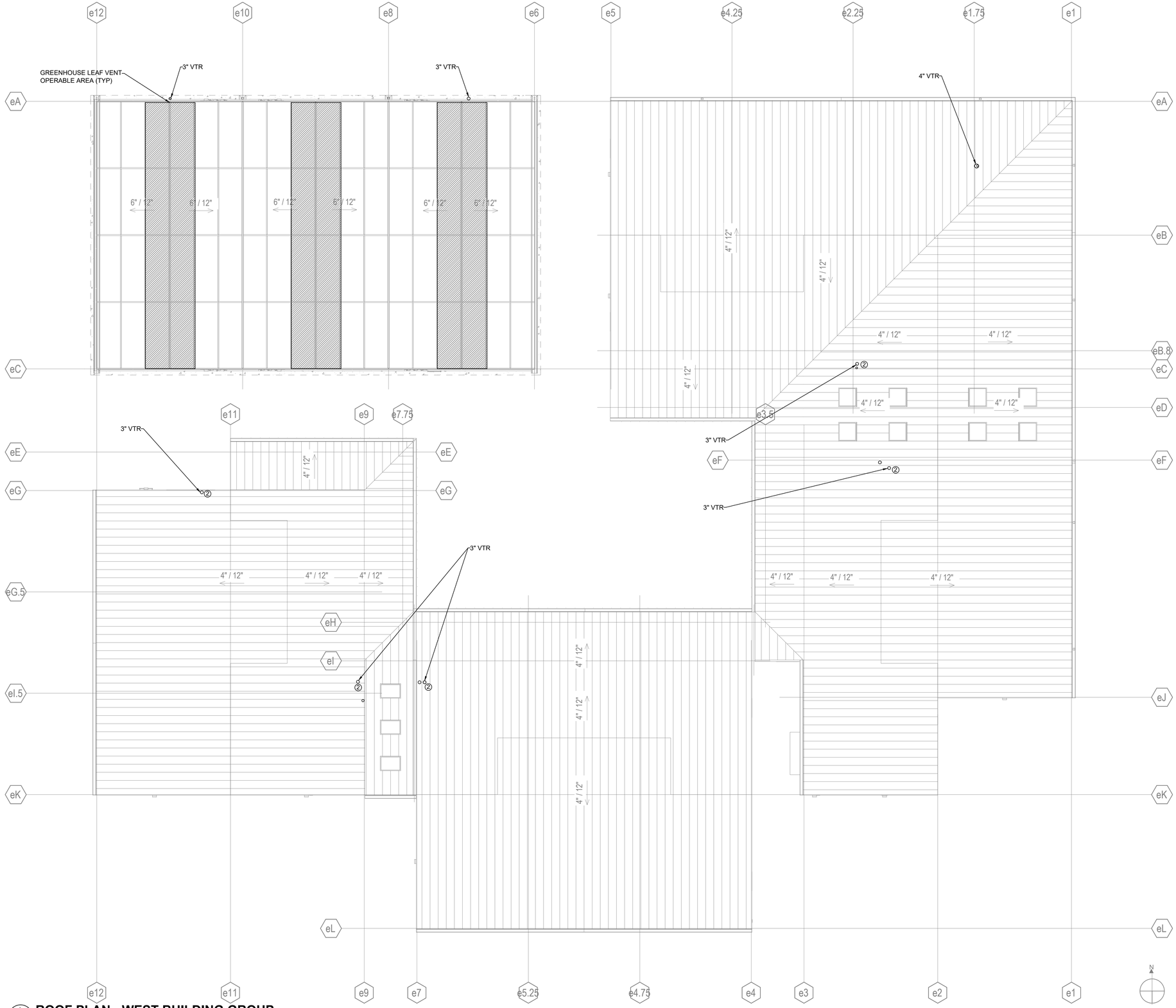

1 P2.42 **ROOF PLAN - WEST BUILDING GROUP**
1/8" = 1'-0"

GENERAL NOTES

1. DRAWINGS ARE DIAGRAMMATIC IN NATURE. PLEASE REFER TO PROJECT SPECIFICATIONS, DETAILS AND EQUIPMENT INSTALLATION MANUALS FOR ADDITIONAL INSTALLATION REQUIREMENTS.
2. COORDINATE ROUTING PRIOR TO INSTALLATION.

SHEET NOTES

① MAINTAIN VENT CLEARANCES TO OPERABLE GREENHOUSE VENTS ON ROOF PER CPC SECTION 906.0 AND PLUMBING DETAILS.

② AT EXTERIOR WALLS, OFFSET BELOW ROOF AS NEEDED TO AVOID DIRECT PENETRATION CONFLICT WITH RIM JOISTS. SEE STRUCTURAL PLANS FOR PLACEMENT. COORDINATE WITH ARCHITECT PRIOR TO INSTALLATION ANYWHERE THIS CANNOT BE ACCOMPLISHED WITH CONCEALED PIPE ROUTING.

APPROVALS

IDENTIFICATION STAMP
DIV. OF THE STATE ARCHITECT
APP: 01-119409 INC:
REVIEWED FOR
SS ☑ FLS ☑ ACS ☑
DATE: 03/14/2022

NOLL & TAM ARCHITECTS
729 Heinz Avenue
Berkeley, CA 94710
tel 510.542.2200
fax 510.542.2201

SEAL

REGISTERED PROFESSIONAL ENGINEER
TYLER BRADSHAW
M33496
EXP. 06/30/2022
MECHANICAL
STATE OF CALIFORNIA

BLUE FOREST ENGINEERING
3622 Kingsley Street
Oakland, CA 94610
tel 510.925.8224

PROJECT TITLE

Peralta Community College District
MERRITT COLLEGE NEW LANDSCAPE HORTICULTURE COMPLEX

12500 Campus Drive
Oakland, CA 94619

BID SET

ISSUE DATE	03/03/2022
N&T JOB NUMBER	22003

REVISIONS

#	DATE	DESCRIPTION

DRAWN BY **S.A.** | CHECKED BY **T.B.**

SHEET TITLE
ROOF PLAN - EAST BUILDING GROUP

SHEET NUMBER
P2.42

7/13/2020 5:38:18 PM BIM 360://PCCD Merritt Horticulture/Merritt Horticulture_2020.rvt

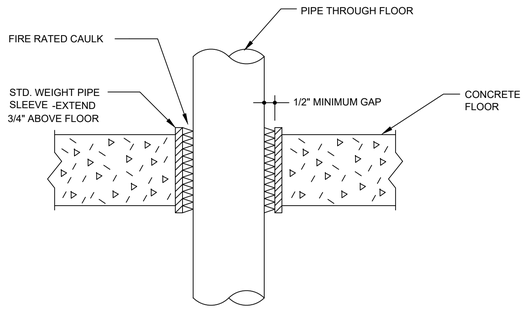

NOTE: THIS DETAIL IS FOR SLAB ON GRADE WITHOUT WATERPROOFING MEMBRANE BELOW. WHERE WATERPROOFING MEMBRANE EXISTS BELOW, PROVIDE WATERPROOFING AS PER PER MEMBRANE MANUFACTURER'S INSTRUCTIONS.

1 PIPING FLOOR PENETRATION

NOT TO SCALE

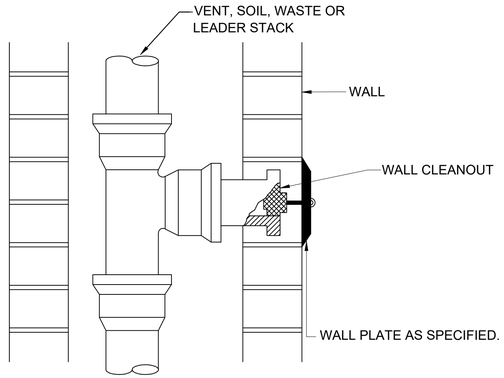

3 WALL CLEANOUT

NOT TO SCALE

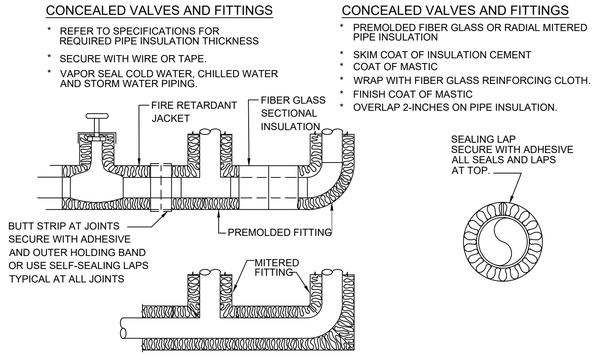

6 HHW PIPE & ACCESSORY INSULATION

NOT TO SCALE

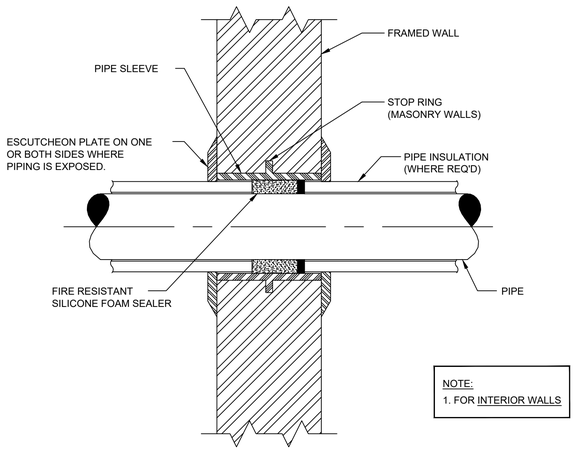

2 INDOOR WALL PIPE PENETRATION

NOT TO SCALE

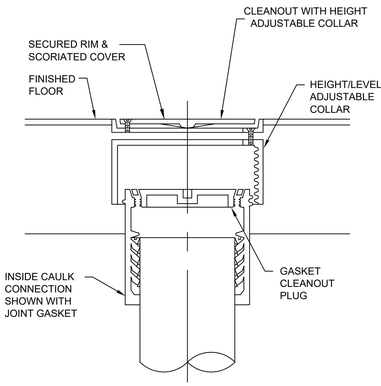

4 FLOOR CLEANOUT (INDOOR)

NOT TO SCALE

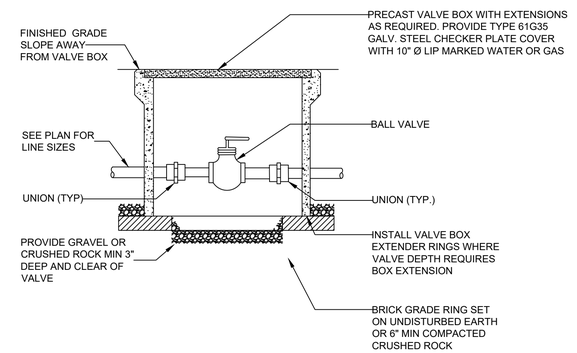

7 VALVE BOX

NOT TO SCALE

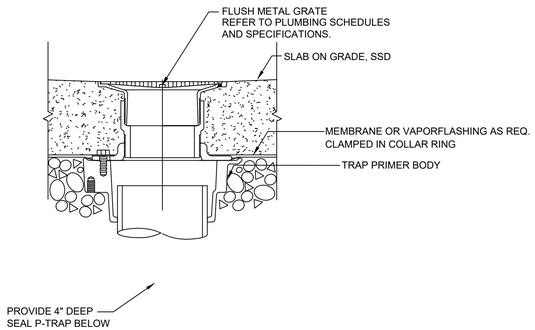

3 CONCRETE SLAB FLOOR DRAIN

NOT TO SCALE

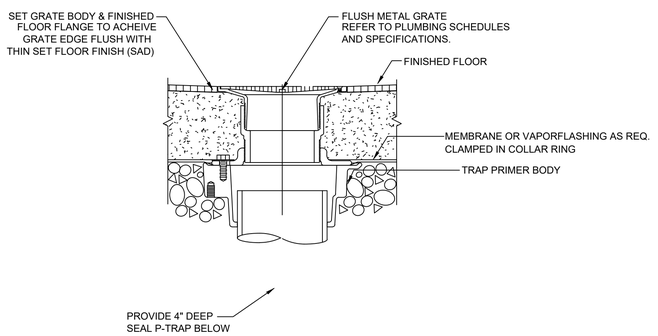

5 FINISHED FLOOR DRAIN

NOT TO SCALE

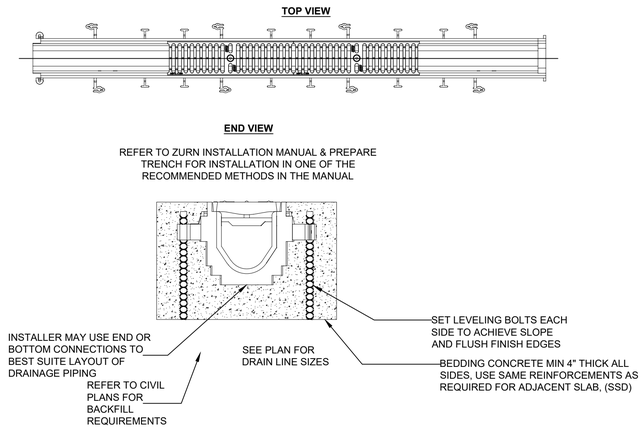

8 TRENCH DRAIN

NOT TO SCALE

APPROVALS

IDENTIFICATION STAMP
DIV. OF THE STATE ARCHITECT
APP: 01-119409 INC:
REVIEWED FOR
SS ☑ FLS ☑ ACS ☑
DATE: 03/14/2022

NOLL & TAM ARCHITECTS
729 Heinz Avenue
Berkeley, CA 94710
tel 510.542.2200
fax 510.542.2201

SEAL

REGISTERED PROFESSIONAL ENGINEER
TYLER BRADSHAW
M33496
EXP. 06/30/2022
MECHANICAL
STATE OF CALIFORNIA

BLUE FOREST ENGINEERING
3622 Kingsley Street
Oakland, CA 94610
tel 510.925.8224

PROJECT TITLE

Peralta Community College District
MERRITT COLLEGE NEW LANDSCAPE HORTICULTURE COMPLEX

12500 Campus Drive
Oakland, CA 94619

BID SET

ISSUE DATE	03/03/2022
N&T JOB NUMBER	22003

REVISIONS

	DATE	DESCRIPTION

DRAWN BY **S.A.** | CHECKED BY **T.B.**

SHEET TITLE

PLUMBING DETAILS

SHEET NUMBER

P4.01

7/13/2020 5:38:18 PM BIM 360://PCCD Merritt Horticulture/Merritt Horticulture_2020.rvt

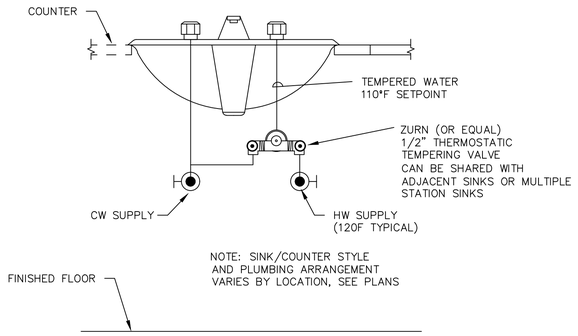

1 LOCAL MIXING VALVE

NOT TO SCALE

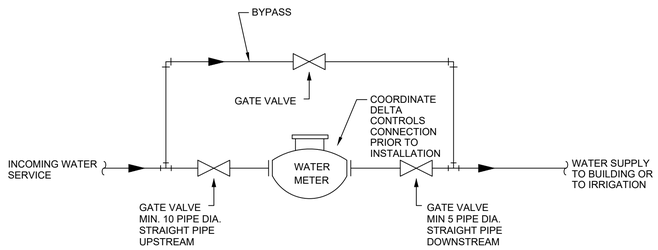

2 WATER METER INSTALLATION

NOT TO SCALE

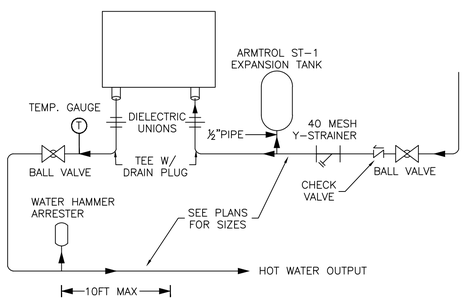

3 TANKLESS WATER HEATER SCHEMATIC

NOT TO SCALE

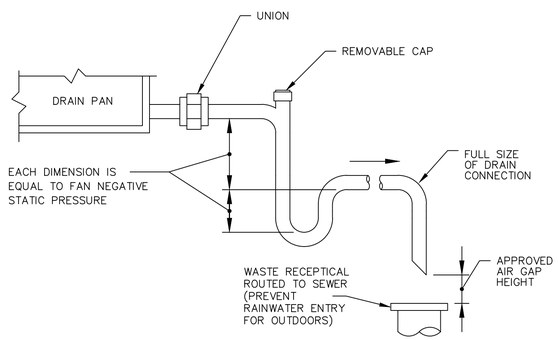

4 CONDENSATE DRAIN

NOT TO SCALE

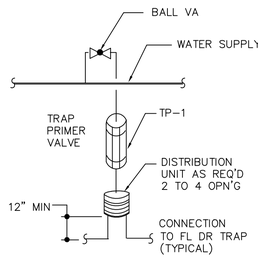

5 TRAP PRIMER

NOT TO SCALE

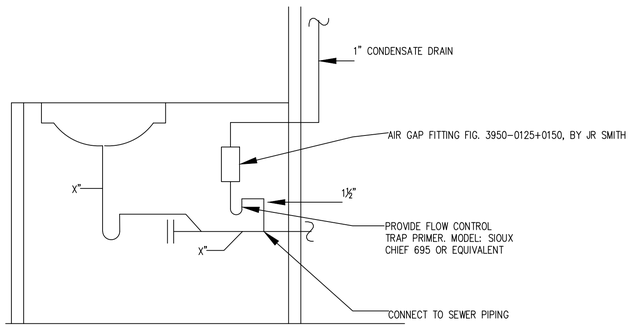

NOTE:
LOCATE AIR GAP FITTING AND PIPING WITHIN SINK/LAVATORY ENCLOSURE.

6 CONDENSATE TO SINK DISCHARGE

NOT TO SCALE

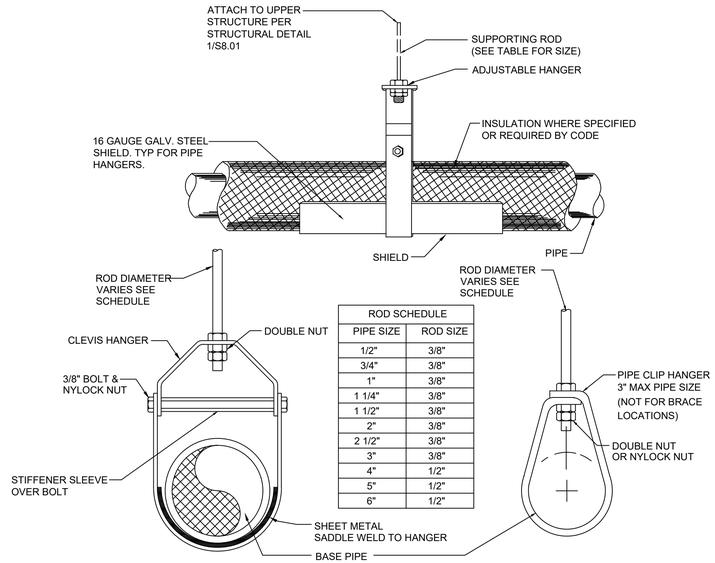

ROD SCHEDULE	
PIPE SIZE	ROD SIZE
1/2"	3/8"
3/4"	3/8"
1"	3/8"
1 1/4"	3/8"
1 1/2"	3/8"
2"	3/8"
2 1/2"	3/8"
3"	3/8"
4"	1/2"
5"	1/2"
6"	1/2"

7 CLEVIS PIPE HANGER

NOT TO SCALE

NOTE:
PROVIDE SEISMIC BRACING IN TWO DIRECTIONS AT SPACINGS NO GREATER THAN 40' FOR EITHER AND WHERE REQUIRED BY 2019 CPC TABLE 313.3

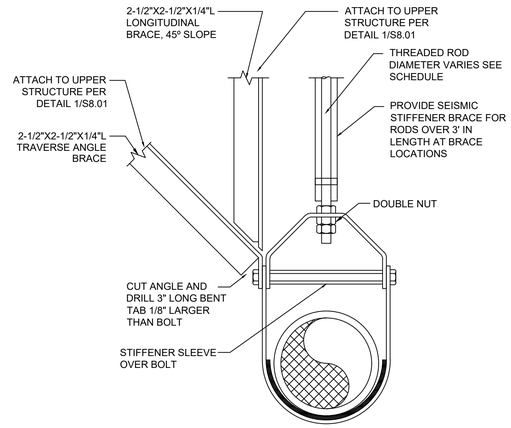

8 TYPICAL PIPE BRACING

NOT TO SCALE

APPROVALS

IDENTIFICATION STAMP
DIV. OF THE STATE ARCHITECT
APP: 01-119409 INC:
REVIEWED FOR
SS ☑ FLS ☑ ACS ☑
DATE: 03/14/2022

NOLL & TAM ARCHITECTS
729 Heinz Avenue
Berkeley, CA 94710
tel 510.542.2200
fax 510.542.2201

SEAL

REGISTERED PROFESSIONAL ENGINEER
TYLER BRADSHAW
M33496
EXP. 06/30/2022
MECHANICAL
STATE OF CALIFORNIA

BLUE FOREST ENGINEERING
3622 Kingsley Street
Oakland, CA 94610
tel 510.925.8224

PROJECT TITLE

Peralta Community College District
MERRITT COLLEGE NEW LANDSCAPE HORTICULTURE COMPLEX

12500 Campus Drive
Oakland, CA 94619

BID SET

ISSUE DATE	03/03/2022
N&T JOB NUMBER	22003

REVISIONS

#	DATE	DESCRIPTION

DRAWN BY S.A. | CHECKED BY T.B.

SHEET TITLE
PLUMBING DETAILS

SHEET NUMBER
P4.02

7/13/2020 5:38:18 PM BIM 360://PCCD Merritt Horticulture/Merritt Horticulture_2020.rvt

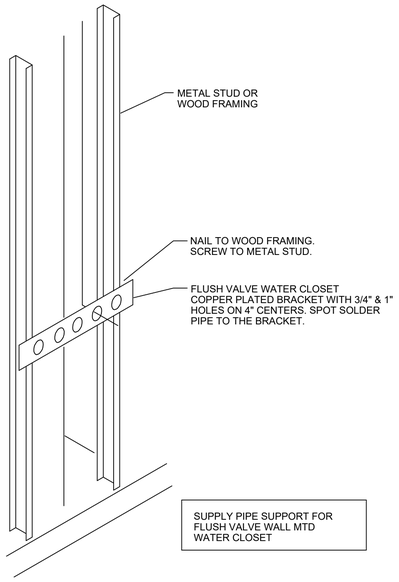

1 WATER CLOSET PIPE SUPPORT
NOT TO SCALE

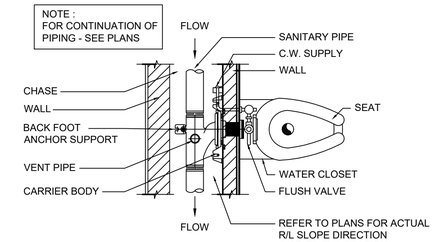

PLAN VIEW

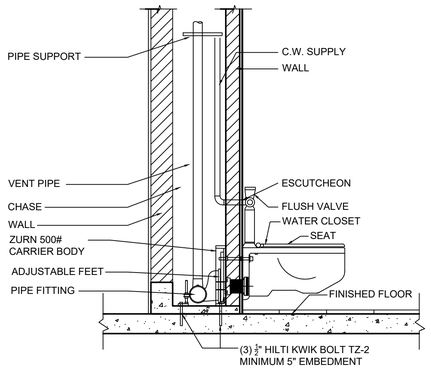

ELEVATION

3 SINGLE HUNG HUNG WATER CLOSET
NOT TO SCALE

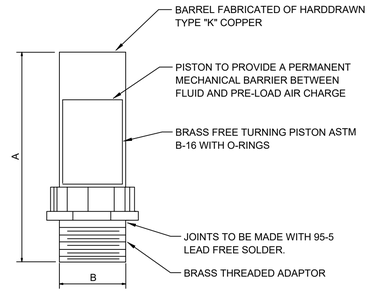

PIPE SIZE	P.D.I. SYMBOL	FIXTURE UNIT RATINGS	A SIZE	B SIZE
1/2"	A	1 - 11	5"	1/2"
3/4"	B	12 - 32	5"	3/4"
1"	C	33 - 60	7"	1"
1-1/4"	D	61 - 113	7"	1-1/4"
1-1/2"	E	114 - 154	9"	1-1/2"
2"	F	155 - 330	9"	2"

NOTE: LOCATE ONE FOR EACH BANK OF FLUSHOMETER FIXTURES AT LAST FIXTURE FOR FINISHED WALL LOCATIONS, PROVIDE A STAINLESS STEEL ACCESS DOOR FOR EACH SUFFICIENT IN SIZE TO ALLOW REPLACEMENT OF ARRESTOR AT A FUTURE DATE AS PER MANUFACTURER'S INSTRUCTIONS.

4 WATER SHOCK ARRESTOR
NOT TO SCALE

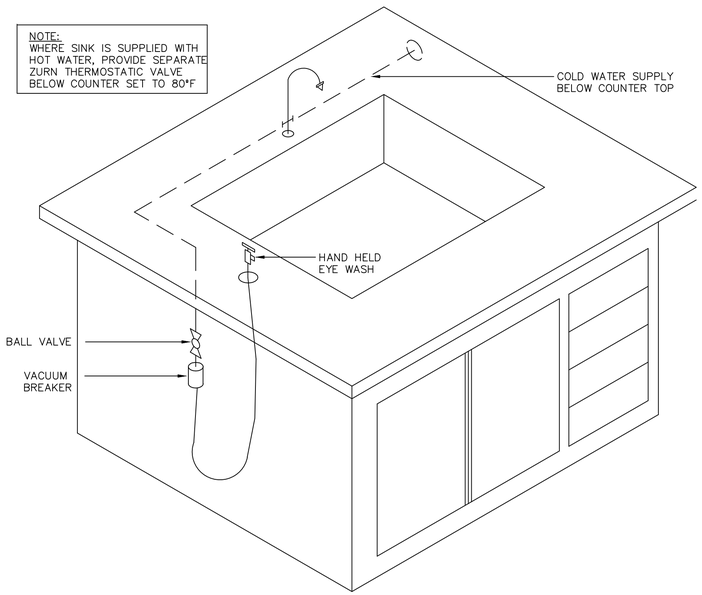

2 COUNTER MOUNTED EMERGENCY EYEWASH
NOT TO SCALE

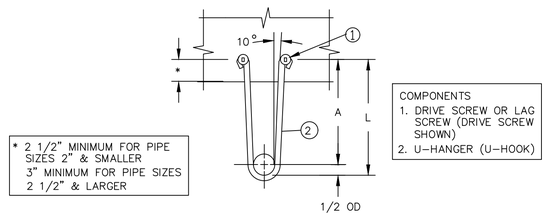

DESIGN DATA FOR U-HANGERS

NOMINAL PIPE SIZE	MINIMUM A DIMENSION	ROD DIAMETER	FASTENERS	
			QTY	
	INCHES	INCHES		
1/2	3 1/4	5/16	2	NO. 16 X 2" DRIVE SCREWS
3/4	3 1/4	"	"	"
1	3 1/4	"	"	"
1 1/4	3 1/2	"	"	"
1 1/2	3 1/2	"	"	"
2	3 3/4	"	"	"
2 1/2	4 1/2	3/8	2	3/8" X 2 1/2 HEX HEAD LAG SCREWS
3	4 3/4	"	"	"
4	5 1/4	"	"	1/2" X 3" HEX HEAD LAG SCREWS
5	6	"	"	"
6	6 1/2	"	"	"
8	7 1/2	1/2	"	5/8" X 3" SQUARE HEAD LAG SCREWS

4 "U-TYPE" PIPE HANGER
NOT TO SCALE

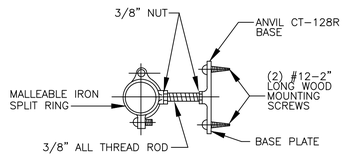

A-A PIPE CLAMP SUPPORT TOP VIEW

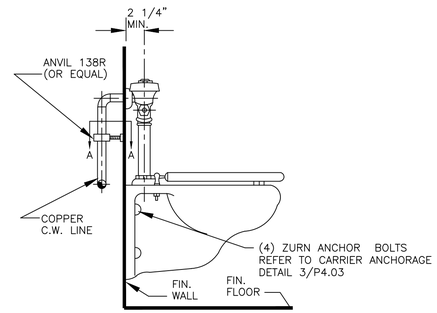

5 FLUSH VALVE WALL BRACKET & SUPPORT
NOT TO SCALE

APPROVALS

IDENTIFICATION STAMP
DIV. OF THE STATE ARCHITECT
APP: 01-119409 INC:
REVIEWED FOR
SS ☑ FLS ☑ ACS ☑
DATE: 03/14/2022

NOLL & TAM ARCHITECTS
729 Heinz Avenue
Berkeley, CA 94710
tel 510.542.2200
fax 510.542.2201

SEAL

REGISTERED PROFESSIONAL ENGINEER
TYLER BRADSHAW
M33496
EXP. 06/30/2022
MECHANICAL
STATE OF CALIFORNIA

BLUE FOREST ENGINEERING
3622 Kingsley Street
Oakland, CA 94610
tel 510.925.8224

PROJECT TITLE

Peralta Community College District
MERRITT COLLEGE NEW LANDSCAPE HORTICULTURE COMPLEX

12500 Campus Drive
Oakland, CA 94619

BID SET

ISSUE DATE 03/03/2022
N&T JOB NUMBER 22003

REVISIONS

	DATE	DESCRIPTION

DRAWN BY S.A. | CHECKED BY T.B.

SHEET TITLE
PLUMBING DETAILS

SHEET NUMBER
P4.03

7/13/2020 5:38:18 PM BIM 360://PCCD Merritt Horticulture/Merritt Horticulture_2020.rvt

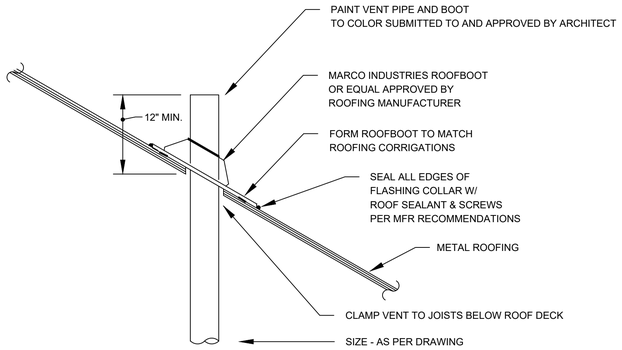

1 PLUMBING VENT THROUGH ROOF

NOT TO SCALE

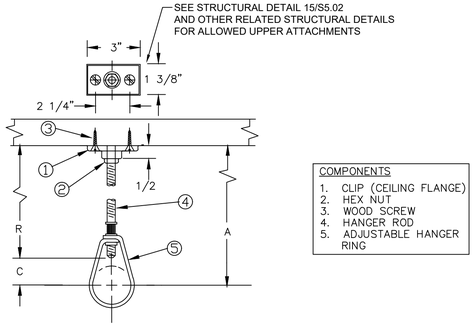

COMPONENTS

1. CLIP (CEILING FLANGE)
2. HEX NUT
3. WOOD SCREW
4. HANGER ROD
5. ADJUSTABLE HANGER RING

DESIGN DATA FOR CLIP HANGERS

NOMINAL PIPE SIZE	MINIMUM A DIMENSION	HANGER TAKEOUT	ROD DIAMETER	FASTENERS	
	INCHES	INCHES	INCHES	QTY	ITEMS
1/2	3 3/4	–1 1/4	3/8	1 2 1	3/8" CEILING FLANGE (CLIP) NO. 18 X 1 1/2" FLAT HEAD WOOD SCREWS 3/8" HEX NUT
3/4	3 3/4	–1 1/4	"		SEE ABOVE
1	3 3/4	–1 1/4	"		" "
1 1/4	4	–1 1/2	"		" "
1 1/2	4	–1 1/2	"		" "
2	4 1/4	–1 3/4	"		" "

3 CLIP PIPE HANGER

NOT TO SCALE

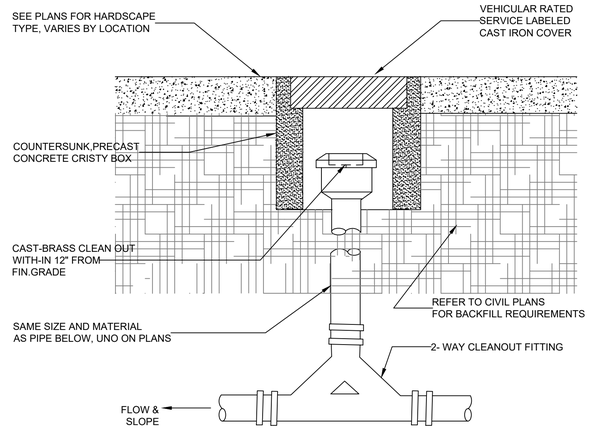

NOTES:

1. 1.CLEAN-OUTS AT FINISHED CONCRETE OR PAVED SURFACES,SHALL BE BROUGHT UP TO GRADE IN A VEHICULAR RATED CONCRETE CRISTY VALVE BOX WITH A REMOVABLE CAST IRON COVER.
2. CLEAN-OUTS IN UNFINISHED SURFACES SHALL BE SET IN CONCRETE PADS.
3. REQUIRED AT WASTE MAIN ON EXIT OF BUILDING EXTERIOR, AND ANYWHERE INDICATED ON PLANS.

5 GRADE CLEANOUT - 2 WAY

NOT TO SCALE

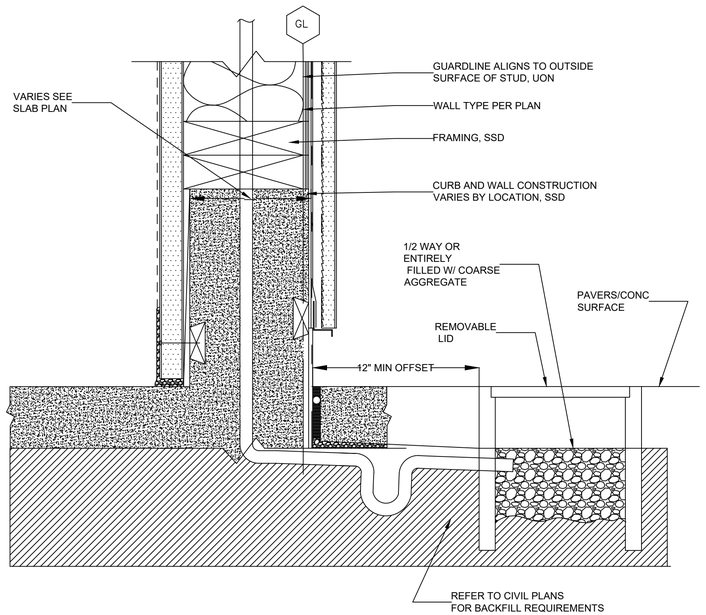

2 CONDENSATE DRY WELL

NOT TO SCALE

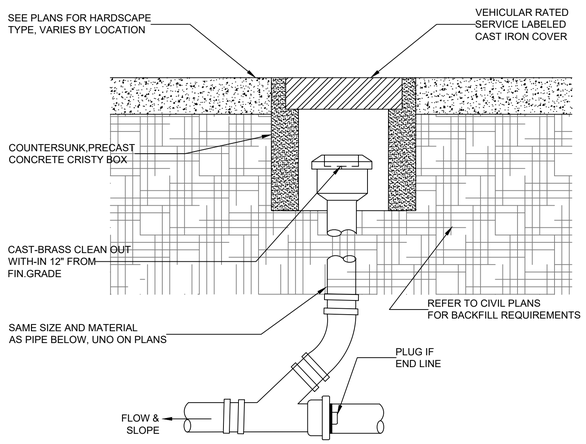

NOTES:
1.CLEAN-OUTS AT FINISHED CONCRETE OR PAVED SURFACES,SHALL BE BROUGHT UP TO GRADE IN A VEHICULAR RATED CONCRETE CRISTY VALVE BOX WITH A REMOVABLE CAST IRON COVER.
2.CLEAN-OUTS IN UNFINISHED SURFACES SHALL BE SET IN CONCRETE PADS.
3.REQUIRED AT WASTE MAIN ON EXIT OF BUILDING EXTERIOR, AND ANYWHERE INDICATED ON PLANS.

4 GRADE CLEANOUT - 1 WAY

NOT TO SCALE

NOTES:

1. INSTALL IN A LOCATION THAT MAINTAINS THE MINIMUM SIDE AND FRONT CLEARANCES RECOMMENDED BY MANUFACTURER AND WHAT IS SHOWN BELOW, WHICHEVER IS GREATER.
2. MOUNT THE WATER HEATER SECURELY TO THE WALL WITH FOUR (4) 2.5" LONG #10 WOOD SCREWS AT MFR KEYHOLE SLOTS. SSD FOR BLOCKING REQUIREMENTS WHERE SCREWS DO NOT COINCIDE WITH WALL STUDS.
3. INSTALL A ¼" DIAMETER BEAD OF SEALING CAULK AROUND THE ENTIRE PERIMETER OF THE HEATER BETWEEN THE HEATER BACK PANEL AND THE WALL. THIS PREVENTS ANY MOISTURE OR DEBRIS FROM ACCUMULATING.
4. SET WATER SUPPLY TEMPERATURE AT 120ºF, THERMOSTATIC VALVES SET TO 110ºF, UNO ON PLANS.

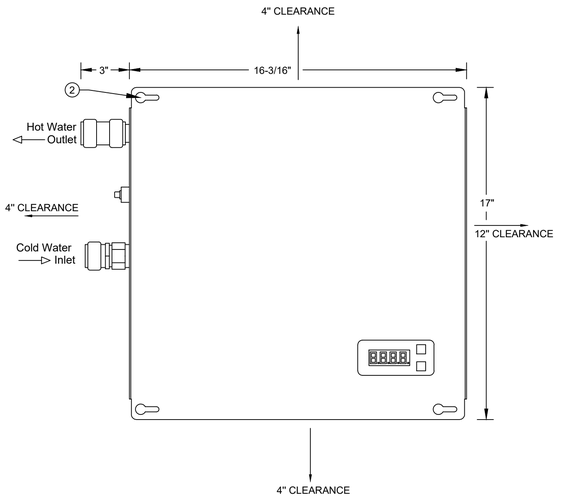

1 INSTANTANEOUS WATER HEATER

NOT TO SCALE

APPROVALS

IDENTIFICATION STAMP
DIV. OF THE STATE ARCHITECT
APP: 01-119409 INC:
REVIEWED FOR
SS ☑ FLS ☑ ACS ☑
DATE: 03/14/2022

NOLL & TAM ARCHITECTS
729 Heinz Avenue
Berkeley, CA 94710
tel 510.542.2200
fax 510.542.2201

SEAL

REGISTERED PROFESSIONAL ENGINEER
TYLER BRADSHAW
M33496
EXP. 06/30/2022
MECHANICAL
STATE OF CALIFORNIA

BLUE FOREST ENGINEERING
3622 Kingsley Street
Oakland, CA 94610
tel 510.925.8224

PROJECT TITLE

Peralta Community College District
MERRITT COLLEGE NEW LANDSCAPE HORTICULTURE COMPLEX

12500 Campus Drive
Oakland, CA 94619

BID SET

ISSUE DATE	03/03/2022
N&T JOB NUMBER	22003

REVISIONS

	DATE	DESCRIPTION

DRAWN BY **S.A.** CHECKED BY **T.B.**

SHEET TITLE

PLUMBING DETAILS

SHEET NUMBER

P4.04

7/13/2020 5:38:18 PM BIM 360://PCCD Merritt Horticulture/Merritt Horticulture_2020.rvt

NOTES:
1. NOT ALL LOCATIONS UTILIZE TWO SINKS OR HAVE FLOOR DRAINS.
2. PROVIDE AT LEAST THE REQUIRED SERVICE CLEARANCES ABOVE EACH TRAP AS LISTED BY MANUFACTURER. COORDINATE LOCATIONS WITH ARCHITECT WHENEVER PLACEMENT REQUIRES ADJUSTMENT TO LOCATION SHOWN ON PLANS OR MODIFICATIONS TO CASEWORK.
3. SEDIMENT TRAPS ACT AS BUCKET TRAPS FOR FIXTURES ALLOWING DIRECT TAILPIECE CONNECTION PER MANUFACTURER'S INSTALLATION INSTRUCTIONS.

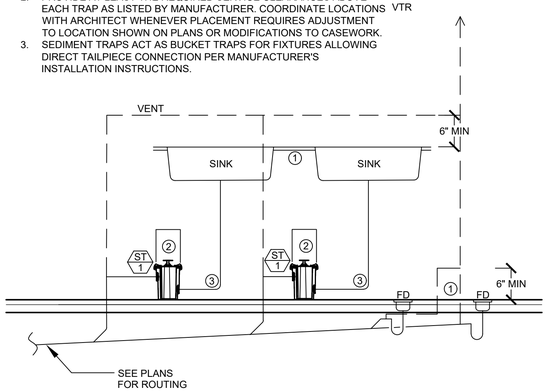

1 ST-1 PLUMBING TRAPS & VENTS
NOT TO SCALE

NOTES:
1. NOT ALL LOCATIONS UTILIZE TWO SINKS OR HAVE FLOOR DRAINS.
2. PROVIDE AT LEAST THE REQUIRED SERVICE CLEARANCES ABOVE EACH TRAP AS LISTED BY MANUFACTURER. COORDINATE LOCATIONS WITH ARCHITECT WHENEVER PLACEMENT REQUIRES ADJUSTMENT TO LOCATION SHOWN ON PLANS OR MODIFICATIONS TO CASEWORK.
3. SEDIMENT TRAPS ACT AS BUCKET TRAPS FOR FIXTURES ALLOWING DIRECT TAILPIECE CONNECTION PER MANUFACTURER'S INSTALLATION INSTRUCTIONS.

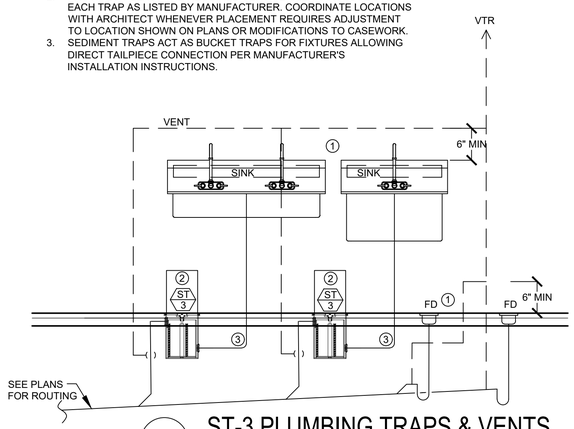

2 ST-3 PLUMBING TRAPS & VENTS
NOT TO SCALE

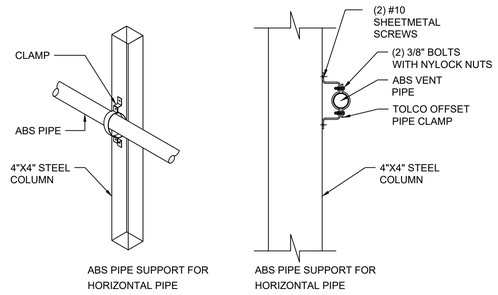

3 GREENHOUSE COLUMN SUPPORT
NOT TO SCALE

NOTE: SEISMIC RESTRAINT NOT REQUIRED ALL VENT PIPING IS <5LBS PER LF.

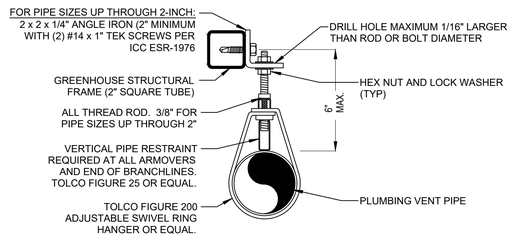

4 GREENHOUSE VENT PIPE SUPPORT
NOT TO SCALE

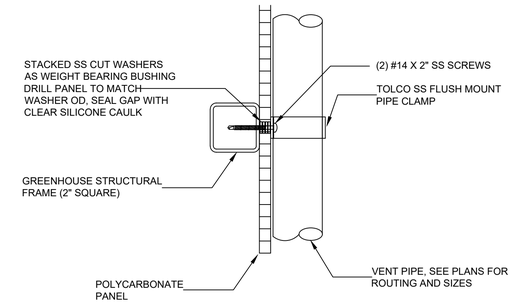

5 GREENHOUSE OUTSIDE WALL SUPPORT
NOT TO SCALE

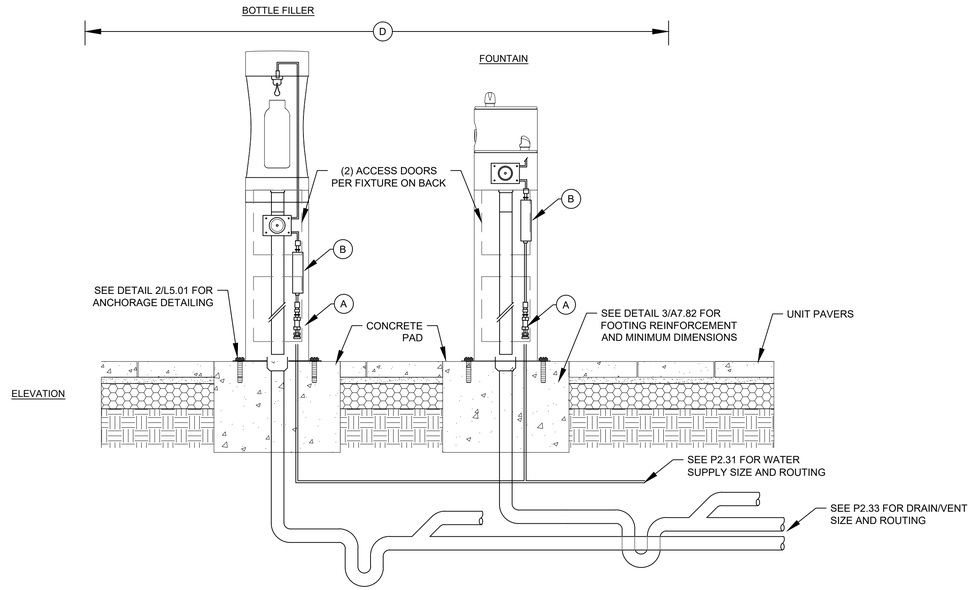

NOTES:
A. BRING 3/4" COPPER SUPPLY THROUGH SLAB. PROVIDE 3/4 TURN SHUTOFF VALVE & TO INLINE STRAINER AT ELEVATION THAT IS EASILY ACCESSIBLE FROM LOWER ACCESS DOOR. TRANSITION MFR PROVIDED INTERNAL SUPPLY PIPING DOWNSTREAM OF SHUTOFF VALVE.
B. INLINE REPLACEABLE WATER FILTER, INSTALLED AT ELEVATION TO BE EASILY REPLACEABLE FROM ONE OF THE TWO ACCESS DOORS.
C. INDIVIDUALLY TRAP AND VENT EACH FIXTURE BEFORE COMBINING DRAINAGE PIPING UNDERGROUND. TRAP INLET MAY BE LOCATED DIRECTLY UNDER FIXTURE VERTICALLY TAILPIECE IF NECESSARY.
D. REFER TO SHEET G3.22 & DETAIL 2/I5.01 FOR ACCESSIBILITY CLEARANCE REQUIREMENTS FOR EACH FIXTURE.

6 DRINKING FOUNTAIN & BOTTTLE FILLER PLUMBING CONNECTIONS
NOT TO SCALE

APPROVALS

IDENTIFICATION STAMP
DIV. OF THE STATE ARCHITECT
APP: 01-119409 INC:
REVIEWED FOR
SS ☑ FLS ☑ ACS ☑
DATE: 03/14/2022

NOLL & TAM ARCHITECTS
729 Heinz Avenue
Berkeley, CA 94710
tel 510.542.2200
fax 510.542.2201

SEAL

REGISTERED PROFESSIONAL ENGINEER
TYLER BRADSHAW
M33496
EXP. 06/30/2022
MECHANICAL
STATE OF CALIFORNIA

BLUE FOREST ENGINEERING
3622 Kingsley Street
Oakland, CA 94610
tel 510.925.8224

PROJECT TITLE

Peralta Community College District
MERRITT COLLEGE NEW LANDSCAPE HORTICULTURE COMPLEX

12500 Campus Drive
Oakland, CA 94619

BID SET

ISSUE DATE	03/03/2022
N&T JOB NUMBER	22003

REVISIONS

#	DATE	DESCRIPTION

DRAWN BY **S.A.** CHECKED BY **T.B.**

SHEET TITLE
PLUMBING DETAILS

SHEET NUMBER
P4.05

7/13/2020 5:38:18 PM BIM 360://PCCD Merritt Horticulture/Merritt Horticulture_2020.rvt

PLUMBING FIXTURE SCHEDULE

TAG	FIXTURE	TYPE	MANUFACTURER	MODEL	MATERIAL	STYLE	PIPE SIZES				MAX FLOW	COMMENTS
							WASTE	VENT	CW	HW		
WC-1	WATER CLOSET	FLUSHOMETER	KOHLER	KINGSTON K-84325	VITREOUS CHINA	WALL MOUNT	4"	2"	1-1/4"	-	1.28 GPF	PROVIDE WITH 1.28 GPF MANUAL KOHLER OR TOTO FLUSHOMETER & ZURN 500# WALL CARRIERS
SK-1	SINK	KITCHEN	KOHLER	VAULT K-3894	STAINLESS STEEL	DUAL MOUNT	2"	1-1/2"	1/2"	1/2"	1.2 GPM	ADA COMPLIANT, 27"W MINIMUM BASE CABINET, 6.5" DEEP BOWL, KOHLER PURIST K-24982 CHROME FINISH FAUCET PROVIDE WITH OFFSET TAILPIECE WHERE REQUIRED TO MAINTAIN ADA CLEARANCES BELOW SINK
SK-2	SINK	KITCHEN	KOHLER	VAULT K-3894	STAINLESS STEEL	DUAL MOUNT	2"	1-1/2"	1/2"	1/2"	1.2 GPM	ADA COMPLIANT, 27"W MINIMUM BASE CABINET, 6.5" DEEP BOWL, KOHLER PURIST K-24982 CHROME FINISH FAUCET PROVIDE WITH OFFSET TAILPIECE WHERE REQUIRED TO MAINTAIN ADA CLEARANCES BELOW SINK
SK-3	SINK	KITCHEN	KOHLER	TOCCATA K-3348	STAINLESS STEEL	DROP-IN	2"	1-1/2"	1/2"	1/2"	1.2 GPM	ADA COMPLIANT, 27"W MINIMUM BASE CABINET, 7" DEEP BOWL, KOHLER PURIST K-24982 CHROME FINISH FAUCET PROVIDE WITH OFFSET TAILPIECE WHERE REQUIRED TO MAINTAIN ADA CLEARANCES BELOW SINK
SK-4	SINK	KITCHEN	KOHLER	TOCCATA K-4011	STAINLESS STEEL	DROP-IN	2"	1-1/2"	1/2"	1/2"	1.2 GPM	ADA COMPLIANT, 27"W MINIMUM BASE CABINET, 6" DEEP BOWL, KOHLER PURIST K-24982 CHROME FINISH FAUCET PROVIDE WITH OFFSET TAILPIECE WHERE REQUIRED TO MAINTAIN ADA CLEARANCES BELOW SINK
SK-5	SINK	WASH STATION	ADVANCE TABCO	FS-WM-2721	STAINLESS STEEL	WALL MOUNT	2"	1-1/2"	1/2"	1/2"	0.5 GPM	PROVIDE WITH ADVANCE TABCO K-160 FAUCET FOR HOT/COLD LOCATIONS AND FISHER MODEL 77394 (0.35 GPM) FAUCET FOR LOCATIONS WITH ONLY COLD WATER SUPPLY
SK-6	SINK	WASH STATION	ADVANCE TABCO	FS-WM-1-ADA	STAINLESS STEEL	WALL MOUNT	2"	1-1/2"	1/2"	1/2"	0.5 GPM	ADA COMPLIANT, PROVIDE WITH ADVANCE TABCO K-160 FAUCET AND K-316-LU ADA FAUCET HANDLES AND FISHER MODEL 77394 (0.35 GPM) FAUCET FOR LOCATIONS WITH ONLY COLD WATER SUPPLY
SK-7	SINK	LAVATORY	BRADLEY	TLX-1	SOLID SURFACE	WALL MOUNT	2"	1-1/2"	1/2"	1/2"	0.35 GPM	26.25" WIDE, ADA COMPLIANT, PROVIDE WITH BRADLEY METRO FAUCETS AND SOAP DISPENSERS HAND FAUCETS SHALL OPERATE A MINIMUM OF 10 SECONDS PER OPERATION PER CBC 11B-606.4
SK-8	SINK	LAVATORY	BRADLEY	TLX-3	SOLID SURFACE	WALL MOUNT	2"	1-1/2"	1/2"	1/2"	0.35 GPM	85.25" WIDE, THREE FAUCET, TWO DRAIN, ADA COMPLIANT, PROVIDE WITH BRADLEY METRO FAUCETS AND SOAP DISPENSERS HAND FAUCETS SHALL OPERATE A MINIMUM OF 10 SECONDS PER OPERATION PER CBC 11B-606.4
SK-9	SINK	SERVICE	FIAT	TERRAZZO TSBC-6011	SOLID SURFACE	FLOOR	3"	1-1/2"	1/2"	1/2"		PROVIDE ACORN KFC UTILITY FAUCET AND KH36 (36") LONG HOSE WITH WALL HANGER
SK-10	SINK	SERVICE	FIAT	TERRAZZO TSB-100	SOLID SURFACE	FLOOR	3"	1-1/2"	1/2"	1/2"		PROVIDE ACORN KFC UTILITY FAUCET AND KH36 (36") LONG HOSE WITH WALL HANGER
SK-11	SINK	LAVATORY	ELKAY	WCL1923OSDC	STAINLESS STEEL	WALL MOUNT	2"	1-1/2"	1/2"	1/2"	-	19"X23"X4" SIZE, ADA COMPLIANT, PROVIDE WITH ELKAY FAUCETS (LKD232SBH5C) AND DRAIN (LKAD174LO).
FD-1	FLOOR DRAIN	ADJUSTABLE HEIGHT	ZURN	Z415B	CAST IRON BODY POLISHED NICKEL TOP	VARIES	3"	-	-	-	-	PROVIDE FUNNEL ADAPTER TOP FOR INDIRECT WASTE CONNECTIONS REQUIRING AN AIR GAP.
FD-2	FLOOR DRAIN	ADJUSTABLE HEIGHT	ZURN	Z415BL	CAST IRON BODY POLISHED NICKEL TOP	VARIES	3"	-	-	-	-	FOR USE WITH THIN FLOORING APPLICATIONS. PROVIDE FUNNEL ADAPTER TOP FOR INDIRECT WASTE CONNECTIONS REQUIRING AN AIR GAP.
FD-3	FLOOR DRAIN	TRENCH	ZURN	Z886	POLYPRO- PYLENE	6" PERMA-TRENCH	3"	-	-	-	-	PROVIDE WITH CLASS A SLOTTED, HEEL PROOF HDPE GRATE, SEE PLANS FOR TOTAL LENGTHS WHICH VARY BY LOCATION
HB-1	HOSE BIB	COLD RECESSED	JAY R. SMITH	560-13	CHROME PLATED BRASS	EXPOSED WALL MOUNT	-	-	3/4"	-	-	PROVIDE WITH INTEGRAL VACUUM BREAKER IN CHROME FINISH
TP-1	TRAP PRIMER	PRESSURE DROP	PPP	PR-500	BRASS		-	-	-	-	-	PROVIDE 12"X12" ACCESS DOOR AND DU-4 ACCESSORY TO SERVE MULTIPLE DRAINS FROM ONE PRIMER.
TP-2	TRAP PRIMER	FLOW	PPP	PRO1-500	BRASS		-	-	-	-	-	PROVIDE 12"X12" ACCESS DOOR AND DU-4 ACCESSORY TO SERVE MULTIPLE DRAINS FROM ONE PRIMER.
DF-1	DRINKING FOUNTAIN	EXTERIOR	ELKAY	44006	STAINLESS STEEL	WALL MOUNT	2"	1-1/2"	1/2"	-	-	ADA COMPLIANT PROVIDE ELKAY OUTDOOR DRINKING FOUNTAIN WALL MOUNT, LEVEL NON-FILTERED NON -REFRIGERATED WITH EVERGREEN COLOR.
DF-2	DRINKING FOUNTAIN	EXTERIOR	ELKAY	LK4420	STAINLESS STEEL	PEDESTAL	2"	1-1/2"	1/2"	-	-	ADA COMPLIANT OUTDOOR FREE STANDING BI-LEVEL, PROVIDE IN EVERGREEN COLOR, FOUNTAIN LOCATION & INSTALLATION DETAILS SHOWN ON LANDSCAPE DRAWINGS
BF-1	BOTTLE FILLER	EXTERIOR	ELKAY	LK4405BF	STAINLESS STEEL	WALL MOUNT	2"	1-1/2"	1/2"	-	-	ADA COMPLIANT ELKAY OUTDOOR SINGLE ARM BOTTLE FILLING STATION WALL MOUNT, NON-FILTERED NON -REFRIGERATED WITH EVERGREEN COLOR.
BF-2	BOTTLE FILLER	EXTERIOR	ELKAY	LK4410BF	STAINLESS STEEL	PEDESTAL	2"	1-1/2"	1/2"	-	-	ADA COMPLIANT ELKAY OUTDOOR FREE STANDING SINGLE BOTTLE FILLING STATION , NON-FILTERED NON -REFRIGERATED WITH EVERGREEN COLOR. BOTTLE FILLER LOCATION & INSTALLATION DETAILS SHOWN ON LANDSCAPE DRAWINGS.
EW-1	EYE WASH	VARIES	BRADLEY	S19274C	STAINLESS STEEL	UNIVERSAL MOUNT	-	-	1/2"	-	-	
ST-1	SEDIMENT TRAP	SOLIDS INTERCEPTOR	ZURN	Z1180	PVC	FLOOR	2"	-	-	-	-	
ST-2	SEDIMENT TRAP	SOLIDS INTERCEPTOR	ZURN	Z1187-300GAL	STEEL	FLUSH BURIED	4"	2"	-	-	-	
ST-3	SEDIMENT TRAP	SOLIDS INTERCEPTOR	JAY R. SMITH	8715T	STEEL	FLUSH BURIED	2"	-	-	-	-	

TANKLESS HOT WATER HEATERS

TAG	LOCATION	SERVICE	MAKE	MODEL	INPUT (MBH)	OUTPUT (MBH)	RECOVERY (GPH)	STORAGE (GAL)	DESIGN FLOW (GPM)	MIN. EFFICIENCY	ELECTRICAL		CONNECTIONS		DIMENSIONS (WxDxH, IN.)	WEIGHT (LBS)	SEISMIC ANCHORAGE DETAIL	NOTES
											FLA (MCOP)	V/Hz/PHASE	WATER (IN)	PROPANE (IN)				
WH-1	FIELD SUPPORT H806	RESTROOM & JANITORIAL	HUBBELL	TX16-3R	16 kW	16 kW	N/A	0	1.56	N/A	44A	208/60/3	3/4"	N/A	17x4x17	22	1/P4.04	1-4
WH-2	HEAD HOUSE H700	HAND SINKS	HUBBELL	TX08-3R	8 kW	8 kW	N/A	0	0.78	N/A	38A	208/60/1	3/4"	N/A	17x4x17	22	1/P4.04	1-4
WH-3	HEAD HOUSE H700	HAND SINKS	HUBBELL	TX08-3R	8 kW	8 kW	N/A	0	0.78	N/A	38A	208/60/1	3/4"	N/A	17x4x17	22	1/P4.04	1-4
WH-4	CLASS LAB 1 H108	HAND SINKS	HUBBELL	TX08-3R	8 kW	8 kW	N/A	0	0.78	N/A	38A	208/60/1	3/4"	N/A	17x4x17	22	1/P4.04	1-4
WH-5	RESTROOMS H102	LAVTORIES	HUBBELL	TX08-3R	8 kW	8 kW	N/A	0	0.78	N/A	38A	208/60/1	3/4"	N/A	17x4x17	22	1/P4.04	1-4
WH-6	JANITORIAL H103	JANITORIAL	HUBBELL	TX11-3R	11 kW	11 kW	N/A	0	1.07	N/A	31A	208/60/3	3/4"	N/A	17x4x17	22	1/P4.04	1-4
WH-7	CIRCULATION H400	HAND SINK	HUBBELL	TX08-3R	8 kW	8 kW	N/A	0	0.78	N/A	38A	208/60/1	3/4"	N/A	17x4x17	22	1/P4.04	1-4
WH-8	CLASS LAB 2 H200	HAND SINK	HUBBELL	TX08-3R	8 kW	8 kW	N/A	0	0.78	N/A	38A	208/60/1	3/4"	N/A	17x4x17	22	1/P4.04	1-4
WH-9	CLASS LAB 3 H300	HAND SINK	HUBBELL	TX08-3R	8 kW	8 kW	N/A	0	0.78	N/A	38A	208/60/1	3/4"	N/A	17x4x17	22	1/P4.04	1-4
WH-10	CLASS LAB 3 H300	HAND SINK	HUBBELL	TX08-3R	8 kW	8 kW	N/A	0	0.78	N/A	38A	208/60/1	3/4"	N/A	17x4x17	22	1/P4.04	1-4
WH-11	WORKSHOP H800	HAND SINKS	HUBBELL	TX08-3R	8 kW	8 kW	N/A	0	0.78	N/A	38A	208/60/1	3/4"	N/A	17x4x17	22	1/P4.04	1-4
WH-12	RESTROOMS H804	OUTDOOR SINKS	HUBBELL	TX08-3R	8 kW	8 kW	N/A	0	0.78	N/A	38A	208/60/1	3/4"	N/A	17x4x17	22	1/P4.04	1-4

NOTES:

1) PROVIDE T&P VALVE WITH DISCHARGE PIPED TO TAILPIECE WITH INDIRECT CONNECTION, MINIMUM 1" GAP, SEE PLUMBING DETAILS FOR CONNECTION DETAILS.
2) DESIGN FLOWS ARE BASED ON A 70ºF TEMPERATURE RISE.
3) PROVIDE EXPANSION TANK.
4) SET WATER HEATER SUPPLY TEMPERATURE TO 120ºF AND THERMOSTATIC VALVES SET TO BLEND TO 110ºF, EXCEPT WHERE NOTED OTHERWISE ON PLANS.

EXPANSION TANK SCHEDULE

TAG	LOCATION	SERVICE	MAKE	MODEL	CONNECTION SIZE (IN)	DIMENSIONS		WEIGHT (LBS)	NOTES
						DIAMETER (IN)	HEIGHT (IN)		
ET-1	VARIES SEE PLANS	DHW	THERM-X-TROL	ST-1	1/2	3	4	1	1

NOTES:

1) PERMANENT AIR CELL WITH FACTORY AIR PRECHARGE.

APPROVALS

IDENTIFICATION STAMP
DIV. OF THE STATE ARCHITECT
APP: 01-119409 INC:
REVIEWED FOR
SS ☑ FLS ☑ ACS ☑
DATE: 03/14/2022

NOLL & TAM ARCHITECTS
729 Heinz Avenue
Berkeley, CA 94710
tel 510.542.2200
fax 510.542.2201

SEAL

REGISTERED PROFESSIONAL ENGINEER
TYLER BRADSHAW
M32496
EXP. 06/30/2022
MECHANICAL
STATE OF CALIFORNIA

BLUE FOREST ENGINEERING
3622 Kingsley Street
Oakland, CA 94610
tel 510.925.8224

PROJECT TITLE

Peralta Community College District
MERRITT COLLEGE NEW LANDSCAPE HORTICULTURE COMPLEX

12500 Campus Drive
Oakland, CA 94619

BID SET

ISSUE DATE 03/03/2022
N&T JOB NUMBER 22003

REVISIONS

#	DATE	DESCRIPTION

DRAWN BY S.A. CHECKED BY T.B.

SHEET TITLE

PLUMBING SCHEDULES

SHEET NUMBER

P6.01

7/13/2020 5:38:18 PM BIM 360://PCCD Merritt Horticulture/Merritt Horticulture_2020.rvt

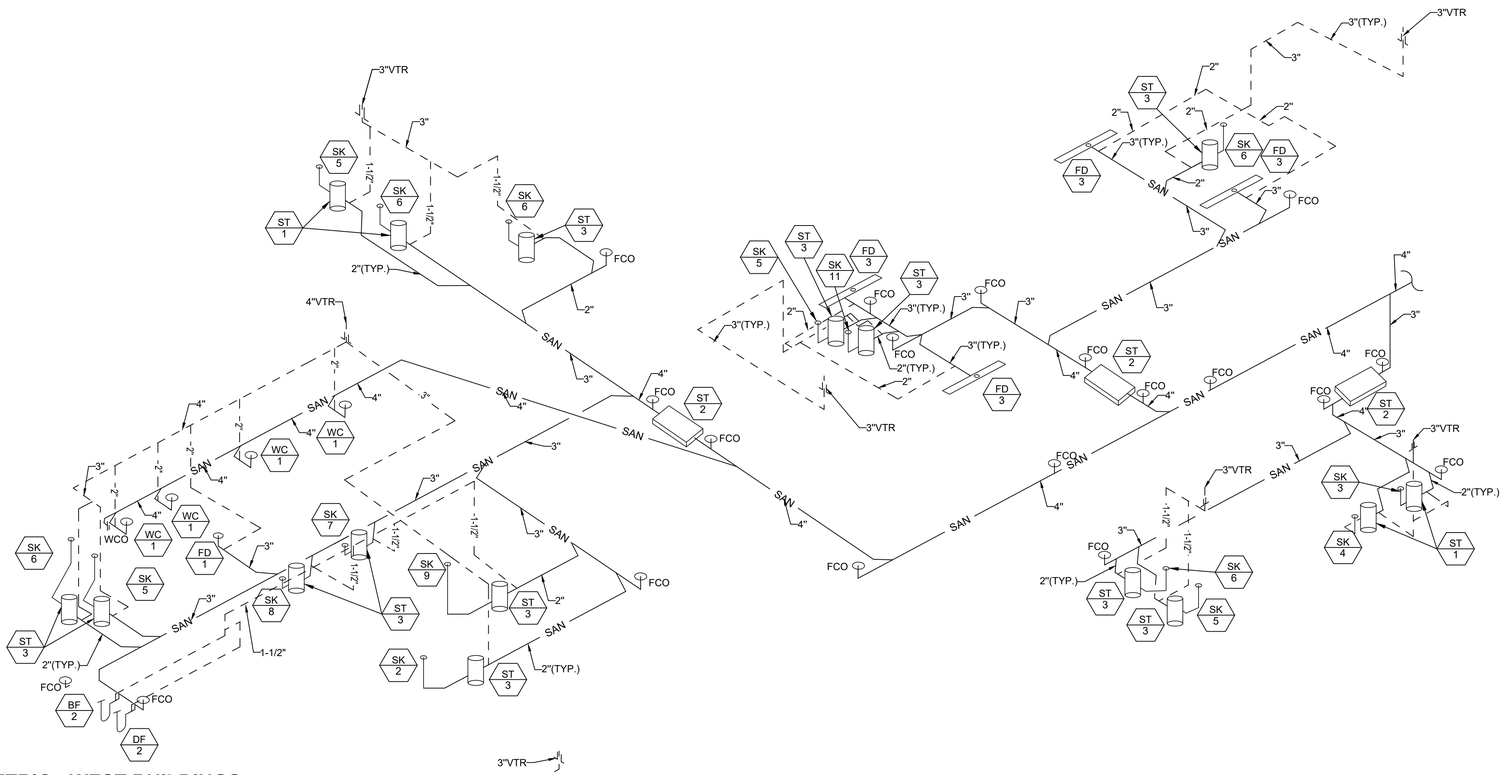

1 P6.02 **PLUMBING SANITARY AND VENT ISOMETRIC - WEST BUILDINGS**
NTS

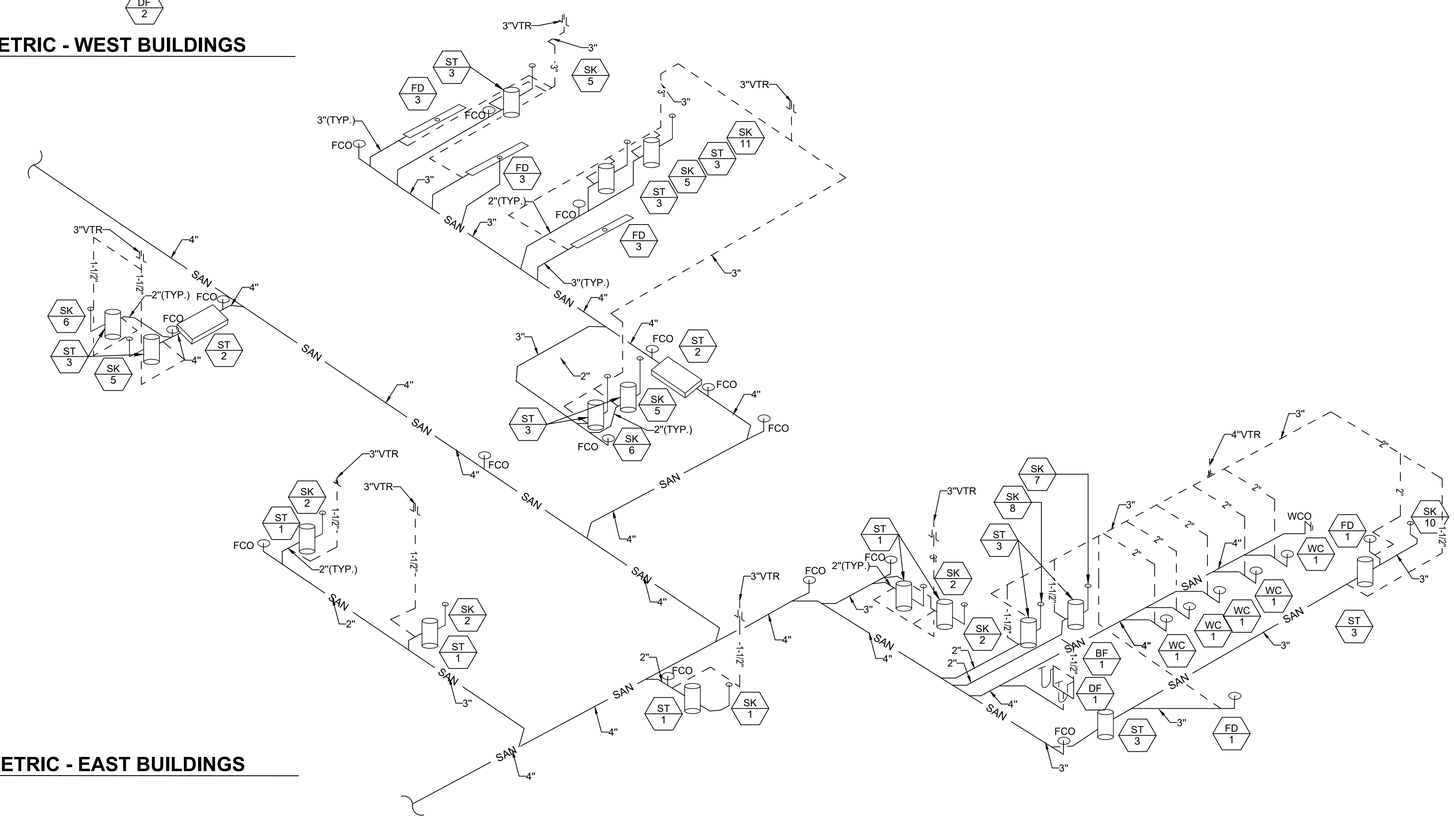

2 P6.02 **PLUMBING SANITARY AND VENT ISOMETRIC - EAST BUILDINGS**
NTS

7/13/2020 5:38:18 PM BIM 360://PCCD Merritt Horticulture/Merritt Horticulture_2020.rvt

APPROVALS

IDENTIFICATION STAMP
DIV. OF THE STATE ARCHITECT
APP: 01-119409 INC:
REVIEWED FOR
SS ☑ FLS ☑ ACS ☑
DATE: 03/14/2022

NOLL & TAM ARCHITECTS
729 Heinz Avenue
Berkeley, CA 94710
tel 510.542.2200
fax 510.542.2201

SEAL

REGISTERED PROFESSIONAL ENGINEER
TYLER BRADSHAW
M33496
EXP. 06/30/2022
MECHANICAL
STATE OF CALIFORNIA

BLUE FOREST ENGINEERING
3622 Kingsley Street
Oakland, CA 94610
tel 510.925.8224

PROJECT TITLE

Peralta Community College District
MERRITT COLLEGE NEW LANDSCAPE HORTICULTURE COMPLEX

12500 Campus Drive
Oakland, CA 94619

BID SET

ISSUE DATE	03/03/2022
N&T JOB NUMBER	22003

REVISIONS

#	DATE	DESCRIPTION

DRAWN BY **S.A.** CHECKED BY **T.B.**

SHEET TITLE
PLUMBING SANITARY AND VENT ISOMETRIC

SHEET NUMBER
P6.02

ABBREVIATIONS

AAV	AUTOMATIC AIR VENT
ABV	ABOVE
ADR	AREA DRAIN (SEE SYMBOLS)
AFF	ABOVE FINISHED FLOOR
ALUM	ALUMINUM
AP	ACCESS PANEL
ATC	AUTOMATIC TEMPERATURE CONTROL
AVER	AVERAGE
AWT	AVERAGE WATER TEMPERATURE
BDD	BACK DRAFT DAMPER
BFP	BACK FLOW PREVENTOR
BG	BLAST GATE
BLDG	BUILDING
BLW	BELOW
BM	BELL MOUTH
BOD	BOTTOM OF DUCT
BOE	BOTTOM OF EQUIPMENT
BSMT	BASEMENT
BTU	BRITISH THERMAL UNIT
CA	COMBUSTION AIR OR CALIFORNIA
CAP	CAPACITY
CBV	CIRCUIT BALANCING VALVE
CFH	CUBIC FEET PER HOUR
CFM	CUBIC FEET PER MINUTE
CHP	CONCRETE HOUSEKEEPING PAD
CI	CAST IRON
CIP	CLEAN IN PLACE
℄	CENTER LINE
CLG	CEILING
CMU	CONCRETE MASONRY UNIT
CO	CLEAN OUT
COL	COLUMN
COMP	COMPRESSOR
CON	CONCENTRIC
CONC	CONCRETE
COND	CONDENSATE
CONN	CONNECTION
CONT'N	CONTINUATION
CONTR	CONTRACTOR
CVS	CONTROL VALVE STATION
DA	DIRECT ACTING
DAMP	DAMPER
DB	DRY BULB
DEPT	DEPARTMENT
DIA	DIAMETER
DIAG	DIAGRAM
DIFF	DIFFERENTIAL
DISCH	DISCHARGE
DIV	DIVISION
DIW	DOWN IN WALL
DL	DOOR LOUVER
DN	DOWN
DWG	DRAWING
DX	DIRECT EXPANSION
(E)	EXISTING
EA	EACH
EAD	EXHAUST AIR DUCT
EAT	ENTERING AIR TEMPERATURE
EC	ELECTRICAL CONTRACTOR
ECC	ECCENTRIC
ECG	EGGCRATE GRILLE
EFF	EFFICIENCY
EJ	EXPANSION JOINT
EL	ELEVATION
ELEC	ELECTRIC
ELEV	ELEVATOR
ENT	ENTERING
EQ	EQUAL
EQUIP	EQUIPMENT
EQUIV	EQUIVALENT
ER	EXHAUST REGISTER
ES	END SWITCH
ETC	AND SO FORTH
EWT	ENTERING WATER TEMPERATURE
EX	EXHAUST
EXPAN	EXPANSION
EXT	EXTERNAL
°F	DEGREES FAHRENHEIT
FA	FROM ABOVE
FB	FROM BELOW
FC	FLEXIBLE CONNECTOR
FCV	FLOW CONTROL VALVE
FD	FLOOR DRAIN
F/D	FIRE DAMPER
FG	FILTER GRILLE
FIN	FINISHED
FL	FLANGE
FLA	FULL LOAD AMPS
FLEX	FLEXIBLE
FLR	FLOOR
FO	FAIL OPEN
FOB	FLAT ON BOTTOM
FOT	FLAT ON TOP
FP	FIRE PROTECTION
FPM	FEET PER MINUTE
FPS	FEET PER SECOND
FRICT	FRICTION
FS	FLOW SWITCH
F/S/D	COMBINATION FIRE AND SMOKE WITH ACCESS DOOR
FT	FEET
FTB	FLOOR TO BOTTOM
FTC	FLOOR TO CENTERLINE
FTR	FINNED TUBE RADIATION
FV	FACE VELOCITY
FXC	FLEXIBLE CONNECTION
GA	GAUGE
GAL	GALLON
GALV	GALVANIZED
GC	GENERAL CONTRACTOR
GPD	GALLONS PER DAY
GPH	GALLONS PER HOUR
GPM	GALLONS PER MINUTE
GR	GRILLE
GRS/LB	GRAINS PER POUND
HT	HEIGHT
H_2O	WATER
HB	HOSE BIBB
HD	HEAD (SEE SCHEDULES)
HP	HORSEPOWER
HR	HOUR
HTR	HEATER
HZ	HERTZ
ID	INTERNAL DIAMETER
IN	INCHES
INCL	INCLUDING
INT	INTERNAL
INV	INVERT
KW	KILOWATT
L	LENGTH
LAT	LEAVING AIR TEMPERATURE
LB	POUND
LBS/HR	POUNDS PER HOUR (#/HR)
LD	LINEAR DIFFUSER
LIN	LINEAR
LIQ	LIQUID
LRA	LOCK ROTOR AMPS
LVG	LEAVING
LVR	LOUVER
LWT	LEAVING WATER TEMPERATURE
MC	MECHANICAL CONTRACTOR
MBH	THOUSANDS OF BTU PER HOUR
MED	MEDIUM
MFR	MANUFACTURER
MH	MANHOLE
MIN	MINIMUM
MISC	MISCELLANEOUS
MTD	MOUNTED
NC	NORMALLY CLOSED
NEG	NEGATIVE
NIC	NOT IN CONTRACT
No	NUMBER
NO	NORMALLY OPEN
NOM	NOMINAL
NTS	NOT TO SCALE
OA	OUTSIDE AIR
OAD	OUTSIDE AIR DUCT
OAF	OUTSIDE AIR FAN
OB	OFF BOTTOM
OD	OUTSIDE DIMENSION
OC	ON CENTER
OCC	OCCUPIED
OGH	OUTSIDE GROUND HYDRANT
OPG	OPENING
OS	OPEN SITE
OT	OFF TOP
OV	OUTLET VELOCITY
OZ	OUNCE
PART	PARTIAL
PDR	PLENUM DRAIN
PD	PRESSURE DROP (SEE SCHEDULE)
PERF	PERFORATED
PH	PHASE
PNEU	PNEUMATIC
POS	POSITIVE
PRESS	PRESSURE
PS	PRESSURE SWITCH
PSI	POUNDS PER SQUARE INCH
PSIG	POUNDS PER SQUARE INCH GAUGE
PT	PRESSURE TRANSMITTER
PV	PLUG VALVE
PVC	POLYVINYL CHLORIDE
PVS	POLYVINYL COATED STEEL
QUAN	QUANTITY
R	REGISTER
RA	RETURN AIR
RAC	RUN ABOVE CEILING
RAD	RETURN AIR DUCT
RAF	RUN ABOVE FLOOR
RATC	RUN AT CEILING
RBC	RUN BELOW CEILING
RBF	RUN BELOW FLOOR
RBG	RUN BELOW GRADE
RBJ	RUN BETWEEN JOIST
RCP	REINFORCED CONCRETE PIPE
RD	ROOF DRAIN
RE	ROUNDED ENTRANCE/EXIT
REF	REFRIGERANT
REL	RELIEF
REQD	REQUIRED
RET	RETURN
RH	RELATIVE HUMIDITY
RICW	RUN IN CASEWORK
RIE	RUN IN ENCLOSURE
RIW	RISE IN WALL
RLA	RATED LOAD AMPS
RM	ROOM
ROD	ROOF OVERFLOW DRAIN
RPM	REVOLUTIONS PER MINUTE
SA	SUPPLY AIR
SAD	SUPPLY AIR DIFFUSER
SCH	SCHEDULE
SCHEM	SCHEMATIC
SH	SENSIBLE HEAT
SP	STATIC PRESSURE
SPEC	SPECIFICATION
SQ	SQUARE
SS	STAINLESS STEEL
SST	SUPPORT STEEL
STD	STANDARD
STL	STEEL
STM	STEAM
STR	STRUCTURAL
SUCT	SUCTION
SUP	SUPPLY
SYS	SYSTEM
T&B	TOP & BOTTOM
TAD	TRANSFER AIR DUCT
TDH	TOTAL DYNAMIC HEAD
TEMP	TEMPERATURE
THT	TOTAL HEAT
TP	TOTAL PRESSURE
TT	TEMPERATURE TRANSMITTER
TYP	TYPICAL
UC	UNDERCUT
UNOCC	UNOCCUPIED
V	VOLTS
VA	VALVE
VB	VACUUM BREAKER
VEL	VELOCITY
VI	VIBRATION ISOLATOR
VOLT	VOLTAGE
VTR	VENT THRU ROOF
W	WIDTH
W/	WITH
W/O	WITHOUT
WB	WET BULB
WC	WATER COLUMN
WG	WATER GAUGE
WMS	WIRE MESH SCREEN

PIPING SYMBOLS

- EXISTING EQUIPMENT OR PIPING TO BE REMOVED.
- GATE VALVE
- GLOBE VALVE
- PLUG VALVE
- BUTTERFLY VALVE
- BALL VALVE
- SWING CHECK VALVE
- LIFT CHECK VALVE
- GATE VALVE, ANGLE
- GLOBE VALVE, ANGLE
- DIAPHRAM VALVE
- BALANCING VALVE
- CBV — CIRCUIT SETTING BALANCING VALVE
- THREE WAY CONTROL VALVE
- TWO WAY CONTROL VALVE
- S — SOLENOID VALVE
- PRESSURE REDUCING VALVE (PRV)
- TPV — TEMPERATURE/PRESSURE RELIEF VALVE
- RELIEF/SAFETY VALVE
- GAS COCK
- FUSIBLE LINK VALVE-QUICK CLOSING
- FUSIBLE LINK VALVE-QUICK OPENING
- AUTOMATIC FILL VALVE
- MV — MANUAL AIR VENT
- AV — AUTOMATIC AIR VENT (EXTEND DISCHARGE TO DRAIN)
- FLOW METER-VENTURI
- FLOW METER-ORIFICE
- DIRECTION OF FLOW
- R D — DIRECTION OF PITCH-RISE OR DROP
- STRAINER
- STRAINER WITH BLOW OFF VALVE
- PIPE RISING UP
- PIPE DROPPING DOWN
- CONCENTRIC REDUCER
- ECCENTRIC REDUCER
- UNION - SCREWED OR FLANGED
- A — ANCHOR
- G — GUIDE
- EJ — EXPANSION JOINT
- FS — FLOW SWITCH
- TT — TEMPERATURE TRANSMITTER
- PT/PS — PRESSURE TRANSMITTER OR PRESSURE SWITCH
- TH — THERMOMETER
- GAUGE WITH GAUGE COCK & SYPHON (STEAM)
- AQUASTAT
- GAS PRESSURE REGULATOR
- FLOAT OPERATED CONTROL VALVE
- ELECTRICALLY TRACED PIPING
- H / W — EXPANSION LOOP (WxH)
- VB — VACUUM BREAKER
- BASKET STRAINER

HVAC SYMBOLS

- FD (F) — FIRE DAMPER WITH ACCESS DOOR
- UC — UNDERCUT DOOR
- DL — DOOR LOUVER FREE AREA REQUIRED IN SF
- PREPURCHASED EQUIPMENT
- T — THERMOSTAT WITH HUMIDISTAT
- T — THERMOSTAT
- CO_2 — CARBON DIOXIDE SENSOR
- S — SMOKE DETECTOR
- M — MOTORIZED DAMPER
- SQUARE FEET
- EXISTING DUCTWORK TO REMAIN
- EXISTING DUCTWORK TO BE REMOVED
- NEW DUCTWORK
- FLEXIBLE DUCTWORK
- ACOUSTIC LINED DUCTWORK
- DROP — DROP IN DUCT IN DIRECTION OF AIR FLOW
- RISE — RISE IN DUCT IN DIRECTION OF AIR FLOW
- M — HAND DAMPER
- MOTOR OPERATED DAMPER
- CEILING DIFFUSER- SQUARE OR ROUND
- AP — ACCESS PANEL
- AD — ACCESS DOOR
- VANED ELBOW
- FLEXIBLE CONNECTION
- 45 DEGREE BRANCH DUCT TAKE-OFF W/HAND DAMPER
- SUPPLY AIR GRILLE (G) OR REGISTER (R)
- RETURN OR EXHAUST AIR GRILLE (G) OR REGISTER (R)
- ROUND
- OVAL
- CEILING FAN
- S — SWITCH

REFERENCE SYMBOLS

- X / X-X — EQUIPMENT IDENTITY (SEE EQUIPMENT ABBREVIATION LIST AND SCHEDULES); EQUIPMENT NUMBER; SYSTEM NUMBER (IF APPLICABLE)
- X / XXX / X — GRILLE/DIFFUSER TAG; CFM; SIZE
- X / X — INDICATES DETAIL, PLAN, SECTION, AND/OR DIAGRAM(APPLIES ONLY WHERE INDICATED ON DRAWINGS); INDICATES DRAWING ON WHICH DETAIL APPEARS
- TYP. / X — INDICATES TYPICAL DETAIL (APPLIES TO ALL CONTRACT DRAWINGS); INDICATES DRAWING ON WHICH DETAIL APPEARS
- X / X — INDICATES SECTION NUMBER; INDICATES ON WHICH DRAWING SECTION APPEARS
- X — INDICATES REVISION & NUMBER
- X — LOCATION POINT FOR COORDINATION BETWEEN FLOOR PLANS & PIPING DIAGRAMS (NUMBER)
- CONNECT NEW TO EXISTING
- TERMINATION POINT OF DEMOLITION
- CONNECT TO MANUFACTURER'S PREPIPED CONNECTION
- POINT OF BEAM PENETRATION
- PREPURCHASED EQUIPMENT
- # — SHEET NOTE NUMBER

GENERAL HVAC NOTES

1. SUBMISSION OF PROPOSAL DIRECTLY OR INDIRECTLY IN CONNECTION WITH THIS WORK SHALL IMPLY THAT THE BIDDER HAS EXAMINED THE JOB SITE UNDER WHICH HE WILL BE OBLIGATED TO OPERATE SHOULD HE BE AWARDED THE WORK UNDER THIS CONTRACT. NO EXTRA CHARGE WILL BE ALLOWED FOR FAILURE OF ANY BIDDER TO EXAMINE THE SITE PRIOR TO BID.
2. CONTRACTOR SHALL VISIT THE SITE AND VERIFY ALL DIMENSIONS IN THE FIELD, AND SHALL ADVISE THE ARCHITECT/ENGINEER AND THE OWNER OF ANY DISCREPANCIES BEFORE PERFORMING THE WORK.
2. THE DUCTWORK AND PIPING INDICATED ON THESE PLANS ARE DIAGRAMATIC. ALL WORK SHALL BE COORDINATED WITH ALL OTHER TRADES PRIOR TO INSTALLATION. CONTRACTOR SHALL COORDINATE ROUTING OF ALL DUCTWORK/PIPING WITH OTHER TRADES AND SHALL PROVIDE ANY NECESSARY OFFSETS, REROUTING, TEES, ELBOWS, ETC. REQUIRED FOR A COMPLETE AND COORDINATED INSTALLATION.
3. ALL EQUIPMENT SHALL BE INSTALLED IN STRICT COMPLIANCE WITH THE MANUFACTURER'S WRITTEN INSTRUCTIONS. THE CONTRACTOR SHALL PROVIDE ALL HANGERS AND SUPPORTS REQUIRED FOR A COMPLETE INSTALLATION.
4. CONTRACTOR SHALL BE RESPONSIBLE FOR WORKMEN'S IDENTIFICATION AND BADGING, SAFETY AND FIRE PROTECTION, CONTRACTOR'S LIABILITY INSURANCE, BARRICADES, WARNING SIGNS, TRASH REMOVAL, CUTTING AND PATCHING.
5. CONTRACTOR SHALL SCHEDULE ALL SHUTDOWNS THAT AFFECT UTILITIES AND OPERATIONS OF SURROUNDING PROPERTY BUILDINGS THAT MUST REMAIN IN OPERATION WITH THE OWNER.
6. CONTRACTOR SHALL COORDINATE ALL WORK WITH THE OWNER AND ALL OTHER CONTRACTORS.
7. CONTRACTOR SHALL BE RESPONSIBLE FOR ALL RIGGING, HANDLING AND PROTECTION OF MATERIALS.
8. CONTRACTOR SHALL PROVIDE LABOR TO RECEIVE, UNLOAD, STORE, PROTECT AND TRANSFER TO POINT OF INSTALLATION, OWNER FURNISHED ITEMS.
9. WHERE CONDUIT, CABLES, DUCTWORK OR PIPING PASSES THROUGH FLOORS OR WALLS, THE SLEEVES SHALL BE COMPLETELY SEALED WITH A FIRE STOP MATERIAL THAT IS COMMPLIANT WITH SPECIFICATION SECTION 10 81 00, CONTRACTOR SHALL BE RESPONSIBLE FOR ALL CORING AS IT RELATES TO HIS WORK.
10. CONTRACTOR SHALL BE RESPONSIBLE FOR ALL STRUCTURAL PENETRATIONS AS IT RELATES TO HIS WORK. CONTRACTOR SHALL SUBMIT SIZE AND LOCATION TO THE STRUCTURAL ENGINEER OR REVIEW AND DETAIL WHEREVER THE PENETRATIONS DO NOT MATCH PREAPPROVED PENETRATIONS SHOWN ON THE STRUCTURAL ENGINEER'S DETAILS.
13. CONTRACTOR SHALL SUBMIT THE NUMBER OF SHOP DRAWINGS AND EQUIPMENT CUTS AS SPECIFIED IN THE PROJECT DIVISION 1 SPECIFICATIONS
14. UPON COMPLETION OF CONSTRUCTION CONTRACTOR SHALL SUPPLY A COMPLETE SET OF AS-BUILT DOCUMENTS AS SPECIFIED IN DIVISION 1.
15. THE FULL PROJECT SCOPE FOR THIS PROJECT IS DESCRIBED IN THE PROJECT DRAWINGS, SPECIFICATIONS OR BOTH IN SOME SITUATIONS. WHEREVER A CONFLICT OCCURS BETWEEN THE PROJECT SPECIFICATIONS, DRAWINGS OR OTHER DESIGN DOCUMENTS, THE CONFLICT SHALL BE BROUGHT TO THE ARCHITECT'S ATTENTION. IN SUCH SITUATIONS, THE MOST STRINGENT CONDITION SHALL APPLY TO BIDDING AND DESIGN UNLESS OTHER DIRECTION IS PROVIDED BY THE ARCHITECTS OR ENGINEERS OF RECORD FOR THE PROJECT.
16. ALL DUCTWORK FOR HEATING/COOLING HVAC SYSTEMS SHALL BE A MINIMUM OF R-8 LEVEL OF INSULATION EXCEPT WHERE THE DUCT IS LOCATED WITHIN THE SPACE/ZONE IT IS SERVING.
17. ALL ASPECTS OF THE PROJECT INSTALLATION SHALL COMPLY WITH APPLICABLE CODES AND LOCAL INSPECTOR REQUIREMENTS INCLUDING BUT NOT LIMITED TO:
    - 2019 T-24 PART 2 CALIFORNIA BUILDING CODE (CBC)
    - 2019 T-24 PART 3 CALIFORNIA ELECTRICAL CODE (CEC)
    - 2019 T-24 PART 4 CALIFORNIA MECHANICAL CODE (CMC)
    - 2019 T-24 PART 5 CALIFORNIA PLUMBING CODE (CPC)
    - 2019 T-24 PART 6 CALIFORNIA ENERGY CONSERVATION CODE (CEEC)
    - 2019 T-24 PART 9 CALIFORNIA FIRE CODE (CFC)
    - 2019 T-24 PART 11 CALIFORNIA GREEN BUILDING CODE (CALGREEN)
    - COUNTY OF ALAMEDA BUILDING CODES + HEALTH DEPARTMENT REQUIREMENTS
    - DIVISION OF STATE ARCHITECTS (DSA)
18. SUPPLY AND RETURN DUCTWORK 10' FROM ALL AC UNITS SHALL BE LINED WITH 1.5" ACOUSTICAL LINING. DIMENSIONS SHOWN ON PLANS ARE INTERNAL DIMENSIONS FOR ANY INTERNALLY LINED DUCTWORK.
19. IF TEMPORARY VENTILATION IS REQUIRED FROM THE NEW SYSTEMS DURING CONSTRUCTION, THE SYSTEMS SHALL BE PROTECTED PER CALGREEEN BUILDING CODE SECTION 5.504.1.
20. OPENINGS TO HVAC SYSTEMS SHALL BE PROTECTED DURING CONSTRUCTION IN COMPLIANCE WITH CALGREEN BUILDING CODE SECTION 5.504.3.

DRAWING INDEX

SHEET NUMBER	SHEET NAME
M0.01	MECHANICAL TITLE SHEET
M2.31	MECHANICAL PLAN-WEST BUILDING
M2.32	MECHANICAL PLAN-EAST BUILDING
M3.32	MECHANICAL SECTIONS- EAST BUILDING
M4.01	MECHANICAL DETAILS
M4.02	MECHANICAL DETAILS
M4.03	MECHANICAL DETAILS
M4.04	MECHANICAL DETAILS
M6.01	MECHANICAL SCHEDULES
M6.02	MECHANICAL SCHEDULES
M6.03	MECHANICAL VRF PIPING & WIRING
M6.04	MECHANICAL VRF PIPING & WIRING
M6.05	MECHANICAL CONTROLS DIAGRAMS
M6.06	MECHANICAL POINTS LIST
M8.01	TITLE 24 COMPLIANCE FORMS
M8.02	TITLE 24 COMPLIANCE FORMS
M8.03	TITLE 24 COMPLIANCE FORMS
M8.04	TITLE 24 COMPLIANCE FORMS
M8.05	TITLE 24 COMPLIANCE FORMS
M8.06	TITLE 24 COMPLIANCE FORMS
M8.07	TITLE 24 COMPLIANCE FORMS
M8.08	TITLE 24 COMPLIANCE FORMS
M8.09	TITLE 24 COMPLIANCE FORMS
M8.10	TITLE 24 COMPLIANCE FORMS
M8.11	TITLE 24 COMPLIANCE FORMS
M8.12	TITLE 24 COMPLIANCE FORMS

MEP COMPONENT ANCHORAGE NOTE

ALL MECHANICAL, PLUMBING, AND ELECTRICAL COMPONENTS SHALL BE ANCHORED AND INSTALLED PER THE DETAILS ON THE DSA-APPROVED CONSTRUCTION DOCUMENTS. THE FOLLOWING COMPONENTS SHALL BE ANCHORED OR BRACED TO MEET THE FORCE AND DISPLACEMENT REQUIREMENTS PRESCRIBED IN THE 2019 CBC SECTIONS 1617A.1.18 THROUGH 1617A.1.26 AND ASCE 7-16 CHAPTERS 13, 26, AND 30:

1. ALL PERMANENT EQUIPMENT AND COMPONENTS.
2. TEMPORARY, MOVABLE OR MOBILE EQUIPMENT THAT IS PERMANENTLY ATTACHED (E.G. HARD WIRED) TO THE BUILDING UTILITY SERVICES SUCH AS ELECTRICITY, GAS OR WATER. "PERMANENTLY ATTACHED" SHALL INCLUDE ALL ELECTRICAL CONNECTIONS EXCEPT PLUGS FOR 110/220 VOLT RECEPTACLES HAVING A FLEXIBLE CABLE.
3. TEMPORARY, MOVABLE OR MOBILE EQUIPMENT WHICH IS HEAVIER THAN 400 POUNDS OR HAS A CENTER OF MASS LOCATED 4 FEET OR MORE ABOVE THE ADJACENT FLOOR OR ROOF LEVEL THAT DIRECTLY SUPPORT THE COMPONENT IS REQUIRED TO BE RESTRAINED IN A MANNER APPROVED BY DSA.

THE FOLLOWING MECHANICAL AND ELECTRICAL COMPONENTS SHALL BE POSITIVELY ATTACHED TO THE STRUCTURE BUT NEED NOT DEMONSTRATE DESIGN COMPLIANCE WITH THE REFERENCES NOTED ABOVE. THESE COMPONENTS SHALL HAVE FLEXIBLE CONNECTIONS PROVIDED BETWEEN THE COMPONENT AND ASSOCIATED DUCTWORK, PIPING, AND CONDUIT. FLEXIBLE CONNECTIONS MUST ALLOW MOVEMENT IN BOTH TRANSVERSE AND LONGITUDINAL DIRECTIONS:

A. COMPONENTS WEIGHING LESS THAN 400 POUNDS AND HAVING A CENTER OF MASS LOCATED 4 FEET OR LESS ABOVE THE ADJACENT FLOOR OR ROOF LEVEL THAT DIRECTLY SUPPORT THE COMPONENT.

B. COMPONENTS WEIGHING LESS THAN 20 POUNDS, OR IN THE CASE OF DISTRIBUTED SYSTEMS, LESS THAN 5 POUNDS PER FOOT, WHICH ARE SUSPENDED FROM A ROOF OR FLOOR OR HUNG FROM A WALL.

THE ANCHORAGE OF ALL MECHANICAL, ELECTRICAL AND PLUMBING COMPONENTS SHALL BE SUBJECT TO THE APPROVAL OF THE DESIGN PROFESSIONAL IN GENERAL RESPONSIBLE CHARGE OR STRUCTURAL ENGINEER DELEGATED RESPONSIBILITY AND ACCEPTANCE BY DSA. THE PROJECT INSPECTOR WILL VERIFY THAT ALL COMPONENTS AND EQUIPMENT HAVE BEEN ANCHORED IN ACCORDANCE WITH THE ABOVE REQUIREMENTS.

PIPING, DUCTWORK, AND ELECTRICAL DISTRIBUTION SYSTEM BRACING NOTE

PIPING, DUCTWORK, AND ELECTRICAL DISTRIBUTION SYSTEMS SHALL BE BRACED TO COMPLY WITH THE FORCES AND DISPLACEMENTS PRESCRIBED IN ASCE 7-16 SECTION 13.3 AS DEFINED IN ASCE 7-16 SECTIONS 13.6.5, 13.6.6, 13.6.7, 13.6.8; AND 2019 CBC, SECTIONS 1617A.1.24, 1617A.1.25 AND 1617A.1.26.

THE METHOD OF SHOWING BRACING AND ATTACHMENTS TO THE STRUCTURE FOR THE IDENTIFIED DISTRIBUTION SYSTEM ARE AS NOTED BELOW. WHEN BRACING AND ATTACHMENTS ARE BASED ON A PREAPPROVED INSTALLATION GUIDE (E.G., OSHPD OPM FOR 2013 CBC OR LATER), COPIES OF THE BRACING SYSTEM INSTALLATION GUIDE OR MANUAL SHALL BE AVAILABLE ON THE JOBSITE PRIOR TO THE START OF AND DURING THE HANGING AND BRACING OF THE DISTRIBUTION SYSTEMS. THE STRUCTURAL ENGINEER OF RECORD SHALL VERIFY THE ADEQUACY OF THE STRUCTURE TO SUPPORT THE HANGER AND BRACE LOADS.

MECHANICAL PIPING (MP), MECHANICAL DUCTS (MD), PLUMBING PIPING (PP), ELECTRICAL DISTRIBUTION SYSTEMS (E):

MP ☒ MD ☒ PP ☐ E ☐ OPTION 1: DETAILED ON THE APPROVED DRAWINGS WITH PROJECT SPECIFIC NOTES AND DETAILS.

MP ☐ MD ☐ PP ☐ E ☐ OPTION 2: SHALL COMPLY WITH THE APPLICABLE OSHPD PRE-APPROVAL (OPM #) #_____.

APPROVALS

IDENTIFICATION STAMP
DIV. OF THE STATE ARCHITECT
APP: 01-119409 INC:
REVIEWED FOR
SS ☑ FLS ☑ ACS ☑
DATE: 03/14/2022

NOLL & TAM ARCHITECTS
729 Heinz Avenue
Berkeley, CA 94710
tel 510.542.2200
fax 510.542.2201

SEAL

REGISTERED PROFESSIONAL ENGINEER — TYLER BRADSHAW — M33496 — EXP. 06/30/2022 — MECHANICAL — STATE OF CALIFORNIA

BLUE FOREST ENGINEERING
3622 Kingsley Street
Oakland, CA 94610
tel 510.925.8224

PROJECT TITLE

Peralta Community College District

MERRITT COLLEGE NEW LANDSCAPE HORTICULTURE COMPLEX

12500 Campus Drive
Oakland, CA 94619

BID SET

ISSUE DATE 03/03/2022

N&T JOB NUMBER 22003

REVISIONS

	DATE	DESCRIPTION

DRAWN BY S.A. | CHECKED BY T.B.

SHEET TITLE

MECHANICAL TITLE SHEET

SHEET NUMBER

M0.01

BIM 360://PCCD Merritt Horticulture/Merritt Horticulture_2020.rvt

7/13/2020 5:38:18 PM

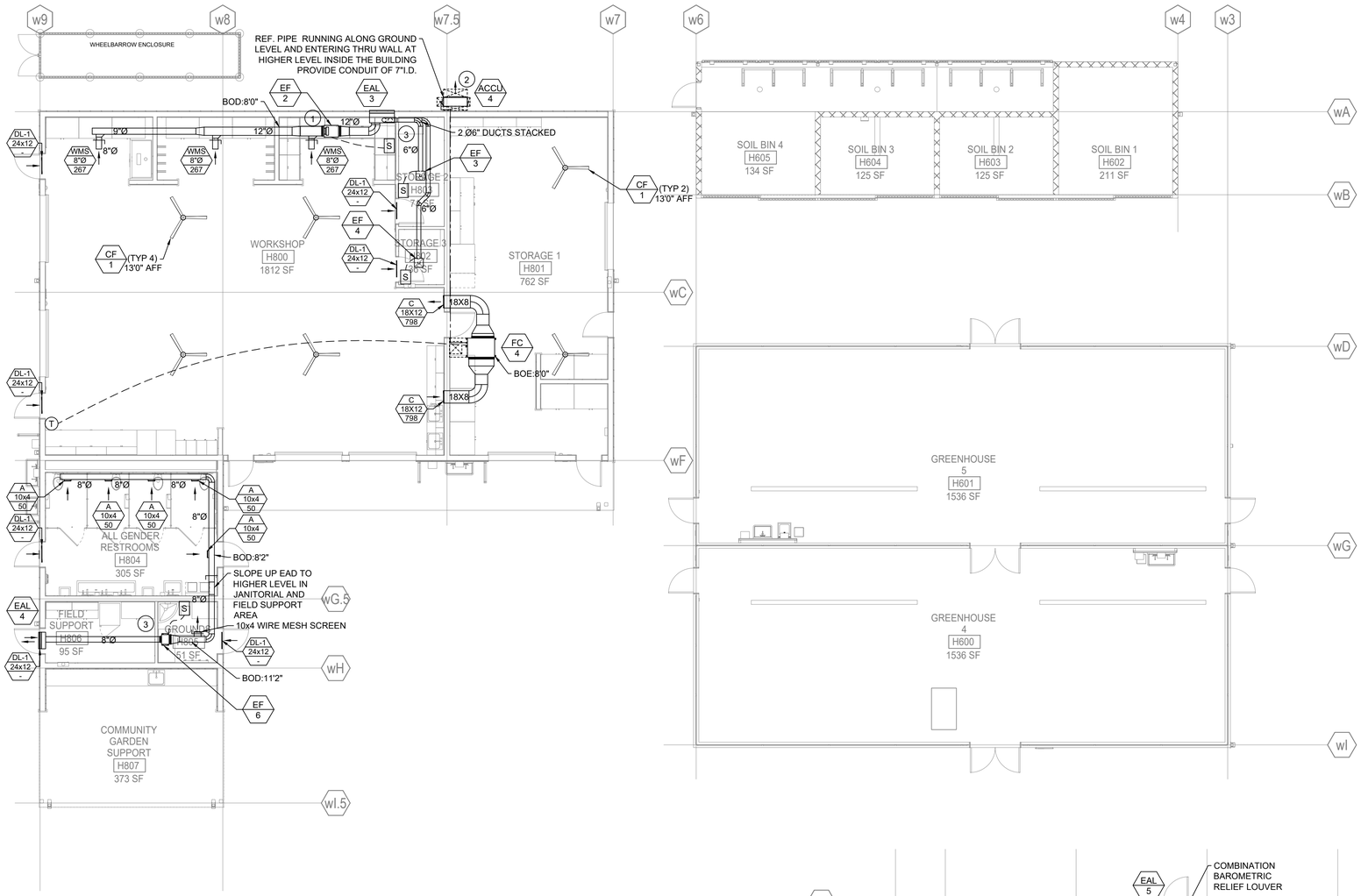

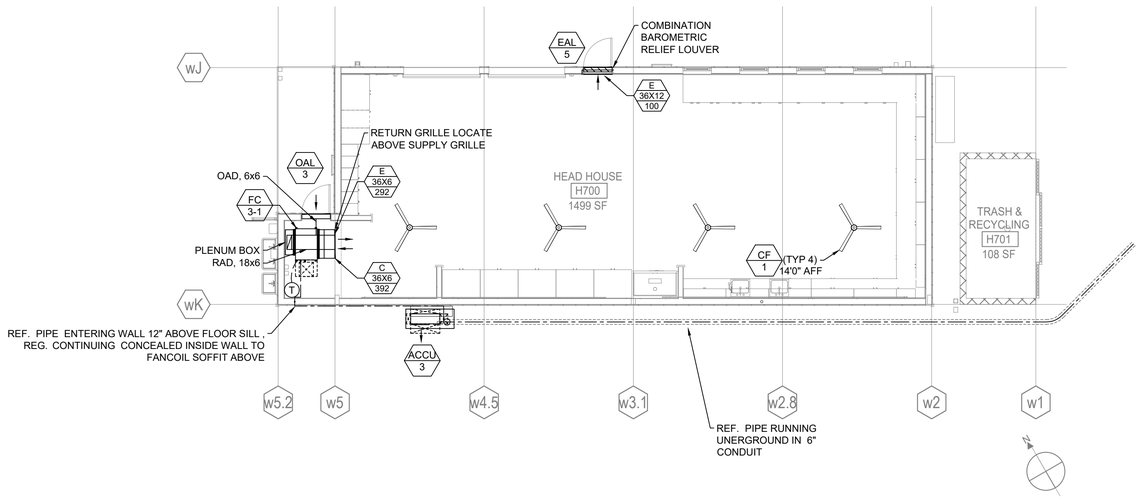

1 M2.31 MECHANICAL PLAN-WEST BUILDING
1/8" = 1'-0"

SHEET NOTES

1. PROVIDE 6" FLEX DUCT REEL MOUNTED IN CEILING WITH SNORKLE ATTACHMENT.
2. MOUNT OUTDOOR UNIT ON THE WALL WITH MOUNTING BRACKETS, 8'0" ABOVE GRADE OR FINISHED SLAB.
3. COORDINATE DUCT PENETRATIONS WITH PARTITION SUPPLIER/INSTALLER TO ENSURE PARTITION HOLES ARE CUT IN LINE AND AT PROPER ELEVATION. INSTALL ESCUTCHEON RINGS ON EACH SIDE OF PENETRATIONS TO COVER ALL VISIBLE GAPS (TYP ALL).
4. PROVIDE METAL ACCESS DOORS OR COORDINATE REMOVABLE PANELS IN CASEWORK TO QUICKLY ACCESS FILTER RACKS, ECNOMIZERS AND BACKDRAFT DAMPERS FROM TOP LID OF CASEWORK IN CLASSROOMS.

APPROVALS

IDENTIFICATION STAMP
DIV. OF THE STATE ARCHITECT
APP: 01-119409 INC:
REVIEWED FOR
SS ☑ FLS ☑ ACS ☑
DATE: 03/14/2022

NOLL & TAM ARCHITECTS
729 Heinz Avenue
Berkeley, CA 94710
tel 510.542.2200
fax 510.542.2201

SEAL

REGISTERED PROFESSIONAL ENGINEER
TYLER BRADSHAW
M33496
EXP. 06/30/2022
MECHANICAL
STATE OF CALIFORNIA

BLUE FOREST ENGINEERING
3622 Kingsley Street
Oakland, CA 94610
tel 510.925.8224

PROJECT TITLE

Peralta Community College District
MERRITT COLLEGE NEW LANDSCAPE HORTICULTURE COMPLEX

12500 Campus Drive
Oakland, CA 94619

BID SET

ISSUE DATE	03/03/2022
N&T JOB NUMBER	22003

REVISIONS

#	DATE	DESCRIPTION

DRAWN BY S.A. | CHECKED BY T.B.

SHEET TITLE

MECHANICAL PLAN-WEST BUILDING

SHEET NUMBER

M2.31

7/13/2020 5:38:18 PM BIM 360://PCCD Merritt Horticulture/Merritt Horticulture_2020.rvt

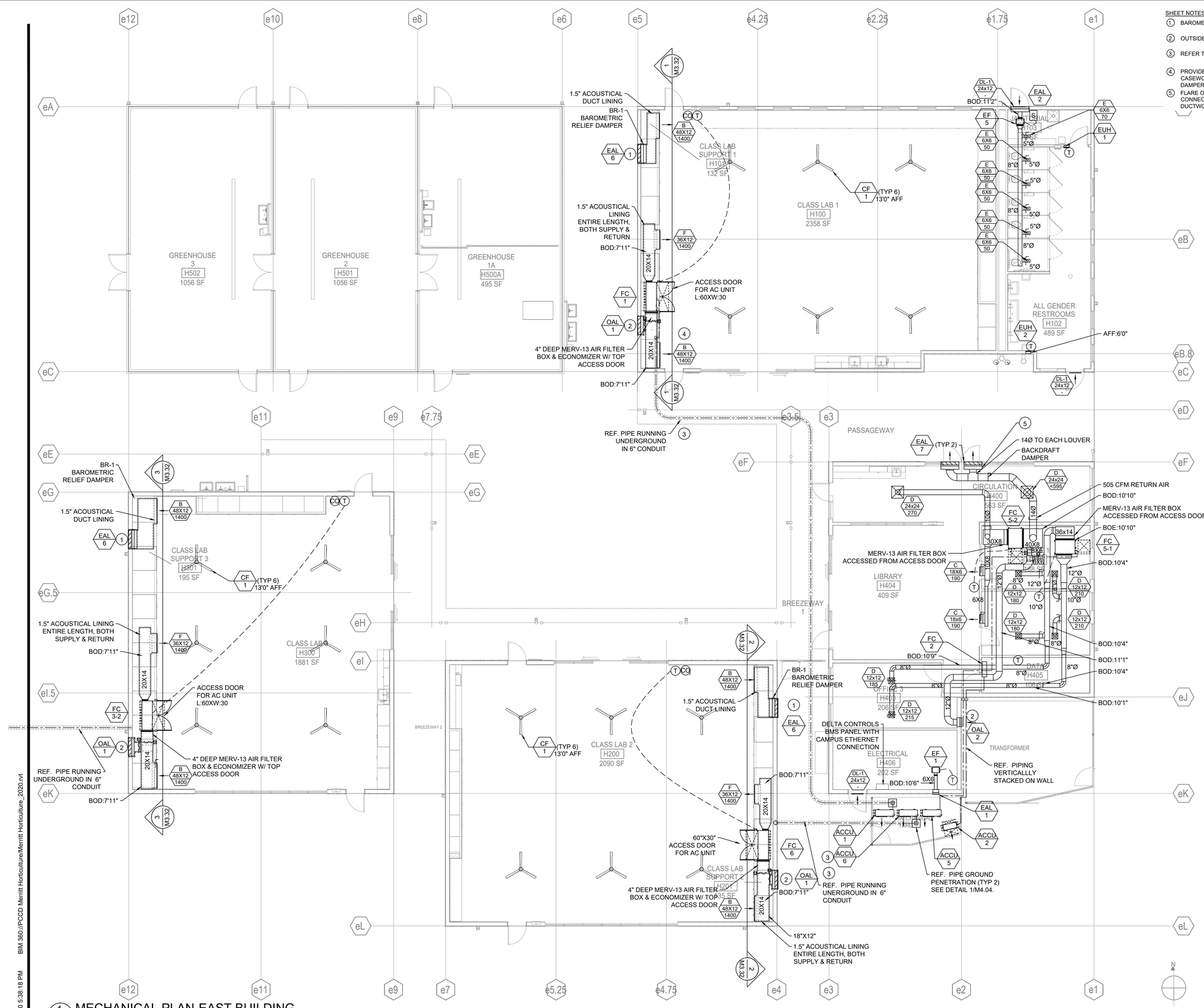

1 M2.32 MECHANICAL PLAN-EAST BUILDING
1/8" = 1'-0"

SHEET NOTES

1. BAROMETRIC RELIEF THROUGH ARCHITECTURAL LOUVER.
2. OUTSIDE AIR INTAKE LOUVER.
3. REFER TO SHEET 4.XX DETAILS FOR INSTALLATION OF REFRIGERANT PIPES.
4. PROVIDE METAL ACCESS DOORS OR COORDINATE REMOVABLE PANELS IN CASEWORK TO QUICKLY ACCESS FILTER RACKS, ECNOMIZERS AND BACKDRAFT DAMPERS FROM TOP LID OF CASEWORK IN CLASSROOMS.
5. FLARE OR ENLARGE LOUVER PLENUM TO ACCOMODATE LARGER DUCT CONNECTION AS SHOWN. PROVIDE R-8+ INSULATION ON PLENUM AND DUCTWORK CONNECTED AT LEAST 24" PAST DAMPER.

APPROVALS

IDENTIFICATION STAMP
DIV. OF THE STATE ARCHITECT
APP: 01-119409 INC:
REVIEWED FOR
SS ☑ FLS ☑ ACS ☑
DATE: 03/14/2022

NOLL & TAM ARCHITECTS
729 Heinz Avenue
Berkeley, CA 94710
tel 510.542.2200
fax 510.542.2201

SEAL

REGISTERED PROFESSIONAL ENGINEER TYLER BRADSHAW M33496 EXP. 06/30/2022 MECHANICAL STATE OF CALIFORNIA

BLUE FOREST ENGINEERING
3622 Kingsley Street
Oakland, CA 94610
tel 510.925.8224

PROJECT TITLE

Peralta Community College District
MERRITT COLLEGE NEW LANDSCAPE HORTICULTURE COMPLEX

12500 Campus Drive
Oakland, CA 94619

BID SET

ISSUE DATE	03/03/2022
N&T JOB NUMBER	22003

REVISIONS

#	DATE	DESCRIPTION

DRAWN BY S.A. | CHECKED BY T.B.

SHEET TITLE

MECHANICAL PLAN-EAST BUILDING

SHEET NUMBER

M2.32

7/13/2020 5:38:18 PM BIM 360://PCCD Merritt Horticulture/Merritt Horticulture_2020.rvt

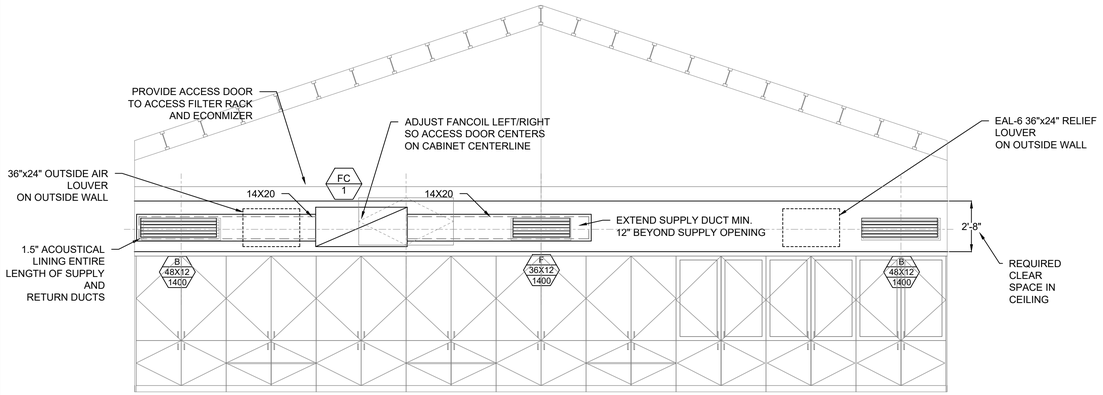

1 M3.32 CLASS LAB 1 CLOSET SECTION

1/4" = 1'-0"

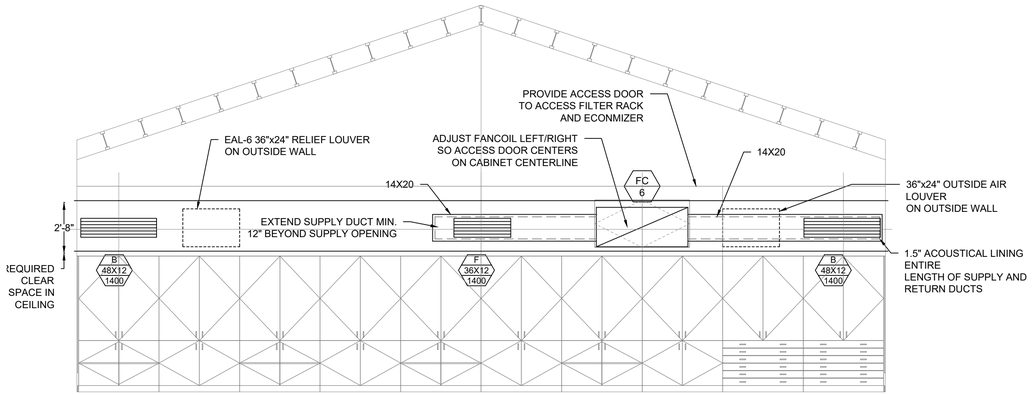

2 M3.32 CLASS LAB 2 CLOSET SECTION

1/4" = 1'-0"

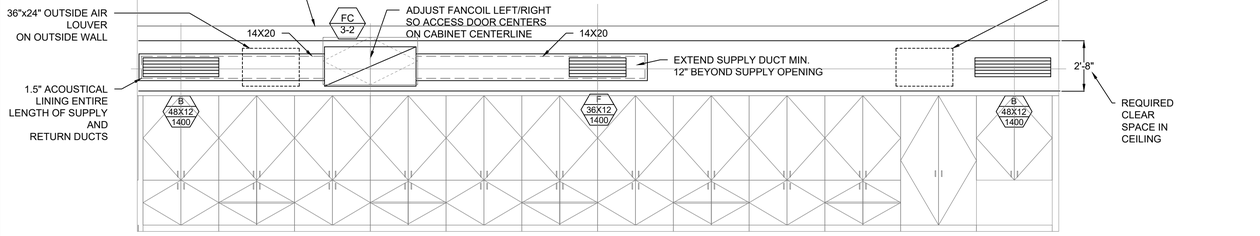

3 M3.32 CLASS LAB 3 CLOSET SECTION

1/4" = 1'-0"

APPROVALS

IDENTIFICATION STAMP
DIV. OF THE STATE ARCHITECT
APP: 01-119409 INC:
REVIEWED FOR
SS ☑ FLS ☑ ACS ☑
DATE: 03/14/2022

NOLL & TAM ARCHITECTS

729 Heinz Avenue
Berkeley, CA 94710
tel 510.542.2200
fax 510.542.2201

SEAL

REGISTERED PROFESSIONAL ENGINEER
TYLER BRADSHAW
M33496
EXP. 06/30/2022
MECHANICAL
STATE OF CALIFORNIA

BLUE FOREST ENGINEERING

3622 Kingsley Street
Oakland, CA 94610
tel 510.925.8224

PROJECT TITLE

Peralta Community College District

MERRITT COLLEGE NEW LANDSCAPE HORTICULTURE COMPLEX

12500 Campus Drive
Oakland, CA 94619

BID SET

ISSUE DATE	03/03/2022
N&T JOB NUMBER	22003

REVISIONS

#	DATE	DESCRIPTION

DRAWN BY	S.A.	CHECKED BY	T.B.

SHEET TITLE

MECHANICAL SECTIONS- EAST BUILDING

SHEET NUMBER

M3.32

7/13/2020 5:38:18 PM BIM 360://PCCD Merritt Horticulture/Merritt Horticulture_2020.rvt

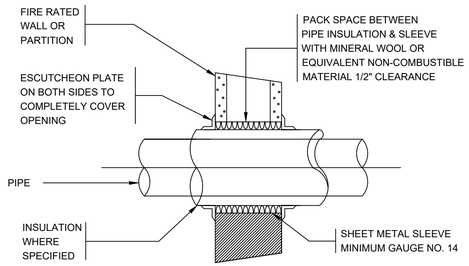

NOTE -

1. THE INSTALLATION OF FIRE STOPPING MATERIALS SHALL BE SUBJECT TO CONTROLLED INSPECTION IN ACCORDANCE WITH C26-106.3.

1 PIPE SLEEVE THRU RATED WALL

NOT TO SCALE

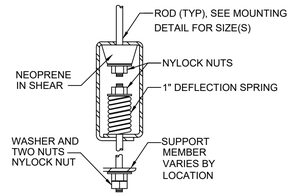

2 VIBRATION ISOLATOR DETAIL

NOT TO SCALE

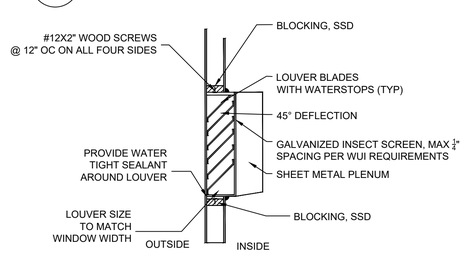

3 LOUVER DETAIL

NOT TO SCALE

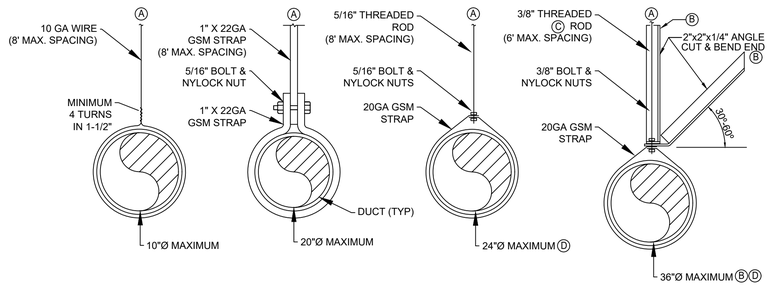

NOTES:

A. SEE "UPPER ATTACHMENT DETAILS" (5/M4.03).
B. PROVIDE SEISMIC RESTRAINT LATERAL AND LONGITUDINAL BRACES FOR DUCTWORK LARGER THAN 6 FT² OR LARGER IN SIZE AND FOR DUCTS 20LBS/LF OR GREATER IN WEIGHT. TRANSVERSE BRACING SPACING AT 30' MAXIMUM & TRAVERSE BRACE SPACING AT 60' MAXIMUM.
C. WHEREVER BRACES OCCUR, PROVIDE 1X1X1/8" ANGLE ROD STIFFENERS USING MASON INDUSTRIES SRC CLAMPS, MINIMUM OF TWO PER ROD WITH MAXIMUM SPACING OF 22" BETWEEN CLAMPS, MAX ROD LENGTH OF 96".
D. FOR ALL EXPOSED DUCTS REGARDLESS OF SIZE, USE ONLY THREADED ROD SUPPORTS AND PROVIDE ONE PRIME-COAT PAINT.

4 ROUND DUCT SUPPORTS

NOT TO SCALE

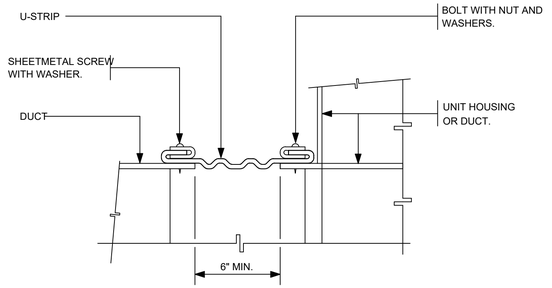

5 FLEXIBLE CONNECTION (DUCT-EQUIPMENT)

NOT TO SCALE

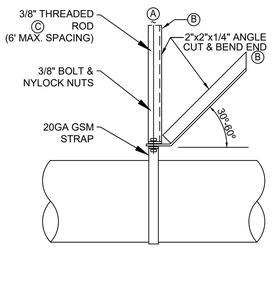

6 CEILING DIFFUSER WITH BRANCH DUCT FLEX CONNECTION

NOT TO SCALE

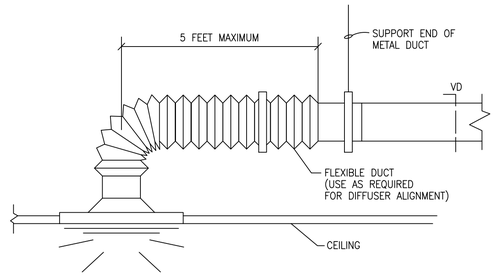

7 FANCOIL/EF-2 INSTALLATION DETAIL

NOT TO SCALE

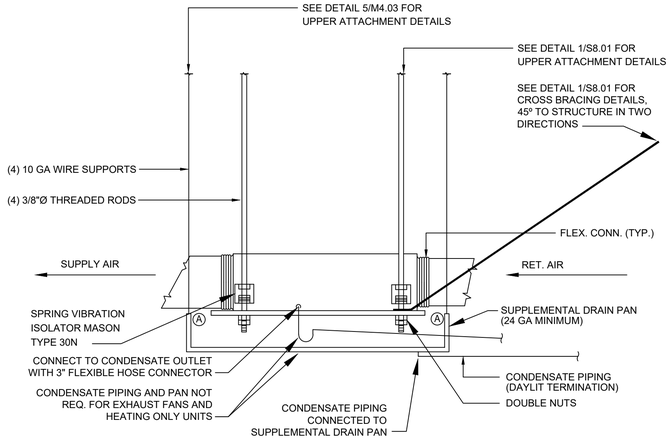

NOTES:

A. ATTACH DRAIN PAN IN (4) CORNERS TO WIRE SUPPORTS ABOVE. DRILL 1/4" HOLES NEAR CORNERS 1" FROM TOP EDGE, LOOP AND PROVIDE (4) TIGHT WRAPS OF WIRE IN 1-1/2".

TOP VIEW

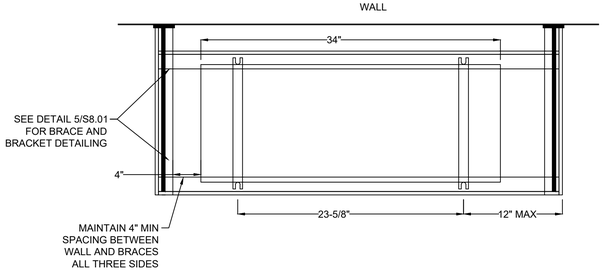

SIDE VIEW

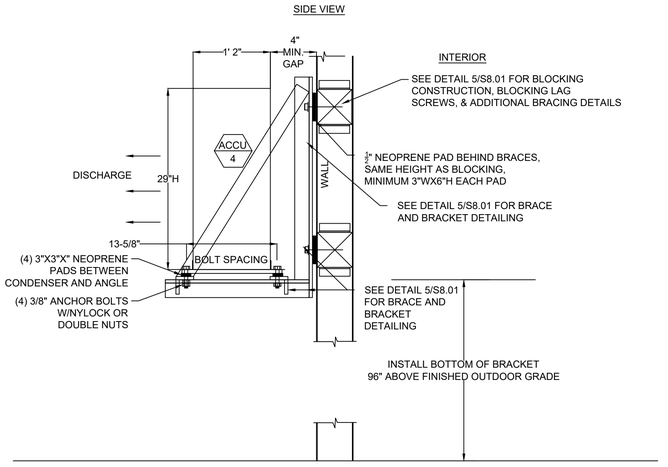

8 ACCU-4 CONDENSER WALL BRACKET

NOT TO SCALE

APPROVALS

IDENTIFICATION STAMP
DIV. OF THE STATE ARCHITECT
APP: 01-119409 INC:
REVIEWED FOR
SS ☑ FLS ☑ ACS ☑
DATE: 03/14/2022

NOLL & TAM ARCHITECTS
729 Heinz Avenue
Berkeley, CA 94710
tel 510.542.2200
fax 510.542.2201

SEAL

REGISTERED PROFESSIONAL ENGINEER TYLER BRADSHAW M32496 EXP. 06/30/2022 MECHANICAL STATE OF CALIFORNIA

BLUE FOREST ENGINEERING
3622 Kingsley Street
Oakland, CA 94610
tel 510.925.8224

PROJECT TITLE

Peralta Community College District
MERRITT COLLEGE NEW LANDSCAPE HORTICULTURE COMPLEX

12500 Campus Drive
Oakland, CA 94619

BID SET

ISSUE DATE	03/03/2022
N&T JOB NUMBER	22003

REVISIONS

#	DATE	DESCRIPTION

DRAWN BY	S.A.	CHECKED BY	T.B.

SHEET TITLE

MECHANICAL DETAILS

SHEET NUMBER

M4.01

7/13/2020 5:38:18 PM BIM 360://PCCD Merritt Horticulture/Merritt Horticulture_2020.rvt

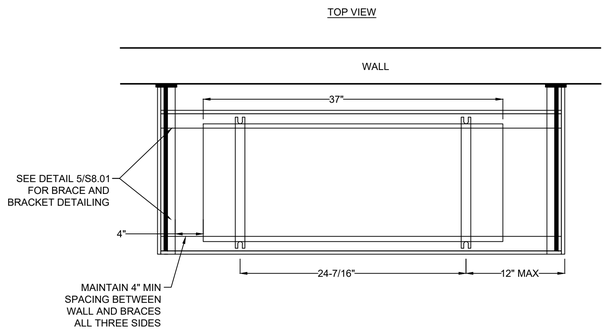

1 ACCU-3 CONDENSER WALL BRACKET

NOT TO SCALE

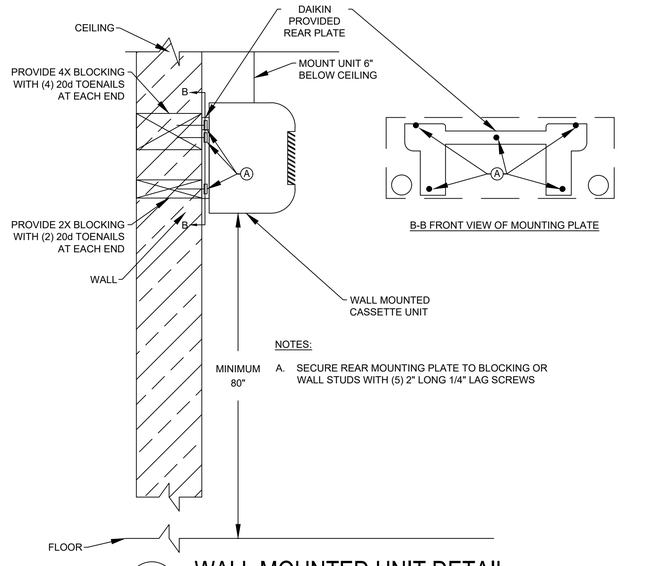

3 WALL MOUNTED UNIT DETAIL

NOT TO SCALE

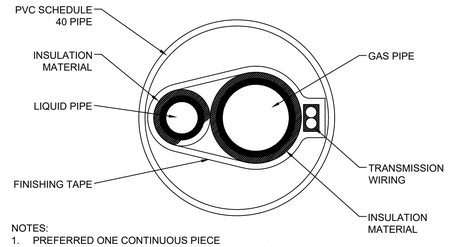

6 REFRIGERANT PIPING CASING INSTALLATION

NOT TO SCALE

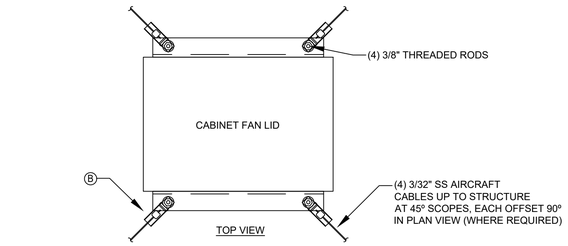

NOTE:

A. DUCT LENGTH TO BE MINIMUM THREE WHEEL DIAMETER ON DISCHARGE AND INLET WHERE PHYSICALLY POSSIBLE.
B. WHERE FANS ARE 20LBS OR GREATER AND MOUNTED MORE THAN 12" FROM STRUCTURE, PROVIDE (4) 3/32" DIAGONAL SWAY CABLES WITH MASON SCHB-0 SEISMIC CABLE BRACE ATTACHMENTS AT EACH END OF CABLE ATTACHMENT.

5 EF-3, EF-4, EF-5 & EF-6 INLINE FAN SUPPORT DETAIL

NOT TO SCALE

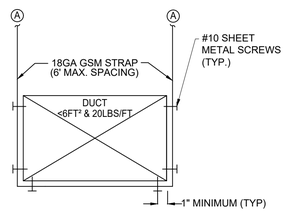

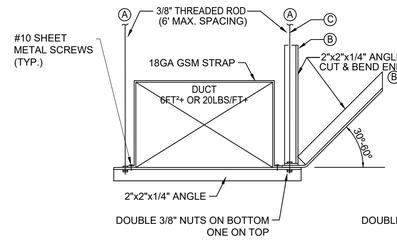

END VIEW

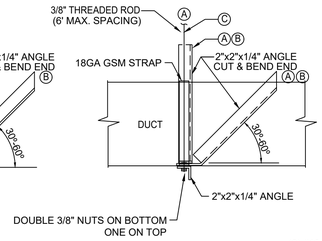

SIDE VIEW

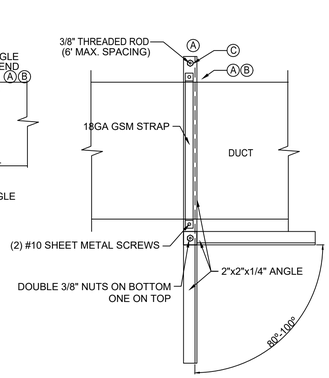

TOP VIEW

NOTES:

A. SEE UPPER ATTACHMENT DETAIL 5/M4.03 FOR STRUCTURAL ATTACHMENT DETAILS

B. PROVIDE SEISMIC RESTRAINT LATERAL AND LONGITUDINAL BRACES FOR DUCTWORK LARGER THAN 6 FT² OR LARGER IN SIZE AND FOR DUCTS 20LBS/LF OR GREATER IN WEIGHT. TRANSVERSE BRACING SPACING AT 30' MAXIMUM & TRAVERSE BRACE SPACING AT 60' MAXIMUM.

C. WHEREVER BRACES OCCUR, PROVIDE 1X1X1/8" ANGLE ROD STIFFENERS USING MASON INDUSTRIES SRC CLAMPS, MINIMUM OF TWO PER ROD WITH MAXIMUM SPACING OF 22" BETWEEN CLAMPS, MAX ROD LENGTH OF 96".

2 RECTANGULAR DUCT SUPPORTS

NOT TO SCALE

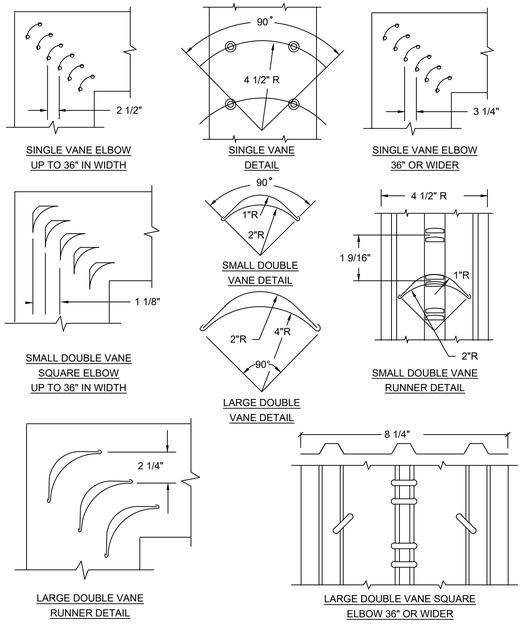

4 LOW VELOCITY DUCTWORK ELBOWS

NOT TO SCALE

APPROVALS

IDENTIFICATION STAMP
DIV. OF THE STATE ARCHITECT
APP: 01-119409 INC:
REVIEWED FOR
SS ☑ FLS ☑ ACS ☑
DATE: 03/14/2022

NOLL & TAM ARCHITECTS
729 Heinz Avenue
Berkeley, CA 94710
tel 510.542.2200
fax 510.542.2201

SEAL

REGISTERED PROFESSIONAL ENGINEER TYLER BRADSHAW M33496 EXP. 06/30/2022 MECHANICAL STATE OF CALIFORNIA

BLUE FOREST ENGINEERING
3622 Kingsley Street
Oakland, CA 94610
tel 510.925.8224

PROJECT TITLE

Peralta Community College District
MERRITT COLLEGE NEW LANDSCAPE HORTICULTURE COMPLEX

12500 Campus Drive
Oakland, CA 94619

BID SET

ISSUE DATE	03/03/2022
N&T JOB NUMBER	22003

REVISIONS

#	DATE	DESCRIPTION

DRAWN BY S.A. | CHECKED BY T.B.

SHEET TITLE
MECHANICAL DETAILS

SHEET NUMBER
M4.02

7/13/2020 5:38:18 PM BIM 360://PCCD Merritt Horticulture/Merritt Horticulture_2020.rvt

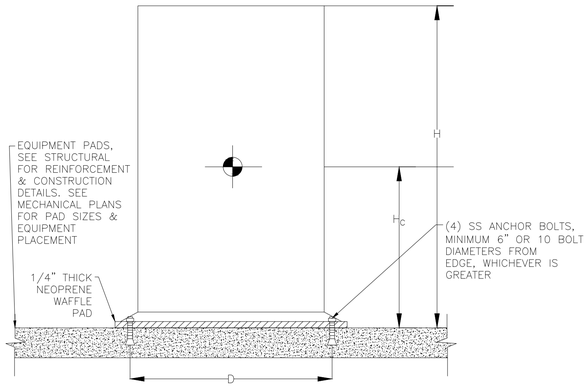

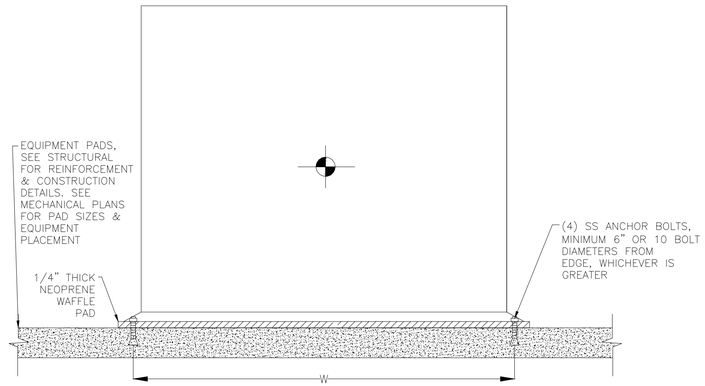

CONDENSER ANCHORS										
TAG	MAKE	MODEL NO.	H(IN)	H_C(IN)	D(IN)	W(IN)	ANCHOR SIZE (IN)	MINIMUM EMDEBMENT (IN)	OPERATING WEIGHT (LBS)	NOTES
ACCU-1	DAIKIN	RXTQ48TAVJU	39	14	13.75	37	1/2	6	180	1
ACCU-2	DAIKIN	RKB12AXVJU	21	10	13.625	26	3/8	5	60	1
ACCU-5	DAIKIN	RXTQ48TAVJU	39	14	13.75	37	1/2	6	180	1
ACCU-6	DAIKIN	RXTQ48TAVJU	39	14	13.75	37	1/2	6	180	1

NOTES:
1. ANCHORS SHALL BE HILTI KWIK BOLT TZ-2

1 SLAB MOUNTED CONDENSER
NOT TO SCALE

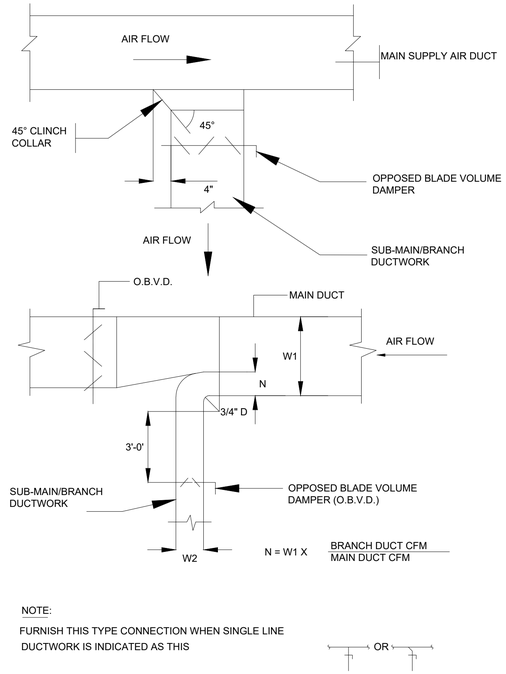

NOTE:

FURNISH THIS TYPE CONNECTION WHEN SINGLE LINE DUCTWORK IS INDICATED AS THIS — OR —

2 NOT USED
NOT TO SCALE

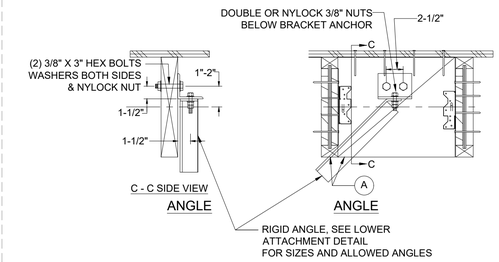

3 SUPPLY AIR DUCTWORK SUB-MAIN/BRANCH DUCT CONNECTION
NOT TO SCALE

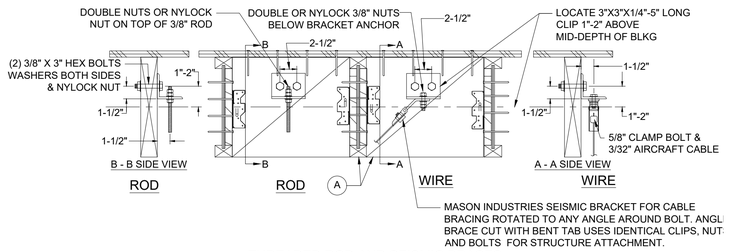

THREADED ROD AND SEISMIC BRACES

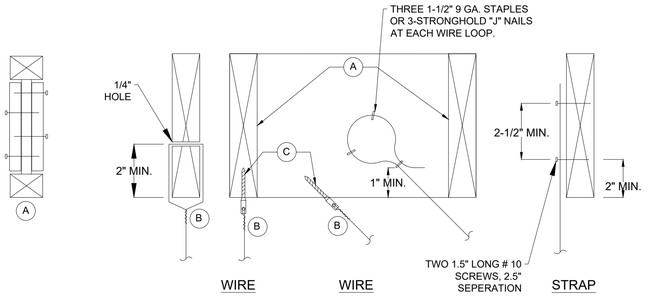

NOTES:

A. REFER TO STRUCTURAL DETAIL 15/S5.02 FOR ADDITIONAL DETAILS ON BLOCKING ATTACHMENTS AND I-JOIST WEB REINFORCEMENTS. DO NOT ATTACH SCREWS OR OTHER FASTENERS TO THE BOTTOM CHORD OR UNREINFORCED TJI WITHOUT WRITTEN APPROVAL OF THE STRUCTURAL ENGINEER OF RECORD.
B. PROVIDE A MINIMUM OF (4) FOUR TIGHT TURNS WITHIN 1-1/2".
C. 1/4" SCREW EYE WITH FULL THREAD EMBEDMENT (1-1/2" MIN.).SCREW SHALL BE INSERTED IN THE SAME DIRECTION AS THE TENSION FROM SUPPORT.

5 UPPER ATTACHMENT DETAIL
NOT TO SCALE

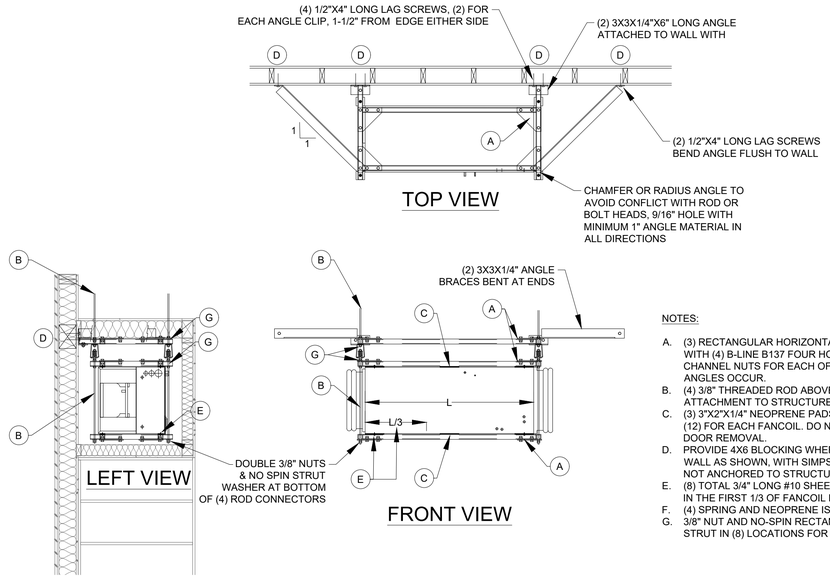

NOTES:

A. (3) RECTANGULAR HORIZONTAL FRAMES, EACH CONSTRUCTED FROM (4) B-LINE B22 STRUTS WITH (4) B-LINE B137 FOUR HOLE CORNER GUSSET PLATES. PROVIDE 1/2"X1" LONG BOLTS AND CHANNEL NUTS FOR EACH OF THE (4) GUSSET PLATE HOLES. USE 1-1/2" LONG BOLTS WHERE 3X3 ANGLES OCCUR.
B. (4) 3/8" THREADED ROD ABOVE AND BELOW (4) ISOLATORS. SEE DETAIL 1/S8.01 FOR UPPER ATTACHMENT TO STRUCTURE DETAILS.
C. (3) 3"X2"X1/4" NEOPRENE PADS BETWEEN EACH STRUT TO FANCOIL CONTACT POINT, TOTAL OF (12) FOR EACH FANCOIL. DO NOT OVERLAP ACCESS DOORS OR OTHERWISE IMPINGE ON ACCESS DOOR REMOVAL.
D. PROVIDE 4X6 BLOCKING WHERE HORIZONTAL STRUT FRAMES AND 3X3 ANGLE ANCHORS TO WALL AS SHOWN, WITH SIMPSON A34 CLIPS EACH END, T&B. FRAMES BELOW ISOLATORS ARE NOT ANCHORED TO STRUCTURE OR CASEWORK.
E. (8) TOTAL 3/4" LONG #10 SHEET METAL SCREWS THROUGH FANCOIL AND STRUT. LOCATE SCREW IN THE FIRST 1/3 OF FANCOIL LENGTH TO AVOID DAMAGING INTERNAL COMPONENTS.
F. (4) SPRING AND NEOPRENE ISOLATORS, SEE DETAIL 2/M4.01.
G. 3/8" NUT AND NO-SPIN RECTANGULAR STRUT WASHER ON TOP OF STRUT AND 3/8" NUT BELOW STRUT IN (8) LOCATIONS FOR UPPER STRUT TO ROD ATTACHMENT.

4 CLASS ROOM FAN COIL SUPPORT
NOT TO SCALE

APPROVALS

IDENTIFICATION STAMP
DIV. OF THE STATE ARCHITECT
APP: 01-119409 INC:
REVIEWED FOR
SS ☑ FLS ☑ ACS ☑
DATE: 03/14/2022

NOLL & TAM ARCHITECTS
729 Heinz Avenue
Berkeley, CA 94710
tel 510.542.2200
fax 510.542.2201

SEAL

REGISTERED PROFESSIONAL ENGINEER
TYLER BRADSHAW
M33496
EXP. 06/30/2022
MECHANICAL
STATE OF CALIFORNIA

BLUE FOREST ENGINEERING
3622 Kingsley Street
Oakland, CA 94610
tel 510.925.8224

PROJECT TITLE

Peralta Community College District
MERRITT COLLEGE NEW LANDSCAPE HORTICULTURE COMPLEX

12500 Campus Drive
Oakland, CA 94619

BID SET

ISSUE DATE	03/03/2022
N&T JOB NUMBER	22003

REVISIONS

#	DATE	DESCRIPTION

DRAWN BY S.A. | CHECKED BY T.B.

SHEET TITLE
MECHANICAL DETAILS

SHEET NUMBER
M4.03

7/13/2020 5:38:18 PM BIM 360://PCCD Merritt Horticulture/Merritt Horticulture_2020.rvt

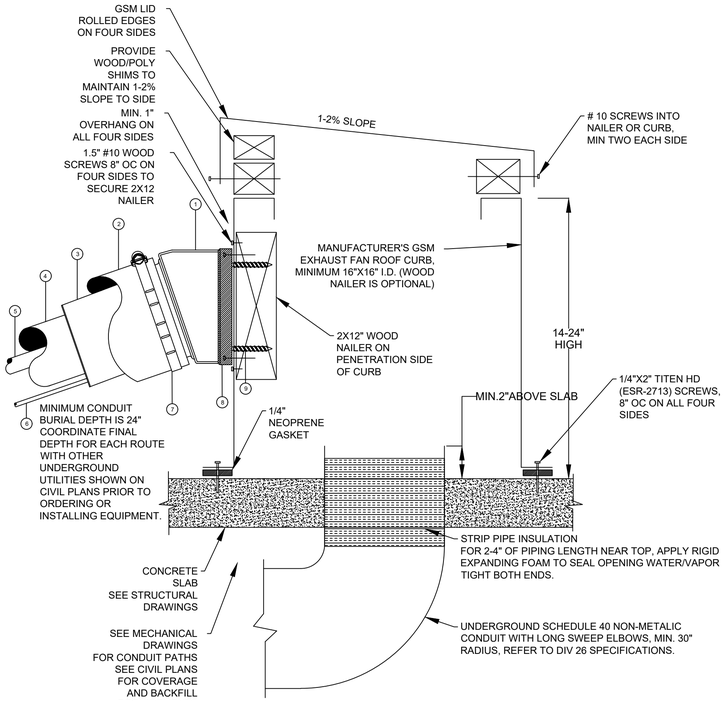

1 REFRIGERANT PIPING GROUND PENETRATION

NOT TO SCALE

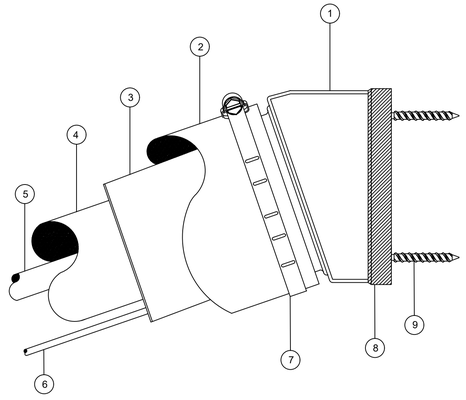

LEGEND:

1. EXTERIOR WALL OR PARAPET WALL SEAL PENETRATION OUTLET WITH ELASTOMERIC LINE-SET COMPRESSION SLEEVE TYPE "TITAN GS30" BY AIREX MANUFACTURING INC.
2. INSULATION PROTECTIVE PVC COVER TYPE "E-FLEX GUARD" BY AIREX MANUFACTURING INC.
3. ELASTOMERIC LINE-SET COMPRESSION & ANTI-VIBRATION SLEEVE (COMPONENT OF REFERENCE 1 "TITAN GS30").
4. INSULATION FOR REFRIGERATION VAPOR LINE.
5. REFRIGERATION VAPOR LINE.
6. REFRIGERATION LIQUID LINE.
7. MECHANICAL CONNECTION SECURED WITH STAINLESS STEEL CLAMP (COMPONENT OF REFERENCE 1 "TITAN GS30").
8. WALL SURFACE SEAL ELASTOMERIC GASKET (COMPONENT OF REFERENCE 1 "TITAN GS30").
9. "(4) 2" LONG" WALL FASTENERS SELF-TAPPING 3/8" HEX HEAD 1/4" DIAMETER ALL MATERIAL ANCHORS SCREWS WITH ELASTOMERIC WASHERS. (COMPONENT OF REFERENCE 1 "TITAN GS30").

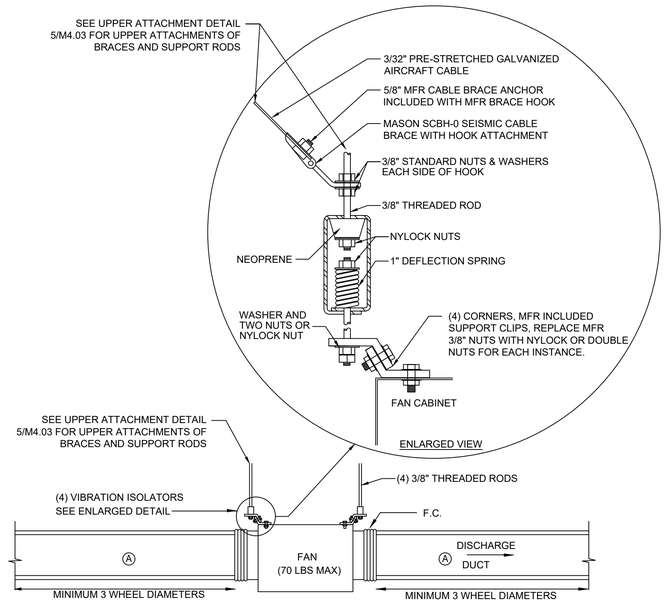

NOTE:

A. DUCT LENGTH TO BE MINIMUM THREE WHEEL DIAMETER ON DISCHARGE AND INLET WHERE PHYSICALLY POSSIBLE.

3 EF-2 MOUNTING DETAIL

NOT TO SCALE

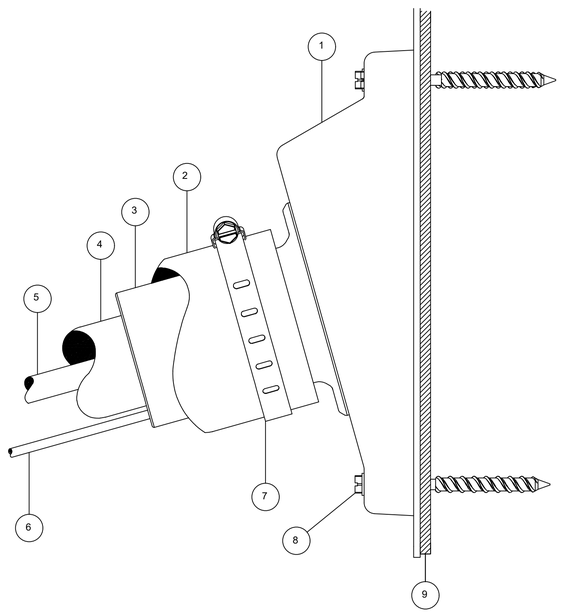

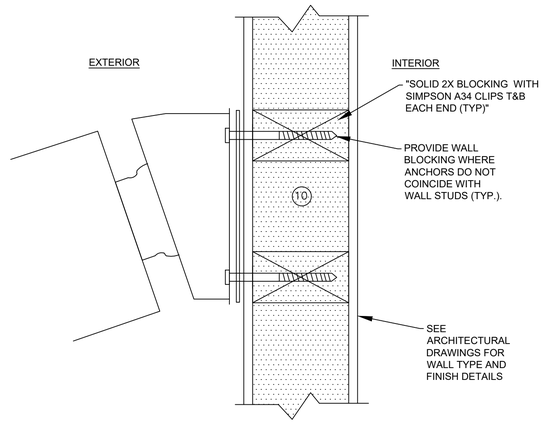

NOTES:

1. EXTERIOR WALL OR PARAPET WALL SEAL PENETRATION OUTLET WITH ELASTOMERIC LINE-SET COMPRESSION SLEEVE TYPE "TITAN GS30" BY AIREX MANUFACTURING INC.
2. INSULATION PROTECTIVE PVC COVER TYPE "E-FLEX GUARD" BY AIREX MANUFACTURING INC.
3. ELASTOMERIC LINE-SET COMPRESSION & ANTI-VIBRATION SLEEVE (COMPONENT OF REFERENCE 1 "TITAN GS30").
4. INSULATION FOR REFRIGERATION VAPOR LINE.
5. REFRIGERATION VAPOR LINE.
6. REFRIGERATION LIQUID LINE.
7. MECHANICAL CONNECTION SECURED WITH STAINLESS STEEL CLAMP (COMPONENT OF REFERENCE 1 "TITAN GS30").
8. WALL SURFACE SEAL ELASTOMERIC GASKET (COMPONENT OF REFERENCE 1 "TITAN GS30").
9. "(4) 2" LONG" WALL FASTENERS SELF-TAPPING 3/8" HEX HEAD 1/4" DIAMETER ALL MATERIAL ANCHORS SCREWS WITH ELASTOMERIC WASHERS. (COMPONENT OF REFERENCE 1 "TITAN GS30").
10. CONTINUE REFRIGERATION PIPING INSULATION WITHOUT GAPS TO FANCOIL CONNECTIONS SPECIFICATIONS AND MECHANICAL PLANS FOR ADDITIONAL REQUIREMENTS.

2 REFRIGERANT PIPING WALL PENETRATION

NOT TO SCALE

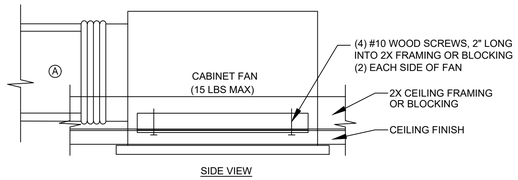

SIDE VIEW

NOTE:

A. DUCT LENGTH TO BE MINIMUM THREE WHEEL DIAMETER ON INLET WHERE PHYSICALLY POSSIBLE.

4 EF-1 MOUNTING DETAIL

NOT TO SCALE

APPROVALS

IDENTIFICATION STAMP
DIV. OF THE STATE ARCHITECT
APP: 01-119409 INC:
REVIEWED FOR
SS ☑ FLS ☑ ACS ☑
DATE: 03/14/2022

NOLL & TAM ARCHITECTS
729 Heinz Avenue
Berkeley, CA 94710
tel 510.542.2200
fax 510.542.2201

SEAL

REGISTERED PROFESSIONAL ENGINEER TYLER BRADSHAW M33496 EXP. 06/30/2022 MECHANICAL STATE OF CALIFORNIA

BLUE FOREST ENGINEERING
3622 Kingsley Street
Oakland, CA 94610
tel 510.925.8224

PROJECT TITLE

Peralta Community College District

MERRITT COLLEGE NEW LANDSCAPE HORTICULTURE COMPLEX

12500 Campus Drive
Oakland, CA 94619

BID SET

ISSUE DATE	03/03/2022
N&T JOB NUMBER	22003

REVISIONS

#	DATE	DESCRIPTION

DRAWN BY S.A. | CHECKED BY T.B.

SHEET TITLE

MECHANICAL DETAILS

SHEET NUMBER

M4.04

7/13/2020 5:38:18 PM BIM 360://PCCD Merritt Horticulture/Merritt Horticulture_2020.rvt

INDOOR FANCOIL UNITS

TAG	MAKE	MODEL	LOCATION	AREA SERVED	TYPE	TON (TR)	COOLING (MBH)	HEATING (MBH)	OUTSIDE AIR (CFM)	SUPPLY FAN DATA				PIPE SIZE			ELECTRICAL				DIMENSIONS (WXHXD) (IN.)	WEIGHT (LBS)	SEISMIC ANCHORAGE DETAIL	NOTES
										SUPPLY AIRFLOW (CFM)	MAX ESP (IN.WC)	MOTOR [HP] (W)	SOUND PRESS. LEVEL UNIT (Dba)	LIQUID (IN.)	GAS (IN.)	COND. DRAIN (IN)	(V/PH/Hz)	FLA (A)	MCA (A)	MOCP (A)				
FC-1	DAIKIN	FXTQ48TAVJUA	CLASS LAB 1	CLASSROOM	DUCTED MULTI POSITION AHU	4	48	54	615	1400	0.8		54	3/8	5/8	3/4	208-230/1/60		6.5	15	21x54x21	150	4/M4.03	1-6
FC-2	DAIKIN	FTKB12AXVJU	DATA H405	DATA H405	WALL MOUNTED DUCTLESS	1	11	N/A	0	360	N/A	18		1/4	3/8	3/4	208-230/1/60	0.2		15	36x12x9	20	3/M4.02	1-6
FC-3-1	DAIKIN	FDMQ12RVJU	HEAD HOUSE H700	HEAD HOUSE H700	DUCTED	1	11		225	350	0.6	130		1/4	3/8	1	208-230/1/60	0.73		15	28x10x32	70	7/M4.01	1-6
FC-3-2	DAIKIN	FXTQ48TAVJUA	CLASS LAB 3	CLASSROOM	DUCTED MULTI POSITION AHU	4	48	54	615	1400	0.8		54	3/8	5/8	3/4	208-230/1/60		6.5	15	21x54x21	150	4/M4.03	1-6
FC-4	DAIKIN	FDMQ24RVJU	STORAGE 1 H801	WORKSHOP H800	DUCTED	2	21.8	24	0	790	0.6	230		1/4	5/8	1	208-230/1/60	1.54		15	40x10x32	90	7/M4.01	1-6
FC-5-2	DAIKIN	FXMQ24PBVJU	OFFICE H401	LIBRARY & CIRCULATION	DUCTED	2	24	27	145	650	0.8		64	3/8	5/8	1-1/4	208-230/1/60		1.8	15	12x40x28	80	7/M4.01	1-5, 7
FC-5-1	DAIKIN	FXMQ18PBVJU	OFFICE H401	OFFICES	DUCTED	1.5	18	20	90	635	0.8		61	1/4	1/2	1-1/4	208-230/1/60		1.6	15	40x12x28	80	7/M4.01	1-5, 7
FC-6	DAIKIN	FXTQ48TAVJUA	CLASS LAB 2	CLASSROOM	DUCTED MULTI POSITION AHU	4	48	54	615	1400	0.8		54	3/8	5/8	3/4	208-230/1/60		6.5	15	21x54x21	150	4/M4.03	1-6

NOTES:

1) PROVIDE ACCESS DOOR SUFFICIENT TO REPLACE FILTERS AND MAINTAIN UNIT PER MANUFACTURER'S RECOMMENDATIONS.
2) PROVIDE & FILL WITH R410a REFRIGERANT.
3) PROVIDE MOUNTING BRACKETS AND ALL ASSOCIATED ACCESSORIES.
4) ALL REFRIGERANT PIPING TO BE SIZED PER MANUFACTURERS RECOMMENDATIONS.
5) PROVIDE LABELED MERV 13 FILTERS ON ALL RETURNS TO UNIT.
6) SET FAN SPEED TO AUTOMATIC
7) SET FAN SPEED TO LOWEST FAN SPEED REQUIRED TO ACHIEVE SPECIFIED AIRFLOW SHOWN.

OUTDOOR CONDENSING UNITS

TAG	MAKE	MODEL	SERVING	LOCATION	NOMINAL SIZE (TONS)	CAPACITIES (MBH)			FAN		PIPING SIZE (IN)		ELECTRICAL			SOUND LEVEL (dBa)	COOLING		HEATING	REFRIGERANT TYPE	UNIT DIMENSIONS (IN., HXWXD)	WEIGHT (LBS)	SEISMIC ANCHORAGE DETAIL(S)	NOTES
						COOLING (BTUH)	HEATING (BTUH)	COMPRESSOR TYPE	MOTOR (W)	AIRFLOW (CFM)	LIQUID (IN)	GAS (IN)	V/Hz./PHASE	MCA (A)	MOP (A)		EER	[IEER] (SEER)	[COP] (HPSF)					
ACCU-1	DAIKIN	RXTQ48TAVJU	CLASS LAB 1	MECHANICAL YARD	4	48,000	52,000	VARIABLE SPEED SCROLL	200	2682	3/8	5/8	208/60/1	29.1	35	57	12.3	(16.0)	[3.35] (9.0)	R410a	39 X 37 X 13	180	1/M4.03	1-4
ACCU-2	DAIKIN	RKB12AXVJU	DATA H405	MECHANICAL YARD	1	12,000	N/A	1-STAGE SCROLL	41				208/60/3	7.7	15		8.5		N/A	R410a	21 X 26 X 11	60	1/M4.03	1,5
ACCU-3	DAIKIN	RXTQ60TAVJU	HEAD HOUSE H700 & CLASS LAB 3	HEAD HOUSE H700 SOUTH WALL	5	57,500	57,000	VARIABLE SPEED SCROLL	70 X (2)	3741	3/8	3/4	208/60/1	29.1	35	58	11.6	(16.0)	[3.70] (10.5)	R410a	53 X 36 X 13	230	8/M4.01	1-4
ACCU-4	DAIKIN	RX24RMVJU	STORAGE 1 H801	STORAGE 1 NORTH WALL	2	24,000		1-STAGE SCROLL	125	2642			208/60/3	16.9	20		12.5		[3.8]	R410a	29 X 35 X 13	110	8/M4.01	1, 4
ACCU-5	DAIKIN	RXTQ48TAVJU	OFFICES & LIBRARY	MECHANICAL YARD	4	48,000	52,000	VARIABLE SPEED SCROLL	200	2682	3/8	5/8	208/60/1	29.1	35	57		(16.0)	[3.35] (9.0)	R410a	39 X 37 X 13	180	1/M4.03	1-4
ACCU-6	DAIKIN	RXTQ48TAVJU	CLASS LAB 2	MECHANICAL YARD	4	48,000	52,000	VARIABLE SPEED SCROLL	200	2682	3/8	5/8	208/60/1	29.1	35	57	9.2	(16.0)	[3.35] (9.0)	R410a	39 X 37 X 13	180	1/M4.03	1-4

NOTES:

1) UNLESS NOTED OTHERWISE, CAPACITIES LISTED ARE AHRI CERTIFIED CAPACITIES
2) PROVIDE BACNET CONTROLS INTEGRATION COMPATIBLE WITH DELTA CONTROLS BMS PANEL LOCATED IN ELECTRICAL H406.
3) THE COMPRESSORS SHALL BE HERMATICALLY SEALED, INVERTER DRIVEN, DRICT VAPOR INJECTED, DC SCROLL TYPE WITH SOFT-START AND VARIABLE CAPABILITY.
4) PROVIDE COMPRESSOR CYCLE PROTECTOR.
5) COOLING ONLY A/C UNIT

GRILLE/DIFFUSER SCHEDULE

TAG	MAKE	MODEL	APPLICATION	DESCRIPTION	NOTES
A	TITUS	S301FL	EXHAUST	DIRECT MOUNT DUCT SINGLE DEFLECTION GRILLE, FRAME RADIUS TO MATCH DUCT	1, 2
B	TITUS	33RL	RETURN & EXHUAST	STEEL HEAVY DUTY RETURN GRILLE, 1/2" BLADE SPACING, 38°DEFLECTION	1
C	TITUS	300RL	SUPPLY & RETURN	3/4" ADJUSTABLE BLADE, DOUBLE DEFLECTION	1
D	TITUS	OMNI	SUPPLY & RETURN	STEEL PLAQUE FACE DIFFUSER	1
E	TITUS	350ZFL	EXHAUST	3/4" BLADE SPACING, 35 DEGREE DEFLECTION	1
F	TITUS	122RS	SUPPLY	STEEL AEROBLADE DOUBLE DEFLECTION SUPPLY GRILLE 2" SPACING	1

NOTES:

1) PROVIDE SUBMITTAL TO ARCHITECT SOLICITING CHOICE OF FINISHES FOR EACH LOCATION.
2) PROVIDE WITH FRAME RADIUS TO MATCH THE RADIUS OF THE DUCT EACH IS MOUNTED TO.

CEILING FANS

TAG	MAKE	MODEL NO.	SERVICE	DIAMETER (IN)	WATTS	CFM	V/PHASE/Hz	OPERATING WEIGHT (LBS)	NOTES
CF-1	MINKA AIRE	F787-WHF	CLASSROOMS	52	22	6231	115/1/60	15	1-4

NOTES:

1) INCLUDE MANUFACTURER'S GLULAM MOUNTING KIT, COORDINATE WITH ARCHITECT PRIOR TO ORDER.
2) INCLUDE MANUFACTURER'S WALL CONTROLLER MODEL WC400.
3) CUSTOM ROD LENGHTS NEEDED. CEILING HEIGHTS MAY VARY BY LOCATION, VERIFY IN FIELD.
4) INSTALL CEILING FANS AT ELEVATIONS OF FAN BLADE CENTERLINE AS INDICATED ON PLANS.

APPROVALS

IDENTIFICATION STAMP
DIV. OF THE STATE ARCHITECT
APP: 01-119409 INC:
REVIEWED FOR
SS ☑ FLS ☑ ACS ☑
DATE: 03/14/2022

NOLL & TAM ARCHITECTS
729 Heinz Avenue
Berkeley, CA 94710
tel 510.542.2200
fax 510.542.2201

SEAL

REGISTERED PROFESSIONAL ENGINEER TYLER BRADSHAW M33496 EXP. 06/30/2022 MECHANICAL STATE OF CALIFORNIA

BLUE FOREST ENGINEERING
3622 Kingsley Street
Oakland, CA 94610
tel 510.925.8224

PROJECT TITLE

Peralta Community College District
MERRITT COLLEGE NEW LANDSCAPE HORTICULTURE COMPLEX

12500 Campus Drive
Oakland, CA 94619

BID SET

ISSUE DATE 03/03/2022
N&T JOB NUMBER 22003

REVISIONS

	DATE	DESCRIPTION

DRAWN BY S.A. | CHECKED BY T.B.

SHEET TITLE
MECHANICAL SCHEDULES

SHEET NUMBER
M6.01

7/13/2020 5:38:18 PM BIM 360://PCCD Merritt Horticulture/Merritt Horticulture_2020.rvt

BAROMETRIC RELIEF DAMPERS

TAG	MAKE	MODEL	SERVICE	CFM	START TO OPEN PRESSURE (IN. WG)	TYPE	MAX. ALLOWABLE PRESSURE DROP (IN.WG)	DIMENSIONS LXW (IN.)	NOTES
BR-1	GREENHECK	BR-30	SEE PLAN	1400	0.05	SIDEWALL	0.1	36X24	
BR-2	GREENHECK	BR-30	SEE PLAN	225	0.05	SIDEWALL	0.1	36X12	
BR-3	GREENHECK	BR-30	SEE PLAN	270	0.05	SIDEWALL	0.1	72X12	

NOTES:

ELECTRIC UNIT HEATER SCHEDULE

TAG	MAKE	MODEL	LOCATION	TYPE	BTU/H	CFM	KW	ELECTRICAL				WEIGHT (LBS.)	PANEL DIMENSIONS (HXWXD) (IN)	BOX DIMENSIONS (HXWXD) (IN)	NOTES
								HZ	VOLTS	PHASE	AMPS.				
EUH-1	QMARK	CWH1208DSF	SEE PLAN	WALL MOUNTED	6826	65	2	60	208	1	9.6	11	13X11X1	11X10X4	1-7
EUH-2	QMARK	CWH1208DSF	SEE PLAN	WALL MOUNTED	6826	65	2	60	208	1	9.6	11	13X11X1	11X10X4	1-7

NOTES:

1) PROVIDE DISCONNECTION SWITCH
2) "HEATER ON" PILOT LIGHT.
3) THREE-POSITION SELECTOR SWITCH (HEATER-STANDBY-FAN)
4) BUILT-IN THERMOSTAT 40F TO 85 F RANGE.
5) ALL UNIT HEATERS SHALL BE INSTALLED IN ACCORDANCE WITH THE LISTING AND MANUFACTURER'S INSTALLATION INSTRUCTIONS.
6) SUPPOSED-TYPE UNIT HEATER SHALL BE SUPPORTED BY ELEMENTS THAT ARE DESIGNED AND CONSTRUCTED TO ACCOMMODATE THE WEIGHT AND DYNAMIC LOADS.
7) PROVIDE TAMPER-RESISTANT COVERS (SRAFCTPF).

EXHAUST FAN SCHEDULE

TAG	MAKE	MODEL	LOCATION	SERVICE	CFM	SP (IN W.G)	RPM	ELEC (V/Hz/Ph.)	MOTOR (HP/W)	WEIGHT (LBS.)	SEISMIC ANCHORAGE DETAIL	NOTES
EF-1	GREENHECK	SP-A90-130-VG	ELECTRICAL H406	ELECTRICAL	70	0.72	887	115/60/1	12 W	12	4/M4.04	3-8
EF-2	GREENHECK	SQ-100-VG	WORKSHOP H800	WORKSHOP	800	0.75	1534	115/60/1	1/4	50	3/M4.04	1, 4-8
EF-3	GREENHECK	CSP-A200	STORAGE 3 H803	STORAGE 3	100	0.62	900	115/60/1	50 W	25	5/M4.02	3-8
EF-4	GREENHECK	CSP-A200	STORAGE 2 H802	STORAGE 2	100	0.62	900	115/60/1	50 W	25	5/M4.02	1, 4-8
EF-5	GREENHECK	CSP-A390-VG	ALL GENDER RESTROOMS H102	RESTROOMS & JANITORIAL	320	0.5	1209	115/60/1	78 W	25	5/M4.02	2-6
EF-6	GREENHECK	CSP-A390-VG	JANITORIAL H805	RESTROOMS & JANITORIAL	320	0.5	1209	115/60/1	78 W	25	5/M4.02	1, 4-8

NOTES:

1) PROVIDE MOTOR RATED 7-DAY WALL TIMER SWITCH. COORDINATE THE FINAL WALL LOCATION WITH THE ARCHITECT.
2) PROVIDE INTERLOCK FOR FAN TO DELTA BMS CONTROLLER. PROVIDE PARALLEL MANUAL ON, AUTO OFF TIMER SWITCH OR LOCAL DELTA OVERRIDE BUTTON WITH ADJUSTABLE DELAY AUTO OFF FEATURE.
3) PROVIDE LINE VOLTAGE THERMOSTAT AND MOTOR RATED SWITCH, WIRED IN PARALLEL FOR CONTINUOUS OR TEMPERATURE BASED OPERATION.
4) ALL DIRECT DRIVE FANS SHALL BE FURNISHED WITH VARI-GREEN MOTOR CONTROL.
5) FAN SPEED SHALL BE EASILY FIELD ADJUSTABLE.
6) REFER TO DETAILS, FAN SHALL BE MOUNTED W/SUPPORT FRAMING BY OTHERS.
7) PROVIDE RUBBER IN SHEAR ISOLATION AND ALL-THREAD HANGING RODS FOR INLINE FANS.
8) COORDINATE WITH ARCH./G.C. ACCESS DOORS FOR SERVICING ALL FANS WITHIN CEILINGS.

WATER METER SCHEDULE

TAG	LOCATION	SERVICE	MAKE	MODEL	METER BODY SIZE (IN)	DESIGN FLOW (GPM)	MINIMUM FLOW (GPM)	LENGTH (IN)	NOTES
WM-1	SEE CIVIL PLANS	POTABLE COLD WATER	ONICON	F-4600-250-100-06	2.5		0.5	12	1-6
WM-2	SEE SHEET L6.02	IRRIGATION WATER	ONICON	F-4600-150-000-09	1.5	50	0.2	17	1-5, 7

NOTES:

1) PROVIDE METER AND LOW VOLTAGE CONNECTION. WATER METER INSTALLED BY UNTERGROUND UTILITIES TEAM UNO BY GENERAL CONTRACTOR.
2) PROVIDE BACnet OUTPUT FOR DISPLAY AND TRENDING OF FLOW (GPM) AND VOLUME (GAL) AT A MINIMUM.
3) METER CONNECTIONS SHOULD BE MADE WITH WATERPROOF CONNECTORS, COVERED WITH HEAT SHRINK TUBING AS ADDITIONAL SHORT PROTECTION IN CASE THE UNDERGROUND BOX OR CONDUIT WATERPROOFING FAILS.
4) METER SHALL BE INSTALLED IN A LOCATION PROVIDING 10 PIPE DIAMETERS OF STRAIGHT PIPE UPSTREAM OF METER AND 5 DIAMETERS DOWNSTREAM OF METER.
5) METER SHALL NOT BE INSTALLED AT THE HIGH POINT OF SYSTEM WHERE TRAPPED AIR MAY COLLECT. REFER TO MANUFACURER'S INSTALLATION MANUAL FOR ALL PROHIBITED OBSTRUCTIONS AND LOCATIONS.
6) CLASS 150 FLANGED CONNECTION
7) MALE NPT CONNECTION

WALL LOUVER SCHEDULE

TAG	MAKE	MODEL	TYPE	SERVICE	LOUVER SIZE	WEIGHT (LBS)	FREE AREA	NOTES
OAL-1	RUSKIN	ELF6375DX	DRAINABLE STATIONARY	OUTSIDE AIR	36X24	24	3.05	1,2
OAL-2	RUSKIN	ELF6375DX	DRAINABLE STATIONARY	OUTSIDE AIR	18X18	9	1	1,2
OAL-3	RUSKIN	ELF6375DX	DRAINABLE STATIONARY	OUTSIDE AIR	36X12	12	1.44	1,2
EAL-1	RUSKIN	ELF6375DX	DRAINABLE STATIONARY	EXHAUST AIR	12X12	4	0.36	1,3
EAL-2	RUSKIN	ELF6375DX	DRAINABLE STATIONARY	EXHAUST AIR	36X12	12	1.44	1,3
EAL-3	RUSKIN	ELF6375DX	DRAINABLE STATIONARY	EXHAUST AIR	36X18	18	2.13	1,3
EAL-4	RUSKIN	ELF6375DX	DRAINABLE STATIONARY	EXHAUST AIR	18X24	12	1.44	1,2
EAL-5	RUSKIN	ELBD813	RELIEF COMBINATION	RELIEF AIR	36X12	12	1.44	1,3
EAL-6	RUSKIN	ELF6375DX	DRAINABLE STATIONARY	RELIEF AIR	36X24	24	3.05	1,3
EAL-7	RUSKIN	ELF6375DX	DRAINABLE STATIONARY	RELIEF AIR	72X12	24	3.05	1,3

NOTES:

1) PROVIDE WITH 1/4" HOT DIPPED HARDWARE CLOTH BEHIND LOUVER.
2) PROVIDE WITH CORROSION RESISTANT 1/8" METAL SCREEN TO MEET THE PROJECT WUI REQUIREMENTS.
3) SEE PLANS FOR SIZES, DRAINABLE, STATIONARY, EXTRUDED ALUMINUM, FINISH COLOR SELECTED BY ARCHITECT

DOOR LOUVERS SCHEDULES

TAG	MAKE	MODEL	SERVICE	TYPE	DEFLECTION	LOUVER SIZE (IN)	SPACING WIDTH (IN)	NOTES
DL-1	TITUS	T-700	SEE PLAN	DOOR GRILL	22.5°	24 x 12	3/4"	1

NOTES:

1) PROVIDE WITH CORROSION RESISTANT 1/8" METAL SCREEN TO MEET THE PROJECT WUI REQUIREMENTS.

APPROVALS

IDENTIFICATION STAMP
DIV. OF THE STATE ARCHITECT
APP: 01-119409 INC:
REVIEWED FOR
SS ☑ FLS ☑ ACS ☑
DATE: 03/14/2022

NOLL & TAM ARCHITECTS
729 Heinz Avenue
Berkeley, CA 94710
tel 510.542.2200
fax 510.542.2201

SEAL

REGISTERED PROFESSIONAL ENGINEER
TYLER BRADSHAW
M33496
EXP. 06/30/2022
MECHANICAL
STATE OF CALIFORNIA

BLUE FOREST ENGINEERING
3622 Kingsley Street
Oakland, CA 94610
tel 510.925.8224

PROJECT TITLE

Peralta Community College District
MERRITT COLLEGE NEW LANDSCAPE HORTICULTURE COMPLEX

12500 Campus Drive
Oakland, CA 94619

BID SET

ISSUE DATE 03/03/2022
N&T JOB NUMBER 22003

REVISIONS

	DATE	DESCRIPTION

DRAWN BY S.A. | CHECKED BY T.B.

SHEET TITLE

MECHANICAL SCHEDULES

SHEET NUMBER

M6.02

7/13/2020 5:38:18 PM BIM 360://PCCD Merritt Horticulture/Merritt Horticulture_2020.rvt

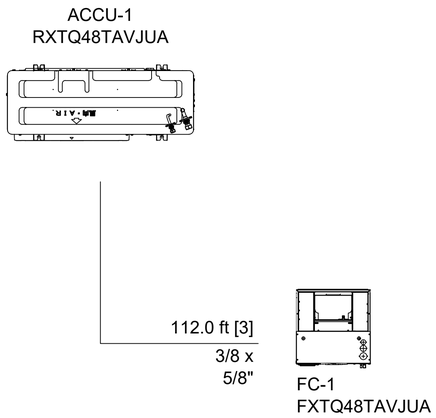

1 M6.03 MECHANICAL VRF PIPING AND WIRING DIAGRAM-ACCU-1
NTS

NOTES:
- REFRIGERANT PIPING SIZES SHOWN ARE PRELIMINARY ESTIMATES WORKING WITH LOCAL SUPPLIER AND IDEAL ROUTING. INSTALLER IS RESPONSIBLE FOR SHARING THE EXACT ROUTE LENGTH AND ELBOW COUNTS AFTER COORDINATING WITH OTHER TRADES AND PROVIDING FACTORY SIZED VAPOR AND LIQUID LINES.

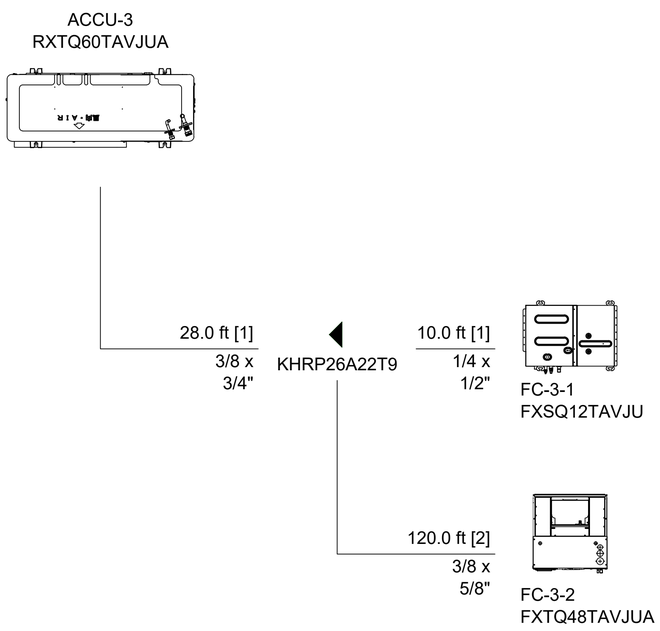

2 M6.03 MECHANICAL VRF PIPING AND WIRING DIAGRAM-ACCU-3
NTS

APPROVALS

IDENTIFICATION STAMP
DIV. OF THE STATE ARCHITECT
APP: 01-119409 INC:
REVIEWED FOR
SS ☑ FLS ☑ ACS ☑
DATE: 03/14/2022

NOLL & TAM ARCHITECTS
729 Heinz Avenue
Berkeley, CA 94710
tel 510.542.2200
fax 510.542.2201

SEAL

REGISTERED PROFESSIONAL ENGINEER
TYLER BRADSHAW
M32496
EXP. 06/30/2022
MECHANICAL
STATE OF CALIFORNIA

BLUE FOREST ENGINEERING
3622 Kingsley Street
Oakland, CA 94610
tel 510.925.8224

PROJECT TITLE

Peralta Community College District
MERRITT COLLEGE NEW LANDSCAPE HORTICULTURE COMPLEX

12500 Campus Drive
Oakland, CA 94619

BID SET

ISSUE DATE 03/03/2022
N&T JOB NUMBER 22003

REVISIONS

#	DATE	DESCRIPTION

DRAWN BY S.A. CHECKED BY T.B.

SHEET TITLE

MECHANICAL VRF PIPING & WIRING

SHEET NUMBER

M6.03

7/13/2020 5:38:18 PM BIM 360://PCCD Merritt Horticulture/Merritt Horticulture_2020.rvt

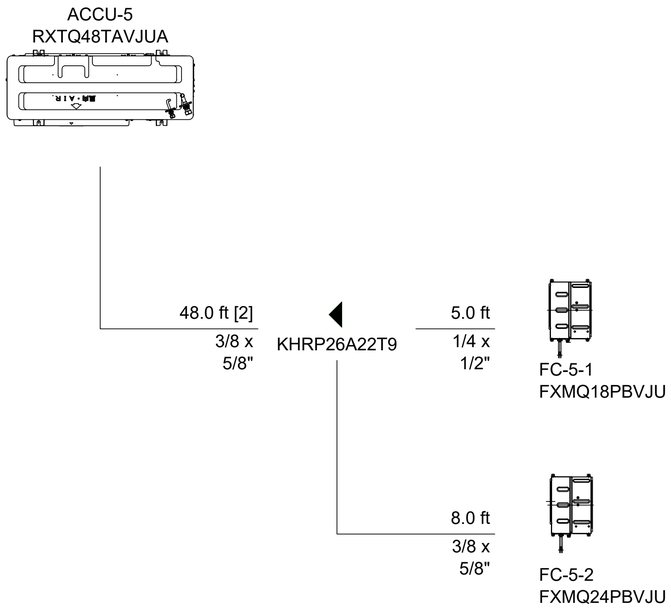

1 M6.04 MECHANICAL VRF PIPING AND WIRING DIAGRAM-ACCU-5
NTS

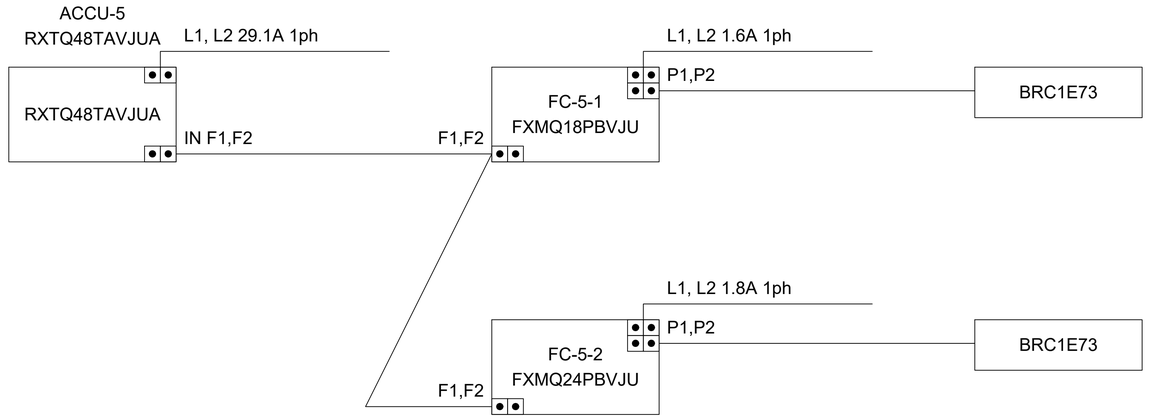

CONTROLLER WIRING SCHEMATICS
CONTROL GROUP

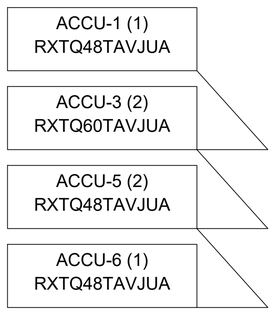

2 M6.04 MECHANICAL VRF CONTROLLER WIRING SCHEMATICS
NTS

NOTES:

- REFRIGERANT PIPING SIZES SHOWN ARE PRELIMINARY ESTIMATES WORKING WITH LOCAL SUPPLIER AND IDEAL ROUTING. INSTALLER IS RESPONSIBLE FOR SHARING THE EXACT ROUTE LENGTH AND ELBOW COUNTS AFTER COORDINATING WITH OTHER TRADES AND PROVIDING FACTORY SIZED VAPOR AND LIQUID LINES.

APPROVALS

IDENTIFICATION STAMP
DIV. OF THE STATE ARCHITECT
APP: 01-119409 INC:
REVIEWED FOR
SS ☑ FLS ☑ ACS ☑
DATE: 03/14/2022

NOLL & TAM ARCHITECTS
729 Heinz Avenue
Berkeley, CA 94710
tel 510.542.2200
fax 510.542.2201

SEAL

REGISTERED PROFESSIONAL ENGINEER
TYLER BRADSHAW
M33496
EXP. 06/30/2022
MECHANICAL
STATE OF CALIFORNIA

BLUE FOREST ENGINEERING
3622 Kingsley Street
Oakland, CA 94610
tel 510.925.8224

PROJECT TITLE

Peralta Community College District
MERRITT COLLEGE NEW LANDSCAPE HORTICULTURE COMPLEX

12500 Campus Drive
Oakland, CA 94619

BID SET

ISSUE DATE	03/03/2022
N&T JOB NUMBER	22003

REVISIONS

#	DATE	DESCRIPTION

DRAWN BY	S.A.	CHECKED BY	T.B.

SHEET TITLE

MECHANICAL VRF PIPING & WIRING

SHEET NUMBER

M6.04

7/13/2020 5:38:18 PM BIM 360://PCCD Merritt Horticulture/Merritt Horticulture_2020.rvt

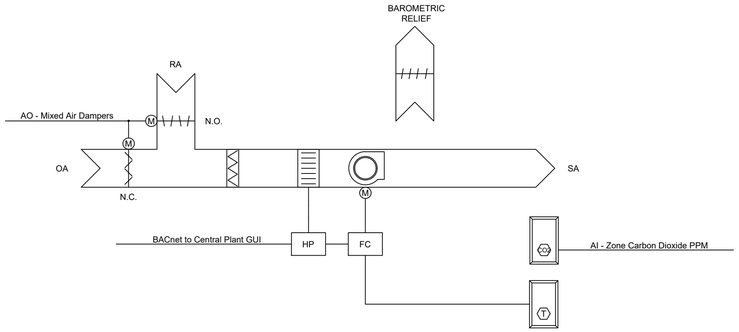

1 FC-1 & FC-6 CONTROL DIAGRAM
M6.05 NTS

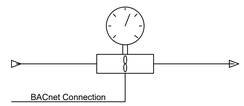

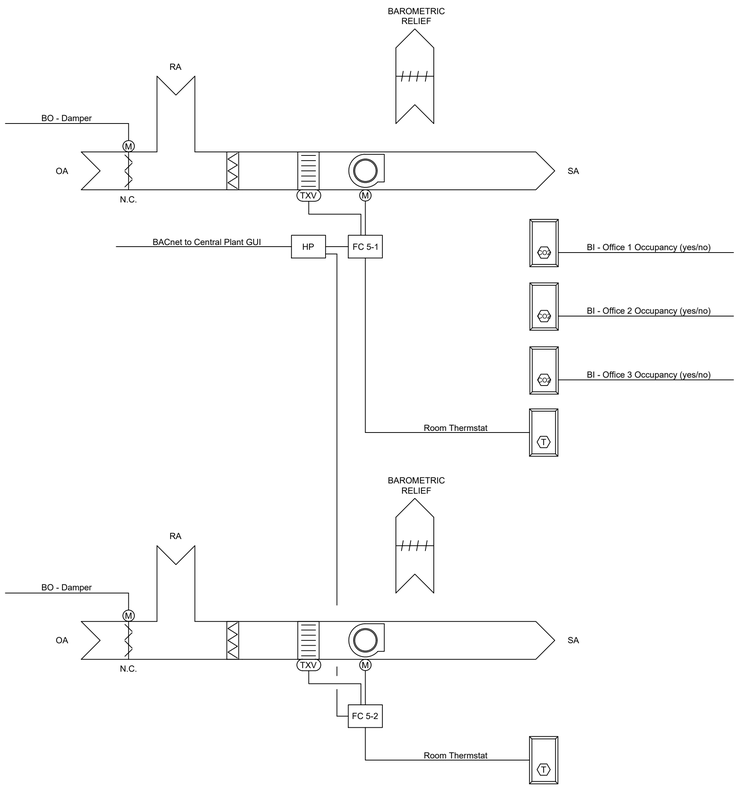

2 FC 5-1 & 5-2 CONTROL DIAGRAM
M6.05 NTS

3 WATER METER CONTROL DIAGRAM
M6.05 NTS

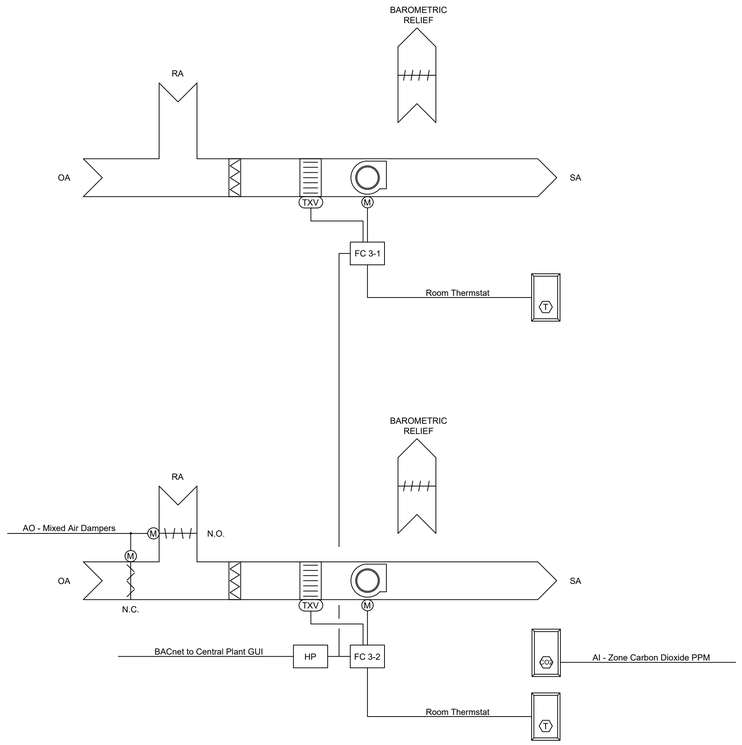

4 FC 3-1 & FC 3-2 CONTROL DIAGRAM
M6.05 NTS

APPROVALS

IDENTIFICATION STAMP
DIV. OF THE STATE ARCHITECT
APP: 01-119409 INC:
REVIEWED FOR
SS ☑ FLS ☑ ACS ☑
DATE: 03/14/2022

NOLL & TAM ARCHITECTS
729 Heinz Avenue
Berkeley, CA 94710
tel 510.542.2200
fax 510.542.2201

SEAL

REGISTERED PROFESSIONAL ENGINEER
TYLER BRADSHAW
M32496
EXP. 06/30/2022
MECHANICAL
STATE OF CALIFORNIA

BLUE FOREST ENGINEERING
3622 Kingsley Street
Oakland, CA 94610
tel 510.925.8224

PROJECT TITLE

Peralta Community College District
MERRITT COLLEGE NEW LANDSCAPE HORTICULTURE COMPLEX

12500 Campus Drive
Oakland, CA 94619

BID SET

ISSUE DATE	03/03/2022
N&T JOB NUMBER	22003

REVISIONS

#	DATE	DESCRIPTION

DRAWN BY S.A. | CHECKED BY T.B.

SHEET TITLE

MECHANICAL CONTROLS DIAGRAMS

SHEET NUMBER

M6.05

7/13/2020 5:38:18 PM BIM 360://PCCD Merritt Horticulture/Merritt Horticulture_2020.rvt

	Hardware Points				Software Points							
Point Name	**AI**	**AO**	**BI**	**BO**	**AV**	**BV**	**Loop**	**Sched**	**Trend**	**Alarm**	**On Graphic**	**Comments**
WATER FLOW METER (WM-1 & WM-1)												
Water Flow Rate (GPM)	2				2						2	Rate/Total/YTD Total available via BACnet controller
Demand (GPM)									2		2	
Peak Month-to-Date (GPM)									2		2	
Peak Today (GPM)									2		2	
Peak Year-to-Date (GPM)									2		2	
Usage input (gal)									2		2	
Usage Month-to-Date (gal)									2		2	
Usage Today (gal)									2		2	
Usage Year-to-Date (Millions gal)									2		2	
Invalid Value										2	2	
CLASS LABS 1, 2 & 3 (FC-1, FC 3-2 & FC-6)												
Zone Carbon Dioxide PPM	3								3		3	
Zone Setpoint Adjust	3										3	
Zone Temp	3								3		3	
Mixed Air Dampers		3							3		3	may required two actuator motors and extra AO points
Fan speed (low, med, high or auto)		3										set up in auto fan speed at start of project
Fan Status			3						3		3	
Zone Override			3						3		3	
Cooling Setpoint					3				3		3	
Heating Setpoint					3				3		3	
Cooling Setback Setpoint												
Heating Setback Setpoint												
Zone Carbon Dioxide PPM Setpoint					3				3		3	
Schedule								3				
Fan Failure										3		
Fan Runtime Exceeded										3		
High Zone Carbon Dioxide Concentration										3		
High Zone Temp										3		
Low Zone Temp										3		
ADMIN BUILDING (FC 5-1 & FC 5-2)												
Zone Setpoint Adjust	2										2	
Zone Temp	2								2		2	
Zone Occupancy Status (FC 5-1 only)			3									provide one networked occupancy sensor per office
Outside Air Damper		2							2		2	
Fan speed (low, med, high or auto)		2										set fan to high or medium speed
Fan Status			2						2		2	
Zone Override			2						2		2	
Cooling Setpoint					2				2		2	
Heating Setpoint					2				2		2	
Cooling Setback Setpoint					2							
Heating Setback Setpoint					2							
Unoccupied Standby Mode Cooling Setback Setpoint					1							
Unoccupied Standby Mode Heating Setback Setpoint					1							
Zone Carbon Dioxide PPM Setpoint					2				2		2	
Schedule								2				
Fan Failure										2		
Fan Runtime Exceeded										2		
High Zone Carbon Dioxide Concentration										2		
High Zone Temp										2		
Low Zone Temp										2		
EXTRA POINT ALLOCATIONS (DEVICE TBD)												
Mapped BACnet points					40				40	40	40	Owner assigned virtual points mapped to control room
												does not include points already listed above
												may include inputs/outputs/binary/analog points
Totals	**15**	**10**	**13**	**0**	**63**	**0**	**0**	**5**	**94**	**67**	**103**	
Total Hardware (23)					**Total Software (49)**							

7/13/2020 5:38:18 PM BIM 360://PCCD Merritt Horticulture/Merritt Horticulture_2020.rvt

APPROVALS

IDENTIFICATION STAMP
DIV. OF THE STATE ARCHITECT
APP: 01-119409 INC:
REVIEWED FOR
SS ☑ FLS ☑ ACS ☑
DATE: 03/14/2022

NOLL & TAM ARCHITECTS
729 Heinz Avenue
Berkeley, CA 94710
tel 510.542.2200
fax 510.542.2201

SEAL

REGISTERED PROFESSIONAL ENGINEER
TYLER BRADSHAW
M33496
EXP. 06/30/2022
MECHANICAL
STATE OF CALIFORNIA

BLUE FOREST ENGINEERING
3622 Kingsley Street
Oakland, CA 94610
tel 510.925.8224

PROJECT TITLE

Peralta Community College District
MERRITT COLLEGE NEW LANDSCAPE HORTICULTURE COMPLEX

12500 Campus Drive
Oakland, CA 94619

BID SET

ISSUE DATE **03/03/2022**
N&T JOB NUMBER **22003**

REVISIONS

#	DATE	DESCRIPTION

DRAWN BY **S.A.** | CHECKED BY **T.B.**

SHEET TITLE

MECHANICAL POINTS LIST

SHEET NUMBER

M6.06

A. GENERAL INFORMATION

1.	Project Location (city)	Oakland	8.	Standards Version	Compliance2019
2.	CA Zip Code	94616	9.	Compliance Software (version)	EnergyPro 8.2
3.	Climate Zone	3	10.	Weather File	OAKLAND_724930_CZ2010.epw
4.	Total Conditioned Floor Area in Scope	1,660 ft²	11.	Building Orientation (deg)	(N) 0 deg
5.	Total Unconditioned Floor Area	202 ft²	12.	Permitted Scope of Work	NewEnvelopeAndMechanical
6.	Total # of Stories (Habitable Above Grade)	1	13	Building Type(s)	Nonresidential
7.	Total # of dwelling units	0	14	Gas Type	NaturalGas

B. PROJECT SUMMARY

Table Instructions: Table B shows which building components are included in the performance calculation. If indicated as not included, the project must show compliance prescriptively if within permit application.

Building Components Complying via Performance					Building Components Complying Prescriptively	
Envelope (see Table G)	☒ Performance ☐ Not Included	Covered Process: Commercial Kitchens	☐ Performance ☒ Not Included	*The following building components are ONLY eligible for prescriptive compliance and should be documented on the NRCC form listed if within the scope of the permit application (i.e. compliance will not be shown on the NRCC-PRF-E).*	
Mechanical (see Table H)	☒ Performance ☐ Not Included	Covered Process: Computer Rooms	☐ Performance ☒ Not Included	Indoor Lighting (Unconditioned)$140.6 Outdoor Lighting $140.7	*NRCC-LTI-E* *NRCC-LTO-E*
Domestic Hot Water (see Table I)	☒ Performance ☐ Not Included	Covered Process: Laboratory Exhaust	☐ Performance ☒ Not Included	Sign Lighting $140.8 Mandatory Measures	*NRCC-LTS-E*
Lighting (Indoor Conditioned, see Table K)	☐ Performance ☒ Not Included			*Electrical power systems, commissioning, solar ready, elevator and escalator requirements are mandatory and should on the NRCC form listed if applicable (i.e. compliance will not be shown on the NRCC-PRF-E.)* Electrical Power Distribution $110.11	*NRCC-ELC-E is required*
Solar Thermal Water Heating (see Table I)	☐ Performance ☒ Not Included			Commissioning $120.8 Solar Ready $110.10	*NRCC-CXR-E is required* *NRCC-SRA-E is required*

C1. COMPLIANCE RESULTS FOR PERFORMANCE COMPONENTS (Annual TDV Energy Use, kBtu/ft²-yr)

COMPLIES

Energy Component	Standard Design (TDV)	Proposed Design (TDV)	Compliance Margin (TDV)[1]
Space Heating	15.90	38.43	-22.53
Space Cooling	41.40	12.69	28.71
Indoor Fans	132.02	48.03	83.99
Heat Rejection	--	--	--
Pumps & Misc.	--	--	--
Domestic Hot Water	15.34	13.19	2.15
Indoor Lighting	41.50	46.41	-4.91
ENERGY STANDARDS COMPLIANCE TOTAL	**246.16**	**158.75**	**87.41 (35.5%)**

[1] *Notes: The number in parenthesis following the Compliance Margin in column 4. represents the Percent Better than Standard.*

C2. RESULTS FOR 'ABOVE CODE' QUALIFICATIONS[1]

☐ This project is pursuing CalGreen Tier 1 ☐ This project is pursuing CalGreen Tier 2

Miscellaneous Energy Component	Standard Design (TDV)	Proposed Design (TDV)	Compliance Margin (TDV)[1]
Receptacle	152.55	152.55	--
Process	--	--	--
Other Ltg	3.05	3.05	--
Process Motors	1.17	1.17	--
COMPLIANCE TOTAL PLUS MISCELLANEOUS COMPONENTS	**402.93**	**315.52**	**87.4 (21.7%)**

[1] *Notes: This table is used to document compliance with programs OTHER THAN Title 24 Part 6, if applicable.*

C3. ENERGY USE SUMMARY

Energy Component	Standard Design Site (MWh)	Proposed Design Site (MWh)	Margin (MWh)	Standard Design Site (MBtu)	Proposed Design Site (MBtu)	Margin (MBtu)
Space Heating	--	2.4	--	13.1	--	--
Space Cooling	2.0	0.5	1.5	--	--	--
Indoor Fans	7.5	2.7	4.8	--	--	--
Heat Rejection	--	--	--	--	--	--
Pumps & Misc.	--	--	--	--	--	--
Domestic Hot Water	0.9	0.8	0.1	--	--	--
Indoor Lighting	2.5	2.8	-0.3	--	--	--
Compliance Total	**12.9**	**9.2**	**3.7**	**13.1**	**0.0**	**--**
Receptacle	9.3	9.3	0.0	--	--	--
Process	--	--	--	--	--	--
Other Ltg	0.2	0.2	0.0	--	--	--
Process Motors	0.1	0.1	0.0	--	--	--
TOTAL	**22.5**	**18.8**	**3.7**	**13.1**	**0.0**	**--**

C4. UNMET LOAD HOURS

This Section Does Not Apply

D. EXCEPTIONAL CONDITIONS

This project includes partial performance compliance scope options. The building must show compliance with all other applicable compliance scope options (performance or prescriptively) before occupying.

This project uses the Simplified Geometry Performance Modeling Approach which is not capable of modeling daylighting controls and assumes the prescriptive Secondary Daylit Control requirements are met. PRESCRIPTIVE COMPLIANCE documentation (form NRCC-LTI-02-E) for the requirements of section 140.6(d) Automatic Daylighting Controls in Secondary Daylit Zones is required.

E. HERS VERIFICATION

This Section Does Not Apply

F. ADDITIONAL REMARKS

This Section Does Not Apply

G1. ENVELOPE GENERAL INFORMATION (conditioned spaces only)

1 Opaque Surfaces & Orientation	2 Total Gross Surface Area (ft²)	3 Total Fenestration Area (ft²)	4 Window to Wall Ratio (%)
North-Facing[1]	756 ft²	128 ft²	16.9%
East-Facing[2]	569 ft²	72 ft²	12.7%
South-Facing[3]	390 ft²	0 ft²	00.0%
West-Facing[4]	706 ft²	239 ft²	33.8%
Total	**2,421 ft²**	**439 ft²**	**18.1%**
Roof	1,660 ft²	0 ft²	00.0%

Notes:
[1] North-Facing is oriented to within 45 degrees of true north, including 45°00'00" east of north (NE), but excluding 45°00'00" west of north (NW).
[2] East-Facing is oriented to within 45 degrees of true east, including 45°00'00" south of east (SE), but excluding 45°00'00" north of east (NE).
[3] South-Facing is oriented to within 45 degrees of true south, including 45°00'00" west of south (SW), but excluding 45°00'00" east of south (SE).
[4] West-Facing is oriented to within 45 degrees of true west, including 45°00'00" north of due west (NW), but excluding 45°00'00" south of west (SW).

G2. CRRC ROOFING PRODUCT SUMMARY

This Section Does Not Apply

G3. OPAQUE SURFACE ASSEMBLY SUMMARY

1 Surface Name	2 Surface Type	3 Area (ft²)	4 Framing Type	5 Cavity R-Value	6 Continuous R-Value	7 U-Factor / F-Factor / C-Factor	8 Status[1]	9 Description of Assembly Layers
Peralta - A-1 / B-T Wall8	ExteriorWall	1276	Wood	21	NA	U-Factor: 0.059	N	Stucco - 7/8 in. Vapor permeable felt - 1/8 in. Plywood - 1/2 in. Wood framed wall, 16in. OC, 7.25in., R-21 Gypsum Board - 1/2 in.

G3. OPAQUE SURFACE ASSEMBLY SUMMARY

1 Surface Name	2 Surface Type	3 Area (ft²)	4 Framing Type	5 Cavity R-Value	6 Continuous R-Value	7 U-Factor / F-Factor / C-Factor	8 Status[1]	9 Description of Assembly Layers
Slab On Grade12	UndergroundFloor	1862	NA	0	NA	F-Factor: 0.730	N	Slab Type = UnheatedSlabOnGrade Insulation Orientation = None Insulation R-Value = R0
Peralta R1 R-30 Roof14	Roof	1862	Wood	30	NA	U-Factor: 0.035	N	Metal Standing Seam - 1/16 in. Vapor permeable felt - 1/8 in. Gypsum Board - 1/2 in. Wood framed roof, 48in. OC, 5.5in., R-30 Plywood - 5/8 in.
Peralta - L-1 / 4-A Wall24	InteriorWall	206	Wood	15	NA	U-Factor: 0.087	N	Gypsum Board - 1/2 in. Wood framed wall, 16in. OC, 3.5in., R-15 Gypsum Board - 1/2 in.
Peralta - B-1 / B-T Wall29	ExteriorWall	1292	Wood	21	NA	U-Factor: 0.059	N	Stucco - 7/8 in. Vapor permeable felt - 1/8 in. Plywood - 1/2 in. Wood framed wall, 16in. OC, 7.25in., R-21 Gypsum Board - 1/2 in.
Peralta - A-1 / 6-T Wall38	ExteriorWall	44	Wood	21	NA	U-Factor: 0.065	N	Stucco - 7/8 in. Vapor permeable felt - 1/8 in. Plywood - 1/2 in. Wood framed wall, 16in. OC, 5.5in., R-21 Gypsum Board - 1/2 in.
Peralta - A-2 / B-T Wall41	ExteriorWall	368	Wood	21	NA	U-Factor: 0.057	N	Stucco - 7/8 in. Vapor permeable felt - 1/8 in. Plywood - 1/2 in. Wood framed wall, 16in. OC, 7.25in., R-21 Plywood - 1/2 in. Gypsum Board - 1/2 in.
Peralta - A-2 / 8_ Wall66	ExteriorWall	87	Wood	0	NA	U-Factor: 0.293	N	Stucco - 7/8 in. Vapor permeable felt - 1/8 in. Plywood - 1/2 in. Wood framed wall, 16in. OC, 7.25in., R-0 Plywood - 1/2 in. Gypsum Board - 1/2 in.

[1] *Status: N - New, A – Altered, E – Existing*

G4. OPAQUE DOOR SUMMARY

1 Assembly Name	2 Overall U-factor	3 Status[1]
Peralta - E 010 - FRP Doo47	0.500	N
Peralta - E 005 - Hollow62	0.700	N

G5. FENESTRATION ASSEMBLY SUMMARY

1 Fenestration Assembly Name / Tag or I.D.	2 Fenestration Type / Product Type / Frame Type	3 Certification Method[1]	4 Assembly Method	5 Area ft²	6 Overall U-factor	7 Overall SHGC	8 Overall VT	9 Status[2]
Peralta - E 021-E 022_Window	VerticalFenestration OperableWindow N/A	NFRC Rated	Manufactured	24	0.45	0.19	0.32	N
Peralta - E 019-E 020_Window	VerticalFenestration OperableWindow N/A	NFRC Rated	Manufactured	24	0.45	0.19	0.32	N
Peralta - E 017-E 018_Window	VerticalFenestration OperableWindow N/A	NFRC Rated	Manufactured	24	0.45	0.19	0.32	N
Peralta - E 032_Window	VerticalFenestration FixedWindow N/A	NFRC Rated	Manufactured	70	0.45	0.19	0.32	N
Peralta - E 011_Storefront door	VerticalFenestration CurtainWall N/A	NFRC Rated	SiteBuilt	42	0.45	0.19	0.32	N
Peralta - E 012_Storefront door	VerticalFenestration CurtainWall N/A	NFRC Rated	SiteBuilt	21	0.45	0.19	0.32	N
Peralta - E 025_Window	VerticalFenestration OperableWindow N/A	NFRC Rated	Manufactured	81	0.45	0.19	0.32	N

G5. FENESTRATION ASSEMBLY SUMMARY

1 Fenestration Assembly Name / Tag or I.D.	2 Fenestration Type / Product Type / Frame Type	3 Certification Method[1]	4 Assembly Method	5 Area ft²	6 Overall U-factor	7 Overall SHGC	8 Overall VT	9 Status[2]
Peralta - E 016_Window	VerticalFenestration FixedWindow N/A	NFRC Rated	Manufactured	86	0.45	0.19	0.32	N
Peralta - E 009_Storefront door	VerticalFenestration CurtainWall N/A	NFRC Rated	SiteBuilt	42	0.45	0.19	0.32	N
Peralta - E 023-E 024_Window	VerticalFenestration OperableWindow N/A	NFRC Rated	SiteBuilt	24	0.35	0.19	0.32	N

[1] *Newly installed fenestration shall have a certified NFRC Label Certificate or use the CEC default tables found in Table 110.6-A and Table 110.6-B. Center of Glass (COG) values are for the glass only, determined by the manufacturer, and are shown for ease of verification. Site-built fenestration values are calculated per Nonresidential Appendix NA6 and are used in the analysis.*
[2] *Status: N - New, A – Altered, E – Existing*

G6. OVERHANG DETAILS

This Section Does Not Apply

G7. FIN DETAILS

This Section Does Not Apply

H. HVAC SYSTEM SUMMARY

H1. DRY SYSTEM EQUIPMENT (furnaces, air handling units, heat pumps, VRF, economizers etc.)

Dry System Equipment [1] (Fan & Economizer info included below in Table N)

1	2	3	4	5	6	7	8	9	10
Equipment Name	Equipment Type	Qty	Heating				Cooling		Status[2]
			Total Heating Output (kBtu/h)	Supp Heat Source (Y/N)	Supp Heat Output (kBtuh)	Efficiency	Total Cooling Output (kBtu/h)	Efficiency	
FC5-1/ACCU-5	SZHP (Split3Phase)	1	21	Yes	1	HSPF-9.00	17	SEER-18.00 / EER-16.00	N

H1. DRY SYSTEM EQUIPMENT (furnaces, air handling units, heat pumps, VRF, economizers etc.)

Dry System Equipment [1] (Fan & Economizer info included below in Table N)

1	2	3	4	5	6	7	8	9	10
Equipment Name	Equipment Type	Qty	Heating				Cooling		Status[2]
			Total Heating Output (kBtu/h)	Supp Heat Source (Y/N)	Supp Heat Output (kBtuh)	Efficiency	Total Cooling Output (kBtu/h)	Efficiency	
FC5-2/ACCU-5	SZHP (Split3Phase)	1	28	Yes	1	HSPF-9.00	23	SEER-18.00 / EER-12.30	N
FC-2/ACCU-2	SZAC (Split3Phase)	1	0	No	0	NA	11	SEER-17.00 / EER-8.50	N

[2] *Status: N - New, A – Altered, E – Existing*

H2. FAN SYSTEMS SUMMARY[1]

1	2	3	4	5	6	7	8	9	10	11	12	13
Name or Item Tag	System Type packaged, DOAS, etc.	Design OA CFM	Supply Fan				Return Fan				Economizer Type (if present)	Status[2]
			CFM	BHP	Watts	Control	CFM	BHP	Watts	Control		
FC5-1/ACCU-5	SZHP	88	635	0.241	209.9	ConstantVolume	NA	NA	NA	NA	NoEconomizer	N
FC5-2/ACCU-5	SZHP	146	688	0.264	229.9	ConstantVolume	NA	NA	NA	NA	NoEconomizer	N
FC-2/ACCU-2	SZAC	0	360	0.047	41.0	ConstantVolume	NA	NA	NA	NA	NoEconomizer	N

[2] *Status: N - New, A – Altered, E – Existing*

H3. EXHAUST FAN SUMMARY

1 System ID	2 Zone Name	3 Qty	4 CFM	5 Motor BHP	6 Motor Watts	7 Total Static Pressure (in H20)
ELECTRICAL (H406)53	3-ELECTRICAL (H406)	1	70	0.014	12.0	0.81

H4. Wet System Equipment (boilers, chillers, cooling towers, etc.)

1	2	3	4	5	6	7	8	9	10	11	12
Name or Item Tag	Equipment Type	Qty	Vol (gal)	Rated Capacity (kBtu/h)	Efficiency	Standby Loss	Pumps				Status[2]
							Qty	GPM	HP	VSD (Y/N)	

[2] *Status: N - New, A – Altered, E – Existing*

H5. SYSTEM SPECIAL FEATURES

1 System Name	2 Optimum Start	3 Window Interlocks per §140.4(n)	4 Evaporative Cooling	5 Heat Recovery	6 Other Controls
FC5-1/ACCU-5	No Optimum Start	No	No Evaporative Cooler	No Heat Recovery	No DCV Controls, No DDC No Economizer No Supply Air Temp. Control
FC5-2/ACCU-5	No Optimum Start	No	No Evaporative Cooler	No Heat Recovery	No DCV Controls, No DDC No Economizer No Supply Air Temp. Control
FC-2/ACCU-2	No Optimum Start	NA	No Evaporative Cooler	No Heat Recovery	No DCV Controls, No DDC No Economizer No Supply Air Temp. Control
Undefined Plant1 - SHW	NA	NA	NA	NA	Fixed Temperature Control, No DDC

Notes: This table includes controls related to the performance path only. For projects using the prescriptive path, mandatory and prescriptive controls requirements are documented on the NRCC-MCH-E.

H6. MECHANICAL VENTILATION

1	2	3	4	5	6	7	8	9
Zone Name	Mechanical Ventilation							DCV or Occupant Sensor Controls, or Both
	Ventilation Function	# hotel rooms	# of people	# of bedrooms	Supply OA CFM	Exhaust CFM	Conditioned Area (sf)	
1-OFFICES (H401-H402-H403)	Office - Office space	0	2.92	0	88	0	584	Occupant Sensor
2-LIBRARY AND CIRCULATION (	Assembly - Libraries (reading rooms and stack areas)	0	9.75	0	146	0	975	NA
4-DATA (H405)	General - Unoccupied	0	0.15	0	0	0	101	NA

Multifamily or Hotel/Motel Occupancy? (if "Yes", see DOMESTIC/SERVICE HOT WATER SYSTEM SUMMARY)	No
Does the Project include Zonal Systems?	No

7/13/2020 5:38:18 PM BIM 360://PCCD Merritt Horticulture/Merritt Horticulture_2020.rvt

APPROVALS

IDENTIFICATION STAMP
DIV. OF THE STATE ARCHITECT
APP: 01-119409 INC:
REVIEWED FOR
SS ☑ FLS ☑ ACS ☑
DATE: 03/14/2022

NOLL & TAM ARCHITECTS
729 Heinz Avenue
Berkeley, CA 94710
tel 510.542.2200
fax 510.542.2201

SEAL

REGISTERED PROFESSIONAL ENGINEER
TYLER BRADSHAW
M33496
EXP. 06/30/2022
MECHANICAL
STATE OF CALIFORNIA

BLUE FOREST ENGINEERING
3622 Kingsley Street
Oakland, CA 94610
tel 510.925.8224

PROJECT TITLE

Peralta Community College District
MERRITT COLLEGE NEW LANDSCAPE HORTICULTURE COMPLEX

12500 Campus Drive
Oakland, CA 94619

BID SET

ISSUE DATE 03/03/2022
N&T JOB NUMBER 22003

REVISIONS

	DATE	DESCRIPTION

DRAWN BY S.A. CHECKED BY T.B.

SHEET TITLE

TITLE 24 COMPLIANCE FORMS

SHEET NUMBER

M8.01

Project Name:	MerrittLandscape Horticulture Complex	NRCC-PRF-01-E	Page 10 of 16
Project Address:	12500 Campus Drive Oakland, CA 94616 Oakland 94616	Calculation Date/Time:	10:28, Fri, Mar 05, 2021
Input File Name:	ADMIN BUILDING.cibd19x		

H7. ZONAL SYSTEM AND TERMINAL UNIT SUMMARY

1	2	3	4	5	6	7	8	9	10	11	12
System ID	Zone Name	System Type	Rated Capacity (kBtuh)		Airflow (cfm)			Fan			
			Heating	Cooling	Design	Min.	Min. Ratio	BHP	Watts	Cycles	ECM Motor
1-OFFICES (H401-H402-H403)-Trm	1-OFFICES (H401-H402-H403)	Uncontrolled	NA	NA	635	NA	0.00	NA	NA	NA	☐
2-LIBRARY AND CIRCULATION (-Trm	2-LIBRARY AND CIRCULATION (	Uncontrolled	NA	NA	688	NA	0.00	NA	NA	NA	☐
4-DATA (H405)-Trm	4-DATA (H405)	Uncontrolled	NA	NA	360	NA	0.00	NA	NA	NA	☐

H8. EVAPORATIVE COOLER SUMMARY

This Section Does Not Apply

I. DOMESTIC/SERVICE HOT WATER SYSTEM SUMMARY

I1. DHW EQUIPMENT SUMMARY

1	2	3	4	5	6	7	8	9	10	11
DHW Name	Heater Element Type	Tank Type	Qty	Tank Vol (gal)	Rated Input (kBtu/h)	Efficiency	Tank Insulation R-value (Int/Ext)	Standby Loss Fraction	Heat Pump Type	Tank Location or Ambient Condition
Instantaneous Electric2	Electricity	Instantaneous	1	1.00	8.0 (kW)	UEF: 0.98	NA	SBLF: NA	NA	NA

I2. MULTI-FAMILY CENTRAL DHW SYSTEM DETAILS

This Section Does Not Apply

I3. SOLAR HOT WATER HEATING SUMMARY

This Section Does Not Apply

Project Name:	MerrittLandscape Horticulture Complex	NRCC-PRF-01-E	Page 11 of 16
Project Address:	12500 Campus Drive Oakland, CA 94616 Oakland 94616	Calculation Date/Time:	10:28, Fri, Mar 05, 2021
Input File Name:	ADMIN BUILDING.cibd19x		

J. COVERED PROCESS SUMMARY

This Section Does Not Apply

K. INDOOR LIGHTING SUMMARY

This Section Does Not Apply

Project Name:	MerrittLandscape Horticulture Complex	NRCC-PRF-01-E	Page 12 of 16
Project Address:	12500 Campus Drive Oakland, CA 94616 Oakland 94616	Calculation Date/Time:	10:28, Fri, Mar 05, 2021
Input File Name:	ADMIN BUILDING.cibd19x		

L. DECLARATION OF REQUIRED CERTIFICATES OF INSTALLATION

Table Instructions: Selections shall be made by Documentation Author to indicate which Certificates of Installation must be submitted for the features to be recognized for compliance. These documents bust be retained and provided to the building inspector during construction and can be found online at: https://www.energy.ca.gov/title24/2019standards/2019_compliance_documents/Nonresidential_Documents/NRCI/

Building Component	YES	NO	Form/Title	Field Inspector Pass	Field Inspector Fail
Envelope	☒	☐	NRCI-ENV-01-E - Must be submitted for all buildings	☐	☐
Mechanical	☒	☐	NRCI-MCH-01-E - Must be submitted for all buildings	☐	☐
Plumbing	☒	☐	NRCI-PLB-01-E - Must be submitted for all buildings	☐	☐
	☐	☒	NRCI-PLB-02-E - Must be submitted for high-rise residential and hotel/ motel central hot water distribution systems to be recognized for compliance	☐	☐
	☐	☒	NRCI-PLB-03-E - Must be submitted for high-rise residential and hotel/motel single dwelling unit hot water system distribution systems to be recognized for compliance	☐	☐
	☐	☒	NRCI-PLB-21-E - Must be HERS verified for central systems in high-rise residential hotel/ motel application	☐	☐
	☐	☒	NRCI-PLB-22-E - Must be HERS verified for single dwelling unit systems in high-rise residential, hotel/motel application	☐	☐
	☐	☒	NRCI-STH-01-E - Must be submitted for solar hot water heating systems	☐	☐
Indoor Lighting	☐	☒	NRCI-LTI-01-E - Must be submitted for all buildings	☐	☐
	☐	☒	NRCI-LTI-02-E - Must be submitted for a lighting control system, or for an Energy Management Control System (EMCS) to be recognized for compliance	☐	☐
	☐	☒	NRCI-LTI-04-E - Must be submitted for two interlocked systems serving an auditorium, a convention center, a conference room, a multipurpose room, or a theater to be recognized for compliance	☐	☐
	☐	☒	NRCI-LTI-05-E - Must be submitted for a Power Adjustment Factor (PAF) to be recognized for compliance	☐	☐
	☐	☒	NRCI-LTI-06-E - Must be submitted for additional wattage installed in a video conferencing studio to be recognized for compliance	☐	☐
Covered Process	☐	☒	NRCI-PRC-01-E - Must be submitted for all Covered Processes	☐	☐

Project Name:	MerrittLandscape Horticulture Complex	NRCC-PRF-01-E	Page 13 of 16
Project Address:	12500 Campus Drive Oakland, CA 94616 Oakland 94616	Calculation Date/Time:	10:28, Fri, Mar 05, 2021
Input File Name:	ADMIN BUILDING.cibd19x		

M. DECLARATION OF REQUIRED CERTIFICATES OF ACCEPTANCE

Table Instructions: Selections shall be made by Documentation Author to indicate which Certificates of Acceptance must be submitted for the features to be recognized for compliance. These documents must be provided to the building inspector during construction and must be completed through an Acceptance Test Technician Certification Provider (ATTCP). For more information visit:https://www.energy.ca.gov/title24/2019standards/2019_compliance_documents/Nonresidential_Documents/NRCA/

Building Component	YES	NO	Form/Title	Field Inspector Pass	Field Inspector Fail
Envelope	☒	☐	NRCA-ENV-02-F - NRFC label verification for fenestration	☐	☐
	☐	☐	NRCA-ENV-03-F - Daylighting Design PAFs	☐	☐
Indoor Lighting	☐	☒	NRCA-LTI-02-A - Occupancy Sensors and Automatic Time Switch Controls	☐	☐
	☐	☒	NRCA-LTI-03-A - Automatic Daylight Controls	☐	☐
	☐	☒	NRCA-LTI-04-A - Demand Responsive Lighting Controls	☐	☐
	☐	☒	NRCA-LTI-05-A - Institutional Tuning Power Adjustment Factor (PAF)	☐	☐
Covered Process	☐	☒	NRCA-PRC-02-F - Kitchen Exhaust	☐	☐
	☐	☒	NRCA-PRC-03-F - Garage Exhaust	☐	☐
	☐	☒	NRCA-PRC-12-F – Elevator Lighting and Ventilation Controls	☐	☐
	☐	☒	NRCA-PRC-13-F –Escalator and Moving Walkways Speed Control	☐	☐
	☐	☒	NRCA-PRC-14-F – Lab Exhaust Ventilation System	☐	☐
	☐	☒	NRCA-PRC-15-F - Fume Hood Automatic Sash Closures System	☐	☐

Project Name:	MerrittLandscape Horticulture Complex	NRCC-PRF-01-E	Page 14 of 16
Project Address:	12500 Campus Drive Oakland, CA 94616 Oakland 94616	Calculation Date/Time:	10:28, Fri, Mar 05, 2021
Input File Name:	ADMIN BUILDING.cibd19x		

M. DECLARATION OF REQUIRED CERTIFICATES OF ACCEPTANCE

Table Instructions: Selections shall be made by Documentation Author to indicate which Certificates of Acceptance must be submitted for the features to be recognized for compliance. These documents must be provided to the building inspector during construction and must be completed through an Acceptance Test Technician Certification Provider (ATTCP). For more information visit:https://www.energy.ca.gov/title24/2019standards/2019_compliance_documents/Nonresidential_Documents/NRCA/

Building Component	YES	NO	Form/TItle	Field Inspector Pass	Field Inspector Fail
Mechanical	☒	☐	NRCA-MCH-02-A Outdoor Air must be submitted for all newly installed HVAC units. Note: MCH02-A can be performed in conjunction with MCH-07-A Supply Fan VFD Acceptance (if applicable) since testing activities overlap	☐	☐
	☒	☐	NRCA-MCH-03-A Constant Volume Single Zone HVAC	☐	☐
	☐	☒	NRCA-MCH-04(a)-H Air Distribution Duct Leakage - HERS Verification required	☐	☐
	☐	☐	NRCA-MCH-04(b)-A Air Distribution Duct Leakage - ATT only	☐	☐
	☐	☒	NRCA-MCH-05-A Air Economizer Controls	☐	☐
	☒	☐	NRCA-MCH-06-A Demand Control Ventilation Systems Acceptance must be submitted for all systems required to employ demand controlled ventilation (refer to §120.1(c)3) can vary outside ventilation flow rates based on maintaining interior carbon dioxide (CO2) concentration setpoints	☐	☐
	☐	☒	NRCA-MCH-07-A Supply Fan Variable Flow Controls	☐	☐
	☐	☒	NRCA-MCH-08-A Valve Leakage Test	☐	☐
	☐	☒	NRCA-MCH-09-A Supply Water Temperature Reset Controls	☐	☐
	☐	☒	NRCA-MCH-10-A Hydronic System Variable Flow Controls	☐	☐
	☐	☒	NRCA-MCH-11-A Automatic Demand Shed Controls	☐	☐
	☐	☒	NRCA-MCH-12-A FDD for Packaged Direct Expansion Units	☐	☐
	☐	☒	NRCA-MCH-13-A Automatic FDD for Air Handling Units and Zone Terminal Units Acceptance	☐	☐
	☐	☒	NRCA-MCH-14-A Distributed Energy Storage DX AC Systems Acceptance	☐	☐
	☐	☒	NRCA-MCH-15-A Thermal Energy Storage (TES) System Acceptance	☐	☐
	☐	☒	NRCA-MCH-16-A Supply Air Temperature Reset Controls	☐	☐
	☐	☒	NRCA-MCH-17-A Condenser Water Temperature Reset Controls	☐	☐
	☐	☒	NRCA-MCH-18 Energy Management Control Systems	☐	☐
	☒	☐	NRCA-MCH-19 Occupancy Sensor Controls	☐	☐

Project Name:	MerrittLandscape Horticulture Complex	NRCC-PRF-01-E	Page 15 of 16
Project Address:	12500 Campus Drive Oakland, CA 94616 Oakland 94616	Calculation Date/Time:	10:28, Fri, Mar 05, 2021
Input File Name:	ADMIN BUILDING.cibd19x		

N. DECLARATION OF REQUIRED CERTIFICATES OF VERIFICATION

Table Instructions: Selections shall be made by Documentation Author to indicate which Certificates of Verification must be submitted for the features to be recognized for compliance. These documents bust be retained and provided to the building inspector during construction and can be found online at: https://www.energy.ca.gov/title24/2019standards/2019_compliance_documents/Nonresidential_Documents/NRCV/

Building Component	YES	NO	Form/TItle	Field Inspector Pass	Field Inspector Fail
Mechanical	☐	☒	NRCV-MCH-04-H Duct Leakage Test	☐	☐
	☐	☒	NRCV-MCH-24-H Enclosure Air Leakage	☐	☐
	☐	☒	NRCV-MCH-27 Indoor Air Quality & Mechanical Ventilation	☐	☐
	☐	☒	NRCV-MCH-32-H Local Mechanical Exhaust	☐	☐
Plumbing	☐	☒	NRCV-PLB-21-H - HERS verified central systems in high-rise residential, hotel/motel application	☐	☐
	☐	☒	NRCV-PLB-22-H - HERS verified single dwelling unit systems in high-rise residential, hotel/motel application	☐	☐

Project Name:	MerrittLandscape Horticulture Complex	NRCC-PRF-01-E	Page 16 of 16
Project Address:	12500 Campus Drive Oakland, CA 94616 Oakland 94616	Calculation Date/Time:	10:28, Fri, Mar 05, 2021
Input File Name:	ADMIN BUILDING.cibd19x		

DOCUMENTATION AUTHOR'S DECLARATION STATEMENT

I certify that this Certificate of Compliance documentation is accurate and complete.

Documentation Author Name: Tyler Bradshaw	Signature:	
Company: Blue Forest Engineering Inc		
Address: 3622 Kingsley Street	Signature Date: 2021-03-05	
City/State/Zip: Oakland CA 94610	CEA/ HERS Certification Identification (if applicable): M33496	
Phone: 510.924.8224 x101		

RESPONSIBLE PERSON'S DECLARATION STATEMENT

I certify the following under penalty of perjury, under the laws of the State of California:

1. The information provided on this Certificate of Compliance is true and correct.
2. I am eligible under Division 3 of the Business and Professions Code to accept responsibility for the building design or system design identified on this Certificate of Compliance (responsible designer)
3. The energy features and performance specifications, materials, components, and manufactured devices for the building design or system design identified on this Certificate of Compliance conform to the requirements of Title 24, Part 1 and Part 6 of the California Code of Regulations.
4. The building design features or system design features identified on this Certificate of Compliance are consistent with the information provided on other applicable compliance documents, worksheets, calculations, plans and specifications submitted to the enforcement agency for approval with this building permit application.
5. I will ensure that a completed signed copy of this Certificate of Compliance shall be made available with the building permit(s) issued for the building, and made available to the enforcement agency for all applicable inspections. I understand that a completed signed copy of this Certificate of Compliance is required to be included with the documentation the builder provides to the building owner at occupancy.

Responsible Envelope Designer Name: Christopher Noll	Signature:	
Company: Noll & Tam Architects		
Address: 729 Heinz Ave.	Date Signed: 03/08/2021	
City/State/Zip: Berkeley CA 94710		
Phone: 510.542.2200	Title: Principal	License #: C15916
Responsible Lighting Designer Name:	Signature: NOT IN SCOPE	
Company:		
Address:	Date Signed:	
City/State/Zip:		
Phone:	Title:	License #:
Responsible Mechanical Designer Name: Tyler Bradshaw	Signature:	
Company: Blue Forest Engineering		
Address: 3622 Kingsley Street	Date Signed: 3.5.2021	
City/State/Zip: Oakland CA 94610		
Phone: 510.924.8205	Title: Principal	License #: M33496

APPROVALS

IDENTIFICATION STAMP
DIV. OF THE STATE ARCHITECT
APP: 01-119409 INC:
REVIEWED FOR
SS ☑ FLS ☑ ACS ☑
DATE: 03/14/2022

NOLL & TAM ARCHITECTS
729 Heinz Avenue
Berkeley, CA 94710
tel 510.542.2200
fax 510.542.2201

SEAL

REGISTERED PROFESSIONAL ENGINEER
TYLER BRADSHAW
M33496
EXP. 08/30/2022
MECHANICAL
STATE OF CALIFORNIA

BLUE FOREST ENGINEERING
3622 Kingsley Street
Oakland, CA 94610
tel 510.925.8224

PROJECT TITLE

Peralta Community College District
MERRITT COLLEGE NEW LANDSCAPE HORTICULTURE COMPLEX

12500 Campus Drive
Oakland, CA 94619

BID SET

ISSUE DATE	03/03/2022
N&T JOB NUMBER	22003

REVISIONS

	DATE	DESCRIPTION
2		

DRAWN BY S.A. | CHECKED BY T.B.

SHEET TITLE

TITLE 24 COMPLIANCE FORMS

SHEET NUMBER

M8.02

BIM 360://PCCD Merritt Horticulture/Merritt Horticulture_2020.rvt
7/13/2020 5:38:18 PM

Project Name:	MerrittLandscape Horticulture Complex	NRCC-PRF-01-E	Page 1 of 14
Project Address:	12500 Campus Drive Oakland, CA 94616 Oakland 94616	Calculation Date/Time:	22:10, Thu, Mar 04, 2021
Input File Name:	CLASS LAB 1 H101.cibd19x		

A. GENERAL INFORMATION

1.	Project Location (city)	Oakland	8.	Standards Version	Compliance2019
2.	CA Zip Code	94616	9.	Compliance Software (version)	EnergyPro 8.2
3.	Climate Zone	3	10.	Weather File	OAKLAND_724930_CZ2010.epw
4.	Total Conditioned Floor Area in Scope	1,880 ft²	11.	Building Orientation (deg)	(N) 0 deg
5.	Total Unconditioned Floor Area	0 ft²	12.	Permitted Scope of Work	NewEnvelopeAndMechanical
6.	Total # of Stories (Habitable Above Grade)	1	13	Building Type(s)	Nonresidential
7.	Total # of dwelling units	0	14	Gas Type	NaturalGas

B. PROJECT SUMMARY

Table Instructions: Table B shows which building components are included in the performance calculation. If indicated as not included, the project must show compliance prescriptively if within permit application.

Building Components Complying via Performance					Building Components Complying Prescriptively	
Envelope (see Table G)	☒ Performance	Covered Process: Commercial Kitchens	☐ Performance		*The following building components are ONLY eligible for prescriptive compliance and should be documented on the NRCC form listed if within the scope of the permit application (i.e. compliance will not be shown on the NRCC-PRF-E).*	
	☐ Not Included		☒ Not Included			
Mechanical (see Table H)	☒ Performance	Covered Process: Computer Rooms	☐ Performance		Indoor Lighting (Unconditioned)§140.6	*NRCC-LTI-E*
	☐ Not Included		☒ Not Included		Outdoor Lighting §140.7	*NRCC-LTO-E*
Domestic Hot Water (see Table I)	☒ Performance	Covered Process: Laboratory Exhaust	☐ Performance		Sign Lighting §140.8	*NRCC -LTS-E*
	☐ Not Included		☒ Not Included		Mandatory Measures	
Lighting (Indoor Conditioned, see Table K)	☐ Performance				*Electrical power systems, commissioning, solar ready, elevator and escalator requirements are mandatory and should on the NRCC form listed if applicable (i.e. compliance will not be shown on the NRCC-PRF-E.)*	
	☒ Not Included				Electrical Power Distribution §110.11	*NRCC-ELC-E is required*
Solar Thermal Water Heating (see Table I)	☐ Performance				Commissioning §120.8	*NRCC-CXR-E is required*
	☒ Not Included				Solar Ready §110.10	*NRCC-SRA-E is required*

Project Name:	MerrittLandscape Horticulture Complex	NRCC-PRF-01-E	Page 2 of 14
Project Address:	12500 Campus Drive Oakland, CA 94616 Oakland 94616	Calculation Date/Time:	22:10, Thu, Mar 04, 2021
Input File Name:	CLASS LAB 1 H101.cibd19x		

C1. COMPLIANCE RESULTS FOR PERFORMANCE COMPONENTS (Annual TDV Energy Use, kBtu/ft ²-yr)

COMPLIES

Energy Component	Standard Design (TDV)	Proposed Design (TDV)	Compliance Margin (TDV)[1]
Space Heating	19.90	19.74	0.16
Space Cooling	16.73	8.35	8.38
Indoor Fans	112.12	46.73	65.39
Heat Rejection	--	--	--
Pumps & Misc.	--	--	--
Domestic Hot Water	16.08	39.44	-23.36
Indoor Lighting	41.42	41.42	--
ENERGY STANDARDS COMPLIANCE TOTAL	**206.25**	**155.68**	**50.57 (24.5%)**

[1] Notes: The number in parenthesis following the Compliance Margin in column 4. represents the Percent Better than Standard.

C2. RESULTS FOR 'ABOVE CODE' QUALIFICATIONS[1]

☐ This project is pursuing CalGreen Tier 1 ☐ This project is pursuing CalGreen Tier 2

Miscellaneous Energy Component	Standard Design (TDV)	Proposed Design (TDV)	Compliance Margin (TDV)[1]
Receptacle	74.35	74.35	--
Process	--	--	--
Other Ltg	--	--	--
Process Motors	--	--	--
COMPLIANCE TOTAL PLUS MISCELLANEOUS COMPONENTS	**280.60**	**230.03**	**50.6 (18.0%)**

[1] Notes: This table is used to document compliance with programs OTHER THAN Title 24 Part 6, if applicable.

Project Name:	MerrittLandscape Horticulture Complex	NRCC-PRF-01-E	Page 3 of 14
Project Address:	12500 Campus Drive Oakland, CA 94616 Oakland 94616	Calculation Date/Time:	22:10, Thu, Mar 04, 2021
Input File Name:	CLASS LAB 1 H101.cibd19x		

C3. ENERGY USE SUMMARY

Energy Component	Standard Design Site (MWh)	Proposed Design Site (MWh)	Margin (MWh)	Standard Design Site (MBtu)	Proposed Design Site (MBtu)	Margin (MBtu)
Space Heating	--	1.4	--	18.7	--	--
Space Cooling	0.6	0.3	0.3	--	--	--
Indoor Fans	6.9	2.9	4.0	--	--	--
Heat Rejection	--	--	--	--	--	--
Pumps & Misc.	--	--	--	--	--	--
Domestic Hot Water	--	2.7	--	16.9	--	--
Indoor Lighting	2.7	2.7	0.0	--	--	--
Compliance Total	**10.2**	**10.0**	**0.2**	**35.6**	**0.0**	**--**
Receptacle	5.0	5.0	0.0	--	--	--
Process	--	--	--	--	--	--
Other Ltg	--	--	--	--	--	--
Process Motors	--	--	--	--	--	--
TOTAL	**15.2**	**15.0**	**0.2**	**35.6**	**0.0**	**--**

C4. UNMET LOAD HOURS

This Section Does Not Apply

D. EXCEPTIONAL CONDITIONS

This project includes partial performance compliance scope options. The building must show compliance with all other applicable compliance scope options (performance or prescriptively) before occupying.

The aged solar reflectance and aged thermal emittance must be listed in the Cool Roof Rating Council database of certified products. For projects where initial reflectance is used, the initial reflectance must be listed, and the aged reflectance is calculated by the software program and used in the compliance model.

This project uses the Simplified Geometry Performance Modeling Approach which is not capable of modeling daylighting controls and assumes the prescriptive Secondary DayIt Control requirements are met. PRESCRIPTIVE COMPLIANCE documentation (form NRCC-LTI-02-E) for the requirements of section 140.6(d) Automatic Daylighting Controls in Secondary DayIt Zones is required.

E. HERS VERIFICATION

This Section Does Not Apply

Project Name:	MerrittLandscape Horticulture Complex	NRCC-PRF-01-E	Page 4 of 14
Project Address:	12500 Campus Drive Oakland, CA 94616 Oakland 94616	Calculation Date/Time:	22:10, Thu, Mar 04, 2021
Input File Name:	CLASS LAB 1 H101.cibd19x		

F. ADDITIONAL REMARKS

This Section Does Not Apply

G1. ENVELOPE GENERAL INFORMATION (conditioned spaces only)

Opaque Surfaces & Orientation	Total Gross Surface Area (ft²)	Total Fenestration Area (ft²)	Window to Wall Ratio (%)
North-Facing[1]	691 ft²	0 ft²	00.0%
East-Facing[2]	756 ft²	234 ft²	31.0%
South-Facing[3]	691 ft²	161 ft²	23.3%
West-Facing[4]	600 ft²	0 ft²	00.0%
Total	**2,738 ft²**	**396 ft²**	**14.4%**
Roof	1,880 ft²	0 ft²	00.0%

Notes:
[1] North-Facing is oriented to within 45 degrees of true north, including 45°00'00" east of north (NE), but excluding 45°00'00" west of north (NW).
[2] East-Facing is oriented to within 45 degrees of true east, including 45°00'00" south of east (SE), but excluding 45°00'00" north of east (NE).
[3] South-Facing is oriented to within 45 degrees of true south, including 45°00'00" west of south (SW), but excluding 45°00'00" east of south (SE).
[4] West-Facing is oriented to within 45 degrees of true west, including 45°00'00" north of due west (NW), but excluding 45°00'00" south of west (SW).

G2. CRRC ROOFING PRODUCT SUMMARY

Assembly Name	Roof Pitch	Aged Solar Reflectance	Thermal Emittance	SRI
Peralta R1 R-30 Roof23	Steep-Slope	0.10	0.85	Not Provided

G3. OPAQUE SURFACE ASSEMBLY SUMMARY

Surface Name	Surface Type	Area (ft²)	Framing Type	Cavity R-Value	Continuous R-Value	U-Factor / F-Factor / C-Factor	Status[1]	Description of Assembly Layers
Peralta B-1 Wall8	ExteriorWall	691	Wood	21	NA	U-Factor: 0.065	N	Stucco - 7/8 in. Vapor permeable felt - 1/8 in. Plywood - 1/2 in. Wood framed wall, 16in. OC, 5.5in., R-21 Gypsum Board - 1/2 in.

Project Name:	MerrittLandscape Horticulture Complex	NRCC-PRF-01-E	Page 5 of 14
Project Address:	12500 Campus Drive Oakland, CA 94616 Oakland 94616	Calculation Date/Time:	22:10, Thu, Mar 04, 2021
Input File Name:	CLASS LAB 1 H101.cibd19x		

G3. OPAQUE SURFACE ASSEMBLY SUMMARY

Surface Name	Surface Type	Area (ft²)	Framing Type	Cavity R-Value	Continuous R-Value	U-Factor / F-Factor / C-Factor	Status[1]	Description of Assembly Layers
20-019 R-21 Wall12	ExteriorWall	2047	NA	0	21	U-Factor: 0.029	N	Metal Insulated Panels - 2 in. Gypsum Board - 5/8 in. Glass fiber batt - 5 1/2 in. R21 (CEC Default) Gypsum Board - 5/8 in.
Slab On Grade21	UndergroundFloor	1880	NA	0	NA	F-Factor: 0.730	N	Slab Type = UnheatedSlabOnGrade Insulation Orientation = None Insulation R-Value = R0
Peralta R1 R-30 Roof23	Roof	1880	Wood	30	NA	U-Factor: 0.035	N	Metal Standing Seam - 1/16 in. Vapor permeable felt - 1/8 in. Gypsum Board - 1/2 in. Wood framed roof, 48in. OC, 5.5in., R-30 Plywood - 5/8 in.

[1] Status: N - New, A – Altered, E – Existing

G4. OPAQUE DOOR SUMMARY

Assembly Name	Overall U-factor	Status[1]
CLASS LAB 3 (H101) - Wood10	0.500	N

G5. FENESTRATION ASSEMBLY SUMMARY

Fenestration Assembly Name / Tag or I.D.	Fenestration Type / Product Type / Frame Type	Certification Method[1]	Assembly Method	Area ft²	Overall U-factor	Overall SHGC	Overall VT	Status[2]
Window E3	VerticalFenestration OperableWindow N/A	NFRC Rated	Manufactured	129	0.45	0.19	0.32	N
Window E8	VerticalFenestration OperableWindow N/A	NFRC Rated	Manufactured	105	0.45	0.19	0.32	N

Project Name:	MerrittLandscape Horticulture Complex	NRCC-PRF-01-E	Page 6 of 14
Project Address:	12500 Campus Drive Oakland, CA 94616 Oakland 94616	Calculation Date/Time:	22:10, Thu, Mar 04, 2021
Input File Name:	CLASS LAB 1 H101.cibd19x		

G5. FENESTRATION ASSEMBLY SUMMARY

Fenestration Assembly Name / Tag or I.D.	Fenestration Type / Product Type / Frame Type	Certification Method[1]	Assembly Method	Area ft²	Overall U-factor	Overall SHGC	Overall VT	Status[2]
Window E1	VerticalFenestration OperableWindow N/A	NFRC Rated	Manufactured	161	0.45	0.19	0.32	N

[1] Newly installed fenestration shall have a certified NFRC Label Certificate or use the CEC default tables found in Table 110.6-A and Table 110.6-B. Center of Glass (COG) values are for the glass-only, determined by the manufacturer, and are shown for ease of verification. Site-built fenestration values are calculated per Nonresidential Appendix NA6 and are used in the analysis.
[2] Status: N - New, A – Altered, E – Existing

G6. OVERHANG DETAILS

This Section Does Not Apply

G7. FIN DETAILS

This Section Does Not Apply

H. HVAC SYSTEM SUMMARY

H1. DRY SYSTEM EQUIPMENT (furnaces, air handling units, heat pumps, VRF, economizers etc.)

Dry System Equipment [1] (Fan & Economizer info included below in Table N)

Equipment Name	Equipment Type	Qty	Heating: Total Heating Output (kBtu/h)	Heating: Supp Heat Source (Y/N)	Heating: Supp Heat Output (kBtuh)	Heating: Efficiency	Cooling: Total Cooling Output (kBtu/h)	Cooling: Efficiency	Status[2]
FC-1 / ACCU-1	SZHP (Split3Phase)	1	54	Yes	2	HSPF-9.00	44	SEER-15.50 / EER-12.30	N

[1] Status: N - New, A – Altered, E – Existing

Project Name:	MerrittLandscape Horticulture Complex	NRCC-PRF-01-E	Page 7 of 14
Project Address:	12500 Campus Drive Oakland, CA 94616 Oakland 94616	Calculation Date/Time:	22:10, Thu, Mar 04, 2021
Input File Name:	CLASS LAB 1 H101.cibd19x		

H2. FAN SYSTEMS SUMMARY[1]

Name or Item Tag	System Type packaged, DOAS, etc.	Design OA CFM	Supply Fan CFM	Supply Fan BHP	Supply Fan Watts	Supply Fan Control	Return Fan CFM	Return Fan BHP	Return Fan Watts	Return Fan Control	Economizer Type (if present)	Status[2]
FC-1 / ACCU-1	SZHP	615	1400	0.750	654.0	ConstantVolume	NA	NA	NA	NA	DifferentialDryBulb	N

[1] Status: N - New, A – Altered, E – Existing

H3. EXHAUST FAN SUMMARY

This Section Does Not Apply

H4. Wet System Equipment (boilers, chillers, cooling towers, etc.)

Name or Item Tag	Equipment Type	Qty	Vol (gal)	Rated Capacity (kBtu/h)	Efficiency	Standby Loss	Pumps: Qty	Pumps: GPM	Pumps: HP	Pumps: VSD (Y/N)	Status[1]

[1] Status: N - New, A – Altered, E – Existing

H5. SYSTEM SPECIAL FEATURES

System Name	Optimum Start	Window Interlocks per §140.4(n)	Evaporative Cooling	Heat Recovery	Other Controls
FC-1 / ACCU-1	No Optimum Start	No	No Evaporative Cooler	No Heat Recovery	1 Zones With CO2Sensor Vent. Control, No DDC Differential DryBulb Economizer No Supply Air Temp. Control
Undefined Plant1 - SHW	NA	NA	NA	NA	Fixed Temperature Control, No DDC

Notes: This table includes controls related to the performance path only. For projects using the prescriptive path, mandatory and prescriptive controls requirements are documented on the NRCC-MCH-E.

Project Name:	MerrittLandscape Horticulture Complex	NRCC-PRF-01-E	Page 8 of 14
Project Address:	12500 Campus Drive Oakland, CA 94616 Oakland 94616	Calculation Date/Time:	22:10, Thu, Mar 04, 2021
Input File Name:	CLASS LAB 1 H101.cibd19x		

H6. MECHANICAL VENTILATION

Zone Name	Mechanical Ventilation: Ventilation Function	# hotel rooms	# of people	# of bedrooms	Supply OA CFM	Exhaust CFM	Conditioned Area (sf)	DCV or Occupant Sensor Controls, or Both
1-CLASS LAB 3 (H101)	Education - Lecture/postsecondary classroom	0	41.00	0	615	0	1880	NA

Multifamily or Hotel/Motel Occupancy? (if "Yes", see DOMESTIC/SERVICE HOT WATER SYSTEM SUMMARY)	No
Does the Project include Zonal Systems?	No

H7. ZONAL SYSTEM AND TERMINAL UNIT SUMMARY

System ID	Zone Name	System Type	Rated Capacity (kBtuh): Heating	Rated Capacity (kBtuh): Cooling	Airflow (cfm): Design	Airflow (cfm): Min.	Min. Ratio	Fan: BHP	Fan: Watts	Fan: Cycles	Fan: ECM Motor
1-CLASS LAB 3 (H101)-Trm	1-CLASS LAB 3 (H101)	Uncontrolled	NA	NA	1400	NA	0.00	NA	NA	NA	☐

H8. EVAPORATIVE COOLER SUMMARY

This Section Does Not Apply

I. DOMESTIC/SERVICE HOT WATER SYSTEM SUMMARY

Project Name:	MerrittLandscape Horticulture Complex	NRCC-PRF-01-E	Page 9 of 14
Project Address:	12500 Campus Drive Oakland, CA 94616 Oakland 94616	Calculation Date/Time:	22:10, Thu, Mar 04, 2021
Input File Name:	CLASS LAB 1 H101.cibd19x		

I1. DHW EQUIPMENT SUMMARY

DHW Name	Heater Element Type	Tank Type	Qty	Tank Vol (gal)	Rated Input (kBtu/h)	Efficiency	Tank Insulation R-value (Int/Ext)	Standby Loss Fraction	Heat Pump Type	Tank Location or Ambient Condition
Instantaneous Electric2	Electricity	Instantaneous	1	1.00	8.0 (kW)	UEF: 0.98	NA	SBLF: NA	NA	NA

I2. MULTI-FAMILY CENTRAL DHW SYSTEM DETAILS

This Section Does Not Apply

I3. SOLAR HOT WATER HEATING SUMMARY

This Section Does Not Apply

J. COVERED PROCESS SUMMARY

This Section Does Not Apply

K. INDOOR LIGHTING SUMMARY

This Section Does Not Apply

7/13/2020 5:38:18 PM BIM 360://PCCD Merritt Horticulture/Merritt Horticulture_2020.rvt

APPROVALS

IDENTIFICATION STAMP
DIV. OF THE STATE ARCHITECT
APP: 01-119409 INC:
REVIEWED FOR
SS ☑ FLS ☑ ACS ☑
DATE: 03/14/2022

NOLL & TAM ARCHITECTS
729 Heinz Avenue
Berkeley, CA 94710
tel 510.542.2200
fax 510.542.2201

SEAL

REGISTERED PROFESSIONAL ENGINEER TYLER BRADSHAW M32496 EXP. 06/30/2022 MECHANICAL STATE OF CALIFORNIA

BLUE FOREST ENGINEERING
3622 Kingsley Street
Oakland, CA 94610
tel 510.925.8224

PROJECT TITLE

Peralta Community College District
MERRITT COLLEGE NEW LANDSCAPE HORTICULTURE COMPLEX

12500 Campus Drive
Oakland, CA 94619

BID SET

ISSUE DATE 03/03/2022
N&T JOB NUMBER 22003

REVISIONS

	DATE	DESCRIPTION

DRAWN BY S.A. CHECKED BY T.B.

SHEET TITLE

TITLE 24 COMPLIANCE FORMS

SHEET NUMBER

M8.03

Project Name:	MerrittLandscape Horticulture Complex	NRCC-PRF-01-E	Page 10 of 14
Project Address:	12500 Campus Drive Oakland, CA 94616 Oakland 94616	Calculation Date/Time:	22:10, Thu, Mar 04, 2021
Input File Name:	CLASS LAB 1 H101.cibd19x		

L. DECLARATION OF REQUIRED CERTIFICATES OF INSTALLATION

Table Instructions: Selections shall be made by Documentation Author to indicate which Certificates of Installation must be submitted for the features to be recognized for compliance. These documents bust be retained and provided to the building inspector during construction and can be found online at: https://www.energy.ca.gov/title24/2019standards/2019_compliance_documents/Nonresidential_Documents/NRCI/

Building Component	YES	NO	Form/Title	Field Inspector Pass	Field Inspector Fail
Envelope	☒	☐	NRCI-ENV-01-E - Must be submitted for all buildings	☐	☐
Mechanical	☒	☐	NRCI-MCH-01-E - Must be submitted for all buildings	☐	☐
Plumbing	☒	☐	NRCI-PLB-01-E - Must be submitted for all buildings	☐	☐
	☐	☒	NRCI-PLB-02-E - Must be submitted for high-rise residential and hotel/ motel central hot water distribution systems to be recognized for compliance	☐	☐
	☐	☒	NRCI-PLB-03-E - Must be submitted for high-rise residential and hotel/motel single dwelling unit hot water system distribution systems to be recognized for compliance	☐	☐
	☐	☒	NRCI-PLB-21-E - Must be HERS verified for central systems in high-rise residential hotel/ motel application	☐	☐
	☐	☒	NRCI-PLB-22-E - Must be HERS verified for single dwelling unit systems in high-rise residential, hotel/motel application	☐	☐
	☐	☒	NRCI-STH-01-E - Must be submitted for solar hot water heating systems	☐	☐
Indoor Lighting	☐	☒	NRCI-LTI-01-E - Must be submitted for all buildings	☐	☐
	☐	☒	NRCI-LTI-02-E - Must be submitted for a lighting control system, or for an Energy Management Control System (EMCS) to be recognized for compliance	☐	☐
	☐	☒	NRCI-LTI-04-E - Must be submitted for two interlocked systems serving an auditorium, a convention center, a conference room, a multipurpose room, or a theater to be recognized for compliance	☐	☐
	☐	☒	NRCI-LTI-05-E - Must be submitted for a Power Adjustment Factor (PAF) to be recognized for compliance	☐	☐
	☐	☒	NRCI-LTI-06-E - Must be submitted for additional wattage installed in a video conferencing studio to be recognized for compliance	☐	☐
Covered Process	☐	☒	NRCI-PRC-01-E - Must be submitted for all Covered Processes	☐	☐

Project Name:	MerrittLandscape Horticulture Complex	NRCC-PRF-01-E	Page 11 of 14
Project Address:	12500 Campus Drive Oakland, CA 94616 Oakland 94616	Calculation Date/Time:	22:10, Thu, Mar 04, 2021
Input File Name:	CLASS LAB 1 H101.cibd19x		

M. DECLARATION OF REQUIRED CERTIFICATES OF ACCEPTANCE

Table Instructions: Selections shall be made by Documentation Author to indicate which Certificates of Acceptance must be submitted for the features to be recognized for compliance. These documents must be provided to the building inspector during construction and must be completed through an Acceptance Test Technician Certification Provider (ATTCP). For more information visit:https://www.energy.ca.gov/title24/2019standards/2019_compliance_documents/Nonresidential_Documents/NRCA/

Building Component	YES	NO	Form/Title	Field Inspector Pass	Field Inspector Fail
Envelope	☒	☐	NRCA-ENV-02-F - NRFC label verification for fenestration	☐	☐
	☐	☐	NRCA-ENV-03-F - Daylighting Design PAFs	☐	☐
Indoor Lighting	☐	☒	NRCA-LTI-02-A - Occupancy Sensors and Automatic Time Switch Controls	☐	☐
	☐	☒	NRCA-LTI-03-A - Automatic Daylight Controls	☐	☐
	☐	☒	NRCA-LTI-04-A - Demand Responsive Lighting Controls	☐	☐
	☐	☒	NRCA-LTI-05-A - Institutional Tuning Power Adjustment Factor (PAF)	☐	☐
Covered Process	☐	☒	NRCA-PRC-02-F - Kitchen Exhaust	☐	☐
	☐	☒	NRCA-PRC-03-F - Garage Exhaust	☐	☐
	☐	☒	NRCA-PRC-12-F – Elevator Lighting and Ventilation Controls	☐	☐
	☐	☒	NRCA-PRC-13-F –Escalator and Moving Walkways Speed Control	☐	☐
	☐	☒	NRCA-PRC-14-F – Lab Exhaust Ventilation System	☐	☐
	☐	☒	NRCA-PRC-15-F - Fume Hood Automatic Sash Closures System	☐	☐

Project Name:	MerrittLandscape Horticulture Complex	NRCC-PRF-01-E	Page 12 of 14
Project Address:	12500 Campus Drive Oakland, CA 94616 Oakland 94616	Calculation Date/Time:	22:10, Thu, Mar 04, 2021
Input File Name:	CLASS LAB 1 H101.cibd19x		

M. DECLARATION OF REQUIRED CERTIFICATES OF ACCEPTANCE

Table Instructions: Selections shall be made by Documentation Author to indicate which Certificates of Acceptance must be submitted for the features to be recognized for compliance. These documents must be provided to the building inspector during construction and must be completed through an Acceptance Test Technician Certification Provider (ATTCP). For more information visit:https://www.energy.ca.gov/title24/2019standards/2019_compliance_documents/Nonresidential_Documents/NRCA/

Building Component	YES	NO	Form/Title	Field Inspector Pass	Field Inspector Fail
Mechanical	☒	☐	NRCA-MCH-02-A Outdoor Air must be submitted for all newly installed HVAC units. Note: MCH02-A can be performed in conjunction with MCH-07-A Supply Fan VFD Acceptance (if applicable) since testing activities overlap	☐	☐
	☒	☐	NRCA-MCH-03-A Constant Volume Single Zone HVAC	☐	☐
	☐	☒	NRCA-MCH-04(a)-H Air Distribution Duct Leakage - HERS Verification required	☐	☐
	☐	☐	NRCA-MCH-04(b)-A Air Distribution Duct Leakage - ATT only	☐	☐
	☒	☐	NRCA-MCH-05-A Air Economizer Controls	☐	☐
	☒	☐	NRCA-MCH-06-A Demand Control Ventilation Systems Acceptance must be submitted for all systems required to employ demand controlled ventilation (refer to §120.1(c)3) can vary outside ventilation flow rates based on maintaining interior carbon dioxide (CO2) concentration setpoints	☐	☐
	☐	☒	NRCA-MCH-07-A Supply Fan Variable Flow Controls	☐	☐
	☐	☒	NRCA-MCH-08-A Valve Leakage Test	☐	☐
	☐	☒	NRCA-MCH-09-A Supply Water Temperature Reset Controls	☐	☐
	☐	☒	NRCA-MCH-10-A Hydronic System Variable Flow Controls	☐	☐
	☐	☒	NRCA-MCH-11-A Automatic Demand Shed Controls	☐	☐
	☐	☒	NRCA-MCH-12-A FDD for Packaged Direct Expansion Units	☐	☐
	☐	☒	NRCA-MCH-13-A Automatic FDD for Air Handling Units and Zone Terminal Units Acceptance	☐	☐
	☐	☒	NRCA-MCH-14-A Distributed Energy Storage DX AC Systems Acceptance	☐	☐
	☐	☒	NRCA-MCH-15-A Thermal Energy Storage (TES) System Acceptance	☐	☐
	☐	☒	NRCA-MCH-16-A Supply Air Temperature Reset Controls	☐	☐
	☐	☒	NRCA-MCH-17-A Condenser Water Temperature Reset Controls	☐	☐
	☐	☒	NRCA-MCH-18 Energy Management Control Systems	☐	☐
	☐	☒	NRCA-MCH-19 Occupancy Sensor Controls	☐	☐

Project Name:	MerrittLandscape Horticulture Complex	NRCC-PRF-01-E	Page 13 of 14
Project Address:	12500 Campus Drive Oakland, CA 94616 Oakland 94616	Calculation Date/Time:	22:10, Thu, Mar 04, 2021
Input File Name:	CLASS LAB 1 H101.cibd19x		

N. DECLARATION OF REQUIRED CERTIFICATES OF VERIFICATION

Table Instructions: Selections shall be made by Documentation Author to indicate which Certificates of Verification must be submitted for the features to be recognized for compliance. These documents bust be retained and provided to the building inspector during construction and can be found online at: https://www.energy.ca.gov/title24/2019standards/2019_compliance_documents/Nonresidential_Documents/NRCV/

Building Component	YES	NO	Form/Title	Field Inspector Pass	Field Inspector Fail
Mechanical	☐	☒	NRCV-MCH-04-H Duct Leakage Test	☐	☐
	☐	☒	NRCV-MCH-24-H Enclosure Air Leakage	☐	☐
	☐	☒	NRCV-MCH-27 Indoor Air Quality & Mechanical Ventilation	☐	☐
	☐	☒	NRCV-MCH-32-H Local Mechanical Exhaust	☐	☐
Plumbing	☐	☒	NRCV-PLB-21-H - HERS verified central systems in high-rise residential, hotel/motel application	☐	☐
	☐	☒	NRCV-PLB-22-H - HERS verified single dwelling unit systems in high-rise residential, hotel/motel application	☐	☐

Project Name:	MerrittLandscape Horticulture Complex	NRCC-PRF-01-E	Page 14 of 14
Project Address:	12500 Campus Drive Oakland, CA 94616 Oakland 94616	Calculation Date/Time:	22:10, Thu, Mar 04, 2021
Input File Name:	CLASS LAB 1 H101.cibd19x		

DOCUMENTATION AUTHOR'S DECLARATION STATEMENT

I certify that this Certificate of Compliance documentation is accurate and complete.

Documentation Author Name: Tyler Bradshaw	Signature:
Company: Blue Forest Engineering Inc	
Address: 3622 Kingsley Street	Signature Date: 2021-03-04
City/State/Zip: Oakland CA 94610	CEA/ HERS Certification Identification (if applicable): M33496
Phone: 510.924.8224 x101	

RESPONSIBLE PERSON'S DECLARATION STATEMENT

I certify the following under penalty of perjury, under the laws of the State of California:
1. The information provided on this Certificate of Compliance is true and correct.
2. I am eligible under Division 3 of the Business and Professions Code to accept responsibility for the building design or system design identified on this Certificate of Compliance (responsible designer)
3. The energy features and performance specifications, materials, components, and manufactured devices for the building design or system design identified on this Certificate of Compliance conform to the requirements of Title 24, Part 1 and Part 6 of the California Code of Regulations.
4. The building design features or system design features identified on this Certificate of Compliance are consistent with the information provided on other applicable compliance documents, worksheets, calculations, plans and specifications submitted to the enforcement agency for approval with this building permit application.
5. I will ensure that a completed signed copy of this Certificate of Compliance shall be made available with the building permit(s) issued for the building, and made available to the enforcement agency for all applicable inspections. I understand that a completed signed copy of this Certificate of Compliance is required to be included with the documentation the builder provides to the building owner at occupancy.

Responsible Envelope Designer Name: Christopher Noll	Signature:	
Company: Noll & Tam Architects		
Address: 729 Heinz Ave.	Date Signed: 03/08/2021	
City/State/Zip: Berkeley CA 94710		
Phone: 510.542.2200	Title: Principal	License #: C15916
Responsible Lighting Designer Name:	Signature: NOT IN SCOPE	
Company:		
Address:	Date Signed:	
City/State/Zip:		
Phone:	Title:	License #:
Responsible Mechanical Designer Name: Tyler Bradshaw	Signature:	
Company: Blue Forest Engineering		
Address: 3622 Kingsley Street	Date Signed:3.4.2021	
City/State/Zip: Oakland CA 94610		
Phone: 510.924.8205	Title: Principal	License #: M33496

7/13/2020 5:38:18 PM BIM 360://PCCD Merritt Horticulture/Merritt Horticulture_2020.rvt

APPROVALS

IDENTIFICATION STAMP
DIV. OF THE STATE ARCHITECT
APP: 01-119409 INC:
REVIEWED FOR
SS ☑ FLS ☑ ACS ☑
DATE: 03/14/2022

NOLL & TAM ARCHITECTS
729 Heinz Avenue
Berkeley, CA 94710
tel 510.542.2200
fax 510.542.2201

SEAL

REGISTERED PROFESSIONAL ENGINEER TYLER BRADSHAW M33496 EXP. 06/30/2022 MECHANICAL STATE OF CALIFORNIA

BLUE FOREST ENGINEERING
3622 Kingsley Street
Oakland, CA 94610
tel 510.925.8224

PROJECT TITLE

Peralta Community College District
MERRITT COLLEGE NEW LANDSCAPE HORTICULTURE COMPLEX

12500 Campus Drive
Oakland, CA 94619

BID SET

ISSUE DATE 03/03/2022
N&T JOB NUMBER 22003

REVISIONS

⚠	DATE	DESCRIPTION

DRAWN BY S.A. CHECKED BY T.B.

SHEET TITLE

TITLE 24 COMPLIANCE FORMS

SHEET NUMBER

M8.04

A. GENERAL INFORMATION

1.	Project Location (city)	Oakland	8.	Standards Version	Compliance2019
2.	CA Zip Code	94616	9.	Compliance Software (version)	EnergyPro 8.2
3.	Climate Zone	3	10.	Weather File	OAKLAND_724930_CZ2010.epw
4.	Total Conditioned Floor Area in Scope	2,292 ft²	11.	Building Orientation (deg)	(N) 0 deg
5.	Total Unconditioned Floor Area	0 ft²	12.	Permitted Scope of Work	NewEnvelopeAndMechanical
6.	Total # of Stories (Habitable Above Grade)	1	13	Building Type(s)	Nonresidential
7.	Total # of dwelling units	0	14	Gas Type	NaturalGas

B. PROJECT SUMMARY

Table Instructions: Table B shows which building components are included in the performance calculation. If indicated as not included, the project must show compliance prescriptively if within permit application.

Building Components Complying via Performance					Building Components Complying Prescriptively	
Envelope (see Table G)	☒ Performance ☐ Not Included	Covered Process: Commercial Kitchens	☐ Performance ☒ Not Included	*The following building components are ONLY eligible for prescriptive compliance and should be documented on the NRCC form listed if within the scope of the permit application (i.e. compliance will not be shown on the NRCC-PRF-E).*		
Mechanical (see Table H)	☒ Performance ☐ Not Included	Covered Process: Computer Rooms	☐ Performance ☒ Not Included	Indoor Lighting (Unconditioned)§140.6	*NRCC-LTI-E*	
				Outdoor Lighting §140.7	*NRCC-LTO-E*	
Domestic Hot Water (see Table I)	☒ Performance ☐ Not Included	Covered Process: Laboratory Exhaust	☐ Performance ☒ Not Included	Sign Lighting §140.8	*NRCC -LTS-E*	
				Mandatory Measures		
Lighting (Indoor Conditioned, see Table K)	☐ Performance			*Electrical power systems, commissioning, solar ready, elevator and escalator requirements are mandatory and should on the NRCC form listed if applicable (i.e. compliance will not be shown on the NRCC-PRF-E.)*		
	☒ Not Included			Electrical Power Distribution S110.11	*NRCC-ELC-E is required*	
Solar Thermal Water Heating (see Table I)	☐ Performance			Commissioning S120.8	*NRCC-CXR-E is required*	
	☒ Not Included			Solar Ready S110.10	*NRCC-SRA-E is required*	

C1. COMPLIANCE RESULTS FOR PERFORMANCE COMPONENTS (Annual TDV Energy Use, kBtu/ft ²-yr)

COMPLIES

Energy Component	Standard Design (TDV)	Proposed Design (TDV)	Compliance Margin (TDV)[1]
Space Heating	24.40	31.21	-6.81
Space Cooling	11.18	6.08	5.10
Indoor Fans	89.78	39.06	50.72
Heat Rejection	--	--	--
Pumps & Misc.	--	--	--
Domestic Hot Water	13.19	32.35	-19.16
Indoor Lighting	34.52	41.42	-6.90
ENERGY STANDARDS COMPLIANCE TOTAL	**173.07**	**150.12**	**22.95 (13.3%)**

[1] Notes: The number in parenthesis following the Compliance Margin in column 4. represents the Percent Better than Standard.

C2. RESULTS FOR 'ABOVE CODE' QUALIFICATIONS[1]

☐ This project is pursuing CalGreen Tier 1 ☐ This project is pursuing CalGreen Tier 2

Miscellaneous Energy Component	Standard Design (TDV)	Proposed Design (TDV)	Compliance Margin (TDV)[1]
Receptacle	74.35	74.35	--
Process	--	--	--
Other Ltg	--	--	--
Process Motors	--	--	--
COMPLIANCE TOTAL PLUS MISCELLANEOUS COMPONENTS	**247.42**	**224.47**	**23.0 (9.3%)**

[1] Notes: This table is used to document compliance with programs OTHER THAN Title 24 Part 6, if applicable.

C3. ENERGY USE SUMMARY

Energy Component	Standard Design Site (MWh)	Proposed Design Site (MWh)	Margin (MWh)	Standard Design Site (MBtu)	Proposed Design Site (MBtu)	Margin (MBtu)
Space Heating	--	2.7	--	28.3	--	--
Space Cooling	0.5	0.3	0.2	--	--	--
Indoor Fans	6.8	2.9	3.9	--	--	--
Heat Rejection	--	--	--	--	--	--
Pumps & Misc.	--	--	--	--	--	--
Domestic Hot Water	--	2.7	--	16.9	--	--
Indoor Lighting	2.7	3.3	-0.6	--	--	--
Compliance Total	**10.0**	**11.9**	**-1.9**	**45.2**	**0.0**	**--**
Receptacle	6.1	6.1	0.0	--	--	--
Process	--	--	--	--	--	--
Other Ltg	--	--	--	--	--	--
Process Motors	--	--	--	--	--	--
TOTAL	**16.1**	**18.0**	**-1.9**	**45.2**	**0.0**	**--**

C4. UNMET LOAD HOURS

This Section Does Not Apply

D. EXCEPTIONAL CONDITIONS

This project includes partial performance compliance scope options. The building must show compliance with all other applicable compliance scope options (performance or prescriptively) before occupying.

This project uses the Simplified Geometry Performance Modeling Approach which is not capable of modeling daylighting controls and assumes the prescriptive Secondary Daylit Control requirements are met. PRESCRIPTIVE COMPLIANCE documentation (form NRCC-LTI-02-E) for the requirements of section 140.6(d) Automatic Daylighting Controls in Secondary Daylit Zones is required.

E. HERS VERIFICATION

This Section Does Not Apply

F. ADDITIONAL REMARKS

This Section Does Not Apply

G1. ENVELOPE GENERAL INFORMATION (conditioned spaces only)

Opaque Surfaces & Orientation	Total Gross Surface Area (ft²)	Total Fenestration Area (ft²)	Window to Wall Ratio (%)
North-Facing[1]	873 ft²	256 ft²	29.3%
East-Facing[2]	761 ft²	0 ft²	00.0%
South-Facing[3]	715 ft²	179 ft²	25.0%
West-Facing[4]	762 ft²	0 ft²	00.0%
Total	**3,111 ft²**	**434 ft²**	**14.0%**
Roof	2,292 ft²	0 ft²	00.0%

Notes:
[1] North-Facing is oriented to within 45 degrees of true north, including 45°00'00" east of north (NE), but excluding 45°00'00" west of north (NW).
[2] East-Facing is oriented to within 45 degrees of true east, including 45°00'00" south of east (SE), but excluding 45°00'00" north of east (NE).
[3] South-Facing is oriented to within 45 degrees of true south, including 45°00'00" west of south (SW), but excluding 45°00'00" east of south (SE).
[4] West-Facing is oriented to within 45 degrees of true west, including 45°00'00" north of due west (NW), but excluding 45°00'00" south of west (SW).

G2. CRRC ROOFING PRODUCT SUMMARY

This Section Does Not Apply

G3. OPAQUE SURFACE ASSEMBLY SUMMARY

Surface Name	Surface Type	Area (ft²)	Framing Type	Cavity R-Value	Continuous R-Value	U-Factor / F-Factor / C-Factor	Status[1]	Description of Assembly Layers
Peralta - A-1 / 6-T Wall8	ExteriorWall	202	Wood	21	NA	U-Factor: 0.065	N	Stucco - 7/8 in. Vapor permeable felt - 1/8 in. Plywood - 1/2 in. Wood framed wall, 16in. OC, 5.5in., R-21 Gypsum Board - 1/2 in.

G3. OPAQUE SURFACE ASSEMBLY SUMMARY

Surface Name	Surface Type	Area (ft²)	Framing Type	Cavity R-Value	Continuous R-Value	U-Factor / F-Factor / C-Factor	Status[1]	Description of Assembly Layers
Peralta - B-1 / 8-T Wall10	ExteriorWall	992	Wood	21	NA	U-Factor: 0.059	N	Stucco - 7/8 in. Vapor permeable felt - 1/8 in. Plywood - 1/2 in. Wood framed wall, 16in. OC, 7.25in., R-21 Gypsum Board - 1/2 in.
Peralta - A-1 / 8-T Wall16	ExteriorWall	1918	Wood	21	NA	U-Factor: 0.059	N	Stucco - 7/8 in. Vapor permeable felt - 1/8 in. Plywood - 1/2 in. Wood framed wall, 16in. OC, 7.25in., R-21 Gypsum Board - 1/2 in.
Slab On Grade25	UndergroundFloor	2292	NA	0	NA	F-Factor: 0.730	N	Slab Type = UnheatedSlabOnGrade Insulation Orientation = None Insulation R-Value = 80
Peralta R1 R-30 Roof27	Roof	2292	Wood	30	NA	U-Factor: 0.035	N	Metal Standing Seam - 1/16 in. Vapor permeable felt - 1/8 in. Gypsum Board - 1/2 in. Wood framed roof, 48in. OC, 5.5in., R-30 Plywood - 5/8 in.

[1] Status: N - New, A – Altered, E – Existing

G4. OPAQUE DOOR SUMMARY

This Section Does Not Apply

G5. FENESTRATION ASSEMBLY SUMMARY

Fenestration Assembly Name / Tag or I.D.	Fenestration Type / Product Type / Frame Type	Certification Method[1]	Assembly Method	Area ft²	Overall U-factor	Overall SHGC	Overall VT	Status[2]
Peralta - E033_Window	VerticalFenestration OperableWindow N/A	NFRC Rated	SiteBuilt	93	0.45	0.19	0.32	N

G5. FENESTRATION ASSEMBLY SUMMARY

Fenestration Assembly Name / Tag or I.D.	Fenestration Type / Product Type / Frame Type	Certification Method[1]	Assembly Method	Area ft²	Overall U-factor	Overall SHGC	Overall VT	Status[2]
Peralta - E 013_Storefront door	VerticalFenestration CurtainWall N/A	NFRC Rated	Manufactured	42	0.45	0.19	0.32	N
Peralta - E 014_Fiberglass Door	VerticalFenestration GlazedDoor N/A	NFRC Rated	Manufactured	21	0.45	0.19	0.32	N
Peralta - E027_Window	VerticalFenestration OperableWindow N/A	NFRC Rated	Manufactured	100	0.45	0.19	0.32	N
Peralta E026_Window	VerticalFenestration OperableWindow N/A	NFRC Rated	Manufactured	158	0.45	0.19	0.32	N
Peralta - E 004_Fiberglass Door	VerticalFenestration GlazedDoor N/A	NFRC Rated	Manufactured	21	0.45	0.19	0.32	N

[1] Newly installed fenestration shall have a certified NFRC Label Certificate or use the CEC default tables found in Table 110.6-A and Table 110.6-B. Center of Glass (COG) values are for the glass-only, determined by the manufacturer, and are shown for ease of verification. Site-built fenestration values are calculated per Nonresidential Appendix NA6 and are used in the analysis.
[2] Status: N - New, A – Altered, E – Existing

G6. OVERHANG DETAILS

This Section Does Not Apply

G7. FIN DETAILS

This Section Does Not Apply

H. HVAC SYSTEM SUMMARY

H1. DRY SYSTEM EQUIPMENT (furnaces, air handling units, heat pumps, VRF, economizers etc.)

Dry System Equipment [1] (Fan & Economizer info included below in Table N)

Equipment Name	Equipment Type	Qty	Heating				Cooling		Status[2]
			Total Heating Output (kBtu/h)	Supp Heat Source (Y/N)	Supp Heat Output (kBtuh)	Efficiency	Total Cooling Output (kBtu/h)	Efficiency	
FC- 6 // ACCU-6	SZHP (Split3Phase)	1	54	Yes	2	HSPF-9.00	44	SEER-15.50 / EER-12.30	N

[2] Status: N - New, A – Altered, E – Existing

H2. FAN SYSTEMS SUMMARY[1]

Name or Item Tag	System Type	Design OA	Supply Fan				Return Fan				Economizer Type (if present)	Status[2]
	packaged, DOAS, etc.		CFM	BHP	Watts	Control	CFM	BHP	Watts	Control		
FC- 6 // ACCU-6	SZHP	615	1400	0.750	654.0	ConstantVolume	NA	NA	NA	NA	DifferentialDryBulb	N

[2] Status: N - New, A – Altered, E – Existing

H3. EXHAUST FAN SUMMARY

This Section Does Not Apply

H4. Wet System Equipment (boilers, chillers, cooling towers, etc.)

Name or Item Tag	Equipment Type	Qty	Vol (gal)	Rated Capacity (kBtu/h)	Efficiency	Standby Loss	Pumps				Status[1]
							Qty	GPM	HP	VSD (Y/N)	

[1] Status: N - New, A – Altered, E – Existing

H5. SYSTEM SPECIAL FEATURES

System Name	Optimum Start	Window Interlocks per §140.4(n)	Evaporative Cooling	Heat Recovery	Other Controls
FC- 6 // ACCU-6	No Optimum Start	No	No Evaporative Cooler	No Heat Recovery	1 Zones With CO2Sensor Vent. Control, No DDC Differential DryBulb Economizer No Supply Air Temp. Control
Undefined Plant1 - SHW	NA	NA	NA	NA	Fixed Temperature Control, No DDC

Notes: This table includes controls related to the performance path only. For projects using the prescriptive path, mandatory and prescriptive controls requirements are documented on the NRCC-MCH-E.

H6. MECHANICAL VENTILATION

Zone Name	Mechanical Ventilation							DCV or Occupant Sensor Controls, or Both
	Ventilation Function	# hotel rooms	# of people	# of bedrooms	Supply OA CFM	Exhaust CFM	Conditioned Area (sf)	
1-CLASS LAB 2 (H200-H201)	Education - Lecture/postsecondary classroom	0	41.00	0	615	0	2292	NA

Multifamily or Hotel/Motel Occupancy? (if "Yes", see DOMESTIC/SERVICE HOT WATER SYSTEM SUMMARY)	No
Does the Project include Zonal Systems?	No

H7. ZONAL SYSTEM AND TERMINAL UNIT SUMMARY

System ID	Zone Name	System Type	Rated Capacity (kBtuh)		Airflow (cfm)			Fan			
			Heating	Cooling	Design	Min.	Min. Ratio	BHP	Watts	Cycles	ECM Motor
1-CLASS LAB 2 (H200-H201)-Trm	1-CLASS LAB 2 (H200-H201)	Uncontrolled	NA	NA	1400	NA	0.00	NA	NA	NA	☐

H8. EVAPORATIVE COOLER SUMMARY

This Section Does Not Apply

I. DOMESTIC/SERVICE HOT WATER SYSTEM SUMMARY

I1. DHW EQUIPMENT SUMMARY

DHW Name	Heater Element Type	Tank Type	Qty	Tank Vol (gal)	Rated Input (kBtu/h)	Efficiency	Tank Insulation R-value (Int/Ext)	Standby Loss Fraction	Heat Pump Type	Tank Location or Ambient Condition
Instantaneous Electric2	Electricity	Instantaneous	1	1.00	8.0 (kW)	UEF: 0.98	NA	SBLF: NA	NA	NA

I2. MULTI-FAMILY CENTRAL DHW SYSTEM DETAILS

This Section Does Not Apply

I3. SOLAR HOT WATER HEATING SUMMARY

This Section Does Not Apply

J. COVERED PROCESS SUMMARY

This Section Does Not Apply

K. INDOOR LIGHTING SUMMARY

This Section Does Not Apply

7/13/2020 5:38:18 PM BIM 360://PCCD Merritt Horticulture/Merritt Horticulture_2020.rvt

APPROVALS

IDENTIFICATION STAMP
DIV. OF THE STATE ARCHITECT
APP: 01-119409 INC:
REVIEWED FOR
SS ☑ FLS ☑ ACS ☑
DATE: 03/14/2022

NOLL & TAM ARCHITECTS
729 Heinz Avenue
Berkeley, CA 94710
tel 510.542.2200
fax 510.542.2201

SEAL

REGISTERED PROFESSIONAL ENGINEER TYLER BRADSHAW M33496 EXP. 06/30/2022 MECHANICAL STATE OF CALIFORNIA

BLUE FOREST ENGINEERING
3622 Kingsley Street
Oakland, CA 94610
tel 510.925.8224

PROJECT TITLE

Peralta Community College District
MERRITT COLLEGE NEW LANDSCAPE HORTICULTURE COMPLEX

12500 Campus Drive
Oakland, CA 94619

BID SET

ISSUE DATE 03/03/2022
N&T JOB NUMBER 22003

REVISIONS

	DATE	DESCRIPTION
4		

DRAWN BY S.A. CHECKED BY T.B.

SHEET TITLE
TITLE 24 COMPLIANCE FORMS

SHEET NUMBER
M8.05

Project Name:	MerrittLandscape Horticulture Complex	NRCC-PRF-01-E	Page 10 of 14
Project Address:	12500 Campus Drive Oakland, CA 94616 Oakland 94616	Calculation Date/Time:	22:07, Thu, Mar 04, 2021
Input File Name:	CLASS LAB 2 H200-201.cibd19x		

L. DECLARATION OF REQUIRED CERTIFICATES OF INSTALLATION

Table Instructions: Selections shall be made by Documentation Author to indicate which Certificates of Installation must be submitted for the features to be recognized for compliance. These documents bust be retained and provided to the building inspector during construction and can be found online at: https://www.energy.ca.gov/title24/2019standards/2019_compliance_documents/Nonresidential_Documents/NRCI/

Building Component	YES	NO	Form/Title	Field Inspector Pass	Field Inspector Fail
Envelope	☒	☐	NRCI-ENV-01-E - Must be submitted for all buildings	☐	☐
Mechanical	☒	☐	NRCI-MCH-01-E - Must be submitted for all buildings	☐	☐
Plumbing	☒	☐	NRCI-PLB-01-E - Must be submitted for all buildings	☐	☐
	☐	☒	NRCI-PLB-02-E - Must be submitted for high-rise residential and hotel/ motel central hot water distribution systems to be recognized for compliance	☐	☐
	☐	☒	NRCI-PLB-03-E - Must be submitted for high-rise residential and hotel/motel single dwelling unit hot water system distribution systems to be recognized for compliance	☐	☐
	☐	☒	NRCI-PLB-21-E - Must be HERS verified for central systems in high-rise residential hotel/ motel application	☐	☐
	☐	☒	NRCI-PLB-22-E - Must be HERS verified for single dwelling unit systems in high-rise residential, hotel/motel application	☐	☐
	☐	☒	NRCI-STH-01-E - Must be submitted for solar hot water heating systems	☐	☐
Indoor Lighting	☐	☒	NRCI-LTI-01-E - Must be submitted for all buildings	☐	☐
	☐	☒	NRCI-LTI-02-E - Must be submitted for a lighting control system, or for an Energy Management Control System (EMCS) to be recognized for compliance	☐	☐
	☐	☒	NRCI-LTI-04-E - Must be submitted for two interlocked systems serving an auditorium, a convention center, a conference room, a multipurpose room, or a theater to be recognized for compliance	☐	☐
	☐	☒	NRCI-LTI-05-E - Must be submitted for a Power Adjustment Factor (PAF) to be recognized for compliance	☐	☐
	☐	☒	NRCI-LTI-06-E - Must be submitted for additional wattage installed in a video conferencing studio to be recognized for compliance	☐	☐
Covered Process	☐	☒	NRCI-PRC-01-E - Must be submitted for all Covered Processes	☐	☐

Project Name:	MerrittLandscape Horticulture Complex	NRCC-PRF-01-E	Page 11 of 14
Project Address:	12500 Campus Drive Oakland, CA 94616 Oakland 94616	Calculation Date/Time:	22:07, Thu, Mar 04, 2021
Input File Name:	CLASS LAB 2 H200-201.cibd19x		

M. DECLARATION OF REQUIRED CERTIFICATES OF ACCEPTANCE

Table Instructions: Selections shall be made by Documentation Author to indicate which Certificates of Acceptance must be submitted for the features to be recognized for compliance. These documents must be provided to the building inspector during construction and must be completed through an Acceptance Test Technician Certification Provider (ATTCP). For more information visit:https://www.energy.ca.gov/title24/2019standards/2019_compliance_documents/Nonresidential_Documents/NRCA/

Building Component	YES	NO	Form/Title	Field Inspector Pass	Field Inspector Fail
Envelope	☒	☐	NRCA-ENV-02-F - NRFC label verification for fenestration	☐	☐
	☐	☐	NRCA-ENV-03-F - Daylighting Design PAFs	☐	☐
Indoor Lighting	☐	☒	NRCA-LTI-02-A - Occupancy Sensors and Automatic Time Switch Controls	☐	☐
	☐	☒	NRCA-LTI-03-A - Automatic Daylight Controls	☐	☐
	☐	☒	NRCA-LTI-04-A - Demand Responsive Lighting Controls	☐	☐
	☐	☒	NRCA-LTI-05-A - Institutional Tuning Power Adjustment Factor (PAF)	☐	☐
Covered Process	☐	☒	NRCA-PRC-02-F - Kitchen Exhaust	☐	☐
	☐	☒	NRCA-PRC-03-F - Garage Exhaust	☐	☐
	☐	☒	NRCA-PRC-12-F – Elevator Lighting and Ventilation Controls	☐	☐
	☐	☒	NRCA-PRC-13-F –Escalator and Moving Walkways Speed Control	☐	☐
	☐	☒	NRCA-PRC-14-F – Lab Exhaust Ventilation System	☐	☐
	☐	☒	NRCA-PRC-15-F - Fume Hood Automatic Sash Closures System	☐	☐

Project Name:	MerrittLandscape Horticulture Complex	NRCC-PRF-01-E	Page 12 of 14
Project Address:	12500 Campus Drive Oakland, CA 94616 Oakland 94616	Calculation Date/Time:	22:07, Thu, Mar 04, 2021
Input File Name:	CLASS LAB 2 H200-201.cibd19x		

M. DECLARATION OF REQUIRED CERTIFICATES OF ACCEPTANCE

Table Instructions: Selections shall be made by Documentation Author to indicate which Certificates of Acceptance must be submitted for the features to be recognized for compliance. These documents must be provided to the building inspector during construction and must be completed through an Acceptance Test Technician Certification Provider (ATTCP). For more information visit:https://www.energy.ca.gov/title24/2019standards/2019_compliance_documents/Nonresidential_Documents/NRCA/

Building Component	YES	NO	Form/Title	Field Inspector Pass	Field Inspector Fail
Mechanical	☒	☐	NRCA-MCH-02-A Outdoor Air must be submitted for all newly installed HVAC units. Note: MCH02-A can be performed in conjunction with MCH-07-A Supply Fan VFD Acceptance (if applicable) since testing activities overlap	☐	☐
	☒	☐	NRCA-MCH-03-A Constant Volume Single Zone HVAC	☐	☐
	☐	☒	NRCA-MCH-04(a)-H Air Distribution Duct Leakage - HERS Verification required	☐	☐
	☐	☐	NRCA-MCH-04(b)-A Air Distribution Duct Leakage - ATT only	☐	☐
	☒	☐	NRCA-MCH-05-A Air Economizer Controls	☐	☐
	☒	☐	NRCA-MCH-06-A Demand Control Ventilation Systems Acceptance must be submitted for all systems required to employ demand controlled ventilation (refer to §120.1(c)3) can vary outside ventilation flow rates based on maintaining interior carbon dioxide (CO2) concentration setpoints	☐	☐
	☐	☒	NRCA-MCH-07-A Supply Fan Variable Flow Controls	☐	☐
	☐	☒	NRCA-MCH-08-A Valve Leakage Test	☐	☐
	☐	☒	NRCA-MCH-09-A Supply Water Temperature Reset Controls	☐	☐
	☐	☒	NRCA-MCH-10-A Hydronic System Variable Flow Controls	☐	☐
	☐	☒	NRCA-MCH-11-A Automatic Demand Shed Controls	☐	☐
	☐	☒	NRCA-MCH-12-A FDD for Packaged Direct Expansion Units	☐	☐
	☐	☒	NRCA-MCH-13-A Automatic FDD for Air Handling Units and Zone Terminal Units Acceptance	☐	☐
	☐	☒	NRCA-MCH-14-A Distributed Energy Storage DX AC Systems Acceptance	☐	☐
	☐	☒	NRCA-MCH-15-A Thermal Energy Storage (TES) System Acceptance	☐	☐
	☐	☒	NRCA-MCH-16-A Supply Air Temperature Reset Controls	☐	☐
	☐	☒	NRCA-MCH-17-A Condenser Water Temperature Reset Controls	☐	☐
	☐	☒	NRCA-MCH-18 Energy Management Control Systems	☐	☐
	☐	☒	NRCA-MCH-19 Occupancy Sensor Controls	☐	☐

Project Name:	MerrittLandscape Horticulture Complex	NRCC-PRF-01-E	Page 13 of 14
Project Address:	12500 Campus Drive Oakland, CA 94616 Oakland 94616	Calculation Date/Time:	22:07, Thu, Mar 04, 2021
Input File Name:	CLASS LAB 2 H200-201.cibd19x		

N. DECLARATION OF REQUIRED CERTIFICATES OF VERIFICATION

Table Instructions: Selections shall be made by Documentation Author to indicate which Certificates of Verification must be submitted for the features to be recognized for compliance. These documents bust be retained and provided to the building inspector during construction and can be found online at: https://www.energy.ca.gov/title24/2019standards/2019_compliance_documents/Nonresidential_Documents/NRCV/

Building Component	YES	NO	Form/Title	Field Inspector Pass	Field Inspector Fail
Mechanical	☐	☒	NRCV-MCH-04-H Duct Leakage Test	☐	☐
	☐	☒	NRCV-MCH-24-H Enclosure Air Leakage	☐	☐
	☐	☒	NRCV-MCH-27 Indoor Air Quality & Mechanical Ventilation	☐	☐
	☐	☒	NRCV-MCH-32-H Local Mechanical Exhaust	☐	☐
Plumbing	☐	☒	NRCV-PLB-21-H - HERS verified central systems in high-rise residential, hotel/motel application	☐	☐
	☐	☒	NRCV-PLB-22-H - HERS verified single dwelling unit systems in high-rise residential, hotel/motel application	☐	☐

Project Name:	MerrittLandscape Horticulture Complex	NRCC-PRF-01-E	Page 14 of 14
Project Address:	12500 Campus Drive Oakland, CA 94616 Oakland 94616	Calculation Date/Time:	22:07, Thu, Mar 04, 2021
Input File Name:	CLASS LAB 2 H200-201.cibd19x		

DOCUMENTATION AUTHOR'S DECLARATION STATEMENT

I certify that this Certificate of Compliance documentation is accurate and complete.

Documentation Author Name: Tyler Bradshaw	Signature:
Company: Blue Forest Engineering Inc	
Address: 3622 Kingsley Street	Signature Date: 2021-03-04
City/State/Zip: Oakland CA 94610	CEA/ HERS Certification Identification (if applicable): M33496
Phone: 510.924.8224 x101	

RESPONSIBLE PERSON'S DECLARATION STATEMENT

I certify the following under penalty of perjury, under the laws of the State of California:

1. The information provided on this Certificate of Compliance is true and correct.
2. I am eligible under Division 3 of the Business and Professions Code to accept responsibility for the building design or system design identified on this Certificate of Compliance (responsible designer)
3. The energy features and performance specifications, materials, components, and manufactured devices for the building design or system design identified on this Certificate of Compliance conform to the requirements of Title 24, Part 1 and Part 6 of the California Code of Regulations.
4. The building design features or system design features identified on this Certificate of Compliance are consistent with the information provided on other applicable compliance documents, worksheets, calculations, plans and specifications submitted to the enforcement agency for approval with this building permit application.
5. I will ensure that a completed signed copy of this Certificate of Compliance shall be made available with the building permit(s) issued for the building, and made available to the enforcement agency for all applicable inspections. I understand that a completed signed copy of this Certificate of Compliance is required to be included with the documentation the builder provides to the building owner at occupancy.

Responsible Envelope Designer Name: Christopher Noll	Signature:	
Company: Noll & Tam Architects		
Address: 729 Heinz Ave.	Date Signed: 03/08/2021	
City/State/Zip: Berkeley CA 94710		
Phone: 510.542.2200	Title: Principal	License #: C15916
Responsible Lighting Designer Name:	Signature: NOT IN SCOPE	
Company:		
Address:	Date Signed:	
City/State/Zip:		
Phone:	Title:	License #:
Responsible Mechanical Designer Name: Tyler Bradshaw	Signature:	
Company: Blue Forest Engineering		
Address: 3622 Kingsley Street	Date Signed: 3.4.2021	
City/State/Zip: Oakland CA 94610		
Phone: 510.924.8205	Title: Principal	License #: M33496

7/13/2020 5:38:18 PM BIM 360://PCCD Merritt Horticulture/Merritt Horticulture_2020.rvt

APPROVALS

IDENTIFICATION STAMP
DIV. OF THE STATE ARCHITECT
APP: 01-119409 INC:
REVIEWED FOR
SS ☑ FLS ☑ ACS ☑
DATE: 03/14/2022

NOLL & TAM ARCHITECTS
729 Heinz Avenue
Berkeley, CA 94710
tel 510.542.2200
fax 510.542.2201

SEAL

REGISTERED PROFESSIONAL ENGINEER
TYLER BRADSHAW
M33496
EXP. 06/30/2022
MECHANICAL
STATE OF CALIFORNIA

BLUE FOREST ENGINEERING
3622 Kingsley Street
Oakland, CA 94610
tel 510.925.8224

PROJECT TITLE

Peralta Community College District
MERRITT COLLEGE NEW LANDSCAPE HORTICULTURE COMPLEX

12500 Campus Drive
Oakland, CA 94619

BID SET

ISSUE DATE **03/03/2022**

N&T JOB NUMBER **22003**

REVISIONS

⚠	DATE	DESCRIPTION

DRAWN BY **S.A.** CHECKED BY **T.B.**

SHEET TITLE

TITLE 24 COMPLIANCE FORMS

SHEET NUMBER

M8.06

A. GENERAL INFORMATION

1.	Project Location (city)	Oakland	8.	Standards Version	Compliance2019
2.	CA Zip Code	94616	9.	Compliance Software (version)	EnergyPro 8.2
3.	Climate Zone	3	10.	Weather File	OAKLAND_724930_CZ2010.epw
4.	Total Conditioned Floor Area in Scope	2,077 ft²	11.	Building Orientation (deg)	(N) 0 deg
5.	Total Unconditioned Floor Area	0 ft²	12.	Permitted Scope of Work	NewEnvelopeAndMechanical
6.	Total # of Stories (Habitable Above Grade)	1	13	Building Type(s)	Nonresidential
7.	Total # of dwelling units	0	14	Gas Type	NaturalGas

B. PROJECT SUMMARY

Table Instructions: Table B shows which building components are included in the performance calculation. If indicated as not included, the project must show compliance prescriptively if within permit application.

Building Components Complying via Performance				Building Components Complying Prescriptively		
Envelope (see Table G)	☒ Performance	Covered Process: Commercial Kitchens	☐ Performance	*The following building components are ONLY eligible for prescriptive compliance and should be documented on the NRCC form listed if within the scope of the permit application (i.e. compliance will not be shown on the NRCC-PRF-E).*		
	☐ Not Included		☒ Not Included			
Mechanical (see Table H)	☒ Performance	Covered Process: Computer Rooms	☐ Performance	Indoor Lighting (Unconditioned)§140.6	NRCC-LTI-E	
	☐ Not Included		☒ Not Included	Outdoor Lighting §140.7	NRCC-LTO-E	
Domestic Hot Water (see Table I)	☒ Performance	Covered Process: Laboratory Exhaust	☐ Performance	Sign Lighting §140.8	NRCC -LTS-E	
	☐ Not Included		☒ Not Included	Mandatory Measures		
Lighting (Indoor Conditioned, see Table K)	☐ Performance			*Electrical power systems, commissioning, solar ready, elevator and escalator requirements are mandatory and should on the NRCC form listed if applicable (i.e. compliance will not be shown on the NRCC-PRF-E.)*		
	☒ Not Included			Electrical Power Distribution S110.11	NRCC-ELC-E is required	
Solar Thermal Water Heating (see Table I)	☐ Performance			Commissioning S120.8	NRCC-CXR-E is required	
	☒ Not Included			Solar Ready S110.10	NRCC-SRA-E is required	

C1. COMPLIANCE RESULTS FOR PERFORMANCE COMPONENTS (Annual TDV Energy Use, kBtu/ft ²-yr)

COMPLIES

Energy Component	Standard Design (TDV)	Proposed Design (TDV)	Compliance Margin (TDV)[1]
Space Heating	24.09	24.89	-0.80
Space Cooling	13.04	8.28	4.76
Indoor Fans	96.89	42.92	53.97
Heat Rejection	--	--	--
Pumps & Misc.	--	--	--
Domestic Hot Water	15.12	36.14	-21.02
Indoor Lighting	34.52	41.42	-6.90
ENERGY STANDARDS COMPLIANCE TOTAL	**183.66**	**153.65**	**30.01 (16.3%)**

[1] *Notes: The number in parenthesis following the Compliance Margin in column 4. represents the Percent Better than Standard.*

C2. RESULTS FOR 'ABOVE CODE' QUALIFICATIONS[1]

☐ This project is pursuing CalGreen Tier 1 ☐ This project is pursuing CalGreen Tier 2

Miscellaneous Energy Component	Standard Design (TDV)	Proposed Design (TDV)	Compliance Margin (TDV)[1]
Receptacle	74.35	74.35	--
Process	--	--	--
Other Ltg	--	--	--
Process Motors	--	--	--
COMPLIANCE TOTAL PLUS MISCELLANEOUS COMPONENTS	**258.01**	**228.00**	**30.0 (11.6%)**

[1] *Notes: This table is used to document compliance with programs OTHER THAN Title 24 Part 6, if applicable.*

C3. ENERGY USE SUMMARY

Energy Component	Standard Design Site (MWh)	Proposed Design Site (MWh)	Margin (MWh)	Standard Design Site (MBtu)	Proposed Design Site (MBtu)	Margin (MBtu)
Space Heating	--	1.9	--	25.2	--	--
Space Cooling	0.5	0.3	0.2	--	--	--
Indoor Fans	6.6	2.9	3.7	--	--	--
Heat Rejection	--	--	--	--	--	--
Pumps & Misc.	--	--	--	--	--	--
Domestic Hot Water	--	2.8	--	17.5	--	--
Indoor Lighting	2.5	3.0	-0.5	--	--	--
Compliance Total	**9.6**	**10.9**	**-1.3**	**42.7**	**0.0**	**--**
Receptacle	5.5	5.5	0.0	--	--	--
Process	--	--	--	--	--	--
Other Ltg	--	--	--	--	--	--
Process Motors	--	--	--	--	--	--
TOTAL	**15.1**	**16.4**	**-1.3**	**42.7**	**0.0**	**--**

C4. UNMET LOAD HOURS

This Section Does Not Apply

D. EXCEPTIONAL CONDITIONS

This project includes partial performance compliance scope options. The building must show compliance with all other applicable compliance scope options (performance or prescriptively) before occupying.

The aged solar reflectance and aged thermal emittance must be listed in the Cool Roof Rating Council database of certified products. For projects where initial reflectance is used, the initial reflectance must be listed, and the aged reflectance is calculated by the software program and used in the compliance model.

This project uses the Simplified Geometry Performance Modeling Approach which is not capable of modeling daylighting controls and assumes the prescriptive Secondary Daylit Control requirements are met. PRESCRIPTIVE COMPLIANCE documentation (form NRCC-LTI-02-E) for the requirements of section 140.6(d) Automatic Daylighting Controls in Secondary Daylit Zones is required.

E. HERS VERIFICATION

This Section Does Not Apply

F. ADDITIONAL REMARKS

This Section Does Not Apply

G1. ENVELOPE GENERAL INFORMATION (conditioned spaces only)

1	2	3	4
Opaque Surfaces & Orientation	**Total Gross Surface Area (ft²)**	**Total Fenestration Area (ft²)**	**Window to Wall Ratio (%)**
North-Facing[1]	759 ft²	21 ft²	02.8%
East-Facing[2]	816 ft²	216 ft²	26.5%
South-Facing[3]	759 ft²	177 ft²	23.4%
West-Facing[4]	646 ft²	0 ft²	00.0%
Total	**2,980 ft²**	**414 ft²**	**13.9%**
Roof	2,077 ft²	0 ft²	00.0%

Notes:
[1] *North-Facing is oriented to within 45 degrees of true north, including 45°00'00" east of north (NE), but excluding 45°00'00" west of north (NW).*
[2] *East-Facing is oriented to within 45 degrees of true east, including 45°00'00" south of east (SE), but excluding 45°00'00" north of east (NE).*
[3] *South-Facing is oriented to within 45 degrees of true south, including 45°00'00" west of south (SW), but excluding 45°00'00" east of south (SE).*
[4] *West-Facing is oriented to within 45 degrees of true west, including 45°00'00" north of due west (NW), but excluding 45°00'00" south of west (SW).*

G2. CRRC ROOFING PRODUCT SUMMARY

1	2	3	4	5
Assembly Name	**Roof Pitch**	**Aged Solar Reflectance**	**Thermal Emittance**	**SRI**
Peralta R1 R-30 Roof28	Steep-Slope	0.10	0.85	Not Provided

G3. OPAQUE SURFACE ASSEMBLY SUMMARY

1 Surface Name	2 Surface Type	3 Area (ft²)	4 Framing Type	5 Cavity R-Value	6 Continuous R-Value	7 U-Factor / F-Factor / C-Factor	8 Status[1]	9 Description of Assembly Layers
Peralta - B-1 / B-T Wall8	ExteriorWall	991	Wood	21	NA	U-Factor: 0.059	N	Stucco - 7/8 in. Vapor permeable felt - 1/8 in. Plywood - 1/2 in. Wood framed wall, 16in. OC, 7.25in., R-21 Gypsum Board - 1/2 in.
Peralta - A-1 / B-T Wall11	ExteriorWall	1080	Wood	21	NA	U-Factor: 0.059	N	Stucco - 7/8 in. Vapor permeable felt - 1/8 in. Plywood - 1/2 in. Wood framed wall, 16in. OC, 7.25in., R-21 Gypsum Board - 1/2 in.
Peralta - A-1 / 6-T Wall13	ExteriorWall	173	Wood	21	NA	U-Factor: 0.065	N	Stucco - 7/8 in. Vapor permeable felt - 1/8 in. Plywood - 1/2 in. Wood framed wall, 16in. OC, 5.5in., R-21 Gypsum Board - 1/2 in.
Peralta - A-2 / 8-T Wall20	ExteriorWall	736	Wood	21	NA	U-Factor: 0.057	N	Stucco - 7/8 in. Vapor permeable felt - 1/8 in. Plywood - 1/2 in. Wood framed wall, 16in. OC, 7.25in., R-21 Plywood - 1/2 in. Gypsum Board - 1/2 in.
Slab On Grade26	UndergroundFloor	2077	NA	0	NA	F-Factor: 0.730	N	Slab Type = UnheatedSlabOnGrade Insulation Orientation = None Insulation R-Value = R0
Peralta R1 R-30 Roof28	Roof	2077	Wood	30	NA	U-Factor: 0.035	N	Metal Standing Seam - 1/16 in. Vapor permeable felt - 1/8 in. Gypsum Board - 1/2 in. Wood framed roof, 48in. OC, 5.5in., R-30 Plywood - 5/8 in.

[1] *Status: N - New, A – Altered, E – Existing*

G4. OPAQUE DOOR SUMMARY

This Section Does Not Apply

G5. FENESTRATION ASSEMBLY SUMMARY

1 Fenestration Assembly Name / Tag or I.D.	2 Fenestration Type / Product Type / Frame Type	3 Certification Method[1]	4 Assembly Method	5 Area Ft²	6 Overall U-factor	7 Overall SHGC	8 Overall VT	9 Status[2]
Peralta - E 016_Fiberglass Door	VerticalFenestration GlazedDoor MetalFraming	Default Performance	SiteBuilt	21	1.25	0.80	0.53	N
Peralta - E 034_Window	VerticalFenestration FixedWindow N/A	NFRC Rated	Manufactured	92	0.45	0.19	0.32	N
Peralta - E 015_Storefront door	VerticalFenestration CurtainWall N/A	NFRC Rated	Manufactured	42	0.45	0.19	0.32	N
Peralta - E 029_Window	VerticalFenestration OperableWindow N/A	NFRC Rated	Manufactured	82	0.45	0.19	0.32	N
Peralta - E 028_Window	VerticalFenestration OperableWindow N/A	NFRC Rated	Manufactured	156	0.45	0.19	0.32	N
Peralta - E 003_Fiberglass Door	VerticalFenestration GlazedDoor N/A	NFRC Rated	Manufactured	21	0.45	0.19	0.32	N

[1] *Newly installed fenestration shall have a certified NFRC Label Certificate or use the CEC default tables found in Table 110.6-A and Table 110.6-B. Center of Glass (COG) values are for the glass-only, determined by the manufacturer, and are shown for ease of verification. Site-built fenestration values are calculated per Nonresidential Appendix NA6 and are used in the analysis.*
[2] *Status: N - New, A – Altered, E – Existing*

G6. OVERHANG DETAILS

This Section Does Not Apply

G7. FIN DETAILS

This Section Does Not Apply

H. HVAC SYSTEM SUMMARY

H1. DRY SYSTEM EQUIPMENT (furnaces, air handling units, heat pumps, VRF, economizers etc.)

Dry System Equipment [1] (Fan & Economizer info included below in Table N)

1 Equipment Name	2 Equipment Type	3 Qty	4 Heating: Total Heating Output (kBtu/h)	5 Heating: Supp Heat Source (Y/N)	6 Heating: Supp Heat Output (kBtuh)	7 Heating: Efficiency	8 Cooling: Total Cooling Output (kBtu/h)	9 Cooling: Efficiency	10 Status[1]
FC-3-2/ACCU-3	SZHP (Split3Phase)	1	54	Yes	2	HSPF-10.50	50	SEER-14.00 / EER-8.00	N

[1] *Status: N - New, A – Altered, E – Existing*

H2. FAN SYSTEMS SUMMARY[1]

1 Name or Item Tag	2 Supply Fan: System Type	3 Supply Fan: Design OA	4 Supply Fan: CFM	5 Supply Fan: BHP	6 Supply Fan: Watts	7 Supply Fan: Control	8 Return Fan: CFM	9 Return Fan: BHP	10 Return Fan: Watts	11 Return Fan: Control	12 Economizer Type (if present)	13 Status[2]
FC-3-2/ACCU-3	SZHP	615	1400	0.750	654.0	ConstantVolume	NA	NA	NA	NA	DifferentialDryBulb	N

[1] *Status: N - New, A – Altered, E – Existing*

H3. EXHAUST FAN SUMMARY

This Section Does Not Apply

H4. Wet System Equipment (boilers, chillers, cooling towers, etc.)

1 Name or Item Tag	2 Equipment Type	3 Qty	4 Vol (gal)	5 Rated Capacity (kBtu/h)	6 Efficiency	7 Standby Loss	8 Pumps: Qty	9 Pumps: GPM	10 Pumps: HP	11 Pumps: VSD (Y/N)	12 Status[1]

[1] *Status: N - New, A – Altered, E – Existing*

H5. SYSTEM SPECIAL FEATURES

1 System Name	2 Optimum Start	3 Window Interlocks per §140.4(n)	4 Evaporative Cooling	5 Heat Recovery	6 Other Controls
FC-3-2/ACCU-3	No Optimum Start	No	No Evaporative Cooler	No Heat Recovery	1 Zones With CO2Sensor Vent. Control, No DDC Differential Drybulb Economizer No Supply Air Temp. Control
Undefined Plant1 - SHW	NA	NA	NA	NA	Fixed Temperature Control, No DDC

Notes: This table includes controls related to the performance path only. For projects using the prescriptive path, mandatory and prescriptive controls requirements are documented on the NRCC-MCH-E.

H6. MECHANICAL VENTILATION

1 Zone Name	2 Mechanical Ventilation: Ventilation Function	3 Mechanical Ventilation: # hotel rooms	4 Mechanical Ventilation: # of people	5 Mechanical Ventilation: # of bedrooms	6 Mechanical Ventilation: Supply OA CFM	7 Mechanical Ventilation: Exhaust CFM	8 Mechanical Ventilation: Conditioned Area (sf)	9 DCV or Occupant Sensor Controls, or Both
1-CLASS LAB 3 (H300)	Education - Lecture/postsecondary classroom	0	41.00	0	615	0	2077	NA

Multifamily or Hotel/Motel Occupancy? (if "Yes", see DOMESTIC/SERVICE HOT WATER SYSTEM SUMMARY)	No
Does the Project include Zonal Systems?	No

H7. ZONAL SYSTEM AND TERMINAL UNIT SUMMARY

1 System ID	2 Zone Name	3 System Type	4 Rated Capacity (kBtuh): Heating	5 Rated Capacity (kBtuh): Cooling	6 Airflow (cfm): Design	7 Airflow (cfm): Min.	8 Airflow (cfm): Min. Ratio	9 Fan: BHP	10 Fan: Watts	11 Fan: Cycles	12 Fan: ECM Motor
1-CLASS LAB 3 (H300)-Trm	1-CLASS LAB 3 (H300)	Uncontrolled	NA	NA	1400	NA	0.00	NA	NA	NA	☐

H8. EVAPORATIVE COOLER SUMMARY

This Section Does Not Apply

I. DOMESTIC/SERVICE HOT WATER SYSTEM SUMMARY

I1. DHW EQUIPMENT SUMMARY

1 DHW Name	2 Heater Element Type	3 Tank Type	4 Qty	5 Tank Vol (gal)	6 Rated Input (kBtu/h)	7 Efficiency	8 Tank Insulation R-value (int/Ext)	9 Standby Loss Fraction	10 Heat Pump Type	11 Tank Location or Ambient Condition
Instantaneous Electric2	Electricity	Instantaneous	1	1.00	16.0 (kW)	UEF: 0.98	NA	SBLF: NA	NA	NA

I2. MULTI-FAMILY CENTRAL DHW SYSTEM DETAILS

This Section Does Not Apply

I3. SOLAR HOT WATER HEATING SUMMARY

This Section Does Not Apply

J. COVERED PROCESS SUMMARY

This Section Does Not Apply

K. INDOOR LIGHTING SUMMARY

This Section Does Not Apply

7/13/2020 5:38:18 PM BIM 360://PCCD Merritt Horticulture/Merritt Horticulture_2020.rvt

APPROVALS

IDENTIFICATION STAMP
DIV. OF THE STATE ARCHITECT
APP: 01-119409 INC:
REVIEWED FOR
SS ☑ FLS ☑ ACS ☑
DATE: 03/14/2022

NOLL & TAM ARCHITECTS
729 Heinz Avenue
Berkeley, CA 94710
tel 510.542.2200
fax 510.542.2201

SEAL

REGISTERED PROFESSIONAL ENGINEER TYLER BRADSHAW M32496 EXP. 06/30/2022 MECHANICAL STATE OF CALIFORNIA

BLUE FOREST ENGINEERING
3622 Kingsley Street
Oakland, CA 94610
tel 510.925.8224

PROJECT TITLE

Peralta Community College District
MERRITT COLLEGE NEW LANDSCAPE HORTICULTURE COMPLEX

12500 Campus Drive
Oakland, CA 94619

BID SET

ISSUE DATE 03/03/2022
N&T JOB NUMBER 22003

REVISIONS

	DATE	DESCRIPTION

DRAWN BY S.A. CHECKED BY T.B.

SHEET TITLE
TITLE 24 COMPLIANCE FORMS

SHEET NUMBER
M8.07

Project Name:	MerrittLandscape Horticulture Complex	NRCC-PRF-01-E	Page 10 of 14
Project Address:	12500 Campus Drive Oakland, CA 94616 Oakland 94616	Calculation Date/Time:	21:52, Thu, Mar 04, 2021
Input File Name:	CLASS LAB 3 H300-301.cibd19x		

L. DECLARATION OF REQUIRED CERTIFICATES OF INSTALLATION

Table Instructions: Selections shall be made by Documentation Author to indicate which Certificates of Installation must be submitted for the features to be recognized for compliance. These documents bust be retained and provided to the building inspector during construction and can be found online at: https://www.energy.ca.gov/title24/2019standards/2019_compliance_documents/Nonresidential_Documents/NRCI/

Building Component	YES	NO	Form/Title	Field Inspector Pass	Field Inspector Fail
Envelope	☒	☐	NRCI-ENV-01-E - Must be submitted for all buildings	☐	☐
Mechanical	☒	☐	NRCI-MCH-01-E - Must be submitted for all buildings	☐	☐
Plumbing	☒	☐	NRCI-PLB-01-E - Must be submitted for all buildings	☐	☐
	☐	☒	NRCI-PLB-02-E - Must be submitted for high-rise residential and hotel/ motel central hot water distribution systems to be recognized for compliance	☐	☐
	☐	☒	NRCI-PLB-03-E - Must be submitted for high-rise residential and hotel/motel single dwelling unit hot water system distribution systems to be recognized for compliance	☐	☐
	☐	☒	NRCI-PLB-21-E - Must be HERS verified for central systems in high-rise residential hotel/ motel application	☐	☐
	☐	☒	NRCI-PLB-22-E - Must be HERS verified for single dwelling unit systems in high-rise residential, hotel/motel application	☐	☐
	☐	☒	NRCI-STH-01-E - Must be submitted for solar hot water heating systems	☐	☐
Indoor Lighting	☐	☒	NRCI-LTI-01-E - Must be submitted for all buildings	☐	☐
	☐	☒	NRCI-LTI-02-E - Must be submitted for a lighting control system, or for an Energy Management Control System (EMCS) to be recognized for compliance	☐	☐
	☐	☒	NRCI-LTI-04-E - Must be submitted for two interlocked systems serving an auditorium, a convention center, a conference room, a multipurpose room, or a theater to be recognized for compliance	☐	☐
	☐	☒	NRCI-LTI-05-E - Must be submitted for a Power Adjustment Factor (PAF) to be recognized for compliance	☐	☐
	☐	☒	NRCI-LTI-06-E - Must be submitted for additional wattage installed in a video conferencing studio to be recognized for compliance	☐	☐
Covered Process	☐	☒	NRCI-PRC-01-E - Must be submitted for all Covered Processes	☐	☐

Project Name:	MerrittLandscape Horticulture Complex	NRCC-PRF-01-E	Page 11 of 14
Project Address:	12500 Campus Drive Oakland, CA 94616 Oakland 94616	Calculation Date/Time:	21:52, Thu, Mar 04, 2021
Input File Name:	CLASS LAB 3 H300-301.cibd19x		

M. DECLARATION OF REQUIRED CERTIFICATES OF ACCEPTANCE

Table Instructions: Selections shall be made by Documentation Author to indicate which Certificates of Acceptance must be submitted for the features to be recognized for compliance. These documents must be provided to the building inspector during construction and must be completed through an Acceptance Test Technician Certification Provider (ATTCP). For more information visit:https://www.energy.ca.gov/title24/2019standards/2019_compliance_documents/Nonresidential_Documents/NRCA/

Building Component	YES	NO	Form/Title	Field Inspector Pass	Field Inspector Fail
Envelope	☒	☐	NRCA-ENV-02-F - NRFC label verification for fenestration	☐	☐
	☐	☐	NRCA-ENV-03-F - Daylighting Design PAFs	☐	☐
Indoor Lighting	☐	☒	NRCA-LTI-02-A - Occupancy Sensors and Automatic Time Switch Controls	☐	☐
	☐	☒	NRCA-LTI-03-A - Automatic Daylight Controls	☐	☐
	☐	☒	NRCA-LTI-04-A - Demand Responsive Lighting Controls	☐	☐
	☐	☒	NRCA-LTI-05-A - Institutional Tuning Power Adjustment Factor (PAF)	☐	☐
Covered Process	☐	☒	NRCA-PRC-02-F - Kitchen Exhaust	☐	☐
	☐	☒	NRCA-PRC-03-F - Garage Exhaust	☐	☐
	☐	☒	NRCA-PRC-12-F – Elevator Lighting and Ventilation Controls	☐	☐
	☐	☒	NRCA-PRC-13-F –Escalator and Moving Walkways Speed Control	☐	☐
	☐	☒	NRCA-PRC-14-F – Lab Exhaust Ventilation System	☐	☐
	☐	☒	NRCA-PRC-15-F - Fume Hood Automatic Sash Closures System	☐	☐

Project Name:	MerrittLandscape Horticulture Complex	NRCC-PRF-01-E	Page 12 of 14
Project Address:	12500 Campus Drive Oakland, CA 94616 Oakland 94616	Calculation Date/Time:	21:52, Thu, Mar 04, 2021
Input File Name:	CLASS LAB 3 H300-301.cibd19x		

M. DECLARATION OF REQUIRED CERTIFICATES OF ACCEPTANCE

Table Instructions: Selections shall be made by Documentation Author to indicate which Certificates of Acceptance must be submitted for the features to be recognized for compliance. These documents must be provided to the building inspector during construction and must be completed through an Acceptance Test Technician Certification Provider (ATTCP). For more information visit:https://www.energy.ca.gov/title24/2019standards/2019_compliance_documents/Nonresidential_Documents/NRCA/

Building Component	YES	NO	Form/Title	Field Inspector Pass	Field Inspector Fail
Mechanical	☒	☐	NRCA-MCH-02-A Outdoor Air must be submitted for all newly installed HVAC units. Note: MCH02-A can be performed in conjunction with MCH-07-A Supply Fan VFD Acceptance (if applicable) since testing activities overlap	☐	☐
	☒	☐	NRCA-MCH-03-A Constant Volume Single Zone HVAC	☐	☐
	☐	☒	NRCA-MCH-04(a)-H Air Distribution Duct Leakage - HERS Verification required	☐	☐
	☐	☐	NRCA-MCH-04(b)-A Air Distribution Duct Leakage - ATT only	☐	☐
	☒	☐	NRCA-MCH-05-A Air Economizer Controls	☐	☐
	☒	☐	NRCA-MCH-06-A Demand Control Ventilation Systems Acceptance must be submitted for all systems required to employ demand controlled ventilation (refer to §120.1(c)3) can vary outside ventilation flow rates based on maintaining interior carbon dioxide (CO2) concentration setpoints	☐	☐
	☐	☒	NRCA-MCH-07-A Supply Fan Variable Flow Controls	☐	☐
	☐	☒	NRCA-MCH-08-A Valve Leakage Test	☐	☐
	☐	☒	NRCA-MCH-09-A Supply Water Temperature Reset Controls	☐	☐
	☐	☒	NRCA-MCH-10-A Hydronic System Variable Flow Controls	☐	☐
	☐	☒	NRCA-MCH-11-A Automatic Demand Shed Controls	☐	☐
	☐	☒	NRCA-MCH-12-A FDD for Packaged Direct Expansion Units	☐	☐
	☐	☒	NRCA-MCH-13-A Automatic FDD for Air Handling Units and Zone Terminal Units Acceptance	☐	☐
	☐	☒	NRCA-MCH-14-A Distributed Energy Storage DX AC Systems Acceptance	☐	☐
	☐	☒	NRCA-MCH-15-A Thermal Energy Storage (TES) System Acceptance	☐	☐
	☐	☒	NRCA-MCH-16-A Supply Air Temperature Reset Controls	☐	☐
	☐	☒	NRCA-MCH-17-A Condenser Water Temperature Reset Controls	☐	☐
	☐	☒	NRCA-MCH-18 Energy Management Control Systems	☐	☐
	☐	☒	NRCA-MCH-19 Occupancy Sensor Controls	☐	☐

Project Name:	MerrittLandscape Horticulture Complex	NRCC-PRF-01-E	Page 13 of 14
Project Address:	12500 Campus Drive Oakland, CA 94616 Oakland 94616	Calculation Date/Time:	21:52, Thu, Mar 04, 2021
Input File Name:	CLASS LAB 3 H300-301.cibd19x		

N. DECLARATION OF REQUIRED CERTIFICATES OF VERIFICATION

Table Instructions: Selections shall be made by Documentation Author to indicate which Certificates of Verification must be submitted for the features to be recognized for compliance. These documents bust be retained and provided to the building inspector during construction and can be found online at: https://www.energy.ca.gov/title24/2019standards/2019_compliance_documents/Nonresidential_Documents/NRCV/

Building Component	YES	NO	Form/Title	Field Inspector Pass	Field Inspector Fail
Mechanical	☐	☒	NRCV-MCH-04-H Duct Leakage Test	☐	☐
	☐	☒	NRCV-MCH-24-H Enclosure Air Leakage	☐	☐
	☐	☒	NRCV-MCH-27 Indoor Air Quality & Mechanical Ventilation	☐	☐
	☐	☒	NRCV-MCH-32-H Local Mechanical Exhaust	☐	☐
Plumbing	☐	☒	NRCV-PLB-21-H - HERS verified central systems in high-rise residential, hotel/motel application	☐	☐
	☐	☒	NRCV-PLB-22-H - HERS verified single dwelling unit systems in high-rise residential, hotel/motel application	☐	☐

Project Name:	MerrittLandscape Horticulture Complex	NRCC-PRF-01-E	Page 14 of 14
Project Address:	12500 Campus Drive Oakland, CA 94616 Oakland 94616	Calculation Date/Time:	21:52, Thu, Mar 04, 2021
Input File Name:	CLASS LAB 3 H300-301.cibd19x		

DOCUMENTATION AUTHOR'S DECLARATION STATEMENT

I certify that this Certificate of Compliance documentation is accurate and complete.

Documentation Author Name: Tyler Bradshaw	Signature:
Company: Blue Forest Engineering Inc	
Address: 3622 Kingsley Street	Signature Date: 2021-03-04
City/State/Zip: Oakland CA 94610	CEA/ HERS Certification Identification (if applicable): M33496
Phone: 510.924.8224 x101	

RESPONSIBLE PERSON'S DECLARATION STATEMENT

I certify the following under penalty of perjury, under the laws of the State of California:

1. The information provided on this Certificate of Compliance is true and correct.
2. I am eligible under Division 3 of the Business and Professions Code to accept responsibility for the building design or system design identified on this Certificate of Compliance (responsible designer)
3. The energy features and performance specifications, materials, components, and manufactured devices for the building design or system design identified on this Certificate of Compliance conform to the requirements of Title 24, Part 1 and Part 6 of the California Code of Regulations.
4. The building design features or system design features identified on this Certificate of Compliance are consistent with the information provided on other applicable compliance documents, worksheets, calculations, plans and specifications submitted to the enforcement agency for approval with this building permit application.
5. I will ensure that a completed signed copy of this Certificate of Compliance shall be made available with the building permit(s) issued for the building, and made available to the enforcement agency for all applicable inspections. I understand that a completed signed copy of this Certificate of Compliance is required to be included with the documentation the builder provides to the building owner at occupancy.

Responsible Envelope Designer Name: Christopher Noll	Signature:	
Company: Noll & Tam Architects		
Address: 729 Heinz Ave.	Date Signed: 03/08/2021	
City/State/Zip: Berkeley CA 94710		
Phone: 510.542.2200	Title: Principal	License #: C15916
Responsible Lighting Designer Name:	Signature: NOT IN SCOPE	
Company:		
Address:	Date Signed:	
City/State/Zip:		
Phone:	Title:	License #:
Responsible Mechanical Designer Name: Tyler Bradshaw	Signature:	
Company: Blue Forest Engineering		
Address: 3622 Kingsley Street	Date Signed: 3.4.2021	
City/State/Zip: Oakland CA 94610		
Phone: 510.924.8205	Title: Principal	License #: M33496

7/13/2020 5:38:18 PM BIM 360://PCCD Merritt Horticulture/Merritt Horticulture_2020.rvt

APPROVALS

IDENTIFICATION STAMP
DIV. OF THE STATE ARCHITECT
APP: 01-119409 INC:
REVIEWED FOR
SS ☑ FLS ☑ ACS ☑
DATE: 03/14/2022

NOLL & TAM ARCHITECTS
729 Heinz Avenue
Berkeley, CA 94710
tel 510.542.2200
fax 510.542.2201

SEAL

REGISTERED PROFESSIONAL ENGINEER TYLER BRADSHAW M33496 EXP. 06/30/2022 MECHANICAL STATE OF CALIFORNIA

BLUE FOREST ENGINEERING
3622 Kingsley Street
Oakland, CA 94610
tel 510.925.8224

PROJECT TITLE

Peralta Community College District
MERRITT COLLEGE NEW LANDSCAPE HORTICULTURE COMPLEX

12500 Campus Drive
Oakland, CA 94619

BID SET

ISSUE DATE 03/03/2022

N&T JOB NUMBER 22003

REVISIONS

⚠	DATE	DESCRIPTION

DRAWN BY S.A. CHECKED BY T.B.

SHEET TITLE

TITLE 24 COMPLIANCE FORMS

SHEET NUMBER

M8.08

Project Name:	MerrittLandscape Horticulture Complex	NRCC-PRF-01-E	Page 1 of 14
Project Address:	12500 Campus Drive Oakland, CA 94616 Oakland 94616	Calculation Date/Time:	21:44, Thu, Mar 04, 2021
Input File Name:	HEADHOUSE H700.cibd19x		

A. GENERAL INFORMATION

1.	Project Location (city)	Oakland	8.	Standards Version	Compliance2019
2.	CA Zip Code	94616	9.	Compliance Software (version)	EnergyPro 8.2
3.	Climate Zone	3	10.	Weather File	OAKLAND_724930_CZ2010.epw
4.	Total Conditioned Floor Area in Scope	1,503 ft²	11.	Building Orientation (deg)	(N) 0 deg
5.	Total Unconditioned Floor Area	0 ft²	12.	Permitted Scope of Work	NewEnvelopeAndMechanical
6.	Total # of Stories (Habitable Above Grade)	1	13	Building Type(s)	Nonresidential
7.	Total # of dwelling units	0	14	Gas Type	NaturalGas

B. PROJECT SUMMARY

Table Instructions: Table B shows which building components are included in the performance calculation. If indicated as not included, the project must show compliance prescriptively if within permit application.

Building Components Complying via Performance					Building Components Complying Prescriptively	
Envelope (see Table G)	☒ Performance	Covered Process: Commercial Kitchens	☐ Performance		*The following building components are ONLY eligible for prescriptive compliance and should be documented on the NRCC form listed if within the scope of the permit application (i.e. compliance will not be shown on the NRCC-PRF-E).*	
	☐ Not Included		☒ Not Included			
Mechanical (see Table H)	☒ Performance	Covered Process: Computer Rooms	☐ Performance		Indoor Lighting (Unconditioned)§140.6	*NRCC-LTI-E*
	☐ Not Included		☒ Not Included		Outdoor Lighting §140.7	*NRCC-LTO-E*
Domestic Hot Water (see Table I)	☒ Performance	Covered Process: Laboratory Exhaust	☐ Performance		Sign Lighting §140.8	*NRCC -LTS-E*
	☐ Not Included		☒ Not Included		Mandatory Measures	
Lighting (Indoor Conditioned, see Table K)	☐ Performance				*Electrical power systems, commissioning, solar ready, elevator and escalator requirements are mandatory and should on the NRCC form listed if applicable (i.e. compliance will not be shown on the NRCC-PRF-E.)*	
	☒ Not Included				Electrical Power Distribution §110.11	*NRCC-ELC-E is required*
Solar Thermal Water Heating (see Table I)	☐ Performance				Commissioning §120.8	*NRCC-CXR-E is required*
	☒ Not Included				Solar Ready §110.10	*NRCC-SRA-E is required*

Project Name:	MerrittLandscape Horticulture Complex	NRCC-PRF-01-E	Page 2 of 14
Project Address:	12500 Campus Drive Oakland, CA 94616 Oakland 94616	Calculation Date/Time:	21:44, Thu, Mar 04, 2021
Input File Name:	HEADHOUSE H700.cibd19x		

C1. COMPLIANCE RESULTS FOR PERFORMANCE COMPONENTS (Annual TDV Energy Use, kBtu/ft²-yr)

COMPLIES

Energy Component	Standard Design (TDV)	Proposed Design (TDV)	Compliance Margin (TDV)[1]
Space Heating	22.83	28.07	-5.24
Space Cooling	25.50	15.32	10.18
Indoor Fans	121.35	31.30	90.05
Heat Rejection	--	--	--
Pumps & Misc.	--	--	--
Domestic Hot Water	19.79	45.89	-26.10
Indoor Lighting	34.52	41.42	-6.90
ENERGY STANDARDS COMPLIANCE TOTAL	**223.99**	**162.00**	**61.99 (27.7%)**

[1] *Notes: The number in parenthesis following the Compliance Margin in column 4, represents the Percent Better than Standard.*

C2. RESULTS FOR 'ABOVE CODE' QUALIFICATIONS[1]

☐ This project is pursuing CalGreen Tier 1 ☐ This project is pursuing CalGreen Tier 2

Miscellaneous Energy Component	Standard Design (TDV)	Proposed Design (TDV)	Compliance Margin (TDV)[1]
Receptacle	74.35	74.35	--
Process	--	--	--
Other Ltg	--	--	--
Process Motors	--	--	--
COMPLIANCE TOTAL PLUS MISCELLANEOUS COMPONENTS	**298.34**	**236.35**	**62.0 (20.8%)**

[1] *Notes: This table is used to document compliance with programs OTHER THAN Title 24 Part 6, if applicable.*

Project Name:	MerrittLandscape Horticulture Complex	NRCC-PRF-01-E	Page 3 of 14
Project Address:	12500 Campus Drive Oakland, CA 94616 Oakland 94616	Calculation Date/Time:	21:44, Thu, Mar 04, 2021
Input File Name:	HEADHOUSE H700.cibd19x		

C3. ENERGY USE SUMMARY

Energy Component	Standard Design Site (MWh)	Proposed Design Site (MWh)	Margin (MWh)	Standard Design Site (MBtu)	Proposed Design Site (MBtu)	Margin (MBtu)
Space Heating	--	1.6	--	17.3	--	--
Space Cooling	1.1	0.6	0.5	--	--	--
Indoor Fans	6.0	1.5	4.5	--	--	--
Heat Rejection	--	--	--	--	--	--
Pumps & Misc.	--	--	--	--	--	--
Domestic Hot Water	--	2.5	--	16.6	--	--
Indoor Lighting	1.8	2.2	-0.4	--	--	--
Compliance Total	**8.9**	**8.4**	**0.5**	**33.9**	**0.0**	**--**
Receptacle	4.0	4.0	0.0	--	--	--
Process	--	--	--	--	--	--
Other Ltg	--	--	--	--	--	--
Process Motors	--	--	--	--	--	--
TOTAL	**12.9**	**12.4**	**0.5**	**33.9**	**0.0**	**--**

C4. UNMET LOAD HOURS

Thermal Zone Name	Cooling Unmet Load Hour Limit for Thermal Zone	Proposed Cooling Unmet Load Hours	Heating Unmet Load Hour Limit for Thermal Zone	Proposed Heating Unmet Load Hours
1-HEAD HOUSE (H700)	150	0	150	158

D. EXCEPTIONAL CONDITIONS

This project includes partial performance compliance scope options. The building must show compliance with all other applicable compliance scope options (performance or prescriptively) before occupying.

This project uses the Simplified Geometry Performance Modeling Approach which is not capable of modeling daylighting controls and assumes the prescriptive Secondary Daylit Control requirements are met. PRESCRIPTIVE COMPLIANCE documentation (form NRCC-LTI-02-E) for the requirements of section 140.6(d) Automatic Daylighting Controls in Secondary Daylit Zones is required.

The user model includes space(s) that are designed to be served by mechanical cooling systems, but the cooling systems were not included in the simulation model. A cooling system has been modeled for both the proposed and standard cases.

The user model includes space(s) without sufficient cooling equipment. Cooling equipment has been added to the model to meet cooling loads.

Project Name:	MerrittLandscape Horticulture Complex	NRCC-PRF-01-E	Page 4 of 14
Project Address:	12500 Campus Drive Oakland, CA 94616 Oakland 94616	Calculation Date/Time:	21:44, Thu, Mar 04, 2021
Input File Name:	HEADHOUSE H700.cibd19x		

E. HERS VERIFICATION

This Section Does Not Apply

F. ADDITIONAL REMARKS

This Section Does Not Apply

G1. ENVELOPE GENERAL INFORMATION (conditioned spaces only)

Opaque Surfaces & Orientation	Total Gross Surface Area (ft²)	Total Fenestration Area (ft²)	Window to Wall Ratio (%)
North-Facing[2]	890 ft²	160 ft²	18.0%
East-Facing[3]	407 ft²	0 ft²	00.0%
South-Facing[4]	1,334 ft²	172 ft²	12.9%
West-Facing[4]	406 ft²	0 ft²	00.0%
Total	**3,037 ft²**	**332 ft²**	**10.9%**
Roof	1,503 ft²	0 ft²	00.0%

Notes:
[1] *North-Facing is oriented to within 45 degrees of true north, including 45°00'00" east of north (NE), but excluding 45°00'00" west of north (NW).*
[2] *East-Facing is oriented to within 45 degrees of true east, including 45°00'00" south of east (SE), but excluding 45°00'00" north of east (NE).*
[3] *South-Facing is oriented to within 45 degrees of true south, including 45°00'00" west of south (SW), but excluding 45°00'00" east of south (SE).*
[4] *West-Facing is oriented to within 45 degrees of true west, including 45°00'00" north of due west (NW), but excluding 45°00'00" south of west (SW).*

G2. CRRC ROOFING PRODUCT SUMMARY

This Section Does Not Apply

G3. OPAQUE SURFACE ASSEMBLY SUMMARY

Surface Name	Surface Type	Area (ft²)	Framing Type	Cavity R-Value	Continuous R-Value	U-Factor / F-Factor / C-Factor	Status[1]	Description of Assembly Layers
Slab On Grade9	UndergroundFloor	1503	NA	0	NA	F-Factor: 0.730	N	Slab Type = UnheatedSlabOnGrade Insulation Orientation = None Insulation R-Value = R0

Project Name:	MerrittLandscape Horticulture Complex	NRCC-PRF-01-E	Page 5 of 14
Project Address:	12500 Campus Drive Oakland, CA 94616 Oakland 94616	Calculation Date/Time:	21:44, Thu, Mar 04, 2021
Input File Name:	HEADHOUSE H700.cibd19x		

G3. OPAQUE SURFACE ASSEMBLY SUMMARY

Surface Name	Surface Type	Area (ft²)	Framing Type	Cavity R-Value	Continuous R-Value	U-Factor / F-Factor / C-Factor	Status[1]	Description of Assembly Layers
Peralta R1 R-30 Roof11	Roof	1503	Wood	30	NA	U-Factor: 0.035	N	Metal Standing Seam - 1/16 in. Vapor permeable felt - 1/8 in. Gypsum Board - 1/2 in. Wood framed roof, 48in. OC, 5.5in., R-30 Plywood - 5/8 in.
Peralta - A-2 / B-T Wall13	ExteriorWall	813	Wood	21	NA	U-Factor: 0.057	N	Stucco - 7/8 in. Vapor permeable felt - 1/8 in. Plywood - 1/2 in. Wood framed wall, 16in. OC, 7.25in., R-21 Plywood - 1/2 in. Gypsum Board - 1/2 in.
Peralta - B-1 / B-T Wall23	ExteriorWall	307	Wood	21	NA	U-Factor: 0.059	N	Stucco - 7/8 in. Vapor permeable felt - 1/8 in. Plywood - 1/2 in. Wood framed wall, 16in. OC, 7.25in., R-21 Gypsum Board - 1/2 in.
Peralta - A-1 / B-T Wall27	ExteriorWall	1917	Wood	21	NA	U-Factor: 0.059	N	Stucco - 7/8 in. Vapor permeable felt - 1/8 in. Plywood - 1/2 in. Wood framed wall, 16in. OC, 7.25in., R-21 Gypsum Board - 1/2 in.

[1] *Status: N - New, A – Altered, E – Existing*

G4. OPAQUE DOOR SUMMARY

Assembly Name	Overall U-factor	Status[1]
Peralta - W 016 - Door15	0.700	N
Peralta - W 019 - Door25	0.700	N

Project Name:	MerrittLandscape Horticulture Complex	NRCC-PRF-01-E	Page 6 of 14
Project Address:	12500 Campus Drive Oakland, CA 94616 Oakland 94616	Calculation Date/Time:	21:44, Thu, Mar 04, 2021
Input File Name:	HEADHOUSE H700.cibd19x		

G5. FENESTRATION ASSEMBLY SUMMARY

Fenestration Assembly Name / Tag or I.D.	Fenestration Type / Product Type / Frame Type	Certification Method[1]	Assembly Method	Area ft²	Overall U-factor	Overall SHGC	Overall VT	Status[2]
Peralta - W 018_Storfront Door	VerticalFenestration CurtainWall N/A	NFRC Rated	SiteBuilt	56	0.45	0.19	0.32	N
Peralta - W 017_Storfront Door	VerticalFenestration CurtainWall N/A	NFRC Rated	SiteBuilt	56	0.45	0.19	0.32	N
Peralta - W 009-W 012_Window	VerticalFenestration OperableWindow N/A	NFRC Rated	SiteBuilt	48	0.35	0.19	0.32	N
Peralta - W 013-W 016_Window - Operable	VerticalFenestration OperableWindow N/A	NFRC Rated	SiteBuilt	80	0.35	0.19	0.32	N
Peralta - W 013-W 016_Window - Fixed	VerticalFenestration FixedWindow N/A	NFRC Rated	SiteBuilt	92	0.35	0.19	0.32	N

[1] *Newly installed fenestration shall have a certified NFRC Label Certificate or use the CEC default tables found in Table 110.6-A and Table 110.6-B. Center of Glass (COG) values are for the glass-only, determined by the manufacturer, and are shown for ease of verification. Site-built fenestration values are calculated per Nonresidential Appendix NA6 and are used in the analysis.*
[2] *Status: N - New, A – Altered, E – Existing*

G6. OVERHANG DETAILS

This Section Does Not Apply

G7. FIN DETAILS

This Section Does Not Apply

Project Name:	MerrittLandscape Horticulture Complex	NRCC-PRF-01-E	Page 7 of 14
Project Address:	12500 Campus Drive Oakland, CA 94616 Oakland 94616	Calculation Date/Time:	21:44, Thu, Mar 04, 2021
Input File Name:	HEADHOUSE H700.cibd19x		

H. HVAC SYSTEM SUMMARY

H1. DRY SYSTEM EQUIPMENT (furnaces, air handling units, heat pumps, VRF, economizers etc.)

Dry System Equipment [1] (Fan & Economizer info included below in Table N)

Equipment Name	Equipment Type	Qty	Heating			Cooling		Status[2]
			Total Heating Output (kBtu/h)	Supp Heat Source (Y/N)	Supp Heat Output (kBtuh)	Efficiency	Total Cooling Output (kBtu/h)	Efficiency	
FC3-1/ACCU-3	SZHP (Split3Phase)	1	15	No	0	HSPF-10.50	12	SEER-14.00 / EER-11.60	N

[1] *Status: N - New, A – Altered, E – Existing*

H2. FAN SYSTEMS SUMMARY[1]

Name or Item Tag	System Type packaged, DOAS, etc.	Design OA	Supply Fan				Return Fan				Economizer Type (if present)	Status[2]
			CFM	BHP	Watts	Control	CFM	BHP	Watts	Control		
FC3-1/ACCU-3	SZHP	225	350	0.149	129.9	ConstantVolume	NA	NA	NA	NA	NoEconomizer	N

[1] *Status: N - New, A – Altered, E – Existing*

H3. EXHAUST FAN SUMMARY

System ID	Zone Name	Qty	CFM	Motor BHP	Motor Watts	Total Static Pressure (in H20)
HEAD HOUSE (H700)3	1-HEAD HOUSE (H700)	1	300	0.250	218.0	3.44

H4. Wet System Equipment (boilers, chillers, cooling towers, etc.)

Name or Item Tag	Equipment Type	Qty	Vol (gal)	Rated Capacity (kBtu/h)	Efficiency	Standby Loss	Pumps				Status[1]
							Qty	GPM	HP	VSD (Y/N)	

[1] *Status: N - New, A – Altered, E – Existing*

Project Name:	MerrittLandscape Horticulture Complex	NRCC-PRF-01-E	Page 8 of 14
Project Address:	12500 Campus Drive Oakland, CA 94616 Oakland 94616	Calculation Date/Time:	21:44, Thu, Mar 04, 2021
Input File Name:	HEADHOUSE H700.cibd19x		

H5. SYSTEM SPECIAL FEATURES

System Name	Optimum Start	Window Interlocks per §140.4(n)	Evaporative Cooling	Heat Recovery	Other Controls
FC3-1/ACCU-3	No Optimum Start	No	No Evaporative Cooler	No Heat Recovery	No DCV Controls, No DDC No Economizer No Supply Air Temp. Control
Undefined Plant1 - SHW	NA	NA	NA	NA	Fixed Temperature Control, No DDC

Notes: This table includes controls related to the performance path only. For projects using the prescriptive path, mandatory and prescriptive controls requirements are documented on the NRCC-MCH-E.

H6. MECHANICAL VENTILATION

Zone Name	Mechanical Ventilation							DCV or Occupant Sensor Controls, or Both
	Ventilation Function	# hotel rooms	# of people	# of bedrooms	Supply OA CFM	Exhaust CFM	Conditioned Area (sf)	
1-HEAD HOUSE (H700)	Misc - All others	0	37.58	0	225	300	1503	NA

Multifamily or Hotel/Motel Occupancy? (if "Yes", see DOMESTIC/SERVICE HOT WATER SYSTEM SUMMARY)	No
Does the Project include Zonal Systems?	Yes

H7. ZONAL SYSTEM AND TERMINAL UNIT SUMMARY

System ID	Zone Name	System Type	Rated Capacity (kBtuh)		Airflow (cfm)			Fan			
			Heating	Cooling	Design	Min.	Min. Ratio	BHP	Watts	Cycles	ECM Motor
1-HEAD HOUSE (H700)-Trm	1-HEAD HOUSE (H700)	Uncontrolled	NA	NA	350	NA	0.00	NA	NA	NA	☐

H8. EVAPORATIVE COOLER SUMMARY

This Section Does Not Apply

Project Name:	MerrittLandscape Horticulture Complex	NRCC-PRF-01-E	Page 9 of 14
Project Address:	12500 Campus Drive Oakland, CA 94616 Oakland 94616	Calculation Date/Time:	21:44, Thu, Mar 04, 2021
Input File Name:	HEADHOUSE H700.cibd19x		

I. DOMESTIC/SERVICE HOT WATER SYSTEM SUMMARY

I1. DHW EQUIPMENT SUMMARY

DHW Name	Heater Element Type	Tank Type	Qty	Tank Vol (gal)	Rated Input (kBtu/h)	Efficiency	Tank Insulation R-value (Int/Ext)	Standby Loss Fraction	Heat Pump Type	Tank Location or Ambient Condition
Instantaneous Electric2	Electricity	Instantaneous	1	1.00	16.0 (kW)	UEF: 0.98	NA	SBLF: NA	NA	NA

I2. MULTI-FAMILY CENTRAL DHW SYSTEM DETAILS

This Section Does Not Apply

I3. SOLAR HOT WATER HEATING SUMMARY

This Section Does Not Apply

J. COVERED PROCESS SUMMARY

This Section Does Not Apply

K. INDOOR LIGHTING SUMMARY

This Section Does Not Apply

APPROVALS

IDENTIFICATION STAMP
DIV. OF THE STATE ARCHITECT
APP: 01-119409 INC:
REVIEWED FOR
SS ☑ FLS ☑ ACS ☑
DATE: 03/14/2022

NOLL & TAM ARCHITECTS
729 Heinz Avenue
Berkeley, CA 94710
tel 510.542.2200
fax 510.542.2201

SEAL

REGISTERED PROFESSIONAL ENGINEER
TYLER BRADSHAW
M32496
EXP. 08/30/2022
MECHANICAL
STATE OF CALIFORNIA

BLUE FOREST ENGINEERING
3622 Kingsley Street
Oakland, CA 94610
tel 510.925.8224

PROJECT TITLE

Peralta Community College District
MERRITT COLLEGE NEW LANDSCAPE HORTICULTURE COMPLEX

12500 Campus Drive
Oakland, CA 94619

BID SET

ISSUE DATE 03/03/2022
N&T JOB NUMBER 22003

REVISIONS

	DATE	DESCRIPTION

DRAWN BY S.A. CHECKED BY T.B.

SHEET TITLE
TITLE 24 COMPLIANCE FORMS

SHEET NUMBER
M8.09

7/13/2020 5:38:18 PM BIM 360://PCCD Merritt Horticulture/Merritt Horticulture_2020.rvt

Project Name:	MerrittLandscape Horticulture Complex	NRCC-PRF-01-E	Page 10 of 14
Project Address:	12500 Campus Drive Oakland, CA 94616 Oakland 94616	Calculation Date/Time:	21:44, Thu, Mar 04, 2021
Input File Name:	HEADHOUSE H700.cibd19x		

L. DECLARATION OF REQUIRED CERTIFICATES OF INSTALLATION

Table Instructions: Selections shall be made by Documentation Author to indicate which Certificates of Installation must be submitted for the features to be recognized for compliance. These documents bust be retained and provided to the building inspector during construction and can be found online at: https://www.energy.ca.gov/title24/2019standards/2019_compliance_documents/Nonresidential_Documents/NRCI/

Building Component	YES	NO	Form/Title	Field Inspector Pass	Field Inspector Fail
Envelope	☒	☐	NRCI-ENV-01-E - Must be submitted for all buildings	☐	☐
Mechanical	☒	☐	NRCI-MCH-01-E - Must be submitted for all buildings	☐	☐
Plumbing	☒	☐	NRCI-PLB-01-E - Must be submitted for all buildings	☐	☐
	☐	☒	NRCI-PLB-02-E - Must be submitted for high-rise residential and hotel/ motel central hot water distribution systems to be recognized for compliance	☐	☐
	☐	☒	NRCI-PLB-03-E - Must be submitted for high-rise residential and hotel/motel single dwelling unit hot water system distribution systems to be recognized for compliance	☐	☐
	☐	☒	NRCI-PLB-21-E - Must be HERS verified for central systems in high-rise residential hotel/ motel application	☐	☐
	☐	☒	NRCI-PLB-22-E - Must be HERS verified for single dwelling unit systems in high-rise residential, hotel/motel application	☐	☐
	☐	☒	NRCI-STH-01-E - Must be submitted for solar hot water heating systems	☐	☐
Indoor Lighting	☐	☒	NRCI-LTI-01-E - Must be submitted for all buildings	☐	☐
	☐	☒	NRCI-LTI-02-E - Must be submitted for a lighting control system, or for an Energy Management Control System (EMCS) to be recognized for compliance	☐	☐
	☐	☒	NRCI-LTI-04-E - Must be submitted for two interlocked systems serving an auditorium, a convention center, a conference room, a multipurpose room, or a theater to be recognized for compliance	☐	☐
	☐	☒	NRCI-LTI-05-E - Must be submitted for a Power Adjustment Factor (PAF) to be recognized for compliance	☐	☐
	☐	☒	NRCI-LTI-06-E - Must be submitted for additional wattage installed in a video conferencing studio to be recognized for compliance	☐	☐
Covered Process	☐	☒	NRCI-PRC-01-E - Must be submitted for all Covered Processes	☐	☐

Project Name:	MerrittLandscape Horticulture Complex	NRCC-PRF-01-E	Page 11 of 14
Project Address:	12500 Campus Drive Oakland, CA 94616 Oakland 94616	Calculation Date/Time:	21:44, Thu, Mar 04, 2021
Input File Name:	HEADHOUSE H700.cibd19x		

M. DECLARATION OF REQUIRED CERTIFICATES OF ACCEPTANCE

Table Instructions: Selections shall be made by Documentation Author to indicate which Certificates of Acceptance must be submitted for the features to be recognized for compliance. These documents must be provided to the building inspector during construction and must be completed through an Acceptance Test Technician Certification Provider (ATTCP). For more information visit:https://www.energy.ca.gov/title24/2019standards/2019_compliance_documents/Nonresidential_Documents/NRCA/

Building Component	YES	NO	Form/Title	Field Inspector Pass	Field Inspector Fail
Envelope	☒	☐	NRCA-ENV-02-F - NRFC label verification for fenestration	☐	☐
	☐	☐	NRCA-ENV-03-F - Daylighting Design PAFs	☐	☐
Indoor Lighting	☐	☒	NRCA-LTI-02-A - Occupancy Sensors and Automatic Time Switch Controls	☐	☐
	☐	☒	NRCA-LTI-03-A - Automatic Daylight Controls	☐	☐
	☐	☒	NRCA-LTI-04-A - Demand Responsive Lighting Controls	☐	☐
	☐	☒	NRCA-LTI-05-A - Institutional Tuning Power Adjustment Factor (PAF)	☐	☐
Covered Process	☐	☒	NRCA-PRC-02-F - Kitchen Exhaust	☐	☐
	☐	☒	NRCA-PRC-03-F - Garage Exhaust	☐	☐
	☐	☒	NRCA-PRC-12-F – Elevator Lighting and Ventilation Controls	☐	☐
	☐	☒	NRCA-PRC-13-F –Escalator and Moving Walkways Speed Control	☐	☐
	☐	☒	NRCA-PRC-14-F – Lab Exhaust Ventilation System	☐	☐
	☐	☒	NRCA-PRC-15-F - Fume Hood Automatic Sash Closures System	☐	☐

Project Name:	MerrittLandscape Horticulture Complex	NRCC-PRF-01-E	Page 12 of 14
Project Address:	12500 Campus Drive Oakland, CA 94616 Oakland 94616	Calculation Date/Time:	21:44, Thu, Mar 04, 2021
Input File Name:	HEADHOUSE H700.cibd19x		

M. DECLARATION OF REQUIRED CERTIFICATES OF ACCEPTANCE

Table Instructions: Selections shall be made by Documentation Author to indicate which Certificates of Acceptance must be submitted for the features to be recognized for compliance. These documents must be provided to the building inspector during construction and must be completed through an Acceptance Test Technician Certification Provider (ATTCP). For more information visit:https://www.energy.ca.gov/title24/2019standards/2019_compliance_documents/Nonresidential_Documents/NRCA/

Building Component	YES	NO	Form/Title	Field Inspector Pass	Field Inspector Fail
Mechanical	☒	☐	NRCA-MCH-02-A Outdoor Air must be submitted for all newly installed HVAC units. Note: MCH02-A can be performed in conjunction with MCH-07-A Supply Fan VFD Acceptance (if applicable) since testing activities overlap	☐	☐
	☒	☐	NRCA-MCH-03-A Constant Volume Single Zone HVAC	☐	☐
	☐	☒	NRCA-MCH-04(a)-H Air Distribution Duct Leakage - HERS Verification required	☐	☐
	☐	☐	NRCA-MCH-04(b)-A Air Distribution Duct Leakage - ATT only	☐	☐
	☐	☒	NRCA-MCH-05-A Air Economizer Controls	☐	☐
	☐	☒	NRCA-MCH-06-A Demand Control Ventilation Systems Acceptance must be submitted for all systems required to employ demand controlled ventilation (refer to §120.1(c)3) can vary outside ventilation flow rates based on maintaining interior carbon dioxide (CO2) concentration setpoints	☐	☐
	☐	☒	NRCA-MCH-07-A Supply Fan Variable Flow Controls	☐	☐
	☐	☒	NRCA-MCH-08-A Valve Leakage Test	☐	☐
	☐	☒	NRCA-MCH-09-A Supply Water Temperature Reset Controls	☐	☐
	☐	☒	NRCA-MCH-10-A Hydronic System Variable Flow Controls	☐	☐
	☐	☒	NRCA-MCH-11-A Automatic Demand Shed Controls	☐	☐
	☐	☒	NRCA-MCH-12-A FDD for Packaged Direct Expansion Units	☐	☐
	☐	☒	NRCA-MCH-13-A Automatic FDD for Air Handling Units and Zone Terminal Units Acceptance	☐	☐
	☐	☒	NRCA-MCH-14-A Distributed Energy Storage DX AC Systems Acceptance	☐	☐
	☐	☒	NRCA-MCH-15-A Thermal Energy Storage (TES) System Acceptance	☐	☐
	☐	☒	NRCA-MCH-16-A Supply Air Temperature Reset Controls	☐	☐
	☐	☒	NRCA-MCH-17-A Condenser Water Temperature Reset Controls	☐	☐
	☐	☒	NRCA-MCH-18 Energy Management Control Systems	☐	☐
	☐	☒	NRCA-MCH-19 Occupancy Sensor Controls	☐	☐

Project Name:	MerrittLandscape Horticulture Complex	NRCC-PRF-01-E	Page 13 of 14
Project Address:	12500 Campus Drive Oakland, CA 94616 Oakland 94616	Calculation Date/Time:	21:44, Thu, Mar 04, 2021
Input File Name:	HEADHOUSE H700.cibd19x		

N. DECLARATION OF REQUIRED CERTIFICATES OF VERIFICATION

Table Instructions: Selections shall be made by Documentation Author to indicate which Certificates of Verification must be submitted for the features to be recognized for compliance. These documents bust be retained and provided to the building inspector during construction and can be found online at: https://www.energy.ca.gov/title24/2019standards/2019_compliance_documents/Nonresidential_Documents/NRCV/

Building Component	YES	NO	Form/Title	Field Inspector Pass	Field Inspector Fail
Mechanical	☐	☒	NRCV-MCH-04-H Duct Leakage Test	☐	☐
	☐	☒	NRCV-MCH-24-H Enclosure Air Leakage	☐	☐
	☐	☒	NRCV-MCH-27 Indoor Air Quality & Mechanical Ventilation	☐	☐
	☐	☒	NRCV-MCH-32-H Local Mechanical Exhaust	☐	☐
Plumbing	☐	☒	NRCV-PLB-21-H - HERS verified central systems in high-rise residential, hotel/motel application	☐	☐
	☐	☒	NRCV-PLB-22-H - HERS verified single dwelling unit systems in high-rise residential, hotel/motel application	☐	☐

Project Name:	MerrittLandscape Horticulture Complex	NRCC-PRF-01-E	Page 14 of 14
Project Address:	12500 Campus Drive Oakland, CA 94616 Oakland 94616	Calculation Date/Time:	21:44, Thu, Mar 04, 2021
Input File Name:	HEADHOUSE H700.cibd19x		

DOCUMENTATION AUTHOR'S DECLARATION STATEMENT

I certify that this Certificate of Compliance documentation is accurate and complete.

Documentation Author Name: Tyler Bradshaw	Signature:	
Company: Blue Forest Engineering Inc		
Address: 3622 Kingsley Street	Signature Date: 2021-03-04	
City/State/Zip: Oakland CA 94610	CEA/ HERS Certification Identification (if applicable): M33496	
Phone: 510.924.8224 x101		

RESPONSIBLE PERSON'S DECLARATION STATEMENT

I certify the following under penalty of perjury, under the laws of the State of California:

1. The information provided on this Certificate of Compliance is true and correct.
2. I am eligible under Division 3 of the Business and Professions Code to accept responsibility for the building design or system design identified on this Certificate of Compliance (responsible designer)
3. The energy features and performance specifications, materials, components, and manufactured devices for the building design or system design identified on this Certificate of Compliance conform to the requirements of Title 24, Part 1 and Part 6 of the California Code of Regulations.
4. The building design features or system design features identified on this Certificate of Compliance are consistent with the information provided on other applicable compliance documents, worksheets, calculations, plans and specifications submitted to the enforcement agency for approval with this building permit application.
5. I will ensure that a completed signed copy of this Certificate of Compliance shall be made available with the building permit(s) issued for the building, and made available to the enforcement agency for all applicable inspections. I understand that a completed signed copy of this Certificate of Compliance is required to be included with the documentation the builder provides to the building owner at occupancy.

Responsible Envelope Designer Name: Christopher Noll	Signature:	
Company: Noll & Tam Architects		
Address: 729 Heinz Ave.	Date Signed: 03/08/2021	
City/State/Zip: Berkeley CA 94710		
Phone: 510.542.2200	Title: Principal	License #: C15916
Responsible Lighting Designer Name:	Signature: NOT IN SCOPE	
Company:		
Address:	Date Signed:	
City/State/Zip:		
Phone:	Title:	License #:
Responsible Mechanical Designer Name: Tyler Bradshaw	Signature:	
Company: Blue Forest Engineering		
Address: 3622 Kingsley Street	Date Signed: 3.4.2021	
City/State/Zip: Oakland CA 94610		
Phone: 510.924.8205	Title: Principal	License #: M33496

APPROVALS

IDENTIFICATION STAMP
DIV. OF THE STATE ARCHITECT
APP: 01-119409 INC:
REVIEWED FOR
SS ☑ FLS ☑ ACS ☑
DATE: 03/14/2022

NOLL & TAM ARCHITECTS
729 Heinz Avenue
Berkeley, CA 94710
tel 510.542.2200
fax 510.542.2201

SEAL

REGISTERED PROFESSIONAL ENGINEER
TYLER BRADSHAW
M33496
EXP. 06/30/2022
MECHANICAL
STATE OF CALIFORNIA

BLUE FOREST ENGINEERING
3622 Kingsley Street
Oakland, CA 94610
tel 510.925.8224

PROJECT TITLE

Peralta Community College District
MERRITT COLLEGE NEW LANDSCAPE HORTICULTURE COMPLEX

12500 Campus Drive
Oakland, CA 94619

BID SET

ISSUE DATE 03/03/2022
N&T JOB NUMBER 22003

REVISIONS

	DATE	DESCRIPTION

DRAWN BY S.A. | CHECKED BY T.B.

SHEET TITLE

TITLE 24 COMPLIANCE FORMS

SHEET NUMBER

M8.10

7/13/2020 5:38:18 PM BIM 360://PCCD Merritt Horticulture/Merritt Horticulture_2020.rvt

A. GENERAL INFORMATION

1.	Project Location (city)	Oakland	8.	Standards Version	Compliance2019
2.	CA Zip Code	94616	9.	Compliance Software (version)	EnergyPro 8.2
3.	Climate Zone	3	10.	Weather File	OAKLAND_724930_CZ2010.epw
4.	Total Conditioned Floor Area in Scope	1,818 ft²	11.	Building Orientation (deg)	(N) 45 deg
5.	Total Unconditioned Floor Area	1,326 ft²	12.	Permitted Scope of Work	NewEnvelopeAndMechanical
6.	Total # of Stories (Habitable Above Grade)	1	13	Building Type(s)	Nonresidential
7.	Total # of dwelling units	0	14	Gas Type	NaturalGas

B. PROJECT SUMMARY

Table Instructions: Table B shows which building components are included in the performance calculation. If indicated as not included, the project must show compliance prescriptively if within permit application.

Building Components Complying via Performance				Building Components Complying Prescriptively	
Envelope (see Table G)	☒ Performance ☐ Not Included	Covered Process: Commercial Kitchens	☐ Performance ☒ Not Included	*The following building components are ONLY eligible for prescriptive compliance and should be documented on the NRCC form listed if within the scope of the permit application (i.e. compliance will not be shown on the NRCC-PRF-E).*	
Mechanical (see Table H)	☒ Performance ☐ Not Included	Covered Process: Computer Rooms	☐ Performance ☒ Not Included	Indoor Lighting (Unconditioned)§140.6 Outdoor Lighting §140.7	*NRCC-LTI-E* *NRCC-LTO-E*
Domestic Hot Water (see Table I)	☒ Performance ☐ Not Included	Covered Process: Laboratory Exhaust	☐ Performance ☒ Not Included	Sign Lighting §140.8 Mandatory Measures	*NRCC -LTS-E*
Lighting (Indoor Conditioned, see Table K)	☐ Performance ☒ Not Included			*Electrical power systems, commissioning, solar ready, elevator and escalator requirements are mandatory and should on the NRCC form listed if applicable (i.e. compliance will not be shown on the NRCC-PRF-E.)* Electrical Power Distribution S110.11	*NRCC-ELC-E is required*
Solar Thermal Water Heating (see Table I)	☐ Performance ☒ Not Included			Commissioning S120.8 Solar Ready S110.10	*NRCC-CXR-E is required* *NRCC-SRA-E is required*

C1. COMPLIANCE RESULTS FOR PERFORMANCE COMPONENTS (Annual TDV Energy Use, kBtu/ft ²-yr)

COMPLIES

Energy Component	Standard Design (TDV)	Proposed Design (TDV)	Compliance Margin (TDV)[1]
Space Heating	78.74	48.43	30.31
Space Cooling	12.08	7.64	4.44
Indoor Fans	140.39	33.52	106.87
Heat Rejection	--	--	--
Pumps & Misc.	--	--	--
Domestic Hot Water	17.08	38.32	-21.24
Indoor Lighting	34.52	41.42	-6.90
ENERGY STANDARDS COMPLIANCE TOTAL	**282.81**	**169.33**	**113.48 (40.1%)**

[1] Notes: The number in parenthesis following the Compliance Margin in column 4. represents the Percent Better than Standard.

C2. RESULTS FOR 'ABOVE CODE' QUALIFICATIONS[1]

☐ This project is pursuing CalGreen Tier 1 ☐ This project is pursuing CalGreen Tier 2

Miscellaneous Energy Component	Standard Design (TDV)	Proposed Design (TDV)	Compliance Margin (TDV)[1]
Receptacle	82.27	82.27	--
Process	--	--	--
Other Ltg	18.62	21.75	-3.13
Process Motors	12.98	12.98	--
COMPLIANCE TOTAL PLUS MISCELLANEOUS COMPONENTS	**396.68**	**286.33**	**110.4 (27.8%)**

[1] Notes: This table is used to document compliance with programs OTHER THAN Title 24 Part 6, if applicable.

C3. ENERGY USE SUMMARY

Energy Component	Standard Design Site (MWh)	Proposed Design Site (MWh)	Margin (MWh)	Standard Design Site (MBtu)	Proposed Design Site (MBtu)	Margin (MBtu)
Space Heating	--	3.3	--	73.7	--	--
Space Cooling	0.4	0.3	0.1	--	--	--
Indoor Fans	8.4	2.0	6.4	--	--	--
Heat Rejection	--	--	--	--	--	--
Pumps & Misc.	--	--	--	--	--	--
Domestic Hot Water	0.1	2.6	-2.5	16.4	--	--
Indoor Lighting	2.2	2.6	-0.4	--	--	--
Compliance Total	**11.1**	**10.8**	**0.3**	**90.1**	**0.0**	**--**
Receptacle	5.3	5.3	0.0	--	--	--
Process	--	--	--	--	--	--
Other Ltg	1.2	1.4	-0.2	--	--	--
Process Motors	0.8	0.8	0.0	--	--	--
TOTAL	**18.4**	**18.3**	**0.1**	**90.1**	**0.0**	**--**

C4. UNMET LOAD HOURS

This Section Does Not Apply

D. EXCEPTIONAL CONDITIONS

This project includes partial performance compliance scope options. The building must show compliance with all other applicable compliance scope options (performance or prescriptively) before occupying.

This project uses the Simplified Geometry Performance Modeling Approach which is not capable of modeling daylighting controls and assumes the prescriptive Secondary Daylit Control requirements are met. PRESCRIPTIVE COMPLIANCE documentation (form NRCC-LTI-02-E) for the requirements of section 140.6(d) Automatic Daylighting Controls in Secondary Daylit Zones is required.

E. HERS VERIFICATION

This Section Does Not Apply

F. ADDITIONAL REMARKS

This Section Does Not Apply

G1. ENVELOPE GENERAL INFORMATION (conditioned spaces only)

Opaque Surfaces & Orientation	Total Gross Surface Area (ft²)	Total Fenestration Area (ft²)	Window to Wall Ratio (%)
North-Facing[1]	1,162 ft²	253 ft²	21.8%
East-Facing[2]	0 ft²	0 ft²	00.0%
South-Facing[3]	352 ft²	112 ft²	31.8%
West-Facing[4]	704 ft²	112 ft²	15.9%
Total	**2,218 ft²**	**477 ft²**	**21.5%**
Roof	1,818 ft²	0 ft²	00.0%

Notes:
[1] North-Facing is oriented to within 45 degrees of true north, including 45°00'00" east of north (NE), but excluding 45°00'00" west of north (NW).
[2] East-Facing is oriented to within 45 degrees of true east, including 45°00'00" south of east (SE), but excluding 45°00'00" north of east (NE).
[3] South-Facing is oriented to within 45 degrees of true south, including 45°00'00" west of south (SW), but excluding 45°00'00" east of south (SE).
[4] West-Facing is oriented to within 45 degrees of true west, including 45°00'00" north of due west (NW), but excluding 45°00'00" south of west (SW).

G2. CRRC ROOFING PRODUCT SUMMARY

This Section Does Not Apply

G3. OPAQUE SURFACE ASSEMBLY SUMMARY

1 Surface Name	2 Surface Type	3 Area (ft²)	4 Framing Type	5 Cavity R-Value	6 Continuous R-Value	7 U-Factor / F-Factor / C-Factor	8 Status[1]	9 Description of Assembly Layers
Peralta - A-2 / 8-T Wall9	ExteriorWall	1821	Wood	21	NA	U-Factor: 0.057	N	Stucco - 7/8 in. Vapor permeable felt - 1/8 in. Plywood - 1/2 in. Wood framed wall, 16in. OC, 7.25in., R-21 Plywood - 1/2 in. Gypsum Board - 1/2 in.

G3. OPAQUE SURFACE ASSEMBLY SUMMARY

1 Surface Name	2 Surface Type	3 Area (ft²)	4 Framing Type	5 Cavity R-Value	6 Continuous R-Value	7 U-Factor / F-Factor / C-Factor	8 Status[1]	9 Description of Assembly Layers
Peralta - B-1 / 8-T Wall15	ExteriorWall	800	Wood	21	NA	U-Factor: 0.059	N	Stucco - 7/8 in. Vapor permeable felt - 1/8 in. Plywood - 1/2 in. Wood framed wall, 16in. OC, 7.25in., R-21 Gypsum Board - 1/2 in.
Peralta - A-1 / 8-T Wall21	ExteriorWall	2667	Wood	21	NA	U-Factor: 0.059	N	Stucco - 7/8 in. Vapor permeable felt - 1/8 in. Plywood - 1/2 in. Wood framed wall, 16in. OC, 7.25in., R-21 Gypsum Board - 1/2 in.
Slab On Grade29	UndergroundFloor	3144	NA	0	NA	F-Factor: 0.730	N	Slab Type = UnheatedSlabOnGrade Insulation Orientation = None Insulation R-Value = R0
Peralta R1 R-30 Roof31	Roof	3144	Wood	30	NA	U-Factor: 0.034	N	Metal Standing Seam - 1/16 in. Vapor permeable felt - 1/8 in. Gypsum Board - 1/2 in. Wood framed roof, 48in. OC, 7.25in., R-30 Plywood - 5/8 in.
Peralta - J-1 / 8-A Wall38	InteriorWall	662	Wood	19	NA	U-Factor: 0.060	N	Gypsum Board - 3/4 in. Wood framed wall, 16in. OC, 7.25in., R-19 Gypsum Board - 3/4 in.
Peralta - J-1 / 4-A Wall66	InteriorWall	506	Wood	15	NA	U-Factor: 0.087	N	Gypsum Board - 1/2 in. Wood framed wall, 16in. OC, 3.5in., R-15 Gypsum Board - 1/2 in.
Peralta - M-1 / 8-A Wall96	InteriorWall	282	Wood	19	NA	U-Factor: 0.059	N	Gypsum Board - 3/4 in. Wood framed wall, 16in. OC, 7.25in., R-19 Plywood - 3/4 in.

G3. OPAQUE SURFACE ASSEMBLY SUMMARY

1 Surface Name	2 Surface Type	3 Area (ft²)	4 Framing Type	5 Cavity R-Value	6 Continuous R-Value	7 U-Factor / F-Factor / C-Factor	8 Status[1]	9 Description of Assembly Layers
Peralta - J-2 / 8-A Wall98	InteriorWall	290	Wood	19	NA	U-Factor: 0.057	N	Gypsum Board - 3/4 in. Wood framed wall, 16in. OC, 7.25in., R-19 Plywood - 1/2 in. Gypsum Board - 3/4 in.
Peralta - J-1 / 4_ Wall109	InteriorWall	119	NA	0	NA	U-Factor: 0.314	N	Gypsum Board - 1/2 in. Air - Cavity - Wall Roof Ceiling - 4 in. or more Gypsum Board - 1/2 in.

[1] Status: N - New, A – Altered, E – Existing

G4. OPAQUE DOOR SUMMARY

1 Assembly Name	2 Overall U-factor	3 Status[1]
Peralta - W 009 - Door19	0.700	N
Peralta - W 001 - Door23	0.700	N
Peralta - W 004 - Door25	0.700	N
Peralta - W 020 - Door40	0.700	N
Peralta - W 014 - Door51	0.700	N
Peralta - W 013 - Door55	0.700	N
Peralta - W 022 - Door68	0.700	N
Peralta - W 021 - Door75	0.700	N
Peralta - W 005 - Door86	0.700	N
Peralta - W 008 - Door89	0.700	N
Peralta - W 007 - Door102	0.700	N
Peralta - W 006 - Door114	0.700	N

G5. FENESTRATION ASSEMBLY SUMMARY

1 Fenestration Assembly Name / Tag or I.D.	2 Fenestration Type / Product Type / Frame Type	3 Certification Method[1]	4 Assembly Method	5 Area ft²	6 Overall U-factor	7 Overall SHGC	8 Overall VT	9 Status[2]
Peralta - W 002_Window-Operable	VerticalFenestration OperableWindow N/A	NFRC Rated	Manufactured	31	0.45	0.19	0.32	N
Peralta - W 002_Window-Fixed	VerticalFenestration FixedWindow N/A	NFRC Rated	Manufactured	42	0.45	0.19	0.32	N
Peralta - W 003_Window-Operable	VerticalFenestration OperableWindow N/A	NFRC Rated	Manufactured	31	0.45	0.19	0.32	N
Peralta - W 003_Window-Fixed	VerticalFenestration FixedWindow N/A	NFRC Rated	Manufactured	42	0.45	0.19	0.32	N
Peralta - W 010_Storefront door	VerticalFenestration GlazedDoor N/A	NFRC Rated	Manufactured	56	0.45	0.19	0.32	N
Peralta - W 011_Storefront door	VerticalFenestration GlazedDoor N/A	NFRC Rated	Manufactured	56	0.45	0.19	0.32	N
Peralta - W 002_Storefront door	VerticalFenestration GlazedDoor N/A	NFRC Rated	Manufactured	56	0.45	0.19	0.32	N
Peralta - W 003_Storefront door	VerticalFenestration GlazedDoor N/A	NFRC Rated	Manufactured	56	0.45	0.19	0.32	N
Peralta - W 005_Window-Operable	VerticalFenestration OperableWindow N/A	NFRC Rated	Manufactured	31	0.45	0.19	0.32	N
Peralta - W 005_Window-Fixed	VerticalFenestration FixedWindow N/A	NFRC Rated	SiteBuilt	23	0.45	0.19	0.32	N
Peralta - W 006_Window-Operable	VerticalFenestration OperableWindow N/A	NFRC Rated	Manufactured	31	0.45	0.19	0.32	N

G5. FENESTRATION ASSEMBLY SUMMARY

1 Fenestration Assembly Name / Tag or I.D.	2 Fenestration Type / Product Type / Frame Type	3 Certification Method[1]	4 Assembly Method	5 Area ft²	6 Overall U-factor	7 Overall SHGC	8 Overall VT	9 Status[2]
Peralta - W 006_Window-Fixed	VerticalFenestration FixedWindow N/A	NFRC Rated	SiteBuilt	23	0.35	0.19	0.32	N
Peralta - W 001_Window-Operable	VerticalFenestration OperableWindow N/A	NFRC Rated	Manufactured	31	0.45	0.19	0.32	N
Peralta - W 001_Window -Fixed	VerticalFenestration FixedWindow N/A	NFRC Rated	Manufactured	42	0.45	0.19	0.32	N
Peralta - W 015_Storefront door	VerticalFenestration GlazedDoor N/A	NFRC Rated	Manufactured	56	0.45	0.19	0.32	N
Peralta - W 012_Storefront door	VerticalFenestration CurtainWall N/A	NFRC Rated	Manufactured	56	0.45	0.19	0.32	N
Peralta - W 004_Window-Operable	VerticalFenestration OperableWindow N/A	NFRC Rated	Manufactured	31	0.45	0.19	0.32	N
Peralta - W 004_Window-Fixed	VerticalFenestration FixedWindow N/A	NFRC Rated	Manufactured	23	0.45	0.19	0.32	N
Peralta - W 007_Window-Operable	VerticalFenestration OperableWindow N/A	NFRC Rated	Manufactured	31	0.45	0.19	0.32	N
Peralta - W 007_Window -Fixed	VerticalFenestration FixedWindow N/A	NFRC Rated	Manufactured	23	0.45	0.19	0.32	N
Peralta - W 008_Window	VerticalFenestration OperableWindow N/A	NFRC Rated	Manufactured	12	0.45	0.19	0.32	N

[1] Newly installed fenestration shall have a certified NFRC Label Certificate or use the CEC default tables found in Table 110.6-A and Table 110.6-B. Center of Glass (COG) values are for the glass-only, determined by the manufacturer, and are shown for ease of verification. Site-built fenestration values are calculated per Nonresidential Appendix NA6 and are used in the analysis.
[2] Status: N - New, A – Altered, E – Existing

G6. OVERHANG DETAILS

This Section Does Not Apply

G7. FIN DETAILS

This Section Does Not Apply

H. HVAC SYSTEM SUMMARY

H1. DRY SYSTEM EQUIPMENT (furnaces, air handling units, heat pumps, VRF, economizers etc.)

Dry System Equipment [1] (Fan & Economizer info included below in Table N)

1 Equipment Name	2 Equipment Type	3 Qty	4 Heating: Total Heating Output (kBtu/h)	5 Heating: Supp Heat Source (Y/N)	6 Heating: Supp Heat Output (kBtuh)	7 Heating: Efficiency	8 Cooling: Total Cooling Output (kBtu/h)	9 Cooling: Efficiency	10 Status[2]
AC-H-1 / ACCU-4	SZHP (Split3Phase)	1	25	No	0	HSPF-10.00	21	SEER-18.60 / EER-12.50	N

[2] Status: N - New, A – Altered, E – Existing

H2. FAN SYSTEMS SUMMARY[1]

1 Name or Item Tag	2 System Type: packaged, DOAS, etc.	3 Design OA	4 Supply Fan: CFM	5 Supply Fan: BHP	6 Supply Fan: Watts	7 Supply Fan: Control	8 Return Fan: CFM	9 Return Fan: BHP	10 Return Fan: Watts	11 Return Fan: Control	12 Economizer Type (if present)	13 Status[2]
AC-H-1 / ACCU-4	SZHP	555	798	0.264	229.9	ConstantVolume	NA	NA	NA	NA	NoEconomizer	N

[2] Status: N - New, A – Altered, E – Existing

H3. EXHAUST FAN SUMMARY

1 System ID	2 Zone Name	3 Qty	4 CFM	5 Motor BHP	6 Motor Watts	7 Total Static Pressure (in H20)
WORKSHOP (H800)3	1-WORKSHOP (H800)	1	1,000	0.250	218.0	1.03
STORAGE (H803)61	3-STORAGE (H803)	1	100	0.057	50.0	2.36

7/13/2020 5:38:18 PM BIM 360://PCCD Merritt Horticulture/Merritt Horticulture_2020.rvt

APPROVALS

IDENTIFICATION STAMP
DIV. OF THE STATE ARCHITECT
APP: 01-119409 INC:
REVIEWED FOR
SS ☑ FLS ☑ ACS ☑
DATE: 03/14/2022

NOLL & TAM ARCHITECTS
729 Heinz Avenue
Berkeley, CA 94710
tel 510.542.2200
fax 510.542.2201

SEAL

REGISTERED PROFESSIONAL ENGINEER TYLER BRADSHAW M33496 EXP. 06/30/2022 MECHANICAL STATE OF CALIFORNIA

BLUE FOREST ENGINEERING
3622 Kingsley Street
Oakland, CA 94610
tel 510.925.8224

PROJECT TITLE

Peralta Community College District
MERRITT COLLEGE NEW LANDSCAPE HORTICULTURE COMPLEX

12500 Campus Drive
Oakland, CA 94619

BID SET

ISSUE DATE 03/03/2022
N&T JOB NUMBER 22003

REVISIONS

#	DATE	DESCRIPTION

DRAWN BY S.A. CHECKED BY T.B.

SHEET TITLE

TITLE 24 COMPLIANCE FORMS

SHEET NUMBER

M8.11

H3. EXHAUST FAN SUMMARY

1	2	3	4	5	6	7
System ID	Zone Name	Qty	CFM	Motor BHP	Motor Watts	Total Static Pressure (in H20)
STORAGE (H802)?0	4-STORAGE (H802)	1	100	0.057	50.0	2.36
RESTROOMS (H804)?9	5-RESTROOMS (H804)	1	320	0.089	78.0	1.15

H4. Wet System Equipment (boilers, chillers, cooling towers, etc.)

1	2	3	4	5	6	7	8	9	10	11	12
Name or Item Tag	Equipment Type	Qty	Vol (gal)	Rated Capacity (kBtu/h)	Efficiency	Standby Loss	Pumps				Status[1]
							Qty	GPM	HP	VSD (Y/N)	

[1] Status: N - New, A – Altered, E – Existing

H5. SYSTEM SPECIAL FEATURES

1	2	3	4	5	6
System Name	Optimum Start	Window Interlocks per §140.4(n)	Evaporative Cooling	Heat Recovery	Other Controls
AC-H-1 / ACCU-4	No Optimum Start	No	No Evaporative Cooler	No Heat Recovery	No DCV Controls, No DDC No Economizer No Supply Air Temp. Control
Undefined Plant1 - SHW	NA	NA	NA	NA	Fixed Temperature Control, No DDC

Notes: This table includes controls related to the performance path only. For projects using the prescriptive path, mandatory and prescriptive controls requirements are documented on the NRCC-MCH-E.

H6. MECHANICAL VENTILATION

1	2	3	4	5	6	7	8	9
Zone Name	Mechanical Ventilation							DCV or Occupant Sensor Controls, or Both
	Ventilation Function	# hotel rooms	# of people	# of bedrooms	Supply OA CFM	Exhaust CFM	Conditioned Area (sf)	
1-WORKSHOP (H800)	Education - Wood shop	0	37.00	0	555	1000	1818	NA

Multifamily or Hotel/Motel Occupancy? (if "Yes", see DOMESTIC/SERVICE HOT WATER SYSTEM SUMMARY)	No
Does the Project include Zonal Systems?	No

H7. ZONAL SYSTEM AND TERMINAL UNIT SUMMARY

1	2	3	4	5	6	7	8	9	10	11	12
System ID	Zone Name	System Type	Rated Capacity (kBtuh)		Airflow (cfm)			Fan			
			Heating	Cooling	Design	Min.	Min. Ratio	BHP	Watts	Cycles	ECM Motor
1-WORKSHOP (H800)-Trm	1-WORKSHOP (H800)	Uncontrolled	NA	NA	798	NA	0.00	NA	NA	NA	☐

H8. EVAPORATIVE COOLER SUMMARY

This Section Does Not Apply

I. DOMESTIC/SERVICE HOT WATER SYSTEM SUMMARY

I1. DHW EQUIPMENT SUMMARY

1	2	3	4	5	6	7	8	9	10	11
DHW Name	Heater Element Type	Tank Type	Qty	Tank Vol (gal)	Rated Input (kBtu/h)	Efficiency	Tank Insulation R-value (Int/Ext)	Standby Loss Fraction	Heat Pump Type	Tank Location or Ambient Condition
Instantaneous Electric2	Electricity	Instantaneous	1	1.00	56.0 (kW)	UEF: 0.98	NA	SBLF: NA	NA	NA

I2. MULTI-FAMILY CENTRAL DHW SYSTEM DETAILS

This Section Does Not Apply

I3. SOLAR HOT WATER HEATING SUMMARY

This Section Does Not Apply

J. COVERED PROCESS SUMMARY

This Section Does Not Apply

K. INDOOR LIGHTING SUMMARY

This Section Does Not Apply

L. DECLARATION OF REQUIRED CERTIFICATES OF INSTALLATION

Table Instructions: Selections shall be made by Documentation Author to indicate which Certificates of Installation must be submitted for the features to be recognized for compliance. These documents bust be retained and provided to the building inspector during construction and can be found online at: https://www.energy.ca.gov/title24/2019standards/2019_compliance_documents/Nonresidential_Documents/NRCI/

Building Component	YES	NO	Form/Title	Field Inspector Pass	Field Inspector Fail
Envelope	☒	☐	NRCI-ENV-01-E - Must be submitted for all buildings	☐	☐
Mechanical	☒	☐	NRCI-MCH-01-E - Must be submitted for all buildings	☐	☐
Plumbing	☒	☐	NRCI-PLB-01-E - Must be submitted for all buildings	☐	☐
	☐	☒	NRCI-PLB-02-E - Must be submitted for high-rise residential and hotel/ motel central hot water distribution systems to be recognized for compliance	☐	☐
	☐	☒	NRCI-PLB-03-E - Must be submitted for high-rise residential and hotel/motel single dwelling unit hot water system distribution systems to be recognized for compliance	☐	☐
	☐	☒	NRCI-PLB-21-E - Must be HERS verified for central systems in high-rise residential hotel/ motel application	☐	☐
	☐	☒	NRCI-PLB-22-E - Must be HERS verified for single dwelling unit systems in high-rise residential, hotel/motel application	☐	☐
	☐	☒	NRCI-STH-01-E - Must be submitted for solar hot water heating systems	☐	☐
Indoor Lighting	☐	☒	NRCI-LTI-01-E - Must be submitted for all buildings	☐	☐
	☐	☒	NRCI-LTI-02-E - Must be submitted for a lighting control system, or for an Energy Management Control System (EMCS) to be recognized for compliance	☐	☐
	☐	☒	NRCI-LTI-04-E - Must be submitted for two interlocked systems serving an auditorium, a convention center, a conference room, a multipurpose room, or a theater to be recognized for compliance	☐	☐
	☐	☒	NRCI-LTI-05-E - Must be submitted for a Power Adjustment Factor (PAF) to be recognized for compliance	☐	☐
	☐	☒	NRCI-LTI-06-E - Must be submitted for additional wattage installed in a video conferencing studio to be recognized for compliance	☐	☐
Covered Process	☐	☒	NRCI-PRC-01-E - Must be submitted for all Covered Processes	☐	☐

M. DECLARATION OF REQUIRED CERTIFICATES OF ACCEPTANCE

Table Instructions: Selections shall be made by Documentation Author to indicate which Certificates of Acceptance must be submitted for the features to be recognized for compliance. These documents must be provided to the building inspector during construction and must be completed through an Acceptance Test Technician Certification Provider (ATTCP). For more information visit:https://www.energy.ca.gov/title24/2019standards/2019_compliance_documents/Nonresidential_Documents/NRCA/

Building Component	YES	NO	Form/Title	Field Inspector Pass	Field Inspector Fail
Envelope	☒	☐	NRCA-ENV-02-F - NRFC label verification for fenestration	☐	☐
	☐	☐	NRCA-ENV-03-F - Daylighting Design PAFs	☐	☐
Indoor Lighting	☐	☒	NRCA-LTI-02-A - Occupancy Sensors and Automatic Time Switch Controls	☐	☐
	☐	☒	NRCA-LTI-03-A - Automatic Daylight Controls	☐	☐
	☐	☒	NRCA-LTI-04-A - Demand Responsive Lighting Controls	☐	☐
	☐	☒	NRCA-LTI-05-A - Institutional Tuning Power Adjustment Factor (PAF)	☐	☐
Covered Process	☐	☒	NRCA-PRC-02-F - Kitchen Exhaust	☐	☐
	☐	☒	NRCA-PRC-03-F - Garage Exhaust	☐	☐
	☐	☒	NRCA-PRC-12-F – Elevator Lighting and Ventilation Controls	☐	☐
	☐	☒	NRCA-PRC-13-F –Escalator and Moving Walkways Speed Control	☐	☐
	☐	☒	NRCA-PRC-14-F – Lab Exhaust Ventilation System	☐	☐
	☐	☒	NRCA-PRC-15-F - Fume Hood Automatic Sash Closures System	☐	☐

M. DECLARATION OF REQUIRED CERTIFICATES OF ACCEPTANCE

Table Instructions: Selections shall be made by Documentation Author to indicate which Certificates of Acceptance must be submitted for the features to be recognized for compliance. These documents must be provided to the building inspector during construction and must be completed through an Acceptance Test Technician Certification Provider (ATTCP). For more information visit:https://www.energy.ca.gov/title24/2019standards/2019_compliance_documents/Nonresidential_Documents/NRCA/

Building Component	YES	NO	Form/Title	Field Inspector Pass	Field Inspector Fail
Mechanical	☒	☐	NRCA-MCH-02-A Outdoor Air must be submitted for all newly installed HVAC units. Note: MCH02-A can be performed in conjunction with MCH-07-A Supply Fan VFD Acceptance (if applicable) since testing activities overlap	☐	☐
	☒	☐	NRCA-MCH-03-A Constant Volume Single Zone HVAC	☐	☐
	☐	☒	NRCA-MCH-04(a)-H Air Distribution Duct Leakage - HERS Verification required	☐	☐
	☐	☐	NRCA-MCH-04(b)-A Air Distribution Duct Leakage - ATT only	☐	☐
	☐	☒	NRCA-MCH-05-A Air Economizer Controls	☐	☐
	☐	☒	NRCA-MCH-06-A Demand Control Ventilation Systems Acceptance must be submitted for all systems required to employ demand controlled ventilation (refer to §120.1(c)3) can vary outside ventilation flow rates based on maintaining interior carbon dioxide (CO2) concentration setpoints	☐	☐
	☐	☒	NRCA-MCH-07-A Supply Fan Variable Flow Controls	☐	☐
	☐	☒	NRCA-MCH-08-A Valve Leakage Test	☐	☐
	☐	☒	NRCA-MCH-09-A Supply Water Temperature Reset Controls	☐	☐
	☐	☒	NRCA-MCH-10-A Hydronic System Variable Flow Controls	☐	☐
	☐	☒	NRCA-MCH-11-A Automatic Demand Shed Controls	☐	☐
	☐	☒	NRCA-MCH-12-A FDD for Packaged Direct Expansion Units	☐	☐
	☐	☒	NRCA-MCH-13-A Automatic FDD for Air Handling Units and Zone Terminal Units Acceptance	☐	☐
	☐	☒	NRCA-MCH-14-A Distributed Energy Storage DX AC Systems Acceptance	☐	☐
	☐	☒	NRCA-MCH-15-A Thermal Energy Storage (TES) System Acceptance	☐	☐
	☐	☒	NRCA-MCH-16-A Supply Air Temperature Reset Controls	☐	☐
	☐	☒	NRCA-MCH-17-A Condenser Water Temperature Reset Controls	☐	☐
	☐	☒	NRCA-MCH-18 Energy Management Control Systems	☐	☐
	☐	☒	NRCA-MCH-19 Occupancy Sensor Controls	☐	☐

N. DECLARATION OF REQUIRED CERTIFICATES OF VERIFICATION

Table Instructions: Selections shall be made by Documentation Author to indicate which Certificates of Verification must be submitted for the features to be recognized for compliance. These documents bust be retained and provided to the building inspector during construction and can be found online at: https://www.energy.ca.gov/title24/2019standards/2019_compliance_documents/Nonresidential_Documents/NRCV/

Building Component	YES	NO	Form/Title	Field Inspector Pass	Field Inspector Fail
Mechanical	☐	☒	NRCV-MCH-04-H Duct Leakage Test	☐	☐
	☐	☒	NRCV-MCH-24-H Enclosure Air Leakage	☐	☐
	☐	☒	NRCV-MCH-27 Indoor Air Quality & Mechanical Ventilation	☐	☐
	☐	☒	NRCV-MCH-32-H Local Mechanical Exhaust	☐	☐
Plumbing	☐	☒	NRCV-PLB-21-H - HERS verified central systems in high-rise residential, hotel/motel application	☐	☐
	☐	☒	NRCV-PLB-22-H - HERS verified single dwelling unit systems in high-rise residential, hotel/motel application	☐	☐

DOCUMENTATION AUTHOR'S DECLARATION STATEMENT

I certify that this Certificate of Compliance documentation is accurate and complete.

Documentation Author Name: Tyler Bradshaw	Signature:
Company: Blue Forest Engineering Inc	
Address: 3622 Kingsley Street	Signature Date: 2021-03-04
City/State/Zip: Oakland CA 94610	CEA/ HERS Certification Identification (if applicable): M33496
Phone: 510.924.8224 x101	

RESPONSIBLE PERSON'S DECLARATION STATEMENT

I certify the following under penalty of perjury, under the laws of the State of California:

1. The information provided on this Certificate of Compliance is true and correct.
2. I am eligible under Division 3 of the Business and Professions Code to accept responsibility for the building design or system design identified on this Certificate of Compliance (responsible designer)
3. The energy features and performance specifications, materials, components, and manufactured devices for the building design or system design identified on this Certificate of Compliance conform to the requirements of Title 24, Part 1 and Part 6 of the California Code of Regulations.
4. The building design features or system design features identified on this Certificate of Compliance are consistent with the information provided on other applicable compliance documents, worksheets, calculations, plans and specifications submitted to the enforcement agency for approval with this building permit application.
5. I will ensure that a completed signed copy of this Certificate of Compliance shall be made available with the building permit(s) issued for the building, and made available to the enforcement agency for all applicable inspections. I understand that a completed signed copy of this Certificate of Compliance is required to be included with the documentation the builder provides to the building owner at occupancy.

Responsible Envelope Designer Name: Christopher Noll	Signature:	
Company: Noll & Tam Architects		
Address: 729 Heinz Ave.	Date Signed: 03/08/2021	
City/State/Zip: Berkeley CA 94710		
Phone: 510.542.2200	Title: Principal	License #: C15916
Responsible Lighting Designer Name:	Signature: NOT IN SCOPE	
Company:		
Address:	Date Signed:	
City/State/Zip:		
Phone:	Title:	License #:
Responsible Mechanical Designer Name: Tyler Bradshaw	Signature:	
Company: Blue Forest Engineering		
Address: 3622 Kingsley Street	Date Signed: 3.4.2021	
City/State/Zip: Oakland CA 94610		
Phone: 510.924.8205	Title: Principal	License #: M33496

APPROVALS

IDENTIFICATION STAMP
DIV. OF THE STATE ARCHITECT
APP: 01-119409 INC:
REVIEWED FOR
SS ☑ FLS ☑ ACS ☑
DATE: 03/14/2022

NOLL & TAM ARCHITECTS
729 Heinz Avenue
Berkeley, CA 94710
tel 510.542.2200
fax 510.542.2201

SEAL

REGISTERED PROFESSIONAL ENGINEER
TYLER BRADSHAW
M33496
EXP. 08/30/2022
MECHANICAL
STATE OF CALIFORNIA

BLUE FOREST ENGINEERING
3622 Kingsley Street
Oakland, CA 94610
tel 510.925.8224

PROJECT TITLE

Peralta Community College District
MERRITT COLLEGE NEW LANDSCAPE HORTICULTURE COMPLEX

12500 Campus Drive
Oakland, CA 94619

BID SET

ISSUE DATE 03/03/2022

N&T JOB NUMBER 22003

REVISIONS

#	DATE	DESCRIPTION

DRAWN BY S.A. CHECKED BY T.B.

SHEET TITLE

TITLE 24 COMPLIANCE FORMS

SHEET NUMBER

M8.12

7/13/2020 5:38:18 PM BIM 360://PCCD Merritt Horticulture/Merritt Horticulture_2020.rvt

SYMBOL LIST (NOT ALL SYMBOLS USED)

LINE TYPES

- EXISTING EQUIPMENT/ RACEWAYS TO REMAIN, (E)
- EXISTING EQUIPMENT/ RACEWAYS TO BE REMOVED, (D)
- NEW EQUIPMENT / RACEWAYS

SINGLE LINE DIAGRAM

- TRANSFORMER
- CIRCUIT BREAKER
- DRAW OUT CIRCUIT BREAKER
- MEDIUM VOLTAGE VACUUM CIRCUIT BREAKER
- MOTOR STARTER WITH OVERCURRENT PROTECTION 3 POLE UNLESS OTHERWISE NOTED
- NON-FUSED DISCONNECT SWITCH, 30 AMP, 3P UNLESS NOTED OTHERWISE.
- FUSED DISCONNECT SWITCH, 3 POLE UNLESS NOTED OTHERWISE.
- CIRCUIT BREAKER ACCESORY, 'S' INDICATES SHUNT TRIP, 'G' INDICATES GROUND FAULT RELAY
- UTILITY METER WITH CT/PT
- KWH SUB METER WITH CT/PT
- MULTIPOINT KWH SUB METER IN SEPARATE ENCLOSURE, CT/PTS AS SHOWN

LIGHTING CONTROLS

- CEILING MOUNTED OCCUPANCY SENSOR
  - P = PASSIVE INFRARED
  - D = DUAL TECHNOLOGY
  - U = ULTRASONIC, 360 DEG RANGE
  - H = ULTRASONIC, HALLWAY PATTERN
- PHOTO ELECTRIC SWITCH
  - D = CONTINUOUS DIMMING PHOTOCELL
  - S = SWITCHED PHOTOCELL
- SWITCH
  - 2 = DOUBLE POLE SWITCH
  - 3 = THREE-WAY SWITCH
  - 4 = FOUR-WAY SWITCH
  - a THRU z (LOWERCASE) = LUMINAIRE CONTROL DESIGNATION
  - M = MANUAL MOTOR STARTER WITH THERMAL OVERLOAD
  - K = KEY OPERATED SWITCH
  - T = INTERVAL TIMER
  - W = WEATHER PROOF SWITCH
  - WL = WET LOCATION
  - V = LOW VOLTAGE SWITCH
  - D = DIMMING SWITCH
- WALL MOUNTED OCCUPANCY SENSOR
  - P = PASSIVE INFRARED
  - D = DUAL TECHNOLOGY WALL MOUNTED
- OCCUPANCY SENSOR/SWITCH (AUTO ON – AUTO OFF)
  - S = PASSIVE INFRARED WITH INTEGRAL "OFF" SWITCH
  - T = DUAL RELAY PASSIVE INFRARED WITH TWO INTEGRAL "OFF" SWITCHES
  - D = PASSIVE INFRARED WITH INTEGRAL DIMMER TO OFF.
- RESIDENTIAL VACANCY SENSOR (MANUAL ON – AUTO OFF)

LUMINAIRES

- RECESSED LUMINAIRE. SEE PLANS FOR DIMENSIONS.
- RECESSED DOWNLIGHT LUMINAIRE.
- SURFACE MOUNTED 2'X4' LUMINAIRE
- SURFACE OR PENDANT MOUNTED 1'X4' LUMINAIRE
- SURFACE OR PENDANT 1'X8' LUMINAIRE
- SURFACE OR PENDANT 6"X8' LUMINAIRE
- SURFACE OR PENDANT STRIP LUMINAIRE
- LINEAR WALL MOUNT LUMINAIRE
- WALL SCONCE
- AREA LUMINAIRE MOUNTED WITH POLE AND CONCRETE BASE
- BOLLARD OR POST TOP LUMINAIRE, SEE LUMINAIRE SCHEDULE
- FLOOD LIGHT
- FLUSH IN GRADE EXTERIOR LUMINAIRE
- SURFACE OR PENDANT DOWNLIGHT
- EMERGENCY LIGHTING, SEE DESCRIPTIONS ABOVE
- EMERGENCY LIGHTING WALL PACK
- LUMINAIRE NOMENCLATURE
  - 'A' = LUMINAIRE TYPE, SEE LUMINAIRE SCHEDULE
  - 1 = CIRCUIT NUMBER
  - a = LOWERCASE LETTER INDICATES MANUAL OR OCCUPANCY SWITCH LEG
  - zA. = INDICATES AUTOMATED DAYLIGHT CONTROL ZONE

DEVICES

FLOOR*	WALL	CEILING	
			SIMPLEX OR SPECIAL RECEPTACLE TYPE, SEE PLANS FOR NEMA TYPE
			DUPLEX RECEPTACLE, 5–20R U.O.N.
			DOUBLE DUPLEX (QUAD) RECEPTACLE, 5–20R U.O.N.
			CONTROLLED DUPLEX RECEPTACLE, 5–20R U.O.N.
			CONTROLLED DOUBLE DUPLEX (QUAD) RECEPTACLE, 5–20R U.O.N.

*PROVIDE COMBINED POWER/DATA FLOOR BOXES IF SHOWN ON PLANS
PT = POKE THRU, FB = FLOOR BOX, PD = PEDESTAL, SEE FLOORBOX SCHEDULE

LTR	ABOVE COUNTER OR AT DEFINED HEIGHT. REFER TO ARCHITECT
A	GROUND FAULT CIRCUIT INTERRUPTER
G	WEATHERPROOF IN-USE COVER WITH GFI RECEPTACLE
WP	RECEPTACLE DEVICE WITH (2) USB PORTS
U	SPLIT WIRED RECEPTACLE
S	DEDICATED CIRCUIT
Z	DEVICE CIRCUITING NOMENCLATURE A = PANEL NAME, IF SHOWN 1. = CIRCUIT NUMBER
A-1.	

FLOOR*	WALL	CEILING	
			4-IN SQUARE JUNCTION BOX
			PULL BOX, SIZED PER CODE
			POWER AND DATA JUNCTION BOXES WITH WHIPS FOR FURNITURE CONNECTION. *PROVIDE POWER POLE WITH CEILING JUNCTION BOX

DUAL COMPARTMENT SURFACE MOUNT RACEWAY WITH PREWIRED RECEPTACLES. REFER TO TECHNOLOGY DRAWINGS FOR ADDITIONAL DEVICE REQUIREMENTS

UL 924 EMERGENCY LIGHTING RELAY, FIELD COORDINATE LOCATION

GROUND ROD IN WELL, REFER TO DETAILS

GROUND BUS

EQUIPMENT

RECESSED	SURFACE	
		DISCONNECT SWITCH, 30 AMP MINIMUM UNLESS NOTED OTHERWISE.
		FUSED DISCONNECT SWITCH, 30 AMP MINIMUM UNLESS NOTED OTHERWISE.
		COMBINATION DISCONNECT SWITCH MOTOR STARTER
		MOTOR, 5 HP INDICATED.
		TRANSFORMER
		RELAY OR EQUIPMENT CABINET AS INDICATED ON PLANS.
		LIGHTING OR POWER PANEL BOARD.
		FREE STANDING SWITCHBOARD, MOTOR CONTROL CENTER OR DISTRIBUTION BOARD.
		FIRE TREATED PLYWOOD BACKBOARD 3/4" X 96" HIGH X LENGTH AS INDICATED.
		CONCRETE PULL BOX

TAGS

- ELECTRICAL EQUIPMENT DESIGNATION DESIGNED "EQ01"
- SHEET NOTE ON SAME SHEET.
- MECHANICAL EQUIPMENT DESIGNATION "AC-1" INDICATED. A-1,3,5. INDICATES CIRCUIT NUMBER, F40-3 INDICATES FEEDER CODE IF NONE SHOWN REFER TO SINGLE LINE DIAGRAM FOR ELECTRICAL REQUIREMENTS
- EQUIPMENT NAME OR NUMBER
- DETAIL REFERENCE
- LIGHTING CONTROL SEQUENCE OF OPERATION TAG

ABBREVIATIONS

(E)	EXISTING
(D)	DEMOLISH
(R)	RELOCATE
(RL)	NEW LOCATION OF RELOCATED DEVICE
A	AMPERES, AMBER
AHJ	AUTHORITY HAVING JURISDICTION
AIC	AVAILABLE INTERRUPTING CAPACITY
C	CONDUIT, CLOSE, CONTROL
CA	CABLE
CAT	CATEGORY
CU	COPPER
DIA	DIAMETER
DIM	DIMENSION
DIV	DIVISION
DN	DOWN
DWG	DRAWING
EA	EACH
FF	FINISH FLOOR
FT	FOOT, FEET G,
GND	GROUND
GFCI	GROUND FAULT CIRCUIT INTERRUPTER
GFI	GROUND FAULT INTERRUPTER
IG	ISOLATED GROUND
KV	KILOVOLT
KVA	KILOVOLT AMPERES
KW	KILOWATT
LV	LOW VOLTAGE
MCA	MINIMUM CIRCUIT AMPS
MISC	MISCELLANEOUS
MOCP	MAXIMUM OVERCURRENT PROTECTION
NEC	NATIONAL ELECTRIC CODE
NTS	NOT TO SCALE
PH	PHASE
QTY	QUANTITY
RM	ROOM
STD	STANDARD
TBD	TO BE DETERMINED
TGB	TELECOMMUNICATIONS GROUNDING BUS BAR
TYP	TYPICAL
UL	UNDERWRITERS LABORATORIES
V	VOLTS, VOLTAGE
WP	WEATHERPROOF

CODES & STANDARDS

1. 2019 CALIFORNIA BUILDING CODE
2. 2019 CALIFORNIA ELECTRICAL CODE
3. 2019 CALIFORNIA MECHANICAL CODE
4. 2019 CALIFORNIA PLUMBING CODE
5. 2019 CALIFORNIA ENERGY CODE (TITLE 24)
6. 2019 CALIFORNIA FIRE CODE
7. 2019 CALIFORNIA GREEN CODE
8. DIVISION OF THE STATE ARCHITECT
9. PERALTA CCD DESIGN & CONSTRUCTION STANDARDS

DRAWING INDEX

E0.01	COVER SHEET – ELECTRICAL
E2.01	SITE PLAN – ELECTRICAL
E2.11	ENLARGED SITE PLAN – ELECTRICAL
E2.31	POWER PLAN – WEST BUILDING GROUP
E2.32	POWER PLAN – EAST BUILDING GROUP
E2.51	LIGHTING PLAN – WEST BUILDING GROUP
E2.52	LIGHTING PLAN – EAST BUILDING GROUP
E3.12	ENLARGED PLANS – ELECTRICAL
E4.01	SINGLE LINE DIAGRAM
E5.01	SCHEDULES
E5.02	SCHEDULES
E5.03	SCHEDULES
E6.01	DETAILS
E6.02	DETAILS
E6.03	DETAILS
E6.04	DETAILS
E6.05	DETAILS
E6.06	DETAILS
E6.07	DETAILS
E6.08	DETAILS
E7.01	SITE PHOTOMETRICS
E7.02	SITE PHOTOMETRICS – EGRESS
E7.03	SITE PHOTOMETRICS RENDERINGS
E8.01	TITLE 24
E8.02	TITLE 24
E8.03	TITLE 24
E8.04	TITLE 24
E8.05	TITLE 24
E8.06	TITLE 24
E8.07	TITLE 24

GENERAL ELECTRICAL NOTES

A. VISIT THE SITE BEFORE SUBMITTING A BID TO OBSERVE EXISTING CONDITIONS.

B. DO NOT INSTALL ELECTRICAL BOXES IN RATED WALLS CLOSER THAN 2'-0" TO EACH OTHER. PROVIDE "PADDY" PADS OR EQUIVALENT ON EACH BOX INSTALLED.

C. PLANS DO NOT GENERALLY INDICATE WIRE COUNTS. FOR EACH 20 AMP, 120 VOLT OR 277 VOLT CIRCUIT, PROVIDE (1) #12 PHASE CONDUCTOR, (1) #12 NEUTRAL CONDUCTOR AND (1) #12 GROUNDING CONDUCTOR. WHERE MULTIPLE CIRCUITS ARE SHOWN, UP TO THREE SEPARATE AND DIFFERENTLY PHASED CIRCUITS (A, B AND C) PROVIDE DEDICATED NEUTRALS UNLESS OTHERWISE NOTED AND A SINGLE GROUNDING CONDUCTOR. WHERE DRAWINGS INDICATE WIRE SIZES/COUNTS, PROVIDE SUCH CIRCUIT, NEUTRAL AND GROUNDING CONDUCTORS FOR THE PORTION OF THE CIRCUIT WHERE SUCH CONDUCTORS SHARE A COMMON CONDUIT. GROUND WIRE INSULATION: GREEN. ALL WORK COMPLY WITH CEC 300.17.

D. IN ALL CASES AND FOR ALL SYSTEMS AND COMPONENTS, USE ONLY EQUIPMENT IN ACCORDANCE WITH ITS LISTING OR LABELING. [CEC 110.3(B)]

E. USE ONLY EQUIPMENT MARKED (LISTED/LABELED) AS SUITABLE FOR INSTALLATION AND WITH HIGHER TEMPERATURE RATED CONDUCTORS AT THE AMPACITY OF THE HIGHER RATED CONDUCTORS. REFER TO THE UL ELECTRICAL CONSTRUCTION MATERIAL DIRECTORY FOR CIRCUIT BREAKERS, SWITCHES, PANELBOARDS, SWITCHBOARDS, ETC. [CEC 110.14(C)]

F. PROVIDE SUFFICIENT ACCESS AND WORKING CLEARANCE ABOUT THE ELECTRICAL EQUIPMENT IN ACCORDANCE WITH CEC 110.26(A).

G. PROVIDE ACCESS AND ENTRANCES TO AND EGRESS FROM WORKING SPACE ABOUT ELECTRICAL EQUIPMENT IN ACCORDANCE WITH CEC 110.26(C).

H. INSTALL ONLY RECEPTACLE OUTLETS WITH GROUND-FAULT CIRCUIT INTERRUPTER PROTECTION IN LOCATIONS SPECIFIED AS BATHROOMS, COMMERCIAL AND INSTITUTIONAL KITCHENS, ROOFTOPS AND OUTDOOR PUBLIC SPACES. SEE EXCEPTIONS. [CEC 210.8(B)]

I. PROVIDE OUTLET DEVICE(S) INSTALLED ON A BRANCH CIRCUIT WITH A RATING IN ACCORDANCE WITH CEC 210.21(B) (SEE EXCEPTIONS, AND REFER TO 210.21(B) TABLE(S)).

J. DO NOT INSTALL CONDUCTORS OTHER THAN SERVICE CONDUCTORS IN THE SAME SERVICE RACEWAY OR SERVICE CABLE WITH OTHER CONDUCTORS. SEE EXCEPTIONS. [CEC 230.7]

K. PROVIDE GROUND FAULT PROTECTION OF EQUIPMENT IN ACCORDANCE WITH CEC 230.95 AND 240.13 (SEE EXCEPTIONS).

L. PROVIDE GROUNDING FOR SEPARATELY DERIVED SYSTEMS IN ACCORDANCE WITH CEC 250.20(A), 250.20(B), 250.20(D) AND 250.30 (SEE EXCEPTIONS).

M. PROVIDE GROUNDING ELECTRODE SYSTEM IN ACCORDANCE WITH CEC 250.24, 250.30 AND 250.50 (SEE EXCEPTIONS).

N. FOR PVC CONDUIT, PROVIDE AN EQUIPMENT GROUNDING CONDUCTOR RUN WITH THE FEEDER CONDUCTORS AND SIZE PER CEC TABLE 250.122.

O. FOR PERMANENTLY CONNECTED APPLIANCES RATED NOT OVER 300 VOLTAMPERES OR 1/8 HORSEPOWER, THE BRANCH-CIRCUIT SWITCH OR CIRCUIT BREAKER SHALL BE PERMITTED TO SERVE AS THE DISCONNECTING MEANS. [CEC 422.31]

P. ALL THE EQUIPMENT, MATERIAL, AND WIRING IN HAZARDOUS (CLASSIFIED) AREAS MEET MINIMUM REQUIREMENTS OF CEC 500 THROUGH 504.

Q. THE EMERGENCY SYSTEM SHALL BE AUTOMATICALLY RESTORED TO OPERATION WITHIN 10 SECONDS AFTER INTERRUPTION OF THE NORMAL SOURCE. [CEC 517.31 AND CEC 700.12]

R. KEEP LIFE SAFETY BRANCH WIRING ENTIRELY INDEPENDENT OF ALL OTHER WIRING AND SHALL NOT ENTER THE SAME RACEWAYS, BOXES, OR CABINETS WITH EACH OTHER OR OTHER WIRING. [CEC 517.41(D) (SEE EXCEPTIONS)]

LIGHTING ACCEPTANCE CERTIFICATE

BEFORE AN OCCUPANCY PERMIT IS GRANTED FOR A NEWLY CONSTRUCTED BUILDING OR AREA, OR A NEW LIGHTING SYSTEM SERVING A BUILDING, AREA, OR SITE IS OPERATED FOR NORMAL USE, ALL INDOOR AND OUTDOOR LIGHTING CONTROLS SERVING THE BUILDING, AREA, OR SITE, SHALL BE CERTIFIED AS MEETING THE ACCEPTANCE REQUIREMENTS FOR CODE COMPLIANCE IN ACCORDANCE WITH CEC SECTION 130.4. A CERTIFICATE OF ACCEPTANCE SHALL BE SUBMITTED TO THE ENFORCEMENT AGENCY UNDER CEC SECTION 10-103(a) OF PART 1. THE GENERAL CONTRACTOR SHALL BE RESPONSIBLE FOR ALL TESTING AND COMPLETION OF REQUIRED ACCEPTANCE FORMS. IF GENERAL CONTRACTOR IS NOT LICENSED FOR THIS WORK, GENERAL CONTRACTOR SHALL HIRE LICENSED THIRD PARTY.

MEP COMPONENT ANCHORAGE NOTE

ALL MECHANICAL, PLUMBING, AND ELECTRICAL COMPONENTS SHALL BE ANCHORED AND INSTALLED PER THE DETAILS ON THE DSA-APPROVED CONSTRUCTION DOCUMENTS. THE FOLLOWING COMPONENTS SHALL BE ANCHORED OR BRACED TO MEET THE FORCE AND DISPLACEMENT REQUIREMENTS PRESCRIBED IN THE 2019 CBC SECTIONS 1617A.1.18 THROUGH 1617A.1.26 AND ASCE 7-16 CHAPTERS 13, 26, AND 30:

1. ALL PERMANENT EQUIPMENT AND COMPONENTS.
2. TEMPORARY, MOVABLE OR MOBILE EQUIPMENT THAT IS PERMANENTLY ATTACHED (E.G. HARD WIRED) TO THE BUILDING UTILITY SERVICES SUCH AS ELECTRICITY, GAS OR WATER. 'PERMANENTLY ATTACHED' SHALL INCLUDE ALL ELECTRICAL CONNECTIONS EXCEPT PLUGS FOR 110/220 VOLT RECEPTACLES HAVING A FLEXIBLE CABLE.
3. TEMPORARY, MOVABLE OR MOBILE EQUIPMENT WHICH IS HEAVIER THAN 400 POUNDS OR HAS A CENTER OF MASS LOCATED 4 FEET OR MORE ABOVE THE ADJACENT FLOOR OR ROOF LEVEL THAT DIRECTLY SUPPORT THE COMPONENT IS REQUIRED TO BE RESTRAINED IN A MANNER APPROVED BY DSA.

THE FOLLOWING MECHANICAL AND ELECTRICAL COMPONENTS SHALL BE POSITIVELY ATTACHED TO THE STRUCTURE BUT NEED NOT DEMONSTRATE DESIGN COMPLIANCE WITH THE REFERENCES NOTED ABOVE. THESE COMPONENTS SHALL HAVE FLEXIBLE CONNECTIONS PROVIDED BETWEEN THE COMPONENT AND ASSOCIATED DUCTWORK, PIPING, AND CONDUIT. FLEXIBLE CONNECTIONS MUST ALLOW MOVEMENT IN BOTH TRANSVERSE AND LONGITUDINAL DIRECTIONS:

A. COMPONENTS WEIGHING LESS THAN 400 POUNDS AND HAVING A CENTER OF MASS LOCATED 4 FEET OR LESS ABOVE THE ADJACENT FLOOR OR ROOF LEVEL THAT DIRECTLY SUPPORT THE COMPONENT.

B. COMPONENTS WEIGHING LESS THAN 20 POUNDS, OR IN THE CASE OF DISTRIBUTED SYSTEMS, LESS THAN 5 POUNDS PER FOOT, WHICH ARE SUSPENDED FROM A ROOF OR FLOOR OR HUNG FROM A WALL.

THE ANCHORAGE OF ALL MECHANICAL, ELECTRICAL AND PLUMBING COMPONENTS SHALL BE SUBJECT TO THE APPROVAL OF THE DESIGN PROFESSIONAL IN GENERAL RESPONSIBLE CHARGE OR STRUCTURAL ENGINEER DELEGATED RESPONSIBILITY AND ACCEPTANCE BY DSA. THE PROJECT INSPECTOR WILL VERIFY THAT ALL COMPONENTS AND EQUIPMENT HAVE BEEN ANCHORED IN ACCORDANCE WITH THE ABOVE REQUIREMENTS.

PIPING, DUCTWORK, AND ELECTRICAL DISTRIBUTION SYSTEM BRACING NOTE

PIPING, DUCTWORK, AND ELECTRICAL DISTRIBUTION SYSTEMS SHALL BE BRACED TO COMPLY WITH THE FORCES AND DISPLACEMENTS PRESCRIBED IN ASCE 7-16 SECTION 13.3 AS DEFINED IN ASCE 7-16 SECTIONS 13.6.5, 13.6.6, 13.6.7, 13.6.8; AND 2019 CBC, SECTIONS 1617A.1.24, 1617A.1.25 AND 1617A.1.26.

THE METHOD OF SHOWING BRACING AND ATTACHMENTS TO THE STRUCTURE FOR THE IDENTIFIED DISTRIBUTION SYSTEM ARE AS NOTED BELOW. WHEN BRACING AND ATTACHMENTS ARE BASED ON A PREAPPROVED INSTALLATION GUIDE (E.G., OSHPD OPM FOR 2013 CBC OR LATER), COPIES OF THE BRACING SYSTEM INSTALLATION GUIDE OR MANUAL SHALL BE AVAILABLE ON THE JOBSITE PRIOR TO THE START OF AND DURING THE HANGING AND BRACING OF THE DISTRIBUTION SYSTEMS. THE STRUCTURAL ENGINEER OF RECORD SHALL VERIFY THE ADEQUACY OF THE STRUCTURE TO SUPPORT THE HANGER AND BRACE LOADS.

MECHANICAL PIPING (MP), MECHANICAL DUCTS (MD), PLUMBING PIPING (PP), ELECTRICAL DISTRIBUTION SYSTEMS (E):

MP☐ MD☐ PP☐ E☒ OPTION 1: DETAILED ON THE APPROVED DRAWINGS WITH PROJECT SPECIFIC NOTES AND DETAILS

MP☐ MD☐ PP☐ E☐ OPTION 2: SHALL COMPLY WITH THE APPLICABLE OSHPD PRE-APPROVAL (OPM#)_____

APPROVALS

IDENTIFICATION STAMP
DIV. OF THE STATE ARCHITECT
APP: 01-119409 INC:
REVIEWED FOR
SS ☑ FLS ☑ ACS ☑
DATE: 03/14/2022

NOLL & TAM ARCHITECTS
729 Heinz Avenue
Berkeley, CA 94710
tel 510.542.2200
fax 510.542.2201

RIJA
5515 Doyle Street, #7
Emeryville, CA 94608
www.rijainc.com
RIJA Job #: 2020011

SEAL

REGISTERED PROFESSIONAL ENGINEER
RAJ A. JANCHORA
No. E19586
Exp. 06-30-23
ELECTRICAL
STATE OF CALIFORNIA

Date Signed: 3/1/22

PROJECT TITLE

Peralta Community College District
Merritt Landscape Horticulture Complex

12500 Campus Drive
Oakland, CA 94616

BID SET

ISSUE DATE	03/03/2022
N&T JOB NUMBER	22003

REVISIONS

	DATE	DESCRIPTION
1		

DRAWN BY CAD	CHECKED BY RAJ

SHEET TITLE

COVER SHEET - ELECTRICAL

SHEET NUMBER

E0.01

4/3/2020 7:20:00 PM BIM 360://PCCD Merritt Horticulture/Merritt Horticulture_2020.rvt

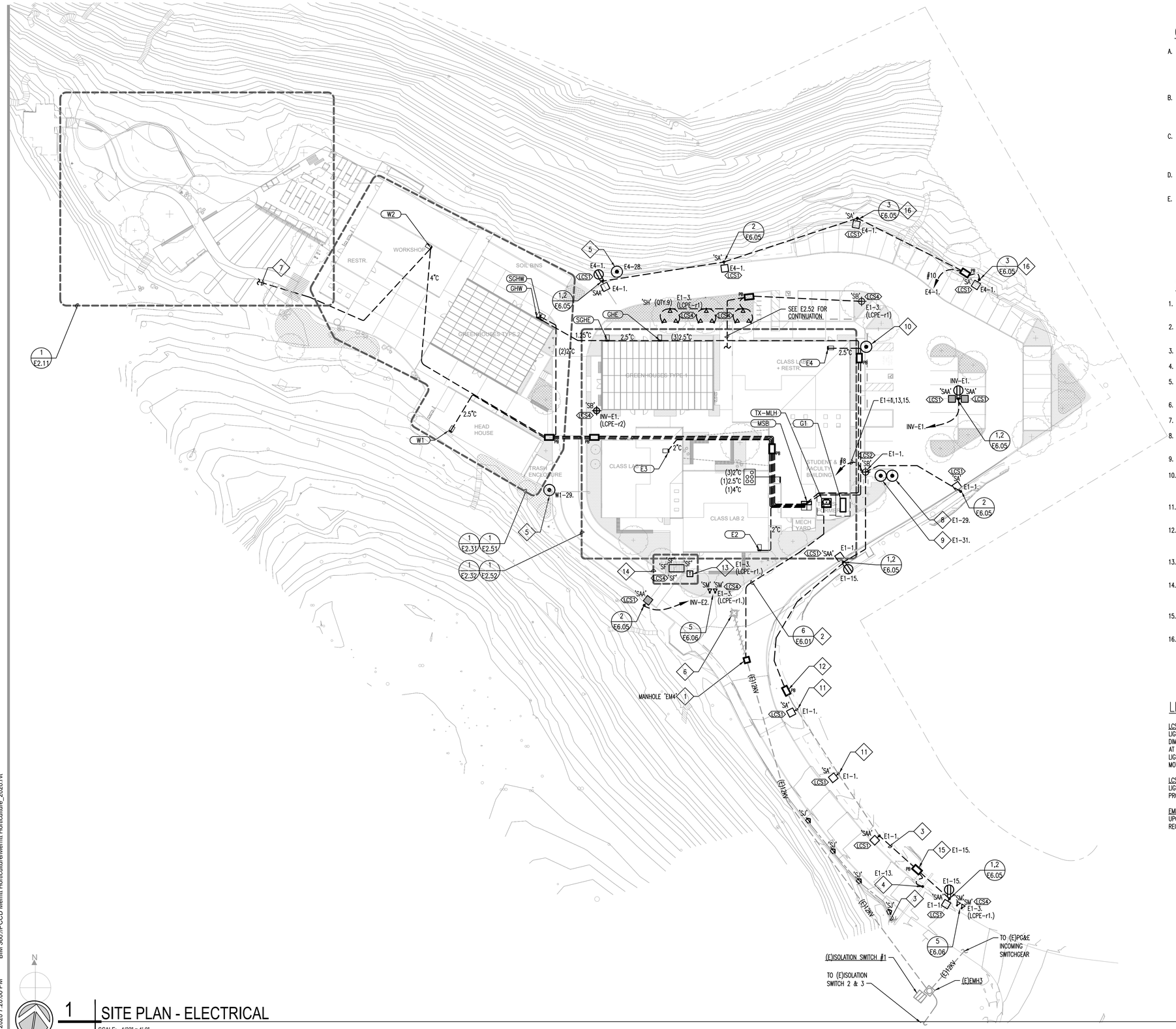

GENERAL SHEET NOTES

A. EXISTING UNDERGROUND UTILITIES AND STRUCTURES ARE KNOWN TO EXIST ON THE PROJECT SITE. CONTRACTOR TO MAKE USE OF ALL CONSTRUCTION DOCUMENTS TO ASSIST IN LOCATING THE UNDERGROUND UTILITIES AND STRUCTURES. NO REPRESENTATION AS TO ACCURACY OR COMPLETENESS OF THE LOCATION OF THE UNDERGROUND UTILITIES OR STRUCTURE EXISTS.

B. CONTRACTOR TO EXERCISE PRECAUTIONARY MEANS INCLUDING HAND DIGGING OR VACUUM EXCAVATION TO PROTECT THE EXISTING UTILITIES AND STRUCTURES. WHERE EXACT LOCATIONS OF UTILITIES AND STRUCTURE CAN NOT BE DETERMINED, HAND OR VACUUM EXCAVATION MAY BE REQUIRED.

C. COORDINATE CONDUIT TRENCHING WITH OTHER DISCIPLINES TO AVOID CONFLICT. LOCATE PULL BOXES IN PLANTERS WHEREVER POSSIBLE. COORDINATE EXACT PULL BOX LOCATIONS WITH LANDSCAPING. REFER TO CIVIL DRAWINGS FOR ADDITIONAL INFORMATION.

D. SIZE PULL BOXES FOR STRAIGHT PULL APPLICATION ONLY. SIZE PER CEC ARTICLE 314. PROVIDE TRAFFIC LID WHERE REQUIRED. LABEL 'ELECTRICAL'

E. COORDINATE EXACT ROUTING OF UNDERGROUND INFRASTRUCTURE WITH CIVIL DRAWINGS. PROVIDE ADDITIONAL SPLICE/PULL BOXES AS REQUIRED IF CONDUIT BENDS EXCEED THREE 90 DEGREE BENDS (OR 270 DEGREES TOTAL).

SHEET NOTES (#)

1. INTERCEPT EXISTING 15KV UNDERGROUND FEEDER. PROVIDE NEW 15KV HANDHOLE WITH TRAFFIC RATED LID.
2. EXTEND MEDIUM VOLTAGE CABLING TO NEW PAD MOUNT TRANSFORMER 'TX-MLH'. CONNECT COMPLETE TO PLACE INTO SERVICE.
3. EXTEND BRANCH CIRCUIT AS SHOWN.
4. CONNECT EXISTING GATE OPERATOR TO NEW CIRCUIT.
5. PROVIDE POWER FOR MOTORIZED ARM GATE. PROVIDE AND COORDINATE DETECTOR LOOPS
6. REMOVE EXISTING 15KV HANDHOLE.
7. BRANCH CIRCUIT ROUTING. REFER TO E2.11 FOR ENLARGED PLAN.
8. 120V FOR RELOCATED PARKING METER. CONNECT COMPLETE TO PLACE BACK INTO SERVICE.
9. 120V FOR BLUE PHONE. CONNECT COMPLETE TO PLACE INTO SERVICE.
10. FOR FUTURE EV CHARGING STATION, HOME RUN (2)1"C TO MAIN ELECTRICAL ROOM. COORDINATE STUB OUT LOCATIONS WITH ARCHITECT PRIOR TO ROUGH-IN.
11. RE-USE EXISTING POLE, AAL #PR4-4R12-125, PROVIDE NEW LUMINAIRE HEAD AS SHOWN.
12. INTERCEPT EXISTING BRANCH CONDUIT FOR RE-USE. REMOVE CONDUCTORS COMPLETE BACK TO SOURCE. MANDREL CONDUIT, PROVIDE NEW CONDUCTORS AND CIRCUITS AS SHOWN.
13. POWER SUPPLY FOR TYPE 'SF' INSTALLED IN GROUND, REFER TO LUMINAIRE SCHEDULE FOR ADDITIONAL INFORMATION.
14. LED LIGHTING INSTALLED AT UNDERSIDE OF TRELLIS. ROUTE 24VDC WIRING FROM POWER SUPPLY UP THROUGH HSS TRELLIS STRUCTURE. REFER TO LANDSCAPE DRAWINGS FOR ADDITIONAL INFORMATION.
15. CIRCUIT FOR ACCESS CONTROL. COORDINATE TERMINATION OF CIRCUIT TO ACCESS CONTROL SYSTEM POWER SUPPLY WITH VENDOR.
16. PROVIDE 10FT POLE, REFER TO LUMINAIRE SCHEDULE. INSTALL POLE BASE MINIMUM 5'-0" BACK FROM WALL.

LIGHTING SEQUENCE OF OPERATIONS (XX)

LCS1
LIGHTING SHALL BE CONTROLLED VIA ON BOARD PHOTOCELL WITH AUTOMATIC PROFILE DIMMING AND MOTION SENSOR. LIGHTING SHALL DIM DOWN TO 30% LUMEN OUTPUT AT OWNER SPECIFIED TIME. MOTION SENSOR SHALL OVER-RIDE DIMMING PROFILE AND LIGHTING SHALL RETURN TO 100% LUMEN OUTPUT. AFTER 5 MINUTES WITH NO MOTION, LIGHTING SHALL RETURN TO AUTOMATIC DIMMING PROFILE.

LCS4
LIGHTING SHALL BE CONTROLLED VIA LCP ASTRONOMICAL TIME CLOCK ON-OFF. PROVIDE MANUAL OVER RIDE ADJACENT TO LCP

EMERGENCY LIGHTING
UPON LOSS OF POWER, LIGHTING INDICATED AS EMERGENCY SHALL TURN ON REGARDLESS OF CONTROL STATE.

N

1 SITE PLAN - ELECTRICAL
SCALE: 1/32" = 1'-0"

4/3/2020 7:20:00 PM BIM 360://PCCD Merritt Horticulture/Merritt Horticulture_2020.rvt

APPROVALS

IDENTIFICATION STAMP
DIV. OF THE STATE ARCHITECT
APP: 01-119409 INC:
REVIEWED FOR
SS ☑ FLS ☑ ACS ☑
DATE: 03/14/2022

NOLL & TAM ARCHITECTS
729 Heinz Avenue
Berkeley, CA 94710
tel 510.542.2200
fax 510.542.2201

RIJA
5515 Doyle Street, #7
Emeryville, CA 94608
www.rijainc.com
RIJA Job #: 2020011

SEAL

REGISTERED PROFESSIONAL ENGINEER
RAY A. JACHON
No. E19586
Exp. 06-30-23
ELECTRICAL
STATE OF CALIFORNIA

Date Signed: 3/1/22

PROJECT TITLE

Peralta Community College District
Merritt Landscape Horticulture Complex

12500 Campus Drive
Oakland, CA 94616

BID SET

ISSUE DATE	03/03/2022
N&T JOB NUMBER	22003

REVISIONS

	DATE	DESCRIPTION

DRAWN BY CAD | CHECKED BY RAJ

SHEET TITLE
SITE PLAN - ELECTRICAL

SHEET NUMBER
E2.01

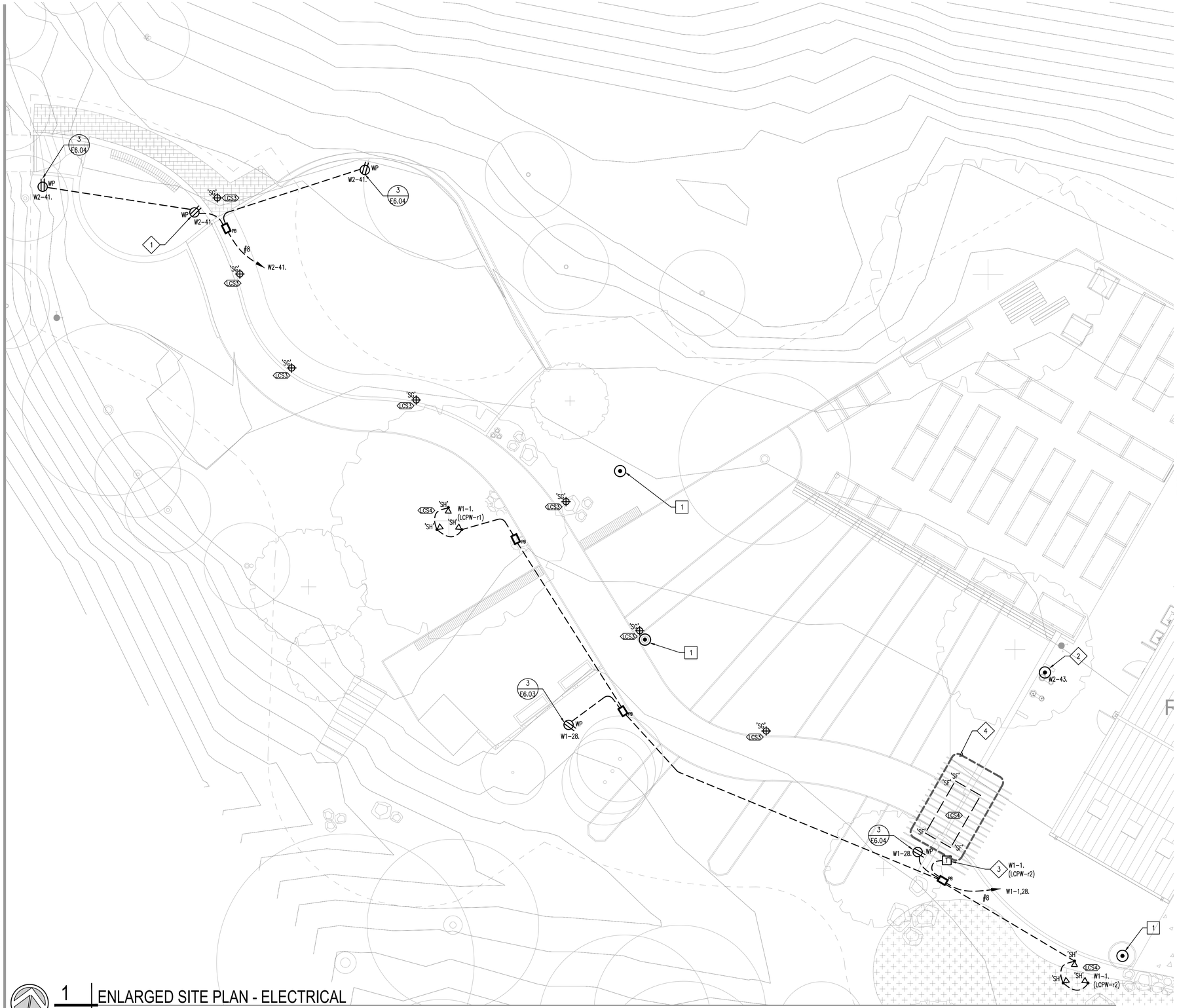

1 ENLARGED SITE PLAN - ELECTRICAL

SCALE: 1/8" = 1'-0"

GENERAL SHEET NOTES

A. EXISTING UNDERGROUND UTILITIES AND STRUCTURES ARE KNOWN TO EXIST ON THE PROJECT SITE. CONTRACTOR TO MAKE USE OF ALL CONSTRUCTION DOCUMENTS TO ASSIST IN LOCATING THE UNDERGROUND UTILITIES AND STRUCTURES. NO REPRESENTATION AS TO ACCURACY OR COMPLETENESS OF THE LOCATION OF THE UNDERGROUND UTILITIES OR STRUCTURE EXISTS.

B. CONTRACTOR TO EXERCISE PRECAUTIONARY MEANS INCLUDING HAND DIGGING OR VACUUM EXCAVATION TO PROTECT THE EXISTING UTILITIES AND STRUCTURES. WHERE EXACT LOCATIONS OF UTILITIES AND STRUCTURE CAN NOT BE DETERMINED, HAND OR VACUUM EXCAVATION MAY BE REQUIRED.

C. COORDINATE CONDUIT TRENCHING WITH OTHER DISCIPLINES TO AVOID CONFLICT. LOCATE PULL BOXES IN PLANTERS WHEREVER POSSIBLE. COORDINATE EXACT PULL BOX LOCATIONS WITH LANDSCAPING. REFER TO CIVIL DRAWINGS FOR ADDITIONAL INFORMATION.

D. SIZE PULL BOXES FOR STRAIGHT PULL APPLICATION ONLY. SIZE PER CEC ARTICLE 314. PROVIDE TRAFFIC LID WHERE REQUIRED. LABEL 'ELECTRICAL'

E. COORDINATE EXACT ROUTING OF UNDERGROUND INFRASTRUCTURE WITH CIVIL DRAWINGS. PROVIDE ADDITIONAL SPLICE/PULL BOXES AS REQUIRED IF CONDUIT BENDS EXCEED THREE 90 DEGREE BENDS (OR 270 DEGREES TOTAL).

SHEET NOTES ◇#

1. RECEPTACLE RECESSED INTO SEAT WALL. REFER TO LANDSCAPE ARCHITECTURAL DRAWINGS FOR ADDITIONAL INFORMATION.
2. 120V FOR DRINKING FOUNTAIN.
3. POWER SUPPLY FOR TYPE 'SF' INSTALLED IN GROUND, REFER TO LUMINAIRE SCHEDULE FOR ADDITIONAL INFORMATION.
4. LED LIGHTING INSTALLED AT UNDERSIDE OF TRELLIS. ROUTE 24VDC WIRING FROM POWER SUPPLY UP THROUGH HSS TRELLIS STRUCTURE. REFER TO LANDSCAPE DRAWINGS FOR ADDITIONAL INFORMATION.

LIGHTING SEQUENCE OF OPERATIONS ◇XX

LCS3
SOLAR POWERED LIGHTING CONTROLLED VIA ON-BOARD PHOTOCELL CONTROL.

LCS4
LIGHTING SHALL BE CONTROLLED VIA LCP ASTRONOMICAL TIME CLOCK ON-OFF. PROVIDE MANUAL OVER RIDE ADJACENT TO LCP

ADD ALTERNATE NOTES

1. PROVIDE LINE ITEM PRICING FOR ROUGH-IN AND CIRCUIT TO FOUNTAIN. PROVIDE DEDICATED CIRCUITED FROM PANEL 'W1'. 2#10, 1#10G IN 3/4"C

APPROVALS

IDENTIFICATION STAMP
DIV. OF THE STATE ARCHITECT
APP: 01-119409 INC:
REVIEWED FOR
SS ☑ FLS ☑ ACS ☑
DATE: 03/14/2022

NOLL & TAM ARCHITECTS
729 Heinz Avenue
Berkeley, CA 94710
tel 510.542.2200
fax 510.542.2201

RIJA
5515 Doyle Street, #7
Emeryville, CA 94608
www.rijainc.com
RIJA Job #: 2020011

SEAL

REGISTERED PROFESSIONAL ENGINEER
RAY A. JACHOW
No. E19586
Exp. 06-30-23
ELECTRICAL
STATE OF CALIFORNIA

Date Signed: 3/1/22

PROJECT TITLE

Peralta Community College District
Merritt Landscape Horticulture Complex

12500 Campus Drive
Oakland, CA 94616

BID SET

ISSUE DATE	03/03/2022
N&T JOB NUMBER	22003

REVISIONS

	DATE	DESCRIPTION

DRAWN BY	CAD	CHECKED BY	RAJ

SHEET TITLE
ENLARGED SITE PLAN - ELECTRICAL

SHEET NUMBER
E2.11

4/3/2020 7:20:00 PM BIM 360://PCCD Merritt Horticulture/Merritt Horticulture_2020.rvt

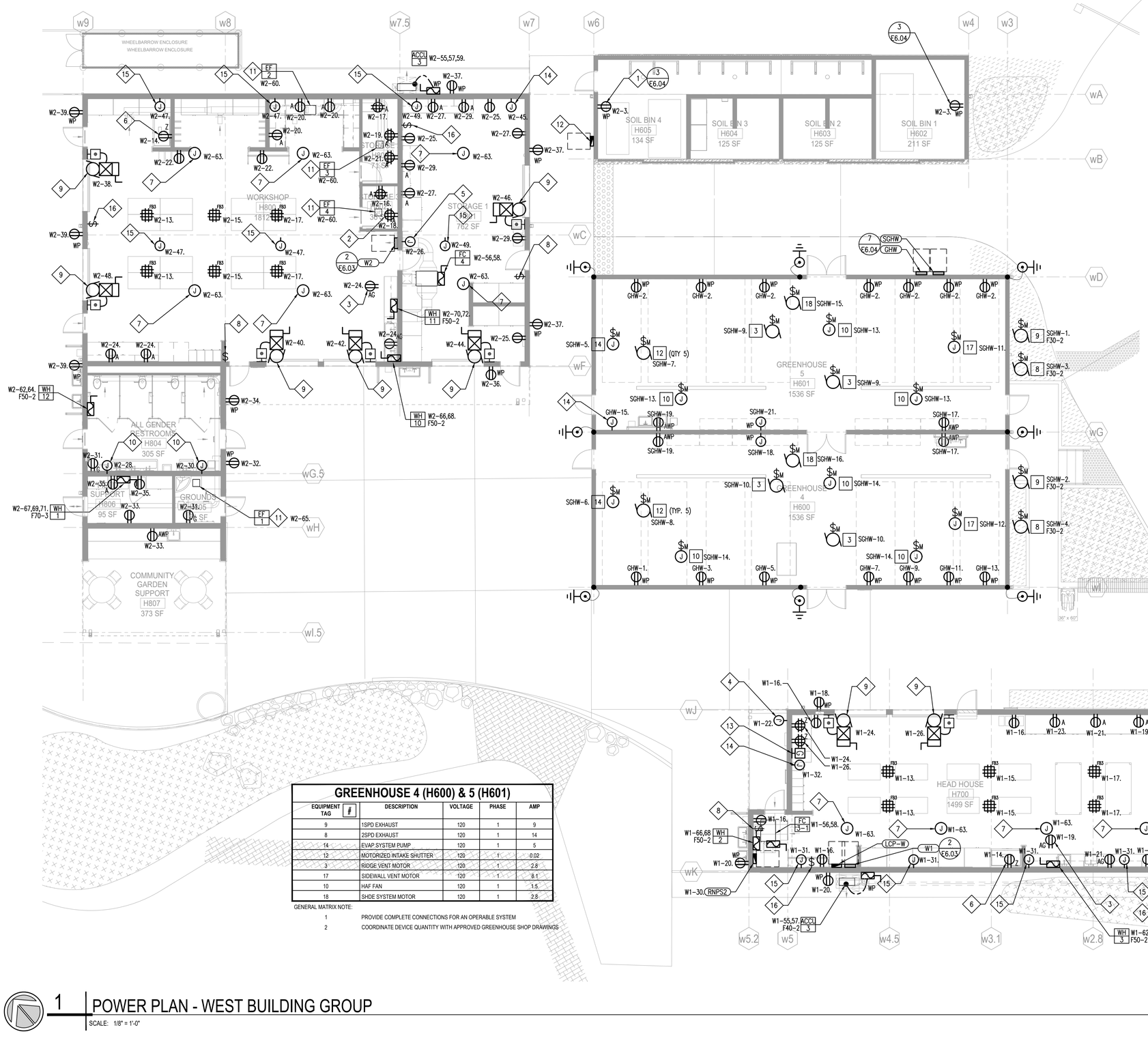

GREENHOUSE 4 (H600) & 5 (H601)

EQUIPMENT TAG	#	DESCRIPTION	VOLTAGE	PHASE	AMP
9		1SPD EXHAUST	120	1	9
8		2SPD EXHAUST	120	1	14
14		EVAP SYSTEM PUMP	120	1	5
12		MOTORIZED INTAKE SHUTTER	120	1	0.02
3		RIDGE VENT MOTOR	120	1	2.8
17		SIDEWALL VENT MOTOR	120	1	8.1
10		HAF FAN	120	1	1.5
18		SHDE SYSTEM MOTOR	120	1	2.8

GENERAL MATRIX NOTE:

1 PROVIDE COMPLETE CONNECTIONS FOR AN OPERABLE SYSTEM

2 COORDINATE DEVICE QUANTITY WITH APPROVED GREENHOUSE SHOP DRAWINGS

1 POWER PLAN - WEST BUILDING GROUP

SCALE: 1/8" = 1'-0"

GENERAL SHEET NOTES

A. COORDINATE EXACT LOCATION AND MOUNTING HEIGHT OF RECEPTACLES, VOICE/DATA OUTLETS AND ELECTRICAL DEVICES WITH ARCHITECT PRIOR TO INSTALLATION.

B. IN FINISHED AREAS RUN ALL CONDUITS CONCEALED U.O.N. PAINT ALL EXPOSED CONDUITS AND ELECTRICAL EQUIPMENT, REER TO ARCHITECT SPECIFICATIONS FOR PAINTING REQUIREMENTS.

C. REFER TO SINGLE LINE DIAGRAMS, EQUIPMENT SCHEDULES, AND DETAILS FOR ADDITIONAL INFORMATION.

D. PROVIDE 120V–24V TRANSFORMERS AS REQUIRED TO POWER VAV POWER SUPPLIES, BMS CONTROL PANELS, RESTROOM PLUMBING CONTROLS, ACCESS CONTROL SYSTEMS, AND FIRE SMOKE DAMPERS. PROVIDE CIRCUIT FROM NEAREST PANEL, U.O.N. REFER TO PANEL SCHEDULES FOR ADDITIONAL INFORMATION.

E. SIZE FUSES FOR ALL MECHANICAL EQUIPMENT PER APPROVED MANUFACTURERS SHOP DRAWINGS.

F. REFER TO DATA/TELECOM, AUDIO VISUAL, AND SECURITY PLANS FOR ALL ITEMS, LOCATIONS, DEVICES AND EQUIPMENT TO BE FURNISHED AND INSTALLED BY CONTRACTOR INCLUDING BUT NOT LIMITED TO ALL CONDUITS AND JUNCTION BOXES.

G. NO CONDUITS, CONDUCTORS OR PENETRATIONS SHALL BE ALLOWED TO BE ROUTED THROUGH GREENHOUSE STRUCTURAL COMPONENTS.

H. WITHIN GREENHOUSE, ALL BOXES AND CONDUITS SHALL BE PVC COATED, WET LOCATION LISTED. ALL ENCLOSURES SHALL BE NEMA 4X.

I. COORDINATE EXPOSED CONDUIT ROUTING WITH ARCHITECT PRIOR TO COMMENCEMENT OF WORK. PROVIDE DETAILED SHOP DRAWINGS FOR ALL EXPOSED CONDUIT RUNS FOR REVIEW.

SHEET NOTES

1. FOR CHARGING OF GOLF CART
2. FOR LASER CUTTER. COORDINATE RECEPTACLE TYPE WITH EQUIPMENT
3. MOUNT TO FACE OF CABINET.
4. 120V FOR BLUE PHONE. CONNECT COMPLETE TO PLACE INTO SERVICE
5. 120V FOR IRRIGATION CONTROLLER
6. 120V FOR COMMERCIAL REFRIGERATOR
7. 120V FOR CEILING FAN
8. CEILING FAN SPEED CONTROLLER
9. OVERHEAD DOOR OPERATOR WITH OPEN/CLOSE ACTUATOR BUTTON. CONNECT COMPLETE.
10. 120V FOR FUTURE HAND DRYER
11. SEE MECHANICAL PLANS FOR SWITCH LOCATION.
12. (1) 20A–1P CIRCUIT BREAKER DISCONNECT IN NEMA3R ENCLOSURE FOR POWER AND LIGHTING CIRCUIT SERVING SOIL BINS, CIRCUIT W2–3.
13. BOND TO PANEL W1 GROUND BUS
14. FOR FIRE SPRINKLER RISER
15. 120V FOR WINDOW ACTUATOR. REFER TO ARCHITECTURAL PLANS FOR LOCATION AND QTY OF ACTUATORS. INSTALL BOX BELOW CLERESTORY WINDOW SIL.
16. OPEN/CLOSE LINE VOLTAGE SWITCH FOR WINDOW ACTUATORS, LEVITON 5657–2W OR APPROVED.

APPROVALS

IDENTIFICATION STAMP
DIV. OF THE STATE ARCHITECT
APP: 01-119409 INC:
REVIEWED FOR
SS ☑ FLS ☑ ACS ☑
DATE: 03/14/2022

NOLL & TAM ARCHITECTS
729 Heinz Avenue
Berkeley, CA 94710
tel 510.542.2200
fax 510.542.2201

RIJA
5515 Doyle Street, #7
Emeryville, CA 94608
www.rijainc.com
RIJA Job #: 2020011

SEAL

REGISTERED PROFESSIONAL ENGINEER
RAY A. JACHON
No. E19586
Exp. 06-30-23
ELECTRICAL
STATE OF CALIFORNIA

Date Signed: 3/1/22

PROJECT TITLE

Peralta Community College District
Merritt Landscape Horticulture Complex

12500 Campus Drive
Oakland, CA 94616

BID SET

ISSUE DATE	03/03/2022
N&T JOB NUMBER	22003

REVISIONS

	DATE	DESCRIPTION

DRAWN BY CAD | CHECKED BY RAJ

SHEET TITLE
POWER PLAN - WEST BUILDING GROUP

SHEET NUMBER
E2.31

4/3/2020 7:20:00 PM BIM 360://PCCD Merritt Horticulture/Merritt Horticulture_2020.rvt

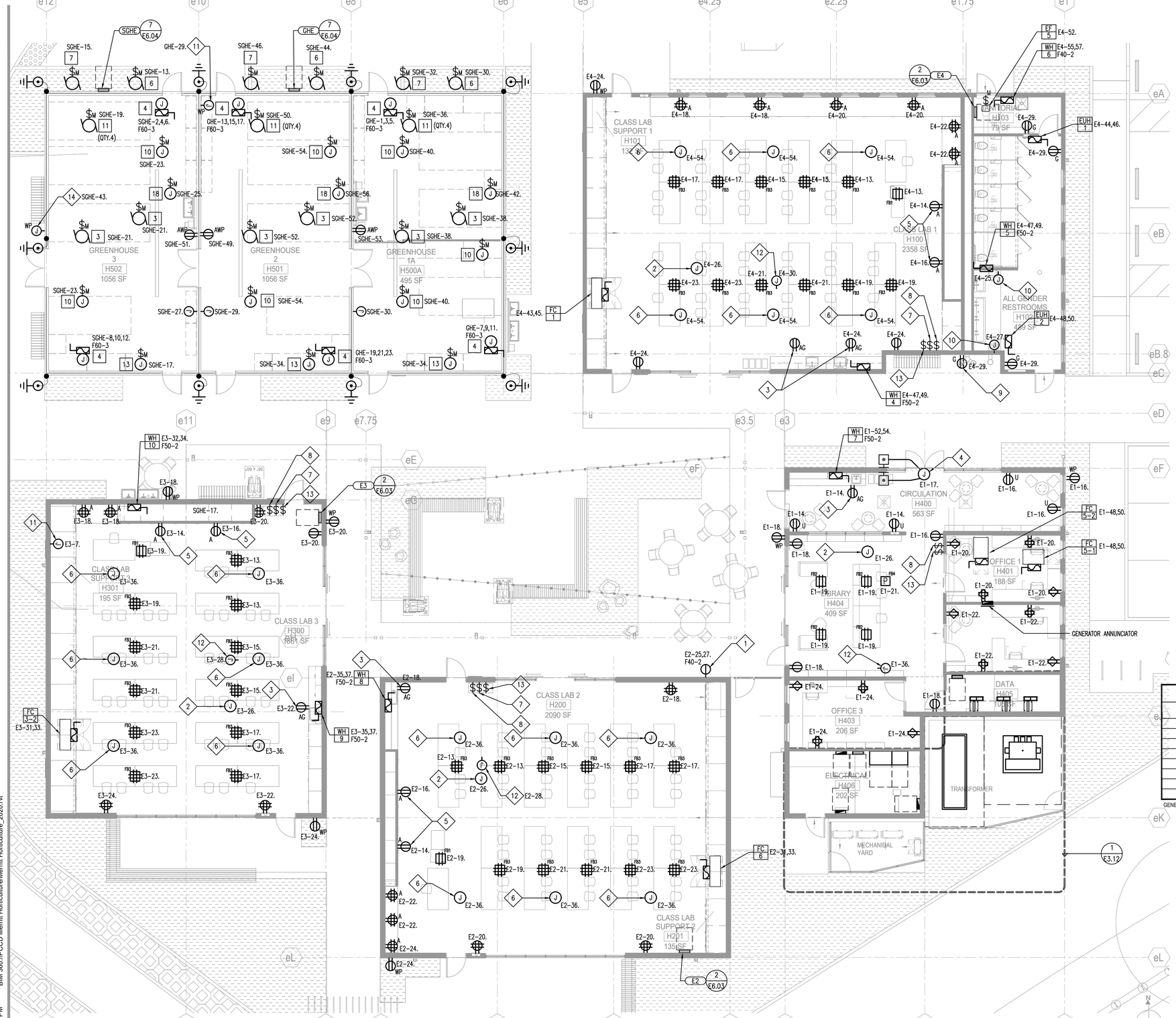

GENERAL SHEET NOTES

A. COORDINATE EXACT LOCATION AND MOUNTING HEIGHT OF RECEPTACLES, VOICE/DATA OUTLETS AND ELECTRICAL DEVICES WITH ARCHITECT PRIOR TO INSTALLATION.

B. IN FINISHED AREAS RUN ALL CONDUITS CONCEALED U.O.N. PAINT ALL EXPOSED CONDUITS AND ELECTRICAL EQUIPMENT, REER TO ARCHITECT SPECIFICATIONS FOR PAINTING REQUIREMENTS.

C. REFER TO SINGLE LINE DIAGRAMS, EQUIPMENT SCHEDULES, AND DETAILS FOR ADDITIONAL INFORMATION.

D. PROVIDE 120V–24V TRANSFORMERS AS REQUIRED TO POWER VAV POWER SUPPLIES, BMS CONTROL PANELS, RESTROOM PLUMBING CONTROLS, ACCESS CONTROL SYSTEMS, AND FIRE SMOKE DAMPERS. PROVIDE CIRCUIT FROM NEAREST PANEL, U.O.N. REFER TO PANEL SCHEDULES FOR ADDITIONAL INFORMATION.

E. SIZE FUSES FOR ALL MECHANICAL EQUIPMENT PER APPROVED MANUFACTURERS SHOP DRAWINGS.

F. REFER TO DATA/TELECOM, AUDIO VISUAL, AND SECURITY PLANS FOR ALL ITEMS, LOCATIONS, DEVICES AND EQUIPMENT TO BE FURNISHED AND INSTALLED BY CONTRACTOR INCLUDING BUT NOT LIMITED TO ALL CONDUITS AND JUNCTION BOXES.

G. NO CONDUITS, CONDUCTORS OR PENETRATIONS SHALL BE ALLOWED TO BE ROUTED THROUGH GREENHOUSE STRUCTURAL COMPONENTS.

H. WITHIN GREENHOUSE, ALL BOXES AND CONDUITS SHALL BE PVC COATED, WET LOCATION LISTED. ALL ENCLOSURES SHALL BE NEMA 4X.

I. COORDINATE EXPOSED CONDUIT ROUTING WITH ARCHITECT PRIOR TO COMMENCEMENT OF WORK. PROVIDE DETAILED SHOP DRAWINGS FOR ALL EXPOSED CONDUIT RUNS FOR REVIEW.

SHEET NOTES

1. 40AMP RECEPTACLE FOR EVENT POWER IN WEATHERPROOF IN-USE ENCLOSURE.
2. 120V POWER FOR MOTORIZED WINDOW SHADE.
3. MOUNT TO FACE OF CABINET.
4. 120V FOR DOOR OPERATOR. PROVIDE COMPLETE CONNECTION TO ACTUATOR PUSH PLATE
5. FOR SHORT THROW PROJECTOR. REFER TO TECHNOLOGY DRAWINGS FOR ADDITIONAL INFORMATION.
6. 120V FOR CEILING FAN
7. CEILING FAN SPEED CONTROLLER
8. MOTORIZED WINDOW SHADE SWITCH
9. FOR DRINKING FOUNTAIN
10. 120V FOR FUTURE HAND DRYER
11. FOR FIRE SPRINKLER RISER
12. 120V FOR WINDOW ACTUATOR. REFER TO ARCHITECTURAL PLANS FOR LOCATION AND QTY OF ACTUATORS. INSTALL BOX BELOW CLERESTORY WINDOW SIL
13. OPEN/CLOSE LINE VOLTAGE SWITCH FOR WINDOW ACTUATORS, LEVITON 5657–2W OR APPROVED.
14. FOR SEED CONTROLLER. COORDINATE ROUGH IN REQUIREMENT WITH MANUFACTURER INSTALLATION INSTRUCTIONS. PROVIDE COMPLETE CONNECTIONS FOR AN OPERATIONAL SYSTEM.

GREENHOUSE 1 (H500) & 2 (H501) & 3 (H502)

EQUIPMENT TAG	#	DESCRIPTION	VOLTAGE	PHASE	AMP
6		1SPD EXHAUST	120	1	5.4
7		2SPD EXHAUST	120	1	6.5
13		EVAP SYSTEM PUMP	120	1	5
11		MOTORIZED INTAKE SHUTTER	120	1	0.02
4		UNIT HEATER ELECTRIC	208	3	42.2
3		RIDGE VENT MOTOR	120	1	2.8
10		HAF FAN	120	1	1.5
18		SHDE SYSTEM MOTOR	120	1	2.8

GENERAL MATRIX NOTE:

1 PROVIDE COMPLETE CONNECTIONS FOR AN OPERABLE SYSTEM

2 COORDINATE DEVICE QUANTITY WITH APPROVED GREENHOUSE SHOP DRAWINGS

1 POWER PLAN - EAST BUILDING GROUP

SCALE: 1/8" = 1'-0"

APPROVALS

IDENTIFICATION STAMP
DIV. OF THE STATE ARCHITECT
APP: 01-119409 INC:
REVIEWED FOR
SS ☑ FLS ☑ ACS ☑
DATE: 03/14/2022

NOLL & TAM ARCHITECTS
729 Heinz Avenue
Berkeley, CA 94710
tel 510.542.2200
fax 510.542.2201

RIJA
5515 Doyle Street, #7
Emeryville, CA 94608
www.rijainc.com
RIJA Job #: 2020011

SEAL

REGISTERED PROFESSIONAL ENGINEER — RAJ — No. E19586 Exp. 06-30-23 — ELECTRICAL — STATE OF CALIFORNIA

Date Signed: 3/1/22

PROJECT TITLE

Peralta Community College District
Merritt Landscape Horticulture Complex

12500 Campus Drive
Oakland, CA 94616

BID SET

ISSUE DATE	03/03/2022
N&T JOB NUMBER	22003

REVISIONS

#	DATE	DESCRIPTION

DRAWN BY CAD | CHECKED BY RAJ

SHEET TITLE

POWER PLAN - EAST BUILDING GROUP

SHEET NUMBER

E2.32

BIM 360://PCCD Merritt Horticulture/Merritt Horticulture_2020.rvt
4/3/2020 7:20:00 PM

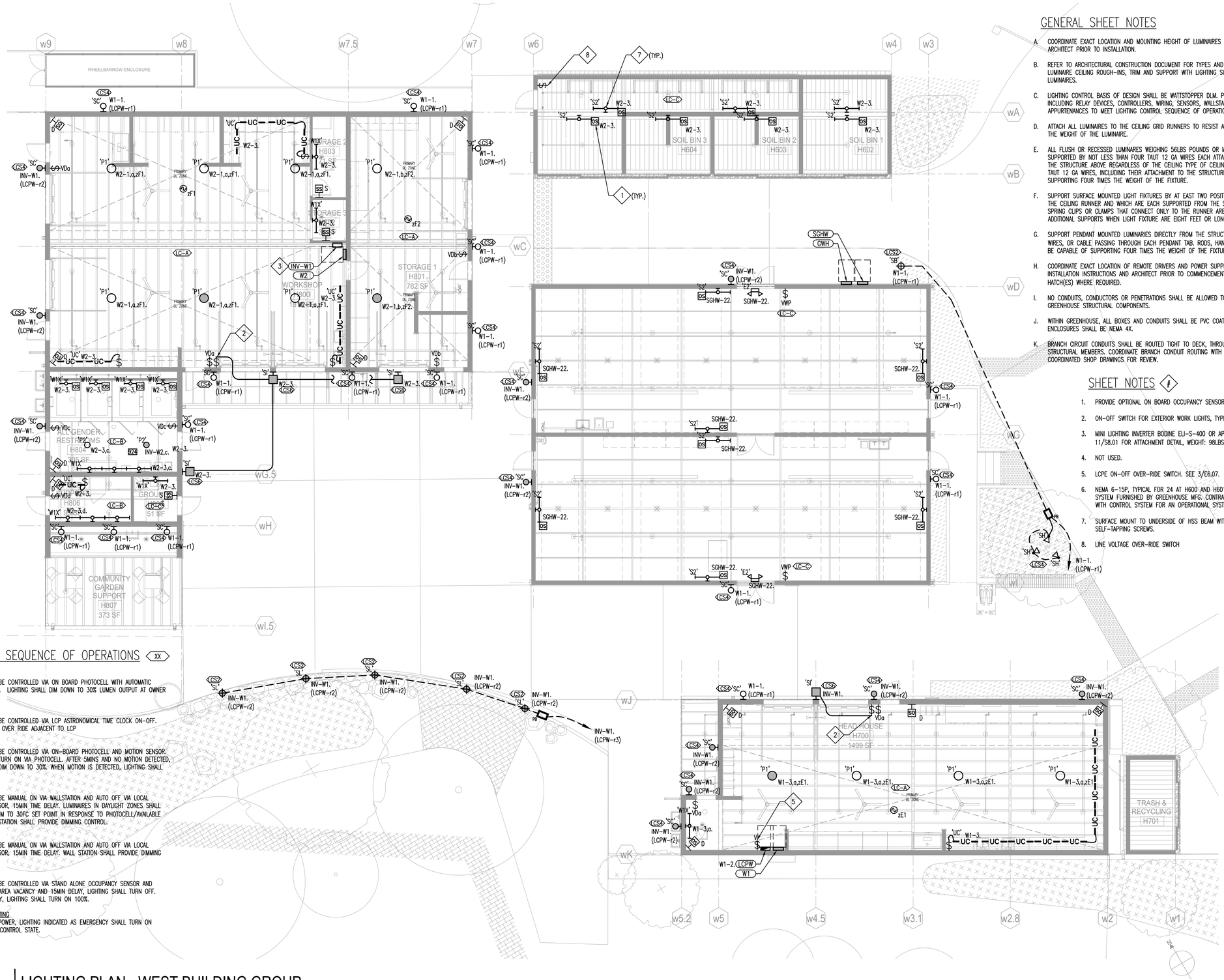

GENERAL SHEET NOTES

A. COORDINATE EXACT LOCATION AND MOUNTING HEIGHT OF LUMINAIRES AND LIGHTING CONTROLS WITH ARCHITECT PRIOR TO INSTALLATION.

B. REFER TO ARCHITECTURAL CONSTRUCTION DOCUMENT FOR TYPES AND MATERIALS. COORDINATE LUMINAIRE CEILING ROUGH-INS, TRIM AND SUPPORT WITH LIGHTING SUPPLIER PRIOR TO RELEASE OF LUMINAIRES.

C. LIGHTING CONTROL BASIS OF DESIGN SHALL BE WATTSTOPPER DLM. PROVIDE A COMPLETE SYSTEM, INCLUDING RELAY DEVICES, CONTROLLERS, WIRING, SENSORS, WALLSTATIONS, LABOR TO INSTALL, AND APPURTENANCES TO MEET LIGHTING CONTROL SEQUENCE OF OPERATION.

D. ATTACH ALL LUMINAIRES TO THE CEILING GRID RUNNERS TO RESIST A HORIZONTAL FORCE EQUAL TO THE WEIGHT OF THE LUMINAIRE.

E. ALL FLUSH OR RECESSED LUMINARES WEIGHING 56LBS POUNDS OR MORE MUST BE INDEPENDENTLY SUPPORTED BY NOT LESS THAN FOUR TAUT 12 GA WIRES EACH ATTACHED TO THE LUMINAIRE AND TO THE STRUCTURE ABOVE REGARDLESS OF THE CEILING TYPE OF CEILING GRID SYSTEM USED. THE FOUR TAUT 12 GA WIRES, INCLUDING THEIR ATTACHMENT TO THE STRUCTURE ABOVE, MUST BE CAPABLE OF SUPPORTING FOUR TIMES THE WEIGHT OF THE FIXTURE.

F. SUPPORT SURFACE MOUNTED LIGHT FIXTURES BY AT EAST TWO POSITIVE DEVICES WHICH SURROUND THE CEILING RUNNER AND WHICH ARE EACH SUPPORTED FROM THE STRUCTURE ABOVE BY 12 GA WIRE. SPRING CLIPS OR CLAMPS THAT CONNECT ONLY TO THE RUNNER ARE NOT ACCEPTABLE. PROVIDE ADDITIONAL SUPPORTS WHEN LIGHT FIXTURE ARE EIGHT FEET OR LONGER.

G. SUPPORT PENDANT MOUNTED LUMINARIES DIRECTLY FROM THE STRUCTURE ABOVE WITH RODS, HANGER WIRES, OR CABLE PASSING THROUGH EACH PENDANT TAB. RODS, HANGER WIRES AND/OR CABLE, SHALL BE CAPABLE OF SUPPORTING FOUR TIMES THE WEIGHT OF THE FIXTURE.

H. COORDINATE EXACT LOCATION OF REMOTE DRIVERS AND POWER SUPPLIES WITH MANUFACTURER INSTALLATION INSTRUCTIONS AND ARCHITECT PRIOR TO COMMENCEMENT OF WORK. PROVIDE ACCESS HATCH(ES) WHERE REQUIRED.

I. NO CONDUITS, CONDUCTORS OR PENETRATIONS SHALL BE ALLOWED TO BE ROUTED THROUGH GREENHOUSE STRUCTURAL COMPONENTS.

J. WITHIN GREENHOUSE, ALL BOXES AND CONDUITS SHALL BE PVC COATED, WET LOCATION LISTED. ALL ENCLOSURES SHALL BE NEMA 4X.

K. BRANCH CIRCUIT CONDUITS SHALL BE ROUTED TIGHT TO DECK, THROUGH PRE-PUNCHED KNOCKOUTS AT STRUCTURAL MEMBERS. COORDINATE BRANCH CONDUIT ROUTING WITH ARCHITECT, AND PROVIDE COORDINATED SHOP DRAWINGS FOR REVIEW.

SHEET NOTES

1. PROVIDE OPTIONAL ON BOARD OCCUPANCY SENSOR, REFER TO LUMINAIRE SCHEDULE.
2. ON-OFF SWITCH FOR EXTERIOR WORK LIGHTS, TYPE 'SI'.
3. MINI LIGHTING INVERTER BODINE ELI-S-400 OR APPROVED EQUAL. REFER TO 11/S8.01 FOR ATTACHMENT DETAIL, WEIGHT: 98LBS
4. NOT USED.
5. LCPE ON-OFF OVER-RIDE SWITCH. SEE 3/E6.07.
6. NEMA 6-15P, TYPICAL FOR 24 AT H600 AND H601. GROW LIGHTS AND CONTROL SYSTEM FURNISHED BY GREENHOUSE MFG. CONTRACTOR SHALL INSTALL COMPLETE WITH CONTROL SYSTEM FOR AN OPERATIONAL SYSTEM.
7. SURFACE MOUNT TO UNDERSIDE OF HSS BEAM WITH (2)#12 SELF-DRILLING SELF-TAPPING SCREWS.
8. LINE VOLTAGE OVER-RIDE SWITCH

LIGHTING SEQUENCE OF OPERATIONS (XX)

LCS2
LIGHTING SHALL BE CONTROLLED VIA ON BOARD PHOTOCELL WITH AUTOMATIC PROFILE DIMMING. LIGHTING SHALL DIM DOWN TO 30% LUMEN OUTPUT AT OWNER SPECIFIED TIME.

LCS4
LIGHTING SHALL BE CONTROLLED VIA LCP ASTRONOMICAL TIME CLOCK ON-OFF. PROVIDE MANUAL OVER RIDE ADJACENT TO LCP

LCS6
LIGHTING SHALL BE CONTROLLED VIA ON-BOARD PHOTOCELL AND MOTION SENSOR. LIGHTING SHALL TURN ON VIA PHOTOCELL. AFTER 5MINS AND NO MOTION DETECTED, LIGHTING SHALL DIM DOWN TO 30%. WHEN MOTION IS DETECTED, LIGHTING SHALL TURN ON 100%.

LC-A
LIGHTING SHALL BE MANUAL ON VIA WALLSTATION AND AUTO OFF VIA LOCAL OCCUPANCY SENSOR, 15MIN TIME DELAY. LUMINAIRES IN DAYLIGHT ZONES SHALL CONTINUOUSLY DIM TO 30FC SET POINT IN RESPONSE TO PHOTOCELL/AVAILABLE DAYLIGHT. WALL STATION SHALL PROVIDE DIMMING CONTROL.

LC-B
LIGHTING SHALL BE MANUAL ON VIA WALLSTATION AND AUTO OFF VIA LOCAL OCCUPANCY SENSOR, 15MIN TIME DELAY. WALL STATION SHALL PROVIDE DIMMING CONTROL.

LC-C
LIGHTING SHALL BE CONTROLLED VIA STAND ALONE OCCUPANCY SENSOR AND SWITCH. UPON AREA VACANCY AND 15MIN DELAY, LIGHTING SHALL TURN OFF. UPON OCCUPANCY, LIGHTING SHALL TURN ON 100%.

EMERGENCY LIGHTING
UPON LOSS OF POWER, LIGHTING INDICATED AS EMERGENCY SHALL TURN ON REGARDLESS OF CONTROL STATE.

1 LIGHTING PLAN - WEST BUILDING GROUP
SCALE: 1/8" = 1'-0"

4/3/2020 7:20:00 PM BIM 360://PCCD Merritt Horticulture/Merritt Horticulture_2020.rvt

APPROVALS

IDENTIFICATION STAMP
DIV. OF THE STATE ARCHITECT
APP: 01-119409 INC:
REVIEWED FOR
SS ☑ FLS ☑ ACS ☑
DATE: 03/14/2022

NOLL & TAM ARCHITECTS
729 Heinz Avenue
Berkeley, CA 94710
tel 510.542.2200
fax 510.542.2201

RIJA
5515 Doyle Street, #7
Emeryville, CA 94608
www.rijainc.com
RIJA Job #: 2020011

SEAL

REGISTERED PROFESSIONAL ENGINEER
RAY A. JACHOW
No. E19586
Exp. 06-30-23
ELECTRICAL
STATE OF CALIFORNIA

Date Signed: 3/1/22

PROJECT TITLE

Peralta Community College District
Merritt Landscape Horticulture Complex

12500 Campus Drive
Oakland, CA 94616

BID SET

ISSUE DATE	03/03/2022
N&T JOB NUMBER	22003

REVISIONS

	DATE	DESCRIPTION

DRAWN BY	CAD	CHECKED BY	RAJ

SHEET TITLE
LIGHTING PLAN - WEST BUILDING GROUP

SHEET NUMBER
E2.51

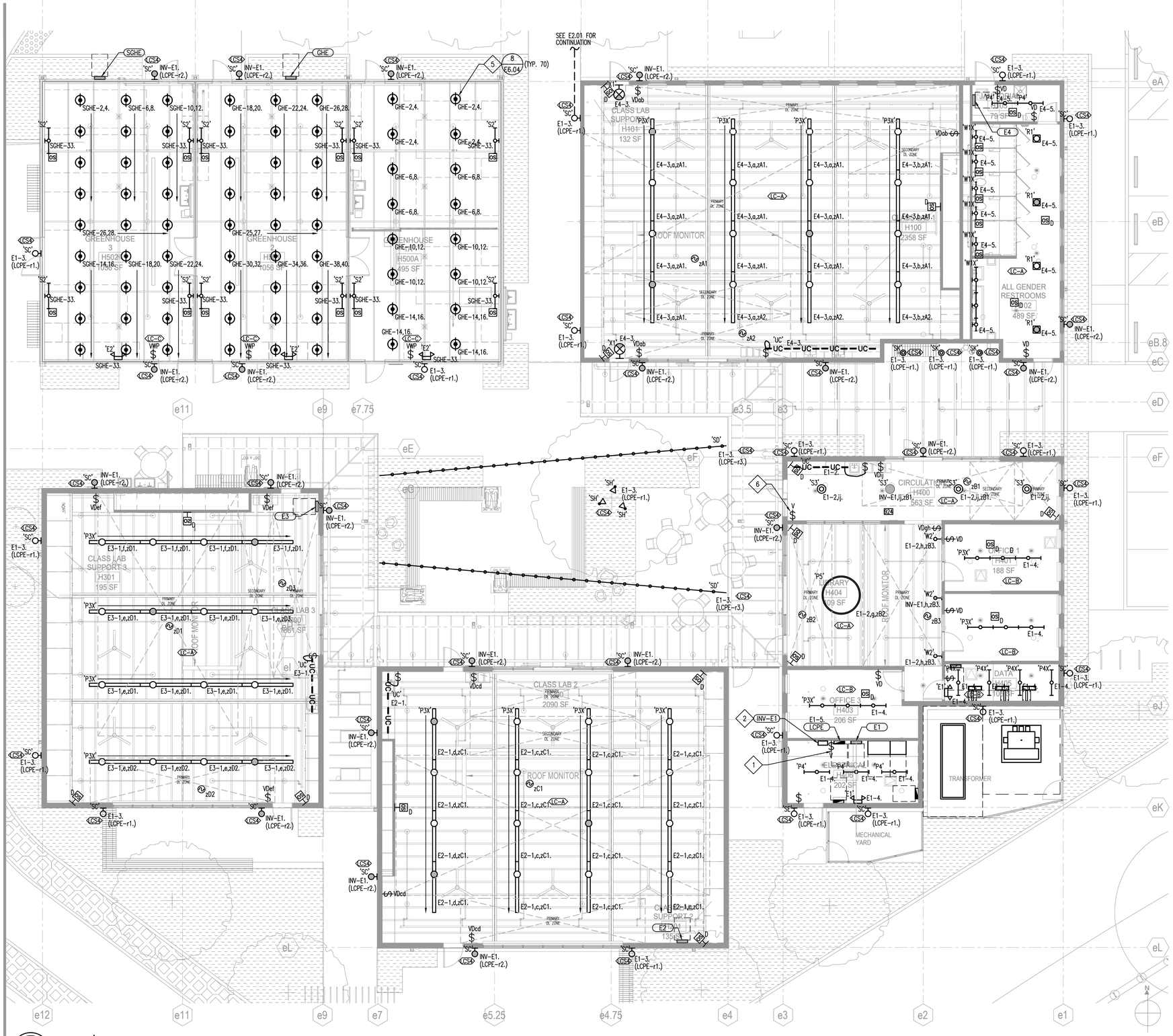

1 LIGHTING PLAN - EAST BUILDING GROUP

SCALE: 1/8" = 1'-0"

GENERAL SHEET NOTES

A. COORDINATE EXACT LOCATION AND MOUNTING HEIGHT OF LUMINAIRES AND LIGHTING CONTROLS WITH ARCHITECT PRIOR TO INSTALLATION.

B. REFER TO ARCHITECTURAL CONSTRUCTION DOCUMENT FOR TYPES AND MATERIALS. COORDINATE LUMINAIRE CEILING ROUGH-INS, TRIM AND SUPPORT WITH LIGHTING SUPPLIER PRIOR TO RELEASE OF LUMINAIRES.

C. LIGHTING CONTROL BASIS OF DESIGN SHALL BE WATTSTOPPER DLM. PROVIDE A COMPLETE SYSTEM, INCLUDING RELAY DEVICES, CONTROLLERS, WIRING, SENSORS, WALLSTATIONS, LABOR TO INSTALL, AND APPURTENANCES TO MEET LIGHTING CONTROL SEQUENCE OF OPERATION.

D. ATTACH ALL LUMINAIRES TO THE CEILING GRID RUNNERS TO RESIST A HORIZONTAL FORCE EQUAL TO THE WEIGHT OF THE LUMINAIRE.

E. ALL FLUSH OR RECESSED LUMINARES WEIGHING 56LBS POUNDS OR MORE MUST BE INDEPENDENTLY SUPPORTED BY NOT LESS THAN FOUR TAUT 12 GA WIRES EACH ATTACHED TO THE LUMINAIRE AND TO THE STRUCTURE ABOVE REGARDLESS OF THE CEILING TYPE OF CEILING GRID SYSTEM USED. THE FOUR TAUT 12 GA WIRES, INCLUDING THEIR ATTACHMENT TO THE STRUCTURE ABOVE, MUST BE CAPABLE OF SUPPORTING FOUR TIMES THE WEIGHT OF THE FIXTURE.

F. SUPPORT SURFACE MOUNTED LIGHT FIXTURES BY AT EAST TWO POSITIVE DEVICES WHICH SURROUND THE CEILING RUNNER AND WHICH ARE EACH SUPPORTED FROM THE STRUCTURE ABOVE BY 12 GA WIRE. SPRING CLIPS OR CLAMPS THAT CONNECT ONLY TO THE RUNNER ARE NOT ACCEPTABLE. PROVIDE ADDITIONAL SUPPORTS WHEN LIGHT FIXTURE ARE EIGHT FEET OR LONGER.

G. SUPPORT PENDANT MOUNTED LUMINARIES DIRECTLY FROM THE STRUCTURE ABOVE WITH RODS, HANGER WIRES, OR CABLE PASSING THROUGH EACH PENDANT TAB. RODS, HANGER WIRES AND/OR CABLE, SHALL BE CAPABLE OF SUPPORTING FOUR TIMES THE WEIGHT OF THE FIXTURE.

H. COORDINATE EXACT LOCATION OF REMOTE DRIVERS AND POWER SUPPLIES WITH MANUFACTURER INSTALLATION INSTRUCTIONS AND ARCHITECT PRIOR TO COMMENCEMENT OF WORK. PROVIDE ACCESS HATCH(ES) WHERE REQUIRED.

I. NO CONDUITS, CONDUCTORS OR PENETRATIONS SHALL BE ALLOWED TO BE ROUTED THROUGH GREENHOUSE STRUCTURAL COMPONENTS.

J. WITHIN GREENHOUSE, ALL BOXES AND CONDUITS SHALL BE PVC COATED, WET LOCATION LISTED. ALL ENCLOSURES SHALL BE NEMA 4X.

K. BRANCH CIRCUIT CONDUITS SHALL BE ROUTED TIGHT TO DECK, THROUGH PRE-PUNCHED KNOCKOUTS AT STRUCTURAL MEMBERS. COORDINATE BRANCH CONDUIT ROUTING WITH ARCHITECT, AND PROVIDE COORDINATED SHOP DRAWINGS FOR REVIEW.

SHEET NOTES (#)

1. LCPW ON-OFF OVER-RIDE SWITCH, SEE 3/E6.07
2. MINI LIGHTING INVERTER BODINE ELI-S-400 OR APPROVED EQUAL. REFER TO 11/S8.01 FOR ATTACHMENT DETAIL, WEIGHT: 98LBS
3. NOT USED
4. NOT USED
5. NEMA 6-15P, TYPICAL. GROW LIGHTS AND CONTROL SYSTEM FURNISHED BY GREENHOUSE MFG. CONTRACTOR SHALL INSTALL COMPLETE WITH CONTROL SYSTEM FOR AN OPERATIONAL SYSTEM. REFER TO GREENHOUSE DRAWINGS FOR GROWLIGHT FIXTURE MOUNTING DETAIL.
6. ON-OFF OVER-RIDE SWITCH FOR TYPE 'SD', RELAY r3. SEE 3/E6.07

LIGHTING SEQUENCE OF OPERATIONS (XX)

LCS2
LIGHTING SHALL BE CONTROLLED VIA ON BOARD PHOTOCELL WITH AUTOMATIC PROFILE DIMMING. LIGHTING SHALL DIM DOWN TO 30% LUMEN OUTPUT AT OWNER SPECIFIED TIME.

LCS4
LIGHTING SHALL BE CONTROLLED VIA LCP ASTRONOMICAL TIME CLOCK ON-OFF. PROVIDE MANUAL OVER RIDE ADJACENT TO LCP

LCS6
LIGHTING SHALL BE CONTROLLED VIA ON-BOARD PHOTOCELL AND MOTION SENSOR. LIGHTING SHALL TURN ON VIA PHOTOCELL. AFTER 5MINS AND NO MOTION DETECTED, LIGHTING SHALL DIM DOWN TO 30%. WHEN MOTION IS DETECTED, LIGHTING SHALL TURN ON 100%.

LC-A
LIGHTING SHALL BE MANUAL ON VIA WALLSTATION AND AUTO OFF VIA LOCAL OCCUPANCY SENSOR, 15MIN TIME DELAY. LUMINAIRES IN DAYLIGHT ZONES SHALL CONTINUOUSLY DIM TO 30FC SET POINT IN RESPONSE TO PHOTOCELL/AVAILABLE DAYLIGHT. WALL STATION SHALL PROVIDE DIMMING CONTROL.

LC-B
LIGHTING SHALL BE MANUAL ON VIA WALLSTATION AND AUTO OFF VIA LOCAL OCCUPANCY SENSOR, 15MIN TIME DELAY. WALL STATION SHALL PROVIDE DIMMING CONTROL.

LC-C
LIGHTING SHALL BE CONTROLLED VIA STAND ALONE OCCUPANCY SENSOR AND SWITCH. UPON AREA VACANCY AND 15MIN DELAY, LIGHTING SHALL TURN OFF. UPON OCCUPANCY, LIGHTING SHALL TURN ON 100%.

EMERGENCY LIGHTING
UPON LOSS OF POWER, LIGHTING INDICATED AS EMERGENCY SHALL TURN ON REGARDLESS OF CONTROL STATE.

APPROVALS

IDENTIFICATION STAMP
DIV. OF THE STATE ARCHITECT
APP: 01-119409 INC:
REVIEWED FOR
SS ☑ FLS ☑ ACS ☑
DATE: 03/14/2022

NOLL & TAM ARCHITECTS
729 Heinz Avenue
Berkeley, CA 94710
tel 510.542.2200
fax 510.542.2201

RIJA
5515 Doyle Street, #7
Emeryville, CA 94608
www.rijainc.com
RIJA Job #: 2020011

SEAL

REGISTERED PROFESSIONAL ENGINEER
RAY A. JACKSON
No. E19586
Exp. 06-30-23
ELECTRICAL
STATE OF CALIFORNIA

Date Signed: 3/1/22

PROJECT TITLE

Peralta Community College District
Merritt Landscape Horticulture Complex

12500 Campus Drive
Oakland, CA 94616

BID SET

ISSUE DATE	03/03/2022
N&T JOB NUMBER	22003

REVISIONS

	DATE	DESCRIPTION

DRAWN BY	CAD	CHECKED BY	RAJ

SHEET TITLE
LIGHTING PLAN - EAST BUILDING GROUP

SHEET NUMBER
E2.52

4/3/2020 7:20:00 PM BIM 360://PCCD Merritt Horticulture/Merritt Horticulture_2020.rvt

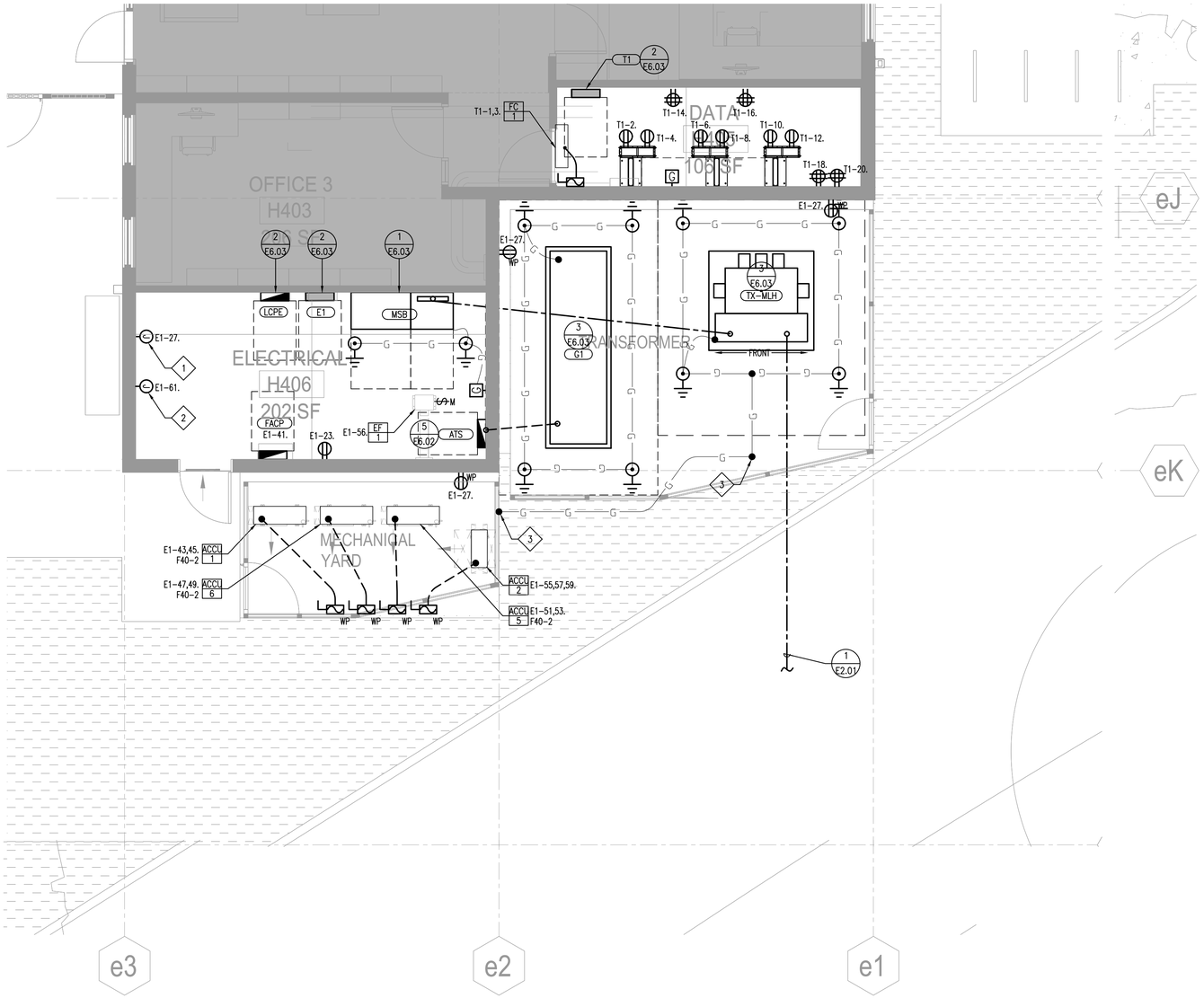

SHEET NOTES

1. 120V FOR IRRIGATION CONTROLLER.
2. FOR BMS CONTROL PANEL
3. BOND METALIC FENCE POST AS SHOWN.

1 ENLARGED PLAN - ELECTRICAL ROOM & IT

SCALE: 1/4" = 1'-0"

APPROVALS

IDENTIFICATION STAMP
DIV. OF THE STATE ARCHITECT
APP: 01-119409 INC:
REVIEWED FOR
SS ☑ FLS ☑ ACS ☑
DATE: 03/14/2022

NOLL & TAM ARCHITECTS
729 Heinz Avenue
Berkeley, CA 94710
tel 510.542.2200
fax 510.542.2201

RIJA
5515 Doyle Street, #7
Emeryville, CA 94608
www.rijainc.com
RIJA Job #: 2020011

SEAL

REGISTERED PROFESSIONAL ENGINEER
RAY A. JACHON
No. E19586
Exp. 06-30-23
ELECTRICAL
STATE OF CALIFORNIA

Date Signed: 3/1/22

PROJECT TITLE

Peralta Community College District
Merritt Landscape Horticulture Complex

12500 Campus Drive
Oakland, CA 94616

BID SET

ISSUE DATE	03/03/2022
N&T JOB NUMBER	22003

REVISIONS

	DATE	DESCRIPTION

DRAWN BY	CAD
CHECKED BY	RAJ

SHEET TITLE
ENLARGED PLANS

SHEET NUMBER
E3.12

4/3/2020 7:20:00 PM BIM 360://PCCD Merritt Horticulture/Merritt Horticulture_2020.rvt

FEEDER SCHEDULE (COPPER)

FEEDER TAG	WIRE AND CONDUIT	MAXIMUM CIRCUIT BREAKER	ACTUAL FEEDER CAPACITY
	2 WIRE + GND		
F20-2	2 #12, 1#12 GND IN 3/4"C	20	20
F30-2	2 #10, 1#10 GND IN 3/4"C	30	30
F40-2	2 #8, 1#10 GND IN 3/4"C	40	40
F50-2	2 #6, 1#8 GND IN 3/4"C	60	55
F70-2	2 #4, 1#8 GND IN 1"C	70	70
F90-2	2 #2, 1#8 GND IN 1"C	90	95
F125-2	2 #1, 1#6 GND IN 1-1/4"C	125	130
	3 WIRE + GND		
F20-3	3 #12, 1#12 GND IN 3/4"C	20	20
F30-3	3 #10, 1#10 GND IN 3/4"C	30	30
F40-3	3 #8, 1#10 GND IN 1"C	40	40
F50-3	3 #6, 1#8 GND IN 1"C	60	55
F70-3	3 #4, 1#8 GND IN 1-1/4"C	70	70
F90-3	3 #2, 1#8 GND IN 1-1/4"C	90	95
F125-3	3 #1, 1#6 GND IN 1-1/2"C	125	130
F150-3	3 #1/0, 1#6 GND IN 1-1/2"C	150	150
F175-3	3 #2/0, 1#6 GND IN 2"C	175	175
F200-3	3 #3/0, 1#6 GND IN 2"C	200	200
F225-3	3 #4/0, 1#4 GND IN 2"C	225/250	230
F250-3	3 #250, 1#4 GND IN 2-1/2"C	250/300	255
F300-3	3 #350, 1#4 GND IN 3"C	300/350	310
F350-3	3 #500, 1#2 GND IN 4"C	350/400	380
F400-3	2 SETS (3 #3/0, 1#2 GND IN 2"C)	400	400
F450-3	2 SETS (3 #4/0, 1#1 GND IN 2-1/2"C)	450/500	460
F500-3	2 SETS (3 #250, 1#1 GND IN 2-1/2"C)	500/600	510
F600-3	2 SETS (3 #350, 1#1 GND IN 3"C)	600/700	620
F700-3	2 SETS (3 #500, 1#1/0 GND IN 3"C)	700/800	760
F800-3	3 SETS (3 #350, 1#1/0 GND IN 3"C)	800	930
F1000-3	3 SETS (3 #500, 1#2/0 GND IN 4"C)	1000	1140
	4 WIRE + GND		
F20-4	4 #12, 1#12 GND IN 3/4"C	20	20
F30-4	4 #10, 1#10 GND IN 3/4"C	30	30
F40-4	4 #8, 1#10 GND IN 1"C	40	40
F50-4	4 #6, 1#8 GND IN 1-1/4"C	60	55
F70-4	4 #4, 1#8 GND IN 1-1/4"C	70	70
F90-4	4 #2, 1#8 GND IN 1-1/2"C	90	95
F125-4	4 #1, 1#6 GND IN 2"C	125	130
F150-4	4 #1/0, 1#6 GND IN 2"C	150	150
F175-4	4 #2/0, 1#6 GND IN 2"C	175	175
F200-4	4 #3/0, 1#6 GND IN 2-1/2"C	200	200
F225-4	4 #4/0, 1#4 GND IN 2-1/2"C	225/250	230
F250-4	4 #250, 1#4 GND IN 3"C	250/300	255
F300-4	4 #350, 1#4 GND IN 3"C	300/350	310
F350-4	4 #500, 1#2 GND IN 4"C	350/400	380
F400-4	2 SETS (4 #3/0, 1#2 GND IN 2-1/2"C)	400	400
F450-4	2 SETS (4 #4/0, 1#1 GND IN 2-1/2"C)	450/500	460
F500-4	2 SETS (4 #250, 1#1 GND IN 3"C)	500/600	510
F600-4	2 SETS (4 #350, 1#1 GND IN 3"C)	600/700	620
F700-4	2 SETS (4 #500, 1#1/0 GND IN 4"C)	700/800	760
F800-4	3 SETS (4 #350, 1#1/0 GND IN 3"C)	800	930
F1000-4	3 SETS (4 #500, 1#2/0 GND IN 4"C)	1000	1140
F1200-4	4 SETS (4 #350, 1#3/0 GND IN 3"C)	1200	1240
F1500-4	5 SETS (4 #350, 1#4/0 GND IN 3"C)	1500	1550
F1600-4	5 SETS (4 #500, 1#4/0 GND IN 4"C)	1600	1900

FEEDER SCHEDULE NOTES:

A. CONDUIT SIZES ARE MINIMUM.
B. USE MINIMUM 1"C FOR UNDERGROUND WORK
C. ABOVE 86 DEG. F AMBIENT, INCREASE WIRE SIZE PER NATIONAL ELECTRICAL CODE
D. DERATE WIRE SIZE PER NEC FOR MORE THAN THREE CURRENT CARRYING WIRES IN CONDUIT

SUMMARY OF VOLT DROP LIMITS

CIRCUIT VOLTS (V)	2% VOLTAGE DROP (V)	3% VOLTAGE DROP (V)	TOTAL LOSS (V)
120	2.4	3.6	6.0
208	4.2	6.2	10.4

SUMMARY OF MAXIMUM FEEDER AND BRANCH CIRCUIT LENGTHS

WIRE (AWG)	CIRCUIT AMPS (A)	MAXIMUM FEEDER LENGTH (ft)		MAXIMUM BRANCH CIRCUIT LENGTH (ft)	
		120V	208V	120V	208V
14	12	39	67	58	101
12	16	46	80	69	120
10	24	48	83	72	125
8	32	57	99	86	149
6	40	73	127	110	190
4	52	89	154	134	232
2	72	103	178	154	267
1/0	96	123	212	184	319
2/0	108	137	238	206	357
4/0	144	163	283	245	425
250	164	170	294	255	441
300	184	181	314	272	471
350	200	195	338	292	506
500	248	224	388	336	582

GENERAL SHEET NOTES

A. DERATE WIRE SIZE PER NEC FOR NUMBER OF CURRENT CARRYING WIRES AND FOR AMBIENT TEMPERATURE OF 86F

B. FEEDERS SHOWN ARE COPPER CONDUCTORS WITH THHN/THWN INSULATION TYPE UNLESS NOTED OTHERWISE.

C. FEEDER LENGTH AND VOLTAGE DROP CALCULATIONS ARE FOR ESTIMATING VOLTAGE DROP AND SHORT CIRCUIT COORDINATION PURPOSES ONLY. CONTRACTOR SHALL USE ACTUAL FEEDER LENGTHS TO CALCULATE ACTUAL VOLTAGE DROP AND SHORT CIRCUIT VALUES.

D. THE CONTRACTOR SHALL PROVIDE AND INSTALL PERMANENTLY ATTACHED ARC FLASH HAZARD LABELS FOR ALL POWER DISTRIBUTION EQUIPMENT (CEC 110.16). LABELS SHALL BE PROFESSIONALLY PRINTED AND INCLUDE THE FOLLOWING INFORMATION:

D.1. EXISTENCE OF ARC FLASH HAZARD, FLASH PROTECTION BOUNDARY
D.2. INCIDENT ENERGY IN CAL/CM2 APPROPRIATE FOR GEAR PER IEEE1584
D.3. PPE CLOTHING REQUIRED
D.4. VOLTAGE SHOCK HAZARD
D.5. LIMITED SHOCK APPROACH BOUNDARY
D.6. RESTRICTED SHOCK APPROACH BOUNDARY

SHEET NOTES

1. EXISTING 15KV, 3#500MCM IN 4"C WITH 4"C SPARE, CONCRETE ENCASED
2. PROVIDE 1-1/4"C AND CABLING TO GENERATOR ANNUNCIATOR PANEL PER MANUFACTURER INSTRUCTIONS
3. STUB AND CAP AT ROOF FOR FUTURE PV

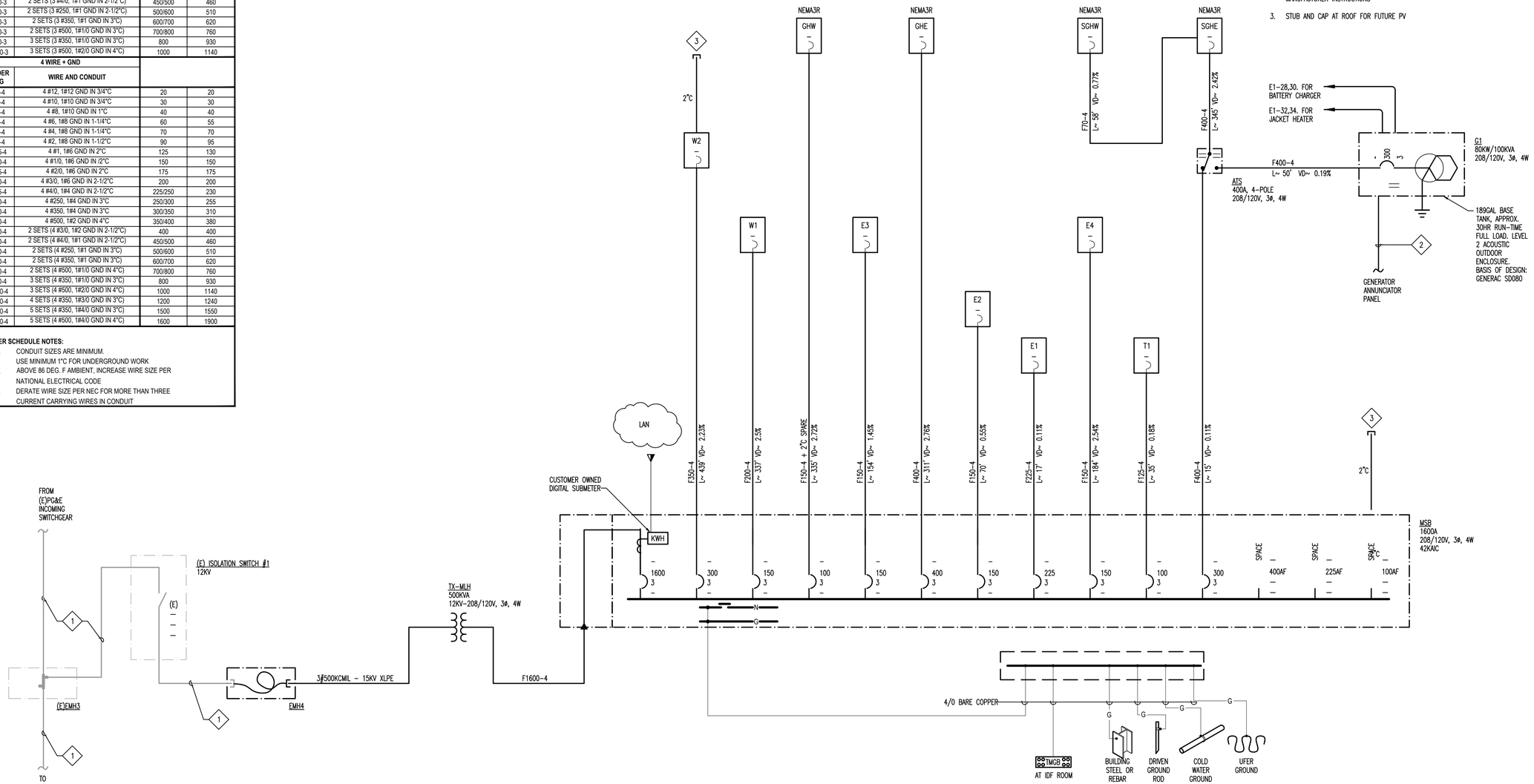

APPROVALS

IDENTIFICATION STAMP
DIV. OF THE STATE ARCHITECT
APP: 01-119409 INC:
REVIEWED FOR
SS ☑ FLS ☑ ACS ☑
DATE: 03/14/2022

NOLL & TAM ARCHITECTS
729 Heinz Avenue
Berkeley, CA 94710
tel 510.542.2200
fax 510.542.2201

RIJA
5515 Doyle Street, #7
Emeryville, CA 94608
www.rijainc.com
RIJA Job #: 2020011

SEAL

REGISTERED PROFESSIONAL ENGINEER — RAJ JANCHOR — No. E19586 Exp. 06-30-23 — ELECTRICAL — STATE OF CALIFORNIA

Date Signed: 3/1/22

PROJECT TITLE

Peralta Community College District
Merritt Landscape Horticulture Complex

12500 Campus Drive
Oakland, CA 94616

BID SET

ISSUE DATE	03/03/2022
N&T JOB NUMBER	22003

REVISIONS

	DATE	DESCRIPTION

DRAWN BY **CAD** | CHECKED BY **RAJ**

SHEET TITLE
SINGLE LINE DIAGRAM

SHEET NUMBER
E4.01

4/3/2020 7:20:00 PM BIM 360://PCCD Merritt Horticulture/Merritt Horticulture_2020.rvt

LUMINAIRE SCHEDULE - EXTERIOR

TYPE:	SA	**TYPE:**	SD	**TYPE:**	SI
BUG RATING:	B2-U0-G2	**BUG RATING:**	EXEMPT PER 140.7(a) (9)	**BUG RATING:**	EXEMPT PER 140.7(a) (9)
WEIGHT / DETAIL:	27 lbs; 2/E6.05	**WEIGHT / DETAIL:**	LESS THAN 1 lbs PER FT / NA	**WEIGHT / DETAIL:**	14.6 lbs ; 4/E6.05
DESCRIPTION:	POLE MOUNTED AREA LIGHT	**DESCRIPTION:**	LED CATENARY LIGHTING SYSTEM	**DESCRIPTION:**	HI LUMEN LED WALL SCONCE
HOUSING:	DIE CAST ALUMINUM ALLOY	**HOUSING:**	12V FESTTON SOCKET ASSEMBLY, GLOBES 2FT ON CENTER, APPROX. 60FT LONG	**HOUSING:**	DIE CAST LUMINUM HOUSING
LENS:	---	**LENS:**	CLEAR GLOBE	**LENS:**	POLYCARBONATE
DISTRIBUTION:	TYPE II	**DISTRIBUTION:**	---	**DISTRIBUTION:**	FORWARD THROW
MOUNTING:	POLE MOUNT	**MOUNTING:**	CATENARY SYSTEM	**MOUNTING:**	WALL
FINISH:	BRONZE	**FINISH:**	---	**FINISH:**	BRONZE
DRIVER/BALLAST:	0-10V	**DRIVER/BALLAST:**	30W 12V POWER SUPPLY	**DRIVER/BALLAST:**	INTEGRAL 0-10V
LED/LAMPS:	5800 LUMENS, 3000K	**LED/LAMPS:**	LED GLOBES, 74CRI, 3000K	**LED/LAMPS:**	3146 LUMENS, 3000K
WATTS:	52W	**WATTS:**	60W (POWER SUPPLY)	**WATTS:**	28W
MANUFACTURER:	GARDCO PUREFORM #P26-140L-1150-WW-G2-AR-2-120-CS30-IMRI2-PCB-BZ OR APPROVED POLE: RA4-CB-12-D1/D2-BRP OR APPROVED, 10FT POLE WHERE NOTED ON PLANS	**MANUFACTURER:**	TIVOLI #LSL-B-24-H-30-C-12-L60 OR APPROVED POWER SUPPLY TIVOLI #ADNM-60-1-5-12-D OR APPROVED	**MANUFACTURER:**	LEOTEK #ES1-24H-MV-WW-FT-DB-350-PC/MSL3/FSIR100 OR APPROVED
NOTES:	PROVIDE RETROFIT ARM MOUNT KIT FOR LOCATIONS WHERE POLES ARE RE-USED, REFER TO SITE PLAN	**NOTES:**		**NOTES:**	
TYPE:	SAA	**TYPE:**	SE	**TYPE:**	SJ
BUG RATING:	B2-U0-G2	**BUG RATING:**	B0-U0-G0	**BUG RATING:**	B1-U3-G1
WEIGHT / DETAIL:	27 lbs; 2/E6.05	**WEIGHT / DETAIL:**	1.1 lbs; 4/E6.05	**WEIGHT / DETAIL:**	3.6 lbs ; 4/E6.05
DESCRIPTION:	POLE MOUNTED AREA LIGHT	**DESCRIPTION:**	LED WALL SCONCE SKINNY	**DESCRIPTION:**	LOW LEVEL LED WALL PACK
HOUSING:	DIE CAST ALUMINUM ALLOY	**HOUSING:**	DIE CASE MARINE GRADE COPPER FREE	**HOUSING:**	DIE CAST ALUMINUM
LENS:	---	**LENS:**	MATTE SAFETY GLASS	**LENS:**	POLYCARBONATE
DISTRIBUTION:	TYPE III	**DISTRIBUTION:**	---	**DISTRIBUTION:**	---
MOUNTING:	POLE MOUNT	**MOUNTING:**	WALL	**MOUNTING:**	WALL
FINISH:	BRONZE	**FINISH:**	BRZ	**FINISH:**	BRONZE
DRIVER/BALLAST:	0-10V	**DRIVER/BALLAST:**	0-10V	**DRIVER/BALLAST:**	INTEGRAL 0-10V
LED/LAMPS:	5800 LUMENS, 3000K	**LED/LAMPS:**	204 LUMENS, 80CRI, 3000K,	**LED/LAMPS:**	2700 LUMENS, 3000K
WATTS:	52W	**WATTS:**	5.8W	**WATTS:**	25W
MANUFACTURER:	GARDCO PUREFORM #P26-140L-1150-WW-G2-AR-3-120-CS30-IMRI2-PCB-BZ OR APPROVED POLE: RA4-CB-12-D1/D2-BRP OR APPROVED	**MANUFACTURER:**	BEGA 33 514-K3 OR APPROVED	**MANUFACTURER:**	ORACLE LIGHTING #OWP-SL-101-LED-2700L-MVOLT-3000K-BZ OR OR APPROVED
NOTES:	PROVIDE RETROFIT ARM MOUNT KIT FOR LOCATIONS WHERE POLES ARE RE-USED, REFER TO SITE PLAN	**NOTES:**		**NOTES:**	
TYPE:	SB	**TYPE:**	SF	**TYPE:**	SK
BUG RATING:	B1-U3-G2	**BUG RATING:**	EXEMPT PER 140.7(a) (9)	**BUG RATING:**	EXEMPT PER CALGREEN 5.106.8 EXCEPTION 3
WEIGHT / DETAIL:	22 lbs / 3/E6.05	**WEIGHT / DETAIL:**	1 lbs per Foot	**WEIGHT / DETAIL:**	2.2 lbs /NA
DESCRIPTION:	POLE TOP WITH SYMMETRICAL DISTRIBUTION	**DESCRIPTION:**	WET RATED LINEAR LED	**DESCRIPTION:**	IMPACT RESISTANT SURFACE LED
HOUSING:	DIE CAST ALUMINUM WITH SPUN ALUMINUM CAP	**HOUSING:**	ALUMINUM FIXTURE ENCAPSULATED IN POLYURETHANE	**HOUSING:**	DIE CAST MARINE GRADE COPPER FREE
LENS:	HIGH IMPACT ACRYLIC DIFFUSER WITH MATTE SURFACE	**LENS:**	TRANSLUCENT FINISH	**LENS:**	CRYSTAL GLASS INSIDE WHITE
DISTRIBUTION:	SYMETRIC	**DISTRIBUTION:**	---	**DISTRIBUTION:**	---
MOUNTING:	POST TOP	**MOUNTING:**	SURFACE WITH CONCEALED CLIP	**MOUNTING:**	SURFACE CEILING
FINISH:	BRONZE	**FINISH:**	BLACK	**FINISH:**	BRONZE
DRIVER/BALLAST:	0-10V	**DRIVER/BALLAST:**	REMOTE POWER SUPPLY, SEE PART # BELOW	**DRIVER/BALLAST:**	0-10V
LED/LAMPS:	2654 LUMENS, 3000K, 80CRI,	**LED/LAMPS:**	3000K	**LED/LAMPS:**	323 LUMENS, 3000K
WATTS:	27W	**WATTS:**	1.5W PER FT	**WATTS:**	6.6W
MANUFACTURER:	BEGA 77 120 OR APPROVED POLE: BEGA 958HR with 3" TENON OR APPROVED	**MANUFACTURER:**	QTRAN VERS-ENCAPSULATED #VERS-06-SW-1.5-30-WET-ENC/TL-XX-XX-XX-BK-XX-CC-BK OR APPROVED POWER SUPPLY: Q-HEX-M60W-DC-120-24V OR APPROVED, PROVIDE Q-TRIX-R50 HOUSING	**MANUFACTURER:**	BEGA #33 534 OR APPROVED
NOTES:		**NOTES:**	PROVIDE REQUIRED CONNECTORS AND CONFIGURATION FOR CONTINUOUS RUNS. REFER TO PLANS	**NOTES:**	
TYPE:	SC	**TYPE:**	SG	**TYPE:**	SL
BUG RATING:	B1-U0-G0	**BUG RATING:**	EXEMPT PER 140.7(a) (9)	**BUG RATING:**	B0-U0-G1
WEIGHT / DETAIL:	4 lbs ; 4/E6.05	**WEIGHT / DETAIL:**	22 lbs; 5/E6.05	**WEIGHT / DETAIL:**	12.8 lbs / 5/E6.05
DESCRIPTION:	LED WALL SCONCE	**DESCRIPTION:**	24" TALL SOLAR POWERED BOLLARD	**DESCRIPTION:**	SHILDED SYMETRIC FORWARD THROW BOLLARD
HOUSING:	DIE CASE MARINE GRADE COPPER FREE	**HOUSING:**	EXTRUDED ALUMINUM	**HOUSING:**	DIE CAST MARINE GRADE COPPER FREE
LENS:	MATTE SAFETY GLASS	**LENS:**	---	**LENS:**	CLEAR SAFETY GLASS
DISTRIBUTION:	DIRECT	**DISTRIBUTION:**	WIDE	**DISTRIBUTION:**	FORWARD THROW
MOUNTING:	WALL	**MOUNTING:**	---	**MOUNTING:**	GROUND
FINISH:	BRONZE	**FINISH:**	BLACK	**FINISH:**	BRONZE
DRIVER/BALLAST:	0-10V DIMMABLE	**DRIVER/BALLAST:**	---	**DRIVER/BALLAST:**	0-10V
LED/LAMPS:	938 LUMENS, 3000K, 80CRI, B1-U0-G0	**LED/LAMPS:**	3000K	**LED/LAMPS:**	3000K, 1650 LUMENS, 80CRI
WATTS:	11W	**WATTS:**	---	**WATTS:**	15W
MANUFACTURER:	BEGA 24218-K3 OR APPROVED	**MANUFACTURER:**	METEOR #SP-7S-30K-BLK-WD-AKE-1S OR APPROVED	**MANUFACTURER:**	BEGA #84 238-K3 OR APPROVED
NOTES:		**NOTES:**		**NOTES:**	
		TYPE:	SH	**TYPE:**	SM
		BUG RATING:	EXEMPT PER 140.7(a) (9)	**BUG RATING:**	EXEMPT PER 140.7(a) (9)
		WEIGHT / DETAIL:	2 lbs / NA	**WEIGHT / DETAIL:**	2 lbs / 5/E6.06
		DESCRIPTION:	MICRO LED UP LIGHT FOR TREES	**DESCRIPTION:**	IN-GROUND FLOOD LIGHT
		HOUSING:	ALUMINUM	**HOUSING:**	COPPER FREE ALUMINUM (6061-T6)
		LENS:	SOFT FOCUS	**LENS:**	SOFT FOCUS
		DISTRIBUTION:	MEDIUM FLOOD	**DISTRIBUTION:**	WIDE FLOOD, 60 DEGREE
		MOUNTING:	GROUND	**MOUNTING:**	GROUND
		FINISH:	BRONZE	**FINISH:**	WRINKLED BRONZE
		DRIVER/BALLAST:	REMOTE POWER SUPPLY, SEE PART # BELOW	**DRIVER/BALLAST:**	INTEGRAL DRIVER
		LED/LAMPS:	3000K	**LED/LAMPS:**	3000K, 80CRI, 869 LUMENS
		WATTS:	3W	**WATTS:**	13W
		MANUFACTURER:	BK LIGHTING MINI-MICRO LED #MM-LED-e71-MFL-BZP-12-8 OR APPROVED POWER SUPPLY: PP-A18-TRe20-BZP OR APPROVED	**MANUFACTURER:**	BK LIGHTING #DE-LED-TR-x99-WFL-BZW-12-A-ELV-120 OR APPROVED
		NOTES:		**NOTES:**	

LUMINAIRE SCHEDULE - INTERIOR

TYPE:	P1	**TYPE:**	S2	**TYPE:**	X1
WEIGHT / DETAIL:	12 lbs ; 1, 2/E6.06	**WEIGHT / DETAIL:**	14 lbs / NA	**WEIGHT / DETAIL:**	NA
DESCRIPTION:	PENDANT CAST ALUM OVER GLASS SHADE	**DESCRIPTION:**	SEALED/GASKETED LINEAR LED	**DESCRIPTION:**	UNIVERSAL MOUNT EDGE LIT EXIT SIGN
HOUSING:	DIE CAST ALUMINUM	**HOUSING:**	MOLDED FIBERGLASS BODY	**HOUSING:**	DIE CAST ALUMINUM FACEPLATE AND BACKPLATE
LENS:	GLASS SHADE	**LENS:**	CLEAR ACRYLIC LENS	**LENS:**	---
DISTRIBUTION:	60 DEGREE BEAM ANGLE	**DISTRIBUTION:**	DIRECT	**DISTRIBUTION:**	---
MOUNTING:	PENDANT, ADJUSTABLE CABLE MOUNT	**MOUNTING:**	SURFACE	**MOUNTING:**	UNIVERSAL MOUNT
FINISH:	BLACK ALUMINUM FRAME OVER GLASS SHADE	**FINISH:**	STANDARD	**FINISH:**	BLACK FRAME, ALUMINUM FACE
DRIVER/BALLAST:	INTEGRAL 0-10V, 1%DIM	**DRIVER/BALLAST:**	0-10V INTEGRAL	**DRIVER/BALLAST:**	INTEGRAL 90MIN BATTERY
LED/LAMPS:	8970 LUMENS, 3500K, 90CRI	**LED/LAMPS:**	3500 LUMENS, 80CRI, 3500K	**LED/LAMPS:**	---
WATTS:	94W	**WATTS:**	39W	**WATTS:**	---
MANUFACTURER:	FC LIGHTING #FCP662-UNV-35K-CRI90-CC-RA-LD OR APPROVED	**MANUFACTURER:**	XTRALIGHT #VTC-4-4000L-35K-DIM-FSP2-OR APPROVED	**MANUFACTURER:**	EMERGILITE #DXN-XX-G OR APPROVED
NOTES:	PROVIDE BATTERY PACK AS NOTED ON PLANS, #BBUR OR APPROVED	**NOTES:**		**NOTES:**	
TYPE:	P2	**TYPE:**	S3	**TYPE:**	X2
WEIGHT / DETAIL:	1.9 lbs ; 1, 2/E6.06	**WEIGHT / DETAIL:**	2 lbs / NA	**WEIGHT / DETAIL:**	NA
DESCRIPTION:	2.5" APERATURE MICRO CYLINDER	**DESCRIPTION:**	VOLUMETRIC / DIRECTION LIGHTING	**DESCRIPTION:**	NEMA4X EXIT SIGN WITH EM LIGHTING HEADS
HOUSING:	2.5"D x 7.9"H, ALUMINUM	**HOUSING:**	MACHINED ALUMINUM CANOPY AND REFLECTOR	**HOUSING:**	FULLY GASKETED NEMA 4X HOUSING
LENS:	---	**LENS:**	---	**LENS:**	---
DISTRIBUTION:	60 DEGREE BEAM ANGLE	**DISTRIBUTION:**	DIRECT/INDIRECT	**DISTRIBUTION:**	---
MOUNTING:	POWER LINE 6FT	**MOUNTING:**	SURFACE	**MOUNTING:**	UNIVERSAL MOUNT
FINISH:	BLACK	**FINISH:**	WHITE	**FINISH:**	BLACK FRAME, ALUMINUM FACE
DRIVER/BALLAST:	INTEGRAL 0-10V, 10% DIM	**DRIVER/BALLAST:**	0-10V INTEGRAL 1% DIM	**DRIVER/BALLAST:**	INTEGRAL 90MIN BATTERY
LED/LAMPS:	3500K, 85CRI	**LED/LAMPS:**	80CRI, 3500K	**LED/LAMPS:**	---
WATTS:	15W	**WATTS:**	17W	**WATTS:**	---
MANUFACTURER:	METEOR DOT 2.5 OR APPROVED	**MANUFACTURER:**	LUCIFER STELLAR #S-WH-WH-8035-8035-55-S-0-SG-J OR APPROVED	**MANUFACTURER:**	EMERGILITE #BA-SVX12N-XX-G-D-4X-2-LJ OR APPROVED
NOTES:		**NOTES:**	PROVIDE BATTERY PACK AS NOTED ON PLANS, #EMB-S-20/25-120/277-LEDX OR APPROVED	**NOTES:**	
TYPE:	P3X	**TYPE:**	UC	**TYPE:**	E1
WEIGHT / DETAIL:	2.3 lbs/ft; 1, 2, 5/E6.06	**WEIGHT / DETAIL:**	1 lbs ; 3/E6.06	**WEIGHT / DETAIL:**	NA
DESCRIPTION:	2.5" LINEAR LED PENDANT	**DESCRIPTION:**	LINEAR LED UNDERCABINET	**DESCRIPTION:**	EMERGENCY WALL PACK
HOUSING:	6061 T6 EXTRUDED ALUMINUM BODY	**HOUSING:**	LED TAPE LIGHT WITH LOUVERS OVER CLEAR LENS	**HOUSING:**	STEEL HOUSING
LENS:	TOP GLOW, FLUSH FROST DIFUSER	**LENS:**	CLEAR ACRYLIC LENS	**LENS:**	---
DISTRIBUTION:	DIRECT/INDIREct	**DISTRIBUTION:**	DIRECT	**DISTRIBUTION:**	---
MOUNTING:	ADJUSTABLE PENDANT AIRCRAFT CABLE	**MOUNTING:**	SURFACE WITH CONCEALED CLIP	**MOUNTING:**	WALL
FINISH:	STANDARD, SELECTED BY ARCHITECT	**FINISH:**	BLACK	**FINISH:**	BLACK
DRIVER/BALLAST:	INTEGRAL 0-10V 10%DIM	**DRIVER/BALLAST:**	REMOTE POWER SUPPLY	**DRIVER/BALLAST:**	INTEGRAL 90MIN BATTERY
LED/LAMPS:	STANDARD OUTPUT UP/DOWN, 90CRI, 3500K	**LED/LAMPS:**	79LUMENS/FT, 97CRI, 3500K	**LED/LAMPS:**	---
WATTS:	6.7W PER FOOT	**WATTS:**	1.5W PER FT	**WATTS:**	---
MANUFACTURER:	FINELITE #HP-X-P-ID-XX-S-S-935-WSOTG-F-120-SC-FC-10%-FA50-C4-F E-XX- OR APPROVED	**MANUFACTURER:**	QTRAN #VERS-07SW-1.5-35-DRY-CL-XX-XX-XX-XX-XX-CC-BK OR APPROVED POWER SUPPLY QTRAN iQ-PH OR APPROVED.	**MANUFACTURER:**	EMERGILITE #B-12JSC30-2-L10-F,-ADNA OR APPROVED
NOTES:	(SEE PLANS FOR LENGTH). PROVIDE EMERGENCY BATTERY PACK AS NOTED ON PLANS #FAC CHO OR APPROVED	**NOTES:**	PROVIDE REQUIRED CONNECTORS AND CONFIGURATION FOR A CONTINUOUS RUN. REFER TO PLANS	**NOTES:**	
TYPE:	P4	**TYPE:**	W1X	**TYPE:**	E2
WEIGHT / DETAIL:	1.5 lbs/ft ; 1, 2/E6.06	**WEIGHT / DETAIL:**	2.3 lbs/ft / NA	**WEIGHT / DETAIL:**	NA
DESCRIPTION:	INDUSTRIAL STRIP LED	**DESCRIPTION:**	LINEAR LED WALLMOUNT	**DESCRIPTION:**	NEMA4X EMERGENCY WALL PACK
HOUSING:	HEAVY GAUGE COLD ROLLED STEEL HOUSING	**HOUSING:**	6061 T6 EXTRUDED ALUMINUM BODY	**HOUSING:**	POLYCARBONATE GRAY HOUSING
LENS:	CONTOURED FROSTED ACRYLIC LENS	**LENS:**	HEX LOUVER	**LENS:**	---
DISTRIBUTION:	DIRECT	**DISTRIBUTION:**	DIRECT/INDIRECT	**DISTRIBUTION:**	---
MOUNTING:	CABLE HUNG	**MOUNTING:**	WALL	**MOUNTING:**	WALL
FINISH:	MATTE BLACK	**FINISH:**	STANDARD SELECTED BY ARCHITECT	**FINISH:**	STANDARD
DRIVER/BALLAST:	INTEGRAL 0-10V	**DRIVER/BALLAST:**	INTEGRAL 0-10V 10%DIM	**DRIVER/BALLAST:**	INTEGRAL 90MIN BATTERY
LED/LAMPS:	4000 LUMENS, 3500K, 80CRI	**LED/LAMPS:**	STANDARD UP/DOWN, 80CRI, 3500K	**LED/LAMPS:**	---
WATTS:	31W	**WATTS:**	7.2W PER FOOT	**WATTS:**	---
MANUFACTURER:	DAY BRITE #FSS-4-40L-UNV-DIM-BK OR APPROVED	**MANUFACTURER:**	FINELITE #HP-2-WM-ID-XX-S-S-835-TG-RG-LHC-96LG-120-SC-FC-10%-MB-FE-SW OR APPROVED	**MANUFACTURER:**	EMERGILITE #HPHRL-D-L15 OR APPROVED
NOTES:	PROVIDE ADJUSTABLE CABLE HANGAR KIT	**NOTES:**	PROVIDE INTEGRAL OCCUPANCY SENSOR WHERE NOTED ON PLANS ONLY. SEE PLANS FOR LENGTH	**NOTES:**	
TYPE:	P5	**TYPE:**	W2	**TYPE:**	NOT USED
WEIGHT / DETAIL:	39 lbs ; 4/E6.06	**WEIGHT / DETAIL:**	6 lbs / NA	**WEIGHT / DETAIL:**	
DESCRIPTION:	6FT DIAMETER DIRECT/INDIRECT CIRCULAR PENDANT	**DESCRIPTION:**	SUSPENDED CYLINDER WITH HANGING WALL BRACKET	**DESCRIPTION:**	
HOUSING:	ALUMINUM WITH SS HARDWARE	**HOUSING:**	ANODIZED ALUMINUM	**HOUSING:**	
LENS:	ACRYLIC DIFFUSER	**LENS:**	---	**LENS:**	
DISTRIBUTION:	DIRECT/INDIRECT	**DISTRIBUTION:**	40 DEGREE BEAM ANGLE	**DISTRIBUTION:**	
MOUNTING:	PENDANT, SINGLE PLATE	**MOUNTING:**	WALL MOUNT	**MOUNTING:**	
FINISH:	STANDARD FINISH BY ARCHITECT	**FINISH:**	STANDARD SELECTED BY ARCHITECT	**FINISH:**	
DRIVER/BALLAST:	INTEGRAL 0-10V	**DRIVER/BALLAST:**	0-10V INTEGRAL, 1% DIM	**DRIVER/BALLAST:**	
LED/LAMPS:	18173 LUMENS, 3500K	**LED/LAMPS:**	1300 LUMENS, 98CRI, 3500K	**LED/LAMPS:**	
WATTS:	203W	**WATTS:**	12W	**WATTS:**	
MANUFACTURER:	TMS LUNA #971LU-72ID-35K-1-S-PSBC-XXX-DIML OR APPROVED	**MANUFACTURER:**	LINDSLEY #LLRD.PN.15-35-1300A-XX-40-BR09XX OR APPROVED	**MANUFACTURER:**	
NOTES:		**NOTES:**		**NOTES:**	
TYPE:	R1	**TYPE:**	NOT USED	**TYPE:**	NOT USED
WEIGHT / DETAIL:	2 lbs / NA	**WEIGHT / DETAIL:**		**WEIGHT / DETAIL:**	
DESCRIPTION:	4" RECESSED LED DOWNLIGHT	**DESCRIPTION:**		**DESCRIPTION:**	
HOUSING:	NEW CONSTRUCTION HOUSING	**HOUSING:**		**HOUSING:**	
LENS:	SOFT FOCUS LENS	**LENS:**		**LENS:**	
DISTRIBUTION:	---	**DISTRIBUTION:**		**DISTRIBUTION:**	
MOUNTING:	RECESSED	**MOUNTING:**		**MOUNTING:**	
FINISH:	STANDARD FINISH BY ARCHITECT	**FINISH:**		**FINISH:**	
DRIVER/BALLAST:	INTEGRAL 0-10V 1% DIM	**DRIVER/BALLAST:**		**DRIVER/BALLAST:**	
LED/LAMPS:	1191 LUMENS, 3500K, 80CRI	**LED/LAMPS:**		**LED/LAMPS:**	
WATTS:	14W	**WATTS:**		**WATTS:**	
MANUFACTURER:	LUCIFER #F4R-MFS-1-WH-80C16A-35-60-NC-1-LN2 OR APPROVED	**MANUFACTURER:**		**MANUFACTURER:**	
NOTES:	PROVIDE BATTERY PACK AS NOTED ON PLANS, #EMB-S-20/25-120/277-LEDX OR APPROVED	**NOTES:**		**NOTES:**	

FLOOR BOX SCHEDULE

TAG	DESCRIPTION	POWER	LOW VOLTAGE	NOTES	BASIS OF DESIGN
FB1	4-GANG FLUSH FLOOR BOX	1-GANG DUPLEX 1-GANG SPARE	2-GANG FOR AV INPUT PLATE, REFER TO TECHNOLOGY DRAWINGS	PROVIDE FLUSH STYLE COVER AND BARE CONCRETE TRIM RING.	LEGRAND EVOLUTION EFB4SS-OG, ALUMINUM COVER, OR APPROVED EQUAL
FB2	1-GANG FLUSH FLOOR BOX	1-GANG DUPLEX	---	PROVIDE BRUSHED ALUMINUM DUPLEX COVER LID	LEGRAND RATCHET PRO STEEL ON GRADE APPROVED EQUAL
FB3	2-GANG FLUSH FLOOR BOX	2-GANG DUPLEX	---	PROVIDE BRUSHED ALUMINUM LID	LEGRAND OMNIBOX ON GRADE APPROVED EQUAL
FB4	FURNITURE FEED FLOOR BOX	POWER FEED	DATA FEED		LEGRAND EFBFF-OG OR APPROVED EQUAL

NOTES

1 PROVIDE REQUIRED MOUTNING BRACKETS FOR DEVICES INDICATED ON ELECTRICAL AND TECHNOLOGY PLANS

GENERAL LUMINAIRE SCHEDULE NOTES

A. PER CALGREEN CHAPTER 5, TABLE 5.106.8, THE MAXIMUM ALLOWABLE BACKLIGHT–UPLIGHT–GLARE RATING FOR THIS PROJECT IS LIGHTING ZONE LZ3.

B. THIS LUMINAIRE SCHEDULE IS NOT COMPLETE WITHOUT A COPY OF THE PROJECT MANUAL CONTAINING THE ELECTRICAL SPECIFICATIONS.

C. DIMMING CONTROL PROTOCOL (0–10VDC, LINE VOLTAGE, DALI, ETC.) COMPATIBLE WITH LIGHTING CONTROL SYSTEM AS SPECIFIED AND SHOWN ON DRAWINGS.

D. COORDINATE ALL CEILING TYPES WITH LUMINAIRE LOCATIONS PRIOR TO ORDERING LUMINAIRES. COORDINATE INSTALLATION WITH REFLECTED CEILING PLAN.

E. SPECIFIED MANUFACTURERS ARE APPROVED TO SUBMIT BID. INCLUSION DOES NOT RELIEVE MANUFACTURER FROM SUPPLYING PRODUCT AS DESCRIBED.

F. PROVIDE SUBMITTALS THAT INCLUDE THE LUMINAIRE, LED AND DRIVER INFORMATION OF EACH LUMINAIRE, WITH APPLICABLE OPTIONS CLEARLY CHECKED OR HIGHLIGHTED. SUBMITTALS NOT INCLUDING THIS INFORMATION WILL BE RETURNED AS REJECTED BY THE ENGINEER OF RECORD.

LUMINAIRE SCHEDULE (EXTERIOR)	LUMINAIRE SCHEDULE (INTERIOR)
FLOORBOX SCHEDULE	

APPROVALS

IDENTIFICATION STAMP
DIV. OF THE STATE ARCHITECT
APP: 01-119409 INC:
REVIEWED FOR
SS ☑ FLS ☑ ACS ☑
DATE: 03/14/2022

NOLL & TAM ARCHITECTS
729 Heinz Avenue
Berkeley, CA 94710
tel 510.542.2200
fax 510.542.2201

RIJA
5515 Doyle Street, #7
Emeryville, CA 94608
www.rijainc.com
RIJA Job #: 2020011

SEAL

REGISTERED PROFESSIONAL ENGINEER
RAJ A. JAMJOOM
No. E19586
Exp. 06–30–23
ELECTRICAL
STATE OF CALIFORNIA

Date Signed: 3/1/22

PROJECT TITLE

Peralta Community College District
Merritt Landscape Horticulture Complex

12500 Campus Drive
Oakland, CA 94616

BID SET

ISSUE DATE	03/03/2022
N&T JOB NUMBER	22003

REVISIONS

	DATE	DESCRIPTION

DRAWN BY **CAD** CHECKED BY **RAJ**

SHEET TITLE

SCHEDULES

SHEET NUMBER

E5.01

4/3/2020 7:20:00 PM BIM 360://PCCD Merritt Horticulture/Merritt Horticulture_2020.rvt

PANELBOARD E2

VOLTAGE: 208/120 V
PHASE/WIRE: 3 PH 4W
MAIN AMPS: 150 A
BUS AMPS: 225 A
AIC RATING 22000 A
MOUNTING: SURFACE

PHASE A: 13117 VA 109.3 A
PHASE B: 7516 VA 62.6 A
PHASE C: 7472 VA 62.3 A
CONNECTED: 28105 VA 78.1 A
DEMAND: 27567 VA 76.6 A

NOTES	LOAD DESCRIPTION	φ	VA		BKR	CKT	CKT	BKR	VA		φ	LOAD DESCRIPTION	NOTES
	LTG - CLASSROOM	A	937	L	20/1	1	2	20/1			A	SPARE	
	SPARE	B			20/1	3	4	20/1			B	SPARE	
	SPARE	C			20/1	5	6	20/1			C	SPARE	
	SPARE	A			20/1	7	8	20/1			A	SPARE	
	SPARE	B			20/1	9	10	20/1			B	SPARE	
	SPARE	C			20/1	11	12	20/1			C	SPARE	
	R - CLASS 2 FLOOR BOX	A	720	R	20/1	13	14	20/1	R	1000	A	R - PROJECTOR	
	R - CLASS 2 FLOOR BOX	B	720	R	20/1	15	16	20/1	R	1000	B	R - PROJECTOR	
	R - CLASS 2 FLOOR BOX	C	720	R	20/1	17	18	20/1	R	540	C	R - CLASS 2	
	R - CLASS 2 FLOOR BOX	A	720	R	20/1	19	20	20/1	R	720	A	R - CLASS 2	
	R - CLASS 2 FLOOR BOX	B	720	R	20/1	21	22	20/1	R	720	B	R - CLASS 2	
	R - CLASS 2 FLOOR BOX	C	720	R	20/1	23	24	20/1	R	540	C	R - CLASS 2	
	R - 208V, 40AMP	A	3328	R	40/2	25	26	20/1	G	500	A	MOTORIZED SHADE	
	-	B	3328	R	-	27	28	20/1	G	288	B	WINDOW ACTUATOR	
	SPARE	C			20/1	29	30	20/1			C	SPARE	
	FC-6	A	740	M	20/1	31	32	20/1			A	SPARE	
	-	B	740	M	20/1	33	34	20/1			B	SPARE	
	WH-8	C	3952	WH	50/2	35	36	20/1	M	1000	C	CEILING FAN	
	-	A	3952	WH	-	37	38	20/1	G	500	A	BMS CONTROL	1
	SPARE	B			20/1	39	40	20/1			B	SPARE	
	SPARE	C			20/1	41	42	20/1			C	SPARE	

GENERAL NOTES
a. EATON PRL1A WITH 3 BREAKER BLOCKS (6-24-12)
b. PROVIDE 3 FUTURE METERING DEVICE SPACES
c.

SCHEDULE NOTES
1. FIELD COORDINATELOCATION WITH DIV 25
2.
3.

LOAD TYPE	LOAD DESCRIPTION	CONNECTED (kVA)	SUBFED (kVA)	TOTAL BY TYPE (kVA)	DEMAND FACTOR (kVA)	DEMAND BY TYPE (kVA)
G	GENERAL	1.29	0.00	1.29	100%	1.29
L	LIGHTING	0.94	0.00	0.94	125%	1.17
R	RECEPTACLES	15.50	0.00	15.50	100%/50%	12.75
K	KITCHEN	0.00	0.00	0.00	100%	0.00
H	HEATING	0.00	0.00	0.00	100%	0.00
M	MOTORS	2.48	0.00	2.48	100%	2.48
LM	LARGEST MOTOR	0.00	0.00	0.00	125%	0.00
WH	WATER HEATER	7.90	0.00	7.90	125%	9.88
C	CONTINUOUS	0.00	0.00	0.00	125%	0.00

PANELBOARD E1

VOLTAGE: 208/120 V
PHASE/WIRE: 3 PH 4W
MAIN AMPS: 225 A
BUS AMPS: 225 A
AIC RATING 22000 A
MOUNTING: SURFACE

PHASE A: 13201 VA 110 A
PHASE B: 17398 VA 145 A
PHASE C: 15477 VA 129 A
CONNECTED: 46076 VA 128 A
DEMAND: 48727 VA 135.4 A

NOTES	LOAD DESCRIPTION	φ	VA		BKR	CKT	CKT	BKR	VA		φ	LOAD DESCRIPTION	NOTES
	LTG - SITE	A	339	L	20/1	1	2	20/1	L	271	A	LTG - ADMIN	
	LTG - SITE	B	699	L	20/1	3	4	20/1	L	366	B	LTG - ADMIN	
	LCPE	C	100	L	20/1	5	6	20/1			C	SPARE	
	SPARE	A			20/1	7	8	20/1			A	SPARE	
	SPARE	B			20/1	9	10	20/1			B	SPARE	
	INVERTER INV-E1	C	426	L	20/1	11	12	20/1			C	SPARE	
	DEER GATE	A	480	G	20/1	13	14	20/1	R	540	A	R - H400	
	120V GATE ACAMS	B	1000	G	20/1	15	16	20/1	R	720	B	R - H400	
	DOOR OPERATOR	C	500	G	20/1	17	18	20/1	R	720	C	R - H404	
	R - H404 FLOORBOX	A	720	R	20/1	19	20	20/1	R	1080	A	R - H401	
	R - H404 FURN	B	500	G	20/1	21	22	20/1	R	1080	B	R -H402	
	R - H406	C	180	R	20/1	23	24	20/1	R	1080	C	R - H403	
	R - MECH YARD	A	540	R	20/1	25	26	20/1	R	500	A	MOTORIZED SHADE	
	IRRIGATION CNTRL	B	500	G	20/1	27	28	20/2	G	1500	B	G1 BATTERY CHARGER	3
	PARKING METER	C	500	G	20/1	29	30	-	G	1500	C	-	-
	BLUE PHONE	A	500	G	20/1	31	32	20/2	G	1500	A	G1 JACKET HEATER	3
	EV STATION LVL 2 (FUTURE)	B			40/2	33	34	-	G	1500	B	-	-
		C			-	35	36	20/1	G	288	C	WINDOW ACTUATOR	
	EV STATION LVL 2 (FUTURE)	A			40/2	37	38	20/1			A	SPARE	
		B			-	39	40	20/1			B	SPARE	
1	FIRE ALARM	C	500	C	20/1	41	42	20/1			C	SPARE	
	ACCU-1	A	2421	M	35/3	43	44				A	SPACE	
		B	2421	M	-	45	46				B	SPACE	
	ACCU-6	C	2421	M	35/3	47	48	15/2	M	150	C	FC 5-2, FC 5-1	
	-	A	2421	M	-	49	50	-	M	150	A	-	
	ACCU-5	B	2421	M	35/3	51	52	50/2	WH	3952	B	WH-7	
	-	C	2421	M	-	53	54	-	WH	3952	C	-	
	ACCU-2	A	739	M	15/3	55	56	20/1	M	500	A	EF-1	
	-	B	739	M	-	57	58	20/1			B	SPARE	
	-	C	739	M	-	59	60	20/1			C	SPARE	
2	BMS CONTROL PANEL	A	500	G	20/1	61	62	20/1			A	SPARE	
	SPARE	B			20/1	63	64	20/1			B	SPARE	
	SPARE	C			20/1	65	66	20/1			C	SPARE	

GENERAL NOTES
a. EATON PRL1A WITH 3 BREAKER BLOCKS (12-30-24)
b. PROVIDE 3 FUTURE METERING DEVICE SPACES
c.

SCHEDULE NOTES
1. RED CIRCUIT BREAKER WITH LOCKABLE HASP
2. FIELD COORDINATE LOCATION WITH DIV 25
3. COORDINATE POWER REQUIREMENTS WITH MANUFACTURER

LOAD TYPE	LOAD DESCRIPTION	CONNECTED (kVA)	SUBFED (kVA)	TOTAL BY TYPE (kVA)	DEMAND FACTOR (kVA)	DEMAND BY TYPE (kVA)
G	GENERAL	10.77	0.00	10.77	100%	10.77
L	LIGHTING	2.20	0.00	2.20	125%	2.75
R	RECEPTACLES	7.16	0.00	7.16	100%/50%	7.16
K	KITCHEN	0.00	0.00	0.00	100%	0.00
H	HEATING	0.00	0.00	0.00	100%	0.00
M	MOTORS	17.54	0.00	17.54	100%	17.54
LM	LARGEST MOTOR	0.00	0.00	0.00	125%	0.00
WH	WATER HEATER	7.90	0.00	7.90	125%	9.88
C	CONTINUOUS	0.50	0.00	0.50	125%	0.63

PANELBOARD W1

VOLTAGE: 208/120 V
PHASE/WIRE: 3 PH 4W
MAIN AMPS: 150 A
BUS AMPS: 225 A
AIC RATING 22000 A
MOUNTING: SURFACE

PHASE A: 18071 VA 150.6 A
PHASE B: 12460 VA 103.8 A
PHASE C: 10576 VA 88.1 A
CONNECTED: 41107 VA 114.2 A
DEMAND: 44786 VA 124.4 A

NOTES	LOAD DESCRIPTION	φ	VA		BKR	CKT	CKT	BKR	VA		φ	LOAD DESCRIPTION	NOTES
	LTG - SITE	A	386	L	20/1	1	2	20/1	L	100	A	LCPW	
	LTG - OVERHEAD	B	391	L	20/1	3	4	20/1			B	SPARE	
	INVERTER 'INV-W1'	C	308	L	20/1	5	6	20/1			C	SPARE	
	SPARE	A			20/1	7	8	20/1			A	SPARE	
	SPARE	B			20/1	9	10	20/1			B	SPARE	
	SPARE	C			20/1	11	12	20/1			C	SPARE	
	R - FLOOR BOX	A	1500	R	20/1	13	14	20/1	R	1500	A	R - COMM REFRIG	
	R - FLOOR BOX	B	1500	R	20/1	15	16	20/1	R	720	B	R - HEADHOUSE	
	R - FLOOR BOX	C	1500	R	20/1	17	18	20/1	R	1500	C	R - EXT	
	R - BENCH	A	540	R	20/1	19	20	20/1	R	360	A	R - EXT	
	R - BENCH	B	540	R	20/1	21	22	20/1	G	500	B	BLUE PHONE	
	R - BENCH	C	540	R	20/1	23	24	20/1	R	1500	C	R - TELCOM	
	OVERHEAD DOOR	A	1176	G	20/1	25	26	20/1	R	1500	A	R - TELCOM	
	OVERHEAD DOOR	B	1176	G	20/1	27	28	20/1	R	360	B	R - GARDEN	
	MOTORIZED GATE	C	1176	M	20/1	29	30	20/1	G	100	C	FIRE ALARM	2
	WINDOW ACTUATOR	A	384	G	20/1	31	32	20/1	G	100	A	FIRE SPRINKLER	
	SPARE	B			20/1	33	34	20/1			B	SPARE	
	SPARE	C			20/1	35	36	20/1			C	SPARE	
	SPARE	A			20/1	37	38	20/1			A	SPARE	
	SPARE	B			20/1	39	40	20/1			B	SPARE	
	SPARE	C			20/1	41	42	20/1			C	SPARE	
	SPARE	A			20/1	43	44	20/1			A	SPARE	
	SPARE	B			20/1	45	46	20/1			B	SPARE	
	SPARE	C			20/1	47	48	20/1			C	SPARE	
	SPACE	A				49	50				A	SPACE	
	SPACE	B				51	52				B	SPACE	
	SPACE	C				53	54				C	SPACE	
	ACCU-3	A	2421	LM	35/2	55	56	15/2	M	100	A	FC-3-1	
		B	2421	LM	-	57	58	-	M	100	B		
	SPACE	C				59	60	20/1			C	SPARE	
1	BMS CONTROL CIRCUIT	A	100	G	20/1	61	62	50/2	WH	3952	A	WH-3	
	CEILING FANS	B	800	M	20/1	63	64	-	WH	3952	B	-	
	SPACE	C				65	66	50/2	WH	3952	C	WH-2	
	SPACE	A				67	68	-	WH	3952	A	-	
	SPACE	B				69	70				B	SPACE	
	SPACE	C				71	72				C	SPACE	

GENERAL NOTES
a. EATON PRL1A WITH 3 BREAKER BLOCKS (12-42-18) OR APPROVED
b. PROVIDE 3 FUTURE METERING DEVICE SPACES
c.

SCHEDULE NOTES
1. FIELD COORDINATE LOCATION WITH DIV 25
2. RED CIRCUIT BREAKER WITH LOCKABLE HASP
3.

LOAD TYPE	LOAD DESCRIPTION	CONNECTED (kVA)	SUBFED (kVA)	TOTAL BY TYPE (kVA)	DEMAND FACTOR (kVA)	DEMAND BY TYPE (kVA)
G	GENERAL	3.54	0.00	3.54	100%	3.54
L	LIGHTING	1.19	0.00	1.19	125%	1.48
R	RECEPTACLES	13.56	0.00	13.56	100%/50%	11.78
K	KITCHEN	0.00	0.00	0.00	100%	0.00
H	HEATING	0.00	0.00	0.00	100%	0.00
M	MOTORS	2.18	0.00	2.18	100%	2.18
LM	LARGEST MOTOR	4.84	0.00	4.84	125%	6.05
WH	WATER HEATER	15.81	0.00	15.81	125%	19.76
C	CONTINUOUS	0.00	0.00	0.00	125%	0.00

PANELBOARD E3

VOLTAGE: 208/120 V
PHASE/WIRE: 3 PH 4W
MAIN AMPS: 150 A
BUS AMPS: 225 A
AIC RATING 22000 A
MOUNTING: SURFACE

PHASE A: 13841 VA 115.3 A
PHASE B: 7960 VA 66.3 A
PHASE C: 7832 VA 65.3 A
CONNECTED: 29633 VA 82.3 A
DEMAND: 33819 VA 93.9 A

NOTES	LOAD DESCRIPTION	φ	VA		BKR	CKT	CKT	BKR	VA		φ	LOAD DESCRIPTION	NOTES
	LTG - CLASSROOM	A	937	L	20/1	1	2	20/1			A	SPARE	
	SPARE	B			20/1	3	4	20/1			B	SPARE	
	SPARE	C			20/1	5	6	20/1			C	SPARE	
	FIRE SPRINKLER	A	100	G	20/1	7	8	20/1			A	SPARE	
	SPARE	B			20/1	9	10	20/1			B	SPARE	
	SPARE	C			20/1	11	12	20/1			C	SPARE	
	R - CLASS 3 FLOOR BOX	A	720	R	20/1	13	14	20/1	R	1000	A	R - PROJECTOR	
	R - CLASS 3 FLOOR BOX	B	720	R	20/1	15	16	20/1	R	1000	B	R - PROJECTOR	
	R - CLASS 3 FLOOR BOX	C	720	R	20/1	17	18	20/1	R	900	C	R - CLASS 3	
	R - CLASS 3 FLOOR BOX	A	720	R	20/1	19	20	20/1	R	720	A	R - CLASS 3	
	R - CLASS 3 FLOOR BOX	B	720	R	20/1	21	22	20/1	R	540	B	R - CLASS 3	
	R - CLASS 3 FLOOR BOX	C	720	R	20/1	23	24	20/1	R	540	C	R - CLASS 3	
	SPARE	A			20/1	25	26	20/1	R	500	A	MOTORIZED SHADE	
	SPARE	B			20/1	27	28	20/1	G	288	B	WINDOW ACTUATOR	
	SPARE	C			20/1	29	30	20/1			C	SPARE	
	FC 3-2	A	740	M	15/2	31	32	50/2	WH	3952	A	WH-10	
	-	B	740	M	-	33	34	-	WH	3952	B	-	
	WH-9	C	3952	WH	50/2	35	36	20/1	M	1000	C	CEILING FAN	
	-	A	3952	WH	-	37	38	20/1	G	500	A	BMS CONTROL	1
	SPARE	B			20/1	39	40	20/1			B	SPARE	
	SPARE	C			20/1	41	42	20/1			C	SPARE	

GENERAL NOTES
a. EATON PRL1A WITH 3 BREAKER BLOCKS (6-24-12), OR APPROVED
b. PROVIDE 3 FUTURE METERING DEVICE SPACES
c.

SCHEDULE NOTES
1. FIELD COORDINATE WITH DIV 25
2.
3.

LOAD TYPE	LOAD DESCRIPTION	CONNECTED (kVA)	SUBFED (kVA)	TOTAL BY TYPE (kVA)	DEMAND FACTOR (kVA)	DEMAND BY TYPE (kVA)
G	GENERAL	0.89	0.00	0.89	100%	0.89
L	LIGHTING	0.94	0.00	0.94	125%	1.17
R	RECEPTACLES	9.52	0.00	9.52	100%/50%	9.52
K	KITCHEN	0.00	0.00	0.00	100%	0.00
H	HEATING	0.00	0.00	0.00	100%	0.00
M	MOTORS	2.48	0.00	2.48	100%	2.48
LM	LARGEST MOTOR	0.00	0.00	0.00	125%	0.00
WH	WATER HEATER	15.81	0.00	15.81	125%	19.76
C	CONTINUOUS	0.00	0.00	0.00	125%	0.00

SWITCHBOARD MSB

VOLTAGE: SEE SLD
PHASE/WIRE: SEE SLD
MAIN AMPS: SEE SLD
BUS AMPS: SEE SLD
AIC RATING SEE SLD
MOUNTING: FREESTANDING

PHASE A: 170019 VA 1416.8 A
PHASE B: 155610 VA 1296.8 A
PHASE C: 145556 VA 1213 A
CONNECTED: 471185 VA 1308.8 A
DEMAND: 475919 VA 1322 A

CKT		VA	φ	LOAD DESCRIPTION	NOTES
1	S	27905	A	W2	
	S	27995	B	-	
	S	28099	C	-	
2	S	18071	A	W1	
	S	12460	B	-	
	S	10576	C	-	
3	S	13841	A	E3	
	S	7960	B	-	
	S	7832	C	-	
4	S	29556	A	GHE	
	S	29556	B	-	
	S	27556	C	-	
5	S	10800	A	GHW	
	S	7300	B	-	
	S	7200	C	-	
6	S	13117	A	E2	
	S	7516	B	-	
	S	7472	C	-	
7	S	13201	A	E1	
	S	17398	B	-	
	S	15477	C	-	
8	S	14834	A	E4	
	S	14737	B	-	
	S	14038	C	-	
9	S	6100	A	T1	
	S	4600	B	-	
	S	4500	C	-	
10	S	22594	A	SGHE	
	S	26088	B	-	
	S	22806	C	-	

GENERAL NOTES
a.
b.
c.

SCHEDULE NOTES
1.
2.
3.

LOAD TYPE	LOAD DESCRIPTION	CONNECTED (kVA)	SUBFED (kVA)	TOTAL BY TYPE (kVA)	DEMAND FACTOR (kVA)	DEMAND BY TYPE (kVA)
G	GENERAL	0.00	53.41	53.41	100%	53.41
L	LIGHTING	0.00	11.31	11.31	125%	14.14
R	RECEPTACLES	0.00	96.18	96.18	100%/50%	53.09
K	KITCHEN	0.00	0.00	0.00	100%	0.00
H	HEATING	0.00	95.14	95.14	100%	95.14
M	MOTORS	0.00	35.17	35.17	100%	35.17
LM	LARGEST MOTOR	0.00	4.84	4.84	125%	6.05
WH	WATER HEATER	0.00	109.23	109.23	125%	136.54
C	CONTINUOUS	0.00	65.90	65.90	125%	82.38

PANELBOARD W2

VOLTAGE: 208/120 V
PHASE/WIRE: 3 PH 4W
MAIN AMPS: 300 A
BUS AMPS: 400 A
AIC RATING 22000 A
MOUNTING: SURFACE

PHASE A: 27905 VA 232.5 A
PHASE B: 27995 VA 233.3 A
PHASE C: 28099 VA 234.2 A
CONNECTED: 83999 VA 233.3 A
DEMAND: 87482 VA 243 A

NOTES	LOAD DESCRIPTION	φ	VA		BKR	CKT	CKT	BKR	VA		φ	LOAD DESCRIPTION	NOTES
	LTG - OVERHEAD	A	752	L	20/1	1	2	20/1			A	SPARE	
	LTG	B	977	L	20/1	3	4	20/1			B	SPARE	
	LTG/PWR - SOIL BINS	C	605	L	20/1	5	6	20/1			C	SPARE	
	INVERTER 'INV-W2'	A	287	L	20/1	7	8	20/1			A	SPARE	
	SPARE	B			20/1	9	10	20/1			B	SPARE	
	SPARE	C			20/1	11	12	20/1			C	SPARE	
	R - FLOORBOX	A	1500	R	20/1	13	14	20/1	R	1500	A	R - COMM REFR	
	R - FLOORBOX	B	1500	R	20/1	15	16	20/1	R	1500	B	R - STORAGE 2	
	R - FLOORBOX	C	1500	R	20/1	17	18	20/1	R	1500	C	R - STORAGE 2	
	R - STORAGE	A	1500	R	20/1	19	20	20/1	R	720	A	R - NORTH BENCH	
	R - STORAGE	B	1500	R	20/1	21	22	20/1	R	360	B	R - NORTH	
	R - STORAGE	C	1500	R	20/1	23	24	20/1	R	720	C	R - SOUTH BENCH	
	R - STORAGE 1	A	540	R	20/1	25	26	20/1	G	500	A	IRRIGATION CONTROLLER	
	R - STORAGE 1	B	540	R	20/1	27	28	20/1	G	1000	B	HAND DRYER	
	R - STORAGE 1	C	540	R	20/1	29	30	20/1	G	1000	C	HAND DRYER	
	R - H804, H805	A	360	R	20/1	31	32	20/1	R	1500	A	R - EXT	
	R - H806	B	360	R	20/1	33	34	20/1	R	1500	B	R - EXT	
	R - H806	C	360	R	20/1	35	36	20/1	R	1500	C	R - EXT	
	R - EXT	A	540	R	20/1	37	38	20/1	G	1176	A	OVERHEAD DOOR	
	R - EXT	B	540	R	20/1	39	40	20/1	G	1176	B	OVERHEAD DOOR	
	R - LOOKOUT	C	540	R	20/1	41	42	20/1	G	1176	C	OVERHEAD DOOR	
	R - GARDEN DRINKING FTN	A	500	G	20/1	43	44	20/1	G	1176	A	OVERHEAD DOOR	
	FIRE SPRINKLER	B	100	G	20/1	45	46	20/1	G	1176	B	OVERHEAD DOOR	
	WINDOW ACTUATOR	C	576	G	20/1	47	48	20/1	G	1176	C	OVERHEAD DOOR	
	WINDOW ACTUATOR	A	288	G	20/1	49	50	20/1			A	SPARE	
	SPARE	B			20/1	51	52	20/1			B	SPARE	
	SPARE	C			20/1	53	54	20/1			C	SPARE	
	ACCU-3	A	1622	M	20/3	55	56	15/2	M	160	A	FC-4	
	-	B	1622	M	-	57	58	-	M	160	B	-	
	-	C	1622	M	-	59	60	20/1	M	500	C	EF-2,EF-3,EF-4	
1	BMS CONTROL CIRCUIT	A	100	G	20/1	61	62	50/2	WH	3952	A	WH-12	
	CEILING FANS	B	800	M	20/1	63	64	-	WH	3952	B	-	
	EF-1	C	100	M	20/1	65	66	50/2	WH	3952	C	WH-10	
	WH-1	A	5280	WH	60/3	67	68	-	WH	3952	A	-	
	-	B	5280	WH	-	69	70	50/2	WH	3952	B	WH-11	
	-	C	5280	WH	-	71	72	-	WH	3952	C	-	

GENERAL NOTES
a. EATON PRL1A WITH 3 BREAKER BLOCKS (12-42-18) OR APPROVED
b. PROVIDE 3 FUTURE METERING DEVICE SPACES
c.

SCHEDULE NOTES
1. FIELD COORDINATE LOCATION WITH DIV 25
2.
3.

LOAD TYPE	LOAD DESCRIPTION	CONNECTED (kVA)	SUBFED (kVA)	TOTAL BY TYPE (kVA)	DEMAND FACTOR (kVA)	DEMAND BY TYPE (kVA)
G	GENERAL	11.12	0.00	11.12	100%	11.12
L	LIGHTING	2.62	0.00	2.62	125%	3.28
R	RECEPTACLES	24.12	0.00	24.12	100%/50%	17.06
K	KITCHEN	0.00	0.00	0.00	100%	0.00
H	HEATING	0.00	0.00	0.00	100%	0.00
M	MOTORS	6.59	0.00	6.59	100%	6.59
LM	LARGEST MOTOR	0.00	0.00	0.00	125%	0.00
WH	WATER HEATER	39.55	0.00	39.55	125%	49.44
C	CONTINUOUS	0.00	0.00	0.00	125%	0.00

E2	W1	MSB
E1	E3	W2

APPROVALS

IDENTIFICATION STAMP
DIV. OF THE STATE ARCHITECT
APP: 01-119409 INC:
REVIEWED FOR
SS ☑ FLS ☑ ACS ☑
DATE: 03/14/2022

NOLL & TAM ARCHITECTS
729 Heinz Avenue
Berkeley, CA 94710
tel 510.542.2200
fax 510.542.2201

RIJA
5515 Doyle Street, #7
Emeryville, CA 94608
www.rijainc.com
RIJA Job #: 2020011

SEAL

REGISTERED PROFESSIONAL ENGINEER
RAJ A. JAGTIANI
No. E19586
Exp. 06-30-23
ELECTRICAL
STATE OF CALIFORNIA

Date Signed: 3/1/22

PROJECT TITLE

Peralta Community College District
Merritt Landscape Horticulture Complex

12500 Campus Drive
Oakland, CA 94616

BID SET

ISSUE DATE 03/03/2022
N&T JOB NUMBER 22003

REVISIONS

⚠	DATE	DESCRIPTION

DRAWN BY CAD | CHECKED BY RAJ

SHEET TITLE
SCHEDULES

SHEET NUMBER
E5.02

4/3/2020 7:20:00 PM BIM 360://PCCD Merritt Horticulture/Merritt Horticulture_2020.rvt

PANELBOARD SGHE

VOLTAGE: 208/120 V
PHASE/WIRE: 3 PH 4W
MAIN AMPS: 300 A
BUS AMPS: 400 A
AIC RATING 22000 A
MOUNTING: SURFACE

PHASE A: 22594 VA 188.3 A
PHASE B: 26088 VA 217.4 A
PHASE C: 22806 VA 190.1 A
CONNECTED: 71488 VA 198.6 A
DEMAND: 75584 VA 210 A

NOTES	LOAD DESCRIPTION	φ	VA		BKR	CKT	CKT	BKR	VA		φ	LOAD DESCRIPTION	NOTES
	04 - UNIT HEATER H502	A	5064	H	60/3	1	2	20/2	C 1200		B	GROW LIGHTS H502	1
	-	B	5064	H	-	3	4	-	C 1200		C	-	-
		C	5064	H	-	5	6	20/2	C 1200		A	GROW LIGHTS H502	1
	04 - UNIT HEATER H502	A	5064	H	60/3	7	8	-	C 1200		B	-	-
	-	B	5064	H	-	9	10	20/2	C 1200		C	GROW LIGHTS H502	1
	-	C	5064	H	-	11	12	-	C 1200		A	-	-
	06 - 1SPD EF H502	A	648	G	20/1	13	14	20/2	C 1200		B	GROW LIGHTS H502	1
	07 - 2SPD EF H502	B	780	G	20/1	15	16	-	C 1200		C	-	-
	13 - EVAP PAD H502	C	600	G	20/1	17	18	20/2	C 1200		A	GROW LIGHTS H502	1
	11 - INTAKE SHUTTER H502	A	10	G	20/1	19	20	-	C 1200		B	-	-
	03 - RIDGE VENT MTR H502	B	672	G	20/1	21	22	20/2	C 1200		C	GROW LIGHTS H502	1
	10 - VK 12 HAF FAN H502	C	540	G	20/1	23	24	-	C 1200		A	-	-
	18 - SHADE SYSTEM H502	A	336	G	20/1	25	26	20/2	C 900		B	GROW LIGHTS H502	1
	IRRIGATION H500	B	100	G	20/1	27	28	-	C 900		C	-	-
	IRRIGATION H501	C	100	G	20/1	29	30	20/1	G 648		C	06 - 1SPD EF H500	
	IRRIGATION H502	A	100	G	20/1	31	32	20/1	G 780		A	07 - 2SPD EF H500	
	EXIT / EMERG LTG	B	276	G	20/1	33	34	20/1	G 600		B	13 - EVAP PAD H500	
	SPARE	C			20/1	35	36	20/1	G 10		C	11 - INTAKE SHUTTER H500	
	SGHW	A	3446	S	100/3	37	38	20/1	G 672		A	03 - RIDGE VENT MTR H500	
	-	B	5660	S	-	39	40	20/1	G 540		B	10 - VK 12 HAF FAN H500	
	-	C	3424	S	-	41	42	20/1	G 336		C	18 - SHADE SYSTEM H500	
	SEED CONTROLLER	A	500	G	20/1	43	44	20/1	G 648		A	06 - 1SPD EF H501	
	SPARE	B			20/1	45	46	20/1	G 780		B	07 - 2SPD EF H501	
	SPARE	C			20/1	47	48	20/1	G 600		C	13 - EVAP PAD H501	
	R - GENERAL	A	180	R	20/1	49	50	20/1	G 10		A	11 - INTAKE SHUTTER H501	
	R - GENERAL	B	180	R	20/1	51	52	20/1	G 672		B	03 - RIDGE VENT MTR H501	
	R - GENERAL	C	180	R	20/1	53	54	20/1	G 540		C	10 - VK 12 HAF FAN H501	
	SPACE	A				55	56	20/1	G 336		A	18 - SHADE SYSTEM H501	
	SPACE	B				57	58				B	SPACE	
	SPACE	C				59	60				C	SPACE	
	SPACE	A				61	62				A	SPACE	
	SPACE	B				63	64				B	SPACE	
	SPACE	C				65	66				C	SPACE	
	SPACE	A				67	68				A	SPACE	
	SPACE	B				69	70				B	SPACE	
	SPACE	C				71	72				C	SPACE	
	SPACE	A				73	74				A	SPACE	
	SPACE	B				75	76				B	SPACE	
	SPACE	C				77	78				C	SPACE	
	SPACE	A				79	80				A	SPACE	
	SPACE	B				81	82				B	SPACE	
	SPACE	C				83	84				C	SPACE	

GENERAL NOTES

a.
b.
c.

SCHEDULE NOTES

1.
2.
3.

LOAD TYPE	LOAD DESCRIPTION	CONNECTED (kVA)	SUBFED (kVA)	TOTAL BY TYPE (kVA)	DEMAND FACTOR (kVA)	DEMAND BY TYPE (kVA)
G	GENERAL	11.83	11.99	23.82	100%	23.82
L	LIGHTING	0.00	0.18	0.18	125%	0.23
R	RECEPTACLES	0.54	0.36	0.90	100%/50%	0.90
K	KITCHEN	0.00	0.00	0.00	100%	0.00
H	HEATING	30.38	0.00	30.38	100%	30.38
M	MOTORS	0.00	0.00	0.00	100%	0.00
LM	LARGEST MOTOR	0.00	0.00	0.00	125%	0.00
WH	WATER HEATER	0.00	0.00	0.00	125%	0.00
C	CONTINUOUS	16.20	0.00	16.20	125%	20.25

PANELBOARD SGHW

VOLTAGE: 208/120 V
PHASE/WIRE: 3 PH 4W
MAIN AMPS: 60 A
BUS AMPS: 100 A
AIC RATING 22000 A
MOUNTING: SURFACE

PHASE A: 3446 VA 28.7 A
PHASE B: 5660 VA 47.2 A
PHASE C: 3424 VA 28.5 A
CONNECTED: 12530 VA 34.8 A
DEMAND: 12576 VA 34.9 A

NOTES	LOAD DESCRIPTION	φ	VA		BKR	CKT	CKT	BKR	VA		φ	LOAD DESCRIPTION	NOTES
	09 - 1SPD EF H601	A	1080	G	30/1	1	2	30/1	G 1080		A	09 - 1SPD EF H600	
	08 - 2SPD EF H601	B	1680	G	30/1	3	4	30/1	G 1680		B	08 - 2SPD EF H600	
	14 - EVAP PAD H601	C	600	G	20/1	5	6	20/1	G 600		C	14 - EVAP PAD H600	
	12 - INTAKE SHUTTER H601	A	13	G	20/1	7	8	20/1	G 13		A	12 - INTAKE SHUTTER H600	
	03 - RIDGE VENT MTR H601	B	672	G	20/1	9	10	20/1	G 672		B	03 - RIDGE VENT MTR H600	
	17 - SIDEWALL VENT MTR H601	C	972	G	20/1	11	12	20/1	G 972		C	17 - SIDEWALL VENT MTR H600	
	10 - VK 12 HAF FAN H601	A	540	G	20/1	13	14	20/1	G 540		A	10 - VK 12 HAF FAN H600	
	18 - SHADE SYSTEM H601	B	336	G	20/1	15	16	20/1	G 336		B	18 - SHADE SYSTEM H600	
	R - GENERAL	C	180	R	20/1	17	18	20/1	G 100		C	IRRIGATION H600	
	R -GENERAL	A	180	R	20/1	19	20	20/1			A	SPARE	
	IRRIGATION H601	B	100	G	20/1	21	22	20/1	L 184		B	EXIT / EMER LTG	
	SPARE	C			20/1	23	24	20/1			C	SPARE	
	SPARE	A			20/1	25	26	20/1			A	SPARE	
	SPARE	B			20/1	27	28	20/1			B	SPARE	
	SPARE	C			20/1	29	30	20/1			C	SPARE	
	SPARE	A			20/1	31	32				A	SPACE	
	SPARE	B			20/1	33	34				B	SPACE	
	SPARE	C			20/1	35	36				C	SPACE	
	SPACE	A				37	38				A	SPACE	
	SPACE	B				39	40				B	SPACE	
	SPACE	C				41	42				C	SPACE	

GENERAL NOTES

a.
b.
c.

SCHEDULE NOTES

1.
2.
3.

LOAD TYPE	LOAD DESCRIPTION	CONNECTED (kVA)	SUBFED (kVA)	TOTAL BY TYPE (kVA)	DEMAND FACTOR (kVA)	DEMAND BY TYPE (kVA)
G	GENERAL	11.99	0.00	11.99	100%	11.99
L	LIGHTING	0.18	0.00	0.18	125%	0.23
R	RECEPTACLES	0.36	0.00	0.36	100%/50%	0.36
K	KITCHEN	0.00	0.00	0.00	100%	0.00
H	HEATING	0.00	0.00	0.00	100%	0.00
M	MOTORS	0.00	0.00	0.00	100%	0.00
LM	LARGEST MOTOR	0.00	0.00	0.00	125%	0.00
WH	WATER HEATER	0.00	0.00	0.00	125%	0.00
C	CONTINUOUS	0.00	0.00	0.00	125%	0.00

PANELBOARD GHE

VOLTAGE: 208/120 V
PHASE/WIRE: 3 PH 4W
MAIN AMPS: 400 A
BUS AMPS: 400 A
AIC RATING 22000 A
MOUNTING: SURFACE

PHASE A: 29556 VA 246.3 A
PHASE B: 29556 VA 246.3 A
PHASE C: 27556 VA 229.6 A
CONNECTED: 86668 VA 240.7 A
DEMAND: 93118 VA 258.7 A

NOTES	LOAD DESCRIPTION	φ	VA		BKR	CKT	CKT	BKR	VA		φ	LOAD DESCRIPTION	NOTES
	04 - UNIT HEATER H500	A	5064	H	60/3	1	2	20/2	C 1200		A	GROW LIGHTS H500	1
	-	B	5064	H	-	3	4	-	C 1200		B	-	-
		C	5064	H	-	5	6	20/2	C 1200		C	GROW LIGHTS H500	1
	04 - UNIT HEATER H500	A	5064	H	60/3	7	8	-	C 1200		A	-	-
	-	B	5064	H	-	9	10	20/2	C 1200		B	GROW LIGHTS H500	1
	-	C	5064	H	-	11	12	-	C 1200		C	-	-
	04 - UNIT HEATER H501	A	5064	H	60/3	13	14	20/2	C 1200		A	GROW LIGHTS H500	1
	-	B	5064	H	-	15	16	-	C 1200		B	-	-
	-	C	5064	H	-	17	18	20/2	C 1200		C	GROW LIGHTS H501	1
	04 - UNIT HEATER H501	A	5064	H	60/3	19	20	-	C 1200		A	-	-
	-	B	5064	H	-	21	22	20/2	C 1200		B	GROW LIGHTS H501	1
	-	C	5064	H	-	23	24	-	C 1200		C	-	-
1	GROW LIGHTS H501	A	900	L	20/2	25	26	20/2	C 1200		A	GROW LIGHTS H501	1
-	-	B	900	L	-	27	28	-	C 1200		B	-	-
	FIRE SPRINKLER	C	100	G	20/1	29	30	20/2	C 1200		C	GROW LIGHTS H501	1
	SPARE	A			20/1	31	32	-	C 1200		A	-	-
	SPARE	B			20/1	33	34	20/2	C 1200		B	GROW LIGHTS H501	1
	SPARE	C			20/1	35	36	-	C 1200		C	-	-
	SPARE	A			20/1	37	38	20/2	C 1200		A	GROW LIGHTS H501	1
	SPARE	B			20/1	39	40	-	C 1200		B	-	-
	SPARE	C			20/1	41	42	20/1			C	SPARE	

GENERAL NOTES

a.
b.
c.

SCHEDULE NOTES

1. PROVIDE GFCI CIRCUIT BREAKER
2.
3.

LOAD TYPE	LOAD DESCRIPTION	CONNECTED (kVA)	SUBFED (kVA)	TOTAL BY TYPE (kVA)	DEMAND FACTOR (kVA)	DEMAND BY TYPE (kVA)
G	GENERAL	0.10	0.00	0.10	100%	0.10
L	LIGHTING	1.80	0.00	1.80	125%	2.25
R	RECEPTACLES	0.00	0.00	0.00	100%/50%	0.00
K	KITCHEN	0.00	0.00	0.00	100%	0.00
H	HEATING	60.77	0.00	60.77	100%	60.77
M	MOTORS	0.00	0.00	0.00	100%	0.00
LM	LARGEST MOTOR	0.00	0.00	0.00	125%	0.00
WH	WATER HEATER	0.00	0.00	0.00	125%	0.00
C	CONTINUOUS	24.00	0.00	24.00	125%	30.00

PANELBOARD GHW

VOLTAGE: 208/120 V
PHASE/WIRE: 3 PH 4W
MAIN AMPS: 100 A
BUS AMPS: 400 A
AIC RATING 22000 A
MOUNTING: SURFACE

PHASE A: 10800 VA 90 A
PHASE B: 7300 VA 60.8 A
PHASE C: 7200 VA 60 A
CONNECTED: 25300 VA 70.3 A
DEMAND: 31600 VA 87.8 A

NOTES	LOAD DESCRIPTION	φ	VA		BKR	CKT	CKT	BKR	VA		φ	LOAD DESCRIPTION	NOTES
	R - HEAT MAT	A	1800	C	20/1	1	2	20/1	C 1800		A	R - HEAT MAT	
	R - HEAT MAT	B	1800	C	20/1	3	4	20/1	C 1800		B	R - HEAT MAT	
	R - HEAT MAT	C	1800	C	20/1	5	6	20/1	C 1800		C	R - HEAT MAT	
	R - HEAT MAT	A	1800	C	20/1	7	8	20/1	C 1800		A	R - HEAT MAT	
	R - HEAT MAT	B	1800	C	20/1	9	10	20/1	C 1800		B	R - HEAT MAT	
	R - HEAT MAT	C	1800	C	20/1	11	12	20/1	C 1800		C	R - HEAT MAT	
	R - HEAT MAT	A	1800	C	20/1	13	14	20/1	C 1800		A	R - HEAT MAT	
	FIRE SPRINKLER	B	100	G	20/1	15	16	20/1			B	SPARE	
	SPARE	C			20/1	17	18	20/1			C	SPARE	
	SPARE	A			20/1	19	20	20/1			A	SPARE	
	SPARE	B			20/1	21	22	20/1			B	SPARE	
	SPARE	C			20/1	23	24	20/1			C	SPARE	
	SPARE	A			20/1	25	26	20/1			A	SPARE	
	SPARE	B			20/1	27	28	20/1			B	SPARE	
	SPARE	C			20/1	29	30	20/1			C	SPARE	
	SPACE	A				31	32				A	SPACE	
	SPACE	B				33	34				B	SPACE	
	SPACE	C				35	36				C	SPACE	
	SPACE	A				37	38				A	SPACE	
	SPACE	B				39	40				B	SPACE	
	SPACE	C				41	42				C	SPACE	

GENERAL NOTES

a.
b.
c.

SCHEDULE NOTES

1.
2.
3.

LOAD TYPE	LOAD DESCRIPTION	CONNECTED (kVA)	SUBFED (kVA)	TOTAL BY TYPE (kVA)	DEMAND FACTOR (kVA)	DEMAND BY TYPE (kVA)
G	GENERAL	0.10	0.00	0.10	100%	0.10
L	LIGHTING	0.00	0.00	0.00	125%	0.00
R	RECEPTACLES	0.00	0.00	0.00	100%/50%	0.00
K	KITCHEN	0.00	0.00	0.00	100%	0.00
H	HEATING	0.00	0.00	0.00	100%	0.00
M	MOTORS	0.00	0.00	0.00	100%	0.00
LM	LARGEST MOTOR	0.00	0.00	0.00	125%	0.00
WH	WATER HEATER	0.00	0.00	0.00	125%	0.00
C	CONTINUOUS	25.20	0.00	25.20	125%	31.50

PANELBOARD E4

VOLTAGE: 208/120 V
PHASE/WIRE: 3 PH 4W
MAIN AMPS: 150 A
BUS AMPS: 225 A
AIC RATING 22000 A
MOUNTING: SURFACE

PHASE A: 14834 VA 123.6 A
PHASE B: 14737 VA 122.8 A
PHASE C: 14038 VA 117 A
CONNECTED: 43609 VA 121.1 A
DEMAND: 49325 VA 137 A

NOTES	LOAD DESCRIPTION	φ	VA		BKR	CKT	CKT	BKR	VA		φ	LOAD DESCRIPTION	NOTES
	LTG - SITE	A	262	L	20/1	1	2	20/1			A	SPARE	
	LTG - CLASS LAB	B	937	L	20/1	3	4	20/1			B	SPARE	
	LTG - JANI, RESTRM	C	248	L	20/1	5	6	20/1			C	SPARE	
	SPARE	A		L	20/1	7	8	20/1			A	SPARE	
	SPARE	B			20/1	9	10	20/1			B	SPARE	
	SPARE	C			20/1	11	12	20/1			C	SPARE	
	R - CLASS 1 FLOOR BOX	A	720	R	20/1	13	14	20/1	R 1000		A	R - PROJECTOR	
	R - CLASS 1 FLOOR BOX	B	720	R	20/1	15	16	20/1	R 1000		B	R - PROJECTOR	
	R - CLASS 1 FLOOR BOX	C	720	R	20/1	17	18	20/1	R 720		C	R - CLASS 3	
	R - CLASS 1 FLOOR BOX	A	720	R	20/1	19	20	20/1	R 720		A	R - CLASS 3	
	R - CLASS 1 FLOOR BOX	B	720	R	20/1	21	22	20/1	R 720		B	R - CLASS 3	
	R - CLASS 1 FLOOR BOX	C	720	R	20/1	23	24	20/1	R 720		C	R - CLASS 3	
	HAND DRYER	A	500	G	20/1	25	26	20/1	R 500		A	MOTORIZED SHADE	
	HAND DRYER	B	500	G	20/1	27	28	20/1	M 1176		B	MOTORIZED GATE	
	R - RESTROOM	C	720	R	20/1	29	30	20/1	G 288		C	WINDOW ACTUATOR	
	SPARE	A			20/1	31	32	20/1			A	SPARE	
	SPARE	B			20/1	33	34	20/1			B	SPARE	
	SPARE	C			20/1	35	36	20/1			C	SPARE	
	SPARE	A			20/1	37	38	20/1			A	SPARE	
	SPARE	B			20/1	39	40	20/1			B	SPARE	
	SPARE	C			20/1	41	42	20/1			C	SPARE	
	FC-1	A	740	M	15/2	43	44	20/2	H 998		A	EUH-1	
	-	B	740	M	-	45	46	-	H 998		B	-	
	WH-4	C	3952	WH	50/2	47	48	20/2	H 998		C	EUH-2	
	-	A	3952	WH	-	49	50	-	H 998		A	-	
	WH-5	B	3952	WH	50/2	51	52	20/1	M 50		B	EF-3	
	-	C	3952	WH	-	53	54	20/1	M 1000		C	CEILING FANS	
	WH-6	A	3224	WH	40/2	55	56	20/1	G 500		A	BMS CONTROL	1
		B	3224	WH		57	58	20/1			B	SPARE	
	SPARE	C			20/1	59	60	20/1			C	SPARE	

GENERAL NOTES

a. EATON PRL1A WITH 3 BREAKER BLOCKS (12-30-18) OR APPROVED
b. PROVIDE 3 FUTURE METERING DEVICE SPACES
c.

SCHEDULE NOTES

1. FIELD COORDINATE WITH DIV 25
2.
3.

LOAD TYPE	LOAD DESCRIPTION	CONNECTED (kVA)	SUBFED (kVA)	TOTAL BY TYPE (kVA)	DEMAND FACTOR (kVA)	DEMAND BY TYPE (kVA)
G	GENERAL	1.79	0.00	1.79	100%	1.79
L	LIGHTING	1.45	0.00	1.45	125%	1.81
R	RECEPTACLES	10.42	0.00	10.42	100%/50%	10.21
K	KITCHEN	0.00	0.00	0.00	100%	0.00
H	HEATING	3.99	0.00	3.99	100%	3.99
M	MOTORS	3.71	0.00	3.71	100%	3.71
LM	LARGEST MOTOR	0.00	0.00	0.00	125%	0.00
WH	WATER HEATER	22.26	0.00	22.26	125%	27.82
C	CONTINUOUS	0.00	0.00	0.00	125%	0.00

PANELBOARD T1

VOLTAGE: 208/120 V
PHASE/WIRE: 3 PH 4W
MAIN AMPS: 100 A
BUS AMPS: 225 A
AIC RATING 22000 A
MOUNTING: SURFACE

PHASE A: 6100 VA 50.8 A
PHASE B: 4600 VA 38.3 A
PHASE C: 4500 VA 37.5 A
CONNECTED: 15200 VA 42.2 A
DEMAND: 12700 VA 35.3 A

NOTES	LOAD DESCRIPTION	φ	VA		BKR	CKT	CKT	BKR	VA		φ	LOAD DESCRIPTION	NOTES
	AC-1	A	100	M	15/2	1	2	20/1	R 1500		A	R - RACK 1	
	-	B	100	M	-	3	4	20/1	R 1500		B	R - RACK 1	
	SPARE	C			20/1	5	6	20/1	R 1500		C	R - RACK 2	
	SPARE	A			20/1	7	8	20/1	R 1500		A	R - RACK 2	
	SPARE	B			20/1	9	10	20/1	R 1500		B	R - RACK 3	
	SPARE	C			20/1	11	12	20/1	R 1500		C	R - RACK 3	
	SPARE	A			20/1	13	14	20/1	R 1500		A	R - ACCESS CNTRL	
	SPARE	B			20/1	15	16	20/1	R 1500		B	R - INTRUSION	
	SPARE	C			20/1	17	18	20/1	R 1500		C	R - NETWORK DEMARC	
	SPARE	A			20/1	19	20	20/1	R 1500		A	R - NETWORK DEMARC	
	SPARE	B			20/1	21	22	20/1			B	SPARE	
	SPARE	C			20/1	23	24	20/1			C	SPARE	
	SPARE	A			20/1	25	26	20/1			A	SPARE	
	SPARE	B			20/1	27	28	20/1			B	SPARE	
	SPARE	C			20/1	29	30	20/1			C	SPARE	
	SPARE	A			20/1	31	32	20/1			A	SPARE	
	SPARE	B			20/1	33	34	20/1			B	SPARE	
	SPARE	C			20/1	35	36	20/1			C	SPARE	
	SPARE	A			20/1	37	38	20/1			A	SPARE	
	SPARE	B			20/1	39	40	20/1			B	SPARE	
	SPARE	C			20/1	41	42	20/1			C	SPARE	

GENERAL NOTES

a.
b.
c.

SCHEDULE NOTES

1.
2.
3.

LOAD TYPE	LOAD DESCRIPTION	CONNECTED (kVA)	SUBFED (kVA)	TOTAL BY TYPE (kVA)	DEMAND FACTOR (kVA)	DEMAND BY TYPE (kVA)
G	GENERAL	0.00	0.00	0.00	100%	0.00
L	LIGHTING	0.00	0.00	0.00	125%	0.00
R	RECEPTACLES	15.00	0.00	15.00	100%/50%	12.50
K	KITCHEN	0.00	0.00	0.00	100%	0.00
H	HEATING	0.00	0.00	0.00	100%	0.00
M	MOTORS	0.20	0.00	0.20	100%	0.20
LM	LARGEST MOTOR	0.00	0.00	0.00	125%	0.00
WH	WATER HEATER	0.00	0.00	0.00	125%	0.00
C	CONTINUOUS	0.00	0.00	0.00	125%	0.00

SGHE	GHE	E4
SGHW	GHW	T1

APPROVALS

IDENTIFICATION STAMP
DIV. OF THE STATE ARCHITECT
APP: 01-119409 INC:
REVIEWED FOR
SS ☑ FLS ☑ ACS ☑
DATE: 03/14/2022

NOLL & TAM ARCHITECTS
729 Heinz Avenue
Berkeley, CA 94710
tel 510.542.2200
fax 510.542.2201

RIJA
5515 Doyle Street, #7
Emeryville, CA 94608
www.rijainc.com
RIJA Job #: 2020011

SEAL

REGISTERED PROFESSIONAL ENGINEER
RAJ JANI CHOW
No. E19586
Exp. 06-30-23
ELECTRICAL
STATE OF CALIFORNIA

Date Signed: 3/1/22

PROJECT TITLE

Peralta Community College District
Merritt Landscape Horticulture Complex

12500 Campus Drive
Oakland, CA 94616

BID SET

ISSUE DATE 03/03/2022
N&T JOB NUMBER 22003

REVISIONS

	DATE	DESCRIPTION

DRAWN BY CAD | CHECKED BY RAJ

SHEET TITLE

SCHEDULES

SHEET NUMBER

E5.03

4/3/2020 7:20:00 PM BIM 360://PCCD Merritt Horticulture/Merritt Horticulture_2020.rvt

DETAIL NOTES

1. CONCRETE ENCASED ELECTRODE AND COPPER WATER PIPE GROUND SHALL BE WITHIN 5 FEET OF BUILDING ENTRY.
2. IF PRESENT ON THE PREMISES AT EACH BUILDING OR STRUCTURE SERVED, EACH OF THE FOLLOWING SHALL BE BONDED TO FORM THE GROUNDING ELECTRODE SYSTEM (CEC 250-50):
   1. METAL UNDERGROUND WATER PIPE
   2. METAL FRAME OF BUILDING OR STRUCTURE
   3. CONCRETE ENCASED ELECTODE (UFER)
   4. GROUND RING
   5. ROD AND PIPE ELECTRODES
   6. PLATE ELECTRODES.

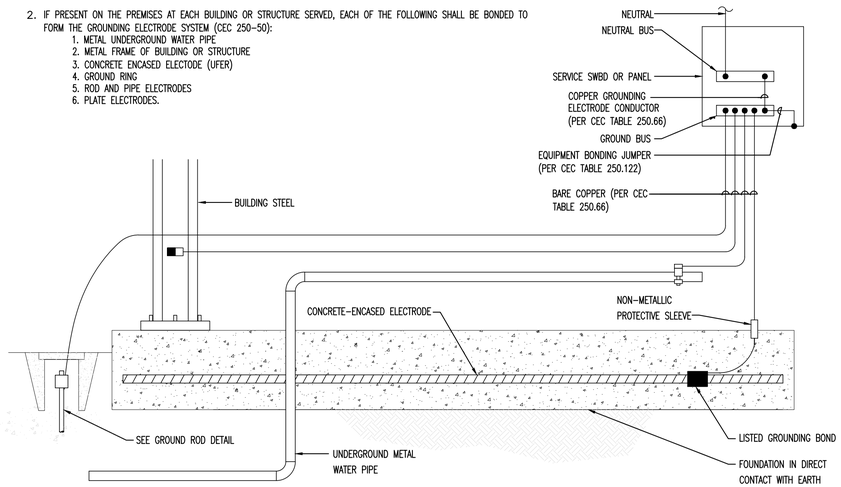

8 SYSTEM GROUNDING

SCALE: NTS

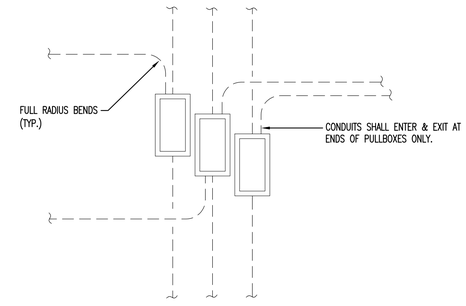

NOTES
1. COORDINATE QUANTITY OF PULL BOXES WITH SITE PLAN.
2. REFER TO SPECIFICATIONS FOR MINIMUM SEPARATION REQUIREMENTS FOR UTILITIES.

3 PULL BOX CLUSTER

SCALE: NTS

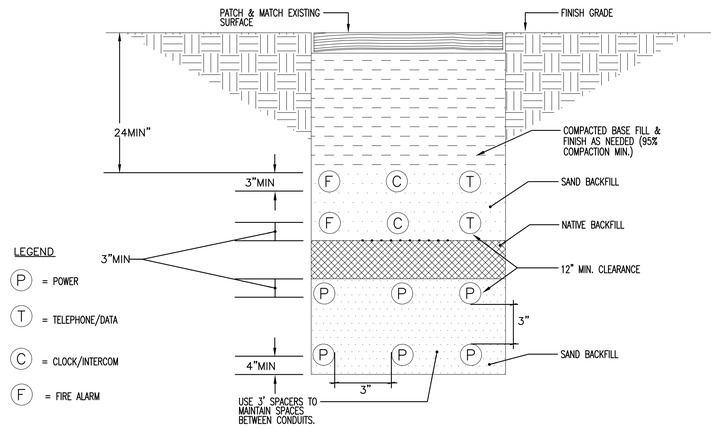

2 TYPICAL TRENCH DETAIL

SCALE: NTS

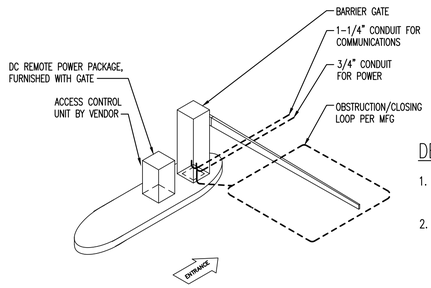

DETAIL NOTES

1. INSTALLATION PER MANUFACTURER SHOP DRAWINGS AND INSTRUCTIONS
2. PROVIDE CONDUIT PATHWAY FOR 'OPTICAL EYE' OPTION PER MANUFACTURER SHOP DRAWINGS.

7 BARRIER GATE

SCALE: NTS

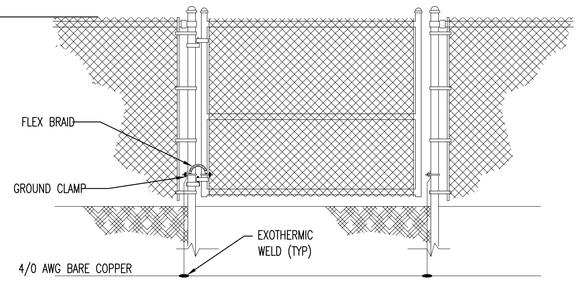

5 FENCE GROUNDING

SCALE: NTS

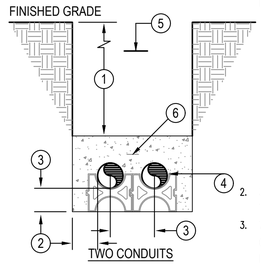

DETAIL NOTES:

1. 30" MINIMUM DEPTH TO TOP OF DUCTBANK. DEPTH MAY BE INCREASED FOR SHORT LENGTHS TO AVOID OBSTRUCTIONS. TOTAL LENGTH OF DUCT BELOW 30" MUST BE LESS THAN 25% OF TOTAL DUCT LENGTH, IF MORE THAN 25% OF DUCT LENGTH IS BELOW 30" FEEDER MUST BE DERATED USING THE FOLLOWING FORMULA FROM 2013 CEC:

$$I2 = I1 \sqrt{\frac{TC - TA2 - DELTA\ TD}{TC - TA1 - DELTA\ TD}}$$

WHERE

I1 = AMPACITY FROM NEC TABLES 310-69 THROUGH 310-84
I2 = AMPACITY AT DESIRED AMBIENT TA2
TC = CONDUCTOR TEMPERATURE IN DEGREES C
TA1 = SURROUNDING AMBIENT FROM NEC TABLES 310-69 THROUGH 310-84 IN DEGREES C
TA2 = DESIRED AMBIENT IN DEGREES C
DELTA TD = DIELECTRIC LOSS TEMPERATURE RISE

2. 3" MINIMUM CLASS E CONCRETE ENCASEMENT AROUND CONDUITS. PROVIDE 2" RED DYED CONCRETE TOPPING FOR ALL 12KV DUCTBANKS.
3. 7½" MINIMUM SEPARATION OR 3" SEPARATION BETWEEN CONDUIT EXTERIOR SURFACES, WHICHEVER IS GREATER. SEPARATE 600V VOLT CONDUITS FROM SIGNAL SYSTEM CONDUITS BY 14" OR 6" BETWEEN EXTERIOR SURFACES, WHICHEVER IS GREATER. SEPARATE 601V AND GREATER CONDUITS FROM ALL OTHER CONDUITS BY 18" OR 12" BETWEEN EXTERIOR SURFACES WHICHEVER IS GREATER.
4. REFER TO SINGLE LINE DIAGRAM(S), SIGNAL SYSTEM RISER DIAGRAM(S) AND PLANS FOR CONDUIT SIZES, REFER TO SPECIFICATIONS FOR CONDUIT AND FITTINGS TYPE. DO NOT STACK CONDUITS RACEWAYS FOR DIFFERENT SYSTEM ABOVE EACH OTHER. CONDUIT SPACING MAY BE REDUCED WHERE CONDUITS ENTER EQUIPMENT ENCLOSURES FORM UNDERGROUND.
5. UNDERGROUND WARNING TAPE LOCATED DIRECTLY ABOVE DUCT BANK AND 6'-8" BELOW FINISHED GRADE.
6. 4/0 BARE COPPER GROUND CONDUCTOR.

6 15kV DUCTBANK

SCALE: NTS

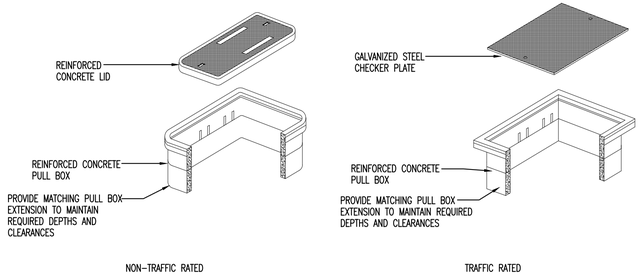

DETAIL NOTES
1. HIGH DENSITY REINFORCED CONCRETE PULL AND JUNCTION BOX WITH END AND SIDE KNOCKOUTS. NON-SETTLING SHOULDERS MAINTAIN GRADE AND FACILITATE BACK FILLING. SIZE PULL BOX PER CODE. PROVIDE MINIMUM OF 6" CRUSHED ROCK BEDDING AT BOTTOM OF BOX FOR DRAINAGE.
2. CHRISTY TYPE "N" SERIES PULL BOX WITH "N" SERIES LID UON OR EQUAL.
3. PROVIDE IN NON-TRAFFIC AREAS, UON.

DETAIL NOTES
1. HIGH DENSITY REINFORCED CONCRETE PULL AND JUNCTION BOX WITH END AND SIDE KNOCKOUTS. NON-SETTLING SHOULDERS MAINTAIN GRADE AND FACILITATE BACK FILLING. SIZE PULL BOX PER CODE. PROVIDE MINIMUM OF 6" CRUSHED ROCK BEDDING AT BOTTOM OF BOX FOR DRAINAGE.
2. TRAFFIC BOX PER CALTRANS SPECS.
3. CHRISTY TYPE "B" SERIES PULL BOX OR EQUAL.
4. PROVIDE IN TRAFFIC RATED AREAS AS NOTED IN SPECIFICATION.

4 TYPICAL INGRADE PULL BOX

SCALE: NTS

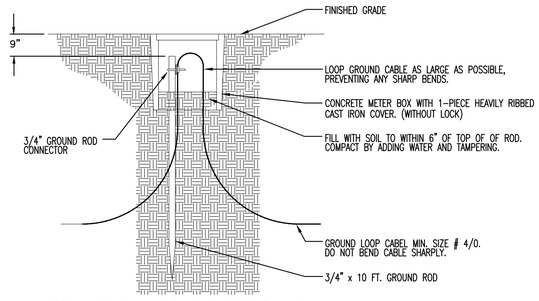

GROUND WELL WITH ROD CONNECTED TO GROUND LOOP SYSTEM

1 GROUND WELL WITH ROD

SCALE: NTS

APPROVALS

IDENTIFICATION STAMP
DIV. OF THE STATE ARCHITECT
APP: 01-119409 INC:
REVIEWED FOR
SS ☑ FLS ☑ ACS ☑
DATE: 03/14/2022

NOLL & TAM ARCHITECTS
729 Heinz Avenue
Berkeley, CA 94710
tel 510.542.2200
fax 510.542.2201

RIJA
5515 Doyle Street, #7
Emeryville, CA 94608
www.rijainc.com
RIJA Job #: 2020011

SEAL

REGISTERED PROFESSIONAL ENGINEER
RAY A. JACHON
No. E19586
Exp. 06-30-23
ELECTRICAL
STATE OF CALIFORNIA

Date Signed: 3/1/22

PROJECT TITLE

Peralta Community College District
Merritt Landscape Horticulture Complex

12500 Campus Drive
Oakland, CA 94616

BID SET

ISSUE DATE	03/03/2022
N&T JOB NUMBER	22003

REVISIONS

	DATE	DESCRIPTION

DRAWN BY CAD	CHECKED BY RAJ

SHEET TITLE

DETAILS

SHEET NUMBER

E6.01

BIM 360://PCCD Merritt Horticulture/Merritt Horticulture_2020.rvt
4/3/2020 7:20:00 PM

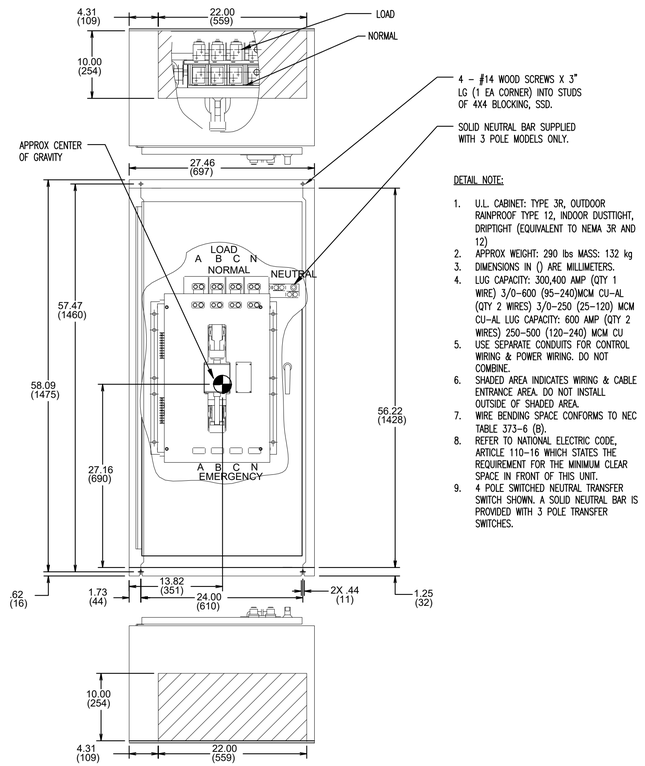

DETAIL NOTE:

1. U.L. CABINET: TYPE 3R, OUTDOOR RAINPROOF TYPE 12, INDOOR DUSTTIGHT, DRIPTIGHT (EQUIVALENT TO NEMA 3R AND 12)
2. APPROX WEIGHT: 290 lbs MASS: 132 kg
3. DIMENSIONS IN () ARE MILLIMETERS.
4. LUG CAPACITY: 300,400 AMP (QTY 1 WIRE) 3/0–600 (85–240)MCM CU–AL (QTY 2 WIRES) 3/0–250 (25–120) MCM CU–AL LUG CAPACITY: 600 AMP (QTY 2 WIRES) 250–500 (120–240) MCM CU
5. USE SEPARATE CONDUITS FOR CONTROL WIRING & POWER WIRING. DO NOT COMBINE.
6. SHADED AREA INDICATES WIRING & CABLE ENTRANCE AREA. DO NOT INSTALL OUTSIDE OF SHADED AREA.
7. WIRE BENDING SPACE CONFORMS TO NEC TABLE 373–6 (B).
8. REFER TO NATIONAL ELECTRIC CODE, ARTICLE 110–16 WHICH STATES THE REQUIREMENT FOR THE MINIMUM CLEAR SPACE IN FRONT OF THIS UNIT.
9. 4 POLE SWITCHED NEUTRAL TRANSFER SWITCH SHOWN. A SOLID NEUTRAL BAR IS PROVIDED WITH 3 POLE TRANSFER SWITCHES.

5 AUTOMATIC TRANSFER SWITCH MOUNTING

SCALE: NTS

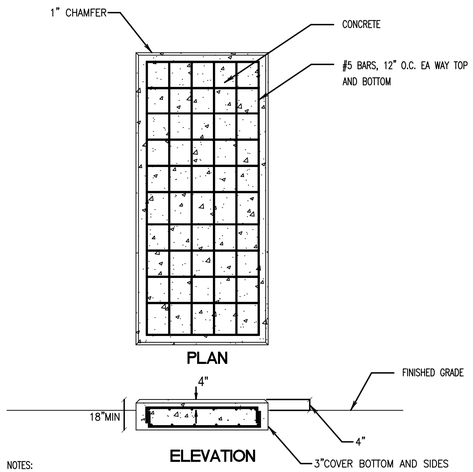

NOTES:

1. SEAL ALL CONDUIT PENETRATIONS OF GENERATOR PAD WITH GROUT TO PROHIBIT THE ENTRANCE OF INSECTS.
2. THE PAD SHALL HAVE A MINIMUM MAINTAINED CLEARANCE OF 36" FROM ALL OBSTRUCTIONS.

4 GENERATOR PAD DETAIL

SCALE: NTS

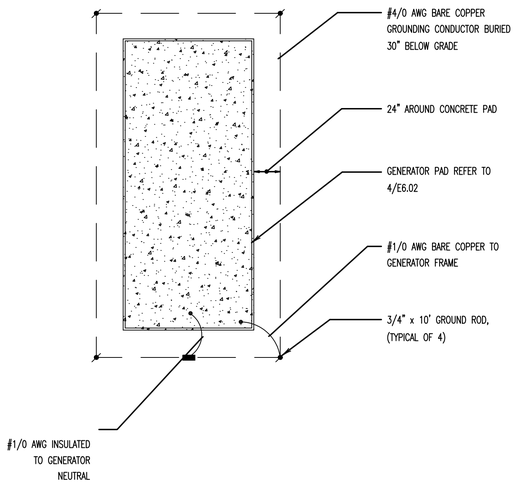

NOTE:

1. FOR A 3–POLE AUTOMATIC TRANSFER SWITCH WITH OVERLAPPING NEUTRAL CONTACTS PROVIDE GROUNDING OF THE GENERATOR NEUTRAL AND FRAME AS INDICATED.

3 GENERATOR GROUNDING

SCALE: NTS

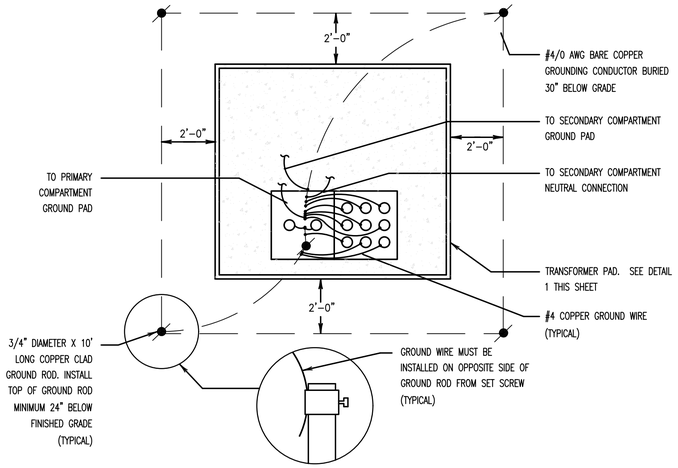

2 PAD MOUNT TRANSFORMER GROUNDING

SCALE: NTS

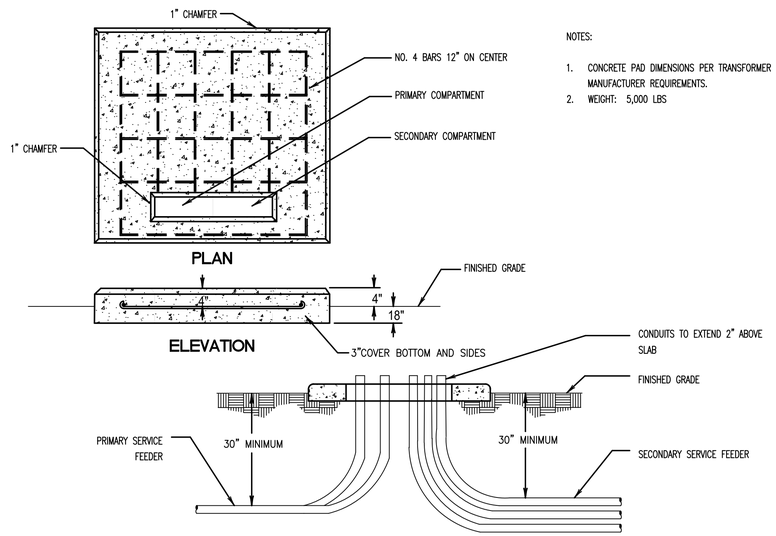

NOTES:

1. CONCRETE PAD DIMENSIONS PER TRANSFORMER MANUFACTURER REQUIREMENTS.
2. WEIGHT: 5,000 LBS

1 TRANSFORMER PAD DETAIL

SCALE: NTS

APPROVALS

IDENTIFICATION STAMP
DIV. OF THE STATE ARCHITECT
APP: 01-119409 INC:
REVIEWED FOR
SS ☑ FLS ☑ ACS ☑
DATE: 03/14/2022

NOLL & TAM ARCHITECTS
729 Heinz Avenue
Berkeley, CA 94710
tel 510.542.2200
fax 510.542.2201

RIJA
5515 Doyle Street, #7
Emeryville, CA 94608
www.rijainc.com
RIJA Job #: 2020011

SEAL

REGISTERED PROFESSIONAL ENGINEER
RAY A. JANCHOM
No. E19586
Exp. 06-30-23
ELECTRICAL
STATE OF CALIFORNIA

Date Signed: 3/1/22

PROJECT TITLE

Peralta Community College District
Merritt Landscape Horticulture Complex

12500 Campus Drive
Oakland, CA 94616

BID SET

ISSUE DATE	03/03/2022
N&T JOB NUMBER	22003

REVISIONS

	DATE	DESCRIPTION

DRAWN BY CAD | CHECKED BY RAJ

SHEET TITLE

DETAILS

SHEET NUMBER

E6.02

4/3/2020 7:20:00 PM BIM 360://PCCD Merritt Horticulture/Merritt Horticulture_2020.rvt

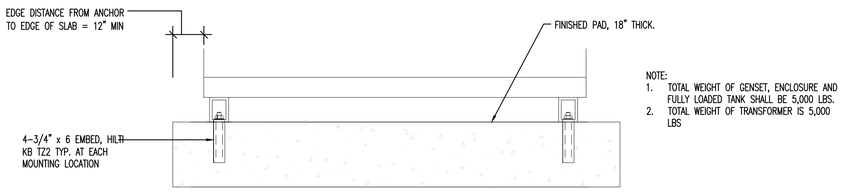

NOTE:
1. TOTAL WEIGHT OF GENSET, ENCLOSURE AND FULLY LOADED TANK SHALL BE 5,000 LBS.
2. TOTAL WEIGHT OF TRANSFORMER IS 5,000 LBS

3 TRANSFORMER AND GENERATOR ANCHORAGE

SCALE: NTS

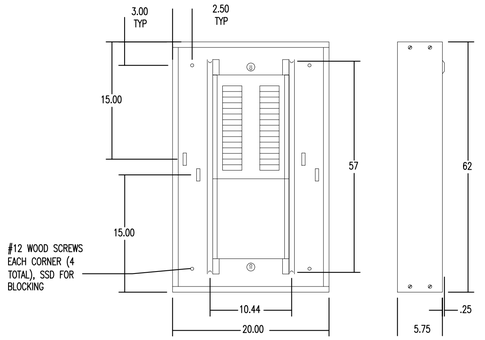

MAXIMUM MAIN BREAKER AMPERE RATING	BRANCH BREAKER MOUNTING SPACE (INCHES)	H	A
		IN	IN
100	18	52.00	29.50
	36	65.00	38.50
	54	74.00	47.50
400	27	65.00	38.50
	45	74.00	47.50
	63	83.00	56.50
	81	92.00	65.50

NOTE:
1. PANELBOARDS ARE 350 LBS AVERAGE

2 TYPICAL PANELBOARD

SCALE: NTS

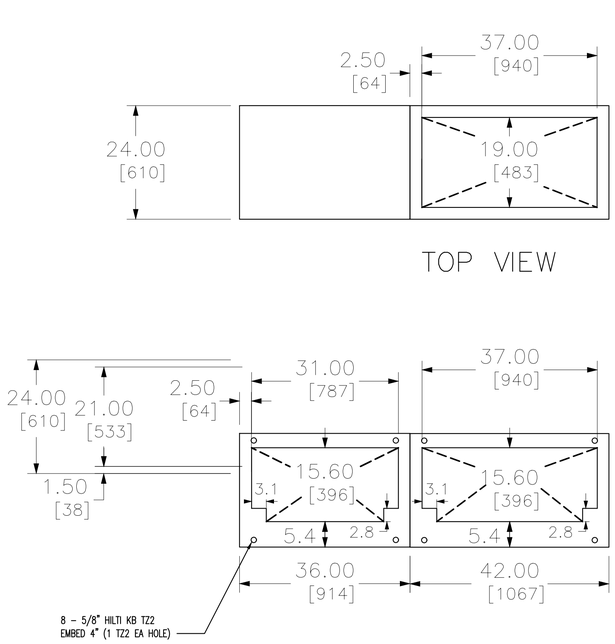

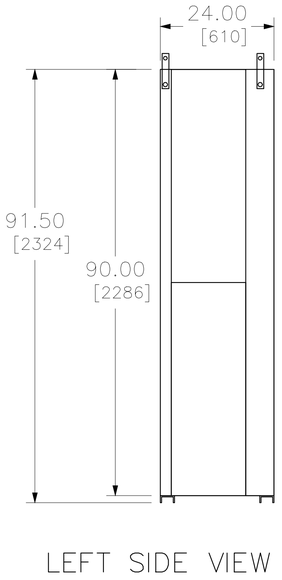

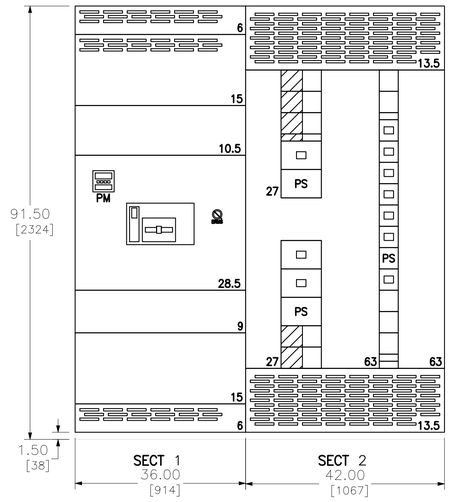

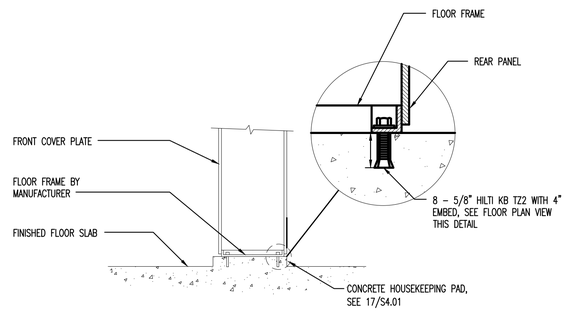

NOTES
1. WEIGHT OF SWITCHBOARD IS 2000 POUNDS.

1 MAIN SWITCHBOARD MSB ANCHORAGE

SCALE: NTS

APPROVALS

IDENTIFICATION STAMP
DIV. OF THE STATE ARCHITECT
APP: 01-119409 INC:
REVIEWED FOR
SS ☑ FLS ☑ ACS ☑
DATE: 03/14/2022

NOLL & TAM ARCHITECTS
729 Heinz Avenue
Berkeley, CA 94710
tel 510.542.2200
fax 510.542.2201

RIJA
5515 Doyle Street, #7
Emeryville, CA 94608
www.rijainc.com
RIJA Job #: 2020011

SEAL

REGISTERED PROFESSIONAL ENGINEER
RAY A. JANCHORA
No. E19586
Exp. 06-30-23
ELECTRICAL
STATE OF CALIFORNIA

Date Signed: 3/1/22

PROJECT TITLE

Peralta Community College District
Merritt Landscape Horticulture Complex

12500 Campus Drive
Oakland, CA 94616

BID SET

ISSUE DATE	03/03/2022
N&T JOB NUMBER	22003

REVISIONS

	DATE	DESCRIPTION

DRAWN BY CAD | CHECKED BY RAJ

SHEET TITLE

DETAILS

SHEET NUMBER

E6.03

4/3/2020 7:20:00 PM BIM 360://PCCD Merritt Horticulture/Merritt Horticulture_2020.rvt

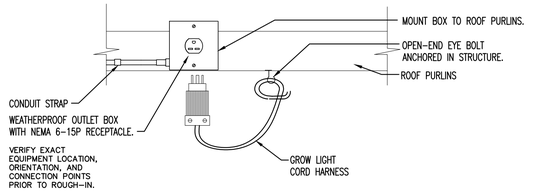

8 GREENHOUSE GROWLIGHT OUTLET

SCALE: NTS

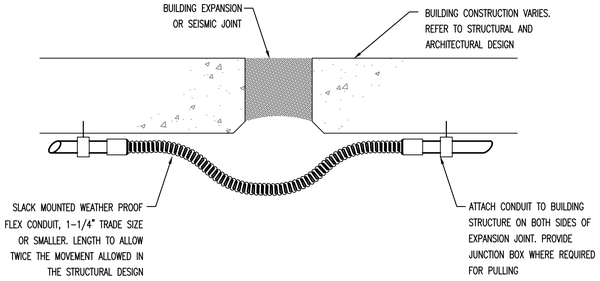

6 FLEXIBLE CONDUIT ACROSS EXPANSION JOINT

SCALE: NTS

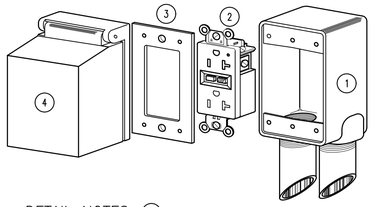

DETAIL NOTES (#)

1. CAST OUTLET BOX, FERROUS METAL CONSTRUCTION,GALVANIZED WITH HUBS FOR RIGID CONDUIT,(MINIMUM 2 HUBS,REFER TO PLANS FOR NUMBER AND LOCATIONS). PROVIDE PLUGS FOR UNUSED HUBS.
2. NEMA 5-20R DUPLEX GFI OUTLET.
3. NEOPRENE GASKET PRECUT TO FIT RECEPTACLE AND BOX.
4. CAST ALUMINUM LIFT COVER. UL LISTED FOR WET LOCATION WHILE IN USE.

3 EXTERIOR RECEPTACLE

SCALE: NTS

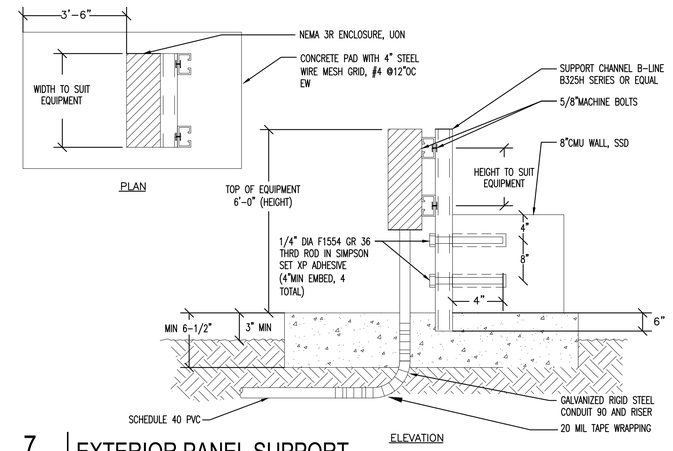

7 EXTERIOR PANEL SUPPORT

SCALE: NTS

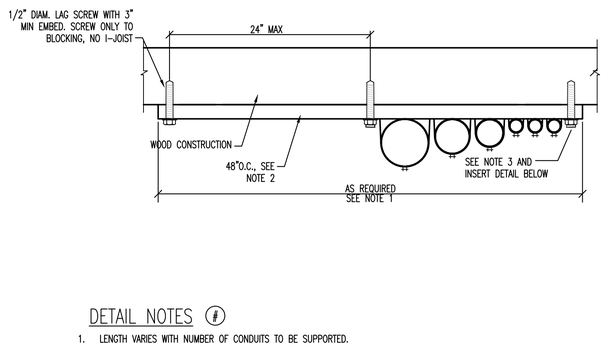

DETAIL NOTES (#)

1. LENGTH VARIES WITH NUMBER OF CONDUITS TO BE SUPPORTED.
2. UNISTRUT WITH ALLOWABLE LOADING PER MANUFACTURER'S RECOMMENDATIONS.
3. FOR SUPPORT IN CONCRETE, USE SWIVEL CONCRETE INSERTS, AS SHOWN.

5 CONDUIT SUPPORT

SCALE: NTS

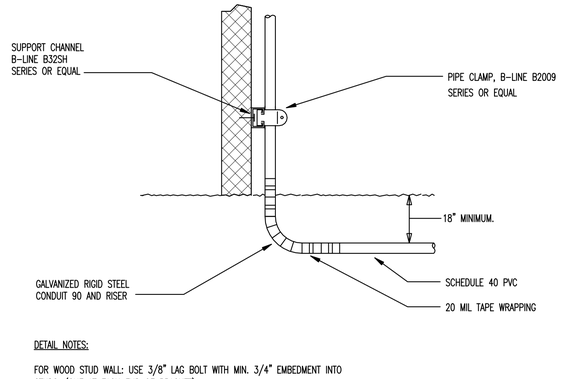

DETAIL NOTES:

FOR WOOD STUD WALL: USE 3/8" LAG BOLT WITH MIN. 3/4" EMBEDMENT INTO STUDS. (ONE AT EACH END OF BRACKET)

2 UNDERGROUND CONDUIT RISER

SCALE: NTS

SYSTEM NO. WL1001

F RATINGS – 1,2,3, AND 4 HR (SEE ITEMS 2 AND 3) T RATINGS – 0,1,2,3,AND 4 HR (SEE ITEM 3)

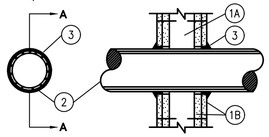

SECTION A-A

✳ BEARING THE UL CLASSIFICATION MARKING

DETAIL NOTES (#)

1. WALL ASSEMBLY – THE 1, 2, 3 OR 4 HR FIRE-RATED GYPSUM WALLBOARD/STUD WALL ASSEMBLY SHALL BE CONSTRUCTED OF THE MATERIALS AND IN THE MANNER DESCRIBED IN THE INDIVIDUAL U300 OR U400 SERIES WALL OR PARTITION DESIGNS IN THE UL FIRE RESISTANCE DIRECTORY AND SHALL INCLUDE THE FOLLOWING CONSTRUCTION FEATURES:
   A. STUDS – WALL FRAMING MAY CONSIST OF EITHER WOOD STUDS (MAX. 2HR FIRE RATED ASSEMBLIES) OR STEEL CHANNEL STUDS. WOOD STUDS TO CONSIST OF NOM. 2 BY 4 IN. LUMBER SPACED 16 IN. OC WITH NOM. 2 BY 4 IN. LUMBER END PLATES AND CROSS BRACES. STEEL STUDS TO BE MIN. 3-5/8 IN. WIDE BY 1-3/8 IN. DEEP CHANNELS SPACED MAX. 24 IN. OC.
   B. WALLBOARD, GYPSUM – NOM. 1/2 OR 5/8 IN. THICK, 4 FT. WIDE WITH SQUARE OR TAPERED EDGES. THE GYPSUM WALLBOARD TYPE, THICKNESS, NUMBER OF LAYERS, FASTENER TYPE AND SHEET ORIENTATION SHALL BE AS SPECIFIED IN THE INDIVIDUAL U300 OR U400 SERIES DESIGN IN THE UL FIRE RESISTANCE DIRECTORY. MAX DIAM OF OPENING IS 13-1/2 IN.
2. PIPE OR CONDUIT – NOM 12 IN. DIAM (OR SMALLER) SCHEDULE 10 (OR HEAVIER) STEEL PIPE, NOM 6 IN. DIAM (OR SMALLER) STEEL CONDUIT, NOM 4 IN. DIAM (OR SMALLER) STEEL ELECTRICAL METALLIC TUBING OR TYPE L OR (OR HEAVIER) COPPER TUBING OR NOM 1 IN. DIAM (OR SMALLER) FLEXIBLE STEEL CONDUIT. WHEN COPPER PIPE OR FLEXIBLE STEEL CONDUIT IS USED, MAX F RATING OF FIRESTOP SYSTEM (ITEM 3) IS 2 HR. STEEL PIPES OR CONDUITS LARGER THAN NOM 4 IN. DIAM MAY ONLY BE USED IN WALLS CONSTRUCTED USING STEEL CHANNEL STUDS. A MAX OF ONE PIPE OR CONDUIT IS PERMITTED IN THE FIRESTOP SYSTEM. PIPE OR CONDUIT TO BE INSTALLED NEAR CENTER OF STUD CAVITY WIDTH AND TO BE RIGIDLY SUPPORTED ON BOTH SIDES OF WALL ASSEMBLY.
3. FILL, VOID OR CAVITY MATERIAL – CAULK – CAULK FILL MATERIAL INSTALLED TO COMPLETELY FILL ANNULAR SPACE BETWEEN PIPE OR CONDUIT AND GYPSUM WALLBOARD AND WITH A MIN 1/4 IN. DIAM BEAD OF CAULK APPLIED TO PERIMETER OF PIPE OR CONDUIT AT ITS EGRESS FROM THE WALL. CAULK INSTALLED SYMMETRICALLY ON BOTH SIDES OF WALL ASSEMBLY. THE HOURLY F RATING OF THE FIRESTOP SYSTEM IS DEPENDENT UPON THE HOURLY FIRE RATING OF THE WALL ASSEMBLY IN WHICH IT IS INSTALLED, AS SHOWN IN THE FOLLOWING TABLE. THE HOURLY T RATING OF THE FIRESTOP SYSTEM IS DEPENDENT UPON THE TYPE OR SIZE OF THE PIPE OR CONDUIT AND THE HOURLY RATING OF THE WALL ASSEMBLY IN WHICH IT IS INSTALLED, AS TABULATED BELOW:

MAX PIPE OR CONDUIT DIAM, IN.	ANNULAR SPACE IN.	F RATING, HR.	T RATING, HR.
1	0 TO 3/16	1 OR 2	0+, 1 OR 2
1	1/4 TO 1/2	3 OR 4	3 OR 4
4	0 TO 1/4	1 OR 2	0
6	1/4 TO 1/2	3 OR 4	0
12	3/16 TO 3/8	1 OR 2	0

+ WHEN COPPER PIPE IS USED, T RATING IS 0 HR.
MINNESOTA MINING & MFG. CO. CAULK MATERIAL AND ASSEMBLY – SHALL BE APPROVED BY FIRE MARSHAL.

4 1HR CONDUIT PENETRATION

SCALE: NTS

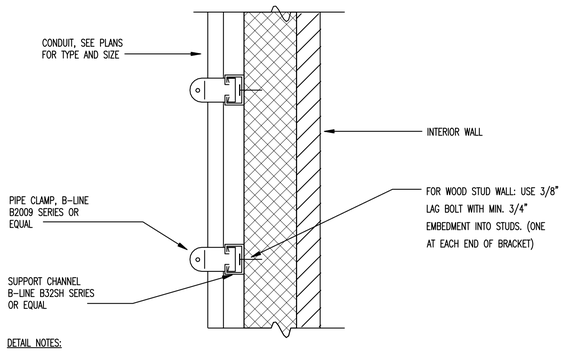

DETAIL NOTES:

ALL COMPONENTS SHALL BE GALVANIZED.
ALL CONDUIT FITTINGS SHALL BE THREADED.

1 EXPOSED CONDUIT

SCALE: NTS

APPROVALS

IDENTIFICATION STAMP
DIV. OF THE STATE ARCHITECT
APP: 01-119409 INC:
REVIEWED FOR
SS ☑ FLS ☑ ACS ☑
DATE: 03/14/2022

NOLL & TAM ARCHITECTS
729 Heinz Avenue
Berkeley, CA 94710
tel 510.542.2200
fax 510.542.2201

RIJA
5515 Doyle Street, #7
Emeryville, CA 94608
www.rijainc.com
RIJA Job #: 2020011

SEAL

REGISTERED PROFESSIONAL ENGINEER
RAY A. JACKSON
No. E19586
Exp. 06-30-23
ELECTRICAL
STATE OF CALIFORNIA

Date Signed: 3/1/22

PROJECT TITLE

Peralta Community College District
Merritt Landscape Horticulture Complex

12500 Campus Drive
Oakland, CA 94616

BID SET

ISSUE DATE	03/03/2022
N&T JOB NUMBER	22003

REVISIONS

	DATE	DESCRIPTION

DRAWN BY **CAD** CHECKED BY **RAJ**

SHEET TITLE

DETAILS

SHEET NUMBER

E6.04

4/3/2020 7:20:00 PM BIM 360://PCCD Merritt Horticulture/Merritt Horticulture_2020.rvt

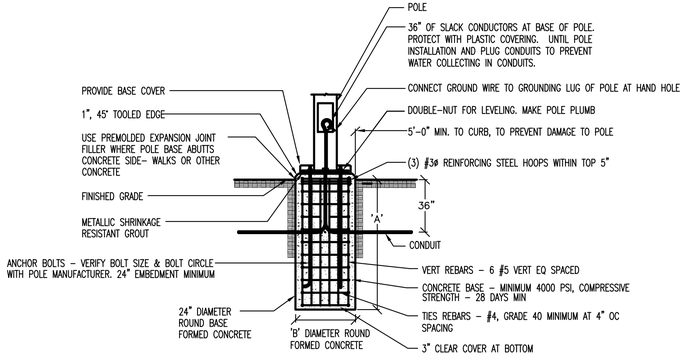

NOTE:
FIXTURE WIRE THROUGH POLE TO LUMINAIRE TO BE RATED FOR 150 F

BASE DIMENSIONS	POLE HIEGHT UP TO 15'
'A'	5'- 0"
'B'	24"
'C'	20"

3 FLUSH LIGHT POLE BASE

SCALE: NTS

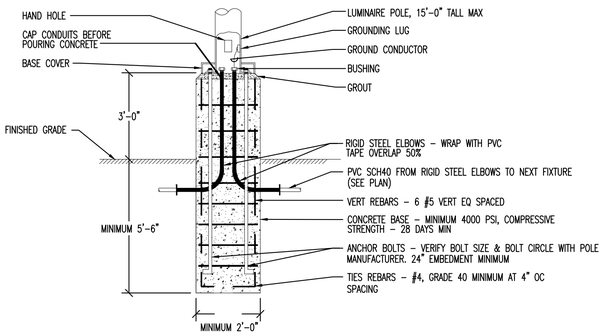

2 RAISED LIGHT POLE BASE

SCALE: NTS

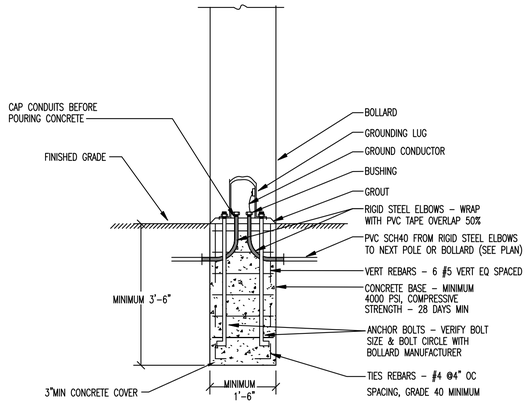

5 BOLLARD FLUSH BASE

SCALE: NTS

1 RAISED LIGHT POLE WITH CURVED J-BOX AT BASE

SCALE: NTS

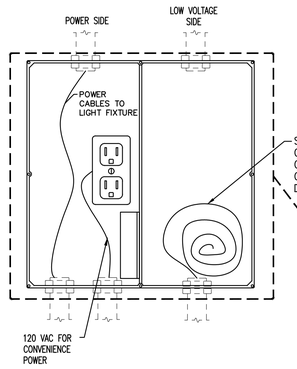

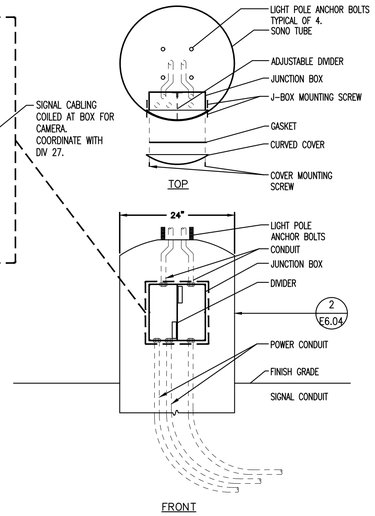

CURVED J-BOX IN 24" LIGHT POLE BASE

DETAIL NOTES:

1. CARLON CURVED LID JUNCTION BOX PART NUMBERS:
   12"X12" JUNCTION BOX = #E1212C24
   DIVIDER (OPTIONAL) 12" = #E12DIV
2. POSITION JUNCTION BOX PERPENDICULAR TO PARKING STALLS.

4 NOT USED

SCALE: NTS

APPROVALS

IDENTIFICATION STAMP
DIV. OF THE STATE ARCHITECT
APP: 01-119409 INC:
REVIEWED FOR
SS ☑ FLS ☑ ACS ☑
DATE: 03/14/2022

NOLL & TAM ARCHITECTS
729 Heinz Avenue
Berkeley, CA 94710
tel 510.542.2200
fax 510.542.2201

RIJA
5515 Doyle Street, #7
Emeryville, CA 94608
www.rijainc.com
RIJA Job #: 2020011

SEAL

REGISTERED PROFESSIONAL ENGINEER
RAY A. JANCHOM
No. E19586
Exp. 06-30-23
ELECTRICAL
STATE OF CALIFORNIA

Date Signed: 3/1/22

PROJECT TITLE

Peralta Community College District
Merritt Landscape Horticulture Complex

12500 Campus Drive
Oakland, CA 94616

BID SET

ISSUE DATE	03/03/2022
N&T JOB NUMBER	22003

REVISIONS

	DATE	DESCRIPTION

DRAWN BY	CAD	CHECKED BY	RAJ

SHEET TITLE

DETAILS

SHEET NUMBER

E6.05

4/3/2020 7:20:00 PM BIM 360://PCCD Merritt Horticulture/Merritt Horticulture_2020.rvt

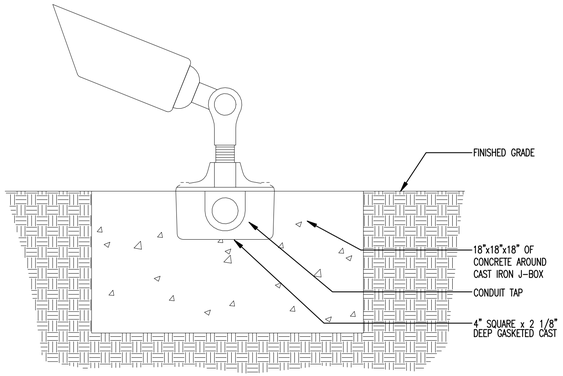

5 TYPE SM LUMINAIRE PLACEMENT

SCALE: NTS

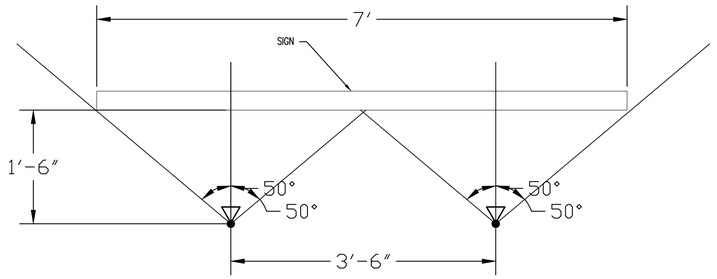

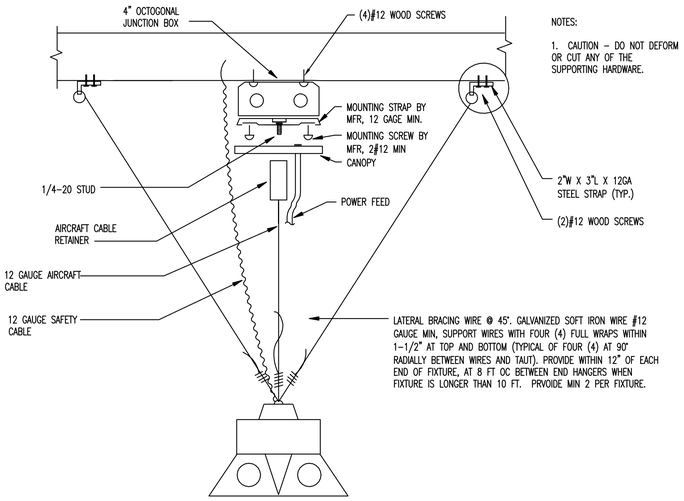

2 CABLE SUSPENDED LUMINAIRE WITH LATERAL BRACING

SCALE: NTS

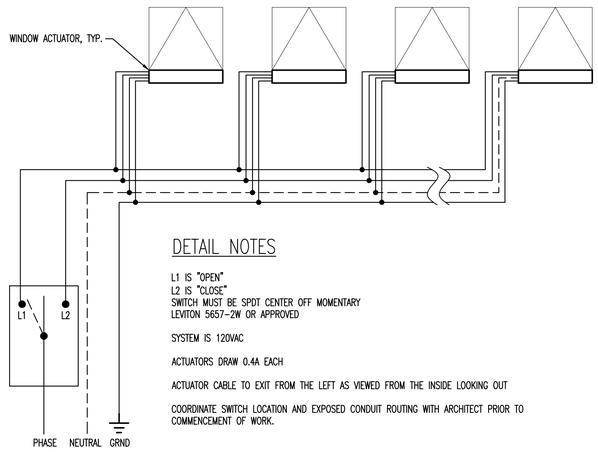

DETAIL NOTES

L1 IS "OPEN"
L2 IS "CLOSE"
SWITCH MUST BE SPDT CENTER OFF MOMENTARY
LEVITON 5657-2W OR APPROVED

SYSTEM IS 120VAC

ACTUATORS DRAW 0.4A EACH

ACTUATOR CABLE TO EXIT FROM THE LEFT AS VIEWED FROM THE INSIDE LOOKING OUT

COORDINATE SWITCH LOCATION AND EXPOSED CONDUIT ROUTING WITH ARCHITECT PRIOR TO COMMENCEMENT OF WORK.

5 WINDOW ACTUATOR WIRING DIAGRAM

SCALE: NTS

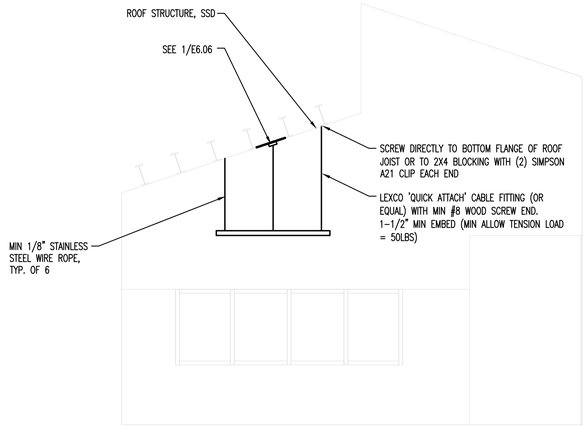

DETAIL NOTES

1. WEIGHT = 39 LBS
2. LUMINAIRE SHALL SWING 45 DEGREES WITHOUT MAKING CONTACT WITH ANY OBJECTS

4 TYPE P5 SUSPENDED LUMINAIRE

SCALE: NTS

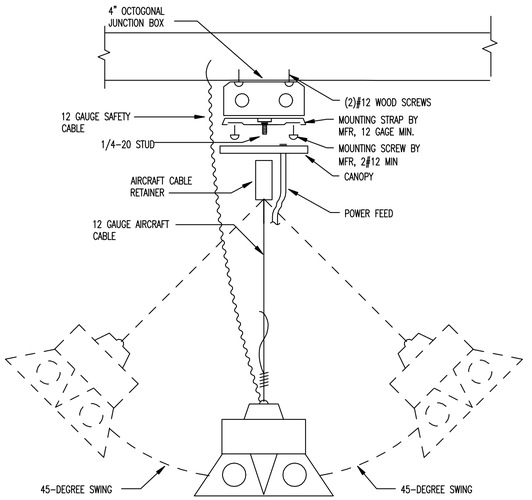

DETAIL NOTES

1. CAUTION – DO NOT DEFORM OR CUT ANY OF THE SUPPORTING HARDWARE.
2. PENDANT LUMINAIRE SHALL BE INSTALLED SO THAT THEY CAN SWING AT LEAST 45 DEGREES FROM THE VERTICAL IN ANY DIRECTION WITHOUT CONTACTING AN OBSTRUCTION.

1 CABLE SUSPENDED LUMINAIRE

SCALE: NTS

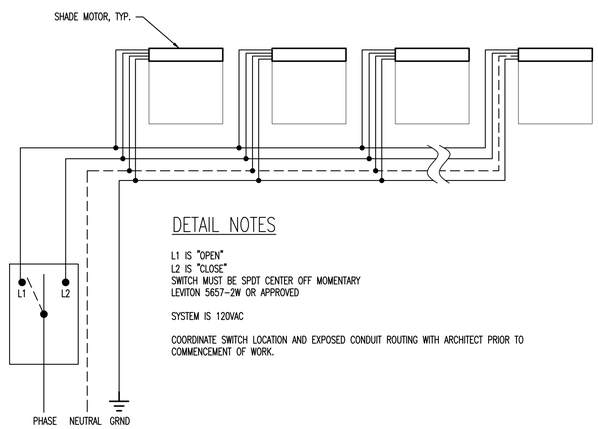

DETAIL NOTES

L1 IS "OPEN"
L2 IS "CLOSE"
SWITCH MUST BE SPDT CENTER OFF MOMENTARY
LEVITON 5657-2W OR APPROVED

SYSTEM IS 120VAC

COORDINATE SWITCH LOCATION AND EXPOSED CONDUIT ROUTING WITH ARCHITECT PRIOR TO COMMENCEMENT OF WORK.

6 WINDOW SHADE WIRING DIAGRAM

SCALE: NTS

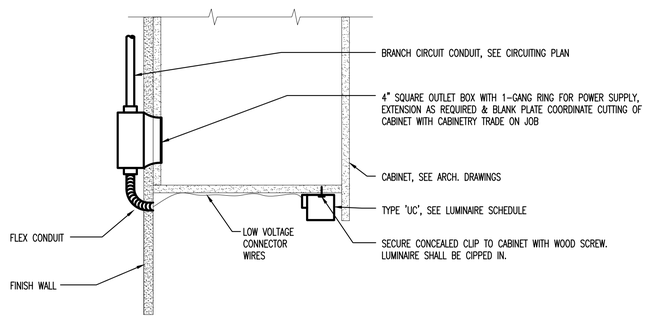

3 UNDERCABINET LIGHTING

SCALE: NTS

APPROVALS

IDENTIFICATION STAMP
DIV. OF THE STATE ARCHITECT
APP: 01-119409 INC:
REVIEWED FOR
SS ☑ FLS ☑ ACS ☑
DATE: 03/14/2022

NOLL & TAM ARCHITECTS
729 Heinz Avenue
Berkeley, CA 94710
tel 510.542.2200
fax 510.542.2201

RIJA
5515 Doyle Street, #7
Emeryville, CA 94608
www.rijainc.com
RIJA Job #: 2020011

SEAL

REGISTERED PROFESSIONAL ENGINEER
RAY A. JACHON
No. E19586
Exp. 06-30-23
ELECTRICAL
STATE OF CALIFORNIA

Date Signed: 3/1/22

PROJECT TITLE

Peralta Community College District
Merritt Landscape Horticulture Complex

12500 Campus Drive
Oakland, CA 94616

BID SET

ISSUE DATE 03/03/2022
N&T JOB NUMBER 22003
REVISIONS

	DATE	DESCRIPTION

DRAWN BY CAD | CHECKED BY RAJ

SHEET TITLE

DETAILS

SHEET NUMBER

E6.06

4/3/2020 7:20:00 PM BIM 360://PCCD Merritt Horticulture/Merritt Horticulture_2020.rvt

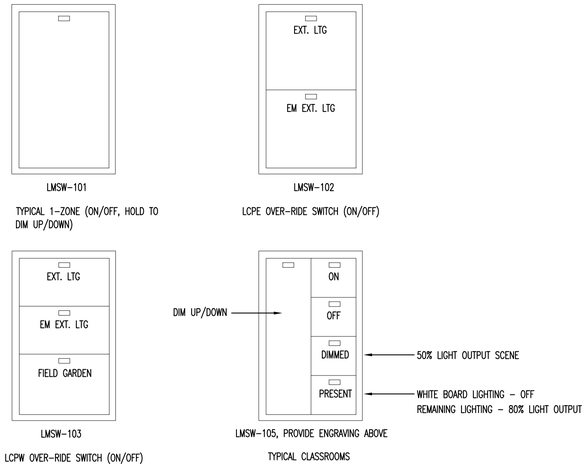

DETAIL NOTES

1. PROVIDE # OF BUTTONS AS REQUIRED. UNUSED BUTTONS SHALL BE SPARES. PROVIDE MULTI-GANG FACEPLATE FOR EACH SWITCHBANK LOCATION WITH MULTIPLE SWITCHES TO PROVIDE UNIFORM SWITCHBANK APPEARANCE. UNUSED BUTTONS SHALL BE SPARES.
2. COORDINATE WITH OWNER AND ARCHITECT FOR ENGRAVING OF BUTTONS AND FACEPLATES. COORDINATE FINAL FINISHES WITH ARCHITECT.

3 TYPICAL SWITCH ELEVATION

SCALE: NTS

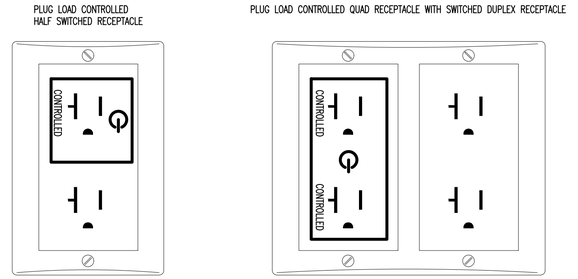

DETAIL NOTES

1. CONTROLLED RECEPTACLES SHALL BE MARKED WITH PERMANENT IDENTIFICATION

3 CONTROLLED RECEPTACLE IDENTIFICATION

SCALE: NTS

WATTSTOPPER DLM - GENERAL NOTES

A. BASIS OF DESIGN IS WATTSTOPPER DLM. CONTRACTOR TO PROVIDE ALL PARTS, DEVICES, WIRING, APPURTENANCES, AND ASSOCIATED LABOR FOR A COMPLETE INSTALLATION.

B. ALL SENSOR LOCATIONS ARE APPROXIMATE AND SHOWN FOR DESIGN INTENT ONLY. LOCATE SENSORS PER MANUFACTURER GUIDELINES AND INSTALLATION MANUAL. PROVIDE QUANTITIES AND LOCATIONS AS REQUIRED FOR PROPER SENSING. FINAL DEVICE LAYOUT SHALL BE SUBMITTED AS A SHOP DRAWING AS PART OF SUBMITTAL REVIEW. SHOP DRAWING APPROVAL IS REQUIRED PRIOR TO PROCUREMENT AND ROUGH-IN.

C. LOCATE SENSOR MINIMUM 5 FEET FROM ANY AIR SUPPLY AND/OR RETURN REGISTERS.

D. THE CONTRACTOR SHALL COMMISSION SENSITIVITY AND TIME DELAY SETTINGS AND PROVIDE TITLE 24 COMMISIONING DOCUMENTS.

E. THE CONSTRACTOR SHALL PROVIDE ALL REQUIRED OCCUPANCY SENSOR POWER PACKS. PROVIDE J-BOXES WITH BLANK FACEPLATES AT CEILING.

F. ROOM CONTROLLERS SHALL BE MOUNTED IN AN ACCESSIBLE LOCATION, INSIDE A MULTI-GANG J-BOX WITH BLANK FACEPLATE, CONCEALED IN CABINETRY, ABOVE DROP CEILING/CLOUD, OR AT A NEARBY REMOTE LOCATION. COORDINATE FINAL LOCATION OF DEVICES WITH ARCHITECT.

G. PROVIDE QUANTITIES AS REQUIRED FOR A COMPLETE SYSTEM. ONE ROOM CONTROLLER IS REQUIRED FOR EACH LIGHTING CIRCUIT. PROVIDE ROOM CONTROLLER SERIES WITH THE FOLLOWING THREE SWITCHING ZONES (INCLUDING MULTIPLE DAYLIGHT SWITCHING ZONES) AND CONTINUOUS DIMMING CAPABILITIES.

H. LMRJ SERIES PRE-TERMINATED CABLES OR CAT5E IS ACCEPTABLE. MANUFACTURER RECOMMENDS PROVIDING LMRJ SERIES PRE-TERMINATED CABLES FOR EASE OF INSTALLATION.

I. COORDINATE WITH MANUFACTURER SO THAT DEVICES ALLOW FOR OPEN TOPOLOGY, AND DO NOT REQUIRE ADDITIONAL CLASS 2 0-10V CONTROL WIRING. DEVICES SHALL HAVE NETWORK CAPABILITY FOR FUTURE USE.

J. ALL PART NUMBERS SHOWN ARE BY WATTSTOPPER. SEE MANUFACTURER'S WEBSITE FOR SUPPORT DOCUMENTATION AND TECHNICAL SUPPORT.

K. SYSTEM SHALL HAVE NETWORK CAPABILITY FOR AUTOMATIC DEMAND RESPONSE VIA BMS OR THIRD PARTY SIGNALLY DEVICE.

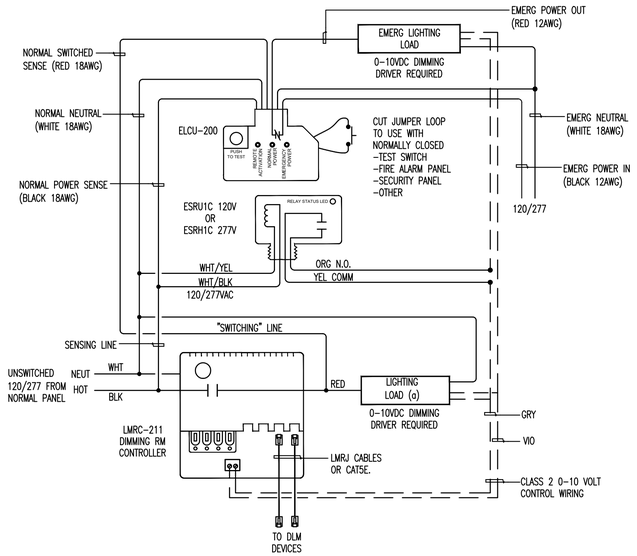

4 DLM - DIMMING WITH EMERGENCY WIRING DIAGRAM

SCALE: NTS

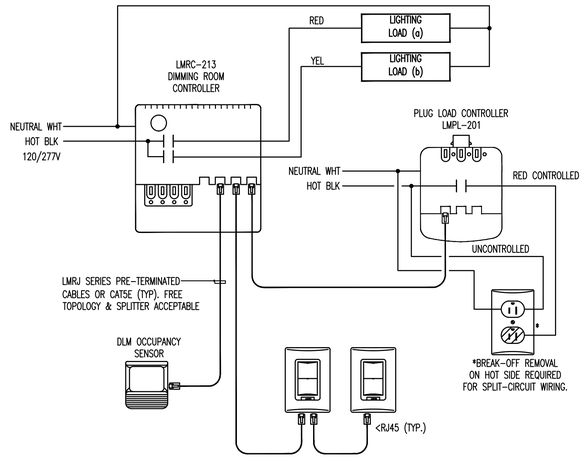

2 DLM - PLUG LOAD CONTROL DIAGRAM

SCALE: NTS

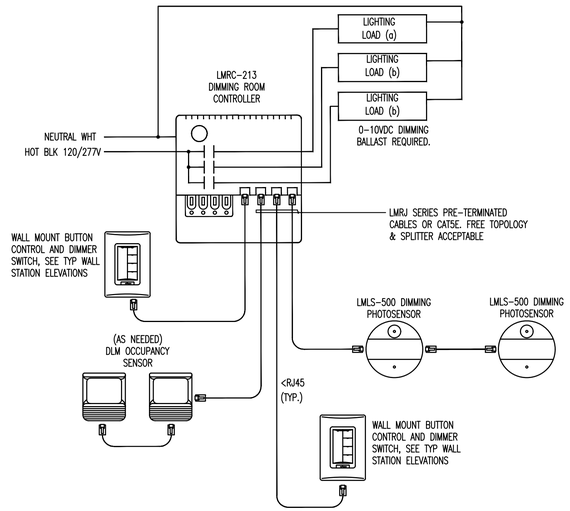

1 DLM - DIMMING WIRING DIAGRAM

SCALE: NTS

APPROVALS

IDENTIFICATION STAMP
DIV. OF THE STATE ARCHITECT
APP: 01-119409 INC:
REVIEWED FOR
SS ☑ FLS ☑ ACS ☑
DATE: 03/14/2022

NOLL & TAM ARCHITECTS
729 Heinz Avenue
Berkeley, CA 94710
tel 510.542.2200
fax 510.542.2201

RIJA
5515 Doyle Street, #7
Emeryville, CA 94608
www.rijainc.com
RIJA Job #: 2020011

SEAL

REGISTERED PROFESSIONAL ENGINEER
RAYMOND A. JACHIM
No. E19586
Exp. 06-30-23
ELECTRICAL
STATE OF CALIFORNIA

Date Signed: 3/1/22

PROJECT TITLE

Peralta Community College District
Merritt Landscape Horticulture Complex

12500 Campus Drive
Oakland, CA 94616

BID SET

ISSUE DATE	03/03/2022
N&T JOB NUMBER	22003

REVISIONS

	DATE	DESCRIPTION

DRAWN BY CAD | CHECKED BY RAJ

SHEET TITLE

DETAILS

SHEET NUMBER

E6.07

4/3/2020 7:20:00 PM BIM 360://PCCD Merritt Horticulture/Merritt Horticulture_2020.rvt

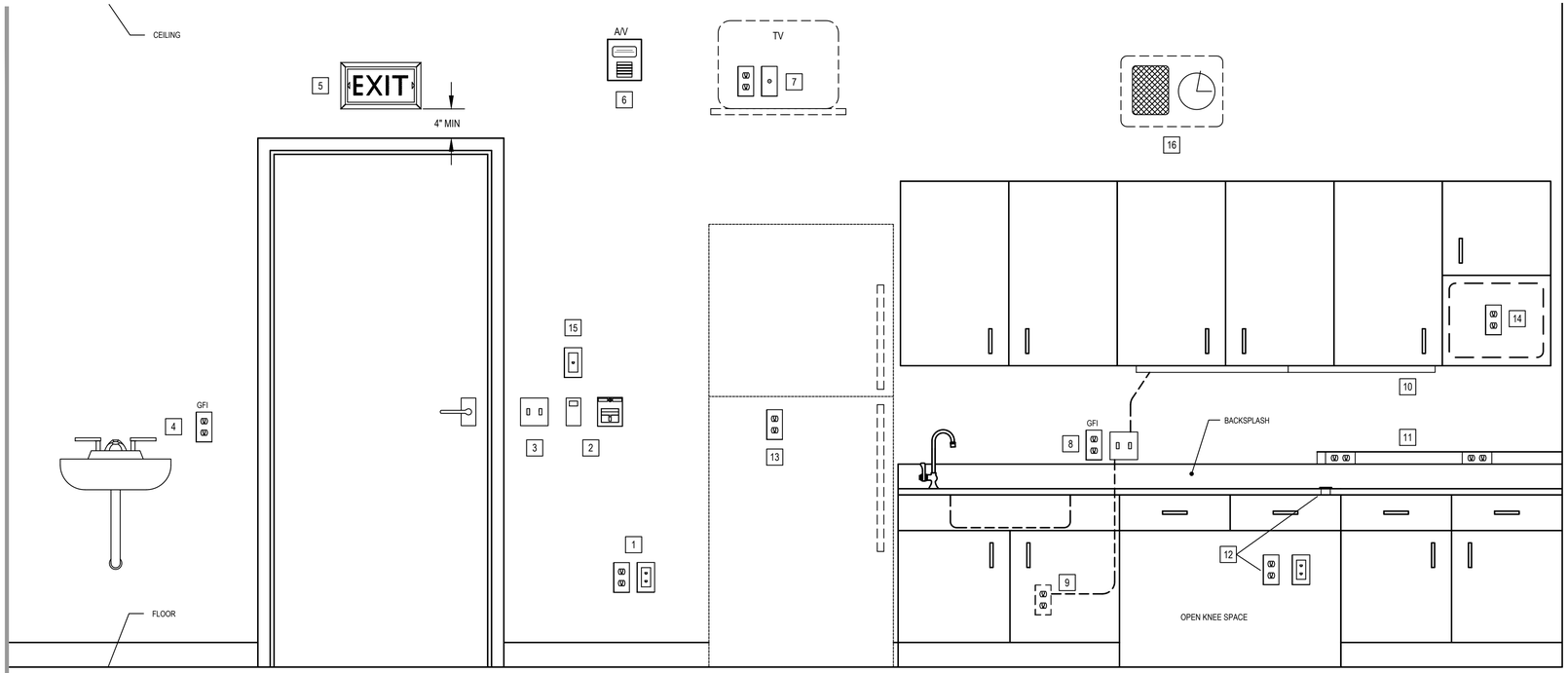

3 DEVICE MOUNTING INFORMATION

SCALE: NTS

DETAIL NOTES

1. STANDARD HEIGHT RECEPTACLES AND COMMUNICATION OUTLETS; +18" AFF.
2. THERMOSTATS AND FIRE ALARM PULL STATIONS; +44" AFF.
3. LIGHT SWITCHES. (CONFIRM DOOR SWING PRIOR TO ROUGH-IN); +44" AFF.
4. GFI RECEPTACLES AT LAVATORY (NO COUNTER); +44" AFF.
5. EXIT SIGNS (WALL OR CEILING) CENTER ON DOOR.
6. FIRE ALARM AUDIBLE/VISUAL DEVICE WHERE 96" OF WALL HEIGHT IS AVAILABLE, ALL APPLIANCES SHALL BE MOUNTED AT 90" AFF TO TOP OF DEVICE. WHERE 96" OF WALL HEIGHT IS NOT AVAILABLE, DEVICES SHALL BE MOUNTED 6" BELOW CEILING TO TOP OF DEVICE.
7. RECEPTACLES/TV OUTLET AT WALL MOUNTED TV FLUSH MOUNT BEHIND TV; COORDINATE WITH BRACKET AND BACKING.
8. DEVICES ABOVE COUNTER BOTTOM OF COVER PLATE; 1" CLEAR ABOVE TOP OF SPLASH. GANG SWITCHES TOGETHER WHERE PRACTICAL.
9. UNDER COUNTER APPLIANCES (DISPOSER, DISHWASHER, COMPACTOR, ETC.) IN CABINET SPACE BELOW. CONFIRM EXACT LOCATION AND MOUNTING HEIGHT WITH APPROVED APPLIANCE SUBMITTAL.
10. UNDER CABINET FLUORESCENT FIXTURE; MOUNT FIXTURE TIGHT TO CABINET, AT WALL.
11. SURFACE RACEWAY; MOUNT BOTTOM OF SPECIFIED RACEWAY AT TOP OF SPLASH.
12. OUTLETS IN KNEE SPACE; FIELD VERIFY EXACT LOCATIONS OF OUTLETS AND COUNTER TOP GROMMET OPENINGS PRIOR TO ROUGH-IN.
13. REFRIGERATOR; +48" AFF.
14. UNDER CABINET APPLIANCES (MICROWAVE, ETC.); CONFIRM EXACT LOCATION AND MOUNTING HEIGHT WITH APPROVED APPLIANCE SUBMITTAL AND INTERIOR ELEVATIONS.
15. WALL PHONE; +54" (PROVIDE PLATE / RECESSED JACK WITH SCREWS TO MOUNT INSTRUMENT.
16. CLOCK / SPEAKER ASSEMBLY +7'-6" OR AS SHOWN ON INTERIOR ELEVATIONS.

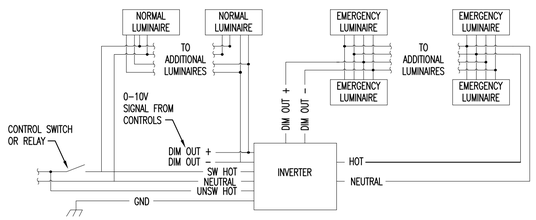

DETAIL NOTES

1. DIAGRAM BASED ON BODINE ELI SERIES INVERTERS. COORDINATE EXACT WIRING REQUIREMENTS WITH MANUFACTURER SELECTED.
2. THE INVERTER UNIT SHALL BE CAPABLE OF POWERING ANY COMBINATION OF DIMMABLE LED LIGHT FIXTURES OF MAXIMUM CONNECTED LOAD AS FOLLOWS:
   - 2.1. ELI-S-100; 400W MAXIMUM
   - 2.2. ELI-S-250; 800W MAXIMUM
   - 2.3. ELI-S-400; 400W MAXIMUM
3. UPON NORMAL POWER FAILURE, THE INVERTER WILL PROVIDE POWER TO THE CONNECTED LIGHTING LOAD FOR MINIMUM 90 MINUTES. WHEN NORMAL POWER IS RESTORED, THE INVERTER AUTOMATICALLY RETURNS TO CHARGE MODE.
4. WHEN EMERGENCY LOADS ARE TO BE DIMMED, THE EMERGENCY MODE OUTPUT DIMMING VOLTAGE IS AUTOMATICALLY CONTROLLED BY THE INVERTER CIRCUITRY TO MAINTAIN MAXIMUM RATING OUTPUT THROUGHOUT THE POWER OUTAGE.CONTRACTOR SHALL SET THE DIP SWITCHES ON THE INVERTER AS REQUIRED TO DIM TO THE LEVEL SPECIFIED AND REDUCE THE EFFECTIVE LOAD ON THE INVERTER.

2 LIGHTING INVERTER - DIMMED LOAD

SCALE: NTS

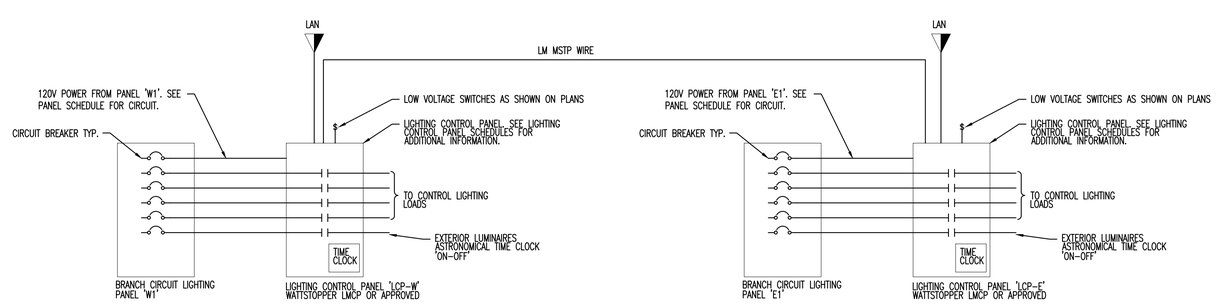

LCPW		TYPE: Wattstopper LMCP or Approved Equal	
		FED FROM: PANEL HP2	
RELAY	CIRCUIT	CONTROL DEVICE	AREA
r1	W1-1	TIME CLOCK - OVER RIDE SWITCH	EXT CIRCUILATION
r2	W1-1	TIME CLOCK - OVER RIDE SWITCH	FIELD GARDEN
r3	INV-W1	TIME CLOCK - OVER RIDE SWITCH	EXT. EM LIGHTING
r4	SPARE		
r5	SPARE		
r6	SPACE		
r7	SPACE		
r8	SPACE		
r9	SPACE		
r10	SPACE		
r11	SPACE		
r12	SPACE		
r13	SPACE		
r14	SPACE		
r15	SPACE		
r16	SPACE		
r17	SPACE		
r18	SPACE		
r19	SPACE		
r20	SPACE		
r21	SPACE		
r22	SPACE		
r23	SPACE		
r24	SPACE		

LCPE		TYPE: Wattstopper LMCP or Approved Equal	
		FED FROM: PANEL HP2	
RELAY	CIRCUIT	CONTROL DEVICE	AREA
r1	E1-3	TIME CLOCK -OVER RIDE SWITCH	EXT CIRCUILATION
r2	INV-E1	TIME CLOCK -OVER RIDE SWITCH	EXT EM LIGHTING
r3	E1-3	TIME CLOCK -OVER RIDE SWITCH	COURTYARD, TYPE 'SD' FIXTURE
r4	SPARE		
r5	SPARE		
r6	SPACE		
r7	SPACE		
r8	SPACE		
r9	SPACE		
r10	SPACE		
r11	SPACE		
r12	SPACE		
r13	SPACE		
r14	SPACE		
r15	SPACE		
r16	SPACE		
r17	SPACE		
r18	SPACE		
r19	SPACE		
r20	SPACE		
r21	SPACE		
r22	SPACE		
r23	SPACE		
r24	SPACE		

1 LIGHTING CONTROL PANEL

SCALE: NTS

APPROVALS

IDENTIFICATION STAMP
DIV. OF THE STATE ARCHITECT
APP: 01-119409 INC:
REVIEWED FOR
SS ☑ FLS ☑ ACS ☑
DATE: 03/14/2022

NOLL & TAM ARCHITECTS
729 Heinz Avenue
Berkeley, CA 94710
tel 510.542.2200
fax 510.542.2201

RIJA
5515 Doyle Street, #7
Emeryville, CA 94608
www.rijainc.com
RIJA Job #: 2020011

SEAL

REGISTERED PROFESSIONAL ENGINEER
RAYA JAMSHIDI
No. E19586
Exp. 06-30-23
ELECTRICAL
STATE OF CALIFORNIA

Date Signed: 3/1/22

PROJECT TITLE

Peralta Community College District
Merritt Landscape Horticulture Complex

12500 Campus Drive
Oakland, CA 94616

BID SET

ISSUE DATE	03/03/2022
N&T JOB NUMBER	22003

REVISIONS

	DATE	DESCRIPTION

DRAWN BY CAD | CHECKED BY RAJ

SHEET TITLE

DETAILS

SHEET NUMBER

E6.08

4/3/2020 7:20:00 PM BIM 360://PCCD Merritt Horticulture/Merritt Horticulture_2020.rvt

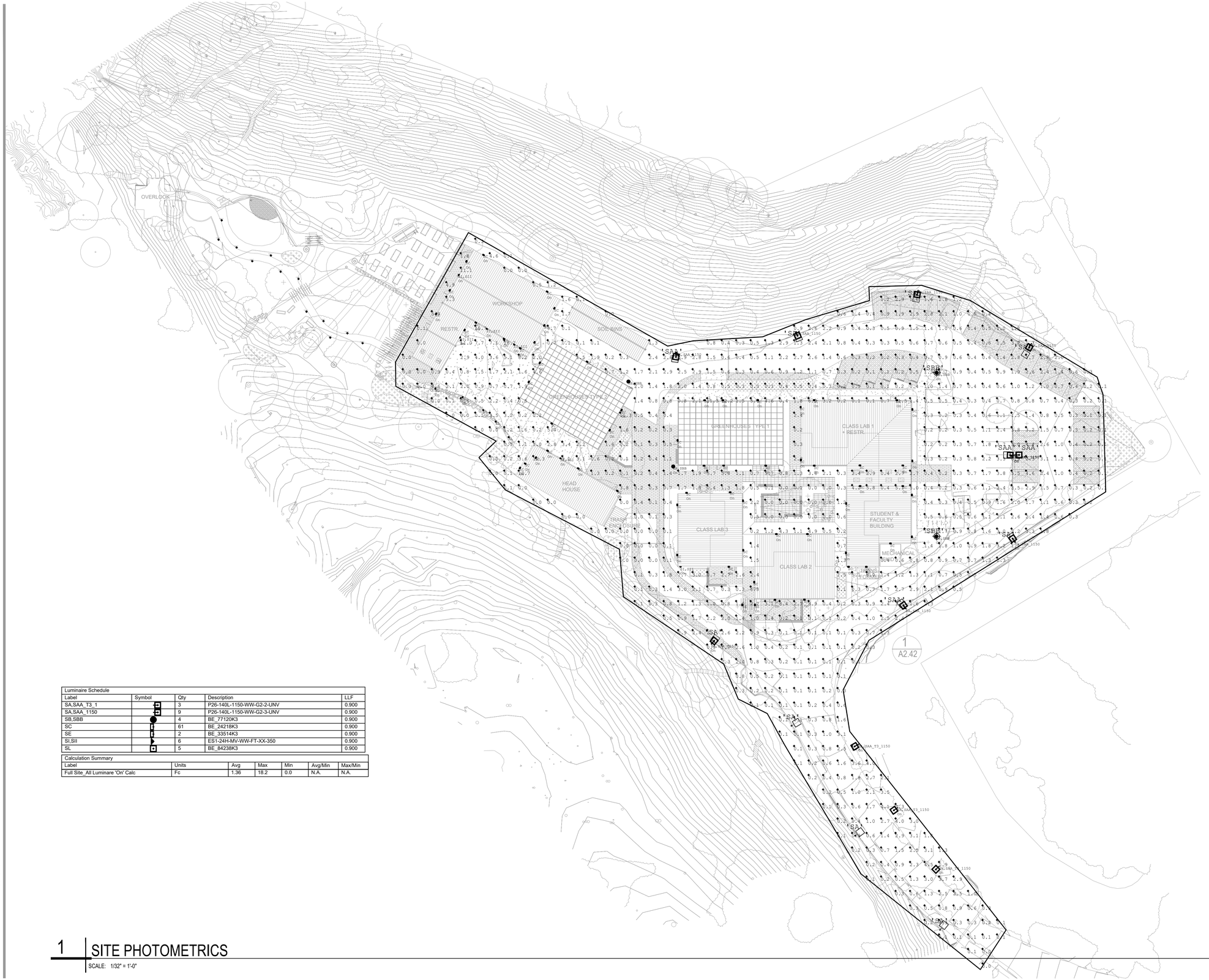

Luminaire Schedule				
Label	Symbol	Qty	Description	LLF
SA,SAA_T3_1		3	P26-140L-1150-WW-G2-2-UNV	0.900
SA,SAA_1150		9	P26-140L-1150-WW-G2-3-UNV	0.900
SB,SBB		4	BE_77120K3	0.900
SC		61	BE_24218K3	0.900
SE		2	BE_33514K3	0.900
SI,SII		6	ES1-24H-MV-WW-FT-XX-350	0.900
SL		5	BE_84238K3	0.900

Calculation Summary						
Label	Units	Avg	Max	Min	Avg/Min	Max/Min
Full Site_All Luminare 'On' Calc	Fc	1.36	18.2	0.0	N.A.	N.A.

1 SITE PHOTOMETRICS
SCALE: 1/32" = 1'-0"

4/3/2020 7:20:00 PM BIM 360://PCCD Merritt Horticulture/Merritt Horticulture_2020.rvt

APPROVALS

IDENTIFICATION STAMP
DIV. OF THE STATE ARCHITECT
APP: 01-119409 INC:
REVIEWED FOR
SS ☑ FLS ☑ ACS ☑
DATE: 03/14/2022

NOLL & TAM ARCHITECTS
729 Heinz Avenue
Berkeley, CA 94710
tel 510.542.2200
fax 510.542.2201

RIJA
5515 Doyle Street, #7
Emeryville, CA 94608
www.rijainc.com
RIJA Job #: 2020011

SEAL

REGISTERED PROFESSIONAL ENGINEER
RAY A. JACHOW
No. E19586
Exp. 06-30-23
ELECTRICAL
STATE OF CALIFORNIA

Date Signed: 3/1/22

PROJECT TITLE

Peralta Community College District
Merritt Landscape Horticulture Complex

12500 Campus Drive
Oakland, CA 94616

BID SET

ISSUE DATE	03/03/2022
N&T JOB NUMBER	22003

REVISIONS

	DATE	DESCRIPTION

DRAWN BY CAD | CHECKED BY RAJ

SHEET TITLE
SITE PHOTOMETRICS

SHEET NUMBER
E7.01

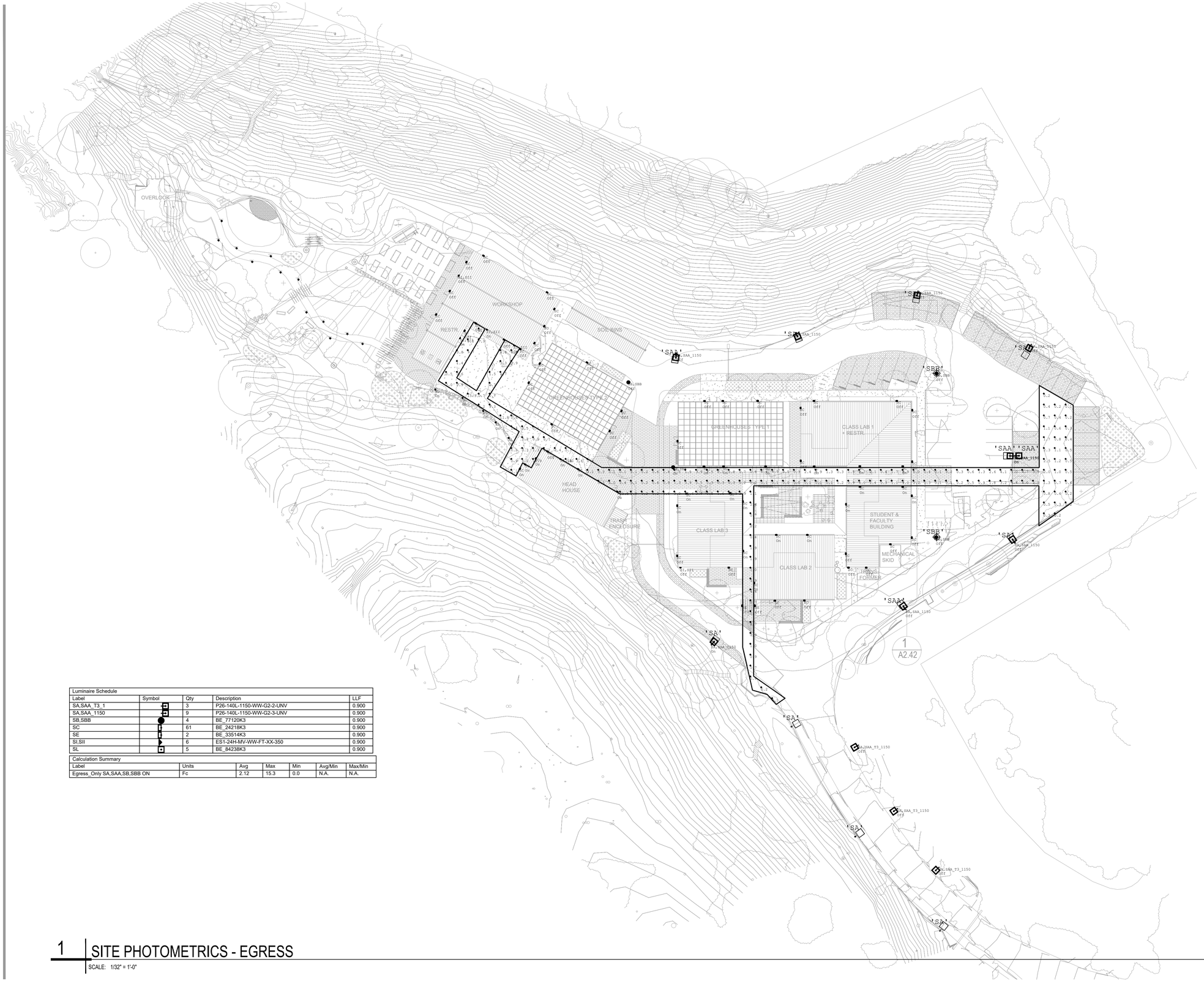

Luminaire Schedule				
Label	Symbol	Qty	Description	LLF
SA,SAA_T3_1		3	P26-140L-1150-WW-G2-2-UNV	0.900
SA,SAA_1150		9	P26-140L-1150-WW-G2-3-UNV	0.900
SB,SBB		4	BE_77120K3	0.900
SC		61	BE_24218K3	0.900
SE		2	BE_33514K3	0.900
SI,SII		6	ES1-24H-MV-WW-FT-XX-350	0.900
SL		5	BE_84238K3	0.900

Calculation Summary						
Label	Units	Avg	Max	Min	Avg/Min	Max/Min
Egress_Only SA,SAA,SB,SBB ON	Fc	2.12	15.3	0.0	N.A.	N.A.

1 SITE PHOTOMETRICS - EGRESS
SCALE: 1/32" = 1'-0"

4/3/2020 7:20:00 PM BIM 360://PCCD Merritt Horticulture/Merritt Horticulture_2020.rvt

APPROVALS

IDENTIFICATION STAMP
DIV. OF THE STATE ARCHITECT
APP: 01-119409 INC:
REVIEWED FOR
SS ☑ FLS ☑ ACS ☑
DATE: 03/14/2022

NOLL & TAM ARCHITECTS
729 Heinz Avenue
Berkeley, CA 94710
tel 510.542.2200
fax 510.542.2201

RIJA
5515 Doyle Street, #7
Emeryville, CA 94608
www.rijainc.com
RIJA Job #: 2020011

SEAL

REGISTERED PROFESSIONAL ENGINEER
RAY A. JANCHORA
No. E19586
Exp. 06-30-23
ELECTRICAL
STATE OF CALIFORNIA

Date Signed: 3/1/22

PROJECT TITLE

Peralta Community College District
Merritt Landscape Horticulture Complex

12500 Campus Drive
Oakland, CA 94616

BID SET

ISSUE DATE	03/03/2022
N&T JOB NUMBER	22003

REVISIONS

	DATE	DESCRIPTION

DRAWN BY CAD | CHECKED BY RAJ

SHEET TITLE
SITE PHOTOMETRICS - EGRESS

SHEET NUMBER
E7.02

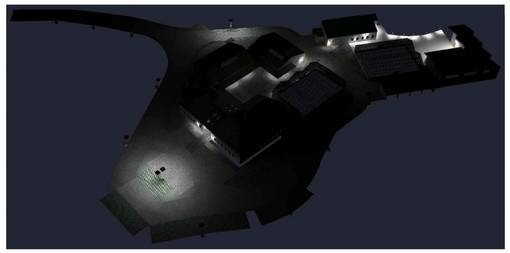

1 SITE RENDERINGS - NORTEAST (EGRESS LIGHTING ONLY)

SCALE: NTS

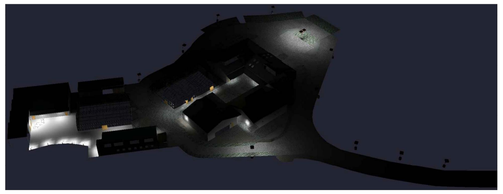

2 SITE RENDERINGS - SOUTHWEST (EGRESS LIGHTING ONLY)

SCALE: NTS

3 SITE RENDERINGS - PLAN VIEW (EGRESS LIGHTING ONLY)

SCALE: NTS

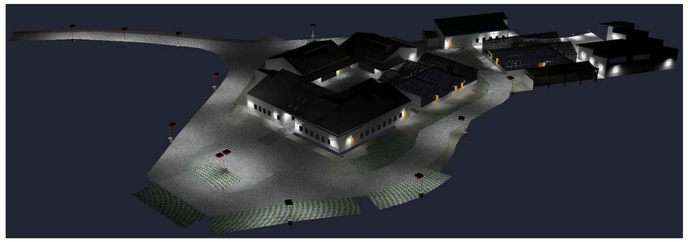

4 SITE RENDERINGS - NORTEAST (ALL LIGHTING ON)

SCALE: NTS

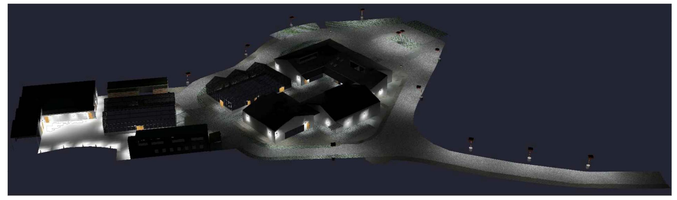

5 SITE RENDERINGS - SOUTH WEST (ALL LIGHTING ON)

SCALE: NTS

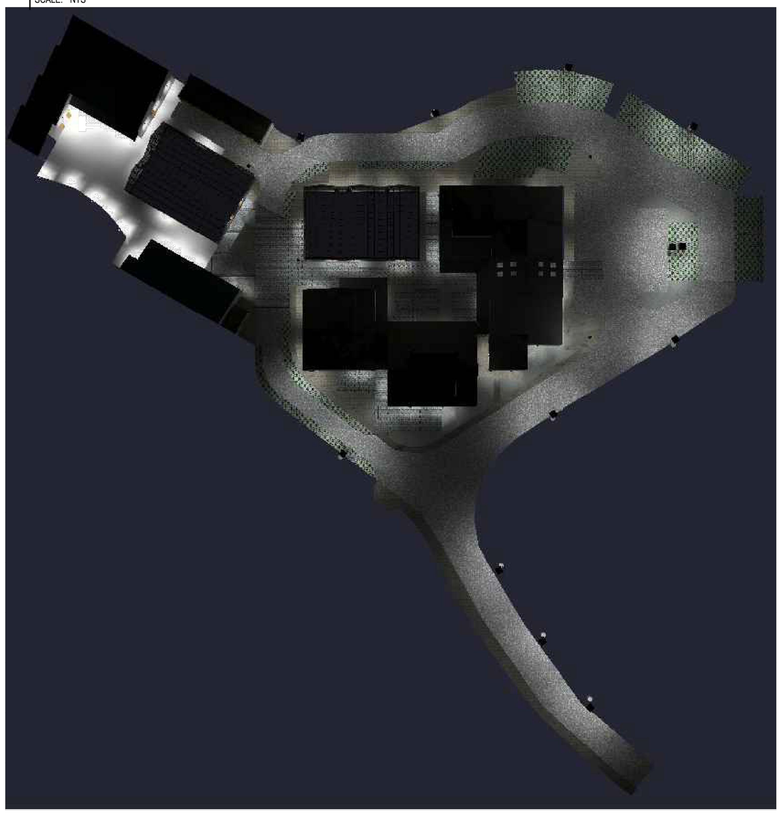

6 SITE RENDERINGS - PLAN VIEW (ALL LIGHTING ON)

SCALE: NTS

APPROVALS

IDENTIFICATION STAMP
DIV. OF THE STATE ARCHITECT
APP: 01-119409 INC:
REVIEWED FOR
SS ☑ FLS ☑ ACS ☑
DATE: 03/14/2022

NOLL & TAM ARCHITECTS

729 Heinz Avenue
Berkeley, CA 94710
tel 510.542.2200
fax 510.542.2201

RIJA

5515 Doyle Street, #7
Emeryville, CA 94608
www.rijainc.com
RIJA Job #: 2020011

SEAL

REGISTERED PROFESSIONAL ENGINEER
RAY A. JANCHON
No. E19586
Exp. 06-30-23
ELECTRICAL
STATE OF CALIFORNIA

Date Signed: 3/1/22

PROJECT TITLE

Peralta Community College District
Merritt Landscape Horticulture Complex

12500 Campus Drive
Oakland, CA 94616

BID SET

ISSUE DATE	03/03/2022
N&T JOB NUMBER	22003

REVISIONS

	DATE	DESCRIPTION

DRAWN BY CAD | CHECKED BY RAJ

SHEET TITLE

SITE PHOTOMETRICS RENDERINGS

SHEET NUMBER

E7.03

4/3/2020 7:20:00 PM BIM 360://PCCD Merritt Horticulture/Merritt Horticulture_2020.rvt

DSA 403-A

2019 ENERGY CODE – CERTIFICATES OF COMPLIANCE CHECKLIST

PRESCRIPTIVE METHOD *(for Performance Method, use Form DSA 403-B)*

PURPOSE
This checklist identifies the 2019 California Energy Code Certificates of Compliance to be submitted with the Plans as part of the plan review process for Prescriptive Compliance. Not all Certificates of Compliance on this checklist may be applicable to the submitted project.

INSTRUCTIONS
Check the appropriate boxes for all required forms pertaining to the submittal. All required information and mandatory measures must be specified in the plans, and all copies of the Certificates of Compliance required for the Project must be submitted in PDF form and a copy of the Certificates of Compliance must be provided in the Plans. The Certificates of Compliance are dynamic and expand or collapse based on the project scope.

For all conditioned buildings pursuing the Prescriptive Method, the following forms are required: Commissioning (CXR), Envelope (ENV), Mechanical (MCH), Indoor Lighting (LTI), Outdoor Lighting (LTO), Electrical Power Distribution (ELC), and Solar Ready (SRA). Plumbing (PLB) is required for each water heater specified in the Project. NRCC-LTS-E is required if internally illuminated or externally illuminated signs are specified either indoors or outdoors in the Project. NRCC-PRC-E is required for Covered Process specified in the Project, which includes computer rooms, data centers, elevators, escalators and moving walkways, laboratories, enclosed parking garages, commercial kitchens, refrigerated warehouses, commercial refrigeration, compressed air systems, or process boilers.

For questions about required Certificates of Compliance and compliance with the California Energy Code contact the Energy Standards Hotline – 1 (800) 772-3300; Outside California: (916) 654-5106. For additional information see www.energy.ca.gov/programs-and-topics/programs/building-energy-efficiency-standards/2019-building-energy-efficiency-1

***Key:** **R** = Report Required **P** = Copy of Form Required on Plans*
Review will not commence until this checklist and all required Certificates of Compliance are submitted.

COMMISSIONING	R	☐	NRCC-CXR-E Building Commissioning
	P	☐	Sheet # in the plans:
ENVELOPE	R	☐	NRCC-ENV-E Envelope Component Approach
	P	☐	Sheet # in the plans:
MECHANICAL	R	☐	NRCC-MCH-E Mechanical Systems
	P	☐	Sheet # in the plans:
INDOOR LIGHTING	R	☑	NRCC-LTI-E Indoor Lighting
	P	☑	Sheet # in the plans: E8.xx
OUTDOOR LIGHTING	R	☑	NRCC-LTO-E Outdoor Lighting
	P	☑	Sheet # in the plans: E8.xx
SOLAR READY	R	☐	NRCC-SRA-E Solar Ready
	P	☐	Sheet # in the plans:

ELECTRICAL POWER DISTRIBUTION	R	☑	NRCC-ELC-E Electrical Power Distribution
	P	☑	Sheet # in the plans: E8.xx
PLUMBING	R	☐	NRCC-PLB-E Plumbing
	P	☐	Sheet # in the plans:
SIGN LIGHTING	R	☐	NRCC-LTS-E Sign Lighting
	P	☐	Sheet # in the plans:
COVERED PROCESSES	R	☐	NRCC-PRC-E Covered Process
	P	☐	Sheet # in the plans:

As the Professional in General Responsible Charge, I have reviewed the Project Plans and affirm that the documentation submitted is in compliance with the requirements of the 2019 California Energy Code (Title 24, Part 6). The documents checked on pages 1 and 2 of this form are included in the project submittal.
I further acknowledge that upon installation of equipment and material identified on compliance forms, I will ensure that the appropriate installation and acceptance tests are conducted and the associated forms completed, signed, and submitted to the owner, and that the completed construction complies with the 2019 California Energy Code Building Energy Efficiency Standards.

Signature: _____ Date: 03/08/21

Print Full Name: Ray A. Juachon

STATE OF CALIFORNIA
Electrical Power Distribution
NRCC-ELC-E (Created 01/20) CALIFORNIA ENERGY COMMISSION

CERTIFICATE OF COMPLIANCE			NRCC-ELC-E
Project Name: MERRITT LANDSCAPE HORTICULTURE COMPLEX		Report Page:	Page 5 of 5
Project Address: 12500 CAMPUS DRIVE		Date Prepared:	2/7/21

DOCUMENTATION AUTHOR'S DECLARATION STATEMENT

I certify that this Certificate of Compliance documentation is accurate and complete.

Documentation Author Name:	RAY JUACHON	Documentation Author Signature:	
Company:	RIJA INC	Signature Date:	2/7/21
Address:	1620 MONTGOMERY STREET, #250	CEA/ HERS Certification Identification (if applicable):	
City/State/Zip:	SAN FRANCISCO, CA 94111	Phone:	415-730-7994

RESPONSIBLE PERSON'S DECLARATION STATEMENT

I certify the following under penalty of perjury, under the laws of the State of California:

1. **The information provided on this Certificate of Compliance is true and correct.**
2. **I am eligible under Division 3 of the Business and Professions Code to accept responsibility for the building design or system design identified on this Certificate of Compliance (responsible designer)**
3. **The energy features and performance specifications, materials, components, and manufactured devices for the building design or system design identified on this Certificate of Compliance conform to the requirements of Title 24, Part 1 and Part 6 of the California Code of Regulations.**
4. **The building design features or system design features identified on this Certificate of Compliance are consistent with the information provided on other applicable compliance documents, worksheets, calculations, plans and specifications submitted to the enforcement agency for approval with this building permit application.**
5. **I will ensure that a completed signed copy of this Certificate of Compliance shall be made available with the building permit(s) issued for the building, and made available to the enforcement agency for all applicable inspections. I understand that a completed signed copy of this Certificate of Compliance is required to be included with the documentation the builder provides to the building owner at occupancy.**

Responsible Designer Name:	RAY JUACHON	Responsible Designer Signature:	
Company :	RIJA INC	Date Signed:	2/7/21
Address:	1620 MONTGOMERY STREET, #250	License:	E19586
City/State/Zip:	SAN FRANCISCO, CA 94111	Phone:	415-730-7994

STATE OF CALIFORNIA
Electrical Power Distribution
NRCC-ELC-E (Created 01/20) CALIFORNIA ENERGY COMMISSION

CERTIFICATE OF COMPLIANCE			NRCC-ELC-E
Project Name: MERRITT LANDSCAPE HORTICULTURE COMPLEX		Report Page:	Page 4 of 5
Project Address: 12500 CAMPUS DRIVE		Date Prepared:	2/7/21

01	02	03	04	05	06	
Room Name or Description	Location/ Type of Controlled Receptacles	Shut-Off Controls	Permanent Durable Marking Will be Used	Location of Requirements in Construction Documents	Field Inspector	
					Pass	Fail

** If "Other*" is selected under Compliance Method above, please indicate how compliance has been achieved in the space provided below.*

J. DECLARATION OF REQUIRED CERTIFICATES OF INSTALLATION

Table Instructions: Selections have been made based on information provided in previous tables of this document. If any selection needs to be changed, please explain why in Table E. Additional Remarks. These documents must be provided to the building inspector during construction and can be found online at https://ww2.energy.ca.gov/title24/2019standards/2019_compliance_documents/Nonresidential_Documents/NRCI/

YES	NO	Form/Title	Field Inspector Pass	Field Inspector Fail
◉	○	NRCI-ELC-01-E - Must be submitted for all buildings.	☐	☐

K. DECLARATION OF REQUIRED CERTIFICATES OF ACCEPTANCE

There are no Certificates of Acceptance applicable to electrical power distribution requirements.

APPROVALS

IDENTIFICATION STAMP
DIV. OF THE STATE ARCHITECT
APP: 01-119409 INC:
REVIEWED FOR
SS ☑ FLS ☑ ACS ☑
DATE: 03/14/2022

NOLL & TAM ARCHITECTS
729 Heinz Avenue
Berkeley, CA 94710
tel 510.542.2200
fax 510.542.2201

RIJA
5515 Doyle Street, #7
Emeryville, CA 94608
www.rijainc.com
RIJA Job #: 2020011

SEAL

REGISTERED PROFESSIONAL ENGINEER
RAY A. JUACHON
No. E19586
Exp. 06-30-23
ELECTRICAL
STATE OF CALIFORNIA

Date Signed: 3/1/22

PROJECT TITLE

Peralta Community College District
Merritt Landscape Horticulture Complex

12500 Campus Drive
Oakland, CA 94616

BID SET

ISSUE DATE 03/03/2022
N&T JOB NUMBER 22003

REVISIONS

	DATE	DESCRIPTION

DRAWN BY CAD CHECKED BY RAJ

SHEET TITLE
TITLE 24

SHEET NUMBER
E8.01

4/3/2020 7:20:00 PM BIM 360://PCCD Merritt Horticulture/Merritt Horticulture_2020.rvt

STATE OF CALIFORNIA
Electrical Power Distribution
NRCC-ELC-E (Created 01/20) CALIFORNIA ENERGY COMMISSION

CERTIFICATE OF COMPLIANCE		NRCC-ELC-E
Project Name: MERRITT LANDSCAPE HORTICULTURE COMPLEX	Report Page:	Page 3 of 5
Project Address: 12500 CAMPUS DRIVE	Date Prepared:	2/7/21

[1] *FOOTNOTES: For each separate load type, up to 10% of the connected load may be of any type.*
[2] *Method 1: Switchboards/ motor control centers/ panelboard loads disaggregated for each load type*
Method 2: Switchboards/ motor control centers/ panelboard supply other distribution equipment with loads disaggregated for each load type
Method 3: Branch circuits serve load types individually & provisions for adding future branch curcuit monitoring
Method 4: Complete metering system measures and reports loads by type
See Chapter 8 of the Nonresidential Compliance Manual for more detail on Compliance Methods.

H. VOLTAGE DROP
Table Instructions: Please complete this table for entirely new or complete replacement electrical power distribution systems, or alterations that add, modify or replace both feeders and branch circuits to demonstrate compliance with §130.5(c). For alterations, only the altered circuits must demonstrate compliance per §141.0(b)2Bii.

01	02		03	04	05	
Electrical Service Designation/ Description	Combined Voltage Drop on Installed Feeder/Branch Circuit Conductors Compliance Method		Location of Voltage Drop Calculations[1]	Sheet Number for Voltage Drop Calculations in Construction Documents	Field Inspector	
					Pass	Fail
TX-MLH	☑ Voltage drop < 5%	☐ Permitted by CA Elec Code (Exception to §130.5(c))*	In construction documents	E4.01	☐	☐

**NOTES If "Permitted by CA Elec Code*" is selected under Compliance Method above, please indicate where the exception applies in the space provided below.*

[1] *FOOTNOTES: Voltage drop calculations may be attached to the permit application outside the construction documents if allowed by the Authority Having Jurisdiction. Select "attached" if applicable. If calculations will be the responsibility of the installing contractor, select "Contractor Responsible".*

I. CIRCUIT CONTROLS FOR 120-VOLT RECEPTACLES AND CONTROLLED RECEPTACLES
Table Instructions: Please complete this table for entirely new or complete replacement electrical power distribution systems to demonstrate compliance with §130.5(d). Both controlled and uncontrolled receptacles must be provided in office areas, lobbies, conference rooms, kitchen areas in office spaces, copy rooms and hotel/motel guest rooms.

01	02	03	04	05	06	
Room Name or Description	Location/ Type of Controlled Receptacles	Shut-Off Controls	Permanent Durable Marking Will be Used	Location of Requirements in Construction Documents	Field Inspector	
					Pass	Fail
H401	Split-wired receptacles	Occupancy Sensor	☑	E2.32, E6.07	☐	☐
H402	Split-wired receptacles	Occupancy Sensor	☑	E2.32, E6.07	☐	☐
H403	Split-wired receptacles	Occupancy Sensor	☑	E2.32, E6.07	☐	☐
				Add Row	Remove Last	

Table Continued

STATE OF CALIFORNIA
Electrical Power Distribution
NRCC-ELC-E (Created 01/20) CALIFORNIA ENERGY COMMISSION

CERTIFICATE OF COMPLIANCE		NRCC-ELC-E
Project Name: MERRITT LANDSCAPE HORTICULTURE COMPLEX	Report Page:	Page 2 of 5
Project Address: 12500 CAMPUS DRIVE	Date Prepared:	2/7/21

D. EXCEPTIONAL CONDITIONS
This table is auto-filled with uneditable comments because of selections made or data entered in tables throughout the form.

Table B indicates the project is exempt from §130.5(a) Service Electrical Metering requirements because the utility company has provided the project a metering system that indicates instantaneous kW demand and kWh for a utility-definied period.

E. ADDITIONAL REMARKS
This table includes remarks made by the permit applicant to the Authority Having Jurisdiction.

F. SERVICE ELECTRICAL METERING
This Section Does Not Apply

G. SEPARATION OF ELECTRICAL CIRCUITS FOR ENERGY MONITORING
Table Instructions: Complete this table for entirely new or complete replacement electrical power distribution systems to demonstrate compliance with §130.5(b). Using the dropdown choices in column 01, indicate the load types included for each service. Any load types that are not included in the service do not need to be shown.

Electrical Service Designation/Description: **TX-MLH**

01	02	03	04	05	
Load Type per Table 130.5-B[1]	Minimum Required Separation of Load per Table 130.5-B	Compliance Method[2]	Location of Requirements in Construction Documents	Field Inspector	
				Pass	Fail
Lighting including exit, egress and exterior	All lighting disaggregated by floor, type or area	Method 3	E5 SERIES	☐	☐
HVAC systems and components	All HVAC in aggregate and each HVAC load rated at least 50 kVA	Method 3	E5 SERIES	☐	☐
Plug Loads and appliances < 25kVA	All plug load separated by floor, type or area Groups of plug loads exceeding 25 kVA connected load in an area less than 5000 sf	Method 3	E5 SERIES	☐	☐
Domestic and service water systems	All loads in aggregate	Method 3	E5 SERIES	☐	☐

** NOTES: If "Other*" is selected under Compliance Method above, please indicate how compliance has been achieved in the space provided below.*

STATE OF CALIFORNIA
Electrical Power Distribution
NRCC-ELC-E (Created 01/20) CALIFORNIA ENERGY COMMISSION

CERTIFICATE OF COMPLIANCE		NRCC-ELC-E
Project Name: MERRITT LANDSCAPE HORTICULTURE COMPLEX	Report Page:	Page 1 of 5
Project Address: 12500 CAMPUS DRIVE	Date Prepared:	2/7/21

This document is used to demonstrate compliance with mandatory requirements in §130.5 for electrical systems in newly constructed nonresidential, high-rise residential and hotel/motel occupancies. Additions and alterations to electrical service systems in these occupancies will also use this document to demonstrate compliance per §141.0(a) or §141.0(b)2P for alterations.

A. GENERAL INFORMATION

01 Project Location (city)	OAKLAND	02 Occupancy Types Within Project:			
☐ Office	☐ Retail	☐ Warehouse	☐ Hotel/ Motel	☑ School	☐ Support Areas
☐ Parking Garage	☐ High-Rise Residential	☐ Relocatable	☐ Healthcare Facilities	☐ Other (Write In):	

B. PROJECT SCOPE
Table Instructions: Include any electrical service systems that are within the scope of the permit application.

01	02	03	04	05	06
Electrical Service Designation/ Description	Scope of Work[1]	Rating (kVA)	Utility Provided Metering System Exception to §130.5(a)[2]	System subject to CA Elec Code Article 517 Exception to §130.5(a)&(b)	Demand Response Controls
TX-MLH	New electrical service equipment & meter	500	☑	☐	Where required, demand response controls must be specified which are capable of receiving and automatically responding to at least one standards based messaging protocol which enables demand response after receiving a demand response signal. Sections §120.2, §130.1 and §130.3 and compliance documents NRCC-MCH, NRCC-LTI and NRCC-LTS will indicate when demand response controls are required.

[1] *FOOTNOTES: Adding only new feeders and branch circuits triggers Voltage Drop 130.5(c), no other requirements from 130.5 are required.*
[2] *Applicable if the utility company is providing a metering system that indicates instantaneous kW demand and kWh for a utility-defined period.*

C. COMPLIANCE RESULTS
Table Instructions: If this table says "DOES NOT COMPLY" refer to Table D. for guidance and review the Table that indicates "No".

01		02		03		04	05
Service Electrical Metering §130.5(a)	AND	Separation for Monitoring §130.5(b)	AND	Voltage Drop §130.5(c)	AND	Controlled Receptacles §130.5(d)	**Compliance Results**
(See Table F)		(See Table G)		(See Table H)		(See Table I)	
	AND	Yes	AND	Yes	AND	Yes	**COMPLIES with Exceptional Conditions**

STATE OF CALIFORNIA
Indoor Lighting
NRCC-LTI-E CALIFORNIA ENERGY COMMISSION

CERTIFICATE OF COMPLIANCE		NRCC-LTI-E
Project Name:	Merritt Landscape Horticulture Complex	Report Page: (Page 1 of 11)
Project Address:	12500 Campus Drive, Oakland CA 94616	Date Prepared: 2021-02-10T08:44:27-05:00

This document is used to demonstrate compliance with requirements in §110.9, §110.12(c), §130.0, §130.1, §140.6 and §141.0(b)2 for indoor lighting scopes using the prescriptive path.

A. GENERAL INFORMATION

01	Project Location (city)	Oakland, CA	04	Total Conditioned Floor Area (ft²)	11,770
02	Climate Zone	3	05	Total Unconditioned Floor Area (ft²)	3,595
03	Occupancy Types Within Project (select all that apply):		06	# of Stories (Habitable Above Grade)	1

☒ Office	☐ Retail	☐ Warehouse	☐ Hotel/Motel	☒ School	☐ Support Areas	
☐ Parking Garage	☐ High-Rise Residential	☐ Relocatable	☐ Healthcare	☐ Other (Write in)		

B. PROJECT SCOPE
This table includes any lighting systems that are within the scope of the permit application and are demonstrating compliance using the prescriptive path outlined in §140.6 or §141.0(b)2 for alterations.

Scope of Work	Conditioned Spaces		Unconditioned Spaces	
01	02	03	04	05
My Project Consists of (check all that apply):	Calculation Method	Area (ft²)	Calculation Method	Area (ft²)
☒ New Lighting System	Area Category Method	11770	Area Category Method	3595
☐ New Lighting System - Parking Garage	N/A	0	N/A	0
Total Area of Work (ft²)	11770		3595	

Registration Number: | Registration Date/Time: | Registration Provider: Energy Code Ace

CA Building Energy Efficiency Standards - 2019 Nonresidential Compliance | Report Version: 2019.1.003 Schema Version: rev 20200601 | Report Generated: 2021-02-10 05:44:21

APPROVALS

IDENTIFICATION STAMP
DIV. OF THE STATE ARCHITECT
APP: 01-119409 INC:
REVIEWED FOR
SS ☑ FLS ☑ ACS ☑
DATE: 03/14/2022

NOLL & TAM ARCHITECTS
729 Heinz Avenue
Berkeley, CA 94710
tel 510.542.2200
fax 510.542.2201

RIJA
5515 Doyle Street, #7
Emeryville, CA 94608
www.rijainc.com
RIJA Job #: 2020011

SEAL

REGISTERED PROFESSIONAL ENGINEER RAY A. JACHOW No. E19586 Exp. 06-30-23 ELECTRICAL STATE OF CALIFORNIA

Date Signed: 3/1/22

PROJECT TITLE

Peralta Community College District
Merritt Landscape Horticulture Complex

12500 Campus Drive
Oakland, CA 94616

BID SET

ISSUE DATE 03/03/2022
N&T JOB NUMBER 22003
REVISIONS
1 DATE DESCRIPTION

DRAWN BY CAD CHECKED BY RAJ
SHEET TITLE
TITLE 24

SHEET NUMBER
E8.02

4/3/2020 7:20:00 PM BIM 360://PCCD Merritt Horticulture/Merritt Horticulture_2020.rvt

STATE OF CALIFORNIA

Indoor Lighting

NRCC-LTI-E

CALIFORNIA ENERGY COMMISSION

CERTIFICATE OF COMPLIANCE			NRCC-LTI-E
Project Name:	Merritt Landscape Horticulture Complex	**Report Page:**	**(Page 2 of 11)**
Project Address:	12500 Campus Drive, Oakland CA 94616	**Date Prepared:**	2021-02-10T08:44:27-05:00

C. COMPLIANCE RESULTS

If any cell on this table says "DOES NOT COMPLY" or "COMPLIES with Exceptional Conditions" refer to Table D. for guidance.

Lighting in conditioned and unconditioned spaces must not be combined for compliance per §140.6(b)1	Allowed Lighting Power per §140.6(b) (Watts)						Adjusted Lighting Power per §140.6(a) (Watts)				Compliance Results
	01	02	03	04		05	06	07		08	09
	Complete Building §140.6(c)1	Area Category §140.6(c)2	Area Category Additional §140.6(c)2G (+)	Tailored §140.6(c)3 (+)	=	**Total Allowed** (Watts)	≥ Total Designed (Watts)	Adjustments PAF Lighting Control Credits §140.6(a)2 (-)	=	**Total Adjusted** (Watts) *Includes Adjustments	**05 must be >= 08 §140.6**
	(See Table I)	(See Table I)	(See Table J)	(See Table K)			(See Table F)	(See Table P)			
Conditioned		8,353			=	8,353	≥ 4,251.8		=	4251.8	COMPLIES
Unconditioned		1,690			=	1,690	≥ 1,174.8		=	1174.8	COMPLIES
Controls Compliance (See Table H for Details)											COMPLIES with Exceptional Conditions
Rated Power Reduction Compliance (See Table Q for Details)											

D. EXCEPTIONAL CONDITIONS

This table is auto-filled with uneditable comments because of selections made or data entered in tables throughout the form.

H. Indoor Lighting Controls (Not including PAFs) Permit Applicant Notes	[H406 - ELECTRICAL] {Multilevel Controls} Not Required: Space <= 0.5 W/sf -- [H802 -STORAGE 2] {Area Controls} OCCUPANCY SENSOR {AUTO ON AND AUTO OFF) --- {Multilevel Controls} Not Required: Space <100 ft² -- [H803 - STORAGE 3] {Area Controls} OCCUPANCY SENSOR {AUTO ON AND AUTO OFF) --- {Multilevel Controls} Not Required: Space <100 ft² -- [H805 - JANITORIAL] {Multilevel Controls} EXCEPTION 2: Restrooms -- [H806 - FIELD SUPPORT] {Multilevel Controls} Not Required: Space <100 ft² -- [H602, H603, H604, H605 - SOIL BINS] {Multilevel Controls} Not Required: Space <= 0.5 W/sf

E. ADDITIONAL REMARKS

This table includes remarks made by the permit applicant to the Authority Having Jurisdiction.

Registration Number:

Registration Date/Time:

Registration Provider: Energy Code Ace

CA Building Energy Efficiency Standards - 2019 Nonresidential Compliance

Report Version: 2019.1.003
Schema Version: rev 20200601

Report Generated: 2021-02-10 05:44:21

STATE OF CALIFORNIA

Indoor Lighting

NRCC-LTI-E

CALIFORNIA ENERGY COMMISSION

CERTIFICATE OF COMPLIANCE			NRCC-LTI-E
Project Name:	Merritt Landscape Horticulture Complex	**Report Page:**	**(Page 3 of 11)**
Project Address:	12500 Campus Drive, Oakland CA 94616	**Date Prepared:**	2021-02-10T08:44:27-05:00

F. INDOOR LIGHTING FIXTURE SCHEDULE

This table includes all permanent designed lighting and all portable lighting in offices.

Designed Wattage: Conditioned Spaces

01 Name or Item Tag	02 Complete Luminaire Description	03 Modular (Track) Fixture	04 Small Aperture & Color Change[1]	05 Watts per luminaire[2]	06 How is Wattage determined	07 Total Number of Luminaires	08 Excluded per §140.6(a)3	09 Design Watts	10 Field Inspector Pass	10 Field Inspector Fail
P1	PENDANT	No	No	94	Mfr. Spec	10	No	940	☐	☐
P3X - 8FT	2.5INCH LINEAR LED PENDANT	No	No	53.6	Mfr. Spec	48	No	2,572.8	☐	☐
P3X - 4FT	2.5INCH LINEAR LED PENDANT	No	No	26.8	Mfr. Spec	9	No	241.2	☐	☐
P5	DIRECT/INDIRECT CIRCULAR PENDANT	No	No	203	Mfr. Spec	1	No	203	☐	☐
S3	VOLUMETRIC/DIRECTIONAL LIGHTING	No	No	17	Mfr. Spec	4	No	68	☐	☐
UC	LINEAR LED UNDERCABINET	No	No	6	Mfr. Spec	27	No	162	☐	☐
W1X - 4FT	LINEAR LED WALLMOUNT	No	No	28.8	Mfr. Spec	1	No	28.8	☐	☐
W2	SUSPENDED CYLINDER WITH HANGING	No	No	12	Mfr. Spec	3	No	36	☐	☐
						Total Designed Watts: CONDITIONED SPACES		4,251.8		

Designed Wattage: Unconditioned Spaces

01 Name or Item Tag	02 Complete Luminaire Description	03 Modular (Track) Fixture	04 Small Aperture & Color Change[1]	05 Watts per luminaire[2]	06 How is Wattage determined	07 Total Number of Luminaires	08 Excluded per §140.6(a)3	09 Design Watts	10 Field Inspector Pass	10 Field Inspector Fail
P1	PENDANT	No	No	94	Mfr. Spec	2	No	188	☐	☐
P2	2.5" APERATURE MICRO CYLINDER	No	No	15	Mfr. Spec	2	No	30	☐	☐
P4	INDUSTRIAL STRIP LED	No	No	31	Mfr. Spec	9	No	279	☐	☐

Registration Number:

Registration Date/Time:

Registration Provider: Energy Code Ace

CA Building Energy Efficiency Standards - 2019 Nonresidential Compliance

Report Version: 2019.1.003
Schema Version: rev 20200601

Report Generated: 2021-02-10 05:44:21

STATE OF CALIFORNIA

Indoor Lighting

NRCC-LTI-E

CALIFORNIA ENERGY COMMISSION

CERTIFICATE OF COMPLIANCE			NRCC-LTI-E
Project Name:	Merritt Landscape Horticulture Complex	**Report Page:**	**(Page 4 of 11)**
Project Address:	12500 Campus Drive, Oakland CA 94616	**Date Prepared:**	2021-02-10T08:44:27-05:00

F. INDOOR LIGHTING FIXTURE SCHEDULE

R1	4" RECESSED LED DOWNLIGHT	No	No	14	Mfr. Spec	4	No	56	☐	☐
S2	LINEAR LED	No	No	23	Mfr. Spec	7	No	161	☐	☐
W1X - 2FT	LINEAR LED WALLMOUNT	No	No	14.4	Mfr. Spec	10	No	144	☐	☐
W1X - 4FT	LINEAR LED WALLMOUNT	No	No	28.8	Mfr. Spec	11	No	316.8	☐	☐
							Total Designed Watts: UNCONDITIONED SPACES	1,174.8		

[1]*FOOTNOTE: Design Watts for small aperture and color changing luminaires which qualify per §140.6(a)4B is adjusted to be 75% of their rated wattage. Table F automatically makes this adjustment, the permit applicant should enter full rated wattage in column 05.*

[2]*Authority Having Jurisdiction may ask for Luminaire cut sheets to confirm wattage used for compliance per §130.0(c) Wattage used must be the maximum rated for the luminaire, not the lamp.*

G. MODULAR LIGHTING SYSTEMS

This section does not apply to this project.

H. INDOOR LIGHTING CONTROLS (Not including PAFs)

*This table includes lighting controls for conditioned and unconditioned spaces. When a control having a * is shown, the notes section of this table provides more detail on how compliance is achieved. The lighting controls section of the Compliance Summary Table on the first page will show "DOES NOT COMPLY" if the notes are left blank.*

Building Level Controls

01	02	03 Field Inspector Pass	03 Field Inspector Fail
Mandatory Demand Response §110.12(c)	Shut-off controls §130.1(c)		
Required > 10,000 SF	See Area/Space Level Controls	☐	☐

Registration Number:

Registration Date/Time:

Registration Provider: Energy Code Ace

CA Building Energy Efficiency Standards - 2019 Nonresidential Compliance

Report Version: 2019.1.003
Schema Version: rev 20200601

Report Generated: 2021-02-10 05:44:21

STATE OF CALIFORNIA

Indoor Lighting

NRCC-LTI-E

CALIFORNIA ENERGY COMMISSION

CERTIFICATE OF COMPLIANCE			NRCC-LTI-E
Project Name:	Merritt Landscape Horticulture Complex	**Report Page:**	**(Page 5 of 11)**
Project Address:	12500 Campus Drive, Oakland CA 94616	**Date Prepared:**	2021-02-10T08:44:27-05:00

H. INDOOR LIGHTING CONTROLS (Not including PAFs)

Area Level Controls

04 Area Description	05 Complete Building or Area Category Primary Function Area	06 Area Controls §130.1(a)	07 Multi-Level Controls §130.1(b)	08 Shut-Off Controls §130.1(c)	09 Primary/Skylit Daylighting §130.1(d)	10 Secondary Daylighting §140.6(d)	11 Interlocked Systems §140.6(a)1	12 Field Inspector Pass	12 Field Inspector Fail
H100 - CLASS LAB	Classroom, Lecture, or Training Vocational Area	Manual ON/OFF	Dimmer	Occupancy Sensor	Included	Included	Yes	☐	☐
H102 - ALL GENDER RESTROOMS	Restrooms	Manual ON/OFF	Dimmer	Occupancy Sensor	Included	N/A	Yes	☐	☐
H103 - JANITORIAL	All Other Space Types	Manual ON/OFF	Dimmer	Occupancy Sensor	N/A	N/A	Yes	☐	☐
H400 - CIRCULATION	Main Entry Lobby	Manual ON/OFF	Dimmer	Occupancy Sensor	Included	Included	Yes	☐	☐
H401 - OFFICE 1	Office 250 square feet or less	Manual ON/OFF	Dimmer	Occupancy Sensor	N/A	N/A	Yes	☐	☐
H402 - OFFICE 2	Office 250 square feet or less	Manual ON/OFF	Dimmer	Occupancy Sensor	N/A	N/A	Yes	☐	☐
H403 - OFFICE 3	Office 250 square feet or less	Manual ON/OFF	Dimmer	Occupancy Sensor	N/A	N/A	Yes	☐	☐
H404 - LIBRARY	Library Reading Area	Manual ON/OFF	Dimmer	Occupancy Sensor	Included	N/A	Yes	☐	☐
H405 - DATA	Electrical Mechancial Telephone Room	Manual ON/OFF	Dimmer	Occupancy Sensor	N/A	N/A	Yes	☐	☐
H406 - ELECTRICAL	Electrical Mechancial Telephone Room	Manual ON/OFF	Exempt*	Vacancy	N/A	N/A	Yes	☐	☐
H200- CLASS LAB 2, H201 - CLASS LAB SUPPORT 2	Classroom, Lecture, or Training Vocational Area	Manual ON/OFF	Dimmer	Occupancy Sensor	Included	Included	Yes	☐	☐

Registration Number:

Registration Date/Time:

Registration Provider: Energy Code Ace

CA Building Energy Efficiency Standards - 2019 Nonresidential Compliance

Report Version: 2019.1.003
Schema Version: rev 20200601

Report Generated: 2021-02-10 05:44:21

APPROVALS

IDENTIFICATION STAMP
DIV. OF THE STATE ARCHITECT
APP: 01-119409 INC:
REVIEWED FOR
SS ☑ FLS ☑ ACS ☑
DATE: 03/14/2022

NOLL & TAM ARCHITECTS
729 Heinz Avenue
Berkeley, CA 94710
tel 510.542.2200
fax 510.542.2201

RIJA
5515 Doyle Street, #7
Emeryville, CA 94608
www.rijainc.com
RIJA Job #: 2020011

SEAL

REGISTERED PROFESSIONAL ENGINEER
RAY A. JANCHORA
No. E19586
Exp. 06-30-23
ELECTRICAL
STATE OF CALIFORNIA

Date Signed: 3/1/22

PROJECT TITLE

Peralta Community College District
Merritt Landscape Horticulture Complex

12500 Campus Drive
Oakland, CA 94616

BID SET

ISSUE DATE 03/03/2022

N&T JOB NUMBER 22003

REVISIONS

	DATE	DESCRIPTION

DRAWN BY CAD | CHECKED BY RAJ

SHEET TITLE

TITLE 24

SHEET NUMBER

E8.03

4/3/2020 7:20:00 PM BIM 360://PCCD Merritt Horticulture/Merritt Horticulture_2020.rvt

STATE OF CALIFORNIA
Indoor Lighting
NRCC-LTI-E
CALIFORNIA ENERGY COMMISSION

CERTIFICATE OF COMPLIANCE			NRCC-LTI-E
Project Name:	Merritt Landscape Horticulture Complex	**Report Page:**	**(Page 6 of 11)**
Project Address:	12500 Campus Drive, Oakland CA 94616	**Date Prepared:**	2021-02-10T08:44:27-05:00

H. INDOOR LIGHTING CONTROLS (Not including PAFs)

H300 - CLASS LAB 3, H301 - CLASS LAB SUPPORT 3	Classroom, Lecture, or Training Vocational Area	Manual ON/OFF	Dimmer	Occupancy Sensor	Included	Included	Yes	☐	☐
H700 - HEAD HOUSE	Classroom, Lecture, or Training Vocational Area	Manual ON/OFF	Dimmer	Occupancy Sensor	Included	N/A	Yes	☐	☐
H800 - WORKSHOP	Classroom, Lecture, or Training Vocational Area	Manual ON/OFF	Dimmer	Occupancy Sensor	Included	N/A	Yes	☐	☐
H801 - STORAGE 1	All Other Space Types	Manual ON/OFF	Dimmer	Occupancy Sensor	Included	N/A	Yes	☐	☐
H802 -STORAGE 2	All Other Space Types	Other*	Exempt*	Occupancy Sensor	N/A	N/A	Yes	☐	☐
H803 - STORAGE 3	All Other Space Types	Other*	Exempt*	Occupancy Sensor	N/A	N/A	Yes	☐	☐
H804 - ALL GENDER RESTROOM	Restrooms	Manual ON/OFF	Dimmer	Occupancy Sensor	N/A	N/A	Yes	☐	☐
H805 - JANITORIAL	All Other Space Types	Manual ON/OFF	Exempt*	Occupancy Sensor	N/A	N/A	Yes	☐	☐
H806 - FIELD SUPPORT	All Other Space Types	Manual ON/OFF	Exempt*	Occupancy Sensor	N/A	N/A	Yes	☐	☐
H602, H603, H604, H605 - SOIL BINS	All Other Space Types	Manual ON/OFF	Exempt*	Occupancy Sensor	N/A	N/A	Yes	☐	☐

STATE OF CALIFORNIA
Indoor Lighting
NRCC-LTI-E
CALIFORNIA ENERGY COMMISSION

CERTIFICATE OF COMPLIANCE			NRCC-LTI-E
Project Name:	Merritt Landscape Horticulture Complex	**Report Page:**	**(Page 7 of 11)**
Project Address:	12500 Campus Drive, Oakland CA 94616	**Date Prepared:**	2021-02-10T08:44:27-05:00

H. INDOOR LIGHTING CONTROLS (Not including PAFs)

*NOTES: Controls with a * require a note in the space below explaining how compliance is achieved. *EX: Conference 1: Primary/Skylight Daylighting: Exempt because less than 120 watts of general lighting; EXCEPTION 1 to §130.1(d)2*		13
		Plan Sheet Showing Daylit Zones:
H406 - ELECTRICAL	{Multilevel Controls} Not Required: Space <= 0.5 W/sf	E2.51, E2.52
H802 -STORAGE 2	{Area Controls} OCCUPANCY SENSOR (AUTO ON AND AUTO OFF) --- {Multilevel Controls} Not Required: Space <100 ft²	
H803 - STORAGE 3	{Area Controls} OCCUPANCY SENSOR (AUTO ON AND AUTO OFF) --- {Multilevel Controls} Not Required: Space <100 ft²	
H805 - JANITORIAL	{Multilevel Controls} EXCEPTION 2: Restrooms	
H806 - FIELD SUPPORT	{Multilevel Controls} Not Required: Space <100 ft²	
H602, H603, H604, H605 - SOIL BINS	{Multilevel Controls} Not Required: Space <= 0.5 W/sf	

I. LIGHTING POWER ALLOWANCE: COMPLETE BUILDING OR AREA CATEGORY METHODS

Each area complying using the Complete Building or Area Category Methods per §140.6(b) are included in this table. Column 06 indicates if additional lighting power allowances per §140.6(c) or adjustments per §140.6(a) are being used .

Conditioned Spaces

01	02	03	04	05	06	
Area Description	Complete Building or Area Category Primary Function Area	Allowed Density (W/ft²)	Area (ft²)	Allowed Wattage (Watts)	Additional Allowance / Adjustment	
					Area Category	PAF
H100 - CLASS LAB	Classroom, Lecture, or Training Vocational Area	0.7	2,495	1,746.5	No	No
H400 - CIRCULATION	Main Entry Lobby	0.85	400	340	No	No
H401 - OFFICE 1	Office 250 square feet or less	0.7	190	133	No	No
H402 - OFFICE 2	Office 250 square feet or less	0.7	190	133	No	No
H403 - OFFICE 3	Office 250 square feet or less	0.7	210	147	No	No
H404 - LIBRARY	Library Reading Area	0.8	575	460	No	No

Registration Number: | Registration Date/Time: | Registration Provider: Energy Code Ace
CA Building Energy Efficiency Standards - 2019 Nonresidential Compliance | Report Version: 2019.1.003 Schema Version: rev 20200601 | Report Generated: 2021-02-10 05:44:21

STATE OF CALIFORNIA
Indoor Lighting
NRCC-LTI-E
CALIFORNIA ENERGY COMMISSION

CERTIFICATE OF COMPLIANCE			NRCC-LTI-E
Project Name:	Merritt Landscape Horticulture Complex	**Report Page:**	**(Page 8 of 11)**
Project Address:	12500 Campus Drive, Oakland CA 94616	**Date Prepared:**	2021-02-10T08:44:27-05:00

I. LIGHTING POWER ALLOWANCE: COMPLETE BUILDING OR AREA CATEGORY METHODS

H200- CLASS LAB 2, H201 - CLASS LAB SUPPORT 2	Classroom, Lecture, or Training Vocational Area	0.7	2,290	1,603	No	No
H300 - CLASS LAB 3, H301 - CLASS LAB SUPPORT 3	Classroom, Lecture, or Training Vocational Area	0.7	2,080	1,456	No	No
H700 - HEAD HOUSE	Classroom, Lecture, or Training Vocational Area	0.7	1,505	1,053.5	No	No
H800 - WORKSHOP	Classroom, Lecture, or Training Vocational Area	0.7	1,830	1,281	No	No
		TOTALS:	11,765	8,353	See Tables J, or P for detail	

Unconditioned Spaces

01	02	03	04	05	06	
Area Description	Complete Building or Area Category Primary Function Area	Allowed Density (W/ft²)	Area (ft²)	Allowed Wattage (Watts)	Additional Allowance / Adjustment	
					Area Category	PAF
H102 - ALL GENDER RESTROOMS	Restrooms	0.65	605	393.25	No	No
H103 - JANITORIAL	All Other Space Types	0.4	105	42	No	No
H405 - DATA	Electrical Mechancial Telephone Room	0.4	135	54	No	No
H406 - ELECTRICAL	Electrical Mechancial Telephone Room	0.4	235	94	No	No
H801 - STORAGE 1	All Other Space Types	0.4	865	346	No	No
H802 -STORAGE 2	All Other Space Types	0.4	45	18	No	No
H803 - STORAGE 3	All Other Space Types	0.4	80	32	No	No
H804 - ALL GENDER RESTROOM	Restrooms	0.65	395	256.75	No	No
H805 - JANITORIAL	All Other Space Types	0.4	65	26	No	No
H806 - FIELD SUPPORT	All Other Space Types	0.4	120	48	No	No
H602, H603, H604, H605 - SOIL BINS	All Other Space Types	0.4	950	380	No	No
		TOTALS:	3,600	1,690	See Tables J, or P for detail	

J. ADDITIONAL ALLOWANCE: AREA CATEGORY METHOD QUALIFYING LIGHTING SYSTEM

This section does not apply to this project.

Registration Number: | Registration Date/Time: | Registration Provider: Energy Code Ace
CA Building Energy Efficiency Standards - 2019 Nonresidential Compliance | Report Version: 2019.1.003 Schema Version: rev 20200601 | Report Generated: 2021-02-10 05:44:21

STATE OF CALIFORNIA
Indoor Lighting
NRCC-LTI-E
CALIFORNIA ENERGY COMMISSION

CERTIFICATE OF COMPLIANCE			NRCC-LTI-E
Project Name:	Merritt Landscape Horticulture Complex	**Report Page:**	**(Page 9 of 11)**
Project Address:	12500 Campus Drive, Oakland CA 94616	**Date Prepared:**	2021-02-10T08:44:27-05:00

K. TAILORED METHOD GENERAL LIGHTING POWER ALLOWANCE

This section does not apply to this project.

L. ADDITIONAL LIGHTING ALLOWANCE: TAILORED WALL DISPLAY

This section does not apply to this project.

M. ADDITIONAL LIGHTING ALLOWANCE: TAILORED FLOOR AND TASK LIGHTING

This section does not apply to this project.

N. ADDITIONAL LIGHTING ALLOWANCE: TAILORED ORNAMENTAL/SPECIAL EFFECTS

This section does not apply to this project.

O. ADDITIONAL LIGHTING ALLOWANCE: TAILORED VERY VALUABLE MERCHANDISE

This section does not apply to this project.

P. POWER ADJUSTMENT: LIGHTING CONTROL CREDIT (POWER ADJUSTMENT FACTOR (PAF))

This section does not apply to this project.

Q. RATED POWER REDUCTION COMPLIANCE FOR ALTERATIONS

This section does not apply to this project.

R. 80% LIGHTING POWER FOR ALL ALTERATIONS - CONTROLS EXCEPTIONS

This section does not apply to this project.

S. DAYLIGHT DESIGN POWER ADJUSTMENT FACTOR (PAF)

This section does not apply to this project.

Registration Number: | Registration Date/Time: | Registration Provider: Energy Code Ace
CA Building Energy Efficiency Standards - 2019 Nonresidential Compliance | Report Version: 2019.1.003 Schema Version: rev 20200601 | Report Generated: 2021-02-10 05:44:21

APPROVALS

IDENTIFICATION STAMP
DIV. OF THE STATE ARCHITECT
APP: 01-119409 INC:
REVIEWED FOR
SS ☑ FLS ☑ ACS ☑
DATE: 03/14/2022

NOLL & TAM ARCHITECTS
729 Heinz Avenue
Berkeley, CA 94710
tel 510.542.2200
fax 510.542.2201

RIJA
5515 Doyle Street, #7
Emeryville, CA 94608
www.rijainc.com
RIJA Job #: 2020011

SEAL

REGISTERED PROFESSIONAL ENGINEER
RAJA A. JAKKOM
No. E19586
Exp. 06-30-23
ELECTRICAL
STATE OF CALIFORNIA

Date Signed: 3/1/22

PROJECT TITLE

Peralta Community College District
Merritt Landscape Horticulture Complex

12500 Campus Drive
Oakland, CA 94616

BID SET

ISSUE DATE 03/03/2022
N&T JOB NUMBER 22003

REVISIONS

	DATE	DESCRIPTION

DRAWN BY CAD | CHECKED BY RAJ

SHEET TITLE
TITLE 24

SHEET NUMBER
E8.04

4/3/2020 7:20:00 PM BIM 360://PCCD Merritt Horticulture/Merritt Horticulture_2020.rvt

STATE OF CALIFORNIA

Indoor Lighting

NRCC-LTI-E — CALIFORNIA ENERGY COMMISSION

CERTIFICATE OF COMPLIANCE			NRCC-LTI-E
Project Name:	Merritt Landscape Horticulture Complex	**Report Page:**	**(Page 10 of 11)**
Project Address:	12500 Campus Drive, Oakland CA 94616	**Date Prepared:**	2021-02-10T08:44:27-05:00

T. DECLARATION OF REQUIRED CERTIFICATES OF INSTALLATION

Selections have been made based on information provided in this document. If any selection have been changed by permit applicant, an explanation should be included in Table E. Additional Remarks. These documents must be provided to the building inspector during construction and can be found online at https://www.energy.ca.gov/title24/2019standards/2019_compliance_documents/Nonresidential_Documents/NRCI/

Yes	No	Form/Title	Field Inspector Pass	Field Inspector Fail
●	○	NRCI-LTI-01-E - Must be submitted for all buildings	☐	☐
○	●	NRCI-LTI-02-E- Must be submitted for a lighting control system, or for an Energy Management Control System (EMCS), to be recognized for compliance.	☐	☐
●	○	NRCI-LTI-04-E - Must be submitted for two interlocked systems serving an auditorium, a convention center, a conference room, a multipurpose room or a theater to be recognized for compliance.	☐	☐
○	●	NRCI-LTI-05-E- Must be submitted for a Power Adjustment Factor (PAF) to be recognized for compliance.	☐	☐
○	●	NRCI-LTI-06-E- Must be submitted for additional wattage installed in a video conferencing studio to be recognized for compliance.	☐	☐

U. DECLARATION OF REQUIRED CERTIFICATES OF ACCEPTANCE

Selections have been made based on information provided in this document. If any selection have been changed by the permit applicant, an explanation should be included in Table E. Additional Remarks. These documents must be provided to the building inspector during construction and any with "-A" in the form name must be completed through an Acceptance Test Technician Certification Provider (ATTCP). For more information visit: http://www.energy.ca.gov/title24/attcp/providers.html

Yes	No	Form/Title	Field Inspector Pass	Field Inspector Fail
●	○	NRCA-LTI-02-A - Must be submitted for occupancy sensors and automatic time switch controls.	☐	☐
●	○	NRCA-LTI-03-A - Must be submitted for automatic daylight controls.	☐	☐
●	○	NRCA-LTI-04-A - Must be submitted for demand responsive lighting controls.	☐	☐
○	●	NRCA-LTI-05-A. - Must be submitted for institutional tuning power adjustment factor (PAF)	☐	☐

Registration Number: | Registration Date/Time: | Registration Provider: Energy Code Ace

CA Building Energy Efficiency Standards - 2019 Nonresidential Compliance | Report Version: 2019.1.003 Schema Version: rev 20200601 | Report Generated: 2021-02-10 05:44:21

STATE OF CALIFORNIA

Indoor Lighting

NRCC-LTI-E — CALIFORNIA ENERGY COMMISSION

CERTIFICATE OF COMPLIANCE			NRCC-LTI-E
Project Name:	Merritt Landscape Horticulture Complex	**Report Page:**	**(Page 11 of 11)**
Project Address:	12500 Campus Drive, Oakland CA 94616	**Date Prepared:**	2021-02-10T08:44:27-05:00

DOCUMENTATION AUTHOR'S DECLARATION STATEMENT

I certify that this Certificate of Compliance documentation is accurate and complete.

Documentation Author Name: Ray A Juachon, PE	Documentation Author Signature:
Company: Rija, Inc.	Signature Date: 2/10/2021
Address: 1620 Montgomery Street, Suite 250	CEA/ HERS Certification Identification (if applicable):
City/State/Zip: San Francisco, CA 94111	Phone: 415.730.7994

RESPONSIBLE PERSON'S DECLARATION STATEMENT

I certify the following under penalty of perjury, under the laws of the State of California:

1. The information provided on this Certificate of Compliance is true and correct.
2. I am eligible under Division 3 of the Business and Professions Code to accept responsibility for the building design or system design identified on this Certificate of Compliance (responsible designer)
3. The energy features and performance specifications, materials, components, and manufactured devices for the building design or system design identified on this Certificate of Compliance conform to the requirements of Title 24, Part 1 and Part 6 of the California Code of Regulations.
4. The building design features or system design features identified on this Certificate of Compliance are consistent with the information provided on other applicable compliance documents, worksheets, calculations, plans and specifications submitted to the enforcement agency for approval with this building permit application.
5. I will ensure that a completed signed copy of this Certificate of Compliance shall be made available with the building permit(s) issued for the building, and made available to the enforcement agency for all applicable inspections. I understand that a completed signed copy of this Certificate of Compliance is required to be included with the documentation the builder provides to the building owner at occupancy.

Responsible Designer Name: Ray A Juachon, PE	Responsible Designer Signature:
Company: Rija, Inc.	Date Signed: 2/10/2021
Address: 1620 Montgomery Street, Suite 250	License: E-19586
City/State/Zip: San Francisco, CA 94111	Phone: 415.730.7994

Registration Number: | Registration Date/Time: | Registration Provider: Energy Code Ace

CA Building Energy Efficiency Standards - 2019 Nonresidential Compliance | Report Version: 2019.1.003 Schema Version: rev 20200601 | Report Generated: 2021-02-10 05:44:21

STATE OF CALIFORNIA

Outdoor Lighting

NRCC-LTO-E — CALIFORNIA ENERGY COMMISSION

CERTIFICATE OF COMPLIANCE			NRCC-LTO-E
Project Name:	Merritt Landscape Horticulture Complex	**Report Page:**	**(Page 1 of 10)**
Project Address:	12500 Campus Drive, Oakland, CA 94616	**Date Prepared:**	2021-02-09T12:34:55-05:00

A. GENERAL INFORMATION

01	Project Location (city)	Oakland, CA	04	Total Illuminated Hardscape Area (ft^2)	60485
02	Climate Zone	3			
03	Outdoor Lighting Zone per Title 24 Part 1 §10.114 or as designated by Authority Having Jurisdiction (AHJ):				
☐	LZ-0: Very Low - Undeveloped Parkland	☐ LZ-2: Moderate - Rural Areas	☐ LZ-4: High - Must be reviewed by CA Energy Commission for Approval		
☐	LZ-1: Low - Developed Parkland	☒ LZ-3: Moderately High - Urban Areas			

B. PROJECT SCOPE

This table includes outdoor lighting systems that are within the scope of the permit application and are demonstrating compliance using the prescriptive path outlined in §140.7 or §141.0(b)2L for alterations.

My Project Consists of:

01	02	
☒ New Lighting System	Must Comply with Allowances from §140.7	
☐ Altered Lighting System	Is your alteration increasing the connected lighting load (Watts)? ○ Yes ○ No	
03	**04**	**05**
% of Existing Luminaires Being Altered[1]	Sum Total of Luminaires Being Added or Altered	Calculation Method
☐ < 10% ☐ >= 10% and < 50% ☐ >= 50%		

Please proceed to Table F. Outdoor Lighting Fixture Schedule to define the project's luminaires.

[1] *FOOTNOTES: % of Existing Luminaires Being Altered = (Sum Total of Luminaires Being Added or Altered / Existing Luminaires within the Scope of the Permit Application) x 100.*

Registration Number: | Registration Date/Time: | Registration Provider: Energy Code Ace

CA Building Energy Efficiency Standards - 2019 Nonresidential Compliance | Report Version: 2019.1.003 Schema Version: rev 20200601 | Report Generated: 2021-02-09 09:34:51

STATE OF CALIFORNIA

Outdoor Lighting

NRCC-LTO-E — CALIFORNIA ENERGY COMMISSION

CERTIFICATE OF COMPLIANCE			NRCC-LTO-E
Project Name:	Merritt Landscape Horticulture Complex	**Report Page:**	**(Page 2 of 10)**
Project Address:	12500 Campus Drive, Oakland, CA 94616	**Date Prepared:**	2021-02-09T12:34:55-05:00

C. COMPLIANCE RESULTS

Results in this table are automatically calculated from data input and calculations in Tables F through I. Note: If any cell on this table says "COMPLIES with Exceptional Conditions" refer to Table D. Exceptional Conditions for guidance or see applicable Table referenced below.

Calculations of Total Allowed Lighting Power (Watts) §140.7 or §141.0(b)2L												Compliance Results			
01		02		03		04		05		06		07		08	09
General Hardscape Allowance §140.7(d)1 (See Table I)	+	Per Application §140.7(d)2 (See Table J)	+	Sales Frontage §140.7(d)2 (See Table K)	+	Ornamental §140.7(d)2 (See Table L)	+	Per Specific Area §140.7(d)2 (See Table M)	OR	Existing Power Allowance §141.0(b)2L (See Table N)	=	**Total Allowed** (Watts)	≥	**Total Actual** (Watts)	**07 must be >= 08**
3,722.3	+	---	+	---	+	---	+	---	OR	---	=	3,722.3	≥	1,556.6	COMPLIES
Cutoff Compliance (See Table G for Details)															N/A
Controls Compliance (See Table H for Details)															COMPLIES with Exceptional Conditions

Registration Number: | Registration Date/Time: | Registration Provider: Energy Code Ace

CA Building Energy Efficiency Standards - 2019 Nonresidential Compliance | Report Version: 2019.1.003 Schema Version: rev 20200601 | Report Generated: 2021-02-09 09:34:51

APPROVALS

IDENTIFICATION STAMP
DIV. OF THE STATE ARCHITECT
APP: 01-119409 INC:
REVIEWED FOR
SS ☑ FLS ☑ ACS ☑
DATE: 03/14/2022

NOLL & TAM ARCHITECTS
729 Heinz Avenue
Berkeley, CA 94710
tel 510.542.2200
fax 510.542.2201

RIJA
5515 Doyle Street, #7
Emeryville, CA 94608
www.rijainc.com
RIJA Job #: 2020011

SEAL

REGISTERED PROFESSIONAL ENGINEER — RAY A. JUACHON — No. E19586 Exp. 06-30-23 — ELECTRICAL — STATE OF CALIFORNIA

Date Signed: 3/1/22

PROJECT TITLE

Peralta Community College District
Merritt Landscape Horticulture Complex

12500 Campus Drive
Oakland, CA 94616

BID SET

ISSUE DATE 03/03/2022
N&T JOB NUMBER 22003

REVISIONS

	DATE	DESCRIPTION

DRAWN BY CAD | CHECKED BY RAJ

SHEET TITLE

TITLE 24

SHEET NUMBER

E8.05

4/3/2020 7:20:00 PM BIM 360://PCCD Merritt Horticulture/Merritt Horticulture_2020.rvt

STATE OF CALIFORNIA
Outdoor Lighting
NRCC-LTO-E
CALIFORNIA ENERGY COMMISSION

CERTIFICATE OF COMPLIANCE			NRCC-LTO-E
Project Name:	Merritt Landscape Horticulture Complex	**Report Page:**	**(Page 3 of 10)**
Project Address:	12500 Campus Drive, Oakland, CA 94616	**Date Prepared:**	2021-02-09T12:34:55-05:00

D. EXCEPTIONAL CONDITIONS

This table is auto-filled with uneditable comments because of selections made or data entered in tables throughout the form.

H. Outdoor Lighting Controls Applicant Notes	[PARKING AND DIRVEWAY: SB] {Motion Sensor Exemption} EXCEPTION 3 to Section 130.2(c)3: A. Pole-mounted luminaires each with a maximum rated wattage of 75 watts
H. Outdoor Lighting Controls Applicant Notes	[PARKING AND DIRVEWAY: SB] {Motion Sensor Exemption} EXCEPTION 3 to Section 130.2(c)3: A. Pole-mounted luminaires each with a maximum rated wattage of 75 watts
H. Outdoor Lighting Controls Applicant Notes	[PARKING AND DIRVEWAY: SC] {Motion Sensor Exemption} EXCEPTION 3 to Section 130.2(c)3: Non-pole mounted luminaires with a maximum rated wattage of 30 watts each
H. Outdoor Lighting Controls Applicant Notes	[SIDEWALKS AND PAVING: SC] {Motion Sensor Exemption} EXCEPTION 3 to Section 130.2(c)3: Non-pole mounted luminaires with a maximum rated wattage of 30 watts each
H. Outdoor Lighting Controls Applicant Notes	[SIDEWALKS AND PAVING: SD] {Motion Sensor Exemption} Lighting for Building Facades and non-pole mounted luminaires with a maximum rated wattage of 30 watts each
H. Outdoor Lighting Controls Applicant Notes	[SIDEWALKS AND PAVING: SE] {Motion Sensor Exemption} EXCEPTION 3 to Section 130.2(c)3 Non-pole mounted luminaires with a maximum rated wattage of 30 watts each
H. Outdoor Lighting Controls Applicant Notes	[SIDEWALKS AND PAVING: SF] {Motion Sensor Exemption} Lighting for Building Facades and non-pole mounted luminaires with a maximum rated wattage of 30 watts each --- {Shut-Off Control} Time clock
H. Outdoor Lighting Controls Applicant Notes	[SIDEWALKS AND PAVING: SG] {Auto-Schedule Exemption} STAND ALONE SOLAR LIGHTING
H. Outdoor Lighting Controls Applicant Notes	[SIDEWALKS AND PAVING: SH] {Motion Sensor Exemption} Lighting for Building Facades
H. Outdoor Lighting Controls Applicant Notes	[SIDEWALKS AND PAVING: SJ] {Motion Sensor Exemption} EXCEPTION 3 to Section 130.2(c)3: B. Non-pole mounted luminaires with a maximum rated wattage of 30 watts each
H. Outdoor Lighting Controls Applicant Notes	[SIDEWALKS AND PAVING: SK] {Motion Sensor Exemption} EXCEPTION 3 to Section 130.2(c)3: B. Non-pole mounted luminaires with a maximum rated wattage of 30 watts each
H. Outdoor Lighting Controls Applicant Notes	[SIDEWALKS AND PAVING: SL] {Motion Sensor Exemption} Dimming option provided
Linear lighting has been indicated on Table F. For these luminaires, wattage reported in F03 is in "W/lf" and Total Number Luminaires reported in F05 indicates total linear feet (lf) of the luminaire type.	
Total Hardscape Area in Table A. does not match the areas entered in Table I. Please review for compliance.	

STATE OF CALIFORNIA
Outdoor Lighting
NRCC-LTO-E
CALIFORNIA ENERGY COMMISSION

CERTIFICATE OF COMPLIANCE			NRCC-LTO-E
Project Name:	Merritt Landscape Horticulture Complex	**Report Page:**	**(Page 4 of 10)**
Project Address:	12500 Campus Drive, Oakland, CA 94616	**Date Prepared:**	2021-02-09T12:34:55-05:00

E. ADDITIONAL REMARKS

This table includes remarks made by the permit applicant to the Authority Having Jurisdiction.

F. OUTDOOR LIGHTING FIXTURE SCHEDULE

For new or altered lighting systems demonstrating compliance with §140.7 all new luminaires being installed and any existing luminaires remaining or being moved within the spaces covered by the permit application are included in the Table below. For altered lighting systems using the Existing Power method per §141.0(b)2L only new luminaires being installed and replacement luminaires being installed as part of the project scope are included (ie, existing luminaires remaining or existing luminaires being moved are not included).

Designed Wattage:

01	02		03	04	05	06	07	08	09	10	
Name or Item Tag	Complete Luminaire Description		Watts per luminaire[1, 2]	How is Wattage determined	Total number luminaires[2]	Luminaire Status[3]	Excluded per §140.7(a)	Design Watts	Cutoff Req. > 6,200 initial lumen output §130.2(b)[4]	Field Inspector	
										Pass	Fail
SA	POLE MOUNT AREA LIGHT	☐ Linear	52	Mfr. Spec	6	New	☐	312	NA: < 6200 lumens	☐	☐
SAA	POLE MOUNTED AREA LIGHT	☐ Linear	52	Mfr. Spec	7	New	☐	364	NA: < 6200 lumens	☐	☐
SB	POLE TOP WITH SYMMETRICAL DISTRIBUTION	☐ Linear	27	Mfr. Spec	4	New	☐	108	NA: < 6200 lumens	☐	☐
SC	LED WALL SCONCE	☐ Linear	11	Mfr. Spec	52	New	☐	572	NA: < 6200 lumens	☐	☐
SD	LED CANTENARY LIGHTING SYSTEM	☐ Linear	1.5	Mfr. Spec	100	New	☒	---	NA: < 6200 lumens	☐	☐
SE	LED WALL SCONCE SKINNY	☐ Linear	5.8	Mfr. Spec	1	New	☐	5.8	NA: < 6200 lumens	☐	☐
SF	WET RATED LINEAR LED	☒ Linear	1.5	Mfr. Spec	53	New	☒	---	NA: < 6200 lumens	☐	☐
SG	24" TALL SOLAR POWERED BOLLARD	☐ Linear	1	Mfr. Spec	7	New	☒	---	NA: < 6200 lumens	☐	☐
SH	MICRO LED UP LIGHT FOR TREES	☐ Linear	3	Mfr. Spec	21	New	☒	---	NA: < 6200 lumens	☐	☐

Registration Number: | Registration Date/Time: | Registration Provider: Energy Code Ace
CA Building Energy Efficiency Standards - 2019 Nonresidential Compliance | Report Version: 2019.1.003 Schema Version: rev 20200601 | Report Generated: 2021-02-09 09:34:51

STATE OF CALIFORNIA
Outdoor Lighting
NRCC-LTO-E
CALIFORNIA ENERGY COMMISSION

CERTIFICATE OF COMPLIANCE			NRCC-LTO-E
Project Name:	Merritt Landscape Horticulture Complex	**Report Page:**	**(Page 5 of 10)**
Project Address:	12500 Campus Drive, Oakland, CA 94616	**Date Prepared:**	2021-02-09T12:34:55-05:00

F. OUTDOOR LIGHTING FIXTURE SCHEDULE

For new or altered lighting systems demonstrating compliance with §140.7 all new luminaires being installed and any existing luminaires remaining or being moved within the spaces covered by the permit application are included in the Table below. For altered lighting systems using the Existing Power method per §141.0(b)2L only new luminaires being installed and replacement luminaires being installed as part of the project scope are included (ie, existing luminaires remaining or existing luminaires being moved are not included).

Designed Wattage:

01	02		03	04	05	06	07	08	09	10	
SI	HI LUMEN LED WALL SCONCE	☐ Linear	28	Mfr. Spec	6	New	☒	---	NA: < 6200 lumens	☐	☐
SJ	LOW LEVEL LED WALL PACK	☐ Linear	25	Mfr. Spec	4	New	☐	100	NA: < 6200 lumens	☐	☐
SK	IMPACT RESISTANCE SURFACE LED	☐ Linear	6.6	Mfr. Spec	3	New	☐	19.8	NA: < 6200 lumens	☐	☐
SL	SHILDED SYMETRIC FORWARD THROW BOLLARD	☐ Linear	15	Mfr. Spec	5	New	☐	75	NA: < 6200 lumens	☐	☐
							Total Design Watts:	1556.6			

* NOTES: Selections with a * require a note in the space below explaining how compliance is achieved.
EX: Luminaire is lighting a statue; EXCEPTION 2 to §130.2(b)

[1] *FOOTNOTES: Authority Having Jurisdiction may ask for Luminaire cut sheets to confirm wattage used for compliance per §130.0(c)*

[2] *For linear luminaires, wattage should be indicated as W/lf instead of Watts/luminaire. Total linear feet should be indicated in column 05 instead of number of luminaires.*

[3] *Select "New" for new luminaires in a new outdoor lighting project, or for added luminaires in an alteration. Select "Altered" for replacement luminaires in an alteration. Select "Existing to Remain" for existing luminaires within the project scope that are not being altered and are remaining. Select "Existing Reinstalled" for existing luminaires which are being removed and reinstalled as part of the project scope.*

[4] *Compliance with mandatory cutoff requirements is required for luminaires with initial lumen output >= 6,200 unless exempted by §130.2(b)*

G. CUTOFF REQUIREMENTS (BUG)

This section does not apply to this project.

Registration Number: | Registration Date/Time: | Registration Provider: Energy Code Ace
CA Building Energy Efficiency Standards - 2019 Nonresidential Compliance | Report Version: 2019.1.003 Schema Version: rev 20200601 | Report Generated: 2021-02-09 09:34:51

STATE OF CALIFORNIA
Outdoor Lighting
NRCC-LTO-E
CALIFORNIA ENERGY COMMISSION

CERTIFICATE OF COMPLIANCE			NRCC-LTO-E
Project Name:	Merritt Landscape Horticulture Complex	**Report Page:**	**(Page 6 of 10)**
Project Address:	12500 Campus Drive, Oakland, CA 94616	**Date Prepared:**	2021-02-09T12:34:55-05:00

H. OUTDOOR LIGHTING CONTROLS

This table demonstrates compliance with controls requirements for all new or altered luminaires installed as part of the permit application. For alteration projects, luminaires which are existing to remain (ie untouched) and luminaires which are removed and reinstalled (wiring only) do not need to be included in this table even if they are within the spaces covered by the permit application.
*When an option having a * is selected, the notes section of this table must be completed. The lighting controls section of the Compliance Summary Table on the first page will show "DOES NOT COMPLY" if the notes are left blank.*

Mandatory Controls

01	02	03	04	05	
Area Description	Shut-Off §130.2(c)1	Auto-Schedule §130.2(c)2	Motion Sensor §130.2(c)3	Field Inspector	
				Pass	Fail
PARKING AND DIRVEWAY: SA	Photocontrol	Yes	Yes	☐	☐
PARKING AND DIRVEWAY: SAA	Photocontrol	Yes	Yes	☐	☐
PARKING AND DIRVEWAY: SB	Photocontrol	Yes	Exempt*	☐	☐
PARKING AND DIRVEWAY: SB	Astronomical Timer	Yes	Exempt*	☐	☐
PARKING AND DIRVEWAY: SC	Astronomical Timer	Yes	Exempt*	☐	☐
SIDEWALKS AND PAVING: SC	Astronomical Timer	Yes	Exempt*	☐	☐
SIDEWALKS AND PAVING: SD	Astronomical Timer	Yes	Exempt*	☐	☐
SIDEWALKS AND PAVING: SE	Astronomical Timer	Yes	Exempt*	☐	☐
SIDEWALKS AND PAVING: SF	Other*	Yes	Exempt*	☐	☐
SIDEWALKS AND PAVING: SG	Astronomical Timer	Exempt*	Yes	☐	☐
SIDEWALKS AND PAVING: SH	Astronomical Timer	Yes	Exempt*	☐	☐
SIDEWALKS AND PAVING: SI	Photocontrol	Yes	Yes	☐	☐
SIDEWALKS AND PAVING: SJ	Photocontrol	Yes	Exempt*	☐	☐
SIDEWALKS AND PAVING: SK	Astronomical Timer	Yes	Exempt*	☐	☐
SIDEWALKS AND PAVING: SL	Photocontrol	Yes	Exempt*	☐	☐

** NOTES: Controls with a * require a note in the space below explaining how compliance is achieved.*
EX: Not permitted by health & safety to be turned off; EXCEPTION 1 to §130.2(c)

PARKING AND DIRVEWAY: SB	{Motion Sensor Exemption} EXCEPTION 3 to Section 130.2(c)3: A. Pole-mounted luminaires each with a maximum rated wattage of 75 watts

Registration Number: | Registration Date/Time: | Registration Provider: Energy Code Ace
CA Building Energy Efficiency Standards - 2019 Nonresidential Compliance | Report Version: 2019.1.003 Schema Version: rev 20200601 | Report Generated: 2021-02-09 09:34:51

4/3/2020 7:20:00 PM BIM 360://PCCD Merritt Horticulture/Merritt Horticulture_2020.rvt

APPROVALS

IDENTIFICATION STAMP
DIV. OF THE STATE ARCHITECT
APP: 01-119409 INC:
REVIEWED FOR
SS ☑ FLS ☑ ACS ☑
DATE: 03/14/2022

NOLL & TAM ARCHITECTS
729 Heinz Avenue
Berkeley, CA 94710
tel 510.542.2200
fax 510.542.2201

RIJA
5515 Doyle Street, #7
Emeryville, CA 94608
www.rijainc.com
RIJA Job #: 2020011

SEAL

REGISTERED PROFESSIONAL ENGINEER
RAY A. JANCHORA
No. E19586
Exp. 06-30-23
ELECTRICAL
STATE OF CALIFORNIA

Date Signed: 3/1/22

PROJECT TITLE

Peralta Community College District
Merritt Landscape Horticulture Complex

12500 Campus Drive
Oakland, CA 94616

BID SET

ISSUE DATE 03/03/2022
N&T JOB NUMBER 22003

REVISIONS

	DATE	DESCRIPTION

DRAWN BY CAD | CHECKED BY RAJ

SHEET TITLE

TITLE 24

SHEET NUMBER

E8.06

STATE OF CALIFORNIA

Outdoor Lighting

NRCC-LTO-E

CALIFORNIA ENERGY COMMISSION

CERTIFICATE OF COMPLIANCE			NRCC-LTO-E
Project Name:	Merritt Landscape Horticulture Complex	**Report Page:**	**(Page 7 of 10)**
Project Address:	12500 Campus Drive, Oakland, CA 94616	**Date Prepared:**	2021-02-09T12:34:55-05:00

H. OUTDOOR LIGHTING CONTROLS

PARKING AND DIRVEWAY: SB	{Motion Sensor Exemption} EXCEPTION 3 to Section 130.2(c)3: A. Pole-mounted luminaires each with a maximum rated wattage of 75 watts
PARKING AND DIRVEWAY: SC	{Motion Sensor Exemption} EXCEPTION 3 to Section 130.2(c)3: Non-pole mounted luminaires with a maximum rated wattage of 30 watts each
SIDEWALKS AND PAVING: SC	{Motion Sensor Exemption} EXCEPTION 3 to Section 130.2(c)3: Non-pole mounted luminaires with a maximum rated wattage of 30 watts each
SIDEWALKS AND PAVING: SD	{Motion Sensor Exemption} Lighting for Building Facades and non-pole mounted luminaires with a maximum rated wattage of 30 watts each
SIDEWALKS AND PAVING: SE	{Motion Sensor Exemption} EXCEPTION 3 to Section 130.2(c)3 Non-pole mounted luminaires with a maximum rated wattage of 30 watts each
SIDEWALKS AND PAVING: SF	{Motion Sensor Exemption} Lighting for Building Facades and non-pole mounted luminaires with a maximum rated wattage of 30 watts each --- {Shut-Off Control} Time clock
SIDEWALKS AND PAVING: SG	{Auto-Schedule Exemption} STAND ALONE SOLAR LIGHTING
SIDEWALKS AND PAVING: SH	{Motion Sensor Exemption} Lighting for Building Facades
SIDEWALKS AND PAVING: SJ	{Motion Sensor Exemption} EXCEPTION 3 to Section 130.2(c)3: B. Non-pole mounted luminaires with a maximum rated wattage of 30 watts each
SIDEWALKS AND PAVING: SK	{Motion Sensor Exemption} EXCEPTION 3 to Section 130.2(c)3: B. Non-pole mounted luminaires with a maximum rated wattage of 30 watts each
SIDEWALKS AND PAVING: SL	{Motion Sensor Exemption} Dimming option provided

STATE OF CALIFORNIA

Outdoor Lighting

NRCC-LTO-E

CALIFORNIA ENERGY COMMISSION

CERTIFICATE OF COMPLIANCE			NRCC-LTO-E
Project Name:	Merritt Landscape Horticulture Complex	**Report Page:**	**(Page 8 of 10)**
Project Address:	12500 Campus Drive, Oakland, CA 94616	**Date Prepared:**	2021-02-09T12:34:55-05:00

I. LIGHTING POWER ALLOWANCE (per §140.7)

This table includes areas using allowance calculations per §140.7. General Hardscape Allowance is per Table 140.7-A while "Use it or lose it" Allowances are per Table 140.7-B . Indicate which allowances are being used to expand sections for user input. Luminaires that qualify for one of the "Use it or lose it" allowances shall not qualify for another "Use it or lose it" allowance.

01				
☒ General Hardscape Allowance Table I (below)	"Use it or lose it" Allowance (select all that apply) (select all that apply)			
	☐ Per Application Table J	☐ Sales Frontage Table K	☐ Ornamental Table L	☐ Per Specific Area Table M

Calculated General Hardscape Lighting Power Allowance per Table 140.7-A (LZ 0, 1 & 4)

This section does not apply to this project.

Calculated General Hardscape Lighting Power Allowance per Table 140.7-A (LZ 2 & 3)

02	03	04	05	06	07	08	9	10
Area Description	Surface Type	Area Wattage Allowance (AWA)			Area Wattage Allowance (AWA)			Total General AWA + LWA (Watts)
		Illuminated Area (ft^2)	Allowed Density (W/ft^2)	Area Allowance (Watts)	Perimeter Length (lf)	Allowed Density (W/lf)	Linear Allowance (Watts)	
SIDEWALKS AND PAVING	Concrete	28485	0.03	854.55	2885	0.4	1154	2008.55
PARKING AND DIRVEWAY	Asphalt	32000	0.025	800	2255	0.25	563.75	1363.75
						Initial Wattage Allowance for Entire Site (Watts):		350
						Total General Hardscape Allowance (Watts):		3722.3

J. LIGHTING ALLOWANCE: PER APPLICATION

This section does not apply to this project.

K. LIGHTING ALLOWANCE: SALES FRONTAGE

This section does not apply to this project.

L. LIGHTING ALLOWANCE: ORNAMENTAL

This section does not apply to this project.

M. LIGHTING ALLOWANCE: PER SPECIFIC AREA

This section does not apply to this project.

Registration Number: | Registration Date/Time: | Registration Provider: Energy Code Ace

CA Building Energy Efficiency Standards - 2019 Nonresidential Compliance | Report Version: 2019.1.003 Schema Version: rev 20200601 | Report Generated: 2021-02-09 09:34:51

STATE OF CALIFORNIA

Outdoor Lighting

NRCC-LTO-E

CALIFORNIA ENERGY COMMISSION

CERTIFICATE OF COMPLIANCE			NRCC-LTO-E
Project Name:	Merritt Landscape Horticulture Complex	**Report Page:**	**(Page 9 of 10)**
Project Address:	12500 Campus Drive, Oakland, CA 94616	**Date Prepared:**	2021-02-09T12:34:55-05:00

N. EXISTING CONDITIONS POWER ALLOWANCE (alterations only)

This section does not apply to this project.

O. DECLARATION OF REQUIRED CERTIFICATES OF INSTALLATION

Selections have been made based on information provided in this document. If any selection have been changed by permit applicant, an explanation should be included in Table E. Additional Remarks. These documents must be provided to the building inspector during construction and can be found online at https://www.energy.ca.gov/title24/2019standards/2019_compliance_documents/Nonresidential_Documents/NRCI/

Yes	No	Form/Title	Field Inspector	
			Pass	Fail
●	○	NRCI-LTO-01-E - Must be submitted for all buildings	☐	☐
●	○	NRCI-LTO-02-E- Must be submitted for a lighting control system, or for an Energy Management Control System (EMCS), to be recognized for compliance.	☐	☐

P. DECLARATION OF REQUIRED CERTIFICATES OF ACCEPTANCE

Selections have been made based on information provided in this document. If any selection have been changed by permit applicant, an explanation should be included in Table E. Additional Remarks. These documents must be provided to the building inspector during construction and must be completed through an Acceptance Test Technician Certification Provider (ATTCP). For more information visit: http://www.energy.ca.gov/title24/attcp/providers.html

Yes	No	Form/Title	Field Inspector	
			Pass	Fail
●	○	NRCA-LTO-02-A - Must be submitted for all outdoor lighting controls except for alterations where controls are added to <= 20 luminaires.	☐	☐

Registration Number: | Registration Date/Time: | Registration Provider: Energy Code Ace

CA Building Energy Efficiency Standards - 2019 Nonresidential Compliance | Report Version: 2019.1.003 Schema Version: rev 20200601 | Report Generated: 2021-02-09 09:34:51

STATE OF CALIFORNIA

Outdoor Lighting

NRCC-LTO-E

CALIFORNIA ENERGY COMMISSION

CERTIFICATE OF COMPLIANCE			NRCC-LTO-E
Project Name:	Merritt Landscape Horticulture Complex	**Report Page:**	**(Page 10 of 10)**
Project Address:	12500 Campus Drive, Oakland, CA 94616	**Date Prepared:**	2021-02-09T12:34:55-05:00

DOCUMENTATION AUTHOR'S DECLARATION STATEMENT

I certify that this Certificate of Compliance documentation is accurate and complete.

Documentation Author Name: Ray A Juachon, PE	Documentation Author Signature:
Company: Riia. Inc.	Signature Date: 02/09/2021
Address: 1620 Montgomery Street, Suite 250	CEA/ HERS Certification Identification (if applicable):
City/State/Zip: San Francisco, CA 94111	Phone: 415.730.7994

RESPONSIBLE PERSON'S DECLARATION STATEMENT

I certify the following under penalty of perjury, under the laws of the State of California:

1. The information provided on this Certificate of Compliance is true and correct.
2. I am eligible under Division 3 of the Business and Professions Code to accept responsibility for the building design or system design identified on this Certificate of Compliance (responsible designer)
3. The energy features and performance specifications, materials, components, and manufactured devices for the building design or system design identified on this Certificate of Compliance conform to the requirements of Title 24, Part 1 and Part 6 of the California Code of Regulations.
4. The building design features or system design features identified on this Certificate of Compliance are consistent with the information provided on other applicable compliance documents, worksheets, calculations, plans and specifications submitted to the enforcement agency for approval with this building permit application.
5. I will ensure that a completed signed copy of this Certificate of Compliance shall be made available with the building permit(s) issued for the building, and made available to the enforcement agency for all applicable inspections. I understand that a completed signed copy of this Certificate of Compliance is required to be included with the documentation the builder provides to the building owner at occupancy.

Responsible Designer Name:Ray A Juachon, PE	Responsible Designer Signature:
Company: Riia, Inc.	Date Signed: 02/09/2021
Address: 1620 Montgomery Street, Suite 250	License: E-19586
City/State/Zip: San Francisco, CA 94111	Phone: 415.730.7994

Registration Number: | Registration Date/Time: | Registration Provider: Energy Code Ace

CA Building Energy Efficiency Standards - 2019 Nonresidential Compliance | Report Version: 2019.1.003 Schema Version: rev 20200601 | Report Generated: 2021-02-09 09:34:51

4/3/2020 7:20:00 PM BIM 360://PCCD Merritt Horticulture/Merritt Horticulture_2020.rvt

APPROVALS

IDENTIFICATION STAMP
DIV. OF THE STATE ARCHITECT
APP: 01-119409 INC:
REVIEWED FOR
SS ☑ FLS ☑ ACS ☑
DATE: 03/14/2022

NOLL & TAM ARCHITECTS

729 Heinz Avenue
Berkeley, CA 94710
tel 510.542.2200
fax 510.542.2201

RIJA

5515 Doyle Street, #7
Emeryville, CA 94608
www.rijainc.com
RIJA Job #: 2020011

SEAL

REGISTERED PROFESSIONAL ENGINEER
RAY A. JUACHON
No. E19586
Exp. 06-30-23
ELECTRICAL
STATE OF CALIFORNIA

Date Signed: 3/1/22

PROJECT TITLE

Peralta Community College District

Merritt Landscape Horticulture Complex

12500 Campus Drive
Oakland, CA 94616

BID SET

ISSUE DATE **03/03/2022**

N&T JOB NUMBER **22003**

REVISIONS

	DATE	DESCRIPTION

DRAWN BY **CAD** | CHECKED BY **RAJ**

SHEET TITLE

TITLE 24

SHEET NUMBER

E8.07

SYMBOL LIST (NOT ALL SYMBOLS USED)

RACEWAY AND WIRING

FLOOR	WALL	CEILING	
	——	——	CONDUIT CONCEALED IN CEILING OR WALL SPACE
	——	——	CONDUIT RUN EXPOSED
——			CONDUIT RUN UNDERGROUND OR CONCEALED IN FLOOR SPACE
——	——	——	EXISTING CONDUIT TO REMAIN
	—○		CONDUIT RISING UP FROM RUN
	—●		CONDUIT DROPPING DOWN FROM RUN
	—≀		CONDUIT CONTINUATION
	—⊐		CONDUIT CAP
A–1 →	A–1 →	A–1 →	HOMERUN TO PANELBOARD, CABINET OR TERMINAL BACKBOARD AS INDICATED

TECHNOLOGY

REFER TO TECHNOLOGY DIAGRAMS FOR CABLING REQUIREMENTS AND ADDITIONAL INFORMATION

FLOOR	WALL	CEILING	
	WAP	WAP	2 CAT6A CABLES. PROVIDE 1–1/4" FOR WIRELESS ACCESS POINT. COORDINATE EXACT LOCATION WITH VENDOR. DEVICE AND FINAL TERMINATION BY VENDOR
	CAM		CAT6A CABLE AND 1–1/4"C FOR CAMERA. DEVICE BY VENDOR
			TELEPHONE (POTS) OUTLET AND CABLING, PROVIDE 4S DEEP SINGLE GANG PLASTER RING AND 1" CONDUIT STUBBED INTO ACCESSIBLE CEILING SPACE UNLESS OTHERWISE NOTED
			DATA OUTLET– WALL MOUNT AT 15" AFF TO THE BOTTOM OF BOX (U.O.N), PROVIDE 4S DEEP SINGLE GANG PLASTER RING AND 1" CONDUIT STUBBED INTO ACCESSIBLE CEILING SPACE UNLESS OTHERWISE NOTED
			VOICE/DATA OUTLET– WALL MOUNT AT 15" AFF TO THE BOTTOM OF BOX (U.O.N), PROVIDE 4S DEEP SINGLE GANG PLASTER RING AND 1" CONDUIT STUBBED INTO ACCESSIBLE CEILING SPACE UNLESS OTHERWISE NOTED.
			COMBINATION POWER, VOICE/DATA OUTLET– FIELD DEFINED HEIGHT (U.O.N), PROVIDE 4S DEEP SINGLE GANG PLASTER RING AND 1" CONDUIT STUBBED INTO ACCESSIBLE CEILING SPACE UNLESS OTHERWISE NOTED
	SYS		NETWORKED COMBINATION CLOCK/PA DEVICE, MOUNT IN 4S DEEP SINGLE GANG BOX.
	S	S	PA SPEAKER, PROVIDE 4S DEEP SINGLE GANG PLASTER RING AND 1" CONDUIT STUBBED INTO ACCESSIBLE CEILING SPACE UNLESS OTHERWISE NOTED.
	S AV		AV SPEAKER, PROVIDE 4S DEEP SINGLE GANG PLASTER RING AND 1" CONDUIT STUBBED INTO ACCESSIBLE CEILING SPACE UNLESS OTHERWISE NOTED.
	J LTR		JUNCTION BOX CR = CARD READER LOCATION, CABLING AND DEVICE BY VENDOR MD = MOTION DETECTOR LOCATION, CABLING AND DEVICE BY VENDOR KP = KEYPAD, CABLING AND DEVICE BY VENDOR PB = PANIC BUTTON, CABLING AND DEVICE BY VENDOR

ABBREVIATIONS

A	AMPERES
ACAMS SYSTEM	ACCESS CONTROL AND ALARM MONITORING
ACT	ACOUSTICAL CEILING TILE
ADA	AMERICANS WITH DISABILITIES ACT
AFC	ABOVE FINISHED CEILING
AFF	ABOVE FINISHED FLOOR
ALS	ASSISTED LISTENING SYSTEM
ANT	ANTENNA
ARF	ABOVE RAISED FLOOR
AVC	AUDIOVISUAL CONTRACTOR
AWG	AMERICAN WIRE GAUGE
BAS	BUILDING AUTOMATION SYSTEM
BCT	BONDING CONDUCTOR - TELECOM
BDF	BUILDING DISTRIBUTION FACILITY
BFC	BELOW FINISHED CEILING CONDUIT
CAM	CAM CAMERA
CAT3	CATEGORY 3 (UTP CABLE)
CAT5E	CATEGORY F3 (UTP CABLE)
CAT6	CATEGORY 6 (UTP CABLE)
CATV	COMMUNITY ANTENNA TELEVISION
CATVP	COMM. ANTENNA TELEVISION PLENUM CB
CEILING BOX	
CMP	COMMUNICATIONS MEDIA PLENUM
CMR	COMMUNICATIONS MEDIA RISER
CP	CONTROL PANEL
CPU	CENTRAL PROCESSING UNIT
CTL	CONTROL
(E)	EXISTING
EC	ELECTRICAL CONTRACTOR
EMS	ELECTRICAL MANAGEMENT SYSTEM
EMT	ELECTRIC METALLIC TUBING
EQUIP	EQUIPMENT
(F)	FUTURE
FACP	FIRE ALARM CONTROL PANEL
FATC	FIRE ALARM TERMINAL CABINET
FB	FLOORBOX
FP	FACEPLATE
FPD	FLAT PANEL DISPLAY
GC	GENERAL CONTRACTOR
GRS	GALVANIZED RIGID STEEL
H	HIGH
IDF	INTERMEDIATE DISTRIBUTION FACILITY
IDS	INTRUSION DETECTION SYSTEM
IR	INFRARED
ISP	INSIDE PLANT
JB	JUNCTION BOX
L	LONG
LV	LOW VOLTAGE
LVI	LOW VOLTAGE INTERFACE
MBGRB REFERENCE BUS	MAIN BUILDING GROUNDING
MDF	MAIN DISTRIBUTION FACILITY
MH	MAINTENANCE HOLE
MIC	MICROPHONE
MM	MULTIMODE
MPOE	MAIN POINT OF ENTRY
MTX	MATRIX
(N)	NEW
NIC	NOT IN CONTRACT
NO	NORMALLY OPEN
NPF	NETWORK PATCHING FACILITY
NTS	NOT TO SCALE
OC	ON CENTER
OFCI INSTALLED	OWNER FURBISHED, CONTRACTOR
OFCP	OPTICAL FIBER CONDUCTIVE PLENUM
OFCR	OPTICAL FIBER CONDUCTIVE RISER
OFE	OWNER FURNISHED EQUIPMENT
OFNP	OPTICAL FIBER NON-CONDUCTING PLENUM
OFNR	OPTICAL FIBER NON-CONDUCTING RISER
OFOI	OWNER FURNISHED, OWNER INSTALLED
OSP	OUTSIDE PLANT
(P)	PROTECTED SIDE OF DOOR
PB	PULLBOX
PNL	PANEL
PR	PAIR (OF COPPER CONDUCTORS)
PRJ	PROJECTOR
PS	PROJECTION SCREEN
PSU	POWER SUPPLY
PT	POKE-THROUGH DEVICE
PTZ	PAN/TILT/ZOOM
PVC	POLYVINY CHLORIDE
REX	REQUEST TO EXIT
RF	RADIO FREQUENCY
RX	RECEIVER
SAD	SEE ARCHITECTURAL DRAWINGS
ScTP	SCREENED TWISTED PAIR
SEC	SECURITY EQUIPMENT CABINET
SED	SEE ELECTRICAL DRAWINGS
SM	SINGLEMODE
SPK	LOUDSPEAKER
STP	SHIELDED TWISTED PAIR
STR	STRANDS (OF FIBER OPTIC CABLE)
TBB	TELECOM BONDING BACKBONE
TBC	TELECOM BONDING CONDUCTOR
TC	TELECOM CONTRACTOR
TGB	TELECOM GROUNDING BUSBAR
TMGB	TELECOM MAIN GROUNDING BUSFAR
TP	TERMINAL PANEL
TR	TELECOMMUNICATIONS ROOM
TS	TERMINATION STRIP
TVT	TV TUNER
TX	TRANSMITTER
TYP	TYPICAL UON UNLESS OTHERWISE NOTED
UPS	UNINTERRUPTIBLE POWER SUPPLY
UTP	UNSHIELDED TWISTED PAIR
V	VOLTS
VC	VOLUME CONTROL
VSS	VIDEO SURVEILLANCE SYSTEM
WAP	WIRELESS ACCESS POINT
W	WIDE
WB	WALLBOX
WP	WEATHERPROOF
XFMR	TRANSFORMER

TECHNOLOGY SYSTEMS SCOPE OF WORK NOTE

WORK UNDER THIS CONTRACT SHALL FURNISH AND INSTALL INFRASTRUCTURE, BOXES, AND PATHWAYS FOR DEVICES PROVIDED BY DISTRICT PREFERRED VENDOR. DEVICES, FIBER-COPPER CONVERTERS, FINAL TERMINATION, SOFTWARE, PROGRAMMING, AND INSTALLATION SHALL BE BY DISTRICT PREFERRED VENDOR (SECURITY, ACCESS CONTROL, AND WIFI).

MEP COMPONENT ANCHORAGE NOTE

ALL MECHANICAL, PLUMBING, AND ELECTRICAL COMPONENTS SHALL BE ANCHORED AND INSTALLED PER THE DETAILS ON THE DSA-APPROVED CONSTRUCTION DOCUMENTS. THE FOLLOWING COMPONENTS SHALL BE ANCHORED OR BRACED TO MEET THE FORCE AND DISPLACEMENT REQUIREMENTS PRESCRIBED IN THE 2019 CBC SECTIONS 1617A.1.18 THROUGH 1617A.1.26 AND ASCE 7-16 CHAPTERS 13, 26, AND 30:

1. ALL PERMANENT EQUIPMENT AND COMPONENTS.
2. TEMPORARY, MOVABLE OR MOBILE EQUIPMENT THAT IS PERMANENTLY ATTACHED (E.G. HARD WIRED) TO THE BUILDING UTILITY SERVICES SUCH AS ELECTRICITY, GAS OR WATER. 'PERMANENTLY ATTACHED' SHALL INCLUDE ALL ELECTRICAL CONNECTIONS EXCEPT PLUGS FOR 110/220 VOLT RECEPTACLES HAVING A FLEXIBLE CABLE.
3. TEMPORARY, MOVABLE OR MOBILE EQUIPMENT WHICH IS HEAVIER THAN 400 POUNDS OR HAS A CENTER OF MASS LOCATED 4 FEET OR MORE ABOVE THE ADJACENT FLOOR OR ROOF LEVEL THAT DIRECTLY SUPPORT THE COMPONENT IS REQUIRED TO BE RESTRAINED IN A MANNER APPROVED BY DSA.

THE FOLLOWING MECHANICAL AND ELECTRICAL COMPONENTS SHALL BE POSITIVELY ATTACHED TO THE STRUCTURE BUT NEED NOT DEMONSTRATE DESIGN COMPLIANCE WITH THE REFERENCES NOTED ABOVE. THESE COMPONENTS SHALL HAVE FLEXIBLE CONNECTIONS PROVIDED BETWEEN THE COMPONENT AND ASSOCIATED DUCTWORK, PIPING, AND CONDUIT. FLEXIBLE CONNECTIONS MUST ALLOW MOVEMENT IN BOTH TRANSVERSE AND LONGITUDINAL DIRECTIONS:

A. COMPONENTS WEIGHING LESS THAN 400 POUNDS AND HAVING A CENTER OF MASS LOCATED 4 FEET OR LESS ABOVE THE ADJACENT FLOOR OR ROOF LEVEL THAT DIRECTLY SUPPORT THE COMPONENT.

B. COMPONENTS WEIGHING LESS THAN 20 POUNDS, OR IN THE CASE OF DISTRIBUTED SYSTEMS, LESS THAN 5 POUNDS PER FOOT, WHICH ARE SUSPENDED FROM A ROOF OR FLOOR OR HUNG FROM A WALL.

THE ANCHORAGE OF ALL MECHANICAL, ELECTRICAL AND PLUMBING COMPONENTS SHALL BE SUBJECT TO THE APPROVAL OF THE DESIGN PROFESSIONAL IN GENERAL RESPONSIBLE CHARGE OR STRUCTURAL ENGINEER DELEGATED RESPONSIBILITY AND ACCEPTANCE BY DSA. THE PROJECT INSPECTOR WILL VERIFY THAT ALL COMPONENTS AND EQUIPMENT HAVE BEEN ANCHORED IN ACCORDANCE WITH THE ABOVE REQUIREMENTS.

PIPING, DUCTWORK, AND ELECTRICAL DISTRIBUTION SYSTEM BRACING NOTE

PIPING, DUCTWORK, AND ELECTRICAL DISTRIBUTION SYSTEMS SHALL BE BRACED TO COMPLY WITH THE FORCES AND DISPLACEMENTS PRESCRIBED IN ASCE 7-16 SECTION 13.3 AS DEFINED IN ASCE 7-16 SECTIONS 13.6.5, 13.6.6, 13.6.7, 13.6.8; AND 2019 CBC, SECTIONS 1617A.1.24, 1617A.1.25 AND 1617A.1.26.

THE METHOD OF SHOWING BRACING AND ATTACHMENTS TO THE STRUCTURE FOR THE IDENTIFIED DISTRIBUTION SYSTEM ARE AS NOTED BELOW. WHEN BRACING AND ATTACHMENTS ARE BASED ON A PREAPPROVED INSTALLATION GUIDE (E.G., OSHPD OPM FOR 2013 CBC OR LATER), COPIES OF THE BRACING SYSTEM INSTALLATION GUIDE OR MANUAL SHALL BE AVAILABLE ON THE JOBSITE PRIOR TO THE START OF AND DURING THE HANGING AND BRACING OF THE DISTRIBUTION SYSTEMS. THE STRUCTURAL ENGINEER OF RECORD SHALL VERIFY THE ADEQUACY OF THE STRUCTURE TO SUPPORT THE HANGER AND BRACE LOADS.

MECHANICAL PIPING (MP), MECHANICAL DUCTS (MD), PLUMBING PIPING (PP), ELECTRICAL DISTRIBUTION SYSTEMS (E):

MP☐ MD☐ PP☐ E ☒ OPTION 1: DETAILED ON THE APPROVED DRAWINGS WITH PROJECT SPECIFIC NOTES AND DETAILS

MP☐ MD☐ PP☐ E ☐ OPTION 2: SHALL COMPLY WITH THE APPLICABLE OSHPD PRE-APPROVAL (OPM#)_____

CODES & STANDARDS

1. 2019 CALIFORNIA BUILDING CODE
2. 2019 CALIFORNIA ELECTRICAL CODE
3. 2019 CALIFORNIA MECHANICAL CODE
4. 2019 CALIFORNIA PLUMBING CODE
5. 2019 CALIFORNIA ENERGY CODE (TITLE 24)
6. 2019 CALIFORNIA FIRE CODE
7. 2019 CALIFORNIA GREEN CODE
8. DIVISION OF THE STATE ARCHITECT
9. OWNER STANDARDS

DRAWING INDEX

T0.01	COVER SHEET – TECHNOLOGY
T2.01	SITE PLAN – TECHNOLOGY
T2.31	TECHNOLOGY FLOOR PLAN – WEST BUILDING GROUP
T2.32	TECHNOLOGY FLOOR PLAN – EAST BUILDING GROUP
T3.01	ENLARGED PLANS – TECHNOLOGY
T3.02	ENLARGED PLANS – TECHNOLOGY
T3.03	ENLARGED PLANS – TECHNOLOGY
T4.01	TECHNOLOGY DIAGRAMS
T4.02	A/V DIAGRAM
T6.01	DETAILS
T6.02	SECURITY DOOR DETAILS

GENERAL TECHNOLOGY NOTES

A. GENERAL
1. THE PURPOSE OF THIS SHEET IS TO ILLUSTRATE AND DEFINE TYPICAL GRAPHIC SYMBOLS, WHICH MAY OCCUR ON THE TELECOMMUNICATIONS/SECURITY DRAWINGS. THE ILLUSTRATION OF A SYMBOL, ON THIS SHEET DOES NOT NECESSARILY INDICATE THAT THE BUILDING COMPONENT REPRESENTED SYSTEM BY THE SYMBOL IS USED AS PART OF THIS PROJECT.
2. REFER TO THE COMPLETE DRAWING PACKAGE AND SPECIFICATIONS TO DETERMINE THE SCOPE OF THE WORK. THE WORK, INCLUDING MATERIALS, METHODS, ASSEMBLIES, ETC., SHALL COMPLY WITH OR EXCEED THE MINIMUM REQUIREMENTS OF THE GOVERNING LAWS, ORDINANCES, AND REGULATIONS OF AUTHORITIES HAVING JURISDICTION OVER THE WORK, AS WELL AS THOSE INDICATED BY THE CONTRACT DOCUMETNS. NO PART OF THE CONTRACT DOCUMENTS MAY BE CONSTRUED TO REQUIRE OR PERMIT WORK CONTRARY TO A GOVERNING LAW, ORDINANCE, OR REGULATION.
3. THE TELECOMMUNICATION/SECURITY DRAWINGS ARE A PART OF A LARGER SET OF DRAWING WHICH, WHEN COMPLETE, WILL CONSIST OF DRAWINGS LISTED BY THE OVERALL ARCHITECTURAL PROJECT "INDEX OF DRAWINGS". THE WORK DESCRIBED BY THE DRAWINGS OF ANY DISCIPLINE MAY BE AFFECTED BY THE WORK AND REQUIREMENTS REPRESENTED ON DRAWINGS OF ANOTHER DISCIPLINE AND MAY REQUIRE REFERENCE TO THE DRAWINGS OF ANOTHER DISCIPLINE. PARTIAL SETS OF DRAWINGS SHOULD NOT BE DISTRIBUTED OR UTILIZED BY THE CONTRACTOR.
4. MANAGE, SUPERVISE, REVIEW, AND COORDINATE THE WORK OF SUB-CONTRACTORS, TRADE, AND SUPPLIERS PER THE CONTRACT DOCUMETNS, WHICH MAY AFFECT THE WORK OF THAT ENTITY.
5. THE ARCHITECTURAL DRAWINGS ESTABLISH AND COORDINATE THE FINISHED APPEARANCE AND EXACT LOCATION OF EXPOSED ELEMENTS OF THE WORK OF THE TRADES, INCLUDING THAT WORK THAT IS ILLUSTRATED PRIMARILY ON THESE DRAWINGS. LOCATIONS SHOWN ON THESE DRAWINGS ARE DIAGRAMMATIC. REFER TO ARCHITECTURAL DRAWINGS FOR DIMENSIONED LOCATIONS.
6. MAINTAIN A COPY OF THE SPECIFICATIONS AND DRAWINGS AT THE JOB SITE. PRESENT THE SPECIFICATIONS AND DRAWINGS UPOHN REQUEST. MAINTAIN DAILY MARKUPS OF THE ACTUAL INSTALLATION AND PRESENT FOR REVIEW UPON REQUEST. REFER TO THE WRITTEN SPECIFICATION FOR PROJECT SCOPE, GENERAL REQUIREMENTS, PRODUCT SPECIFICATIONS, AND INSTALLATION REQUIREMETNS. WHERE QUANTITY AND QUALITY DIFFER, THE HIGHER OF EACH SHALL PREVAIL.
7. PROVIDE NECESSARY EQUIPMENT AND ACCESSORIES FOR FULLY FUNCTIONAL SYSTEMS THAT MEET THE DESIGN INTENT, WHETHER EXPRESSLY SPECIFIED OR NOT.
8. PROVIDE MATERIAL AND EQUIPMENT LISTED BY UNDERWRITERS LABORATORIES FOR THE PURPOSE USED AND BEARING THEIR LABEL.
9. PRIOR TO PERFORMING WORK, IMMEDIATELY NOTIFY THE OWNER, OR OWNER'S REPRESENTATIVE, IN WRITING OF CONDITIONS THAT WOULD PREVENT INSTALLATION ACCORDING TO DRAWINGS AND SPECIFICATIONS.
10. REMOVE CABLING, LEFT OVER CONDUIT, WIRE SCRAPS, ETC. LEAVE PREMISES CLEAN AND FREE OF TRASH OR DEBRIS RESULTING FROM THE WORK. PROPERLY RECYCLE MATERIAL ACCORDING TO CODE AND PROJECT REQUIREMENTS.

B. PATHWAYS
1. INSTALL EQUIPMENT, DEVICES, AND PATHWAYS, SUCH AS CABLE TRAY, RUNWAY, CONDUITS, CABLE HANGERS, AND PULLBOXES, ETC. ACCORDING TO STATE AND LOCAL CODES AND REGULATORY REQUIREMENTS FOR SEISMIC BRACING.
2. INSTALL CONDUIT PATHWAYS PER ANSI/TIA-569-B AND BUILDING INDUSTRIES CONSULTING SERVICES INTERNATIONAL (BICSI) "TELECOMMUNICATIONS DISTRIBUTION METHODS MANUAL" (TDMM).
3. CONDUIT ROUTING SHOWN IS DIAGRAMMATIC, UON. DETERMINE CONDUIT ROUTES IN THE FIELD TO SUITE FIELD CONDITIONS WHILE CONFORMING TO SPECIFICATIONS. PREPARE SHOP DRAWINGS SHOWING EXACT CONDUIT ROUTES, INDICATING PENETRATION TYPES (E.G., FRAMED WALL, CONCRETE WALL, ETC.). COORDINATE REQUIREMENTS WITH OTHER TRADES.
4. ROUTE CONDUIT, CABLE TRAYS, AND OTHER PATHWAYS PERPENDICULAR OR PARALLEL TO BUILDING LINES, IN GENERAL.
5. WHEN PROVIDING BENDS IN CONDUIT RUNS, PROVIDE BENDS WITH RADII NO LESS THAN AS FOLLOWS: (1) CONDUITS LESS THAN 2-INCH TRADE SIZE = SIX TIMES THE INSIDE DIAMETER, (2) CONDUITS 2-INCH OR GREATER TRADE SIZE = TEN TIMES THE INSIDE DIAMETER.
6. CONDUIT RUNS SHALL NOT EXCEED 180 DEGREES OR TWO 90-DEGREES BENDS WITHOUT AN APPROPRIATE NEMA RATED PULL BOX AND/OR INCREASE CONDUIT BY ONE TRADE SIZE FOR EACH ADDITIONAL BEND OF UP TO 90 DEGREES. A THIRD CONDUIT 90-DEGREE BEND WILL BE ALLOWED WITHOUT UPSIZING THE CONDUIT IF IT IS WITHIN 12 INCHES OF THE CONDUIT END.
7. WHEN ROUTING CONDUIT IN CONCRETE, PLACE CONDUITS INTO FORMS WITH A GRADUATED BEND RADIUS TO MITIGATE CAPACITY REDUCTIONS. THE USE OF 90-DEGREE ELBOWS IS EXPRESSLY PROHIBITED OTHER THAN TURNING UP OR DOWN OUT OF CONCRETE UNLESS PRIOR AUTHORIZATION IS RECEIVED IN WRITING FROM THE OWNER, OR OWNER'S REPRESENTATIVE.
8. PROPERLY FIRE SEAL CONDUIT AND RACEWAY PENETRATIONS THROUGH FIRE RATED WALLS AND FLOORS TO MAINTAIN THE FIRE SEPARATION RATING. PROVIDE FIRE STOPPING SYSTEMS THAT ARE UL LISTED FOR THE APPLICATION. COORDINATE REQUIREMENTS WITH LOCAL FIRE MARSHAL PRIOR TO INSTALLATION. DO NOT MIX PRODUCTS BETWEEN MANUFACTURED ASSEMBLIES.
9. PROVIDE EXPANSION/DEFLECTION FITTINGS FOR CONDUITS AT STRUCTURAL EXPANSION JOINT CROSSINGS. PROVIDE PLASTIC BUSHINGS ON EXPOSED ENDS OF CONDUITS AND SLEEVES, WHETHER VISIBLE OR NOT. PROVIDE EMT 4-INCH TRADE SIZE CONDUITS FOR BACKBONE PATHWAYS WITH 40 INCHES MINIMUM BEND RADISU FITTINGS, UON.
10. PROVIDE A MINIMUM OF ONE 1-INCH TRADE SIZE CONDUIT FOR HORIZONTAL DISTRIBUTION AND OUTLETS, UON ON SCHEDULES OR PLANS. CONSOLIDATION OF CONDUITS IS ALLOWED WHEN EQUAL OR GREATER CONSOLIDATED AREA IS PROVIDED.
11. PROVIDE A DEDICATED CONDUIT STUB PER OUTLET/DEVICE/BACK BOX. DAISY-CHAINING OUTLET BOXES IS PROHIBITED UNLESS SPECIFICALLY NOTED ON PLANS.
12. CONDULET ("LB", ETC.) FITTINGS ARE EXPRESSLY PROHIBITED FOR LOW VOLTAGE SYSTEMS PATHWAYS.
13. PROVIDE PULL STRINGS WITH A MINIMUM OF 200 LB PULL TENSION IN CONDUITS.
14. PROVIDE DEDICATED SUPPORTS (CLIPS AND WIRES) FOR CABLE SUPPORT HANGERS (AND SIMILAR PATHWAY COMPONENTS) INTENDED FOR LOW VOLTAGE SYSTEMS CABLES.
15. DO NOT SHARE SUPPORTS WITH OTHER TRADES/SYSTEMS OTHER THAN WITH THE SYSTEMS AS IDENTIFIED IN THIS SET OF DRAWINGS.
16. PROVIDE CONDUITS FOR LOW VOLTAGE SYSTEMS CABLING ROUTED THROUGH NON-ACCESSIBLE CEILING SPACE (E.G., 'HARD LID' CEILING), UON. SIZE CONDUITS TO MAINTAIN A FILL CAPACITY NO LESS THAN 40% PLUS 50% SPARE CAPACITY.
17. MOUNTING HEIGHTS ARE REFERENCED FROM THE FINISHED FLOOR TO THE CENTERLINE OF THE DEVICE, UON SPECIFICALLY FOR A DEVICE.
18. PROVIDE A 24-INCH MINIMUM SEPARATION OF ONE STUD BAY BETWEEN 'BACK-TO-BACK' OUTLETS/DEVICES/BACK BOXES IN FRAMED WALLS.

C. TELECOMMUNICATIONS CABLING AND DEVICES
1. DO NOT ATTACH CABLES TO OTHER STRUCTURES NOT INTENDED FOR CABLE SUPPORT. DO NOT TIE CABLES TO CABLE TRAYS.
2. ROUTE TELECOMMUNICATIONS CABLES PERPENDICULAR OR PARALLEL TO BUILDING LINES, IN GENERAL. ROUTE TELECOMMUNICATIONS CABLES NO LESS THAN 6 INCHES FROM POWER SOURCE AND LIGHTING FIXTURES, AND NO LESS THAN 4 FEET FROM TRANSFORMERS AND MOTORS.
3. LABEL TELECOMMUNICATION CABLES ACCORDING TO SPECIFICATIONS AND LABELING DETAILS.

D. TELECOMMUNICATIONS ROOMS
1. GROUP AND DRESS EXPOSED TELECOMMUNICATION CABLE GROUPS USING VELCRO TYPE TIES, UON.
2. COMPONENTS NOT RELATED TO THE SUPPORT OF THE TELECOMMUNICATIONS ROOM(S) FUNCTION (E.G., PIPING, DUCTWORK, PNEUMATIC TUBING, ETC.) SHALL NOT BE INSTALLED IN, PASS THROUGH, OR ENTER THE TELECOMMUNICATIONS ROOM(S).
3. LOCATE PIPES AND OTHER TUBING COMPONENTS CONTAINING LIQUID OUTSIDE OF TELECOMMUNICATION ROOM(S).
4. SECURITY
5. SECURITY DOOR HARDWARE TO FAIL SECURE, UON.
6. EGRESS HARDWARE SHALL BE OPERABLE AT ALL TIMES. SECURITY HARDWARE SHALL NOT PROHIBIT EGRESS.
7. INTERFACE SECURITY CONTROLLED DOOR HARWARE WITH THE FIRE ALARM SYSTEM AS TO NOT IMPEDE EGRESS UNDER FIRE ALARM CONDITIONS.
8. REFER TO SPECIFICATION SECTION 087100 FOR EXIT DEVICE HARDWARE REQUIRING A LOCAL POWER SUPPLY. INTERCONNECT LOW VOLTAGE CABLES BETWEEN SYSTEM AND LOCKS.

APPROVALS

IDENTIFICATION STAMP
DIV. OF THE STATE ARCHITECT
APP: 01-119409 INC:
REVIEWED FOR
SS ☑ FLS ☑ ACS ☑
DATE: 03/14/2022

NOLL & TAM ARCHITECTS
729 Heinz Avenue
Berkeley, CA 94710
tel 510.542.2200
fax 510.542.2201

RIJA
5515 Doyle Street, #7
Emeryville, CA 94608
www.rijainc.com
RIJA Job #: 2020011

SEAL

REGISTERED PROFESSIONAL ENGINEER
RAY A. JACHON
No. E19586
Exp. 06-30-23
ELECTRICAL
STATE OF CALIFORNIA

Date Signed: 3/1/22

PROJECT TITLE

Peralta Community College District
Merritt Landscape Horticulture Complex

12500 Campus Drive
Oakland, CA 94616

BID SET

ISSUE DATE	03/03/2022
N&T JOB NUMBER	22003

REVISIONS

	DATE	DESCRIPTION
1		

DRAWN BY CAD | CHECKED BY RAJ

SHEET TITLE

COVER SHEET - TECHNOLOGY

SHEET NUMBER

T0.01

4/3/2020 7:20:00 PM BIM 360://PCCD Merritt Horticulture/Merritt Horticulture_2020.rvt

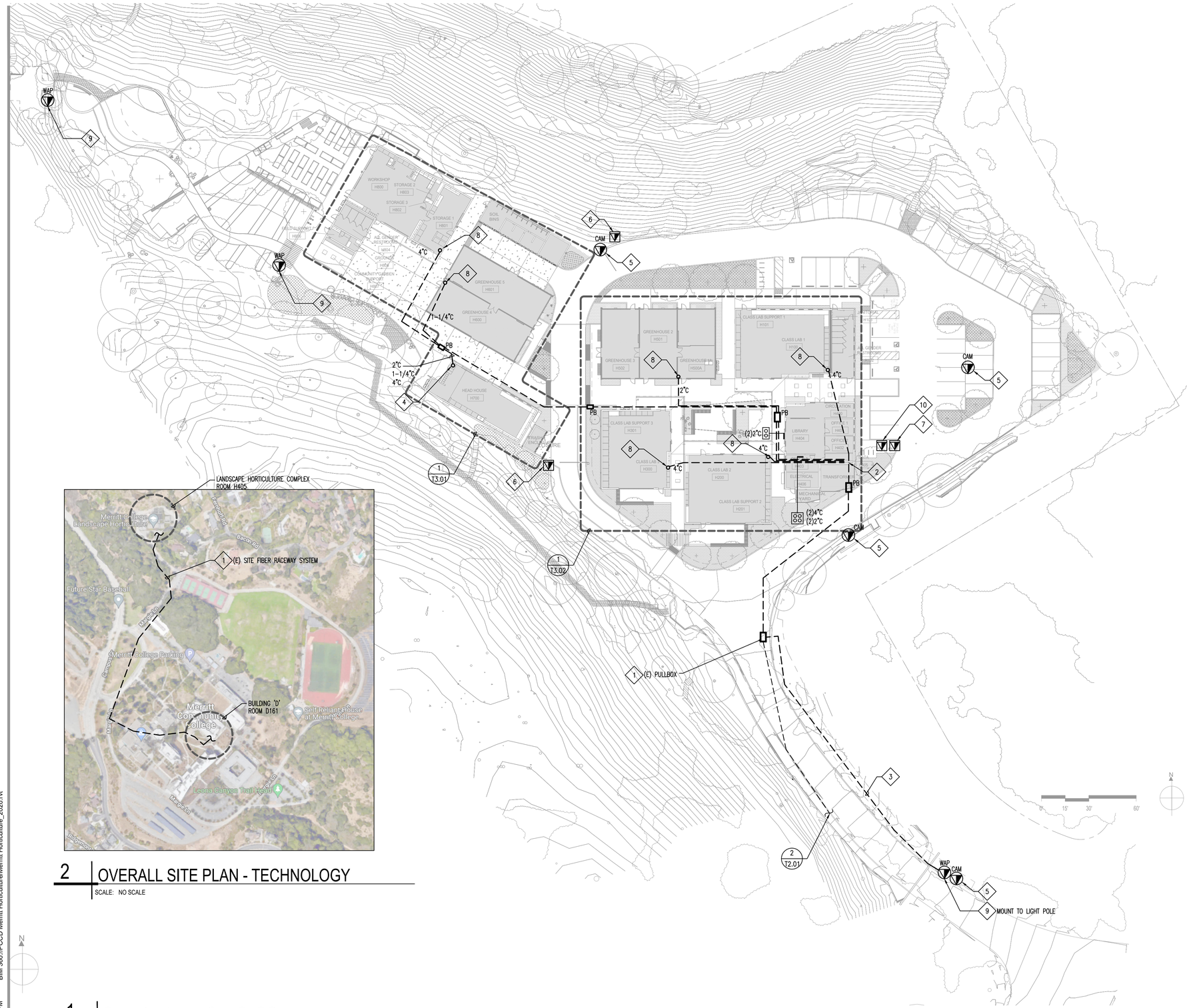

2 OVERALL SITE PLAN - TECHNOLOGY

SCALE: NO SCALE

1 SITE PLAN - TECHNOLOGY

SCALE: 1/40" = 1'-0"

GENERAL SHEET NOTES

A. EXISTING UNDERGROUND UTILITIES AND STRUCTURES ARE KNOWN TO EXIST ON THE PROJECT SITE. CONTRACTOR TO MAKE USE OF ALL CONSTRUCTION DOCUMENTS TO ASSIST IN LOCATING THE UNDERGROUND UTILITIES AND STRUCTURES. NO REPRESENTATION AS TO ACCURACY OR COMPLETENESS OF THE LOCATION OF THE UNDERGROUND UTILITIES OR STRUCTURE EXISTS.

B. CONTRACTOR TO EXERCISE PRECAUTIONARY MEANS INCLUDING HAND DIGGING OR VACUUM EXCAVATION TO PROTECT THE EXISTING UTILITIES AND STRUCTURES. WHERE EXACT LOCATIONS OF UTILITIES AND STRUCTURE CAN NOT BE DETERMINED, HAND OR VACUUM EXCAVATION MAY BE REQUIRED.

C. COORDINATE CONDUIT TRENCHING WITH OTHER DISCIPLINES TO AVOID CONFLICT. LOCATE PULL BOXES IN PLANTERS WHEREVER POSSIBLE. COORDINATE EXACT PULL BOX LOCATIONS WITH LANDSCAPING. REFER TO CIVIL DRAWINGS FOR ADDITIONAL INFORMATION.

D. PROVIDE TRAFFIC LID WHERE REQUIRED FOR PULL BOXES (CHRISTY BOXES). PULL BOX SIZES SHOWN FOR STRAIGHT PULL APPLICATION ONLY. SIZE PER CEC ARTICLE 314. LABEL "TELECOM"

E. COORDINATE EXACT ROUTING OF UNDERGROUND INFRASTRUCTURE WITH CIVIL DRAWINGS. PROVIDE ADDITIONAL SPLICE/PULL BOXES AS REQUIRED IF CONDUIT BENDS EXCEED THREE 90 DEGREE BENDS (OR 270 DEGREES TOTAL).

F. PROVIDE BLUE PHONES AS DIRECTED BY DISTRICTS PROJECT MANAGER. PROVIDE COMPLETE CONNECTIONS FOR AN OPERABLE SYSTEM.

SHEET NOTES

1. PROVIDE NEW SM FIBER END-TO-END FROM BUILDING D, ROOM D161 EXISTING TERMINATION POINT TO LANDSCAPE HORTICULTURE COMPLEX, ROOM H405 FOR FIBER BACKBONE SYSTEM. REFER TO OVERALL SITE PLAN THIS SHEET AND CMIL DRAWINGS FOR ADDITIONAL INFORMATION.
2. INCOMING SERVICE POINT OF CONNECTION. COORDINATE ALL INCOMING SERVICE WITH DISTRICT. ALL EXISTING CAMPUS NETWORK CONNECTIONS WILL TIE-IN TO THIS LOCATION.
3. 2"C AND FIBER CONNECTIVITY FOR SECURITY AND ACCESS CONTROL SYSTEM. REFER TO T4.01 FOR ADDITIONAL INFORMATION
4. PROVIDE FIBER CONNECTIVITY TO WALL MOUNTED RACK.
5. CAMERA TO BE FURNISHED AND INSTALLED AT LIGHT POLE BY VENDOR. REFER TO 1/E6.05 FOR ADDITIONAL INFORMATION.
6. FOR DATA CONNECTIVITY TO ARM GATE. PROVIDE DETECTOR LOOP PER MANUFACTURER INSTRUCTIONS.
7. FOR EMERGENCY BLUE PHONE STATION. BLUE PHONE BY OTHERS.
8. STUB UP CONDUIT FOR ROUTING OF NETWORK CATEGORY CABLES.
9. PROVIDE MIN. 2"C AND FIBER CONNECTIVITY FOR WIFI FROM HEADHOUSE ROOM H700. DEVICE AND FIBER-TO-COPPER CONVERTER BY VENDOR.
10. FOR RELOCATED TICKET MACHINE.

APPROVALS

IDENTIFICATION STAMP
DIV. OF THE STATE ARCHITECT
APP: 01-119409 INC:
REVIEWED FOR
SS ☑ FLS ☑ ACS ☑
DATE: 03/14/2022

NOLL & TAM ARCHITECTS
729 Heinz Avenue
Berkeley, CA 94710
tel 510.542.2200
fax 510.542.2201

RIJA
5515 Doyle Street, #7
Emeryville, CA 94608
www.rijainc.com
RIJA Job #: 2020011

SEAL

REGISTERED PROFESSIONAL ENGINEER
RAY A. JACHON
No. E19586
Exp. 06-30-23
ELECTRICAL
STATE OF CALIFORNIA

Date Signed: 3/1/22

PROJECT TITLE

Peralta Community College District
Merritt Landscape Horticulture Complex

12500 Campus Drive
Oakland, CA 94616

BID SET

ISSUE DATE	03/03/2022
N&T JOB NUMBER	22003

REVISIONS

	DATE	DESCRIPTION

DRAWN BY	CAD	CHECKED BY	RAJ

SHEET TITLE
SITE PLAN - TECHNOLOGY

SHEET NUMBER
T2.01

4/3/2020 7:20:00 PM BIM 360://PCCD Merritt Horticulture/Merritt Horticulture_2020.rvt

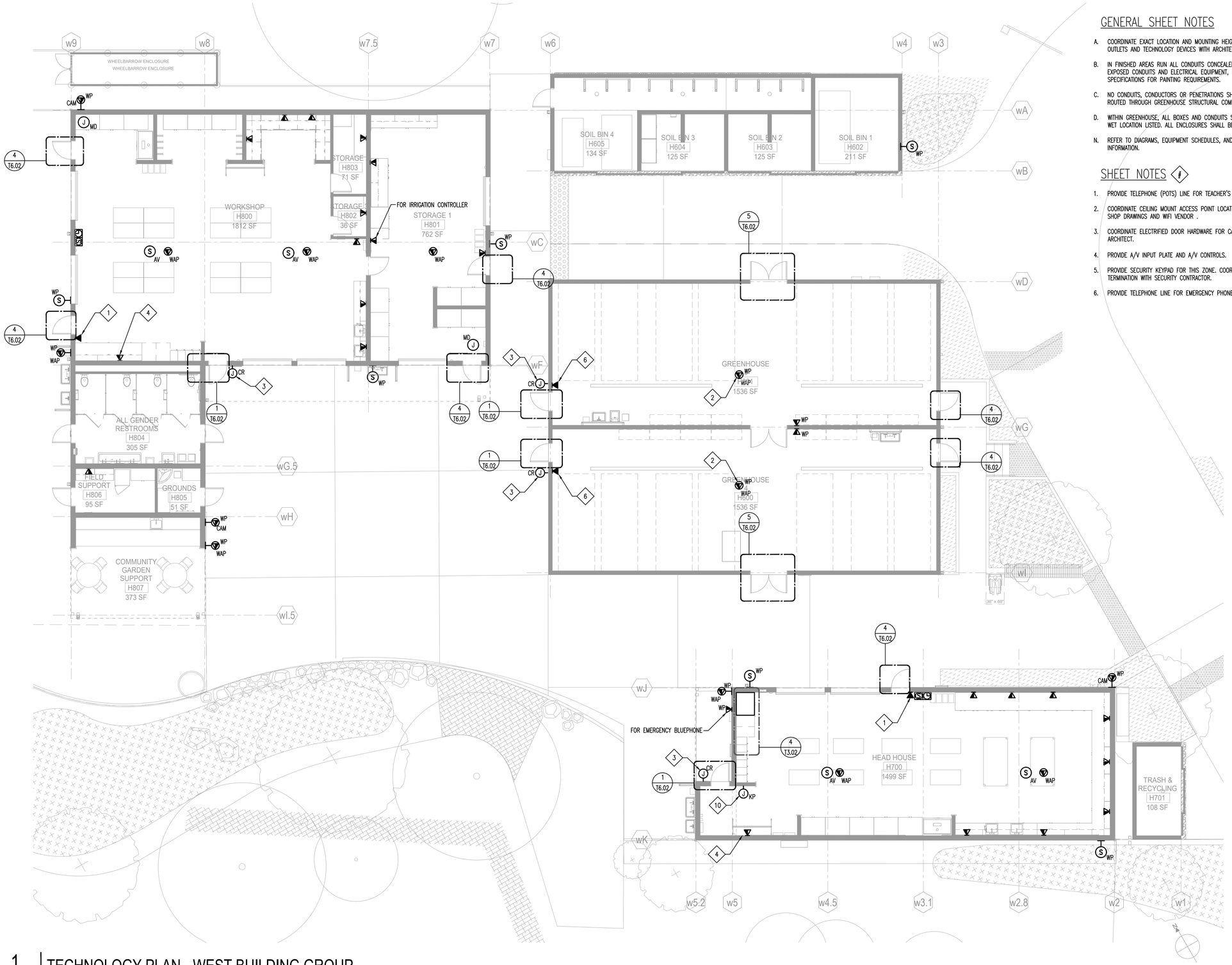

1 TECHNOLOGY PLAN - WEST BUILDING GROUP

SCALE: 1/8" = 1'-0"

GENERAL SHEET NOTES

A. COORDINATE EXACT LOCATION AND MOUNTING HEIGHT OF VOICE/DATA OUTLETS AND TECHNOLOGY DEVICES WITH ARCHITECT PRIOR TO INSTALLATION.

B. IN FINISHED AREAS RUN ALL CONDUITS CONCEALED U.O.N. PAINT ALL EXPOSED CONDUITS AND ELECTRICAL EQUIPMENT, REFER TO ARCHITECT SPECIFICATIONS FOR PAINTING REQUIREMENTS.

C. NO CONDUITS, CONDUCTORS OR PENETRATIONS SHALL BE ALLOWED TO BE ROUTED THROUGH GREENHOUSE STRUCTURAL COMPONENTS.

D. WITHIN GREENHOUSE, ALL BOXES AND CONDUITS SHALL BE PVC COATED, WET LOCATION LISTED. ALL ENCLOSURES SHALL BE NEMA 4X.

N. REFER TO DIAGRAMS, EQUIPMENT SCHEDULES, AND DETAILS FOR ADDITIONAL INFORMATION.

SHEET NOTES

1. PROVIDE TELEPHONE (POTS) LINE FOR TEACHER'S PHONE.
2. COORDINATE CEILING MOUNT ACCESS POINT LOCATION WITH GREENHOUSE SHOP DRAWINGS AND WIFI VENDOR .
3. COORDINATE ELECTRIFIED DOOR HARDWARE FOR CARD READERS WITH ARCHITECT.
4. PROVIDE A/V INPUT PLATE AND A/V CONTROLS.
5. PROVIDE SECURITY KEYPAD FOR THIS ZONE. COORDINATE PROGRAMMING AND TERMINATION WITH SECURITY CONTRACTOR.
6. PROVIDE TELEPHONE LINE FOR EMERGENCY PHONE.

APPROVALS

IDENTIFICATION STAMP
DIV. OF THE STATE ARCHITECT
APP: 01-119409 INC:
REVIEWED FOR
SS ☑ FLS ☑ ACS ☑
DATE: 03/14/2022

NOLL & TAM ARCHITECTS
729 Heinz Avenue
Berkeley, CA 94710
tel 510.542.2200
fax 510.542.2201

RIJA
5515 Doyle Street, #7
Emeryville, CA 94608
www.rijainc.com
RIJA Job #: 2020011

SEAL

REGISTERED PROFESSIONAL ENGINEER
RAY A. JUACHON
No. E19586
Exp. 06-30-23
ELECTRICAL
STATE OF CALIFORNIA

Date Signed: 3/1/22

PROJECT TITLE

Peralta Community College District
Merritt Landscape Horticulture Complex

12500 Campus Drive
Oakland, CA 94616

BID SET

ISSUE DATE	03/03/2022
N&T JOB NUMBER	22003

REVISIONS

	DATE	DESCRIPTION

DRAWN BY	CAD	CHECKED BY	RAJ

SHEET TITLE
TECHNOLOGY PLAN - WEST BUILDING GROUP

SHEET NUMBER
T2.31

4/3/2020 7:20:00 PM BIM 360://PCCD Merritt Horticulture/Merritt Horticulture_2020.rvt

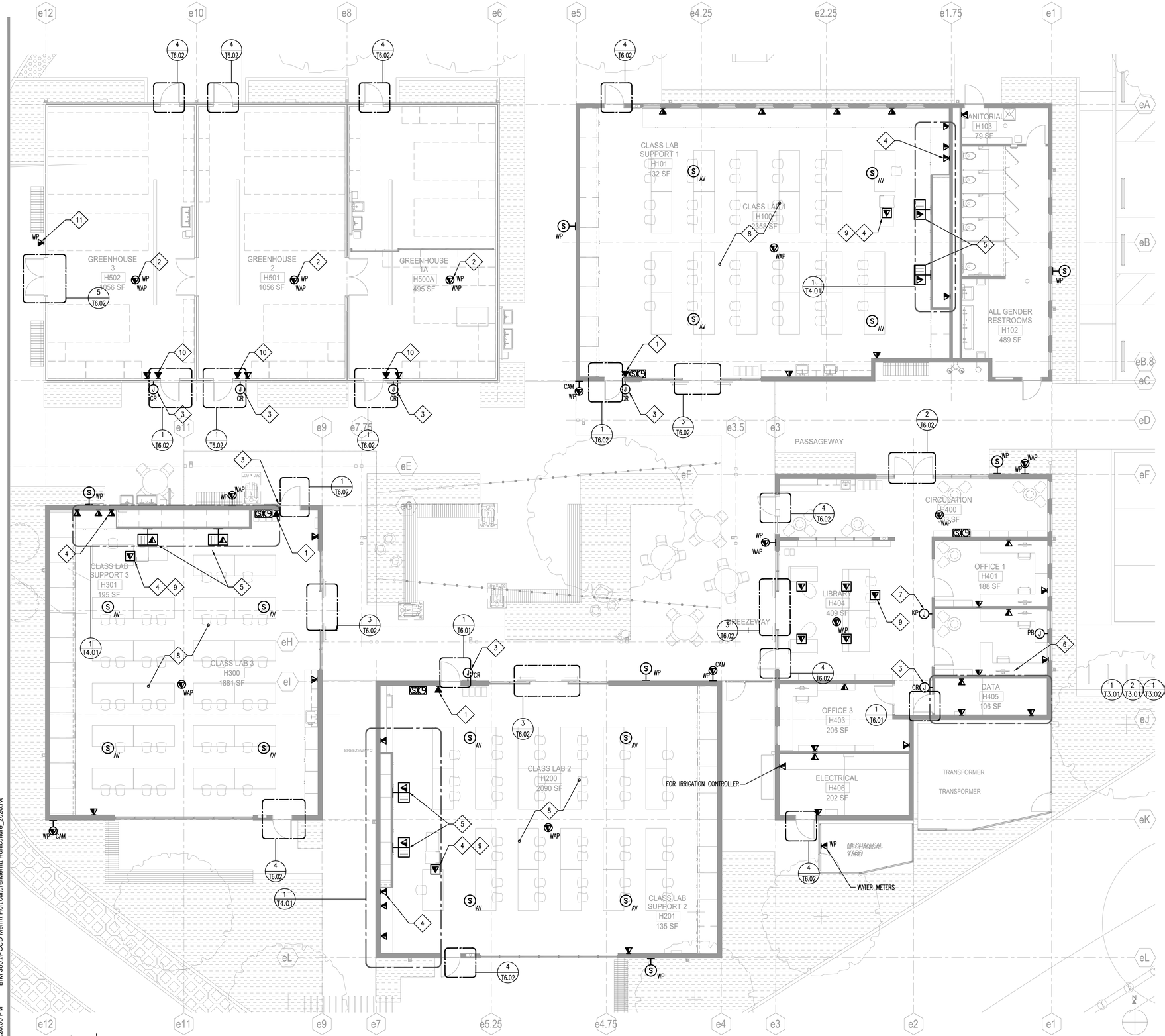

1 TECHNOLOGY PLAN - EAST BUILDING GROUP

SCALE: 1/8" = 1'-0"

GENERAL SHEET NOTES

A. COORDINATE EXACT LOCATION AND MOUNTING HEIGHT OF VOICE/DATA OUTLETS AND TECHNOLOGY DEVICES WITH ARCHITECT PRIOR TO INSTALLATION.

B. IN FINISHED AREAS RUN ALL CONDUITS CONCEALED U.O.N. PAINT ALL EXPOSED CONDUITS AND ELECTRICAL EQUIPMENT, REER TO ARCHITECT SPECIFICATIONS FOR PAINTING REQUIREMENTS.

C. REFER TO DIAGRAMS, EQUIPMENT SCHEDULES, AND DETAILS FOR ADDITIONAL INFORMATION.

D. NO CONDUITS, CONDUCTORS OR PENETRATIONS SHALL BE ALLOWED TO BE ROUTED THROUGH GREENHOUSE STRUCTURAL COMPONENTS.

E. WITHIN GREENHOUSE, ALL BOXES AND CONDUITS SHALL BE PVC COATED, WET LOCATION LISTED. ALL ENCLOSURES SHALL BE NEMA 4X.

SHEET NOTES

1. PROVIDE TELEPHONE (POTS) LINE FOR TEACHER'S PHONE.
2. COORDINATE CEILING MOUNT ACCESS POINT WITH GREENHOUSE SHOP DRAWINGS AND WIFI VENDOR
3. COORDINATE ELECTRIFIED DOOR HARDWARE FOR CARD READERS WITH ARCHITECT.
4. AV INPUT PLATE AND AV CONTROLS, REFER TO T4.02.
5. PROVIDE COMBINATION DATA/POWER OUTLET FOR SHORT-THROW PROJECTOR. MOUNT AT 96" AFF (U.O.N.).
6. LOCATE SECURITY WORKSTATION IN ROOM.
7. PROVIDE SECURITY KEYPAD FOR THIS ZONE. COORDINATE PROGRAMMING AND TERMINATION WITH SECURITY CONTRACTOR.
8. PROVIDE ASSISTED LISTENING SYSTEM FOR CLASSROOM USE. SYSTEM SHALL TIE- IN TO CLASSROOM AV SYSTEM, REFER TO T4.02.
9. REFER TO ELECTRICAL DRAWINGS FOR COMBINED FLOOR BOX REQUIREMENTS.
10. PROVIDE TELEPHONE LINE FOR EMERGENCY PHONE.
11. FOR SEED CONTROLLER. COORDINATE ROUGH-IN REQUIREMENTS WITH MANUFACTURERS INSTALLATION INSTRUCTIONS.

APPROVALS

IDENTIFICATION STAMP
DIV. OF THE STATE ARCHITECT
APP: 01-119409 INC:
REVIEWED FOR
SS ☑ FLS ☑ ACS ☑
DATE: 03/14/2022

NOLL & TAM ARCHITECTS
729 Heinz Avenue
Berkeley, CA 94710
tel 510.542.2200
fax 510.542.2201

RIJA
5515 Doyle Street, #7
Emeryville, CA 94608
www.rijainc.com
RIJA Job #: 2020011

SEAL

REGISTERED PROFESSIONAL ENGINEER
RAY A. JUACHON
No. E19586
Exp. 06-30-23
ELECTRICAL
STATE OF CALIFORNIA

Date Signed: 3/1/22

PROJECT TITLE

Peralta Community College District

Merritt Landscape Horticulture Complex

12500 Campus Drive
Oakland, CA 94616

BID SET

ISSUE DATE	03/03/2022
N&T JOB NUMBER	22003

REVISIONS

	DATE	DESCRIPTION

DRAWN BY **CAD** CHECKED BY **RAJ**

SHEET TITLE

TECHNOLOGY PLAN - EAST BUILDING GROUP

SHEET NUMBER

T2.32

4/3/2020 7:20:00 PM BIM 360://PCCD Merritt Horticulture/Merritt Horticulture_2020.rvt

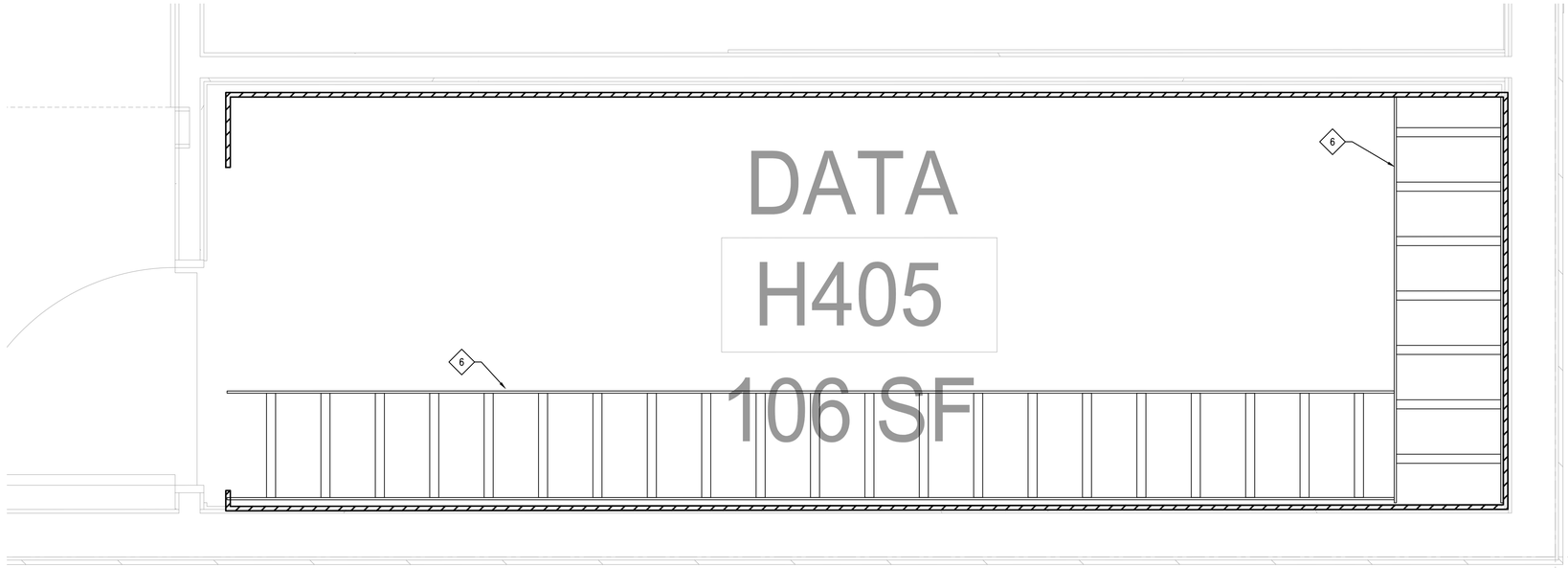

3 ENLARGED DATA ROOM OVERHEAD VIEW

SCALE: 1" = 1'-0"

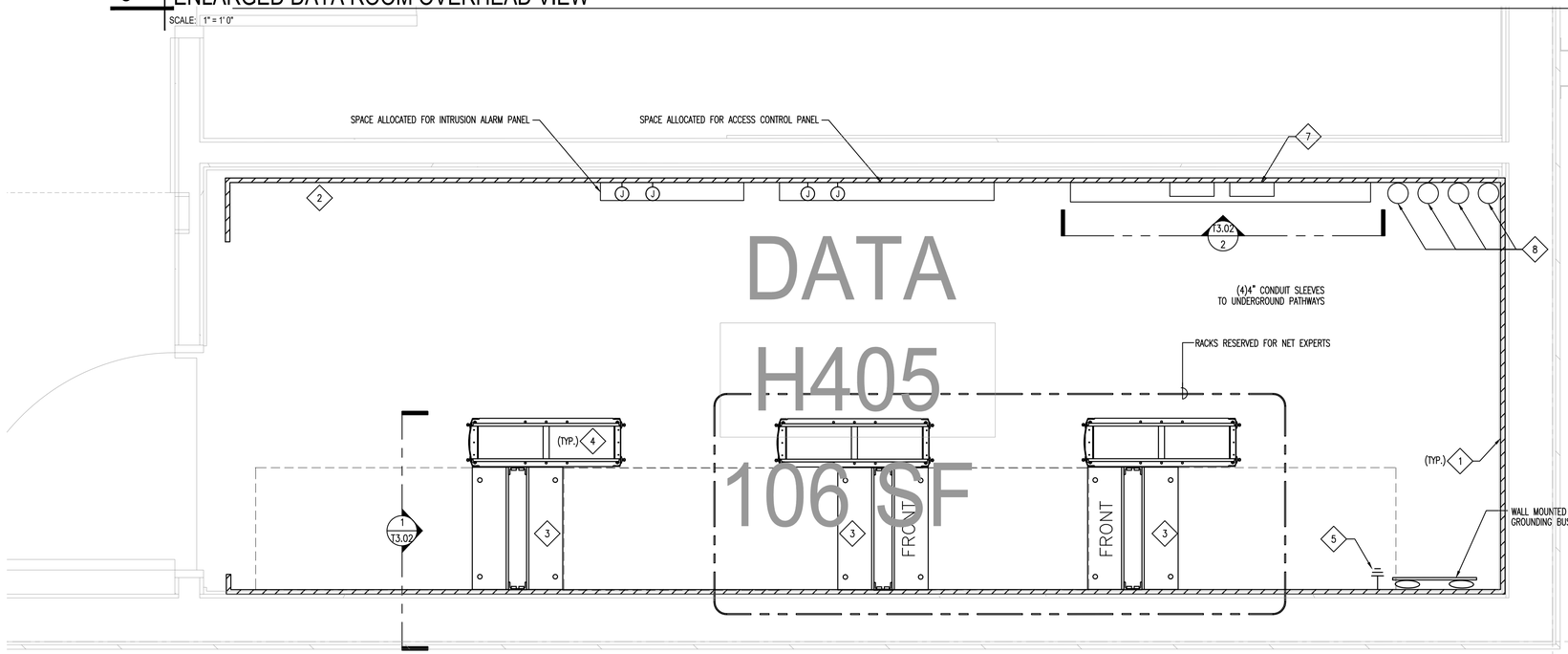

2 ENLARGED DATA ROOM PLAN VIEW

SCALE: 1" = 1'-0"

GENERAL SHEET NOTES

A. ELECTRICAL CONTRACTOR SHALL PROVIDE AND INSTALL 50 FOOT CANDLES MEASURED 3' ABOVE THE FINISHED FLOOR IN THE MIDDLE OF AISLES BETWEEN RACKS. LIGHT SHALL BE CONTROLLED BY ONE SWITCH LOCATED NEAR THE ENTRANCE DOOR.

B. THE TEMPERATURE WITHIN THE TELECOM ROOM SHALL RANGE BETWEEN 68°F TO 74°F. GENERAL CONTRACTOR SHALL PROVIDE AND INSTALL ENVIRONMENT SENSOR TO MONITOR THE TEMPERATURE IN ALL TELECOM ROOMS.

C. ALL TELECOM ROOM SPACES SHALL BE PROVIDED WITH HVAC 24 HOURS PER DAY AND 365 DAYS PER YEAR TO SUPPORT EQUIPMENT LOAD .

D. ALL WALL OUTLETS WITHIN THE TELECOM ROOM SHALL BE FLUSH MOUNT, NOT SURFACE MOUNT.

E. AUDIO VISUAL CONTRACTOR SHALL PROVIDE RACK ELEVATION OF ALL AV EQUIPMENT FOR OWNER TO REVIEW AND APPROVE PRIOR TO INSTALLATION.

F. SECURITY CONTRACTOR SHALL SHALL PROVIDE RACK AND WALL ELEVATION EQUIPMENT FOR OWNER TO REVIEW AND APPROVE PRIOR TO INSTALLATION.

G. ELECTRICAL CONTRACTOR SHALL PROVIDE AND INSTALL EQUIPMENT OUTLET BEHIND EQUIPMENT AFTER EQUIPMENT RACK IS INSTALLED. COORDINATE INSTALLATION ON FIELD WITH CABLING CONTRACTOR.

SHEET NOTES

1. GENERAL CONTRACTOR SHALL PROVIDE AND INSTALL ¾" A/C GRADE PLYWOOD (SEE SHEET T3.02), LEAVE THE FIRE STAMP EXPOSED AND PAINT THE REST OF PLYWOOD TO MATCH.
2. SPACE ALLOCATED FOR SERVICE PROVIDER (DEMARC).
3. PROVIDE AND INSTALL 19" X 7' , 2-POST RACK (SEE DETAIL 1, THIS SHEET).
4. PROVIDE AND INSTALL 8" DOUBLE SIDE VERTICAL CABLE MANAGERS (EQUIPMENT WEIGHT IS LESS THAN 20 LBS.).
5. PROVIDE AND INSTALL TELECOMMUNICATION GROUND BUS BAR AT 7'-8" AFF (EQUIPMENT WEIGHT IS LESS THAN 20 LBS.)
6. PROVIDE AND INSTALL 18" LADDER RACK (SEE DETAIL 4 & 6, SHEET T6.01).
7. PROVIDE AND INSTALL 110-BLOCK ON WALL.
8. INCOMING CONDUITS

* SEE ANCHORAGE CALCULATIONS ON SHEET T3.02, DETAIL 5 FOR REFRENCE.

CONTRACTOR TO REFER TO PRODUCT MANUFACTURER INFORMATION FOR MODEL #, TYPE, AND MATERIALS.

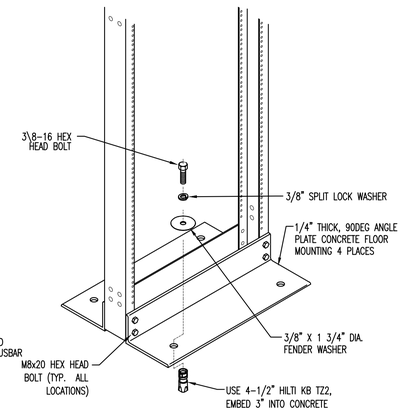

1 RACK MOUNT DETAIL

SCALE: NTS

APPROVALS

IDENTIFICATION STAMP
DIV. OF THE STATE ARCHITECT
APP: 01-119409 INC:
REVIEWED FOR
SS ☑ FLS ☑ ACS ☑
DATE: 03/14/2022

NOLL & TAM ARCHITECTS
729 Heinz Avenue
Berkeley, CA 94710
tel 510.542.2200
fax 510.542.2201

RIJA
5515 Doyle Street, #7
Emeryville, CA 94608
www.rijainc.com
RIJA Job #: 2020011

SEAL

REGISTERED PROFESSIONAL ENGINEER
RAY A. JUDACHON
No. E19586
Exp. 06-30-23
ELECTRICAL
STATE OF CALIFORNIA

Date Signed: 3/1/22

PROJECT TITLE

Peralta Community College District
Merritt Landscape Horticulture Complex

12500 Campus Drive
Oakland, CA 94616

BID SET

ISSUE DATE	03/03/2022
N&T JOB NUMBER	22003

REVISIONS

	DATE	DESCRIPTION

DRAWN BY CAD | CHECKED BY RAJ

SHEET TITLE
ENLARGED PLANS - TECHNOLOGY

SHEET NUMBER
T3.01

4/3/2020 7:20:00 PM BIM 360://PCCD Merritt Horticulture/Merritt Horticulture_2020.rvt

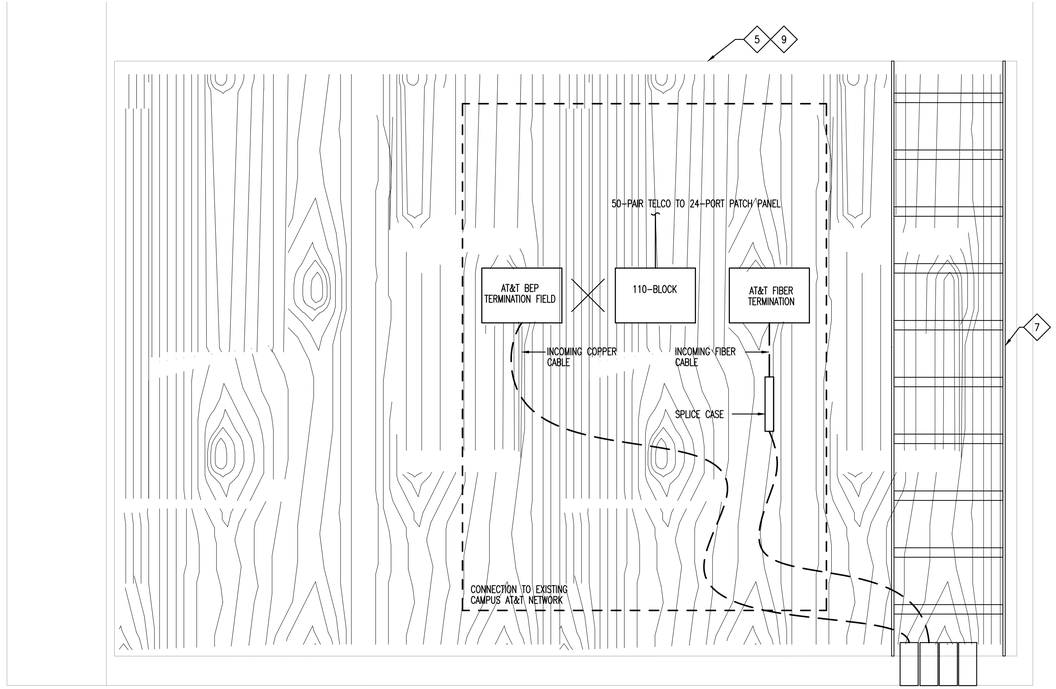

2 WALL ELEVATION - EAST WALL

SCALE: 1" = 1'-0"

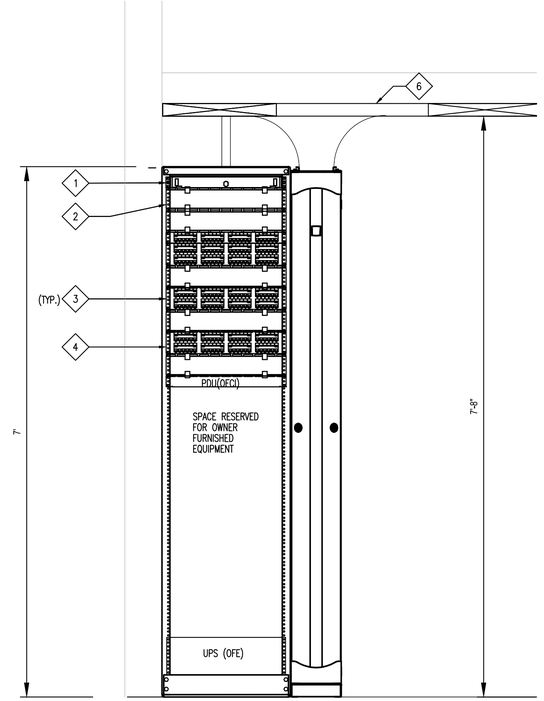

1 RACK ELEVATION

SCALE: 1" = 1'-0"

GENERAL SHEET NOTES

A. ELECTRICAL CONTRACTOR SHALL PROVIDE AND INSTALL 50 FOOT CABLES MEASURED 3' ABOVE THE FINISHED FLOOR IN THE MIDDLE OF AISLES BETWEEN RACKS. LIGHT SHALL BE CONTROLLED BY ONE SWITCH LOCATED NEAR THE ENTRANCE DOOR.

B. THE TEMPERATURE WITHIN THE TELECOM ROOM SHALL RANGE BETWEEN 68°F TO 74°F. GENERAL CONTRACTOR SHALL PROVIDE AND INSTALL ENVIRONMENT SENSOR TO MONITOR THE TEMPERATURE IN ALL TELECOM ROOMS.

C. ALL TELECOM ROOM SPACES SHALL BE PROVIDED WITH HVAC 24 HOURS PER DAY AND 365 DAYS PER YEAR TO SUPPORT EQUIPMENT LOAD .

D. ALL WALL OUTLETS WITHIN THE TELECOM ROOM SHALL BE FLUSH MOUNT, NOT SURFACE MOUNT.

E. AUDIO VISUAL CONTRACTOR SHALL PROVIDE RACK ELEVATION OF ALL AV EQUIPMENT FOR OWNER TO REVIEW AND APPROVE PRIOR TO INSTALLATION.

F. SECURITY CONTRACTOR SHALL SHALL PROVIDE RACK AND WALL ELEVATION EQUIPMENT FOR OWNER TO REVIEW AND APPROVE PRIOR TO INSTALLATION.

G. G.ELECTRICAL CONTRACTOR SHALL PROVIDE AND INSTALL EQUIPMENT OUTLET BEHIND EQUIPMENT AFTER EQUIPMENT RACK IS INSTALLED. COORDINATE INSTALLATION ON FIELD WITH CABLING CONTRACTOR.

SHEET NOTES

1. COMMUNICATION CONTRACTOR SHALL PROVIDE AND INSTALL 1RU FIBER PATCH PANEL.
2. COMMUNICATION CONTRACTOR SHALL PROVIDE 110 BLOCK NETWORK SWITCH.
3. COMMUNICATION CONTRACTOR SHALL PROVIDE AND INSTALL 48-PORTS COPPER PATCH PANEL TO SUPPORT HORIZONTAL CABLES.
4. SPACE ALLOCATED FOR SWITCH PROVIDED AND INSTALLED BY OWNER.
5. GENERAL CONTRACTOR SHALL PROVIDE AND INSTALL ¾" A/C GRADE PLYWOOD, LEAVE THE FIRE STAMP EXPOSED AND PAINT THE REST OF PLYWOOD TO MATCH.
6. COMMUNICATION CONTRACTOR SHALL PROVIDE AND INSTALL 18" LADDER RACK.
7. COMMUNICATION CONTRACTOR SHALL PROVIDE AND INSTALL 18" VERTICAL LADDER RACK.
8. ATTACH ALL BOXES TO PLYWOOD WALLS USING #12 X 1½" LONG WOOD SCREWS AT 4 CORNERS AND 8" OC AT ALL SIDES OF ALL BOXES (TYP.)
9. ATTACH PLYWOOD TO STUDS– USE 10D NAILS AT 6" ON AT ALL PANEL EDGES (4 SIDES) AND ALL INTERIOR STUDS.

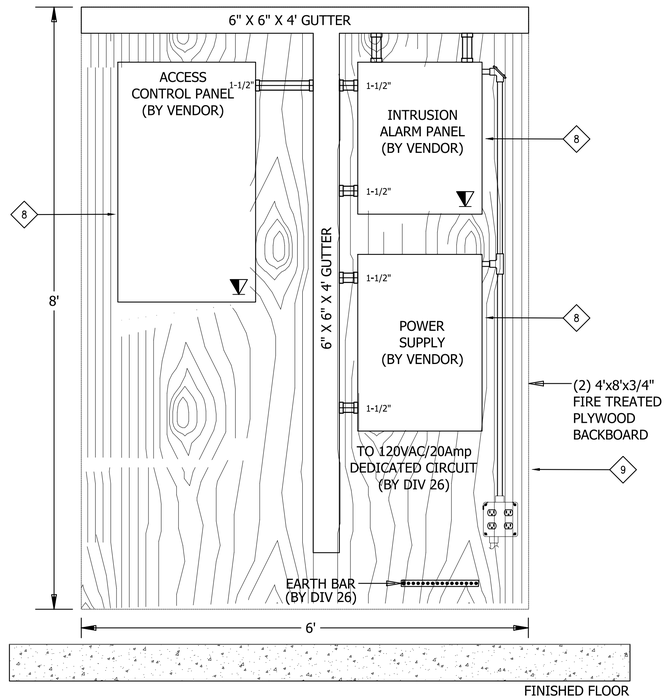

3 SECURITY EQUIPMENT ELEVATION

SCALE: NTS

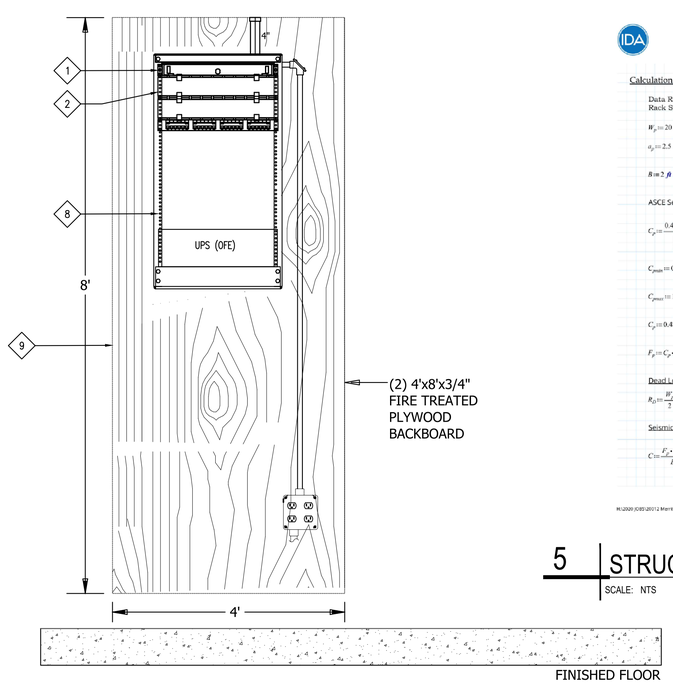

4 WALL MOUNTED EQUIPMENT RACK ELEVATION IN HEADHOUSE H700

SCALE: NTS

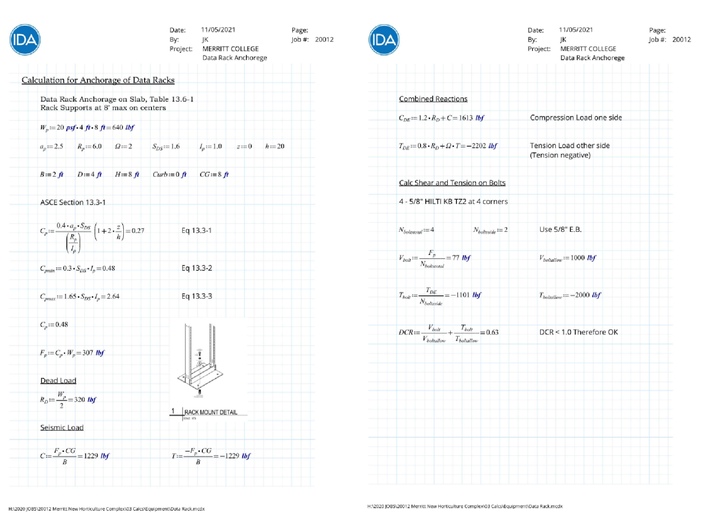

IDA — Date: 11/05/2021 By: JK Project: MERRITT COLLEGE Data Rack Anchorage Page: Job #: 20012

Calculation for Anchorage of Data Racks

Data Rack Anchorage on Slab, Table 13.6-1
Rack Supports at 8' max on centers

$W_p = 20\ psf \cdot 4\ ft \cdot 8\ ft = 640\ lbf$

$a_p = 2.5 \quad R_p = 6.0 \quad \Omega = 2 \quad S_{DS} = 1.6 \quad I_p = 1.0 \quad z = 0 \quad h = 20$

$B = 2\ ft \quad D = 4\ ft \quad H = 8\ ft \quad Curb = 0\ ft \quad CG = 8\ ft$

ASCE Section 13.3-1

$C_p = \frac{0.4 \cdot a_p \cdot S_{DS}}{\left(\frac{R_p}{I_p}\right)} \left(1 + 2 \cdot \frac{z}{h}\right) = 0.27$ Eq 13.3-1

$C_{pmin} = 0.3 \cdot S_{DS} \cdot I_p = 0.48$ Eq 13.3-2

$C_{pmax} = 1.65 \cdot S_{DS} \cdot I_p = 2.64$ Eq 13.3-3

$C_p = 0.48$

$F_p = C_p \cdot W_p = 307\ lbf$

Dead Load

$R_D = \frac{W_p}{2} = 320\ lbf$

Seismic Load

$C = \frac{F_p \cdot CG}{B} = 1229\ lbf$

1 RACK MOUNT DETAIL

$T = \frac{-F_p \cdot CG}{B} = -1229\ lbf$

M:\2020 JOBS\20012 Merritt\New Horticulture Complex\03 Calcs\Equipment\Data Rack.mcdx

IDA — Date: 11/05/2021 By: JK Project: MERRITT COLLEGE Data Rack Anchorage Page: Job #: 20012

Combined Reactions

$C_{Tot} = 1.2 \cdot R_D + C = 1613\ lbf$ Compression Load one side

$T_{Tot} = 0.8 \cdot R_D + \Omega \cdot T = -2202\ lbf$ Tension Load other side (Tension negative)

Calc Shear and Tension on Bolts

4 - 5/8" HILTI KB TZ2 at 4 corners

$N_{bolts\,wide} = 4 \quad N_{bolts\,side} = 2$ Use 5/8" E.B.

$V_{bolt} = \frac{F_p}{N_{bolts\,wide}} = 77\ lbf$ $V_{bolt\,allow} = 1000\ lbf$

$T_{bolt} = \frac{T_{tot}}{N_{bolts\,side}} = -1101\ lbf$ $T_{bolt\,allow} = -2000\ lbf$

$DCR = \frac{V_{bolt}}{V_{bolt\,allow}} + \frac{T_{bolt}}{T_{bolt\,allow}} = 0.63$ DCR < 1.0 Therefore OK

M:\2020 JOBS\20012 Merritt\New Horticulture Complex\03 Calcs\Equipment\Data Rack.mcdx

5 STRUCTURAL LOAD CALCULATION

SCALE: NTS

APPROVALS

IDENTIFICATION STAMP
DIV. OF THE STATE ARCHITECT
APP: 01-119409 INC:
REVIEWED FOR
SS ☑ FLS ☑ ACS ☑
DATE: 03/14/2022

NOLL & TAM ARCHITECTS
729 Heinz Avenue
Berkeley, CA 94710
tel 510.542.2200
fax 510.542.2201

RIJA
5515 Doyle Street, #7
Emeryville, CA 94608
www.rijainc.com
RIJA Job #: 2020011

SEAL

REGISTERED PROFESSIONAL ENGINEER — RAY A. JUACHON — No. E19586 Exp. 06-30-23 — ELECTRICAL — STATE OF CALIFORNIA

Date Signed: 3/1/22

PROJECT TITLE

Peralta Community College District
Merritt Landscape Horticulture Complex

12500 Campus Drive
Oakland, CA 94616

BID SET

ISSUE DATE	03/03/2022
N&T JOB NUMBER	22003

REVISIONS

	DATE	DESCRIPTION

DRAWN BY CAD | CHECKED BY RAJ

SHEET TITLE
ENLARGED PLANS - TECHNOLOGY

SHEET NUMBER
T3.02

4/3/2020 7:20:00 PM BIM 360://PCCD Merritt Horticulture/Merritt Horticulture_2020.rvt

GENERAL SHEET NOTES

A. PROVIDE PLENUM RATED CABLING AS REQUIRED

SHEET NOTES

1. PROVIDE AND INSTALL 1 1/2" CONDUIT FOR AV AND 1" CONDUIT FOR DATA AND 3/4" CONDUIT FOR POWER.
2. PROVIDE J-BOX FOR CONDUIT AND CABLE CONNECTIONS.
3. PROVIDE AND INSTALL 1 1/2" CONDUIT FOR AV.
4. PROVIDE AND INSTALL 1" CONDUIT FOR DATA.
5. REFER TO STRUCTURAL DETAIL #3, SHEET S8.01 FOR MOUNTING AND ANCHORAGE INFORMATION.

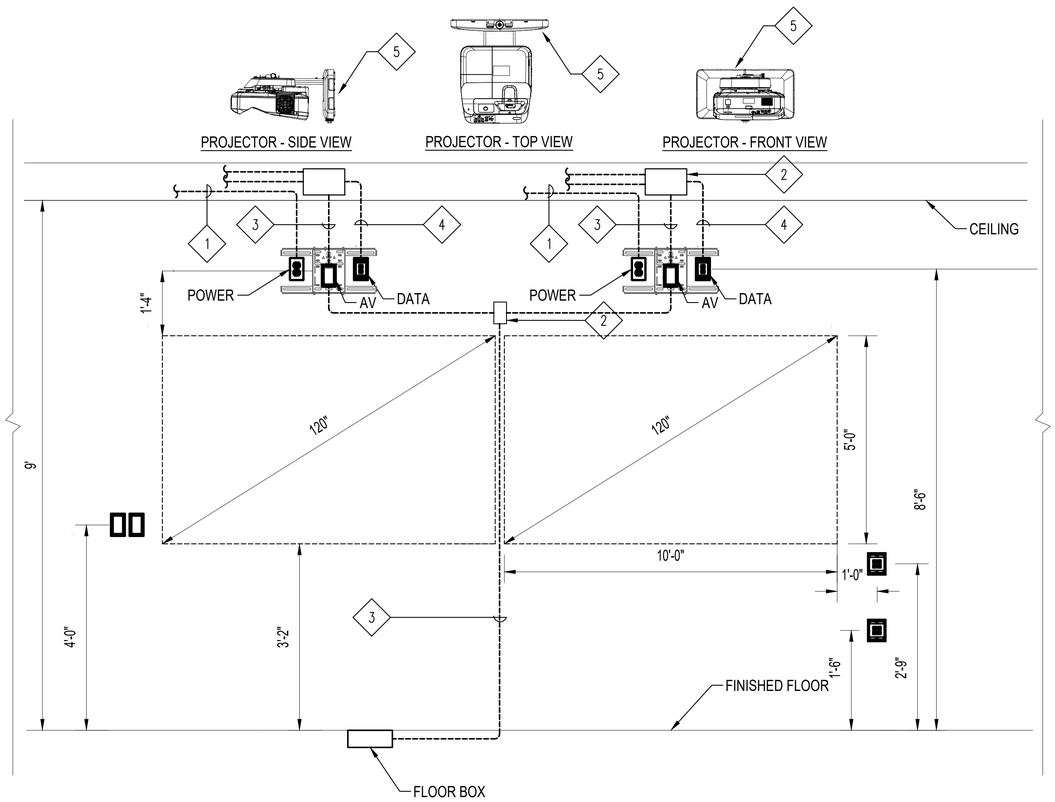

1 TEACHING WALL ELAVATION DETAIL (WITH SHORT -THROW PROJECTOR)

SCALE: 1/2" = 1'-0"

APPROVALS

IDENTIFICATION STAMP
DIV. OF THE STATE ARCHITECT
APP: 01-119409 INC:
REVIEWED FOR
SS ☑ FLS ☑ ACS ☑
DATE: 03/14/2022

NOLL & TAM ARCHITECTS
729 Heinz Avenue
Berkeley, CA 94710
tel 510.542.2200
fax 510.542.2201

RIJA
5515 Doyle Street, #7
Emeryville, CA 94608
www.rijainc.com
RIJA Job #: 2020011

SEAL

REGISTERED PROFESSIONAL ENGINEER
RAY A. JUACHON
No. E19586
Exp. 06-30-23
ELECTRICAL
STATE OF CALIFORNIA

Date Signed: 3/1/22

PROJECT TITLE

Peralta Community College District
Merritt Landscape Horticulture Complex

12500 Campus Drive
Oakland, CA 94616

BID SET

ISSUE DATE	03/03/2022
N&T JOB NUMBER	22003

REVISIONS

	DATE	DESCRIPTION

DRAWN BY CAD | CHECKED BY RAJ

SHEET TITLE
ENLARGED PLANS - TECHNOLOGY

SHEET NUMBER
T3.03

4/3/2020 7:20:00 PM BIM 360://PCCD Merritt Horticulture/Merritt Horticulture_2020.rvt

GENERAL SHEET NOTES

A. PROVIDE SEPARATE PULLBOXES FOR TEL/DATA AND FIRE ALARM SITE INFRASTRUCTURE.

B. PROVIDE PULL STRING FOR ALL SITE INFRASTRUCTURE.

C. PROVIDE PLENUM RATED CABLING AS REQUIRED

SHEET NOTES

1. LOW VOLTAGE SERVICES POINT OF CONNECTION.
2. PROVIDE RACEWAY (CONDUIT, CABLE TRAY, OR J-HOOKS AS REQUIRED).
3. 4" CORE/SLEEVES, COORDINATE LOCATION.
4. ONE 4" CONDUIT FOR FIBER CONNECTION TO EXISTING MPOE ROOM.
5. NETWORK EQUIPMENT RACK.
6. NETWORK RACK FOR WIRELESS ACCESS EQUIPMENT. (PROVIDED BY NETEXPERTS)
7. COMMUNICATIONS CONTRACTOR TO CONNECT WIRELESS GATEWAY TO OWNER PROVIDED SWITCH AT THIS RACK LOCATION.

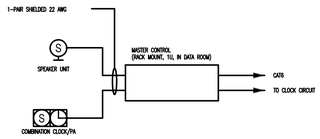

COMBO CLOCK / SPEAKER UNITS	MODELS LOUDSPEAKER: BOSPAK CLOCK: BOGEN BCAL (WIRELESS ANALOG) HOUSING: CS/BU/CK1
OUTDOOR PA SPEAKERS	ATLAS IED- APC-30T
GRILLE ASSEMBLY (BAFFLE)	ESB-CK (FLUSH MOUNT ENCLOSURE)
BACK BOX	ERO-BKS, FEIW (SURFACE MOUNT- WP)

NOTE:

1. PROVIDE CLOCK AND SPEAKER UNITS. WIRING AS SHOWN.

2 CLOCK / PA SYSTEM DIAGRAM

SCALE: NTS

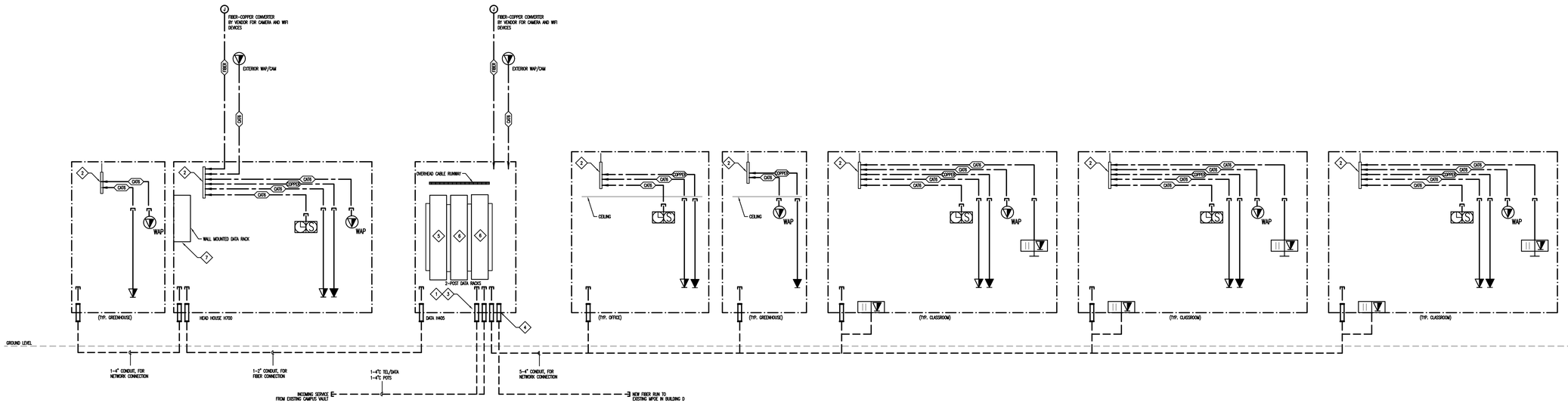

1 TECHNOLOGY PATHWAY DIAGRAM

SCALE: NTS

APPROVALS

IDENTIFICATION STAMP
DIV. OF THE STATE ARCHITECT
APP: 01-119409 INC:
REVIEWED FOR
SS ☑ FLS ☑ ACS ☑
DATE: 03/14/2022

NOLL & TAM ARCHITECTS
729 Heinz Avenue
Berkeley, CA 94710
tel 510.542.2200
fax 510.542.2201

RIJA
5515 Doyle Street, #7
Emeryville, CA 94608
www.rijainc.com
RIJA Job #: 2020011

SEAL

REGISTERED PROFESSIONAL ENGINEER
RAY A. JUACHON
No. E19586
Exp. 06-30-23
ELECTRICAL
STATE OF CALIFORNIA

Date Signed: 3/1/22

PROJECT TITLE

Peralta Community College District
Merritt Landscape Horticulture Complex

12500 Campus Drive
Oakland, CA 94616

BID SET

ISSUE DATE	03/03/2022
N&T JOB NUMBER	22003

REVISIONS

	DATE	DESCRIPTION

DRAWN BY CAD | CHECKED BY RAJ

SHEET TITLE
TECHNOLOGY DIAGRAMS

SHEET NUMBER
T4.01

4/3/2020 7:20:00 PM BIM 360://PCCD Merritt Horticulture/Merritt Horticulture_2020.rvt

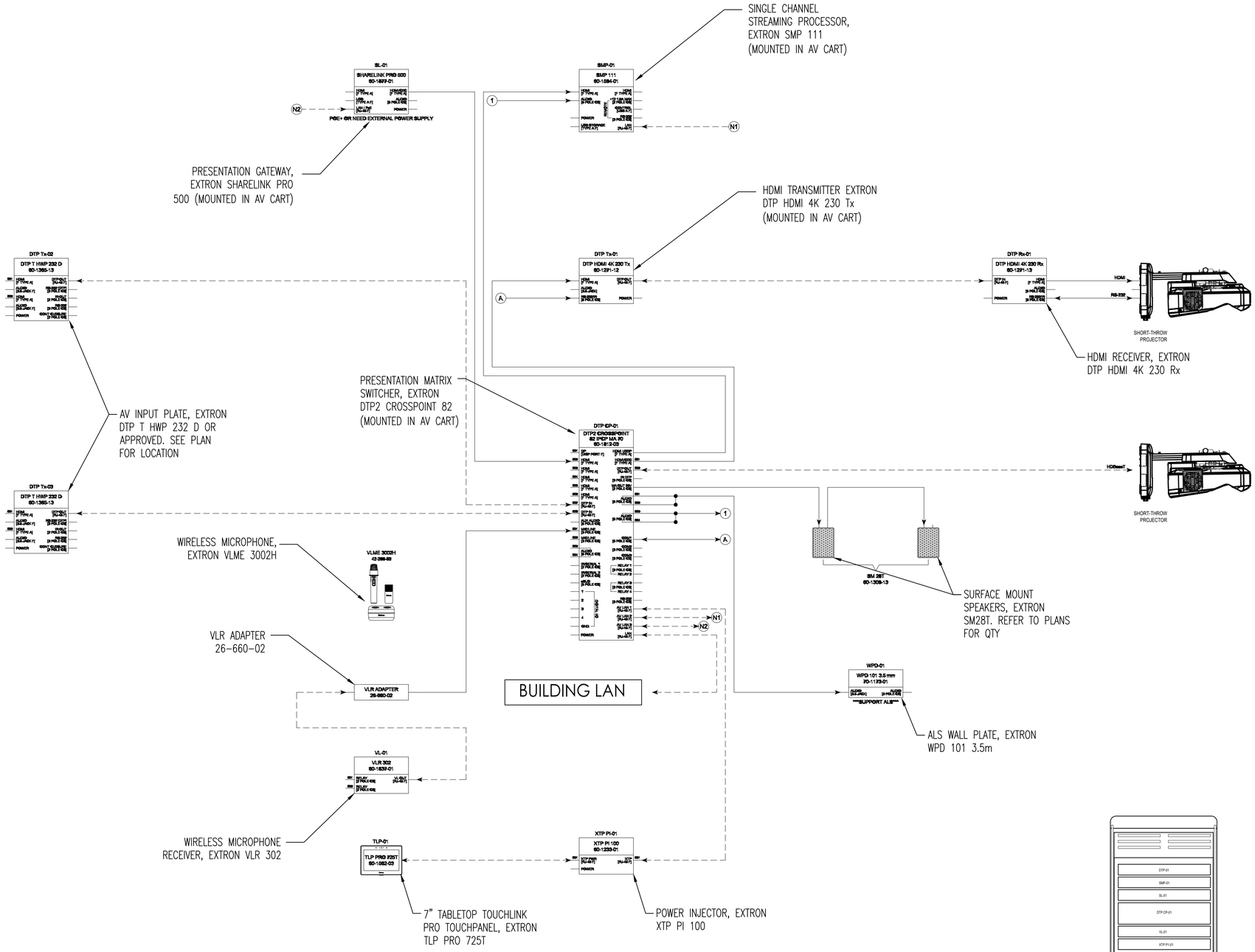

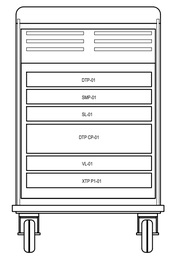

MOBILE CART DETAIL

A. PROVIDE INSPIRATION PLUS 42" LECTERN (P/N 55411).

B. COORDINATE EQUIPMENT MOUNTING WITH DISTRICT IT TEAM.

1 TYPICAL CLASSROOM AV DIAGRAM

SCALE: NTS

4/3/2020 7:20:00 PM BIM 360://PCCD Merritt Horticulture/Merritt Horticulture_2020.rvt

APPROVALS

IDENTIFICATION STAMP
DIV. OF THE STATE ARCHITECT
APP: 01-119409 INC:
REVIEWED FOR
SS ☑ FLS ☑ ACS ☑
DATE: 03/14/2022

NOLL & TAM ARCHITECTS
729 Heinz Avenue
Berkeley, CA 94710
tel 510.542.2200
fax 510.542.2201

RIJA
5515 Doyle Street, #7
Emeryville, CA 94608
www.rijainc.com
RIJA Job #: 2020011

SEAL

REGISTERED PROFESSIONAL ENGINEER
RAY A. JUAQUICHON
No. E19586
Exp. 06-30-23
ELECTRICAL
STATE OF CALIFORNIA

Date Signed: 3/1/22

PROJECT TITLE

Peralta Community College District

Merritt Landscape Horticulture Complex

12500 Campus Drive
Oakland, CA 94616

BID SET

ISSUE DATE	03/03/2022
N&T JOB NUMBER	22003

REVISIONS

	DATE	DESCRIPTION

DRAWN BY **CAD** | CHECKED BY **RAJ**

SHEET TITLE

A/V DIAGRAM

SHEET NUMBER

T4.02

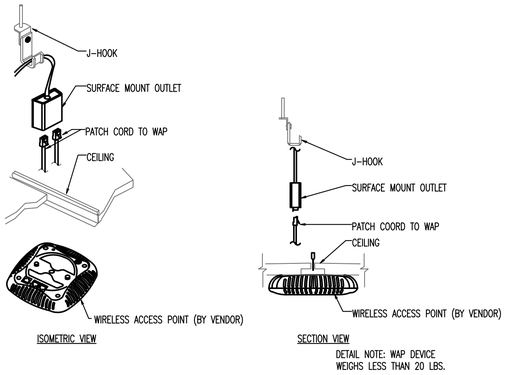

DETAIL NOTE: WAP DEVICE WEIGHS LESS THAN 20 LBS.

9 WIRELESS ACCES POINT

SCALE: NTS

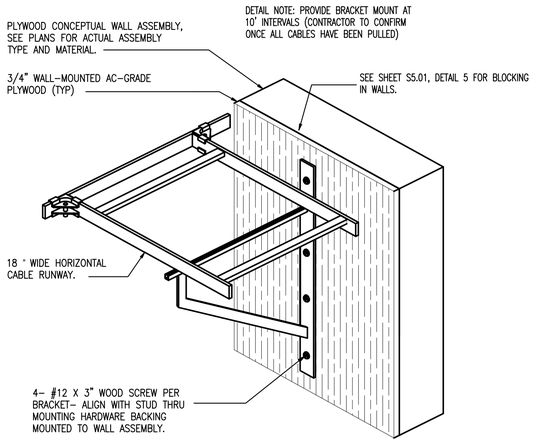

6 LADDER RACK L BRACKET (UNDER)

SCALE: NTS

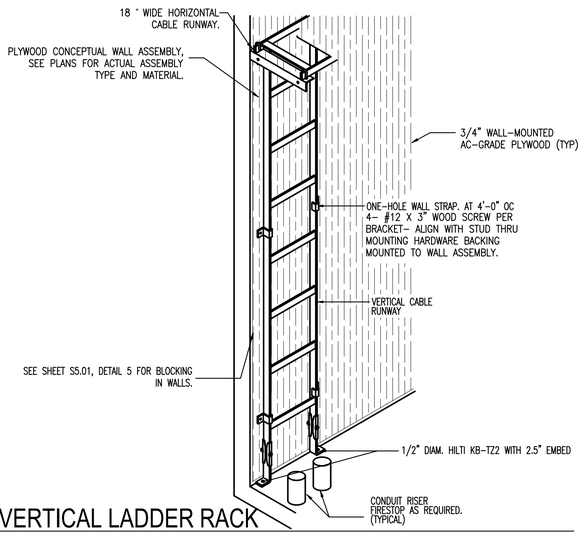

3 VERTICAL LADDER RACK

SCALE: NTS

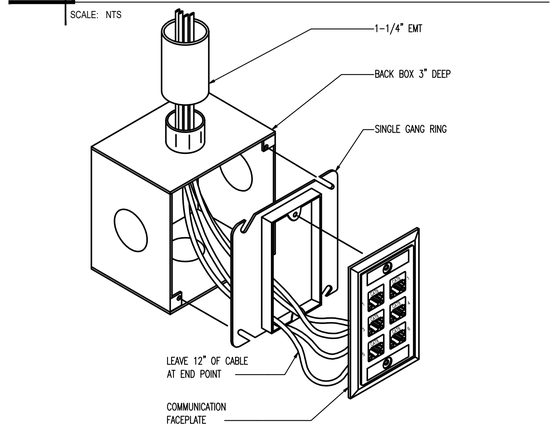

8 BACK BOX

SCALE: NTS

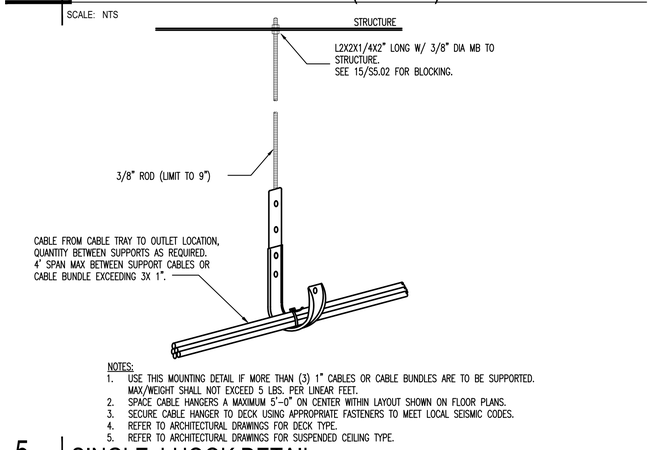

NOTES:
1. USE THIS MOUNTING DETAIL IF MORE THAN (3) 1" CABLES OR CABLE BUNDLES ARE TO BE SUPPORTED. MAX/WEIGHT SHALL NOT EXCEED 5 LBS. PER LINEAR FEET.
2. SPACE CABLE HANGERS A MAXIMUM 5'-0" ON CENTER WITHIN LAYOUT SHOWN ON FLOOR PLANS.
3. SECURE CABLE HANGER TO DECK USING APPROPRIATE FASTENERS TO MEET LOCAL SEISMIC CODES.
4. REFER TO ARCHITECTURAL DRAWINGS FOR DECK TYPE.
5. REFER TO ARCHITECTURAL DRAWINGS FOR SUSPENDED CEILING TYPE.

5 SINGLE J-HOOK DETAIL

SCALE: NTS

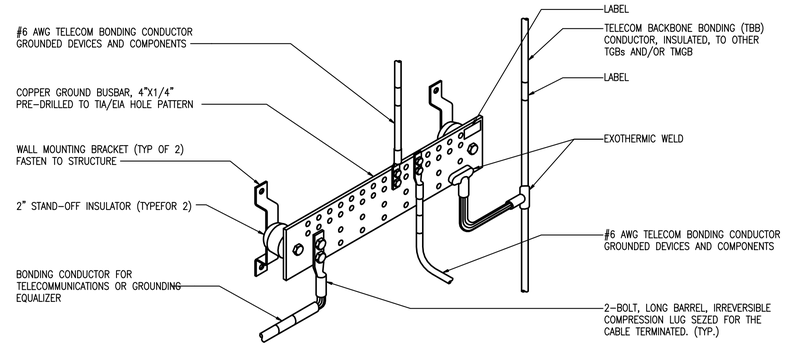

2 GROUND BUS CONNECTIONS

SCALE: NTS

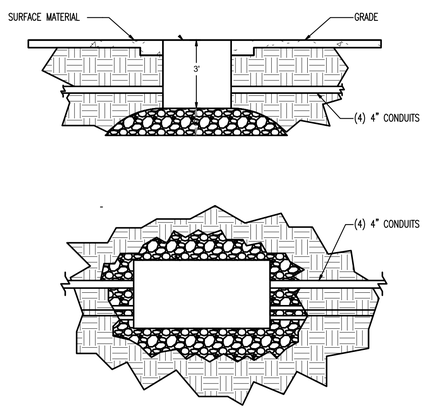

7 PULL BOX

SCALE: NTS

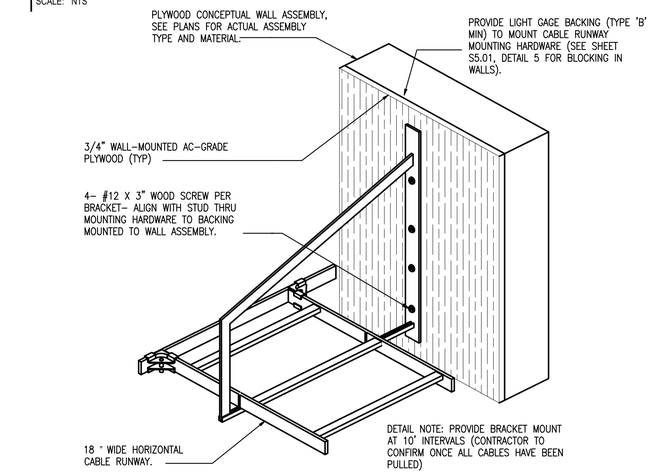

4 LADDER RACK L BRACKET

SCALE: NTS

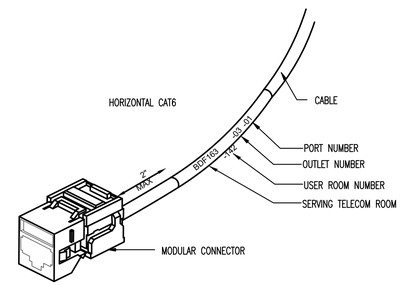

1 CATEGORY CABLING DETAIL

SCALE: NTS

APPROVALS

IDENTIFICATION STAMP
DIV. OF THE STATE ARCHITECT
APP: 01-119409 INC:
REVIEWED FOR
SS ☑ FLS ☑ ACS ☑
DATE: 03/14/2022

NOLL & TAM ARCHITECTS
729 Heinz Avenue
Berkeley, CA 94710
tel 510.542.2200
fax 510.542.2201

RIJA
5515 Doyle Street, #7
Emeryville, CA 94608
www.rijainc.com
RIJA Job #: 2020011

SEAL

REGISTERED PROFESSIONAL ENGINEER
RAY A. JACHON
No. E19586
Exp. 06-30-23
ELECTRICAL
STATE OF CALIFORNIA

Date Signed: 3/1/22

PROJECT TITLE

Peralta Community College District
Merritt Landscape Horticulture Complex

12500 Campus Drive
Oakland, CA 94616

BID SET

ISSUE DATE	03/03/2022
N&T JOB NUMBER	22003

REVISIONS

	DATE	DESCRIPTION

DRAWN BY **CAD** | CHECKED BY **RAJ**

SHEET TITLE

DETAILS

SHEET NUMBER

T6.01

4/3/2020 7:20:00 PM BIM 360://PCCD Merritt Horticulture/Merritt Horticulture_2020.rvt

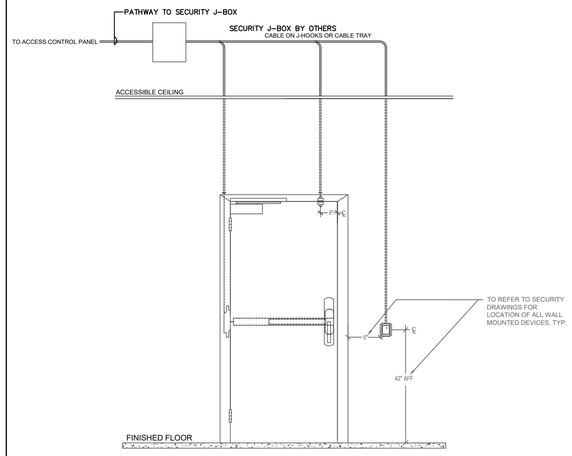

1 CARD READER - SINGLE DOOR

SCALE: NTS

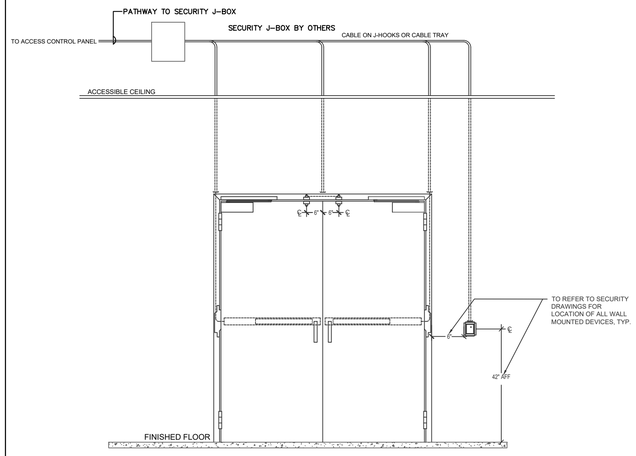

2 CARD READER - DOUBLE DOOR

SCALE: NTS

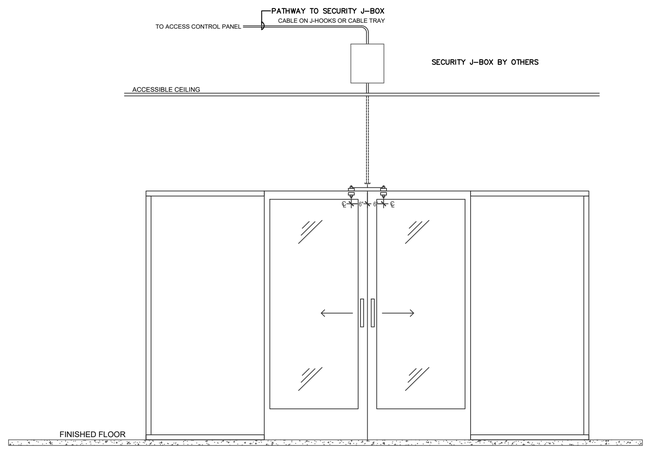

3 DOOR CONTACTS - SLIDING DOORS

SCALE: NTS

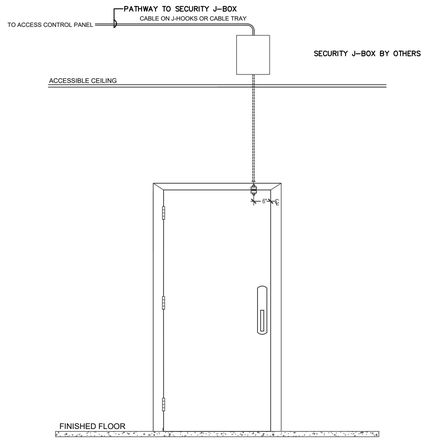

4 DOOR CONTACT - SINGLE DOOR

SCALE: NTS

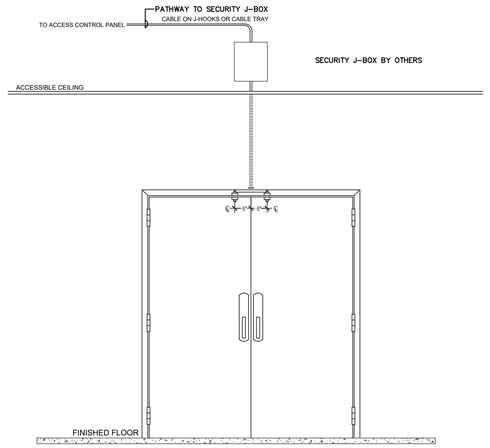

5 DOOR CONTACT - DOUBLE DOOR

SCALE: NTS

APPROVALS

IDENTIFICATION STAMP
DIV. OF THE STATE ARCHITECT
APP: 01-119409 INC:
REVIEWED FOR
SS ☑ FLS ☑ ACS ☑
DATE: 03/14/2022

NOLL & TAM ARCHITECTS
729 Heinz Avenue
Berkeley, CA 94710
tel 510.542.2200
fax 510.542.2201

RIJA
5515 Doyle Street, #7
Emeryville, CA 94608
www.rijainc.com
RIJA Job #: 2020011

SEAL

REGISTERED PROFESSIONAL ENGINEER
RAY A. JUDACHON
No. E19586
Exp. 06-30-23
ELECTRICAL
STATE OF CALIFORNIA

Date Signed: 3/1/22

PROJECT TITLE

Peralta Community College District
Merritt Landscape Horticulture Complex

12500 Campus Drive
Oakland, CA 94616

BID SET

ISSUE DATE 03/03/2022
N&T JOB NUMBER 22003

REVISIONS

	DATE	DESCRIPTION

DRAWN BY CAD | CHECKED BY RAJ

SHEET TITLE
SECURITY DOOR DETAILS

SHEET NUMBER
T6.02

4/3/2020 7:20:00 PM BIM 360://PCCD Merritt Horticulture/Merritt Horticulture_2020.rvt

SYMBOL LIST (NOT ALL SYMBOLS USED)

RACEWAY AND WIRING

FLOOR WALL CEILING

- CONDUIT CONCEALED IN CEILING OR WALL SPACE
- CONDUIT RUN EXPOSED
- CONDUIT RUN UNDERGROUND OR CONCEALED IN FLOOR SPACE
- EXISTING CONDUIT TO REMAIN
- CONDUIT RISING UP FROM RUN
- CONDUIT DROPPING DOWN FROM RUN
- CONDUIT CONTINUATION
- CONDUIT CAP
- A-1 A-1 A-1 HOMERUN TO PANELBOARD, CABINET OR TERMINAL BACKBOARD AS INDICATED

FIRE ALARM

- FACP — FIRE ALARM CONTROL PANEL
  MODEL: 4100ES FIRE ALARM CONTROL UNIT (4100-9311)
  CSFM: 7165-0026:0251
- ANNUN — REMOTE ANNUNCIATOR
  MODEL: 4603-9101
  CSFM: 7120-0026:0179
- RNPS — REMOTE NOTIFICATION POWER SUPPLY
  MODEL: 4009 IDNet EXTENDER
  CSFM: 7300-0026:214
- (F) (F) — STROBE, CEILING OR WALL MOUNTED
  MODEL: 49VO-WWF
  CSFM: 7125-0026:0373
- SPEAKER-STROBE, CEILING OR WALL MOUNTED
  MODEL: 49SV-APPLW/49WPBB-AVVOWW
  CSFM: 7125-0026:0384/7300-0026:0502
- EXTERIOR SPEAKER (WEATHERPROOF)
  MODEL: 49SO-APPLW-0/49SVC-WRFIRE-0/49MP-SOWW
  CSFM: 7320-0026:0501/7300-0026:0502
- HD — HEAT DETECTOR/STANDARD BASE
  MODEL: 4098-9733 (HEAD), 4098-9792 (BASE)
  CSFM: 7270-0026:0216/7300-0026:0217
- SD — PHOTOELECTRIC SMOKE DETECTOR/STANDARD BASE
  MODEL: 4098-9714 (HEAD), 4098-9792 (BASE)
  CSFM: 7272-0026:0218/7300-0026:0217
- FATC — FIRE ALARM TERMINAL CABINET
- MM — ADDRESSABLE MONITOR MODULE
  MODEL: 4090-9001
  CSFM: 7300-0026:0223
- RM — ADDRESSABLE RELAY MODULE
  MODEL: 4090-9002
  CSFM: 7300-0026:0223
- M — SINGLE-ACTION MANUAL PULL STATION
  MODEL: 4099-9021
  CSFM: 7150-0026:0224
- P — ABORT SWITCH PUSHBUTTON
  MODEL: 2080-9056
  CSFM: 7300-0026:0313

LINEAR HEAT DETECTOR
MODEL: SAFE CABLE LHD
CSFM: 7270-1686:0100

ABBREVIATIONS

A	AMPERES
ACAMS	ACCESS CONTROL AND ALARM MONITORING SYSTEM
ACT	ACOUSTICAL CEILING TILE
ADA	AMERICANS WITH DISABILITIES ACT
AFC	ABOVE FINISHED CEILING
AFF	ABOVE FINISHED FLOOR
ALS	ASSISTED LISTENING SYSTEM
ANT	ANTENNA
ARF	ABOVE RAISED FLOOR
AVC	AUDIOVISUAL CONTRACTOR
AWG	AMERICAN WIRE GAUGE
BAS	BUILDING AUTOMATION SYSTEM
BCT	BONDING CONDUCTOR - TELECOM
BDF	BUILDING DISTRIBUTION FACILITY
BFC	BELOW FINISHED CEILING CONDUIT
C	CAM CAMERA
CAT3	CATEGORY 3 (UTP CABLE)
CAT5E	CATEGORY F3 (UTP CABLE)
CAT6	CATEGORY 6 (UTP CABLE)
CATV	COMMUNITY ANTENNA TELEVISION
CATVP	COMM. ANTENNA TELEVISION PLENUM CB
CEILING BOX	
CMP	COMMUNICATIONS MEDIA PLENUM
CMR	COMMUNICATIONS MEDIA RISER
CP	CONTROL PANEL
CPU	CENTRAL PROCESSING UNIT
CTL	CONTROL
(E)	EXISTING
EC	ELECTRICAL CONTRACTOR
EMS	ELECTRICAL MANAGEMENT SYSTEM
EMT	ELECTRIC METALLIC TUBING
EQUIP	EQUIPMENT
(F)	FUTURE
FACP	FIRE ALARM CONTROL PANEL
FATC	FIRE ALARM TERMINAL CABINET
FB	FLOORBOX
FP	FACEPLATE
FPD	FLAT PANEL DISPLAY
GC	GENERAL CONTRACTOR
GRS	GALVANIZED RIGID STEEL
H	HIGH
IDF	INTERMEDIATE DISTRIBUTION FACILITY
IDS	INTRUSION DETECTION SYSTEM
IR	INFRARED
ISP	INSIDE PLANT
JB	JUNCTION BOX
L	LONG
LV	LOW VOLTAGE
LVI	LOW VOLTAGE INTERFACE
MBGRB	MAIN BUILDING GROUNDING REFERENCE BUS
MDF	MAIN DISTRIBUTION FACILITY
MH	MAINTENANCE HOLE
MIC	MICROPHONE
MM	MULTIMODE
MPOE	MAXIMUM POINT OF ENTRY
MTX	MATRIX
(N)	NEW
NIC	NOT IN CONTRACT
NO	NORMALLY OPEN
NPF	NETWORK PATCHING FACILITY
NTS	NOT TO SCALE
OC	ON CENTER
OFCI	OWNER FURBISHED, CONTRACTOR INSTALLED
OFCP	OPTICAL FIBER CONDUCTIVE PLENUM
OFCR	OPTICAL FIBER CONDUCTIVE RISER
OFE	OWNER FURNISHED EQUIPMENT
OFNP	OPTICAL FIBER NON-CONDUCTING PLENUM
OFNR	OPTICAL FIBER NON-CONDUCTING RISER
OFOI	OWNER FURNISHED, OWNER INSTALLED
OSP	OUTSIDE PLANT
(P)	PROTECTED SIDE OF DOOR
PB	PULLBOX
PNL	PANEL
PR	PAIR (OF COPPER CONDUCTORS)
PRJ	PROJECTOR
PS	PROJECTION SCREEN
PSU	POWER SUPPLY
PT	POKE-THROUGH DEVICE
PTZ	PAN/TILT/ZOOM
PVC	POLYVINY CHLORIDE
REX	REQUEST TO EXIT
RF	RADIO FREQUENCY
RX	RECEIVER
SAD	SEE ARCHITECTURAL DRAWINGS
ScTP	SCREENED TWISTED PAIR
SEC	SECURITY EQUIPMENT CABINET
SED	SEE ELECTRICAL DRAWINGS
SM	SINGLEMODE
SPK	LOUDSPEAKER
STP	SHIELDED TWISTED PAIR
STR	STRANDS (OF FIBER OPTIC CABLE)
TBB	TELECOM BONDING BACKBONE
TBC	TELECOM BONDING CONDUCTOR
TC	TELECOM CONTRACTOR
TGB	TELECOM GROUNDING BUSBAR
TMGB	TELECOM MAIN GROUNDING BUSFAR
TP	TERMINAL PANEL
TR	TELECOMMUNICATIONS ROOM
TS	TERMINATION STRIP
TVT	TV TUNER
TX	TRANSMITTER
TYP	TYPICAL UON UNLESS OTHERWISE NOTED
UPS	UNINTERRUPTIBLE POWER SUPPLY
UTP	UNSHIELDED TWISTED PAIR
V	VOLTS
VC	VOLUME CONTROL
VSS	VIDEO SURVEILLANCE SYSTEM
WAP	WIRELESS ACCESS POINT
W	WIDE
WB	WALLBOX
WP	WEATHERPROOF
XFMR	TRANSFORMER

TAGS

- FACP — FIRE ALARM EQUIPMENT DESIGNATION DESIGNED "FACP"
- # — SHEET NOTE ON SAME SHEET.
- AC 1 — MECHANICAL EQUIPMENT DESIGNATION "AC-1" INDICATED.
- XX — EQUIPMENT NAME OR NUMBER
- 1 / FA-1 — DETAIL REFERENCE

FIRE ALARM SYSTEM OPERATIONAL MATRIX

CAUSE	ALARM: ALARM AT FACP	ALARM: ALARM AT ANNUNCIATOR	ALARM: ALARM AT REMOTE POWER SUPPLY	ALARM: ALARM AT FIRE ALARM PANELS	ALARM: ALARM AUDIO / VISUALS	TROUBLE: TROUBLE AT FACP	TROUBLE: TROUBLE AT ANNUNCIATOR	TROUBLE: TROUBLE AT OFF SITE REPORTING	SUPERVISORY: AT FACP	SUPERVISORY: AT ANNUNCIATOR	SUPERVISORY: AT OFF SITE REPORTING	DEACTIVATE: AUDIALS	DEACTIVATE: VISUALS	DEACTIVATE: AUDIO / VISUALS	SYSTEM NORMAL	REMARKS
MANUAL PULL STATIONS	●	●	●	●	●	●						●	●	●		
SYSTEM RESET																
SIGNAL SILENCE												●	●	●		
AC POWER FAILURE																
TAMPER SWITCH																
FLOW SWITCH	●	●	●	●	●	●	●	●								
LINEAR HEAT DETECTOR (ACTIVATION OF DELUGE SYSTEM)	●	●	●	●	●	●	●	●								BLDG. DELUGE SYSTEM TO ACTIVATE ONCE LINEAR HEAT DETECTION IS ACTIVE & SIGNAL TO RELEASING PANEL IS SENT VIA ALARM VERIFICATION.
FIRE ALARM TROUBLE (OPEN, SHORTS, OR GROUNDS) ON INITIATION OR SIGNALING CIRCUITS																

SEQUENCE OF OPERATIONS OF FIRE ALARM SYSTEM

1. ACTIVATION OF ANY SYSTEM PULL STATION, SMOKE DETECTOR, HEAT DETECTOR SHALL CAUSE ALL SIGNAL DEVICES ON THE CAMPUS TO ACTIVATE AND SOUND. FACP(S) AND REMOTE ANNUNCIATOR(S) SHALL INDICATE THE SOURCE OF THE ALARM AND ALARM LIGHT(S) ON THE FIRE ALARM PANEL WILL ILLUMINATE. ACTIVATION OF ALARM SHALL CAUSE THE DIGITAL ALARM COMMUNICATIONS TRANSMITTER TO TRANSMIT THE ALARM TO A U.L. LISTED CENTRAL STATION.
2. ACTIVATION OF A VALVE SUPERVISORY SWITCH OR SHOULD AN OPEN GROUND OR FAULT OCCUR IN THE WIRING, THE FACP(S) AND REMOTE ANNUNCIATOR(S) SHALL INITIATE A TROUBLE SIGNAL AND SHALL INDICATE THE SOURCE OF THE TROUBLE.
3. ONCE THE SYSTEM IS BACK TO NORMAL, THE PANEL WILL RESOUND FOR PROPER RESETTING.
4. THE FIRE ALARM PANEL SHALL BE BACKED UP BY STANDBY BATTERIES FOR 24 HOURS AND 15 MINUTES OF ALARM (NFPA 72, 10.6.7.2.1(2)).

EVACUATION MESSAGES

EVAC NOTIFICATION SYSTEMS SHALL BE DESIGNED TO HAVE THE FOLLOWING STANDARD ANNOUNCEMENTS FOR FIRE ALARM AND EMERGENCY NOTIFICATION:

FIRE ALARM EMERGENCY NOTIFICATION MESSAGE:
(ALERT TONE) "THERE IS A FIRE EMERGENCY IN THE BUILDING. YOU ARE TO LEAVE THE BUILDING BY THE NEAREST EXIT OR EXIT STAIRWAY." (ALERT TONE)

EMERGENCY CONDITION CLEAR MESSAGE:
"ATTENTION. YOUR ATTENTION, PLEASE. THE BUILDING EMERGENCY CONDITION HAS BEEN CLEARED. YOU MAY RETURN TO NORMAL ACTIVITIES. THE BUILDING EMERGENCY CONDITION HAS BEEN CLEARED. YOU MAY RETURN TO NORMAL ACTIVITIES."

FIRE DRILL NOTIFICATION MESSAGE:
(ALERT TONE) "THERE IS A FIRE EMERGENCY IN THE BUILDING. YOU ARE TO LEAVE THE BUILDING BY THE NEAREST EXIT OR EXIT STAIRWAY." (ALERT TONE)

FIRE DRILL COMPLETED MESSAGE:
"ATTENTION. YOUR ATTENTION, PLEASE. THE BUILDING EMERGENCY CONDITION HAS BEEN CLEARED. YOU MAY RETURN TO NORMAL ACTIVITIES. THE BUILDING EMERGENCY CONDITION HAS BEEN CLEARED. YOU MAY RETURN TO NORMAL ACTIVITIES."

CODES & STANDARDS

1. NFPA 72 NATIONAL FIRE ALARM CODE, LATEST ADOPTED EDITION.
2. NFPA 13 STANDARDS FOR FIRE SPRINKLER SYSTEMS
3. ADA STANDARDS FOR ACCESSIBLE DESIGN: ADA ACCESSIBILITY GUIDELINES (ADAAG) 28, PART 36 APPENDIX A.
4. ADA STANDARDS FOR ACCESSIBLE DESIGN - CODE OF REGULATIONS (INCLUDING AMENDMENTS)
5. 2019 CALIFORNIA BUILDING CODE
6. 2019 CALIFORNIA ELECTRICAL CODE
7. 2019 CALIFORNIA MECHANICAL CODE
8. 2019 CALIFORNIA PLUMBING CODE
9. 2019 CALIFORNIA ENERGY CODE (TITLE 24)
10. 2019 CALIFORNIA FIRE CODE
11. 2019 CALIFORNIA GREEN CODE
12. DIVISION OF THE STATE ARCHITECT
13. OWNER STANDARDS

PROJECT DESCRIPTION

- OCCUPANCY TYPE: COMBINATION OF B AND U (GREENHOUSE).
- SYSTEM TYPE: CLASS B, ADDRESSABLE, MANUAL.
- METHOD OF COMMUNICATION: VIA TELEPHONE LINE TO AN OFF-SITE U.L. LISTED MONITORING STATION.
- SCOPE OF WORK: PROVIDE NEW MANUAL FIRE ALARM SYSTEM WITH EMERGENCY VOICE EVACUATION SYSTEM AT COMMUNITY COLLEGE CAMPUS.

DRAWING INDEX

FA0.01	COVER SHEET - FIRE ALARM
FA2.01	SITE PLAN - FIRE ALARM
FA2.31	FIRE ALARM PLAN - WEST BUILDING GROUP
FA2.32	FIRE ALARM PLAN - EAST BUILDING GROUP
FA3.01	RISER DIAGRAM
FA4.01	SCHEDULES
FA5.01	DETAILS
FA5.02	DETAILS
FA5.03	DETAILS

GENERAL FIRE ALARM NOTES

A. THE CONTRACTOR SHALL VISIT THE PROJECT SITE PRIOR TO BIDDING AND ALLOW FOR ALL FIELD CONDITIONS. OBTAIN CONTRACT DOCUMENTS FOR ALL OTHER TRADES AND BE RESPONSIBLE FOR ALL ELECTRICAL WORK NOTED AND CALLED OUT ON THE CONTRACT DOCUMENTS. COORDINATE FIRE ALARM WORK WITH ALL OTHER TRADES ON PROJECT. COORDINATE ALL CONDUIT RUNS FIRE ALARM EQUIPMENT AND PANEL LOCATIONS WITH ALL OTHER WORK TO AVOID CONFLICT.

B. COMPLY WITH ALL APPLICABLE CODES AND REGULATIONS. MATERIALS AND EQUIPMENT SHALL BE UL AND CALIFORNIA STAT FIRE MARSHAL (CSFM) LISTED AND LABELED FOR THE APPLICATION.

C. BEFORE BEGINNING CONSTRUCTION, PROVIDE TO THE ARCHITECT A CONSTRUCTION SCHEDULE OF FIRE ALARM WORK. THE CONSTRUCTION SCHEDULE SHALL IDENTIFY ALL SIGNIFICANT MILESTONES WITH COMPLETION DATES.

D. OBTAIN AND PAY FOR ALL PERMITS, LICENSES, AND INSPECTION FEES REQUIRED BY THIS CONTRACT WORK UNLESS OTHERWISE NOTED.

E. THE CONTRACTOR SHALL BE RESPONSIBLE FOR SAFETY OF PERSONS AND PROPERTY AND SHALL PROVIDE INSURANCE COVERAGE AS NECESSARY FOR LIABILITY, PERSONAL, PROPERTY DAMAGE, TO PROTECT THE OWNER, ARCHITECT, AND ENGINEER FROM ANY AND ALL CLAIMS RESULTING FROM THIS WORK.

F. MAINTAIN RECORD DRAWINGS AT THE PROJECT SITE INDICATING ALL MODIFICATIONS TO THE FIRE ALARM SYSTEM. AT THE CONCLUSION OF THE PROJECT, PROVIDE ACCURATE 'AS-BUILT' DRAWINGS ACCEPTABLE TO THE ARCHITECT.

G. ALL MATERIALS PROVIDED FOR THE PROJECT SHALL BE NEW, UNLESS OTHERWISE NOTED. PROVIDE ALL INCIDENTAL MATERIALS REQUIRED FOR A COMPLETE INSTALLATION.

H. PROVIDE ALL REQUIRED 'CUTTING, PATCHING, BACK FILL AND REPAIRS' NECESSARY TO RESTORE DAMAGED SURFACES TO EQUAL OR BETTER THAN ORIGINAL CONDITIONS EXISTING AT START OF WORK.

I. THERE SHALL BE NO ROOF PENETRATIONS WITHIN 5'-0" OF FIRE RATED OR AREA SEPARATION WALLS. VERIFY EXACT LOCATIONS OF THESE WALLS WITH ARCHITECTURAL DRAWINGS.

J. ALL FIRE ALARM EQUIPMENT INSTALLED OUTDOORS SHALL BE WEATHERPROOF. EXTERIOR CONDUIT RUNS INTO BUILDINGS SHALL BE INSTALLED WITH FLASHING, CAULKED, AND SEALED. CONDUITS FOR EXTERIOR FIRE ALARM DEVICES SHALL BE RUN INSIDE BUILDING UNLESS OTHERWISE NOTED. UNDERGROUND AND EXTERIOR CONDUIT SHALL HAVE WATERTIGHT FITTINGS.

K. PROVIDE A PULL CORD IN EVERY EMPTY CONDUIT FOR USE IN THE FUTURE CONSTRUCTION.

L. THE CONTRACTOR SHALL BE RESPONSIBLE FOR SITE LOCATING ALL EXISTING UNDERGROUND SYSTEMS IN THE AREA OF UNDERGROUND WORK. REPAIR ALL DAMAGED SYSTEMS TO OWNERS SATISFACTION. MAINTAIN EXTREME CARE DURING TRENCHING AS EXISTING SYSTEMS ARE KNOWN TO EXIST IN THE AREA. THE DRAWINGS AND SPECIFICATIONS ARE FOR ASSISTANCE AND GUIDANCE OF THE CONTRACTOR. EXACT LOCATIONS, DISTANCES, AND ELEVATIONS WILL BE GOVERNED BY ACTUAL CONDITIONS. COORDINATE THE CONTRACT DOCUMENTS AND FIELD CONDITIONS TO DETERMINE EXACT ROUTING AND FINAL TERMINATIONS FOR ALL WORK.

M. CONDUIT AND WIRING ARE SHOWN ON THESE PLANS DIAGRAMMATICALLY. EXACT LOCATIONS SHALL BE DETERMINED IN THE FIELD TO SUIT SITE CONDITIONS.

N. SEISMIC ANCHORAGE OF ALL ELECTRICAL EQUIPMENT SHALL BE PROVIDED IN ACCORDANCE WITH CBC SECTION 1632A.

O. PLANS SHALL BE APPROVED BY THE 'DIVISION OF THE STATE ARCHITECT' (DSA) PRIOR TO BEGINNING WORK. SUBMIT SHOP DRAWINGS TO THE ENGINEER FOR REVIEW PRIOR TO PURCHASE.

P. ALL FIRE ALARM DEVICES SHALL BE CALIFORNIA STATE FIRE MARSHAL (CSFM) LISTED.

Q. FIRE ALARM WIRING AND MATERIALS SHALL BE LISTED FOR USE AS REQUIRED BY TITLE 24/CEC ARTICAL 760. MINIMUM WIRE SHALL BE (2) #14AWG FOR INITIATING CIRCUITS AND (2) #14AWG FOR INDICATING CIRCUITS.

R. FIRE ALARM WIRE USED IN WET LOCATIONS SHALL BE OF AN APPROVED TYPE IN ACCORDANCE WITH 3-310-8 T24/CEC (I.E. THHW OR EQUAL)

S. PER CED STANDARDS ALL WIRING IS TO BE PULLED THROUGH EACH JUNCTION BOX AND CONNECTED DIRECTLY TO EACH FIRE DEVICE. DO NOT SPLICE WIRE. THERE MUST BE AT LEAST 6" OF LEAD WIRE FROM BOX THE DEVICE. ALL BOXES SIZED PER CEC.

T. PENETRATIONS OF FIRE RATED WALLS SHALL BE PROTECTED IN ACCORDANCE WITH CALIFORNIA BUILDING CODE, CHAPTER 7, TITLE 24. PROVIDE DETAILS OF FIRE-STOP SYSTEMS FOR ALL PIPE/CABLE/CONDUIT PASSING THROUGH FIRE RATED WALLS/FLOORS REQUIRING PROTECTED OPENINGS.

U. ALL FIRE ALARM DEVICE CONNECTIONS TO THE LIGHT AND POWER SERVICE SHALL BE ON A DEDICATED BRANCH CIRCUIT(S). THE CIRCUIT(S) AND CONNECTIONS SHALL BE MECHANICALLY PROTECTED. CIRCUIT DISCONNECTING MEANS SHALL HAVE A RED MARKING, SHALL BE ACCESSIBLE ONLY TO AUTHORIZED PERSONNEL, AND SHALL BE IDENTIFIED AS 'FIRE ALARM CIRCUIT CONTROL'. THE LOCATION OF THE CIRCUIT DISCONNECTING MEANS SHALL BE PERMANENTLY IDENTIFIED AT THE FIRE ALARM CONTROL UNIT (NFPA 72 SECTION 10.5.5.1)

V. THE CONTRACTOR SHALL ADJUST ALL DEVICES TO MAXIMUM PERFORMANCE AND MINIMIZE FALSE ALARMS.

W. PROVIDE TEMPORAL-THREE DISTINCTIVE FIRE ALARM SOUND (NFPA 72 SECTION 6.8.6.5.1)

X. AUDIBLE FIRE ALARM SOUND LEVEL SHALL BE AT LEAST 15dBA ABOVE THE AVERAGE AMBIENT SOUND LEVEL IN ALL OCCUPIABLE AREAS (NFPA 72 SECTION 18.4.3.1) SOUND TO BE MAINTAINED FOR A MINIMUM DURATION OF 60 SECONDS.

Y. STROBES SHALL FLASH AT A RATE OF NOT EXCEEDING TWO FLASHES PER SECOND NOR BE LESS THAN ON FLASH EVERY SECOND (NFPA 72 SECTION 18.5.2.1).

Z. AUDIBLE SIGNALS INTENDED FOR OPERATION IN THE PUBLIC MODE SHOULD HAVE A SOUND LEVEL OF NOT LESS THAN 75dBA AT 10 FEET OR MORE THAN 110dBA AT THE MINIMUM HEARING DISTANCE FROM THE AUDIBLE APPLIANCE. (NFPA 72 SECTION 18.4).

AA. SMOKE DETECTORS SHALL NOT BE ANY CLOSER THAN 1 FOOT FROM FIRE SPRINKLERS OR 3 FOOT FROM ANY SUPPLY DIFFUSER. IN AREA OF CONSTRUCTION OR POSSIBLE DAMAGE/CONTAMINATION ON NEWLY INSTALLED FIRE ALARM DEVICES SHALL BE COVERED UNTIL THAT AREA IS READY TO BE TURNED OVER TO THE OWNER.

AB. THE INSTALLING CONTRACTOR SHALL PROVIDE SYSTEM PROGRAMMING FOR SUPERVISORY MONITORING PER CBC SECTION 901.6.2.

AC. INSPECTOR, ARCHITECT, AND ENGINEER SHALL BE NOTIFIED A MINIMUM OF 48 HOURS PRIOR TO THE FINAL INSPECTION AND/OR TESTING.

AD. FINAL FIRE ALARM TEST SHALL BE MADE WITH THE INSPECTOR OF RECORD (IOR). LOCAL FIRE AUTHORITY SHALL BE NOTIFIED OF DATE AND TIME OF FINAL ALARM TESTING AND SHALL ASSIST/WITNESS SUCH TESTING AT THEIR DISCRETION.

AE. SUPERVISORY MONITORING SHALL BE TESTED AND VERIFIED AS SENDING CORRECT SIGNALS IN CONJUNCTION WITH FINAL ACCEPTANCE TEST.

AF. FIRE ALARM CONTRACTOR SHALL PROVIDE A 'RECORD OF COMPLETION' TO THE OWNER, ARCHITECT, AND INSPECTOR OF RECORD (IOR) AFTER COMPLETION OF OPERATIONAL ACCEPTANCE TESTS (NFPA 72 SECTION 10.18.2.1.2.4)

AG. OWNER SHALL BE RESPONSIBLE FOR ESTABLISHING A FIRE ALARM MONITORING CONTRACT OR PROVISIONS. THE SUPERVISORY STATION SHALL BE LISTED AS EITHER UUFX OR UUJS BY UNDERWRITERS LABORATORIES (UL) OR SHALL BE THE REQUIREMENTS OF FACTORY MUTUAL (FM) RESEARCH APPROVAL STANDARD 3011.

AH. PROVIDE ALL WIRING AND MATERIALS PER CBC 760.

APPROVALS

IDENTIFICATION STAMP
DIV. OF THE STATE ARCHITECT
APP: 01-119409 INC:
REVIEWED FOR
SS ☑ FLS ☑ ACS ☑
DATE: 03/14/2022

NOLL & TAM ARCHITECTS
729 Heinz Avenue
Berkeley, CA 94710
tel 510.542.2200
fax 510.542.2201

RIJA
5515 Doyle Street, #7
Emeryville, CA 94608
www.rijainc.com
RIJA Job #: 2020011

SEAL

REGISTERED PROFESSIONAL ENGINEER — RAJ JASTHI — No. E19586 Exp. 06-30-23 — ELECTRICAL — STATE OF CALIFORNIA

Date Signed: 2/28/22

PROJECT TITLE

Peralta Community College District
Merritt Landscape Horticulture Complex

12500 Campus Drive
Oakland, CA 94616

BID SET

ISSUE DATE 03/03/2022
N&T JOB NUMBER 22003

REVISIONS

	DATE	DESCRIPTION

DRAWN BY CAD | CHECKED BY RAJ

SHEET TITLE
COVER SHEET - FIRE ALARM

SHEET NUMBER
FA0.01

4/3/2020 7:20:00 PM BIM 360://PCCD Merritt Horticulture/Merritt Horticulture_2020.rvt

2 OVERALL SITE PLAN - FIRE ALARM

SCALE: NO SCALE

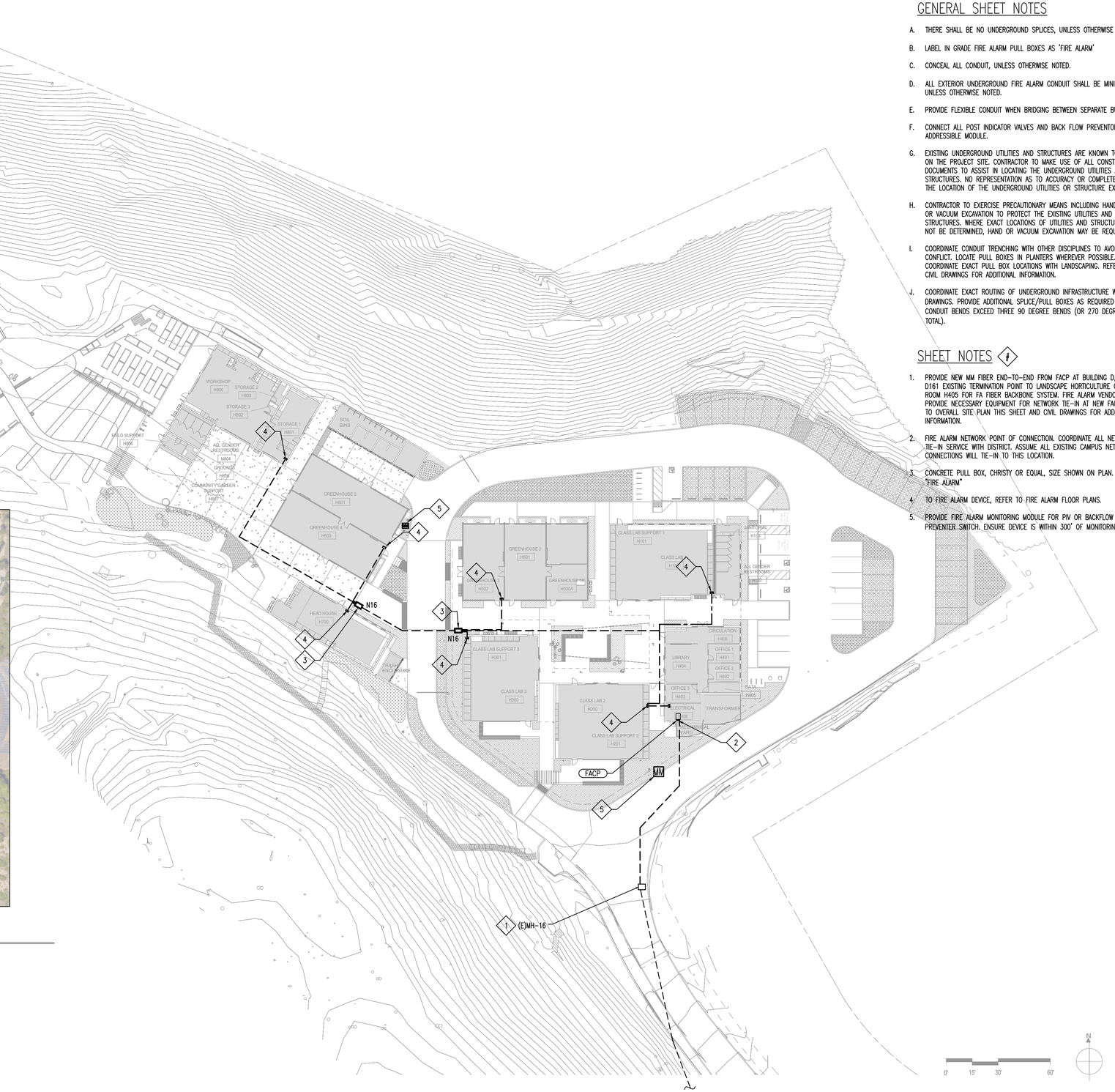

1 SITE PLAN - FIRE ALARM

SCALE: 1/32" = 1'-0"

GENERAL SHEET NOTES

A. THERE SHALL BE NO UNDERGROUND SPLICES, UNLESS OTHERWISE NOTED.

B. LABEL IN GRADE FIRE ALARM PULL BOXES AS "FIRE ALARM"

C. CONCEAL ALL CONDUIT, UNLESS OTHERWISE NOTED.

D. ALL EXTERIOR UNDERGROUND FIRE ALARM CONDUIT SHALL BE MINIMUM 1" UNLESS OTHERWISE NOTED.

E. PROVIDE FLEXIBLE CONDUIT WHEN BRIDGING BETWEEN SEPARATE BUILDINGS.

F. CONNECT ALL POST INDICATOR VALVES AND BACK FLOW PREVENTORS VIA ADDRESSIBLE MODULE.

G. EXISTING UNDERGROUND UTILITIES AND STRUCTURES ARE KNOWN TO EXIST ON THE PROJECT SITE. CONTRACTOR TO MAKE USE OF ALL CONSTRUCTION DOCUMENTS TO ASSIST IN LOCATING THE UNDERGROUND UTILITIES AND STRUCTURES. NO REPRESENTATION AS TO ACCURACY OR COMPLETENESS OF THE LOCATION OF THE UNDERGROUND UTILITIES OR STRUCTURE EXISTS.

H. CONTRACTOR TO EXERCISE PRECAUTIONARY MEANS INCLUDING HAND DIGGING OR VACUUM EXCAVATION TO PROTECT THE EXISTING UTILITIES AND STRUCTURES. WHERE EXACT LOCATIONS OF UTILITIES AND STRUCTURE CAN NOT BE DETERMINED, HAND OR VACUUM EXCAVATION MAY BE REQUIRED.

I. COORDINATE CONDUIT TRENCHING WITH OTHER DISCIPLINES TO AVOID CONFLICT. LOCATE PULL BOXES IN PLANTERS WHEREVER POSSIBLE. COORDINATE EXACT PULL BOX LOCATIONS WITH LANDSCAPING. REFER TO CIVIL DRAWINGS FOR ADDITIONAL INFORMATION.

J. COORDINATE EXACT ROUTING OF UNDERGROUND INFRASTRUCTURE WITH CIVIL DRAWINGS. PROVIDE ADDITIONAL SPLICE/PULL BOXES AS REQUIRED IF CONDUIT BENDS EXCEED THREE 90 DEGREE BENDS (OR 270 DEGREES TOTAL).

SHEET NOTES

1. PROVIDE NEW MM FIBER END-TO-END FROM FACP AT BUILDING D, ROOM D161 EXISTING TERMINATION POINT TO LANDSCAPE HORTICULTURE COMPLEX, ROOM H405 FOR FA FIBER BACKBONE SYSTEM. FIRE ALARM VENDOR TO PROVIDE NECESSARY EQUIPMENT FOR NETWORK TIE-IN AT NEW FACP. REFER TO OVERALL SITE PLAN THIS SHEET AND CIVIL DRAWINGS FOR ADDITIONAL INFORMATION.
2. FIRE ALARM NETWORK POINT OF CONNECTION. COORDINATE ALL NETWORK TIE-IN SERVICE WITH DISTRICT. ASSUME ALL EXISTING CAMPUS NETWORK CONNECTIONS WILL TIE-IN TO THIS LOCATION.
3. CONCRETE PULL BOX, CHRISTY OR EQUAL, SIZE SHOWN ON PLAN. LABEL "FIRE ALARM"
4. TO FIRE ALARM DEVICE, REFER TO FIRE ALARM FLOOR PLANS.
5. PROVIDE FIRE ALARM MONITORING MODULE FOR PIV OR BACKFLOW PREVENTER SWITCH. ENSURE DEVICE IS WITHIN 300' OF MONITORING POINT.

APPROVALS

IDENTIFICATION STAMP
DIV. OF THE STATE ARCHITECT
APP: 01-119409 INC:
REVIEWED FOR
SS ☑ FLS ☑ ACS ☑
DATE: 03/14/2022

NOLL & TAM ARCHITECTS
729 Heinz Avenue
Berkeley, CA 94710
tel 510.542.2200
fax 510.542.2201

RIJA
5515 Doyle Street, #7
Emeryville, CA 94608
www.rijainc.com
RIJA Job #: 2020011

SEAL

REGISTERED PROFESSIONAL ENGINEER
RAJESH JAISWAL
No. E19586
Exp. 06-30-23
ELECTRICAL
STATE OF CALIFORNIA

Date Signed:
2/28/22

PROJECT TITLE

Peralta Community College District
Merritt Landscape Horticulture Complex

12500 Campus Drive
Oakland, CA 94616

BID SET

ISSUE DATE	03/03/2022
N&T JOB NUMBER	22003

REVISIONS

	DATE	DESCRIPTION

DRAWN BY CAD | CHECKED BY RAJ

SHEET TITLE
SITE PLAN - FIRE ALARM

SHEET NUMBER
FA2.01

4/3/2020 7:20:00 PM BIM 360://PCCD Merritt Horticulture/Merritt Horticulture_2020.rvt

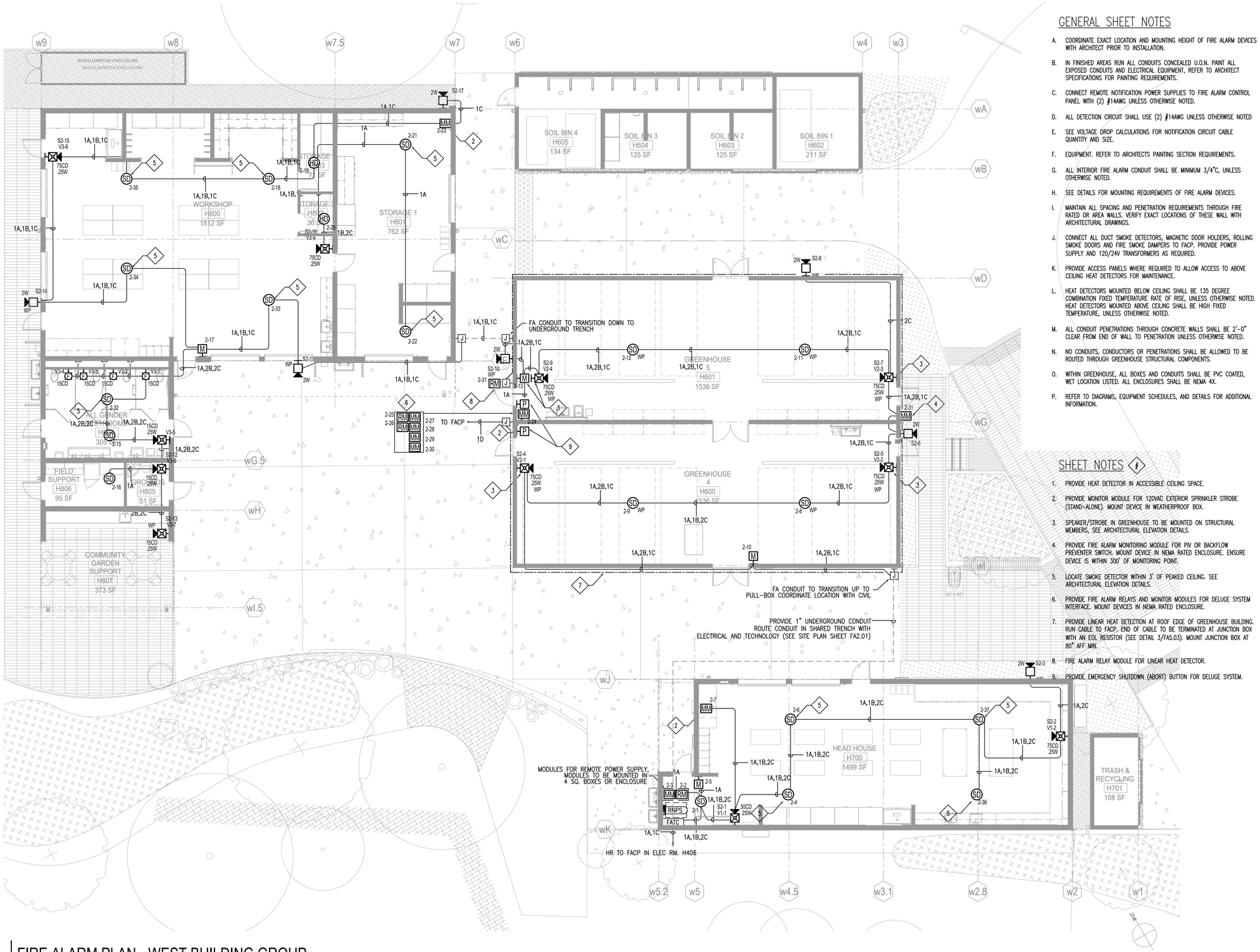

1 FIRE ALARM PLAN - WEST BUILDING GROUP

SCALE: 1/8" = 1'-0"

GENERAL SHEET NOTES

A. COORDINATE EXACT LOCATION AND MOUNTING HEIGHT OF FIRE ALARM DEVICES WITH ARCHITECT PRIOR TO INSTALLATION.

B. IN FINISHED AREAS RUN ALL CONDUITS CONCEALED U.O.N. PAINT ALL EXPOSED CONDUITS AND ELECTRICAL EQUIPMENT, REFER TO ARCHITECT SPECIFICATIONS FOR PAINTING REQUIREMENTS.

C. CONNECT REMOTE NOTIFICATION POWER SUPPLIES TO FIRE ALARM CONTROL PANEL WITH (2) #14AWG UNLESS OTHERWISE NOTED.

D. ALL DETECTION CIRCUIT SHALL USE (2) #14AWG UNLESS OTHERWISE NOTED

E. SEE VOLTAGE DROP CALCULATIONS FOR NOTIFICATION CIRCUIT CABLE QUANTITY AND SIZE.

F. EQUIPMENT. REFER TO ARCHITECTS PAINTING SECTION REQUIREMENTS.

G. ALL INTERIOR FIRE ALARM CONDUIT SHALL BE MINIMUM 3/4"C, UNLESS OTHERWISE NOTED.

H. SEE DETAILS FOR MOUNTING REQUIREMENTS OF FIRE ALARM DEVICES.

I. MAINTAIN ALL SPACING AND PENETRATION REQUIREMENTS THROUGH FIRE RATED OR AREA WALLS. VERIFY EXACT LOCATIONS OF THESE WALL WITH ARCHITECTURAL DRAWINGS.

J. CONNECT ALL DUCT SMOKE DETECTORS, MAGNETIC DOOR HOLDERS, ROLLING SMOKE DOORS AND FIRE SMOKE DAMPERS TO FACP. PROVIDE POWER SUPPLY AND 120/24V TRANSFORMERS AS REQUIRED.

K. PROVIDE ACCESS PANELS WHERE REQUIRED TO ALLOW ACCESS TO ABOVE CEILING HEAT DETECTORS FOR MAINTENANCE.

L. HEAT DETECTORS MOUNTED BELOW CEILING SHALL BE 135 DEGREE COMBINATION FIXED TEMPERATURE RATE OF RISE, UNLESS OTHERWISE NOTED. HEAT DETECTORS MOUNTED ABOVE CEILING SHALL BE HIGH FIXED TEMPERATURE, UNLESS OTHERWISE NOTED.

M. ALL CONDUIT PENETRATIONS THROUGH CONCRETE WALLS SHALL BE 2'-0" CLEAR FROM END OF WALL TO PENETRATION UNLESS OTHERWISE NOTED.

N. NO CONDUITS, CONDUCTORS OR PENETRATIONS SHALL BE ALLOWED TO BE ROUTED THROUGH GREENHOUSE STRUCTURAL COMPONENTS.

O. WITHIN GREENHOUSE, ALL BOXES AND CONDUITS SHALL BE PVC COATED, WET LOCATION LISTED. ALL ENCLOSURES SHALL BE NEMA 4X.

P. REFER TO DIAGRAMS, EQUIPMENT SCHEDULES, AND DETAILS FOR ADDITIONAL INFORMATION.

SHEET NOTES

1. PROVIDE HEAT DETECTOR IN ACCESSIBLE CEILING SPACE.
2. PROVIDE MONITOR MODULE FOR 120VAC EXTERIOR SPRINKLER STROBE (STAND-ALONE). MOUNT DEVICE IN WEATHERPROOF BOX.
3. SPEAKER/STROBE IN GREENHOUSE TO BE MOUNTED ON STRUCTURAL MEMBERS, SEE ARCHITECTURAL ELEVATION DETAILS.
4. PROVIDE FIRE ALARM MONITORING MODULE FOR PIV OR BACKFLOW PREVENTER SWITCH. MOUNT DEVICE IN NEMA RATED ENCLOSURE. ENSURE DEVICE IS WITHIN 300' OF MONITORING POINT.
5. LOCATE SMOKE DETECTOR WITHIN 3' OF PEAKED CEILING. SEE ARCHITECTURAL ELEVATION DETAILS.
6. PROVIDE FIRE ALARM RELAYS AND MONITOR MODULES FOR DELUGE SYSTEM INTERFACE. MOUNT DEVICES IN NEMA RATED ENCLOSURE.
7. PROVIDE LINEAR HEAT DETECTION AT ROOF EDGE OF GREENHOUSE BUILDING. RUN CABLE TO FACP. END OF CABLE TO BE TERMINATED AT JUNCTION BOX WITH AN EOL RESISTOR (SEE DETAIL 3/FA5.03). MOUNT JUNCTION BOX AT 80" AFF MIN.
8. FIRE ALARM RELAY MODULE FOR LINEAR HEAT DETECTOR.
9. PROVIDE EMERGENCY SHUTDOWN (ABORT) BUTTON FOR DELUGE SYSTEM.

APPROVALS

IDENTIFICATION STAMP
DIV. OF THE STATE ARCHITECT
APP: 01-119409 INC:
REVIEWED FOR
SS ☑ FLS ☑ ACS ☑
DATE: 03/14/2022

NOLL & TAM ARCHITECTS
729 Heinz Avenue
Berkeley, CA 94710
tel 510.542.2200
fax 510.542.2201

RIJA
5515 Doyle Street, #7
Emeryville, CA 94608
www.rijainc.com
RIJA Job #: 2020011

SEAL

REGISTERED PROFESSIONAL ENGINEER
RAJ JASION
No. E19586
Exp. 06-30-23
ELECTRICAL
STATE OF CALIFORNIA

Date Signed: 2/28/22

PROJECT TITLE

Peralta Community College District
Merritt Landscape Horticulture Complex

12500 Campus Drive
Oakland, CA 94616

BID SET

ISSUE DATE	03/03/2022
N&T JOB NUMBER	22003

REVISIONS

	DATE	DESCRIPTION

DRAWN BY CAD | CHECKED BY RAJ

SHEET TITLE
FIRE ALARM PLAN - WEST BUILDING GROUP

SHEET NUMBER
FA2.31

4/3/2020 7:20:00 PM BIM 360://PCCD Merritt Horticulture/Merritt Horticulture_2020.rvt

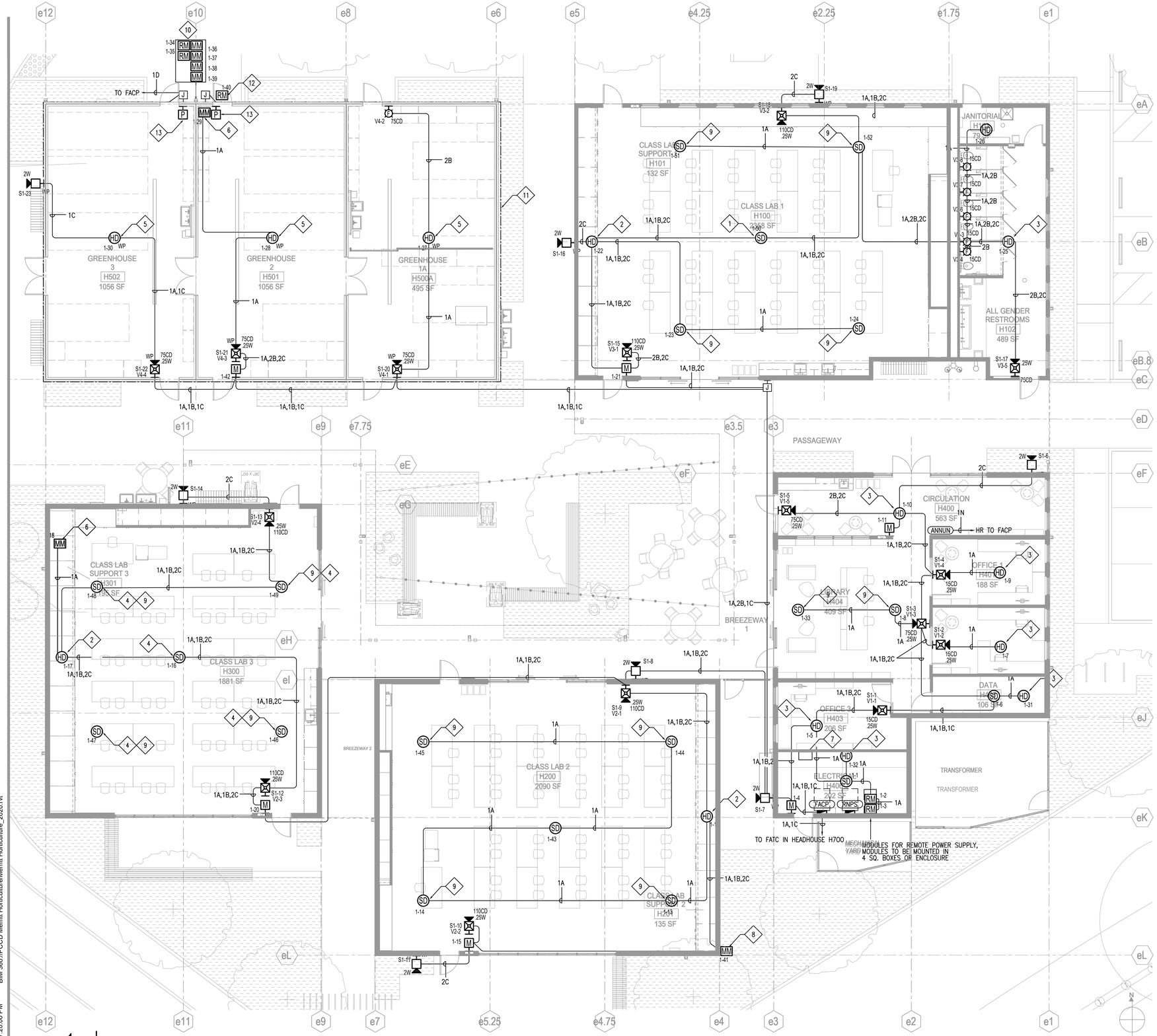

1 FIRE ALARM PLAN - EAST BUILDING GROUP

SCALE: 1/8" = 1'-0"

GENERAL SHEET NOTES

A. COORDINATE EXACT LOCATION AND MOUNTING HEIGHT OF FIRE ALARM DEVICES WITH ARCHITECT PRIOR TO INSTALLATION.

B. OJN FINISHED AREAS RUN ALL CONDUITS CONCEALED U.O.N. PAINT ALL EXPOSED CONDUITS AND ELECTRICAL EQUIPMENT, REFER TO ARCHITECT SPECIFICATIONS FOR PAINTING REQUIREMENTS.

C. CONNECT REMOTE NOTIFICATION POWER SUPPLIES TO FIRE ALARM CONTROL PANEL WITH (2) #14AWG UNLESS OTHERWISE NOTED.

D. ALL DETECTION CIRCUIT SHALL USE (2) #14AWG UNLESS OTHERWISE NOTED

E. SEE VOLTAGE DROP CALCULATIONS FOR NOTIFICATION CIRCUIT CABLE QUANTITY AND SIZE.

F. EQUIPMENT. REFER TO ARCHITECTS PAINTING SECTION REQUIREMENTS.

G. ALL INTERIOR FIRE ALARM CONDUIT SHALL BE MINIMUM 3/4"C, UNLESS OTHERWISE NOTED.

H. SEE DETAILS FOR MOUNTING REQUIREMENTS OF FIRE ALARM DEVICES.

I. MAINTAIN ALL SPACING AND PENETRATION REQUIREMENTS THROUGH FIRE RATED OR AREA WALLS. VERIFY EXACT LOCATIONS OF THESE WALL WITH ARCHITECTURAL DRAWINGS.

J. CONNECT ALL DUCT SMOKE DETECTORS, MAGNETIC DOOR HOLDERS, ROLLING SMOKE DOORS AND FIRE SMOKE DAMPERS TO FACP. PROVIDE POWER SUPPLY AND 120/24V TRANSFORMERS AS REQUIRED.

K. PROVIDE ACCESS PANELS WHERE REQUIRED TO ALLOW ACCESS TO ABOVE CEILING HEAT DETECTORS FOR MAINTENANCE.

L. HEAT DETECTORS MOUNTED BELOW CEILING SHALL BE 135 DEGREE COMBINATION FIXED TEMPERATURE RATE OF RISE, UNLESS OTHERWISE NOTED. HEAT DETECTORS MOUNTED ABOVE CEILING SHALL BE HIGH FIXED TEMPERATURE, UNLESS OTHERWISE NOTED.

M. ALL CONDUIT PENETRATIONS THROUGH CONCRETE WALLS SHALL BE 2'-0" CLEAR FROM END OF WALL TO PENETRATION UNLESS OTHERWISE NOTED.

N. NO CONDUITS, CONDUCTORS OR PENETRATIONS SHALL BE ALLOWED TO BE ROUTED THROUGH GREENHOUSE STRUCTURAL COMPONENTS.

O. WITHIN GREENHOUSE, ALL BOXES AND CONDUITS SHALL BE PVC COATED, WET LOCATION LISTED. ALL ENCLOSURES SHALL BE NEMA 4X.

P. REFER TO DIAGRAMS, EQUIPMENT SCHEDULES, AND DETAILS FOR ADDITIONAL INFORMATION.

SHEET NOTES

1. LOCATE SMOKE DETECTOR IN PROXIMITY TO CLERESTORY WINDOWS.
2. PROVIDE HEAT DETECTOR IN ACCESSIBLE MECHANICAL SPACE.
3. PROVIDE IN ACCESSIBLE CEILING SPACE.
4. PENDANT MOUNT DETECTORS IN CLASSROOMS DUE TO OPEN CEILINGS.
5. SPEAKER/STROBE IN GREENHOUSE TO BE MOUNTED ON STRUCTURAL MEMBERS, REFERENCE ARCHITECTURAL DETAILS.
6. PROVIDE MONITOR MODULE FOR 120VAC EXTERIOR SPRINKLER STROBE (STAND-ALONE). MOUNT DEVICE IN WEATHERPROOF BOX.
7. SPACE RESERVED FOR ERRC SYSTEM (BY OTHERS). ROUTE CONDUIT/PATHWAYS IN UNDERGROUND TRENCHING SHOWN IN SITE PLAN FA2.01. PROVIDE PATHWAY UP TO ROOF (FOR SYSTEM ANTENNA) IN 2 HOUR CHASE.
8. PROVIDE FIRE ALARM MONITORING MODULE FOR PIV OR BACKFLOW PREVENTER SWITCH. MOUNT DEVICE IN NEMA RATED ENCLOSURE. ENSURE DEVICE IS WITHIN 300' OF MONITORING POINT.
9. LOCATE SMOKE DETECTOR WITHIN 3' OF PEAKED CEILING. SEE ARCHITECTURAL ELEVATION DETAILS.
10. PROVIDE FIRE ALARM RELAYS AND MONITOR MODULES FOR DELUGE SYSTEM INTERFACE. MOUNT DEVICES IN NEMA RATED ENCLOSURE.
11. PROVIDE LINEAR HEAT DETECTION AT ROOF EDGE OF GREENHOUSE BUILDING. RUN CABLE TO FACP. END OF CABLE TO BE TERMINATED AT JUNCTION BOX WITH AN EOL RESISTOR (SEE DETAIL 3/FA5.03). MOUNT JUNCTION BOX AT 80" AFF MIN.
12. FIRE ALARM RELAY MODULE FOR LINEAR HEAT DETECTOR.
13. PROVIDE EMERGENCY SHUTDOWN (ABORT) BUTTON FOR DELUGE SYSTEM.

APPROVALS

IDENTIFICATION STAMP
DIV. OF THE STATE ARCHITECT
APP: 01-119409 INC:
REVIEWED FOR
SS ☑ FLS ☑ ACS ☑
DATE: 03/14/2022

NOLL & TAM ARCHITECTS
729 Heinz Avenue
Berkeley, CA 94710
tel 510.542.2200
fax 510.542.2201

RIJA
5515 Doyle Street, #7
Emeryville, CA 94608
www.rijainc.com
RIJA Job #: 2020011

SEAL

REGISTERED PROFESSIONAL ENGINEER
RAJ A. JAYSHREE
No. E19586
Exp. 06-30-23
ELECTRICAL
STATE OF CALIFORNIA

Date Signed: 2/28/22

PROJECT TITLE

Peralta Community College District
Merritt Landscape Horticulture Complex

12500 Campus Drive
Oakland, CA 94616

BID SET

ISSUE DATE	03/03/2022
N&T JOB NUMBER	22003

REVISIONS

	DATE	DESCRIPTION

DRAWN BY CAD | CHECKED BY RAJ

SHEET TITLE
FIRE ALARM PLAN - EAST BUILDING GROUP

SHEET NUMBER
FA2.32

4/3/2020 7:20:00 PM BIM 360://PCCD Merritt Horticulture/Merritt Horticulture_2020.rvt

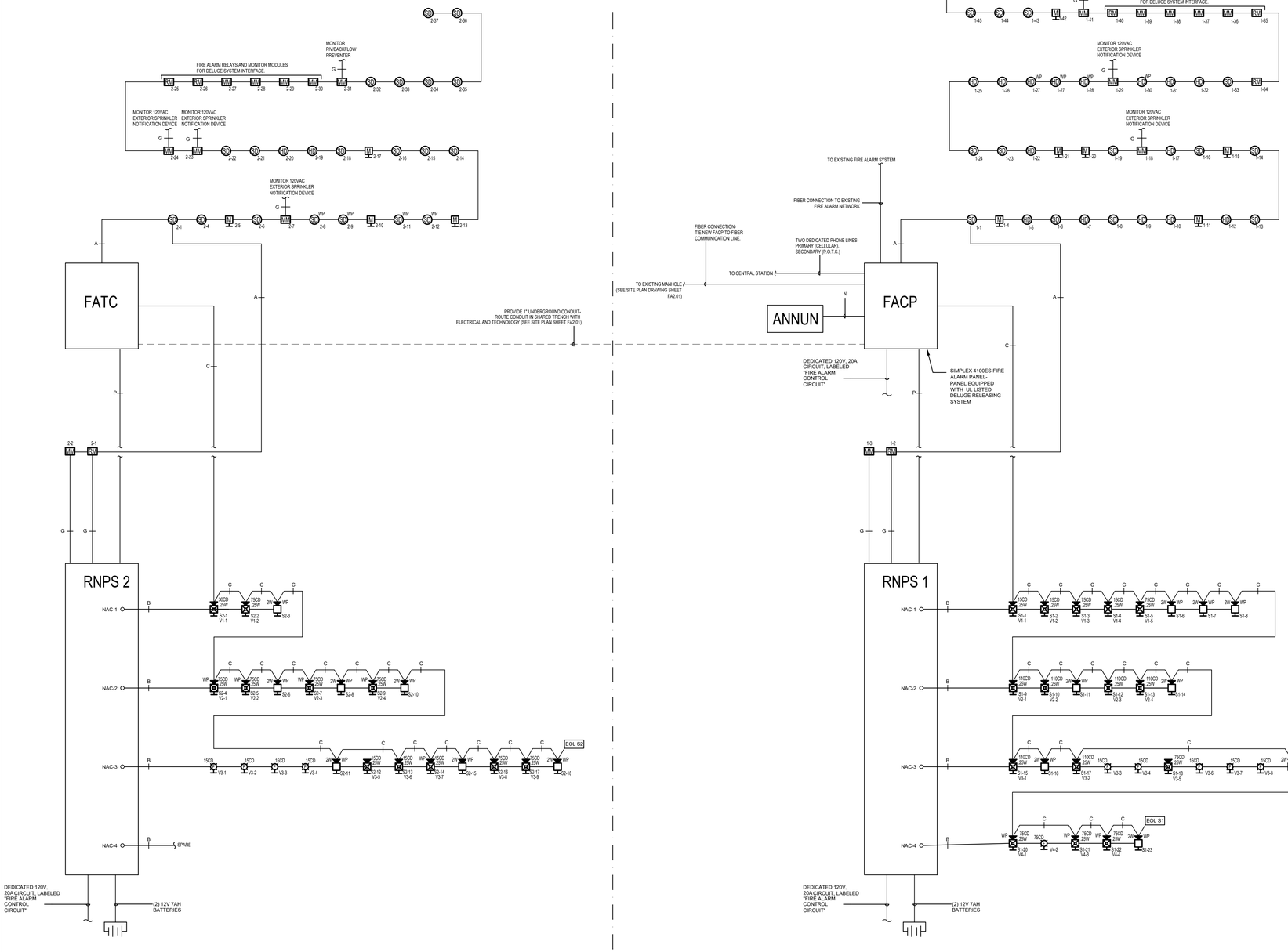

GENERAL SHEET NOTES

A. PROVIDE SEPARATE PULLBOXES FOR TEL/DATA AND FIRE ALARM SITE INFRASTRUCTURE.

B. PROVIDE PULL STRING FOR ALL SITE INFRASTRUCTURE.

C. PROVIDE PLENUM RATED CABLING AS REQUIRED

FIRE ALARM WIRING SCHEDULE

SYMBOL	RECOMMENDED WIRE TYPE	USED ON
1A	2-CONDUCTOR, #16 AWG SOLID TWISTED, SHIELDED CABLE	ADDRESSABLE ALARM INITIATING DEVICES: – SMOKE DETECTORS – HEAT DETECTORS – PULL STATION
1B	2-CONDUCTOR, #14 AWG SOLID, THHN	NOTIFICATION APPLIANCE CIRCUIT: – STROBES
1C	2-CONDUCTOR, #14 AWG TWISTED NON SHIELDED	NOTIFICATION APPLIANCE CIRCUIT: – SPEAKERS
1D	2-CONDUCTOR, #18 AWG SOLID TWISTED, SHIELDED CABLE	ADDRESSABLE ALARM INITIATING DEVICES: – LINEAR HEAT DETECTORS
1G	2-CONDUCTOR, #16 AWG SOLID, THHN	MONITORED DEVICES: – WATERFLOW SWITCH – TAMPER SWITCH – POST INDICATOR VALVE (PIV) – POWER SUPERVISORY RELAY (PSR) – RSM-2 TEST SWITCH – 5129 DIGITAL FIRE COMMUNICATOR
1N	2-CONDUCTOR, #16 AWG SOLID TWISTED SHIELDED CABLE	NETWORK WIRING: – REMOTE ANNUNCIATORS – REMOTE PANELS
120 VAC	2-CONDUCTOR WITH GROUND #12 AWG SOLID, THHN COLOR TO MATCH NEC	120 VAC POWER TO CONTROL UNITS: – MAIN XLSV FACU – REMOTE XLSV FACU – PS-8 NAC EXTENDER PANEL

NOTE: ALL UNDERGROUND CABLE MUST BE RATED FIRE ALARM "AQUA SEAL"

WEST BUILDING

EAST BUILDING

APPROVALS

IDENTIFICATION STAMP
DIV. OF THE STATE ARCHITECT
APP: 01-119409 INC:
REVIEWED FOR
SS ☑ FLS ☑ ACS ☑
DATE: 03/14/2022

NOLL & TAM ARCHITECTS
729 Heinz Avenue
Berkeley, CA 94710
tel 510.542.2200
fax 510.542.2201

RIJA
5515 Doyle Street, #7
Emeryville, CA 94608
www.rijainc.com
RIJA Job #: 2020011

SEAL

REGISTERED PROFESSIONAL ENGINEER
RAJA E. JAYSON
No. E19586
Exp. 06-30-23
ELECTRICAL
STATE OF CALIFORNIA

Date Signed:
2/28/22

PROJECT TITLE

Peralta Community College District
Merritt Landscape Horticulture Complex

12500 Campus Drive
Oakland, CA 94616

BID SET

ISSUE DATE 03/03/2022
N&T JOB NUMBER 22003

REVISIONS

	DATE	DESCRIPTION

DRAWN BY CAD | CHECKED BY RAJ

SHEET TITLE
RISER DIAGRAM

SHEET NUMBER
FA3.01

4/3/2020 7:20:00 PM BIM 360://PCCD Merritt Horticulture/Merritt Horticulture_2020.rvt

FAS BATTERY CALCULATION FACP

QTY	MODEL NUMBER	DEVICE TYPE	SUPERVISORY CURRENT (PER DEVICE)	SUPERVISORY CURRENT (TOTAL)	ALARM CURRENT (PER DEVICE)	ALARM CURRENT (TOTAL)
1	SIMPLEX 4100ES	CPU MOTHERBOARD	0.27700	0.27700	0.32100	0.32100
1	4100-9706	TOUCH SCREEN DISPLAY	0.32600	0.32600	0.44100	0.44100
1	4100-1291	REMOTE INTERFACE	0.0850	0.08500	0.0850	0.08500
1	4100-6033	ALARM RELAY	0.0150	0.01500	0.0370	0.03700
1	4100-6046	STANDARD INTERFACE MODULE	0.0600	0.06000	0.0600	0.06000
1	4100-6080	DACT	0.0300	0.03000	0.0400	0.04000
1	4100-5401	AUX RELAY/BATT. CHARGER	0.0680	0.06800	0.0770	0.07700
1	4100-5152	POWER SUPPLY	0.0680	0.06800	0.0770	0.07700
1	4100-5450	NAC MODULE	0.0660	0.06600	0.0660	0.06600
1	4100-3110	IDNAC/SLC MODULE	0.0900	0.09000	0.1500	0.15000
1	4100-9610	REMOTE ANNUNCIATOR	0.0650	0.06500	0.1400	0.14000
8	4099-9021	PULL STATION	0.00300	0.02400	0.00000	0.00000
16	4098-9714	SMOKE DETECTOR	0.00036	0.00576	0.08600	1.37600
20	4098-9733	HEAT DETECTOR	0.00030	0.00600	0.00650	0.13000
2	4090-9001	MONITOR MODULE	0.00040	0.00080	0.00510	0.01020
2	4090-9002	CONTROL & RELAY MODULE	0.00040	0.00080	0.00650	0.01300
			SYSTEM SUPERVISORY CURRENT	1.29996	SYSTEM ALARM CURRENT	3.05440

MAXIMUM SUPERVISORY CURRENT:	1.29996
STANDBY PERIOD (24 HOURS):	24.00000
REQUIRED SUPERVISORY RESERVE:	31.19904
MAXIMUM ALARM CURRENT:	3.05440
ALARM PERIOD (15 MINUTES):	0.25000
REQUIRED ALARM RESERVE:	0.76360
TOTAL RESERVE AMP HOURS:	31.96264
20% SPARE CAPACITY:	6.39253
TOTAL REQUIRED AMP HOURS:	**38.35517**
SELECTED BATTERY AMP HOURS:	**55.0**

FAS BATTERY CALCULATION RNPS 1

QTY	MODEL NUMBER	DEVICE TYPE	SUPERVISORY CURRENT (PER DEVICE)	SUPERVISORY CURRENT (TOTAL)	ALARM CURRENT (PER DEVICE)	ALARM CURRENT (TOTAL)
1	4009 IDNet EXTENDER	RNPS	0.00000	0.00000	0.00000	0.00000
5	49VO-WWF	15CD STROBE	0.00000	0.00000	0.04700	0.23500
0	49VO-WWF	30CD STROBE	0.00000	0.00000	0.05700	0.00000
1	49VO-WWF	75CD STROBE	0.00000	0.00000	0.10000	0.10000
0	49VO-WWF	110CD STROBE	0.00000	0.00000	0.13200	0.00000
3	49SV-APPLW	15CD SPEAKER/STROBE	0.00000	0.00000	0.04700	0.14100
0	49SV-APPLW	30CD SPEAKER/STROBE	0.00000	0.00000	0.05700	0.00000
5	49SV-APPLW	75CD SPEAKER/STROBE	0.00000	0.00000	0.10000	0.50000
6	49SV-APPLW	110CD SPEAKER/STROBE	0.00000	0.00000	0.13200	0.79200
			SYSTEM SUPERVISORY CURRENT	0.00000	SYSTEM ALARM CURRENT	3.46600

MAXIMUM SUPERVISORY CURRENT:	0.00000
STANDBY PERIOD (24 HOURS):	24.00000
REQUIRED SUPERVISORY RESERVE:	0.00000
MAXIMUM ALARM CURRENT:	3.46600
ALARM PERIOD (15 MINUTES):	0.25000
REQUIRED ALARM RESERVE:	0.86650
TOTAL RESERVE AMP HOURS:	0.86650
20% SPARE CAPACITY:	0.17330
TOTAL REQUIRED AMP HOURS:	**1.03980**
SELECTED BATTERY AMP HOURS:	**7.0**

FAS BATTERY CALCULATION RNPS 2

QTY	MODEL NUMBER	DEVICE TYPE	SUPERVISORY CURRENT (PER DEVICE)	SUPERVISORY CURRENT (TOTAL)	ALARM CURRENT (PER DEVICE)	ALARM CURRENT (TOTAL)
1	4009 IDNet EXTENDER	RNPS	0.00000	0.00000	0.00000	0.00000
5	49VO-WWF	15CD STROBE	0.00000	0.00000	0.04700	0.23500
0	49VO-WWF	30CD STROBE	0.00000	0.00000	0.05700	0.00000
0	49VO-WWF	75CD STROBE	0.00000	0.00000	0.10000	0.00000
0	49VO-WWF	110CD STROBE	0.00000	0.00000	0.13200	0.00000
2	49SV-APPLW	15CD SPEAKER/STROBE	0.00000	0.00000	0.04700	0.09400
1	49SV-APPLW	30CD SPEAKER/STROBE	0.00000	0.00000	0.05700	0.05700
5	49SV-APPLW	75CD SPEAKER/STROBE	0.00000	0.00000	0.10000	0.50000
6	49SV-APPLW	110CD SPEAKER/STROBE	0.00000	0.00000	0.13200	0.79200
			SYSTEM SUPERVISORY CURRENT	0.00000	SYSTEM ALARM CURRENT	3.37600

MAXIMUM SUPERVISORY CURRENT:	0.00000
STANDBY PERIOD (24 HOURS):	24.00000
REQUIRED SUPERVISORY RESERVE:	0.00000
MAXIMUM ALARM CURRENT:	3.37600
ALARM PERIOD (15 MINUTES):	0.25000
REQUIRED ALARM RESERVE:	0.84400
TOTAL RESERVE AMP HOURS:	0.84400
20% SPARE CAPACITY:	0.16880
TOTAL REQUIRED AMP HOURS:	**1.01280**
SELECTED BATTERY AMP HOURS:	**7.0**

FAS VOLTAGE DROP (VD) CALCULATION V1

DEVICE NUMBER	1	2	3	4	5
WIRE GAUGE	14	14	14	14	14
DISTANCE (FT)	20	30	52	121	135
AMPS AT DEVICE	0.14800	0.22000	0.22000	0.14800	0.14800
AMPS DEVELOPED	0.849	0.701	0.481	0.261	0.148
VOLTAGE DROP	0.096	0.119	0.141	0.178	0.113

TOTAL CIRCUIT VOLTAGE DROP:	0.646
CIRCUIT VOLTAGE:	24.000
VOLTAGE AT FINAL DEVICE:	23.354
% VOLTAGE DROP:	**2.691%**
MAXIMUM ALLOWED % VOLTAGE DROP:	10%

WIRE SIZE	OHMS/ 1000 FT	CIRC. MILS.
12	1.77	6530
14	2.82	4110
16	4.48	2580
18	7.14	1620
20	11.34	1020
22	18.08	640
24	28.64	404

FORMULA:
VOLTAGE DROP = AMPS X FT X OHMS/FT

FAS VOLTAGE DROP (VD) CALCULATION V1

DEVICE NUMBER	1	2	3	4	5
WIRE GAUGE	14	14			
DISTANCE (FT)	20	30			
AMPS AT DEVICE	0.14800	0.22000			
AMPS DEVELOPED	0.368	0.220			
VOLTAGE DROP	0.042	0.037			

TOTAL CIRCUIT VOLTAGE DROP:	0.079
CIRCUIT VOLTAGE:	24.000
VOLTAGE AT FINAL DEVICE:	23.921
% VOLTAGE DROP:	**0.328%**
MAXIMUM ALLOWED % VOLTAGE DROP:	10%

WIRE SIZE	OHMS/ 1000 FT	CIRC. MILS.
12	1.77	6530
14	2.82	4110
16	4.48	2580
18	7.14	1620
20	11.34	1020
22	18.08	640
24	28.64	404

FORMULA:
VOLTAGE DROP = AMPS X FT X OHMS/FT

FAS VOLTAGE DROP (VD) CALCULATION V2

DEVICE NUMBER	1	2	3	4	5
WIRE GAUGE	14	14	14	14	
DISTANCE (FT)	55	65	145	221	
AMPS AT DEVICE	0.14800	0.22000	0.22000	0.14800	
AMPS DEVELOPED	0.736	0.588	0.368	0.148	
VOLTAGE DROP	0.228	0.216	0.301	0.184	

TOTAL CIRCUIT VOLTAGE DROP:	0.929
CIRCUIT VOLTAGE:	24.000
VOLTAGE AT FINAL DEVICE:	23.071
% VOLTAGE DROP:	**3.872%**
MAXIMUM ALLOWED % VOLTAGE DROP:	10%

WIRE SIZE	OHMS/ 1000 FT	CIRC. MILS.
12	1.77	6530
14	2.82	4110
16	4.48	2580
18	7.14	1620
20	11.34	1020
22	18.08	640
24	28.64	404

FORMULA:
VOLTAGE DROP = AMPS X FT X OHMS/FT

FAS VOLTAGE DROP (VD) CALCULATION V2

DEVICE NUMBER	1	2	3	4	5
WIRE GAUGE	14	14	14	14	
DISTANCE (FT)	55	65	145	221	
AMPS AT DEVICE	0.14800	0.22000	0.22000	0.14800	
AMPS DEVELOPED	0.736	0.588	0.368	0.148	
VOLTAGE DROP	0.228	0.216	0.301	0.184	

TOTAL CIRCUIT VOLTAGE DROP:	0.929
CIRCUIT VOLTAGE:	24.000
VOLTAGE AT FINAL DEVICE:	23.071
% VOLTAGE DROP:	**3.872%**
MAXIMUM ALLOWED % VOLTAGE DROP:	10%

WIRE SIZE	OHMS/ 1000 FT	CIRC. MILS.
12	1.77	6530
14	2.82	4110
16	4.48	2580
18	7.14	1620
20	11.34	1020
22	18.08	640
24	28.64	404

FORMULA:
VOLTAGE DROP = AMPS X FT X OHMS/FT

FAS VOLTAGE DROP (VD) CALCULATION V3

DEVICE NUMBER	1	2	3	4	5
WIRE GAUGE	14	14			
DISTANCE (FT)	275	280			
AMPS AT DEVICE	0.14800	0.22000			
AMPS DEVELOPED	0.368	0.220			
VOLTAGE DROP	0.571	0.347			

TOTAL CIRCUIT VOLTAGE DROP:	0.918
CIRCUIT VOLTAGE:	24.000
VOLTAGE AT FINAL DEVICE:	23.082
% VOLTAGE DROP:	**3.826%**
MAXIMUM ALLOWED % VOLTAGE DROP:	10%

WIRE SIZE	OHMS/ 1000 FT	CIRC. MILS.
12	1.77	6530
14	2.82	4110
16	4.48	2580
18	7.14	1620
20	11.34	1020
22	18.08	640
24	28.64	404

FORMULA:
VOLTAGE DROP = AMPS X FT X OHMS/FT

FAS VOLTAGE DROP (VD) CALCULATION V3

DEVICE NUMBER	1	2	3	4	5
WIRE GAUGE	14	14	14	14	
DISTANCE (FT)	125	132	220	232	
AMPS AT DEVICE	0.14800	0.22000	0.22000	0.14800	
AMPS DEVELOPED	0.736	0.588	0.368	0.148	
VOLTAGE DROP	0.519	0.438	0.457	0.194	

TOTAL CIRCUIT VOLTAGE DROP:	1.607
CIRCUIT VOLTAGE:	24.000
VOLTAGE AT FINAL DEVICE:	22.393
% VOLTAGE DROP:	**6.695%**
MAXIMUM ALLOWED % VOLTAGE DROP:	10%

WIRE SIZE	OHMS/ 1000 FT	CIRC. MILS.
12	1.77	6530
14	2.82	4110
16	4.48	2580
18	7.14	1620
20	11.34	1020
22	18.08	640
24	28.64	404

FORMULA:
VOLTAGE DROP = AMPS X FT X OHMS/FT

FAS VOLTAGE DROP (VD) CALCULATION V4

DEVICE NUMBER	1	2	3	4	5
WIRE GAUGE	14	14	14		
DISTANCE (FT)	120	135	141		
AMPS AT DEVICE	0.14800	0.22000	0.22000		
AMPS DEVELOPED	0.588	0.440	0.220		
VOLTAGE DROP	0.398	0.335	0.175		

TOTAL CIRCUIT VOLTAGE DROP:	0.908
CIRCUIT VOLTAGE:	24.000
VOLTAGE AT FINAL DEVICE:	23.092
% VOLTAGE DROP:	**3.783%**
MAXIMUM ALLOWED % VOLTAGE DROP:	10%

WIRE SIZE	OHMS/ 1000 FT	CIRC. MILS.
12	1.77	6530
14	2.82	4110
16	4.48	2580
18	7.14	1620
20	11.34	1020
22	18.08	640
24	28.64	404

FORMULA:
VOLTAGE DROP = AMPS X FT X OHMS/FT

APPROVALS

IDENTIFICATION STAMP
DIV. OF THE STATE ARCHITECT
APP: 01-119409 INC:
REVIEWED FOR
SS ☑ FLS ☑ ACS ☑
DATE: 03/14/2022

NOLL & TAM ARCHITECTS
729 Heinz Avenue
Berkeley, CA 94710
tel 510.542.2200
fax 510.542.2201

RIJA
5515 Doyle Street, #7
Emeryville, CA 94608
www.rijainc.com
RIJA Job #: 2020011

SEAL

REGISTERED PROFESSIONAL ENGINEER
RAJ K. JOSHI
No. E19586
Exp. 06-30-23
ELECTRICAL
STATE OF CALIFORNIA

Date Signed:
2/28/22

PROJECT TITLE

Peralta Community College District
Merritt Landscape Horticulture Complex

12500 Campus Drive
Oakland, CA 94616

BID SET

ISSUE DATE **03/03/2022**
N&T JOB NUMBER **22003**

REVISIONS

	DATE	DESCRIPTION

DRAWN BY **CAD** CHECKED BY **RAJ**

SHEET TITLE
SCHEDULES

SHEET NUMBER
FA4.01

4/3/2020 7:20:00 PM BIM 360://PCCD Merritt Horticulture/Merritt Horticulture_2020.rvt

PRODUCT INFORMATION
FEATURES:
- UL LISTED
- A SINGLE ADDRESSABLE POINT BOTH CONTROLS A 2A FORM "C" CONTACT AND TRACKS ITS STATUS
- COMPATIBLE WITH SIMPLEX MODEL 4010 AND 4100 ADDRESSABLE FIRE ALARM CONTROL PANEL
- LATCHING RELAY DESIGN ALLOWS DATA AND POWER TO BE BOTH SUPPLIED BY IDNet COMMUNICATIONS
- COMPACT, SEALED CONSTRUCTION:
  - SCREW TERMINALS FOR WIRING CONNECTIONS
  - REDUCES DUST INFILTRATION

SPECIFICATIONS:
- RELAY IAM POWER: SUPPLIED BY IDNet COMMUNICATIONS
- RELAY IAM CONTACTS (FORM "C", SPDT)
- POWER LIMITED RATING: 2A @ 24VDC, TRANSIENT SUPPRESSED LOADS, 1A @ 24VDC FOR INDUCTIVE LOADS
- NON POWER LIMITED RATING: 1/2A @ 24VAC, TRANSIENT SUPPRESSED LOADS, 1A @ 24 VDC FOR INDUCTIVE LOADS
- WIRE CONNECTIONS: SCREW TERMINALS FOR IN/OUT WIRING, #18 TO #14 AWG WIRE
- COMPATIBLE WITH SIMPLEX 2081-9044 OVER VOLTAGE PROTECTORS
- DIMENSIONS: 4 1/8"H x 4 1/8"W x 1 3/8"D (105mm x 105mm x 35mm)
- HOUSING MATERIAL: BLACK THERMOPLASTIC
- MOUNTING PLATE MATERIAL: SHEET METAL, GALVANIZED
- TEMPERATURE RANGE: 32° F TO 120° F (0° C TO 49° C) INTENDED FOR INDOOR OPERATION
- HUMIDITY RANGE UP TO 93% RH AT 100° F (38° C)

DESCRIPTION:
IDNet SLC RELAY MODULES ALLOW THE SIMPLEX FIRE ALARM CONTROL PANEL TO CONTROL A REMOTELY LOCATED FORM "C" CONTACT USING IDNet ADDRESSABLE COMMUNICATIONS FOR BOTH DATA AND POWER. TYPICAL APPLICATIONS WOULD BE FOR SWITCHING LOCAL POWER FOR CONTROL FUNCTIONS SUCH AS ELEVATOR CAPTURE, OR CONTROL OF HVAC COMPONENTS, PRESSURIZATION FANS, DAMPERS, ETC. RELAY STATUS IS ALSO COMMUNICATED REQUIRING ONLY ONE DEVICE ADDRESS.

WIRING NOTES:
1. IDNet LINES ARE TO BE #18 AWG TWISTED PAIR (CONSULT SG SALES ENGINEERING FOR EXCEPTIONS).
2. MAXIMUM ALLOWABLE LINE RUN, FROM THE F.A.C.P. TO THE FARTHEST DEVICE, NOT TO EXCEED 2500 FEET.
3. MAXIMUM QUANTITY OF DEVICES PER CIRCUIT: CONTROL PANEL MODULE DEPENDENT
4. CONTRACTOR WIRING TO RELAY CONTACTS IS UNSUPERVISED. USE #14 AWG WIRE TO LOCAL CODE.
5. RELAY CONTACTS RATED 2A, 24VDC (1A FOR INDUCTIVE LOAD) RELAY CONTACTS RATED 0.5A 120VAC (NON POWER LIMITED) FOR POWER-LIMITED OPERATION, POWER MUST BE PROVIDED FROM FACP OR POWER-LIMITED POWER SUPPLY LISTED FOR FIRE PROTECTIVE SIGNALING USE.
6. SEE INSTALLATION INSTRUCTIONS 574-184.
7. IF SHIELD IS PRESENT, CONNECT TO THE OUTGOING IDNet SHIELD TO PROVIDE A CONTINUOUS SHIELD OVER THE LENGTH OF THE IDNet CHANNEL. METHOD OF SPLICE DETERMINED BY AHJ.
8. WHEN CONNECTED TO A NON POWER-LIMITED SOURCE, THE WIRING MUST MAINTAIN A MINIMUM 1/4 INCH SEPARATION FROM IDNet WIRING.
9. WHEN USED WITH NON POWER-LIMITED SOURCE, THE "POWER LIMITED WIRING" INDICATION ON THE DEVICE LABEL MUST BE OBLITERATED.
10. WHEN BOTH POWER-LIMITED AND NON POWER-LIMITED SOURCES ARE PRESENT, USE TYPE FPL, FPLR OR FPLP POWER LIMITED CABLE FOR POWER-LIMITED CIRCUITS.
11. MAXIMUM TOTAL WIRE (INCLUDING ALL T-TAPS) ON CIRCUIT, FROM THE F.A.C.P. NOT TO EXCEED 10,000 FEET OR .58uF. (CLASS B ONLY)
12. REFER TO FIELD WIRING DIAGRAM 842-073

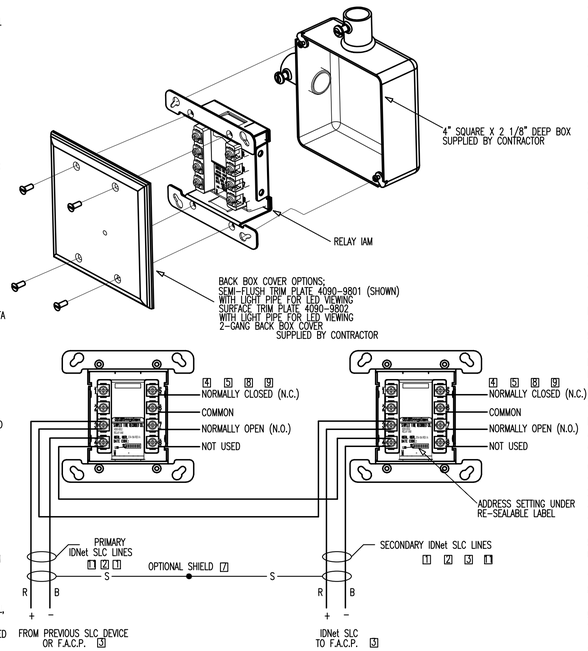

4 4090-9002 IDNET SLC, INDIVIDUAL ADDRESSABLE OUTPUT MODULE RELAY (AOM)

SCALE: NTS

PRODUCT INFORMATION
FEATURES:
- UL LISTED
- ADDRESSABLE COMMUNICATIONS SUPPLY BOTH DATA AND POWER TO PROVIDE:
  - SUPERVISED STYLE B MONITORING OF NORMALLY OPEN DRY CONTACTS.
  - COMMUNICATIONS WIRING USING ONE TWISTED, SHIELDED WIRE PAIR.
- COMPATIBLE WITH SIMPLEX ADDRESSABLE FIRE ALARM CONTROL PANELS.
- COMPACT, SEALED CONSTRUCTION:
  - ALLOWS MOUNTING IN A SINGLE GANG BOX
  - REDUCES DUST INFILTRATION
- PROVIDES CURRENT LIMITED MONITORING
  - TO MONITOR TAMPER SWITCH (SUPERVISORY) AND WATER FLOW SWITCH (ALARM) ON SAME CIRCUIT
  - REQUIRES ONLY ONE ADDRESSABLE POINT
- SELECTABLE LATCHING OPERATION
  - MONITORS MOMENTARY CONTACT CLOSURES SUCH AS RATE-OF RISE HEAT DETECTORS

SPECIFICATIONS:
- WIRE CONNECTIONS: SCREW TERMINALS FOR IN/OUT WIRING FOR WIRE FROM #18 TO #14 AWG.
- DIMENSIONS: 1 9/16" X 1 3/4" X 1 1/4"
- TEMPERATURE RANGE: 32° F TO 158° F (0° C TO 70° C)
- HUMIDITY: UP TO 93% RH AT 100° F
- SUPERVISION RESISTOR: 6.8k 10HM/2W, (SUPPLIED) SIMPLEX PART NO. 733-886
- RESISTOR FOR CURRENT LIMITED OPERATION: 4.7k 10HM/2W, WITH A 1.8k 1/2W
- INPUT REQUIREMENTS: NORMALLY OPEN, DRY CONTACTS
- HOUSING MATERIAL: BLACK THERMOPLASTIC

DESCRIPTION:
THE 4090-9001 IS AN ADDRESSABLE INPUT MODULE (AIM) WITH POWER AND COMMUNICATIONS SUPPLIED BY A TWO WIRE ADDRESSABLE CIRCUIT. IT PROVIDES LOCATION SPECIFIC ADDRESSABILITY TO A SINGLE INITIATING DEVICE (SUCH AS SINGLE STATION SMOKE DETECTOR ALARM CONTACTS OR HEAT DETECTOR CONTACTS) OR MULTIPLE DEVICES AT THE SAME LOCATION BY MONITORING NORMALLY OPEN, DRY CONTACTS AND THE WIRING TO AN END-OF-LINE RESISTOR. CLOSURE OF THE MONITORED CONTACTS INITIATES AN ALARM OR OTHER RESPONSE AS PROGRAMMED AT THE FIRE ALARM CONTROL PANEL. AN OPEN IN THE MONITORED CIRCUIT WIRING WILL CAUSE A TROUBLE TO BE REPORTED. IF THE INITIATING DEVICE CONTACTS ARE MOMENTARY, SUCH AS FROM A RATE-OF-RISE HEAT DETECTOR, ENABLING THE LATCH FEATURE WILL MAINTAIN THE ALARM CONDITION UNTIL THE SYSTEM IS RESET. FOR APPLICATIONS WHERE THE CONTACT CLOSURE LATCHES, OR IF ITS CONDITION NEEDS TO BE TRACKED AT THE CONTROL PANEL NON-LATCHING OPERATION MAY BE ENABLED.

WIRING NOTES:
1. ALL WIRING TO COMPLY WITH LOCAL CODE.
2. CONDUCTORS MUST TEST FREE OF ALL GROUNDS.
3. ONLY N.O. DRY CONTACTS ARE ALLOWED.
4. MAXIMUM WIRE LENGTH (NO. 18 AWG) IS 400 FT. W/2081-9044 OVER VOLTAGE PROTECTORS OR 400 FT. W/O PROTECTORS.
5. A MAXIMUM QUANTITY OF DEVICES PER CIRCUIT: CONTROL PANEL MODULE DEPENDENT
6. IF SHIELD IS PRESENT, CONNECT TO THE OUTGOING IDNet SHIELD TO PROVIDE A CONTINUOUS SHIELD OVER THE LENGTH OF THE IDNet CHANNEL. METHOD OF SPLICE DETERMINED BY AHJ.
7. REFER TO INSTALLATION INSTRUCTIONS 574-331.
8. MAXIMUM ALLOWABLE LINE RUN FROM THE F.A.C.P. TO THE FARTHEST DEVICE, NOT TO EXCEED 2500 FEET.
9. MAXIMUM TOTAL WIRE (INCLUDING ALL T-TAPS) FROM THE FIRE ALARM CONTROL PANEL
10. FOR STYLE 6 CIRCUIT WIRING IT IS RECOMMENDED THAT THE PRIMARY 1 AND THE BACK-UP 2 LINES BE IN SEPARATE WIRE RUNS AND IN COMPLIANCE WITH LOCAL REQUIREMENTS.
11. REFER TO FIELD WIRING DIAGRAM 842-073

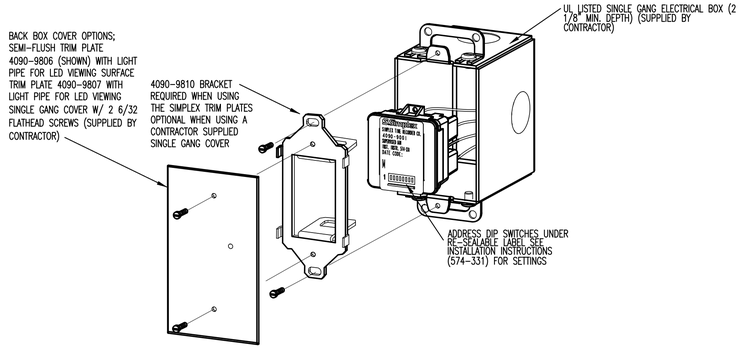

T-SENSING OPERATION:
- SUPERVISED INPUT:
  - 4090-9001 AIM WITH T-SENSE CAPABILITY HAS A SUPERVISED INPUT THAT MONITORS FOR CONTINUITY TO AN END-OF-LINE RESISTOR AND CAN DIFFERENTIATE BETWEEN A SHORT CIRCUIT CONTACT CLOSURE AND A CURRENT LIMITED CONTACT CLOSURE.
- FOUR STATE OPERATION:
  - NORMAL IS WHEN ALL CONTACTS ARE OPEN AND THERE IS CONTINUITY TO THE END-OF-LINE RESISTOR.
  - OPEN IS WHEN CONTINUITY DOES NOT EXIST TO THE END-OF-LINE RESISTOR, CAUSING A TROUBLE CONDITION.
  - SHORT, INDICATES THAT A CONTACT HAS CLOSED THAT IS DIRECTLY CONNECTED TO THE INPUT CIRCUIT.
  - CURRENT LIMITED INDICATES THAT A CONTACT HAS CLOSED BEYOND A SERIES CONNECTED CURRENT LIMITING RESISTOR. THIS OPERATION ALLOWS DIFFERENTIATION BETWEEN TWO DIFFERENT CONTACT TYPES DUE TO THEIR WIRING LOCATION, AND REPORTING AS A SINGLE IDNET ADDRESSABLE POINT TO A 4100U FIRE ALARM CONTROL PANEL.

2 4090-9001 IDNET SLC, SUPERVISED ADDRESSABLE INPUT MODULE (AIM)

SCALE: NTS

INSTRUCTIONS
1. REMOVE ELECTRONIC CARD CAGE (IF PRESENT) AND STORE IT IN A SAFE DRY AREA.
2. NO KNOCKOUTS PROVIDED. CUT CONDUIT/SERVICE ENTRANCE OPENINGS. REFER TO FIG.1 FOR PROPER LOCATIONS. CONDUIT PROTRUSION INTO BOX 1/2" MAX.
3. MOUNT BOX TO WALL: BOX MUST BE LEVEL AND PLUMB. FOR SURFACE MOUNT USE TEAR DROP AND CLEARANCE HOLES ON BACK SURFACE. FOR SEMI-FLUSH MOUNT: USE WALL STUD GUIDES FOR MAXIMUM ALLOWABLE BOX DEPTH TO PROVIDE OPEN DOOR CLEARANCE. USE KNOCKOUTS ON SIDE WALL, SCREW OR NAIL BOX TO WALL STUDS. ATTACH ALL BOXES TO PLYWOOD WALLS USING #12 X 1" LONG WOOD SCREWS AT ALL 4 CORNERS, AND 8" OC AT ALL SIDES OF ALL BOXES (TYP.).
4. MINIMUM DISTANCE BETWEEN ANY TWO BOXES IS 3 1/4" (6" MAXIMUM).
5. IF PRESENT, USE WIRE MANAGEMENT BRACKETS ON BOX SIDES TO SECURE WIRE RUNS.
6. NEMA RATING: NEMA 1 – GENERAL PURPOSE.
7. DO NOT LOCATE POWER-LIMITED WIRING IN THE SHADED AREAS OF THE BACKBOX, THIS AREA IS RESERVED FOR NON-POWER LIMITED CIRCUITRY SUCH AS AC POWER, BATTERIES AND CITY CONNECTION.
8. REFER TO SIMPLEX BACKBOX INSTALLATION DOCUMENT 579-117 FOR DETAILED INSTRUCTIONS.

NOTE:
ADA REQUIREMENTS LIMIT THE ALLOWABLE PROTRUSION OF OBJECTS MOUNTED IN PUBLIC ACCESSIBLE WALKS, HALLS, CORRIDORS, PASSAGEWAYS OR AISLES. THE 4 INCH (100mm) RESTRICTION APPLIES TO ANY ITEM IN WHICH THE MEASUREMENT FROM THE FLOOR TO THE BOTTOM OF THE UNIT IS MORE THAN 27 INCHES.

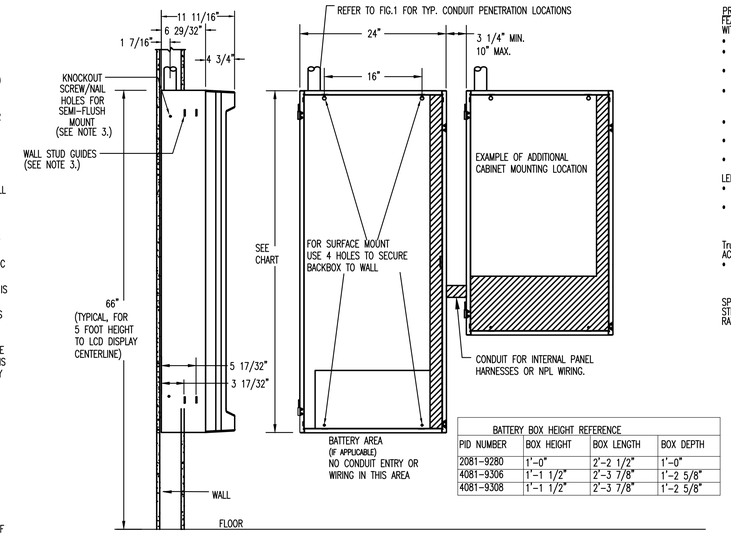

BATTERY BOX HEIGHT REFERENCE			
PID NUMBER	BOX HEIGHT	BOX LENGTH	BOX DEPTH
2081-9280	1'-0"	2'-2 1/2"	1'-0"
4081-9306	1'-1 1/2"	2'-3 7/8"	1'-2 5/8"
4081-9308	1'-1 1/2"	2'-3 7/8"	1'-2 5/8"

BACKBOX AND DOOR OPTIONS						
PKG. SIZE	BOX W/ GLASS DR	BOX W/ SOLID DR	BOX ONLY	GLASS DOOR	SOLID DOOR	BOX HEIGHT
1 BAY RED	2975-9441	2975-9447	2975-9407	4100-2124	4100-2134	22"
2 BAY RED	2975-9442	2975-9448	2975-9408	4100-2125	4100-2135	40"
3 BAY RED	2975-9443	2975-9449	2975-9409	4100-2126	4100-2136	56"
1 BAY PLATINUM	2975-9444	2975-9450	2975-9438	4100-2104	4100-2114	22"
2 BAY PLATINUM	2975-9445	2975-9451	2975-9439	4100-2105	4100-2115	40"
3 BAY PLATINUM	2975-9446	2975-9452	2975-9440	4100-2106	4100-2116	56"

TYPICAL CONDUIT LOCATION FOR PWR. LIMITED FIELD WIRING

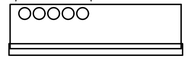

FIG. 1

3 4100ES BACKBOX INSTALLATION

SCALE: NTS

PRODUCT INFORMATION
FEATURES: INDIVIDUALLY ADDRESSED WALL MOUNT VISIBLE NOTIFICATION APPLIANCES WITH EFFICIENT ELECTRONIC HIGH INTENSITY XENON STROBE PROVIDES:
- SUPERVISION OF EACH INDIVIDUAL APPLIANCE'S WIRING AND CONNECTIONS
- ABILITY TO CONNECT USING "T" TAPPING FOR CLASS B/STYLE 4 CIRCUITS TO SIMPLIFY WIRING
- HORNS CONTROLLED SEPARATELY FROM STROBES ON THE SAME 2-WIRE CIRCUIT ALLOWING "ON-UNTIL-SILENCED" AND "ON-UNTIL RESET".
- XENON STROBE OUTPUT IS MANUALLY SELECTABLE FOR 15, 30, 75, 110, 135 AND 185 CANDELA OR "FACP", THE "FACP" SETTING ALLOWS THE 4100 TO PROGRAM THE CANDELA SETTING.
- IN/OUT WIRING ACCESSIBILITY FROM FRONT OF HOUSING PROVIDES EASY ACCESS FOR INSTALLATION, INSPECTION, AND TESTING.
- MAGNETIC TEST DIAGNOSTICS TO ASSIST CHECKOUT AND TESTING OF APPLIANCES AND WIRING.
- UL LISTED TO STANDARD 1971

LED INDICATOR AND MAGNETIC TEST FEATURE:
- LED INDICATOR CAN BE ELECTED TO DISPLAY EACH POLLING CYCLE TO INDICATE APPLIANCE SUPERVISION
- WHEN THE TrueAlert CONTROLLER IS IN DIAGNOSTIC MODE, THE MAGNETIC TEST PULSES THE LED TO INDICATE APPLIANCE ADDRESS AND IS SELECTABLE TO ALSO BRIEFLY FLASH THE STROBE TO CONFIRM OPERATION

TrueAlert 2-WIRE ADDRESSABLE CONTROL OF VISIBLE AND AUDIBLE NOTIFICATION ACTIVATES APPLIANCES WITH:
- HORNS SOUNDED AS TEMPORAL OR MARCH TIME PATTERN, OR ON CONTINUOUSLY, CONTROLLED SEPARATELY FROM VISIBLE APPLIANCES ON THE SAME TWO-WIRE CIRCUIT

SPECIFICATIONS:
STROBE:
RATED VOLTAGE RANGE: 17 TO 31 VR

APPLIANCE CONFIGURATION SETTINGS
POSITION 1: CONFIGURATION CONTROL – LOCAL (OFF), PANEL (ON)
POSITION 2: AUDIBLE VOLUME – HIGH (OFF), LOW (ON)
POSITION 3: CANADIAN HORN MODE – SET TO OFF
POSITION 4: LEGACY NAC MODE – SET TO OFF
POSITION 5,6,7: UNUSED – SET TO OFF
POSITION 8: CLEAR/COLOR LENS – ALARM (OFF), ALERT (ON)

APPLIANCE CONFIGURATION SETTINGS POSITION 1: CONFIGURATION CONTROL – LOCAL (OFF), PANEL (ON) POSITION 2: AUDIBLE VOLUME – HIGH (OFF), LOW (ON) POSITION 3: CANADIAN HORN MODE – SET TO OFF POSITION 4: LEGACY NAC MODE – SET TO OFF POSITION 5,6,7: UNUSED – SET TO OFF
POSITION 8: CLEAR/COLOR LENS – ALARM (OFF), ALERT (ON)

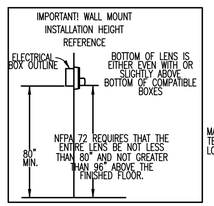

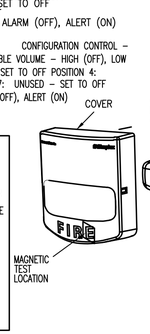

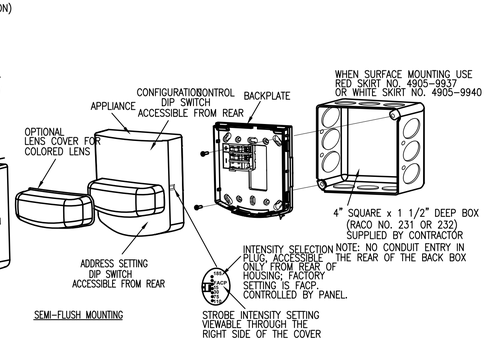

MODEL NUMBER	COVER COLOR	LETTERING COLOR	LENS COLOR	CURRENT VALUES ARE UL 1971 MAX RATING FOR THE GIVEN VOLTAGE LEVEL					
				VOLTAGE	15cd	30cd	75cd	110cd	135cd	185cd
49VO-WRF(-BA)	RED	WHITE	CLEAR	24 VRMS	0.047	0.057	0.100	0.132	0.160	0.208
				17 VRMS	0.062	0.075	0.133	0.178	**0.214	**0.281
			AMBER/ BLUE	24 VRMS	0.054	0.078	0.128	0.184	0.211	
				17 VRMS	0.067	0.103	0.171	0.250	**0.282	
49VO-WWF(-BA)	WHITE	RED	GREEN	24 VRMS	*10cd	*20cd	*45cd	*75cd	*95cd	NOT SUPPORTED
				17 VRMS	0.054	0.078	0.128	0.184	0.211	
				24 VRMS	0.067	0.103	0.171	0.250	**0.282	
			RED	24 VRMS	*3cd	*7cd	*15cd	*30cd	*37cd	
				17 VRMS	0.054	0.078	0.128	0.184	0.211	
				24 VRMS	0.067	0.103	0.171	0.250	**0.282	

* VISIBLE OUTPUT RATING FOR THE GIVEN LENS COVER COLOR AT THE APPLIANCE SETTING.
** 17 VOLT CURRENT SHOWN AT THE HIGH CANDELA SETTINGS IS FOR USE WITH 4009T ONLY.

GENERAL SPECIFICATIONS:
HOUSING DIMENSIONS (INCLUDING LENS): 5 1/8" H X 5" W X 2 5/8" D (130 mm X 127 mm X 67 mm)
TEMPERATURE RANGE: 32° TO 120° F (0° TO 49° C)
HUMIDITY RANGE: 10% TO 93% NON-CONDENSING AT 104° F (40° C)
CONNECTIONS: TERMINAL BLOCKS FOR 18 TO 12 AWG

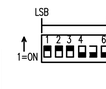

REFER TO TRUEALERT DIPSWITCH SETTINGS DETAIL FOR ADDRESS SETTINGS.

MOUNTING INSTRUCTIONS:
1. BRING THE BUILDING WIRING THROUGH THE RECTANGULAR OPENING IN THE BACKPLATE.
2. CONNECT THE BUILDING WIRES TO THE BACKPLATE.
3. SECURE THE BACKPLATE TO THE ELECTRICAL BOX BY USING THE PROVIDED HARDWARE. INSTALLED WITH THE WRITING "INSTALL THIS SIDE UP" AT THE TOP.
4. ATTACH THE COVER TO THE APPLIANCE.
5. SET THE APPLIANCE ADDRESS AND CONFIGURATION SETTINGS.
6. ATTACH THE ASSEMBLED APPLIANCE ONTO THE BACKPLATE.

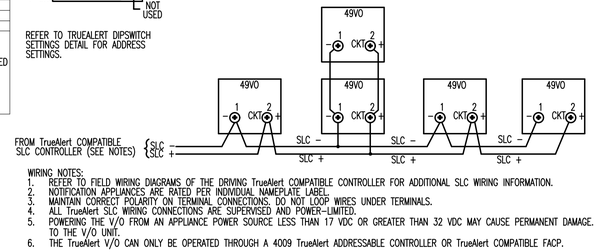

WIRING NOTES:
1. REFER TO FIELD WIRING DIAGRAMS OF THE DRIVING TrueAlert COMPATIBLE CONTROLLER FOR ADDITIONAL SLC WIRING INFORMATION.
2. NOTIFICATION APPLIANCES ARE RATED PER INDIVIDUAL NAMEPLATE LABEL.
3. MAINTAIN CORRECT POLARITY ON TERMINAL CONNECTIONS. DO NOT LOOP WIRES UNDER TERMINALS.
4. ALL TrueAlert SLC WIRING CONNECTIONS ARE SUPERVISED AND POWER-LIMITED.
5. POWERING THE V/O FROM AN APPLIANCE POWER SOURCE LESS THAN 17 VDC OR GREATER THAN 32 VDC MAY CAUSE PERMANENT DAMAGE. TO THE V/O UNIT.
6. THE TrueAlert V/O CAN ONLY BE OPERATED THROUGH A 4009 TrueAlert ADDRESSABLE CONTROLLER OR TrueAlert COMPATIBLE FACP.

1 TRUEALERT ES (STYLE 4 SLC) ONLY NOTIFICATION APPLIANCES 49VO SERIES

SCALE: NTS

APPROVALS

IDENTIFICATION STAMP
DIV. OF THE STATE ARCHITECT
APP: 01-119409 INC:
REVIEWED FOR
SS ☑ FLS ☑ ACS ☑
DATE: 03/14/2022

NOLL & TAM ARCHITECTS
729 Heinz Avenue
Berkeley, CA 94710
tel 510.542.2200
fax 510.542.2201

RIJA
5515 Doyle Street, #7
Emeryville, CA 94608
www.rijainc.com
RIJA Job #: 2020011

SEAL

Date Signed: 2/28/22

PROJECT TITLE

Peralta Community College District
Merritt Landscape Horticulture Complex

12500 Campus Drive
Oakland, CA 94616

BID SET

ISSUE DATE	03/03/2022
N&T JOB NUMBER	22003

REVISIONS

	DATE	DESCRIPTION

DRAWN BY CAD	CHECKED BY RAJ

SHEET TITLE

DETAILS

SHEET NUMBER

FA5.01

4/3/2020 7:20:00 PM BIM 360://PCCD Merritt Horticulture/Merritt Horticulture_2020.rvt

MODEL NUMBER	MOUNTING ADAPTERS AND BOXES		DIMENSIONS
4905-9946	SURFACE MOUNT RED ADAPTER SKIRT	REQUIRED WHEN MOUNTING TO SURFACE MOUNTED ELECTRICAL BOX 4" SQUARE, 1 1/2" DEEP WITH 1 1/2" DEEP EXTENSION	7 3/4" H X 5 3/8" W X 3 3/16"D (197 mm X 137 mm X 81 mm) DEPTH WITH S/V=5 7/8" (149mm)
4905-9947	SURFACE MOUNT WHITE ADAPTER SKIRT		
4905-9903	ADAPTER PLATE, RED, REQUIRED TO MOUNT S/V ON 2975-9145		8 5/16" H X 5 3/4" W X 0.060" THICK (211 mm X 146 mm X 1.5 mm)
2975-9145	MOUNTING BOX, RED FOR SURFACE OR FLUSH MOUNT REQUIRES ADAPTER PLATE 4905-9903 (THIS BOX MAY BE AVAILABLE FOR RETROFIT APPLICATIONS)		7 7/8" H X 5 1/8" W X 2 3/4"D (200 mm X 130 mm X 70 mm)

MODEL NUMBER	COVERS (FOR REPLACEMENT OR COLOR CONVERSION)	DIMENSIONS
4905-9996	RED S/V COVER WITH WHITE "FIRE" LETTERING	7 1/4" H X 5" W X 1 3/8"D (184 mm X 127 mm X 35 mm)
4905-9997	WHITE S/V COVER WITH RED "FIRE" LETTERING	

TrueAlert S/V UNITS– DIP SWITCH ADDRESS CHART

RESERVED FOR FUTURE USE ↓ / DIP SWITCHES 5 & 6 →	0000	1000	0100	1100
0000	0	16	32	48
1000	1	17	33	49
0100	2	18	34	50
1100	3	19	35	51
0010	4	20	36	52
1010	5	21	37	53
0110	6	22	38	54
1110	7	23	39	55
0001	8	24	40	56
1001	9	25	41	57
0101	10	26	42	58
1101	11	27	43	59
0011	12	28	44	60
1011	13	29	45	61
0111	14	30	46	62
1111	15	31	47	63

DIP SWITCHES 1 THRU 4

LSB MSB

ATTACHES TO ONE OF 8 TERMINALS

1 2 3 4 5 6 7 8

1=ON 0=OFF NOT USED

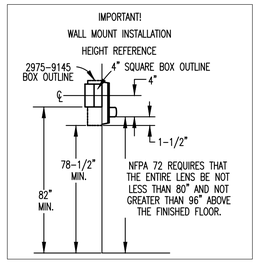

PRODUCT INFORMATION
FEATURES:
AUDIBLE NOTIFICATION APPLIANCE (SPEAKER)
- HIGH QUALITY VOICE AND TONE REPRODUCTION WITH TAPS FOR 1/4, 1/2, 1W, OR 2W AT 25 OR 70.7 VRMS
- UL LISTED TO STANDARD 1480
- SPEAKERS ARE WIRED SEPARATELY FROM TRUEALERT STROBE WIRING

TrueAlert VISIBLE NOTIFICATION APPLIANCE (STROBE)
- XENON STROBE OUTPUT IS MANUALLY SELECTABLE FOR 15, 30, 75, 110 CANDELA OR "FACP". THE "FACP" SETTING ALLOWS THE 4100 TO PROGRAM THE CANDELA SETTING.
- UL LISTED TO STANDARD 1971
- SUPERVISION OF EACH INDIVIDUAL STROBE'S WIRING AND CONNECTIONS WITH ACTIVATION AT A SYNCHRONIZED 1 Hz FLASH RATE
- MAGNETIC TEST DIAGNOSTICS TO ASSIST CHECKOUT AND TESTING OF TRUEALERT STROBE AND WIRING
- RUGGED, HIGH IMPACT, FLAME RETARTANT THERMOPLASTIC HOUSING AVAILABLE IN RED OR WHITE (COVERS ARE AVAILABLE SEPARATELY TO CONVERT COLORS)
- LED INDICATOR CAN BE SELECTED TO DISPLAY EACH POLLING CYCLE TO INDICATE APPLIANCE SUPERVISION
- WHEN THE TRUEALERT CONTROLLER IS IN DIAGNOSTIC MODE, THE MAGNETIC TEST PULSES THE LED TO INDICATE APPLIANCE ADDRESS AND IS SELECTABLE TO ALSO BRIEFLY FLASH THE STROBE TO CONFIRM OPERATION

GENERAL SPECIFICATIONS:
DIMENSIONS (INCLUDING LENS) : 7 1/4" (184mm) H X 5" (127mm) W X 2 5/8" (67mm) D TEMPERATURE RANGE: 32° F TO 122° F (0° TO 50° C) HUMIDITY RANGE: 10% TO 93% NON-CONDENSING AT 100° F (38° C) DEPTH INTO BOX: 2 1/2" (64mm) SPEAKER TAP

SELECTION:
SINGLE JUMPER WIRE WITH PRESSURE CONNECTOR CONNECTIONS: TERMINALS FOR 18 TO 12 AWG, SEPARATE TERMINALS FOR SPEAKER AND TrueAlert STROBE CONNECTION FOR VISIBLE LENS MOUNTING HEIGHT TO MEET "ADA" 80" MINIMUM, THE 4" SQUARE BACKBOX IS TO BE INSTALLED AT A HEIGHT OF 82" FROM THE FLOOR TO THE BOTTOM OF THE BOX. STROBE – RATED VOLTAGE: 17 TO 31 VRMS – SUPERVISORY REQUIREMENTS: 1 UNIT LOAD – STROBE FLASH RATE: 1Hz – SYNCHRONIZED SLC LOADING: UP TO 43 TrueAlert ADDRESSABLE SYNCHRONIZED STROBES

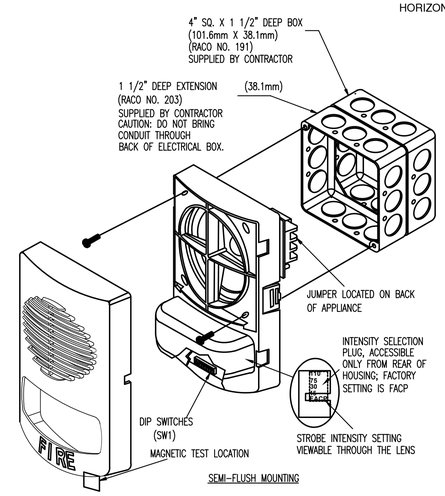

SEMI-FLUSH MOUNTING

MOUNTING NOTES:
1. THE TrueAlert S/V ATTACHES DIRECTLY TO A STANDARD 4-INCH ELECTRICAL BOX (NOT SUPPLIED), FLUSH MOUNTED OR SURFACE MOUNTED.
2. THERE ARE FOUR HOLES FOR 4-INCH SQUARE ELECTRICAL BOX MOUNTING. SECURE THE HOUSING TO THE BOX USING TWO MOUNTING SCREWS. THE TWO MOUNTING SCREWS ARE PLACED CROSS CORNER (OPPOSITE TOP AND BOTTOM HOLES)
3. TO REMOVE THE COVER, PRESS THE SNAP RELEASE IN (ONE AT A TIME) WITH A FLAT TIP SCREWDRIVER WHILE PULLING UP THE COVER WITH THE OTHER HAND. ADDRESS SWITCH (SW1 IS ACCESSIBLE WITH THE COVER REMOVED).

8 SPEAKER/VISIBLE NOTIFICATION APPLIANCES 4906 SERIES

SCALE: NTS

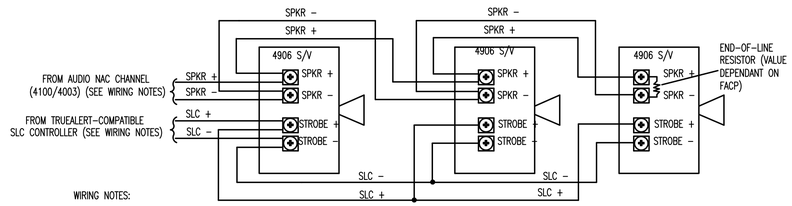

WIRING NOTES:
1. REFER TO FIELD WIRING DIAGRAMS OF THE DRIVING TrueAlert COMPATIBLE CONTROLLER FOR ADDITIONAL SLC WIRING INFORMATION. REFER TO THE FIELD WIRING DIAGRAMS SUPPLIED WITH THE 4100/4003 FOR ADDITIONAL NAC WIRING INFORMATION.
2. NOTIFICATION APPLIANCES ARE RATED PER INDIVIDUAL NAMEPLATE LABEL.
3. MAINTAIN CORRECT POLARITY ON TERMINAL CONNECTIONS. DO NOT LOOP WIRES UNDER TERMINALS.
4. ALL TrueAlert SLC AND NAC WIRING CONNECTIONS ARE SUPERVISED AND POWER–LIMITED.
5. POWERING THE S/V FROM AN APPLIANCE POWER SOURCE LESS THAN 17 VDC OR GREATER THAN 32 VDC MAY CAUSE PERMANENT DAMAGE TO THE S/V UNIT.
6. THE TrueAlert S/V CAN ONLY BE OPERATED THROUGH A 4009 TrueAlert ADDRESSABLE CONTROLLER OR TrueAlert COMPATIBLE FACP.
7. WHEN CONTROLLED FROM A 4009 TrueAlert ADDRESSABLE CONTROLLER, THE FACP SETTINGS ARE NOT SUPPORTED.
8. MAXIMUM T–TAPPING LENGTH IS 100 FEET.

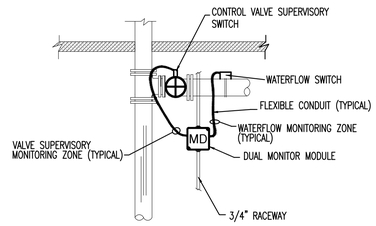

HORIZONTAL RISER

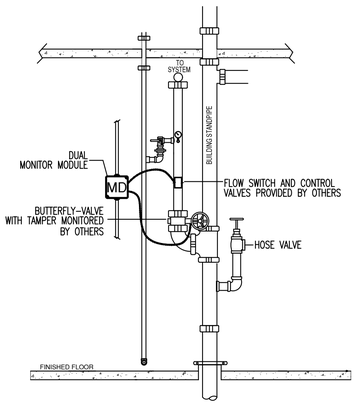

VERTICAL RISER

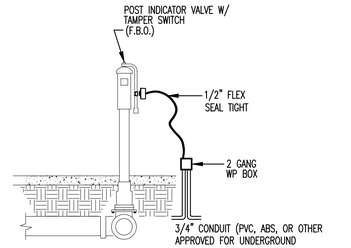

**MODULE FOR PIV VALVE TO BE MOUNTED ON THE INSIDE OF THE BUILDING

PIV VALVE

7 FIRE SPRINKLER/FA DEVICE MOUNTING DETAILS

SCALE: NTS

PRODUCT INFORMATION
FEATURES:
UL LISTED, FM APPROVED TRUEALARM ANALOG SENSING PROVIDES DIGITAL TRANSMISSION OF ANALOG SENSOR VALUES VIA MAPNET II, OR IDNet SLC TWO WIRE COMMUNICATIONS FIRE ALARM CONTROL PANEL PROVIDES: –INDIVIDUAL SENSITIVITY SELECTION FOR EACH SENSOR –PEAK VALUE LOGGING ALLOWING ACCURATE ANALYSIS FOR SENSITIVITY SELECTION –AUTOMATIC ENVIRONMENTAL COMPENSATION –DISPLAY OF SENSITIVITY IN PERCENT PER FOOT –MULTISTAGE ALARM OPERATION –ABILITY TO DISPLAY AND PRINT DETAILED SENSOR INFORMATION IN PLAIN ENGLISH LANGUAGE PHOTOELECTRIC SMOKE SENSOR 4098–9714: SEVEN LEVELS OF SENSITIVITY FROM 0.2% TO 3.7% IONIZATION SMOKE SENSOR 4098–9717: FOUR LEVELS OF SENSITIVITY FROM 0.5% TO 1.7%. HEAT SENSOR 4098–9733: –RATE–OF–RISE TEMPERATURE DETECTION IS SELECTABLE AT THE CONTROL PANEL FOR EITHER 15°F OR 20°F PER MINUTE –FIXED TEMPERATURE SENSING IS INDEPENDENT OF RATE–OF–RISE AND PROGRAMMABLE TO OPERATE AT 135°F OR 155°F –TRUEALARM HEAT SENSORS CAN BE PROGRAMMED AS A UTILITY DEVICE TO MONITOR FOR TEMPERATURE EXTREMES IN THE RANGE FROM 32° F TO 120° F. UL STANDARD SPACING: –60 FT SPACING FOR 135° F –40 FT SPACING FOR 155° F INTEGRAL RED LED FOR POWER–ON (PULSING), OR ALARM OR TROUBLE (STEADY ON) BASE MOUNTED ADDRESS SELECTION –ACCESSIBLE FROM FRONT (DIP SWITCH UNDER SENSOR) –NON–ADDRESS REMAINS WITH ITS PROGRAMMED LOCATION FOR USE WITH SIMPLEX 4010, 4100, 4020, AND 4120 SERIES CONTROL PANELS. MAXIMUM QUANTITY OF DEVICES: –127 FOR 4020, 4100, 4120 –250 FOR 4010, 4100 MOUNTING: CEILING OR WALL COLOR : FROST WHITE BASE DIMENSIONS: 15/16" X 4–7/8"

SPECIFICATIONS:
UL LISTED TEMPERATURE RANGE: 32°F TO 100°F OPERATING TEMPERATURE RANGE: 32°F TO 120°F HUMIDITY RANGE: 10% TO 95% RH PHOTOELECTRIC SENSOR AIR VELOCITY RANGE: 0–2000 FT/MIN IONIZATION SENSOR AIR VELOCITY RANGE: 0–300 FT/MIN WIRING CONNECTIONS: SCREW TERMINALS FOR IN/OUT WIRING, #18 TO #14 AWG COMMUNICATIONS MAPNET II/IDNet SLC: 1 ADDRESS PER BASE VOLTAGE (MAPNET II/IDNet SLC): 24–40VDC CURRENT: 400uA TYPICAL

DESCRIPTION:
TRUEALARM SENSOR BASES CONTAIN INTEGRAL ADDRESSABLE ELECTRONICS THAT CONSTANTLY MONITOR THE STATUS OF THE DETACHABLE PHOTOELECTRIC, IONIZATION, OR HEAT SENSORS. EACH SENSOR'S OUTPUT IS DIGITIZED AND TRANSMITTED TO THE SYSTEM FIRE ALARM CONTROL PANEL EVERY FOUR SECONDS. SINCE TRUEALARM SENSORS USE THE SAME BASE, DIFFERENT SENSOR TYPES CAN BE EASILY INTERCHANGED TO MEET SPECIFIC LOCATION REQUIREMENTS. THIS FEATURE ALLOWS INTENTIONAL SENSOR SUBSTITUTION DURING BUILDING CONSTRUCTION. WHEN CONDITIONS ARE TEMPORARILY DUSTY, INSTEAD OF COVERING THE SMOKE SENSORS, HEAT SENSORS MAY BE INSTALLED WITHOUT REPROGRAMMING THE CONTROL PANEL, ALTHOUGH THE CONTROL PANEL WILL INDICATE AN INCORRECT SENSOR TYPE, THE HEAT SENSOR WILL OPERATE AS A DEFAULT SENSITIVITY PROVIDING HEAT DETECTION FOR BUILDING PROTECTION AT THAT LOCATION.

WIRING:
1. ALL WIRING TO COMPLY WITH LOCAL CODE.
2. CONDUCTORS MUST TEST FREE OF ALL GROUNDS.
3. MAINTAIN CORRECT POLARITY
4. MAPNET II/IDNet SLC WIRING TO BE #18 AWG TWISTED SHIELDED PAIR
5. IF SHIELD IS PRESENT, CONNECT TO THE OUTGOING IDNet SLC SHIELD TO PROVIDE A CONTINUOUS SHIELD OVER THE LENGTH OF THE IDNet SLC CHANNEL. METHOD OF SPLICE DETERMINED BY AHJ.
6. REFER TO INSTALLATION INSTRUCTIONS (574–707)
7. REFER TO APPLICATION MANUAL (574–709)

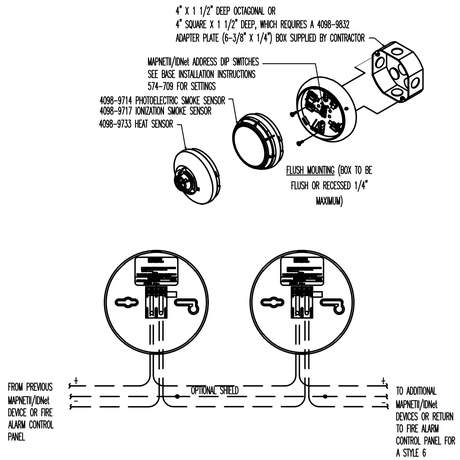

6 40998-9792 STANDARD SENSOR BASE

SCALE: NTS

PRODUCT INFORMATION
FEATURES:
UL LISTED SINGLE ACTION, NO GRIP, IDNet SLC ADDRESSABLE PULL LEVEL PROTRUDES WHEN ALARMED LED INDICATOR FLASHES DURING COMMUNICATION TAMPER RESISTANT RESET KEY LOCK MOUNTING: SEMI–FLUSH, SURFACE OPERATING TEMPERATURE RANGE: 32 – 120° F OPERATING HUMIDITY RANGE: 0 – 93% RH ADAPTER PLATES 2099–9813 OR 2099–9814 CAN BE USE FOR RETROFIT APPLICATIONS. 5" HIGH X 3 3/4" WIDE X 1" DEEP SCREW TERMINALS FOR 18 TO 14 AWG WIRE ADDRESSED BY MEANS OF AN 8 POSITION DIP SWITCH COMPATIBLE WITH IDNet SLC/MAPNET

OPERATION:
ACTIVATION: 4099–9021 NO GRIP SINGLE ACTION STATION PROVIDES A MORE EASILY ACTIVATED PULL LEVER FOR ANTICIPATED USERS MAY FIND THE STANDARD STATION LEVER DIFFICULT TO ACTIVATE. COMPLETING THIS ACTION BREAKS AN INTERNAL PLASTIC BREAK–ROD THAT IS VISIBLE BELOW THE PULL LEVER (USE OF PLASTIC ROD IS OPTIONAL). THE PULL LEVEL LATCHES INTO THE ALARM POSITION AND REMAINS EXTENDED OUT OF THE HOUSING TO PROVIDE A VISIBLE INDICATION. RESETTING 4099–9021 SINGLE ACTION STATION REQUIRES A KEY TO RESET THE ACTIVATION LEVER AND DEACTIVATE THE ALARM SWITCH. (IF OPTIONAL PLASTIC BREAK ROD WAS USED IT MUST BE REPLACED)

CONSTRUCTION:
STATION HOUSING AND PULL LEVER ARE CONSTRUCTED OF CHIP RESISTANT AND DIRT RESISTANT, HIGH IMPACT LEXAN. HOUSING IS RED WITH RAISED WHITE LETTERING AND PULL LEVER IS WHITE WITH RED RAISED LETTERING. * LEXAN IS A REGISTERED TRADEMARK OF THE GENERAL ELECTRIC CO.

APPLICATION: PULL STATIONS SHALL BE INSTALLED IN ACCORDANCE WITH NFPA 72 AND ADA GUIDE LINES.

INTRODUCTION: THE 4099–9021 ADDRESSABLE PULL STATION PROVIDES TWO–STATE STATUS INFORMATION (NORMAL AND SHORT) TO THE IDNet SLC COMPATIBLE FIRE ALARM CONTROL PANEL (FACP) VIA THE IDNet SLC CHANNEL. THE IDNet SLC CHANNEL PROVIDES THE COMMUNICATION LINK BETWEEN PULL STATION AND THE FACP AND POWERS THE ENTIRE CIRCUITRY.

WIRING:
1. ALL WIRING TO COMPLY WITH LOCAL CODE.
2. CONDUCTORS MUST TEST FREE OF ALL GROUNDS.
3. MAINTAIN CORRECT POLARITY
4. IDNet SLC LINES ARE TO BE 18 AWG TWISTED SHIELDED PAIR
5. MAXIMUM LINE RUN FROM PANEL TO FARTHEST DEVICE NOT TO EXCEED 2500 FEET.
6. MAXIMUM TOTAL WIRE (INCLUDING ALL T–TAPS) FROM PANEL NOT TO EXCEED 10,000 FEET.
7. MAXIMUM QUANTITY OF DEVICES PER CIRCUIT: 250
8. TERMINALS 1 AND 2 FOR FIELD WIRING. TERMINALS 3 AND 4 ARE FACTORY WIRING.
9. WIRE NUT, SPLICE, OR SOLDER THE SHIELD WIRES.
10. IF SHIELD IS PRESENT, IT SHOULD BE CONNECTED TO THE OUTGOING IDNet SLC SHIELD TO PROVIDE A CONTINUOUS SHIELD OVER THE LENGTH OF THE IDNet SLC CHANNEL. SHIELD SHOULD BE INSULATED FROM THE ELECTRICAL BOX.
11. SEE INSTALLATION INSTRUCTIONS 574–332

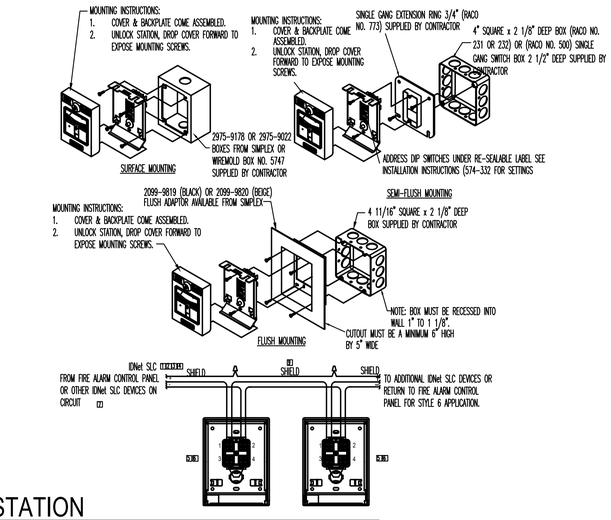

5 SLC ADDRESSABLE MANUAL PULL STATION

SCALE: NTS

APPROVALS

IDENTIFICATION STAMP
DIV. OF THE STATE ARCHITECT
APP: 01-119409 INC:
REVIEWED FOR
SS ☑ FLS ☑ ACS ☑
DATE: 03/14/2022

NOLL & TAM ARCHITECTS
729 Heinz Avenue
Berkeley, CA 94710
tel 510.542.2200
fax 510.542.2201

RIJA
5515 Doyle Street, #7
Emeryville, CA 94608
www.rijainc.com
RIJA Job #: 2020011

SEAL

REGISTERED PROFESSIONAL ENGINEER
RAJA K. JAYSHREE
No. E19586
Exp. 06–30–23
ELECTRICAL
STATE OF CALIFORNIA

Date Signed: 2/28/22

PROJECT TITLE

Peralta Community College District
Merritt Landscape Horticulture Complex

12500 Campus Drive
Oakland, CA 94616

BID SET

ISSUE DATE	03/03/2022
N&T JOB NUMBER	22003

REVISIONS

⚠	DATE	DESCRIPTION

DRAWN BY	CAD	CHECKED BY	RAJ

SHEET TITLE

DETAILS

SHEET NUMBER

FA5.02

4/3/2020 7:20:00 PM BIM 360://PCCD Merritt Horticulture/Merritt Horticulture_2020.rvt

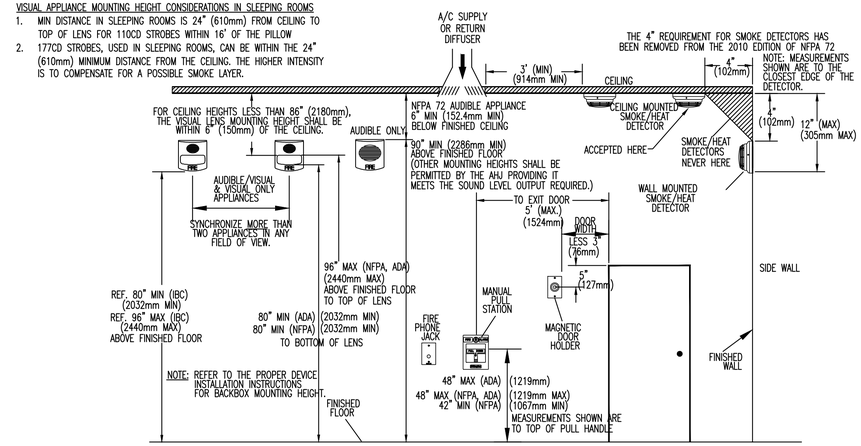

2 DEVICE MOUNTING HEIGHT REFERENCE (PER NFPA 72)

SCALE: NTS

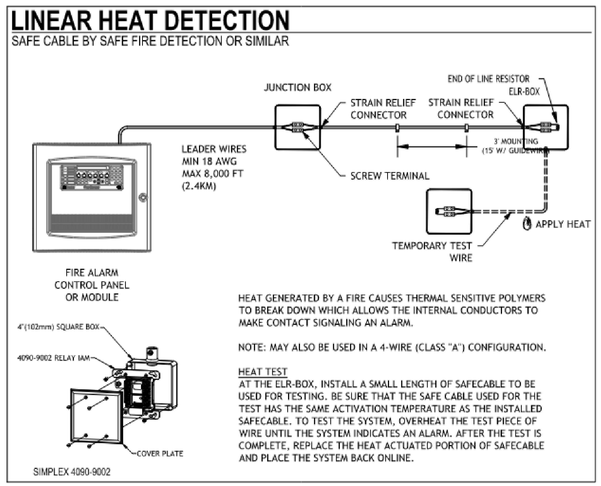

3 LINEAR HEAT DETECTION

SCALE: NTS

NOTE: REFER TO PANEL/MODULE AND DEVICE INSTALLATION INSTRUCTIONS FOR PROPER TERMINATIONS.

* USE WITH RETROFIT OR HIGH CURRENT MODULE

MODEL	REFERENCE NUMBER	OHMS	1ST BAND	2ND BAND	3RD BAND	4TH BAND	5TH BAND	WATTS	CIRCUIT TYPE	FIRE ALARM PANEL/MODULE
4081-9001	733-892	2.2K	RED	RED	RED	GOLD	N/A	1/2	ANNUNCIATOR (4300)	4004, 4010 (TROUBLE)
4081-9002	733-893	3.3K	ORANGE	ORANGE	RED	GOLD	N/A	1	N.O. INITIATING PULL, SMOKE, HEAT, WATERFLOW, TAMPER, ETC.	4004*, 4004R, 4005*, 4006, 4100, 4120, 41000, ZAM'S
									24 PT. I/O SWITCH SUPV.	4605-7401, 4100 SERIES
4081-9003	733-896	4.7K	YELLOW	VIOLET	RED	GOLD	N/A	1/2	CURRENT LIMITED N.O. INITIATING	4090-9001 IDNET IAM (EOLR)
									NOTIFICATION (DACT)	2080-9024
4081-9004	733-886	6.8K	BLUE	GREY	RED	GOLD	N/A	1/2	N.O. INITIATING PULL, SMOKE, HEAT, WATERFLOW, TAMPER, ETC.	4004, 4005, 4090-9001 IDNET IAM, 2190-2173 MAPNET II 2 PT I/O, 4-20MA ZAM (TROUBLE)
4081-9005	733-984	1.8K	BROWN	GREY	RED	GOLD	N/A	1/2	CURRENT LIMITED N.O. INITIATING (IN LINE)	4090-9001 IDNET IAM
4081-9006	733-890	560Ω	GREEN	BLUE	BROWN	GOLD	N/A	1	N.C. INITIATING (EOLR)	4005*, 4090-9001 IDNET IAM 4100, 4100U
4081-9007	733-891	1.2K	BROWN	RED	RED	GOLD	N/A	1	N.C. INITIATING (EOLR)	4005
4081-9008	733-894	10K	BROWN	BLACK	ORANGE	GOLD	N/A	1/2	NOTIFICATION	4004, 4005, 4006, 4008 4009, 4010, 4100, 41000
4081-9009	733-912	20Ω	RED	BLACK	BLACK	GOLD	N/A	1	TO MR-101 RELAY COIL	4005 8 POINT I/O
4081-9010	733-973	1K	BROWN	BLACK	RED	GOLD	N/A	1	N.C. INITIATING (ACROSS CONTACTS)	4005*, 4090-9001 IDNET IAM
									24 PT. I/O (ACROSS CONTACTS)	4605-7401, 4100 SERIES
									CURRENT LIMITED N.O. INITIATING (IN SERIES WITH CONTACT)	4090-9001 IDNET IAM
4081-9011	733-974	100Ω	BROWN	BLACK	BROWN	GOLD	N/A	1/2	ANNUNCIATOR (N2)	4006, 4008, 4010
4081-9012	733-985	22K	RED	RED	ORANGE	GOLD	N/A	1/2	SPEAKER CIRCUIT	4003
4081-9013	734-086	4.99K	YELLOW	WHITE	WHITE	BROWN	BROWN	1/2		
4081-9014	734-092	2.4K	RED	YELLOW	RED	GOLD	N/A	1/2	N.C. INITIATING (SECURITY MONITORING EOLR)	4090-9001 IDNET IAM
4081-9015	734-093	1.5K	BROWN	GREEN	RED	GOLD	N/A	1/2	CURRENT LIMITED N.O. INITIATING (SECURITY MONITORING EOLR)	4090-9001 IDNET IAM
4081-9016	734-149	150K	BROWN	GREEN	YELLOW	GOLD	N/A	1/2		
4081-9017	734-171	3.9K	ORANGE	WHITE	RED	GOLD	N/A	1		
4081-9018	734-168	10K	BROWN	BLACK	ORANGE	GOLD	N/A	1	70VRMS CONSTANT SUPV. NACS	4100-1260
	378-090	8.2K	GRAY	RED	RED	GOLD	N/A	1/2	SECURITY MONITORING (EOLR)	4100, 4100U
	378-046	5.6K	GREEN	BLUE	RED	GOLD	N/A	1/2	N.O. SECURITY MON. (SERIES)	4100, 4100U
	378-069	12K	BROWN	RED	ORANGE	GOLD	N/A	1/2	N.C. SECURITY MON. (SHUNT)	4100, 4100U

1 END-OF-LINE RESISTOR CODES

SCALE: NTS

4/3/2020 7:20:00 PM BIM 360://PCCD Merritt Horticulture/Merritt Horticulture_2020.rvt

APPROVALS

IDENTIFICATION STAMP
DIV. OF THE STATE ARCHITECT
APP: 01-119409 INC:
REVIEWED FOR
SS ☑ FLS ☑ ACS ☑
DATE: 03/14/2022

NOLL & TAM ARCHITECTS
729 Heinz Avenue
Berkeley, CA 94710
tel 510.542.2200
fax 510.542.2201

RIJA
5515 Doyle Street, #7
Emeryville, CA 94608
www.rijainc.com
RIJA Job #: 2020011

SEAL

Date Signed:
2/28/22

PROJECT TITLE

Peralta Community College District
Merritt Landscape Horticulture Complex

12500 Campus Drive
Oakland, CA 94616

BID SET

ISSUE DATE 03/03/2022
N&T JOB NUMBER 22003

REVISIONS

	DATE	DESCRIPTION

DRAWN BY CAD | CHECKED BY RAJ

SHEET TITLE

DETAILS

SHEET NUMBER

FA5.03

MERRITT LANDSCAPE HORTICULTURE COMPLEX
PERALTA COMMUNITY COLLEGE DISTRICT
12500 CAMPUS DR.
OAKLAND, CA 94619

PAGE	DESCRIPTION
GH-0.0	GREENHOUSE TITLE PAGE
GH-1.0	GREENHOUSE TYPE 1 COLUMN & BASE PLATE LAYOUT, ROOF PLAN & BENCH LAYOUT
GH-2.0	GREENHOUSE TYPE 2 COLUMN & BASE PLATE LAYOUT ROOF PLAN & BENCH LAYOUT
GH-2.1	GREENHOUSE BENCH DETAILS
GH-3.0	GREENHOUSE TYPE 1 & TYPE 2 EQUIPMENT & DOOR LAYOUT
GH-4.0	GREENHOUSE TYPE 1 GABLE END, SIDEWALL & SECTION ELEVATIONS (FRAMING)
GH-5.0	GREENHOUSE TYPE 2 GABLE END, SIDEWALL & SECTION ELEVATIONS (FRAMING)
GH-6.0	GREENHOUSE TYPE 1 GABLE, SIDEWALL & SECTION ELEVATIONS (EQUIPMENT & GLAZING)
GH-7.0	GREENHOUSE TYPE 2 GABLE, SIDEWALL & SECTION ELEVATIONS (EQUIPMENT & GLAZING)
GH-8.0	GREENHOUSE TYPICAL WELDED TRUSS DETAIL
GH-9.0	GREENHOUSE TYP. X-ROD CONNECTION & KNEE BRACE DETAIL
GH-9.1	GREENHOUSE TYP. CAP TO TRUSS ASSEMBLY, SIDEWALL DOOR FRAME, MISC EQUIPMENT DETAILS
GH-9.2	GREENHOUSE 8MM POLYCARBONATE COVERING FASTENER SPACING DETAIL
GH-10.1	GREENHOUSE 8MM POLYCARBONATE ROOF & ROOF VENT INSTALL DETAILS
GH-10.2	GREENHOUSE 8MM POLYCARBONATE ROOF & ROOF VENT INSTALL DETAILS
GH-10.3	GREENHOUSE 8MM POLYCARBONATE ROOF & ROOF VENT INSTALL DETAILS
GH-10.4	GREENHOUSE 8MM POLYCARBONATE ROOF & ROOF VENT INSTALL DETAILS
GH-10.5	GREENHOUSE 8MM POLYCARBONATE ROOF & ROOF VENT INSTALL DETAILS
GH-11.1	GREENHOUSE EDDG VENT DETAILS 8MM COVERING - OVERVIEW & PARTS IDENTIFICATION
GH-11.2	GREENHOUSE EDDG VENT DETAILS 8MM COVERING - OVERVIEW & PARTS IDENTIFICATION
GH-11.3	GREENHOUSE EDDG VENT DETAILS 8MM COVERING - OVERVIEW & PARTS IDENTIFICATION

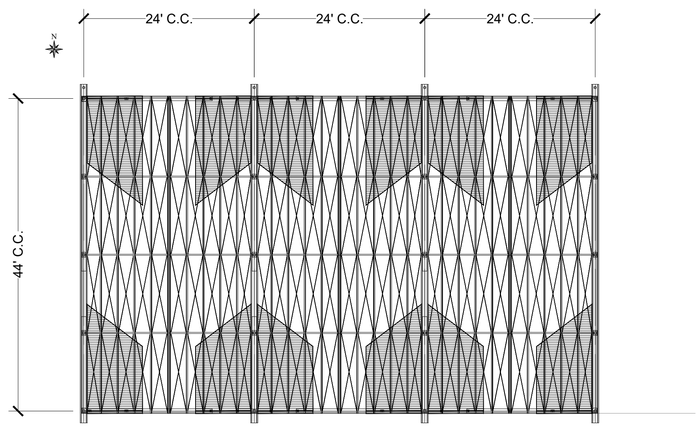

1 OVERVIEW - GREENHOUSE TYPE 1
SCALE: 3/32" = 1'-0"

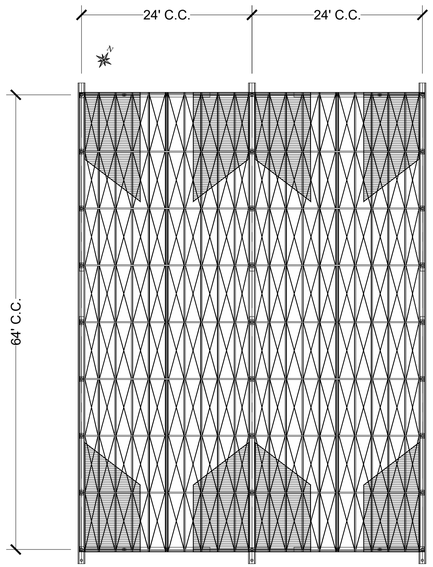

2 OVERVIEW - GREENHOUSE TYPE 2
SCALE: 3/32" = 1'-0"

NOTE:

1. NEXUS IS RESPONSIBLE FOR THE DESIGN OF THE SUPER STRUCTURE ONLY. FOUNDATION AND SLAB DESIGNS ARE BY SEOR. VERIFICATION OF THE CONCRETE IS THE RESPONSIBILITY OF G.C.

2. DESIGN DATA:
2019 CALIFORNIA BUILDING CODE, CHAPTER 16A/ ASCE 7-16

RISK CATEGORY	II
GREENHOUSE TYPE 1:	
DEAD LOAD (PURLIN DESIGN)	DL = 1.56 psf
DEAD LOAD (TRUSS DESIGN)	DL = 7.37 psf
DEAD LOAD (COLUMN DESIGN)	DL = 10.93 psf
GREENHOUSE TYPE 2:	
DEAD LOAD (PURLIN DESIGN)	DL = 1.54 psf
DEAD LOAD (TRUSS DESIGN)	DL = 6.49 psf
DEAD LOAD (COLUMN DESIGN)	DL = 9.90 psf
ROOF LIVE LOAD	LL = 20 psf
SNOW DESIGN	
GROUND SNOW LOAD	P_g = 0 psf
SNOW EXPOSURE FACTOR	C_e = 1.0
SNOW LOAD IMPORTANCE FACTOR	I = 1.0
THERMAL FACTOR	C_t = 1.0
ROOF SNOW LOAD	$P_f = 0.7*C_e*C_t*I*P_g$ = 0 psf
MINIMUM ROOF SNOW LOAD	P_{fmin} = 0 psf
WIND DESIGN	
ULTIMATE WIND SPEED (3 SECOND GUST)	V_{ult} = 92 mph
NOMINAL WIND SPEED (3 SECOND GUST)	V_{asd} = 71 mph
WIND EXPOSURE	C
INTERNAL PRESSURE COEFFICIENT	GC_{pi} = +/- 0.18
BASIC WIND PRESSURE	q = 15.2 psf
SEISMIC DESIGN	
SEISMIC IMPORTANCE FACTOR	I = 1.00
SPECTRAL RESPONSE ACCELERATION	S_S = 2.482
SPECTRAL RESPONSE ACCELERATION	S_1 = 0.949
SITE CLASS	C
SPECTRAL RESPONSE COEFFICIENT	S_{DS} = 1.59
SPECTRAL RESPONSE COEFFICIENT	S_{D1} = 0.71
SEISMIC DESIGN CATEGORY	E
EQUIVALENT LATERAL FORCE PROCEDURE	
LATERAL: STEEL ORDINARY MOMENT FRAME	
DESIGN BASE SHEAR	V = 0.45 x W
RESPONSE MODIFICATION FACTOR	R = 3.5
SEISMIC RESPONSE COEFFICIENT	C_S = 0.45
LONGITUDINAL: STEEL ORDINARY CONCENTRICALLY BRACED FRAMES	
DESIGN BASE SHEAR	V = 0.49 x W
RESPONSE MODIFICATION FACTOR	R = 3.25
SEISMIC RESPONSE COEFFICIENT	C_S = 0.49
MAXIMUM SEISMIC DRIFT (GREENHOUSE 1)	△ = 2.838"
MAXIMUM SEISMIC DRIFT (GREENHOUSE 2)	△ = 1.716"

3. TYPICAL COLUMN AND POST DIMENSIONS ARE CENTER TO CENTER (C.C.) OF MEMBERS UNLESS OTHERWISE NOTED. TYPICAL WALL MEMBER DIMENSIONS ARE FROM GRADE TO TOP OF MEMBER.

4. R.O. = ROUGH OPENING DIMENSION
C.C. = CENTER TO CENTER DIMENSION
O.O. = OUT TO OUT DIMENSION
V.I.F. = VERIFY IN FIELD
U.G. = UNDER GUTTER HEIGHT

5. DEPENDING ON SITE AND PROJECT CONDITIONS, SOME FIELD FABRICATION MAY BE REQUIRED, INCLUDING DRILLING, CUTTING AND WELDING OF STEEL OR ALUMINUM MATERIALS.

MATERIAL SPECIFICATIONS

STEEL:
SQUARE GALVANIZED TUBING- ASTM A500

SHAPE	NOMINAL WALL THICK.	WT/FT	GRADE	TYPICAL YIELD	TYPICAL TENSILE	S	I	r	A
HSS 4"x4" x 3/8"	0.375"	17.20	B	46,000	58,000	5.13	10.3	1.47	4.78
HSS 2"x4" x 14GA	0.083"	3.2927	C	50,000	60,000	1.027	0.885	0.48	0.968
HSS 2"x2" x 12GA	0.109"	2.8053	C	50,000	60,000	0.493	0.493	0.773	0.824
HSS 2"x2" x 15GA	0.072"	1.8879	C	50,000	60,000	0.358	0.345	0.785	0.580
HSS 2"x2" x 16GA	0.065"	1.7105	C	50,000	60,000	0.314	0.2839	0.79	0.503
HSS 1-1/2"x1-1/2" x 18GA	0.049"	0.9669	B	45,000	50,000	0.1332	0.0999	0.5928	0.2844
HSS 4"x2"x3/16"	0.174"	6.87	B	46,000	58,000	1.83	3.66	1.39	1.89

ALUMINUM EXTRUSIONS ARE 6063-T6 ALLOY

ALL ALUMINUM SHEET AND FLASHING WILL BE 3003-H14 ALLOY.

PLATES WILL BE A36 GALVANIZED STEEL

GUTTERS-
16GA ROLL FORMED STEEL A36

X-RODS:
3/8" DIAM., A36 ZINC-PLATED AT ROOF AND SIDEWALLS.

FASTENERS:
BAR CAP SCREWS ARE AISI C 1018 STAINLESS STEEL
ALL SELF DRILL SCREWS ARE AISI C 1022 ZINC-PLATED
BOLTS ARE A307 & A325 ZINC-PLATED
ANCHOR BOLTS- 5/8" Ø GRADE 36 THREADED RODS (NOT BY NEXUS)

COVERING:
8MM TWINWALL POLYCARBONATE

APPROVALS

IDENTIFICATION STAMP
DIV. OF THE STATE ARCHITECT
APP: 01-119409 INC:
REVIEWED FOR
SS ☑ FLS ☑ ACS ☑
DATE: 03/14/2022

NOLL & TAM ARCHITECTS
729 Heinz Avenue
Berkeley, CA 94710
tel 510.542.2200
fax 510.542.2201

SEAL

NEXUS
10983 LEROY DRIVE
NORTHGLENN, COLORADO 80233
303/457-9199 FAX 303/457-2801

REGISTERED PROFESSIONAL ENGINEER
ROBERT VIVAK NANGIA
5400
STRUCTURAL
STATE OF CALIFORNIA
Exp. 08/31/2022
STRUCTURAL ONLY
2/28/2022

ROBERT V. NANGIA P.E.
7423 HOLLOW RIDGE DR.
HOUSTON, TX 77095

PROJECT TITLE

Peralta Community College District
MERRITT COLLEGE NEW LANDSCAPE HORTICULTURE COMPLEX

12500 Campus Drive
Oakland, CA 94616

BID SET

ISSUE DATE 03/03/2022
N&T JOB NUMBER 22003

REVISIONS

#	DATE	DESCRIPTION

DRAWN BY J.Broderick | CHECKED BY T. Moore

SHEET TITLE
GREENHOUSE TITLE PAGE

SHEET NUMBER
GH-0.0

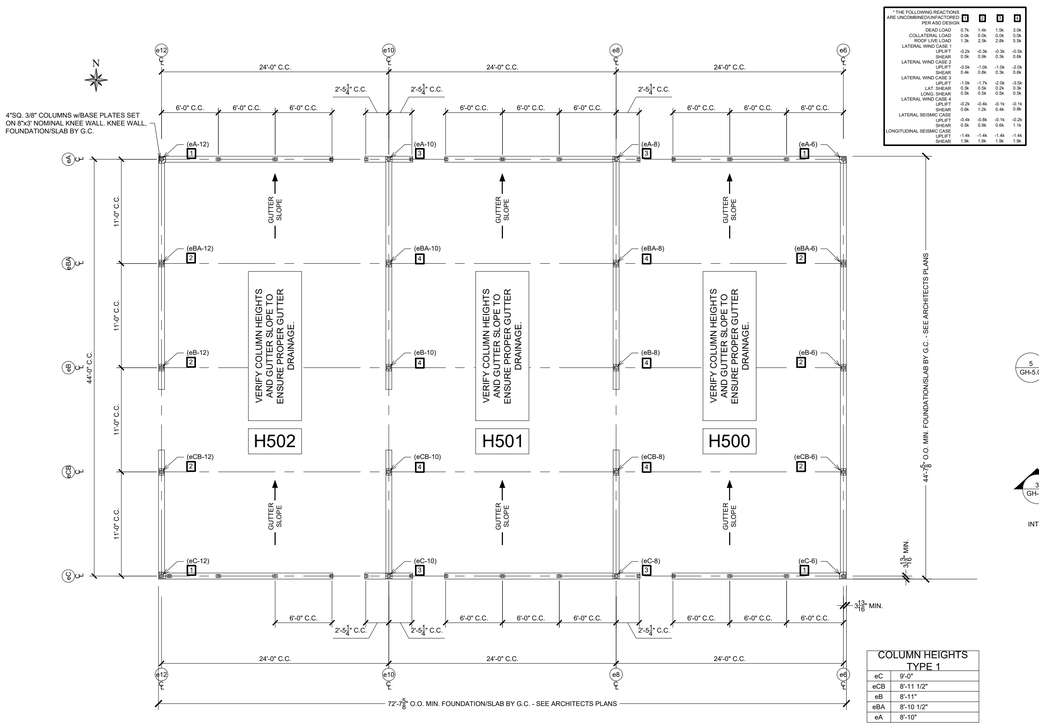

THE FOLLOWING REACTIONS ARE UNCOMBINED(UNFACTORED) PER ASD DESIGN				
DEAD LOAD	0.7k	1.4k	1.5k	3.0k
COLLATERAL LOAD	0.3k	0.3k	0.2k	0.2k
ROOF LIVE LOAD	1.3k	2.5k	2.6k	5.1k
LATERAL WIND CASE 1				
UPLIFT	-0.2k	-0.3k	-0.3k	-0.5k
SHEAR	0.3k	0.3k	0.3k	0.6k
LATERAL WIND CASE 2				
UPLIFT	-0.5k	-1.0k	-1.0k	-2.0k
SHEAR	0.4k	0.8k	0.3k	0.6k
LATERAL WIND CASE 3				
UPLIFT	-1.0k	-1.7k	-2.0k	-3.5k
LAT. SHEAR	0.3k	0.3k	0.2k	0.3k
LONG. SHEAR	0.5k	0.5k	0.5k	0.5k
LATERAL WIND CASE 4				
UPLIFT	-0.2k	-0.4k	-0.1k	-0.1k
SHEAR	0.6k	1.2k	0.4k	0.8k
LATERAL SEISMIC CASE				
UPLIFT	-0.4k	-0.8k	-0.1k	-0.2k
SHEAR	0.5k	0.9k	0.6k	1.1k
LONGITUDINAL SEISMIC CASE				
UPLIFT	-1.4k	-1.4k	-1.4k	-1.4k
SHEAR	1.3k	1.5k	1.5k	1.5k

COLUMN HEIGHTS TYPE 1	
eC	9'-0"
eCB	8'-11 1/2"
eB	8'-11"
eBA	8'-10 1/2"
eA	8'-10"

1 COLUMN & BASE PLATE LAYOUT - GREENHOUSE TYPE 1
SCALE: 1/8" = 1'-0"

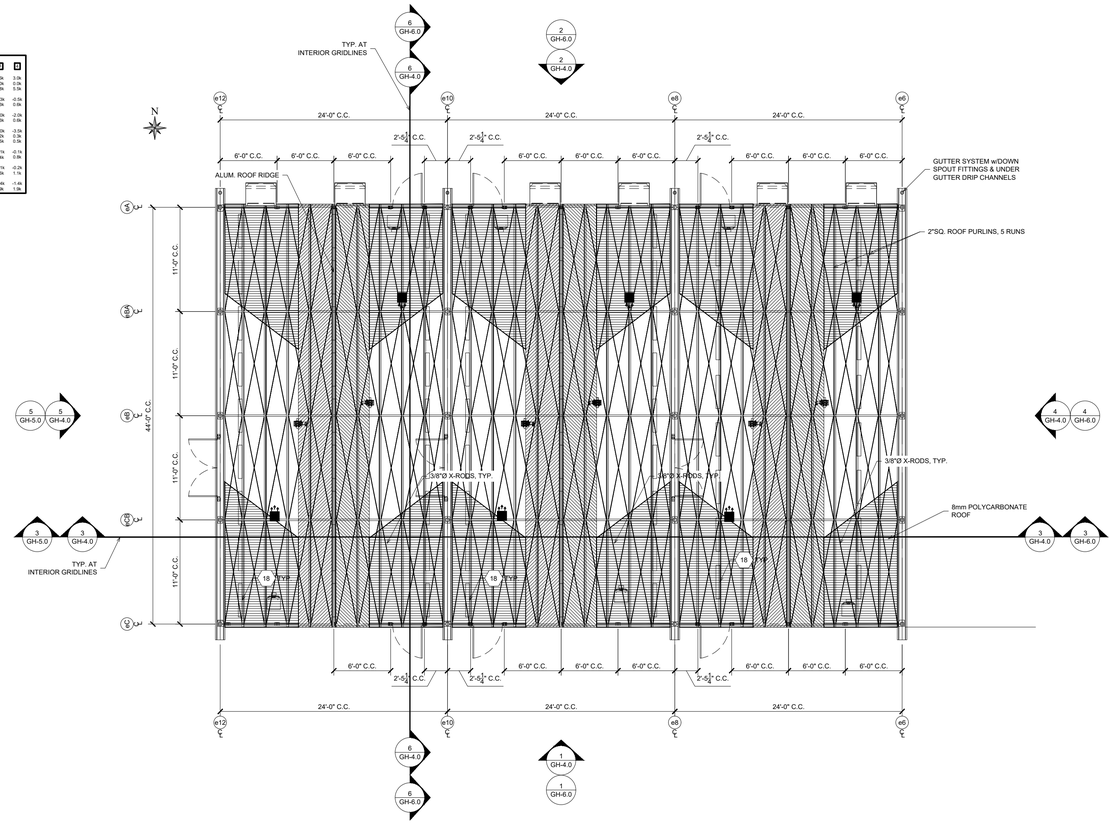

2 ROOF PLAN - GREENHOUSE TYPE 1
SCALE: 1/8" = 1'-0"

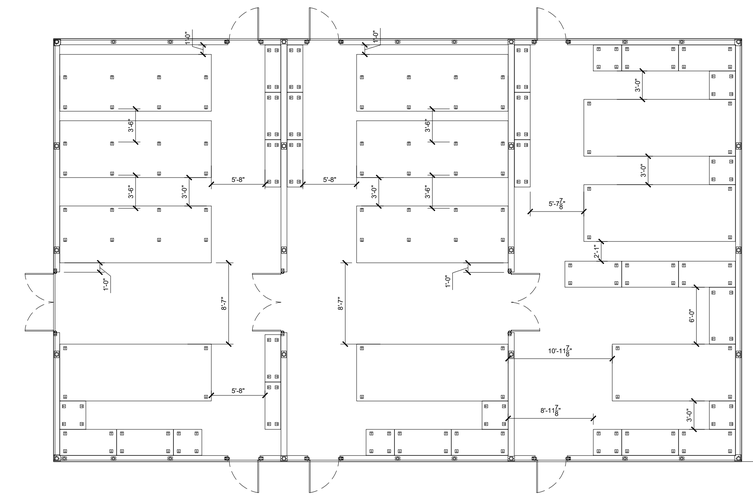

3 BENCH LAYOUT - GREENHOUSE TYPE 1
SCALE: 1/8" = 1'-0"

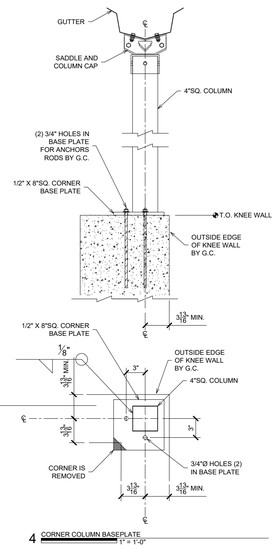

4 CORNER COLUMN BASEPLATE
1" = 1'-0"

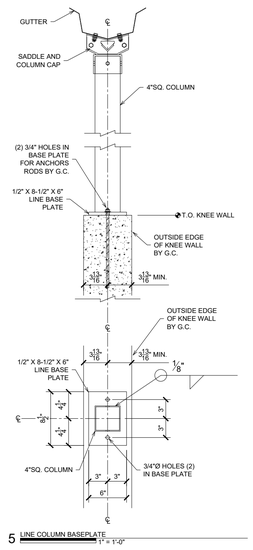

5 LINE COLUMN BASEPLATE
1" = 1'-0"

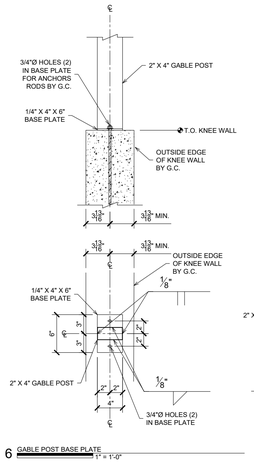

6 GABLE POST BASE PLATE
1" = 1'-0"

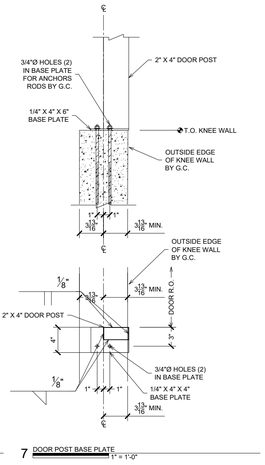

7 DOOR POST BASE PLATE
1" = 1'-0"

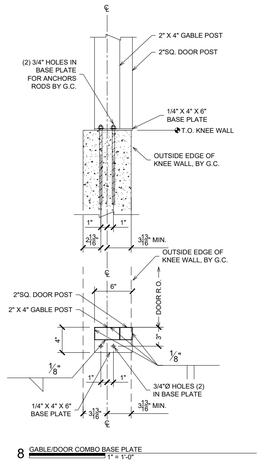

8 GABLE/DOOR COMBO BASE PLATE
1" = 1'-0"

APPROVALS

IDENTIFICATION STAMP
DIV. OF THE STATE ARCHITECT
APP: 01-119409 INC:
REVIEWED FOR
SS ☑ FLS ☑ ACS ☑
DATE: 03/14/2022

NOLL & TAM ARCHITECTS
729 Heinz Avenue
Berkeley, CA 94710
tel 510.542.2200
fax 510.542.2201

SEAL

NEXUS
10983 LEROY DRIVE
NORTHGLENN, COLORADO 80233
303/457-9199 FAX 303/457-2801

STRUCTURAL ONLY
REGISTERED PROFESSIONAL ENGINEER
ROBERT VIVAK MAGIA
5400
Exp. 06/30/2022
STRUCTURAL
STATE OF CALIFORNIA
2/28/2022

PROJECT TITLE

Peralta Community College District
MERRITT COLLEGE NEW LANDSCAPE HORTICULTURE COMPLEX

12500 Campus Drive
Oakland, CA 94616

BID SET

ISSUE DATE	03/03/2022
N&T JOB NUMBER	22003

REVISIONS

#	DATE	DESCRIPTION

DRAWN BY J.Broderick | CHECKED BY T. Moore

SHEET TITLE
GREENHOUSE TYPE 1 COLUMN & BASE PLATE LAYOUT, ROOF PLAN & BENCH LAYOUT

SHEET NUMBER
GH-1.0

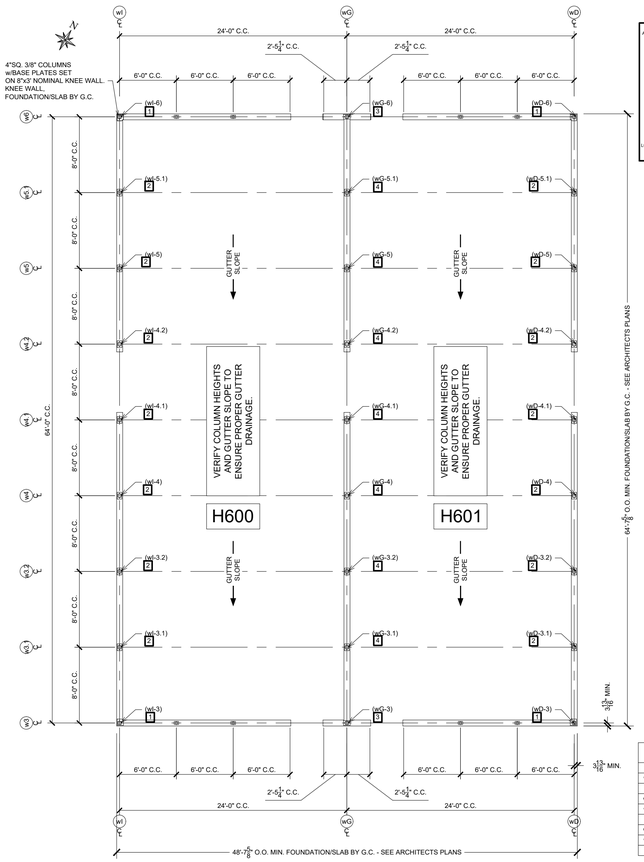

* THE FOLLOWING REACTIONS ARE UNCOMBINED/UNFACTORED				
PER AXIS DESIGN				
DEAD LOAD	0.3k	0.9k	1.0k	2.0k
COLLATERAL LOAD	0.1k	0.3k	0.3k	0.7k
ROOF LIVE LOAD	0.9k	1.8k	2.1k	4.2k
LATERAL WIND CASE 1				
UPLIFT	-0.2k	-0.3k	-0.2k	-0.4k
SHEAR	0.4k	0.7k	0.3k	0.3k
LATERAL WIND CASE 2				
UPLIFT	-0.4k	-0.8k	-0.8k	-1.9k
SHEAR	0.3k	0.6k	0.3k	0.3k
LATERAL WIND CASE 3				
UPLIFT	-0.7k	-1.2k	-1.0k	-2.6k
LAT. SHEAR	0.2k	0.4k	0.1k	0.2k
LONG. SHEAR	0.4k	0.4k	0.4k	0.4k
LATERAL WIND CASE 4				
UPLIFT	-0.2k	-0.3k	-0.1k	-0.1k
SHEAR	0.0k	1.0k	0.3k	0.6k
LATERAL SEISMIC CASE				
UPLIFT	-0.3k	-0.5k	-0.1k	-0.1k
SHEAR	0.3k	0.6k	0.4k	0.7k
LONGITUDINAL SEISMIC CASE				
UPLIFT	-1.0k	-1.0k	-1.0k	-1.9k
SHEAR	1.0k	1.0k	1.0k	1.9k

COLUMN HEIGHTS TYPE 2	
w6	9'-0"
w5.1	8'-11 1/2"
w5	8'-11"
w4.2	8'-10 1/2"
w4.1	8'-10"
w4	8'-9 1/2"
w3.2	8'-9"
w3.1	8'-8 1/2"
w3	8'-8"

1 COLUMN & BASE PLATE LAYOUT - GREENHOUSE TYPE 2
SCALE: 1/8" = 1'-0"

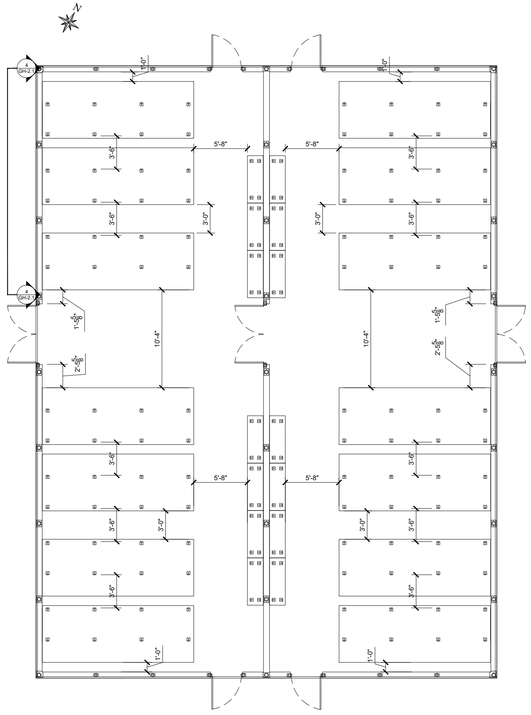

3 BENCH LAYOUT - GREENHOUSE TYPE 2
SCALE: 1/8" = 1'-0"

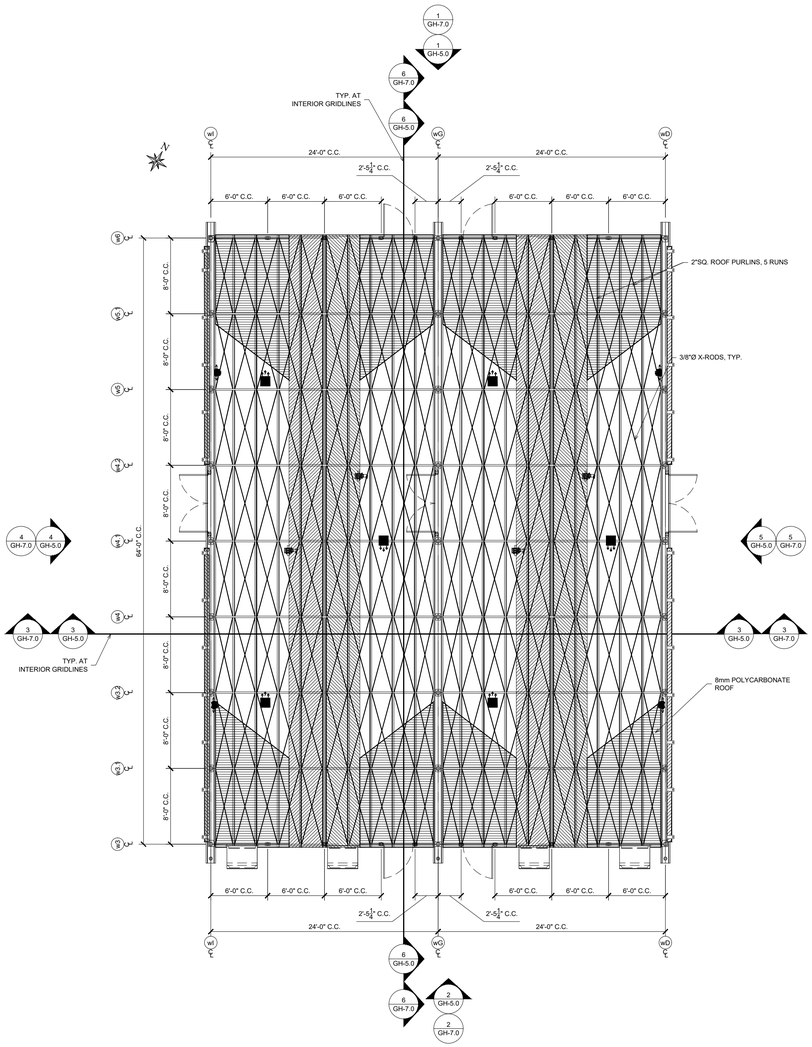

2 ROOF PLAN - GREENHOUSE TYPE 2
SCALE: 1/8" = 1'-0"

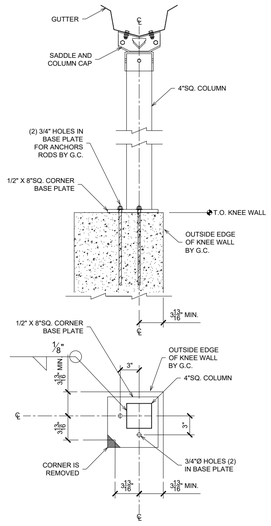

4 CORNER COLUMN BASEPLATE
1" = 1'-0"

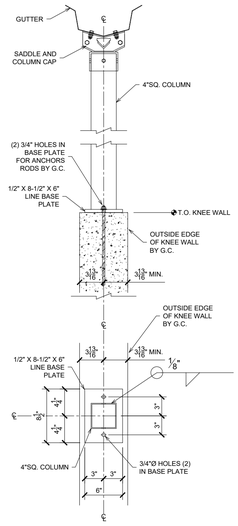

5 LINE COLUMN BASEPLATE
1" = 1'-0"

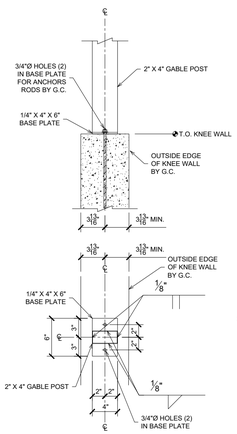

6 GABLE POST BASE PLATE
1" = 1'-0"

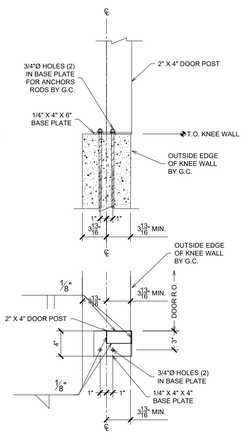

7 DOOR POST BASE PLATE
1" = 1'-0"

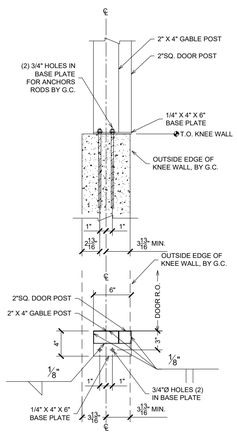

8 GABLE/DOOR COMBO BASE PLATE
1" = 1'-0"

APPROVALS

IDENTIFICATION STAMP
DIV. OF THE STATE ARCHITECT
APP: 01-119409 INC:
REVIEWED FOR
SS ☑ FLS ☑ ACS ☑
DATE: 03/14/2022

NOLL & TAM ARCHITECTS
729 Heinz Avenue
Berkeley, CA 94710
tel 510.542.2200
fax 510.542.2201

SEAL

NEXUS
10983 LEROY DRIVE
NORTHGLENN, COLORADO 80233
303/457-9199 FAX 303/457-2801

STRUCTURAL ONLY
REGISTERED PROFESSIONAL ENGINEER
ROBERT VIVAK MANOLIA
5400
Exp. 06/30/2022
STRUCTURAL
STATE OF CALIFORNIA
2/28/2022

PROJECT TITLE

Peralta Community College District
MERRITT COLLEGE NEW LANDSCAPE HORTICULTURE COMPLEX

12500 Campus Drive
Oakland, CA 94616

BID SET

ISSUE DATE	03/03/2022
N&T JOB NUMBER	22003

REVISIONS

#	DATE	DESCRIPTION

DRAWN BY **J.Broderick** | CHECKED BY **T. Moore**

SHEET TITLE

GREENHOUSE TYPE 2 COLUMN & BASE PLATE LAYOUT, ROOF PLAN & BENCH LAYOUT

SHEET NUMBER

GH-2.0

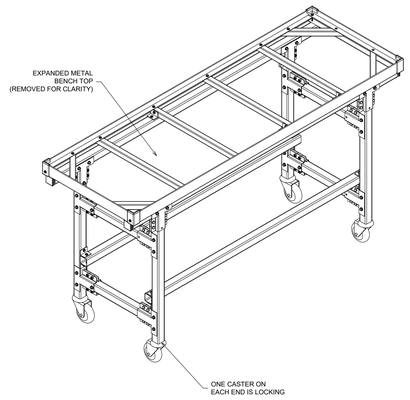

1 NEXUS BENCH WITH CASTERS
1" = 1'-0"

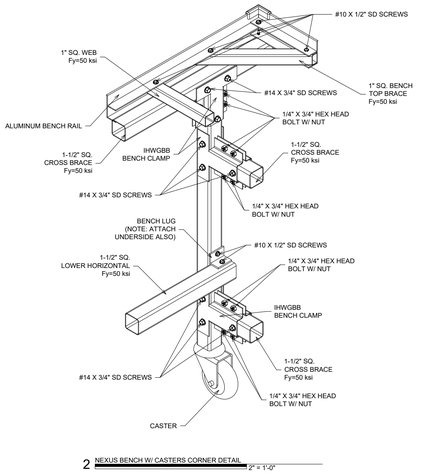

2 NEXUS BENCH W/ CASTERS CORNER DETAIL
2" = 1'-0"

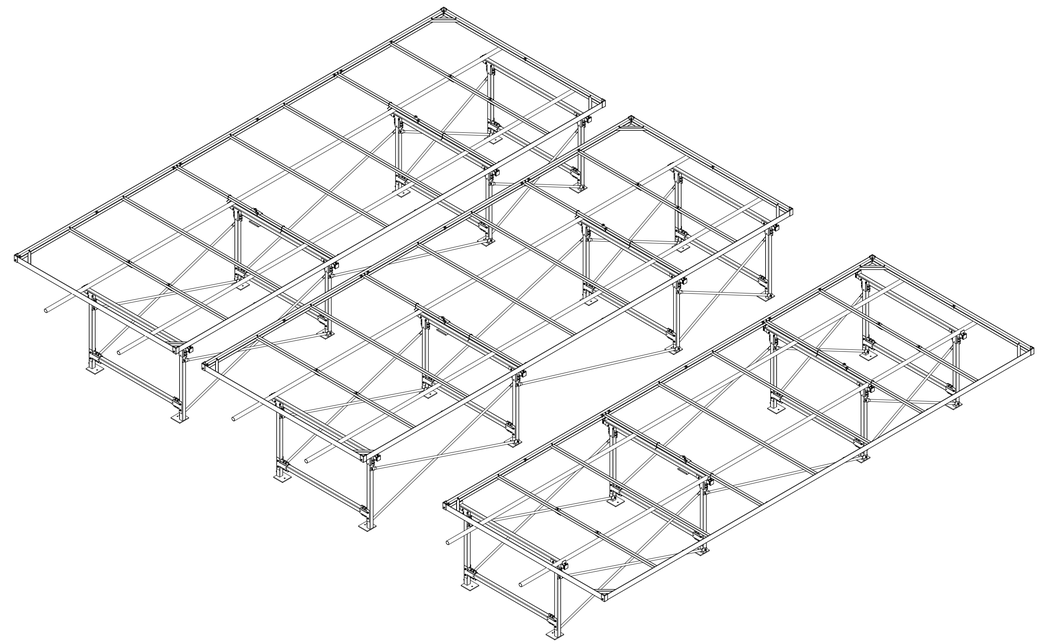

3 NEXUS ROLLING BENCH OVERVIEW
SCALE: 1/2" = 1'-0"

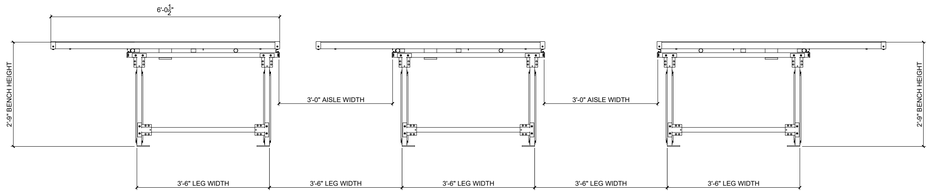

4 NEXUS ROLLING BENCH ELEVATION
SCALE: 1/2" = 1'-0"

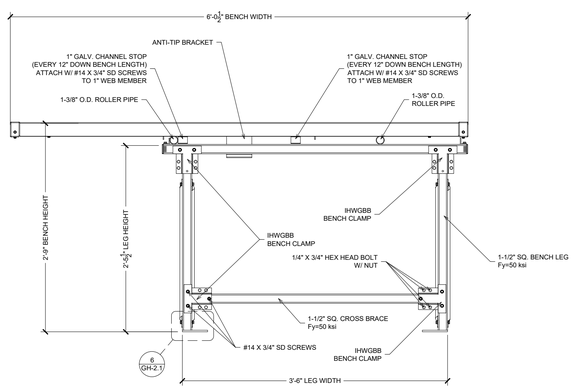

5 NEXUS ROLLING BENCH END VIEW
1" = 1'-0"

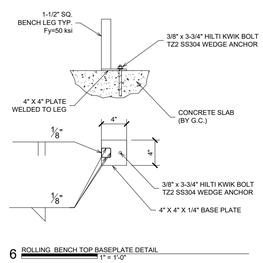

6 ROLLING BENCH TOP BASEPLATE DETAIL
1" = 1'-0"

APPROVALS

IDENTIFICATION STAMP
DIV. OF THE STATE ARCHITECT
APP: 01-119409 INC:
REVIEWED FOR
SS ☑ FLS ☑ ACS ☑
DATE: 03/14/2022

NOLL & TAM ARCHITECTS
729 Heinz Avenue
Berkeley, CA 94710
tel 510.542.2200
fax 510.542.2201

SEAL

NEXUS
10983 LEROY DRIVE
NORTHGLENN, COLORADO 80233
303/457-9199 FAX 303/457-2801

STRUCTURAL ONLY
REGISTERED PROFESSIONAL ENGINEER
PAREN VIVAK KANGHEN
5400
Exp. 08/31/2022
STRUCTURAL
STATE OF CALIFORNIA
2/28/2022

PROJECT TITLE

Peralta Community College District
MERRITT COLLEGE NEW LANDSCAPE HORTICULTURE COMPLEX

12500 Campus Drive
Oakland, CA 94616

BID SET

ISSUE DATE	**03/03/2022**
N&T JOB NUMBER	**22003**

REVISIONS

#	DATE	DESCRIPTION

DRAWN BY **J.Broderick** | CHECKED BY **T. Moore**

SHEET TITLE
GREENHOUSE BENCH DETAILS

SHEET NUMBER
GH-2.1

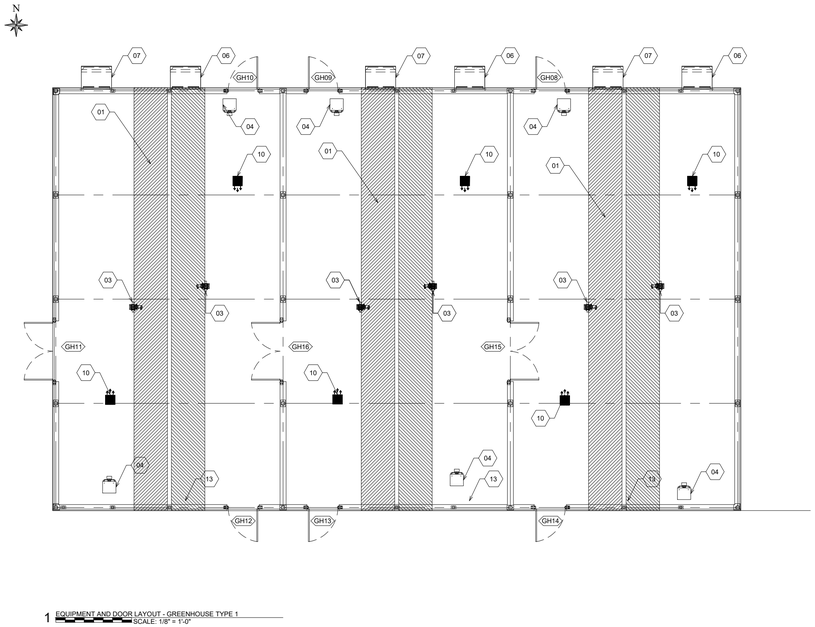

1 EQUIPMENT AND DOOR LAYOUT - GREENHOUSE TYPE 1
SCALE: 1/8" = 1'-0"

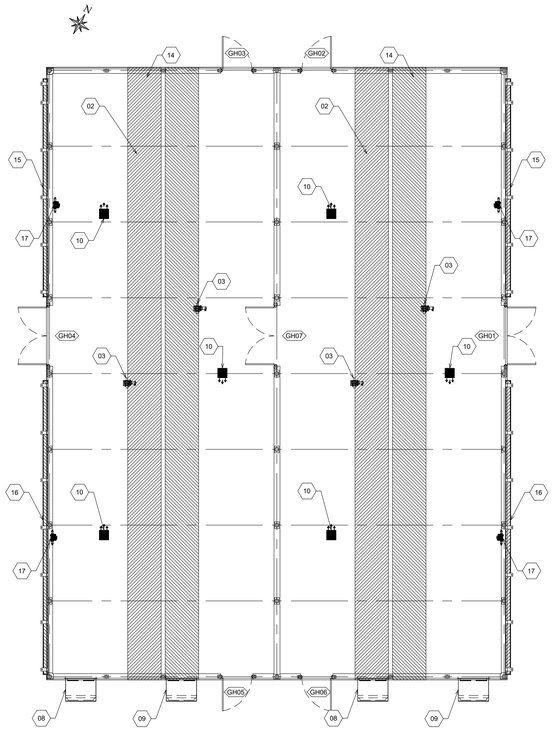

2 EQUIPMENT AND DOOR LAYOUT - GREENHOUSE TYPE 2
SCALE: 1/8" = 1'-0"

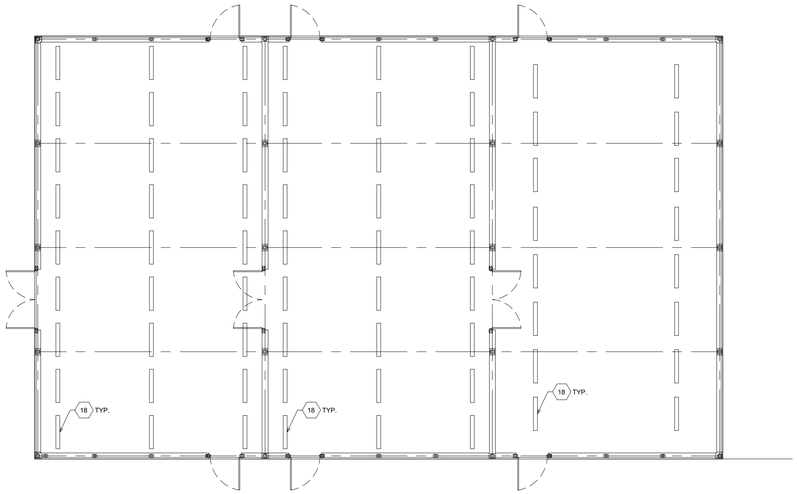

3 LIGHT LAYOUT - GREENHOUSE TYPE 1
SCALE: 1/8" = 1'-0"

EQUIPMENT SCHEDULE

ITEM NO.	QTY	EQUIPMENT TYPE	EQUIPMENT DESCRIPTION	TRADE	EQUIPMENT WEIGHT	ANCHORAGE DETAIL	HEIGHT A.F.F.
01	3	NEXUS DOUBLE RIDGE VENT SYSTEM W/ INSECT SCREENS	NEXUS 30" X 44' NOM. DOUBLE RIDGE VENT SYSTEM W/ 8MM CLEAR TWIN WALL VENT COVERINGS, INSECT SCREENS, POWER SUPPLY REQUIRED FOR MOTOR.	GH01, GH03, GH07	348	1 / GH-10.2	222 3/16"
02	2	NEXUS DOUBLE RIDGE VENT SYSTEM W/ INSECT SCREENS	NEXUS 30" X 64' NOM. DOUBLE RIDGE VENT SYSTEM W/ 8MM CLEAR TWIN WALL VENT COVERINGS, INSECT SCREENS, POWER SUPPLY REQUIRED FOR MOTOR.	GH02, GH04	440	1 / GH-10.2	222 3/16"
03	10	VENT MOTOR	WADSWORTH MODEL VC2000 ROOF VENT MOTOR, MOUNTED IN GREENHOUSE TRUSSES, POWER SUPPLY REQUIRED.	GH01, GH02, GH03, GH04, GH07	73	8 / GH-9.1	187 5/8"
04	6	UNIT HEATER	MODINE HER150 UNIT HEATER, 1/15-HP, 208-V, 60Hz, 3-PH, W/ HEATER HANGER KIT, POWER SUPPLY REQUIRED.	GH08, GH09, GH10	74	4 / GH-3.0	119 9/16"
05	1	SEED CONTROLLER SYSTEM	WADSWORTH SEED CONTROLLER SYSTEM. SEE MANUFACTURER'S DRAWINGS. REFER TO ARCHITECTURAL DRAWINGS FOR LOCATION	GH08	10		
06	3	EXHAUST FANS	AMERICAN COOLAIR, AL30H, 615 RPM, 1 SPEED, 115V, 5.4 AMPS, 1/3HP POWER SUPPLY REQUIRED.	GH08, GH09, GH10	104	7 / GH-7.0	67 7/8"
07	3	EXHAUST FANS	AMERICAN COOLAIR, AL30H, 615 RPM, 2 SPEED, 115V, 6.5 AMPS, 1/3 HP POWER SUPPLY REQUIRED.	GH08, GH09, GH10	104	7 / GH-7.0	67 7/8"
08	2	EXHAUST FANS	AMERICAN COOLAIR, AL30K, 615 RPM, 2 SPEED, 115V, 3/4HP POWER SUPPLY REQUIRED.	GH05, GH06	104	7 / GH-7.0	67 7/8"
09	2	EXHAUST FANS	AMERICAN COOLAIR, AL30K, 615 RPM, 1 SPEED, 1 PHASE, 3/4HP POWER SUPPLY REQUIRED.	GH05, GH06	104	7 / GH-7.0	67 7/8"
10	12	HAF FANS	SCHAEFER 12" HAF FANS 120 VAC, 1 PHASE, 1.3 AMPS, POWER SUPPLY REQUIRED.	GH01, GH02, GH03, GH04, GH07	18	9 / GH-9.1	126 5/8"
11	9	INLET SHUTTER	AMERICAN COOLAIR, LRW-6036E, 115 VAC, 1 PHASE, 0.15 AMPS, POWER SUPPLY REQUIRED.	GH01, GH02, GH03, GH04, GH07	22	7 / GH-6.0	52 3/4"
12	8	INLET SHUTTER	AMERICAN COOLAIR, LRW45E, 115 VAC, 1 PHASE, 0.28 AMPS, POWER SUPPLY REQUIRED.	GH05, GH06, GH08, GH09, GH10	22	8 / GH-7.0	52 3/4"
13	3	COOLING PAD SYSTEM	AMERICAN COOLAIR, 36" X 16' NOM. SELF CONTAINED COOLING PAD SYSTEM, 6" PADS, PVC, POWER & WATER SUPPLY REQUIRED.	GH08, GH09, GH10, GH11, GH12, GH13, GH14, GH15, GH16	228	7 / GH-6.0	51 9/16"
14	2	COOLING PAD SYSTEM	AMERICAN COOLAIR, 48" X 16' NOM. SELF CONTAINED COOLING PAD SYSTEM, 6" PADS, PVC, POWER & WATER SUPPLY REQUIRED.	GH08, GH09, GH10, GH11, GH12, GH13, GH14, GH15, GH16	240	8 / GH-7.0	51 9/16"
15	2	NEXUS EDDG VENT SYSTEM	NEXUS 48" X 23' NOM. EDDG VENT SYSTEM W/ 8mm TWIN-WALL POLYCARBONATE VENT COVERINGS, POWER SUPPLY REQUIRED FOR MOTOR.	GH01, GH02, GH03, GH04, GH07	144	GH-11.1-11.3	76 1/2"
16	2	NEXUS EDDG VENT SYSTEM	NEXUS 48" X 31' NOM. EDDG VENT SYSTEM W/ 8mm TWIN-WALL POLYCARBONATE VENT COVERINGS, POWER SUPPLY REQUIRED FOR MOTOR.	GH01, GH02, GH03, GH04, GH07	176	GH-11.1-11.3	76 1/2"
17	4	EDDG VENT MOTOR	LOCK EWA12.1503 MOTOR, FOR EDDG VENT, POWER SUPPLY REQUIRED.	GH01, GH02, GH03, GH04, GH07	50	GH-11.1-11.3	78 11/16"
18	70	GROW LIGHTS	PARSOURCE PHOTOBIO'T 600W LED S4 SPECTRUM GROW LIGHTS - SEE MANUFACTURE'S SPECIFICATIONS AND/OR DRAWINGS.	GH01, GH02, GH03, GH04, GH07	29	10 / GH-9.1	124"

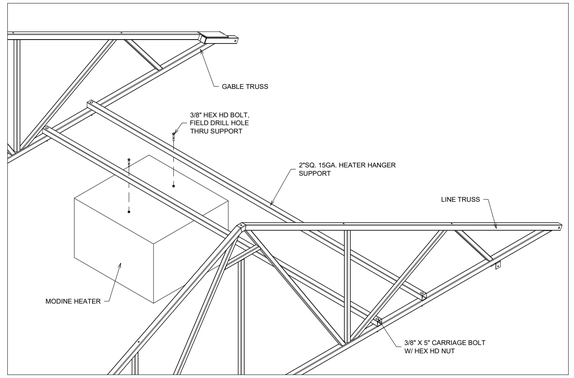

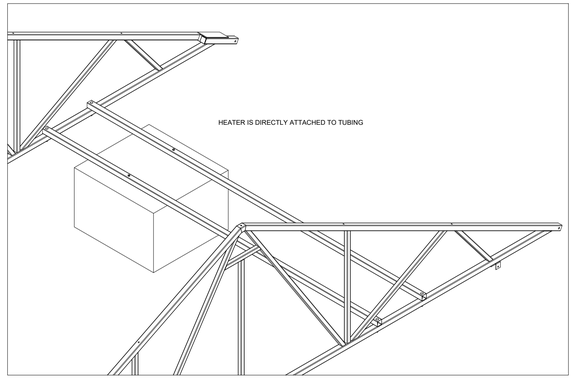

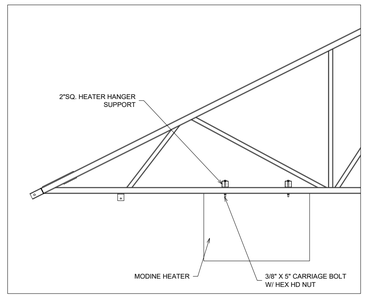

4 HEATER HANGER/TYP. EQUIPMENT SUPPORT DETAIL
SCALE: 1/2" = 1'-0"

MEP Component Anchorage Note

All mechanical, plumbing, and electrical components shall be achored and installed per the details on the DSA-approved construction documents. The following components shall be anchored or braced to meet the force and displacement requirements prescribed in the 2019 CBC Sections 1617A.1.18 through 1617A.1.26 and ASCE 7-16 Chapters 13, 26, and 30.

1. All permanent equipment and components
2. Temporary, moveable or mobile equipment that is permanently attached (e.g. hard wired) to the building utility services such as electricity, gas or water. "Permanently attached" shall include all electrical connections except plugs for 110/220 volt receptacles having a flexible cable.
3. Temporary, movable or mobile equipment which is heavier than 400 pounds or has a center of mass located 4 feet or more above the adjacent floor or roof level that directly support the component is required to be restrained in a manner approved by DSA.

The following mechanical and electrical components shall be positively attached to the structure but need not demonstrate design compliance with the references noted above. These components shall have flexible connections provided between the component and the associated ductwork, piping, and conduit. Flexible connections must allow movement in both transverse and longitudinal directions:

A. Components weighing less than 400 pounds and having a center of mass located 4 feet or less above the adjacent floor or roof level that directly support the component.
B. Components weighting less than 20 pounds, or in the case of distributed systems, less than 5 pounds per foot, which are suspended from a roof or floor or hung from a wall.

The anchorage of all mechanical, electrical and plumbing components shall be subject to the approval of the design professional in general responsible charge or structural engineer delegated responsibility and acceptance by DSA. The project inspector will verify all components and equipment have been anchored in accordance with the above requirements.

APPROVALS

IDENTIFICATION STAMP
DIV. OF THE STATE ARCHITECT
APP: 01-119409 INC:
REVIEWED FOR
SS ☑ FLS ☑ ACS ☑
DATE: 03/14/2022

NOLL & TAM ARCHITECTS
729 Heinz Avenue
Berkeley, CA 94710
tel 510.542.2200
fax 510.542.2201

SEAL

NEXUS
10983 LEROY DRIVE
NORTHGLENN, COLORADO 80233
303/457-9199 FAX 303/457-2801

STRUCTURAL ONLY
REGISTERED PROFESSIONAL ENGINEER
ROBERT VIVAK MANGHA
5400
Exp. 08/31/2022
STRUCTURAL
STATE OF CALIFORNIA
2/28/2022

PROJECT TITLE

Peralta Community College District
MERRITT COLLEGE NEW LANDSCAPE HORTICULTURE COMPLEX

12500 Campus Drive
Oakland, CA 94616

BID SET

ISSUE DATE **03/03/2022**
N&T JOB NUMBER **22003**

REVISIONS

#	DATE	DESCRIPTION

DRAWN BY **J.Broderick** | CHECKED BY **T. Moore**

SHEET TITLE
GREENHOUSE TYPE 1 & TYPE 2 EQUIPMENT & DOOR LAYOUT

SHEET NUMBER
GH-3.0

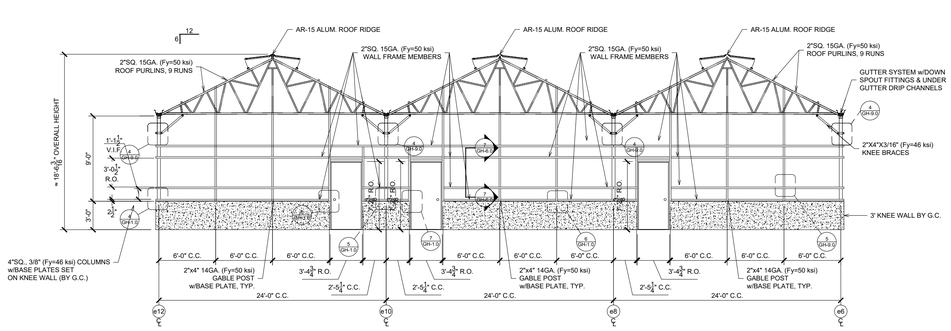

1 GABLE END ELEVATION @ COLUMN LINE 'eC'
SCALE: 1/8" = 1'-0"

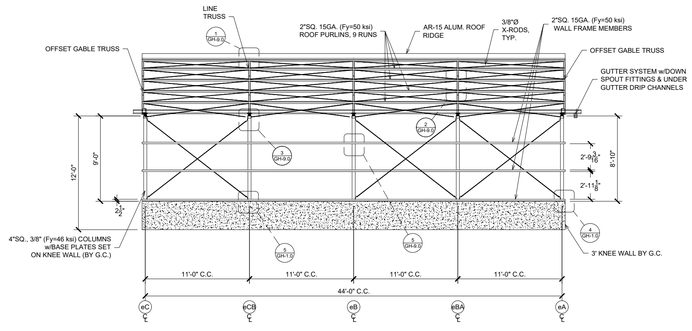

4 SIDEWALL ELEVATION @ COLUMN LINE 'e6'
SCALE: 1/8" = 1'-0"

2 GABLE END ELEVATION @ COLUMN LINE 'eA'
SCALE: 1/8" = 1'-0"

5 SIDEWALL ELEVATION @ COLUMN LINE 'e12'
SCALE: 1/8" = 1'-0"

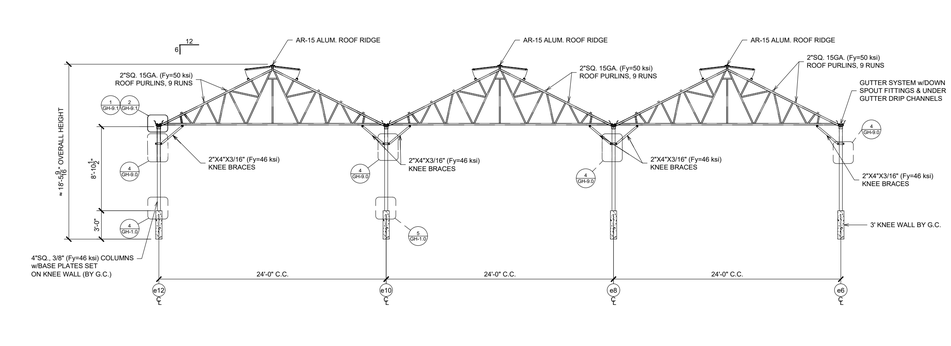

3 SECTION ELEVATION @ COLUMN LINE 'eCB' (TYPICAL @ 'eB' & 'eBA')
SCALE: 1/8" = 1'-0"

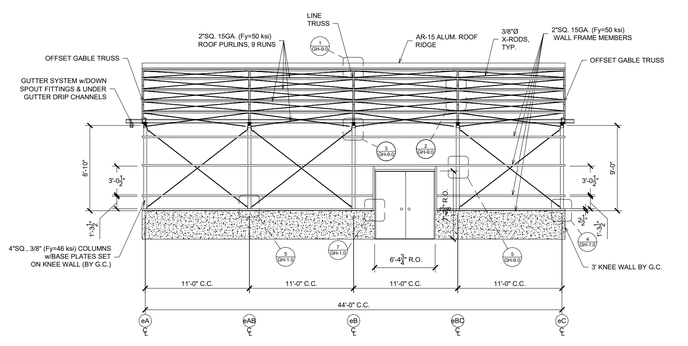

6 SIDEWALL ELEVATION @ COLUMN LINE 'e10' (TYPICAL AT INTERIOR GRIDLINES)
SCALE: 1/8" = 1'-0"

APPROVALS

IDENTIFICATION STAMP
DIV. OF THE STATE ARCHITECT
APP: 01-119409 INC:
REVIEWED FOR
SS ☑ FLS ☑ ACS ☑
DATE: 03/14/2022

NOLL & TAM ARCHITECTS
729 Heinz Avenue
Berkeley, CA 94710
tel 510.542.2200
fax 510.542.2201

SEAL

NEXUS
10983 LEROY DRIVE
NORTHGLENN, COLORADO 80233
303/457-9199 FAX 303/457-2801

STRUCTURAL ONLY
REGISTERED PROFESSIONAL ENGINEER
ROBERT VIVAK NANGLA
5400
Exp. 12/31/2022
STRUCTURAL
STATE OF CALIFORNIA
2/28/2022

PROJECT TITLE

Peralta Community College District
MERRITT COLLEGE NEW LANDSCAPE HORTICULTURE COMPLEX

12500 Campus Drive
Oakland, CA 94616

BID SET

ISSUE DATE	03/03/2022
N&T JOB NUMBER	22003

REVISIONS

#	DATE	DESCRIPTION

DRAWN BY **J.Broderick** | CHECKED BY **T. Moore**

SHEET TITLE

GREENHOUSE TYPE 1 GABLE END, SIDEWALL & SECTION ELEVATIONS (FRAMING)

SHEET NUMBER

GH-4.0

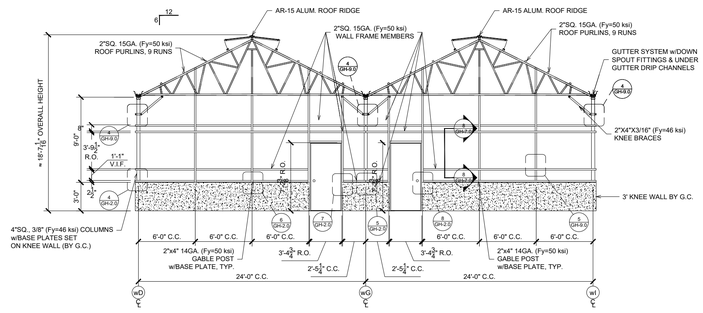

1 GABLE END ELEVATION @ COLUMN LINE 'w6'
SCALE: 1/8" = 1'-0"

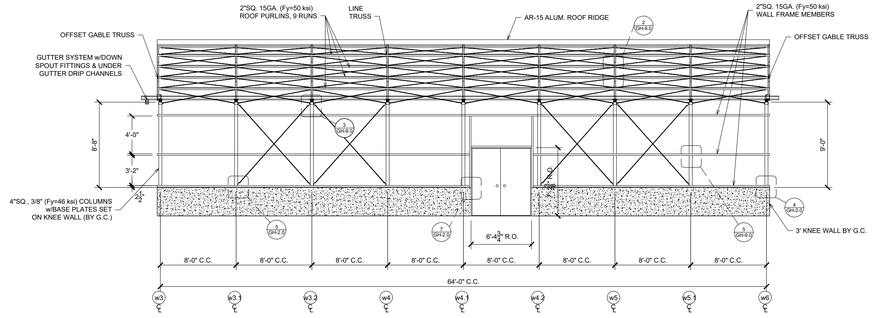

4 SIDEWALL ELEVATION @ COLUMN LINE 'w' SCALE: 1/8" = 1'-0"

2 GABLE END ELEVATION @ COLUMN LINE 'w3'
SCALE: 1/8" = 1'-0"

5 SIDEWALL ELEVATION @ COLUMN LINE 'wD'
SCALE: 1/8" = 1'-0"

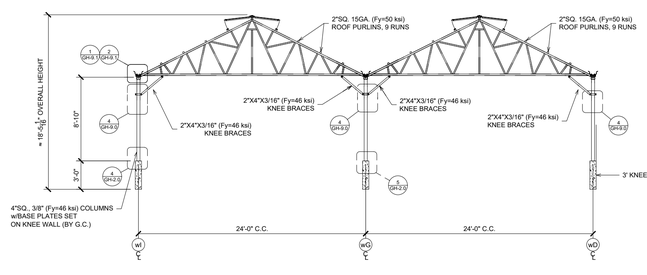

3 SECTION ELEVATION @ COLUMN LINE 'w4' (TYP. @ w3.1, w3.2, w4.1, w4.2, w5 & w5.1)
SCALE: 1/8" = 1'-0"

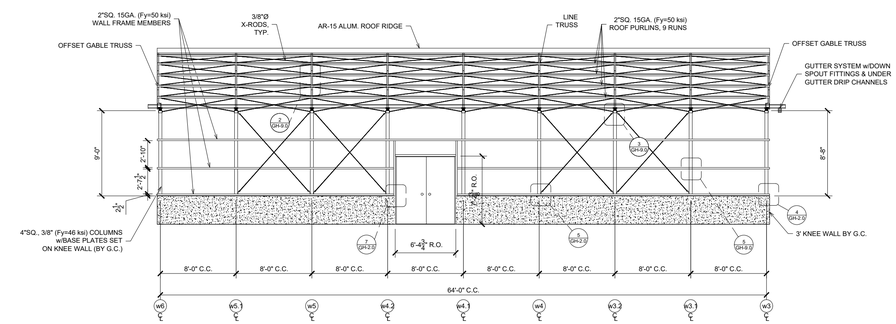

6 SIDEWALL ELEVATION @ COLUMN LINE 'wG' (TYPICAL AT INTERIOR GRIDLINES)
SCALE: 1/8" = 1'-0"

APPROVALS

IDENTIFICATION STAMP
DIV. OF THE STATE ARCHITECT
APP: 01-119409 INC:
REVIEWED FOR
SS ☑ FLS ☑ ACS ☑
DATE: 03/14/2022

NOLL & TAM ARCHITECTS
729 Heinz Avenue
Berkeley, CA 94710
tel 510.542.2200
fax 510.542.2201

SEAL

NEXUS
10983 LEROY DRIVE
NORTHGLENN, COLORADO 80233
303/457-9199 FAX 303/457-2801

STRUCTURES ONLY
REGISTERED PROFESSIONAL ENGINEER
ROBERT VIVAR NAGGA
5400
Exp. 06/30/2022
STRUCTURAL
STATE OF CALIFORNIA
2/28/2022

PROJECT TITLE

Peralta Community College District

MERRITT COLLEGE NEW LANDSCAPE HORTICULTURE COMPLEX

12500 Campus Drive
Oakland, CA 94616

BID SET

ISSUE DATE	03/03/2022
N&T JOB NUMBER	22003

REVISIONS

#	DATE	DESCRIPTION

DRAWN BY **J.Broderick** | CHECKED BY **T. Moore**

SHEET TITLE

GREENHOUSE TYPE 2 GABLE END, SIDEWALL & SECTION ELEVATIONS (FRAMING)

SHEET NUMBER

GH-5.0

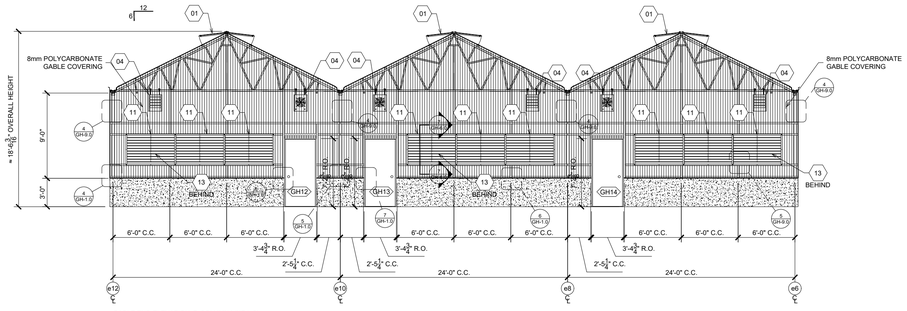

1 GABLE END ELEVATION @ COLUMN LINE 'eC'
SCALE: 1/8" = 1'-0"

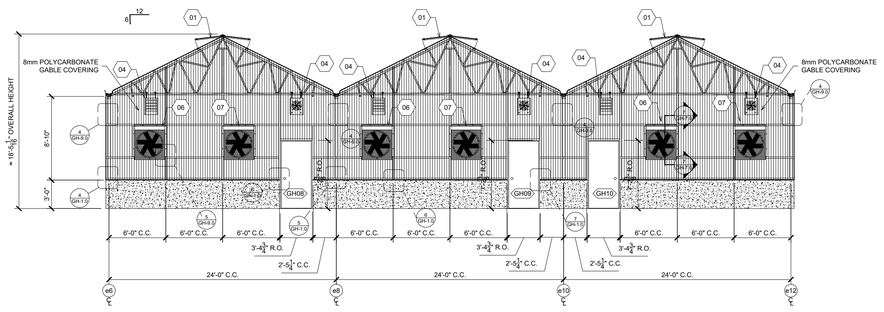

2 GABLE END ELEVATION @ COLUMN LINE 'eA'
SCALE: 1/8" = 1'-0"

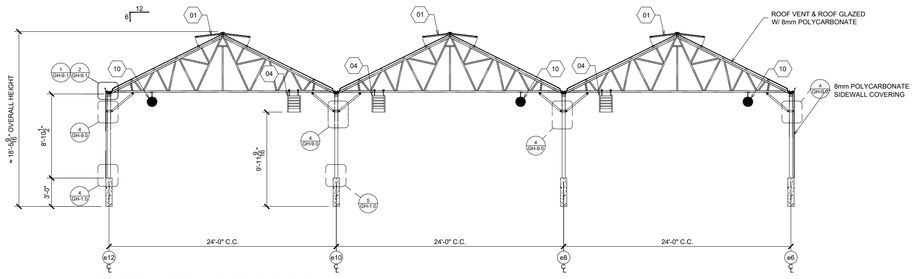

3 SECTION ELEVATION @ COLUMN LINE 'eC/8' (TYPICAL @ 'e8' & 'eBA')
SCALE: 1/8" = 1'-0"

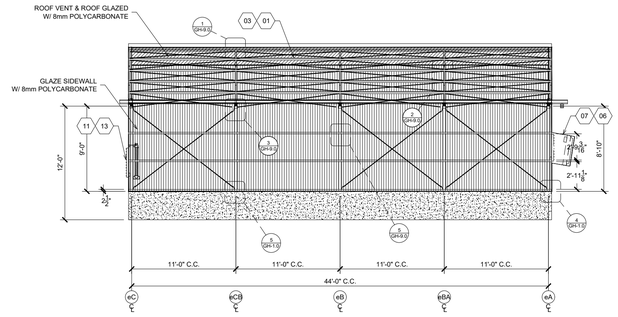

4 SIDEWALL ELEVATION @ COLUMN LINE 'e6'
SCALE: 1/8" = 1'-0"

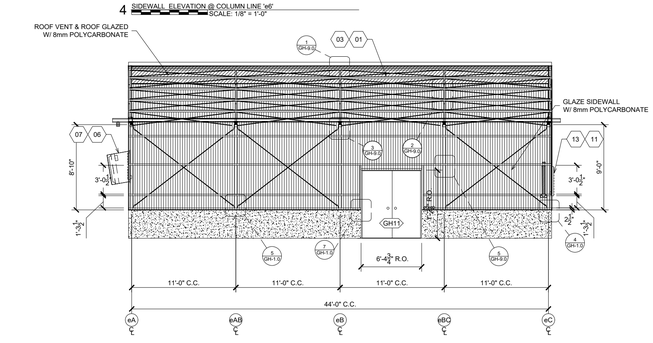

5 SIDEWALL ELEVATION @ COLUMN LINE 'e12'
SCALE: 1/8" = 1'-0"

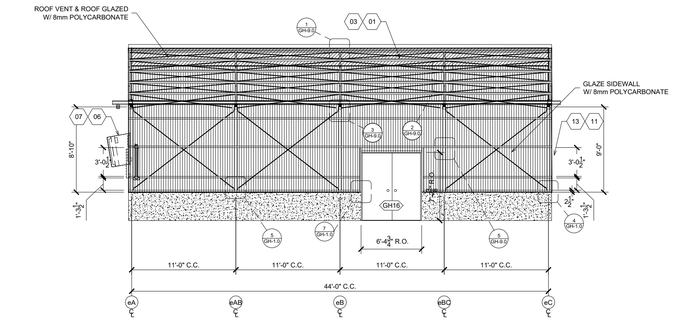

6 SIDEWALL @ COLUMN LINE 'e10' (TYPICAL AT INTERIOR GRIDLINES)
SCALE: 1/8" = 1'-0"

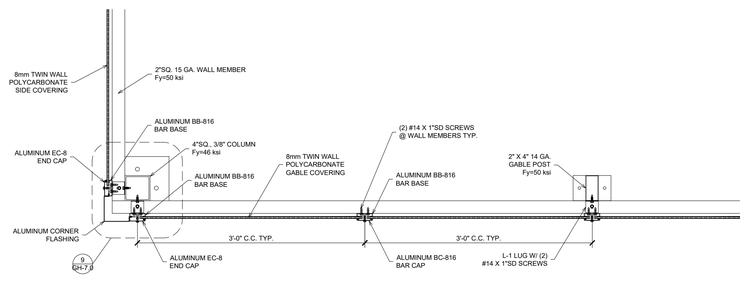

8 GLAZING SECTION @ CORNER
1" = 1'-0"

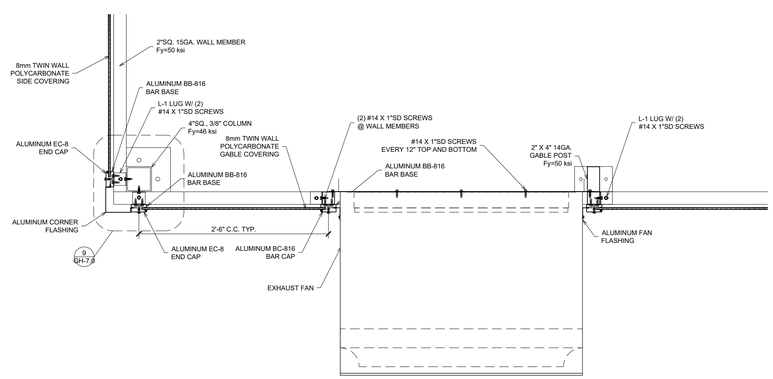

9 GLAZING SECTION @ EXHAUST FAN
1" = 1'-0"

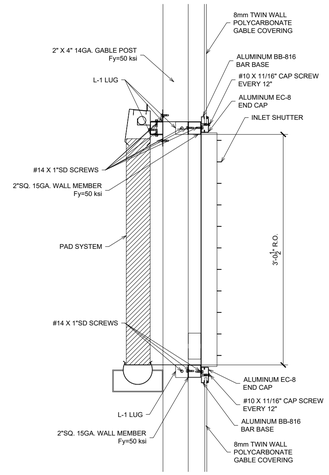

7 SECTION THRU 36" PAD LRW6036E SHUTTER
1" = 1'-0"

EQUIPMENT SCHEDULE

ITEM NO.	QTY	EQUIPMENT TYPE	EQUIPMENT DESCRIPTION	TRADE	EQUIPMENT WEIGHT	ANCHORAGE DETAIL	HEIGHT A.F.F.
01	3	NEXUS DOUBLE RIDGE VENT SYSTEM W/ INSECT SCREENS	NEXUS 30" X 44' NOM. DOUBLE RIDGE VENT SYSTEM W/ 8MM CLEAR TWIN WALL VENT COVERINGS, INSECT SCREENS, POWER SUPPLY REQUIRED FOR MOTOR.	ARCH. MECH. ELEC. PLUMB.	348	1 / GH-10.2	222 3/16"
02	2	NEXUS DOUBLE RIDGE VENT SYSTEM W/ INSECT SCREENS	NEXUS 30" X 64' NOM. DOUBLE RIDGE VENT SYSTEM W/ 8MM CLEAR TWIN WALL VENT COVERINGS, INSECT SCREENS, POWER SUPPLY REQUIRED FOR MOTOR.	ARCH. MECH. ELEC. PLUMB.	440	1 / GH-10.2	222 3/16"
03	10	VENT MOTOR	WADSWORTH MODEL VC2000 ROOF VENT MOTOR, MOUNTED IN GREENHOUSE TRUSSES, POWER SUPPLY REQUIRED.	ARCH. MECH. ELEC. PLUMB.	73	8 / GH-9.1	187 5/8"
04	6	UNIT HEATER	MODINE HER150 UNIT HEATER, 1/15-HP, 208-V, 60Hz, 3-PH, W/ HEATER HANGER KIT, POWER SUPPLY REQUIRED.	ARCH. MECH. ELEC. PLUMB.	74	4 / GH-3.0	119 9/16"
05	1	SEED CONTROLLER SYSTEM	WADSWORTH SEED CONTROLLER SYSTEM, SEE MANUFACTURER'S DRAWINGS. REFER TO ARCHITECTURAL DRAWINGS FOR LOCATION	ARCH. MECH. ELEC. PLUMB.	10		
06	3	EXHAUST FANS	AMERICAN COOLAIR, AL30H, 615 RPM, 1 SPEED, 115V, .5.4 AMPS, 1/3HP POWER SUPPLY REQUIRED.	ARCH. MECH. ELEC. PLUMB.	104	7 / GH-7.0	67 7/8"
07	3	EXHAUST FANS	AMERICAN COOLAIR, AL30H, 615 RPM, 2 SPEED, 115V, 6.5 AMPS, 1/3 HP POWER SUPPLY REQUIRED.	ARCH. MECH. ELEC. PLUMB.	104	7 / GH-7.0	67 7/8"
08	2	EXHAUST FANS	AMERICAN COOLAIR, AL30K, 615 RPM, 2 SPEED, 115V, 3/4HP POWER SUPPLY REQUIRED.	ARCH. MECH. ELEC. PLUMB.	104	7 / GH-7.0	67 7/8"
09	2	EXHAUST FANS	AMERICAN COOLAIR, AL30K, 615 RPM, 1 SPEED, 1 PHASE, 3/4HP POWER SUPPLY REQUIRED.	ARCH. MECH. ELEC. PLUMB.	104	7 / GH-7.0	67 7/8"
10	12	HAF FANS	SCHAEFER 12" HAF FANS 120 VAC, 1 PHASE, 1.3 AMPS, POWER SUPPLY REQUIRED.	ARCH. MECH. ELEC. PLUMB.	18	9 / GH-9.1	126 5/8"
11	9	INLET SHUTTER	AMERICAN COOLAIR, LRW-6036E, 115 VAC, 1 PHASE, 0.15 AMPS, POWER SUPPLY REQUIRED.	ARCH. MECH. ELEC. PLUMB.	22	7 / GH-6.0	52 3/4"
12	8	INLET SHUTTER	AMERICAN COOLAIR, LRW45E, 115 VAC, 1 PHASE, 0.28 AMPS, POWER SUPPLY REQUIRED.	ARCH. MECH. ELEC. PLUMB.	22	8 / GH-7.0	52 3/4"
13	3	COOLING PAD SYSTEM	AMERICAN COOLAIR, 36" X 16' NOM. SELF CONTAINED COOLING PAD SYSTEM, 6" PADS, PVC, POWER & WATER SUPPLY REQUIRED.	ARCH. MECH. ELEC. PLUMB.	228	7 / GH-6.0	51 9/16"
14	2	COOLING PAD SYSTEM	AMERICAN COOLAIR, 48" X 16' NOM. SELF CONTAINED COOLING PAD SYSTEM, 6" PADS, PVC, POWER & WATER SUPPLY REQUIRED.	ARCH. MECH. ELEC. PLUMB.	240	8 / GH-7.0	51 9/16"
15	2	NEXUS EDDG VENT SYSTEM	NEXUS 48" X 23' NOM. EDDG VENT SYSTEM W/ 8mm TWIN-WALL POLYCARBONATE VENT COVERINGS, POWER SUPPLY REQUIRED FOR MOTOR.	ARCH. MECH. ELEC. PLUMB.	144	GH-11.1-11.3	76 1/2"
16	2	NEXUS EDDG VENT SYSTEM	NEXUS 48" X 31' NOM. EDDG VENT SYSTEM W/ 8mm TWIN-WALL POLYCARBONATE VENT COVERINGS, POWER SUPPLY REQUIRED FOR MOTOR.	ARCH. MECH. ELEC. PLUMB.	176	GH-11.1-11.3	76 1/2"
17	4	EDDG VENT MOTOR	LOCK EWA12.1503 MOTOR, FOR EDDG VENT, POWER SUPPLY REQUIRED.	ARCH. MECH. ELEC. PLUMB.	50	GH-11.1-11.3	78 11/16"
18	70	GROW LIGHTS	PARSOURCE PHOTOBIO™ 600W LED S4 SPECTRUM GROW LIGHTS - SEE MANUFACTURE'S SPECIFICATIONS AND/OR DRAWINGS.	ARCH. MECH. ELEC. PLUMB.	29	10 / GH-9.1	124"

APPROVALS

IDENTIFICATION STAMP
DIV. OF THE STATE ARCHITECT
APP: 01-119409 INC:
REVIEWED FOR
SS ☑ FLS ☑ ACS ☑
DATE: 03/14/2022

NOLL & TAM ARCHITECTS
729 Heinz Avenue
Berkeley, CA 94710
tel 510.542.2200
fax 510.542.2201

SEAL

NEXUS
10983 LEROY DRIVE
NORTHGLENN, COLORADO 80233
303/457-9199 FAX 303/457-2801

STRUCTURAL ONLY
REGISTERED PROFESSIONAL ENGINEER
PRADEEP VIVAK NANGIA
5400
Exp. 09/30/2022
STRUCTURAL
STATE OF CALIFORNIA
2/28/2022

PROJECT TITLE

Peralta Community College District

MERRITT COLLEGE NEW LANDSCAPE HORTICULTURE COMPLEX

12500 Campus Drive
Oakland, CA 94616

BID SET

ISSUE DATE	03/03/2022
N&T JOB NUMBER	22003

REVISIONS

#	DATE	DESCRIPTION

DRAWN BY J.Broderick | CHECKED BY T. Moore

SHEET TITLE

GREENHOUSE TYPE 1 GABLE , SIDEWALL & SECTION ELEVATIONS (EQUIPMENT & GLAZING)

SHEET NUMBER

GH-6.0

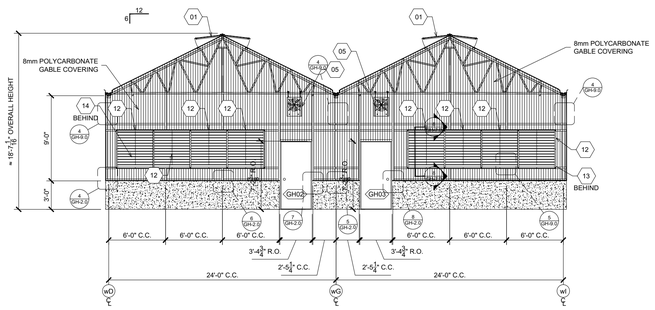

1 GABLE END ELEVATION @ COLUMN LINE 'w6'
SCALE: 1/8" = 1'-0"

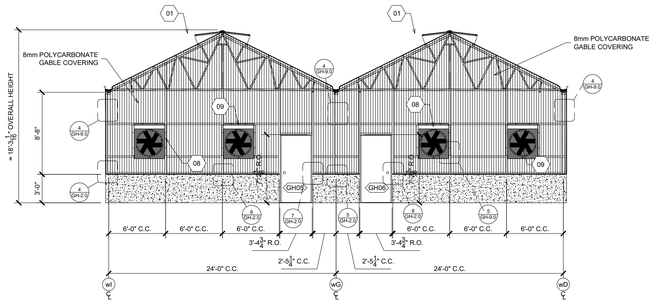

2 GABLE END ELEVATION @ COLUMN LINE 'w3'
SCALE: 1/8" = 1'-0"

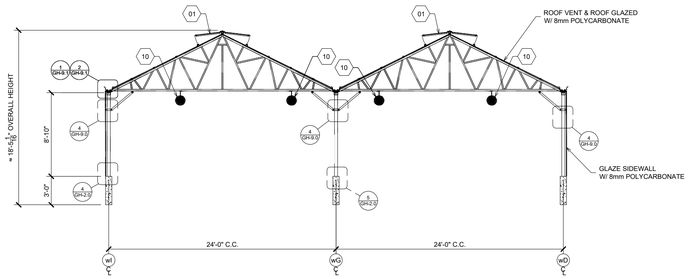

3 SECTION ELEVATION @ COLUMN LINE 'w4' (TYP. @ w3.1, w3.2, w4.1, w4.2, w5 & w5.1)
SCALE: 1/8" = 1'-0"

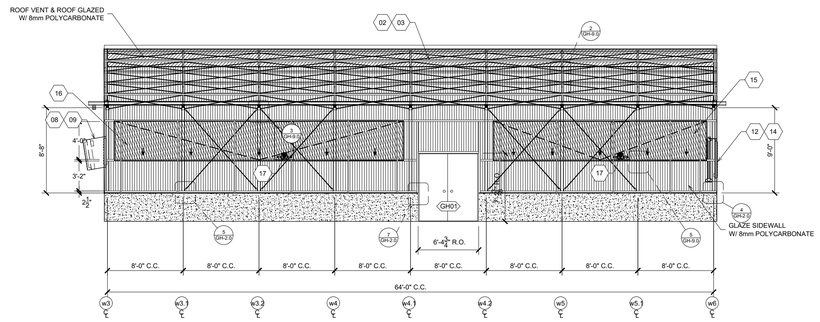

4 SIDEWALL ELEVATION @ COLUMN LINE 'w4'
SCALE: 1/8" = 1'-0"

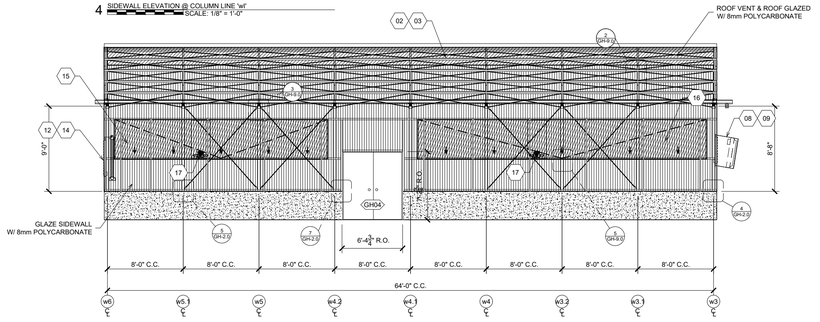

5 SIDEWALL ELEVATION @ COLUMN LINE 'wD'
SCALE: 1/8" = 1'-0"

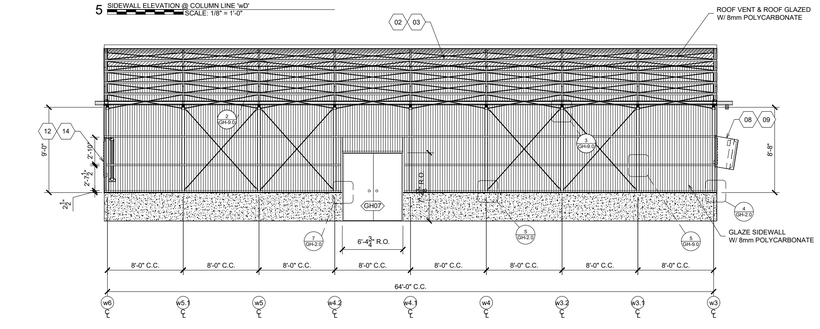

6 SIDEWALL ELEVATION @ COLUMN LINE 'wG' (TYPICAL AT INTERIOR GRIDLINES)
SCALE: 1/8" = 1'-0"

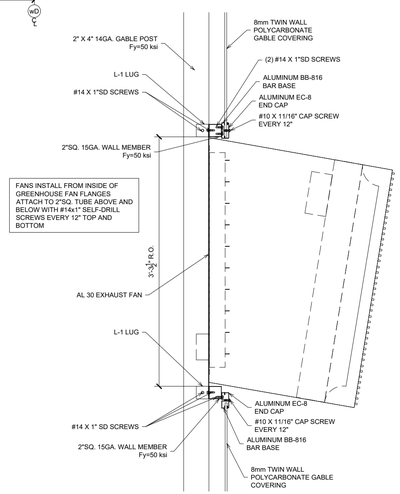

7 SECTION THRU AL30 EXHAUST FAN
1" = 1'-0"

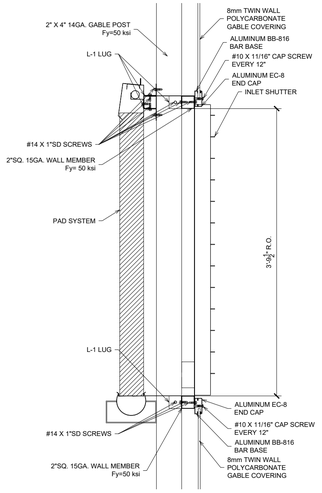

8 SECTION THRU 48" PAD/LRW45E SHUTTER
1" = 1'-0"

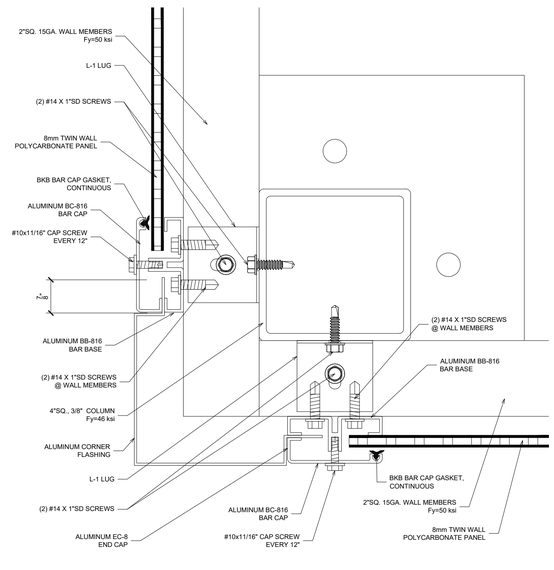

9 GLAZING @ CORNER
6" = 1'-0"

EQUIPMENT SCHEDULE								
ITEM NO.	QTY	EQUIPMENT TYPE	EQUIPMENT DESCRIPTION	TRADE		EQUIPMENT WEIGHT	ANCHORAGE DETAIL	HEIGHT A.F.F.
01	3	NEXUS DOUBLE RIDGE VENT SYSTEM W/ INSECT SCREENS	NEXUS 30" X 44' NOM. DOUBLE RIDGE VENT SYSTEM W/ 8MM CLEAR TWIN WALL VENT COVERINGS, INSECT SCREENS, POWER SUPPLY REQUIRED FOR MOTOR.	#### ####		348	1 / GH-10.2	222 3/16"
02	2	NEXUS DOUBLE RIDGE VENT SYSTEM W/ INSECT SCREENS	NEXUS 30" X 64' NOM. DOUBLE RIDGE VENT SYSTEM W/ 8MM CLEAR TWIN WALL VENT COVERINGS, INSECT SCREENS, POWER SUPPLY REQUIRED FOR MOTOR.	#### ####		440	1 / GH-10.2	222 3/16"
03	10	VENT MOTOR	WADSWORTH MODEL VC2000 ROOF VENT MOTOR, MOUNTED IN GREENHOUSE TRUSSES, POWER SUPPLY REQUIRED.	#### ####		73	8 / GH-9.1	187 5/8"
04	6	UNIT HEATER	MODINE HER150 UNIT HEATER, 1/15-HP, 208-V, 60Hz, 3-PH, W/ HEATER HANGER KIT, POWER SUPPLY REQUIRED.	#### ####		74	4 / GH-3.0	119 9/16"
05	1	SEED CONTROLLER SYSTEM	WADSWORTH SEED CONTROLLER SYSTEM, SEE MANUFACTURER'S DRAWINGS, REFER TO ARCHITECTURAL DRAWINGS FOR LOCATION	#### ####		10		
06	3	EXHAUST FANS	AMERICAN COOLAIR, AL30H, 615 RPM, 1 SPEED, 115V, 5.4 AMPS, 1/3HP POWER SUPPLY REQUIRED.	#### ####		104	7 / GH-7.0	67 7/8"
07	3	EXHAUST FANS	AMERICAN COOLAIR, AL30H, 615 RPM, 2 SPEED, 115V, 6.5 AMPS, 1/3 HP POWER SUPPLY REQUIRED.	#### ####		104	7 / GH-7.0	67 7/8"
08	2	EXHAUST FANS	AMERICAN COOLAIR, AL30K, 615 RPM, 2 SPEED, 115V, 3/4HP POWER SUPPLY REQUIRED.	#### ####		104	7 / GH-7.0	67 7/8"
09	2	EXHAUST FANS	AMERICAN COOLAIR, AL30K, 615 RPM, 1 SPEED, 1 PHASE, 3/4HP POWER SUPPLY REQUIRED.	#### ####		104	7 / GH-7.0	67 7/8"
10	12	HAF FANS	SCHAEFER 12" HAF FANS 120 VAC, 1 PHASE, 1.3 AMPS, POWER SUPPLY REQUIRED.	#### ####		18	9 / GH-9.1	126 5/8"
11	9	INLET SHUTTER	AMERICAN COOLAIR, LRW-6036E, 115 VAC, 1 PHASE, 0.15 AMPS, POWER SUPPLY REQUIRED.	#### ####		22	7 / GH-6.0	52 3/4"
12	8	INLET SHUTTER	AMERICAN COOLAIR, LRW45E, 115 VAC, 1 PHASE, 0.28 AMPS, POWER SUPPLY REQUIRED.	#### ####		22	8 / GH-7.0	52 3/4"
13	3	COOLING PAD SYSTEM	AMERICAN COOLAIR, 36" X 16' NOM. SELF CONTAINED COOLING PAD SYSTEM, 6" PADS, PVC, POWER & WATER SUPPLY REQUIRED.	#### ####		228	7 / GH-6.0	51 9/16"
14	2	COOLING PAD SYSTEM	AMERICAN COOLAIR, 48" X 16' NOM. SELF CONTAINED COOLING PAD SYSTEM, 6" PADS, PVC, POWER & WATER SUPPLY REQUIRED.	#### ####		240	8 / GH-7.0	51 9/16"
15	2	NEXUS EDDG VENT SYSTEM	NEXUS 48" X 23' NOM. EDDG VENT SYSTEM W/ 8mm TWIN-WALL POLYCARBONATE VENT COVERINGS, POWER SUPPLY REQUIRED FOR MOTOR.	#### ####		144	GH-11.1-11.3	76 1/2"
16	2	NEXUS EDDG VENT SYSTEM	NEXUS 48" X 31' NOM. EDDG VENT SYSTEM W/ 8mm TWIN-WALL POLYCARBONATE VENT COVERINGS, POWER SUPPLY REQUIRED FOR MOTOR.	#### ####		176	GH-11.1-11.3	76 1/2"
17	4	EDDG VENT MOTOR	LOCK EWA12.1503 MOTOR, FOR EDDG VENT, POWER SUPPLY REQUIRED.	#### ####		50	GH-11.1-11.3	78 11/16"
18	70	GROW LIGHTS	PARSOURCE PHOTOBIO"T 600W LED S4 SPECTRUM GROW LIGHTS - SEE MANUFACTURE'S SPECIFICATIONS AND/OR DRAWINGS.	#### ####		29	10 / GH-9.1	124"

APPROVALS

IDENTIFICATION STAMP
DIV. OF THE STATE ARCHITECT
APP: 01-119409 INC:
REVIEWED FOR
SS ☑ FLS ☑ ACS ☑
DATE: 03/14/2022

NOLL & TAM ARCHITECTS
729 Heinz Avenue
Berkeley, CA 94710
tel 510.542.2200
fax 510.542.2201

SEAL

NEXUS
10983 LEROY DRIVE
NORTHGLENN, COLORADO 80233
303/457-9199 FAX 303/457-2801

STRUCTURAL ONLY
REGISTERED PROFESSIONAL ENGINEER
PRABEN VIVAK KHANNA
5400
Exp. 12/31/2022
STRUCTURAL
STATE OF CALIFORNIA
2/28/2022

PROJECT TITLE

Peralta Community College District
MERRITT COLLEGE NEW LANDSCAPE HORTICULTURE COMPLEX

12500 Campus Drive
Oakland, CA 94616

BID SET

ISSUE DATE 03/03/2022
N&T JOB NUMBER 22003

REVISIONS

#	DATE	DESCRIPTION

DRAWN BY J.Broderick | CHECKED BY T. Moore

SHEET TITLE
GREENHOUSE TYPE 2 GABLE , SIDEWALL & SECTION ELEVATIONS (EQUIPMENT & GLAZING)

SHEET NUMBER
GH-7.0

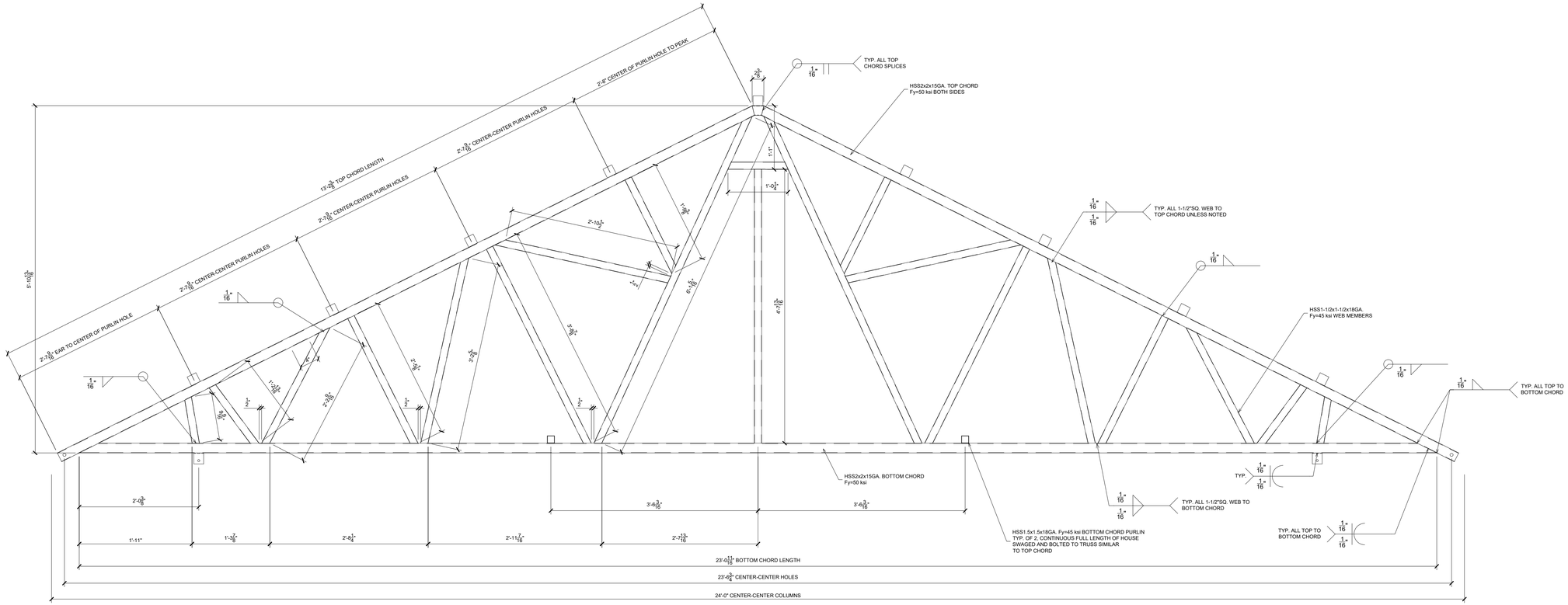

1 TRUSS DETAIL — 1" = 1'-0"

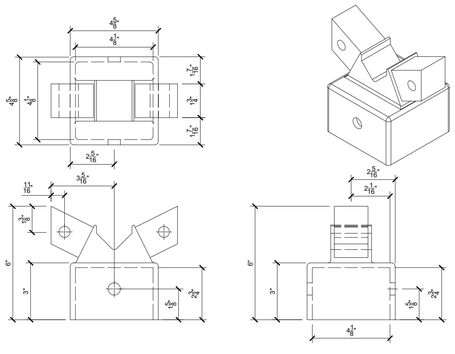

2 COLUMN CAP DETAIL — SCALE: 3" = 1'-0"

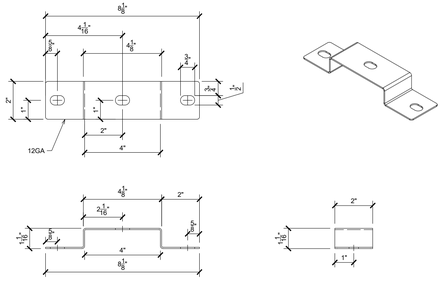

4 B-14 KNEE BRACE BRACKET DETAIL — SCALE: 3" = 1'-0"

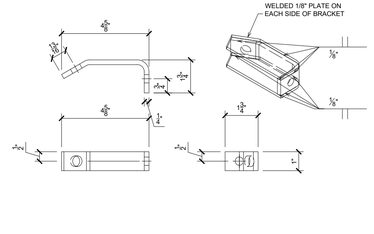

7 BENT 'X' ROD BRACKET DETAIL — SCALE: 3" = 1'-0"

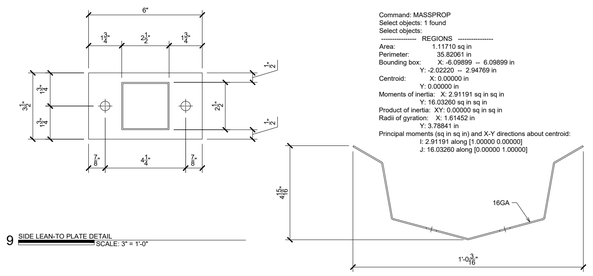

9 SIDE LEAN-TO PLATE DETAIL — SCALE: 3" = 1'-0"

5 GUTTER SECTION DETAIL — SCALE: 3" = 1'-0"

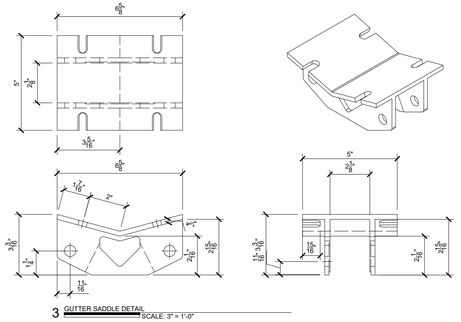

3 GUTTER SADDLE DETAIL — SCALE: 3" = 1'-0"

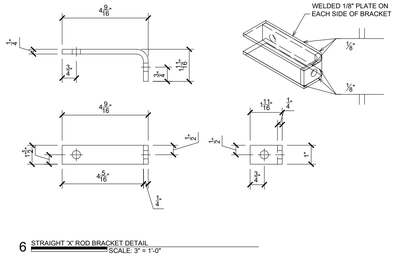

6 STRAIGHT 'X' ROD BRACKET DETAIL — SCALE: 3" = 1'-0"

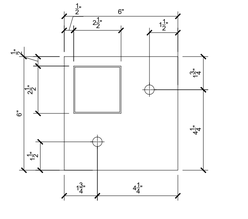

8 CORNER LEAN-TO PLATE DETAIL — SCALE: 3" = 1'-0"

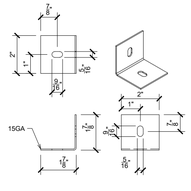

10 L-1 LUG — SCALE: 3" = 1'-0"

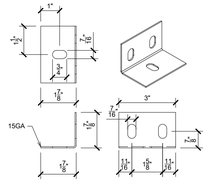

11 L-2 LUG — SCALE: 3" = 1'-0"

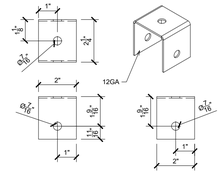

12 C-23S CLIP — SCALE: 3" = 1'-0"

APPROVALS

IDENTIFICATION STAMP
DIV. OF THE STATE ARCHITECT
APP: 01-119409 INC:
REVIEWED FOR
SS ☑ FLS ☑ ACS ☑
DATE: 03/14/2022

NOLL & TAM ARCHITECTS
729 Heinz Avenue
Berkeley, CA 94710
tel 510.542.2200
fax 510.542.2201

SEAL

NEXUS
10983 LEROY DRIVE
NORTHGLENN, COLORADO 80233
303/457-9199 FAX 303/457-2801

STRUCTURAL ONLY
REGISTERED PROFESSIONAL ENGINEER
ROBERT VIVAK NANGIA
5400
Exp: 08/31/2022
STRUCTURAL
STATE OF CALIFORNIA
3/28/2022

PROJECT TITLE

Peralta Community College District
MERRITT COLLEGE NEW LANDSCAPE HORTICULTURE COMPLEX

12500 Campus Drive
Oakland, CA 94616

BID SET

ISSUE DATE	**03/03/2022**
N&T JOB NUMBER	**22003**

REVISIONS

#	DATE	DESCRIPTION

DRAWN BY **J.Broderick** | CHECKED BY **T. Moore**

SHEET TITLE

GREENHOUSE TYPICAL WELDED TRUSS DETAIL

SHEET NUMBER

GH-8.0

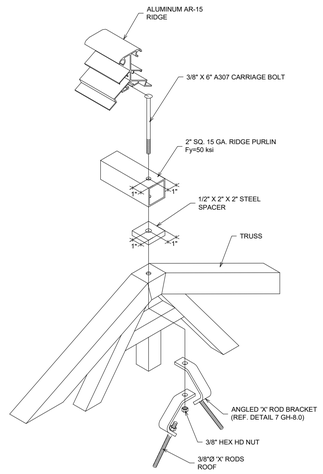

1 'X' ROD ATTACHMENT @ RIDGE
SCALE: 1-1/2" = 1'-0"

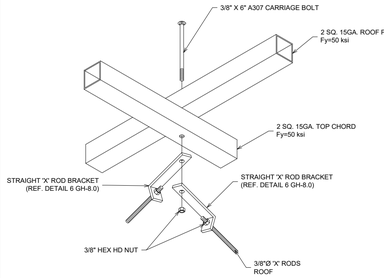

2 'X' ROD ATTACHMENT @ PURLINS
SCALE: 1-1/2" = 1'-0"

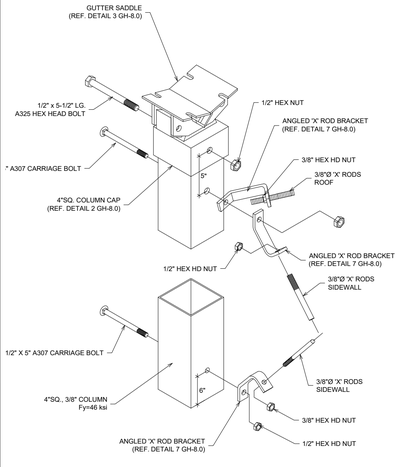

3 'X' ROD ATTACHMENT @ COLUMN
SCALE: 1-1/2" = 1'-0"

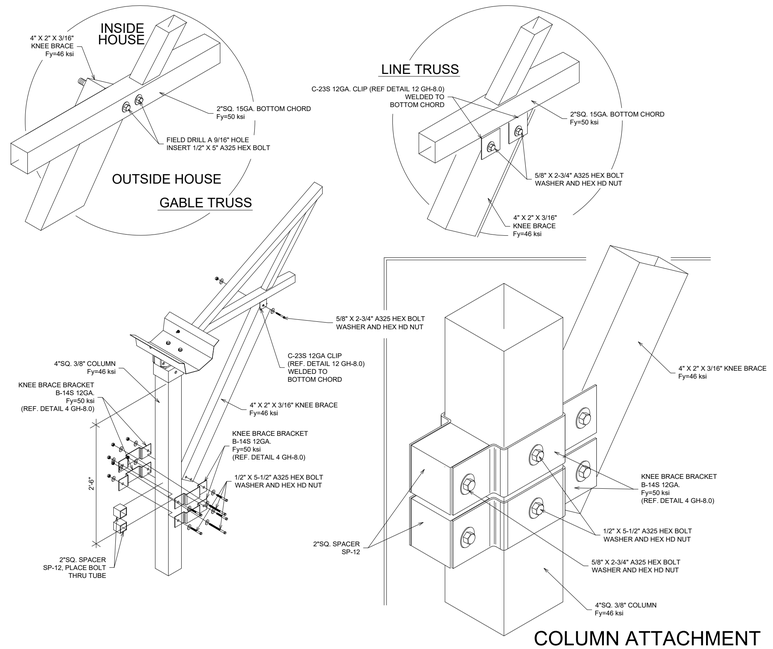

COLUMN ATTACHMENT

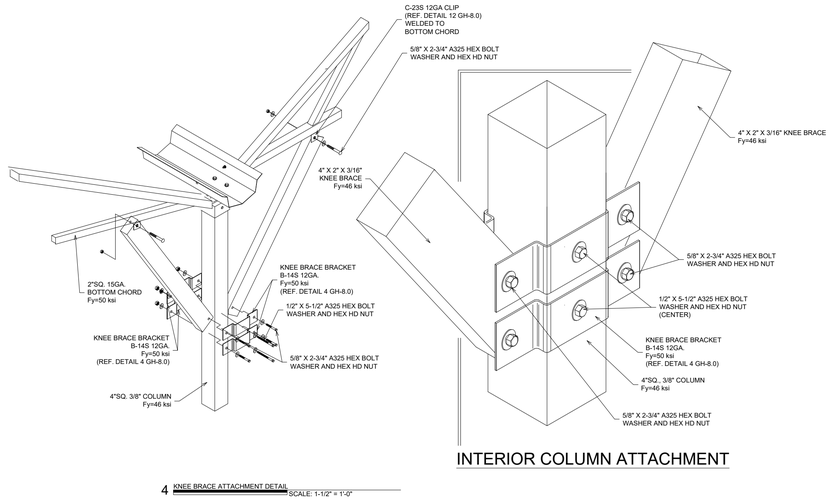

INTERIOR COLUMN ATTACHMENT

4 KNEE BRACE ATTACHMENT DETAIL
SCALE: 1-1/2" = 1'-0"

NOTE:
1. SET DOOR POSTS, IF APPLICABLE, BEFORE FRAMING.
2. SEE PARTS LIST FOR LENGTH OF WALL MEMBERS AND THEIR LOCATIONS. (SIDE OR GABLE)
3. LAY OUT MEMBERS AROUND PERIMETER.
4. MARK POSITION OF WALL MEMBERS. MAKE SURE TO MOUNT THE MEMBERS LEVEL.
5. A WALL MEMBER CONNECTOR MAY BE USED TO FINISH OUT A RUN AT A CORNER COLUMN.
6. IF CAISSONS ARE TO BE USED, THEN THE WALL MEMBER SHOULD BE PLACE SO THE TOP FACE IS 6" ABOVE GRADE.

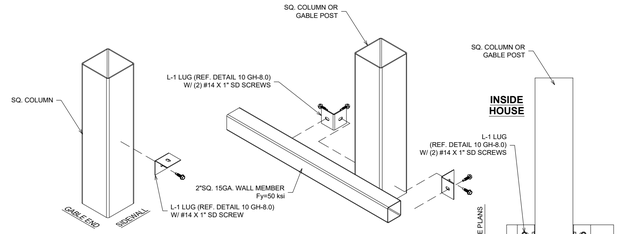

STEP #1
SET LOWER L-1 LUG AT THE HEIGHT SPECIFIED ON THE PLANS, TAKING INTO ACCOUNT THE WALL MEMBER RESTS ON TOP OF THE LUG. NOTE: THE LOWER WALL MEMBER MAY BE MOUNTED NEAR THE FLOOR LEVEL. IN THIS CASE, MOUNT THE LUGS (ON THEIR SIDES) ONTO THE COLUMN OR POST. THEN, MOUNT THE WALL MEMBER USING #14 X 1" SD SCREWS. SEE PLANS FOR MEMBER HEIGHTS.

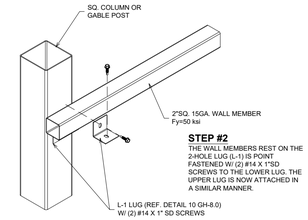

STEP #2
THE WALL MEMBERS REST ON THE 2-HOLE LUG (L-1) IS POINT FASTENED W/ (2) #14 X 1"SD SCREWS TO THE LOWER LUG. THE UPPER LUG IS NOW ATTACHED IN A SIMILAR MANNER.

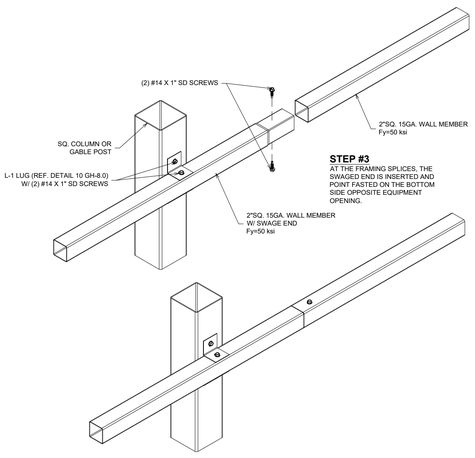

STEP #3
AT THE FRAMING SPLICES, THE SWAGED END IS INSERTED AND POINT FASTED ON THE BOTTOM SIDE OPPOSITE EQUIPMENT OPENING.

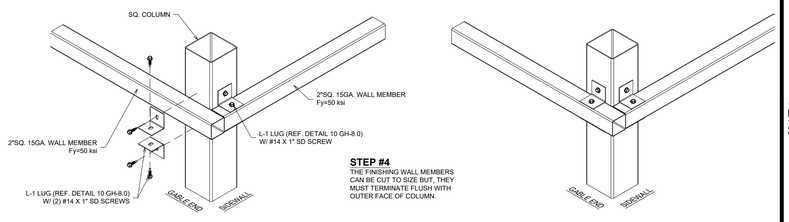

STEP #4
THE FINISHING WALL MEMBERS CAN BE CUT TO SIZE BUT, THEY MUST TERMINATE FLUSH WITH OUTER FACE OF COLUMN.

5 WALL FRAMING DETAILS
SCALE: 1-1/2" = 1'-0"

APPROVALS

IDENTIFICATION STAMP
DIV. OF THE STATE ARCHITECT
APP: 01-119409 INC:
REVIEWED FOR
SS ☑ FLS ☑ ACS ☑
DATE: 03/14/2022

NOLL & TAM ARCHITECTS
729 Heinz Avenue
Berkeley, CA 94710
tel 510.542.2200
fax 510.542.2201

SEAL

NEXUS
10983 LEROY DRIVE
NORTHGLENN, COLORADO 80233
303/457-9199 FAX 303/457-2801

STRUCTURAL ONLY
REGISTERED PROFESSIONAL ENGINEER
PRABEET VIVAK NANGIA
5400
Exp. 09/30/2022
STRUCTURAL
STATE OF CALIFORNIA
2/28/2022

PROJECT TITLE

Peralta Community College District
MERRITT COLLEGE NEW LANDSCAPE HORTICULTURE COMPLEX

12500 Campus Drive
Oakland, CA 94616

BID SET

ISSUE DATE	03/03/2022
N&T JOB NUMBER	22003

REVISIONS

#	DATE	DESCRIPTION

DRAWN BY J.Broderick | CHECKED BY T. Moore

SHEET TITLE
GREENHOUSE TYP. X-ROD CONNECTION & KNEE BRACE DETAIL

SHEET NUMBER
GH-9.0

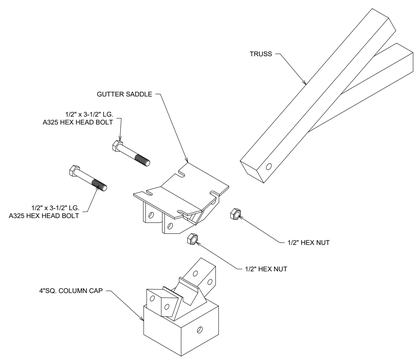

1 CAP TO TRUSS ASSEMBLY — SCALE: 1-1/2" = 1'-0"

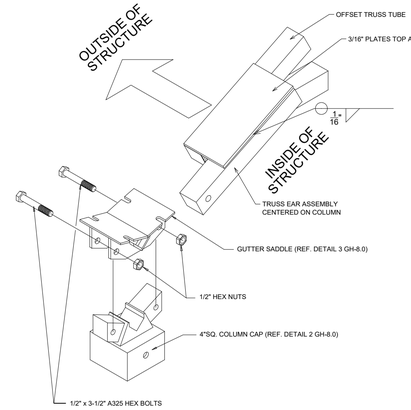

4 GABLE OFFSET TRUSS — SCALE: 1-1/2" = 1'-0"

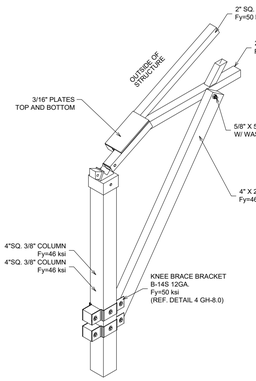

5 GABLE OFFSET TRUSS AND KNEE BRACE ASSEMBLY — SCALE: 1-1/2" = 1'-0"

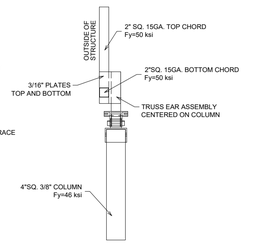

6 GABLE OFFSET TRUSS SIDE VIEW — SCALE: 1-1/2" = 1'-0"

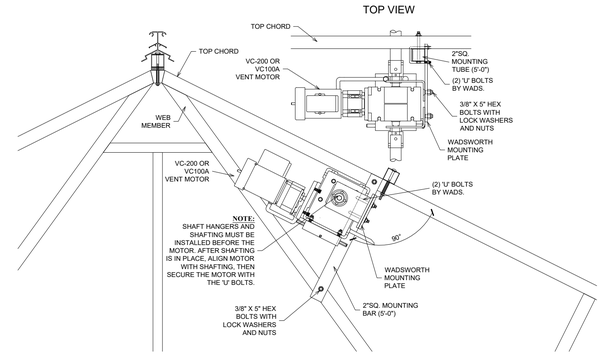

8 MOTOR MOUNT — 1" = 1'-0"

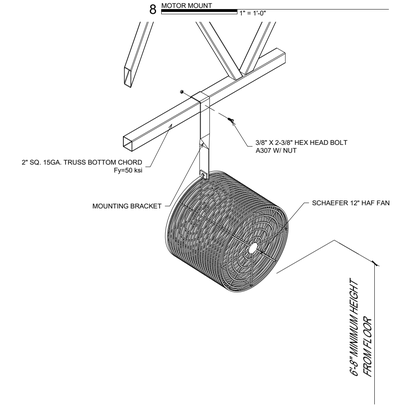

9 HAF FAN INSTALL — 1" = 1'-0"

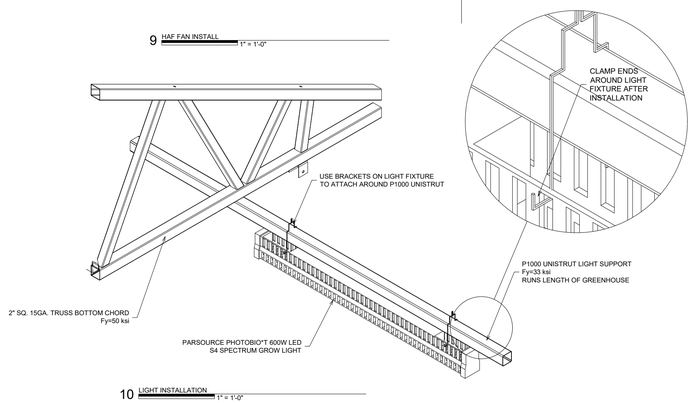

10 LIGHT INSTALLATION — 1" = 1'-0"

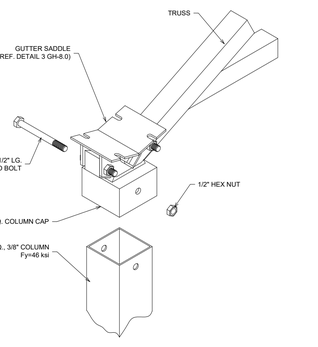

2 TRUSS TO CAP ATTACHMENT — SCALE: 1-1/2" = 1'-0"

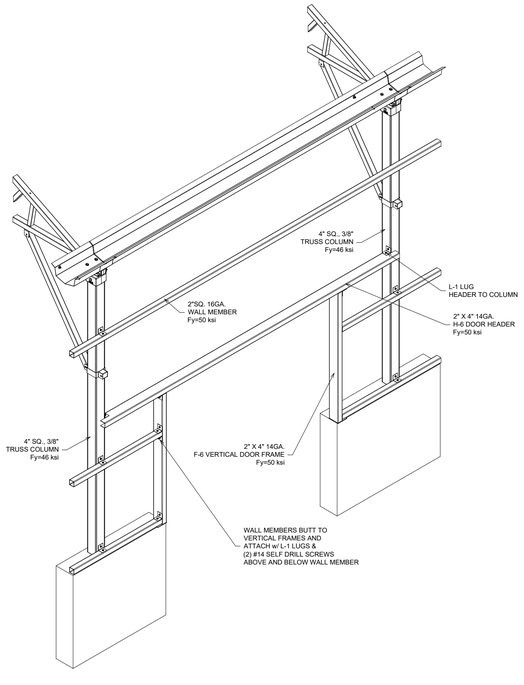

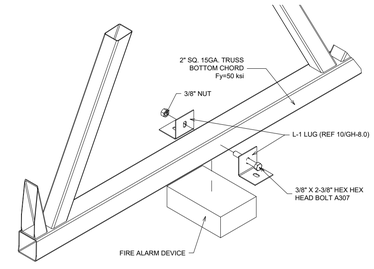

11 FIRE ALARM DEVICE INSTALL — 2" = 1'-0"

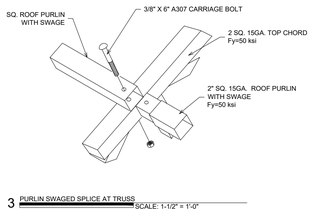

3 PURLIN SWAGED SPLICE AT TRUSS — SCALE: 1-1/2" = 1'-0"

SECTION THROUGH DOOR HEADER

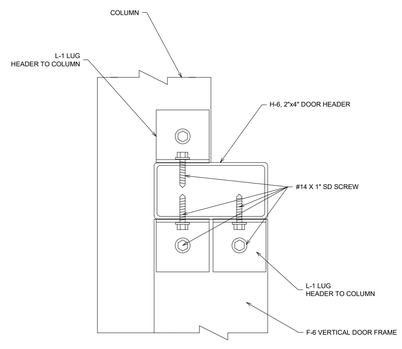

7 SIDEWALL DOOR FRAME — SCALE: 1/2" = 1'-0"

APPROVALS

IDENTIFICATION STAMP
DIV. OF THE STATE ARCHITECT
APP: 01-119409 INC:
REVIEWED FOR
SS ☑ FLS ☑ ACS ☑
DATE: 03/14/2022

NOLL & TAM ARCHITECTS
729 Heinz Avenue
Berkeley, CA 94710
tel 510.542.2200
fax 510.542.2201

SEAL

NEXUS
10983 LEROY DRIVE
NORTHGLENN, COLORADO 80233
303/457-9199 FAX 303/457-2801

STRUCTURAL ONLY
REGISTERED PROFESSIONAL ENGINEER
ROBERT VIVAK NANGALAMA
5400
Exp. 08/31/2022
STRUCTURAL
STATE OF CALIFORNIA
2/28/2022

PROJECT TITLE

Peralta Community College District
MERRITT COLLEGE NEW LANDSCAPE HORTICULTURE COMPLEX

12500 Campus Drive
Oakland, CA 94616

BID SET

ISSUE DATE	03/03/2022
N&T JOB NUMBER	22003

REVISIONS

#	DATE	DESCRIPTION

DRAWN BY **J.Broderick** | CHECKED BY **T. Moore**

SHEET TITLE

GREENHOUSE TYP. CAP TO TRUSS ASSEMBLY, SIDEWALL DOOR FRAME, MISC. EQUIPMENT DETAILS

SHEET NUMBER

GH-9.1

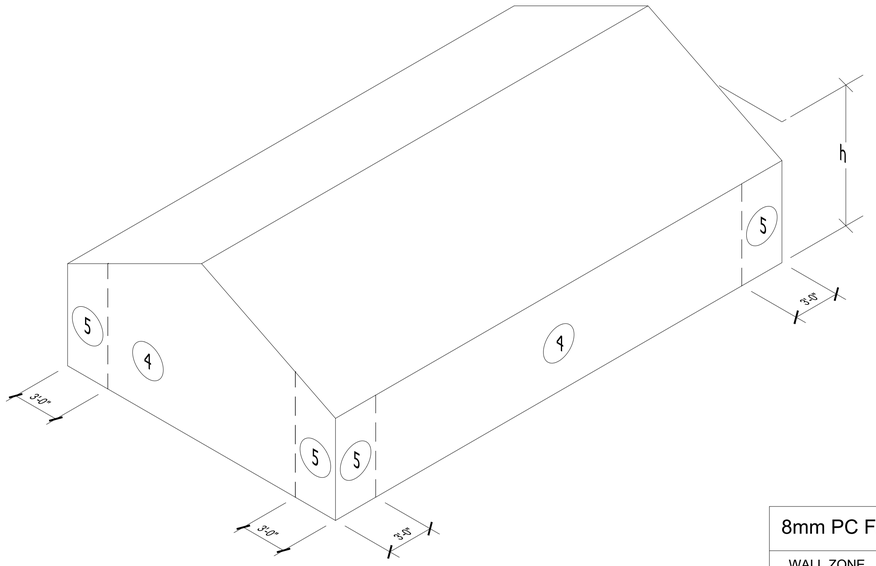

8mm PC Fastener Spacing	
WALL ZONE	SPACING
5	6" o.c.
4	12" o.c.
3r	4" o.c.
2n	6" o.c.
2r	6" o.c.
3e	6" o.c.
1	12" o.c.
2e	12" o.c.

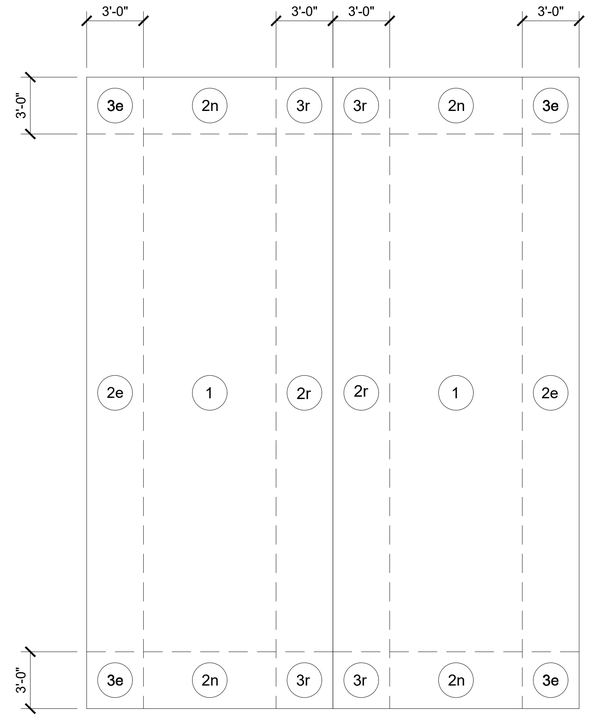

APPROVALS

IDENTIFICATION STAMP
DIV. OF THE STATE ARCHITECT
APP: 01-119409 INC:
REVIEWED FOR
SS ☑ FLS ☑ ACS ☑
DATE: 03/14/2022

NOLL & TAM ARCHITECTS
729 Heinz Avenue
Berkeley, CA 94710
tel 510.542.2200
fax 510.542.2201

SEAL

NEXUS
10983 LEROY DRIVE
NORTHGLENN, COLORADO 80233
303/457-9199 FAX 303/457-2801

STRUCTURAL ONLY
REGISTERED PROFESSIONAL ENGINEER
ROBERT VIVAK NANGIA
5400
Exp. 08.31.2022
STRUCTURAL
STATE OF CALIFORNIA
2/28/2022

PROJECT TITLE

Peralta Community College District

MERRITT COLLEGE NEW LANDSCAPE HORTICULTURE COMPLEX

12500 Campus Drive
Oakland, CA 94616

BID SET

ISSUE DATE	03/03/2022
N&T JOB NUMBER	22003

REVISIONS

#	DATE	DESCRIPTION

DRAWN BY **J.Broderick** | CHECKED BY **T. Moore**

SHEET TITLE

GREENHOUSE TYP. 8mm POLYCARBONATE COVERING FASTENER SPACING DETAIL

SHEET NUMBER

GH-9.2

ROOF AND RIDGE VENT INSTALLATION - 8MM POLYCARBONATE COVERING: **SHEET 1 OF 5**

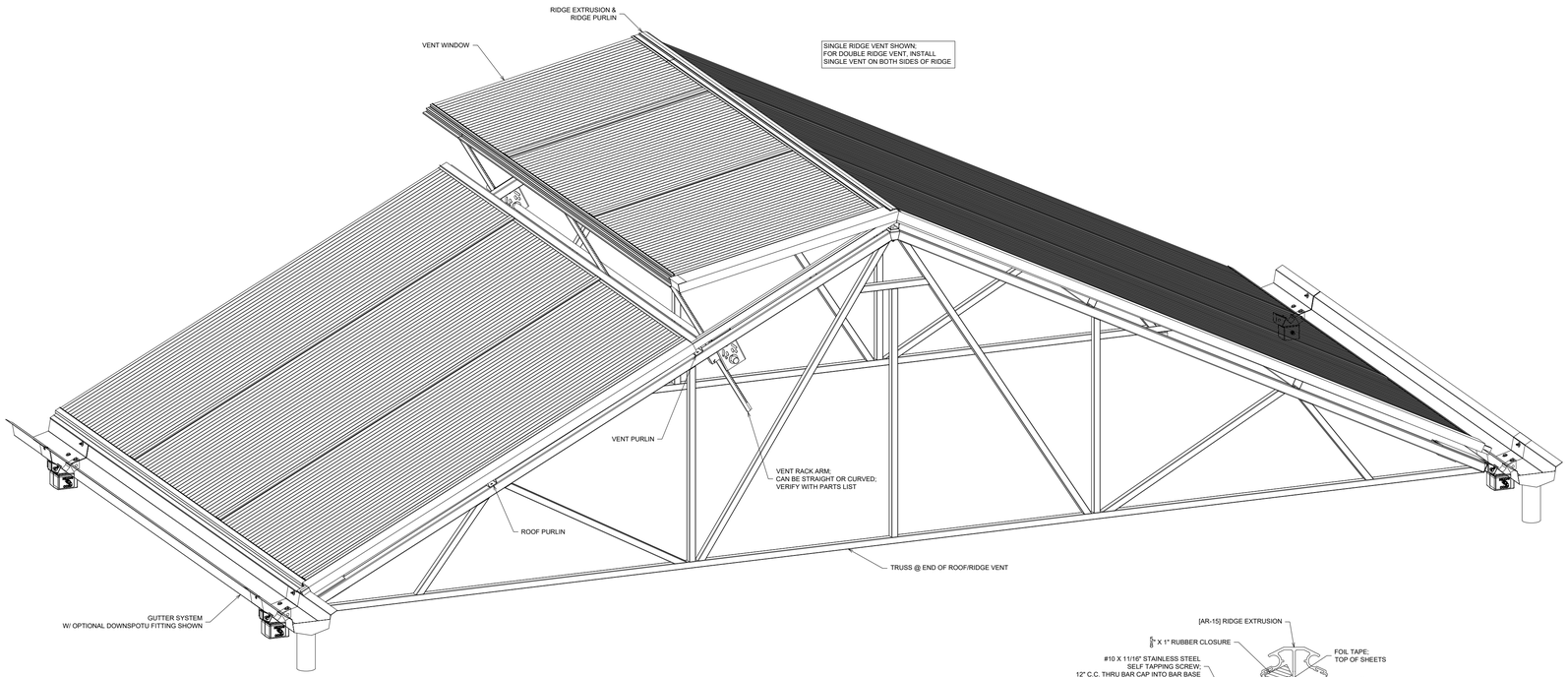

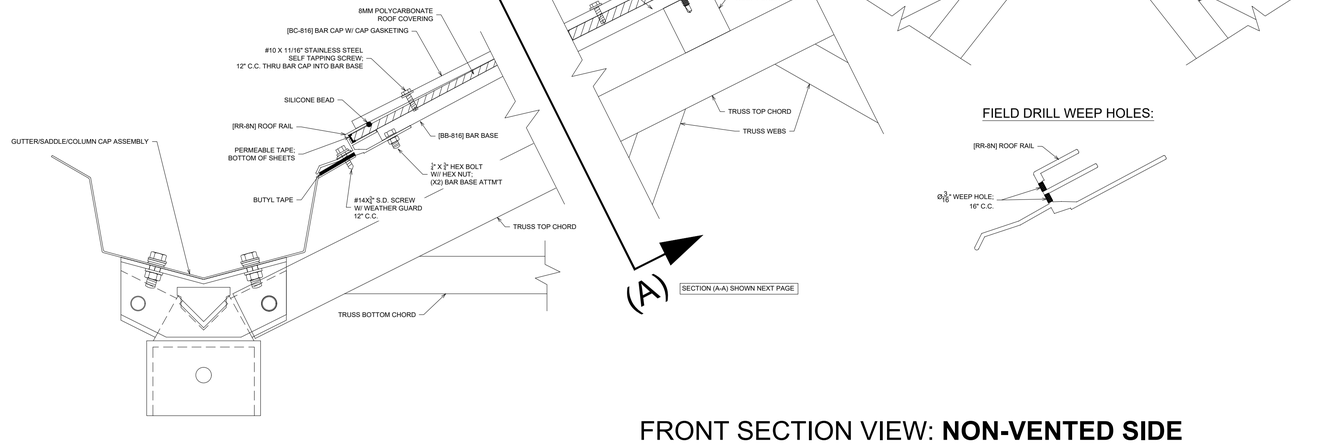

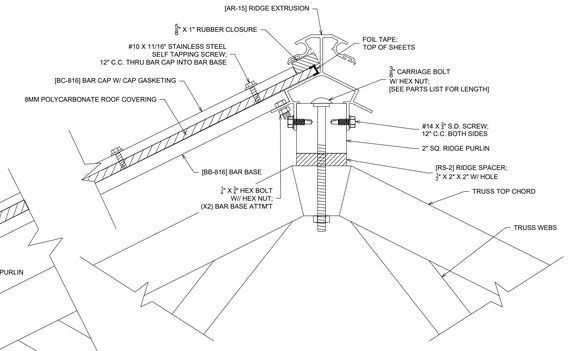

FIELD DRILL WEEP HOLES:

FRONT SECTION VIEW: **NON-VENTED SIDE**

APPROVALS

IDENTIFICATION STAMP
DIV. OF THE STATE ARCHITECT
APP: 01-119409 INC:
REVIEWED FOR
SS ☑ FLS ☑ ACS ☑
DATE: 03/14/2022

NOLL & TAM ARCHITECTS
729 Heinz Avenue
Berkeley, CA 94710
tel 510.542.2200
fax 510.542.2201

SEAL

NEXUS
10983 LEROY DRIVE
NORTHGLENN, COLORADO 80233
303/457-9199 FAX 303/457-2801

STRUCTURAL ONLY
REGISTERED PROFESSIONAL ENGINEER
ROBERT VIVAN NATIGA
5400
Exp. 06/30/2022
STRUCTURAL
STATE OF CALIFORNIA
2/28/2022

PROJECT TITLE

Peralta Community College District
MERRITT COLLEGE NEW LANDSCAPE HORTICULTURE COMPLEX

12500 Campus Drive
Oakland, CA 94616

BID SET

ISSUE DATE	**03/03/2022**
N&T JOB NUMBER	**22003**

REVISIONS

#	DATE	DESCRIPTION

DRAWN BY **J.Broderick** | CHECKED BY **T. Moore**

SHEET TITLE

GREENHOUSE 8MM POLYCARBONATE ROOF & ROOF VENT INSTALL DETAILS

SHEET NUMBER

GH-10.1

ROOF AND RIDGE VENT INSTALLATION - 8MM POLYCARBONATE COVERING: **SHEET 2 OF 5**

INSECT SCREENS: CRITICAL BUILD NOTES
- LOCATE THE VENT SCREEN & RACK ARM LAYOUT. THIS LAYOUT IS JOB SPECIFIC & WILL SHOW CRICITICAL LOCATIONS FOR VENT RACK ARMS, VENT SPLICE STRUTS AND SCREEN PANELS.

[TSC-117] TOP SCREEN CLIP
- LENGTH: 0'-2"

[TSL-117] TOP SCREEN LEDGER
- LENGTH: 10'-0"

[BL-78] BOTTOM SCREEN CLIP
- USE [BL-78] LUG
-LENGTH: 0'-1 1/2"
- 2 HOLES

[BSL-3] BOTTOM SCREEN LEDGER
- LENGTH: 10'-0"

INSECT SCREENS:
-REMOVABLE PANELS, IN VENT OPENING

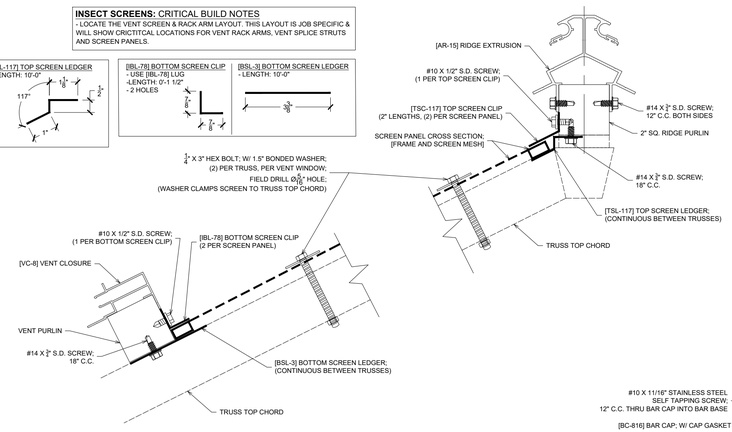

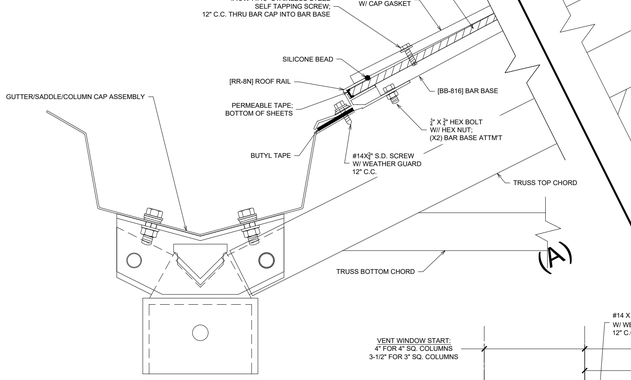

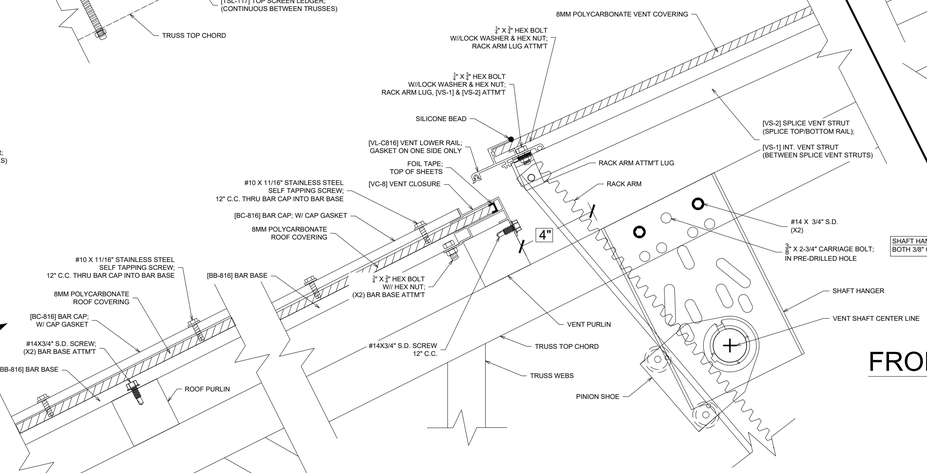

SHAFT HANGER ATTMT:
BOTH 3/8" CARRIAGE BOLT AND # 14 S.D. SCREWS MUST BE USED

FRONT SECTION VIEW: **VENT SIDE**

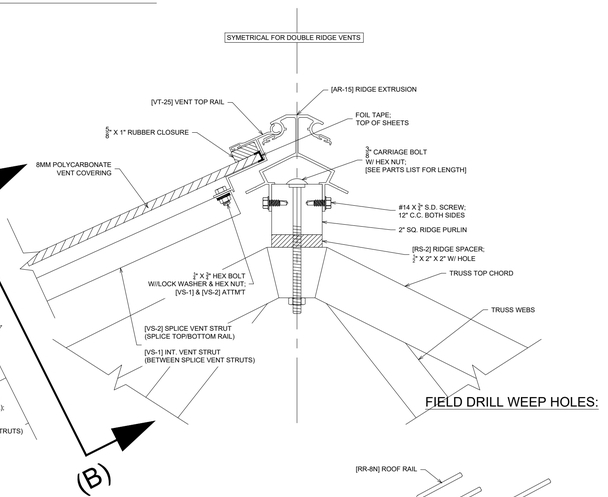

FIELD DRILL WEEP HOLES:

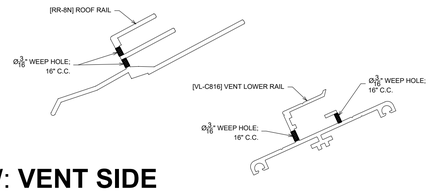

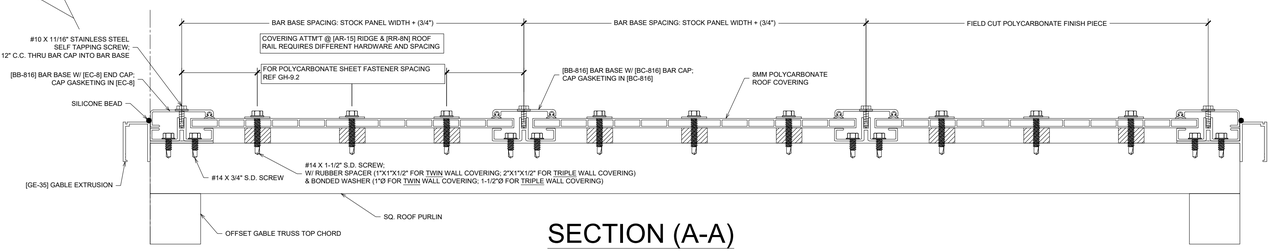

SECTION (A-A)

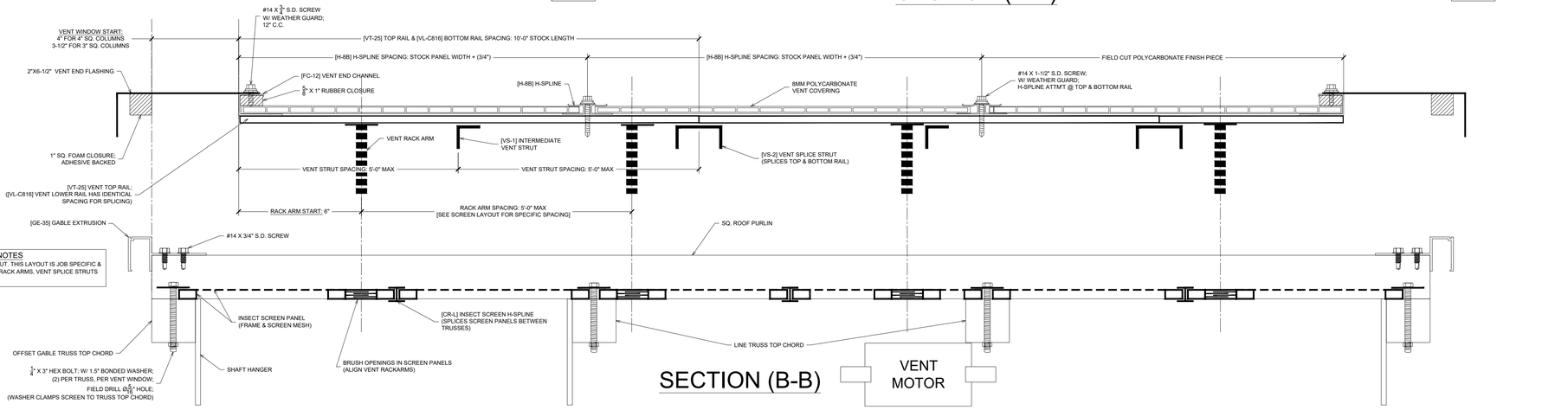

INSECT SCREENS: CRITICAL BUILD NOTES
- LOCATE THE VENT SCREEN & RACK ARM LAYOUT. THIS LAYOUT IS JOB SPECIFIC & WILL SHOW CRICITICAL LOCATIONS FOR VENT RACK ARMS, VENT SPLICE STRUTS AND SCREEN PANELS.

SECTION (B-B)

APPROVALS

IDENTIFICATION STAMP
DIV. OF THE STATE ARCHITECT
APP: 01-119409 INC:
REVIEWED FOR
SS ☑ FLS ☑ ACS ☑
DATE: 03/14/2022

NOLL & TAM ARCHITECTS
729 Heinz Avenue
Berkeley, CA 94710
tel 510.542.2200
fax 510.542.2201

SEAL

NEXUS
10983 LEROY DRIVE
NORTHGLENN, COLORADO 80233
303/457-9199 FAX 303/457-2801

STRUCTURAL ONLY
REGISTERED PROFESSIONAL ENGINEER
ROBERT VIVAK NANGLA
5400
Exp. 12/31/2022
STRUCTURAL
STATE OF CALIFORNIA
2/28/2022

PROJECT TITLE

Peralta Community College District
MERRITT COLLEGE NEW LANDSCAPE HORTICULTURE COMPLEX

12500 Campus Drive
Oakland, CA 94616

BID SET

ISSUE DATE	**03/03/2022**
N&T JOB NUMBER	**22003**

REVISIONS

#	DATE	DESCRIPTION

DRAWN BY **J.Broderick** | CHECKED BY **T. Moore**

SHEET TITLE

GREENHOUSE 8MM POLYCARBONATE ROOF & ROOF VENT INSTALL DETAILS

SHEET NUMBER

GH-10.2

ROOF AND RIDGE VENT INSTALLATION - 8MM POLYCARBONATE COVERING: **SHEET 3 OF 5**

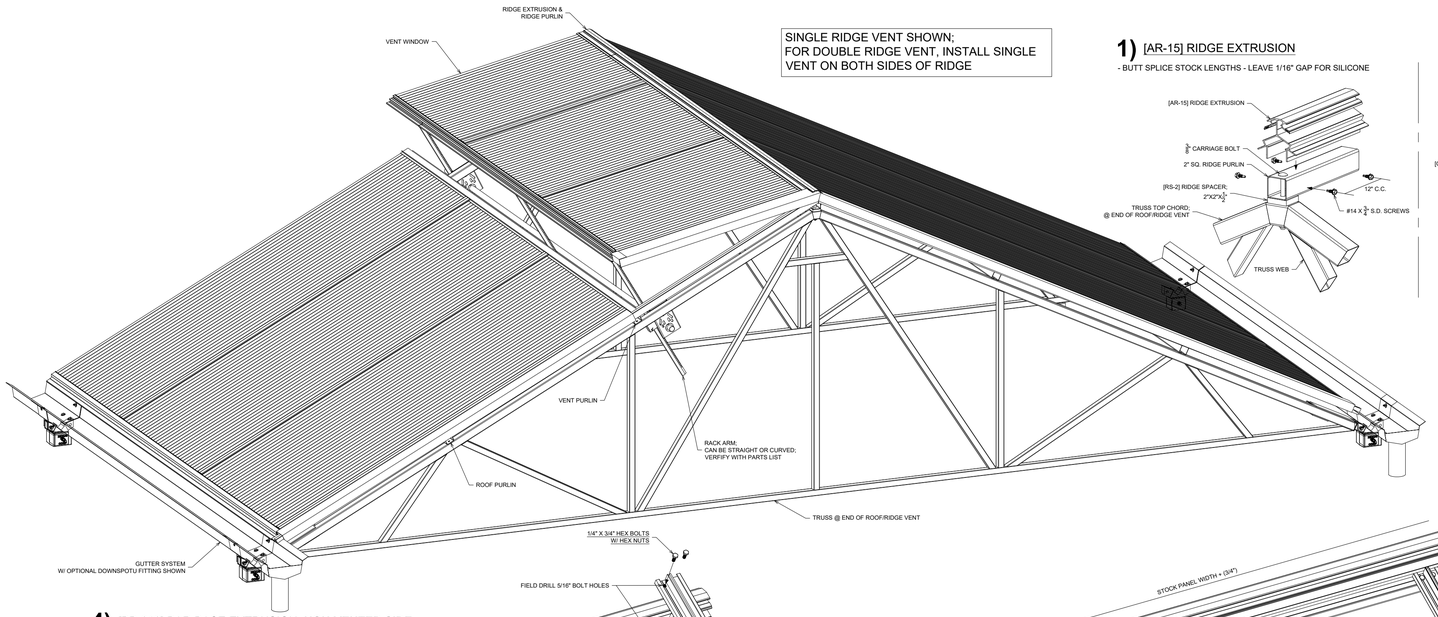

SINGLE RIDGE VENT SHOWN;
FOR DOUBLE RIDGE VENT, INSTALL SINGLE VENT ON BOTH SIDES OF RIDGE

1) [AR-15] RIDGE EXTRUSION

- BUTT SPLICE STOCK LENGTHS - LEAVE 1/16" GAP FOR SILICONE

2) [GE-35] GABLE EXTRUSION

- [GE-35] IS CONTINUOUS FROM RIDGE TO GUTTER

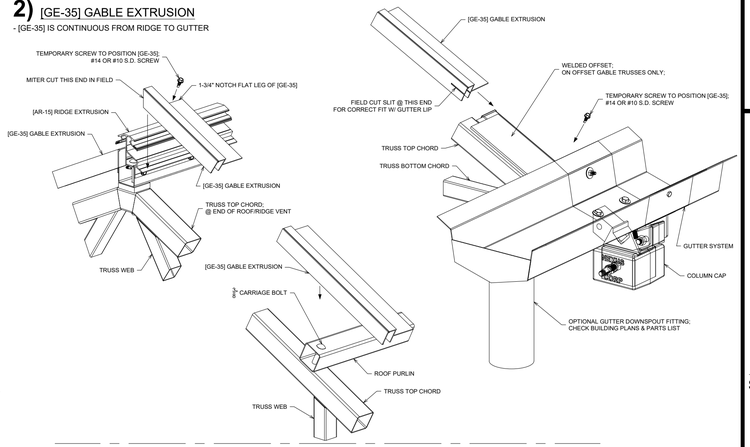

3) [RR-8N] ROOF RAIL EXTRUSION

- BUTT SPLICE STOCK LENGTHS - LEAVE 1/16" GAP FOR SILICONE

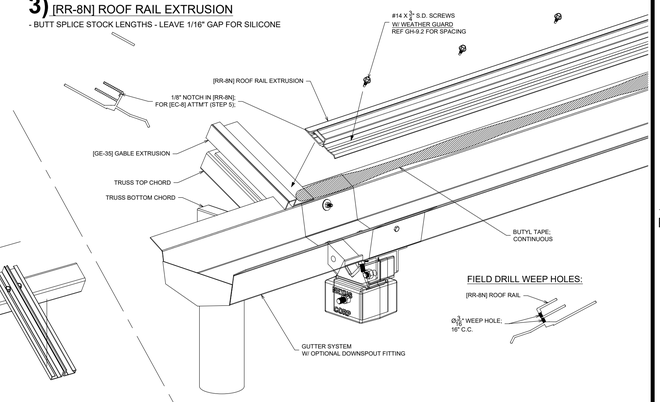

4) [BB-816] BAR BASE EXTRUSION: **NON-VENTED SIDE**

- [BB-816] BAR BASE EXTRUSIONS ARE CONTINUOUS FROM RIDGE TO GUTTER ON NON-VENTED SIDE
- FIELD DRILL Ø5/16" HOLES FOR 1/4" X 3/4" HEX BOLTS

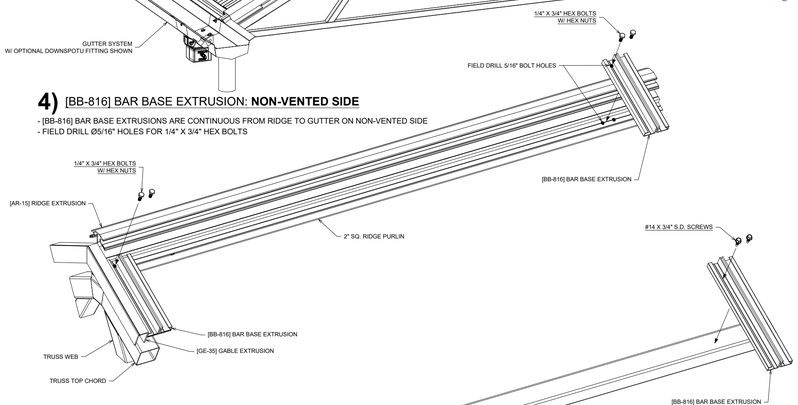

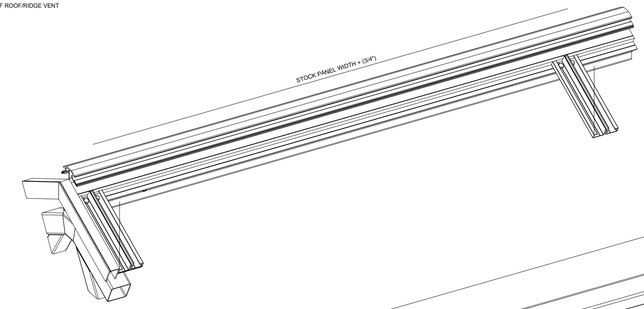

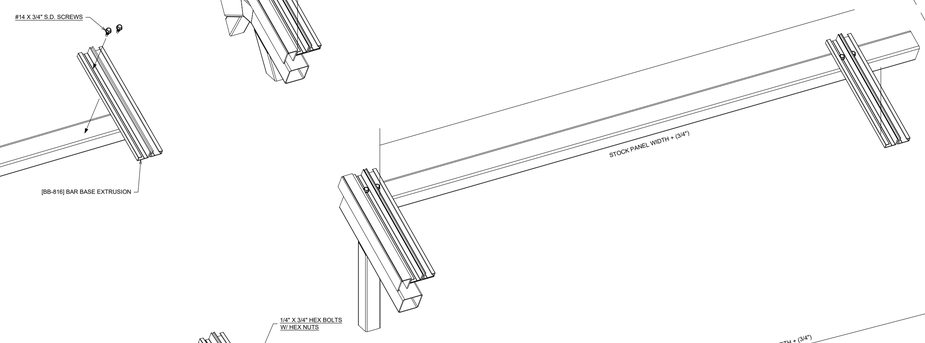

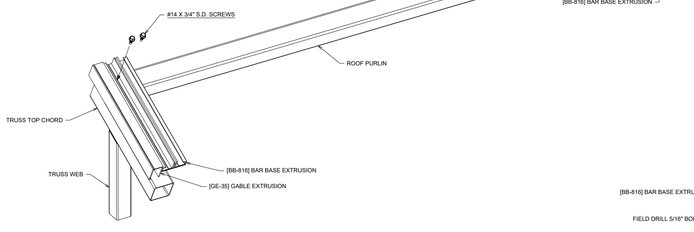

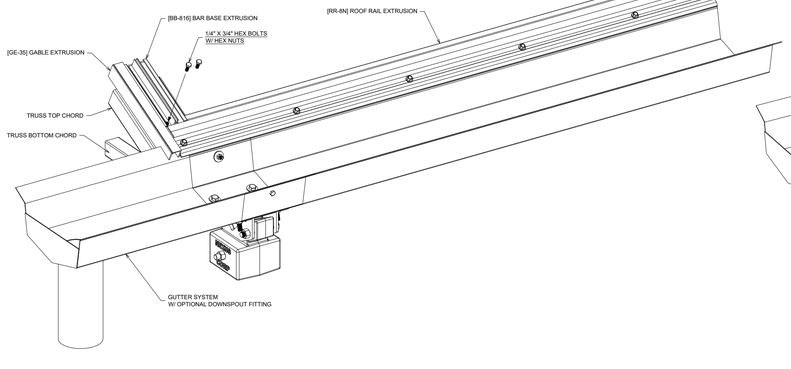

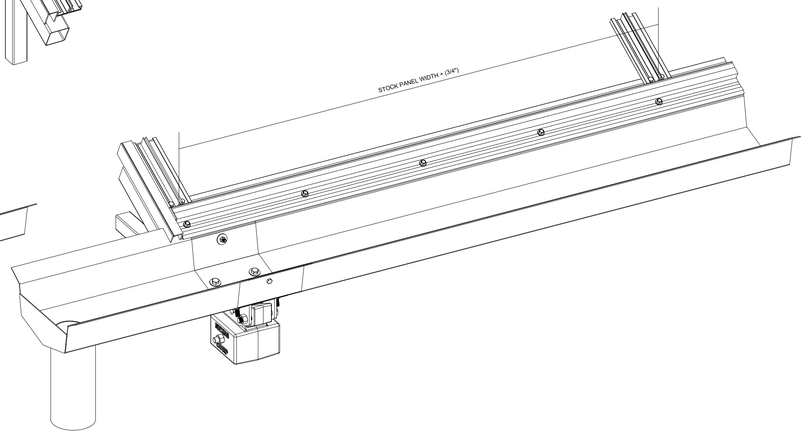

APPROVALS

IDENTIFICATION STAMP
DIV. OF THE STATE ARCHITECT
APP: 01-119409 INC:
REVIEWED FOR
SS ☑ FLS ☑ ACS ☑
DATE: 03/14/2022

NOLL & TAM ARCHITECTS
729 Heinz Avenue
Berkeley, CA 94710
tel 510.542.2200
fax 510.542.2201

SEAL

NEXUS
10983 LEROY DRIVE
NORTHGLENN, COLORADO 80233
303/457-9199 FAX 303/457-2801

STRUCTURAL ONLY
REGISTERED PROFESSIONAL ENGINEER
ROBERT VIVAK NANDRA
5400
Exp. 08/31/2022
STRUCTURAL
STATE OF CALIFORNIA
2/28/2022

PROJECT TITLE

Peralta Community College District
MERRITT COLLEGE NEW LANDSCAPE HORTICULTURE COMPLEX

12500 Campus Drive
Oakland, CA 94616

BID SET

ISSUE DATE	03/03/2022
N&T JOB NUMBER	22003

REVISIONS

#	DATE	DESCRIPTION

DRAWN BY **J.Broderick** | CHECKED BY **T. Moore**

SHEET TITLE

GREENHOUSE 8MM POLYCARBONATE ROOF & ROOF VENT INSTALL DETAILS

SHEET NUMBER

GH-10.3

ROOF AND RIDGE VENT INSTALLATION - 8MM POLYCARBONATE COVERING: **SHEET 4 OF 5**

GASKETING IN ALL [EC-8] & [BB-816] EXTRUSIONS

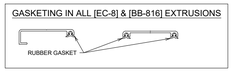

5) [EC-8] & [BC-816] END/BAR CAP EXTRUSIONS: **NON-VENTED SIDE**

- [EC-8], [BC-816], & [GCF-13] ARE CONTINUOUS FROM RIDGE TO GUTTER ON NON-VENTED SIDE
- FIELD DRILL Ø3/16" HOLES IN [EC-8] & [BC-816] FOR #10 X 11/16", STAINLESS STEEL, SELF TAPPING SCREWS
-HARDWARE THROUGH COVERING: DO NOT OVER-TIGHTEN, TO AVOID DAMAGING COVERING

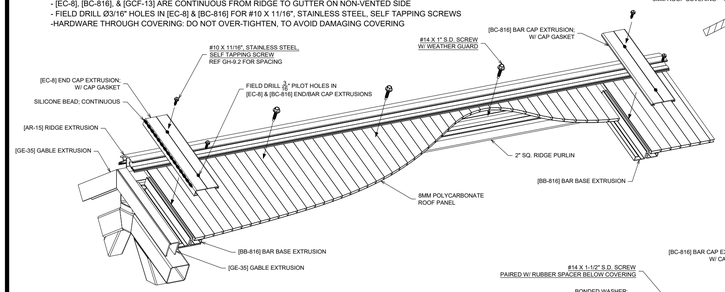

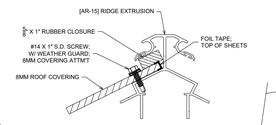

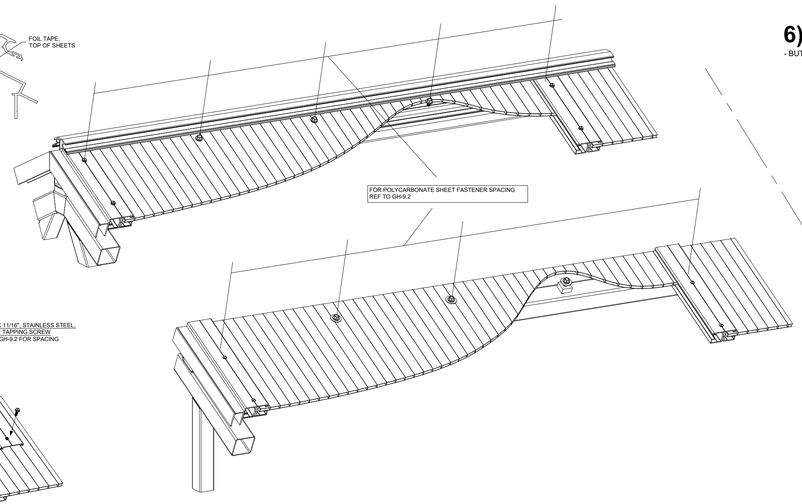

6) [VC-8] VENT CLOSURE EXTRUSION: **VENT SIDE**

- BUTT SPLICE STOCK LENGTHS - LEAVE 1/16" GAP FOR SILICONE

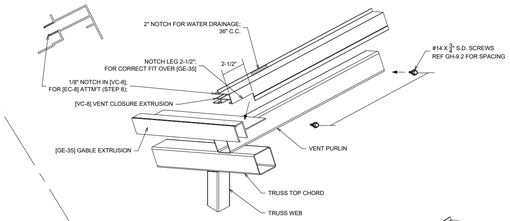

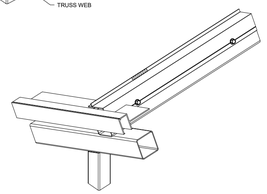

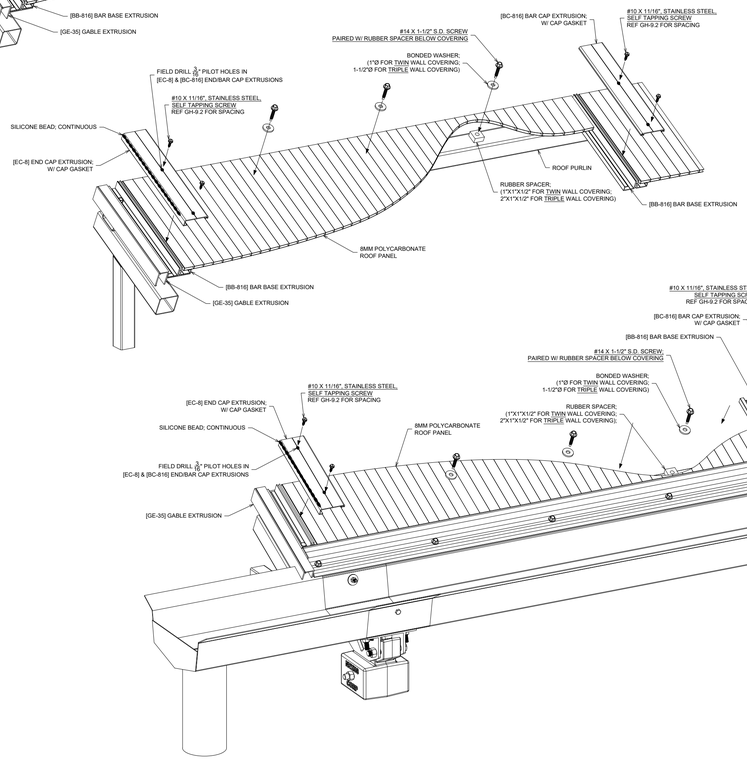

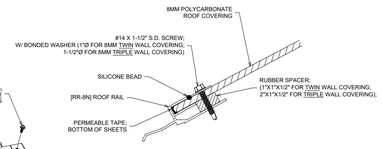

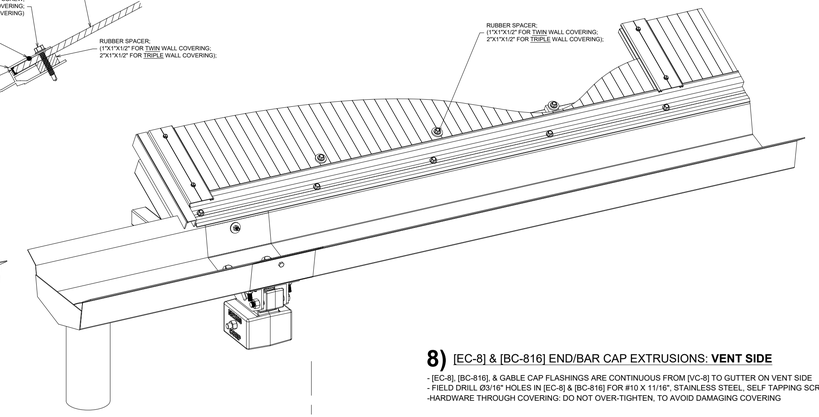

7) [BB-816] BAR BASE EXTRUSION: **VENT SIDE**

- [BB-816] BAR BASE EXTRUSIONS ARE CONTINUOUS FROM [VC-16] TO GUTTER ON VENT SIDE
- FIELD DRILL Ø5/16" HOLES FOR 1/4" X 3/4" HEX BOLTS
- ATTM'T TO GUTTER IS IDENTICAL ON NON-VENTED AND VENT SIDE

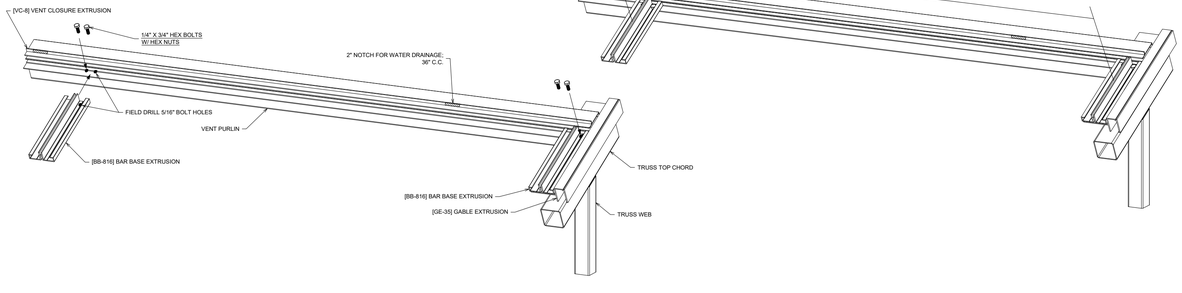

8) [EC-8] & [BC-816] END/BAR CAP EXTRUSIONS: **VENT SIDE**

- [EC-8], [BC-816], & GABLE CAP FLASHINGS ARE CONTINUOUS FROM [VC-8] TO GUTTER ON VENT SIDE
- FIELD DRILL Ø3/16" HOLES IN [EC-8] & [BC-816] FOR #10 X 11/16", STAINLESS STEEL, SELF TAPPING SCREWS
-HARDWARE THROUGH COVERING: DO NOT OVER-TIGHTEN, TO AVOID DAMAGING COVERING

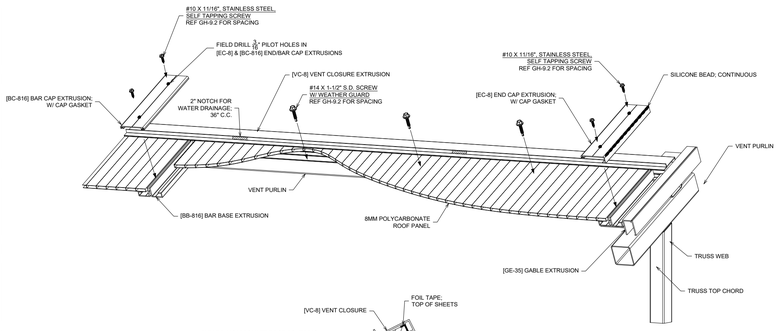

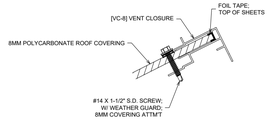

APPROVALS

IDENTIFICATION STAMP
DIV. OF THE STATE ARCHITECT
APP: 01-119409 INC:
REVIEWED FOR
SS ☑ FLS ☑ ACS ☑
DATE: 03/14/2022

NOLL & TAM ARCHITECTS
729 Heinz Avenue
Berkeley, CA 94710
tel 510.542.2200
fax 510.542.2201

SEAL

NEXUS
10983 LEROY DRIVE
NORTHGLENN, COLORADO 80233
303/457-9199 FAX 303/457-2801

STRUCTURAL ONLY
REGISTERED PROFESSIONAL ENGINEER
ROBERT VIVAN NANGIA
5400
Exp. 08/31/2022
STRUCTURAL
STATE OF CALIFORNIA
2/28/2022

PROJECT TITLE

Peralta Community College District
MERRITT COLLEGE NEW LANDSCAPE HORTICULTURE COMPLEX

12500 Campus Drive
Oakland, CA 94616

BID SET

ISSUE DATE	**03/03/2022**
N&T JOB NUMBER	**22003**

REVISIONS

#	DATE	DESCRIPTION

DRAWN BY **J.Broderick** | CHECKED BY **T. Moore**

SHEET TITLE

GREENHOUSE 8MM POLYCARBONATE ROOF & ROOF VENT INSTALL DETAILS

SHEET NUMBER

GH-10.4

ROOF AND RIDGE VENT INSTALLATION - 8MM POLYCARBONATE COVERING: **SHEET 5 OF 5**

VENT WINDOW ASSEMBLY STEPS (V-0) - (V-10):

V-0) ROLL PIN @ VENT END: **VENT WINDOW**

- INSTALL ROLL PIN ON THE [AR-15] RIDGE EXTRUSION
- ROLL PIN DOES NOT PENETRATE THE [VT-25] TOP RAIL EXTRUSION
- ROLL PIN ACTS AS VENT STOP @ EACH VENT END

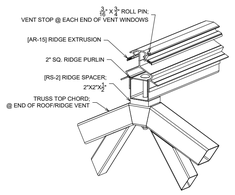

V-1) [FC-12] VENT END CHANNEL: **VENT WINDOW**

- USE LOCK WASHERS W/ 1/4" BOLTS IN VENT WINDOW
- FIELD DRILL Ø5/16" HOLE FOR 1/4" X 3/4" HEX BOLT
- SEE VENT SECTION VIEW (B-B) FOR SPACING (SHOWN ON SHEET 2)

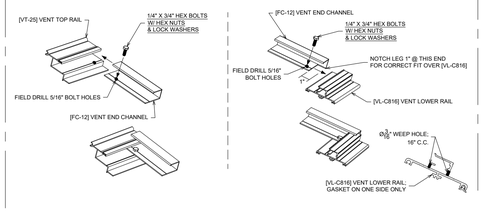

V-2) [VS-1] INTERMEDIATE VENT STRUT: **VENT WINDOW**

- USE LOCK WASHERS W/ 1/4" BOLTS IN VENT WINDOW
- FIELD DRILL Ø5/16" HOLES FOR 1/4" X 3/4" HEX BOLTS
- SEE VENT SECTION VIEW (B-B) FOR SPACING (SHOWN ON SHEET 2)

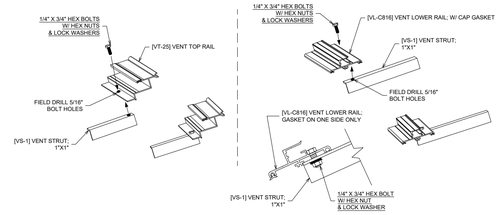

V-3) [VS-2] VENT SPLICE STRUT: **VENT WINDOW**

- USE LOCK WASHERS W/ 1/4" BOLTS IN VENT WINDOW
- FIELD DRILL Ø5/16" HOLES FOR 1/4" X 3/4" HEX BOLTS
- SPLICE [VT-25] & [VL-C816] STOCK LENGTHS USING [VS-2] VENT SPLICE STRUTS

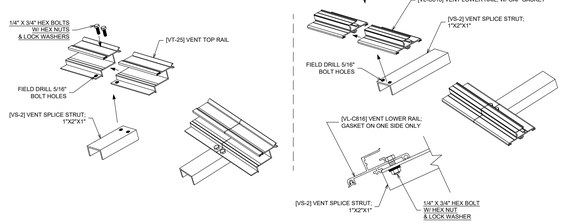

V-4) RACK ARMS: **VENT WINDOW**

- USE LOCK WASHERS W/ 1/4" BOLTS IN VENT WINDOW
- FIELD DRILL Ø5/16" HOLES FOR 1/4" X 3/4" HEX BOLTS
- SEE VENT SECTION VIEW (B-B) FOR SPACING (SHOWN ON SHEET 2)

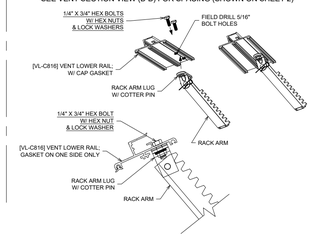

V-5) SHAFT & PINIONS:

-SECURE PINION TO SHAFT WITH (2) SET SCREWS
- SEE VENT SECTION VIEW (B-B) FOR SPACING (SHOWN ON SHEET 2)
- (4) RACK ARM STOPS PER VENT WINDOW (NOT ON EVERY RACK ARM)

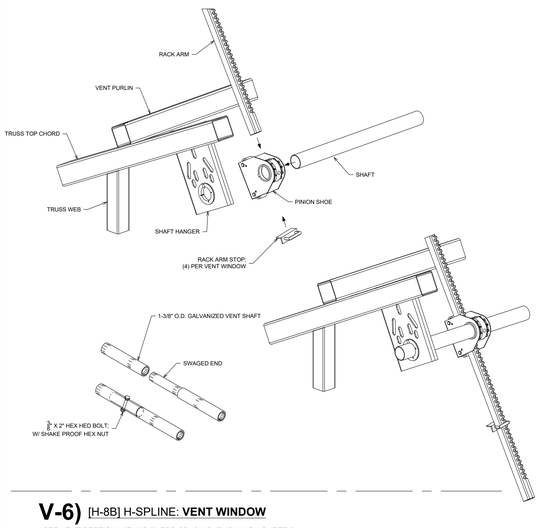

V-6) [H-8B] H-SPLINE: **VENT WINDOW**

- SEE VENT SECTION VIEW (B-B) FOR SPACING (SHOWN ON SHEET 2)

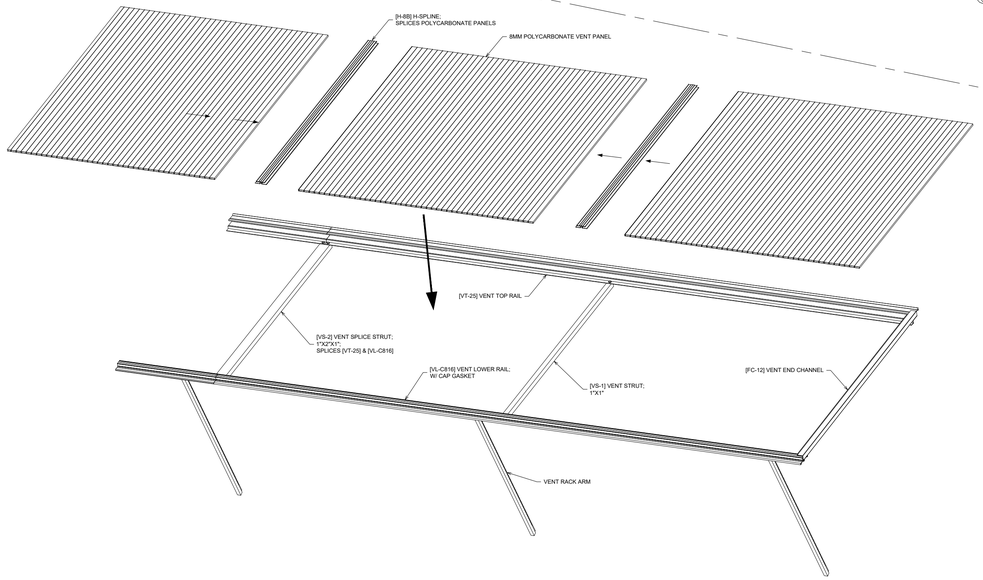

V-7) 8MM POLYCARBONATE HARDWARE: **VENT WINDOW**

-HARDWARE THROUGH COVERING: DO NOT OVER-TIGHTEN, TO AVOID DAMAGING COVERING

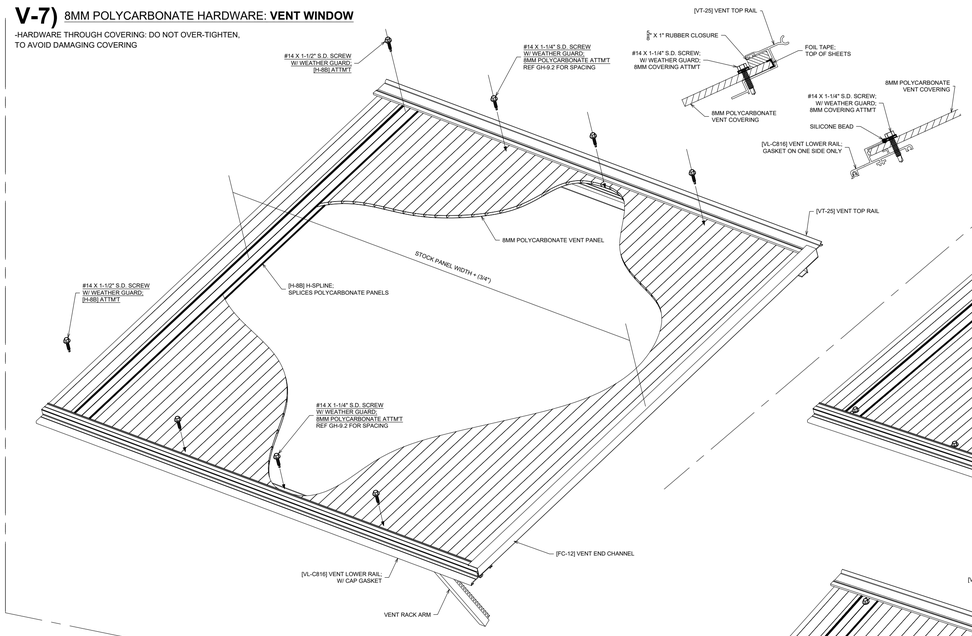

V-8) 2"X6-1/2" VENT END FLASHING W/ CAP FLASHING: **VENT WINDOW**

- FLASHING LOCATION: EXACT DIMENSION SHOWN IN VENT SECTION VIEW (B-B) - (SHEET 2)

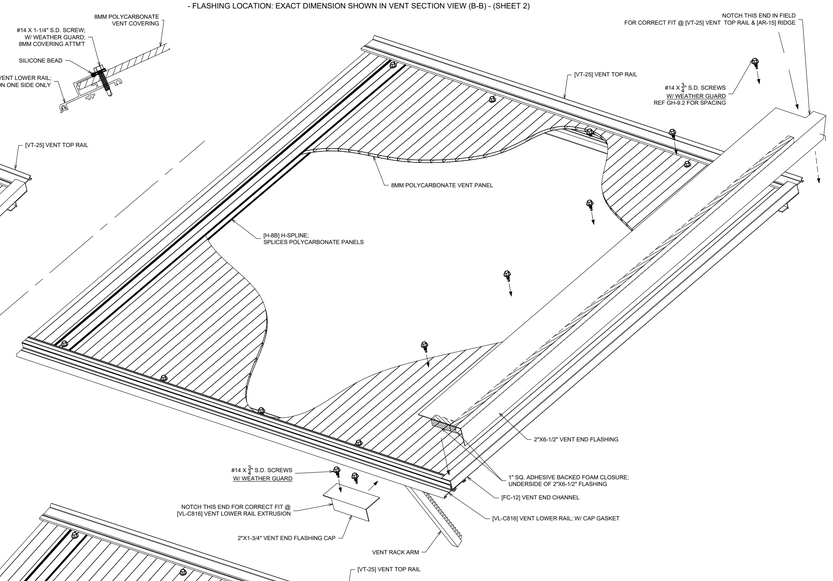

V-9) ASSEMBLED VENT WINDOW SECTION

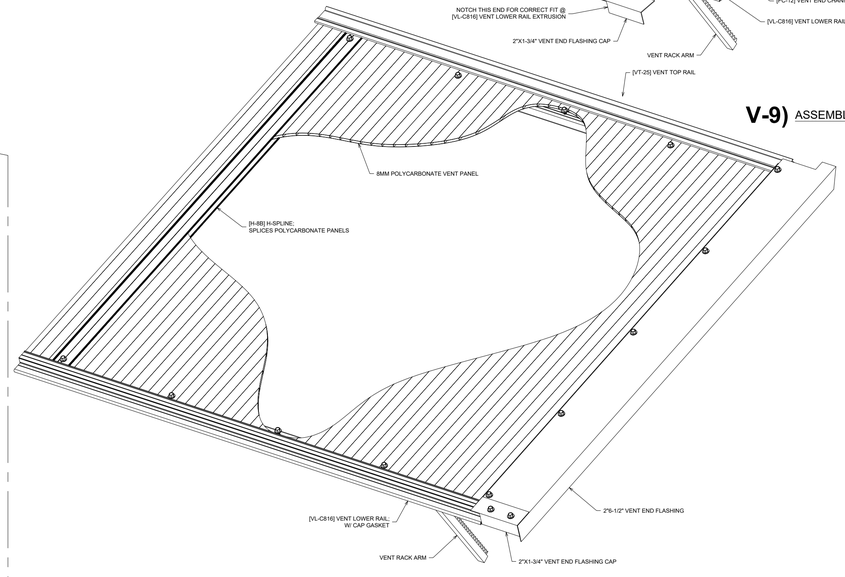

APPROVALS

IDENTIFICATION STAMP
DIV. OF THE STATE ARCHITECT
APP: 01-119409 INC:
REVIEWED FOR
SS ☑ FLS ☑ ACS ☑
DATE: 03/14/2022

NOLL & TAM ARCHITECTS
729 Heinz Avenue
Berkeley, CA 94710
tel 510.542.2200
fax 510.542.2201

SEAL

NEXUS
10983 LEROY DRIVE
NORTHGLENN, COLORADO 80233
303/457-9199 FAX 303/457-2801

STRUCTURAL ONLY
REGISTERED PROFESSIONAL ENGINEER
ROBERT VIVAK NANGIA
5400
Exp. 08/31/2022
STRUCTURAL
STATE OF CALIFORNIA
2/28/2022

PROJECT TITLE

Peralta Community College District
MERRITT COLLEGE NEW LANDSCAPE HORTICULTURE COMPLEX

12500 Campus Drive
Oakland, CA 94616

BID SET

ISSUE DATE	**03/03/2022**
N&T JOB NUMBER	**22003**

REVISIONS

#	DATE	DESCRIPTION

DRAWN BY **J.Broderick** | CHECKED BY **T. Moore**

SHEET TITLE

GREENHOUSE 8MM POLYCARBONATE ROOF & ROOF VENT INSTALL DETAILS

SHEET NUMBER

GH-10.5

CLOSED POSITION

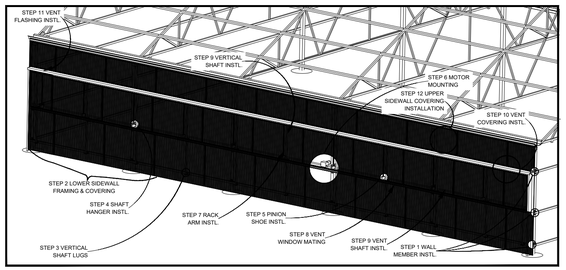

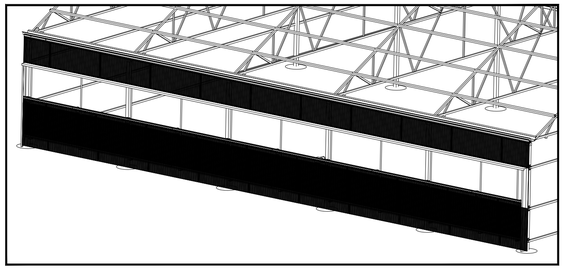

OPEN POSITION

STEP 1: WALL MEMBER INSTALLATION

START BY LOCATING THE WALL MEMBERS. ATTACH L-1 LUGS TO COLUMNS WITH #14 X 1" SD SCREWS. THEN ATTACH WALL MEMBERS TO LUGS USING #14 X 1" SD SCREWS. SEE DETAIL (1A) FOR WALL MEMBER AND LUG LOCATIONS. BE SURE TO PUT LUGS ON THE SIDES OF COLUMN INSTEAD OF ON TOP OF WALL MEMBERS AT THE LOWER WALL MEMBER OF THE VENT OPENING TO ALLOW THE 302 RAIL TO BE PLACED CORRECTLY.

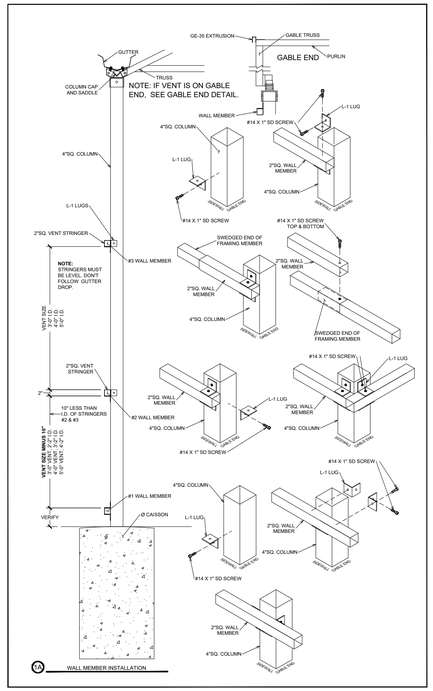

STEP 2: LOWER SIDEWALL/GABLE FRAMING & COVERING INSTALLATION

INSTALL GUTTER RAIL GR-224 AT THIS TIME. USE 1/4" X 3/4" HEX HEAD BOLTS WITH BONDED WASHERS AND NUTS EVERY 16" O.C. EXTEND THE GR-224 4" FROM THE CENTER OF THE COLUMN AT THE GABLE END TO ALIGN FRAMING CHANNEL (BOTH ENDS). SEE DETAIL (2A). NEXT, INSTALL THE FRAMING CHANNEL FC-12 AT EITHER END OF THE 4"SQ. COLUMN CORNERS. INSTALL THE FRAMING CHANNEL ON THE SIDEWALL/GABLE FIRST. USE A L-1 LUG UNDERNEATH THE WALL MEMBER AND SECURE THE LUG WITH A #14 X 1" SD SCREW. THEN SECURE THE FRAMING CHANNEL TO THE LUG WITH A 1/4" X 3/4" HEX HEAD BOLT AND NUT AT EACH WALL MEMBER. NEXT, INSTALL THE FRAMING CHANNEL AT THE GABLE END TO THE SIDE WALL FRAMING CHANNEL WITH A #10 X 1/2" SD SCREW EVERY 16" O.C. THEN USE A #14 X 1" SD SCREW AT EACH WALL MEMBER. SEE DETAIL (2B). NEXT, INSTALL THE 8mm POLYCARBONATE AND H-SPLICES.

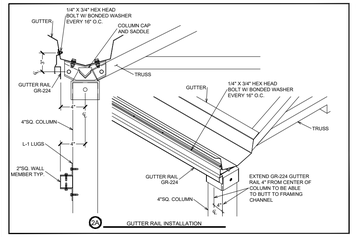

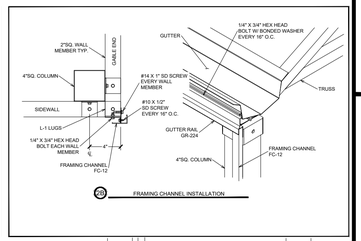

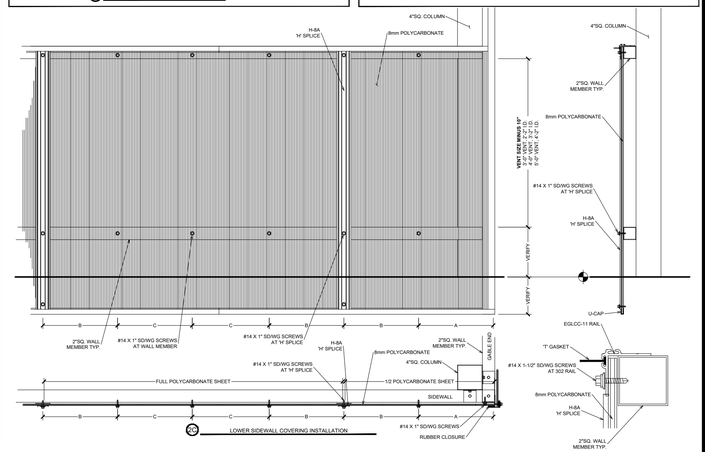

STEP 3: VERTICAL SHAFT BRACES (EGUB-37 & EGSB-35)

AFTER INSTALLING LOWER COVERING, INSTALL THE UPPER SHAFT BRACE (EGUB-37). START AT ONE END. MOUNT THE UPPER SHAFT BRACE UNDERNEATH THE TOP VENT WALL MEMBER (#3). THE FIRST EGUB-37 BRACE WILL BE 6" FROM THE INSIDE EDGE OF THE GABLE COLUMN TO THE EDGE BRACE. USE (2) #14 X 1"SD SCREWS TO SECURE THE BRACE TO THE WALL MEMBER. NEXT INSTALL THE SHAFT BASE LUG (EGSB-35). ALIGN THE EGSB-35 WITH THE EGUB-37. MOUNT THE SHAFT BASE LUG OVER THE LOWER COVERING AND TO THE LOWER WALL MEMBER USING (2) 3/8" X 3" HEX HEAD BOLTS. "DO NOT OVER TIGHTEN" YOU MAY INSTALL THE 5/16" X 3" ELEVATOR BOLTS ONTO THE EGSB-35 SHAFT BASE AT THIS TIME; LEAVE LOOSE FOR ADJUSTMENTS. REPEAT THE PROCESS EVERY 6'-0" UNTIL YOU GET TO THE OTHER END. MIRROR THE BRACE AND LUG AS YOU DID AT THE BEGINNING. SEE DETAIL (3A). IF YOU VENT IS ON A SIDEWALL AND HAS 12'-0" C.C. BAYS, INSTALL THE 1-1/2"SQ. SHAFT HANGER SUPPORTS IN BETWEEN THE 12'-0" C.C. BAY TO SUPPORT THE SHAFT. SECURE THE 1-1/2"SQ. SUPPORT TO BOTH THE TOP AND BOTH VENT WALL MEMBERS USING L-3 LUGS AND #14 X 3/4" SD SCREWS. USE (2) LUGS ON BOTH SIDES OF THE SUPPORT. SECURE THE SHAFT HANGER ONTO THE 1-1/2"SQ. SUPPORT USING #14 X 3/4" SD SCREWS. SEE DETAILS (3A & 4A).

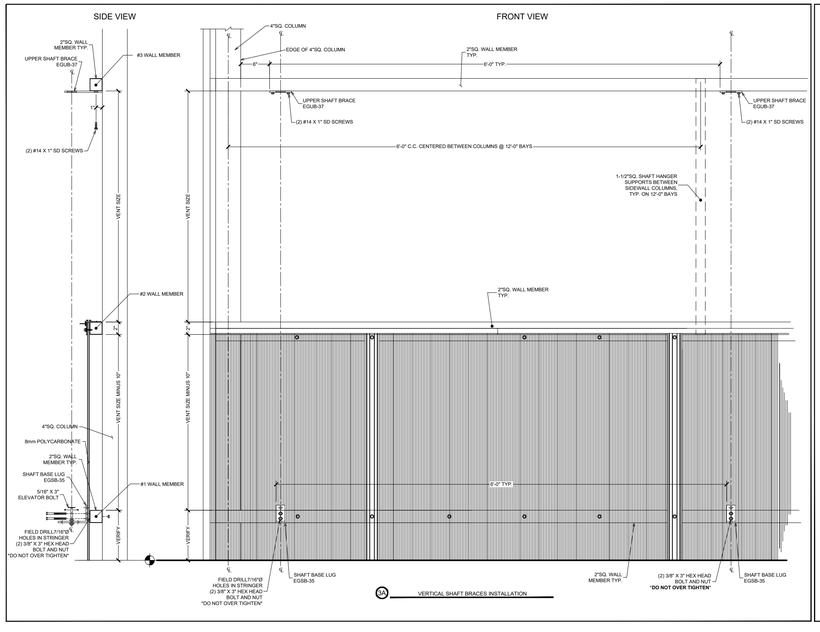

STEP 4: SHAFT HANGER INSTALLATION

INSTALL SHAFT HANGERS TO EACH SIDEWALL COLUMN. SEE DETAIL (4A). IF YOU VENT IS ON A SIDEWALL AND HAS 12'-0" C.C. BAYS, INSTALL THE 1-1/2"SQ. SHAFT HANGER SUPPORTS IN BETWEEN THE 12'-0" C.C. BAY TO SUPPORT THE SHAFT. SECURE THE 1-1/2"SQ. SUPPORT TO BOTH THE TOP AND BOTH VENT WALL MEMBERS USING L-3 LUGS AND #14 X 3/4" SD SCREWS. USE (2) LUGS ON BOTH SIDES OF THE SUPPORT. SECURE THE SHAFT HANGER ONTO THE 1-1/2"SQ. SUPPORT USING #14 X 3/4" SD SCREWS. SEE DETAILS (3A & 4A).

FOR POLYCARBONATE SHEET FASTENER SPACING REF GH-9.2

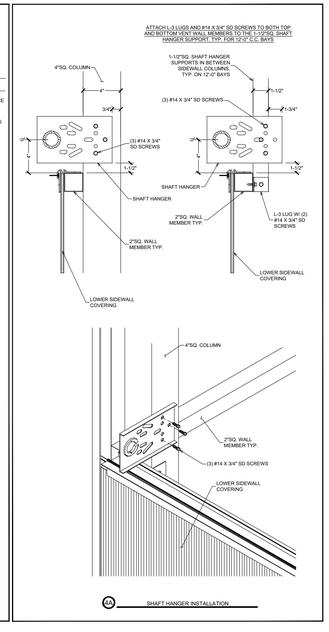

APPROVALS

IDENTIFICATION STAMP
DIV. OF THE STATE ARCHITECT
APP: 01-119409 INC:
REVIEWED FOR
SS ☑ FLS ☑ ACS ☑
DATE: 03/14/2022

NOLL & TAM ARCHITECTS
729 Heinz Avenue
Berkeley, CA 94710
tel 510.542.2200
fax 510.542.2201

SEAL

NEXUS
10983 LEROY DRIVE
NORTHGLENN, COLORADO 80233
303/457-9199 FAX 303/457-2801

STRUCTURAL ONLY
REGISTERED PROFESSIONAL ENGINEER
ROBERT VIVAK NAGGIA
5400
Exp: 06/30/2022
STRUCTURAL
STATE OF CALIFORNIA
2/28/2022

PROJECT TITLE

Peralta Community College District
MERRITT COLLEGE NEW LANDSCAPE HORTICULTURE COMPLEX

12500 Campus Drive
Oakland, CA 94616

BID SET

ISSUE DATE	03/03/2022
N&T JOB NUMBER	22003

REVISIONS

#	DATE	DESCRIPTION

DRAWN BY J.Broderick | CHECKED BY T. Moore

SHEET TITLE

GREENHOUSE EDDG VENT DETAILS 8MM COVERING - OVERVIEW & PARTS IDENTIFICATION

SHEET NUMBER

GH-11.1

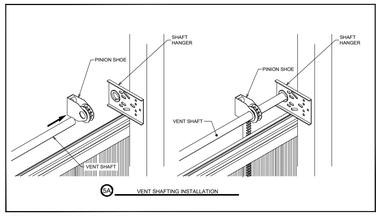

5A VENT SHAFTING INSTALLATION

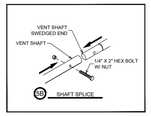

5B SHAFT SPLICE

STEP 6: VENT MOTOR INSTALLATION

INSTALL THE VENT MOTOR AS YOU REACH THE MIDDLE OF THE HOUSE AS YOU ARE INSTALLING THE VENT SECTIONS AND VENT SHAFTING.
USE THE MOTOR MOUNTING PLATE TO SECURE THE MOTOR TO THE 2x4" POST OR 4"SQ. COLUMN. SEE DETAIL (6A).
IF THE GREENHOUSE HAS A COOLING PAD SYSTEM AND/OR A LIGHT DEPLETION SYSTEM, YOU MUST INSTALL THE MOTOR HOOD FLASHING BEFORE THE PAD SYSTEM IS INSTALLED. SEE THE PAD SYSTEM/LIGHT DEPLETION SYSTEM DETAILS FOR THE MOTOR HOOD FLASHING INSTALLATION

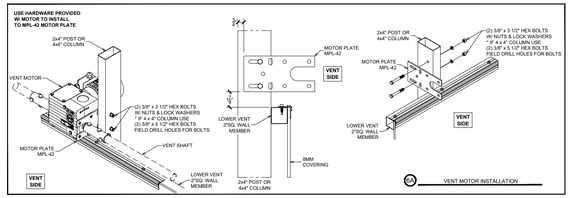

6A VENT MOTOR INSTALLATION

STEP 5: VENT SHAFT INSTALLATION

BEFORE YOU INSTALL THE SHAFTING, INSTALL THE 1-1/2"SQ. SHAFT HANGER SUPPORTS IF YOUR VENT IS ON A SIDEWALL AND HAS 12'-0" C.C. BAYS. SEE DETAILS (3A & 4A). BEGIN THE VENT SHAFTING INSTALLATION. ALIGN THE PINION SHOE WITH THE SHAFT HANGER. SLIDE THE SHAFT THROUGH EACH THE PINION AND SHAFT HANGER. SEE DETAIL (5A). AS THE SHAFT IS INSTALLED, SECURE THE PINION TO THE SHAFT WITH THE SET SCREWS IN THE PINION. SPLICE VENT SHAFT TOGETHER. SEE DETAIL (5B). MAKE SURE PINIONS ARE IN PLACE TO MATCH RACK ARMS ON SHAFT.

STEP 7: RACK ARM & PINION INSTALLATION

BEGIN CONSTRUCTING THE VENT RACK AND PINIONS. START BY ATTACHING THE TOP RACK ARM LUG (RAP-EG-2) TO THE TOP OF THE RACK ARM. USE (1) 1/4" X 2-1/2" HEX HEAD BOLT W/ SLIT LOCK WASHERS AND NUT. NEXT SLIDE THE PINION SHOE ONTO THE RACK ARM. ATTACH THE BOTTOM RACK ARM LUG TO THE RACK ARM. SEE DETAIL (7A). AFTER THE RACK ARM LUGS AND PINION ARE ATTACHED TO THE RACK ARM, NOTE THE LOCATION FOR THE RACK ARMS. SEE DETAIL (7B).

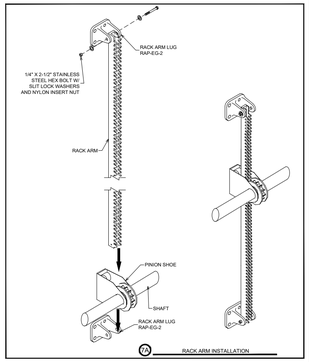

7A RACK ARM INSTALLATION

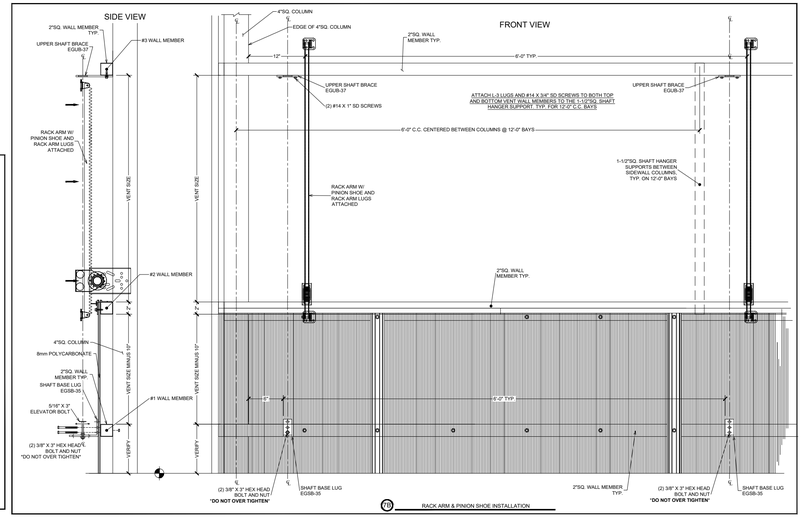

7B RACK ARM & PINION SHOE INSTALLATION

STEP 8: WINDOW MATING

FIRST LAYOUT THE STARTER WINDOW SECTION. MITER CUT END SILL AND STARTER SILLS. BEGIN MATING THE END VENT SILL TO THE STARTER SILL WITH CORNER GUSSET SPLICES (EGGC-2). SEE DETAIL (8A). REPEAT THIS PROCESS WITH BOTH THE LOWER AND UPPER SILL PIECES (EGS-22). BEFORE MATING INTERMEDIATE PIECES TO STARTER OR OTHER INTERMEDIATE PIECES, INSERT 5/16" X 1" CARRIAGE BOLTS IN THE BOLT SLOTS ON THE BACK OF THE SILL (EGS-22). SEE DETAIL (8C). INSERT (2) CARRIAGE BOLTS IN BOTH TOP AND BOTTOM SILLS FOR EVERY RACK ARM LUG APPROXIMATELY EVERY 6'-0" O.C. SEE VENT LAYOUT ON THIS SHEET FOR CARRIAGE BOLT LOCATIONS. NEXT INSTALL THE LOWER SILL FLASHING (EGLS-52) TO THE LOWER SILL. SEE DETAIL (8D). ALIGN THE (EGLS-52) HOLE WITH THE CENTER OF THE VENT GUIDES (EGVG-2). SECURE THE (EGLS-52) TO THE (EGS-22) WITH #10 X 1/2" HEX HD EVERY 12" O.C. CUT A PIECE OF THE (EGLS-52) FOR THE REMAINING AREA OF THE VENT TO COMPLETE THE LOWER SILL FLASHING. NEXT INSTALL BOTTOM VENT GUIDES. SEE DETAIL (8E). MOUNT THE (EGVG-4) VENT GUIDE BOTTOM (FIRST) AND TOP (LAST) OF THE SILLS. SECURE THE GUIDES WITH (2) #14" X 1"SC SCREWS TO THE (EGS-22) SILLS. THE TOP VERT GUIDE SHOULD BE DIRECTLY ABOVE BOTTOM VENT GUIDE. WHEN STARTER SECTION IS COMPLETED, MOUNT THE FIRST SECTION ON THE SIDEWALL. MOUNT THE SECTION TO THE RACK ARMS AND RACK ARM LUGS ALREADY INSTALLED ON THE VENT SHAFT. SEE DETAIL (8F). MAKE SURE BOTH THE RACK ARM LUGS AND VENT GUIDE ARE LEVEL AND ARE IN LINE WITH THE TOP AND BOTTOM PIECES. THE REST OF THE RACK ARMS AND RACK ARM LUGS WILL BE SET EVERY 6'-0". CONTINUE ADDING SILLS (BOTTOM AND TOP) CONNECTION SILL SPLICES. REMEMBER TO SLIDE IN (2) 5/16" X 1" CARRIAGE BOLTS PER SILL AS YOU CONTINUE. BEFORE END SILL IS CONNECTED. INSERT 'T'; CASKETING THE TOP AND END SILLS. SEE DETAIL (8F).

EGS-22 SILL	
A	VENT ENDS, MITER CUT 45°, LENGTHS = VENT ROUGH OPENINGS
B	STARTER SILL, MITER CUT 45° AT ONE END, LENGTH, 19'-0"
C	INTERMEDIATE SILL, LENGTH, 24'-0"
D	FINISH INTERMEDIATE SILL, MITER CUT 45° AT ONE END, LENGTH, BASED ON HOUSE LENGTH

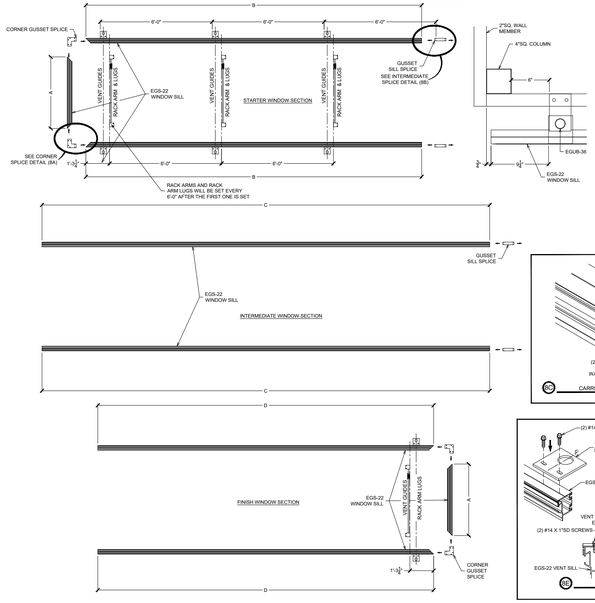

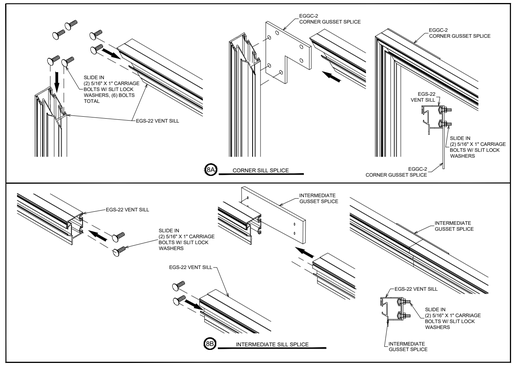

8A CORNER SILL SPLICE
8B INTERMEDIATE SILL SPLICE

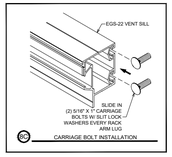

8C CARRIAGE BOLT INSTALLATION

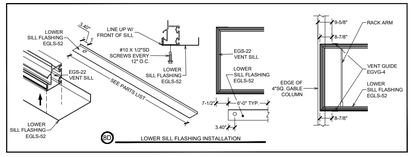

8D LOWER SILL FLASHING INSTALLATION

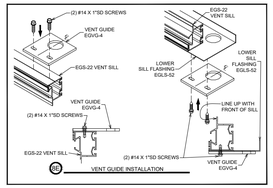

8E VENT GUIDE INSTALLATION

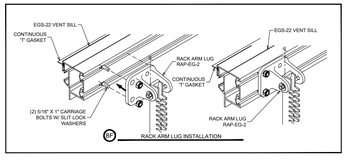

8F RACK ARM LUG INSTALLATION

APPROVALS

IDENTIFICATION STAMP
DIV. OF THE STATE ARCHITECT
APP: 01-119409 INC:
REVIEWED FOR
SS ☑ FLS ☑ ACS ☑
DATE: 03/14/2022

NOLL & TAM ARCHITECTS
729 Heinz Avenue
Berkeley, CA 94710
tel 510.542.2200
fax 510.542.2201

SEAL

NEXUS
10983 LEROY DRIVE
NORTHGLENN, COLORADO 80233
303/457-9199 FAX 303/457-2801

PROJECT TITLE

Peralta Community College District
MERRITT COLLEGE NEW LANDSCAPE HORTICULTURE COMPLEX

12500 Campus Drive
Oakland, CA 94616

BID SET

ISSUE DATE	03/03/2022
N&T JOB NUMBER	22003

REVISIONS

#	DATE	DESCRIPTION

DRAWN BY **J.Broderick** | CHECKED BY **T. Moore**

SHEET TITLE

GREENHOUSE EDDG VENT DETAILS 8MM COVERING - OVERVIEW & PARTS IDENTIFICATION

SHEET NUMBER

GH-11.2

STEP 9: VERTICAL SHAFT INSTALLATION

AS YOU FINISH EACH SECTION, NEXT INSTALL VENT GUIDE SHAFTING. INSERT VERTICAL SHAFT THROUGH THE UPPER SHAFT BRACE (EGUB-37), THE VENT GUIDES (EGVG-4) AND INTO THE SHAFT BASE LUG (EGSB-24). SEE DETAIL (11A). SECURE THE SHAFT WITH #14 X 1" SD SCREW.

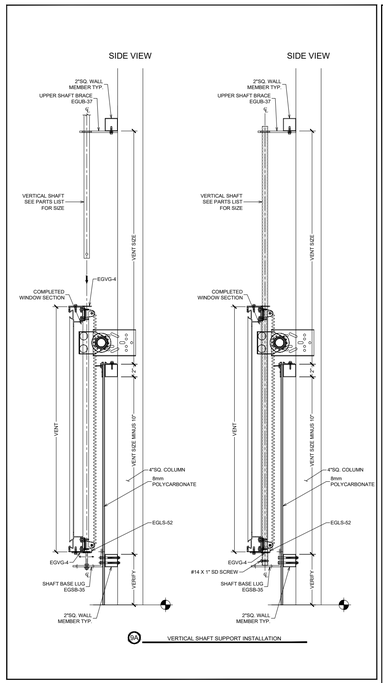

5A VERTICAL SHAFT SUPPORT INSTALLATION

STEP 10: VENT COVERING INSTALLATION

AFTER ALL VENT SECTIONS HAVE BEEN INSTALL, GLAZE THE VENT WINDOW. CUT THE STARTER POLYCARBONATE SHEET TO BE ALIGNED WITH THE LOWER POLYCARBONATE AND 'H' SPLICES. INSERT THE MITER CUT VENT SILL CAP (EGSC-1) AT THE BOTTOM AND SIDES FIRST IN THE SLOT IN THE VENT SILLS (EGS-22). SEE DETAIL (10A). USE 'H' SPLICES TO CONNECT POLYCARBONATE SHEETS TOGETHER. SCREW DOWN THE SILL CAP AND POLYCARBONATE USING #14 X 1"SD/WG SCREWS EVERY 12" O.C. WHEN POLYCARBONATE SHEETS HAVE BEEN INSTALLED ON THE VENT, INSTALL THE TOP SILL CAP.

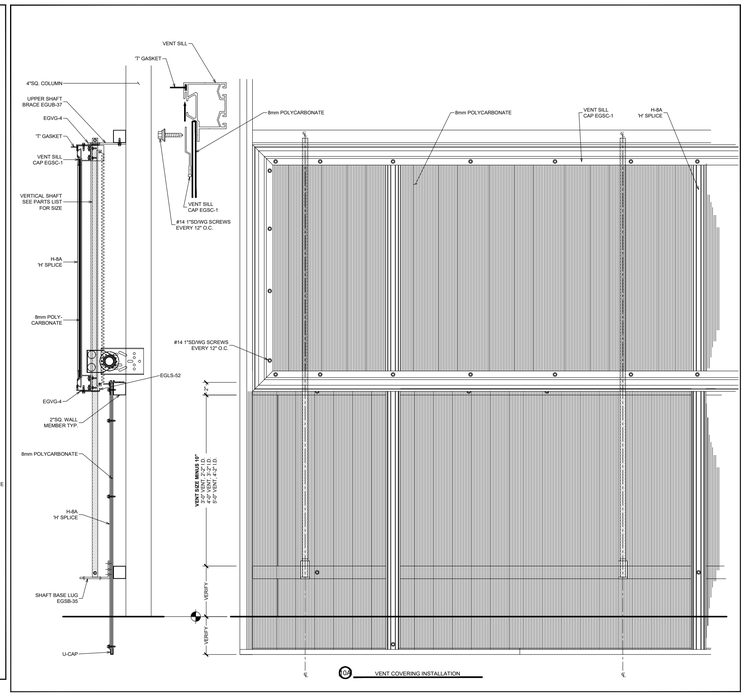

5A VENT COVERING INSTALLATION

STEP 11: VENT FLASHING INSTALLATION

NEXT INSTALL THE UPPER SILL FLASHING (EGUS-1743). MOUNT THE (EGUS-1743) AT THE TOP OF THE TOP WALL MEMBER. SCREW THE FLASHING DOWN WITH #14 X 1"SD SCREWS EVERY 16" O.C., OVERLAP 1" EACH PIECE. SECURE THE CORNERS WITH (1) #14 X 1"SD SCREW. SEE DETAIL (11B). NEXT INSTALL THE END VENT FLASHING (EGEF-362). MOUNT THE (EGEF-362) FLASHING AT THE GABLE SIDEWALL COLUMN CORNERS. PLACE END FLASHING UP TO THE TOP OF THE TOP WALL MEMBER. SEE DETAIL (11A). USE #14 X 1" SD SCREWS EVERY 16" O.C.

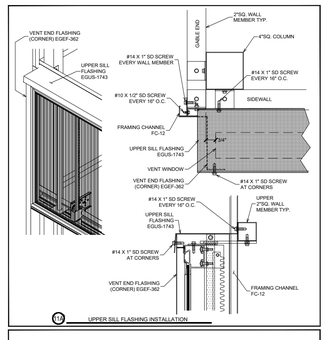

11A UPPER SILL FLASHING INSTALLATION

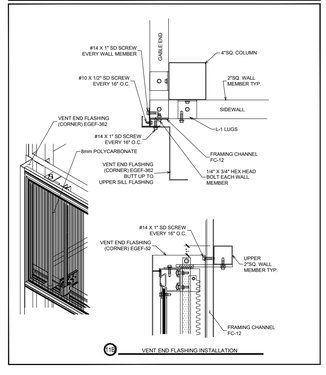

11B VENT END FLASHING INSTALLATION

STEP 12: UPPER SIDEWALL COVERING INSTALLATION

NEXT INSTALL THE UPPER SIDEWALL COVERING. ALIGN THE UPPER SIDEWALL COVERING WITH THE LOWER SIDEWALL AND VENT WINDOW COVERING. SEE DETAIL (14A).

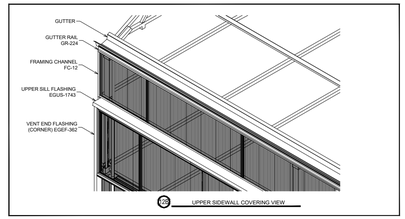

12A UPPER SIDEWALL COVERING VIEW

FOR POLYCARBONATE SHEET FASTENER SPACING
REF GH-9.2

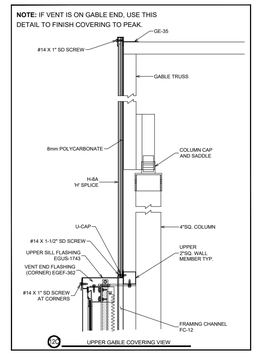

12A UPPER GABLE COVERING VIEW

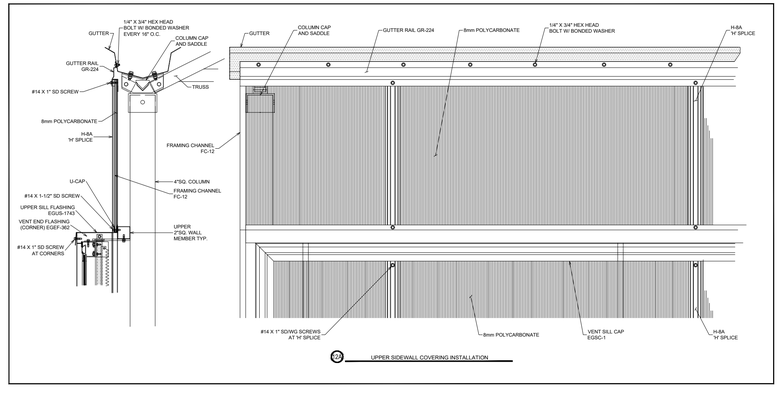

12A UPPER SIDEWALL COVERING INSTALLATION

APPROVALS

IDENTIFICATION STAMP
DIV. OF THE STATE ARCHITECT
APP: 01-119409 INC:
REVIEWED FOR
SS ☑ FLS ☑ ACS ☑
DATE: 03/14/2022

NOLL & TAM ARCHITECTS
729 Heinz Avenue
Berkeley, CA 94710
tel 510.542.2200
fax 510.542.2201

SEAL

NEXUS
10983 LEROY DRIVE
NORTHGLENN, COLORADO 80233
303/457-9199 FAX 303/457-2801

STRUCTURAL ONLY
REGISTERED PROFESSIONAL ENGINEER
ROBERT VIVAK NANCHIA
5400
Exp. 06/30/2022
STRUCTURAL
STATE OF CALIFORNIA
2/28/2022

PROJECT TITLE

Peralta Community College District
MERRITT COLLEGE NEW LANDSCAPE HORTICULTURE COMPLEX

12500 Campus Drive
Oakland, CA 94616

BID SET

ISSUE DATE	03/03/2022
N&T JOB NUMBER	22003

REVISIONS

#	DATE	DESCRIPTION

DRAWN BY **J.Broderick** | CHECKED BY **T. Moore**

SHEET TITLE

GREENHOUSE EDDG VENT DETAILS 8MM COVERING - OVERVIEW & PARTS IDENTIFICATION

SHEET NUMBER

GH-11.3