STRUCTURAL ENGINEER
WEATHERLY ENGINEERING

MYRTLE BEACH, SOUTH CAROLINA
(843) 458- 5318

PM & E ENGINEER
MCKNIGHT SMITH WARD GRIFFIN ENGINEERS, INC.

CHARLOTTE, NORTH CAROLINA
(704)-527-2112

ARCHITECT
TYCH & WALKER ARCHITECTS, L.L.P.

MICHAEL WALKER, AIA
38 BLACKGUM ROAD, UNIT B
PAWLEYS ISLAND, SOUTH CAROLINA
843-651-7151

A NEW LIBRARY FACILITY

SOUTHERN GEORGETOWN COMMUNITY LIBRARY

POWELL ROAD, GEORGETOWN COUNTY, SOUTH CAROLINA

DRAWING INDEX

CIVIL
PROVIDE BY OWNER - FOR REFERENCE ONLY

C-00 COVER
C-01 GENERAL NOTES
C-02 GENERAL LEGENDS
C-03 EXISTING CONDITIONS
C-04 PHASE PLAN
C-05 SITE PLAN
C-06 UTILITY PLAN
C-07 GRADING AND DRAINAGE PLAN
C-08 DRAINAGE STRUCTURE TABLE
C-09 SEDIMENT AND EROSION CONTROL PLAN
C-10 DRIVEWAY PLAN AND PROFILE
C-11 SEDIMENT AND EROSION CONTROL DETAILS
C-12 TYPICAL DETAILS
C-13 PAVEMENT DETAILS

ARCHITECTURAL

G0.0 CODE COMPLIANCE
SP1.0 SITE PLAN
A1.0 FLOOR PLAN
A1.1 WALL LEGEND PLAN
A1.2 ROOF PLAN
A1.3 DOOR SCHEDULE AND DETAILS
A1.4 WINDOW SCHEDULE AND DETAILS
A1.5 WINDOW DETAILS
A1.6 ROOM FINISH SCHEDULE AND INTEIROR WINDOW DETAILS
A2.0 ELEVATIONS
A3.0 BUILDING SECTIONS
A4.0 WALL SECTIONS
A4.1 WALL SECTIONS
A4.2 WALL SECTIONS
A4.3 WALL SECTIONS
A4.4 WALL SECTIONS
A5.0 REFLECTED CEILING PLAN
A6.0 INTERIOR ELEVATIONS
A6.1 INTERIOR ELEVATIONS
A6.2 INTERIOR DETAILS
F1.0 FURNITURE PLAN

STRUCTURAL

S1.0 GENERAL NOTES
S1.1 SPECIAL INSPECTIONS
S2.0 FOUNDATION PLAN
S2.1 FRAMING PLAN
S3.0 SECTIONS AND DETAILS
S4.0 SECTIONS AND DETAILS
S4.1 SECTIONS AND DETAILS
S4.2 SECTIONS AND DETAILS
S4.3 WINDOW AND DOOR ELEVATIONS
S4.4 WINDOW AND DOOR ELEVATIONS
S4.5 WINDOW AND DOOR ELEVATIONS
S4.6 TRUSS PROFILE

PLUMBING

P1.0 FLOOR PLAN - WASTE
P1.1 FLOOR PLAN - WATER
P2.0 SCHEDULE AND DETAILS

MECHANICAL

M1.0 FLOOR PLAN MECHANICAL
M1.1 MECHANICAL PIPING PLAN
M2.0 MECHANICAL DETAILS
M3.0 SCHEDULES AND LEGEND

ELECTRICAL

E1.0 SYMBOLS & SCHEDULES
E1.1 ELECTRICAL SITE PLAN
E2.0 FLOOR PLAN - LIGHTING
E3.0 FLOOR PLAN - POWER
E4.0 RISER DIAGRAMS
E4.1 DETAILS
E5.0 PANEL SCHEDULES

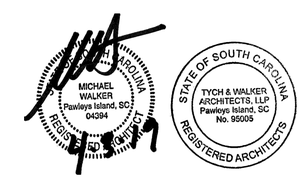

CODE COMPLIANCE REVIEW

CODES COMPLIANCE REVIEW AND RELATED INFORMATION

A. PROJECTED DESIGNED IN ACCORDANCE WITH:
1. International Building Code - 2015 Edition
2. International Plumbing Code - 2015 Edition
3. International Mechanical Code - 2015 Edition
4. International Fuel Gas Code - 2015 Edition
5. International Fire Code - 2015 Edition
6. National Electric Code - 2014 Edition
7. National Electrical Safety Code ANSI-C2 - Latest Edition
8. ICC/ANSI-A117.1 - American National Standard: Accessible and Usable Buildings and Facilities
9. Americans with Disabilities Act (ADA)
10. International Energy Conservation Code - 2009 Edition
11. Uniform Federal Accessibility Standard (UFAS)

B. BASIC REVIEW INFORMATION

1. Site Development:
   a. Area of Site Developed (in acres): See Civil
   b. Municipality and/or County Where Project is Located: Georgetown County
   c. Jurisdiction for:
      1) Site Work: Georgetown County
      2) Water: Georgetown County
      3) Sewer: Georgetown County
      4) Zoning: Georgetown County
   d. Is project in Flood Plain: No
   e. Is project in Wetlands Area: No

2. Primary Occupancy Classification: A3

3. Type of Construction (IBC Chapter 6): Type III-B
   Sprinklered: No

4. Building Area by Design:

		Building Area allowed by IBC:
Assembly	6,203 sf	9,500 sf
Business	2,557 sf	19,000 sf
TOTAL:	8,760 sf	9,500 sf Nonseparated occupancies; most restrictive applies

5. Building Height: +/- 25'-8" * Building Height Allowed (IBC Table 503): 55 ft.
   Number of Stories: 1 Number of Stories Allowed: 2
   Allowable Height Increase (IBC Section 504): NA
   Allowable Story Increase (IBC Section 504): NA
   *Building height is measured from the average grade plane to the top of the highest roof surface.

6. Building Occupant Load: (IBC Section 1004 and Table 1004.1.2)

Occupancy Classification:	Assembly - Auditorium	Assembly - Stacks	Assembly - Reading Room	Business	Unheated
Area per Occupancy	1,537 sf	3,024 sf	1,642 sf	2,557 sf	740 sf
Area per Occupant	15 net	100 sf gross	50 net	100 sf gross	200 gross
Area Occupant Load:	103 occupants	31 occupants	33 occupants	26 occupants	4 occupants

TOTAL Building Occupant Load: 197 occupants

7. Fire Resistance ratings required (IBC Table 601), A/E specified system and source of rated assembly/element selected (UL, FM, etc.)

	Required	Source UL
a. Party/Fire Walls:	Not Required	
b. Interior Bearing Walls:	Not Required	
c. Interior Nonbearing Partitions:	Not Required	
d. Columns:	Not Required	
e. Beams, Girders, Trusses & Arches:	Not Required	
f. Floor & Floor/Ceiling Construction:	Not Required	
g. Roof & Roof/Ceiling Construction:	Not Required	
h. Exterior Bearing Walls:	Not Required	
i. Corridors:	Not Required	

8. Other Fire Protection:
   a. Mechanical Room Separation Not Required
   b. Shaft Enclosure (IBC 707.4): "...shaft enclosures shall have a fire resistance ratings of not less...than 1 hour where connecting less than four stories."
   c. Machine Rooms (IBC 3006.4): "...machine rooms shall be enclosed with construction having a fire resistance rating of not less than the required rating of the hoistway enclosure..."
   d. Fireblocking Required (IBC 717): Required
   e. Smoke Barrier Required (IBC 709): Not Required
   f. Sprinklers Required (IBC 903): Not Required
   g. Standpipes Required (IBC 905): Not Required
   h. Fire Alarms Required (IBC 907): Required
   i. Draftstopping (IBC 717.3.3): Required
   j. Draftstopping (IBC 717.4.3): Required

9 Project in Fire District: Georgetown County

10. Plumbing Facilities: (IPC Chapter 4; Table 403.1)

	Required	Provided
Water Closets:	Male: 1; Female: 2	Male: 1; Female: 1
Lavatories:	Male: 1; Female: 1	Male: 1; Female: 1
Drinking Fountains:	1	1
Other: Service Sinks	1	1
Unisex Bathrooms (water closet and lavatory)	1	1
Staff Toilet	0	1

A1 / G0.0 — CODE COMPLIANCE
NO SCALE

ROOM NAME / RM # — ROOM TAG
101 — DOOR TAG
W1 — WINDOW TAG
DETAIL # / A9 / SHEET # / A5.2 — DETAIL TAG
DETAIL # / A1 / SHEET # / A4.0 — WALL SECTION TAG
DETAIL # / E1 / SHEET # / A3.1 — BUILDING SECTION TAG
A / B / C — INTERIOR ELEVATION TAG
1 — REVISION TAG
FEC — FIRE EXTINGUISHER SEE SPECIFICATIONS
ACCESSIBLE

H10 / G0.0 — SYMBOLS
NO SCALE

THE FOLLOWING IS A LIST OF ABBREVIATIONS (BUT NOT LIMITED TO), FOR USE WITH ALL ARCHITECTURAL DRAWINGS.

ACMU = ARCHITECTURAL CONCRETE MASONRY UNIT
ACT = ACOUSTICAL CEILING TILE
ADA = AMERICAN DISABILITIES ACT
AFF = ABOVE FINISH FLOOR
ALUM. = ALUMINUM
AP = ACCESS PANEL
BM. = BEAM
BTM. = BOTTOM
CLG. = CEILING
CMU = CONCRETE MASONRY UNIT
COL. = COLUMN
COORD. = COORDINATE
CPT = CARPET
CT = CERAMIC TILE
CTB = CERAMIC BASE TILE
CTW = CERAMIC WALL TILE
DR = DOOR
DTL. = DETAIL
EA. = EACH
ELEV. = ELEVATION
EXT. = EXTERIOR
FD = FLOOR DRAIN
FEC = FIRE EXTINGUISHER CABINET
FFE = FINISH FLOOR ELEVATION
FOM = FACE OF MASONRY
FPH = FROST PROOF HYDRANT
FRP = FIBERGLASS REINFORCED PANEL
GALV. = GALVANIZED
GYP. BD. = GYPSUM WALL BOARD
GWB = GYPSUM WALL BOARD
HDW. = HARDWARE
HGT. = HEIGHT
HM = HOLLOW METAL
INFO. = INFORMATION
INT. = INTERIOR
LAV = LAVATORY
MATL. = MATERIAL
MANUFACT. = MANUFACTURER
MANUF. = MANUFACTURER
MTL. = METAL
NA = NOT APPLICABLE
NIC = NOT IN CONTRACT
NL = NARROW LITE
OC. = ON CENTER
OFCI = OWNER FURNISHED CONTRACTOR INSTALLED
OFOI = OWNER FURNISHED OWNER INSTALLED
OPP = OPPOSITE
ORD. = OVERFLOW ROOF DRAIN
PLY = PLYWOOD
PLYWD. = PLYWOOD
PT = PASS THRU
PTD. = PAINTED
PWD = PLYWOOD
RCP = REFLECTED CEILING PLAN
RD. = ROOF DRAIN
RE = REFER TO / REFERENCE SHEET
RWB = RUBBER WALL BASE
SAP = SECURITY ACCESS PANEL
SCHED. = SCHEDULE
SHLVS. = SHELVES
SHM = SECURITY HOLLOW METAL
SIM. = SIMILAR
SNL = SECURITY NARROW LITE
TYP. = TYPICAL
UNO = UNLESS NOTED OTHERWISE
VCT = VINYL COMPOSITION TILE
W/ = WITH
WGTS. = WEIGHTS

H12 / G0.0 — ABBREVIATIONS
NO SCALE

WALL LEGEND (INTERIOR)

REFER TO SHEET A 1.1 FOR THE WALL LEGEND PLAN

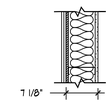

= EXTERIOR WALL: E1
CEMENTITIOUS SIDING ON BUILDING FELT ON EXTERIOR SHEATHING ON 6" METAL STUDS @ 16" O.C. W/ GYP BOARD INTERIOR AND BATT INSULATION

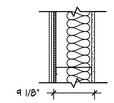

= EXTERIOR WALL: E2
CEMENTITIOUS SIDING ON BUILDING FELT ON EXTERIOR SHEATHING ON 8" METAL STUDS @ 16" O.C. W/ GYP BOARD INTERIOR AND BATT INSULATION

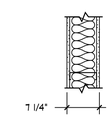

= INTERIOR WALL: 1
6" METAL STUDS @ 16" O.C. W/ GYP BD EA SIDE (W/ SOUND BATT INSULATION)

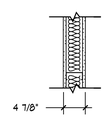

= INTERIOR WALL: 2
3-5/8" METAL STUDS @ 16" O.C. W/ GYP BD EA SIDE (W/ SOUND BATT INSULATION)

E10 / G0.0 — WALL LEGEND
NO SCALE

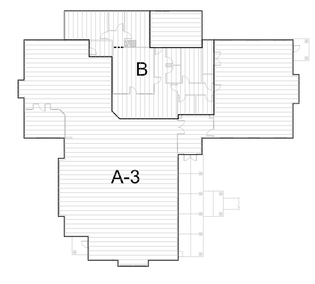

TOTAL OCCUPANT LOAD
197 PEOPLE

BUSINESS, B	26 OCCUPANTS
ASSEMBLY, A-3	171 OCCUPANTS
TOTAL	197 OCCUPANTS

A13 / G0.0 — OCCUPANCY DIAGRAMS
NO SCALE

GENERAL NOTES

A. DIMENSIONS ARE TO FACE OF STUDS OR CMU, CENTERLINE OF DOORS, CENTERLINE OF COLUMNS OR CENTERLINE OF WINDOWS, UNLESS NOTED OTHERWISE.

B. PLAN CUT IS TAKEN AT 4'-6" ABOVE FINISHED FLOOR.

C. NOTIFY ARCHITECT IMMEDIATELY UPON DISCOVERY OF ANY CONDITIONS THAT ARE CONTRARY TO THOSE REPRESENTED WITHIN THE DRAWINGS.

D. PROVIDE BLOCKING AT ALL WALL HUNG EQUIPMENT TO INCLUDE, BUT NOT LIMITED TO: GRAB BARS, CASEWORK AND TOILET ACCESSORIES.

E. ALL HEIGHTS FOR HANDICAP ELEMENTS ARE TO BE IN ACCORDANCE WITH THE ADA STANDARD FOR ACCESSIBLE DESIGN FOR MAKING FACILITIES ACCESSIBLE AND USABLE FOR PHYSICALLY HANDICAPPED PEOPLE. THE CONTRACTOR IS RESPONSIBLE FOR COORDINATION AND PROPER INSTALLATION OF ALL RELATED ELEMENTS.

F. PROVIDE MINIMUM OF 18" CLEAR ON THE PULL SIDE AND 12" CLEAR ON THE PUSH SIDE OF ALL ACCESSIBLE DOORS.

G. COORDINATE AND ALIGN STUD FRAMING WITH THE THICKNESS OF FINISH WALL MATERIAL SO THAT THE FINISH WALL IS IN A CONTINUOUS SMOOTH PLANE.

H. FEC = FIRE EXTINGUISHER CABINET. FINAL LOCATION TO BE APPROVED BY BOTH ARCHITECT AND LOCAL FIRE INSPECTOR.

I. ALL NON-BEARING PARTITION WALLS SHALL EXTEND A MINIMUM OF 6" ABOVE THE A.C.T. CEILING HEIGHT. BRACE WALLS TO STRUCTURE ABOVE EVERY 48" O.C. WITH METAL STUDS.

J. ALL INTERIOR STUD WALLS TO RECEIVE SOUND BATT INSULATION.

STATE OF SOUTH CAROLINA — MICHAEL WALKER, Pawleys Island, SC, 04394 — REGISTERED ARCHITECT

REVISION	DATE

TYCH & WALKER
ARCHITECTS, LLP
38 BLACKGUM ROAD, UNIT B
PO BOX 509
PAWLEYS ISLAND, SC 29576
843-651-7151
mwalker@tychwalker.com

A NEW LIBRARY FACILITY

SOUTHERN GEORGETOWN COMMUNITY LIBRARY

GEORGETOWN COUNTY, SOUTH CAROLINA

STATE OF SOUTH CAROLINA — TYCH & WALKER ARCHITECTS, LLP, Pawleys Island, SC, No. 95005 — REGISTERED ARCHITECTS

2016-04
04/03/19
CODE COMPLIANCE

G0.0

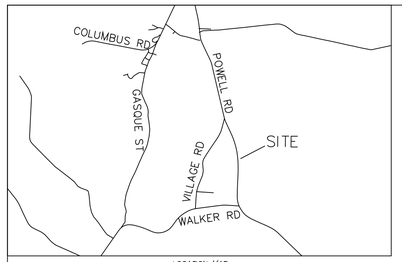

LOCATION MAP
N.T.S.

CURVE	RADIUS	ARC LENGTH	CHORD LENGTH	CHORD BEARING
C1	4520.52'	387.14'	387.03'	N 04°39'03" W

SC SPC'83

JOB #: C18-059 DAX

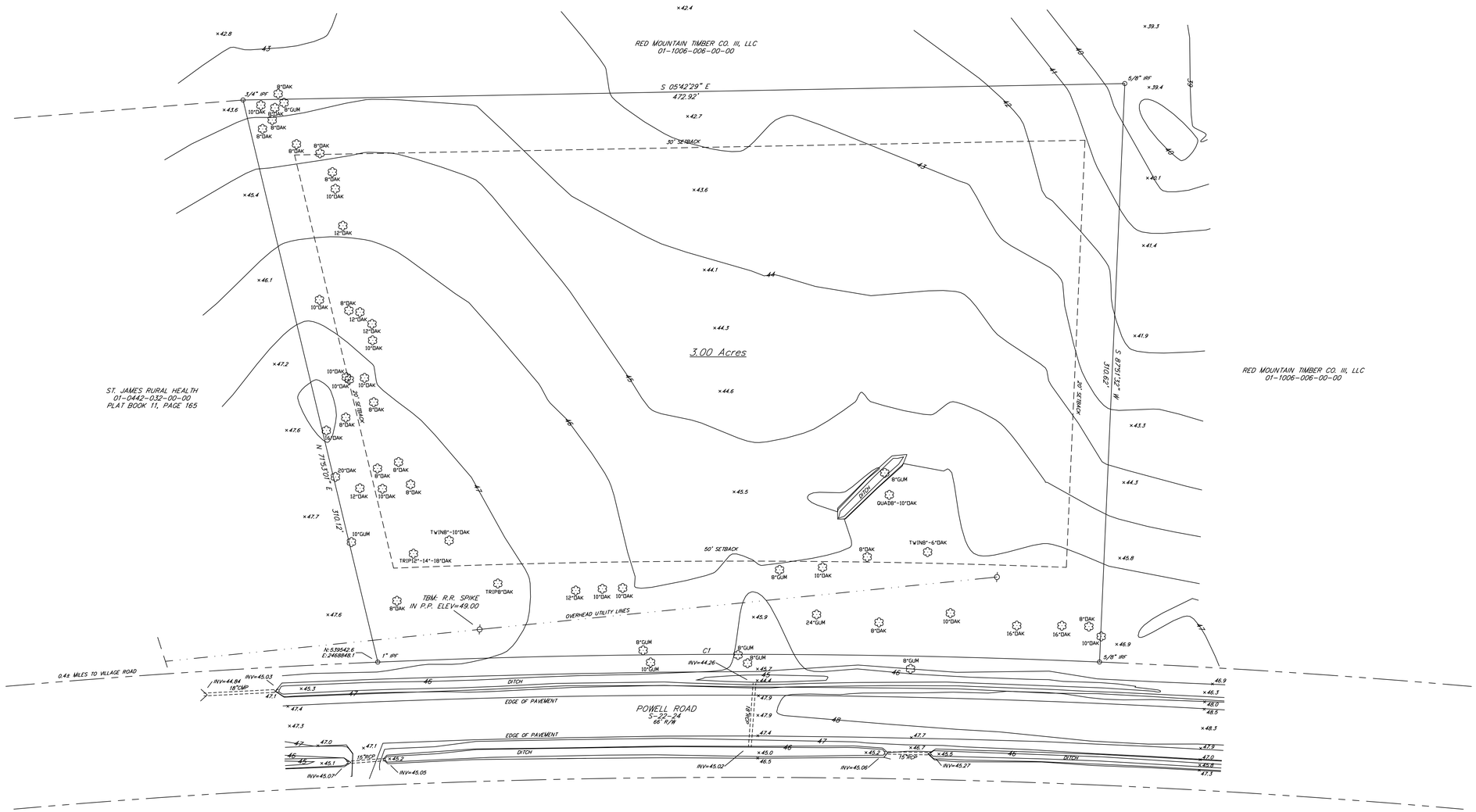

REFERENCES:

1. PLAT OF 3.0 ACRES LOT, DATED OCTOBER 13, 2015, PREPARED BY PARKER LAND SURVEYING, LLC, RECORDED IN RECORD BOOK 2690, PAGE 151.

2. DEED RECORDED IN RECORD BOOK 2690, PAGE 152.

3. GEORGETOWN COUNTY TAX MAP 01-1006-006-04-00.

NOTES:

1. THIS PROPERTY IS LOCATED IN FLOOD ZONE X, PER F.I.R.M. COMMUNITY PANEL 450085 0375 E, REVISED AUGUST 2, 1989.

2. ALL PROPERTY CORNERS SET ARE 5/8" OPEN PIPE UNLESS OTHERWISE NOTED.

3. OWNER OF RECORD: GEORGETOWN COUNTY
PO BOX 421270
GEORGETOWN, SC 29440

4. ZONED: FA
BUILDING SETBACKS: FRONT = 50'
SIDE = 20'
REAR = 30'
* SETBACKS TO BE VERIFIED BY GEORGETOWN COUNTY (AND IF APPLICABLE, VERIFIED BY APPROPRIATE HOA OR ARB).

5. THIS PROPERTY IS SUBJECT TO ALL EASEMENTS AND RESTRICTIONS OF RECORD. NO TITLE SEARCH PERFORMED BY THIS OFFICE.

6. THIS SURVEY WAS PREPARED FOR THE EXCLUSIVE USE OF THE PERSON(S) OR ENTITY APPEARING ON SAID SURVEY. THIS SURVEY DOES NOT EXTEND TO ANY UNNAMED PERSON(S) OR ENTITY WITHOUT AN EXPRESSED RECERTIFICATION BY PARKER LAND SURVEYING, LLC.

7. THIS SURVEY IS NULL AND VOID IF SIGNATURE AND EMBOSSED SEAL ARE ABSENT.

8. ALL BEARINGS AND COORDINATES SHOWN HEREON ARE BASED ON SOUTH CAROLINA STATE PLANE COORDINATE SYSTEM 1983. DISTANCES SHOWN HEREON ARE HORIZONTAL (GROUND) DISTANCES, NOT GRID DISTANCES.

9. ELEVATIONS SHOWN ARE BASED ON NAVD 88 DATUM.

Parker Land Surveying, LLC
400 Church Street
Georgetown, SC 29440
Phone: (843) 485-4405
Fax: (843) 554-7779

I HEREBY STATE TO THE BEST OF MY KNOWLEDGE, INFORMATION AND BELIEF, THE SURVEY SHOWN HEREON WAS MADE IN ACCORDANCE WITH THE REQUIREMENTS OF THE MINIMUM STANDARDS MANUAL FOR THE PRACTICE OF LAND SURVEYING IN SOUTH CAROLINA AND MEETS OR EXCEEDS THE REQUIREMENTS FOR A CLASS A SURVEY AS SPECIFIED THEREIN.

SOUTH CAROLINA PROFESSIONAL ENGINEER SEAL: GREGORY F. CUNNINGHAM, REGISTERED LAND SURVEYOR No. 17924

GREGORY F. CUNNINGHAM, S.C.L.S. No. 17924

SOUTH CAROLINA
PARKER LAND SURVEYING, LLC
No. C03814
CERTIFICATE OF AUTHORIZATION

EXISTING LOT OF RECORD
CERTIFIED TO BE A RESURVEY OF A PIECE, PARCEL OR LOT OF LAND SHOWN ON A MAP OR PLAT PREVIOUSLY RECORDED IN GEORGETOWN COUNTY IN RECORD
BOOK 2690 PAGE 151

LEGEND
I.P.F. - IRON PIPE FOUND
POWER POLE

0 15 30 45 60 90
ONE INCH = 30'

TOPOGRAPHIC SURVEY
OF 3.00 ACRES OF LAND, SURVEYED FOR
GEORGETOWN COUNTY

LOCATED IN THE SAMPIT SECTION,
GEORGETOWN COUNTY, SOUTH CAROLINA
DATE: APRIL 6, 2018

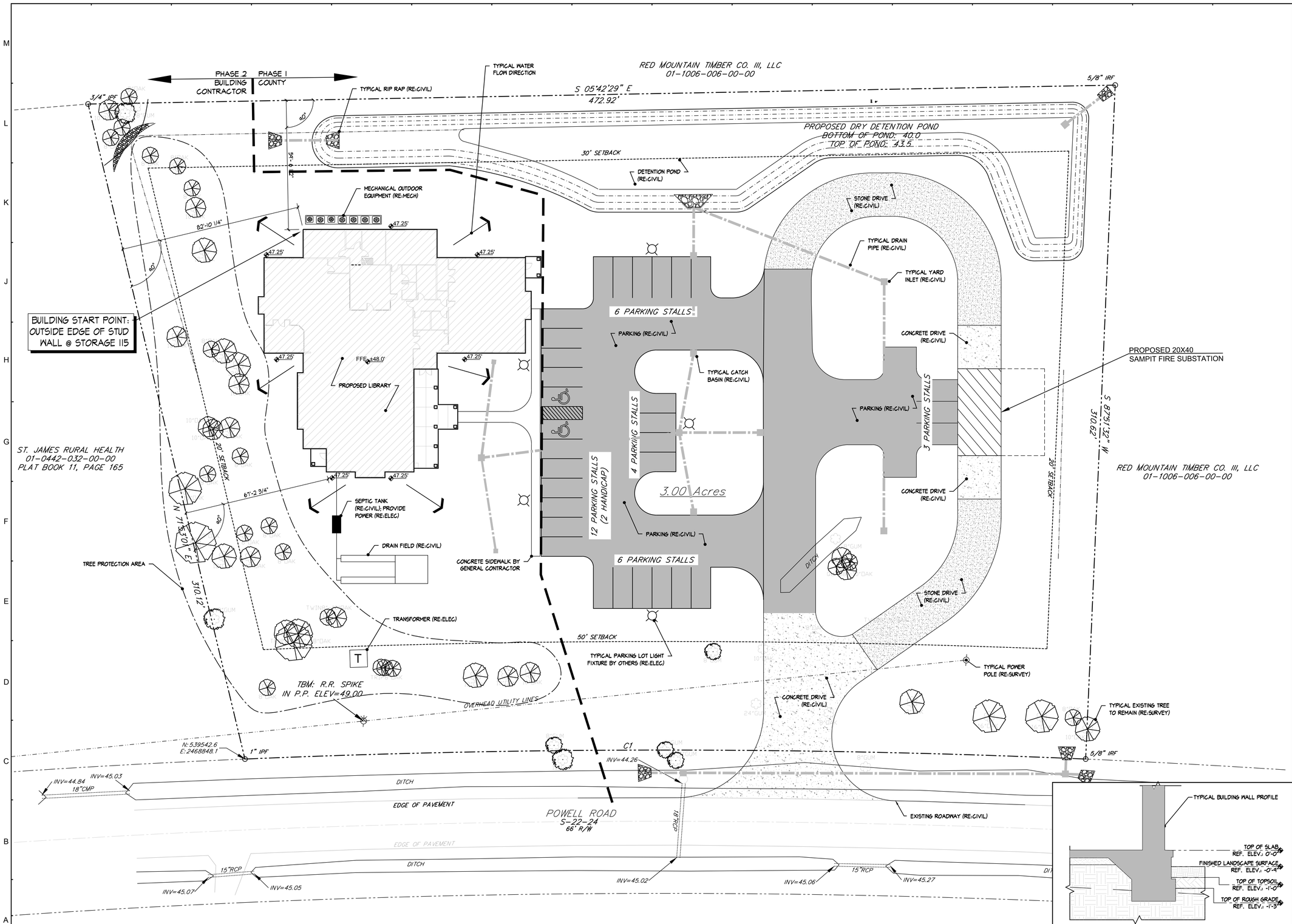

A1 SP1.0 — ARCHITECTURAL SITE PLAN

SCALE: 1"=30'-0"

A14 SP1.0 — GRADE DETAIL @ BUILDING

NO SCALE

GENERAL NOTES

A. SITE INFORMATION OF TMS# 01-1006-006-04-00 ARE BASED ON SURVEY PROVIDE BY OWNER AND DRAWN BY PARKER LAND SURVEYING, LLC; 400 CHURCH STREET, GEORGETOWN, SC 29440; PHONE: (843) 485-4405; FAX: (843) 554-7719

B. THE CONTRACTOR IS TO GRADE THE SITE IN SUCH A WAY AS TO ENSURE ADEQUATE DRAINAGE AWAY FROM ALL BUILDINGS. PONDING SHOULD BE AVOIDED IN ALL INSTANCES. REFER TO CIVIL DRAWINGS FOR GRADING INFORMATION.

C. THE CONTRACTOR SHALL LOCATE ALL UTILITIES PRIOR TO INITIATING CONSTRUCTION.

D. THE CONTRACTOR SHALL COORDINATE THE LOCATION OF ALL UTILITIES AND THEIR TIE-INS WITH THE CITY/COUNTY AGENCIES. THE CONTRACTOR SHALL REPAIR ANY DAMAGE TO THE EXISTING CONDITIONS TO THE SATISFACTION OF THE REGULATORY AUTHORITIES. THE CONTRACTOR SHALL ALSO EMPLOY A R.L.S. TO LOCATE THE BUILDING AND CERTIFY COMPLIANCE WITH ALL CITY/COUNTY REGULATIONS.

E. THE CONTRACTOR SHALL EMPLOY A R.L.S. TO VERIFY, DEFINE AND CLEARLY MARK ALL PROPERTY LINES PRIOR TO THE COMMENCEMENT OF WORK. MARK THE SIDE AND REAR PROPERTY BOUNDARY LINES AND MAINTAIN FOR THE DURATION OF THE PROJECT.

F. ANY AND ALL WORK SHALL BE MAINTAINED WITHIN THE PROPERTY LINES (APART FROM WHAT WORK FALLS WITHIN AN EASEMENT) THE CONTRACTOR IS RESPONSIBLE FOR ANY INTRUSION OR DAMAGE TO ADJACENT PROPERTY.

G. THE CONTRACTOR SHALL PREPARE A GRAVEL DRIVE AREA DURING THE CONSTRUCTION; REFER TO CIVIL DRAWINGS.

H. THE CONTRACTOR IS RESPONSIBLE FOR MAINTAINING A CLEAN JOB SITE AT ALL TIMES AND REMOVING DEBRIS ON A REGULAR BASIS. ALL LOOSE TRASH WILL BE MAINTAINED ON SITE AND/OR CLEANED UP BY THE CONTRACTOR.

I. REFER TO CIVIL DRAWINGS FOR ALL CIVIL INFORMATION.

J. FLOOR REFERENCE ELEVATION 0'-0" EQUALS THE EXISTING VERTICAL ELEVATION OF BUILDING SLAB AS INDICATED ON CIVIL DRAWINGS.

K. PROVIDE 4" CONCRETE PAD ON COMPACTED SOIL FOR ALL MECHANICAL OUTDOOR UNITS. THE PAD SHALL EXTEND 6" MIN. BEYOND EACH EDGE OF THE OVERALL EQUIPMENT LAYOUT. THE PAD SHALL BE A MIN. OF 12" OFF THE EDGE OF THE BUILDING.

L. FFE = FINISHED FLOOR ELEVATION. 48.00' IS REPRESENTED AS 0'-0" FOR ARCHITECTURAL BENCHMARK. REFER TO CIVIL.

M. PROVIDE DETECTABLE WARNINGS AS PER THE ADA GUIDELINES.

N. TOP OF ROUGH GRADE ALL AROUND BUILDING SHALL BE 46.75' UNLESS NOTED OTHERWISE. SEE A14/SP1.0. REFER TO CIVIL.

LEGEND

PROPERTY LINE

BUILDING SETBACK LINE

MICHAEL WALKER
Pawleys Island, SC
04394
REGISTERED ARCHITECT
SOUTH CAROLINA

REVISION	DATE

TYCH & WALKER
ARCHITECTS, LLP
38 BLACKGUM ROAD, UNIT B
PO BOX 509
PAWLEYS ISLAND, SC 29576
843-651-7151
mwalker@tychwalker.com

A NEW LIBRARY FACILITY

SOUTHERN GEORGETOWN COMMUNITY LIBRARY

GEORGETOWN COUNTY, SOUTH CAROLINA

STATE OF SOUTH CAROLINA
TYCH & WALKER ARCHITECTS, LLP
Pawleys Island, SC
No. 9500S
REGISTERED ARCHITECTS

2016-04	
04/03/19	
ARCHITECTURAL SITE PLAN	

SP1.0

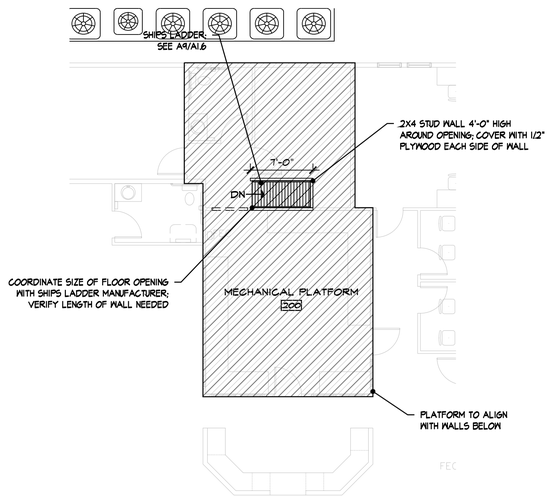

A1 / A1.0 — MECHANICAL PLATFORM PLAN

SCALE: 1/8"=1'-0"

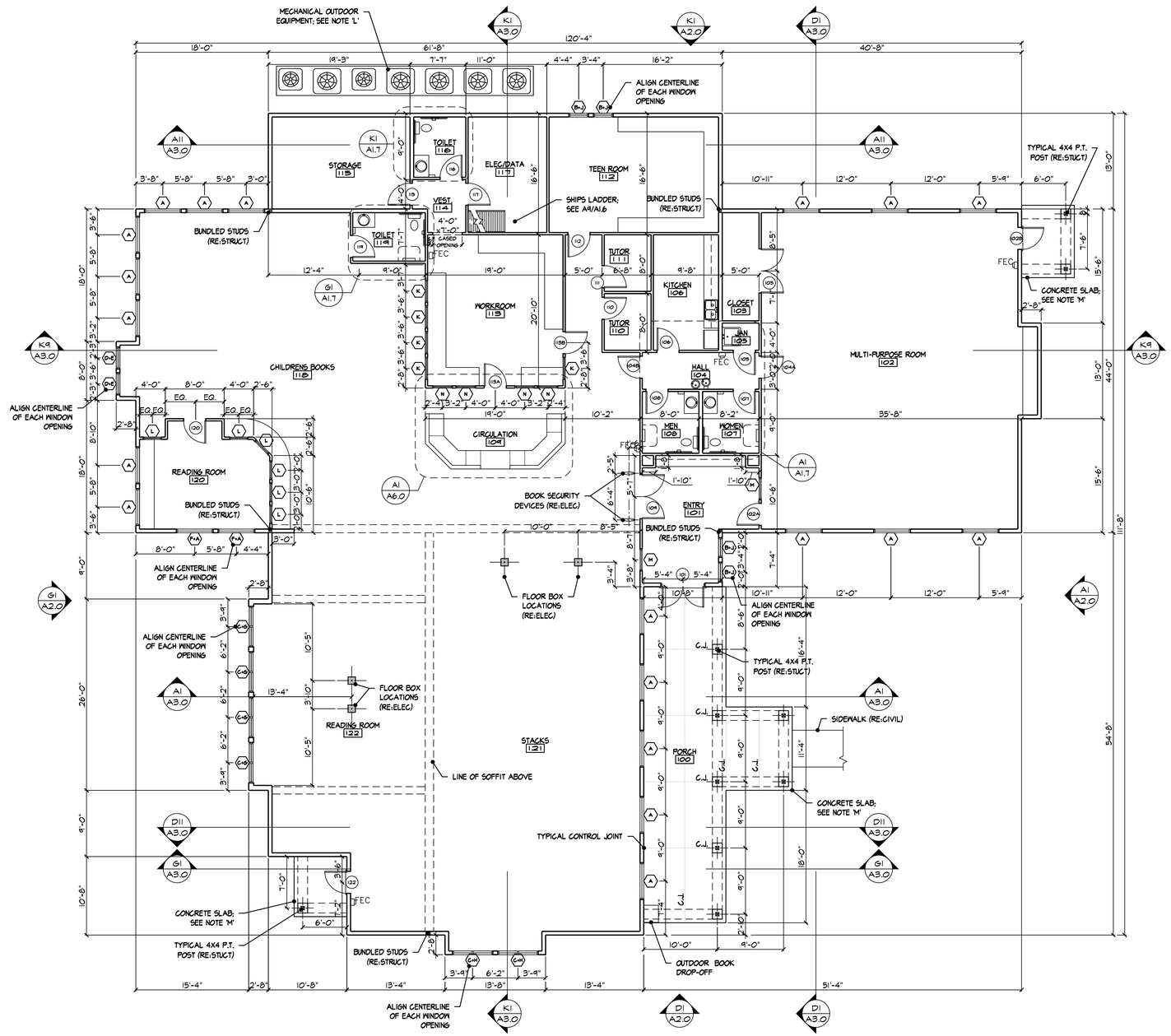

A6 / A1.0 — FLOOR PLAN

SCALE: 1/8"=1'-0"

GENERAL NOTES

A. NOTIFY ARCHITECT IMMEDIATELY UPON DISCOVERY OF ANY CONDITIONS THAT ARE CONTRARY TO THOSE REPRESENTED WITHIN THE DRAWINGS.

B. DIMENSIONS ARE FACE OF STUDS OR CMU, CENTERLINE OF DOORS, CENTERLINE OF COLUMNS OR CENTERLINE OF WINDOWS, UNLESS NOTED OTHERWISE.

C. THE PLAN CUT IS TAKEN AT 4'-6" AFF.

D. PROVIDE BLOCKING AT ALL WALL HUNG EQUIPMENT TO INCLUDE, BUT NOT LIMITED TO, GRAB BARS, CASEWORK AND TOILET ACCESSORIES.

E. ALL HEIGHTS FOR HANDICAP ELEMENTS ARE TO BE IN ACCORDANCE WITH THE ADA FOR MAKING FACILITIES ACCESSIBLE AND USABLE FOR PHYSICALLY HANDICAPPED PEOPLE. THE CONTRACTOR IS RESPONSIBLE FOR COORDINATION AND PROPER INSTALLATION OF ALL RELATED ELEMENTS.

F. PROVIDE MINIMUM OF 18" CLEAR ON THE PULL SIDE AND 12" CLEAR ON THE PUSH SIDE OF ALL ACCESSIBLE DOORS.

G. COORDINATE AND ALIGN STUD FRAMING WITH THE THICKNESS OF FINISH WALL MATERIAL SO THAT THE FINISH WALL IS IN A CONTINUOUS SMOOTH PLANE.

H. INSULATE ALL PIPE IN UNCONDITIONED SPACES.

I. INSULATE CEILINGS; ALL EXTERIOR WALLS. ALL INTERIOR WALLS TO RECEIVE SOUND BATT ATTENUATION.

J. REFERENCE INTERIOR DETAILS FOR CASEWORK AND SHELVING INFORMATION. REFERENCE THE INTERIOR ELEVATIONS FOR ALL SOFFIT AND CEILING HEIGHTS.

K. THE TYPICAL LOCATION OF ALL INTERIOR DOORS SHALL BE 6" FROM THE ADJACENT WALL UNLESS OTHERWISE NOTED.

L. PROVIDE 4" CONCRETE PADS W/WWM ON COMPACTED SOIL FOR ALL MECHANICAL COMPRESSORS. THE PADS SHOULD EXTEND 6" BEYOND THE EACH EDGE OF THE OVERALL CONFIGURATION. THE PAD SHALL BE 12" MIN. OFF THE EDGE OF THE BUILDING.

M. 4" CONCRETE SLAB; SLOPE CONCRETE SLAB 1/8" PER FOOT AWAY FROM BUILDING. PROVIDE MIN. 36" LANDING AT DOOR WITH SLOPE NO GREATER THAN 1:48. PROVIDE LIGHT BROOM FINISH WITH 2-1/2" HAND FINISHED EDGE AT ALL JOINTS AND EDGES.

N. ALL ROOFING AND FLASHING COMPONENTS TO CONFORM WITH THE LATEST EDITION OF THE SHEET METAL AND AIR CONDITIONING CONTRACTOR'S NATIONAL ASSOCIATION, INC. (SMACNA) ARCHITECTURAL SHEET METAL MANUAL AND THE NATIONAL ROOFING CONTRACTORS ASSOCIATION (NRCA) ROOFING AND WATERPROOFING MANUAL..

O. PROVIDE SPLASH BLOCK AT GRADE FOR ALL DOWNSPOUTS.

P. FEC = FIRE EXTINGUISHER CABINET. FINAL LOCATION TO BE APPROVED BY BOTH ARCHITECT AND LOCAL FIRE INSPECTOR.

TYCH & WALKER
ARCHITECTS, LLP
38 BLACKGUM ROAD, UNIT B
PO BOX 509
PAWLEYS ISLAND, SC 29576
843-651-7151
mwalker@tychwalker.com

REVISION	DATE

A NEW LIBRARY FACILITY

SOUTHERN GEORGETOWN COMMUNITY LIBRARY

GEORGETOWN COUNTY, SOUTH CAROLINA

STATE OF SOUTH CAROLINA — TYCH & WALKER ARCHITECTS, LLP, Pawleys Island, SC, No. 95005 — REGISTERED ARCHITECTS

2016-04	
04/03/19	
COMPOSITE FLOOR PLAN	
A1.0	

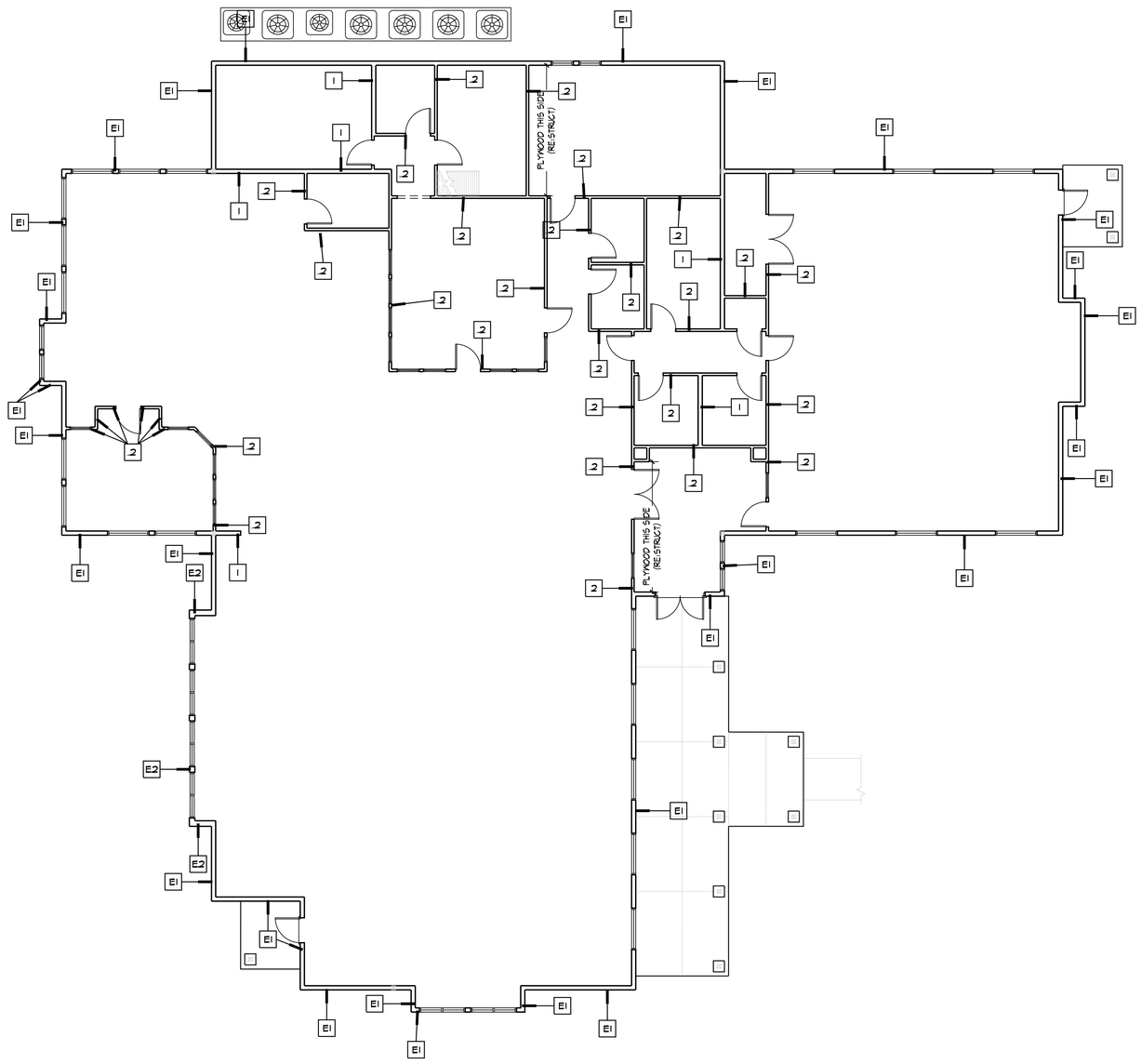

GENERAL NOTES

A. NOTIFY ARCHITECT IMMEDIATELY UPON DISCOVERY OF ANY CONDITIONS THAT ARE CONTRARY TO THOSE REPRESENTED WITHIN THE DRAWINGS.

B. DIMENSIONS ARE FACE OF STUDS OR CMU, CENTERLINE OF DOORS, CENTERLINE OF COLUMNS OR CENTERLINE OF WINDOWS, UNLESS NOTED OTHERWISE.

C. THE PLAN CUT IS TAKEN AT 4'-6" AFF.

D. PROVIDE BLOCKING AT ALL WALL HUNG EQUIPMENT TO INCLUDE, BUT NOT LIMITED TO, GRAB BARS, CASEWORK AND TOILET ACCESSORIES.

E. ALL HEIGHTS FOR HANDICAP ELEMENTS ARE TO BE IN ACCORDANCE WITH THE ADA FOR MAKING FACILITIES ACCESSIBLE AND USABLE FOR PHYSICALLY HANDICAPPED PEOPLE. THE CONTRACTOR IS RESPONSIBLE FOR COORDINATION AND PROPER INSTALLATION OF ALL RELATED ELEMENTS.

F. PROVIDE MINIMUM OF 18" CLEAR ON THE PULL SIDE AND 12" CLEAR ON THE PUSH SIDE OF ALL ACCESSIBLE DOORS.

G. COORDINATE AND ALIGN STUD FRAMING WITH THE THICKNESS OF FINISH WALL MATERIAL SO THAT THE FINISH WALL IS IN A CONTINUOUS SMOOTH PLANE.

H. INSULATE ALL PIPE IN UNCONDITIONED SPACES.

I. INSULATE CEILINGS; ALL EXTERIOR WALLS. ALL INTERIOR WALLS TO RECEIVE SOUND BATT ATTENUATION.

J. REFERENCE INTERIOR DETAILS FOR CASEWORK AND SHELVING INFORMATION. REFERENCE THE INTERIOR ELEVATIONS FOR ALL SOFFIT AND CEILING HEIGHTS.

K. THE TYPICAL LOCATION OF ALL INTERIOR DOORS SHALL BE 6" FROM THE ADJACENT WALL UNLESS OTHERWISE NOTED.

L. PROVIDE 4" CONCRETE PADS W/WWM ON COMPACTED SOIL FOR ALL MECHANICAL COMPRESSORS. THE PADS SHOULD EXTEND 6" BEYOND THE EACH EDGE OF THE OVERALL CONFIGURATION. THE PAD SHALL BE 12" MIN. OFF THE EDGE OF THE BUILDING.

M. SLOPE CONCRETE SLAB 1/8" PER FOOT AWAY FROM BUILDING. PROVIDE MIN. 36" LANDING AT DOOR WITH SLOPE NO GREATER THAN 1:48. PROVIDE LIGHT BROOM FINISH WITH 2-1/2" HAND FINISHED EDGE AT ALL JOINTS AND EDGES.

N. ALL ROOFING AND FLASHING COMPONENTS TO CONFORM WITH THE LATEST EDITION OF THE SHEET METAL AND AIR CONDITIONING CONTRACTOR'S NATIONAL ASSOCIATION, INC. (SMACNA) ARCHITECTURAL SHEET METAL MANUAL AND THE NATIONAL ROOFING CONTRACTORS ASSOCIATION (NRCA) ROOFING AND WATERPROOFING MANUAL..

O. PROVIDE SPLASH BLOCK AT GRADE FOR ALL DOWNSPOUTS.

MICHAEL WALKER
Pawleys Island, SC
04394
REGISTERED ARCHITECT
NORTH CAROLINA
4/3/19

REVISION DATE

TYCH & WALKER
ARCHITECTS, LLP

38 BLACKGUM ROAD, UNIT B
PO BOX 509
PAWLEYS ISLAND, SC 29576
843 651 7151

mwalker@tychwalker.com

A NEW LIBRARY FACILITY

SOUTHERN GEORGETOWN COMMUNITY LIBRARY

GEORGETOWN COUNTY, SOUTH CAROLINA

STATE OF SOUTH CAROLINA
TYCH & WALKER ARCHITECTS, LLP
Pawleys Island, SC
No. 95005
REGISTERED ARCHITECTS

2016-04

04/03/19

WALL TYPE PLAN

A1.1

A1
A1.1

WALLTYPE PLAN

SCALE: 1/8"=1'-0"

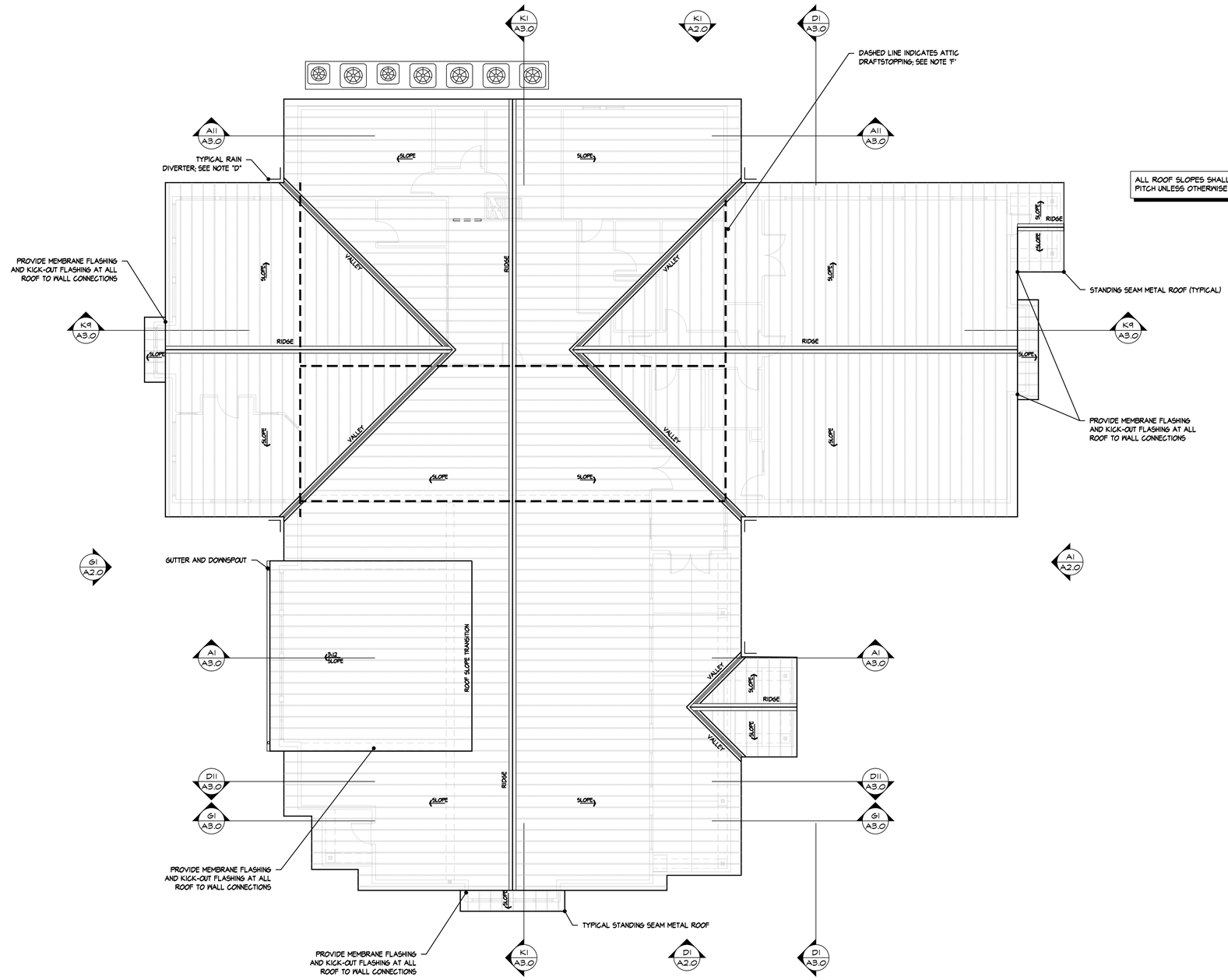

ALL ROOF SLOPES SHALL BE 5:12 PITCH UNLESS OTHERWISE NOTED

GENERAL NOTES

A. NOTIFY ARCHITECT IMMEDIATELY UPON DISCOVERY OF ANY CONDITIONS THAT ARE CONTRARY TO THOSE REPRESENTED WITHIN THE DRAWINGS.

B. ALL ROOFING AND FLASHING COMPONENTS TO CONFORM WITH THE LATEST EDITION OF THE SHEET METAL AND AIR CONDITIONING CONTRACTOR'S NATIONAL ASSOCIATION, INC. (SMACNA) ARCHITECTURAL SHEET METAL MANUAL AND THE NATIONAL ROOFING CONTRACTORS ASSOCIATION (NRCA) ROOFING AND WATERPROOFING MANUAL.

C. PROVIDE MEMBRANE FLASHING AT ALL ROOF TO WALL CONNECTIONS.

D. PROVIDE RAIN DIVERTERS AT ALL VALLEYS AND ABOVE ENTRANCES/EXITS DESPITE NOT BEING SHOWN ON DRAWINGS. COORDINATE LOCATIONS WITH ARCHITECT.

E. PROVIDE DOWNSPOUTS AND COORDINATE LOCATION OF ALL DOWNSPOUTS WITH ARCHITECT. NOT SHOWN ON DRAWING FOR CLARITY. PROVIDE SPLASH BLOCKS ON GRADE FOR ALL DOWNSPOUTS WHERE PROVIDED.

F. DRAFTSTOPPING SHALL BE INSTALLED IN ATTICS AND CONCEALED ROOF SPACES, SUCH THAT ANY HORIZONTAL AREA DOES NOT EXCEED 3,000 SQUARE FEET. DRAFTSTOPPING MATERIALS SHALL BE NOT LESS THAN 1/2-INCH GYPSUM BOARD, 3/8-INCH WOOD STRUCTURAL PANEL, 3/8-INCH PARTICLEBOARD, 1-INCH NOMINAL LUMBER, CEMENT FIBERBOARD, BATTS OR BLANKETS OF MINERAL WOOL OR GLASS FIBER, OR OTHER APPROVED MATERIALS ADEQUATELY SUPPORTED. THE INTEGRITY OF DRAFTSTOPS SHALL BE MAINTAINED.

STATE OF SOUTH CAROLINA
MICHAEL WALKER
Pawleys Island, SC
04394
REGISTERED ARCHITECT
04/03/19

REVISION	DATE

TYCH & WALKER
ARCHITECTS, LLP
38 BLACKGUM ROAD, UNIT B
PO BOX 509
PAWLEYS ISLAND, SC 29576
843-651-7151
mwalker@tychwalker.com

A NEW LIBRARY FACILITY

SOUTHERN GEORGETOWN COMMUNITY LIBRARY

GEORGETOWN COUNTY, SOUTH CAROLINA

STATE OF SOUTH CAROLINA
TYCH & WALKER ARCHITECTS, LLP
Pawleys Island, SC
No. 95005
REGISTERED ARCHITECTS

2016-04	
04/03/19	
ROOF PLAN	
A1.2	

A1 / A1.2

ROOF PLAN

SCALE: 1/8"=1'-0"

DOOR AND FRAME SCHEDULE

DR NO.	MATERIAL	ELEV.	DOOR WIDTH	DOOR HEIGHT	DOOR THK	FRAME MATL	FRAME ELEV	DETAIL HEAD	DETAIL JAMB	DETAIL SILL	REMARKS
103	WOOD	DF	6'-0"	7'-0"	1 3/4"	HM	2	A5/A1.4	A1/A1.4	--	--
101	ASF	DG	6'-0"	7'-0"	1 3/4"	ASF	--	J14/A1.3	E14/A1.3	A14/A1.3	TRANSOM
109	WOOD/GLASS		6'-0"	7'-0"	1 3/4"	HM	2	A5/A1.3	A1/A1.3	--	--
102B	METAL	F	3'-0"	7'-0"	1 3/4"	HM	1	J10/A1.3	E10/A1.3	A10/A1.3	--
122			3'-0"	7'-0"	1 3/4"	HM	1	J10/A1.3	E10/A1.3	A10/A1.3	--
104A	WOOD		3'-0"	7'-0"	1 3/4"	HM	1	A5/A1.3	A1/A1.3	--	--
105			3'-0"	7'-0"	1 3/4"	HM	1	A5/A1.3	A1/A1.3	--	--
106			3'-0"	7'-0"	1 3/4"	HM	1	A5/A1.3	A1/A1.3	--	--
107			3'-0"	7'-0"	1 3/4"	HM	1	A5/A1.3	A1/A1.3	--	--
108			3'-0"	7'-0"	1 3/4"	HM	1	A5/A1.3	A1/A1.3	--	--
115			3'-0"	7'-0"	1 3/4"	HM	1	A5/A1.3	A1/A1.3	--	--
116			3'-0"	7'-0"	1 3/4"	HM	1	A5/A1.3	A1/A1.3	--	--
117			3'-0"	7'-0"	1 3/4"	HM	1	A5/A1.3	A1/A1.3	--	--
119			3'-0"	7'-0"	1 3/4"	HM	1	A5/A1.3	A1/A1.3	--	--
104B	WOOD/GLASS	FG	3'-0"	7'-0"	1 3/4"	HM	1	A5/A1.3	A1/A1.3	--	--
112			3'-0"	7'-0"	1 3/4"	HM	1	A5/A1.3	A1/A1.3	--	--
120			3'-0"	7'-0"	1 3/4"	HM	1	A5/A1.3	A1/A1.3	--	--
102A	WOOD	HG	3'-0"	7'-0"	1 3/4"	HM	1	A5/A1.3	A1/A1.3	--	--
110			3'-0"	7'-0"	1 3/4"	HM	1	A5/A1.3	A1/A1.3	--	--
111			3'-0"	7'-0"	1 3/4"	HM	1	A5/A1.3	A1/A1.3	--	--
113A			3'-0"	7'-0"	1 3/4"	HM	1	A5/A1.3	A1/A1.3	--	--
113B			3'-0"	7'-0"	1 3/4"	HM	1	A5/A1.3	A1/A1.3	--	--

G1 / A1.3 — DOOR AND FRAME SCHEDULE
NO SCALE

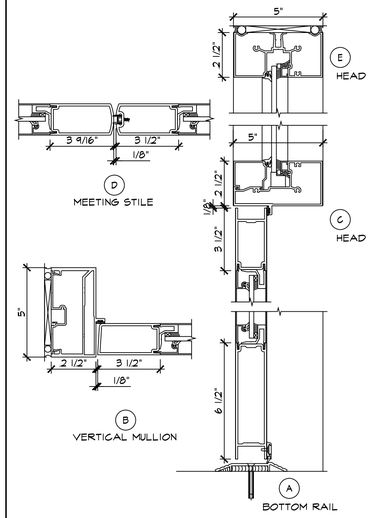

G7 / A1.3 — STOREFRONT DETAILS
SCALE: 3" = 1'-0"

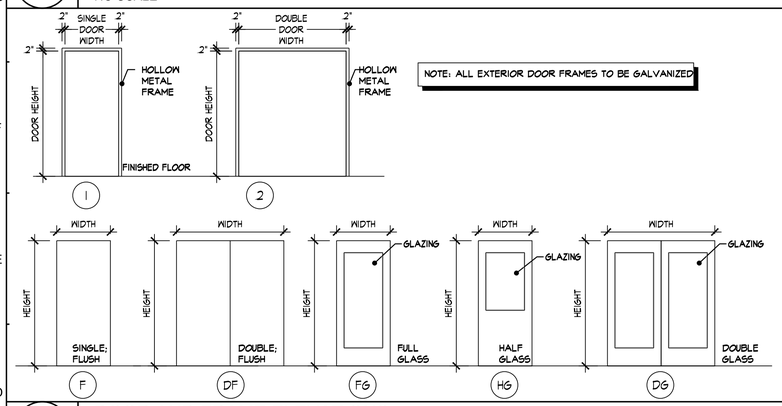

NOTE: ALL EXTERIOR DOOR FRAMES TO BE GALVANIZED

D1 / A1.3 — DOOR AND FRAME ELEVATIONS
NO SCALE

REFER TO DETAIL G7/A1.3 FOR ALL CALLOUTS

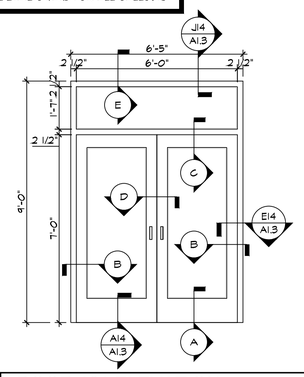

D7 / A1.3 — DOOR 101 ELEVATION
SCALE: 3/8" = 1'-0"

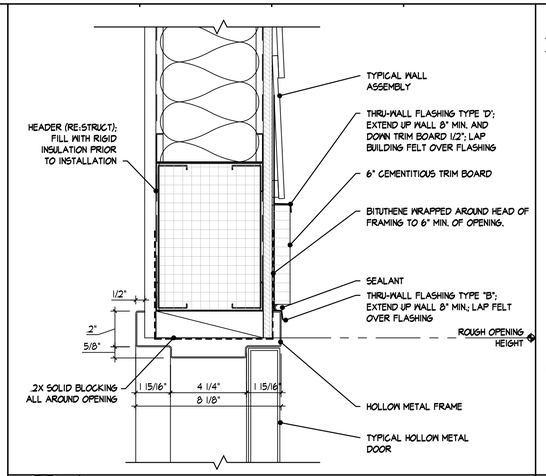

J10 / A1.3 — TYPICAL HOLLOW METAL DOOR HEAD
SCALE: 3"=1'-0"

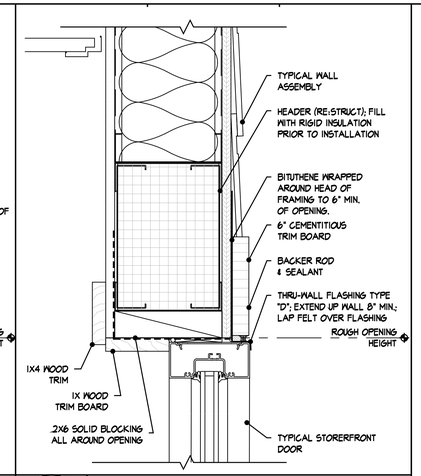

J14 / A1.3 — STOREFRONT DOOR HEAD
SCALE: 3"=1'-0"

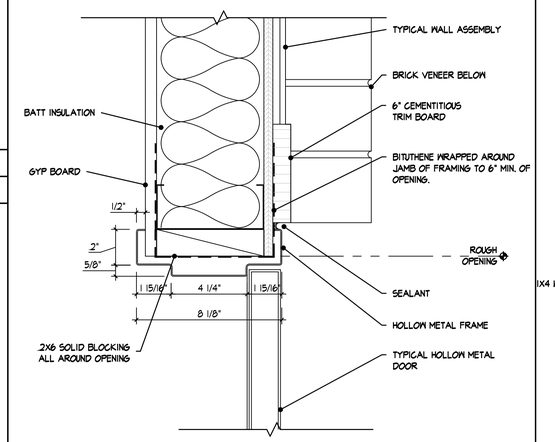

E10 / A1.3 — EXTERIOR HOLLOW METAL DOOR JAMB
SCALE: 3"=1'-0"

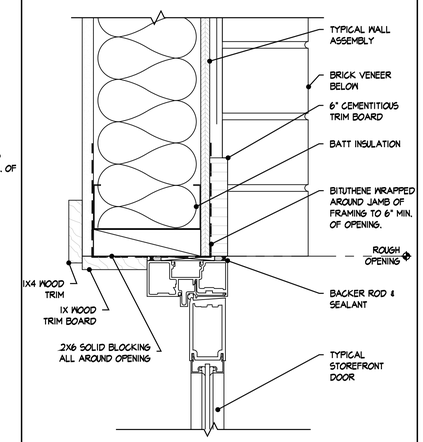

E14 / A1.3 — STOREFRONT DOOR JAMB
SCALE: 3"=1'-0"

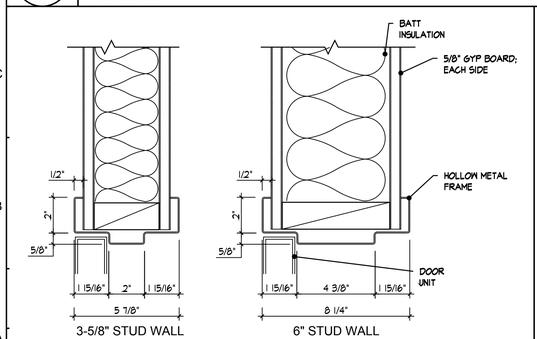

A1 / A1.3 — INTERIOR DOOR JAMB DETAIL
SCALE: 3"=1'-0"

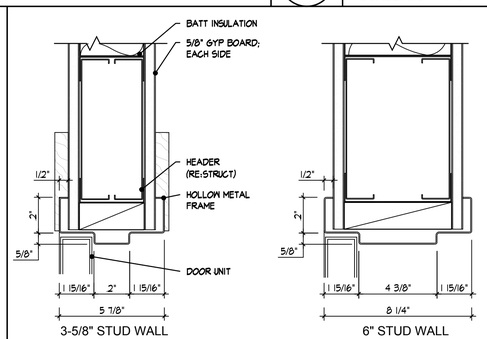

A5 / A1.3 — INTERIOR DOOR HEAD DETAIL
SCALE: 3"=1'-0"

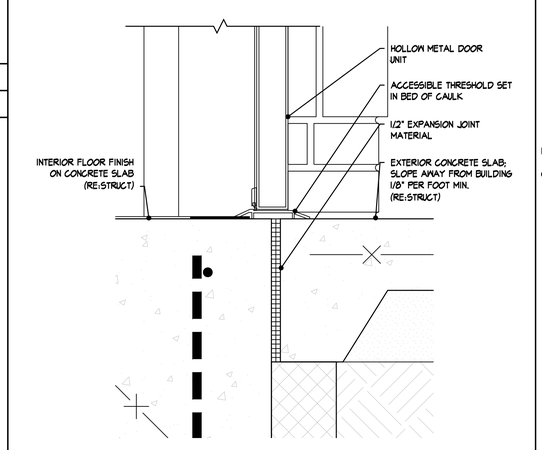

A10 / A1.3 — EXTERIOR HOLLOW METAL DOOR SILL
SCALE: 3"=1'-0"

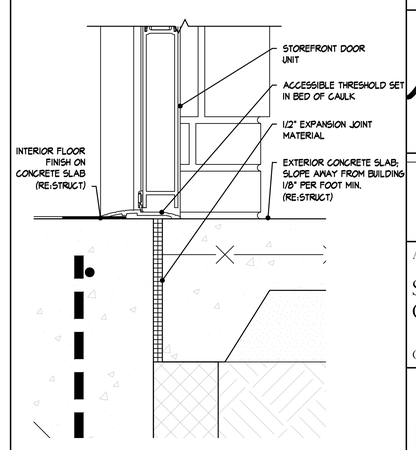

A14 / A1.3 — STOREFRONT DOOR SILL
SCALE: 3"=1'-0"

GENERAL NOTES

TYCH & WALKER
ARCHITECTS, LLP
38 BLACKGUM ROAD, UNIT B
PO BOX 509
PAWLEYS ISLAND, SC 29576
843-651-7151
mwalker@tychwalker.com

STATE OF SOUTH CAROLINA — MICHAEL WALKER — Pawleys Island, SC — 04394 — REGISTERED ARCHITECT

REVISION	DATE

A NEW LIBRARY FACILITY

SOUTHERN GEORGETOWN COMMUNITY LIBRARY

GEORGETOWN COUNTY, SOUTH CAROLINA

STATE OF SOUTH CAROLINA — TYCH & WALKER ARCHITECTS, LLP — Pawleys Island, SC — No. 95005 — REGISTERED ARCHITECTS

2016-04
04/03/19
DOOR SCHEDULE AND HOLLOW METAL DETAILS

A1.3

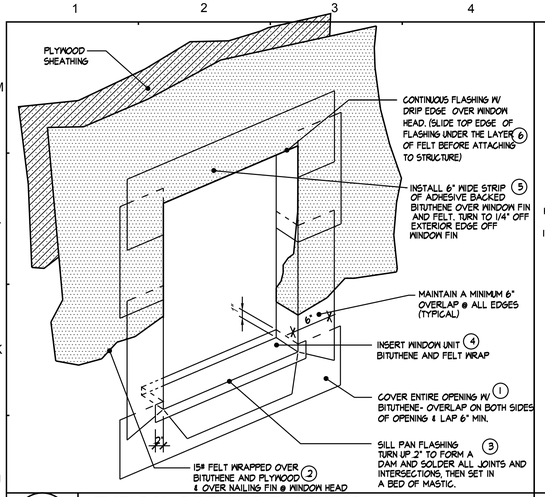

J1 / A1.4 — TYPICAL OPENING/FLASHING

NO SCALE

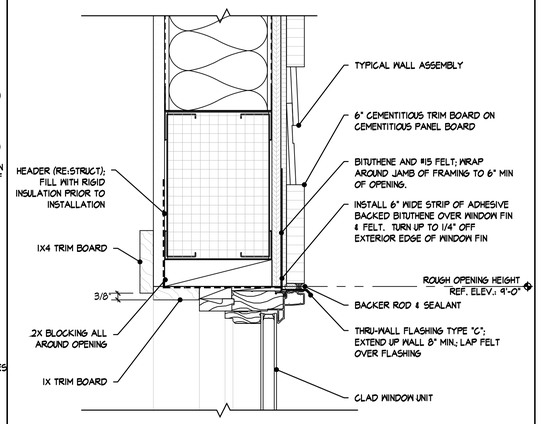

J5 / A1.4 — TYPICAL HIGH WINDOW HEAD

SCALE: 3"=1'-0"

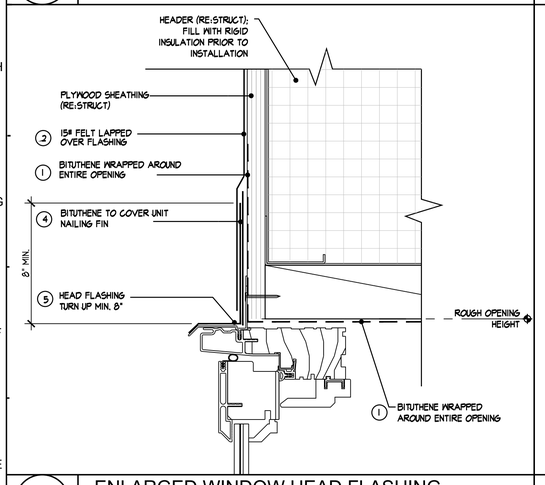

E1 / A1.4 — ENLARGED WINDOW HEAD FLASHING

SCALE: 6"=1'-0"

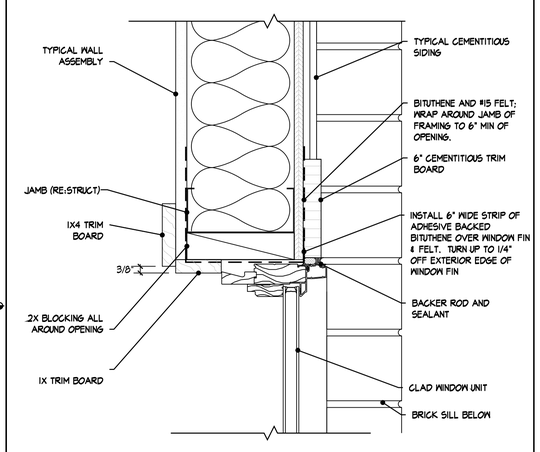

E5 / A1.4 — TYPICAL HIGH WINDOW JAMB

SCALE: 3"=1'-0"

WINDOW SCHEDULE

QUANTITY	MARK	LOCATION	TYPE	MATERIAL	SIZE		DETAILS			NOTES
					WIDTH	HEIGHT	HEAD	JAMB	SILL	
21	A	EXTERIOR	FIXED CASEMENT	CLAD	5'-0"	2'-4"	J5/A1.4	E5/A1.4	A5/A1.4	--
4	B		FIXED CASEMENT	CLAD	2'-8"	4'-0"	J13/A1.5	E13/A1.5	A13/A1.5	--
6	C		FIXED CASEMENT	CLAD	5'-6"	6'-0"	E5/A1.5	E1/A1.5	A5/A1.5	--
2	D		FIXED CASEMENT	CLAD	3'-0"	4'-0"	E9/A1.5	A1/A1.5	A9/A1.5	--
2	E		FIXED CASEMENT	CLAD	2'-4"	3'-0"	J9/A1.5	A1/A1.5	E9/A1.5	--
2	F		FIXED CASEMENT	CLAD	2'-4"	2'-4"	J13/A1.5	E13/A1.5	A13/A1.5	--
4	G		FIXED CASEMENT	CLAD	5'-6"	5'-6"	J5/A1.5	E1/A1.5	E5/A1.5	--
2	H		FIXED CASEMENT	CLAD	5'-6"	3'-0"	J5/A1.5	E1/A1.5	E5/A1.5	--
4	J		FIXED CASEMENT	CLAD	2'-8"	2'-4"	J9/A1.5	A1/A1.5	E9/A1.5	--
5	K	INTERIOR	FIXED	WOOD	3'-0"	3'-6"	F6/A1.6	A1/A1.6	F6/A1.6	--
6	L		FIXED	WOOD	2'-6"	4'-0"	F6/A1.6	A1/A1.6	F6/A1.6	--
2	M		FIXED	WOOD	3'-0"	4'-0"	F6/A1.6	A1/A1.6	F6/A1.6	--
4	N		FIXED	WOOD	2'-8"	3'-6"	F6/A1.6	A1/A1.6	F6/A1.6	--

BASIS OF DESIGN: KOLBE & KOLBE CLAD FIXED WINDOWS.
- WINDOW MATERIAL SHALL BE EXTRUDED ALUMINUM.
- COORDINATE ALL TEMPERED GLASS LOCATIONS.
- COORDINATE ALL ROUGH OPENING SIZES.

ALTERNATE #1: IMPACT WINDOW ELEVATIONS
PROVIDE MULLION AS SHOWN FOR IMPACT RATED UNITS FOR WINDOWS "C" AND "G"

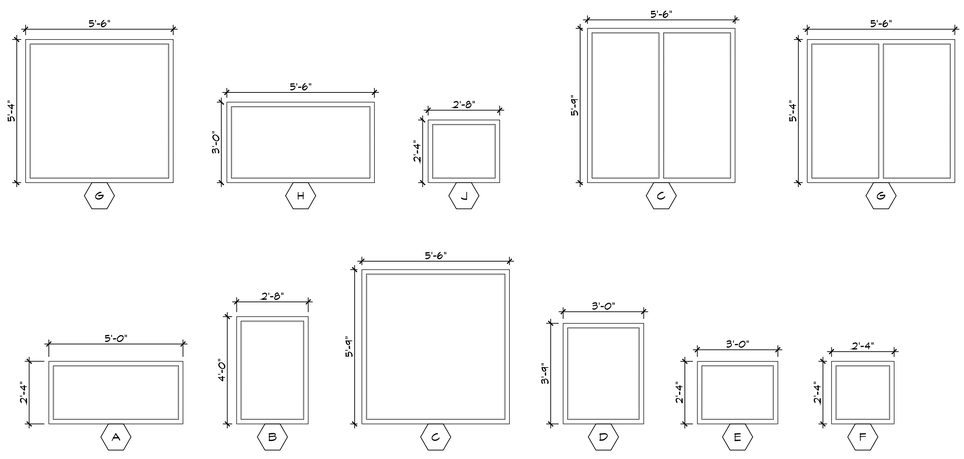

E9 / A1.4 — WINDOW SCHEDULE/PROFILES

NO SCALE

GENERAL NOTES

A. DIMENSIONS ARE TO FACE OF METAL STUDS, CENTERLINE OF DOORS, OR CENTERLINE OF WINDOWS, UNLESS NOTED OTHERWISE.

B. NOTIFY ARCHITECT IMMEDIATELY UPON DISCOVERY OF ANY CONDITIONS THAT ARE CONTRARY TO THOSE REPRESENTED WITHIN THE DRAWINGS.

C. THE PLAN CUT IS TAKEN AT 4'-6" AFF.

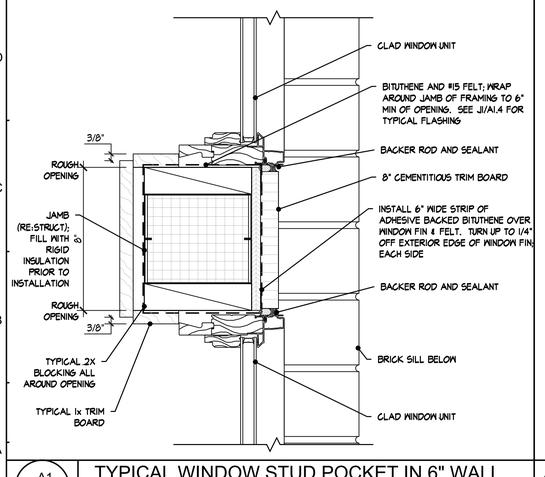

A1 / A1.4 — TYPICAL WINDOW STUD POCKET IN 6" WALL

SCALE: 3" = 1'-0"

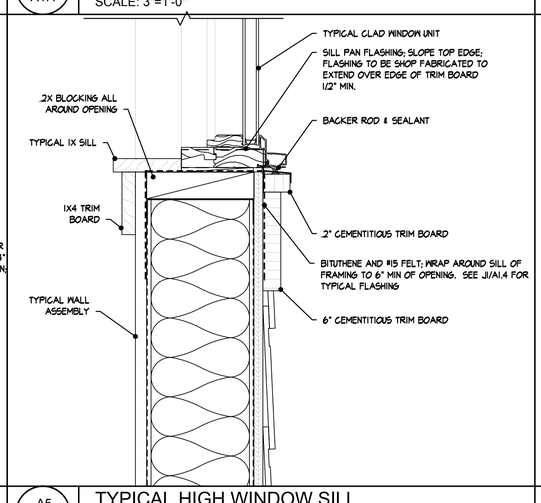

A5 / A1.4 — TYPICAL HIGH WINDOW SILL

SCALE: 3"=1'-0"

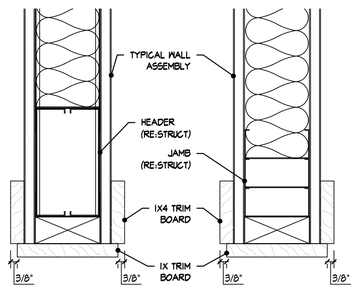

A9 / A1.4 — CASED OPENING DETAILS

SCALE: 3"=1'-0"

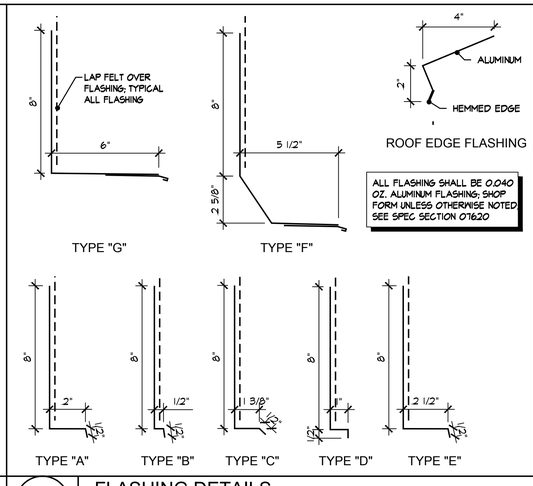

A13 / A1.4 — FLASHING DETAILS

NO SCALE

TYCH & WALKER
ARCHITECTS, LLP
38 BLACKGUM ROAD, UNIT B
PO BOX 509
PAWLEYS ISLAND, SC 29576
843-651-7151
mwalker@tychwalker.com

STATE OF SOUTH CAROLINA — MICHAEL WALKER — Pawleys Island, SC — 04394 — REGISTERED ARCHITECT

REVISION	DATE

A NEW LIBRARY FACILITY

SOUTHERN GEORGETOWN COMMUNITY LIBRARY

GEORGETOWN COUNTY, SOUTH CAROLINA

STATE OF SOUTH CAROLINA — TYCH & WALKER ARCHITECTS, LLP — Pawleys Island, SC — No. 95005 — REGISTERED ARCHITECTS

2016-04

04/03/19

WINDOW SCHEDULE AND DETAILS

A1.4

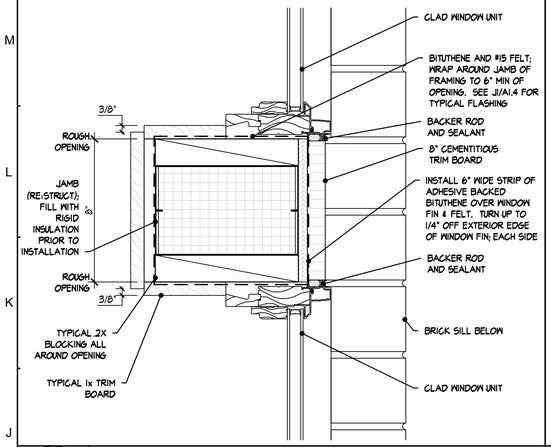

J1 / A1.5 — TYPICAL WINDOW JAMB POCKETIN 8" WALL

SCALE: 3"=1'-0"

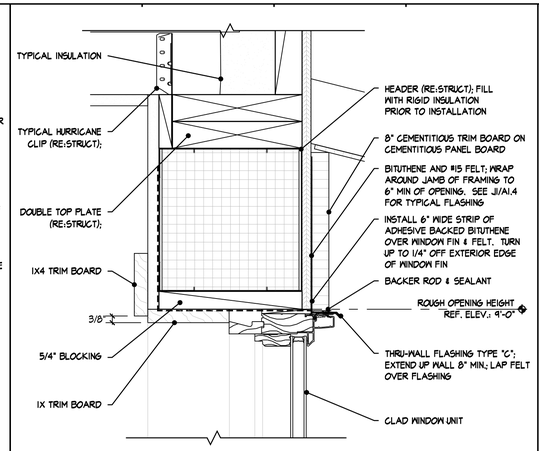

J5 / A1.5 — TYPICAL WINDOW HEAD IN 8" WALL

SCALE: 3"=1'-0"

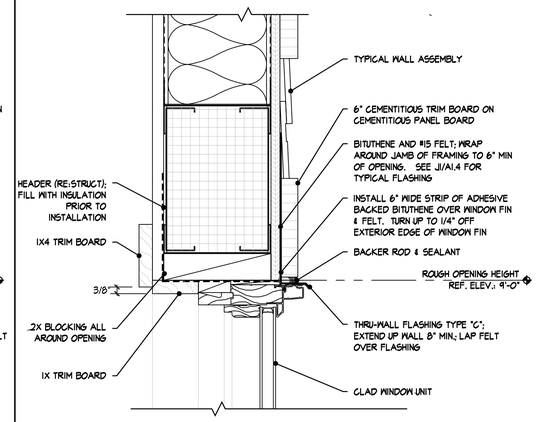

J9 / A1.5 — TYPICAL WINDOW HEAD IN 6" WALL

SCALE: 3"=1'-0"

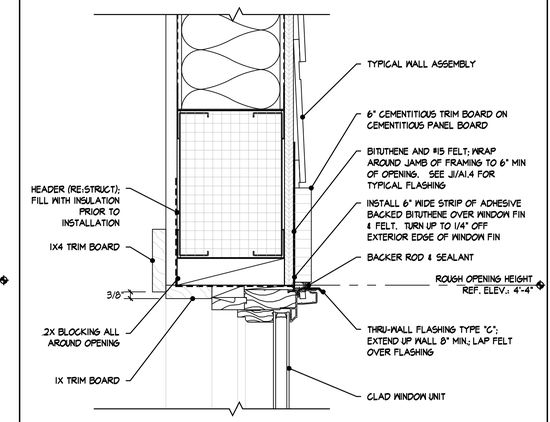

J13 / A1.5 — TYPICAL LOW WINDOW HEAD

SCALE: 3"=1'-0"

GENERAL NOTES

A. DIMENSIONS ARE TO FACE OF METAL STUDS, CENTERLINE OF DOORS, OR CENTERLINE OF WINDOWS, UNLESS NOTED OTHERWISE.

B. NOTIFY ARCHITECT IMMEDIATELY UPON DISCOVERY OF ANY CONDITIONS THAT ARE CONTRARY TO THOSE REPRESENTED WITHIN THE DRAWINGS.

C. THE PLAN CUT IS TAKEN AT 4'-6" AFF.

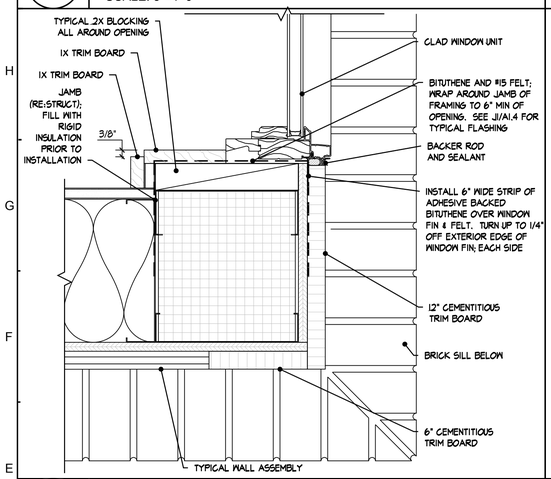

E1 / A1.5 — TYPICAL WINDOW JAMB IN 8" WALL

SCALE: 3"=1'-0"

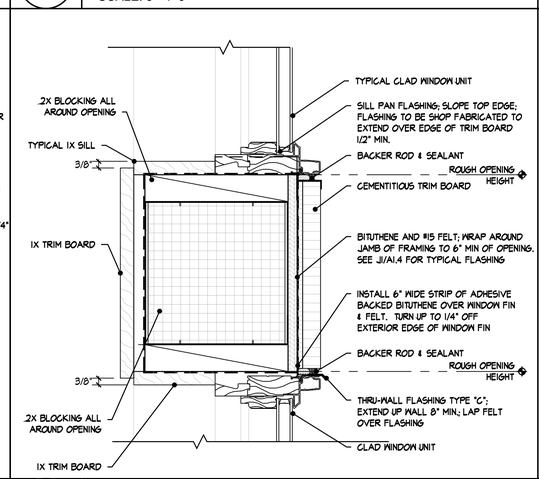

E5 / A1.5 — TYPICAL WINDOW HEAD/SILL IN 8" WALL

SCALE: 3"=1'-0"

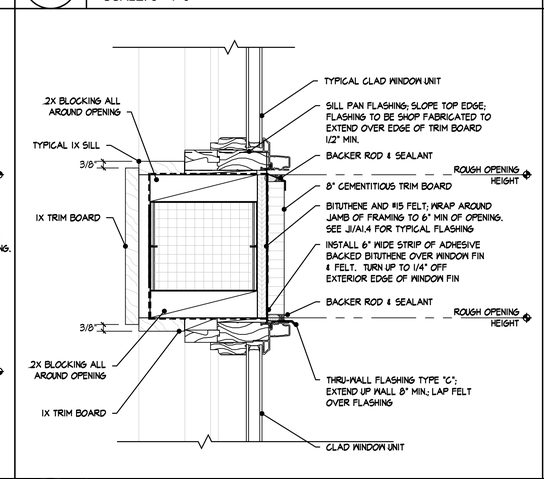

E9 / A1.5 — TYPICAL WINDOW HEAD/SILL IN 6" WALL

SCALE: 3"=1'-0"

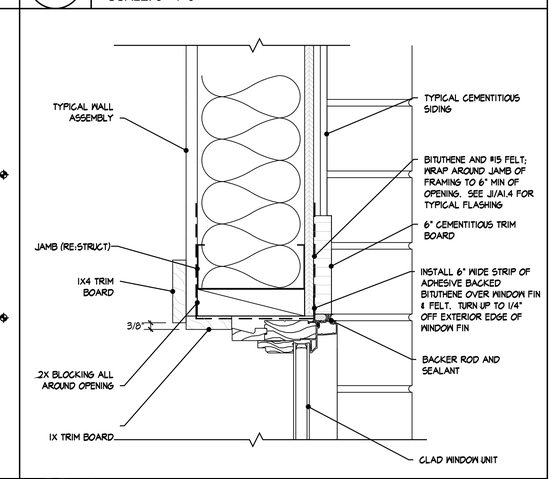

E13 / A1.5 — TYPICAL LOW WINDOW HEAD

SCALE: 3"=1'-0"

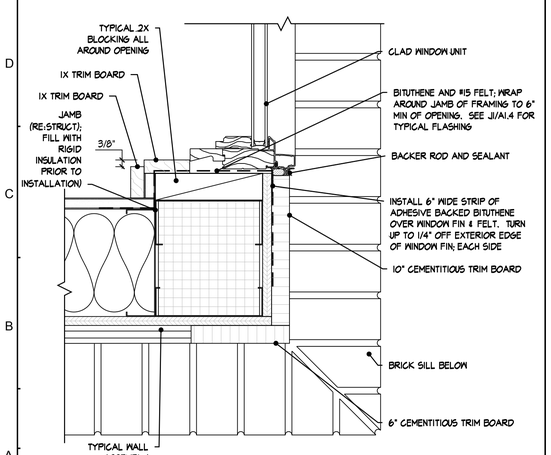

A1 / A1.5 — TYPICAL WINDOW JAMB IN 6" WALL

SCALE: 3" = 1'-0"

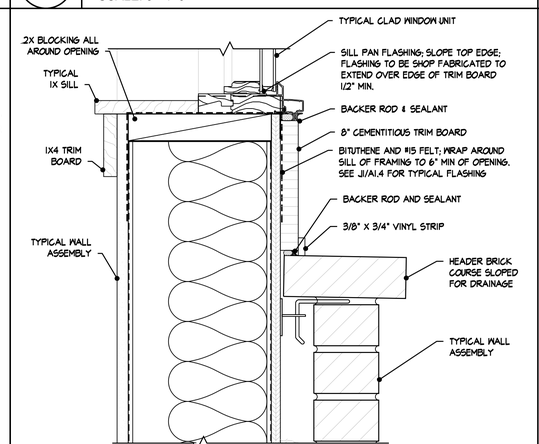

A5 / A1.5 — TYPICAL WINDOW SILL IN 8" WALL

SCALE: 3"=1'-0"

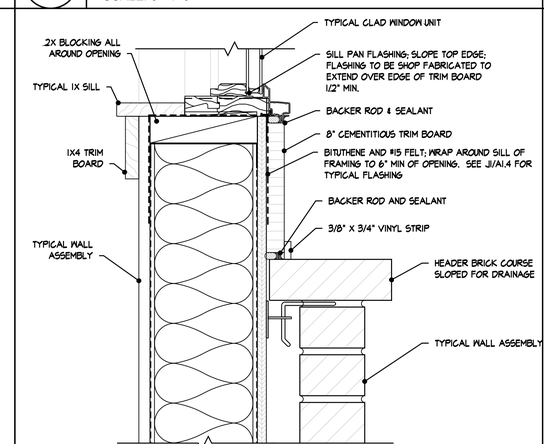

A9 / A1.5 — TYPICAL WINDOW SILL IN 6" WALL

SCALE: 3"=1'-0"

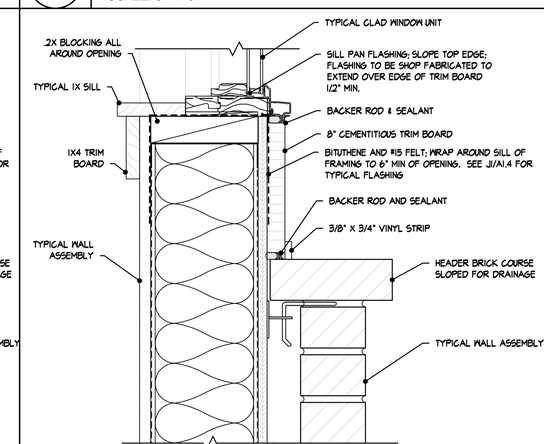

A13 / A1.5 — TYPICAL LOW WINDOW SILL

SCALE: 3"=1'-0"

MICHAEL WALKER
Pawleys Island, SC
04394
REGISTERED ARCHITECT
SOUTH CAROLINA

REVISION	DATE

TYCH & WALKER
ARCHITECTS, LLP

38 BLACKGUM ROAD, UNIT B
PO BOX 509
PAWLEYS ISLAND, SC 29576
843-651-7151

mwalker@tychwalker.com

A NEW LIBRARY FACILITY

SOUTHERN GEORGETOWN COMMUNITY LIBRARY

GEORGETOWN COUNTY, SOUTH CAROLINA

STATE OF SOUTH CAROLINA
TYCH & WALKER ARCHITECTS, LLP
Pawleys Island, SC
No. 95005
REGISTERED ARCHITECTS

2016-04	
04/03/19	
WINDOW DETAILS	

A1.5

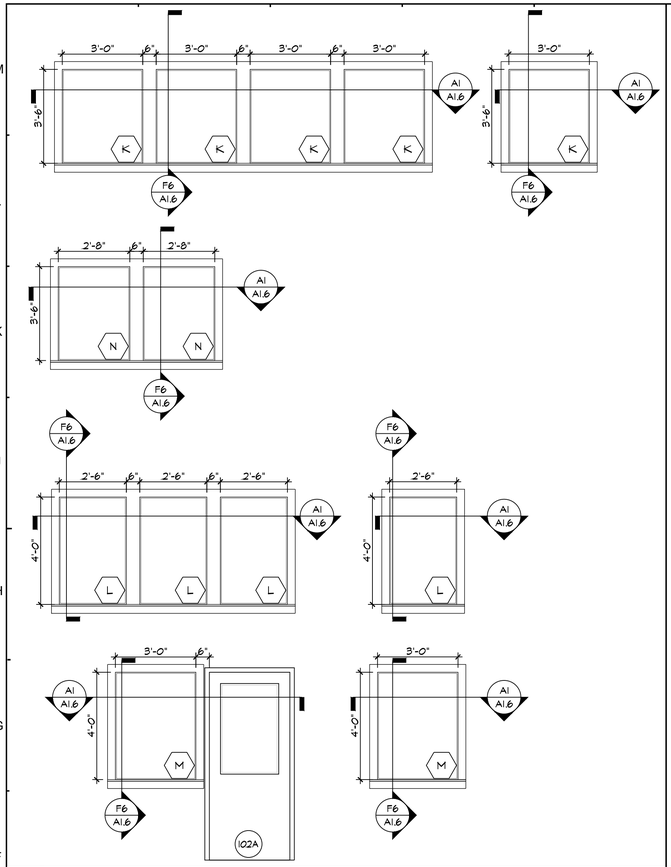

F1 / A1.6 — INTERIOR WINDOW ELEVATIONS

SCALE: 3/8 = 1'-0"

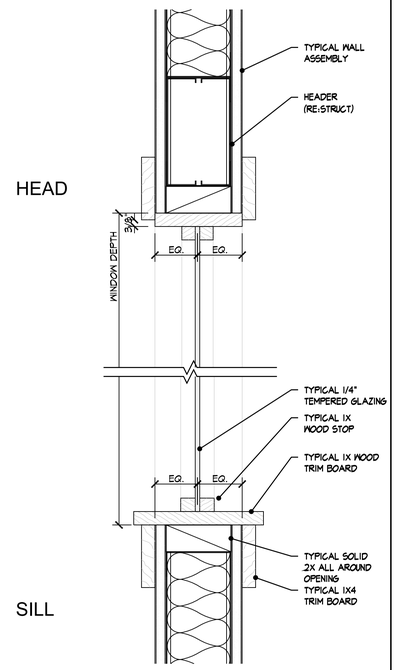

VERTICAL SECTION

F6 / A1.6 — INTERIOR WINDOW DETAILS

SCALE: 3 = 1'-0"

WINDOW/DOOR JAMB @ 6" WALL; SIM @ 3-5/8" WALL

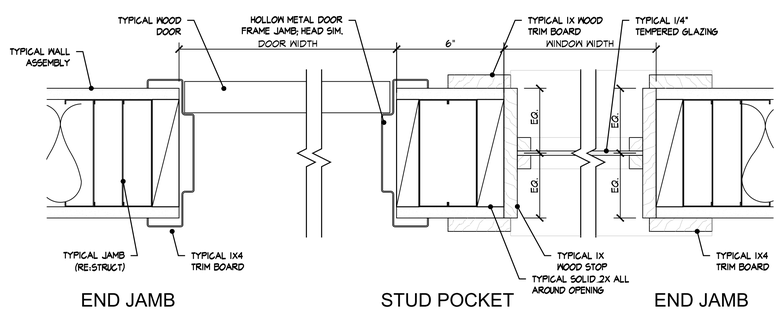

WINDOW/WINDOW JAMB @ 3-5/8" WALL; SIM @ 6" WALL

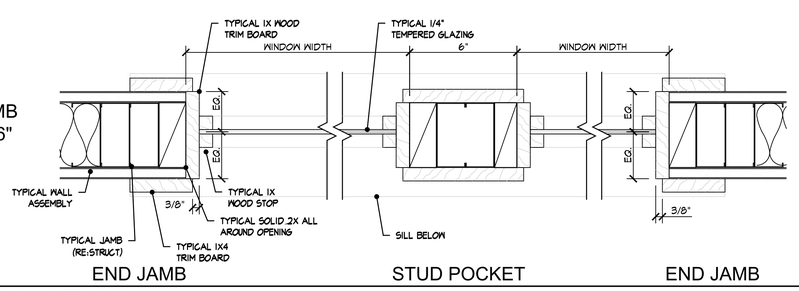

A1 / A1.6 — INTERIOR WINDOW DETAILS

SCALE: 3 = 1'-0"

ROOM FINISH SCHEDULE

ROOM NO	ROOM NAME	FLOOR	BASE MATERIAL	WALL MATERIAL	WALL FINISH	CEILING MATERIAL	CEILING HEIGHT	REMARKS
101	ENTRY	LVT	1X6 WOOD TRIM	GWB	PTD	ACT	10'-4"	--
102	MULTI-PURPOSE ROOM	LVT	1X6 WOOD TRIM	GWB	PTD	ACT	10'-4"	--
103	CLOSET	LVT	1X6 WOOD TRIM	GWB	PTD	ACT	9'-0"	--
104	HALL	LVT	1X6 WOOD TRIM	GWB	PTD	ACT	10'-0"	--
105	JAN	LVT	RWB	GWB	PTD	ACT	9'-0"	PROVIDE FRP PANELS ON ALL WALLS TO 48" AFF.
106	KITCHEN	LVT	RWB	GWB	PTD	ACT	9'-0"	--
107	WOMEN	LVT	RWB	GWB	PTD	ACT	9'-0"	--
108	MEN	LVT	RWB	GWB	PTD	ACT	9'-0"	--
109	CIRCULATION	LVT	1X6 WOOD TRIM	GWB	PTD	ACT	9'-4"	--
110	TUTOR	LVT	1X6 WOOD TRIM	GWB	PTD	ACT	9'-0"	--
111	TUTOR	LVT	1X6 WOOD TRIM	GWB	PTD	ACT	9'-0"	--
112	TEEN ROOM	LVT	1X6 WOOD TRIM	GWB	PTD	ACT	10'-4"	--
113	WORKROOM	LVT	RWB	GWB	PTD	ACT	9'-0"	--
114	VEST.	LVT	RWB	GWB	PTD	ACT	9'-0"	--
115	STORAGE	LVT	RWB	GWB	PTD	ACT	9'-0"	--
116	TOILET	LVT	RWB	GWB	PTD	ACT	9'-0"	--
117	ELEC/DATA	LVT	RWB	GWB	PTD	ACT	9'-0"	--
118	CHILDRENS BOOKS	LVT	1X6 WOOD TRIM	GWB	PTD	ACT	10'-4"	--
119	TOILET	LVT	RWB	GWB	PTD	ACT	9'-0"	--
120	READING ROOM	LVT	1X6 WOOD TRIM	GWB	PTD	ACT	10'-4"	--
121	STACKS	LVT	1X6 WOOD TRIM	GWB	PTD	ACT	12'-4"	--
122	READING ROOM	LVT	1X6 WOOD TRIM	GWB	PTD	ACT	15'-0"	15'-0" CELING HEIGHT @ WINDOWS; 12'-4" CEILING HEIGHT ELSEWHERE

G9 / A1.6 — ROOM FINISH SCHEDULE

NO SCALE

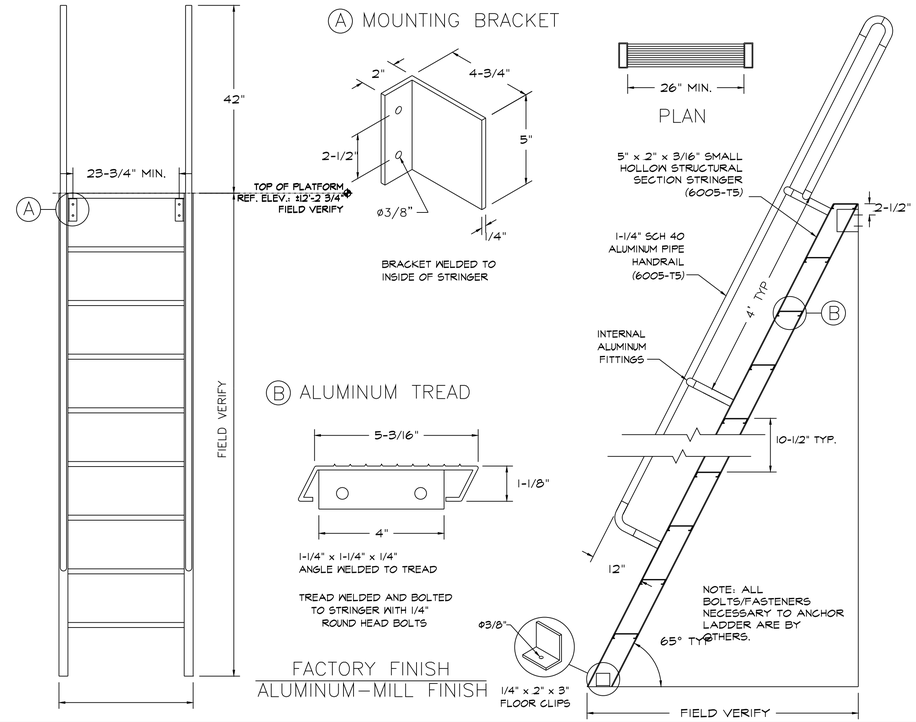

A9 / A1.6 — ALUMINUM SHIPS LADDER WITH WALK-THRU

NO SCALE

GENERAL NOTES

A. DIMENSIONS ARE TO FACE OF METAL STUDS, CENTERLINE OF DOORS, OR CENTERLINE OF WINDOWS, UNLESS NOTED OTHERWISE.

B. NOTIFY ARCHITECT IMMEDIATELY UPON DISCOVERY OF ANY CONDITIONS THAT ARE CONTRARY TO THOSE REPRESENTED WITHIN THE DRAWINGS.

C. THE PLAN CUT IS TAKEN AT 4'-6" AFF.

ROOM FINISH SCHEDULE NOTES

FLOOR CODE	FLOOR FINISH MATERIAL
CONC	CONCRETE
CPT	CARPET
VCT	RESILIENT FLOORING

WALL CODE	WALL FINISH MATERIAL
CWT	CERAMIC WALL TILE
FRP	FIBER REINFORCED PLASTIC
GWB	GYPSUM WALL BOARD
PTD	PAINTED
WWC	WOOD WAINSCOTT
WS	WOOD T&G SIDING

BASE	
CWB	CERAMIC WALL BASE
RWB	RUBBER WALL BASE

CEILING	
ACT	ACOUSTIC CEILING TILE
CCB	CEMENTITIOUS CEILING BOARD
GCB	GYPSUM CEILING BOARD

ROOM FINISH REMARKS

1. ALL GYP BOARD SURFACES SHALL RECEIVE LEVEL "5" FINISH.

STATE OF SOUTH CAROLINA — MICHAEL WALKER — Pawleys Island, SC — 04394 — REGISTERED ARCHITECT

REVISION | DATE

TYCH & WALKER
ARCHITECTS, LLP
38 BLACKGUM ROAD, UNIT B
PO BOX 509
PAWLEYS ISLAND, SC 29576
843-651-7151
mwalker@tychwalker.com

A NEW LIBRARY FACILITY

SOUTHERN GEORGETOWN COMMUNITY LIBRARY

GEORGETOWN COUNTY, SOUTH CAROLINA

STATE OF SOUTH CAROLINA — TYCH & WALKER, ARCHITECTS, LLP — Pawleys Island, SC — No. 95005 — REGISTERED ARCHITECTS

2016-04

04/03/19

ROOM FINISH SCHEDULE AND INTERIOR WINDOW DETAILS

A1.6

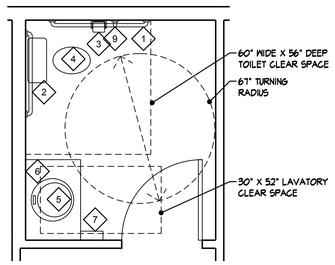

K1 / A1.7 — TOILET 116 ENLARGED PLAN

SCALE: 3/8" =1'-0"

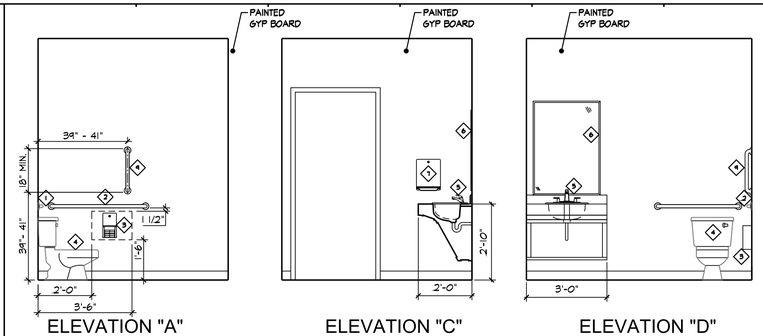

ELEVATION "A" ELEVATION "C" ELEVATION "D"

K4 / A1.7 — TOILET 116 ELEVATIONS

SCALE: 3/8" =1'-0"

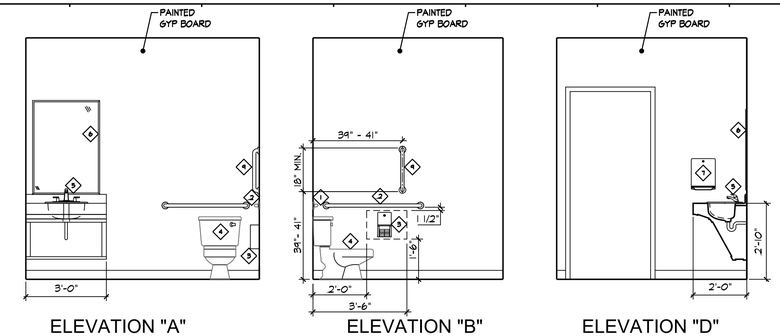

ELEVATION "A" ELEVATION "B" ELEVATION "D"

K10 / A1.7 — TOILET 119 ELEVATIONS

SCALE: 3/8" =1'-0"

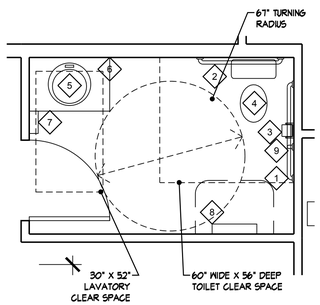

G1 / A1.7 — TOILET 119 ENLARGED PLAN

SCALE: 3/8" =1'-0"

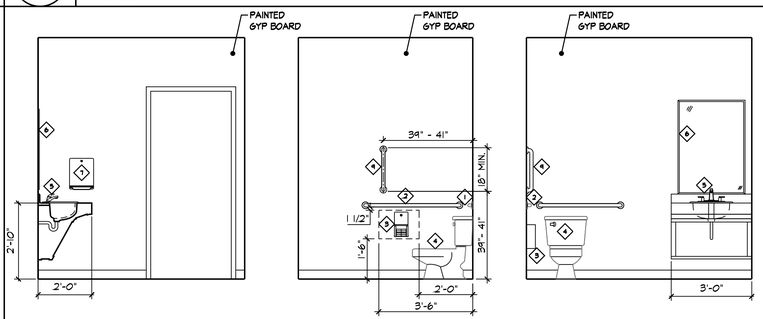

ELEVATION "A" ELEVATION "C" ELEVATION "D"

G4 / A1.7 — WOMEN 107 ELEVATIONS

SCALE: 3/8" =1'-0"

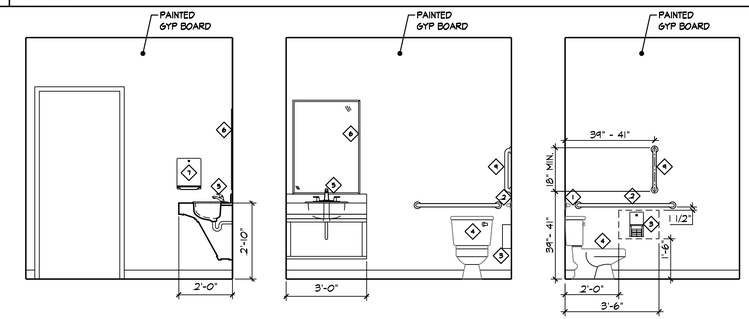

ELEVATION "A" ELEVATION "B" ELEVATION "C"

G10 / A1.7 — MEN 108 ELEVATIONS

SCALE: 3/8" =1'-0"

GENERAL NOTES

1. GENERAL CONTRACTOR AND ALL SUB-CONTRACTORS SHALL COMPLY WITH THE AMERICANS WITH DISABILITIES ACT (ADA) REGARDING ANY AND ALL ELEMENTS OF THE PROJECT. FAILURE TO COMPLY WITH THESE REGULATIONS WILL RESULT IN THE REMOVAL OF NON COMPLYING WORK AT THE COST OF THE GENERAL CONTRACTOR.

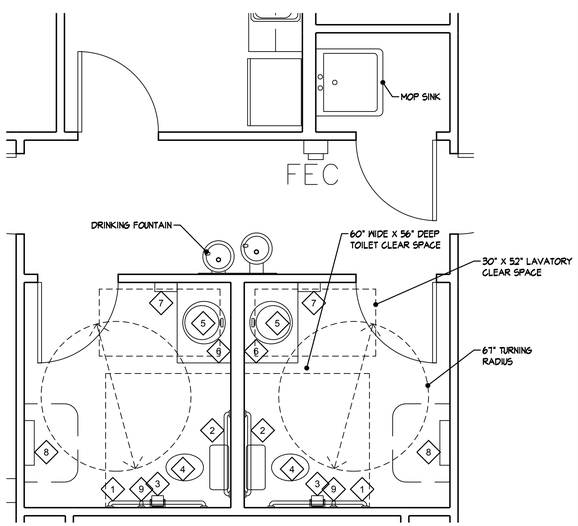

A1 / A1.7 — WOMEN 107 AND MEN 108 ENLARGED PLANS

SCALE: 3/8" =1'-0"

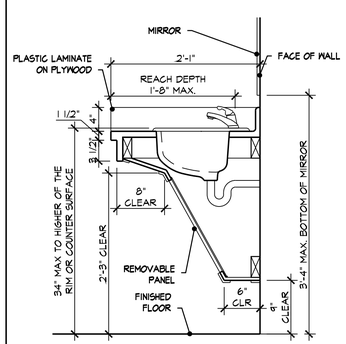

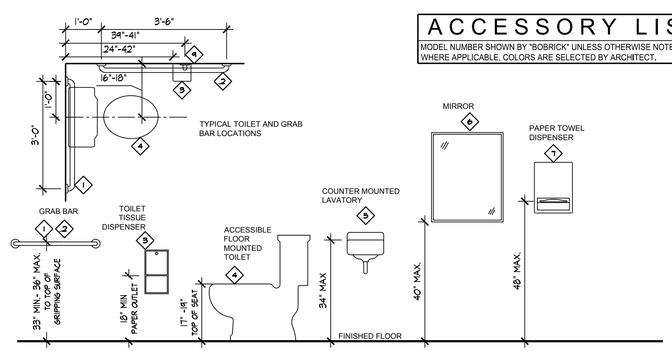

ACCESSORY LIST

MODEL NUMBER SHOWN BY "BOBRICK" UNLESS OTHERWISE NOTED. WHERE APPLICABLE, COLORS ARE SELECTED BY ARCHITECT.

SYM.	DESCRIPTION	MODEL NUMBER
1	36" GRAB BAR	# 6806 SERIES
2	42" GRAB BAR	# 6806 SERIES
3	TOILET TISSUE DISPENSER	# 2888
4	FLOOR MOUNTED TOILET (ACCESSIBLE)	SEE PLUMBING DWGS
5	COUNTER MOUNTED LAVATORY	SEE PLUMBING DWGS
6	MIRROR (24" X 36")	# 165 SERIES
7	RECESSED PAPER TOWEL DISPENSER	# B-359
8	CHANGE TABLE	#KB200-00
9	18" GRAB BAR	# 6806 SERIES

A6 / A1.7 — ACCESSIBLE LAVATORY DETAIL//MOUNTING DETAILS

SCALE: NO SCALE

STATE OF SOUTH CAROLINA — MICHAEL WALKER — Pawleys Island, SC — 04594 — REGISTERED ARCHITECT — 04/03/19

REVISION	DATE

TYCH & WALKER ARCHITECTS, LLP

38 BLACKGUM ROAD, UNIT B
PO BOX 509
PAWLEYS ISLAND, SC 29576
843-651-7151

mwalker@tychwalker.com

A NEW LIBRARY FACILITY

SOUTHERN GEORGETOWN COMMUNITY LIBRARY

GEORGETOWN COUNTY, SOUTH CAROLINA

STATE OF SOUTH CAROLINA — TYCH & WALKER ARCHITECTS, LLP — Pawleys Island, SC — No. 95005 — REGISTERED ARCHITECTS

2016-04

04/03/19

ENLARGED BATHROOM PLANS AND ELEVATIONS

A1.7

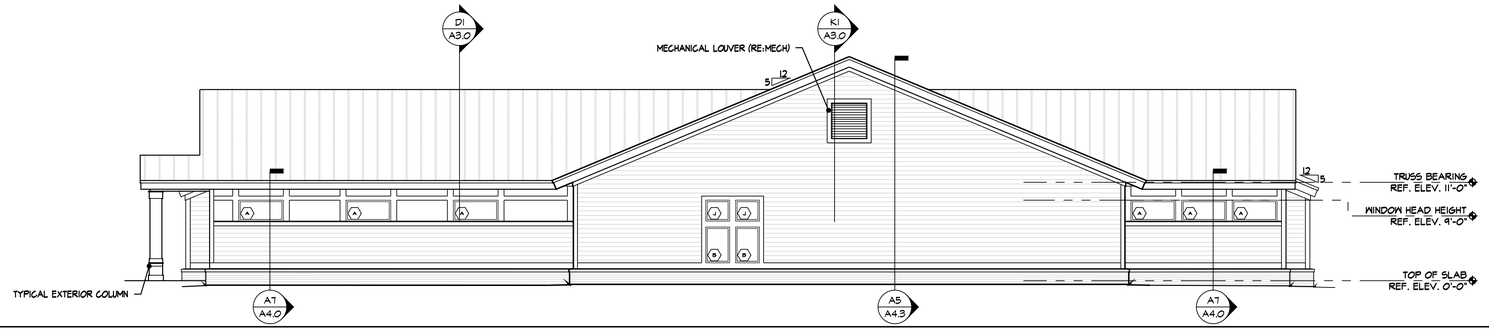

K1 / A2.0 — EAST ELEVATION

SCALE: 1/8"=1'-0"

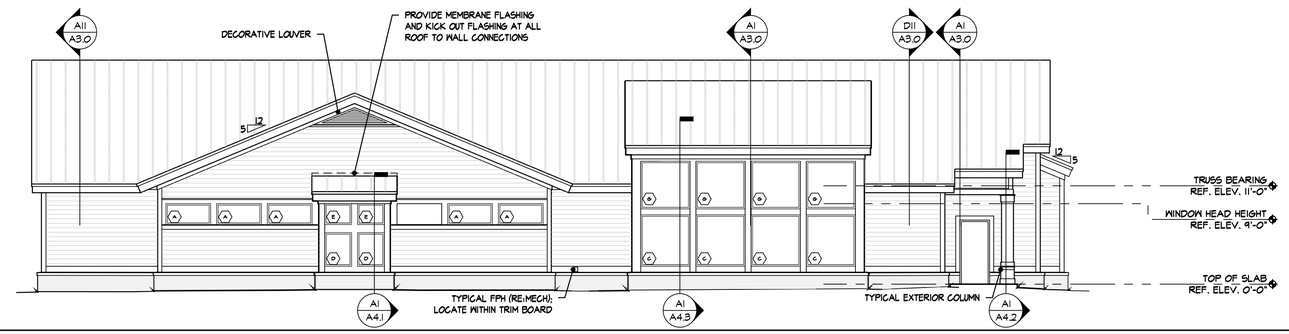

G1 / A2.0 — REAR ELEVATION

SCALE: 1/8"=1'-0"

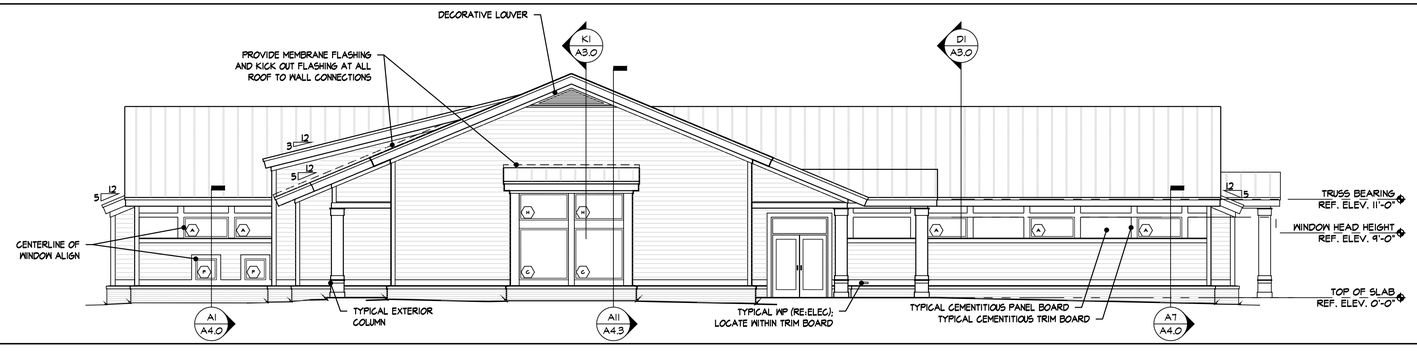

D1 / A2.0 — STREET ELEVATION

SCALE: 1/8"=1'-0"

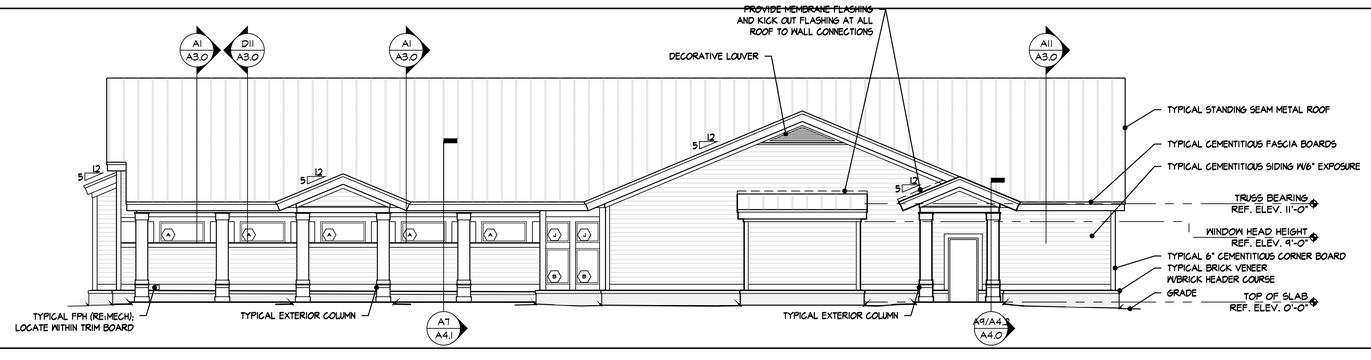

A1 / A2.0 — FRONT ELEVATION

SCALE: 1/8"=1'-0"

GENERAL NOTES

A. NOTIFY ARCHITECT IMMEDIATELY UPON DISCOVERY OF ANY CONDITIONS THAT ARE CONTRARY TO THOSE REPRESENTED WITHIN THE DRAWINGS.

REVISION	DATE

TYCH & WALKER
ARCHITECTS, LLP

38 BLACKGUM ROAD, UNIT B
PO BOX 509
PAWLEYS ISLAND, SC 29576
843 651 7151

mwalker@tychwalker.com

A NEW LIBRARY FACILITY

SOUTHERN GEORGETOWN COMMUNITY LIBRARY

GEORGETOWN COUNTY, SOUTH CAROLINA

STATE OF SOUTH CAROLINA — TYCH & WALKER ARCHITECTS, LLP, Pawleys Island, SC, No. 95005 — REGISTERED ARCHITECTS

2016-04	
04/03/19	
ELEVATIONS	

A2.0

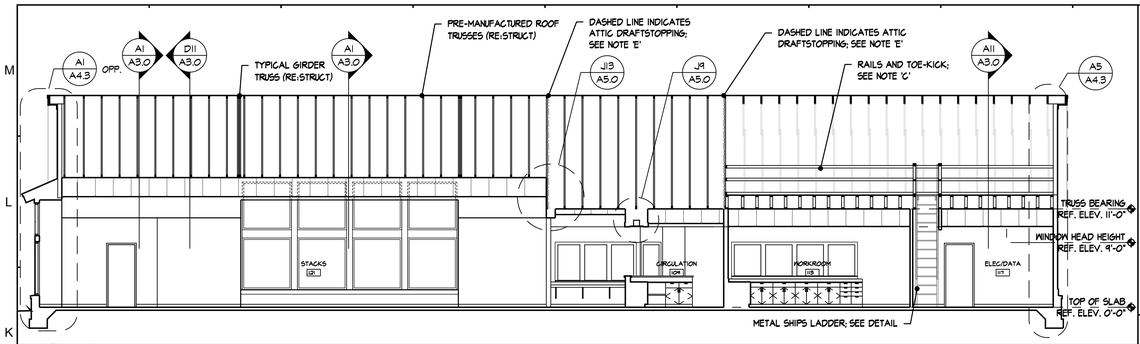

K1 A3.0 BUILDING SECTION
SCALE: 1/8"=1'-0"

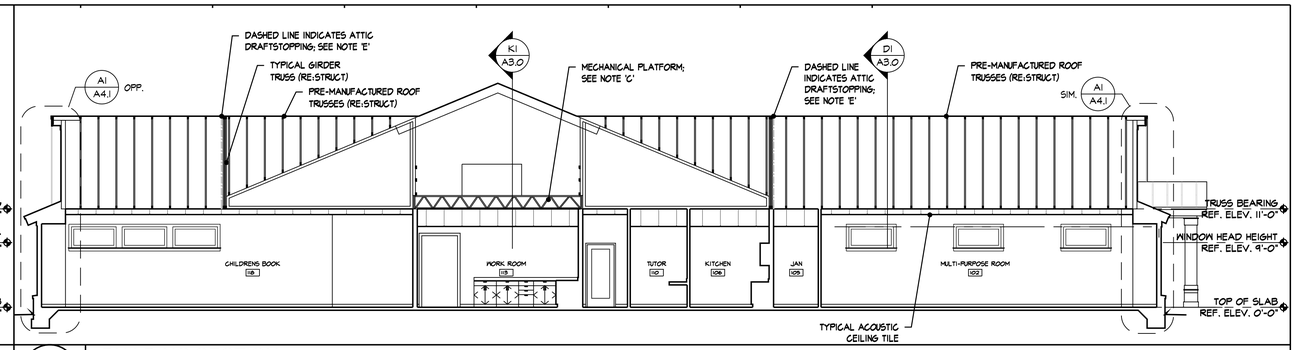

K9 A3.0 BUILDING SECTION
SCALE: 1/8"=1'-0"

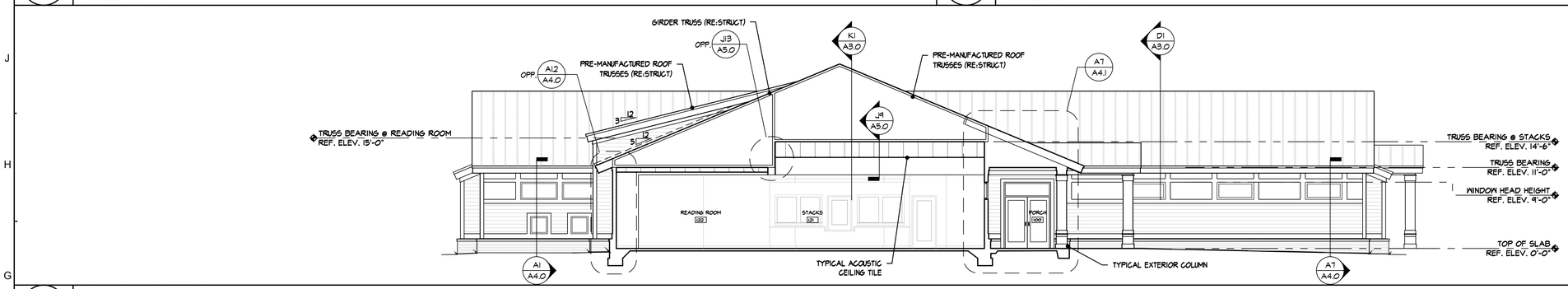

G1 A3.0 BUILDING SECTION
SCALE: 1/8"=1'-0"

GENERAL NOTES

A. NOTIFY ARCHITECT IMMEDIATELY UPON DISCOVERY OF ANY CONDITIONS THAT ARE CONTRARY TO THOSE REPRESENTED WITHIN THE DRAWINGS.

B. COORDINATE ALL LOCATIONS OF HOSE BIBBS, LIGHTS, AND VENTS WITH MECHANICAL, ELECTRICAL, AND PLUMBING DRAWINGS; REVIEW ANY CONFLICTS WITH THE ARCHITECT PRIOR TO ROUGH-IN.

C. MECHANICAL PLATFORM SHALL BE 3/4" T&G PLYWOOD GLUED AND NAILED TO FLOOR JOISTS; SEE STRUCTURAL. PROVIDE 2X4 TOE-KICK AND 2X4 RAILS AT 1'-7" AND 3'-0" ABOVE FLOOR. PROVIDE AT EDGES OF PLATFORM EXPOSED TO ATTIC TRUSSES.

D. BRACE ALL UNSUPPORTED WALLS TO STRUCTURE ABOVE WITH METAL STUDS EVERY 48" O.C.

E. DRAFTSTOPPING SHALL BE INSTALLED IN ATTICS AND CONCEALED ROOF SPACES, SUCH THAT ANY HORIZONTAL AREA DOES NOT EXCEED 3,000 SQUARE FEET. DRAFTSTOPPING MATERIALS SHALL BE NOT LESS THAN 1/2-INCH GYPSUM BOARD, 3/8-INCH WOOD STRUCTURAL PANEL, 3/8-INCH PARTICLEBOARD, 1-INCH NOMINAL LUMBER, CEMENT FIBERBOARD, BATTS OR BLANKETS OF MINERAL WOOL OR GLASS FIBER, OR OTHER APPROVED MATERIALS ADEQUATELY SUPPORTED. THE INTEGRITY OF DRAFTSTOPS SHALL BE MAINTAINED.

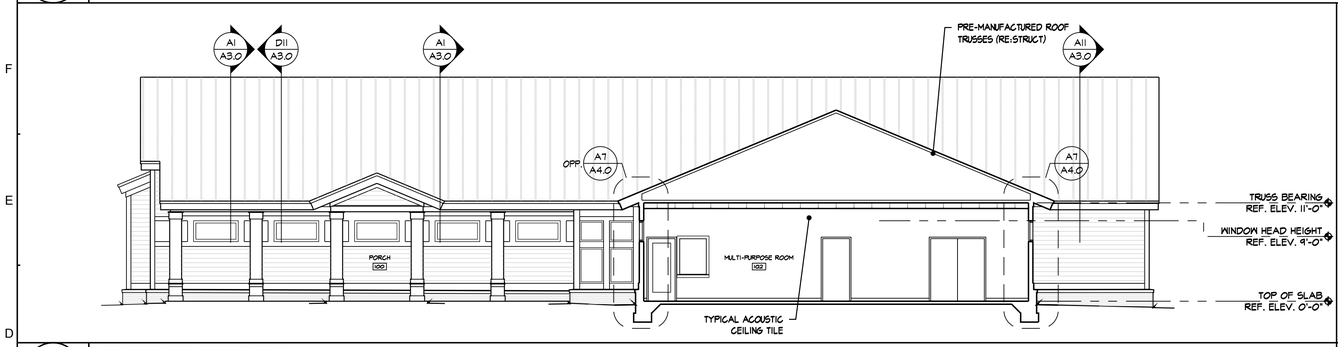

D1 A3.0 BUILDING SECTION
SCALE: 1/8"=1'-0"

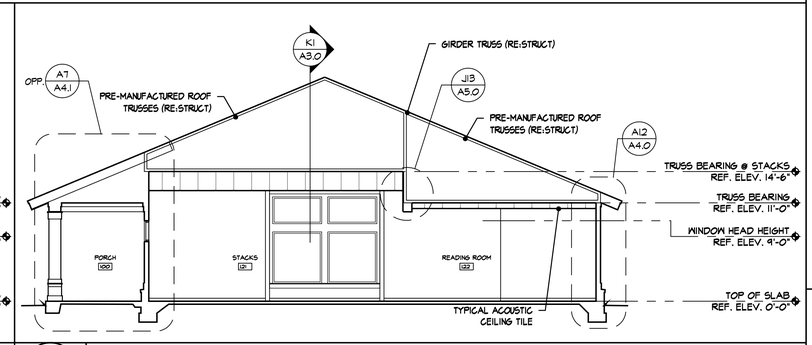

D11 A3.0 BUILDING SECTION
SCALE: 1/8"=1'-0"

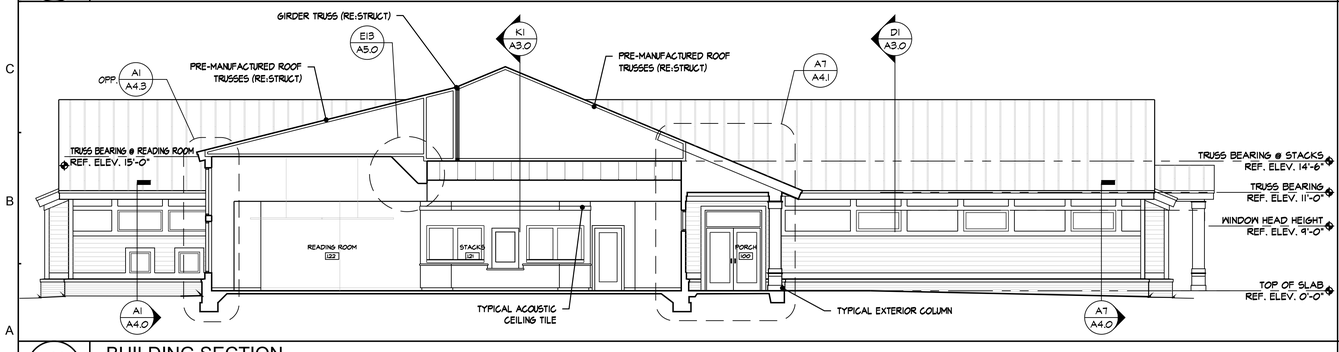

A1 A3.0 BUILDING SECTION
SCALE: 1/8"=1'-0"

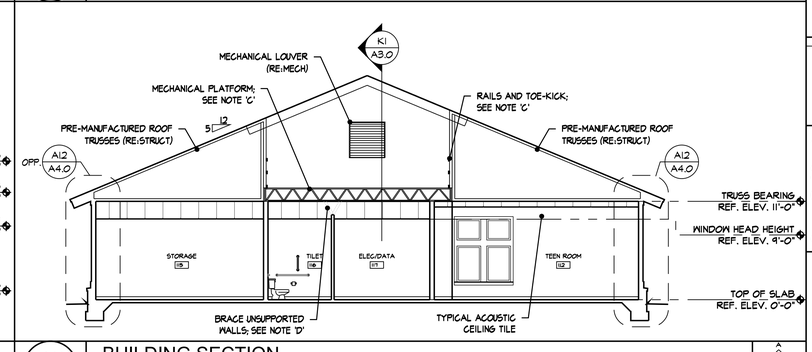

A11 A3.0 BUILDING SECTION
SCALE: 1/8"=1'-0"

REVISION	DATE

TYCH & WALKER
ARCHITECTS, LLP
38 BLACKGUM ROAD, UNIT B
PO BOX 509
PAWLEYS ISLAND, SC 29576
843 651 7151
mwalker@tychwalker.com

A NEW LIBRARY FACILITY

SOUTHERN GEORGETOWN COMMUNITY LIBRARY

GEORGETOWN COUNTY, SOUTH CAROLINA

2016-04	
04/03/19	
ENLARGED RESIDENTIAL UNIT PLANS	

A3.0

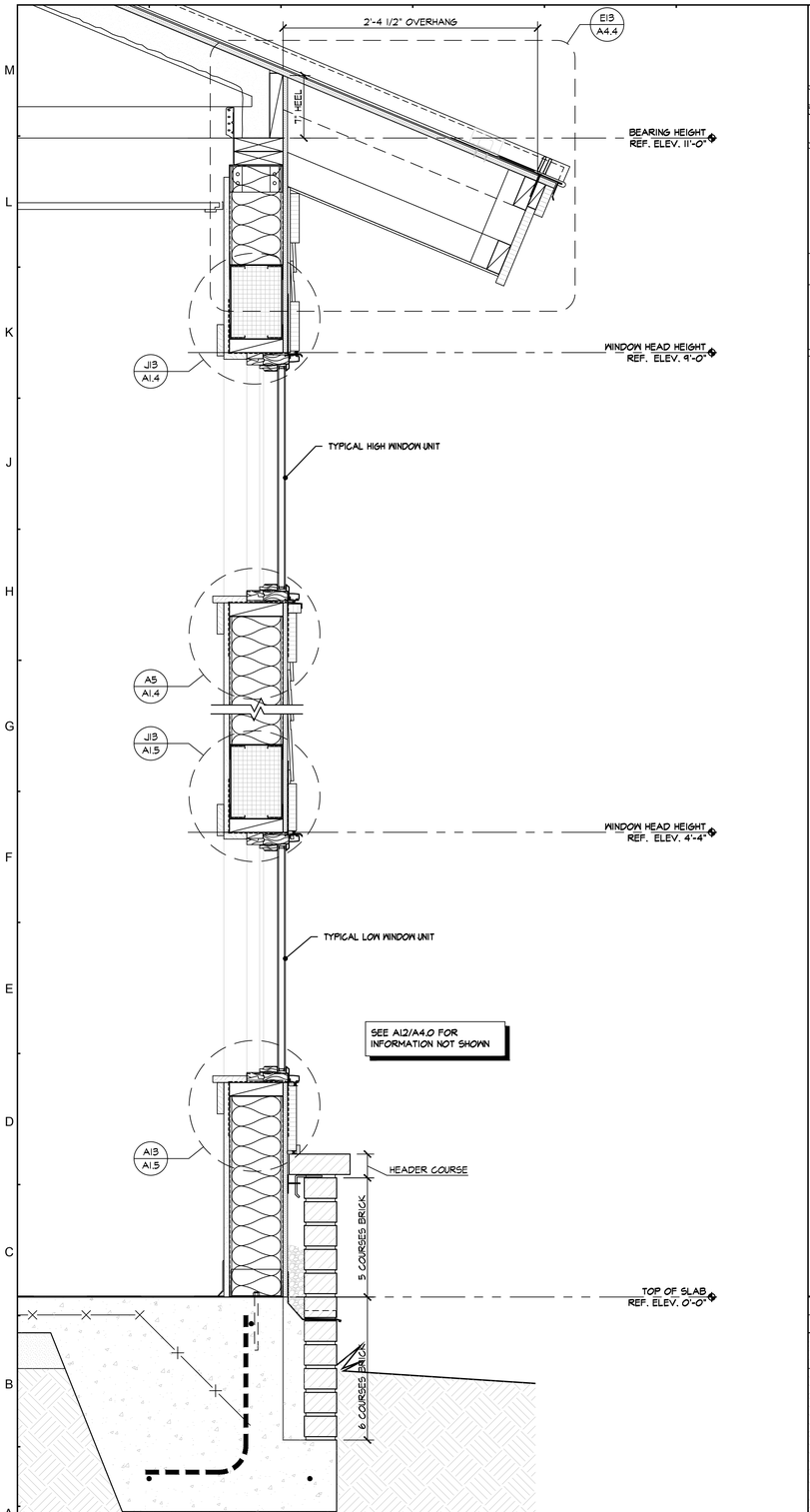

A1 / A4.0 TYPICAL WALL SECTION @ READING ROOM 120

SCALE: 1 1/2"=1'-0"

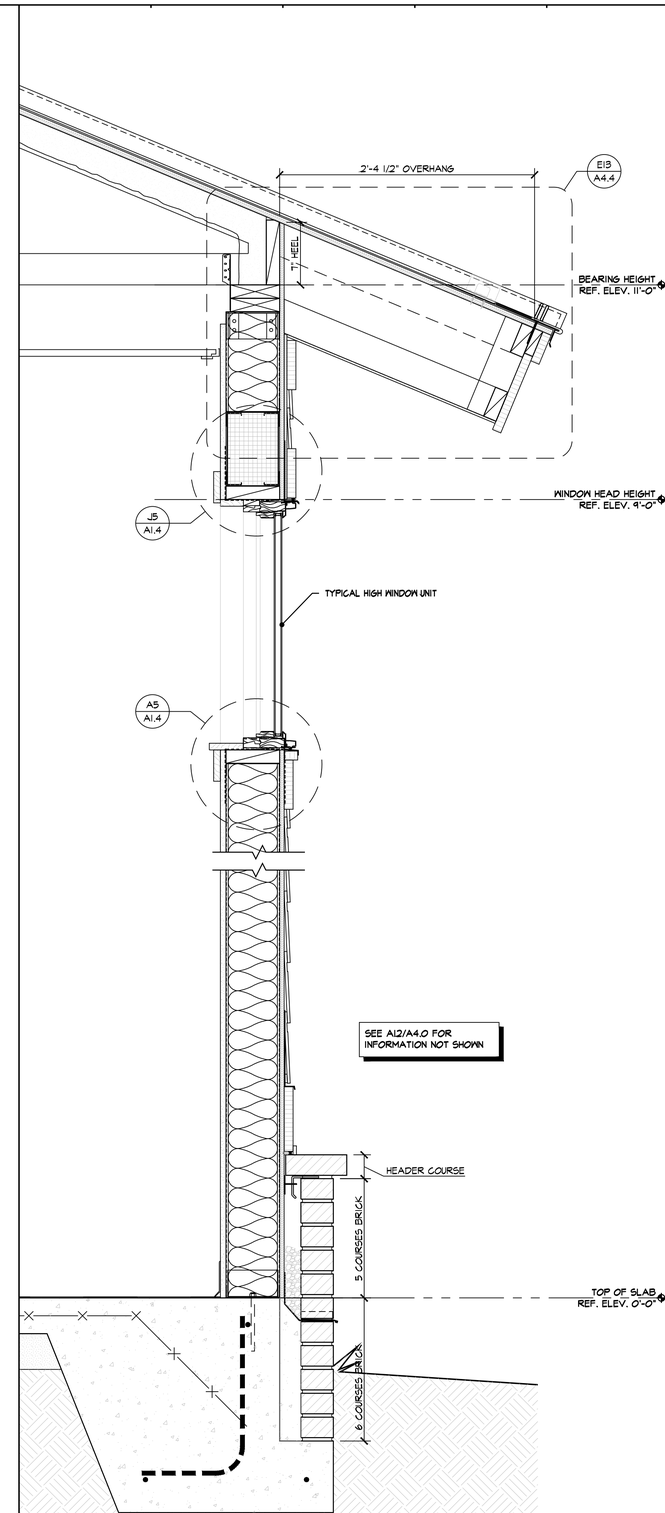

A7 / A4.0 TYPICAL WALL SECTION @ HIGH WINDOW

SCALE: 1 1/2"=1'-0"

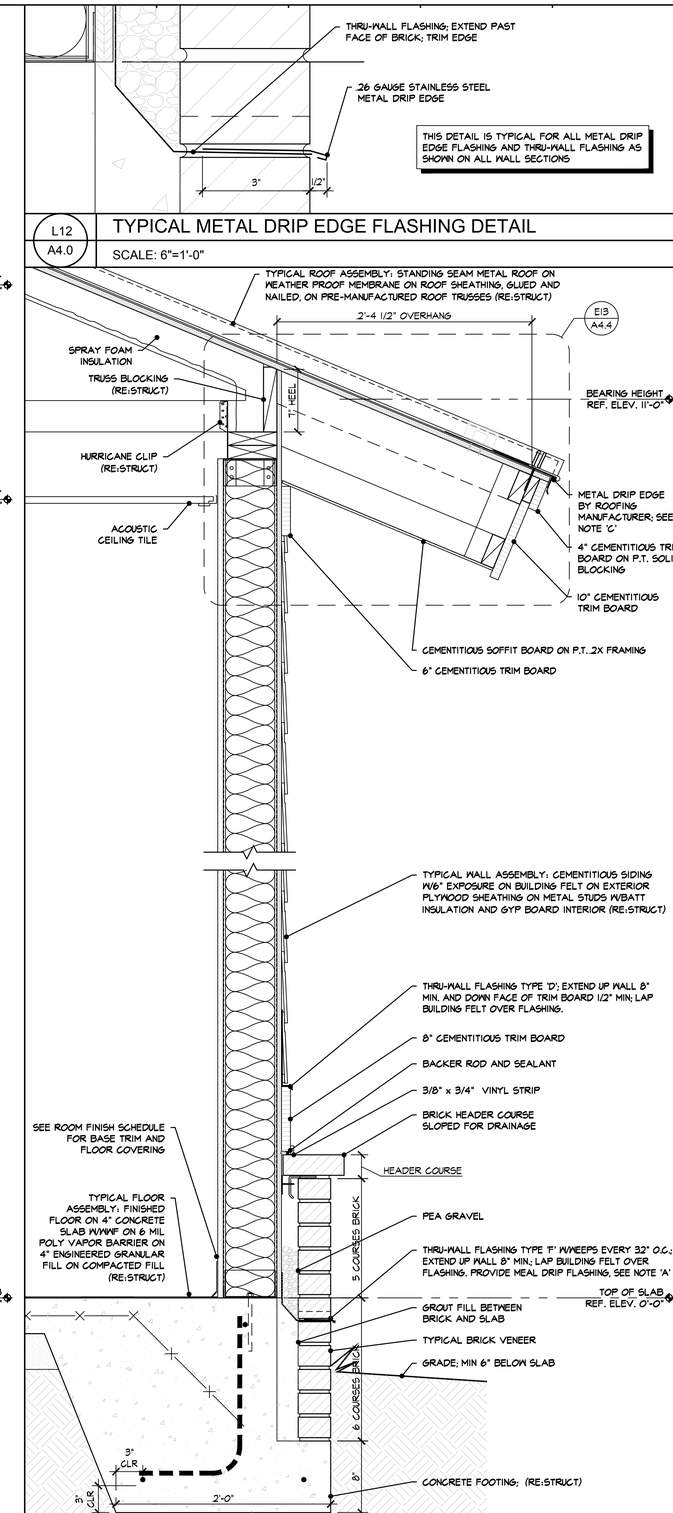

A12 / A4.0 TYPICAL WALL SECTION

SCALE: 1 1/2"=1'-0"

GENERAL NOTES

A. METAL DRIP EDGE FLASHING SHALL BE STAINLESS STEEL AND SHALL EXTEND 1/2" BEYOND THE FACE OF THE BRICK. THRU-WALL FLASHING MATERIAL SHALL EXTEND 1/2" MIN BEYOND THE EXTERIOR EDGE OF BRICK AND BE FULLY BONDED TO THE TOP SURFACE OF THE METAL DRIP EDGE WITH A MASTIC OR MANUFACTURER-APPROVED SEALANT. TRIM FLASHING AS DIRECTED BY ARCHITECT. METAL DRIP EDGES SHALL BE SEALED AT ALL LAPS AND PENETRATIONS. EXPOSED END SHALL BE HEMMED.

B. DISSIMILAR METAL ARE TO BE USED IN CONJUNCTION WITH STEEL SHELF ANGLES OR LINTELS TO NEGATE THE POTENTIAL FOR GALVANIC ACTION BETWEEN THE METALS.

C. METAL DRIP EDGE BY ROOFING MANUFACTURER; ATTACH W/(2) FASTENERS INTO SOLID SURFACE EVERY 24" O.C.

D. PROVIDE BAFFLES BETWEEN ROOF TRUSSES AT SOFFIT LOCATIONS FOR INSTALLATION OF SPRAY FOAM INSULATION. PROVIDE BAFFLES IN OTHER LOCATIONS AS REQUIRED.

STATE OF SOUTH CAROLINA
MICHAEL WALKER
Pawleys Island, SC
04394
REGISTERED ARCHITECT

REVISION	DATE

TYCH & WALKER
ARCHITECTS, LLP

38 BLACKGUM ROAD, UNIT B
PO BOX 509
PAWLEYS ISLAND, SC 29576
843-651-7151

mwalker@tychwalker.com

A NEW LIBRARY FACILITY

SOUTHERN GEORGETOWN COMMUNITY LIBRARY

GEORGETOWN COUNTY, SOUTH CAROLINA

STATE OF SOUTH CAROLINA
TYCH & WALKER ARCHITECTS, LLP
Pawleys Island, SC
No. 95005
REGISTERED ARCHITECTS

2016-04	
04/03/19	
WALL SECTIONS	

A4.0

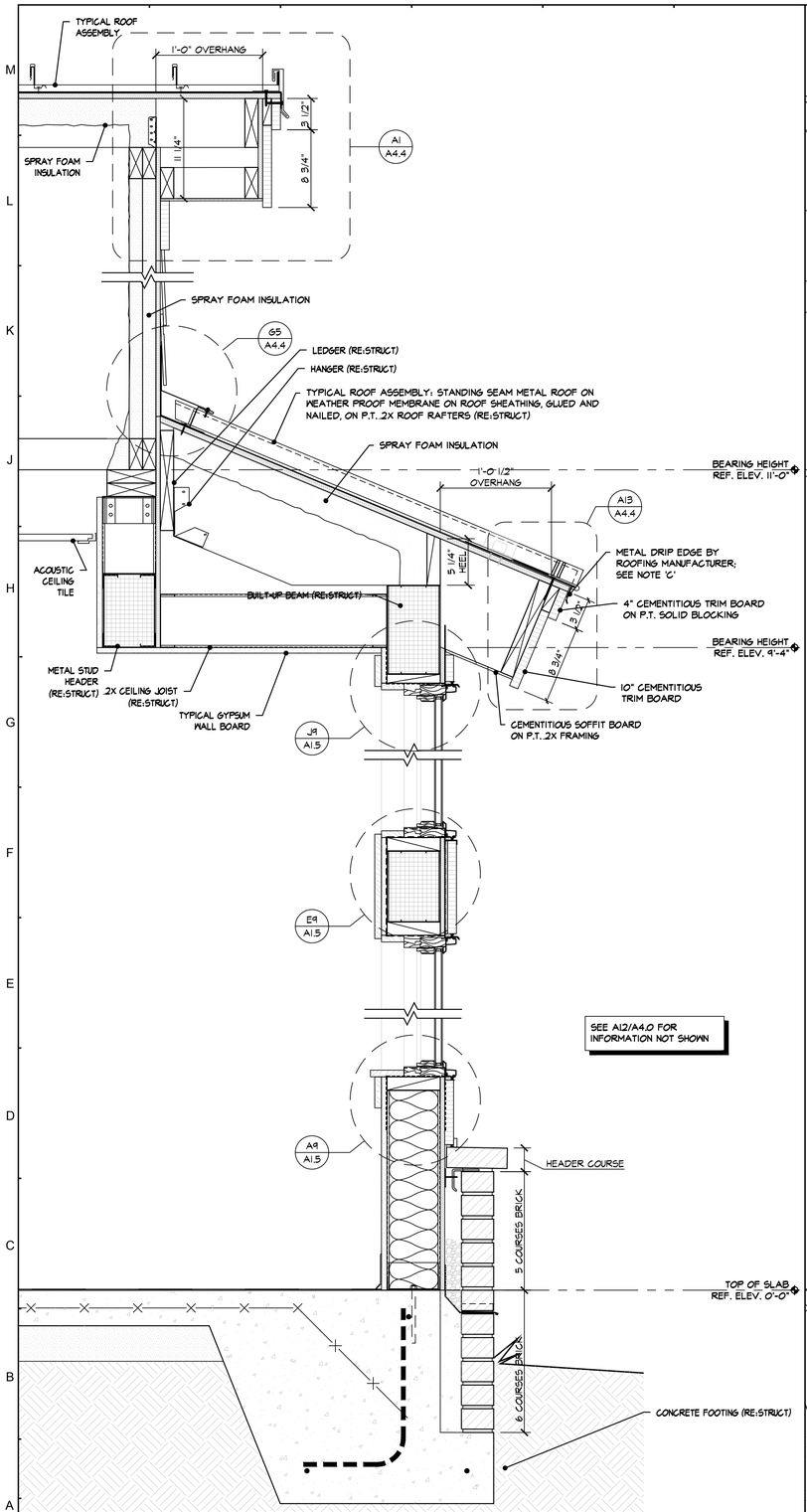

A1 / A4.1 BAY WINDOW @ CHILDRENS ROOM 118

SCALE: 1 1/2"=1'-0"

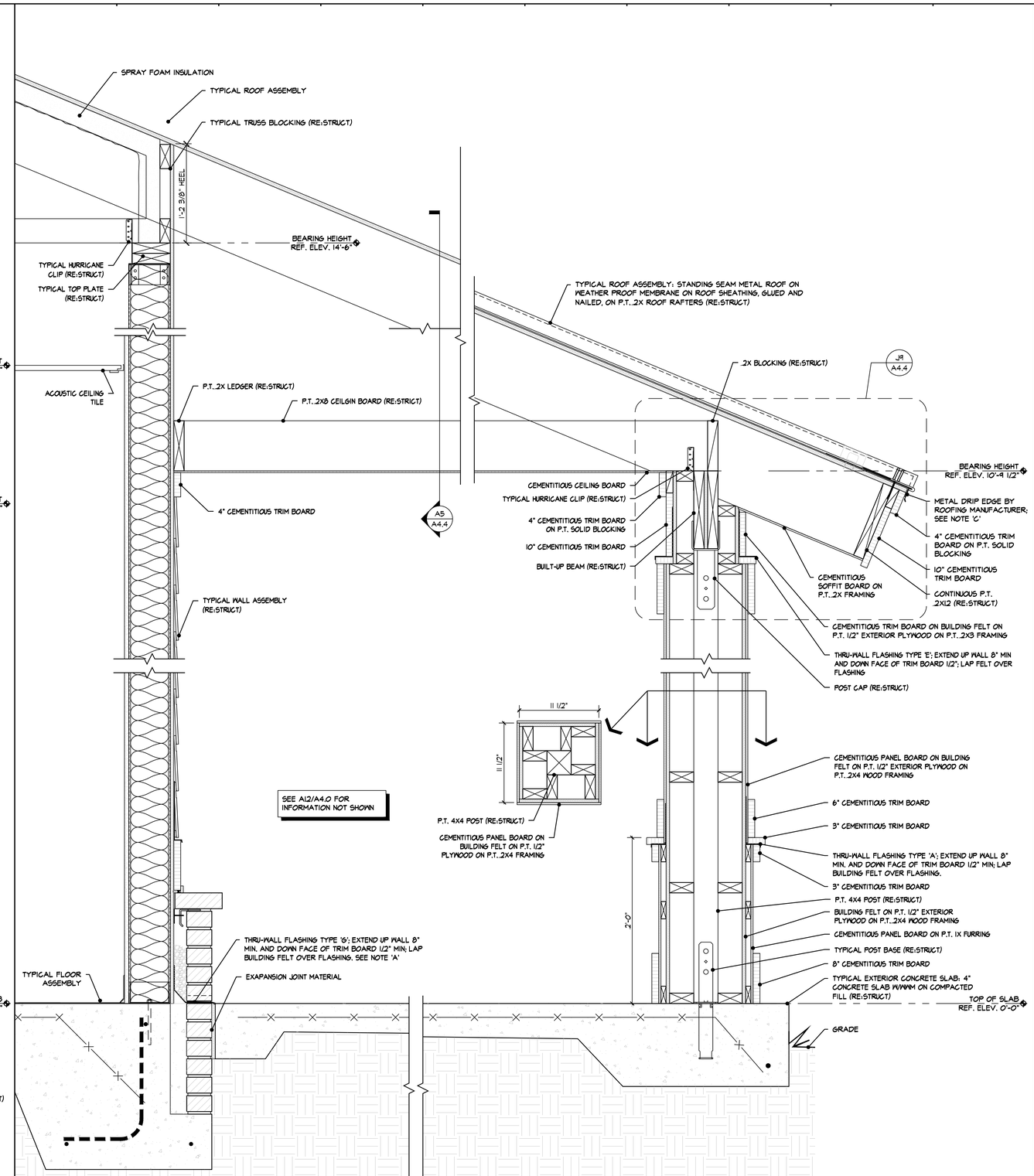

A7 / A4.1 TYPICAL WALL SECTION @ FRONT PORCH

SCALE: 1 1/2"=1'-0"

GENERAL NOTES

A. METAL DRIP EDGE FLASHING SHALL BE STAINLESS STEEL AND SHALL EXTEND 1/2" BEYOND THE FACE OF THE BRICK. THRU-WALL FLASHING MATERIAL SHALL EXTEND 1/2" MIN BEYOND THE EXTERIOR EDGE OF BRICK AND BE FULLY BONDED TO THE TOP SURFACE OF THE METAL DRIP EDGE WITH A MASTIC OR MANUFACTURER-APPROVED SEALANT. TRIM FLASHING AS DIRECTED BY ARCHITECT. METAL DRIP EDGES SHALL BE SEALED AT ALL LAPS AND PENETRATIONS. EXPOSED END SHALL BE HEMMED.

B. DISSIMILAR METAL ARE TO BE USED IN CONJUNCTION WITH STEEL SHELF ANGLES OR LINTELS TO NEGATE THE POTENTIAL FOR GALVANIC ACTION BETWEEN THE METALS.

C. METAL DRIP EDGE BY ROOFING MANUFACTURER; ATTACH W(2) FASTENERS INTO SOLID SURFACE EVERY 24" O.C.

D. PROVIDE BAFFLES BETWEEN ROOF TRUSSES AT SOFFIT LOCATIONS FOR INSTALLATION OF SPRAY FOAM INSULATION. PROVIDE BAFFLES IN OTHER LOCATIONS AS REQUIRED.

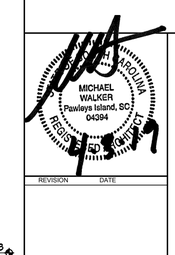

REVISION	DATE

TYCH & WALKER
ARCHITECTS, LLP
38 BLACKGUM ROAD, UNIT B
PO BOX 509
PAWLEYS ISLAND, SC 29576
843-651-7151
mwalker@tychwalker.com

A NEW LIBRARY FACILITY

SOUTHERN GEORGETOWN COMMUNITY LIBRARY

GEORGETOWN COUNTY, SOUTH CAROLINA

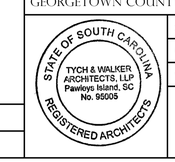

2016-04

04/03/19

WALL SECTIONS

A4.1

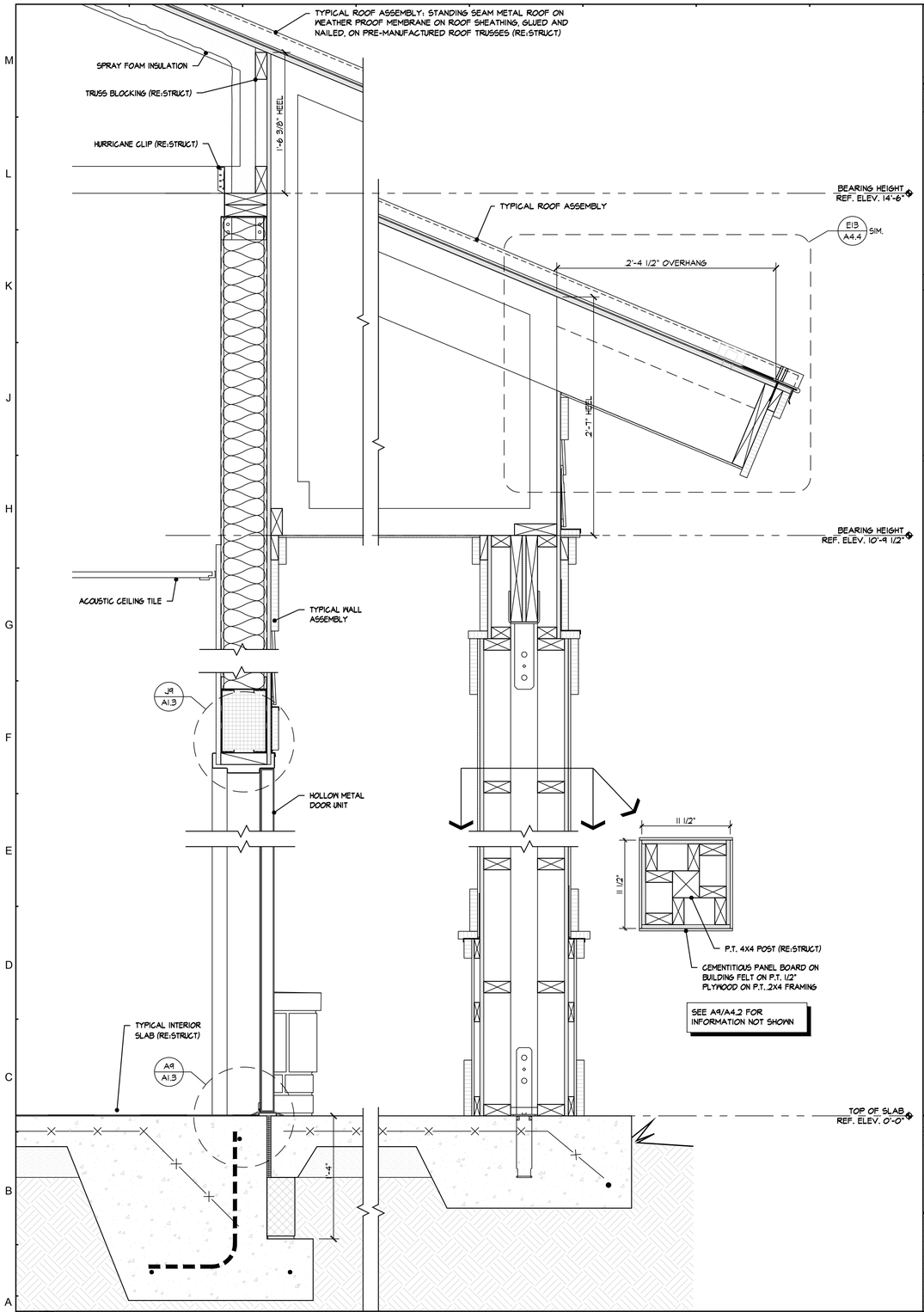

A1 A4.2 EXIT DOOR @ READING ROM 122

SCALE: 1 1/2"=1'-0"

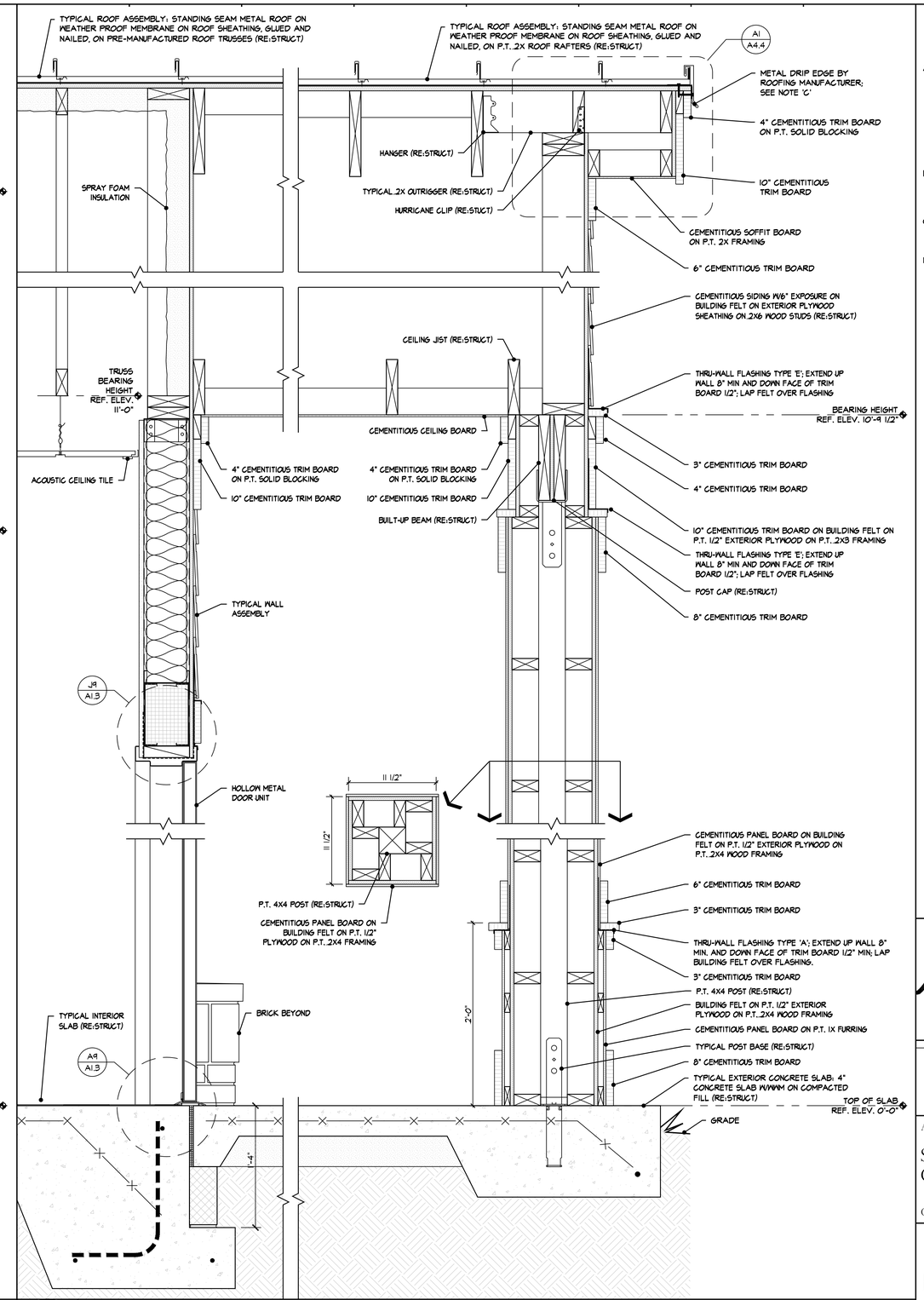

A9 A4.2 WALL SECTION @ MULTIPURPOSE DOOR

SCALE: 1 1/2"=1'-0"

GENERAL NOTES

A. METAL DRIP EDGE FLASHING SHALL BE STAINLESS STEEL AND SHALL EXTEND 1/2" BEYOND THE FACE OF THE BRICK. THRU-WALL FLASHING MATERIAL SHALL EXTEND 1/2" MIN BEYOND THE EXTERIOR EDGE OF BRICK AND BE FULLY BONDED TO THE TOP SURFACE OF THE METAL DRIP EDGE WITH A MASTIC OR MANUFACTURER-APPROVED SEALANT. TRIM FLASHING AS DIRECTED BY ARCHITECT. METAL DRIP EDGES SHALL BE SEALED AT ALL LAPS AND PENETRATIONS. EXPOSED END SHALL BE HEMMED.

B. DISSIMILAR METAL ARE TO BE USED IN CONJUNCTION WITH STEEL SHELF ANGLES OR LINTELS TO NEGATE THE POTENTIAL FOR GALVANIC ACTION BETWEEN THE METALS.

C. METAL DRIP EDGE BY ROOFING MANUFACTURER; ATTACH W/(2) FASTENERS INTO SOLID SURFACE EVERY 24" O.C.

D. PROVIDE BAFFLES BETWEEN ROOF TRUSSES AT SOFFIT LOCATIONS FOR INSTALLATION OF SPRAY FOAM INSULATION. PROVIDE BAFFLES IN OTHER LOCATIONS AS REQUIRED.

STATE OF SOUTH CAROLINA
MICHAEL WALKER
Pawleys Island, SC
04394
REGISTERED ARCHITECT

REVISION	DATE

TYCH & WALKER
ARCHITECTS, LLP
38 BLACKGUM ROAD, UNIT B
PO BOX 509
PAWLEYS ISLAND, SC 29576
843-651-7151
mwalker@tychwalker.com

A NEW LIBRARY FACILITY

SOUTHERN GEORGETOWN COMMUNITY LIBRARY

GEORGETOWN COUNTY, SOUTH CAROLINA

STATE OF SOUTH CAROLINA
TYCH & WALKER ARCHITECTS, LLP
Pawleys Island, SC
No. 95005
REGISTERED ARCHITECTS

2016-04

04/03/19

WALL SECTIONS

A4.2

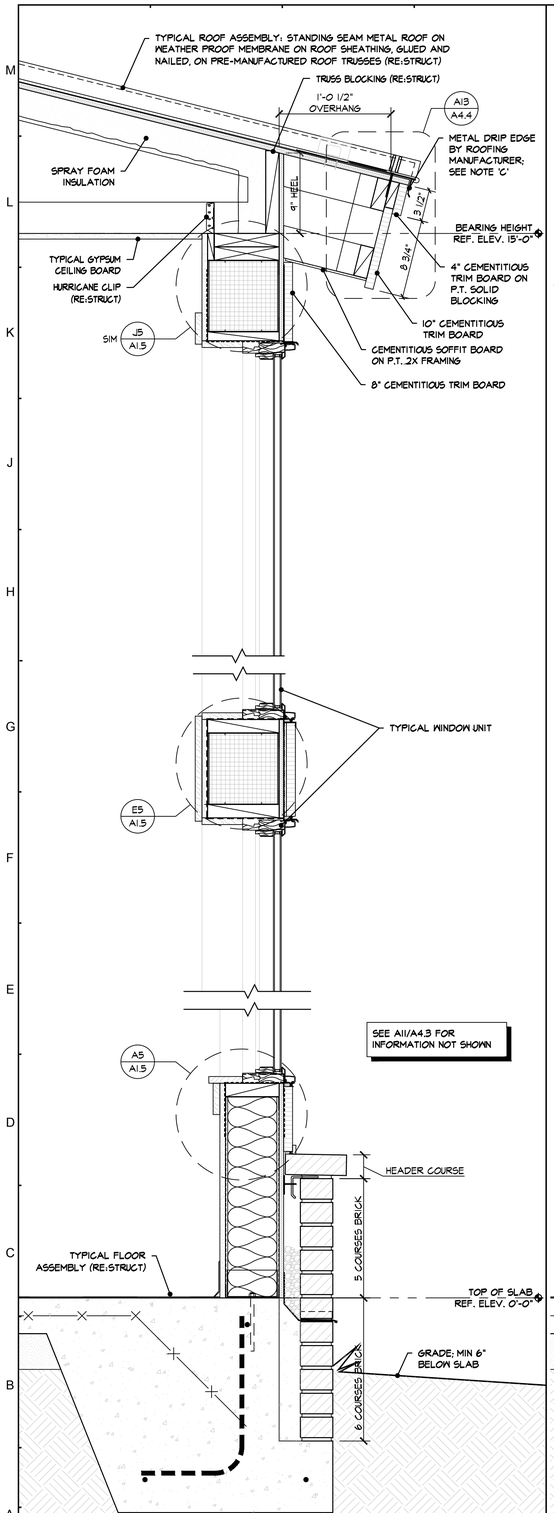

A1 A4.3 WINDOW @ READING ROM 122

SCALE: 1 1/2"=1'-0"

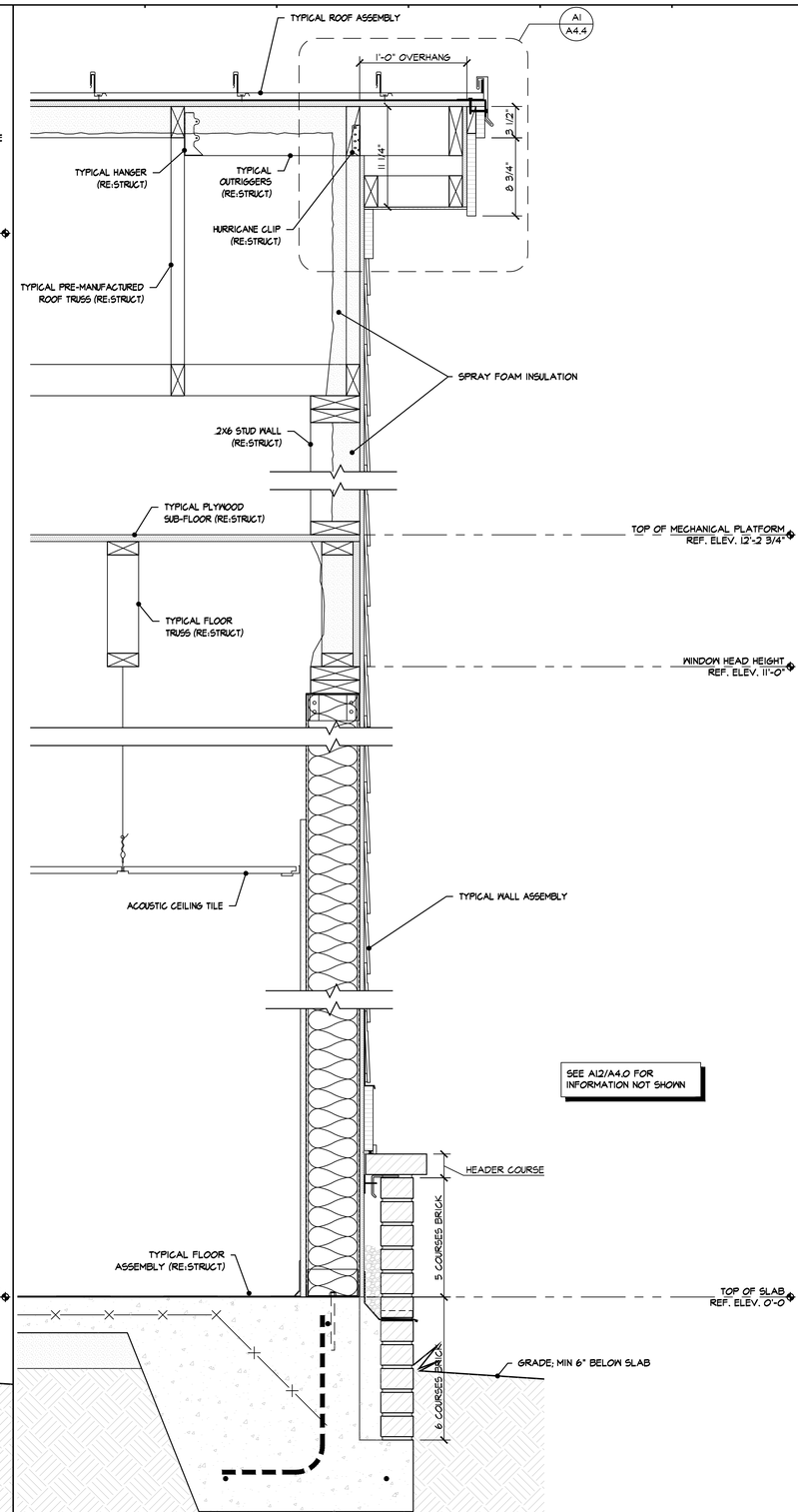

A5 A4.3 WALL SECTION @ GABLE END

SCALE: 1 1/2"=1'-0"

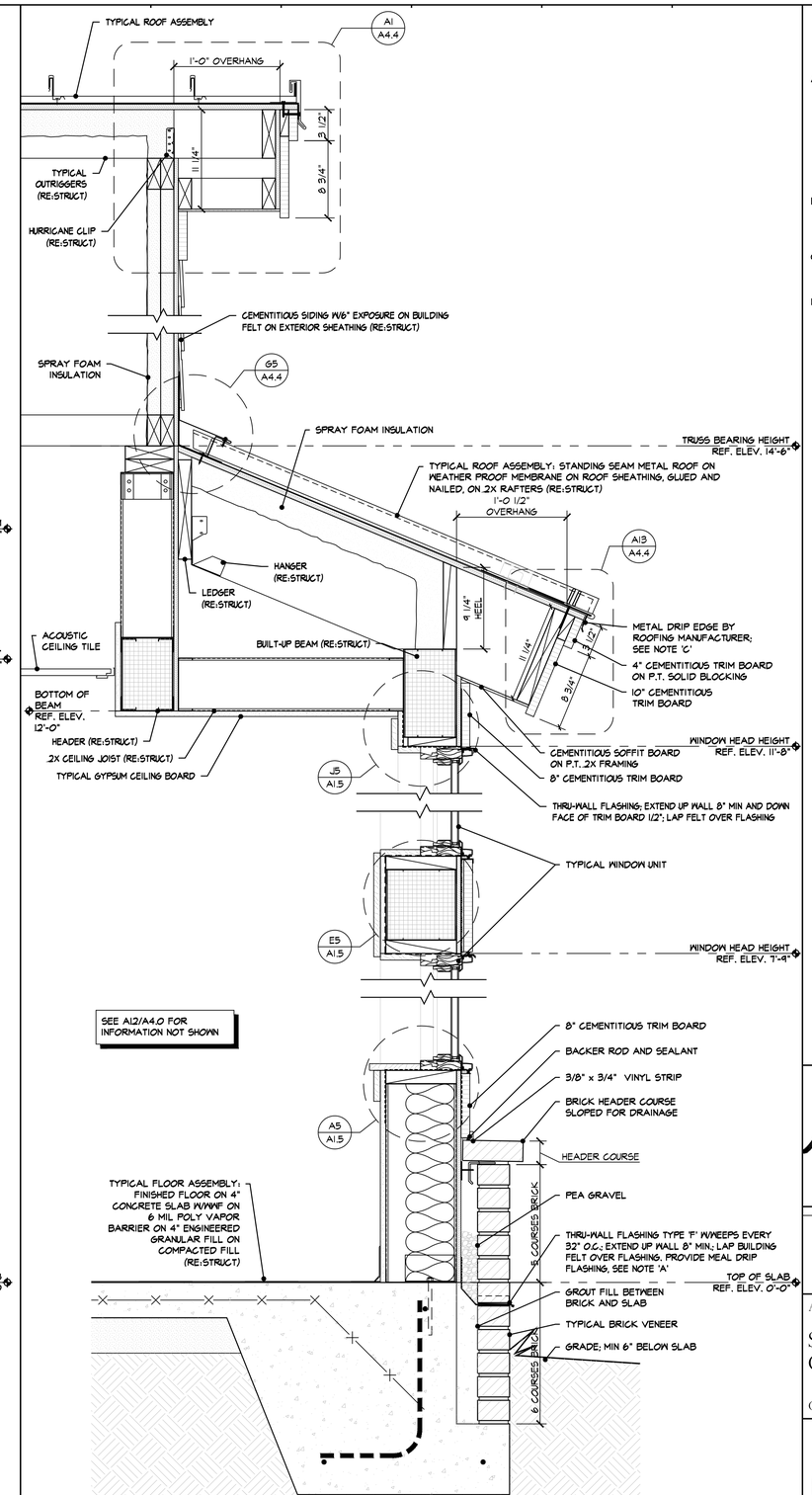

A11 A4.3 BAY WINDOW @ STACKS 121

SCALE: 1 1/2"=1'-0"

GENERAL NOTES

A. METAL DRIP EDGE FLASHING SHALL BE STAINLESS STEEL AND SHALL EXTEND 1/2" BEYOND THE FACE OF THE BRICK. THRU-WALL FLASHING MATERIAL SHALL EXTEND 1/2" MIN BEYOND THE EXTERIOR EDGE OF BRICK AND BE FULLY BONDED TO THE TOP SURFACE OF THE METAL DRIP EDGE WITH A MASTIC OR MANUFACTURER-APPROVED SEALANT. TRIM FLASHING AS DIRECTED BY ARCHITECT. METAL DRIP EDGES SHALL BE SEALED AT ALL LAPS AND PENETRATIONS. EXPOSED END SHALL BE HEMMED.

B. DISSIMILAR METAL ARE TO BE USED IN CONJUNCTION WITH STEEL SHELF ANGLES OR LINTELS TO NEGATE THE POTENTIAL FOR GALVANIC ACTION BETWEEN THE METALS.

C. METAL DRIP EDGE BY ROOFING MANUFACTURER; ATTACH W(2) FASTENERS INTO SOLID SURFACE EVERY 24" O.C.

D. PROVIDE BAFFLES BETWEEN ROOF TRUSSES AT SOFFIT LOCATIONS FOR INSTALLATION OF SPRAY FOAM INSULATION. PROVIDE BAFFLES IN OTHER LOCATIONS AS REQUIRED.

MICHAEL WALKER Pawleys Island, SC 04394 REGISTERED ARCHITECT SOUTH CAROLINA

REVISION	DATE

TYCH & WALKER
ARCHITECTS, LLP
38 BLACKGUM ROAD, UNIT B
PO BOX 509
PAWLEYS ISLAND, SC 29576
843-651-7151
mwalker@tychwalker.com

A NEW LIBRARY FACILITY

SOUTHERN GEORGETOWN COMMUNITY LIBRARY

GEORGETOWN COUNTY, SOUTH CAROLINA

STATE OF SOUTH CAROLINA TYCH & WALKER ARCHITECTS, LLP Pawleys Island, SC No. 95005 REGISTERED ARCHITECTS

2016-04

04/03/19

WALL SECTIONS

A4.3

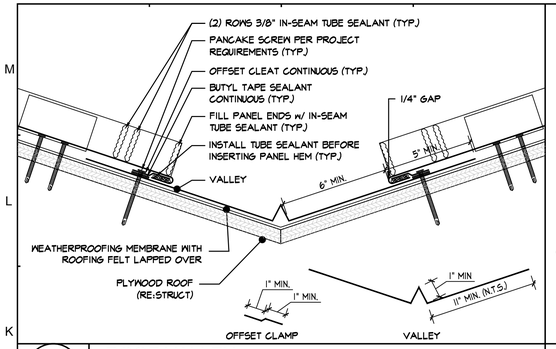

K1 / A4.4 — ROOF VALLEY

NO SCALE

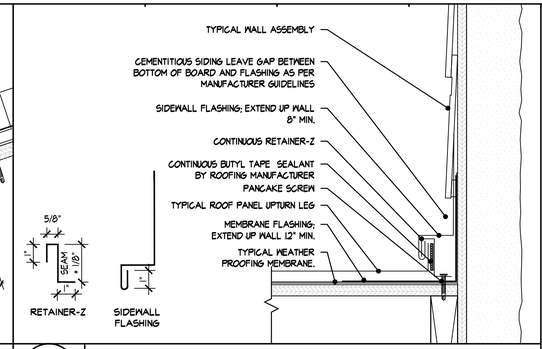

K5 / A4.4 — ROOF TO WALL CONNECTION DETAIL

SCALE: 3"=1'-0"

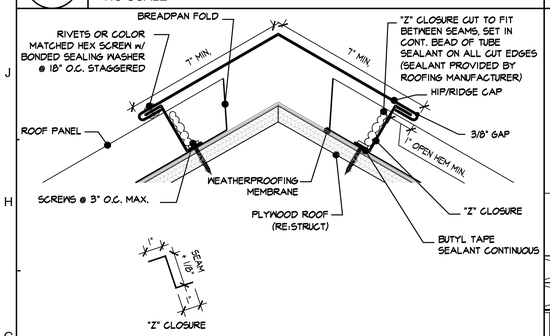

G1 / A4.4 — HIP/RIDGE DETAIL

NO SCALE

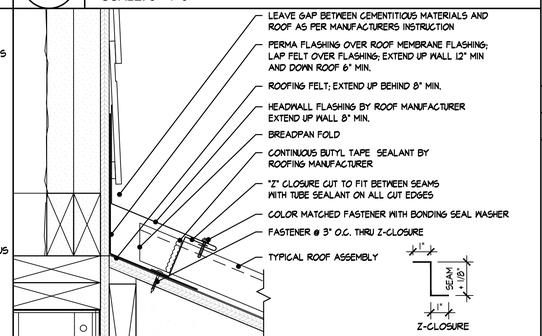

G5 / A4.4 — ROOF TO WALL CONNECTION DETAIL

SCALE: 3"=1'-0"

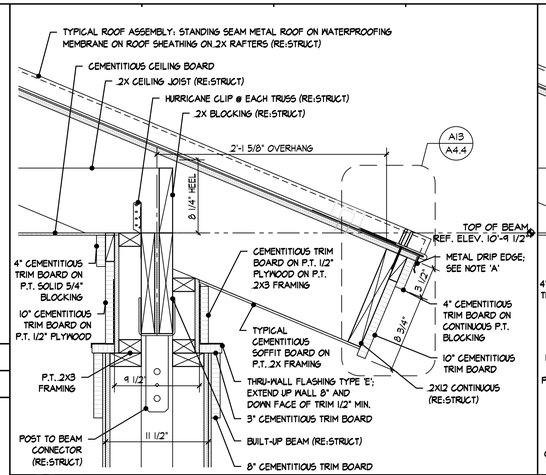

J9 / A4.4 — PORCH EAVE DETAIL @COLUMN

SCALE: 1"=1'-0"

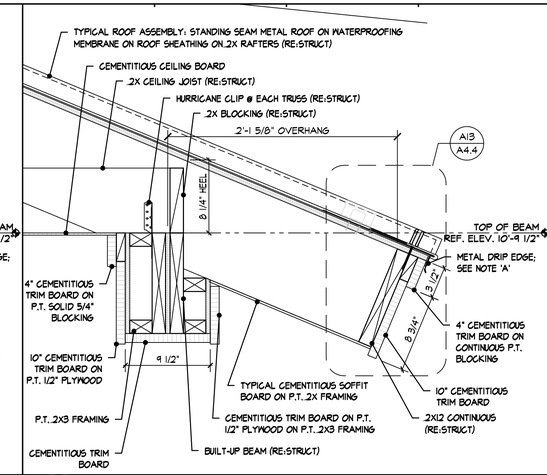

J13 / A4.4 — TYPICAL PORCH EAVE DETAIL

SCALE: 1 1/2"=1'-0"

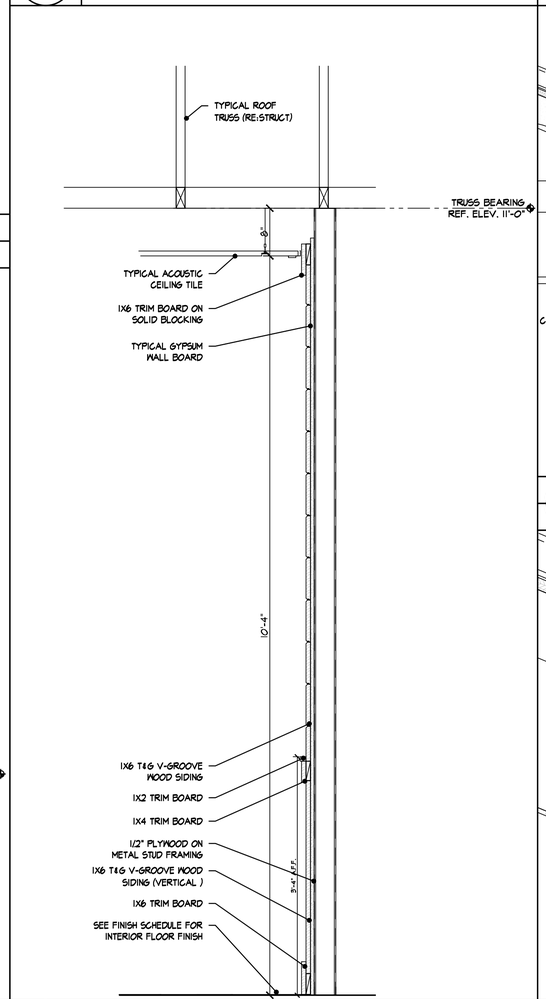

A9 / A4.4 — ENTRY 101 WALL DETAIL

SCALE: 1"=1'-0"

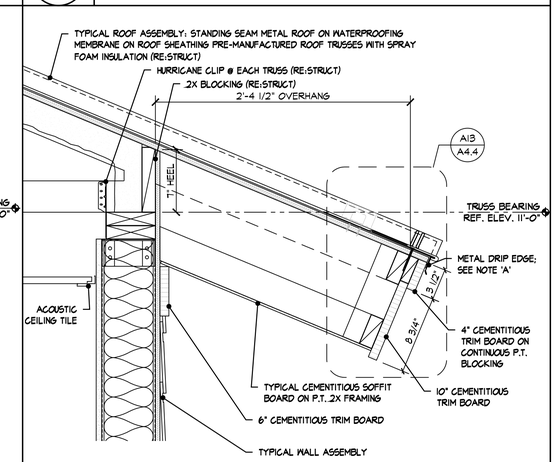

E13 / A4.4 — TYPICAL ROOF EAVE

SCALE: 1"=1'-0"

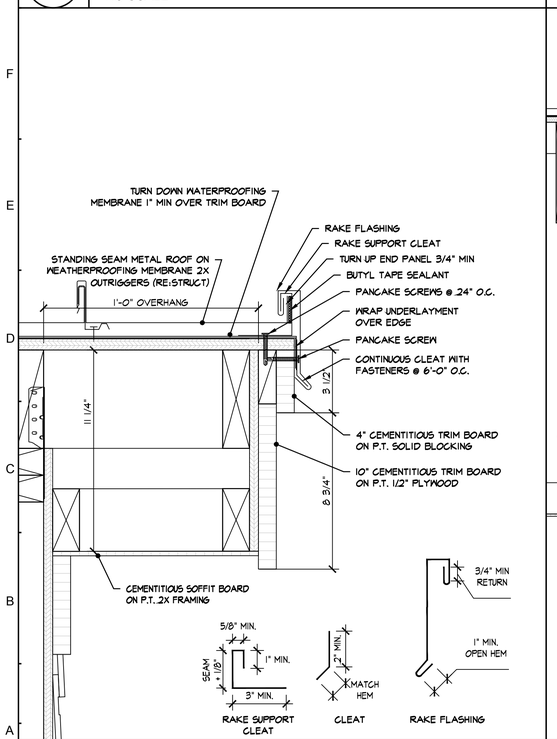

A1 / A4.4 — TYPICAL RAKE DETAIL

SCALE: 3"=1'-0"

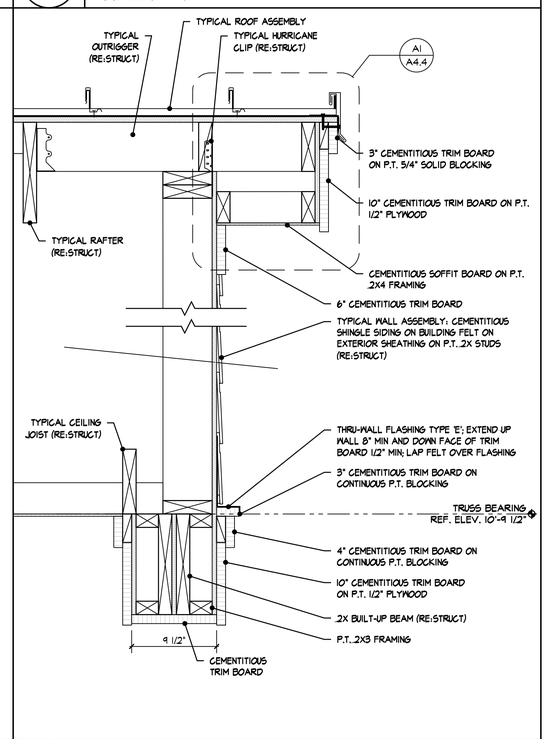

A5 / A4.4 — TYPICAL PORCH RAKE

SCALE: 1 1/2"=1'-0"

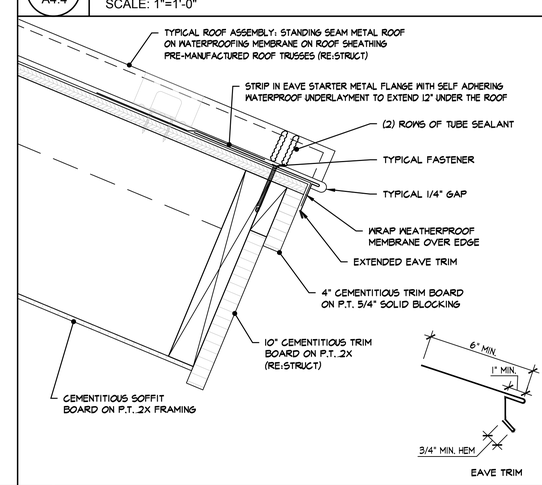

A13 / A4.4 — TYPICAL EAVE DETAIL

SCALE: 3" = 1'-0"

GENERAL NOTES

A. METAL DRIP EDGE FLASHING SHALL BE STAINLESS STEEL AND SHALL EXTEND 1/2" BEYOND THE FACE OF THE BRICK. THRU-WALL FLASHING MATERIAL SHALL EXTEND 1/2" MIN BEYOND THE EXTERIOR EDGE OF BRICK AND BE FULLY BONDED TO THE TOP SURFACE OF THE METAL DRIP EDGE WITH A MASTIC OR MANUFACTURER-APPROVED SEALANT. TRIM FLASHING AS DIRECTED BY ARCHITECT. METAL DRIP EDGES SHALL BE SEALED AT ALL LAPS AND PENETRATIONS. EXPOSED END SHALL BE HEMMED.

B. DISSIMILAR METAL ARE TO BE USED IN CONJUNCTION WITH STEEL SHELF ANGLES OR LINTELS TO NEGATE THE POTENTIAL FOR GALVANIC ACTION BETWEEN THE METALS.

C. ALL ROOF TRUSSES AND EXTERIOR PLYWOOD SHEATHING SHALL BE FIRE RETARDANT WOOD. ALL SOFFIT PLYWOOD SHALL BE FIRE RETARDANT WOOD. ALL WOOD SOFFIT FRAMING SHALL BE FIRE RETARDANT WOOD.

D. PROVIDE BAFFLES BETWEEN ROOF TRUSSES AT SOFFIT LOCATIONS FOR INSTALLATION OF SPRAY FOAM INSULATION. PROVIDE BAFFLES IN OTHER LOCATIONS AS REQUIRED.

E. PROVIDE INTUMESCENT PAINT ON ALL STEEL STRUCTURAL COMPONENTS AS PER UL DESIGN (SEE SHEET FS-3).

MICHAEL WALKER
Pawleys Island, SC
04394
REGISTERED ARCHITECT
NORTH CAROLINA
REVISION DATE

TYCH & WALKER
ARCHITECTS, LLP

38 BLACKGUM ROAD, UNIT B
PO BOX 509
PAWLEYS ISLAND, SC 29576
843-651-7151

mwalker@tychwalker.com

A NEW LIBRARY FACILITY

SOUTHERN GEORGETOWN COMMUNITY LIBRARY

GEORGETOWN COUNTY, SOUTH CAROLINA

STATE OF SOUTH CAROLINA
TYCH & WALKER ARCHITECTS, LLP
Pawleys Island, SC
No. 95005
REGISTERED ARCHITECTS

2016-04	
04/03/19	
WALL SECTIONS	

A4.4

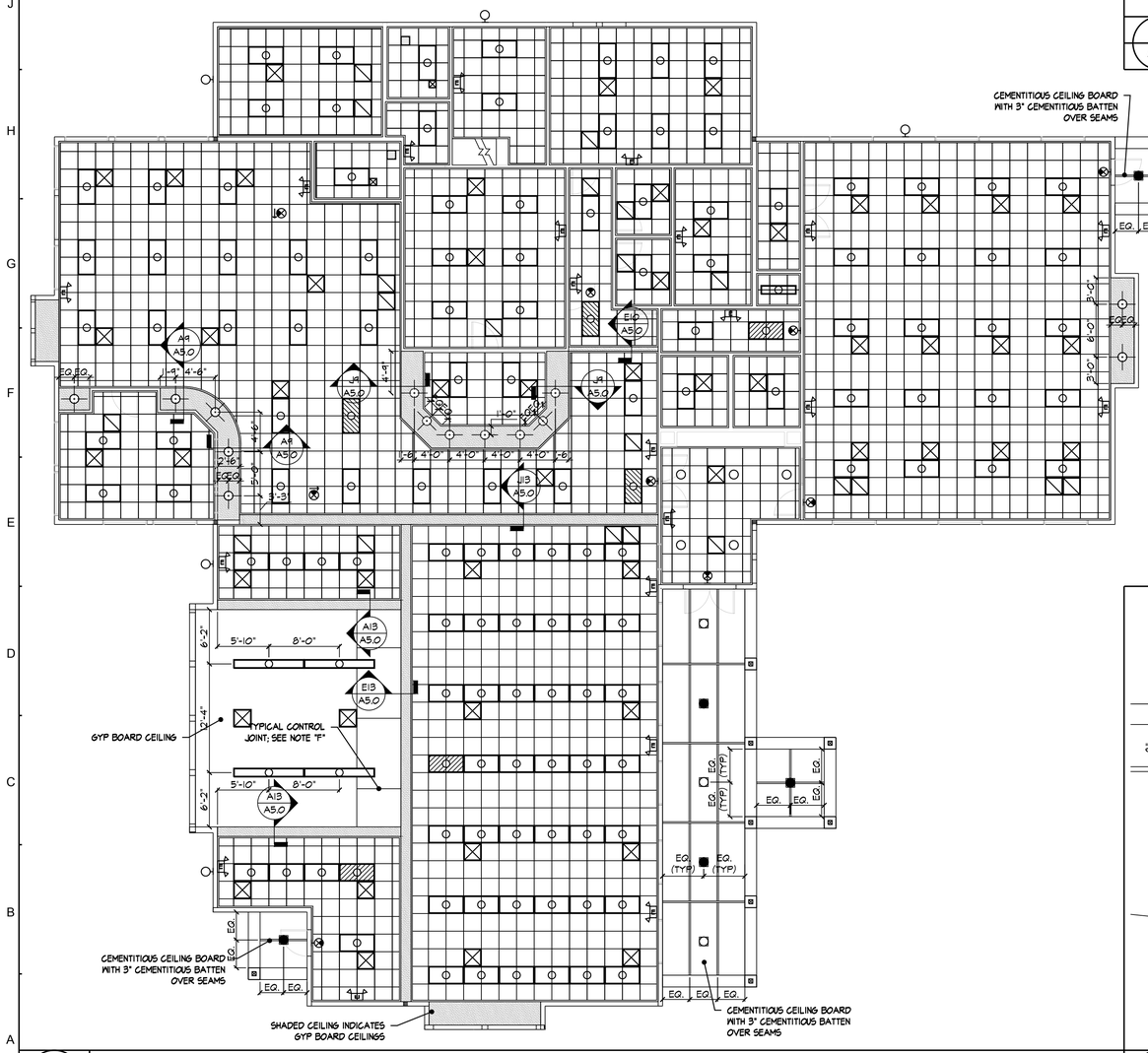

A1 / A5.0 — REFLECTED CEILING PLAN
SCALE: 1/8"=1'-0"

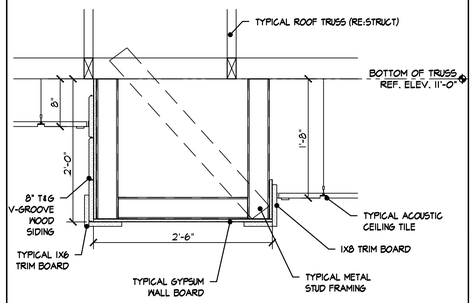

J9 / A5.0 — CEILING SOFFIT @ CIRCULATION
SCALE: 1"=1'-0"

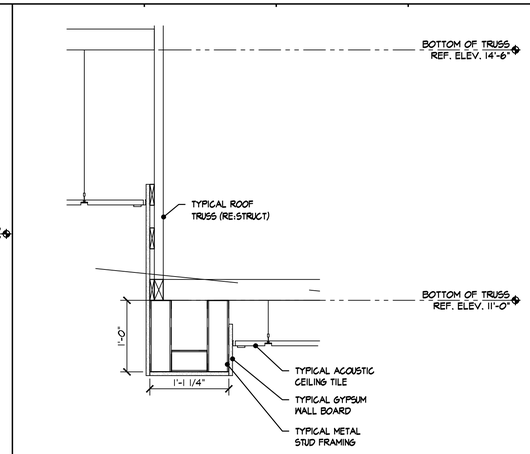

J13 / A5.0 — CEILING SOFFIT @ READING ROOM
SCALE: 1"=1'-0"

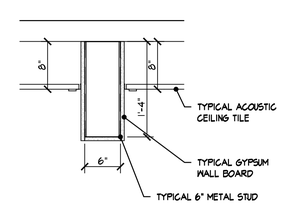

E10 / A5.0 — CEILING SOFFIT
SCALE: 1"=1'-0"

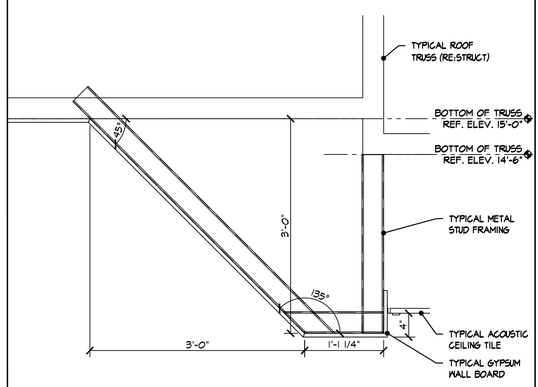

E13 / A5.0 — CEILING SOFFIT @ READING ROOM
SCALE: 1"=1'-0"

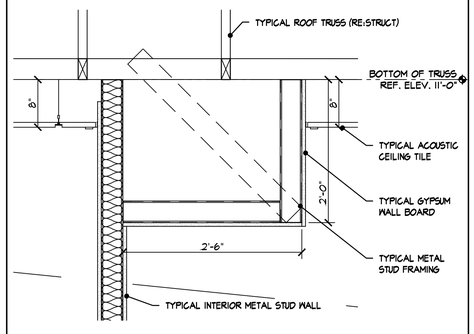

A9 / A5.0 — CEILING SOFFIT @ READING ROOM
SCALE: 1"=1'-0"

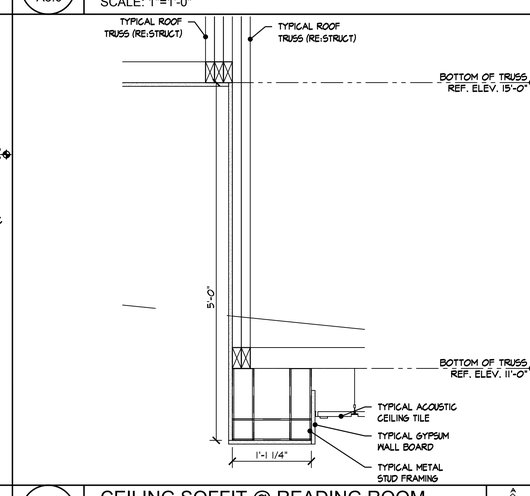

A13 / A5.0 — CEILING SOFFIT @ READING ROOM
SCALE: 1"=1'-0"

GENERAL NOTES

A. DIMENSIONS ARE TO FACE OF FINISH MATERIALS UNLESS NOTED OTHERWISE.

B. SEE MECHANICAL DRAWINGS FOR ALL MECH SYMBOL INFORMATION.

C. SEE ELECTRICAL DRAWINGS FOR ALL ELECTRICAL SYMBOL INFORMATION.

D. COORDINATE HEIGHTS OF LIGHTING FIXTURES, MECHANICAL GRILLES, AND INTERIOR MECHANICAL UNITS WITH ARCHITECT.

E. MECHANICAL PLATFORMS SHALL BE 3/4" T&G PLYWOOD GLUED AND NAILED TO TOP OF THE 2X FLOOR JOISTS; SEE STRUCTURAL. PROVIDE 2X4 TOE-KICK, 2X4 MIDDLE RAIL @ 2'-0" AFF AND 2X4 TOP RAILS AT 42" AFF). PROVIDE AT EDGES OF PLATFORM EXPOSED TO ATTIC TRUSSES. ALL WOOD TO BE FIRE RETARDANT.

F. TYPICAL CONTROL JOINT TO BE SPACED NO MORE THAN 8'-0" O.C. MAX. USE 1/2" WIDE REVEAL CONTROL JOINT REGLET.

SYMBOL LEGEND

- 2X4 LIGHT FIXTURE
- 2X4 LIGHT FIXTURE; USED AS NIGHT LIGHT
- 1X4 LIGHT FIXTURE
- 1X4 LIGHT FIXTURE; USED AS NIGHT LIGHT
- CAN LIGHT FIXTURE
- CAN LIGHT FIXTURE; USED AS NIGHT LIGHT
- WALL MOUNTED LIGHT FIXTURE
- WALL MOUNTED LIGHT FIXTURE CONNECTED TO EMERGENCY CIRCUIT
- CEILING MOUNTED EXIT LIGHT
- WALL MOUNTED EXIT LIGHT
- MECH SUPPLY GRILLE; CEILING MOUNTED
- MECH RETURN GRILLE; CEILING MOUNTED
- PENDANT LIGHT FIXTURE
- LINEAR WALL DIFFUSER/WITH AIR FLOW DIRECTION
- EMERGENCY BATTERY LIGHT
- EXHAUST FAN
- MIRROR WITH LED LIGHT SURROUND
- CEILING MOUNTED LIGHT FIXTURE

STATE OF SOUTH CAROLINA — MICHAEL WALKER, Pawleys Island, SC, 04394 — REGISTERED ARCHITECT

REVISION	DATE

TYCH & WALKER
ARCHITECTS, LLP
38 BLACKGUM ROAD, UNIT B
PO BOX 509
PAWLEYS ISLAND, SC 29576
843-651-7151
mwalker@tychwalker.com

A NEW LIBRARY FACILITY

SOUTHERN GEORGETOWN COMMUNITY LIBRARY

GEORGETOWN COUNTY, SOUTH CAROLINA

STATE OF SOUTH CAROLINA — TYCH & WALKER ARCHITECTS, LLP, Pawleys Island, SC, No. 95005 — REGISTERED ARCHITECTS

2016-04
04/03/19
PARTIAL FIRST FLOOR REFLECTED CEILING PLAN

A5.0

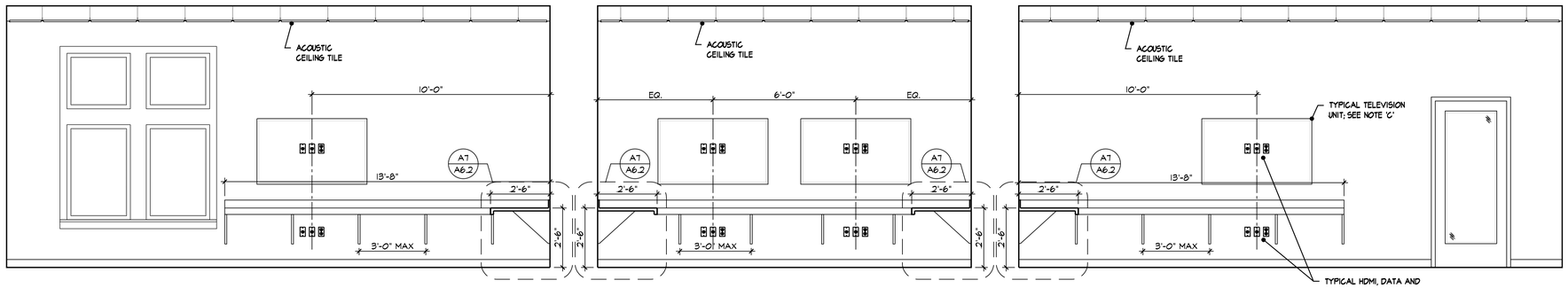

ELEVATION "A" ELEVATION "B" ELEVATION "C"

J1 A6.0

TEEN ROOM 112 ELEVATIONS

SCALE: 3/8"=1'-0"

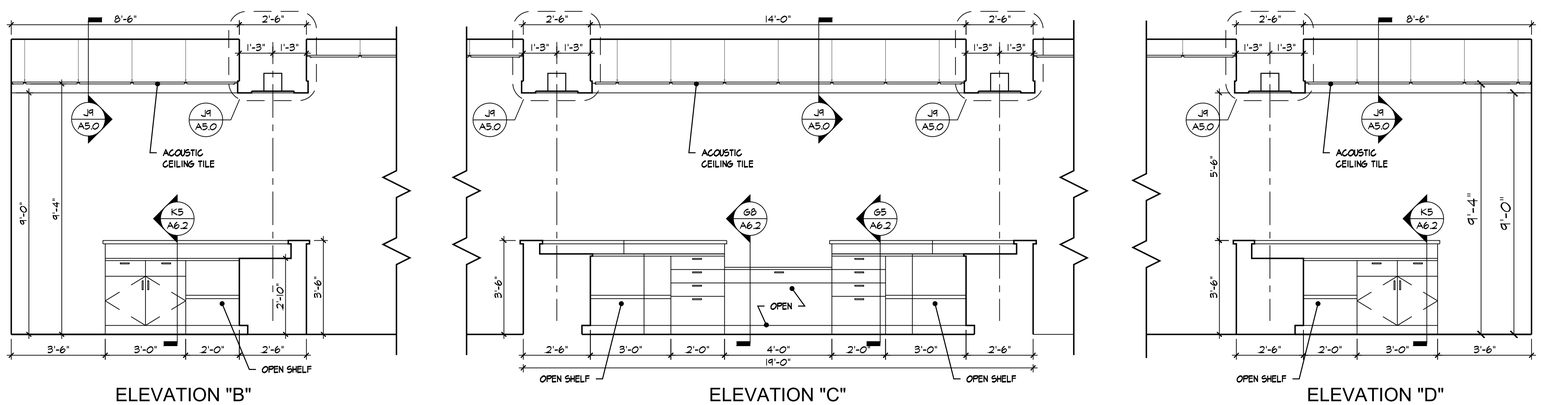

ELEVATION "B" ELEVATION "C" ELEVATION "D"

E1 A6.0

CIRCULATION 109 ELEVATIONS

SCALE: 3/8"=1'-0"

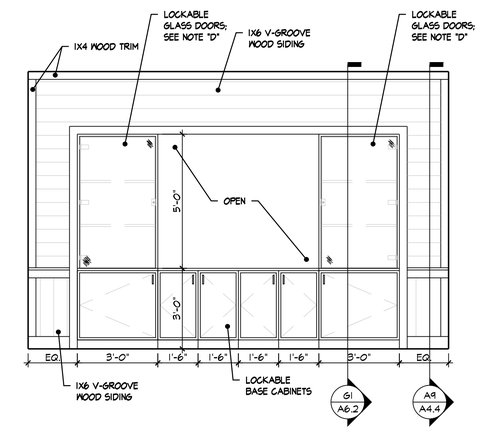

E13 A6.0

ENTRY 101 ELEVATIONS

SCALE: 3/8"=1'-0"

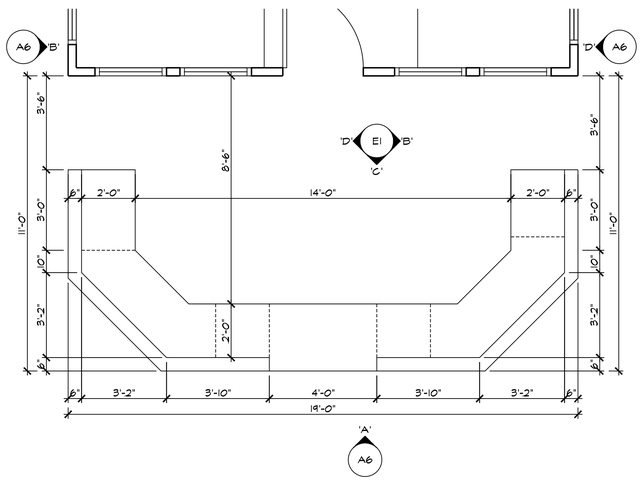

A1 A6.0

CIRCULATION 109 ENLARGED PLAN

SCALE: 3/8"=1'-0"

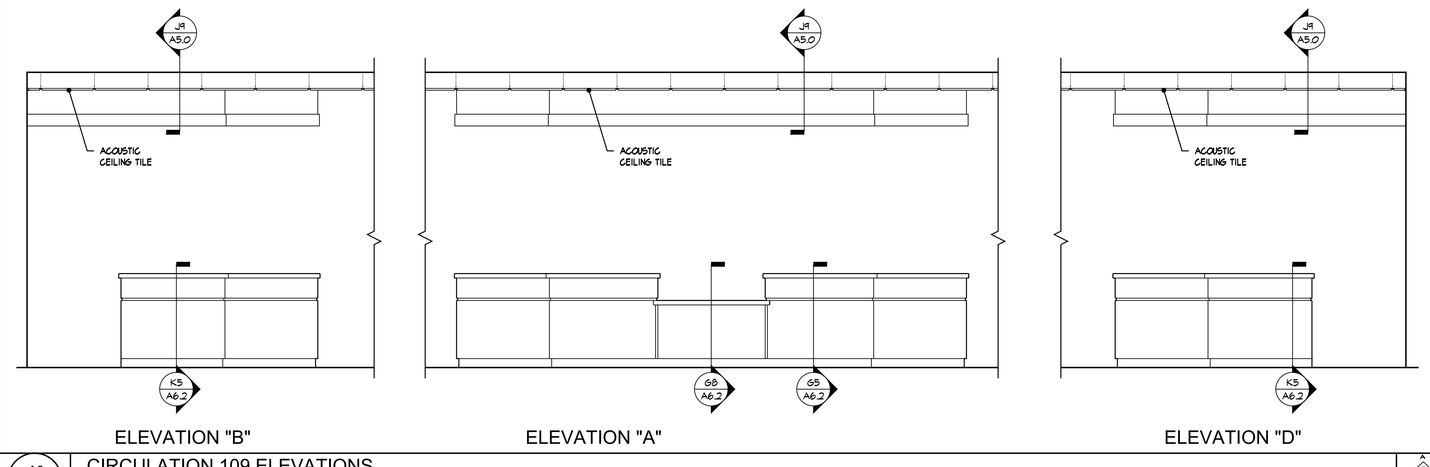

ELEVATION "B" ELEVATION "A" ELEVATION "D"

A6 A6.0

CIRCULATION 109 ELEVATIONS

SCALE: 3/8"=1'-0"

GENERAL NOTES

A. CONTRACTOR IS RESPONSIBLE FOR INSTALLATION AND COORDINATION OF ALL BLOCKING REQUIRED FOR CASEWORK INSTALLATION WHETHER INDICATED ON DRAWINGS OR NOT.

B. PROVIDE 1/2" REGLET REVEAL AT ALL SOFFIT TO SOFFIT JOINT AND SOFFIT TO COLUMN JOINTS CONNECTIONS.

C. COORDINATE VERTICAL ELEVATION AND HORIZONTAL LOCATION OF ALL TELEVISION UNITS WITH ARCHITECT PRIOR TO ROUGH-IN. FIELD VERIFY LOCATION OF ALL POWER, DATA AND HDMI OUTLETS IN ENTRY 101, MULTIPURPOSE ROOM 102, TEEN ROOM 112 AND READING ROOM 120 WITH ARCHITECT PRIOR TO ROUGH-IN.

D. GLASS TO BE 3/8" TEMPERED. USE CRL CHROME OFFSET PIVOT HINGE, FA044CH OR EQUAL, MIN. 3 PER DOOR. PROVIDE CRL CHROME SQUARE PLUNGER LOCK WITH STRIKE , EH102 OR EQUAL FOR 3/8" GLASS DOOR (PROVIDE ONE PER DOOR). SEE INTERIOR DETAILS SHEET A6.2.

STATE OF SOUTH CAROLINA
MICHAEL WALKER
Pawleys Island, SC
04394
REGISTERED ARCHITECT
04/03/19

REVISION	DATE

TYCH & WALKER
ARCHITECTS, LLP

38 BLACKGUM ROAD, UNIT B
PO BOX 509
PAWLEYS ISLAND, SC 29576
843-651-7151

mwalker@tychwalker.com

A NEW LIBRARY FACILITY

SOUTHERN GEORGETOWN COMMUNITY LIBRARY

GEORGETOWN COUNTY, SOUTH CAROLINA

STATE OF SOUTH CAROLINA
TYCH & WALKER ARCHITECTS, LLP
Pawleys Island, SC
No. 95005
REGISTERED ARCHITECTS

2016-04	
04/03/19	
INTERIOR ELEVATIONS	
A6.0	

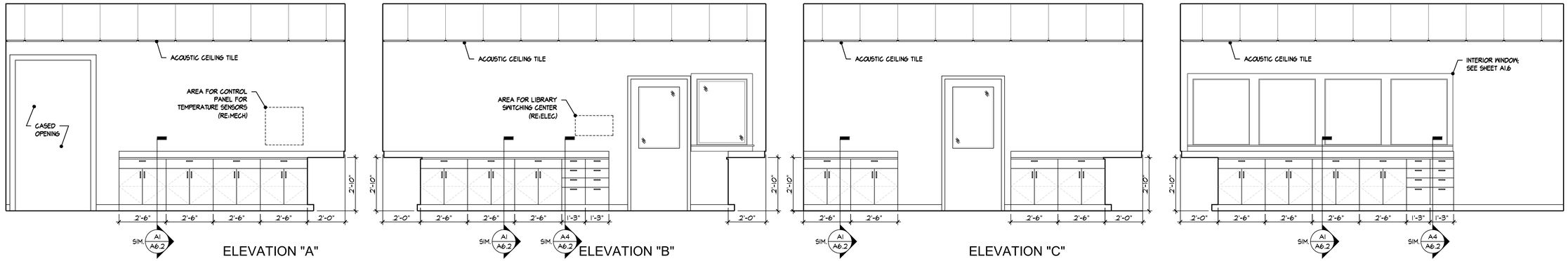

J1 A6.1

WORKROOM 113 ELEVATIONS

SCALE: 3/8"=1'-0"

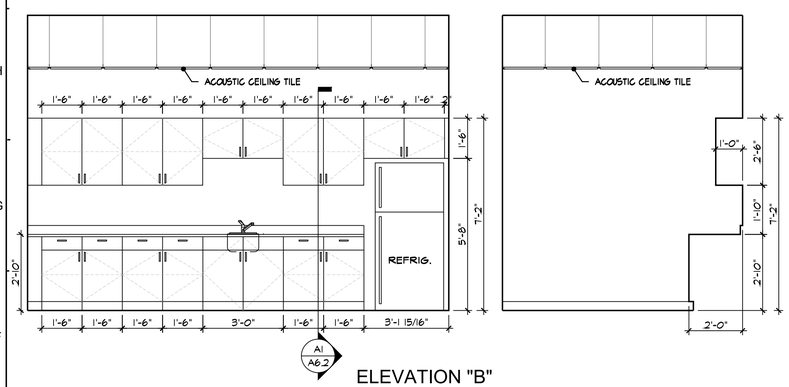

E1 A6.1

KITCHENETTE 106 ELEVATIONS

SCALE: 3/8"=1'-0"

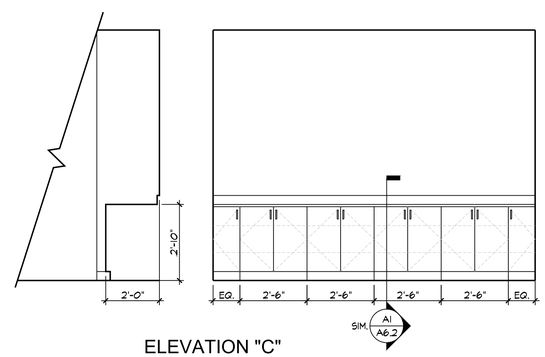

E7 A6.1

MULTIPURPOSE 102 ELEVATIONS

SCALE: 3/8"=1'-0"

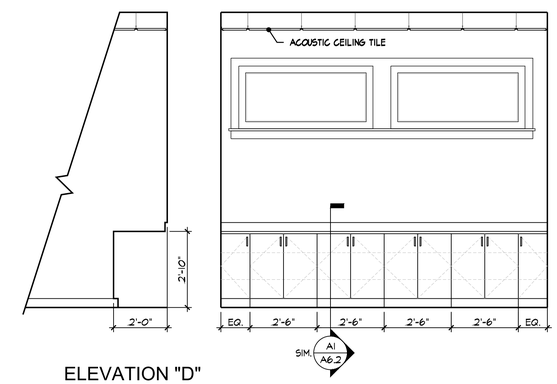

E12 A6.1

READING ROOM 120 ELEVATIONS

SCALE: 3/8"=1'-0"

A1 A6.1

NOT USED

NO SCALE

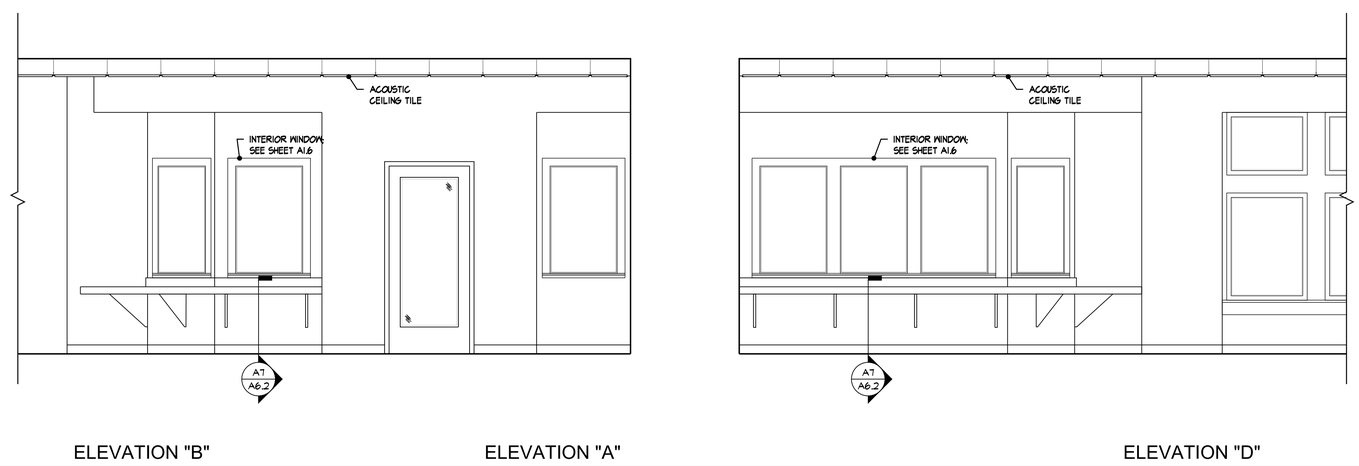

A6 A6.1

CHILDRENS BOOKS 118 ELEVATIONS

SCALE: 3/8"=1'-0"

GENERAL NOTES

A. CONTRACTOR IS RESPONSIBLE FOR INSTALLATION AND COORDINATION OF ALL BLOCKING REQUIRED FOR CASEWORK INSTALLATION WHETHER INDICATED ON DRAWINGS OR NOT.

B. PROVIDE 1/2" RESLET REVEAL AT ALL SOFFIT TO SOFFIT JOINT AND SOFFIT TO COLUMN JOINTS CONNECTIONS.

SOUTH CAROLINA MICHAEL WALKER Pawleys Island, SC 04394 REGISTERED ARCHITECT

REVISION	DATE

TYCH & WALKER
ARCHITECTS, LLP
38 BLACKGUM ROAD, UNIT B
PO BOX 509
PAWLEYS ISLAND, SC 29576
843-651-7151
mwalker@tychwalker.com

A NEW LIBRARY FACILITY

SOUTHERN GEORGETOWN COMMUNITY LIBRARY

GEORGETOWN COUNTY, SOUTH CAROLINA

STATE OF SOUTH CAROLINA TYCH & WALKER ARCHITECTS, LLP Pawleys Island, SC No. 95005 REGISTERED ARCHITECTS

2016-04	
04/03/19	
INTERIOR ELEVATIONS	

A6.1

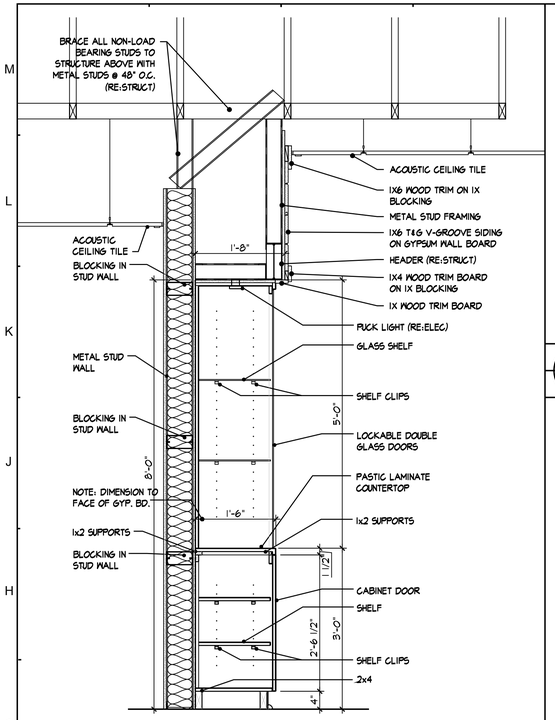

G1 A6.2 — LOBBY DISPLAY SHELVING

SCALE: 3/4"=1'-0"

NOTE: DRAWER FRONTS AND COUNTER TOPS SHALL BE PLASTIC LAM. ON PLYWOOD, TYP.

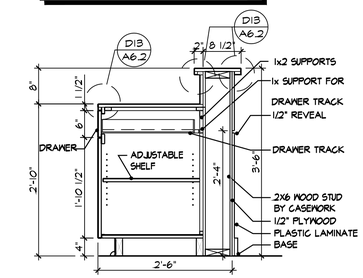

K5 A6.2 — CIRCULATION DESK SHELF UNIT

SCALE: 3/4"=1'-0"

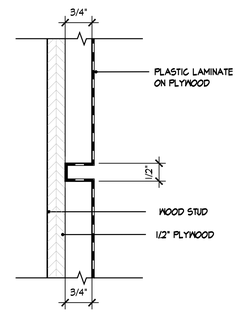

K8 A6.2 — REVEAL DETAIL

SCALE: 6"=1'-0"

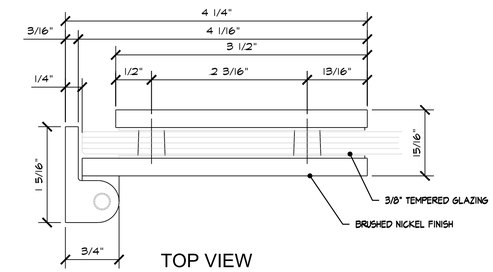

TOP VIEW

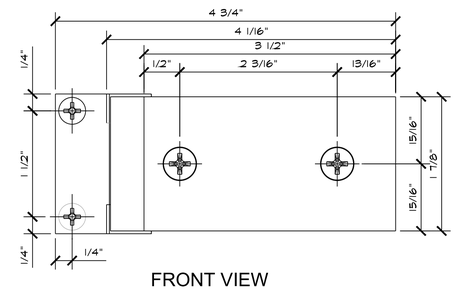

FRONT VIEW

G11 A6.2 — ENTRY DISPLAY CASE HINGE

SCALE: 6"=1'-0"

NOTE: DRAWER FRONTS AND COUNTER TOPS SHALL BE PLASTIC LAM. ON PLYWOOD, TYP.

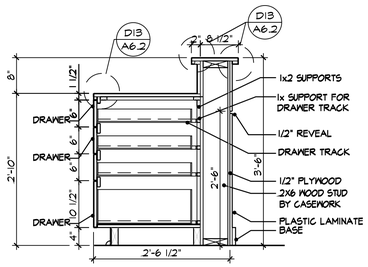

G5 A6.2 — CIRCULATION DESK DRAWER UNIT

SCALE: 3/4"=1'-0"

NOTE: DRAWER FRONTS AND COUNTER TOPS SHALL BE PLASTIC LAM. ON PLYWOOD, TYP.

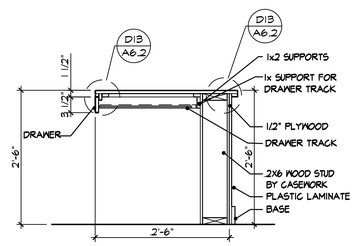

G8 A6.2 — CIRCULATION DESK ACCESSIBLE UNIT

SCALE: 3/4"=1'-0"

GENERAL NOTES

A. CONTRACTOR IS RESPONSIBLE FOR INSTALLATION AND COORDINATION OF ALL BLOCKING REQUIRED FOR CASEWORK INSTALLATION WHETHER INDICATED ON DRAWINGS OR NOT.

B. PROVIDE 1/2" REGLET REVEAL AT ALL SOFFIT TO SOFFIT JOINT AND SOFFIT TO COLUMN JOINTS CONNECTIONS.

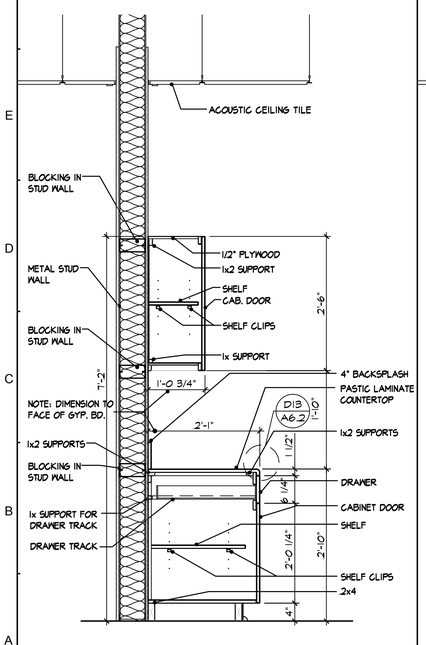

A1 A6.2 — TYPICAL SHELF CABINET UNIT

SCALE: 3/4"=1'-0"

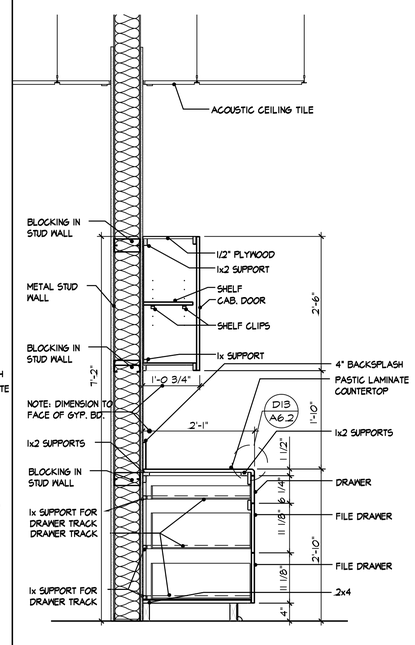

A4 A6.2 — TYPICAL DRAWER CABINET UNIT

SCALE: 3/4"=1'-0"

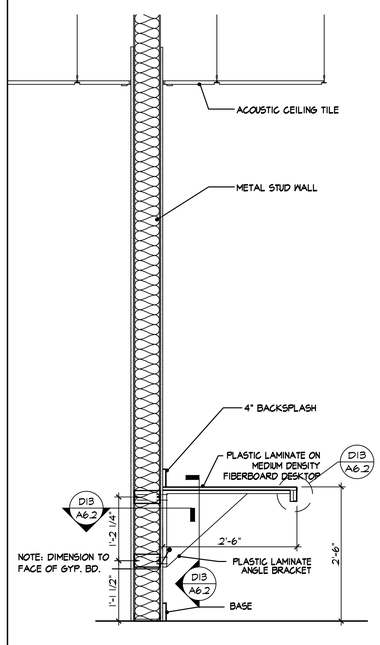

A7 A6.2 — WALL COUNTER

SCALE: 3/4"=1'-0"

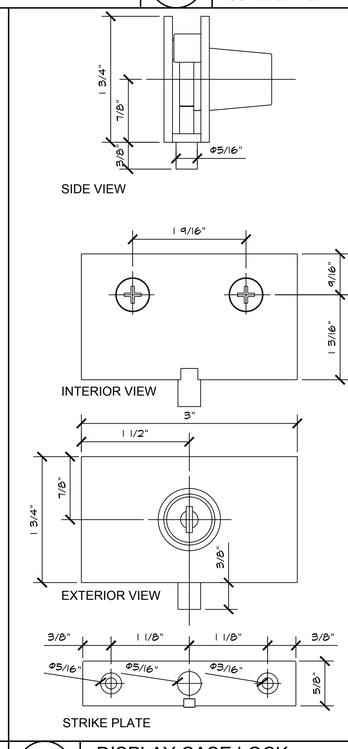

A9 A6.2 — DISPLAY CASE LOCK

SCALE: 6"=1'-0"

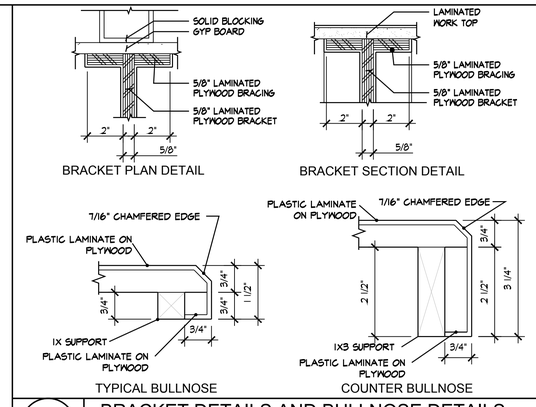

D13 A6.2 — BRACKET DETAILS AND BULLNOSE DETAILS

SCALE: 6" =1'-0"

A13 A6.2 — NOT USED

NO SCALE

TYCH & WALKER
ARCHITECTS, LLP

38 BLACKGUM ROAD, UNIT B
PO BOX 509
PAWLEYS ISLAND, SC 29576
843 651 7151

mwalker@tychwalker.com

STATE OF SOUTH CAROLINA — MICHAEL WALKER — Pawleys Island, SC — 04594 — REGISTERED ARCHITECT

REVISION	DATE

A NEW LIBRARY FACILITY

SOUTHERN GEORGETOWN COMMUNITY LIBRARY

GEORGETOWN COUNTY, SOUTH CAROLINA

STATE OF SOUTH CAROLINA — TYCH & WALKER ARCHITECTS, LLP — Pawleys Island, SC — No. 95005 — REGISTERED ARCHITECTS

2016-04	
04/03/19	
INTERIOR DETAILS	

A6.2

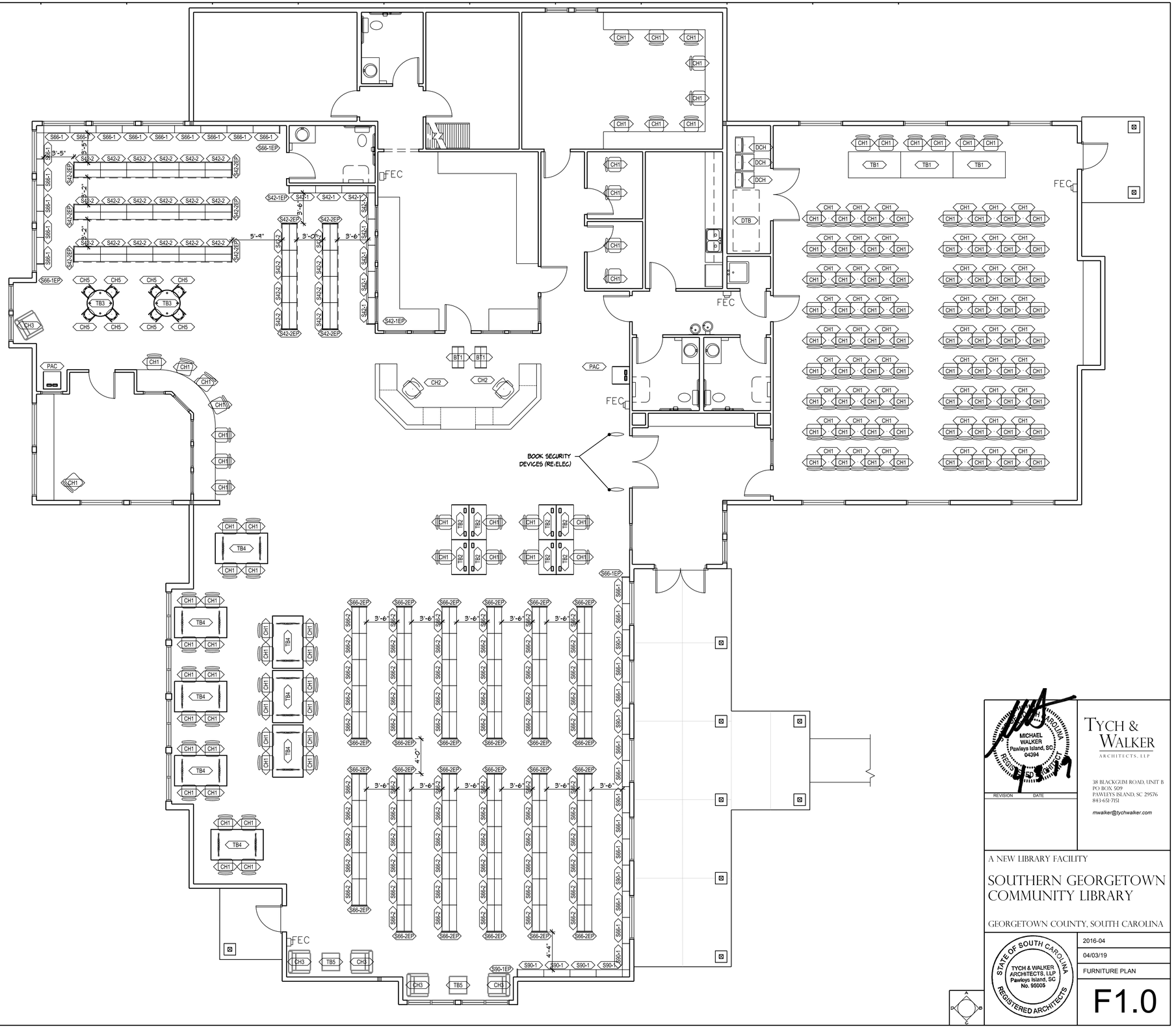

FURNITURE SCHEDULE

Quantity	MARK	ROOM NO.	ROOM	ITEM
410	?	?	?	?
2	BT1	109	CIRCULATION	BOOK TRUCK
132	CH1	102	MULTI-PURPOSE	CHAIR
2	CH1	110	TUTOR	CHAIR
2	CH1	111	TUTOR	CHAIR
8	CH1	112	TEEN ROOM	CHAIR
8	CH1	120	READING ROOM	CHAIR
8	CH1	121	STACKS	CHAIR
32	CH1	122	READING ROOM	CHAIR
2	CH2	109	CIRCULATION	CHAIR
1	CH3	118	CHILDRENS BOOKS	CHAIR
4	CH3	121	STACKS	CHAIR
8	CH5	118	CHILDRENS BOOKS	CHAIR
3	DCH	103	CLOSET	CHAIR DOLLY
1	DTB	103	CLOSET	TABLE DOLLY
2	PAC	121	STACKS	PAC TABLE
8	S42-1	118	CHILDRENS BOOKS	42" SINGLE FACE SHELVING
2	S42-1EP	118	CHILDRENS BOOKS	42" SINGLE FACE END PANEL
26	S42-2	118	CHILDRENS BOOKS	42" DOUBLE FACE SHELVING
10	S42-2EP	118	CHILDRENS BOOKS	42" DOUBLE FACE END PANEL
14	S66-1	118	CHILDRENS BOOKS	66" SINGLE FACE SHELVING
10	S66-1	121	STACKS	66" SINGLE FACE SHELVING
2	S66-1EP	118	CHILDRENS BOOKS	66" SINGLE FACE END PANEL
1	S66-1EP	121	STACKS	66" SINGLE FACE END PANEL
65	S66-2	121	STACKS	66" DOUBLE FACE SHELVING
24	S66-2EP	121	STACKS	66" DOUBLE FACE END PANEL
9	S90-1	121	STACKS	90" SINGLE FACE SHEVLING
1	S90-1EP	121	STACKS	90" SINGLE FACE END PANEL
3	TB1	102	MULTI-PURPOSE	36" X 72" FOLDING TABLE
8	TB2	121	STACKS	24" X 48" INTANDEM TABLE
2	TB3	118	CHILDRENS BOOKS	CHILDRENS TABLE
8	TB4	122	READING ROOM	42" X 72" TABLE
2	TB5	121	STACKS	24" X 24" X22" TABLE

A1
F1.0

FURNITURE PLAN

SCALE: 1/8"=1'-0"

MICHAEL WALKER
Pawleys Island, SC
04394
REGISTERED ARCHITECT
SOUTH CAROLINA

REVISION	DATE

TYCH & WALKER
ARCHITECTS, LLP

38 BLACKGUM ROAD, UNIT B
PO BOX 509
PAWLEYS ISLAND, SC 29576
843-651-7151

mwalker@tychwalker.com

A NEW LIBRARY FACILITY

SOUTHERN GEORGETOWN COMMUNITY LIBRARY

GEORGETOWN COUNTY, SOUTH CAROLINA

STATE OF SOUTH CAROLINA
TYCH & WALKER ARCHITECTS, LLP
Pawleys Island, SC
No. 95005
REGISTERED ARCHITECTS

2016-04

04/03/19

FURNITURE PLAN

F1.0