SAN ANTONIO ELEMENTARY SCHOOL
ROOFING PROJECT NO. 2019-1308

OJAI UNIFIED SCHOOL DISTRICT

ABBREVIATIONS

Ø	DIAMETER	HR.	HOUR
&	AND	HT.	HEIGHT
CL OR C	CENTERLINE	INSUL.	INSULATION
#	POUND OR NUMBER	INT.	INTERIOR
A.B.	ANCHOR BOLT	JT.	JOINT
ABV.	ABOVE	LAM.	LAMINATE
ACP	ACOUSTICAL CEILING PANEL	LAV.	LAVATORY
A.D.	AREA DRAIN	LT.	LIGHT
ADJ.	ADJUSTABLE	MFR.	MANUFACTURER
A.F.F.	ABOVE FINISH FLOOR	MATR'L	MATERIAL
A.F.G.	ABOVE FINISH GRADE	MAX.	MAXIMUM
ALUM.	ALUMINUM	M.B.	MACHINE BOLT
BLDG.	BUILDING	MECH.	MECHANICAL
BLKG.	BLOCKING	MIN.	MINIMUM
BM.	BEAM	MISC.	MISCELLANEOUS
B.O.B.	BOTTOM OF BEAM	M.R.	MOISTURE RESISTANT
BOT.	BOTTOM	MTL.	METAL
BTWN.	BETWEEN	(N)	NEW
CAB.	CABINET	N.I.C.	NOT IN CONTRACT
CALIF.	CALIFORNIA	NO. OR #	NUMBER
C.F.O.I	CONTRACTOR FURNISHED OWNER INSTALLED	N.T.S.	NOT TO SCALE
		O/	OVER
C.I.P.	CAST IN PLACE	O.C.	ON CENTER
CJ	CONSTRUCTION JOINT	O.F.C.I.	OWNER FURNISHED CONTACTOR INSTALLED
C.J.	CONTROL JOINT		
C.L.	CHAIN LINK	O.F.O.I.	OWNER FURNISHED OWNER INSTALLED
CLG.	CEILING		
CLR.	CLEAR	OPP.	OPPOSITE
CMU	CONCRETE MASONRY UNIT	PB	PULL BOX
C.O.	CLEAN OUT	PERF.	PERFORATED
C.O.C.	CENTER OF COLUMN	PL.	PLATE OR PLASTIC
COL.	COLUMN	PLAST.	PLASTER
COMP.	COMPOSITION	PLYWD.	PLYWOOD
CONC.	CONCRETE	PR.	PAIR
CONSTR.	CONSTRUCTION	PROJ.	PROJECTION
CONT.	CONTINUOUS	P.T.D.F.	PRESSURE TREATED DOUGLAS FIR
C.T.	CERAMIC TILE		
DBL.	DOUBLE	R OR RAD	RADIUS
DF	DOUGLAS FIR	REFL.	REFLECTED
D.F.	DRINKING FOUNTAIN	REFRIG.	REFRIGERATOR
DFCI	DISTRICT FURNISHED CONTRACTOR INSTALL	REINF.	REINFORCED OR REINFORCEMENT
DIA.	DIAMETER	REQ.	REQUIRED OR REQUIREMENTS
DIM.	DIMENSION		
DN	DOWN	RM.	ROOM
DR.	DOOR	S.C.	SOLID CORE
DWG	DRAWING	SCHED.	SCHEDULE
(E)	EXISTING	SHT'G	SHEATHING
EA	EACH	SHT.	SHEET
EJ	EXPANSION JOINT	SIM.	SIMILAR
ELECT.	ELECTRICAL	SJ	SAWCUT JOINT
ELEV.	ELEVATION	S.M.S.	SHEET METAL SCREWS
EQ	EQUAL	SQ.	SQUARE
EQUIP.	EQUIPMENT	S.S.	STAINLESS STEEL
EXIST.	EXISTING	ST.	STANDARD
EXT.	EXTERIOR	STL.	STEEL
FD	FLOOR DRAIN	STOR.	STORAGE
FDN.	FOUNDATION	STRUCT.	STRUCTURAL
F.E.	FIRE EXTINGUISHER	SUSP.	SUSPENDED
F.E.C.	FIRE EXTINGUISHER CABINET	T&B	TOP & BOTTOM
F.F.	FINISH FLOOR	TEMP.	TEMPERED
FIN.	FINISH	T.O.	TOP OF
FLR.	FLOOR	T.O.B.	TOP OF BEAM
F.O.C.	FACE OF CONCRETE	TS	TUBE STEEL
F.O.F.	FACE OF FINISH	T.W.	TOP OF WALL
F.O.S.	FACE OF STRUCTURE	TYP.	TYPICAL
FRAM'G	FRAMING	U.N.O.	UNLESS NOTED OTHERWISE
FRP	FIBERGLASS REINFORCED PANEL	U.O.N.	UNLESS OTHERWISE NOTED
		V.C.T.	VINYL COMPOSITION TILE
FT.	FOOT OR FEET	VERT.	VERTICAL
FTG.	FOOTING	V.G.D.F.	VERTICAL GRAIN DOUGLAS FIR
F.V.	FIELD VERIFY		
GA.	GAUGE	V.I.F.	VERIFY IN FIELD
GALV.	GALVANIZED	W/	WITH
GWB	GYPSUM WALL BOARD	WD.	WOOD
GYP. BD.	GYPSUM BOARD	W.O.	WHERE OCCURS
HDG	HOT DIP GALV	W.P.	WATERPROOF
HDR.	HEADER	W.R.	WATER RESISTANT
HORIZ.	HORIZONTAL	WT.	WEIGHT
H.M.	HOLLOW METAL		

DEMOLITION NOTES

1. IDENTIFY ALL DAMAGED ELEMENTS DESIGNATED TO REMAIN OR BE RELOCATED. REQUEST CLARIFICATION FROM THE ARCHITECT BEFORE PROCEEDING WITH DEMOLITION WORK.

2. GENERAL CONTRACTOR IS RESPONSIBLE FOR REVIEWING AND VERIFYING DEMOLITION PLANS IN RELATION TO STRUCTURAL AND CONSTRUCTION DRAWINGS. CONTRACTOR SHALL VERIFY AND COORDINATE THE EXTENT OF DEMOLITION WORK WITH NEW WORK. THE ARCHITECT SHALL BE NOTIFIED OF ANY AND ALL CONFLICTS, DISCREPANCIES OR PROBLEMS.

3. THE CONTRACTOR SHALL VERIFY LOCATION OF ALL UTILITIES PRIOR TO DEMOLITION. THE CONTRACTOR SHALL BEWARE OF POTENTIAL HAZARDS FROM DEMOLITION WORK NEAR UTILITIES. PIPES AND CONDUIT ENCOUNTERED IN DEMOLISHED PARTITIONS AND AREAS WHICH ARE TO REMAIN IN USE SHALL BE RE-ROUTED AND CONCEALED. THOSE WHICH ARE TO BE ABANDONED SHALL BE CAPPED AND CONCEALED IN FLOOR, WALL OR CEILING.

4. THE GENERAL CONTRACTOR SHALL ERECT ALL NECESSARY TEMPORARY SOLID AND/OR PLASTIC DROP CLOTH PARTITIONS TO PROTECT AREAS TO REMAIN WHILE DEMOLITION AND CONSTRUCTION ARE IN PROGRESS.

5. BRACE AND SUPPORT EXISTING WORK PRIOR TO AND DURING DEMOLITION AND NEW WORK, AND UNTIL SAFE TO REMOVE SUCH BRACING AND SUPPORTS. THE CONTRACTOR IS RESPONSIBLE FOR ALL STRUCTURAL SHORING DESIGN AND CALCULATIONS.

6. THE CONTRACTOR SHALL PERFORM ALL DEMOLITION WORK REQUIRED INCLUDING THE REMOVAL AND PROPER DISPOSAL OF ALL DEBRIS, BROKEN CONCRETE, ETC., FROM THE SITE. PROPER SHORING SHALL BE EXECUTED FOR THE SAFETY OF THE STRUCTURE AND WORKMEN.

7. THE OWNER SHALL HAVE FIRST RIGHTS OF REFUSAL FOR ALL DEMOLISHED MATERIALS.

8. THE CONTRACTOR SHALL BE RESPONSIBLE FOR ALL DAMAGE RESULTING FROM DEMOLITION AT NO ADDITIONAL COST TO THE OWNER. THE GENERAL CONTRACTOR SHALL BE EXTREMELY CAREFUL TO PROTECT AND NOT TO DAMAGE ANY PORTION OF EXISTING INSTALLATION NOT BEING REMOVED. ANY EXISTING FACILITIES INDICATED TO REMAIN WHICH ARE SO DAMAGED SHALL BE REPLACED EQUAL TO ORIGINAL CONDITION AND TO THE SATISFACTION OF THE OWNER.

9. CUT EXISTING PORTIONS OF WALLS, FLOORS, CEILINGS, ETC., WHERE INDICATED AND AS NECESSARY FOR NEW WORK. UNLESS SPECIFICALLY SHOWN ON THESE PLANS, NO STRUCTURAL MEMBER SHALL BE CUT, NEITHER DRILLED NOR NOTCHED, WITHOUT PRIOR WRITTEN AUTHORIZATION FROM THE STRUCTURAL ENGINEER, THE ARCHITECT AND THE AUTHORITY HAVING JURISDICTION.

10. ALL TRADES CONCERNED SHALL COORDINATE EACH OTHER'S WORKS PRIOR TO AND DURING DEMOLITION.

11. ANY PROJECTING OR SURFACE-MOUNTED ITEMS BEING ABANDONED SHALL BE REMOVED, CAPPED AND CONCEALED BEHIND FINISHED SURFACES, UNLESS OTHERWISE NOTED. PATCH AND FINISH TO MATCH EXISTING ADJACENT SURFACE.

12. SURFACES WHERE MATERIAL IS REMOVED TO INSTALL NEW WORK OR TO RECEIVE NEW FINISH SHALL BE REPAIRED AND PATCHED TO MATCH ORIGINAL CONDITIONS. RETEXTURE AND REPAINT WALL OR CEILING WHERE PATCHED TO MATCH EXISTING, WITH NO EVIDENCE THAT PATCH HAS OCCURRED.

13. ALL EXISTING AREAS TO REMAIN OR NEW CONSTRUCTION WORK THAT ARE DAMAGED SHALL BE PATCHED AS REQUIRED TO MATCH EXISTING ADJACENT AREA IN MATERIAL, FINISH AND COLOR, UNLESS OTHERWISE NOTED.

14. ALL EQUIPMENT AND MATERIAL WHICH ARE IN OPERATING CONDITION WHEN REMOVED SHALL BE MAINTAINED AS SUCH AND RETURNED TO THE OWNER OR TO BE REINSTALLED WHERE INDICATED. PROPERLY RECONNECT EQUIPMENT TO RESUME OPERATION.

GENERAL NOTES

1. THE PROJECT MANUAL ISSUED AS PART OF THESE CONSTRUCTION DOCUMENTS IS AN INTEGRAL PART OF THE CONTRACT DOCUMENTS.

2. THE CONTRACTOR SHALL BE RESPONSIBLE FOR MAINTAINING THAT ALL WORKMANSHIP, MATERIALS AND CONSTRUCTION SHALL BE IN COMPLIANCE WITH THE APPLICABLE CODES AND FEDERAL REQUIREMENTS AND REGULATIONS.

3. THE CONTRACTOR SHALL VISIT THE SITE AND VERIFY ALL DIMENSIONS PRIOR TO SUBMITTING A BID. THE CONTRACTOR IS ALSO RESPONSIBLE FOR OBTAINING ALL REQUIRED PERMITS.

4. THE CONTRACTOR SHALL VERIFY ALL EXISTING CONDITIONS, GRADES, ELEVATIONS AND DIMENSIONS BEFORE STARTING WORK. THE ARCHITECT SHALL BE NOTIFIED IMMEDIATELY OF ANY DISCREPANCY OR INCONSISTENCY.

5. THE CONTRACTOR SHALL DETERMINE THE LOCATION OF ALL EXISTING UTILITY SERVICES IN THE AREA TO BE EXCAVATED PRIOR TO THE BEGINNING OF EXCAVATION. THE CONTRACTOR SHALL PROTECT ALL UTILITY LINES AND SERVICE LINES TO REMAIN WHICH ARE ENCOUNTERED DURING CONSTRUCTION.

6. THE CONTRACTOR SHALL BE RESPONSIBLE FOR THE ENFORCEMENT OF FEDERAL AND STATE OF CALIFORNIA OCCUPATIONAL SAFETY AND HEALTH ADMINISTRATION REQUIREMENTS AND REGULATIONS.

7. DO NOT SCALE ANY DRAWINGS IN THIS SET.

8. ALL DIMENSIONS SHALL TAKE PRECEDENCE OVER SCALE SHOWN ON PLANS, SECTIONS AND DETAILS. SPECIFIC NOTES AND DETAILS SHALL TAKE PRECEDENCE OVER GENERAL NOTES AND TYPICAL DETAILS.

9. ALL OMISSIONS AND CONFLICTS BETWEEN THE VARIOUS ELEMENTS OF THE WORKING DRAWINGS AND/OR SPECIFICATIONS SHALL BE BROUGHT TO THE ATTENTION OF THE ARCHITECT IMMEDIATELY BEFORE PROCEEDING WITH ANY WORK SO INVOLVED. NO CHANGES ARE TO BE MADE UNLESS THE ARCHITECT AND THE OWNER ARE NOTIFIED IN WRITING AND APPROVE SUCH A CHANGE ACCORDING TO THE CONTRACT.

10. THE ARCHITECT IS NOT RESPONSIBLE FOR ASBESTOS ABATEMENT.

11. TRADE NAMES AND MANUFACTURERS REFERRED TO ARE FOR QUALITY STANDARDS ONLY. SUBSTITUTIONS WILL BE PERMITTED AS APPROVED BY THE OWNER AND THE ARCHITECT ONLY UPON SUBMITTAL, AND FOR A LIMITED PERIOD.

12. ITEMS SHOWN AS N.I.C. ON PLANS MAY REQUIRE SEPARATE SUBMITTALS, APPROVALS AND PERMITS. INSTALLING CONTRACTOR IS RESPONSIBLE FOR OBTAINING PERMITS FOR SUCH ITEMS.

13. CONTRACTOR SHALL ENSURE ALL FINISH MATERIALS WILL BE FLUSH WHERE NEW FINISH SURFACE MATERIALS JOIN EXISTING TO PROVIDE SMOOTH TRANSITION.

14. CONTRACTOR ACKNOWLEDGES THAT DRAWINGS ARE DIAGRAMMATIC IN NATURE AND ARE TO REPRESENT THE INTENT OF THE WORK TO BE ACCOMPLISHED. CONTRACTOR IS TO INSTALL MATERIALS AND SYSTEMS WITH EXPERIENCED SKILLED CRAFTSMEN WHO WILL BE RESPONSIBLE FOR THE INTEGRITY OF THEIR RESPECTIVE WORK. NOT EVERY DETAIL OF EACH CONDITION IS DRAWN. CONTRACTOR AND SUB-CONTRACTOR ARE RESPONSIBLE FOR COMPLETE WORKMANLIKE INSTALLATION OF ALL MATERIALS AND SYSTEMS AND WILL NEED TO PROVIDE ADDITIONAL DETAILS FOR INSTALLATION BASED ON GENERAL INFORMATION SHOWN. FOR INSTANCE, NOT EVERY WATERPROOFING OR FLASHING DETAIL FOR EVERY CONDITION IS SHOWN. CONTRACTOR IS TO PROVIDE DETAILS AND INSTALLATION FOR A COMPLETE WATERTIGHT INSTALLATION.

15. THE INTENT OF THESE DRAWINGS AND SPECIFICATIONS IS THAT THE WORK OF THE ALTERATION, REHABILITATION OR RECONSTRUCTION IS TO BE IN ACCORDANCE WITH TITLE 24, CALIFORNIA CODE OF REGULATIONS. SHOULD ANY EXISTING CONDITION NOT COVERED BY THE CONTRACT DOCUMENTS SUCH AS DETERIORATION OR NON-COMPLYING CONSTRUCTION BE DISCOVERED, DETAILS AND SPECIFICATIONS FOR THE REQUIRED WORK SHALL BE SUBMITTED TO AND APPROVED BY THE AUTHORITY HAVING JURISDICTION BEFORE PROCEEDING WITH THE WORK.

16. DURING CONSTRUCTION PERIOD, CONSTRUCTION MATERIALS SHALL BE SPREAD OUT IF PLACED ON FRAMED FLOORS OR ROOF. THE LOAD SHALL NOT EXCEED THE DESIGN LIVE LOADS FOR EACH PARTICULAR LEVEL.

LEGEND

	PROPERTY LINE
1:12	SLOPING SURFACE
2 / A4	DETAIL NUMBER / SHEET DETAIL APPEARS ON
2 / A4	SECTION NUMBER / SHEET SECTION APPEARS ON
2 / A4	ELEVATION NUMBER / SHEET SECTION APPEARS ON
	CONCRETE
	SOIL
	PLYWOOD
	STEEL
	WOOD BLOCKING
	WOOD CONTINUOUS MEMBER
	WORK POINT, CONNECTION POINT, DATUM POINT OR CONTROL POINT
1222A	KEYNOTE
A3	DOOR NUMBER REFERENCE, REFER TO DOOR SCHEDULE
C03A	WINDOW NUMBER REFERENCE, REFER TO WINDOW TYPES
1A	WALL TYPE REFERENCE, REFER TO AD101-AD106
a	SIGN TYPE REFERENCE, REFER TO AD701
X" - X"	TICK INDICATES DIMENSIONS TO FACE OF STUD, GRIDLINES OR FACE OF STRUCTURE
X' - X"	DOT INDICATES DIMENSION TO CENTERLINE
X' - X"	ARROW INDICATES DIMENSION TO F.O. FINISH OR CLEAR DIMENSION
x.x	SPOT ELEVATION

APPLICABLE CODES

CONSTRUCTION SHALL COMPLY WITH THE FOLLOWING PARTS OF THE TITLE 24 OF THE CALIFORNIA CODE OF REGULATIONS (CCR):

2016 CALIFORNIA BUILDING STANDARDS ADMINISTRATIVE CODE, C.C.R. TITLE 24 PART 1 AND 2

2016 CALIFORNIA BUILDING CODE (CBC), PART 2, TITLE 24 C.C.R.
2016 CALIFORNIA ELECTRICAL CODE (CEC), C.C.R. TITLE 24 PART 3
2016 CALIFORNIA MECHANICAL CODE (CMC), C.C.R. TITLE 24 PART 4
2016 CALIFORNIA PLUMBING CODE (CPC), C.C.R. TITLE 24 PART 5
2016 CALIFORNIA ENERGY CODE, C.C.R. TITLE 24 PART 6
2016 CALIFORNIA HISTORICAL CODE, C.C.R. TITLE 24 PART 8
2016 CALIFORNIA FIRE CODE, C.C.R. TITLE 24 PART 9
2016 CALIFORNIA EXISTING BUILDING CODE, C.C.R. TITLE 24 PART 10
2016 CALIFORNIA GREEN BUILDING STANDARDS CODE, C.C.R. TITLE 24 PART 11
2016 CALIFORNIA REFERENCED STANDARDS CODE, C.C.R. TITLE 24 PART 12
TITLE 19 C.C.R., PUBLIC SAFETY, STATE FIRE MARSHAL REGULATIONS

APPLICABLE STANDARDS:
2016 CBC (FOR SFM) REFERENCED STANDARDS CHAPTER 35

NFPA 13	AUTOMATIC SPRINKLER SYSTEMS (CALIF. AMENDED), 2016 EDITION
NFPA 17	DRY CHEMICAL EXTINGUISHING SYSTEMS, 2017 EDITION
NFPA 17A	WET CHEMICAL EXTINGUISHING SYSTEMS, 2017 EDITION
NFPA 24	PRIVATE FIRE SERVICE MAINS (CALIF. AMENDED), 2016 EDITION
NFPA 72	NATIONAL FIRE ALARM CODE (CALIF. AMENDED), 2016 EDITION
NFPA 253	CRITICAL RADIANT FLUX OF FLOOR COVERINGS, 2015 EDITION
NFPA 2001	CLEAN AGENT FIRE EXTINGUISHING SYSTEMS (CALIF. AMENDED), 2015 EDITION

PROJECT DIRECTORY

CLIENT
OJAI UNIFIED SCHOOL DISTRICT
414 E. OJAI AVE, OJAI, CA 93023
CONTACT: ADAM DUTTER
P: (805) 640-4300

ARCHITECT
ROESLING NAKAMURA TERADA ARCHITECTS, INC.
285 N VENTURA AVE, SUITE 102, VENTURA, CA 93001
CONTACT: CATHERINE YOUNG, NCARB
P : (805) 626-5330

PROJECT DESCRIPTION

REMOVE AND REPLACE ROOF OF:

BUILDING A

SHEET INDEX

G-000	TITLE SHEET
AS-100	SITE PLAN
D-100	BLDG A - ROOF DEMOLITION PLAN
A-100	BLDG A - ROOF PLAN
AD-100	DETAIL SHEET - TYPICAL

VICINITY MAP

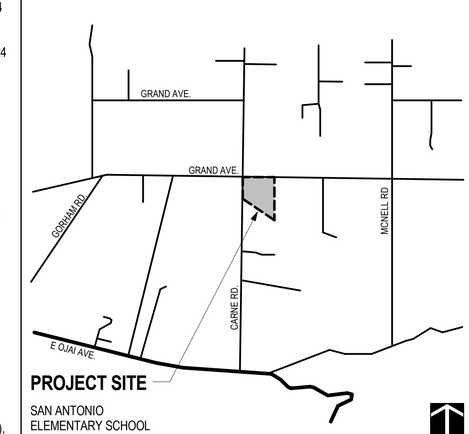

Roesling Nakamura Terada Architects

285 N Ventura Ave #102
Ventura, CA 93001
P805.626.5330
F805.626.5350
www.RNTarchitects.com

LICENSED ARCHITECT
TYSON CLINE
NO. C-34436
REN. 1-31-19
STATE OF CALIFORNIA

OJAI UNIFIED SCHOOL DISTRICT

ROOFING PROJECT AT SAN ANTONIO ELEMENTARY SCHOOL

650 Carne Road
Ojai, CA 93023

100% CDs

No.	Description	Date

Sheet Name

TITLE SHEET

	17761.00
Date	01/10/2019
Drawn by	CLD
Checked by	CY

Sheet Number

G-000

C:\Users\calderon\Documents\San Antonio Roofing Project - 2019_calderon.rvt

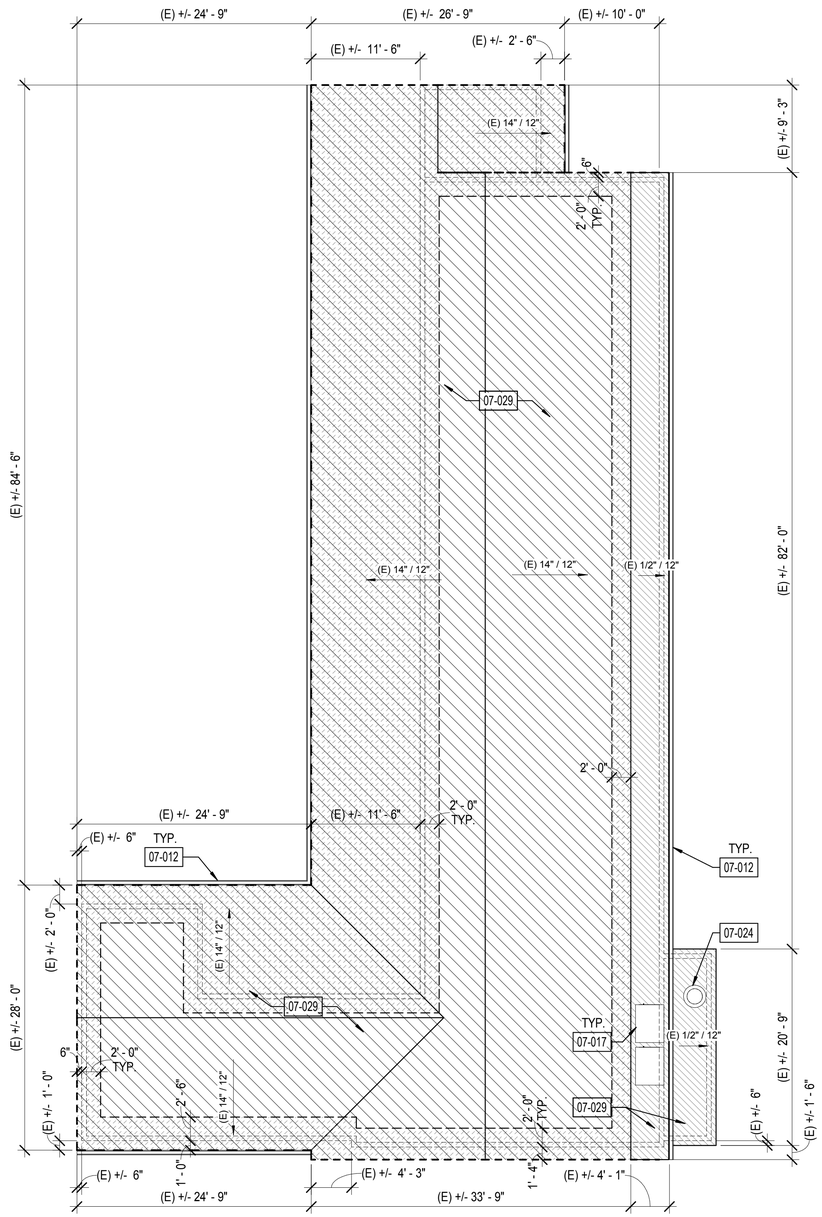

1 BLDG A ROOF DEMOLITION PLAN
1/8" = 1'-0"

SHEET GENERAL NOTES

1. EXISTING ROOF DEMOLITION REQUIRES REMOVAL OF ROOF MEMBRANE.
2. AFTER REMOVAL OF ROOFING, THE ARCHITECT WILL REVIEW THE EXISTING PLYWOOD SUBSTRATE. IF PORTIONS OF PLYWOOD REQUIRE REPLACEMENT, THE ARCHITECT WILL IDENTIFY AND PROVIDE WRITTEN DIRECTION TO THE CONTRACTOR TO AUTHORIZE THE WORK. SUCH COSTS WILL BE APPLIED **AGAINST ALLOWANCE NO. 1.**
3. EXISTING ROOFING MATERIALS SCHEDULED FOR DEMOLITION HAVE BEEN TESTED AND BEEN FOUND NOT TO CONTAIN ASBESTOS. THIS DOES NOT GUARANTEE THAT ALL ROOFING MATERIALS WILL BE FREE OF ASBESTOS. IF ASBESTOS IS FOUND, COMPLY WITH ALL LOCAL, STATE, AND FEDERAL REQUIREMENTS FOR ASBESTOS ABATEMENT.
4. DO NOT CUT INTO EXISTING PLYWOOD ROOF SHEATHING DURING ROOFING DEMOLITION. ANY PLYWOOD CUT SHALL BE REPLACED AT THE CONTRACTOR'S EXPENSE.
5. DETACH UTILITIES FROM SUPPORTS AND TEMPORARILY SUPPORT AS REQUIRED TO REMOVE AND REPLACE ROOFING.
6. REMOVE ALL EXISTING ROOF JACKS AT PIPE OR CONDUIT PENETRATIONS AND PREP TO RECEIVE NEW SEALED PENETRATION PER DETAIL 13/AD-100.
7. VERIFY ON FIELD LOCATION OF MECHANICAL EQUIPMENT AND & TYPE OF UTILITY.

LEGEND

- REMOVE AND REPLACE ROOF
- ASSUMED ROOF SHEATHING REPLACEMENT AT EAVES/ EDGES
- PROTECT IN PLACE (E) STANDING SEAM ROOF)
- (E) EXHAUST FAN
- (E) VENT PIPE THROUGH ROOF
- (E) SKYLIGHT
- ROOF VENT
- (E) WALL BELOW
- DEMOLISH (E) ITEM

KEYNOTE LEGEND

07-012	PROTECT IN PLACE (E) GUTTER AND (E) DOWNSPOUT
07-017	PROTECT IN PLACE (E) HVAC UNIT, DETACH & TEMPORARILY SUPPORT UNIT AS REQUIRED FOR ROOFING WORK
07-024	PROTECT IN PLACE (E) EXHAUST FAN
07-029	DEMOLISH (E) ROOF

Roesling Nakamura Terada Architects

285 N Ventura Ave #102
Ventura, CA 93001
P805.626.5330
F805.626.5350
www.RNTarchitects.com

LICENSED ARCHITECT
TYSON CLINE
NO. C-34436
REN. 1-31-19
STATE OF CALIFORNIA

OJAI UNIFIED SCHOOL DISTRICT

ROOFING PROJECT AT SAN ANTONIO ELEMENTARY SCHOOL

650 Carne Road
Ojai, CA 93023

100% CDs

No.	Description	Date

Sheet Name

BLDG A - ROOF DEMOLITION PLAN

	17761.00
Date	1/10/2019
Drawn by	CLD
Checked by	CY
Sheet Number	

D-100

C:\Users\calderon\Documents\San Antonio Roofing Project - 2019_calderon.rvt

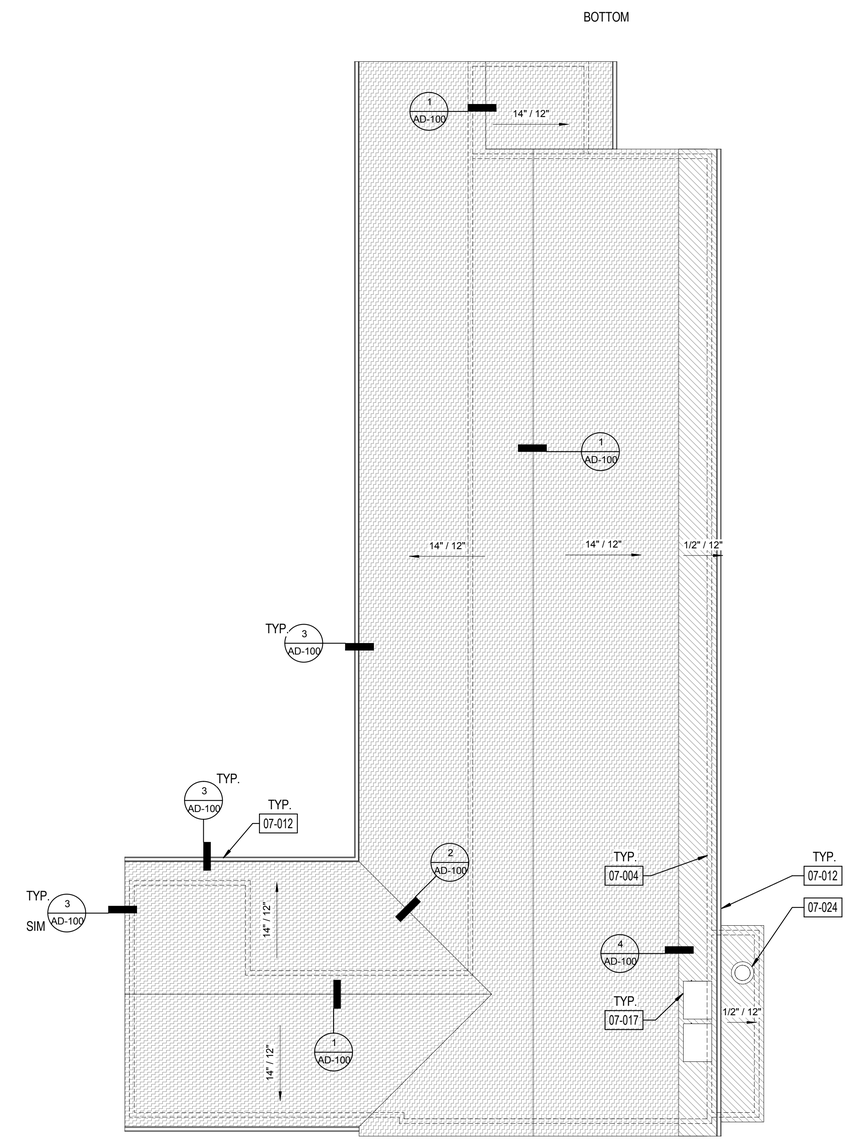

2 ROOF PLAN
1/8" = 1'-0"

SHEET GENERAL NOTES

1. ALL ITEMS ARE NEW UNLESS OTHERWISE NOTED.
2. ANY ROOFING MEMBERS OBSERVED TO BE COMPROMISED TO BE REPLACED IN COMPLIANCE WITH DSA-APPROVED EXISTING CONDITION DRAWINGS.
3. INSTALL PRECAST POLYMER CURB AT ALL PIPING ROOF PENETRATIONS PER DETAIL 17/A-531.
4. VERIFY ON FIELD LOCATION OF MECHANICAL EQUIPMENT AND & TYPE OF UTILITY

LEGEND

SHINGLES OVER UNDERLAYMENT OVER (E) DECKING. REFER TO 7/AD-100 FOR TYP. ASSEMBLY.

CLASS A MULTI WIDTH COMPOSITE RUBBER ROOF TILES. REFER 6/AD-100 FOR ASSEMBLY.

PROTECT IN PLACE (E) STANDING SEAM ROOF)

(E) EXHAUST FAN

(E) VENT PIPE THROUGH ROOF

(E) SKYLIGHT

ROOF VENT

(E) WALL BELOW

KEYNOTE LEGEND

07-004	LINE OF (E) WALL BELOW
07-012	PROTECT IN PLACE (E) GUTTER AND (E) DOWNSPOUT
07-017	PROTECT IN PLACE (E) HVAC UNIT, DETACH & TEMPORARILY SUPPORT UNIT AS REQUIRED FOR ROOFING WORK
07-024	PROTECT IN PLACE (E) EXHAUST FAN

Roesling Nakamura Terada Architects

285 N Ventura Ave #102
Ventura, CA 93001
P805.626.5330
F805.626.5350
www.RNTarchitects.com

LICENSED ARCHITECT
TYSON CLINE
NO. C-34436
REN. 1-31-19
STATE OF CALIFORNIA

OJAI UNIFIED SCHOOL DISTRICT

ROOFING PROJECT AT SAN ANTONIO ELEMENTARY SCHOOL

650 Carne Road
Ojai, CA 93023

100% CDs

No.	Description	Date

Sheet Name

BLDG A - ROOF PLAN

	17761.00
Date	1/10/2019
Drawn by	CLD
Checked by	CY

Sheet Number

A-100

C:\Users\calderon\Documents\San Antonio Roofing Project - 2019_calderon.rvt

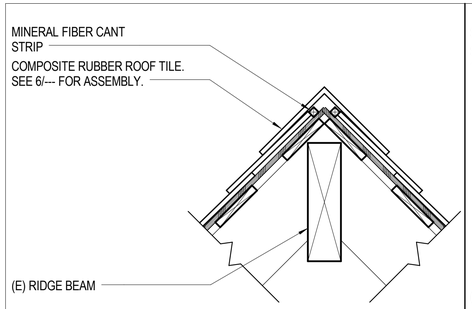

BLDG A RIDGE DETAIL 1 1/2" = 1'-0" (1)

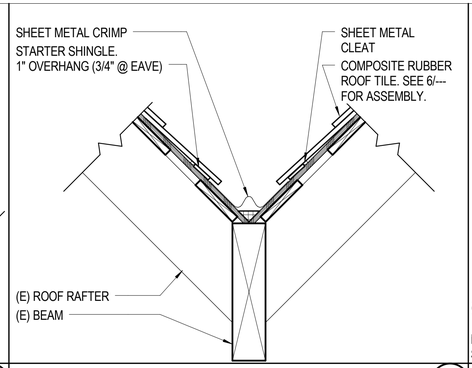

BLDG A CRIMP IN VALLEY 1 1/2" = 1'-0" (2)

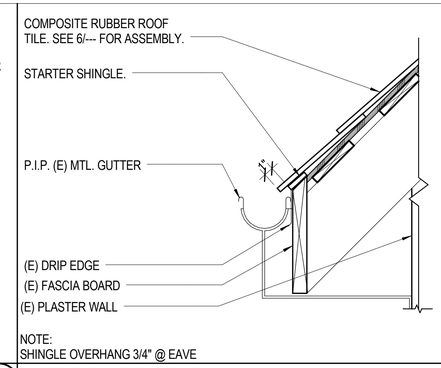

BLDG A EAVE @ GUTTER 1 1/2" = 1'-0" (3)

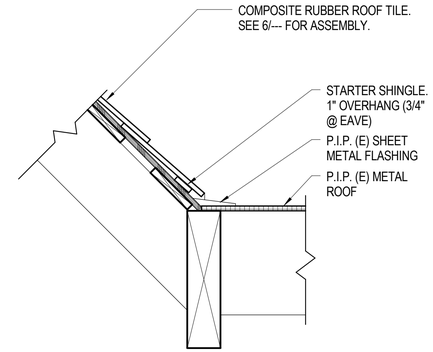

BLDG A ROOF TRANSITION 1 1/2" = 1'-0" (4)

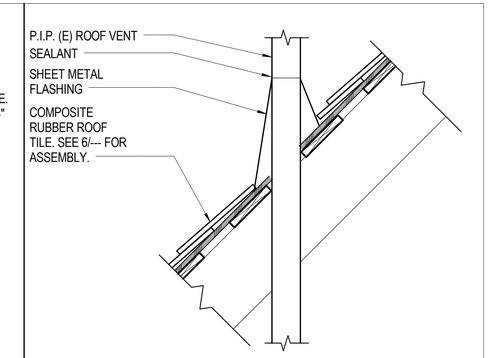

BLDG A ROOF VENT 1 1/2" = 1'-0" (5)

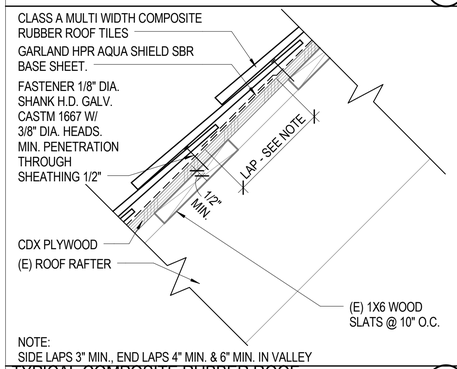

TYPICAL COMPOSITE RUBBER ROOF TILES DETAIL 3" = 1'-0" (6)

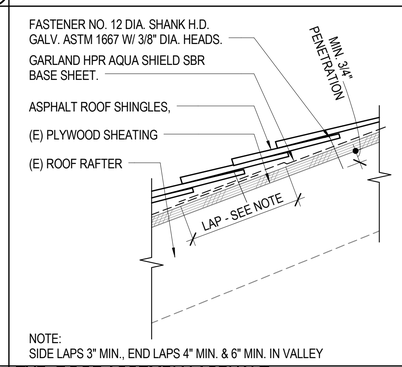

TYP. ROOF ASSEMBLY ASPHALT SHINGLES 3" = 1'-0" (7)

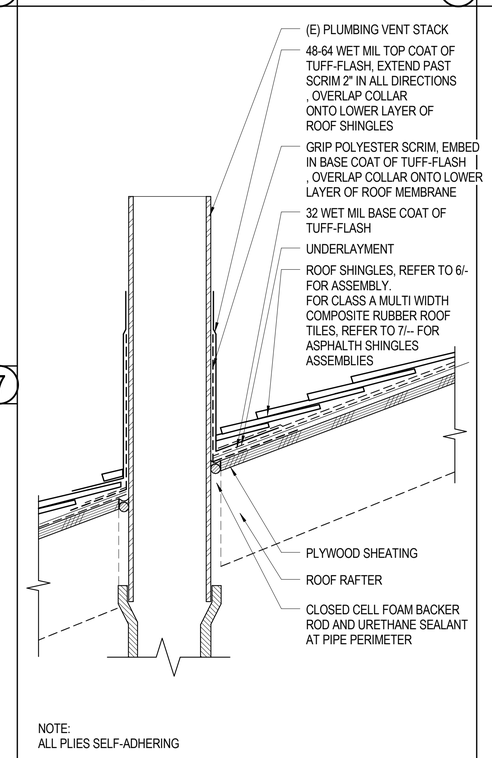

ROOF PENETRATION @ PLUMBING STACK 3" = 1'-0" (13)

Roesling Nakamura Terada Architects

285 N Ventura Ave #102
Ventura, CA 93001
P805.626.5330
F805.626.5350
www.RNTarchitects.com

LICENSED ARCHITECT TYSON CLINE NO. C-34436 REN. 1-31-19 STATE OF CALIFORNIA

OJAI UNIFIED SCHOOL DISTRICT

ROOFING PROJECT AT SAN ANTONIO ELEMENTARY SCHOOL

650 Carne Road
Ojai, CA 93023

100% CDs

No.	Description	Date

Sheet Name

DETAIL SHEET - TYPICAL

	17761.00
Date	1/10/2019
Drawn by	CLD
Checked by	CY

Sheet Number

AD-100

C:\Users\calderon\Documents\San Antonio Roofing Project - 2019_calderon.rvt

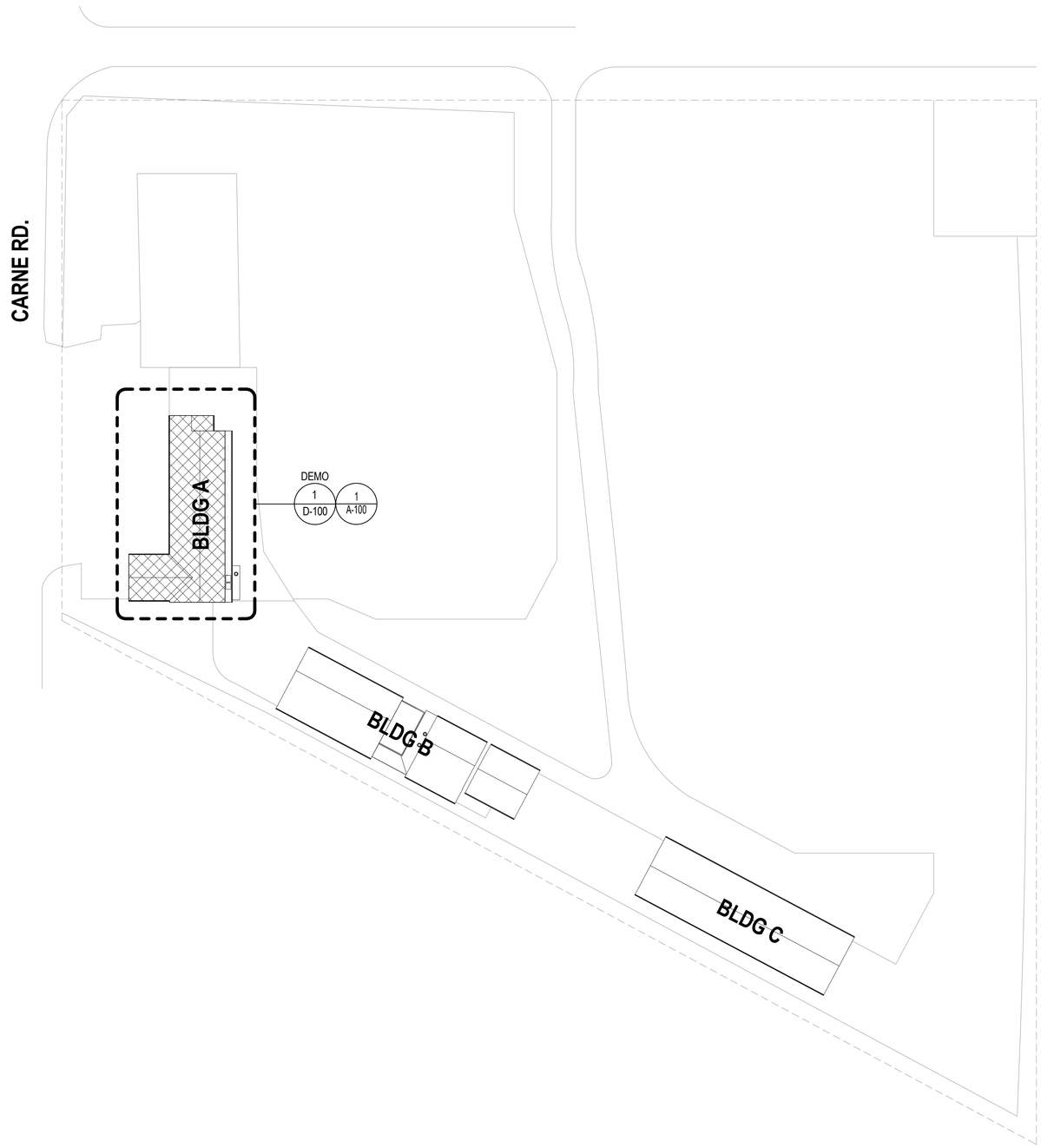

1 SITE PLAN
1" = 40'-0"

NORTH

SHEET GENERAL NOTES

1. PROTECT ADJACENT STRUCTURES, EQUIPMENT, VEHICLES ETC. FROM OVERSPRAY

LEGEND

REMOVE AND REPLACE ROOF

Roesling Nakamura Terada Architects

285 N Ventura Ave #102
Ventura, CA 93001
P805.626.5330
F805.626.5350
www.RNTarchitects.com

LICENSED ARCHITECT
TYSON CLINE
NO. C-34436
REN. 1-31-19
STATE OF CALIFORNIA

OJAI UNIFIED SCHOOL DISTRICT

ROOFING PROJECT AT SAN ANTONIO ELEMENTARY SCHOOL

650 Carne Road
Ojai, CA 93023

100% CDs

No.	Description	Date

Sheet Name

SITE PLAN

17761.00

Date	01/10/2019
Drawn by	CLD
Checked by	CY

Sheet Number

AS-100

C:\Users\calderon\Documents\San Antonio Roofing Project - 2019_calderon.rvt