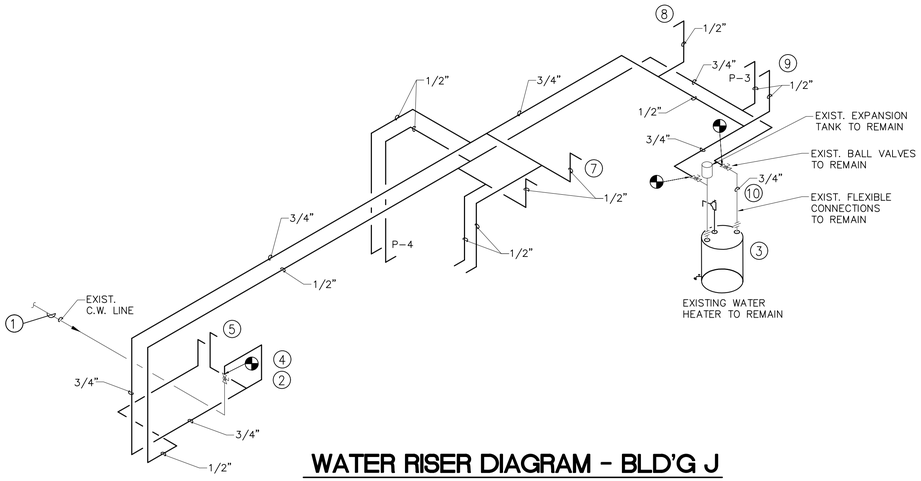

WATER RISER DIAGRAM - BLD'G J

NOT TO SCALE
(OTHER SIDE MIRRORED)

GENERAL DEMOLITION NOTES:

1. CONTRACTOR SHALL REMOVE EXISTING FIXTURES AS INDICATED BY DASHED LINES.
2. CONTRACTOR SHALL DISPOSE OF REMOVED FIXTURES AS INDICATED BY OWNER.
3. CONTRACTOR SHALL VERIFY ALL EXISTING CONDITIONS INCLUDING EXACT PIPE LOCATION, SIZE BEFORE STARTING CONSTRUCTION.
4. DEMOLITION WORK SHALL BE COORDINATED WITH ALL OTHER TRADES AND WITH THE NEW CONSTRUCTION PLANS FOR THE EXACT SCOPE OF WORK.
5. EXISTING ROUTING AND LOCATION OF PIPING, IS BASED ON LIMITED OBSERVATION AND LIMITED CONTRACT DOCUMENTS. CONTRACTOR SHALL ACCOUNT FOR SUCH IN BID.
6. ALL EXISTING WALLS, CEILING AND SLAB BEING CUT OR DAMAGED UNDER THIS CONTRACT TO BE PATCHED BACK TO MATCH EXISTING FINISH AND FIRE PROTECTION RATING. COORDINATE REQUIREMENTS WITH ARCHITECTURAL.
7. WHETHER SHOWN OR NOT ALL EXISTING DOMESTIC WATER PIPING TO BE REMOVED OR ABANDONED.

PLUMBING LEGEND

SYMBOL	DESCRIPTION
CW	COLD WATER PIPING
HW	HOT WATER PIPING
HWR	HOT WATER RICIRCULATION PIPING
	INDICATES NEW WORK TO CONNECT TO EXISTING WORK AT THIS POINT.
P - #	PLUMBING FIXTURE DESIGNATION
	END CAP

FIXTURE CONNECTION SCHEDULE:

SYMBOL	DESCRIPTION	CONNECTION SIZE		
		WASTE	COLD WATER	HOT WATER
P-1	LAVATORY, ADA	1 1/4"	1/2"	1/2"
P-2	HAND HELD SHOWER	-----	-----	1/2"
P-3	LAVATORY	1-1/4"	1/2"	1/2"
P-4	VANITY WITH LAVATORY	1-1/4"	1/2"	1/2"

NOTES:

1. 1. ALL WALL MTD. LAVATORIES SHALL BE PROVIDED WITH FLOOR MOUNTED CARRIER.
2. ALL EXPOSED P-TRAPS SHALL BE PROVIDED W/LAV SHIELDS.
3. PROVIDE OFFSET GRID DRAINS AT BARRIER-FREE LOCATIONS.

NEW CONSTRUCTION KEYED NOTES

1. EXISTING ¾" COLD WATER ENTRANCE TO FIRST FLOOR TO REMAIN.
2. EXISTING BALL VALVE AND PRESSURE REDUCING VALVE TO REMAIN.
3. EXISTING WATER HEATER, EXPANSION TANK, BALL VALVES AND FLEXIBLE CONNECTORS TO REMAIN.
4. PROVIDE ½" x 4" BRASS NIPPLE IPS AT BOTH ENDS FROM DISCHARGE OF PRV TO TRANSITION TO PEX.
5. CONNECT ½' HOT AND COLD WATER TO EXISTING KITCHEN SINK.
6. CONNECT ½" HOT AND COLW WATER TO EXISTING WASHING MACHINE BOX.
7. CONNECT ½" HOT AND COLD WATER TO SHOWER. EXISTING SHOWER VALVE TO REMAIN. CONNECT TO EXISTING PIPING ABOVE CEILING OR BELOW FLOOR TO MINIMISE DAMAGE TO SHEETROCK.
8. CONNECT ½" COLD WATER TO WATER CLOSET.
9. CONNECT ½' HOT AND COLD WATER TO NEW LAVATORY. ADJUST EXISTING WASTE ROUGH-INS AS REQUIRED TO ACCEPT NEW FIXTURE.
10. CONNECT NEW ½" HOT AND COLD WATER TO EXISTING LINES SERVING WATER HEATER.
11. EXISTING ¾" COLD WATER ENTRANCE TO SECOND FLOOR TO REMAINTO REMAIN.
12. EXISTING ¾" COLD WATER TO SECOND FLOOR TO REMAIN.
13. PROVIDE NEW HAND HELD SHOWER.
14. EXISTING HOT AND COLD WATER LINES TO BE ABANDONED BELOW SLAB OR REMOVED IF ABOVE SLAB.

GENERAL NOTES

1. FOR FULL COUNT OF BUILDING TYPES AND QUANTITIES REFER TO ARCHITECTURAL.
2. CONTRACTOR SHALL VISIT SITE BEFORE BID AND BECOME FAMILIAR WITH EXISTING CONDITIONS WHICH MAY AFFECT WORK.
3. CONTRACTOR IS RESPONSIBLE FOR PROVIDING ALL REQUIRED FITTINGS TO CREATE A COMPLETE AND FUNTIONAL PLUMBING SYSTEM.
   CONTRACTOR SHALL DETERMINE FITTINGS REQUIRED TO CONNECTION TO FIXTURES SHOWN.
4. THE WATER SUPPLY SYSTEM SHALL BE PRESSURE TESTED AND PROVED TIGHT UNDER AWATER PRESSURE NOT LESS THAN 25 PSI ABOVE THE WORKING PRESSURE.THIS TEST SHALL BE PERFORMED IN THE PRESENCE OF THE OWNER. THIS TEST IS IN ADDITION TO OTHER TEST SPECIFIED AND SHALL BE THE LAST TEST PERFORMED.
5. COLD WATER PEX PIPING SHALL BE BLUE, NO EXCEPTIONS.
6. HOT WATER PEX PIPING SHALL BE RED, NO EXCEPTIONS.

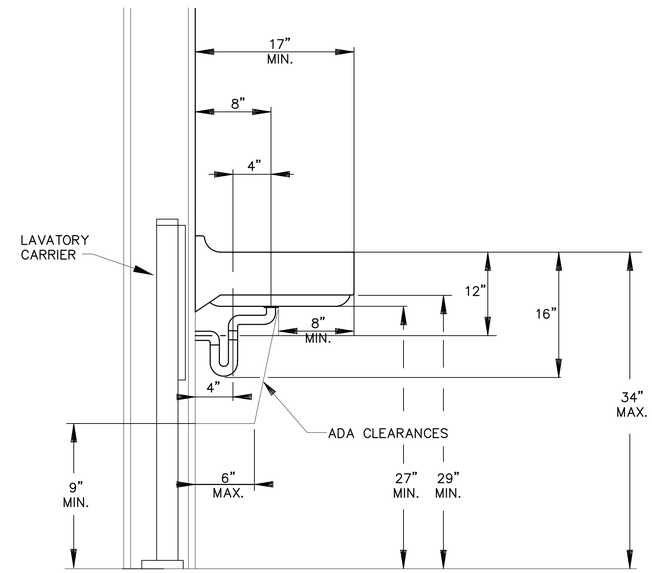

NOTE:
CONTRACTOR TO FIELD MODIFY P-TRAP
AND OFFSET DRAIN TO EXACT SIZES AS SHOWN.

ADA LAVATORY INSTALLATION DETAIL

NOT TO SCALE

DIA Design Innovation
ARCHITECTS + INTERIORS + PLANNING
402 S. Gay Street, Suite 201, Knoxville, TN 37902
ph 865.637.8540 or 865.291.2221 fx 865.544.3840
www.dia-arch.com

COURT WILLIAMS
LICENSED PROFESSIONAL ENGINEER
AGRICULTURE
CIVIL
No. 117115
STATE OF TENNESSEE
10/5/18

I.C. Thomasson Associates, Inc.
1114 Clinch Ave., Suite 200
Knoxville, TN 37916
(865) 525-3488
ICT JOB No. 180484

A RENOVATION TO:
MONTGOMERY VILLAGE
4530 JOE LEWIS ROAD
KNOXVILLE, TENNESSEE 37920

DATE	ISSUE FOR
	△
	△
	△
	△
	△
	△
	△
	△
	△
	△
	△
	△

This drawing is the property of DESIGN INNOVATIONS ARCHITECTS, INC. and is not to be reproduced or copied in whole or in part without authorization from DESIGN INNOVATIONS ARCHITECTS, INC. It is to be used for the project and site specifically identified herein and is not to be used on any other project. It is to be returned upon request. Do not scale drawings, written dimensions take precedence. All drawings and designs shown on these drawings are copyright © of DESIGN INNOVATIONS ARCHITECTS, INC.

Sheet Title
BUILDINGS
MISC. DETAILS
NEW & DEMO - WATER

Project Number 18110
Date 10-08-18
Sheet Number P-200

K:\2018\180484 KCDC - Montgomery Village\Cadd\DWG\180484-P200.dwg, 10/5/2018 1:43:02 PM, Adobe PDF 24x36.pc3