Union County High School
Fire Alarm Upgrades

Union County, Tennessee

OWNER

Union County Board of Education
3006 Maynardville, highway PO Box 10
Maynardville, Tennessee 37807

November 22, 2019

Construction Document Submittal

PROJECT DATA

PROJECT SCOPE:
FIRE ALARM SYSTEM REPLACEMENT AND UPGRADES
UNION COUNTY HIGH SCHOOL
MAYNARDVILLE, TENNESSEE

PROJECT LOCATION (911 ADDRESS):
150 MAIN STREET
MAYNARDVILLE , TN 37807
UNION COUNTY

OWNER'S CONTACT:
MICHAEL JOHNSON - DIRECTOR OF MAINTENANCE AND OPERATIONS
EMAIL: johnsonma@ucps.org

APPLICABLE CODES:

2012 INTERNATIONAL BUILDING CODE (EXCLUDING CHAPTER 11 ACCESSIBILITY and CHAPTER 34, SECTION 3411 ACCESSIBILITY FOR EXISTING BUILDINGS)

2012 INTERNATIONAL FIRE CODE

2012 INTERNATIONAL MECHANICAL CODE

2012 INTERNATIONAL FUEL GAS CODE

2012 NFPA 101 LIFE SAFETY CODE

TENNESSEE PUBLIC BUILDING ACCESSIBILITY ACT

2010 ADA STANDARDS FOR ACCESSIBLE DESIGN

2017 NFPA 70 NATIONAL ELECTRICAL CODE

2012 INTERNATIONAL ENERGY CONSERVATION CODE

2012 INTERNATIONAL EXISTING BUILDING CODE

1 RESPONDING FIRE DEPARTMENT'S INFORMATION:

MAYNARDVILLE VOLUNTEER FIRE DEPARTMENT

VOLUNTEER CHIEF - DANNY SMITH

125 JOHNSON ROAD

MAYNARDVILLE, TN 37807

865-567-7270

mvfd901@aol.com

BUILDING INFORMATION

EXISTING BUILDING DATA IS PROVIDED FOR REFERENCE AND GENERAL INFORMATION ONLY AND IS NOT AFFECTED BY THIS PROJECT EXCEPT WHERE SPECIFICALLY NOTED.

NO WALLS OR DOORS ARE BEING ADDED, REMOVED OR MODIFIED..

NO CHANGE IS BEING MADE TO THE OCCUPANCY CLASSIFICATION.

NO CHANGE IS BEING MADE TO BUILDING'S SPRINKLER SYSTEM PERFORMANCE OR COVERAGE

THERE IS NO CHANGE TO BUILDING SQUARE FOOTAGE

THERE IS NO CHANGE TO BUILDING OCCUPANCY

THERE IS NO CHANGE TO EXIT CAPACITY OR EXIT PATHS

EXISTING CONDITIONS MEETING ZONING REQUIREMENTS FOR HEIGHT, SETBACKS, SITE COVERAGE, PARKING, ETC, ARE NOT ALTERED BY THIS PROJECT

1 OCCUPANCY TYPE : IBC GROUP E
CONSTRUCTION TYPE: IBC TYPE IIB, SPRINKLERED
NUMBER OF STORIES: 2
ALLOWABLE HEIGHT: PER IBC = 75 FT
ACTUAL HEIGHT: UNKNOWN - LESS THAN 75 FT
GROSS BUILDING AREA:
FIRST FLOOR = 128,934 SQUARE FEET
SECOND FLOOR = 32,488 SQUARE FEET
TOTAL = 161,422 SQUARE FEET
RENOVATED BUILDING FLOOR AREA: NONE

Vreeland Engineers Inc.
3107 Sutherland Ave.
P.O. Box 10648
Knoxville, TN 37939
PH: (865) 637-4451
FAX: (865) 637-1558
WATS: 800-362-9789
vreelandengineers.com

CHARLES N. LUTTRELL JR.
REGISTERED ENGINEER
AGRICULTURE
COMMERCE
NO. 14
STATE OF TENNESSEE
12/5/19

DRAWING INDEX

FIRE ALARM SYSTEM OPERATION SCHEDULE

	ALARM AT PANEL	SUPERVISORY ALARM AT PANEL	ACTIVATE EVACUATION SIGNAL	CALL FIRE DEPARTMENT	SHUT DOWN AHU	RELEASE SMOKE DOORS	NOTIFICATION ZONES A	NOTIFICATION ZONES B
MANUAL STATIONS	•		•	•	•	•	•	•
SPRINKLER SYSTEM FLOW SWITCH			•	•		•	•	•
DUCT SMOKE DETECTOR		•			•			
SMOKE DETECTOR	•		•	•	•	•	•	•
SPRINKLER SYSTEM SUPERVISORY VALVE		•						
HEAT DETECTORS	•		•	•	•	•	•	•
OPEN CIRCUIT		•						
GROUND FAULT		•						
NOTIFICATION APPLIANCE SHORT CIRCUIT		•						
FIRE ALARM LOW BATTERY		•						
FIRE ALARM AC POWER FAILURE		•						

ALL EVENTS MONITORED AND DISPLAYED AT THE FACU WILL ALSO BE DISPLAYED AT THE REMOTE ANNUNCIATOR.

EVACUATION ZONES

A – FIRST FLOOR
B – SECOND FLOOR

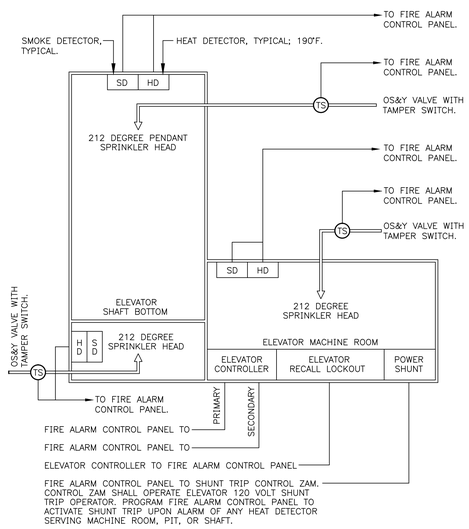

HEAT DETECTORS SHALL BE INSTALLED WITHIN 2FT. OF EACH SPRINKLER HEAD SERVING ELEVATOR MACHINE ROOM, PIT, AND SHAFT. HEAT DETECTORS SERVING THESE AREAS SHALL BE 190°F FIXED TEMPERATURE

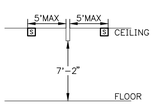

DETECTOR LOCATION REQUIREMENTS AT SMOKE DOORS

N.T.S.

UL STANDARDS:

1. PRODUCTS PROVIDED AS PART OF THIS PROJECT SHALL COMPLY WITH THE FOLLOWING U.L. STANDARDS:

U.L. 38, STANDARD FOR MANUAL SIGNALING BOXES FOR FIRE ALARM SYSTEMS.

U.L. 228, STANDARD FOR DOOR CLOSERS–HOLDERS, WITH OR WITHOUT INTEGRAL SMOKE DETECTORS.

U.L. 268, STANDARD FOR SMOKE DETECTORS FOR FIRE ALARM SIGNALING SYSTEMS.

U.L. 268A, STANDARD FOR SMOKE DETECTORS FOR DUCT APPLICATIONS.

U.L. 497B, STANDARD FOR PROTECTORS FOR DATA COMMUNICATIONS AND FIRE ALARM CIRCUITS.

U.L. 521, STANDARD FOR HEAT DETECTORS FOR FIRE PROTECTIVE SIGNALING SYSTEMS

U.L. 864, STANDARD FOR CONTROL UNITS AND ACCESSORIES FOR FIRE ALARM SYSTEMS.

U.L. 1424, STANDARD FOR CABLES FOR POWER–LIMITED FIRE ALARM CIRCUITS.

U.L. 1480, STANDARD FOR SPEAKERS FOR FIRE ALARM, EMERGENCY, AND COMMERCIAL AND PROFESSIONAL USE.

U.L. 1651, STANDARD FOR OPTICAL FIBER CABLE.

U.L. 1711, STANDARDS FOR AMPLIFIERS FOR FIRE–PROTECTIVE SIGNALING SYSTEMS.

U.L. 1989, STANDARD FOR STANDBY BATTERIES.

U.L. 1971, STANDARD FOR SIGNALING DEVICES FOR THE HEARING IMPAIRED.

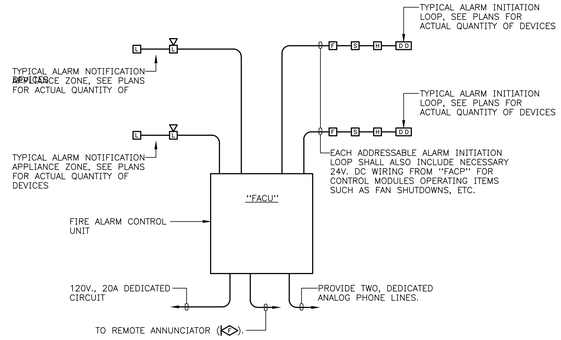

FIRE ALARM RISER DIAGRAM

N.T.S.

FIRE ALARM SYSTEM UL LISTING STANDARDS	
COMPONENTS	UL STANDARDS
CONTROL PANEL	UL 864,2017,1076,1730
REMOTE ANNUNCIATOR	UL 864
MANUAL STATION	UL 38
SMOKE DETECTOR	UL 268
HEAT DETECTOR	UL 268
INTELLIGENT BASES	UL 268
DUCT DETECTORS	UL 268A
ADDRESSABLE MODULES	UL 864
FLASHING LIGHTS	UL 1971
FOR SPECIFICATIONS OF DEVICES SEE ELECTRICAL SPECIFICATIONS ON E5.	

FIRE ALARM NOTES:

1. THE FIRE ALARM CONTRACTOR MUST BE CERTIFIED IN ACCORDANCE WITH THE TENNESSEE ALARM CONTRACTORS LICENSING ACT OF 1991, TCA TITLE 62, CHAPTER 32. CALL 615–741–9771 FOR ADDITIONAL INFORMATION.

2. CONTRACTOR SHALL SUBMIT BATTERY CALCULATIONS FOR NEW FIRE ALARM SYSTEM IN ACCORDANCE WITH REQUIREMENTS OF NFPA 72. BATTERY CALCULATIONS SHALL BE INCLUDED AS PART OF SUBMITTALS FOR FIRE ALARM SYSTEM.

3. ALL REQUIRED DOCUMENTATION REGARDING THE DESIGN OF FIRE DETECTION, ALARM, AND COMMUNICATIONS SYSTEMS AND THE PROCEDURES FOR MAINTENANCE, INSPECTION, AND TESTING OF FIRE DETECTION, ALARM, AND COMMUNICATIONS SYSTEMS SHALL BE MAINTAINED AT AN APPROVED, SECURED LOCATION FOR THE LIFE OF THE SYSTEM. (IFC 901.6.2.1)

4. TWO OR MORE VISIBLE NOTIFICATION APPLIANCES IN THE SAME ROOM OR ADJACENT SPACE WITHIN THE FIELD OF VIEW MUST FLASH IN SYNCHRONIZATION. (NFPA 72 7.5.4.1.1 AND 7.5.4.1.2(3))

5. THE FIRE ALARM CONTROL PANEL CIRCUIT DISCONNECTING MEANS SHALL HAVE A RED MARKING, SHALL BE ACCESSIBLE ONLY TO AUTHORIZED PERSONNEL, AND SHALL BE IDENTIFIED AS "FIRE ALARM CIRCUIT". THE LOCATION OF THE CIRCUIT DISCONNECTING MEANS SHALL BE PERMANENTLY IDENTIFIED AT THE FIRE ALARM CONTROL UNIT. (2010 NFPA 72. 10.5.5.2.2)

6. FIRE ALARM CONTROL UNIT (FACU) ALARM/TROUBLE ACTIVITY WILL BE MONITORED REMOTELY BY A MONITORING AGENCY VIA TELEPHONE LINES CONNECTED TO THE FACU DIGITAL TO ANALOG COMMUNICATOR. THE MONITORING SERVICE IS MANNED 24 HOURS A DAY, 7 DAYS A WEEK. COORDINATE WITH OWNER AND MONITORING AGENCY. REFER TO NOTE #9 BELOW.

7. FIRE ALARM SYSTEM SHALL COMPLY WITH THE ADOPTED EDITIONS OF FOLLOWING CODES AND STANDARDS:
   NFPA 101 LIFE SAFETY CODE
   NFPA 72
   NFPA 70
   NFPA 90A
   NFPA 92A
   NFPA 13
   NFPA 13R
   NFPA 13D
   NFPA 14
   INTERNATIONAL BUILDING CODE
   INTERNATIONAL FIRE CODE
   INTERNATIONAL MECHANICAL CODE
   ADA STANDARDS FOR ACCESSIBLE DESIGN

8. PROVIDE VOICE EVACUATION FIRE ALARM SYSTEM IN ACCORDANCE WITH PROJECT MANUAL REQUIREMENTS. VOICE EVACUATION SHALL BE INSTALLED IN ACCORDANCE WITH REQUIREMENTS OF NFPA 72(3.3.208), NFPA 101(12.3.4, 9.6.2, 9.6.3.), AND IBC. VOICE ANNOUNCEMENTS SHALL BE PRE–RECORDED AND SHALL BE AUDIBLE ABOVE AMBIENT NOISE LEVEL IN ACCORDANCE WITH CODE REQUIREMENTS. STANDBY BATTERIES IN FACP SHALL BE SIZED TO SERVE REQUIRED VOICE ANNOUNCEMENTS.

9. DIGITAL ALARM COMMUNICATION SYSTEMS (DACT & DACR) WHERE APPLICABLE SHALL BE INSTALLED AS PER THE FOLLOWING:
   A. DIGITAL ALARM COMMUNICATOR TRANSMITTER (DACT) SHALL BE CONNECTED TO THE PUBLIC SWITCHED TELEPHONE NETWORK UPSTREAM OF ANY PRIVATE TELEPHONE SYSTEM AT THE PROTECTED PREMISES. (NFPA 72 8.5.3.2.1.3)
      1. DACT SHALL BE CONFIGURED SO THAT IT SHALL SEIZE THE TELEPHONE LINE, DISCONNECT AN OUTGOING OR INCOMING TELEPHONE CALL, AND PREVENT USE OF THE TELEPHONE LINE FOR OTHER TELEPHONE CALLS UNTIL SIGNAL TRANSMISSION HAS BEEN COMPLETED.
      2. DACT SHALL HAVE THE MEANS TO SATISFACTORILY OBTAIN A DIAL TONE, DIAL THE NUMBER(S) OF THE DACR, OBTAIN VERIFICATION THAT THE DACR IS ABLE TO RECEIVE SIGNALS, TRANSMIT THE SIGNAL, AND RECEIVE ACKNOWLEDGMENT THAT THE DACR HAS ACCEPTED THAT SIGNAL WITHIN 90 SECONDS PER ATTEMPT.
      3. DACT SHALL HAVE MEANS TO RESET AND RETRY IF THE FIRST ATTEMPT TO COMPLETE A SIGNAL TRANSMISSION SEQUENCE IS UNSUCCESSFUL. A FAILURE TO COMPLETE CONNECTION SHALL NOT PREVENT SUBSEQUENT ATTEMPTS TO TRANSMIT AN ALARM WHERE SUCH ALARM IS GENERATED FROM ANY OTHER INITIATING DEVICE CIRCUIT OR SIGNALING LINE CIRCUIT, OR BOTH. ADDITIONAL ATTEMPTS SHALL BE MADE UNTIL THE SIGNAL TRANSMISSION SEQUENCE HAS BEEN COMPLETED, UP TO A MINIMUM OF 5 AND A MAXIMUM OF 10 ATTEMPTS.
      4. IF THE MAXIMUM NUMBER OF ATTEMPTS TO COMPLETE THE SEQUENCE IS REACHED, AN INDICATION OF THE FAILURE SHALL BE MADE AT THE PREMISES.
      5. A SECOND MEANS OF SIGNAL TRANSMISSION SHALL BE PROVIDED.
   B. THE DIGITAL ALARM COMMUNICATOR RECEIVER (DACR) SHALL BE LOCATED AT THE SUPERVISING OR SUBSIDIARY STATION AND SHALL BE CONNECTED TO MINIMUM OF TWO SEPARATE INCOMING TELEPHONE LINES (NUMBERS). THE LINES (NUMBERS) SHALL HAVE THE FOLLOWING CHARACTERISTICS. (NFPA 72 8.5.3.2.2)
      1. IF THE LINES ARE IN A SINGLE HUNT GROUP, THEY SHALL BE INDIVIDUALLY ACCESSIBLE; OTHERWISE, SEPARATE HUNT GROUPS SHALL BE REQUIRED. (NFPA 72 8.5.3.2.2.2(1))
      2. THE LINES SHALL BE USED FOR NO OTHER PURPOSES THAN RECEIVING SIGNALS FROM A DACT.
      3. THE LINES (NUMBERS) SHALL BE UNLISTED.
   C. THE FAILURE OF ANY TELEPHONE LINE CONNECTED TO A DACR DUE TO LINE OF LINE VOLTAGE SHALL BE ANNUNCIATED VISUALLY AND AUDIBLY IN THE SUPERVISING STATION.

10. FURNISH AND INSTALL ADDRESSABLE MONITORING MODULES AT EXISTING SPRINKLER RISER. FOR FLOW AND TAMPER SWITCHES, FIELD VERIFY EXACT QUANTITY AND LOCATION.

11. ELECTRONIC COPIES OF SHOP DRAWINGS ARE TO BE SUBMITTED FOR REVIEW AND APPROVAL PRIOR TO INSTALLATION IN ACCORDANCE WITH IBC 907.

L E G E N D

SYMBOL	DESCRIPTION
—-—○	WIRING IN THE FLOOR CONSTRUCTION OR UNDERGROUND SHOWN TURNING UP.
——•	WIRING IN THE WALL OR CEILING CONSTRUCTION SHOWN TURNING DOWN.
Ⓙ	JUNCTION BOX, SIZE AND USE AS REQUIRED; COVERPLATE SHALL OVERLAP THE BOX EDGE BY 1/2" WHERE RECESSED IN WALL WITH CONCEALED WIRING.
F	FIRE ALARM MANUAL PULL STATION, 48" ABOVE FINISHED FLOOR (AFF).
L◁	WALL MOUNTED FIRE ALARM COMBINATION SPEAKER/STROBE UNIT, MULTI–CANDELA. PROVIDE BACKBOX SUCH THAT BOTTOM OF STROBE LENS IS 81" ABOVE FINISHED FLOOR, COORDINATE BACKBOX TYPE AND EXACT MOUNTING HEIGHT WITH FIRE ALARM EQUIPMENT SUPPLIER. UNIT TO BE SET AT 75 CANDELA, 88 dB, UNLESS NOTED OTHERWISE.
L	WALL MOUNTED FIRE ALARM FLASHING STROBE UNIT, CANDELA AND DBA RATING AS NOTED ON DRAWINGS. PROVIDE BACKBOX SUCH THAT BOTTOM OF STROBE LENS IS 81" ABOVE FINISHED FLOOR, COORDINATE BACKBOX TYPE AND EXACT MOUNTING HEIGHT WITH FIRE ALARM EQUIPMENT SUPPLIER. UNIT TO BE SET AT 75 CANDELA UNLESS NOTED OTHERWISE.
"C" L◁	FIRE ALARM COMBINATION SPEAKER/FLASHING STROBE COMBINATION UNIT, CEILING MOUNTED. UNIT SHALL BE RATED MINIMUM 75 CANDELA UNLESS NOTED OTHERWISE. COORDINATE BACKBOX REQUIREMENTS WITH FIRE ALARM EQUIPMENT SUPPLIER.
"C" L	CEILING MOUNTED FIRE ALARM VISUAL STROBE UNIT, CANDELA RATING AS NOTED ON DRAWINGS.
S	CEILING MOUNTED FIRE ALARM AUTOMATIC SMOKE DETECTOR. LOCATE DETECTOR MINIMUM 3'–0" AWAY FROM ALL SUPPLY/RETURN AIR GRILLS. LOCATE DETECTOR MAXIMUM OF 5'–0" AWAY FROM FIRE DOORS WHERE DOOR HOLD OPEN DEVICES ARE LOCATED.
H	CEILING MOUNTED FIRE ALARM HEAT DETECTOR.
<F>	WALL MOUNTED FIRE ALARM REMOTE ANNUNCIATOR PANEL, TOP 48" AFF.
"FACU" ▭	WALL MOUNTED FIRE ALARM CENTRAL CONTROL UNIT, TOP 6'–0" AFF.
DD	FIRE ALARM DUCT MOUNTED SMOKE DETECTOR. CONNECT TO FIRE ALARM SYSTEM. CONNECT TO SHUT UNIT DOWN UPON ALARM. FURNISH AND INSTALL "LED" REMOTE STATUS INDICATOR FOR EACH DUCT DETECTOR. W.P. INDICATES WEATHERPROOF ENCLOSURE WHERE INSTALLED OUTDOORS. FIELD VERIFY LOCATION AND QUANTITY OF EXISTING DUCT MOUNTED DETECTORS AND REPLACE.
▬	EXISTING PANELBOARD
DH	FIRE ALARM MAGNETIC DOOR HOLD–OPEN DEVICE.
EX–20/1 →	HOMERUN CIRCUIT WIRING TO EXISTING PANELBOARD, NOTATION "20/1" INDICATES HOMERUN WIRING TO BE CONNECTED TO 20/1 CIRCUIT BREAKER IN EXISTING PANELBOARD. SPARE CIRCUIT BREAKERS MAY BE UTILIZED WHERE AVAILABLE. OTHERWISE, PROVIDE NEW CIRCUIT BREAKERS AS REQUIRED. EACH NEW BRANCH CIRCUIT SHALL CONSIST OF 2#12,1#12G.
TS	SPRINKLER SYSTEM TAMPER SWITCH, CONNECT TO SEPARATE ZONE IN BUILDING FIRE ALARM SYSTEM.
FS	SPRINKLER SYSTEM FLOW SWITCH, CONNECT TO SEPARATE ZONE IN BUILDING FIRE ALARM SYSTEM.
HES	KITCHEN HOOD EXTINGUISHING SYSTEM. INSTALL FIRE ALARM SYSTEM MONITORING MODULE AND CONNECT TO FIRE ALARM SYSTEM.
PIV	SPRINKLER SYSTEM POST INDICATOR VALVE, CONNECT TO SEPARATE ZONE IN BUILDING FIRE ALARM SYSTEM.

LEGEND NOTES:

1. "RP" INDICATES APPROXIMATE LOCATION OF EXISTING DEVICE TO BE REMOVED AND REPLACED WITH NEW. REMOVE EXISTING A/V DEVICE OR VISUAL ONLY DEVICE NOTED AND INSTALL NEW DEVICE IN EXISTING LOCATION. REUSE EXISTING CONDUIT AND JUNCTION BOX IF JUNCTION IS AT CORRECT HEIGHT. INSTALL NEW JUNCTION BOX AT CORRECT HEIGHT AS DIRECTED BY FIRE ALARM EQUIPMENT SUPPLIER OR INSTALL NEW CEILING MOUNTED DEVICE AT SAME LOCATION.
2. ALL EXISTING DEVICES THAT ARE REMOVED SHALL BE TURNED OVER TO OWNER.
3. FURNISH AND INSTALL MONITORING MODULES AT KITCHEN HOOD EXTINGUISHING PANEL AND MONITOR VIA NEW FIRE ALARM SYSTEM.
4. ALL NEW FIRE ALARM SYSTEM PULL STATIONS SHALL BE LOCATED WITHIN 60 INCHES OF EXIT DOORWAY.
5. FURNISH AND INSTALL CONTROLS MODULES / RELAYS AS REQUIRED TO INTERFACE WITH EXISTING ACCESS CONTROLS. LOCKING DEVICES ALONG PATH OF BUILDING EGRESS SHALL "RELEASE" UPON INITIATION OF FIRE ALARM SYSTEM.
6. WHERE NEW CEILING MOUNTED DEVICES ARE TO BE INSTALLED, CONTRACTOR TO INSTALL ¾" CONDUIT SLEEVE THROUGH CORRIDOR WALL TO ALLOW FOR PASSAGE OF FIRE ALARM CABLE FROM NEW DEVICE WITHIN ROOM TO DEVICE IN CORRIDOR. FURNISH AND INSTALL FIRE STOPPING OF ALL CONDUITS PENETRATING THROUGH RATED WALLS. SEE DETAILS ON SHEET 0.2.

ELECTRICAL SPECIFICATIONS AND NOTES

1. GENERAL DESIGN APPROACH:
   THE DESIGN INTENT OF THIS PROJECT IS TO UPGRADE AND REPLACE THE EXISTING FIRE ALARM SYSTEM WITHIN THE EXISTING BUILDING. THE END RESULT WILL BE A NEW, EARLY DETECTION AND NOTIFICATION SYSTEM WITH THE OBJECTIVE BEING SUFFICIENT EGRESS OF ALL OCCUPANTS TO OUTSIDE IN THE EVENT OF ALARM CONDITION IN BUILDING. THE SYSTEM WILL BE AN ADDRESSABLE SYSTEM WITH VOICE EVACUATION ALARM CAPABILITY. PRE–RECORDED VOICE EVACUATION SIGNALS WILL BE COMMUNICATED OVER FIRE ALARM SPEAKER SYSTEM IN THE EVENT OF ALARM CONDITION. THE FIRE ALARM SYSTEM WILL ALSO HAVE CAPABILITY FOR MANUAL VOICE ANNOUNCEMENTS UTILIZING MICROPHONE AT VOICE FIRE ALARM PANEL AND REMOTE ANNUNCIATOR PANEL. VISUAL ALARM NOTIFICATION WILL ALSO BE PROVIDED VIA VISUAL STROBES IN ACCORDANCE WITH CODE REQUIREMENTS. AREA SMOKE DETECTORS WILL BE INSTALLED IN ACCORDANCE WITH CODE. DUCT–TYPE SMOKE DETECTORS WILL BE INSTALLED IN SUPPLY AND RETURN DUCTWORK TO REPLACE EXISTING DUCT–TYPE SMOKE DETECTORS. SHUTDOWN OF HVAC SYSTEM SHALL BE ACCOMPLISHED IN ACCORDANCE WITH REQUIREMENTS OF NFPA 72, NFPA 90A, AND IBC. MANUAL PULL STATIONS SHALL BE INSTALLED AT EXIT DOOR LOCATIONS AND AT LOCATIONS IN ACCORDANCE WITH CODE. EXISTING SPRINKLER SYSTEMS WILL BE MONITORED BY THE FIRE ALARM SYSTEM.

   A NEW FIRE ALARM CONTROL UNIT (FACU) SHALL BE INSTALLED IN THE FIRST FLOOR ELECTRICAL ROOM. EXTENDER PANELS WILL BE INSTALLED AS REQUIRED. ALARM /TROUBLE ACTIVITY WILL BE MONITORED LOCALLY AT FACU. ADDITIONALLY, ALL ALARM / TROUBLE SIGNALS WILL BE DISPLAYED AT THE REMOTE ANNUNCIATOR PANEL LOCATED IN THE BUILDING'S ADMINISTRATION / RECEPTION AREA. LOCATION OF THE REMOTE ANNUNCIATOR PANEL WILL BE COORDINATED WITH LOCAL FIRE AND WILL UTILIZED BY FIRE DEPARTMENT FOR ACCESS IN THE EVENT OF BUILDING ALARM. THE NEW ALARM SYSTEM WILL BE REMOTELY MONITORED BY A LICENSED MONITORING AGENCY.

   SEPARATE SIGNALING AND NOTIFICATION ZONES SHALL BE PROVIDED FOR THE SYSTEM. THE ADDRESSABLE FIRE ALARM CONTROL UNIT AND REMOTE ANNUNCIATOR WILL PROVIDE PINPOINT LOCATION OF ALARM/TROUBLE CONDITION FOR EACH ADDRESSABLE ALARM INITIATION DEVICE IN THE SYSTEM. MULTIPLE NOTIFICATION EVACUATION SIGNAL ZONES SHALL BE PROVIDED WITHIN THE BUILDING. EACH FLOOR NOTIFICATION EVACUATION SIGNAL ZONES SHALL BE PROVIDED IN THE BUILDING. EACH FLOOR IN EACH BUILDING SHALL BE ON A SEPARATE EVACUATION SIGNAL ZONE.

2. SCOPE:
   CONTRACTOR SHALL FURNISH PLANT, LABOR, MATERIAL, SERVICES, AND EQUIPMENT NECESSARY FOR AND REASONABLY INCIDENTAL TO THE INSTALLATION OF NEW AND UPGRADED FIRE ALARM SYSTEM, SMOKE DETECTION AND VISUAL/ AUDIBLE NOTIFICATION SYSTEM AS INDICATED ON THE DRAWINGS AND CALLED FOR HEREINAFTER.

3. CODES AND PERMITS:
   SECURE NECESSARY PERMITS, PAY NECESSARY FEES, CONFORM TO THE NATIONAL ELECTRICAL CODE AND ALL STATE/ LOCAL CODES.

4. GENERAL CONDITIONS:
   DRAWINGS AND SPECIFICATIONS SET FORTH REQUIREMENTS FOR INSTALLATION OF THE NEW FIRE ALARM COMPONENTS AND REMOVAL OF EXISTING DEVICES AS NOTED. IN THE BUILDING, CONTRACTOR SHALL MAINTAIN EXISTING FIRE ALARM SYSTEM IN ITS PRE–CONSTRUCTION STATE OF OPERATION THROUGHOUT ALL PHASES OF THE PROJECT UNTIL THE NEW SYSTEM HAS BEEN COMPLETELY INSTALLED, TESTED, AND APPROVED BY ENGINEER, OWNER, AND AUTHORITY HAVING JURISDICTION. AFTER NEW SYSTEM HAS BEEN ACCEPTED, CONTRACTOR SHALL REMOVE ALL EXISTING/ ABANDONED FIRE ALARM DEVICES, EQUIPMENT, WIRING, ETC. REMOVE ALL EXPOSED CONDUIT AND BOXES ASSOCIATED WITH FIRE ALARM SYSTEMS BEING REMOVED. FURNISH AND INSTALL PROVIDE BLANK STAINLESS STEEL COVER PLATES OVER ALL ABANDONED RECESSED BOXES.

   NEW DUCT TYPE SMOKE DETECTORS ARE BEING INSTALLED TO REPLACE THOSE THAT EXIST IN EXISTING AIR HANDLING UNITS. INSTALLATION SHALL BE IN ACCORDANCE WITH NFPA 90A, SMC, SBC, AND NFPA 72. SINCE EXACT ROUTING OF DUCTWORK THROUGHOUT BUILDING IS UNKNOWN, LOCATION AND QUANTITY OF DUCT TYPE SMOKE DETECTORS ARE BEING ILLUSTRATED BASED ON EXISTING DRAWINGS. CONTRACTOR SHALL FIELD VERIFY EXACT LOCATION AND QUANTITY OF DETECTORS REQUIRED. FURNISH AND INSTALL DUCT TYPE DETECTORS IN ANY EXISTING AIR HANDLING UNITS THAT ARE NOT EQUIPPED WITH CODE REQUIRED DETECTORS.

   CONTRACTOR SHALL RE–INSTALL ALL EXISTING ELECTRICAL DEVICES, SPEAKERS, ETC. IN AREAS WHERE REMOVED FOR INSTALLATION OF NEW FIRE ALARM DEVICES, WIRING, ETC.

   VISIT THE SITE OF EACH BUILDING PRIOR TO BID IN ORDER TO BECOME FAMILIAR WITH EXISTING CONDITIONS THAT COULD IMPACT FIRE ALARM SYSTEM INSTALLATION. MAKE DUE ALLOWANCE FOR SAME IN BID PRICE.

5. FIRE ALARM SYSTEM; ALL COMPONENTS SHALL BE MANUFACTURED BY SINGLE MANUFACTURER.
   A. NEW CONTROL UNIT SHALL BE ANALOG ADDRESSABLE WITH BATTERY SUPPLY, INCLUDING CHARGER, POWER SUPPLIES, DISPLAY MODULES, ETC.
   B. REMOTE ANNUNCIATOR SHALL BE LCD.
   C. MANUAL STATION SHALL BE ADDRESSABLE, SINGLE ACTION
   D. CEILING–MOUNTED SMOKE DETECTORS SHALL BE ADDRESSABLE, PHOTOELECTRIC TYPE
   E. HEAT DETECTORS SHALL BE ADDRESSABLE RATE–OF–RISE TYPE, ANALOG FIXED AND INTELLIGENT,
   F. BASES FOR INTELLIGENT DETECTORS SHALL BE ADDRESSABLE.
   G. DUCT DETECTORS SHALL BE ADDRESSABLE, PHOTOELECTRIC TYPE, WITH SAMPLING TUBES.
   H. ADDRESSABLE MODULES SHALL BE INSTALLED WHERE REQUIRED.
   I. AUDIO–VISUAL UNITS SHALL BE MULTI–CANDELA, AND SET TO VALUE NOTED ON DRAWINGS.
   J. WHERE FLASHING LIGHTS ONLY ARE ILLUSTRATED, PROVIDE MODEL MULTI–CANDELA RATED UNITS, ALL FLASHING LIGHTS SHALL BE SYNCHRONIZED.
   K. MAGNETIC DOOR HOLDERS SHALL BE INSTALLED WHERE NOTED.
   L. ADDRESSABLE MONITOR MODULES SHALL BE INSTALLED AS REQUIRED.
   M. FURNISH AND INSTALL MAIN FIRE ALARM CONTROL UNIT WITH A DIGITAL COMMUNICATOR, DUAL CHANNEL TYPE. PROVIDE TELEPHONE OUTLET AT FIRE ALARM CONTROL PANEL FOR TIE–IN TO REMOTE LOCATION.
   N. FURNISH AND INSTALL TRANSMITTER MODULE, BATTERIES, ADDRESSABLE RELAYS, POWER SUPPLIES, ETC. AS REQUIRED.

6. INSTALLATION AND EXECUTION:
   A. THE CONTRACTOR SHALL PROVIDE AND INSTALL THE SYSTEM IN ACCORDANCE WITH THE PLANS AND SPECIFICATIONS, ALL APPLICABLE NATIONAL AND LOCAL CODES, UL WIRING CRITERIA, AND THE MANUFACTURER'S RECOMMENDATIONS. ALL WIRING SHALL BE COLOR CODED, TAGGED, AND CHECKED RECOMMENDATIONS. ALL WIRING SHALL BE COLOR CODED, TAGGED, AND CHECKED TO ASSURE THAT IT IS FREE FROM SHORTS AND GROUNDS.
   B. RECESSED JUNCTION BOXES SHALL BE INSTALLED IN WALLS FOR INSTALLATION OF NEW DEVICES. FROM WALL BOX, EXTEND ¾" CONDUIT TO ABOVE CEILING AND TERMINATE WITH BUSHING.
   C. WHERE EXISTING WALL CONSTRUCTION DOES NOT ALLOW FOR BOXES TO BE RECESSED, SURFACE MOUNTED BOXES AND "EMT" CONDUIT MAY BE UTILIZED. PAINT ALL EXPOSED RACEWAYS TO MATCH EXISTING CONDITIONS. SURFACE MOUNTED WALL BOXES FOR NEW FIRE ALARM EQUIPMENT SHALL BE SUPPLIED BY FIRE ALARM SYSTEM MANUFACTURER. STANDARD WALL BOXES SHALL NOT BE PERMITTED.
   D. ALL COMPONENTS SHALL BE INSTALLED IN A NEAT AND WORKMANLIKE MANNER. CONDUIT RUNS SHALL BE PARALLEL OR PERPENDICULAR TO EXISTING BUILDING STRUCTURAL ELEMENTS. NO DIAGONAL RUNS WILL BE PERMITTED.
   E. NEW FIRE ALARM WIRING SHALL BE RUN CONCEALED ABOVE EXISTING LAY–IN CEILINGS TO THE MAXIMUM EXTENT POSSIBLE. PLENUM RATED "OPEN" CABLING SHALL BE PERMITTED ABOVE LAY–IN CEILINGS. PROVIDE LOW VOLTAGE CABLING SUPPORT SYSTEM ABOVE ENTIRE LENGTH OF ALL NEW FIRE ALARM WIRING RUNS ABOVE LAY–IN CEILINGS. SEE SPECIFICATION SECTION 28 05 29, "LOW–VOLTAGE CABLING SUPPORT SYSTEM" FOR ADDITIONAL INFORMATION.
   F. NEW FIRE ALARM WIRING SHOWN ON "HARD" CEILINGS SHALL BE INSTALLED IN SURFACE MOUNTED CONDUIT (ELECTRIC–METALLIC TUBING).
   G. FIRE ALARM WIRING SHOWN ON WALLS SHALL BE INSTALLED IN ACCORDANCE WITH SPECIFICATION SECTION 26 05 33, "CONDUIT AND RACEWAY SYSTEM", PART 3, EXECUTION, PARAGRAPH G.
   H. SURFACE MOUNTED WALL BOXES FOR NEW FIRE ALARM EQUIPMENT SHALL BE SUPPLIED BY FIRE ALARM SYSTEM MANUFACTURER. STANDARD WALL BOXES SHALL NOT BE PERMITTED. REFER TO SPECIFICATION SECTION 26 05 34, BOXES FOR ADDITIONAL INFORMATION.
   I. PAINT ALL EXPOSED RACEWAYS TO MATCH EXISTING CONDITIONS. PAINT ALL FIRESTOPPING SEALANTS TO MATCH EXISTING CONDITIONS.
   J. VISIT THE SITE OF EACH BUILDING PRIOR TO BID IN ORDER TO BECOME FAMILIAR WITH EXISTING CONDITIONS THAT COULD IMPACT FIRE ALARM SYSTEM INSTALLATION. MAKE DUE ALLOWANCE FOR SAME IN BID PRICE.
   K. DUCT TYPE SMOKE DETECTORS ARE BEING REPLACED AS PART OF THIS PROJECT IN ALL AIR HANDLING UNITS IN ACCORDANCE WITH NFPA 90A, SMC, IBC, AND NFPA 72. SINCE EXACT ROUTING OF DUCTWORK THROUGHOUT THE EXISTING BUILDING IS UNKNOWN, CONTRACTOR SHALL FIELD DETERMINE EXACT QUANTITY AND LOCATION OF EACH DUCT MOUNTED SMOKE DETECTOR AND REPLACE ALL DETECTORS REGARDLESS OF WHETHER ALL DUCT DETECTORS ARE ILLUSTRATED ON CONSTRUCTION DRAWINGS OR NOT.
   L. FIRE ALARM VENDOR SHALL SUBMIT BATTERY CALCULATIONS FOR EACH NEW FIRE ALARM SYSTEM IN ACCORDANCE WITH REQUIREMENTS OF NFPA 72. BATTERY CALCULATIONS SHALL BE INCLUDED AS PART OF FIRE ALARM SUBMITTAL PACKAGE.
   M. ALL JUNCTION BOXES AND CONDUIT RAN ABOVE LAY–IN CEILING SHALL BE SPRAY PAINTED RED AND LABELED "FIRE ALARM". WHERE INSTALLED ABOVE LAY–IN CEILING, WIRING SHALL BE INSTALLED UTILIZING A SYSTEM "J–HOOKS" SPACED NO MORE THAN 5–FEET APART. WIRING NOT ABOVE LAY–IN CEILINGS SHALL BE INSTALLED IN "EMT" CONDUIT.
   M. THE FIRE ALARM CONTRACTOR MUST BE CERTIFIED IN ACCORDANCE WITH THE TENNESSEE ALARM CONTRACTORS LICENSING ACT OF 1991,TCA TITLE 62, CHAPTER 32.
   O. THE COMPLETED SYSTEM SHALL BE FULLY TESTED BY THE CONTRACTOR AND THE MANUFACTURER'S NICET CERTIFIED TECHNICAL REPRESENTATIVE IN THE PRESENCE OF THE OWNER'S REPRESENTATIVE AND THE LOCAL AUTHORITY HAVING JURISDICTION. UPON COMPLETION OF A SUCCESSFUL TEST, THE CONTRACTOR SHALL SO VERIFY IN WRITING TO THE OWNER, ARCHITECT, AND GENERAL CONTRACTOR.
   P. NEW EQUIPMENT AND WIRING SHALL BE WARRANTED TO BE FREE FROM ELECTRICAL AND MECHANICAL DEFECTS FOR A PERIOD OF ONE YEAR COMMENCING WITH OCCUPANCY OF SPACE BY TENANT. WARRANTY SHALL INCLUDE ALL LABOR/ TRAVEL TIME AND MATERIAL/ PARTS.
   Q. EACH INITIATION DEVICE SHALL BE AFFIXED WITH A MASTIC LABEL INDICATING IT'S ASSIGNED ADDRESS.

7. SHOP DRAWINGS AND SUBMITTALS: PROVIDE ELECTRONIC SUBMITTALS, IN PDF FORMAT, FOR REVIEW BY ARCHITECT AND ENGINEER. SUBMITTALS SHALL INCLUDE MANUFACTURER'S CUTSHEET WITH SPECIFIC MODEL NUMBERS IDENTIFIED AS THEY APPLY TO THIS PROJECT. ALONG WITH CUTSHEETS FIRE ALARM SUBMITTAL SHALL INCLUDE CAD DRAWINGS OF THE PROPOSED SYSTEM INCLUDING CONDUIT AND WIRING LAYOUT, WIRING COUNT, AND DEVICE LAYOUT. ALSO INCLUDED SHALL BE BATTERY CALCULATIONS FOR NEW FIRE ALARM SYSTEM IN ACCORDANCE WITH REQUIREMENTS OF NFPA 72.

8. GUARANTY: GUARANTEE ALL WORK TO BE FREE FROM DEFECTS IN MATERIAL AND WORKMANSHIP FOR ONE YEAR AFTER DATE OF FINAL ACCEPTANCE.

CHARLES N. LUTTRELL, JR.
NO. 14177
12-5-19

Vreeland Engineers Inc.
3107 Sutherland Ave.
P.O. Box 10648
Knoxville, TN 37939
865–637–4451
vreelandengineers.com

UNION COUNTY HIGH SCHOOL
FIRE ALARM UPGRADES
UNION COUNTY, TENNESSEE
T.F.M. #09158 / PROJECT # 2019-11-26-03

DRAWING DESCRIPTION:
LEGENDS, NOTES, AND DETAILS

DATE:
11-22-2019

REVISIONS:	
1	TFM COMMENTS 12-5-19

SHEET NUMBER
E0.1
OF

E0.1 – UCHS – Legend.dwg
C.W.L. 12/09/19 9:47 AM CL19318(La)

System No. W-L-1054

WL 1054

Classified by Underwriters Laboratories, Inc. to UL 1479 and CAN/ULC-S115

ANSI/UL1479 (ASTM E814)	CAN/ULC S115
F Ratings — 1 and 2 Hr (See Items 1 and 3)	F Ratings — 1 and 2 Hr (See Items 1 and 3)
T Rating — 0 Hr	FT Rating — 0 Hr
L Rating at Ambient — Less Than 1 CFM/sq ft	FH Ratings —1 and 2 Hr (See Items 1 and 3)
L Rating at 400 F — Less Than 1 CFM/sq ft	FTH Rating — 0 Hr
	L Rating at Ambient — Less Than 1 CFM/sq ft
	L Rating at 400 F — Less Than 1 CFM/sq ft

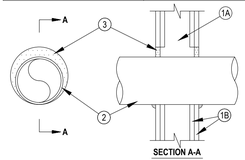

SECTION A-A

1. Wall Assembly — The 1 or 2 hr fire-rated gypsum wallboard/stud wall assembly shall be constructed of the materials and in the manner specified in the individual U300 or U400 Series Wall and Partition Designs in the UL Fire Resistance Directory and shall include the following construction features:
   A. Studs — Wall framing may consist of either wood studs or steel channel studs. Wood studs to consist of nom 2 by 4 in. (51 by 102 mm) lumber spaced 16 in. (406 mm) OC. Steel studs to be min 2-1/2 in. (64 mm) wide and spaced max 24 in. (610 mm) OC. When steel studs are used and the diam of opening exceeds the width of stud cavity, the opening shall be framed on all sides using lengths of steel stud installed between the vertical studs and screw-attached to the steel studs at each end. The framed opening in the wall shall be 4 to 6 in. (102 to 152 mm) wider and 4 to 6 in. (102 to 152 mm) higher than the diam of the penetrating item such that, when the penetrating item is installed in the opening, a 2 to 3 in. (51 to 76 mm) clearance is present between the penetrating item and the framing on all four sides.
   B. Gypsum Board* — 5/8 in. (16 mm) thick, 4 ft (122 cm) wide with square or tapered edges. The gypsum board type, thickness, number of layers, fastener type and sheet orientation shall be as specified in the individual U300 or U400 Series Design in the UL Fire Resistance Directory. Max diam of opening is 32-1/4 in. (819 mm) for steel stud walls. Max diam of opening is 14-1/2 in. (368 mm) for wood stud walls.

   The F and FH Ratings of the firestop system are equal to the fire rating of the wall assembly.
2. Through-Penetrants — One metallic pipe, conduit or tubing to be installed either concentrically or eccentrically within the firestop system. The annular space shall be min 0 in. to max 2-1/4 in. (57 mm). Pipe may be installed with continuous point contact. Pipe, conduit or tubing to be rigidly supported on both sides of wall assembly. The following types and sizes of metallic pipes, conduits or tubing may be used:
   A. Steel Pipe — Nom 30 in. (762 mm) diam (or smaller) Schedule 10 (or heavier) steel pipe.
   B. Iron Pipe — Nom 30 in. (762 mm) diam (or smaller) cast or ductile iron pipe.
   C. Conduit — Nom 4 in. (102 mm) diam (or smaller) steel electrical metallic tubing or 6 in. (152 mm) . diam steel conduit.
   D. Copper Tubing — Nom 6 in. (152 mm) diam (or smaller) Type L (or heavier) copper tubing.
   E. Copper Pipe — Nom 6 in. (152 mm) diam (or smaller) regular (or heavier) copper pipe.
3. Fill, Void or Cavity Material* — Sealant — Min 5/8 in. (16 mm) thickness of fill material applied within the annulus, flush with both surfaces of wall. At the point or continuous contact locations between pipe and wall, a min 1/2 in. (13 mm) diam bead of fill material shall be applied at the pipe wall interface on both surfaces of wall.
   HILTI CONSTRUCTION CHEMICALS, DIV OF HILTI INC — FS-One Sealant or FS-ONE MAX Intumescent Sealant

* Indicates such products shall bear the UL or cUL Certification Mark for jurisdictions employing the UL or cUL Certification (such as Canada), respectively.

Hilti Firestop Systems

Reproduced by HILTI, Inc. Courtesy of Underwriters Laboratories, Inc.
October 14, 2015

System No. W-J-1067

Classified by Underwriters Laboratories, Inc. to UL 1479 and CAN/ULC-S115

ANSI/UL1479 (ASTM E814)	CAN/ULC S115
F Rating — 1 and2 Hr (See Items 1 and 3)	F Rating — 1 and 2 Hr (See Items 1 and 3)
T Rating — 0 Hr	FT Rating — 0 Hr
L Rating At Ambient — Less Than 1 CFM/sq ft	FH Rating — 1 and 2 Hr (See Items 1 and 3)
L Rating At 400 F — Less Than 1 CFM/sq ft	FTH Rating — 0 Hr
	L Rating At Ambient — Less Than 1 CFM/sq ft
	L Rating At 400 F — Less Than 1 CFM/sq ft

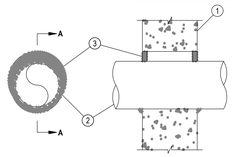

SECTION A-A

1. Wall Assembly — Min 3-3/4 in. and 5 in. thick reinforced lightweight or normal weight (100-150 pcf) concrete for 1 and 2 h rated assemblies, respectively. Wall may also be constructed of any UL Classified Concrete Blocks*. Max diam of opening is 32-1/4 in.
   See Concrete Blocks (CAZT) category in the Fire Resistance Directory for names of manufacturers.
2. Through—Penetrants — One metallic pipe, conduit or tubing to be centered within the firestop system. The annular space shall be min 0 in. to max 2-1/4 in. Pipe may be installed with continuous point contact. Pipe, conduit or tube may be installed at an an angle not greater than 45 degrees from perpendicular. Pipe, conduit or tubing to be rigidly supported on both sides of wall assembly. The following types and sizes of metallic pipes, conduits or tubing may be used:
   A. Steel Pipe — Nom 30 in. diam (or smaller) Schedule 10 (or heavier) steel pipe.
   B. Iron Pipe — Nom 30 in. diam (or smaller) cast or ductile iron pipe.
   C. Conduit — Nom 4 in. diam (or smaller) steel electrical metallic tubing or 6 in. diam (or smaller) steel conduit.
   D. Copper Tubing — Nom 6 in. diam (or smaller) Type L (or heavier) copper tubing.
   E. Copper Pipe — Nom 6 in. diam (or smaller) Regular (or heavier) copper pipe.
3. Fill, Void or Cavity Material* — Min 5/8 in. thickness of fill material applied within the annulus, flush with both surfaces of wall. At the point or continuous contact locations between pipe and wall, a min 1/2 in. diam bead of fill material shall be applied at the pipe-wall interface on both surfaces of wall.
   HILTI CONSTRUCTION CHEMICALS, DIV OF HILTI INC — FS-One Sealant

*Bearing the UL Classification Mark

Hilti Firestop Systems

Reproduced by HILTI, Inc. Courtesy of Underwriters Laboratories, Inc.
November 26, 2012

NOTES:

1. DETAILS SHOWN ABOVE REPRESENT THE STANDARD QUALITY TO BE USED FOR FIRESTOPPING IN THESE APPLICATIONS. SIMILAR AND EQUAL PRODUCTS BY 3M AND STI SHALL BE APPROVED FOR USE IN THIS PROJECT.
2. ALL CONDUITS ENTERING/DEPARTING RATED WALLS SHALL HAVE APPLICABLE FIRESTOPPING METHOD INSTALLED.

System No. C-AJ-1630

CAJ 1630

Classified by Underwriters Laboratories, Inc. to UL 1479 and CAN/ULC-S115

ANSI/UL1479 (ASTM E814)	CAN/ULC S115
F Ratings — 2, 3 & 4 Hr (See Item 4)	F Rating — 2, 3 & 4 Hr (See Item 4)
T Rating — 0 Hr	FT Rating — 0 Hr
L Rating At Ambient — Less Than 1 CFM/sq ft	FH Rating — 2, 3 & 4 Hr (See Item 4)
L Rating At 400 F — Less Than 1 CFM/sq ft	FTH Rating — 0 Hr
W Rating — Class 1 (See Item 4)	L Rating At Ambient — Less Than 1 CFM/sq ft
	L Rating At 400 F — 4 CFM/sq ft

CONFIGURATION A

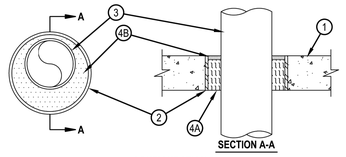

SECTION A-A

CONFIGURATION B

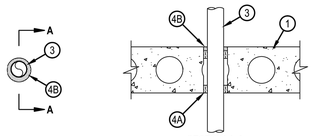

SECTION A-A

1. Floor or Wall Assembly — See Configuration A above. Reinforced lightweight or normal weight (100-150 pcf or 1600-2400 kg/cu meter) concrete as specified in the Table in Item 4 below. Wall may also be constructed of any UL Classified Concrete Blocks*. Max diam of sleeved opening is 32 in. (813 mm).
   See Concrete Blocks (CAZT) category in the Fire Resistance Directory for names of manufacturers.

1A. Floor Assembly — See Configuration B above. Min 6 in. (152 mm) thick UL Classified hollow-core Precast Concrete Units*. Max diam of opening is 7 in. (178 mm).
   See Precast Concrete Units (CFTV) category in the Fire Resistance Directory for names of manufacturers.

Hilti Firestop Systems

Reproduced by HILTI, Inc. Courtesy of Underwriters Laboratories, Inc.
December 20, 2013

Page: 1 of 2

System No. C-AJ-1630

CAJ 1630

2. Steel Sleeve (Optional) — Nom 32 in. (813 mm) diam (or smaller) Schedule 10 (or heavier) steel pipe sleeve cast or grouted into floor or wall assembly, flush with both surfaces of floor or wall. As an option, sleeve may extend max 2 in. above top surface of floor or beyond one or both surfaces of wall. Steel sleeve may be used in 2 and 3 hr F Rated systems only.
3. Through Penetrants — One metallic pipe, conduit or tubing to be installed either concentrically or eccentrically within the firestop system. Pipe, conduit or tubing to be rigidly supported on both sides of floor or wall assembly. See Table in Item 4 for sizes of penetrants A, B, D and E that may be used. See Item 3C below for size of conduit that may be used. The annular space shall be as specified in Table in Item 4 below. The following types and sizes of metallic pipes, conduits or tubing may be used:
   A. Steel Pipe — Schedule 10 (or heavier) steel pipe.
   B. Iron Pipe — Cast or ductile iron pipe.
   C. Conduit — Nom 4 in. (102 mm) diam (or smaller) steel electrical metallic tubing or nom 6 in. (152 mm) diam (or smaller) steel conduit.
   D. Copper Tubing — Type L (or heavier) copper tubing.
   E. Copper Pipe — Regular (or heavier) copper pipe.
4. Firestop System — The F Rating of the system is dependent upon the type of concrete, thickness of concrete, annular space, fill and packing material thickness, packing material density and penetrant size as shown in the Table below. W Rating applies to annular spaces of min 0 in. (point contact) to max 1-7/8 in. and to Configuration A detail only.

F Rating hr	Min Thick Concrete In. (mm)	Annular Space In. (mm)	Min Thick Packing Mtl In. (mm)	Min Density Packing Mtl pcf (kg/cu meter)	Min Thick Fill Mtl, In. (mm)	Penetrant Size, In. (mm) Diam (or Smaller)	
						D, E Copper	A, B (Steel Iron)
2	5-1/2 (140)	0 to 1-7/8 (0 to 48)	5 (127)	4 (64)	1/2 (13)	4 (102)	16 (406)
3	4-1/2 (114)	0 to 2-1/8 (0 to 54)	4-1/4 (108)	4 (64)	1/4 (6)	6 (152)	30 (762)
4	5-1/2 (140)	0 to 1-7/8 (0 to 48)	5 (127)	4 (64)	1/2 (13)	4 (102)	8 (203)

   A. Packing Material — Min 4-1/4 or 5 in. (108 or 127 mm) thickness of min 4.0 pcf (64 kg/cu meter) mineral wool batt insulation firmly packed into opening as a permanent form as specified in the Table above. Packing material to be recessed from top surface of floor or top end of sleeve, or from both surfaces of wall or ends of sleeve, as required to accommodate the required thickness of fill material. For hollow-core floor applications as shown in Configuration B, one half of the required thickness of mineral wool packing material shall be installed flush with the bottom surface of the floor and the remaining half of the mineral wool packing material installed at the top of the opening and recessed from the top surface of the floor to accommodate the required thickness of the fill material.
   B. Fill, Void or Cavity Material* — Caulk — Min 1/4 or 1/2 in. (6 or 13 mm) thickness of fill material as specified in the Table above applied within the annulus, flush with top surface of floor or top end of sleeve, or with both surfaces of wall or ends of sleeve. At the point contact location between pipe and concrete or sleeve, a min 1/2 in. (13 mm) diam bead of fill material shall be applied. As an option, for hollow-core floors, the packing material (Item 4A) on the bottom surface of the floor may be recessed to accommodate a 1/4 in. (6 mm) depth of fill material installed flush with bottom surface of floor.
   HILTI CONSTRUCTION CHEMICALS, DIV OF HILTI INC — CFS-S SIL GG (floors or walls) and CFS-S SIL SL (floors only)

*Bearing the UL Classification Mark

Hilti Firestop Systems

Reproduced by HILTI, Inc. Courtesy of Underwriters Laboratories, Inc.
December 20, 2013

Page: 2 of 2

CHARLES N. LUTTRELL JR. REGISTERED ENGINEER AGRICULTURE NO. 14171 STATE OF TENNESSEE

Vreeland Engineers Inc.
3107 Sutherland Ave.
P.O. Box 10648
Knoxville, TN 37939
865-637-4343
vreelandengineers.com

UNION COUNTY HIGH SCHOOL
FIRE ALARM UPGRADES
UNION COUNTY, TENNESSEE
T.F.M. #09158 / PROJECT # 2019-11-26-03

DRAWING DESCRIPTION:
DETAILS

DATE:
11-22-2019

REVISIONS:	
1	TFM COMMENTS 12-5-19

SHEET NUMBER
E0.2

OF

E0.2 – UCHS – Details.dwg
C.W.L. 11/25/19 3:59 PM CL19318(La)