City of Raton
Solid Waste Convenience Center Project

Raton, New Mexico

May 2020

CERTIFICATION:
I, Kenneth Scott Berry, New Mexico Registered Professional Engineer No. 12848, Hereby Certify That Project Design Documents Have been Prepared By Myself In Accordance With Applicable Standards and Agency Requirements.

Kenneth Scott Berry, P.E.
City of Raton
224 Savage Avenue
Raton, New Mexico 87740

FUNDING AGENCIES:
New Mexico Environment Department
The City of Raton

CONTRACTING AGENCY:
The City of Raton
224 Savage Avenue
Raton, New Mexico 87740

MAYOR:
Mr. James Neil Segotta – Mayor

CITY COMMISSION:
Mrs. Linde Schuster – Mayor Pro-Tem
Mr. Donald Giacomo – Commissioner
Mr. Ronald Chavez – Commissioner
Mrs. Lori Chatterley – Commissioner

CITY MANAGER:
Mr. Scott Berry, P.E.

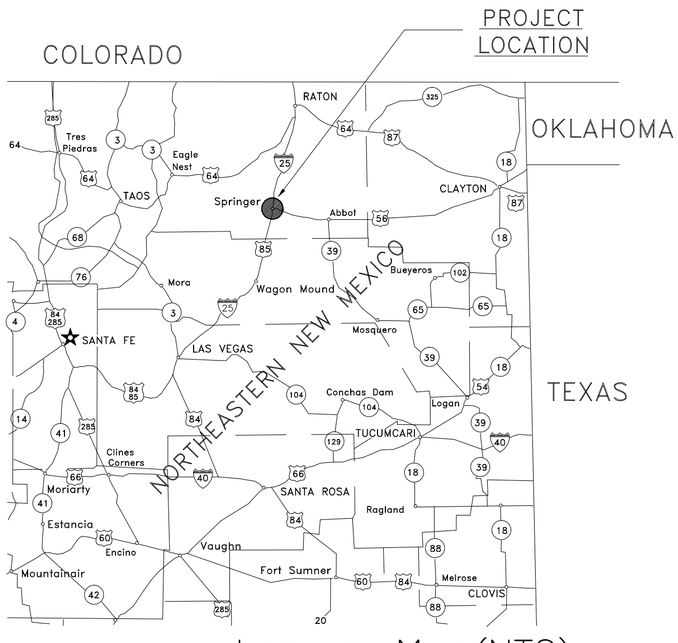

LOCATION MAP (NTS)

Index of Sheets

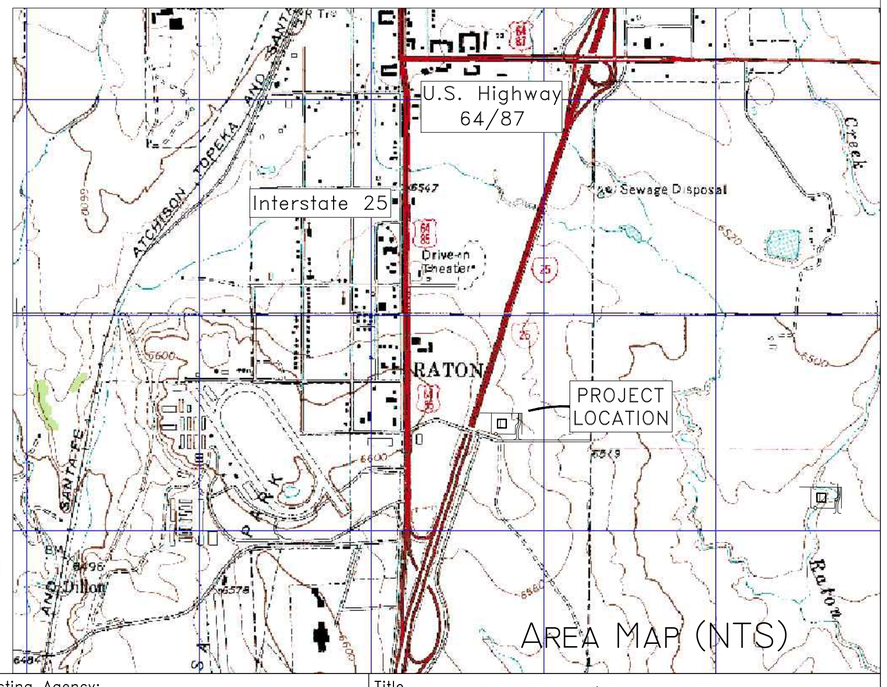

AREA MAP (NTS)

Revisions	No.	Description

Contracting Agency:
City of Raton
224 Savage Avenue
Post Office Box 910
Raton, New Mexico 87740
(575) 445-9551

Title
Title Sheet / Location Maps
City of Raton, New Mexico
Solid Waste Convenience Center Project

N/A	Date: March 17, 2019	Sheet G-1

Construction Notes:

1. Contractor and fabricators shall verify all quantities, dimensions, and conditions and notify the Owner and/or Engineer of any discrepancies or inconsistencies in the drawings and/or specifications before proceeding with the work.

2. Following rough grading and excavation, in-situ subgrade/ native soil material shall be re-processed to a minimum depth of 48 inches (or shale/ claystone formation) within the proposed structure perimeter area and within 5 feet of the proposed structure area. Compaction and moisture content required for the reprocessing operation shall meet all specifications of Section 3 on this sheet. Reprocessing subgrade material shall include excavation, stockpiling, moisture treatment, placement in uncompacted lifts not exceeding 6 inches in thickness, and compaction to specified standards and subgrade elevations.

3. Subgrade/ native soil material shall be compacted to 95% of standard Proctor (ASTM D-698) density at a controlled moisture content ranging from optimum moisture to +2.00% of optimum moisture. Moisture content shall not vary to less than optimum moisture. Compaction shall be completed with equipment approved by Project Engineer, and shall consist of appropriately sized sheepsfoot or padfoot equipment that is capable of delivering adequate compactive effort.

4. All compacted fill or soil material of all types shall be proof-rolled. Pumping or yielding soils shall be removed and re-processed.

5. Structural (engineered) fill shall be provided and placed by Contractor and shall consist of a well graded 2 inch minus aggregate/ sand/ fines mixture that is non-expansive, has a Plasticity Index less than 18, and no greater than 15% passing a #200 sieve.

6. Structural fill material shall be placed in 6 inch loose maximum lifts to 95% of standard Proctor (ASTM D-698) density at a controlled moisture content ranging from optimum moisture to +2.00% of optimum moisture. Moisture content shall not vary to less than optimum moisture. Contractor shall provide suitable equipment and methods to complete uniform moisture content and compaction/ consolidation of material.

7. Contractor shall submit concrete mix design for approval prior to construction. No additional admixtures shall be added to concrete, unless specified on approved design mix. No supplemental water shall be added to mix at site of placement or following placement, without express written approval of the Project Engineer. Concrete placement not meeting batching, handling and placement specifications shall be removed and replaced at Contractor's expense. Aggregates in the mix design must be designed for the specific conditions of the project.

8. Concrete shall be 3000 psi compressive strength @ 28 days. Reinforcement materials, placement, splicing and cover shall be in accordance with applicable ACI provisions. Reinforcing steel shall meet Grade 40 for #3 and #4 bars and Grade 60 for bars larger than #4.

9. Pier foundation shall consist of drilled, cast-in-place, reinforced concrete end-bearing piles. All piers shall have a minimum drilled length of 12 feet and penetrate a minimum of 6 feet into competent, unweathered bedrock, whichever results in the longer drilled pier length. Contractor shall provide temporary casing if required.

10. Contractor shall provide and install ASTM F1554 Gr. 36 Anchor Rods as shown. Anchor Rods shall be hot-dipped galvanized and shall be accurately placed in fresh concrete. Anchor rod placement shall not deviate more than $\frac{1}{16}$ inch from the location designated on the Anchor Bolt Plan. Contractor shall provide and install A563 grade DH or A194 grade 2H nuts and F436 washers. Contractor shall double-nut as required.

11. Contractor shall be responsible for all measures necessary to prevent damage to concrete resulting from high temperatures, low temperature, precipitation, drainage or other potentially harmful conditions. The use of accelerants, high early strength, or chloride/ corrosive admixtures shall not be permitted. Contractor shall provide approved, effective curing method to prevent excessive shrinkage. Contractor shall demonstrate adequate curing and strength prior to loading structural concrete components.

12. Contractor shall provide and install Liquid Membrane-Forming Compound Having Special Properties for Curing and Sealing Concrete to all flat concrete surfaces. Curing and Sealing Compound shall be installed as a continuous membrane-forming liquid in full conformance with manufacturer's instructions and Standard Specification. Spotted appearance of applied compound shall constitute inadequate coverage and shall require re-application. Curing and Sealing Compound shall meet the requirements of Standard ASTM C1315.

REV NO	REV DATE	DESCRIPTION
(1)	3/26/20	General Revision

KSBE PROJECT NUMBER: 1-12-106-09414
DRAWN BY: K. S. Berry
PROJECT ENGINEER: K. S. Berry
SCALE: N/A
DATE OF DRAWING: October 4, 2019

Project: City of Raton
Solid Waste Convenience Center Project

Prepared For: The City of Raton
224 Savage Avenue
Post Office Box 910
Raton, New Mexico 87740

Title: Construction Notes and Details

Sheet
G-2

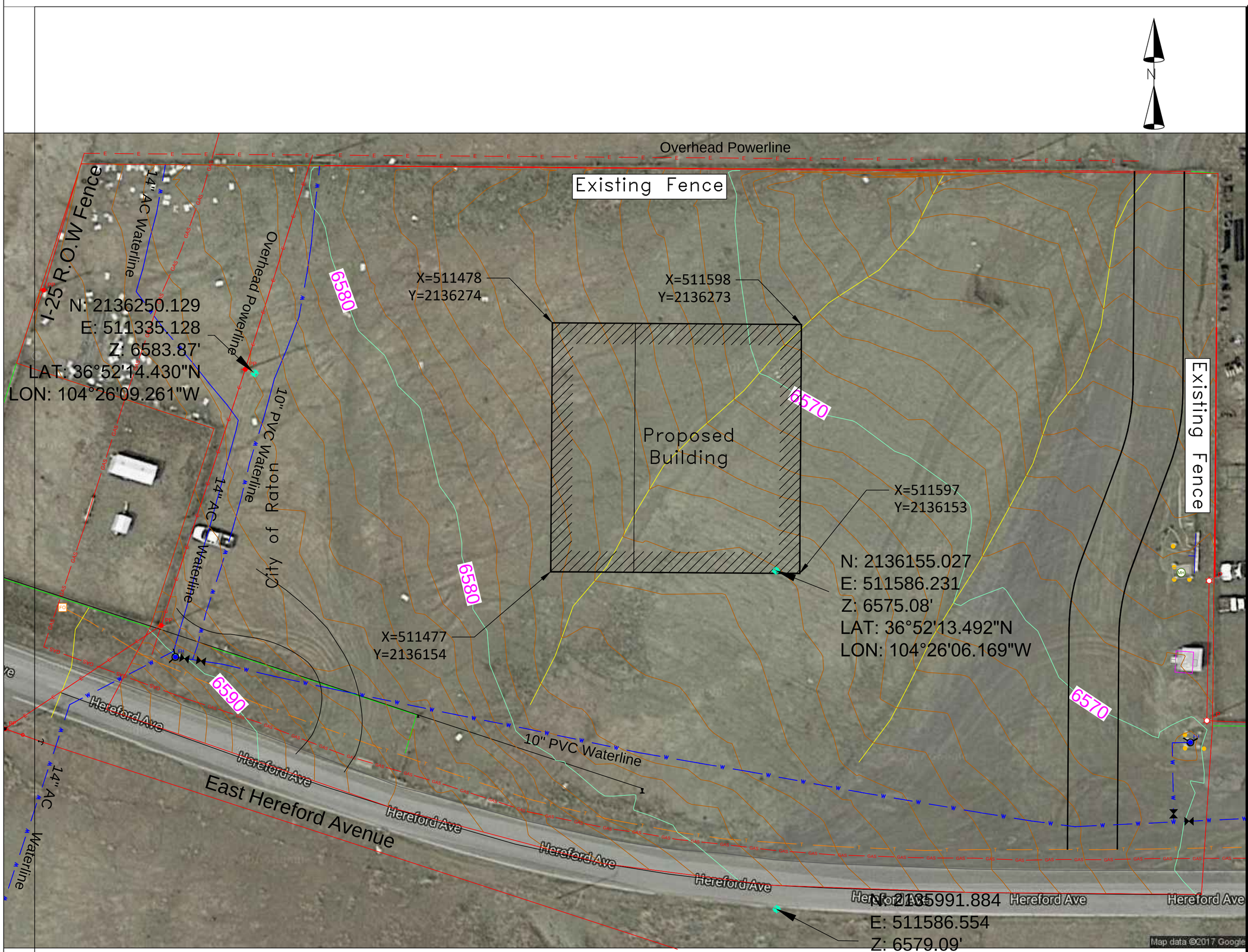

Control Established by Shields Survey Co.

REV NO	REV DATE	DESCRIPTION
1	9/29/19	Review & Update

KSBE PROJECT NUMBER: 1-12-106-09414
DRAWN BY: K. S. Berry
PROJECT ENGINEER: K. S. Berry
SCALE: 1 Inch = 30 Feet
DATE OF DRAWING: January 10, 2018

Project: City of Raton
Solid Waste Convenience Center Project

Prepared For: The City of Raton
224 Savage Avenue
Post Office Box 910
Raton, New Mexico 87740

Title: Existing Building Site Topography

Sheet G-3

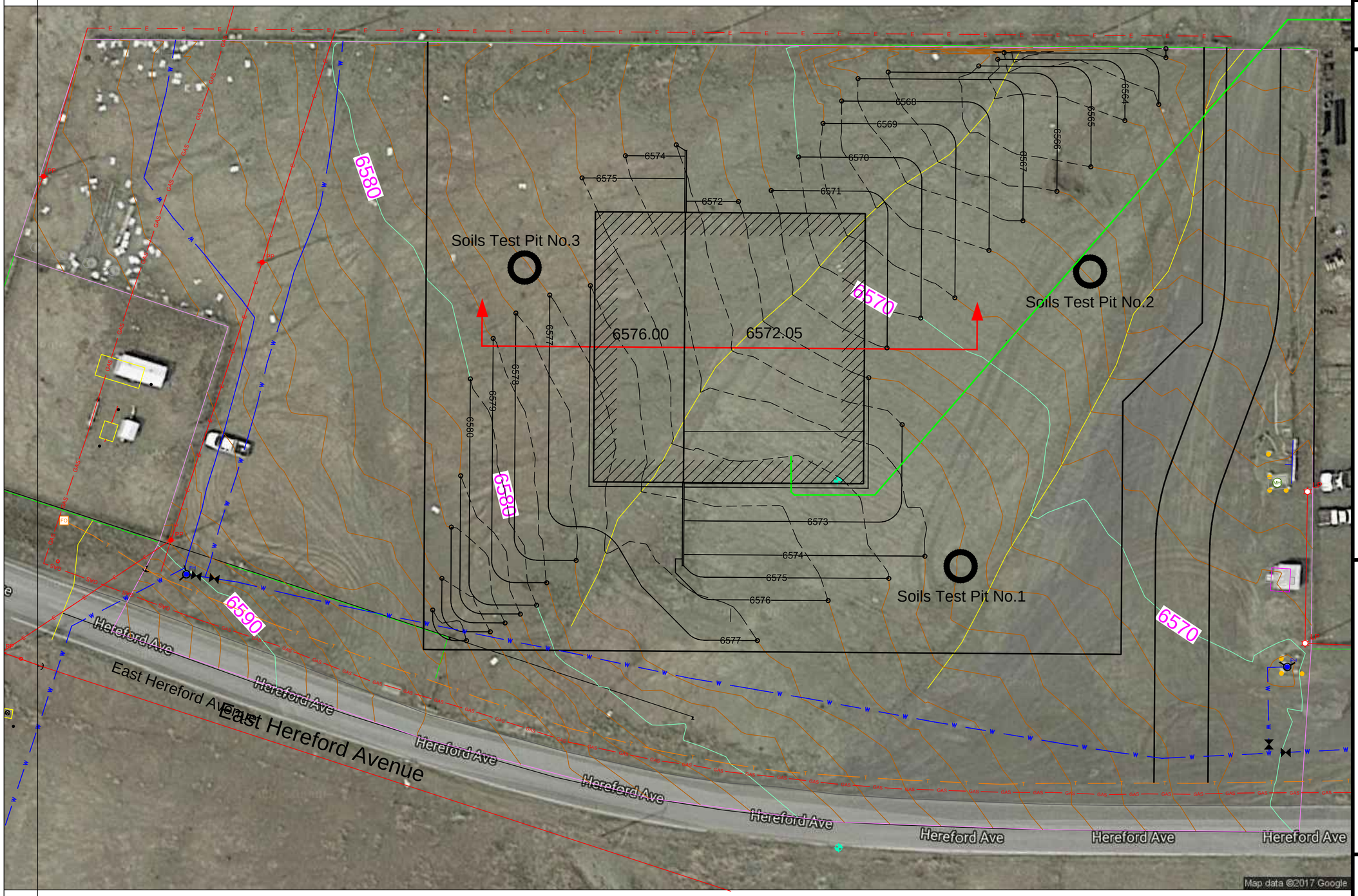

REV NO	REV DATE	DESCRIPTION
1	9/29/19	Review & Update

KSBE PROJECT NUMBER: 1-12-106-09414
DRAWN BY: K. S. Berry
PROJECT ENGINEER: K. S. Berry
SCALE: 1 Inch = 10 Feet
DATE OF DRAWING: January 10, 2018

Project: City of Raton
Solid Waste Convenience Center Project

Prepared For: The City of Raton
224 Savage Avenue
Post Office Box 910
Raton, New Mexico 87740

Title: Site Grading Plan

Sheet G-4

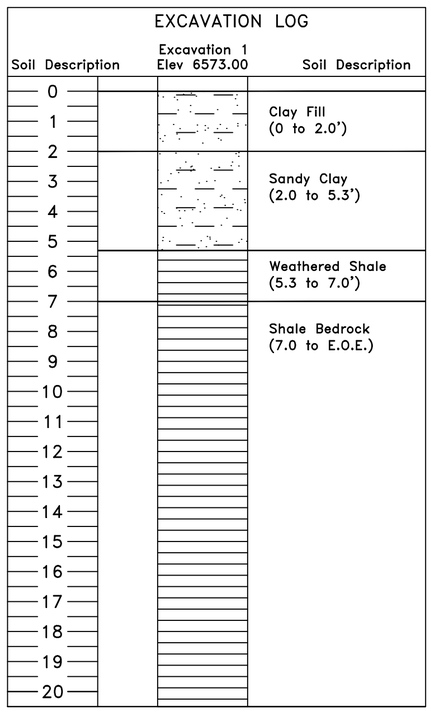

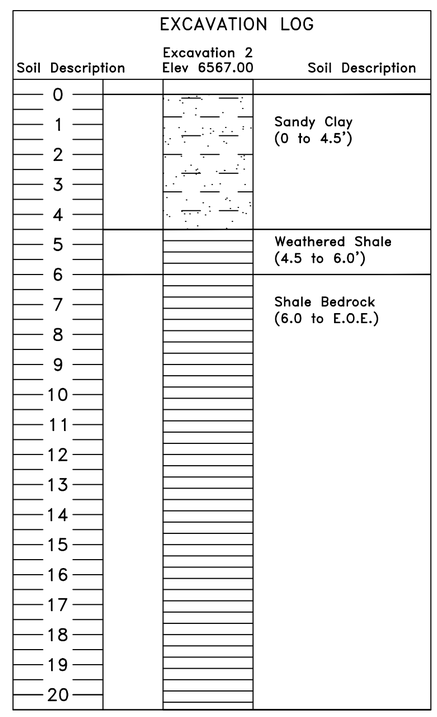

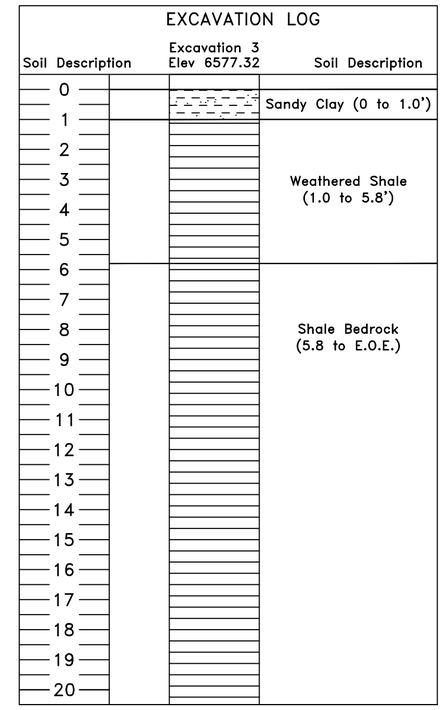

See Sheet G-4 for Location

REV NO	REV DATE	DESCRIPTION
1	9/28/19	Review & Update

KSBE PROJECT NUMBER: 1-12-106-09414
DRAWN BY: K. S. Berry
PROJECT ENGINEER: K. S. Berry
SCALE: 1 Inch = 20 Feet
DATE OF DRAWING: January 8, 2018

Project: City of Raton
Solid Waste Convenience Center Project

Prepared For: The City of Raton
224 Savage Avenue
Post Office Box 910
Raton, New Mexico 87740

Title: Log of Backhoe Test Excavations

Sheet G-5

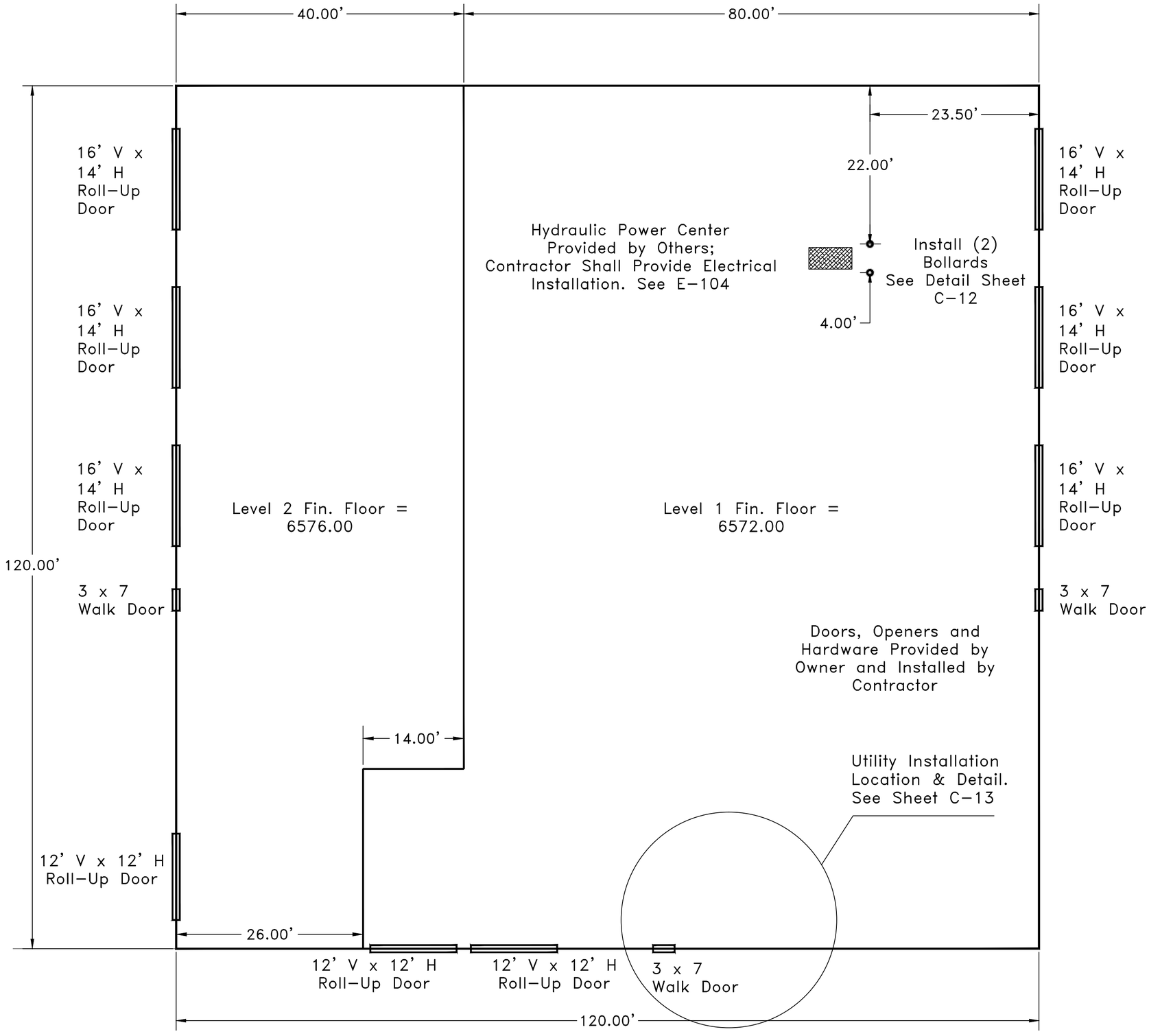

REV NO	REV DATE	DESCRIPTION
1	9/28/19	Review & Update

COR PROJECT NUMBER: 00011
DRAWN BY: K. S. Berry
PROJECT ENGINEER: K. S. Berry
SCALE: 1 Inch = 10 Feet
DATE OF DRAWING: January 8, 2018

Project: City of Raton Solid Waste Convience Center Project

Prepared For: The City of Raton
224 Savage Avenue
Post Office Box 910
Raton, New Mexico 87740

Title: Proposed Building Floor Plan

Sheet C-1

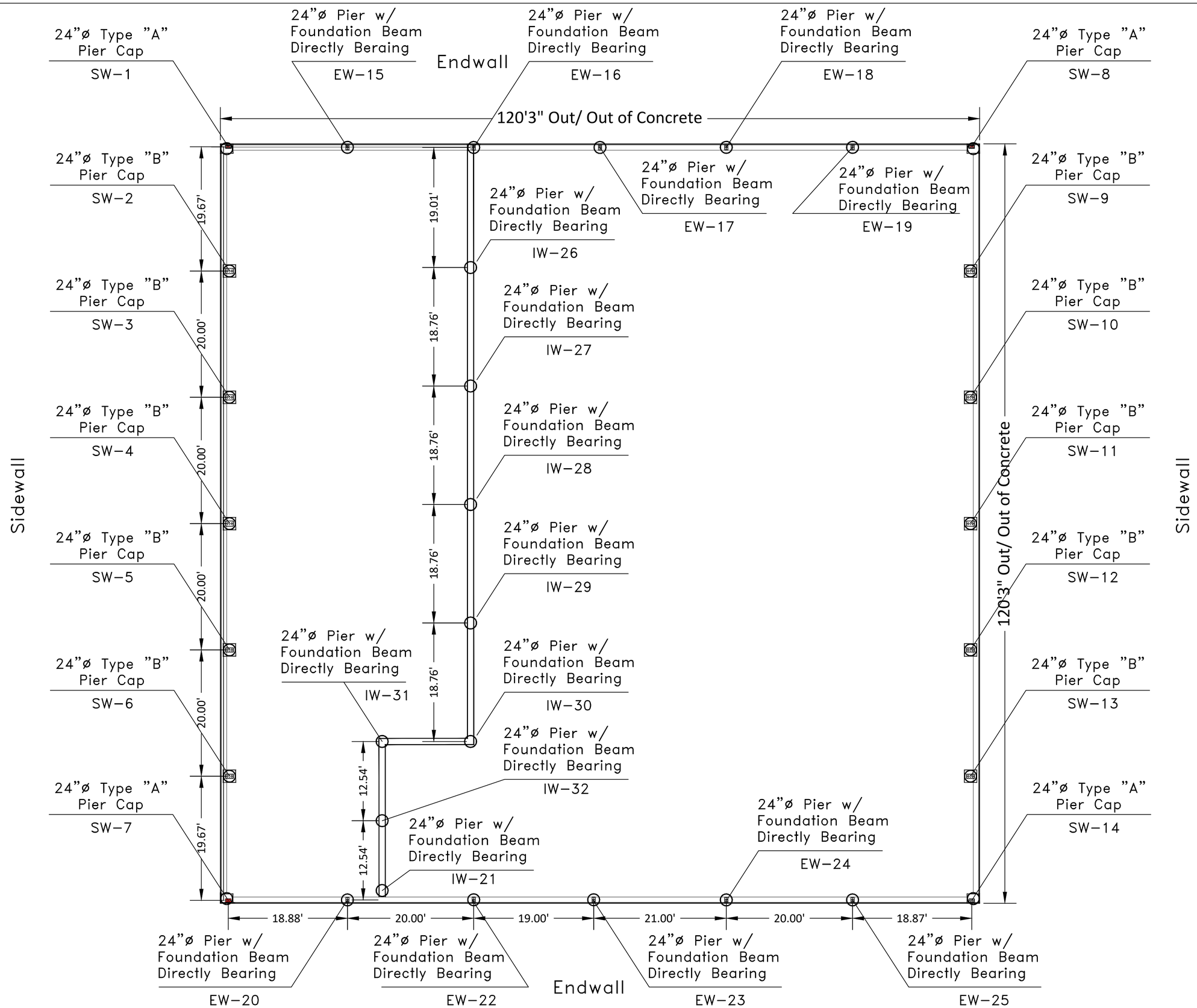

REV NO	REV DATE	DESCRIPTION
1	9/28/19	Review & Update

COR PROJECT NUMBER: 00011
DRAWN BY: K. S. Berry
PROJECT ENGINEER: K. S. Berry
SCALE: 1 Inch = 10 Feet
DATE OF DRAWING: January 8, 2018

Project: City of Raton Solid Waste Convience Center Project

Prepared For: The City of Raton
224 Savage Avenue
Post Office Box 910
Raton, New Mexico 87740

Title: Building Foundation Plan

Sheet C-2

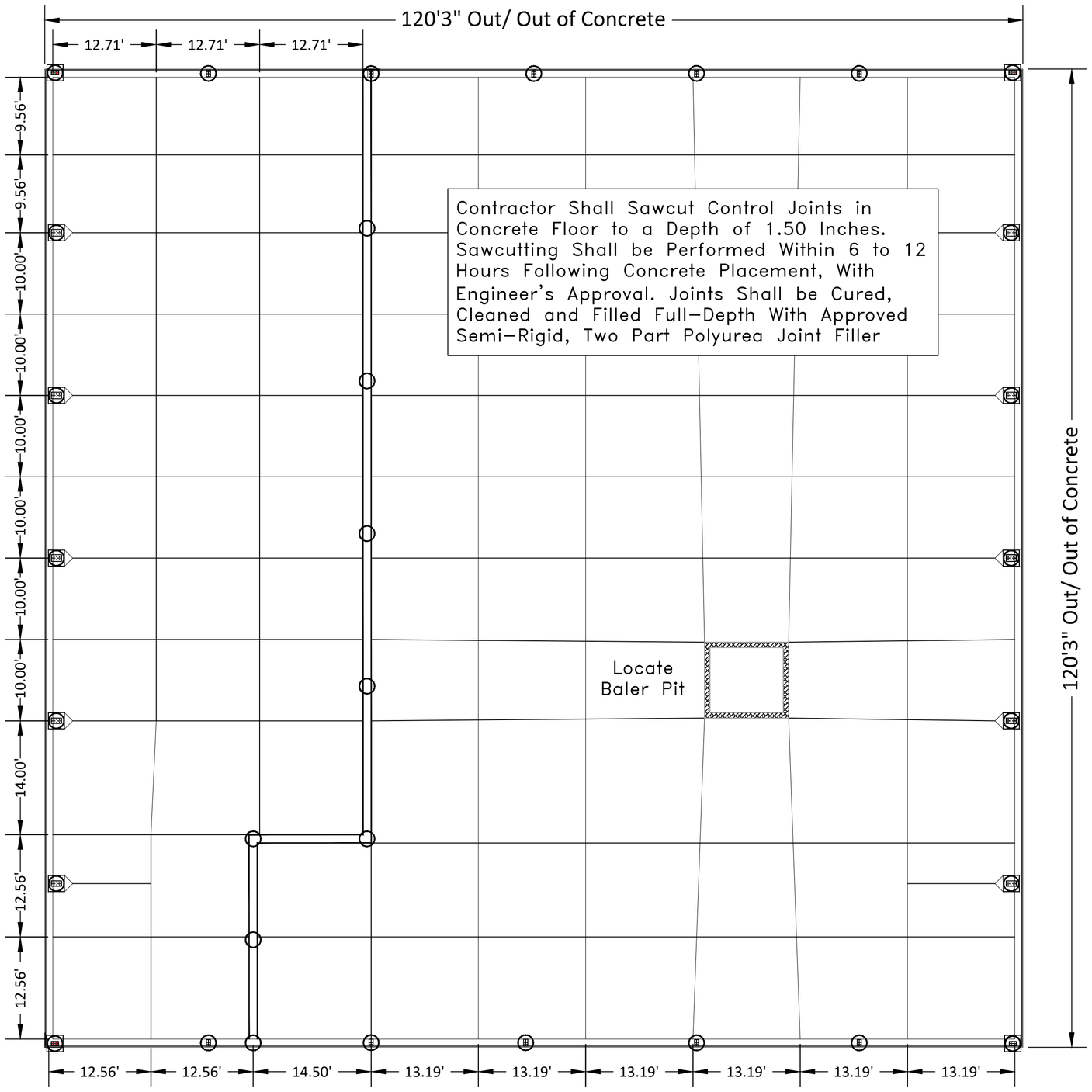

REV NO	REV DATE	DESCRIPTION
1	9/28/19	Review & Update

COR PROJECT NUMBER: 00011
DRAWN BY: K. S. Berry
PROJECT ENGINEER: K. S. Berry
SCALE: 1 Inch = 10 Feet
DATE OF DRAWING: January 8, 2018

Project: City of Raton
Solid Waste Convience Center Project

Prepared For: The City of Raton
224 Savage Avenue
Post Office Box 910
Raton, New Mexico 87740

Title: Concrete Floor Jointing Plan

Sheet C-3

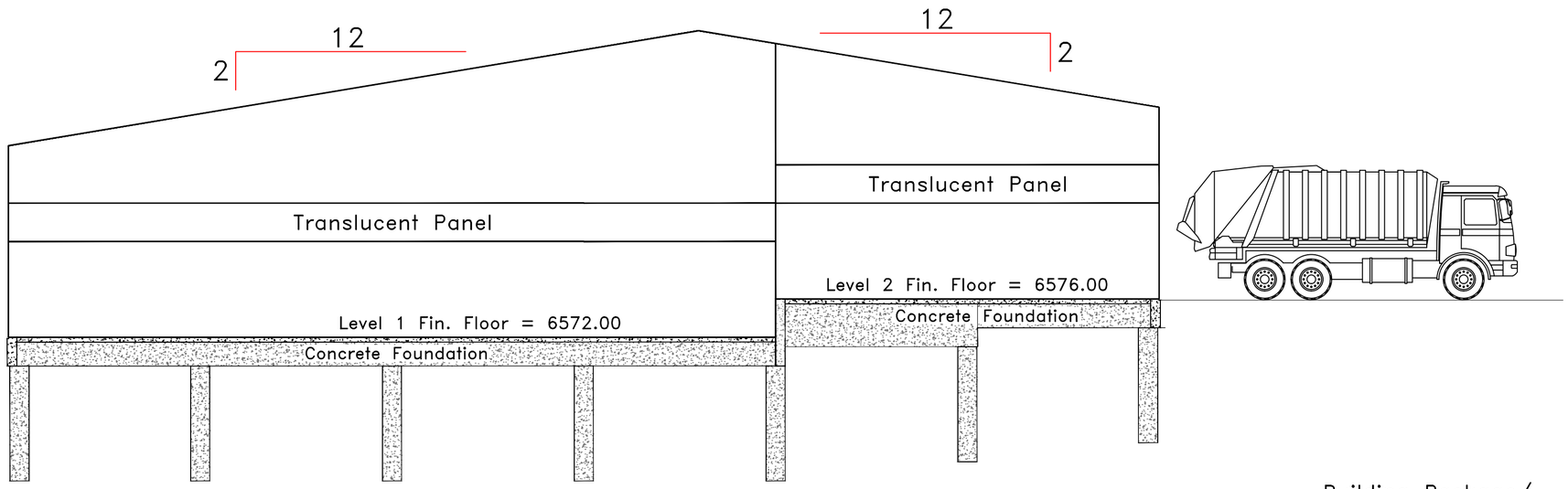

North Elevation

Building Package/
Components Provided
by Owner and Installed
by Contractor

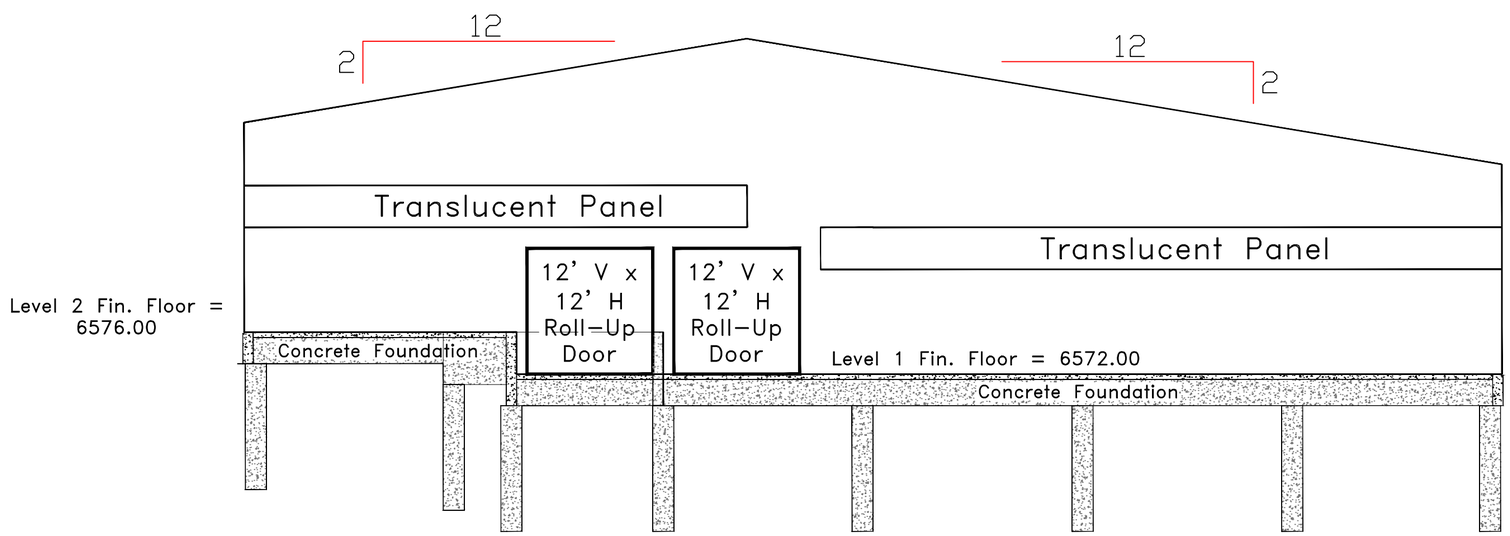

South Elevation

REV NO	REV DATE	DESCRIPTION
1	9/28/19	Review & Update

COR PROJECT NUMBER: 00011
DRAWN BY: K. S. Berry
PROJECT ENGINEER: K. S. Berry
SCALE: 1 Inch = 10 Feet
DATE OF DRAWING: January 8, 2018

Project: City of Raton
Solid Waste Convience Center Project

Prepared For: The City of Raton
224 Savage Avenue
Post Office Box 910
Raton, New Mexico 87740

Title: Proposed Building Elevations

Sheet
C-4

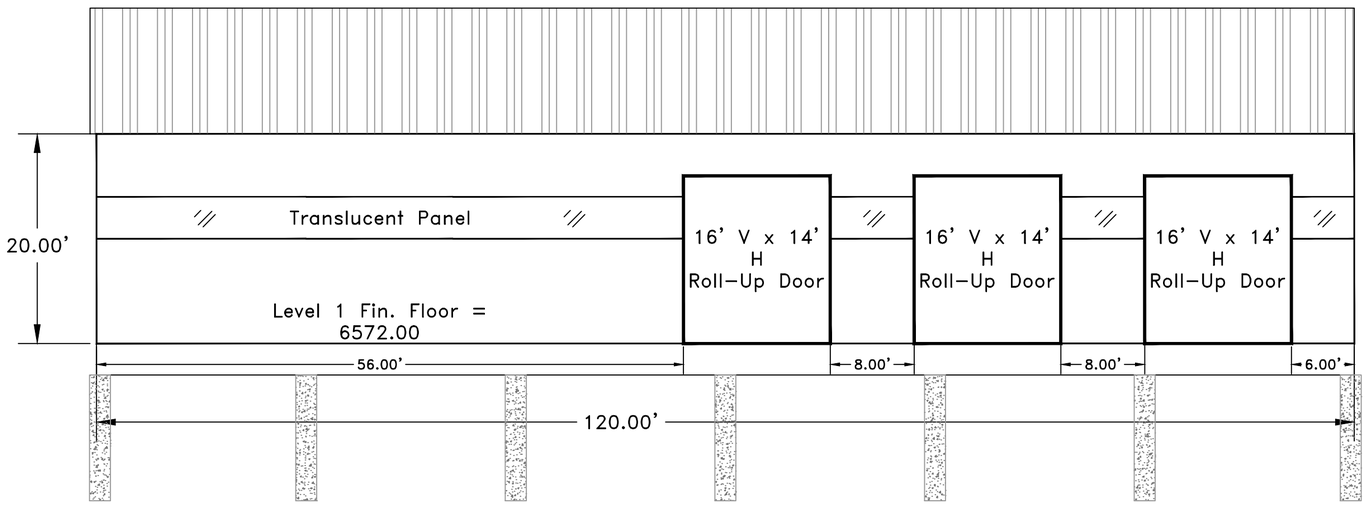

East Elevation

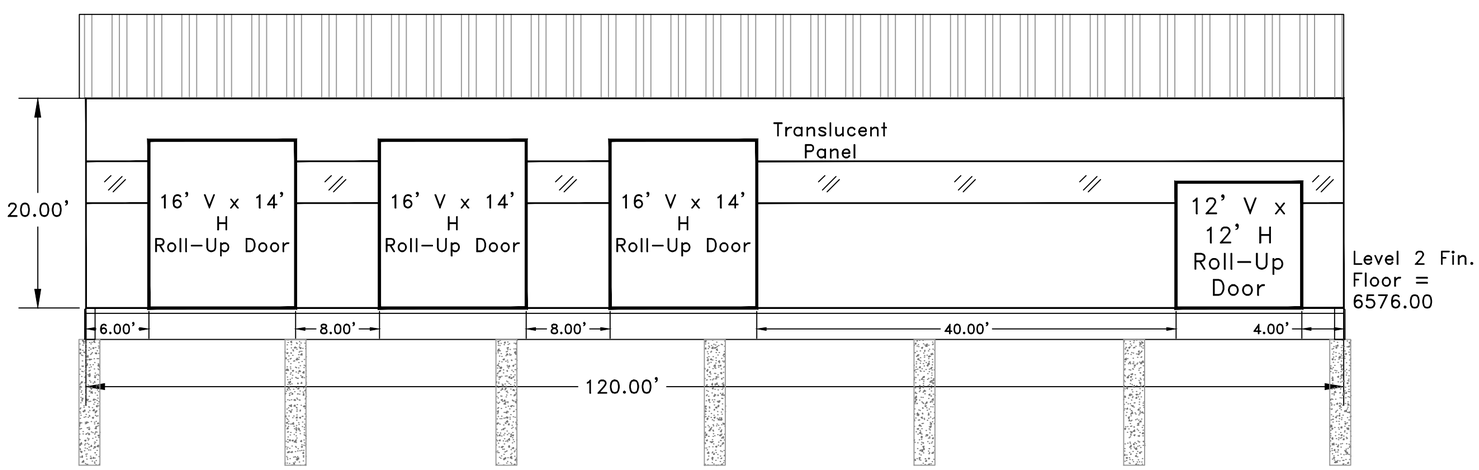

West Elevation

REV NO	REV DATE	DESCRIPTION
1	9/28/19	Review & Update

COR PROJECT NUMBER: 00011
DRAWN BY: K. S. Berry
PROJECT ENGINEER: K. S. Berry
SCALE: 1 Inch = 10 Feet
DATE OF DRAWING: January 8, 2018

Project: City of Raton
Solid Waste Convience Center Project

Prepared For: The City of Raton
224 Savage Avenue
Post Office Box 910
Raton, New Mexico 87740

Title: Proposed Building Elevations

Sheet C-5

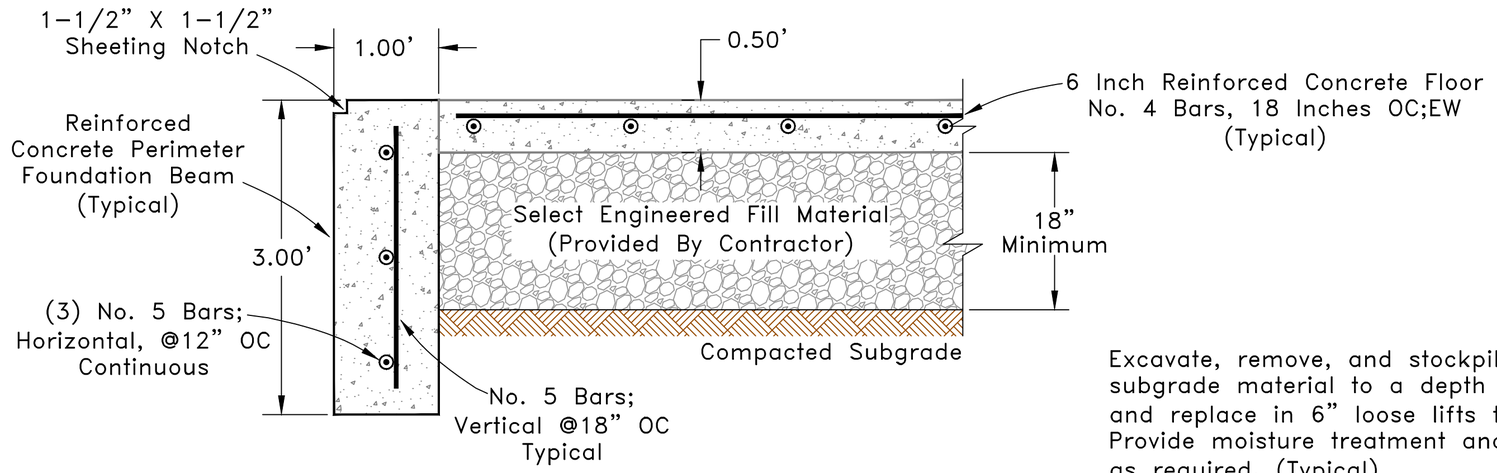

Excavate, remove, and stockpile, in-situ subgrade material to a depth of 48 inches and replace in 6" loose lifts to grade. Provide moisture treatment and compaction as required. (Typical)

Where Required by Grading Plan, Contractor Shall Provide Additional Thickness of Select Engineered Fill at All Locations; Meeting Specifications.

C-6 / 1 Perimeter Foundation Beam; Floor Section

Scale : 1" = 1'

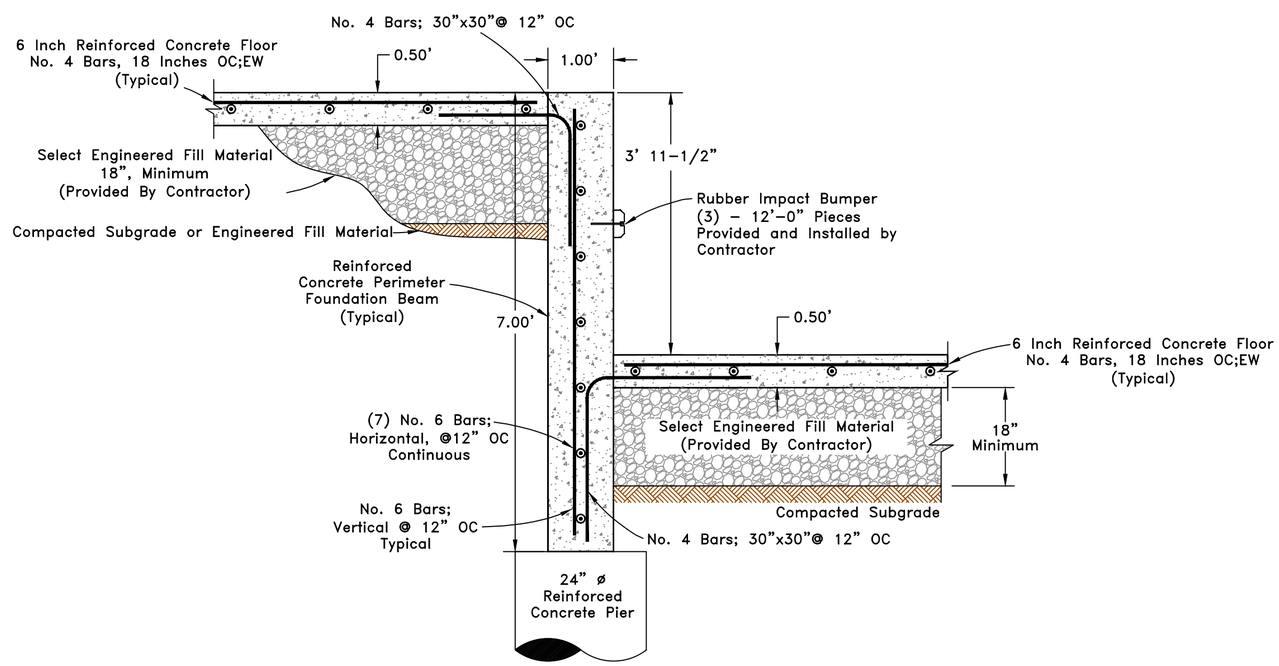

C-6 / 2 Perimeter Foundation Beam; Floor Section

Scale : 1" = 1'

REV NO	REV DATE	DESCRIPTION
1	9/28/19	Review & Update

COR PROJECT NUMBER: 00011
DRAWN BY: K. S. Berry
PROJECT ENGINEER: K. S. Berry
SCALE: As Shown
DATE OF DRAWING: January 8, 2018

Project: City of Raton Solid Waste Convience Center Project

Prepared For: The City of Raton
224 Savage Avenue
Post Office Box 910
Raton, New Mexico 87740

Title: Foundation Construction Details

Sheet C-6

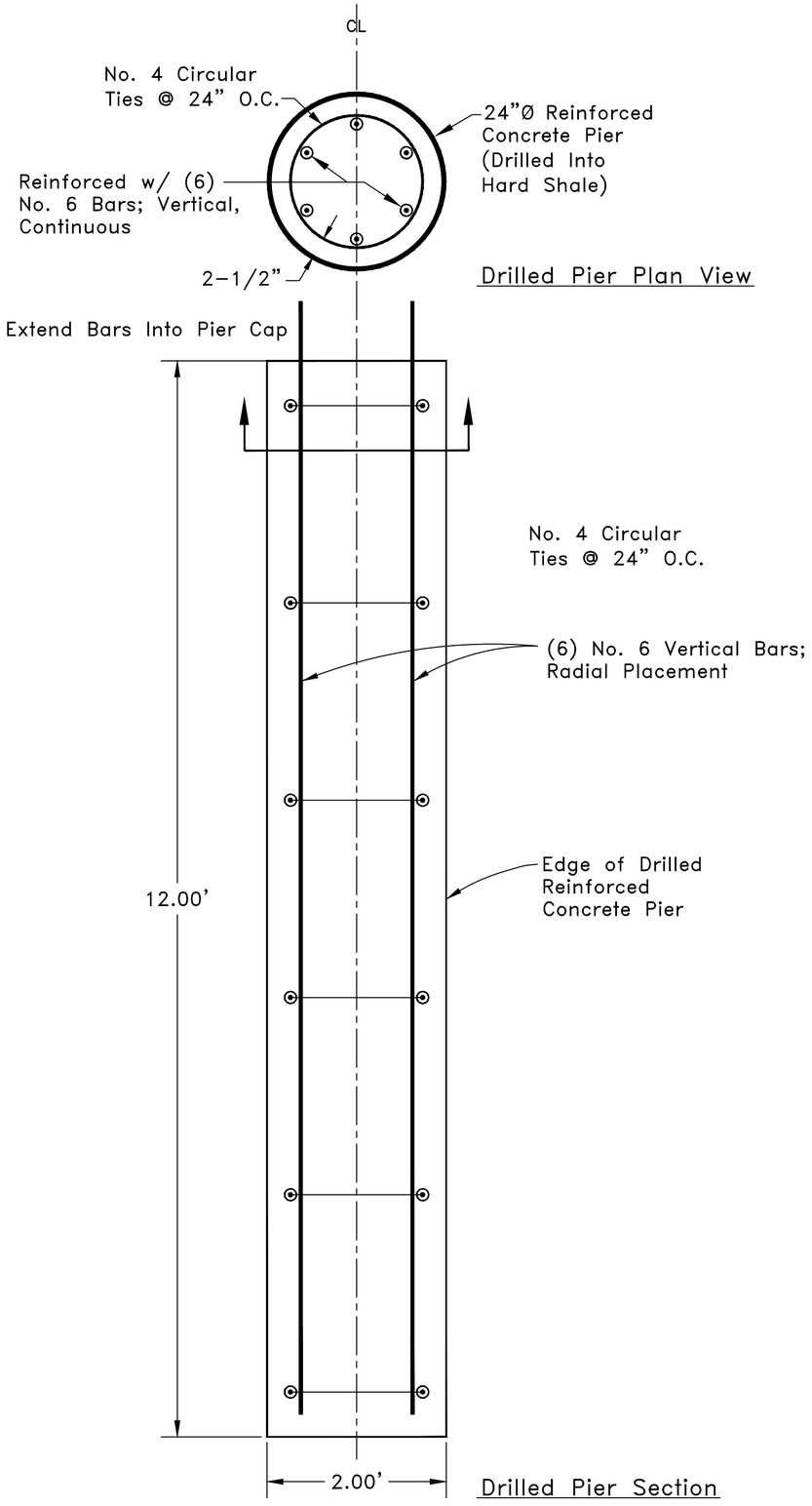

C-7 / 1 Drilled Concrete Pier Detail
Not to Scale

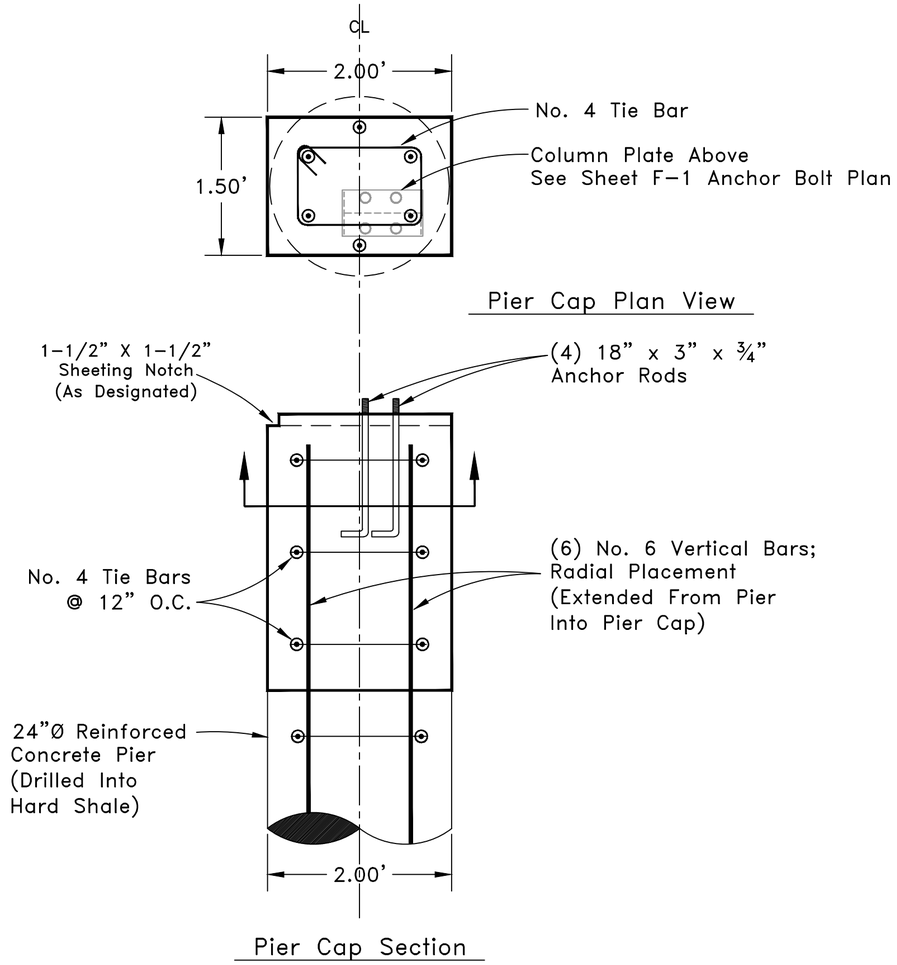

C-7 / 2 Type "A" Pier Cap Detail
Not to Scale

REV NO	REV DATE	DESCRIPTION
1	9/28/19	Review & Update

COR PROJECT NUMBER: 00011
DRAWN BY: K. S. Berry
PROJECT ENGINEER: K. S. Berry
SCALE: As Shown
DATE OF DRAWING: January 8, 2018

Project: City of Raton
Solid Waste Convience Center Project

Prepared For: The City of Raton
224 Savage Avenue
Post Office Box 910
Raton, New Mexico 87740

Title: Foundation Construction Details

Sheet C-7

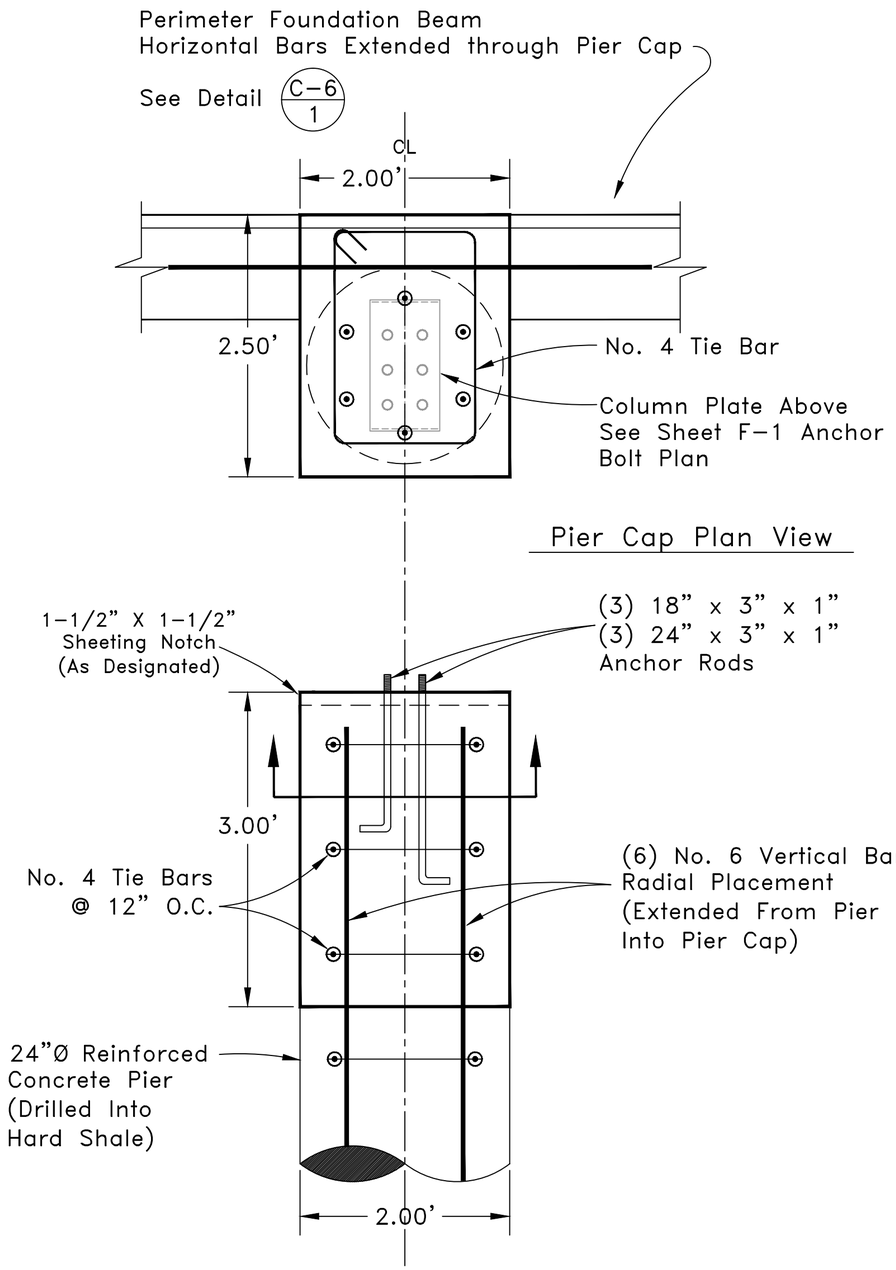

C-8 / 1 Type "B" Pier Cap Detail

1 Inch = 1 Foot

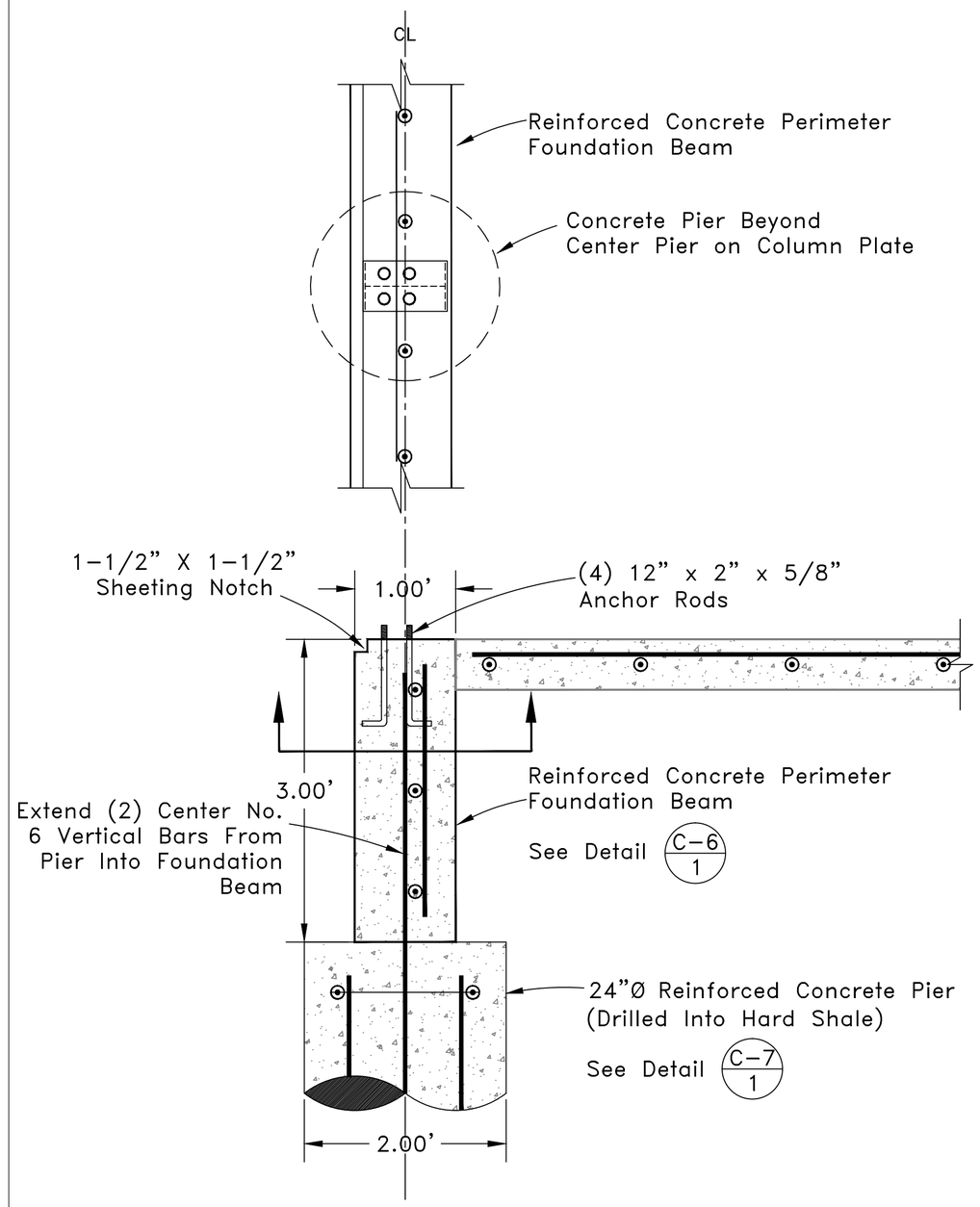

C-8 / 2 Foundation Beam – Pier Detail

Scale : 1" = 1'

REV NO	REV DATE	DESCRIPTION
1	9/28/19	Review & Update

COR PROJECT NUMBER: 00011
DRAWN BY: K. S. Berry
PROJECT ENGINEER: K. S. Berry
SCALE: As Shown
DATE OF DRAWING: January 8, 2018

Project: City of Raton Solid Waste Convience Center Project

Prepared For: The City of Raton
224 Savage Avenue
Post Office Box 910
Raton, New Mexico 87740

Title: Foundation Construction Details

Sheet C-8

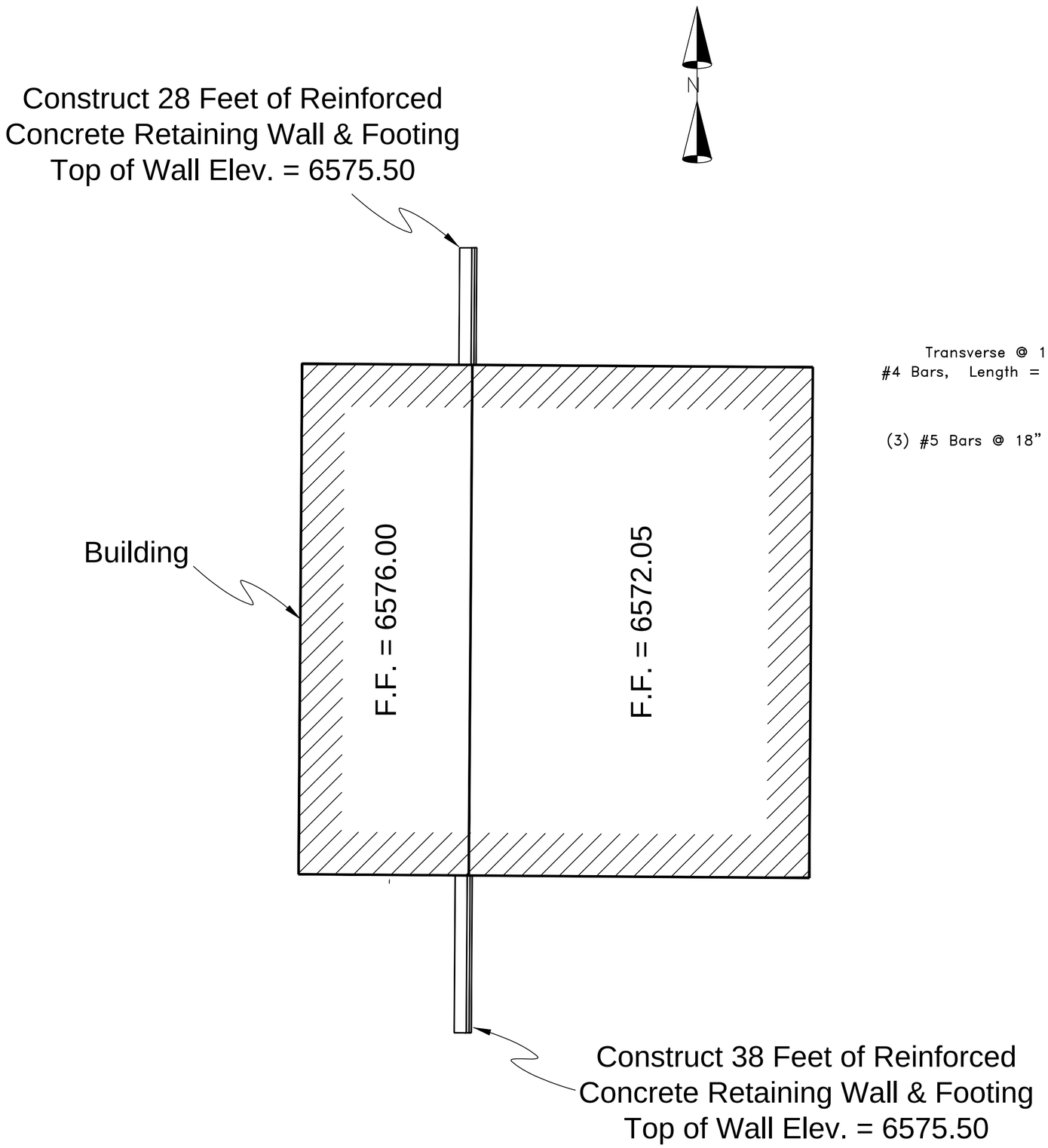

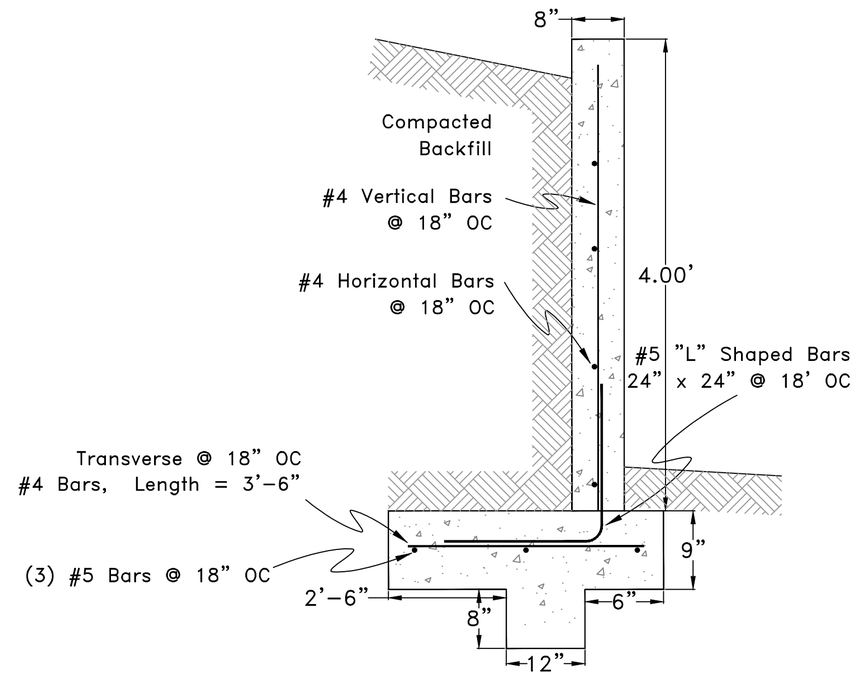

Retaining Wall Section
Scale: 3/4" = 1'-0"

REV NO	REV DATE	DESCRIPTION

COR PROJECT NUMBER: 00011
DRAWN BY: K. S. Berry
PROJECT ENGINEER: K. S. Berry
SCALE: Not to Scale
DATE OF DRAWING: October 2, 2019

Project: City of Raton
Solid Waste Convience Center Project

Prepared For: The City of Raton
224 Savage Avenue
Post Office Box 910
Raton, New Mexico 87740

Title: Retaining Wall Plan and Construction Detail

Sheet C-9

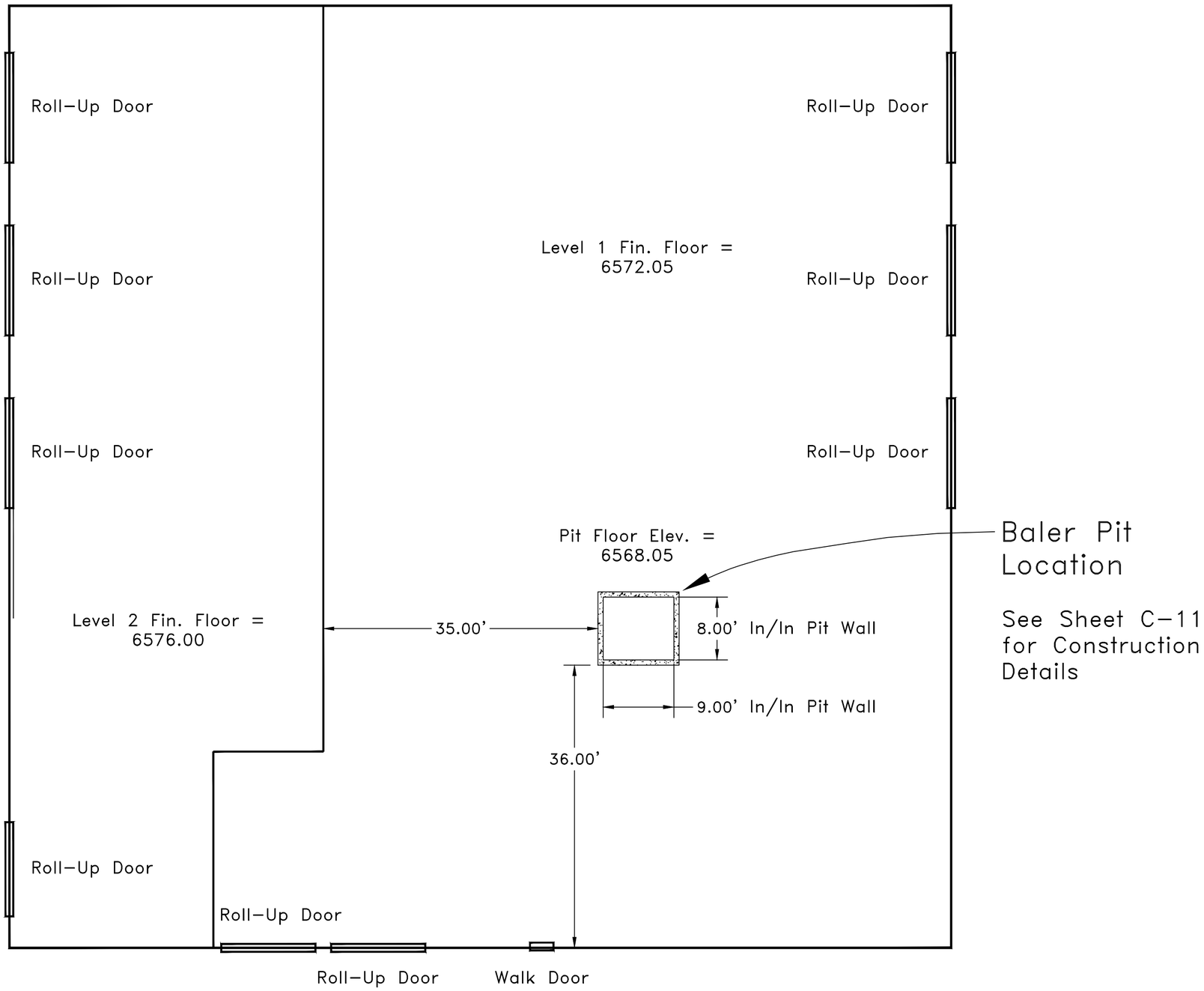

REV NO	REV DATE	DESCRIPTION

COR PROJECT NUMBER: 00011
DRAWN BY: K. S. Berry
PROJECT ENGINEER: K. S. Berry
SCALE: 1 Inch = 10 Feet
DATE OF DRAWING: October 4, 2019

Project: City of Raton
Solid Waste Convience Center Project

Prepared For: The City of Raton
224 Savage Avenue
Post Office Box 910
Raton, New Mexico 87740

Title: Baler Pit Plan View

Sheet C-10

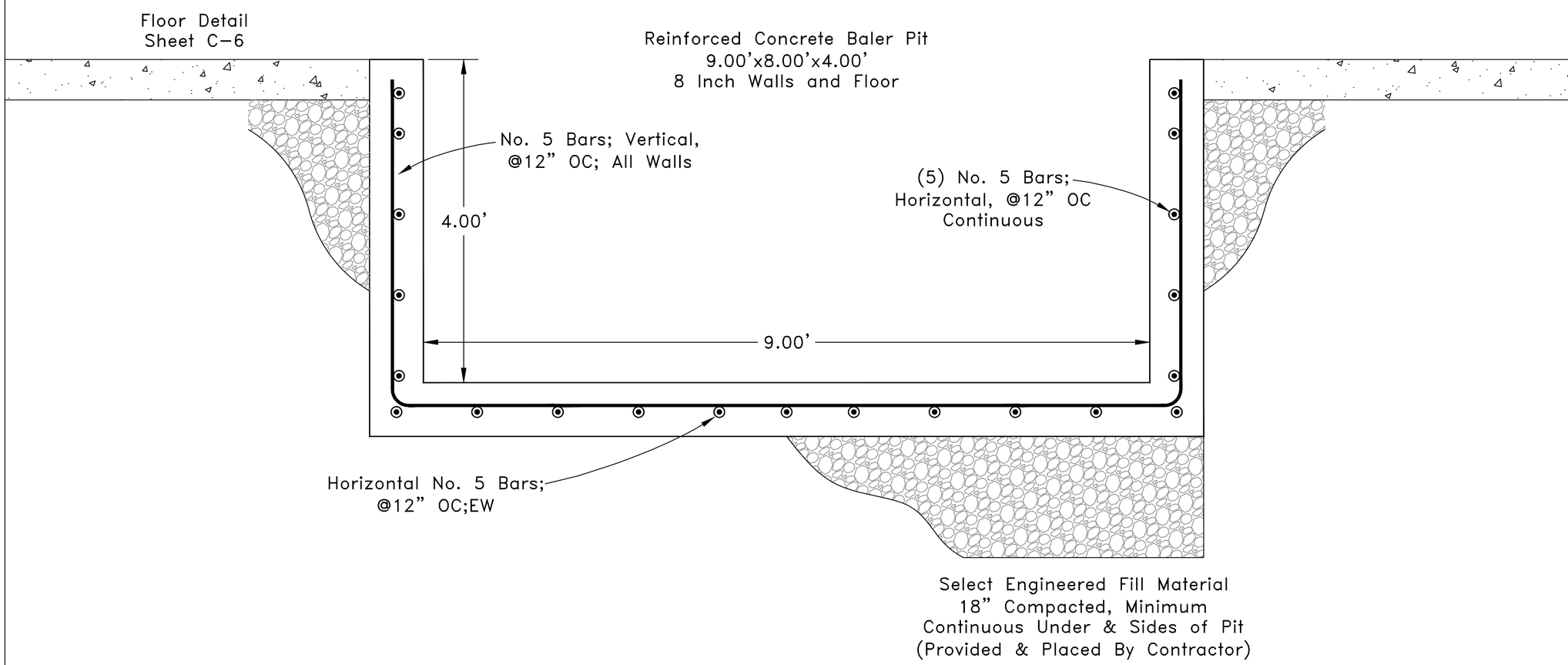

REV NO	REV DATE	DESCRIPTION

COR PROJECT NUMBER: 00011
DRAWN BY: K. S. Berry
PROJECT ENGINEER: K. S. Berry
SCALE: 1 Inch = 1 Feet
DATE OF DRAWING: October 4, 2019

Project: City of Raton
Solid Waste Convience Center Project

Prepared For: The City of Raton
224 Savage Avenue
Post Office Box 910
Raton, New Mexico 87740

Title: Baler Pit Section Detail

Sheet
C-11

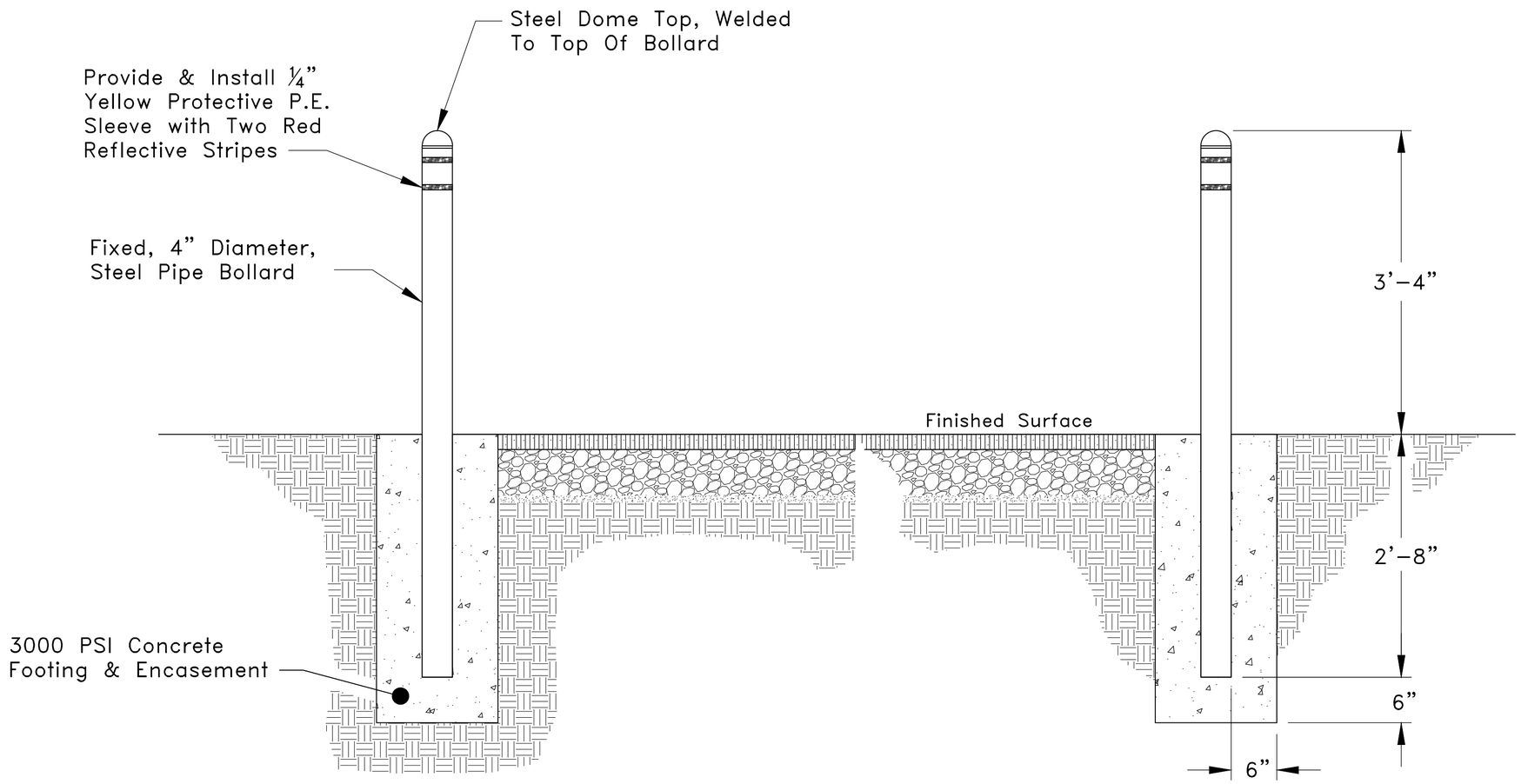

Contractor Shall Provide And Install Two Bollards at Each Roll-Up Door Location
All Metal Shall Be Galvanized Paint, One Coat Metal Primer And Two Coats Metal Enamel.

Standard Bollard Section Detail

REV NO	REV DATE	DESCRIPTION
1	3/14/20	Update & Revise

COR PROJECT NUMBER: 00011
DRAWN BY: K. S. Berry
PROJECT ENGINEER: K. S. Berry
SCALE: 1 Inch = 2 Feet
DATE OF DRAWING: October 4, 2019

Project: City of Raton
Solid Waste Convience Center Project

Prepared For: The City of Raton
224 Savage Avenue
Post Office Box 910
Raton, New Mexico 87740

Title: Bollard Detail

Sheet C-12

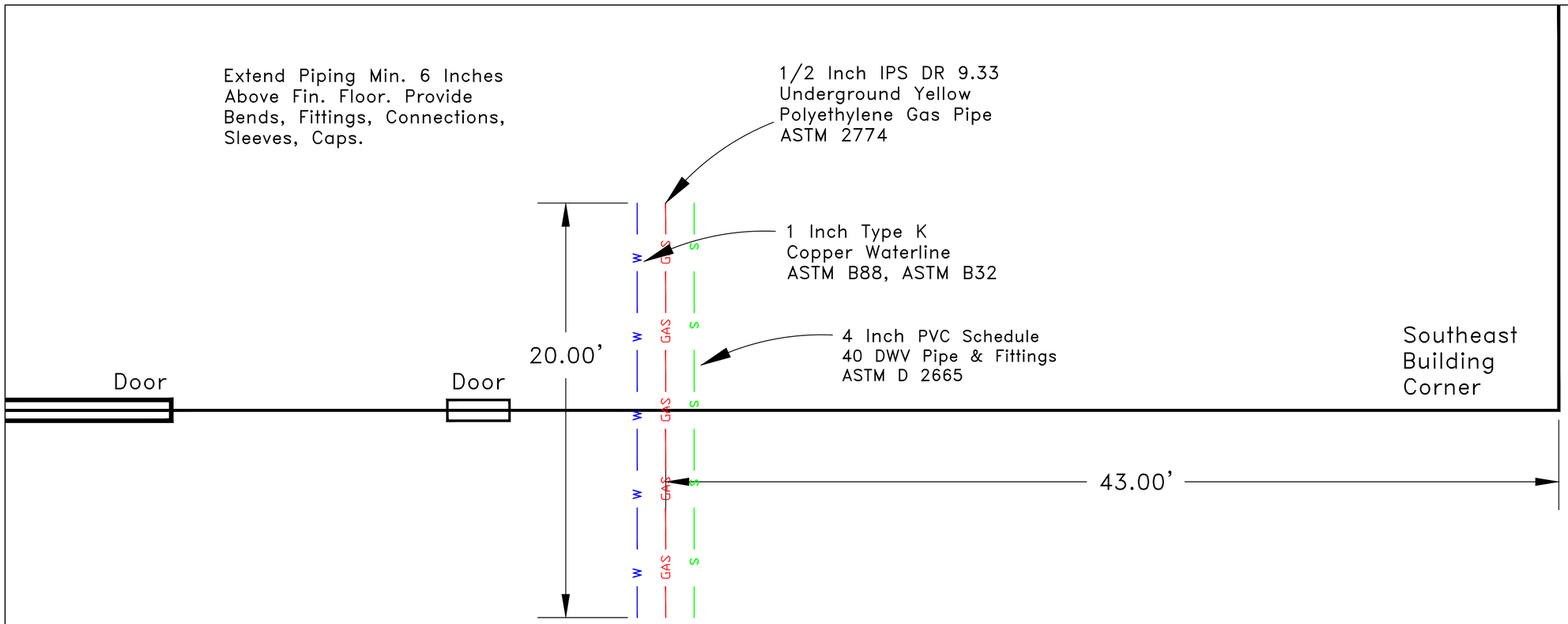

C-13 / 1 Utility Service Lines Location Detail

Scale : 1" = 4'

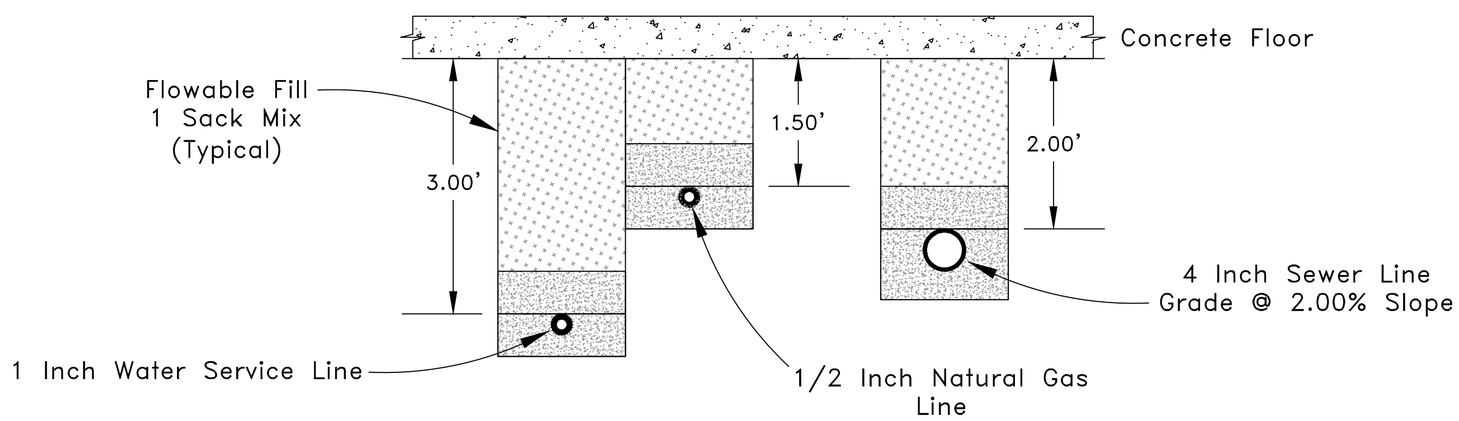

6 Inches Select Bedding Above and Below Pipe Lines; Consolidated (Typical)

C-13 / 2 Utility Service Lines Installation Detail
Trench Detail Under Concrete Floor

Scale : 1" = 1'

REV NO	REV DATE	DESCRIPTION

COR PROJECT NUMBER: 00011
DRAWN BY: K. S. Berry
PROJECT ENGINEER: K. S. Berry
SCALE: As Shown
DATE OF DRAWING: February 17, 2020

Project: City of Raton Solid Waste Convience Center Project

Prepared For: The City of Raton
224 Savage Avenue
Post Office Box 910
Raton, New Mexico 87740

Title: Utility Installation Details

Sheet C-13

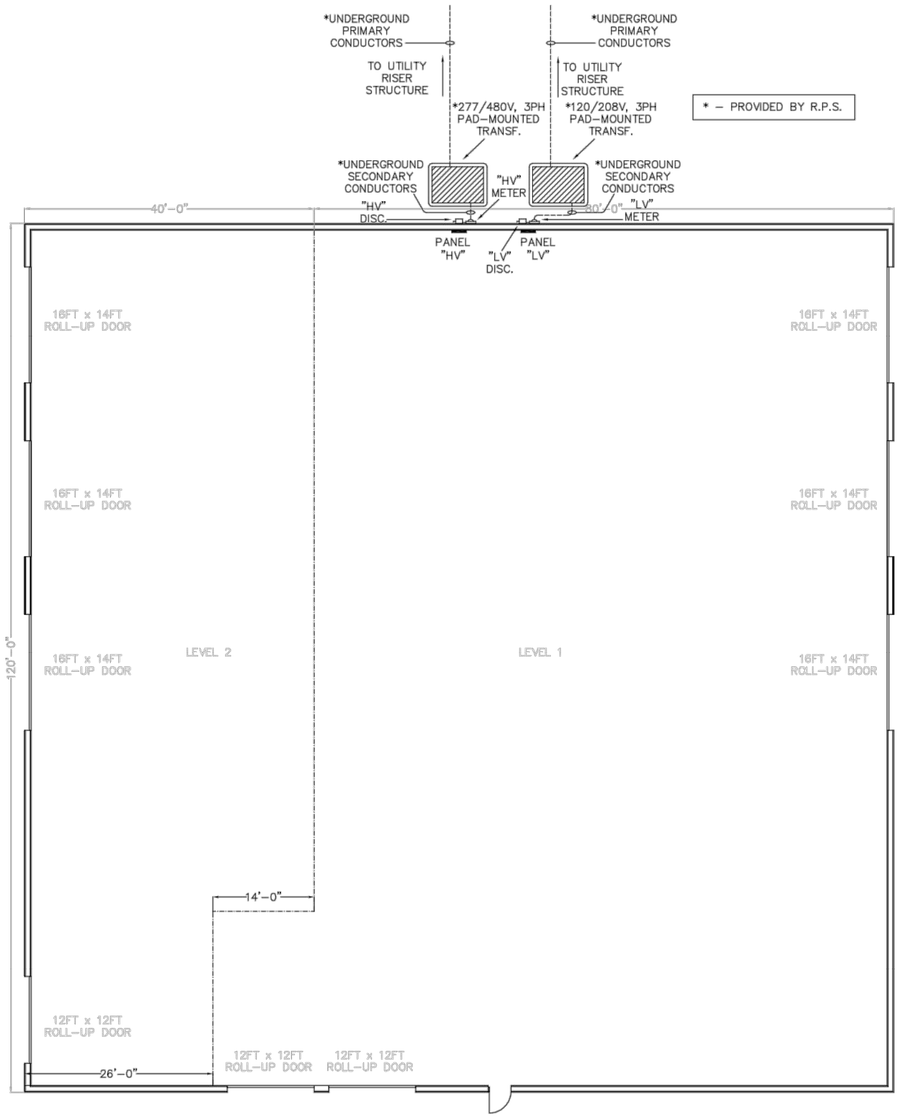

ELECTRICAL SITE PLAN
SCALE: 1/8"=1'–0"

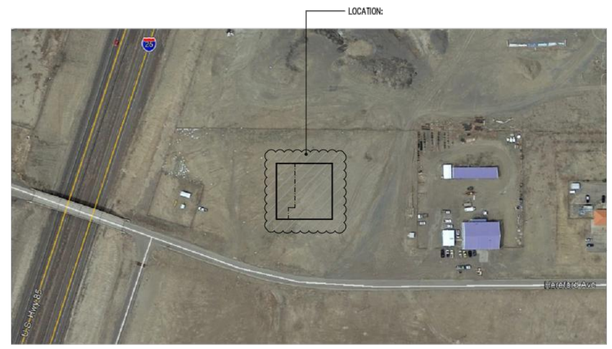

PROJECT LOCATION:
SCALE: NONE

GENERAL NOTES

A IT SHALL BE THE RESPONSIBILITY OF THE CONTRACTOR TO REVIEW THE CONSTRUCTION DOCUMENTS, PLANS AND SITE FOR ANY DISCREPANCIES OR OMISSIONS AND RESOLVE ANY CONFLICTS PRIOR TO CONSTRUCTION AND PURCHASE OF MATERIALS.

B FIELD-ROUTE ALL CONDUCTORS USING THE SHORTEST DISTANCE POSSIBLE TO MINIMIZE VOLTAGE DROP ON CIRCUIT.

C ENSURE COMPLIANCE WITH ALL LOCAL, STATE AND FEDERAL CODES, RULES AND REGULATIONS.

D COORDINATE AND COOPERATE WITH ALL TRADES ON THE PROJECT.

E TEST ALL WIRING FOR CONTINUITY AND GROUNDS BEFORE CONNECTING ANY FIXTURES OR DEVICES. PERFORM INSULATION RESISTANCE TESTS ON ALL WIRING #8 AWG OR LARGER TO ENSURE THAT ALL PORTIONS ARE FREE FROM SHORT CIRCUITS AND GROUNDS.

F PROVIDE GROUNDING IN ACCORDANCE WITH THE NEC FOR THE ELECTRICAL SYSTEM INCLUDING EQUIPMENT FRAMES, CONDUITS, SWITCHES, CONTROLLERS, WIREWAYS, NEUTRAL CONDUCTORS AND OTHER EQUIPMENT. PROVIDE A GROUNDING CONDUCTOR IN ALL POWER CIRCUITS.

G LABEL ALL JUNCTION BOXES WITH PERMANENT MARKER IDENTIFYING CIRCUIT NUMBER AND PANELBOARD OF CIRCUITS CONTAINED WITHIN.

H WHERE FUSE PROTECTION IS SPECIFICALLY REQUIRED BY THE EQUIPMENT MANUFACTURER, PROVIDE FUSE SWITCHES IN LIEU OF NON-FUSE SWITCHES OR IN LIEU OF ENCLOSED CIRCUIT BREAKERS OR OTHER DEVICES INDICATED.

I SECURE APPROVED SHOP DRAWINGS SHOWING WIRING DIAGRAMS, ROUGH-IN AND HOOK-UP DETAILS FROM OTHER INVOLVED CONTRACTORS FOR EQUIPMENT WHICH MUST BE CONNECTED ELECTRICALLY.

J MECHANICAL EQUIPMENT WILL BE FURNISHED AND INSTALLED BY THE MECHANICAL CONTRACTOR. THE LOCATIONS SHOWN ON THE ELECTRICAL DRAWINGS ARE APPROXIMATE. COORDINATE WITH THE MECHANICAL CONTRACTOR TO DETERMINE THE EXACT LOCATION OF EACH PIECE OF EQUIPMENT AND DETERMINE THE EXACT ROUGH-IN AND CONNECTION REQUIREMENTS.

K WHERE AN INDIVIDUALLY MOUNTED SAFETY SWITCH, STARTER OR CIRCUIT BREAKER IS SHOWN ADJACENT TO ITS RESPECTIVE LOAD AND NOT MOUNTED ON A WALL, PROVIDE ALL SUPPORTS, BRACKETS, ANCHORING, ETC. NECESSARY TO PROPERLY SUPPORT THE DEVICE.

L COORDINATE LIGHTING FIXTURES WITH GRILLES, DIFFUSERS, SPRINKLER HEADS AND ACCESS PANELS, ETC.

M COORDINATE LOCATIONS OF SWITCHES, RECEPTACLES AND TELE/DATA OUTLETS WITH OTHER WALL MOUNTED DEVICES SUCH AS THERMOSTATS AND CONTROL STATIONS. DO NOT MOUNT WIRING DEVICES BACK TO BACK. PROVIDE MINIMUM OF ONE STUD SEPARATION.

N RECEPTACLES FOR ELECTRIC WATER COOLERS (EWC) SHALL BE INSTALLED OUT OF VIEW AND BEHIND THE EWC ENCLOSURE. VERIFY THE MOUNTING HEIGHT WITH THE EQUIPMENT SUPPLIER PRIOR TO ROUGH-IN.

O THOROUGHLY REVIEW AND COORDINATE ALL CASEWORK, DOOR SWINGS AND CABINET DRAWINGS AND ARCHITECTURAL ELEVATIONS WITH DEVICE LOCATIONS PRIOR TO ROUGH-IN OF OUTLET BOXES.

P WHERE MULTIPLE GANG BOX HAS CIRCUITS OF DIFFERENT VOLTAGES OR SYSTEMS WHICH ARE REQUIRED TO BE SEPARATED, PROVIDE THE CODE-REQUIRED SEPARATION USING A FULL HEIGHT AND DEPTH BARRIER PLATE.

Q FOR ANY WALL OR FLOOR PENETRATIONS THROUGH FIRE RATED STRUCTURES, PROVIDE FIRE-PROOFING TO SEAL ALL THE PENETRATIONS AFTER THE CONDUIT HAS BEEN INSTALLED. FIRE PROOFING FOR PENETRATIONS SHALL BE U.L. APPROVED PER THE PENETRATION MADE IN ORDER TO MAINTAIN FIRE RATED INTEGRITY OF THE STRUCTURE.

R LOCATION OF EQUIPMENT AND DEVICES SHOWN ON THE PLANS ARE APPROXIMATE AND SHALL BE FIELD-VERIFIED PRIOR TO ROUGH-IN.

S THE CONDUIT RUNS AS SHOWN ON THE PLANS INDICATE APPROXIMATE ROUTING. EXACT LOCATION OF CONDUIT RUNS SHALL BE AS FIELD CONDITIONS DICTATE.

T CONTRACTOR SHALL MAKE AS-BUILT DRAWINGS DOCUMENTING ANY AND ALL WIRING AND EQUIPMENT CONDITIONS AND CHANGES WHILE COMPLETING THIS PROJECT. PROVIDE UPDATED, TYPEWRITTEN DIRECTORIES FOR ALL PANELS. PROVIDE PANEL LABELS AS NOTED IN ELECTRICAL SPECIFICATIONS.

U CONTRACTOR SHALL PROVIDE AND INSTALL TIE HANDLES ON ALL CIRCUIT BREAKERS SHARING A NEUTRAL CONDUCTOR PER THE N.E.C.

MISC. NOTES:

#	MISC. NOTES:
1	THE NEXT PHASE OF THIS PROJECT WILL INCLUDE THE CONSTRUCTION OF AN INTERIOR OFFICE AND RESTROOMS. THESE DETAILS HAVE NOT BEEN DEVELOPED.
2	RATON PUBLIC SERVICE (RPS) SHALL PROVIDE TWO PAD-MOUNTED TRANSFORMERS FOR EACH VOLTAGE BEING USED IN THIS PROJECT. REFERENCE NEC 230.2(D).
3	RPS SHALL PROVIDE TRENCHING FROM THE PADMOUNT TO THE BUILDING WHERE BOTH SETS OF SECONDARY CONDUCTORS SHALL BE RUN (ALSO PROVIDED BY RPS) TO THE METER LOCATIONS. METERING SHALL BE PROVIDED BY RPS.
4	THE ELECTRICAL CONTRACTOR'S SCOPE OF WORK BEGINS AT EACH SERVICE DISCONNECT ON THE NORTH BUILDING EXTERIOR. THE ELECTRICAL CONTRACTOR IS RESPONSIBLE FOR COORDINATING WITH RPS TO ENSURE THE SCOPE OF WORK BY EACH PARTY IS UNDERSTOOD. THE ELECTRICAL CONTRACTOR SHALL PROVIDE THE CONDUIT AND WIRING BETWEEN THE UTILITY METERING AND EACH FUSED DISCONNECT.

ELECTRICAL SPECIFICATIONS:

1 LOCATION OF EQUIPMENT, CONDUIT & DEVICES SHOWN ON THE DRAWINGS ARE APPROXIMATE AND SHALL BE COORDINATED WITH THE MECHANICAL DRAWINGS AND FIELD CONDITIONS PRIOR TO ROUGH-IN.

2 EXACT LOCATIONS AND ROUTING OF CONDUIT SHALL BE DETERMINED BY THE ELECTRICAL CONTRACTOR BASED ON EXISTING CONDITIONS.

3 PROVIDE PULL BOXES AND JUNCTION BOXES WHERE INDICATED OR REQUIRED. INSTALL PER NEC 314.

4 WIRING METHODS SHALL BE AC OR MC CABLE, EMT, INTERMEDIATE AND RIGID METALLIC CONDUIT. EMT, INTERMEDIATE AND RIGID CONDUIT SHALL HAVE BENDS MADE IN ACCORDANCE WITH THE NEC. NO RIGHT ANGLE DEVICES OTHER THAN STANDARD CONDUIT ELBOWS WITH 12" MINIMUM INSIDE SWEEPS FOR ALL CONDUITS 2" AND LARGER.

5 CABLE AND CONDUIT FITTINGS SHALL BE DIE-CAST, MALLEABLE IRON OR STEEL. SET SCREW FITTINGS SHALL BE USED ONLY IN AREAS INTERIOR TO THE BUILDING. COMPRESSION TYPE OR WATER TIGHT FITTINGS SHALL BE USED IN THE EXTERIOR.

6 ALL WIRE SHALL BE TYPE THHN/THWN, SOLID, ANNEALED COPPER. MINIMUM SIZE #14 FOR CONTROLS AND #12 FOR LIGHTING AND POWER CIRCUIT UP TO SIZE #10 AWG (#8 AND LARGER SHALL BE CONCENTRIC STRANDED) 75° C (167° F) CONDUCTIVITY.

7 ALL NEW MATERIAL SHALL HAVE A U.L. LABEL OR AN NRTL APPROVED EQUIPMENT LABEL.

8 THE CONTRACTOR SHALL REPAIR ALL DAMAGE TO WALLS, CEILING, ETC. IN A PROFESSIONAL MANNER. SEAL ALL WALL OR CEILING OPENINGS WITH MATCHING MATERIAL. PROVIDE PITCH PANS WHERE CONDUITS PENETRATE EXISTING ROOF FOR ARCHITECTURAL APPROVAL.

9 CONDUIT ROUGH-IN SHALL BE COORDINATED WITH THE MECHANICAL TO AVOID LOCATION CONFLICTS. VERIFY WITH MECHANICAL AND COMPLY AS REQUIRED.

10 ALL PANEL DIRECTORIES SHALL BE TYPEWRITTEN NOT HAND WRITTEN. PANEL DIRECTORIES SHALL INCLUDE SPECIFIC LOAD INFORMATION PER NEC 110.22.

11 ALL WIRING IN FINISHED AREAS SHALL BE ROUTED IN CONDUIT AND SHALL BE CONCEALED IN WALLS OR ABOVE CEILINGS WHENEVER POSSIBLE UNLESS OTHERWISE NOTED.

12 INSTALL AN EQUIPMENT GROUNDING CONDUCTOR IN ALL FEEDER CIRCUITS. THE EQUIPMENT GROUNDING CONDUCTORS SHALL BE BONDED AT ALL PULLBOXES, DISCONNECT SWITCHES, PANEL BOARDS, ETC. ARMORED AND METAL CLAD CABELING SHALL HAVE AN INTERAL BONDING STRIP OR PROVIDE AN ADEQUATE PATH FOR EQUIPMENT GROUNDING PER NEC 250.

13 ALL DISCONNECT SWITCHES, STARTERS AND OTHER CONTROLLING DEVICES SHALL BE PROVIDED WITH ENGRAVED LAMICOID NAMEPLATES INDICATING EQUIPMENT CONTROLLED, BRANCH CIRCUIT INSTALLED ON AND PANEL LOCATION FED FROM (NO EXCEPTIONS).

14 ALL ELECTRICAL DEVICES AND INSTALLATION OF THE DEVICES SHALL COMPLY WITH ADA AS ADOPTED BY THE STATE OF NEW MEXICO.

15 ALL CIRCUITS SHALL CONTAIN A DEDICATED NEUTRAL. REFER TO NEC 210.4 FOR MULTIWIRE BRANCH CIRCUIT REQUIREMENTS.

16 BRANCH CIRCUIT AND FEEDER DESIGN SHALL ALLOW FOR NO MORE THAN A 5% VOLTAGE DROP AS PER NMAC 14.10.4.11F(3).

17 ALL NEW INSTALLATIONS SHALL HAVE A CONCRETE ENCASED GROUNDING ELECTRODE OTHERWISE THE ELECTRICAL CONTRACTOR SHALL PROVIDE A UFER GROUND AS PER NEC 250.52(A)(3).

18 ELECTRICAL DEVICE INSTALLATION SHALL COMPLY WITH ACCESSSIBILITY CODES ADOPTED BY NEW MEXICO. MOUNT APPLICABLE SWITCHES, RECEPTACLES & ENVIRONMENTAL CONTROLS SO THAT THEY ARE MOUNTED WITH THE TOP OF THE DEVICE NO HIGHER THAN 48 INCHES ABOVE FINISHED FLOORS AND THE BOTTOM OF THE DEVICE NO LOWER THAN 14 INCHES ABOVE FINISHED FLOORS.

19 THE DRAWINGS SHOW ONLY THE GENERAL RUN OF RACEWAYS AND APPROXIMATE LOCATION OF OUTLETS. THESE SHALL BE FIELD COORDINATED AND INSTALLED AS PER AL NEC AND NEW MEXICO STATE BUILDING CODE REQUIREMENTS.

20 ALL FINAL CONNECTIONS TO MECHANICAL EQUIPMENT SHALL BE MADE USING FLEXIBLE METALLIC CONDUIT. CONNECTIONS TO MECHANICAL EQUIPMENT ON THE EXTERIOR OF THE BUILDING SHALL USE WEATHERPROOF, FLEXIBLE CONDUIT.

21 ALL NEW LIGHTING SHALL COMPLY WITH THE MOST CURRENT NEW MEXICO ENERGY CONSERVATION CODE.

22 ELECTRICAL DEVICE INSTALLATION SHALL COMPLY WITH THE ACCESSIBILITY CODES ADOPTED FOR NEW MEXICO. NMAC 14.10.4.13.

23 EXTERIOR AND PARKING LOT LIGHTING SHALL UTILIZE PHOTOCELL "ON" AND TIME CLOCK "OFF" CONTROL.

24 EXTERIOR LIGHTING SHALL COMPLY WITH THE NEW MEXICO NIGHT SKY PROTECTION ACT OR LOCAL LIGHTING ORDINANCE; WHICHEVER IS STRICTER. NMAC 14.10.4.14.

25 RACEWAYS AND CABLES INSTALLED ON ROOFTOPS ARE SUBJECT TO CORRECTION FACTORS IN TABLE 310.15(B)(2)(C) BASED ON DISTANCE ABOVE THE ROOF SURFACE.

26 CONDUCTORS AND CABLES INSTALLED IN ABOVEGRADE RACEWAYS LOCATED IN WET LOCATIONS ARE REQUIRED TO BE SUITABLE FOR USE IN WET LOCATIONS IN ACCORDANCE WITH NEC 310.8(C).

27 THE INTERIOR OF ENCLOSURES AND RACEWAYS INSTALLED UNDERGROUND ARE CONSIDERED WET LOCATIONS. NEC 300.5(B).

28 INDUSTRIAL CONTROL PANELS WHICH CONTAIN ONLY CONTROL CIRCUITS AND DEVICES DO NOT REQUIRE A SHORT-CIRCUIT CURRENT RATING ACCORDING TO NEC 409.110(3).

29 RECEPTACLES FOR VENDING MACHINE USE MUST COMPLY WITH NEC 422.51 GROUND-FAULT CIRCUIT-INTERRUPTER PROTECTION REQUIREMENTS.

30 ELECTRIC DRINKING WATER FOUNTAINS MUST BE PROTECTED BY GROUND-FAULT CIRCUIT INTERRUPTERS. NEC 422.52.

31 SERVICE MASTS MUST BE A MINIMUM OF TWO-INCH RIGID METAL CONDUIT, INTERMEDIATE METAL CONDUIT OR COMPLY WITH LOCAL UTILITY REQUIREMENTS AS PER NMAC 14.10.4.11.F(2) WHEN USED FOR THE SUPPORT OF SERVICE DROP CONDUCTORS.

32 AN EQUIPMENT GROUNDING CONDUCTOR SHALL BE INSTALLED IN ALL BRANCH CIRCUIT AND FEEDER RACEWAYS ON OR ABOVE A ROOF. NMAC 14.10.4.11.G(7).

33 ALUMINUM CONDUCTORS USED IN GENERAL WIRING APPLICATIONS SHALL BE OF THE AA-8000 SERIES OR EQUIVALENT AND SHALL BE LIMITED TO SIZE 8 AWG OR LARGER. NMAC 14.10.4.11.I.

34 WHERE AN EVAPORATIVE COOLER IS INSTALLED, THE RACEWAY SHALL CONTAIN AN EQUIPMENT-GROUNDING CONDUCTOR FROM THE CONTROL POINT OUTLET BOX TO THE JUNCTION BOX AT THE UNIT. NMAC 14.10.4.11.P.

35 ELECTRICAL EQUIPMENT SHALL BE FIELD MARKED TO WARN QUALIFIED PERSONS OF POTENTIAL ELECTRIC ARC FLASH HAZARDS. NEC 110.16, NFPA 70E ARTICLE 130.

ANTONIO R. SANCHEZ JR. NEW MEXICO 16483 LICENSED PROFESSIONAL ENGINEER
03/21/2020

JOB NO:
DATE: 03/21/2020
REV A

Sheet Title: SITE PLAN, PROJECT LOCATION, ELECTRICAL SPECS & GENERAL NOTES
Drawn By: AS
Checked By: Antonio R. Sanchez, Jr., PE

Eastern New Mexico Engineering, Inc.
Electrical Consulting Engineers
"Helping Serve Your Electrical Needs"
1104 Libra Drive, Portales, NM 88130
Phone: (575) 769-0085 FAX: (575) 226-0416
Email: enmeinc@yahoo.com
website: www.enmeinc.com
ENME

Project Name
CITY OF RATON
SOLID WASTE CONVENIENCE CENTER PROJECT
RATON, NEW MEXICO 87740

SHEET NO.
E–101

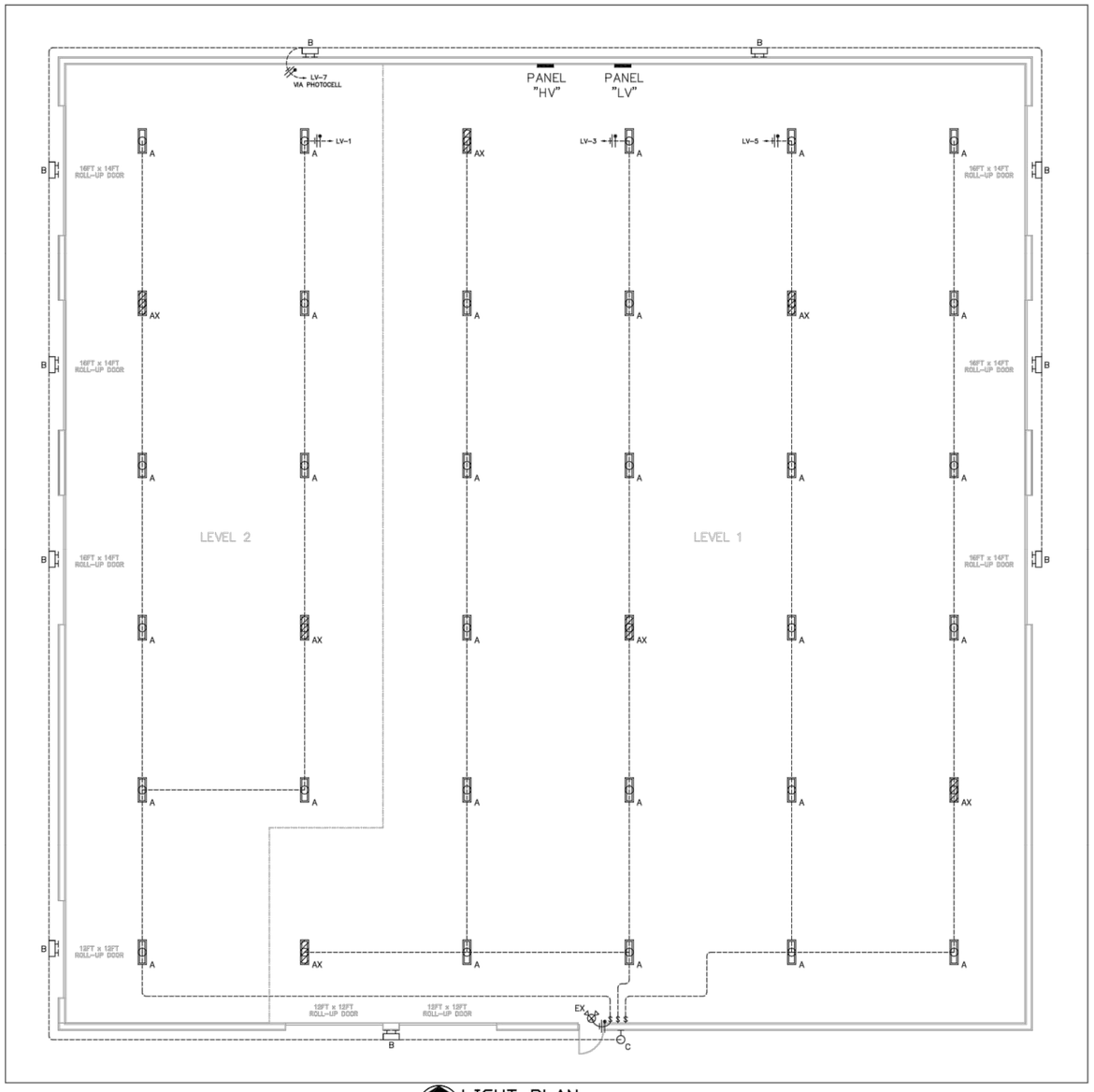

LIGHT PLAN

SCALE: 1/8"=1'-0"

LIGHT SCHEDULE

DESIGN	DESCRIPTION	MOUNTING	MANUFACTURER	CATALOG NUMBER	LAMP DETAILS	DESCRIPTION
A	LED HIGH BAY EFFICIENCY LUMINAIRE	SUSPENDED	METALUX	OHB-15SE-MCL-UNV-L840-CD-U	LED 15,000 LUMEN 98W	VERIFY ACCESSORIES NEEDED PRIOR TO PURCHASE.
AX	LED HIGH BAY EFFICIENCY LUMINAIRE WITH EMERGENCY BATTERY PACK INSTALLED	SUSPENDED	METALUX	OHB-15SE-MCL-UNV-L840-CD-U-EL20W	LED 15,000 LUMEN 98W	VERIFY ACCESSORIES NEEDED PRIOR TO PURCHASE.
B	LED WALLPACK	EXTERIOR WALL	EATON	XTOR8B-BZ-PC1	LED 8,502 LUMEN 81W	PHOTOCELL ON/OFF.
C	EXTERIOR LED DOOR ENTRY FIXTURE	EXTERIOR WALL	EATON	XTOR2B-BZ-PC1	LED 2,135 LUMEN 18W	PHOTOCELL ON/OFF.
EX	EMERGENCY EXIT LIGHT COMBO LED SINGLE FACE	CEILING/WALL	COOPER LIGHTING	AP7-0-R-WH-DH	LED 3.4W	LEAD CALCIUM BATTERY, DUAL LED HEADS.

#	LIGHTING NOTES:
L1	ALL EXTERIOR LIGHTING SHALL BE CONTROLLED BY PHOTOCELL.
L2	ALL EXIT/EMERGENCY FIXTURES SHALL BE CONNECTED TO UNSWITCHED CONDUCTORS.
L3	ALL EXTERIOR LIGHTING SHALL COMPLY WITH THE NEW MEXICO ENERGY CONSERVATION CODE AND THE NEW MEXICO NIGHT SKY PROTECTION ACT.
L4	ALL LIGHTING SHALL BE TYPE LED.

SYMBOL LEGEND	
	LED HIGH BAY INTERIOR FIXTURE
	LED HIGH BAY INTERIOR FIXTURE WITH EMERGENCY BATTERY PACK INSTALLED.
	LED EMERGENCY EXIT LIGHT COMBO FIXTURE
	LED EXTERIOR WALLPACK
	LED DOOR ENTRY FIXTURE
	LIGHT SWITCH, # DENOTES NUM. OF POLES

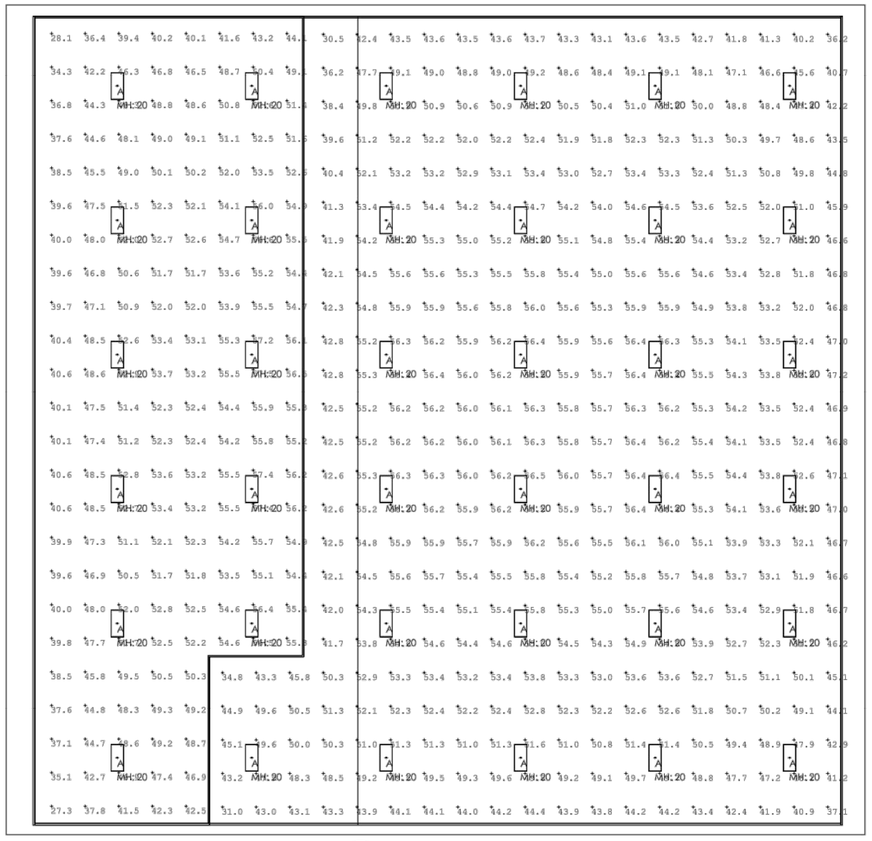

PHOTOMETRICS

SCALE: NONE

COMMERCIAL ENERGY CONSERVATION AND EFFICIENCY:

1. ALL LIGHTING SHALL COMPLY WITH THE 2009 NEW MEXICO ENERGY CONSERVATION CODE AS WELL AS SECTION 14.10.4.16 OF THE 2017 NEW MEXICO ELECTRICAL CODE.
2. INTERIOR LIGHTING POWER REQUIREMENTS SHALL BE IN ACCORDANCE WITH 14.10.4.16. REFER TO TABLE 505.5.2 "LIGHTING POWER DENSITY" FOR ALLOWABLE WATTS PER SQUARE FEET VALUES BASED ON BUILDING AREA TYPE.

LIGHTING POWER DENSITY CALCULATIONS:

IECC TABLE 505.5.2

INTERIOR LIGHTING POWER ALLOWANCES

ALLOWABLE FOR "SHOP AREA" = 1.40W/FT^2
ACTUAL FOR "SHOP AREA" = 0.37W/FT^2

IECC TABLE 505.6.2

LIGHTING POWER DENSITIES FOR BUILDING EXTERIORS

ALLOWABLE = 5.0W/LINEAR FOOT
ACTUAL = 2.1W/LINEAR FOOT

ANTONIO R. SANCHEZ, JR. NEW MEXICO 16463 LICENSED PROFESSIONAL ENGINEER

03/21/2020

JOB NO:
DATE: 03/21/2020
REV A
REV:

Sheet Title: LIGHT PLAN
LIGHT SCHEDULE, NOTES & IECC COMPLIANCE

Drawn By: AS
Checked By: Antonio R. Sanchez, Jr., PE

Eastern New Mexico Engineering, Inc.
Electrical Consulting Engineers
"Helping Serve Your Electrical Needs"
1104 Libra Drive, Portales, NM 88130
Phone: (575) 760-0265 FAX: (575) 226-0416
Email: enmeinc@yahoo.com
website: www.enmeinc.com
ENME

Project Name
CITY OF RATON
SOLID WASTE CONVENIENCE CENTER PROJECT
RATON, NEW MEXICO 87740

SHEET NO.
E-102

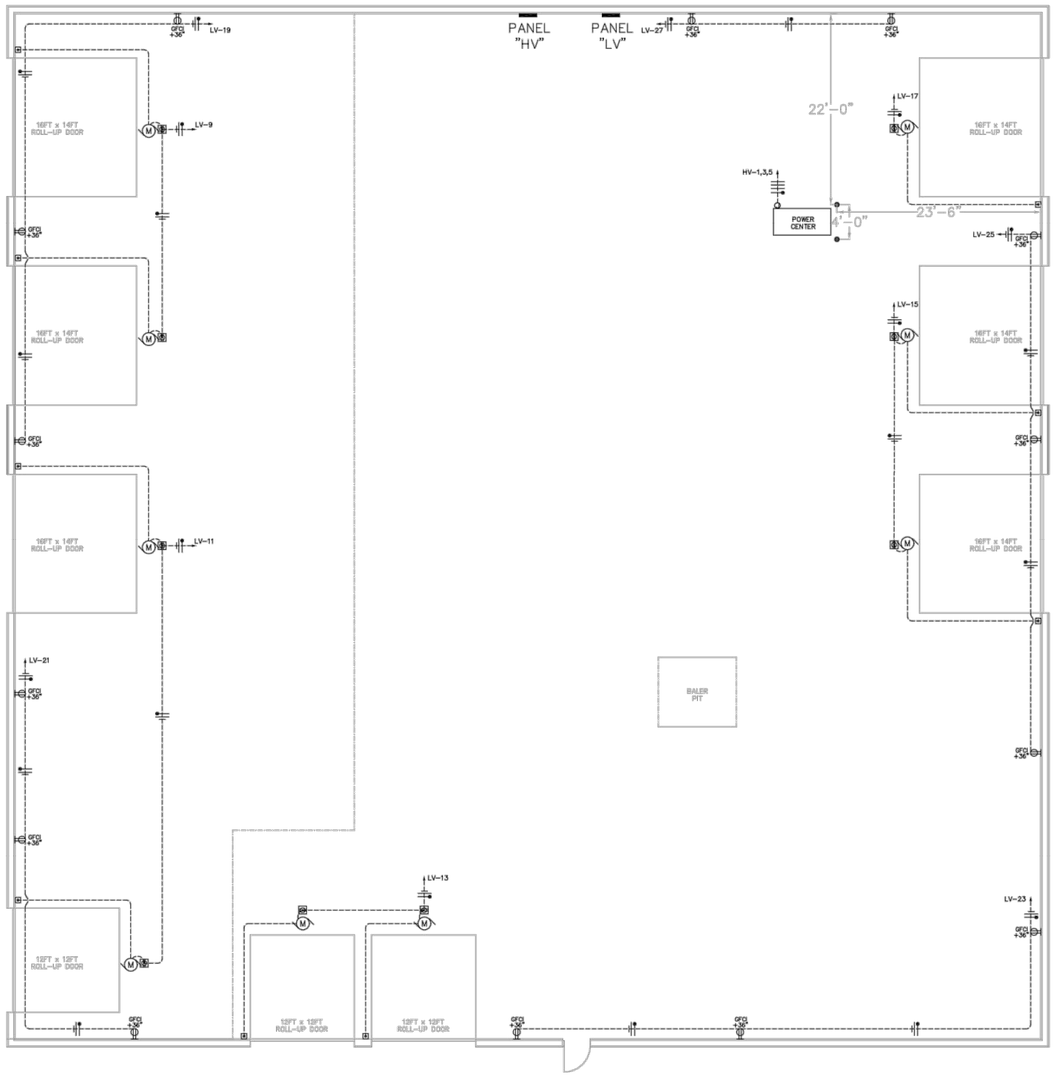

GENERAL POWER PLAN

SCALE: 1/8"=1'-0"

#	WIRING NOTES:
1	ELECTRICAL CONTRACTOR SHALL VERIFY ALL GROUNDING COMPLIES WITH NEC ARTICLE 250.
2	ELECTRICAL CONTRACTOR SHALL FIELD-ROUTE ALL CONDUITS AND CIRCUITS.
3	ALL ELECTRICAL DEVICE LOCATIONS SHALL COMPLY WITH NEC ARTICLE 110.26.
4	VERIFY EXACT LOCATION OF ALL EQUIPMENT LOCATIONS WITH OWNER/ARCHITECT PRIOR TO ROUGH-IN.

#	ELECTRICAL NOTES:
E1	COORDINATE THE EXACT LOCATION OF ALL DEVICES WITH OWNER/ARCHITECT PRIOR TO ROUGH-IN.
E2	ELECTRICAL CONTRACTOR SHALL COORDINATE THE WIRING REQUIREMENTS OF ALL EQUIPMENT WITH EQUIPMENT PROVIDER PRIOR TO ROUGH-IN. ELECTRICAL CONTRACTOR SHALL BE RESPONSIBLE FOR ALL ELECTRICAL REQUIREMENTS PER EQUIPMENT PROVIDER AND/OR EQUIPMENT DRAWINGS.
E3	PER NEC 230.8(E) ELECTRICAL CONTRACTOR SHALL PROVIDE PERMANENT PLAQUES OR DIRECTORIES AT EACH SERVICE DISCONNECT LOCATION DENOTING ALL OTHER SERVICES, FEEDERS, AND BRANCH CIRCUITS SUPPLYING THAT BUILDING OR STRUCTURE AND THE AREA SERVED BY EACH. SEE NEC 225.37, "IDENTIFICATION". THE PLAQUES OR DIRECTORIES MUST BE OF SUFFICIENT DURABILITY TO WITHSTAND THE ENVIRONMENT AND REMAIN LEGIBLE.

TYPICAL MOUNTING HEIGHTS:	
Wall Switches	1.2 m (48 in.)
Receptacle Outlets (general)	450 mm (18 in.)
Receptacle Outlets (kitchen, utility room, workbenches, etc.)	1.0 m (42 in.) or 150 mm (6 in.) above countertop
Special Purpose Outlet	within 1.8 mm (72 in.) of intended use
Telephone Outlet	450 mm (18 in.)
Exit signage	2030mm (6ft. - 8in.) bottom of egress markings shall be located not more than this distance above the top edge of the egress opening intended for designation by that marking.
Wall Intercom Stations	1.2 mm (48 in.)
Night Lights	450 mm (18 in.)
Wall Lighting Outlets	2.1 m (84 in.)
Thermostats	1.2 mm (48 in.)
Push Buttons	1.2 mm (48 in.)
Elevator and Hoistway Control Buttons	1.0 m (42 in.)
Bed Lights	1.8 mm (72 in.)
Patient Bedside Stations	1.2 mm (48 in.)
Clock Outlet	2.5 m (96 in.) when possible, or 150 mm (6 in.) below ceiling. Above doors, center the clock outlet between door trim and ceiling.
Bells, Buzzers, Chimes	2.5 m (96 in.) when possible, or 150 mm (6 in.) below ceiling
Fire Alarm Pull Stations	1.2 mm (48 in.)
Fire Alarms (gongs, bells, horns, lights)	2.0 m (80 in.) above floor finish line, or 150 mm (6 in) below ceiling.

SYMBOL LEGEND	
	DUPLEX RECEPTACLE.
GFCI	DUPLEX RECEPTACLE WITH GROUND FAULT CIRCUIT INTERRUPTER.
	TWO-GANG (QUADPLEX) RECEPTACLE.
GFCI WP	TWO-GANG (QUADPLEX) GFCI RECEPTACLE IN A WEATHERPROOF ENCLOSURE.
220V	220V EQUIPMENT RECEPTACLE. VERIFY NEMA CONFIGURATION PRIOR TO INSTALL.
	CEILING MOUNTED DUPLEX RECEPTACLE.
M	MOTOR LOAD.
	FUSED/NON-FUSED DISCONNECT.
	CIRCUIT BREAKER PANELBOARD.
#	HOMERUN CIRCUIT. # INDICATES BREAKER LOCATION.

PANEL: HV

PANELBOARD SCHEDULE

CCT NO.	LOAD DESCRIPTION:	BKR SIZE	LOAD VA	PH A	PH B	PH C	LOAD VA	BKR SIZE	LOAD DESCRIPTION:	CCT NO.
1	POWER CENTER	70A-3P	14404	18282			3878	20A-3P	VERTICAL BALER #1	2
3			14404		18282		3878			4
5			14404			18282	3878			6
7	SPACE			3878			3878	20A-3P	VERTICAL BALER #2	8
9	SPACE				3878		3878			10
11	SPACE					3878	3878			12
13	SPACE			3878			3878	20A-3P	VERTICAL BALER #3	14
15	SPACE				3878		3878			16
17	SPACE					3878	3878			18
19	SPACE			0					SPACE	20
21	SPACE				0				SPACE	22
23	SPACE					0			SPACE	24
25	SPACE			0					SPACE	26
27	SPACE				0				SPACE	28
29	SPACE					0			SPACE	30
31	SPACE			0					SPACE	32
33	SPACE				0				SPACE	34
35	SPACE					0			SPACE	36
37	SPACE			0					SPACE	38
39	SPACE				0				SPACE	40
41	SPACE					0			SPACE	42
			43212	VA			34902	VA		
	TOTAL CONNECTED LOAD PER PHASE:			26038	26038	26038				
								78114	TOTAL NEW CONNECTED LOAD	
								94	NEW CONNECTED AMPS ON MAX PHASE	
	VOLTAGE: 277/480V, 3-PH, 4W							MOUNTING:	SURFACE, NEMA 1	
	MAINS: 400A							FEED:	TOP	
	RATING: 400A							DOOR-IN-DOOR	YES	
	AIC: 30K							LOCATION	INTERIOR N. WALL	
	GND BUS: YES							FED FROM:	400A FUSED DISCONNECT "HV"	

PANEL: LV

PANELBOARD SCHEDULE

CCT NO.	LOAD DESCRIPTION:	BKR SIZE	LOAD VA	PH A	PH B	PH C	LOAD VA	BKR SIZE	LOAD DESCRIPTION:	CCT NO.
1	LIGHTS (WEST)	20A-1P	1082	8210			7128	80A-3P	HORIZONTAL BALER	2
3	LIGHTS (CENTER)	20A-1P	1274		8402		7128			4
5	LIGHTS (EAST)	20A-1P	1176			8304	7128			6
7	EXTERIOR LIGHTS	20A-1P	828	2100			1272	15A-3P	NORD DRIVE CONVEYOR MOTOR	8
9	NW OVERHEAD DOORS	20A-1P	2160		3432		1272			10
11	SW OVERHEAD DOORS	20A-1P	2160			3432	1272			12
13	SOUTH OVERHEAD DOORS	20A-1P	2160	2160					SPACE	14
15	EAST OVERHEAD DOORS	20A-1P	2160		2160				SPACE	16
17	NE OVERHEAD DOOR	20A-1P	1080			1080			SPACE	18
19	RECEPTS NW INTERIOR WALLS	20A-1P	540	540					SPACE	20
21	RECEPTS SW INTERIOR WALLS	20A-1P	540		540				SPACE	22
23	RECEPTS SE INTERIOR WALLS	20A-1P	540			540			SPACE	24
25	RECEPTS E-CENTRAL INTERIOR WALL	20A-1P	540	540					SPACE	26
27	RECEPTS NE INTERIOR WALL	20A-1P	360		360				SPACE	28
29	SPACE	20A-1P				0			SPACE	30
31	SPACE	20A-1P		0					SPACE	32
33	SPACE	20A-1P			0				SPACE	34
35	SPACE	20A-1P				0			SPACE	36
37	SPACE	20A-1P		0					SPACE	38
39	SPACE	20A-1P			0				SPACE	40
41	SPACE	20A-1P				0			SPACE	42
			16600	VA			25200	VA		
	TOTAL CONNECTED LOAD PER PHASE:			13550	14894	13356				
								41799.5	TOTAL NEW CONNECTED LOAD	
								124	NEW CONNECTED AMPS ON MAX PHASE	
	VOLTAGE: 120/208V, 3-PH, 4W							MOUNTING:	SURFACE, NEMA 1	
	MAINS: 400A							FEED:	BOTTOM	
	RATING: 400A							DOOR-IN-DOOR	YES	
	AIC: 22K							LOCATION	INTERIOR N. WALL	
	GND BUS: YES							FED FROM:	400A FUSED DISCONNECT "LV"	

EQUIPMENT LIST

DESCRIPTION	QUANTITY	VOLTAGE	AMPERAGE	BREAKER TYPE	CONDUCTOR SIZE	MAKE/MODEL	MISC. INFO.
HORIZONTAL BALER	1	208V, 3PH	59.4	80A-3P	3 CU	MARATHON/GEMINI-XTREME	MOTOR: 20HP, 15KW, CONTROL VOLTAGE IS 120V. CAT. NO. CEM2334T.
NORD DRIVE CONVEYOR MOTOR	1	208V, 3PH	10.6	15A-3P	12 CU	NORD	MOTOR: 3HP - USED IN CONJUNCTION WITH THE HORIZONTAL BALER.
VERTICAL BALER	3	480V, 3PH	14	20A-3P	12 CU	MARATHON/V-6030 HD	MOTOR: 10HP, 7.46KW, CONTROL VOLTAGE IS 120V.
POWER CENTER	1	480V, 3PH	52	70A-3P	4 CU	CUSTOM MADE	MOTOR: 40HP. INFO PROVIDED BY CITY OF RATON.
OVERHEAD DOOR OPERATOR	9	120V, 1PH	6	20A-1P	12 CU	LIFTMASTER/MHUR 5011	SOFT START OPERATORS. HARDWIRED CONFIGURATION.

THE FINAL LOCATION OF ALL EQUIPMENT SHALL BE VERIFIED AND APPROVED BY THE OWNER/ARCHITECT AND THE TYPE OF CONNECTION (RECEPTACLE, DISCONNECT, J-BOX, ETC.) SHALL BE VERIFIED WITH THE MANUFACTURER'S INSTRUCTIONS PRIOR TO ROUGH-IN AND CIRCUITING. IF THE MAN

ANTONIO R. SANCHEZ JR. NEW MEXICO 16463 LICENSED PROFESSIONAL ENGINEER
03/21/2020

JOB NO:
DATE: 03/21/2020
REV A
REV:

Sheet Title: GENERAL POWER PLAN, EQUIPMENT LIST, PANEL SCHEDULES & NOTES
Drawn By: AS
Checked By: Antonio R. Sanchez, Jr., PE

Eastern New Mexico Engineering, Inc.
Electrical Consulting Engineers
"Helping Serve Your Electrical Needs"
1104 Libra Drive, Portales, NM 88130
Phone: (575) 760-0065 FAX: (575) 226-0416
Email: enmeinc@yahoo.com
website: www.enmeinc.com
ENME

Project Name
CITY OF RATON
SOLID WASTE CONVENIENCE CENTER PROJECT
RATON, NEW MEXICO 87740

SHEET NO.
E-103

SINGLE–LINE DIAGRAM

SCALE: NONE "HV SYSTEM"

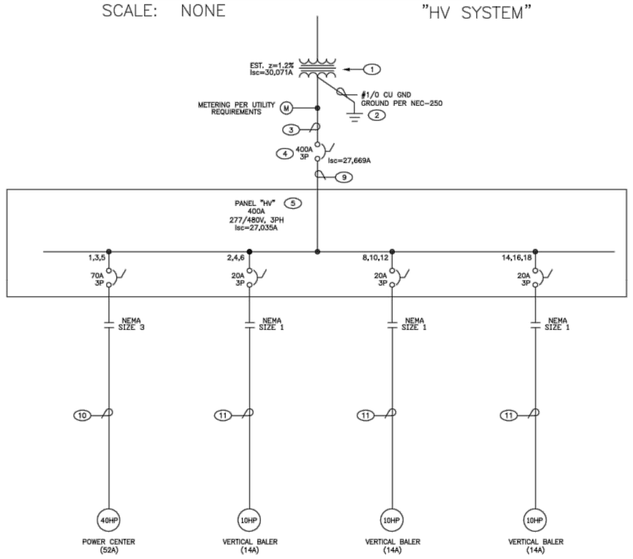

SINGLE–LINE DIAGRAM

SCALE: NONE "LV SYSTEM"

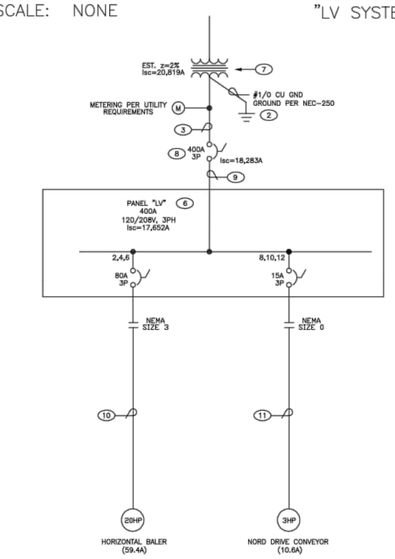

ITEM	ELECTRICAL NOTES:
1	277/480V, 3-PHASE UTILITY TRANSFORMER. FOR THE PURPOSE OF PROVIDING ARC FLASH VALUES, A 300KVA TRANSFORMER WAS USED. ACTUAL SIZE MAY VARY DEPENDING ON THE UTILITY. IT SHALL BE THE RESPONSIBILITY OF THE CONTRACTOR TO VERIFY ACTUAL SIZE OF UNIT PLACED IN FIELD. IF NECESSARY, CONTACT THE ENGINEER FOR REVISED ARC FLASH DETAILS.
2	#1/0 AWG CU TO (2) 5/8" x 8FT GROUND RODS PER NEC 250. REFERENCE ATTACHED GROUNDING DETAIL.
3	4-#600 MCM CU IN 3-1/2" C.
4	600V NEMA 3R FUSED DISCONNECT WITH (3) 400A CURRENT LIMITING FUSES RATED AT 30KAIC MIN.
5	NEMA 1, 400A MAIN BREAKER, 277/480V, 3PH, 4W PANEL RATED AT 30KAIC MINIMUM. SEE ATTACHED PANEL SCHEDULE FOR BREAKER DETAILS.
6	NEMA 1, 400A MAIN BREAKER, 120/208V, 3PH, 4W PANEL RATED AT 22KAIC MINIMUM. SEE ATTACHED PANEL SCHEDULE FOR BREAKER DETAILS.
7	120/208V, 3-PHASE UTILITY TRANSFORMER. FOR THE PURPOSE OF PROVIDING ARC FLASH VALUES, A 150KVA TRANSFORMER WAS USED. ACTUAL SIZE MAY VARY DEPENDING ON THE UTILITY. IT SHALL BE THE RESPONSIBILITY OF THE CONTRACTOR TO VERIFY ACTUAL SIZE OF UNIT PLACED IN FIELD. IF NECESSARY, CONTACT THE ENGINEER FOR REVISED ARC FLASH DETAILS.
8	208V NEMA 3R FUSED DISCONNECT WITH (3) 400A CURRENT LIMITING FUSES RATED AT 22KAIC MIN.
9	4-#600 MCM CU & 1-#3 AWG CU GND IN 3-1/2" C.
10	3-#4 AWG CU & 1-#8 AWG CU GND IN 1" C.
11	3-#12 AWG CU & 1-#12 AWG CU GND IN 1/2" C.

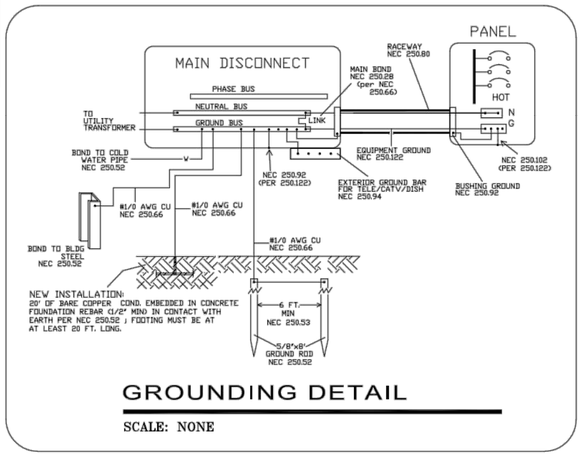

GROUNDING DETAIL

SCALE: NONE

Fault Current Calculations:		
Calculations performed using the following criteria:		
Transformer capacity:	300	kVA
Voltage:	480	V
Impedance:	1.2	%
Phase:	3	
Available current:	361	A
Transformer multiplier:	83.33	
Let-thru short circuit current:	30,071	A
Secondary conductor length:	20	Ft
Conductor Constant Value:	25000	
Number of parallel phases:	1	
"F" factor:	0.0868	
Multiplier:	0.9201	
Short circuit currents @:		
400A "HV" DISC.	27,669	A
PANEL 'HV'	27,035	A

Fault Current Calculations:		
Calculations performed using the following criteria:		
Transformer capacity:	150	kVA
Voltage:	208	V
Impedance:	2	%
Phase:	3	
Available current:	416	A
Transformer multiplier:	50.00	
Let-thru short circuit current:	20,819	A
Secondary conductor length:	20	Ft
Conductor Constant Value:	25000	
Number of parallel phases:	1	
"F" factor:	0.1387	
Multiplier:	0.8782	
Short circuit currents @:		
400A "LV" DISC.	18,283	A
PANEL 'LV'	17,652	A

PPE CATEGORY	PPE
1	**Arc-Rated Clothing, Minimum Arc Rating of 4 cal/cm^2 (see Note 1)** Arc-rated long-sleeve shirt and pants of arc-rated coverall Arc-rated face shield (see Note 2) or arc flash suit hood Arc-rated jacket, parka, rainwear, or hard hat liner (AN) **Protective Equipment** Hard hat Safety glasses or safety goggles (SR) Hearing protection (ear canal inserts) Heavy duty leather gloves (see Note 3) Leather footwear (AN)
2	**Arc-Rated Clothing, Minimum Arc Rating of 8 cal/cm^2 (see Note 1)** Arc-rated long-sleeve shirt and pants of arc-rated coverall Arc-rated flash suit hood or arc-rated face shield (see Note 2) and arc-rated balaclava Arc-rated jacket, parka, rainwear, or hard hat liner (AN) **Protective Equipment** Hard hat Safety glasses or safety goggles (SR) Hearing protection (ear canal inserts) Heavy duty leather gloves (see Note 3) Leather footwear (AN)
3	**Arc-Rated Clothing, Minimum Arc Rating of 25 cal/cm^2 (see Note 1)** Arc-rated long-sleeve shirt Arc-rated pants (AR) Arc-rated coverall (AR) Arc-rated arc flash suit jacket (AR) Arc-rated arc flash suit pants (AR) Arc-rated arc flash suit hood Arc-rated gloves (see Note 1) Arc-rated jacket, parka, rainwear, or hard hat liner (AN) **Protective Equipment** Hard hat Safety glasses or safety goggles (SR) Hearing protection (ear canal inserts) Leather footwear (AN)
4	**Arc-Rated Clothing Selected so That the System Arc Rating Meets the Required Minimum Arc Rating of 40 cal/cm^2 (see Note 1)** Arc-rated long-sleeve shirt Arc-rated pants (AR) Arc-rated coverall (AR) Arc-rated arc flash suit jacket (AR) Arc-rated arc flash suit pants (AR) Arc-rated arc flash suit hood Arc-rated gloves (see Note 1) Arc-rated jacket, parka, rainwear, or hard hat liner (AN) **Protective Equipment** Hard hat Safety glasses or safety goggles (SR) Hearing protection (ear canal inserts) Leather footwear (AN)

Notes:
(1) Arc rating is defined in Article 100.
(2) Face shields are to have wrap-around guarding to protect not only the face but also the forehead, ears, and neck, or, alternatively, an arc-rated arc flash suit hood is required to be worn.
(3) If rubber insulating gloves with leather protectors are used, additional leather or arc-rated gloves are not required. The combination of rubber insulating gloves with leather protectors satisfies the arc flash protection requirement.

WARNING
ARC FLASH AND SHOCK HAZARD
APPROPRIATE PPE REQUIRED

EQUIPMENT TYPE:	600V SWITCHGEAR
GROUNDING:	GROUNDED
WORK DISTANCE:	18 INCHES
AVAILABLE 3-PH BOLTED CURRENT:	27.669kA
FLASH PROTECTION BOUNDARY:	6 INCHES
INCIDENT ENERGY AT 18 INCHES:	0.25 CAL/cm2
PPE LEVEL:	*0
EQUIPMENT NAME:	"HV" DISC.
03/21/2020	

WARNING
ARC FLASH AND SHOCK HAZARD
APPROPRIATE PPE REQUIRED

EQUIPMENT TYPE:	208V SWITCHGEAR
GROUNDING:	GROUNDED
WORK DISTANCE:	18 INCHES
AVAILABLE 3-PH BOLTED CURRENT:	18.283kA
FLASH PROTECTION BOUNDARY:	8 INCHES
INCIDENT ENERGY AT 18 INCHES:	0.38 CAL/cm2
PPE LEVEL:	*0
EQUIPMENT NAME:	"LV" DISC.
03/21/2020	

WARNING
ARC FLASH AND SHOCK HAZARD
APPROPRIATE PPE REQUIRED

EQUIPMENT TYPE:	480V PANEL
GROUNDING:	GROUNDED
WORK DISTANCE:	18 INCHES
AVAILABLE 3-PH BOLTED CURRENT:	27.035kA
FLASH PROTECTION BOUNDARY:	17 INCHES
INCIDENT ENERGY AT 18 INCHES:	1.37 CAL/cm2
PPE LEVEL:	1
EQUIPMENT NAME:	PANEL 'HV'
03/21/2020	

WARNING
ARC FLASH AND SHOCK HAZARD
APPROPRIATE PPE REQUIRED

EQUIPMENT TYPE:	208V PANEL
GROUNDING:	GROUNDED
WORK DISTANCE:	18 INCHES
AVAILABLE 3-PH BOLTED CURRENT:	17.652kA
FLASH PROTECTION BOUNDARY:	14 INCHES
INCIDENT ENERGY AT 18 INCHES:	0.95 CAL/cm2
PPE LEVEL:	*0
EQUIPMENT NAME:	PANEL 'LV'
03/21/2020	

CATEGORY	ENERGY LEVEL	TYPICAL PPE EXAMPLES
0	N/A	Non-melting, flammable materials.
1	4 cal/cm2	FR long-sleeve shirt & FR pants or FR coverall.
2	8 cal/cm2	Cotton underwear – conventional short sleeve and brief/shorts, plus FR long-sleeve shirt & pants.
3	25 cal/cm2	Cotton underwear plus FR long-sleeve shirt & pants plus FR coverall or cotton underwear plus two FR coveralls.
4	40 cal/cm2	Cotton underwear plus FR long-sleeve shirt & pants plus multilayer flash suit.

All categories require a face shield and/or safety glasses, hard hat and leather gloves. Where insulating rubber gloves are used for shock protection, leather protectors shall be worn over the rubber gloves. Leather work boots shall be worn for energy levels above 4 cal/cm2.

** CAVEAT: NFPA 70E – WORK ON ENERGIZED PARTS, INCLUDING VOLTAGE TESTING, REMOVING OR INSTALLING CIRCUIT BREAKERS OR FUSED SWITCHES OR REMOVING BOLTED COVERS TO EXPOSE BARE, ENERGIZED PARTS WOULD PLACE THIS PROJECT INTO A CATEGORY 1 FOR APPROPRIATE PPE.*

ARC FLASH INFO:

SCALE: NONE

ANTONIO R. SANCHEZ, JR.
NEW MEXICO
16463
LICENSED PROFESSIONAL ENGINEER
03/21/2020

JOB NO:
DATE: 03/21/2020
REV A
REV:

Sheet Title
SINGLE–LINE DIAGRAM, GROUNDING DETAIL, FAULT CALCS AND ARC FLASH INFO.
Drawn By: AS
Checked By: Antonio R. Sanchez, Jr., PE

Eastern New Mexico Engineering, Inc.
Electrical Consulting Engineers
"Helping Serve Your Electrical Needs"
1104 Libra Drive, Portales, NM 88130
Phone: (575) 760-0065 FAX: (575) 226-5416
Email: enmeinc@yahoo.com
website: www.enmeinc.com
ENME

Project Name
CITY OF RATON
SOLID WASTE CONVENIENCE CENTER PROJECT
RATON, NEW MEXICO 87740

SHEET NO.
E–104