MID-WEST
STEEL BUILDING COMPANY
7301 FAIRVIEW ◆ HOUSTON, TEXAS ◆ P.O. BOX 40338
ZIP 77041 (713) 466-7788 ZIP 77240

Builder/Contractor Responsibilities

Drawing Validity – These drawings, supporting structural calculations and design certification are based on the order documents as of the date of these drawings. These documents describe the material supplied by the manufacturer as of the date of these drawings. Any changes to the order documents after the date on these drawings may void these drawings, supporting structural calculations and design certification. The Builder/Contractor is responsible for notifying the building authority of all changes to the order documents which result in changes to the drawings, supporting structural calculations and design certification.

Builder Acceptance of Drawings – Approval of the manufacturer's drawings and design data affirms that the manufacturer has correctly interpreted and applied the requirements of the order documents and constitutes Builder/Contractor acceptance of the manufacturer's interpretations of the order documents and standard product specifications, including its design, fabrication and quality criteria standards and tolerances. (AISC code of standard practice Sept 86 Section 4.2.1)(Mar 05 Section 4.4.1)

Code Official Approval – It is the responsibility of the Builder/Contractor to ensure that all project plans and specifications comply with the applicable requirements of any governing building authority. The Builder/Contractor is responsible for securing all required approvals and permits from the appropriate agency as required.

Building Erection – The Builder/Contractor is responsible for all erection of the steel and associated work in compliance with the Metal Building Manufacturers drawings. Temporary supports, such as temporary guys, braces, false work or other elements required for erection will be determined, furnished and installed by the erector (AISC Code of Standard Practice Sept 86 Section 7.9.1) (Mar 05 Section 7.10.3) (CSA/S16–09 Section 29).

Discrepancies – Where discrepancies exist between the Metal Building plans and plans for other trades, the Metal Building plans will govern. (AISC Code of Standard Practice Sept 86 Section 3.3) (Mar 05 Section 3.3)

Materials by Others – All interface and compatibility of any materials not furnished by the manufacturer are the responsibility of and to be coordinated by the Builder/Contractor or A/E firm. Unless specific design criteria concerning any interface between materials if furnished as a part of the order documents, the manufacturers assumptions will govern.

Modification of the Metal Building from Plans – The Metal Building supplied by the manufacturer has been designed according to the Building Code and specifications and the loads shown on this drawing. Modification of the building configuration, such as removing wall panels or braces, from that shown on these plans could affect the structural integrity of the building. The Metal Building Manufacturer or a Licensed Structural Engineer should be consulted prior to making any changes to the building configuration shown on these drawings. The Metal Building Manufacturer will assume no responsibility for any loads applied to the building not indicated on these drawings.

Foundation Design
The Metal Building Manufacturer is not responsible for the design, materials and workmanship of the foundation. Anchor rod plans prepared by the manufacturer are intended to show only location, diameter and projection of the anchor rods required to attach the Metal Building System to the foundation. It is the responsibility of the end customer to ensure that adequate provisions are made for specifying rod embedment, bearing values, tie rods and or other associated items embedded in the concrete foundation, as well as foundation design for the loads imposed by the Metal Building System, other imposed loads, and the bearing capacity of the soil and other conditions of the building site. (MBMA 06 Sections 3.2.2 and A3)

ENGINEERING DESIGN CRITERIA

Building Code ..... IBC 09
Occupancy Category..... II – Normal

Roof Dead Load
Superimposed..... 2.000 psf
Collateral..... 0.500 psf
Roof Live Load..... 40.00 psf Non Reducible

Snow
Ground Snow Load (Pg)..... 30.0 psf
Snow Load Importance Factor (Is)..... 1.00
Flat Roof Snow Load (Pf)..... 21.0 psf (As per code)
Min Roof Snow Load (Pf)..... 40.0 psf (Used in design)
Snow Exposure Factor (Ce)..... 1.00
Thermal Factor (Ct)..... 1.00

Wind
Basic Wind Speed..... 90 mph
Wind Importance Factor (Iw)..... 1.00
Wind Exposure Category C
Internal Pressure Coef (GCpi) 0.18/–0.18
Loads for components not provided by building manufacturer
Corner Areas 17.741 psf pressure –23.611 psf suction
Other Areas 17.741 psf pressure –19.220 psf suction
These values are the maximum values required based on a 10 sq ft area. Components with larger areas may have lower wind loads.

Seismic
Seismic Importance Factor (Ie)..... 1.00
Seismic Design Category..... B
Soil Site Class..... D Stiff Soil
Ss..... 0.2160 g Sds ..... 0.2304 g
S1..... 0.0640 g Sd1 ..... 0.1024 g
Analysis Procedure..... Equivalent Lateral Force

Column Line	All	All(Front)	All(Back)
Basic Force Resisting System	H	H	H
Response Modification Coefficient (R)	3	3	3
System Over–Strength Factor (Omega)	2.5000	2.5000	2.5000
Seismic Response Coefficient (Cs)	0.077	0.077	0.077

Design Base Shear in kips (V) Transverse 5.90 Longitudinal 5.88
Basic Structural System (from ASCE 7–05 Table 12.1–1)
H – Steel System not Specifically Detailed for Seismic Resistance

DEFLECTION CRITERIA

The material supplied by the manufacturer has been designed with the following minimum deflection criteria. The actual deflection may be less depending on actual load and actual member length.

BUILDING DEFLECTION LIMITS.....: BLDG–A

Roof Limits	Rafters	Purlins	Panels
Live L/	180	180	60
Snow L/	180	180	60
Serviceability Wind L/	180	180	60
Total Gravity L/	120	120	60
Total Uplift L/	N/A	N/A	60

Frame Limits	Sidesway
Live H/	60
Snow H/	60
Serviceability Wind H/	60
Seismic Drift H/	50
Portal Service Wind H/	N/A
Total Gravity H/	60
Service Seismic H/	50

Wall Limits	Limit
Total Wind Panels L/	60
Total Wind Girts L/	90
Total Wind EW Columns L/	120

The Service Seismic limit as shown here is at service level loads.

Drawing Index

Page	Description
C1	Cover Sheet
C2	Primary Steel Location Plan
F1	Anchor Bolt Plan
F2	Anchor Bolt Reaction Drawings
F3	Anchor Bolt Details
E1	Roof Framing Plan
E2	Roof Sheeting Plan
E3	Front Sidewall (SWA)
E4	Back Sidewall (SWC)
E5	Left Endwall (EWB)
E6	Right Endwall (EWD)
E7–E10	Rigid Frame Cross Section
E11	Connection Detail
DET1–13	Construction Drawings
DET14–16	Erection Guides

Revision	Date	Description	By	Ck'd
A	11/27/17	FOR CONSTRUCTION PERMIT	RAV	KYG
0	02/12/18	FOR ERECTOR INSTALLATION	ADN	ADR

PROJECT NOTES

BOLT TIGHTENING – All bolted joints with A325–09 Type 1 bolts are specified as snugtightened joints in accordance with the Specification for Structural Joints Using ASTM A325 or A490 Bolts, June 30, 2004. Pretensioning methods, including turn–of–nut, calibrated wrench, twist off type tension control bolts or direct tension indicator are NOT required. Installation Inspection requirements for Snug Tight Bolts (Specification for Structural Joints Section 9.1) is suggested.

Material properties of steel bar, plate, and sheet used in the fabrication of built–up structural framing members conform to ASTM A529, ASTM A572, ASTM A1011 SS, or ASTM A1011 HSLAS with a minimum yield point of 50 ksi. Material properties of hot rolled structural shapes conform to ASTM A992, ASTM A529, or ASTM A572 with a minimum specified yield point of 50 ksi. Hot rolled angles, other than flange braces, conform to ASTM 36 minimum. Hollow structural shapes conform to ASTM A500 grade B, minimum yield point is 42 ksi for round HSS and 46 ksi for rectangular HSS. Material properties of cold–formed light gage steel members conform to grade 55, with a minimum yield point of 55 ksi. For Canada, material properties conform to CAN/CSA G40.20/G40.21 or equivalent.

Design criteria as noted is as given within order documents and is applied in general accordance with the applicable provisions of the model code and/or specification indicated. Neither the manufacturer nor the certifying engineer declares or attests that the loads as designated are proper for local provisions that may apply or for site specific parameters. The design criteria is supplied by the builder, project owner, or an Architect and/or Engineer of Record for the overall construction project.

Framed openings walk doors, and open areas shall be located in the bay and elevation as shown in the erection drawings. The cutting or removal of girts shown on the erection drawings due to the addition of framed openings, walk doors, or open areas not shown may void the design certifications supplied by the metal building manufacturer.

PROJECT NOTES

X–Bracing is to be installed to a taut condition with all slack removed. Do not tighten beyond this state.

This metal building system is designed as enclosed. All exterior components (i.e. doors, windows, vents, etc.) must be designed to withstand the specified wind loading for the design of components and cladding in accordance with the specified building code. Doors are to be closed when a maximum of 50% of design wind velocity is reached.

Rigid Bearing Main frames :

The rigid frame at lines 1&7 are designed as a Rigid Bearing frame. Corresponding frame reactions are calculated based upon actual tributary area.

Using Standard (5x5) eave gutter with 4 x 5 downspouts, the roof drainage system has been designed using the method outlined in the MBMA Metal Building Systems Manual. Downspout locations have not been located on these drawings. The downspouts are to be placed on the building sidewalls at a spacing not to exceed 83 feet with the first downspout at both ends of the gutter. Downspout spacing that does not exceed the maximum spacing will be in compliance with the building code. The gutter and downspout system as provided by the manufacturer is designed to accommodate 4.0 in/hr rainfall intensity.

The metal building manufacturer has not designed the structure for snow accumulation loads at the ground level which may impose snow loads on the wall framing provided by the manufacturer.

½"ø A325 BOLT GRIP TABLE

GRIP	LENGTH
0 TO 9/16"	1 1/4" F.T.
Over 9/16" TO 1 1/16"	1 3/4" F.T.
Over 1 1/16" TO 1 5/16"	2"
Over 1 5/16" TO 1 9/16"	2 1/4"
Over 1 9/16" TO 1 13/16"	2 1/2"
Over 1 13/16" TO 2 1/16"	2 3/4"
LOCATIONS OF BOLTS LONGER THAN 2 3/4" NOTED ON ERECTION DRAWINGS	
F.T. DENOTES FULLY THREADED	

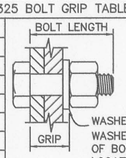

NOTE:
FULL THREAD ENGAGEMENT IS DEEMED TO HAVE BEEN MET WHEN THE END OF THE BOLT IS FLUSH WITH THE FACE OF THE NUT.

WASHER REQUIRED ONLY WHEN SPECIFIED. WASHER MAY BE LOCATED UNDER HEAD OF BOLT, UNDER NUT, OR AT BOTH AT LOCATIONS NOTED ON ERECTION DRAWINGS. ADD 5/32" FOR EACH WASHER TO MATERIAL THICKNESS TO DETERMINE GRIP.

MID-WEST
STEEL BUILDING COMPANY
7301 FAIRVIEW ◆ HOUSTON, TEXAS ◆ P.O. BOX 40338
ZIP 77041 (713) 466-7788 ZIP 77240

Customer:
STEEL DEPOT HOBBS
212 S MAGNUM RD
HOBBS, NM, 88240
DARLA JOHNSON

Project Name & Location:
420 EAST HEREFORD AVENUE
RATON, NM, 87740
COLFAX

Drawing Status:
☐ Preliminary (Not For Construction)
☐ For Approval (Not For Construction)
☐ For Construction Permit
☒ For Erector Installation

Scale:	NOT TO SCALE	
Drawn by:	ADN	02/12/18
Checked by:	ADR	02/12/18
Project Engineer:	MSP	
Job Number:	16–B–26319	
Sheet Number:	C1	

The engineer whose seal appears hereon is an employee for the manufacturer for the materials described herein. Said seal or certification is limited to the products designed and manufactured by manufacturer only.The undersigned engineer is not the overall engineer of record for this project.

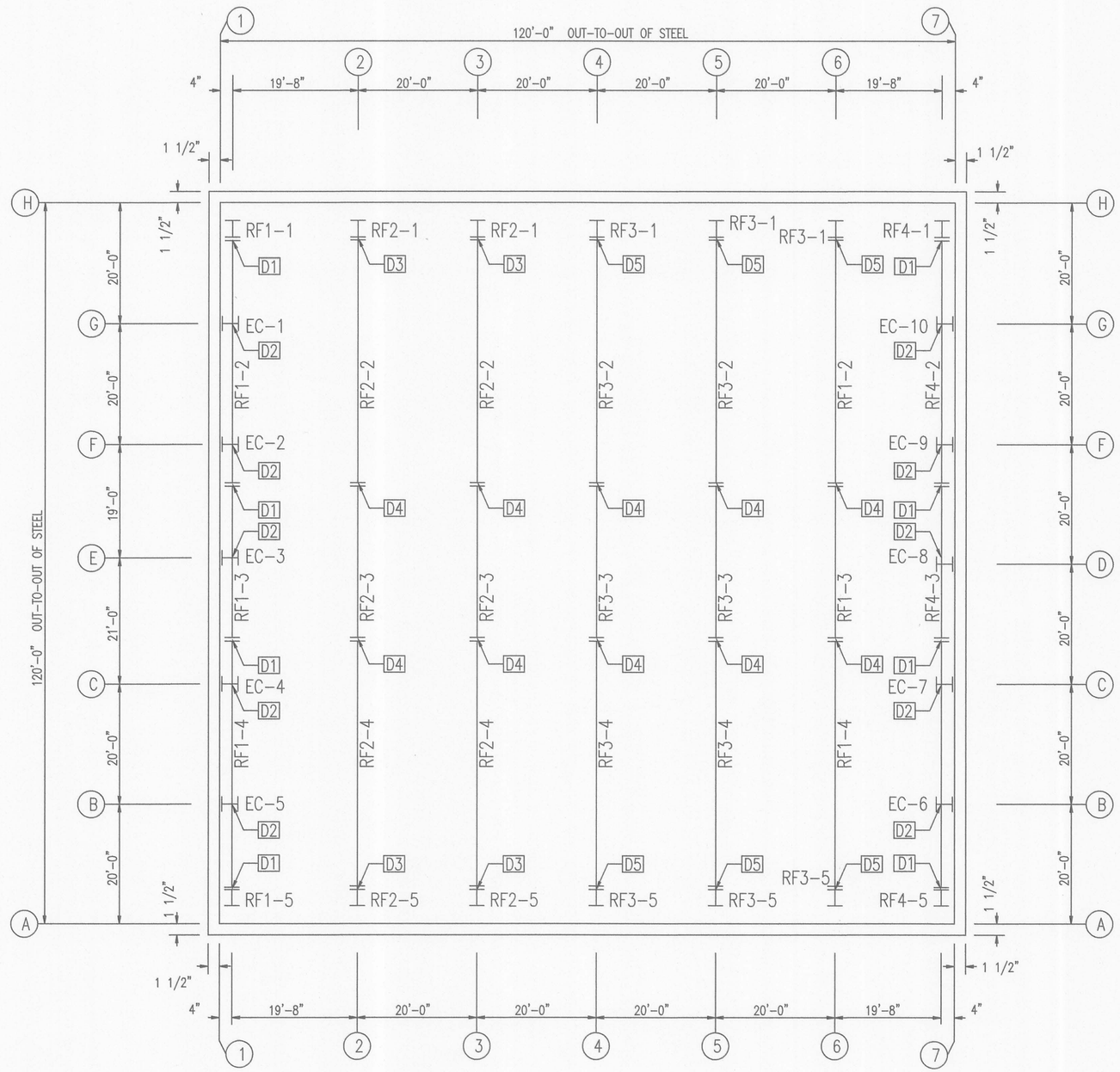

PRIMARY STEEL LOCATION PLAN

SPLICE BOLT TABLE @ GRID-1 & 7					
MARK	QTY	SIZE	TYPE	HARDENED WASHERS	BEVELED WASHERS
D1	8	3/4" x 1 3/4"	A325 B&N	0	0
D2	4	5/8" x 1 1/2"	A325 B&N	0	0

SPLICE BOLT TABLE @ GRID-2 & 3					
MARK	QTY	SIZE	TYPE	HARDENED WASHERS	BEVELED WASHERS
D3	12	1 1/4" x 3 3/4"	A325 B&N	0	0
D4	10	3/4" x 1 3/4"	A325 B&N	0	0

SPLICE BOLT TABLE @ GRID-4, 5 & 6					
MARK	QTY	SIZE	TYPE	HARDENED WASHERS	BEVELED WASHERS
D5	12	1 1/4" x 3 1/4"	A325 B&N	0	0
D4	10	3/4" x 1 3/4"	A325 B&N	0	0

Revision	Date	Description	By	Ck'd
0	02/12/18	FOR ERECTOR INSTALLATION	ADN	ADR

MID-WEST
STEEL BUILDING COMPANY
7301 FAIRVIEW ◆ HOUSTON, TEXAS ◆ P.O. BOX 40338
(713) 466-7788 ZIP 77240
ZIP 77041

Project Name & Location:
420 EAST HEREFORD AVENUE
RATON, NM, 87740
COLFAX

Customer:
STEEL DEPOT HOBBS
212 S MAGNUM RD
HOBBS, NM, 88240
DARLA JOHNSON

Drawing Status:
☐ Preliminary (Not For Construction)
☐ For Approval (Not For Construction)
☐ For Construction Permit
☒ For Erector Installation

Scale:	NOT TO SCALE	
Drawn by:	ADN	02/12/18
Checked by:	ADR	02/12/18
Project Engineer:	MSP	
Job Number:	16-B-26319	
Sheet Number:	C1	

The engineer whose seal appears hereon is an employee for the manufacturer for the materials described herein. Said seal or certification is limited to the products designed and manufactured by manufacturer only. The undersigned engineer is not the overall engineer of record for this project.

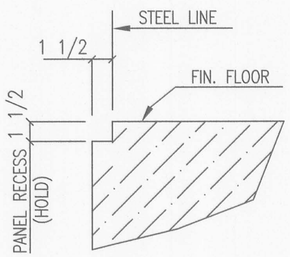

CONCRETE NOTCH DETAIL

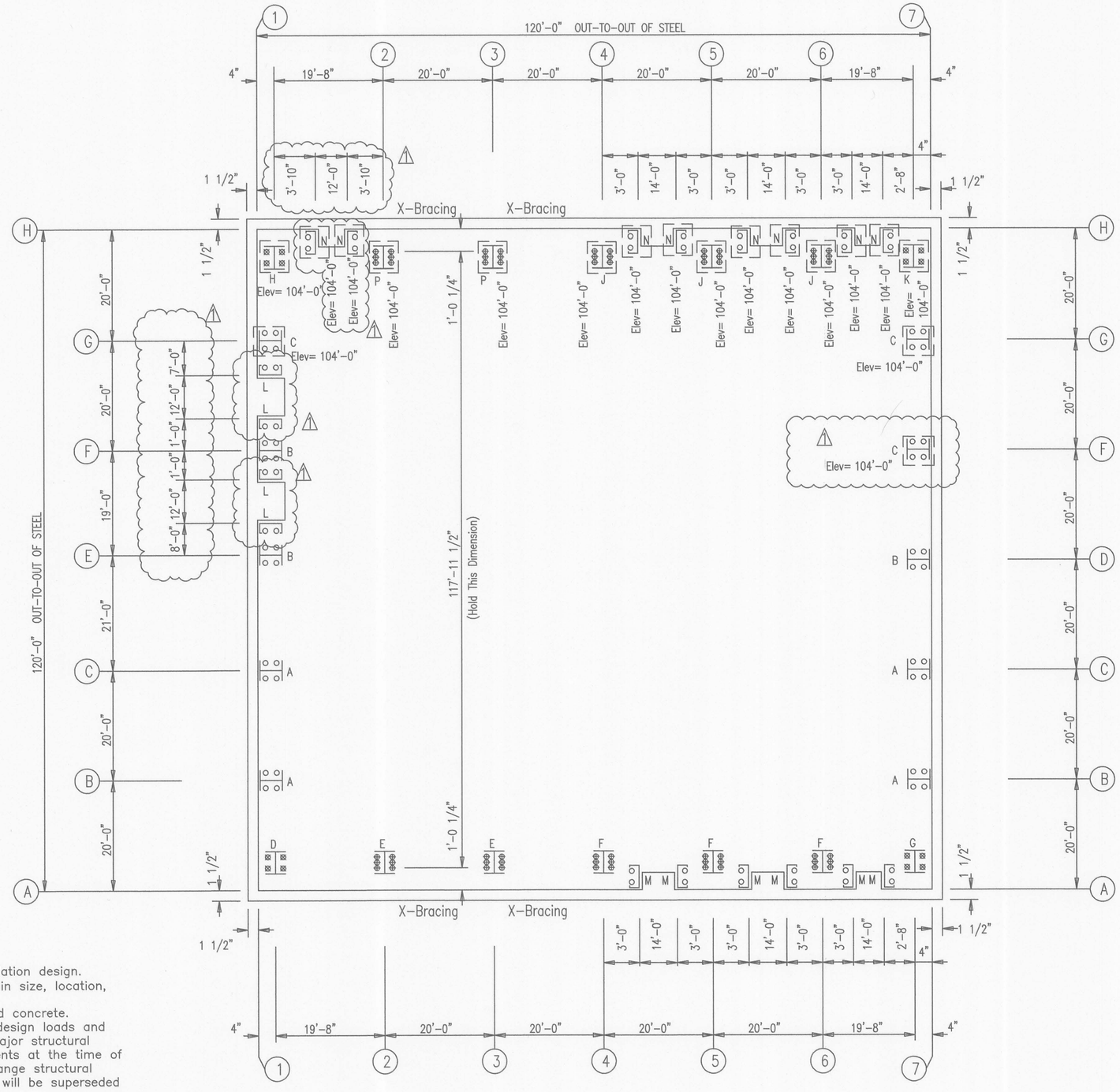

ANCHOR BOLT PLAN

Anchor Rod Drawings

1) This drawing is for anchor rod placement only and is not foundation design.
2) Foundation must be square and level with all anchor rods true in size, location, and projection.
3) Projection shown must be held to keep threads clear of finished concrete.
4) This structural design data includes magnitude and location of design loads and support conditions, material properties, and type and size of major structural members necessary to show compliance with the Order Documents at the time of this issue. Any change to building loads or dimensions may change structural member sizes and locations shown. This structural design data will be superseded and voided by any future mailing.
5) Anchor rod size is determined by shear and tension at the bottom of the base plate. The length of the anchor rod and method of load transfer to the foundation are to be determined by the foundation engineer, and are not provided by the manufacturer.
6) Anchor rods are ASTM F1554 Gr. 36 material unless noted otherwise.

ACCESSORY SCHEDULE			
MARK	DESCRIPTION	DETAIL	QUAN.
A	3070 KNOCK DOWN WALK DOOR	R	3

○ Dia= 5/8"
⊠ Dia= 3/4"
⊕ Dia= 1"

Revision	Date	Description	By	Ck'd
0	11/27/17	FOR ERECTOR INSTALLATION	RAV	KYG
1	02/12/18	REV. FOR ERECTOR INSTALLATION	ADN	ADR

MID-WEST
STEEL BUILDING COMPANY
7301 FAIRVIEW ◆ HOUSTON, TEXAS ◆ P.O. BOX 40338
ZIP 77041 (713) 466-7788 ZIP 77240

Customer:
STEEL DEPOT HOBBS
212 S MAGNUM RD
HOBBS, NM, 88240
DARLA JOHNSON

Project Name & Location:
420 EAST HEREFORD AVENUE
RATON, NM, 87740
COLFAX

Drawing Status:
☐ Preliminary (Not For Construction)
☐ For Approval (Not For Construction)
☐ For Construction Permit
☒ For Erector Installation

Scale: NOT TO SCALE
Drawn by: ADN 02/12/18
Checked by: ADR 02/12/18
Project Engineer: MSP
Job Number: 16-B-26319
Sheet Number: F1

The engineer whose seal appears hereon is an employee for the manufacturer for the materials described herein. Said seal or certification is limited to the products designed and manufactured by manufacturer only.The undersigned engineer is not the overall engineer of record for this project.

RIGID FRAME: BASIC COLUMN REACTIONS (k)

Frame Line	Column Line	Dead Horiz	Dead Vert	Collateral Horiz	Collateral Vert	Live Horiz	Live Vert	Snow Horiz	Snow Vert	Wind_Left1 Horiz	Wind_Left1 Vert	Wind_Right1 Horiz	Wind_Right1 Vert
1	H	0.0	0.5	0.0	0.0	0.3	3.8	0.2	2.0	−1.8	−3.2	1.6	−0.7
1	A	0.0	0.6	0.0	0.0	−0.3	3.9	−0.2	2.0	−1.9	−0.1	1.5	−2.6
1	G	0.0	1.1	0.0	0.1	0.0	8.5	0.0	4.5	0.0	−3.1	0.0	−3.5
1	F	0.0	1.3	0.0	0.1	0.0	7.7	0.0	4.1	0.0	−3.8	0.0	−1.8
1	E	0.0	1.2	0.0	0.1	0.0	6.2	0.0	4.3	0.0	−2.3	0.0	−2.4
1	C	0.0	1.0	0.0	0.1	0.0	8.4	0.0	4.4	0.0	−2.4	0.0	−4.4
1	B	0.0	1.0	0.0	0.1	0.0	8.3	0.0	4.4	0.0	−4.0	0.0	−3.6

Frame Line	Column Line	Wind_Left2 Horiz	Wind_Left2 Vert	Wind_Right2 Horiz	Wind_Right2 Vert	Wind_Long1 Horiz	Wind_Long1 Vert	Wind_Long2 Horiz	Wind_Long2 Vert	Seismic_Left Horiz	Seismic_Left Vert	Seismic_Right Horiz	Seismic_Right Vert
1	H	−2.2	−2.2	1.2	0.3	0.5	−2.2	0.1	−1.2	−0.3	−0.4	0.3	0.4
1	A	−1.3	0.5	2.2	−1.9	−1.0	−1.4	−0.5	−0.7	−0.4	0.4	0.4	−0.4
1	G	0.0	−2.1	0.0	−2.5	0.0	−2.6	0.0	−1.5	0.0	0.6	0.0	−0.5
1	F	0.0	−2.8	0.0	−0.9	0.0	−2.4	0.0	−1.4	0.0	−0.1	0.0	0.1
1	E	0.0	−1.3	0.0	−1.4	0.0	−2.5	0.0	−1.5	0.0	0.0	0.0	0.0
1	C	0.0	−1.1	0.0	−3.1	0.0	−3.1	0.0	−1.8	0.0	0.1	0.0	−0.1
1	B	0.0	−2.7	0.0	−2.3	0.0	−3.3	0.0	−2.0	0.0	−0.5	0.0	0.5

Frame Line	Column Line	MIN_SNOW Horiz	MIN_SNOW Vert	LWIND1_L2E Horiz	LWIND1_L2E Vert	LWIND1_R2E Horiz	LWIND1_R2E Vert	LWIND2_L2E Horiz	LWIND2_L2E Vert	LWIND2_R2E Horiz	LWIND2_R2E Vert	F1UNB_SL_L Horiz	F1UNB_SL_L Vert
1	H	0.3	3.8	0.1	−0.5	−0.1	−0.2	0.1	−0.5	−0.1	−0.2	0.1	1.8
1	A	−0.3	3.9	0.1	−0.2	−0.1	−0.5	0.1	−0.2	−0.1	−0.5	−0.1	0.6
1	G	0.0	8.5	0.0	−0.8	0.0	0.2	0.0	−0.8	0.0	0.2	0.0	5.2
1	F	0.0	7.8	0.0	0.2	0.0	0.0	0.0	0.2	0.0	0.0	0.0	7.4
1	E	0.0	8.2	0.0	0.0	0.0	0.0	0.0	0.0	0.0	0.0	0.0	1.5
1	C	0.0	8.4	0.0	0.0	0.0	0.1	0.0	0.0	0.0	0.1	0.0	1.3
1	B	0.0	8.3	0.0	0.2	0.0	−0.8	0.0	0.2	0.0	−0.8	0.0	1.3

Frame Line	Column Line	F1UNB_SL_R Horiz	F1UNB_SL_R Vert
1	H	0.1	0.7
1	A	−0.1	2.0
1	G	0.0	1.1
1	F	0.0	2.2
1	E	0.0	6.6
1	C	0.0	4.3
1	B	0.0	4.4

Frame Line	Column Line	Dead Horiz	Dead Vert	Collateral Horiz	Collateral Vert	Live Horiz	Live Vert	Snow Horiz	Snow Vert	Wind_Left1 Horiz	Wind_Left1 Vert	Wind_Right1 Horiz	Wind_Right1 Vert
2*	H	5.2	6.3	0.6	0.6	45.6	46.5	23.9	24.4	−14.9	−15.1	−9.0	−11.6
2*	A	−5.2	6.9	−0.6	0.6	−45.6	49.5	−23.9	26.0	8.9	−12.3	14.7	−16.0

Frame Line	Column Line	Wind_Left2 Horiz	Wind_Left2 Vert	Wind_Right2 Horiz	Wind_Right2 Vert	Wind_Long1 Horiz	Wind_Long1 Vert	Wind_Long2 Horiz	Wind_Long2 Vert	Seismic_Left Horiz	Seismic_Left Vert	Seismic_Right Horiz	Seismic_Right Vert
2*	H	−9.6	−8.2	−4.1	−4.7	−14.1	−21.6	−8.7	−14.6	−0.4	−0.1	0.4	0.1
2*	A	4.2	−5.0	10.5	−8.7	13.0	−22.0	8.0	−14.7	−0.5	0.1	0.5	−0.1

Frame Line	Column Line	Seismic_Long Horiz	Seismic_Long Vert	MIN_SNOW Horiz	MIN_SNOW Vert	LWIND1_L2E Horiz	LWIND1_L2E Vert	LWIND1_R2E Horiz	LWIND1_R2E Vert	LWIND2_L2E Horiz	LWIND2_L2E Vert	LWIND2_R2E Horiz	LWIND2_R2E Vert
2*	H	0.0	−1.4	45.6	46.5	−0.2	−2.1	−0.5	−0.2	−0.2	−2.1	−0.5	−0.2
2*	A	0.0	−1.3	−45.6	49.5	0.6	−0.3	0.1	−2.1	0.6	−0.3	0.1	−2.1

Frame Line	Column Line	F2UNB_SL_L Horiz	F2UNB_SL_L Vert	F2UNB_SL_R Horiz	F2UNB_SL_R Vert
2*	H	18.8	24.1	22.1	16.1
2*	A	−18.7	13.6	−22.2	25.8

Frame Line	Column Line	Dead Horiz	Dead Vert	Collateral Horiz	Collateral Vert	Live Horiz	Live Vert	Snow Horiz	Snow Vert	Wind_Left1 Horiz	Wind_Left1 Vert	Wind_Right1 Horiz	Wind_Right1 Vert
4*	H	5.2	6.5	0.6	0.6	45.8	46.5	24.1	24.4	−15.0	−15.1	−9.0	−11.6
4*	A	−5.2	7.0	−0.6	0.6	−45.8	49.5	−24.1	26.0	8.9	−12.3	14.8	−16.0

Frame Line	Column Line	Wind_Left2 Horiz	Wind_Left2 Vert	Wind_Right2 Horiz	Wind_Right2 Vert	Wind_Long1 Horiz	Wind_Long1 Vert	Wind_Long2 Horiz	Wind_Long2 Vert	Seismic_Left Horiz	Seismic_Left Vert	Seismic_Right Horiz	Seismic_Right Vert
4*	H	−9.7	−8.2	−4.1	−4.7	−14.2	−21.6	−8.7	−14.6	−0.4	−0.1	0.4	0.1
4*	A	4.2	−5.0	10.5	−8.7	13.1	−22.0	8.1	−14.7	−0.5	0.1	0.5	−0.1

Frame Line	Column Line	Seismic_Long Horiz	Seismic_Long Vert	MIN_SNOW Horiz	MIN_SNOW Vert	LWIND1_L2E Horiz	LWIND1_L2E Vert	LWIND1_R2E Horiz	LWIND1_R2E Vert	LWIND2_L2E Horiz	LWIND2_L2E Vert	LWIND2_R2E Horiz	LWIND2_R2E Vert
4*	H	0.0	−1.4	45.8	46.5	−0.2	−2.1	−0.5	−0.2	−0.2	−2.1	−0.5	−0.2
4*	A	0.0	−1.3	−45.9	49.5	0.6	−0.3	0.1	−2.1	0.6	−0.3	0.1	−2.1

Frame Line	Column Line	F3UNB_SL_L Horiz	F3UNB_SL_L Vert	F3UNB_SL_R Horiz	F3UNB_SL_R Vert
4*	H	18.9	24.1	22.2	16.1
4*	A	−18.8	13.7	−22.3	25.8

Frame Line	Column Line	Dead Horiz	Dead Vert	Collateral Horiz	Collateral Vert	Live Horiz	Live Vert	Snow Horiz	Snow Vert	Wind_Left1 Horiz	Wind_Left1 Vert	Wind_Right1 Horiz	Wind_Right1 Vert
7	H	0.0	0.6	0.0	0.0	0.4	3.9	0.2	2.1	−1.9	−3.2	1.5	−0.8
7	A	0.0	0.7	0.0	0.0	−0.4	3.9	−0.2	2.1	−1.8	−0.2	1.5	−2.6
7	G	0.0	0.9	0.0	0.1	0.0	8.3	0.0	4.4	0.0	−3.1	0.0	−3.5
7	F	0.0	1.0	0.0	0.1	0.0	8.1	0.0	4.2	0.0	−3.9	0.0	−1.8
7	D	0.0	1.2	0.0	0.1	0.0	8.1	0.0	4.3	0.0	−2.3	0.0	−2.4
7	C	0.0	1.0	0.0	0.1	0.0	8.1	0.0	4.2	0.0	−2.3	0.0	−4.3
7	B	0.0	0.9	0.0	0.1	0.0	8.3	0.0	4.4	0.0	−4.0	0.0	−3.6

Frame Line	Column Line	Wind_Left2 Horiz	Wind_Left2 Vert	Wind_Right2 Horiz	Wind_Right2 Vert	Wind_Long1 Horiz	Wind_Long1 Vert	Wind_Long2 Horiz	Wind_Long2 Vert	Seismic_Left Horiz	Seismic_Left Vert	Seismic_Right Horiz	Seismic_Right Vert
7	H	−2.2	−2.2	1.2	0.2	0.5	−2.2	0.1	−1.2	−0.3	−0.4	0.3	0.4
7	A	−1.3	0.4	2.2	−2.0	−1.1	−1.4	−0.5	−0.7	−0.4	0.4	0.4	−0.4
7	G	0.0	−2.0	0.0	−2.4	0.0	−2.5	0.0	−1.5	0.0	0.5	0.0	−0.5
7	F	0.0	−2.9	0.0	−1.0	0.0	−2.5	0.0	−1.5	0.0	−0.1	0.0	0.1
7	D	0.0	−1.3	0.0	−1.4	0.0	−2.6	0.0	−1.5	0.0	0.0	0.0	0.0
7	C	0.0	−1.0	0.0	−3.1	0.0	−3.0	0.0	−1.7	0.0	0.1	0.0	−0.1
7	B	0.0	−2.7	0.0	−2.2	0.0	−3.3	0.0	−2.0	0.0	−0.5	0.0	0.6

Frame Line	Column Line	MIN_SNOW Horiz	MIN_SNOW Vert	LWIND1_L2E Horiz	LWIND1_L2E Vert	LWIND1_R2E Horiz	LWIND1_R2E Vert	LWIND2_L2E Horiz	LWIND2_L2E Vert	LWIND2_R2E Horiz	LWIND2_R2E Vert	F4UNB_SL_L Horiz	F4UNB_SL_L Vert
7	H	0.4	3.9	0.1	−0.5	−0.1	−0.2	0.1	−0.5	−0.1	−0.2	0.1	1.9
7	A	−0.4	4.0	0.1	−0.2	−0.1	−0.5	0.1	−0.2	−0.1	−0.5	−0.1	0.7
7	G	0.0	8.3	0.0	−0.8	0.0	0.2	0.0	−0.8	0.0	0.2	0.0	5.2
7	F	0.0	8.1	0.0	0.2	0.0	0.0	0.0	0.2	0.0	0.0	0.0	7.5
7	D	0.0	8.2	0.0	0.0	0.0	0.0	0.0	0.0	0.0	0.0	0.0	1.5
7	C	0.0	8.1	0.0	0.0	0.0	0.1	0.0	0.0	0.0	0.1	0.0	1.2
7	B	0.0	8.3	0.0	0.2	0.0	−0.8	0.0	0.2	0.0	−0.8	0.0	1.3

Frame Line	Column Line	F4UNB_SL_R Horiz	F4UNB_SL_R Vert
7	H	0.1	0.7
7	A	−0.2	2.0
7	G	0.0	1.0
7	F	0.0	2.5
7	D	0.0	6.6
7	C	0.0	4.1
7	B	0.0	4.5

2* Frame lines: 2 3
4* Frame lines: 4 5 6

RIGID FRAME: ANCHOR BOLTS & BASE PLATES

Frm Line	Col Line	Anc_Bolt Qty	Anc_Bolt Dia	Base_Plate (in) Width	Base_Plate (in) Length	Base_Plate (in) Thick	Grout (in)
7	H	4	0.750	6.000	11.00	0.375	48.0
7	A	4	0.750	6.000	11.00	0.375	0.0
7	G	4	0.625	6.000	10.00	0.375	48.0
7	F	4	0.625	6.000	10.00	0.375	48.0
7	D	4	0.625	6.000	10.50	0.375	0.0
7	C	4	0.625	6.000	10.00	0.375	0.0
7	B	4	0.625	6.000	10.00	0.375	0.0

ENDWALL COLUMN: BASIC COLUMN REACTIONS (k)

Frm Line	Col Line	Wind Press Horz	Wind Suct Horz	MIN_SNOW Horz	MIN_SNOW Vert	E1UNB_SL_L Horz	E1UNB_SL_L Vert	E1UNB_SL_R Horz	E1UNB_SL_R Vert	LWIND1_L Horz	LWIND1_L Vert	LWIND1_R Horz	LWIND1_R Vert
1	G	−3.1	3.4	0.0	9.1	0.0	5.4	0.0	1.3	0.0	−0.7	0.0	0.0
1	F	−4.1	4.5	0.0	7.6	0.0	7.4	0.0	2.1	0.0	0.1	0.0	0.0
1	E	−4.1	4.5	0.0	8.3	0.0	1.5	0.0	6.7	0.0	0.0	0.0	0.0
1	C	−3.7	4.1	0.0	8.2	0.0	1.3	0.0	4.2	0.0	0.0	0.0	0.1
1	B	−3.1	3.4	0.0	8.9	0.0	1.4	0.0	4.7	0.0	0.0	0.0	−0.7

Frm Line	Col Line	LWIND2_L Horz	LWIND2_L Vert	LWIND2_R Horz	LWIND2_R Vert
1	G	0.0	−0.7	0.0	0.0
1	F	0.0	0.1	0.0	0.0
1	E	0.0	0.0	0.0	0.0
1	C	0.0	0.0	0.0	0.1
1	B	0.0	0.0	0.0	−0.7

Frm Line	Col Line	Wind Press Horz	Wind Suct Horz	MIN_SNOW Horz	MIN_SNOW Vert	E2UNB_SL_L Horz	E2UNB_SL_L Vert	E2UNB_SL_R Horz	E2UNB_SL_R Vert	LWIND1_L Horz	LWIND1_L Vert	LWIND2_L Horz	LWIND2_L Vert
7	B	−3.1	3.4	0.0	9.0	0.0	4.8	0.0	1.4	0.0	−0.7	0.0	−0.7
7	C	−3.6	4.0	0.0	7.9	0.0	4.0	0.0	1.2	0.0	0.1	0.0	0.1
7	D	−4.1	4.5	0.0	8.3	0.0	6.7	0.0	1.5	0.0	0.0	0.0	0.0
7	F	−3.6	4.0	0.0	8.0	0.0	2.4	0.0	7.4	0.0	0.0	0.0	0.0
7	G	−3.1	3.4	0.0	9.0	0.0	1.2	0.0	5.4	0.0	0.0	0.0	0.0

GENERAL NOTES

1. THE REACTIONS PROVIDED ARE BASED ON THE ORDER DOCUMENTS AT THE TIME OF MAILING. ANY CHANGES TO BUILDING LOADS OR DIMENSIONS MAY CHANGE THE REACTIONS. THE REACTIONS WILL BE SUPERSEDED AND VOIDED BY ANY FUTURE MAILING.
2. REACTIONS ARE PROVIDED AS UN-FACTORED FOR EACH LOAD GROUP APPLIED TO THE COLUMN. THE FOUNDATION ENGINEER WILL APPLY THE APPROPRIATE LOAD FACTORS AND COMBINE THE REACTIONS IN ACCORDANCE WITH THE BUILDING CODE AND DESIGN SPECIFICATIONS TO DETERMINE BEARING PRESSURES AND CONCRETE DESIGN. THE FACTORS APPLIED TO LOAD GROUPS FOR THE STEEL COLUMN DESIGN MAY BE DIFFERENT THAN THE FACTORS USED IN THE FOUNDATION DESIGN.
3. THE MANUFACTURER DOES NOT PROVIDE "MAXIMUM" LOAD COMBINATION REACTIONS. HOWEVER, THE INDIVIDUAL LOAD REACTIONS PROVIDED MAY BE USED BY THE FOUNDATION ENGINEER TO DETERMINE THE APPLICABLE LOAD COMBINATIONS FOR HIS/HER DESIGN PROCEDURES AND ALLOW FOR AN ECONOMICAL FOUNDATION DESIGN
4. THE METAL BUILDING MANUFACTURER IS RESPONSIBLE FOR THE DESIGN OF THE ANCHOR BOLT DIAMETER ONLY TO PERMIT THE TRANSFER OF FORCES BETWEEN THE BASE PLATE AND THE ANCHOR BOLT IN SHEAR, BEARING AND TENSION, BUT IS NOT RESPONSIBLE FOR THE ANCHOR BOLT EMBEDMENT FOR TRANSFER OF FORCES TO THE FOUNDATION. THE METAL BUILDING MANUFACTURER DOES NOT DESIGN AND IS NOT RESPONSIBLE FOR THE DESIGN, MATERIAL AND CONSTRUCTION OF THE FOUNDATION EMBEDMENTS. THE END USE CUSTOMER SHOULD ASSURE HIMSELF THAT ADEQUATE PROVISIONS ARE MADE IN THE FOUNDATION DESIGN FOR LOADS IMPOSED BY COLUMN REACTIONS OF THE BUILDING, OTHER IMPOSED LOADS, AND BEARING CAPACITY OF THE SOIL AND OTHER CONDITIONS OF THE BUILDING SITE. IT IS RECOMMENDED THAT THE ANCHORAGE AND FOUNDATION OF THE BUILDING BE DESIGNED BY A REGISTERED PROFESSIONAL ENGINEER EXPERIENCED IN THE DESIGN OF SUCH STRUCTURES, (SECTION A3 MBMA 2006 METAL BUILDING SYSTEMS MANUAL)
5. BOTTOM OF ALL BASE PLATES ARE AT THE SAME ELEVATION. (UNLESS NOTED).
6. ANCHOR RODS ARE ASTM F1554 GRADE 36 MATERIAL UNLESS NOTED OTHERWISE.

ENDWALL COLUMN: ANCHOR BOLTS & BASE PLATES

Frm Line	Col Line	Anc_Bolt Qty	Anc_Bolt Dia	Base_Plate (in) Width	Base_Plate (in) Length	Base_Plate (in) Thick	Grout (in)
1	G	4	0.625	6.000	10.00	0.375	48.0
1	F	4	0.625	6.000	10.50	0.375	0.0
1	E	4	0.625	6.000	10.50	0.375	0.0
1	C	4	0.625	6.000	10.00	0.375	0.0
1	B	4	0.625	6.000	10.00	0.375	0.0
7	B	4	0.625	6.000	10.00	0.375	0.0
7	C	4	0.625	6.000	10.00	0.375	0.0
7	D	4	0.625	6.000	10.50	0.375	0.0
7	F	4	0.625	6.000	10.00	0.375	48.0
7	G	4	0.625	6.000	10.00	0.375	48.0

NOTES FOR REACTIONS

BUILDING REACTIONS ARE BASED ON THE FOLLOWING BUILDING DATA:

WIDTH (FT)	= 120
LENGTH (FT)	= 120
EAVE HEIGHT (FT)	= 24 / 20
ROOF SLOPE (rise/12)	= 2.0:12 / 2.0:12
DEAD LOAD (psf)	= 2.000
COLLATERAL LOAD (psf)	= 0.5
ROOF LIVE LOAD (psf)	= 40.00
FRAME LIVE LOAD (psf)	= 40
ROOF SNOW LOAD (psf)	= 21
GROUND SNOW LOAD (psf)	= 30.0000
WIND SPEED (MPH)	= 90
WIND CODE	= IBC 09
EXPOSURE	= C
CLOSED/OPEN	= Closed
IMPORTANCE – WIND	= 1.00
IMPORTANCE – SEISMIC	= 1.00
SEISMIC ZONE	= B

ANCHOR BOLT SUMMARY

Qty	Locate	Dia (in)	Type	Proj (in)
○ 36	Jamb	5/8"	F1554	2.00
○ 40	Endwall	5/8"	F1554	2.00
⊠ 16	Frame	3/4"	F1554	2.50
⊕ 60	Frame	1"	F1554	3.00
○ 12	Jamb	1/2"	-----	----

BUILDING BRACING REACTIONS

Wall Loc	Wall Line	Col Line	Reactions in plane of wall ± Reactions(k) Wind Horz	Wind Vert	Seismic Horz	Seismic Vert	Panel_Shear (lb/ft) Wind	Seis	Note
L_EW	1								(h)
F_SW	A	2,3	4.9	*	1.5	*			
		3,4	4.9	*	1.5	*			
R_EW	7								(h)
B_SW	H	4,3	5.3	*	1.5	*			
		3,2	5.3	*	1.5	*			

(h)Rigid frame at endwall

*See RF reactions table for vertical and horizontal reactions in plane of the rigid frame.

FRAME LINES: 1

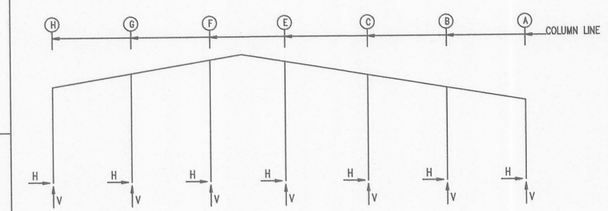

FRAME LINES: 2 3 4 5 6

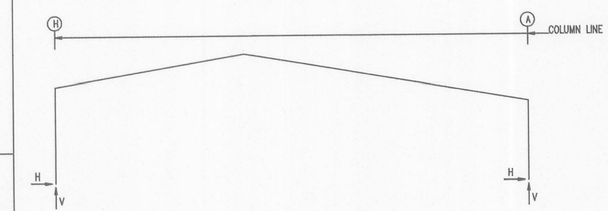

FRAME LINES: 7

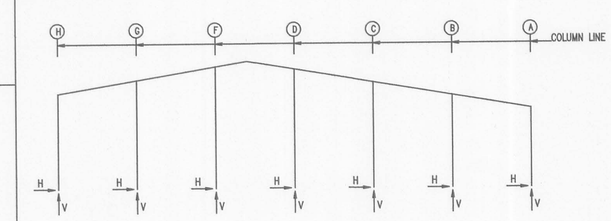

RIGID FRAME: ANCHOR BOLTS & BASE PLATES

Frm Line	Col Line	Anc_Bolt Qty	Anc_Bolt Dia	Base_Plate (in) Width	Base_Plate (in) Length	Base_Plate (in) Thick	Grout (in)
1	H	4	0.750	6.000	10.50	0.375	48.0
1	A	4	0.750	6.000	10.50	0.375	0.0
1	G	4	0.625	6.000	10.50	0.375	48.0
1	F	4	0.625	6.000	10.50	0.375	0.0
1	E	4	0.625	6.000	10.50	0.375	0.0
1	C	4	0.625	6.000	10.00	0.375	0.0
1	B	4	0.625	6.000	10.00	0.375	0.0

RIGID FRAME: ANCHOR BOLTS & BASE PLATES

Frm Line	Col Line	Anc_Bolt Qty	Anc_Bolt Dia	Base_Plate (in) Width	Base_Plate (in) Length	Base_Plate (in) Thick	Grout (in)
2*	H	6	1.000	8.000	15.00	0.625	48.0
2*	A	6	1.000	8.000	15.00	0.625	0.0

2* Frame lines: 2 3

RIGID FRAME: ANCHOR BOLTS & BASE PLATES

Frm Line	Col Line	Anc_Bolt Qty	Anc_Bolt Dia	Base_Plate (in) Width	Base_Plate (in) Length	Base_Plate (in) Thick	Grout (in)
4*	H	6	1.000	10.00	15.00	0.625	48.0
4*	A	6	1.000	10.00	15.00	0.625	0.0

4* Frame lines: 4 5 6

Revision	Date	Description	By	Ck'd
0	11/27/17	FOR ERECTOR INSTALLATION	RAV	KYG
1	02/12/18	REV. FOR ERECTOR INSTALLATION	ADN	ADR

MID-WEST
7301 FAIRVIEW ◆ HOUSTON, TEXAS ◆ P.O. BOX 40338
ZIP 77001 (713) 466-7788 ZIP 77240

Project Name & Location:
420 EAST HEREFORD AVENUE
RATON, NM, 87740
COLFAX

Customer:
STEEL DEPOT HOBBS
2112 S. MAGNOLIA RD
HOBBS, NM 88240
DARLA JOHNSON

Drawing Status:
☐ Preliminary (Not For Construction)
☐ For Approval (Not For Construction)
☐ For Construction Permit
☒ For Erector Installation

Scale: NOT TO SCALE
Drawn by: ADN 02/12/18
Checked by: ADR 02/12/18
Project Engineer: MSP
Job Number: 16–B–26319
Sheet Number: F2

The engineer whose seal appears hereon is an employee for the manufacturer for the materials described herein. Said seal or certification is limited to the products designed and manufactured by manufacturer only.The undersigned engineer is not the overall engineer of record for this project.

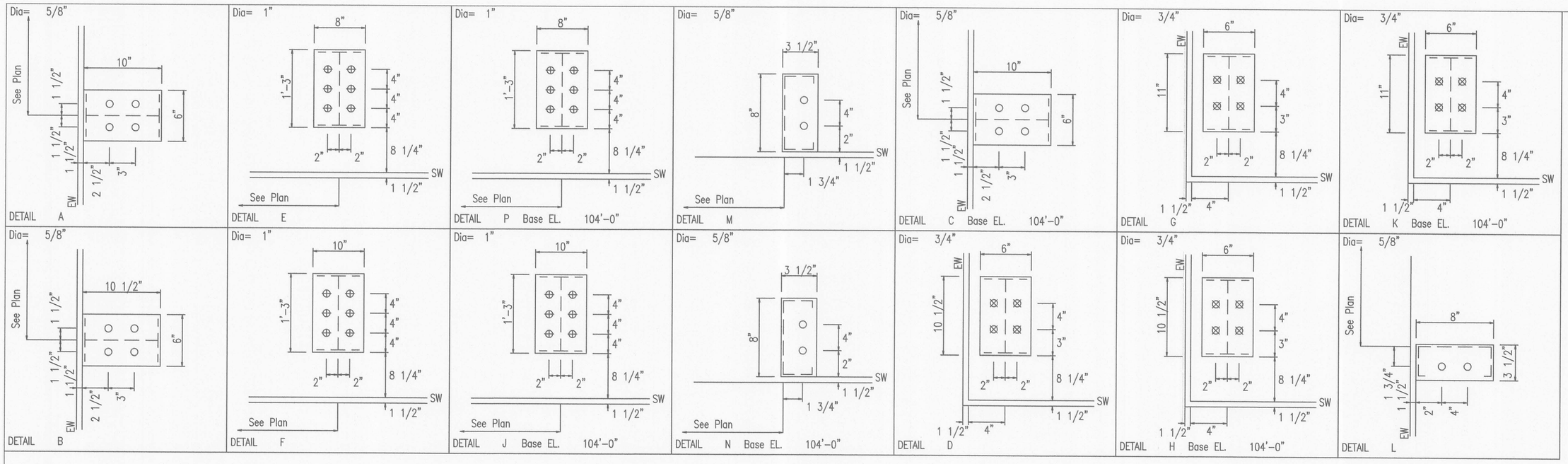

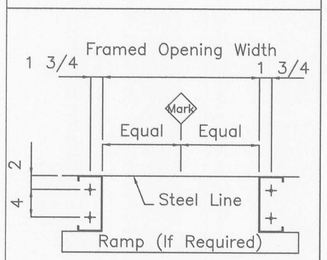

ARDia	Framed Opening AR Layout
5/8"	

AISC CODE OF STANDARD PRACTICE TOLERANCES FOR SETTING ANCHOR RODS

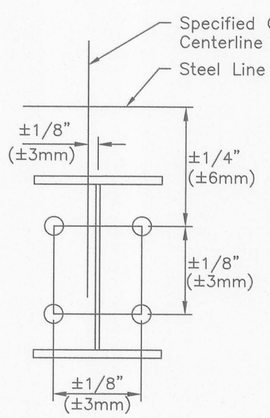

ANCHOR ROD SETTING TOLERANCES

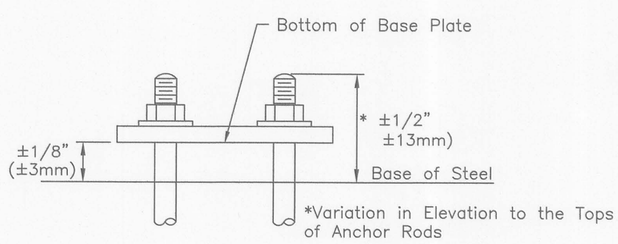

BASE PLATE AND ANCHOR ROD TOLERANCES

Knock Down Walk Door Anchor Placement

Page AC05130
Date Oct '16 Rev 02

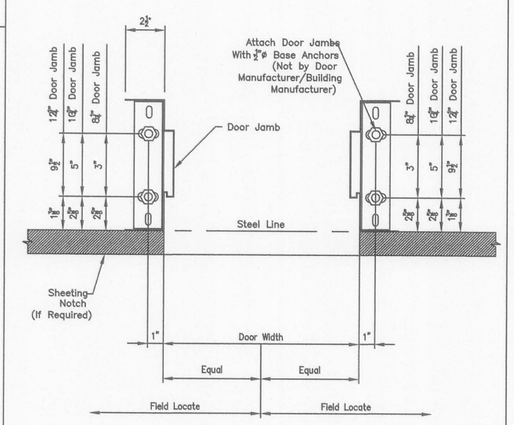

The Adequacy of these Base Anchor is not the Responsibility of the Building Manufacturer. The Adequacy of These Base Anchors Should be Determined by a Qualified Foundation Engineer.

DETAIL – R

Revision	Date	Description	By	Ck'd
0	11/27/17	FOR ERECTOR INSTALLATION	RAV	KYG

MID-WEST STEEL BUILDING COMPANY
7301 FAIRVIEW ◆ HOUSTON, TEXAS ◆ P.O. BOX 40338
ZIP 77041 (713) 466-7788 ZIP 77240

Project Name & Location:
420 EAST HEREFORD AVENUE
RATON, NM, 87740
COLFAX

Customer:
STEEL DEPOT HOBBS
212 S. MAGNUM RD
HOBBS, NM, 88240
DARLA JOHNSON

Drawing Status:
☐ Preliminary (Not For Construction)
☐ For Approval (Not For Construction)
☐ For Construction Permit
☒ For Erector Installation

Scale:	NOT TO SCALE
Drawn by:	RAV 11/27/17
Checked by:	KYG 11/27/17
Project Engineer:	MSP
Job Number:	16-B-26319
Sheet Number:	F3

The engineer whose seal appears hereon is an employee for the manufacturer for the materials described herein. Said seal or certification is limited to the products designed and manufactured by manufacturer only.The undersigned engineer is not the overall engineer of record for this project.

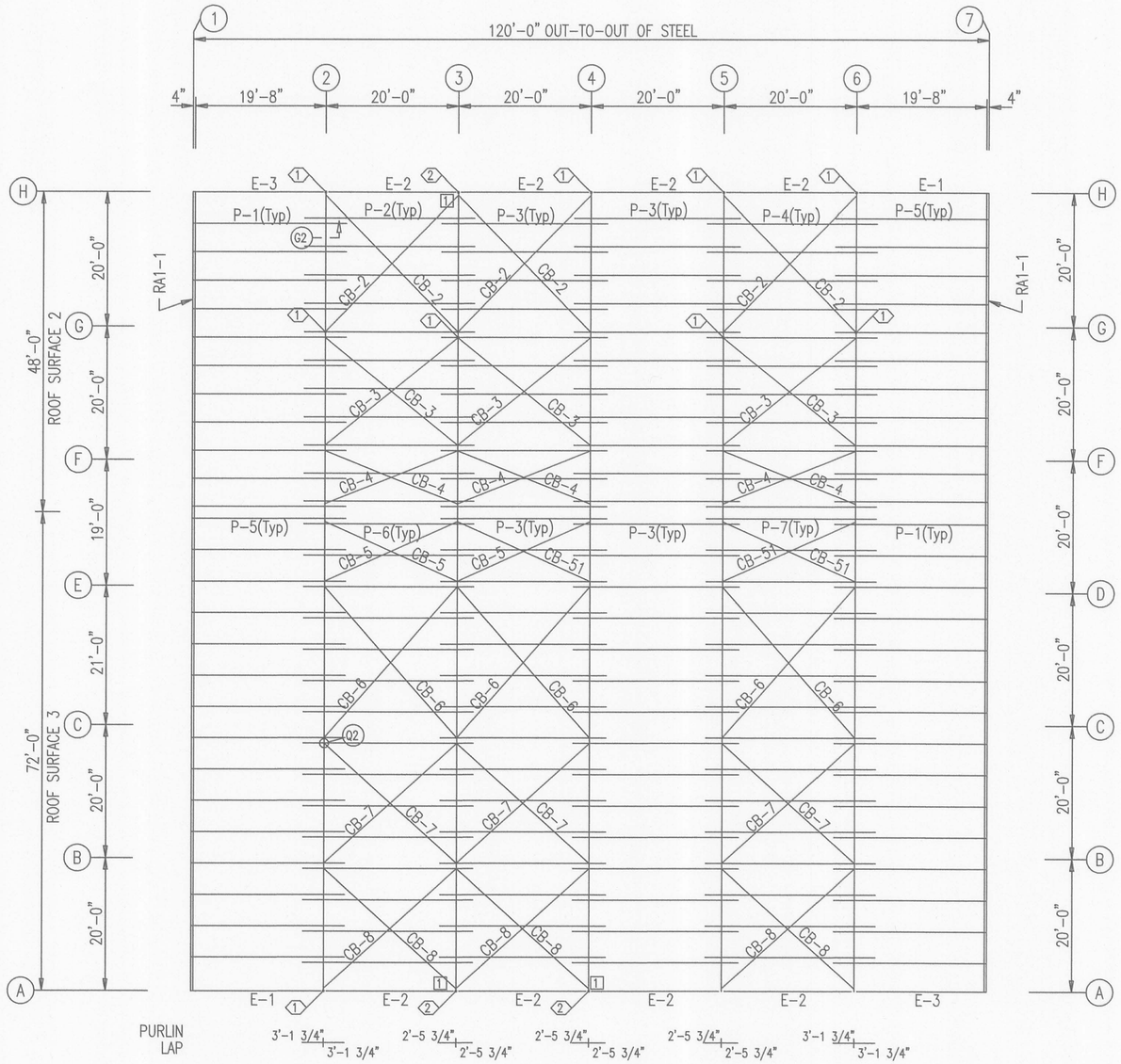

ROOF FRAMING PLAN

SPECIAL BOLTS ROOF PLAN					
◇ ID	QUAN	TYPE	DIA	LENGTH	WASH
1	2	A325	1/2"	1 1/4"	2
2	4	A325	1/2"	1 1/4"	0

MEMBER TABLE ROOF PLAN		
MARK	PART	LENGTH
P-1	8X25Z14	23'-1 1/2"
P-2	8X25Z16	25'-7 1/2"
P-3	8X25Z16	24'-11 1/2"
P-4	8X25Z16	25'-7 1/2"
P-5	8X25Z14	23'-1 1/2"
P-6	8X25Z14	25'-7 1/2"
P-7	8X25Z14	25'-7 1/2"
E-1	8ES2L14	19'-11 1/2"
E-2	8ES2L14	19'-11 1/2"
E-3	8ES2L14	19'-11 1/2"
CB-2	3/8" CABLE	28'-9"
CB-3	3/8" CABLE	26'-5"
CB-4	3/8" CABLE	22'-2"
CB-5	3/8" CABLE	22'-7"
CB-6	3/8" CABLE	31'-1"
CB-7	3/8" CABLE	27'-8"
CB-8	3/8" CABLE	27'-2"
CB-51	3/8" CABLE	22'-4"

CONNECTION PLATES ROOF PLAN	
☐ ID	MARK/PART
1	SC18

Revision	Date	Description	By	Ck'd
A	11/27/17	FOR CONSTRUCTION PERMIT	RAV	KYG
0	02/12/18	FOR ERECTOR INSTALLATION	ADN	ADR

MID-WEST
7301 FAIRVIEW ◆ HOUSTON, TEXAS ◆ P.O. BOX 40338
ZIP 77041 (713) 466-7788 ZIP 77240

Project Name & Location:
420 EAST HEREFORD AVENUE
RATON, NM, 87740
COLFAX

Customer:
STEEL DEPOT HOBBS
212 S MAGNUM RD
HOBBS, NM, 88240
DARLA JOHNSON

Drawing Status:
☐ Preliminary (Not For Construction)
☐ For Approval (Not For Construction)
☐ For Construction Permit
☒ For Erector Installation

Scale:	NOT TO SCALE
Drawn by:	ADN 02/12/18
Checked by:	ADR 02/12/18
Project Engineer:	MSP
Job Number:	16-B-26319
Sheet Number:	E1

The engineer whose seal appears hereon is an employee for the manufacturer for the materials described herein. Said seal or certification is limited to the products designed and manufactured by manufacturer only.The undersigned engineer is not the overall engineer of record for this project.

SCHEDULE OF FASTENERS		
NO. REQD	DESCRIPTION	COLOR
#3A	12–14 x 1 1/2" SD Screw, Washer (Long Life)	Galvalume
#4	1/4–14 x 7/8 SD Screw, Washer (Long Life)	Galvalume

ROOF TO MEET UL90 REQUIREMENTS, SEE DETAILS FOR SPECIFIC INSTRUCTIONS.

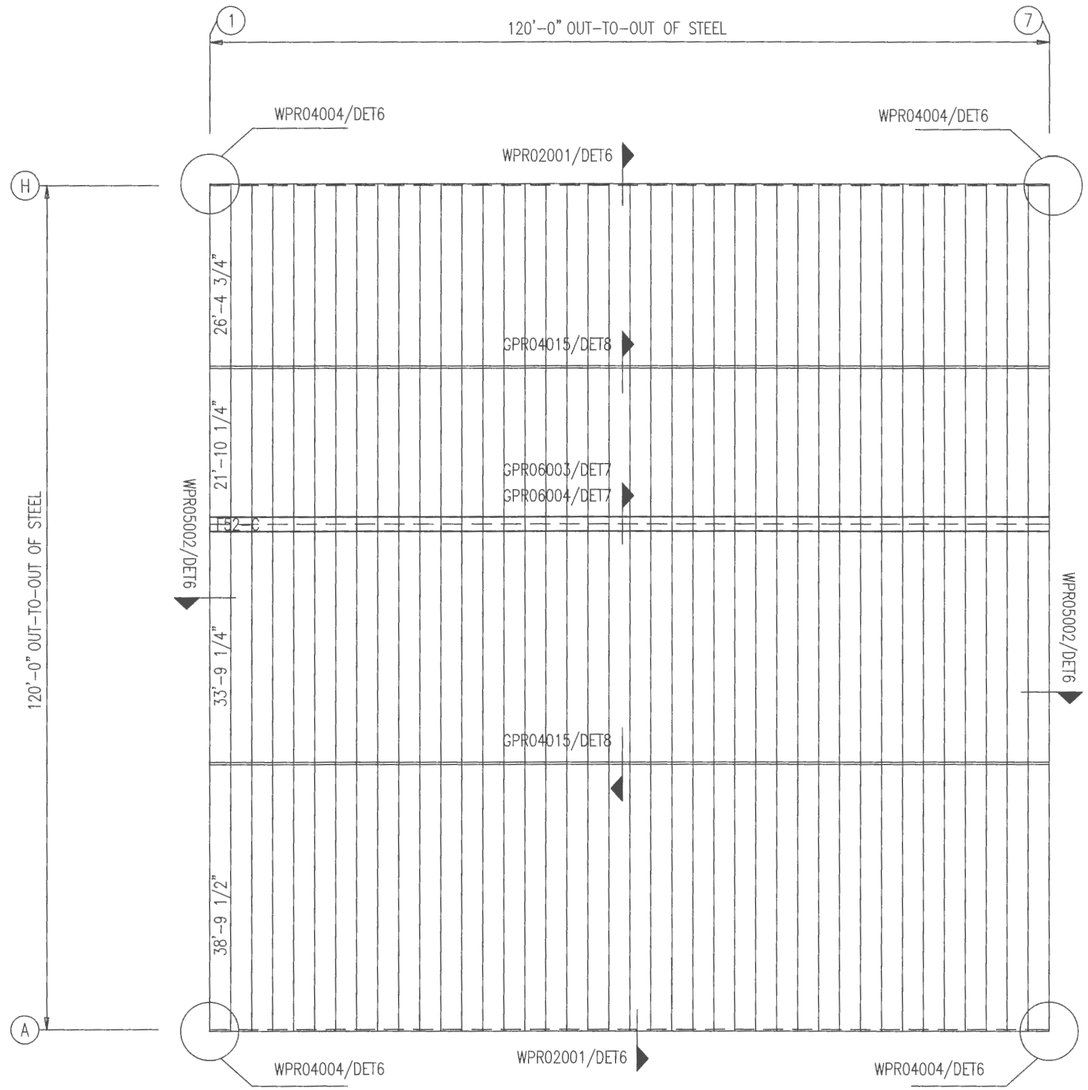

PANEL TYPE = PBR (Galvalume)
PANEL COVERAGE = 3'–0"
PANEL OVER HANG = 3"
FROM OUTER STEEL LINE

PANEL TYPE = PBR (Galvalume)
PANEL COVERAGE = 3'–0"
PANEL OVER HANG = 3"
FROM OUTER STEEL LINE

ROOF SHEETING PLAN

PANELS: 26 Gauge PBR – Galvalume

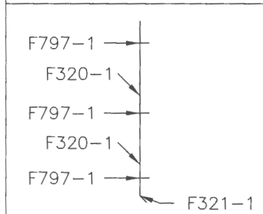

DOWNSPOUT LAYOUT
(4 Required at SWA)

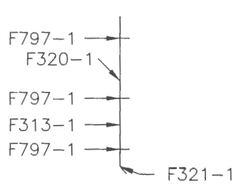

DOWNSPOUT LAYOUT
(4 Required at SWC)

SEE DP00001/DET6

THE DOWNSPOUTS ARE TO BE PLACED ON THE BUILDING SIDEWALLS AT A SPACING NOT TO EXCEED 83 FEET WITH THE FIRST DOWNSPOUT AT BOTH ENDS OF THE GUTTER. DOWNSPOUT SPACING THAT DOES NOT EXCEED THE MAXIMUM SPACING WILL BE IN COMPLIANCE WITH THE BUILDING CODE.

Revision	Date	Description	By	Ck'd
A	11/27/17	FOR CONSTRUCTION PERMIT	RAV	KYG
0	02/12/18	FOR ERECTOR INSTALLATION	ADN	ADR

MID-WEST
7301 FAIRVIEW • HOUSTON, TEXAS • P.O. BOX 40338
ZIP 77041 (713) 466-7788 ZIP 77240

Customer:
STEEL DEPOT HOBBS
212 S MAGNUM RD
HOBBS, NM, 88240
DARLA JOHNSON

Project Name & Location:
420 EAST HEREFORD AVENUE
RATON, NM, 87740
COLFAX

Drawing Status:
☐ Preliminary (Not For Construction)
☐ For Approval (Not For Construction)
☐ For Construction Permit
☒ For Erector Installation

Scale:	NOT TO SCALE	
Drawn by:	ADN	02/12/18
Checked by:	ADR	02/12/18
Project Engineer:	MSP	
Job Number:	16–B–26319	
Sheet Number:	E2	

The engineer whose seal appears hereon is an employee for the manufacturer for the materials described herein. Said seal or certification is limited to the products designed and manufactured by manufacturer only.The undersigned engineer is not the overall engineer of record for this project.

SCHEDULE OF FASTENERS

NO. REQD	DESCRIPTION	COLOR
#17B	12-14 x 1 1/2 SD Screw, Washer	Light Stone
#4A	1/4-14 x 7/8 SD Screw, Washer	Light Stone

SCHEDULE OF ACCESSORIES

NO. REQD	DESCRIPTION
1	3070 KNOCK DOWN WALK DOOR

REFER TO DETAILS ON INSTALLATION OF WALK DOORS. USE STANDARD WALL PROCEDURES TO ERECT THE SIDEWALL AND ENDWALL PANELS.

MEMBER TABLE
FRAME LINE A

MARK	PART	LENGTH
DJ-5	8F35C12	18'-0"
DH-2	8F25C16	14'-0"
E-1	8ES2L14	19'-11 1/2"
E-2	8ES2L14	19'-11 1/2"
E-3	8ES2L14	19'-11 1/2"
G-26	8X25Z16	21'-5 1/2"
G-27	8X25Z16	22'-11 1/2"
G-28	8X25Z16	24'-2"
G-29	8X25Z16	21'-9 1/2"
G-30	8X25Z16	5'-4 1/2"
G-31	8X25Z16	22'-11 1/2"
G-32	8X25Z16	21'-5 1/2"
G-33	8X25Z16	2'-8"
CB-1	3/8" CABLE	27'-8"

CONNECTION PLATES
FRAME LINE A

☐ ID	MARK/PART
1	SC-5

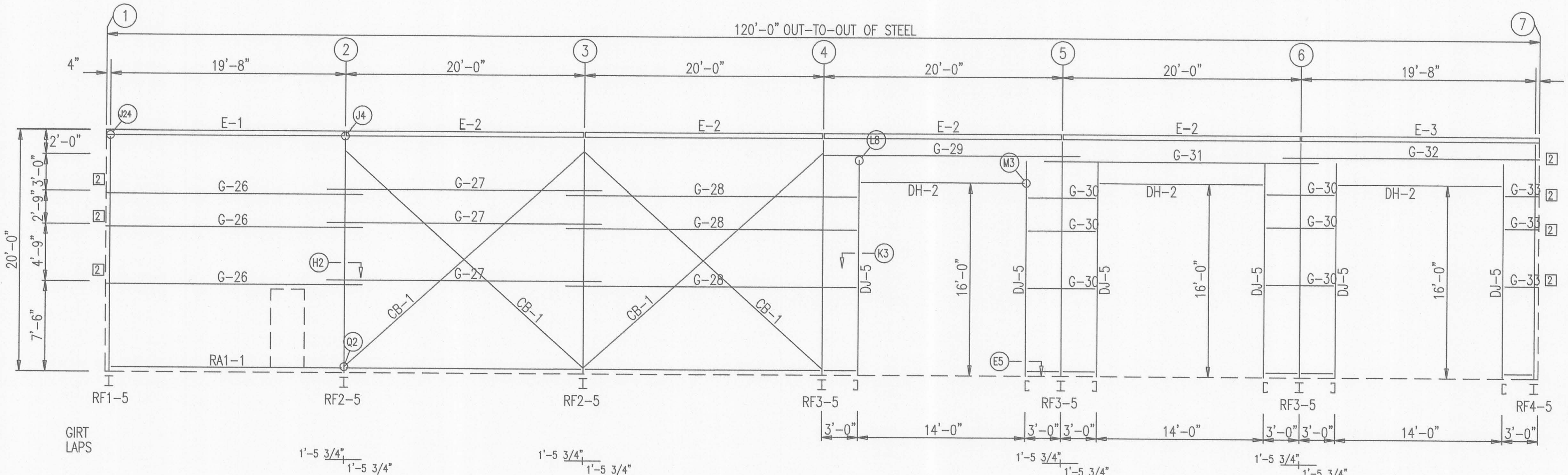

SIDEWALL FRAMING: FRAME LINE A

CL292- FASTENS BETWEEN THE GIRTS ON EACH SIDE OF THE ENDWALL COLUMNS, AT ALL GIRT ELEVATIONS. REFER TO DETAILS.

PC30- FASTENS BETWEEN THE GIRTS ON EACH SIDE OF THE ENDWALL COLUMNS, AT ALL GIRT ELEVATIONS. REFER TO DETAILS.

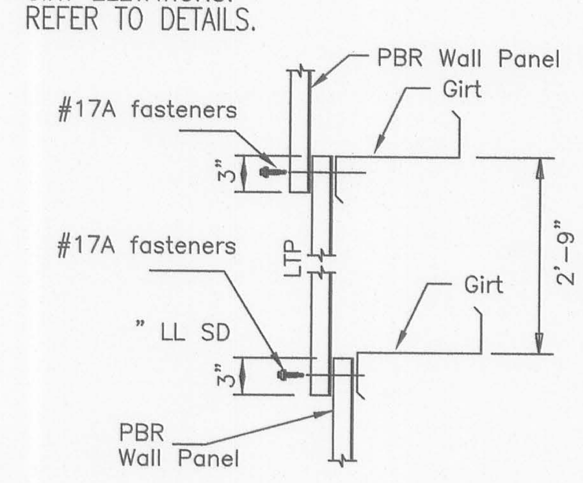

SECTION-A

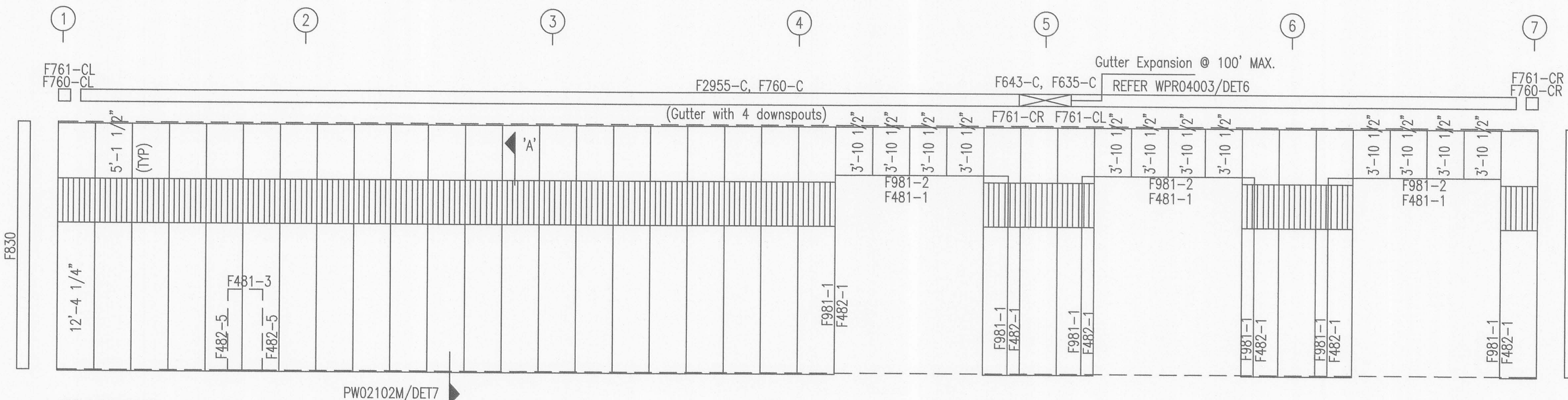

PBR WALL PANELS
PANEL COVERAGE = 3'-0"
COLOR = Light Stone

SIDEWALL SHEETING & TRIM: FRAME LINE A

PANELS: 26 Gauge PBR - Light Stone

FIELD CUT PANEL AS REQUIRED

NOTE:
LTP'S TO BE FIELD LOCATED & FIELD CUT (BY OTHERS)

INSTALLATION MUST COMPLY WITH OSHA REQUIREMENTS

Revision	Date	Description	By	Ck'd
A	11/27/17	FOR CONSTRUCTION PERMIT	RAV	KYG
0	02/12/18	FOR ERECTOR INSTALLATION	ADN	ADR

MID-WEST STEEL BUILDING COMPANY
7301 FAIRVIEW ◆ HOUSTON, TEXAS ◆ P.O. BOX 40338
ZIP 77041 (713) 466-7788 ZIP 77240

Customer:
STEEL DEPOT HOBBS
212 S MAGNUM RD
HOBBS, NM, 88240
DARLA JOHNSON

Project Name & Location:
420 EAST HEREFORD AVENUE
RATON, NM, 87740
COLFAX

Drawing Status:
☐ Preliminary (Not For Construction)
☐ For Approval (Not For Construction)
☐ For Construction Permit
☒ For Erector Installation

Scale: NOT TO SCALE
Drawn by: ADN 02/12/18
Checked by: ADR 02/12/18
Project Engineer: MSP
Job Number: 16-B-26319
Sheet Number: E3

The engineer whose seal appears hereon is an employee for the manufacturer for the materials described herein. Said seal or certification is limited to the products designed and manufactured by manufacturer only.The undersigned engineer is not the overall engineer of record for this project.

SCHEDULE OF FASTENERS

NO. REQD	DESCRIPTION	COLOR
#17B	12-14 x 1 1/2 SD Screw, Washer	Light Stone
#4A	1/4-14 x 7/8 SD Screw, Washer	Light Stone

SCHEDULE OF ACCESSORIES

NO. REQD	DESCRIPTION
1	3070 KNOCK DOWN WALK DOOR

REFER TO DETAILS ON INSTALLATION OF WALK DOORS. USE STANDARD WALL PROCEDURES TO ERECT THE SIDEWALL AND ENDWALL PANELS.

MEMBER TABLE
FRAME LINE H

MARK	PART	LENGTH
DJ-6	8F35C12	15'-0"
DJ-7	8F35C12	12'-3"
DH-1	8F25C16	12'-0"
DH-2	8F25C16	14'-0"
E-1	8ES2L14	19'-11 1/2"
E-2	8ES2L14	19'-11 1/2"
E-3	8ES2L14	19'-11 1/2"
G-27	8X25Z16	22'-11 1/2"
G-30	8X25Z16	5'-4 1/2"
G-31	8X25Z16	22'-11 1/2"
G-35	8X25Z16	2'-8"
G-36	8X25Z14	21'-5 1/2"
G-39	8X25Z16	24'-2"
G-42	8X25Z16	5'-0"
G-43	8X25Z13	21'-5 1/2"
G-44	8X25Z16	21'-5 1/2"
G-46	8X25Z16	3'-10"
CB-1	3/8" CABLE	27'-8"

CONNECTION PLATES
FRAME LINE H

☐ID	MARK/PART
2	SC-5

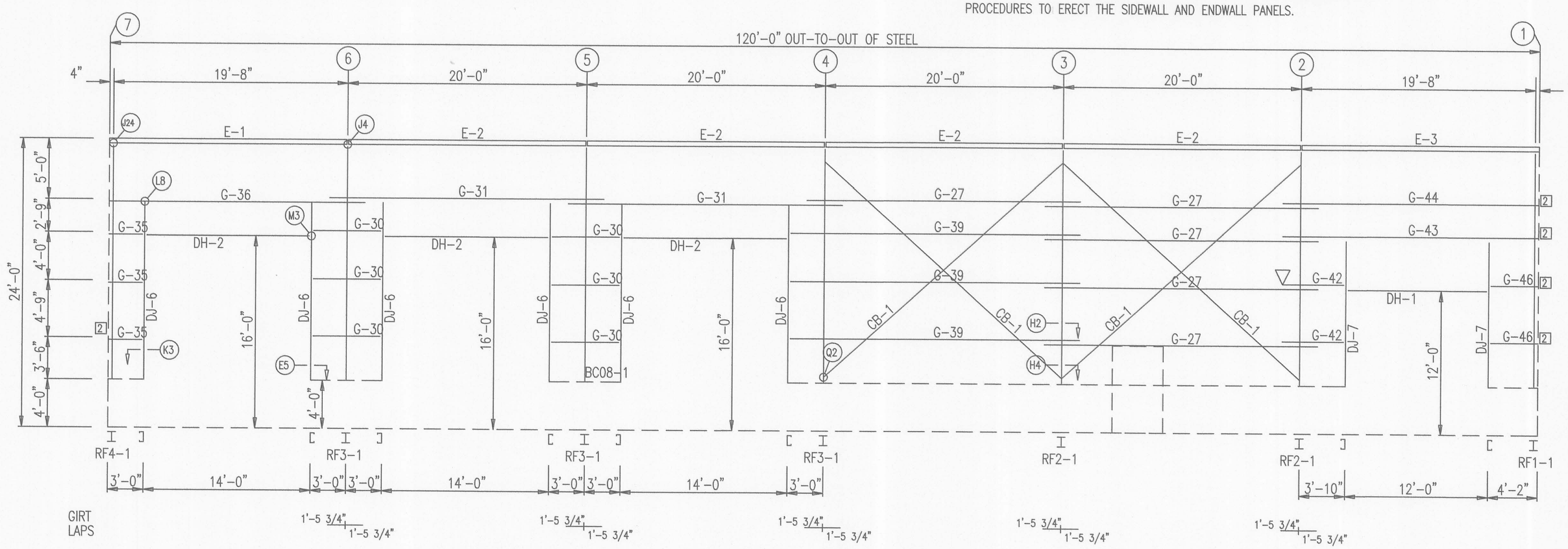

SIDEWALL FRAMING: FRAME LINE H

CL292- FASTENS BETWEEN THE GIRTS ON EACH SIDE OF THE ENDWALL COLUMNS, AT ALL GIRT ELEVATIONS. REFER TO DETAILS.

PC30- FASTENS BETWEEN THE GIRTS ON EACH SIDE OF THE ENDWALL COLUMNS, AT ALL GIRT ELEVATIONS. REFER TO DETAILS.

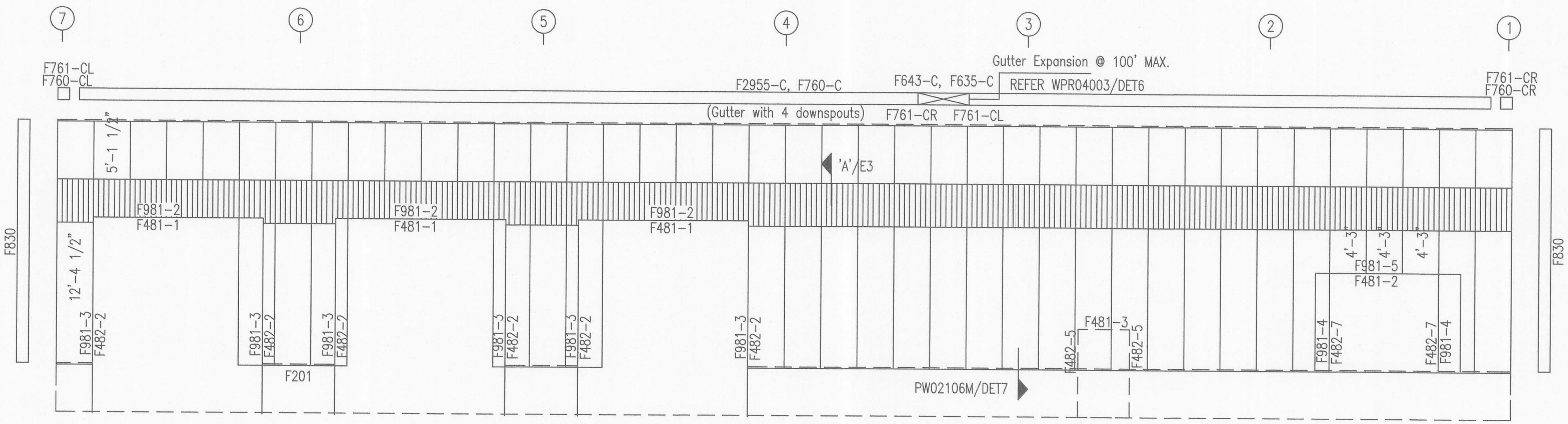

PBR WALL PANELS
PANEL COVERAGE = 3'-0"
COLOR = Light Stone

FIELD CUT PANEL AS REQUIRED

SIDEWALL SHEETING & TRIM: FRAME LINE H

PANELS: 26 Gauge PBR – Light Stone

NOTE:
LTP'S TO BE FIELD LOCATED & FIELD CUT (BY OTHERS)
INSTALLATION MUST COMPLY WITH OSHA REQUIREMENTS

Revision	Date	Description	By	Ck'd
A	11/27/17	FOR CONSTRUCTION PERMIT	RAV	KYG
0	02/12/18	FOR ERECTOR INSTALLATION	ADN	ADR

MID-WEST STEEL BUILDING COMPANY
7301 FAIRVIEW ◆ HOUSTON, TEXAS ◆ P.O. BOX 40338
ZIP 77041 (713) 466-7788 ZIP 77240

Customer:
STEEL DEPOT HOBBS
212 S MAGNUM RD
HOBBS, NM, 88240
DARLA JOHNSON

Project Name & Location:
420 EAST HEREFORD AVENUE
RATON, NM, 87740
COLFAX

Drawing Status:
☐ Preliminary (Not For Construction)
☐ For Approval (Not For Construction)
☐ For Construction Permit
☒ For Erector Installation

Scale: NOT TO SCALE
Drawn by: ADN 02/12/18
Checked by: ADR 02/12/18
Project Engineer: MSP
Job Number: 16-B-26319
Sheet Number: E4

The engineer whose seal appears hereon is an employee for the manufacturer for the materials described herein. Said seal or certification is limited to the products designed and manufactured by manufacturer only.The undersigned engineer is not the overall engineer of record for this project.

SCHEDULE OF FASTENERS

NO. REQD	DESCRIPTION	COLOR
#17B	12-14 x 1 1/2 SD Screw, Washer	Light Stone
#4A	1/4-14 x 7/8 SD Screw, Washer	Light Stone

SCHEDULE OF ACCESSORIES

NO. REQD	DESCRIPTION
1	3070 KNOCK DOWN WALK DOOR

REFER TO DETAILS ON INSTALLATION OF WALK DOORS. USE STANDARD WALL PROCEDURES TO ERECT THE SIDEWALL AND ENDWALL PANELS.

BEARING FRAME ONLY!
WASHER TO BE USED AT ENDWALL COLUMN TO ENDWALL RAFTER CONNECTION. USE ONE WASHER ON COLUMN SIDE. WASHER NOT NEEDED ON CLIP SIDE.

BOLT TABLE
FRAME LINE 1

LOCATION	QUAN	TYPE	DIA	LENGTH
Columns/Raf	4	A325	5/8"	1 1/2"

MEMBER TABLE
FRAME LINE 1

MARK	PART	LENGTH
EC-1	W10X12	21'-9 5/16"
EC-2	W10X22	29'-1 1/2"
EC-3	W10X17	28'-7 5/16"
EC-4	W10X12	25'-1 5/16"
EC-5	W10X12	21'-9 5/16"
DJ-1	8F35C12	14'-3"
DJ-2	8F35C12	14'-3"
DJ-3	8F35C12	14'-0"
DJ-4	8F35C12	14'-0"
DH-1	8F25C16	12'-0"
G-2	8X25Z14	18'-0 1/4"
G-3	8X25Z16	18'-0 1/4"
G-4	8X25Z16	6'-1 5/8"
G-6	8X25Z16	6'-4 1/4"
G-7	8X25Z12	19'-3 7/8"
G-8	8X25Z16	19'-3 7/8"
G-9	8X25Z13	19'-3 7/8"
G-10	8X25Z12	18'-3 3/4"
G-11	8X25Z14	18'-3 3/4"
G-12	8X25Z13	18'-3 3/4"
G-13	8X25Z16	5'-4 1/8"
G-14	8X25Z13	20'-3 7/8"
G-15	8X25Z16	20'-3 7/8"
G-16	8X25Z14	20'-3 7/8"
G-17	8X25Z14	19'-3 7/8"
G-18	8X25Z16	2'-1 5/8"
G-19	8X25Z16	9'-1 5/8"

CONNECTION PLATES
FRAME LINE 1

☐ ID	MARK/PART
1	PC22

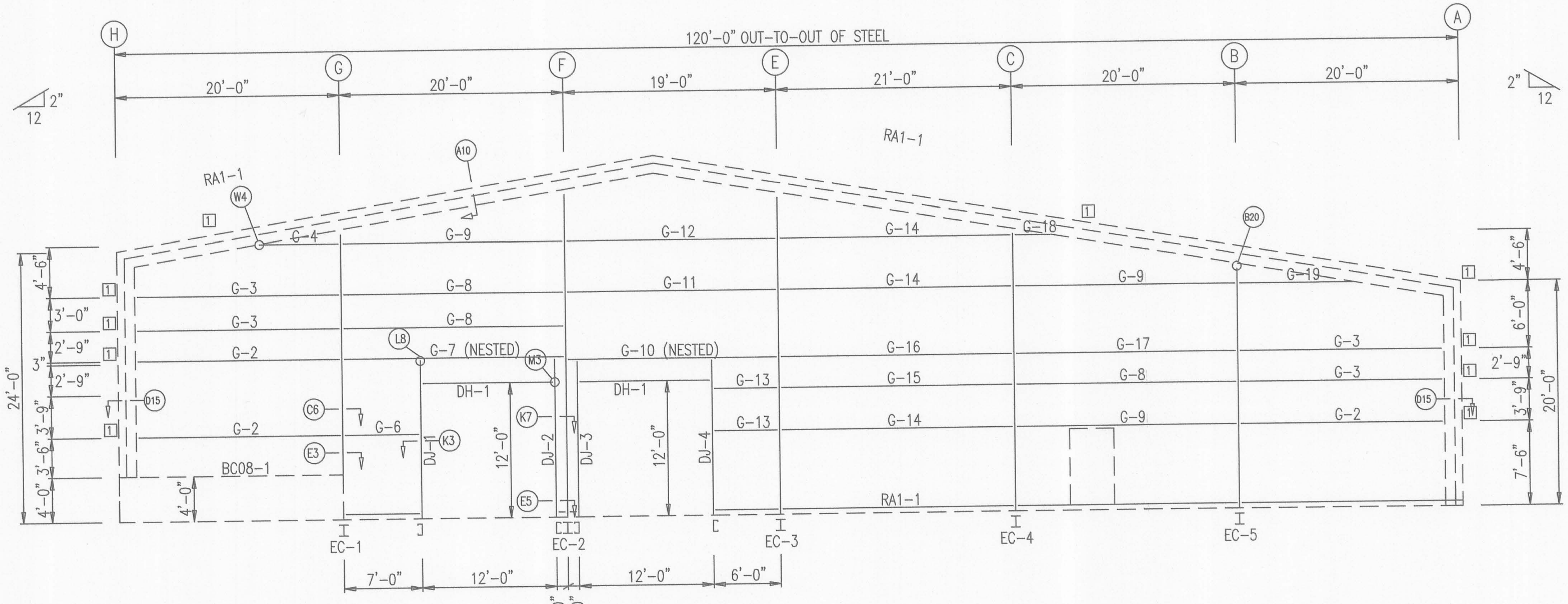

ENDWALL FRAMING: FRAME LINE 1

CL292- FASTENS BETWEEN THE GIRTS ON EACH SIDE OF THE ENDWALL COLUMNS, AT ALL GIRT ELEVATIONS. REFER TO DETAILS.

PC30- FASTENS BETWEEN THE GIRTS ON EACH SIDE OF THE ENDWALL COLUMNS, AT ALL GIRT ELEVATIONS. REFER TO DETAILS.

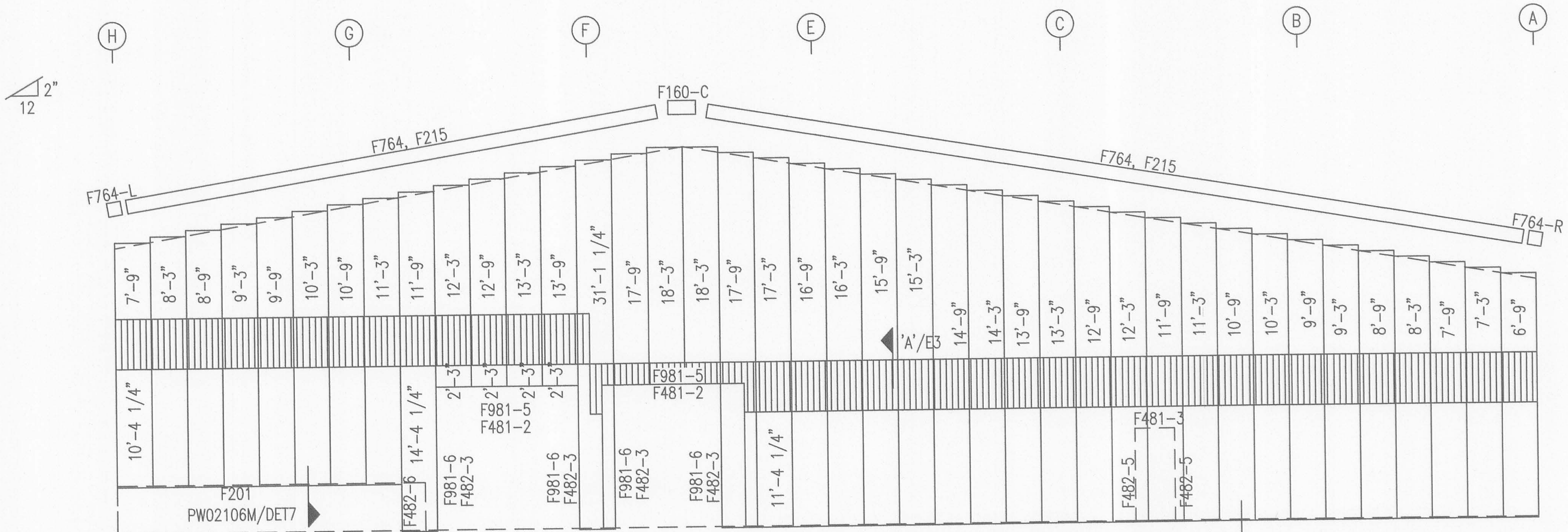

FIELD CUT PANEL AS REQUIRED

ENDWALL SHEETING & TRIM: FRAME LINE 1

PANELS: 26 Gauge PBR – Light Stone

PW02102M/DET7

PBR WALL PANELS
PANEL COVERAGE = 3'-0"
COLOR = Light Stone

NOTE:
LTP'S TO BE FIELD LOCATED & FIELD CUT (BY OTHERS)
INSTALLATION MUST COMPLY WITH OSHA REQUIREMENTS

Revision	Date	Description	By	Ck'd
A	11/27/17	FOR CONSTRUCTION PERMIT	RAV	KYG
0	02/12/18	FOR ERECTOR INSTALLATION	ADN	ADR

MID-WEST STEEL BUILDING COMPANY
7301 FAIRVIEW • HOUSTON, TEXAS • P.O. BOX 40338
ZIP 77041 (713) 466-7788 ZIP 77240

Project Name & Location:
420 EAST HEREFORD AVENUE
RATON, NM, 87740
COLFAX

Customer:
STEEL DEPOT HOBBS
212 S MAGNUM RD
HOBBS, NM, 88240
DARLA JOHNSON

Drawing Status: ☐ Preliminary (Not For Construction) ☐ For Approval (Not For Construction) ☐ For Construction Permit ☒ For Erector Installation

Scale: NOT TO SCALE
Drawn by: ADN 02/12/18
Checked by: ADR 02/12/18
Project Engineer: MSP
Job Number: 16-B-26319
Sheet Number: E5

The engineer whose seal appears hereon is an employee for the manufacturer for the materials described herein. Said seal or certification is limited to the products designed and manufactured by manufacturer only. The undersigned engineer is not the overall engineer of record for this project.

SCHEDULE OF FASTENERS

NO. REQD	DESCRIPTION	COLOR
#17B	12–14 x 1 1/2 SD Screw, Washer	Light Stone
#4A	1/4–14 x 7/8 SD Screw, Washer	Light Stone

BEARING FRAME ONLY!

WASHER TO BE USED AT ENDWALL COLUMN TO ENDWALL RAFTER CONNECTION. USE ONE WASHER ON COLUMN SIDE. WASHER NOT NEEDED ON CLIP SIDE.

BOLT TABLE
FRAME LINE 7

LOCATION	QUAN	TYPE	DIA	LENGTH
Columns/Raf	4	A325	1/2"	1 1/4"

MEMBER TABLE
FRAME LINE 7

MARK	PART	LENGTH
EC–6	W10X12	21'–9 1/4"
EC–7	W10X12	25'–1 1/4"
EC–8	W10X17	28'–5 1/4"
EC–9	W10X12	25'–1 1/4"
EC–10	W10X12	21'–9 1/4"
G–8	8X25Z16	19'–3 7/8"
G–9	8X25Z13	19'–3 7/8"
G–17	8X25Z14	19'–3 7/8"
G–20	8X25Z14	18'–0 1/8"
G–21	8X25Z16	18'–0 1/8"
G–22	8X25Z16	9'–1 1/4"
G–23	8X25Z16	2'–1 1/4"
G–25	8X25Z16	6'–1 1/4"

CONNECTION PLATES
FRAME LINE 7

ID	MARK/PART
1	PC22

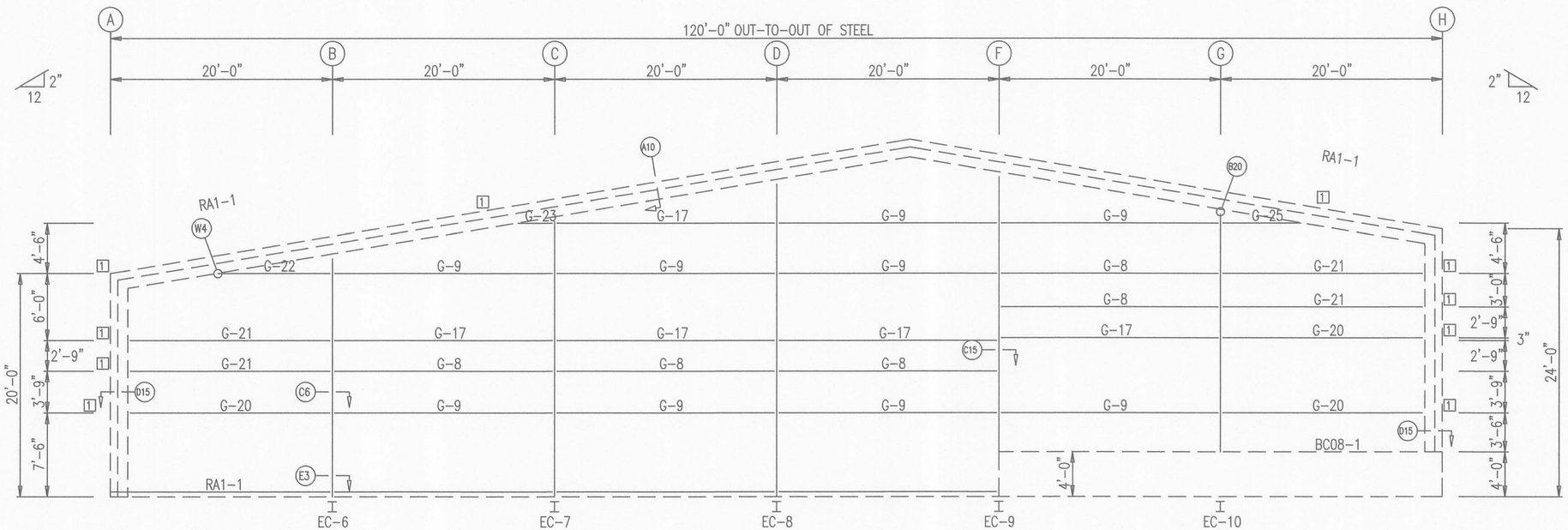

ENDWALL FRAMING: FRAME LINE 7

CL292– FASTENS BETWEEN THE GIRTS ON EACH SIDE OF THE ENDWALL COLUMNS, AT ALL GIRT ELEVATIONS. REFER TO DETAILS.

PC30– FASTENS BETWEEN THE GIRTS ON EACH SIDE OF THE ENDWALL COLUMNS, AT ALL GIRT ELEVATIONS. REFER TO DETAILS.

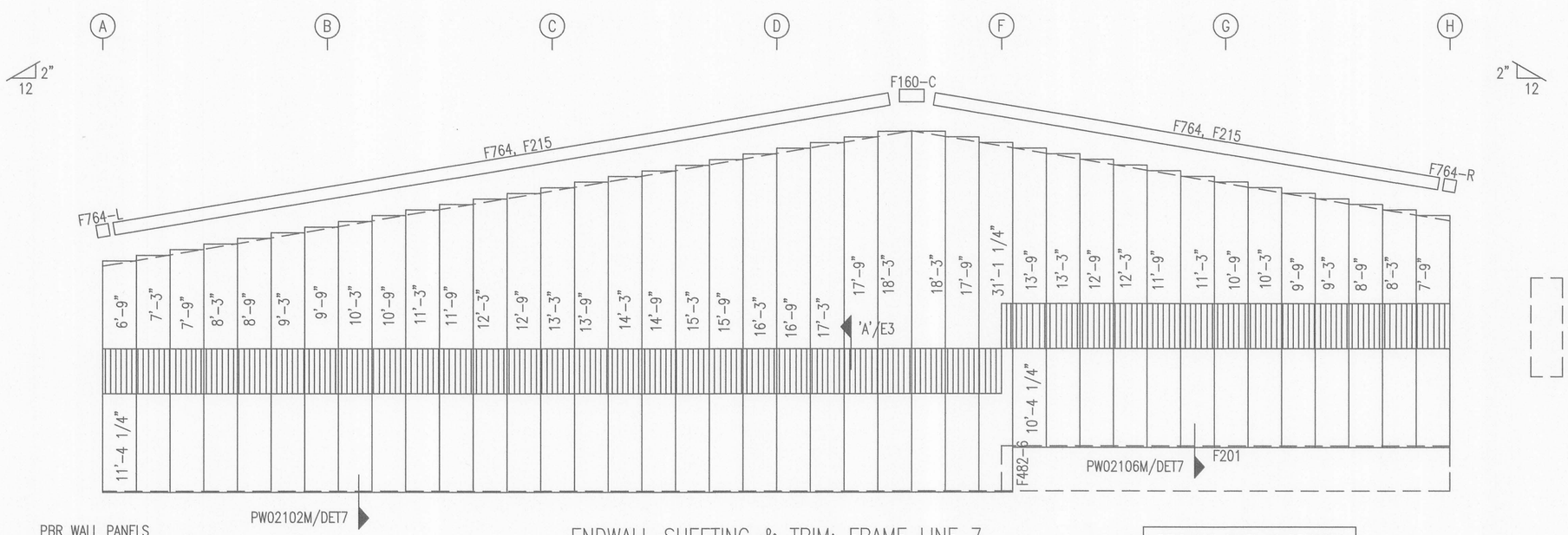

PBR WALL PANELS
PANEL COVERAGE = 3'–0"
COLOR = Light Stone

ENDWALL SHEETING & TRIM: FRAME LINE 7

PANELS: 26 Gauge PBR – Light Stone

FIELD CUT PANEL AS REQUIRED

NOTE:
LTP'S TO BE FIELD LOCATED & FIELD CUT (BY OTHERS)

INSTALLATION MUST COMPLY WITH OSHA REQUIREMENTS

Revision	Date	Description	By	Ck'd
A	11/27/17	FOR CONSTRUCTION PERMIT	RAV	KYG
0	02/12/18	FOR ERECTOR INSTALLATION	ADN	ADR

MID-WEST
STEEL BUILDING SYSTEMS
7301 FAIRVIEW ◆ HOUSTON, TEXAS ◆ P.O. BOX 40338
ZIP 77041 (713) 466–7788 ZIP 77240

Project Name & Location:
420 EAST HEREFORD AVENUE
RATON, NM, 87740
COLFAX

Customer:
STEEL DEPOT HOBBS
212 S MAGNUM RD
HOBBS, NM, 88240
DARLA JOHNSON

Drawing Status:
☐ Preliminary (Not For Construction)
☐ For Approval (Not For Construction)
☐ For Construction Permit
☒ For Erector Installation

Scale:	NOT TO SCALE
Drawn by:	ADN 02/12/18
Checked by:	ADR 02/12/18
Project Engineer:	MSP
Job Number:	16–B–26319
Sheet Number:	E6

The engineer whose seal appears hereon is an employee for the manufacturer for the materials described herein. Said seal or certification is limited to the products designed and manufactured by manufacturer only.The undersigned engineer is not the overall engineer of record for this project.

SPLICE BOLT TABLE @ GRID-1 & 7

MARK	QTY	SIZE	TYPE	HARDENED WASHERS	BEVELED WASHERS
D1	8	3/4" x 1 3/4"	A325 B&N	0	0
D2	4	5/8" x 1 1/2"	A325 B&N	0	0

BASE PLATE TABLE

Col Mark	Plate Size Width	Thick	Length
BP-1	6"	3/8"	10 1/2"
BP-2	6"	3/8"	10"
BP-3	6"	3/8"	10 1/2"

FLANGE BRACES: BOTH SIDES(UNLESS NOTED)
FBxxA(1): xx=length(in)
A - L2X2X14G

GENERAL NOTES

FRAME CLEARANCES SHOWN ARE APPROXIMATE AND MAY VARY DUE TO CONDITIONS (DEFLECTION).

VERTICAL CLEARANCE DIMENSIONS ARE FROM FINISHED FLOOR REFERENCE ELEVATION.

MEMBER TABLE

Mark	Web Depth Start/End	Web Plate Thick	Web Plate Length	Outside Flange W x Thk x Length	Inside Flange W x Thk x Length
RF1-1	10.0/10.0	0.156	234.1	5 x 1/4" x 232.4	5 x 1/4" x 220.6
				5 x 1/4" x 18.7	
RF1-2	10.0/10.0	0.156	240.0	5 x 1/4" x 240.0	5 x 1/4" x 240.0
	10.0/10.0	0.156	240.0	5 x 1/4" x 240.0	5 x 1/4" x 240.0
	10.0/10.0	0.156	85.7	5 x 1/4" x 84.0	5 x 1/4" x 84.0
RF1-3	10.0/10.0	0.156	81.8	5 x 1/4" x 81.8	5 x 1/4" x 80.1
	10.0/10.0	0.156	240.0	5 x 1/4" x 240.0	5 x 1/4" x 240.0
RF1-4	10.0/10.0	0.156	55.1	5 x 1/4" x 53.4	5 x 1/4" x 55.1
	10.0/10.0	0.156	240.0	5 x 1/4" x 240.0	5 x 1/4" x 240.0
	10.0/10.0	0.156	240.0	5 x 1/4" x 240.0	5 x 1/4" x 240.0
RF1-5	10.0/10.0	0.156	234.1	5 x 1/4" x 18.7	5 x 1/4" x 220.6
				5 x 1/4" x 232.4	
EC-1	W10X12				
EC-2	W10X22				
EC-3	W10X17				
EC-4	W10X12				
EC-5	W10X12				

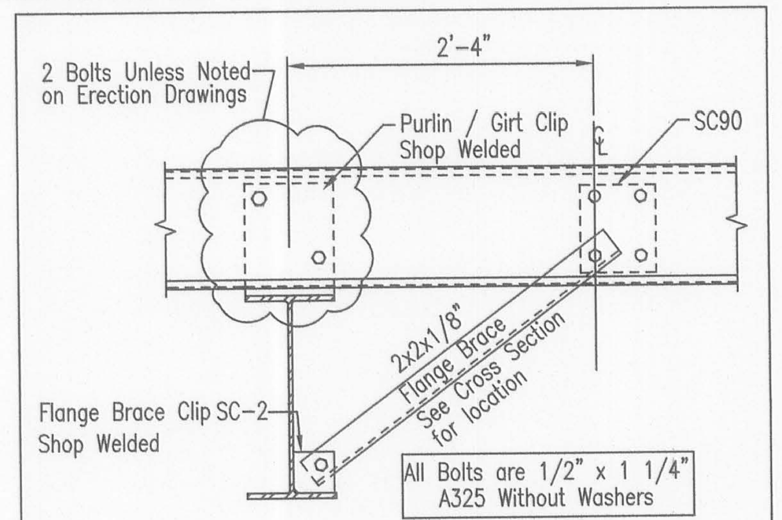

FB6 Flange Brace Detail W/SC90

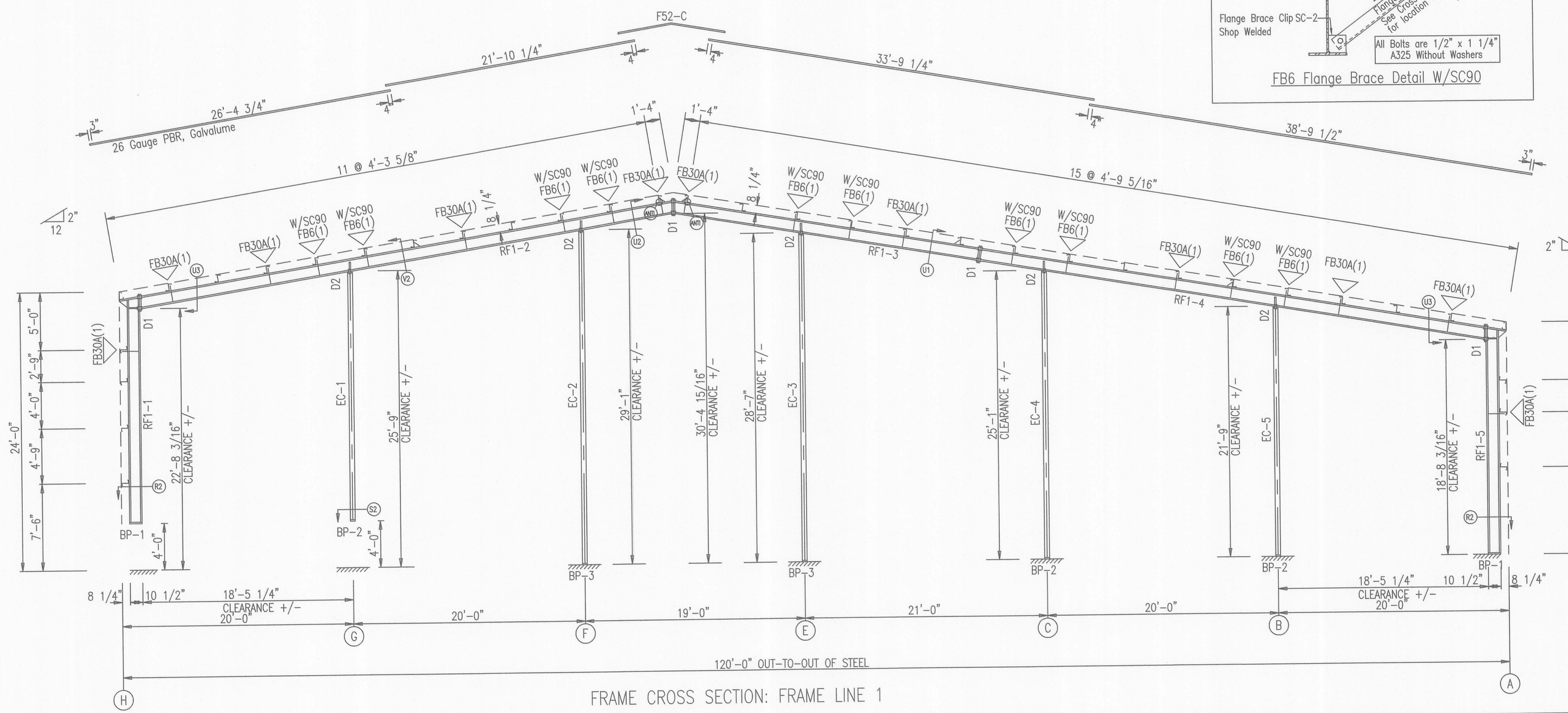

FRAME CROSS SECTION: FRAME LINE 1

Revision	Date	Description	By	Ck'd
A	11/27/17	FOR CONSTRUCTION PERMIT	RAV	KYG
0	02/12/18	FOR ERECTOR INSTALLATION	ADN	ADR

MID-WEST STEEL BUILDING COMPANY
7301 FAIRVIEW ◆ HOUSTON, TEXAS ◆ P.O. BOX 40338
ZIP 77041 (713) 466-7788 ZIP 77240

Customer:
STEEL DEPOT HOBBS
212 S MAGNUM RD
HOBBS, NM, 88240
DARLA JOHNSON

Project Name & Location:
420 EAST HEREFORD AVENUE
RATON, NM, 87740
COLFAX

Drawing Status:
☐ Preliminary (Not For Construction)
☐ For Approval (Not For Construction)
☐ For Construction Permit
☒ For Erector Installation

Scale: NOT TO SCALE
Drawn by: ADN 02/12/18
Checked by: ADR 02/12/18
Project Engineer: MSP
Job Number: 16-B-26319
Sheet Number: E7

The engineer whose seal appears hereon is an employee for the manufacturer for the materials described herein. Said seal or certification is limited to the products designed and manufactured by manufacturer only.The undersigned engineer is not the overall engineer of record for this project.

SPLICE BOLT TABLE @ GRID–2 & 3					
MARK	QTY	SIZE	TYPE	HARDENED WASHERS	BEVELED WASHERS
D3	12	1 1/4" x 3 3/4"	A325 B&N	0	0
D4	10	3/4" x 1 3/4"	A325 B&N	0	0

MEMBER TABLE					
Mark	Web Depth Start/End	Web Plate Thick	Web Plate Length	Outside Flange W x Thk x Length	Inside Flange W x Thk x Length
RF2–1	14.0/39.9	0.313	120.0	8 x 5/16" x 120.0	8 x 1/2" x 189.2
	39.9/54.0	0.375	65.1	8 x 3/8" x 112.0	
	54.0/54.0	0.375	56.0	8 x 3/8" x 63.4	
RF2–2	50.0/38.4	0.375	166.4	8 x 3/8" x 158.0	8 x 1/2" x 166.9
	38.4/30.0	0.250	120.0	8 x 5/16" x 120.0	8 x 3/8" x 120.3
	30.0/30.0	0.250	120.0	8 x 1/4" x 120.0	8 x 1/4" x 235.0
	30.0/30.0	0.185	120.0	8 x 5/16" x 120.0	
RF2–3	30.0/30.0	0.250	120.0	8 x 3/8" x 120.0	8 x 1/4" x 115.0
	30.0/30.0	0.185	120.0	8 x 1/2" x 120.0	8 x 5/16" x 120.0
	30.0/30.0	0.250	240.0	8 x 1/2" x 240.0	8 x 3/8" x 240.0
RF2–4	30.0/37.1	0.250	120.0	8 x 1/4" x 120.0	8 x 1/4" x 120.2
	37.1/44.2	0.313	120.0	8 x 5/16" x 120.0	8 x 3/8" x 120.2
	44.2/50.0	0.375	97.7	8 x 3/8" x 89.3	8 x 1/2" x 97.8
RF2–5	54.0/54.0	0.375	56.0	8 x 3/8" x 63.4	8 x 1/2" x 189.2
	54.0/39.9	0.375	65.1	8 x 3/8" x 112.0	
	39.9/14.0	0.313	120.0	8 x 5/16" x 120.0	

BASE PLATE TABLE			
Col Mark	Plate Size Width	Thick	Length
BP–1	8"	5/8"	1'–3"

GENERAL NOTES
FRAME CLEARANCES SHOWN ARE APPROXIMATE AND MAY VARY DUE TO CONDITIONS (DEFLECTION).
VERTICAL CLEARANCE DIMENSIONS ARE FROM FINISHED FLOOR REFERENCE ELEVATION.

FLANGE BRACES: BOTH SIDES(UNLESS NOTED)
FBxxC(1): xx=length(in)
C – L2X2X1/8
A – L2X2X14G

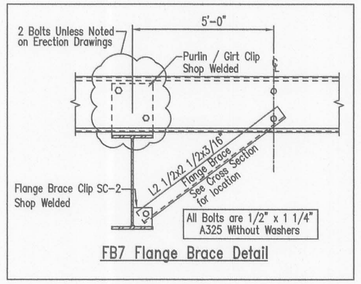

FB7 Flange Brace Detail

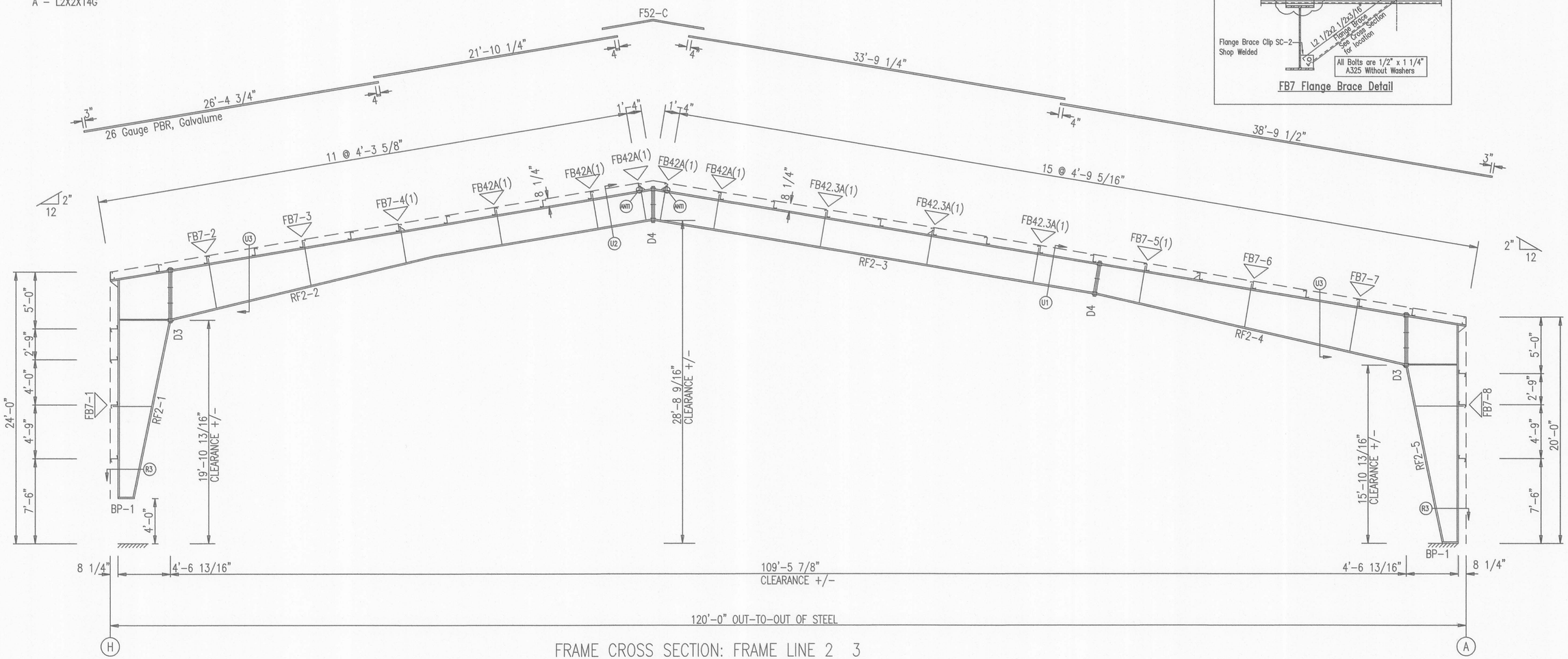

FRAME CROSS SECTION: FRAME LINE 2 3

Revision	Date	Description	By	Ck'd
A	11/27/17	FOR CONSTRUCTION PERMIT	RAV	KYG
0	02/12/18	FOR ERECTOR INSTALLATION	ADN	ADR

MID-WEST STEEL BUILDING COMPANIES
7301 FAIRVIEW • HOUSTON, TEXAS • P.O. BOX 40338
ZIP 77041 (713) 466–7788 ZIP 77240

Customer:
STEEL DEPOT HOBBS
212 S MAGNUM RD
HOBBS, NM. 88240
DARLA JOHNSON

Project Name & Location:
420 EAST HEREFORD AVENUE
RATON, NM, 87740
COLFAX

Drawing Status:
☐ Preliminary (Not For Construction)
☐ For Approval (Not For Construction)
☐ For Construction Permit
☒ For Erector Installation

Scale:	NOT TO SCALE	
Drawn by:	ADN	02/12/18
Checked by:	ADR	02/12/18
Project Engineer:	MSP	
Job Number:	16–B–26319	
Sheet Number:	E8	

The engineer whose seal appears hereon is an employee for the manufacturer for the materials described herein. Said seal or certification is limited to the products designed and manufactured by manufacturer only.The undersigned engineer is not the overall engineer of record for this project.

SPLICE BOLT TABLE @ GRID–4, 5 & 6					
MARK	QTY	SIZE	TYPE	HARDENED WASHERS	BEVELED WASHERS
D5	12	1 1/4" x 3 1/4"	A325 B&N	0	0
D4	10	3/4" x 1 3/4"	A325 B&N	0	0

BASE PLATE TABLE			
Col Mark	Plate Size Width	Thick	Length
BP–1	10"	5/8"	1'–3"

FLANGE BRACES: BOTH SIDES(UNLESS NOTED)
FBxxC(1): xx=length(in)
C – L2X2X1/8
A – L2X2X14G

GENERAL NOTES
FRAME CLEARANCES SHOWN ARE APPROXIMATE AND MAY VARY DUE TO CONDITIONS (DEFLECTION).
VERTICAL CLEARANCE DIMENSIONS ARE FROM FINISHED FLOOR REFERENCE ELEVATION.

MEMBER TABLE					
Mark	Web Depth Start/End	Web Plate Thick	Web Plate Length	Outside Flange W x Thk x Length	Inside Flange W x Thk x Length
RF3–1	14.0/39.9	0.313	120.0	10 x 3/8" x 232.0	10 x 1/2" x 189.2
	39.9/54.0	0.375	65.1	10 x 3/8" x 63.4	
	54.0/54.0	0.375	56.0		
RF3–2	50.0/38.4	0.375	166.9	8 x 1/2" x 158.5	8 x 1/2" x 167.3
	38.4/30.0	0.250	120.0	8 x 5/16" x 120.0	8 x 3/8" x 120.3
	30.0/30.0	0.250	120.0	8 x 1/4" x 120.0	8 x 1/4" x 235.0
	30.0/30.0	0.185	120.0	8 x 5/16" x 120.0	
RF3–3	30.0/30.0	0.250	120.0	8 x 3/8" x 120.0	8 x 1/4" x 115.0
	30.0/30.0	0.185	120.0	8 x 1/2" x 120.0	8 x 5/16" x 120.0
	30.0/30.0	0.250	240.0	8 x 1/2" x 240.0	8 x 3/8" x 240.0
RF3–4	30.0/37.1	0.250	120.0	8 x 1/4" x 120.0	8 x 1/4" x 120.2
	37.1/44.2	0.313	120.0	8 x 5/16" x 120.0	8 x 3/8" x 120.2
	44.2/50.0	0.375	98.1	8 x 3/8" x 89.7	8 x 1/2" x 98.3
RF3–5	54.0/54.0	0.375	56.0	10 x 3/8" x 63.4	10 x 1/2" x 189.2
	54.0/39.9	0.375	65.0	10 x 3/8" x 232.0	
	39.9/14.0	0.313	120.0		

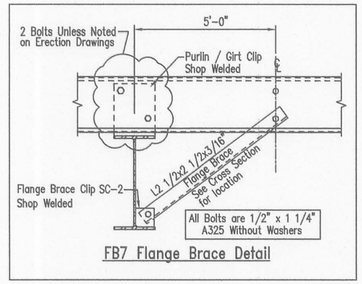

FB7 Flange Brace Detail

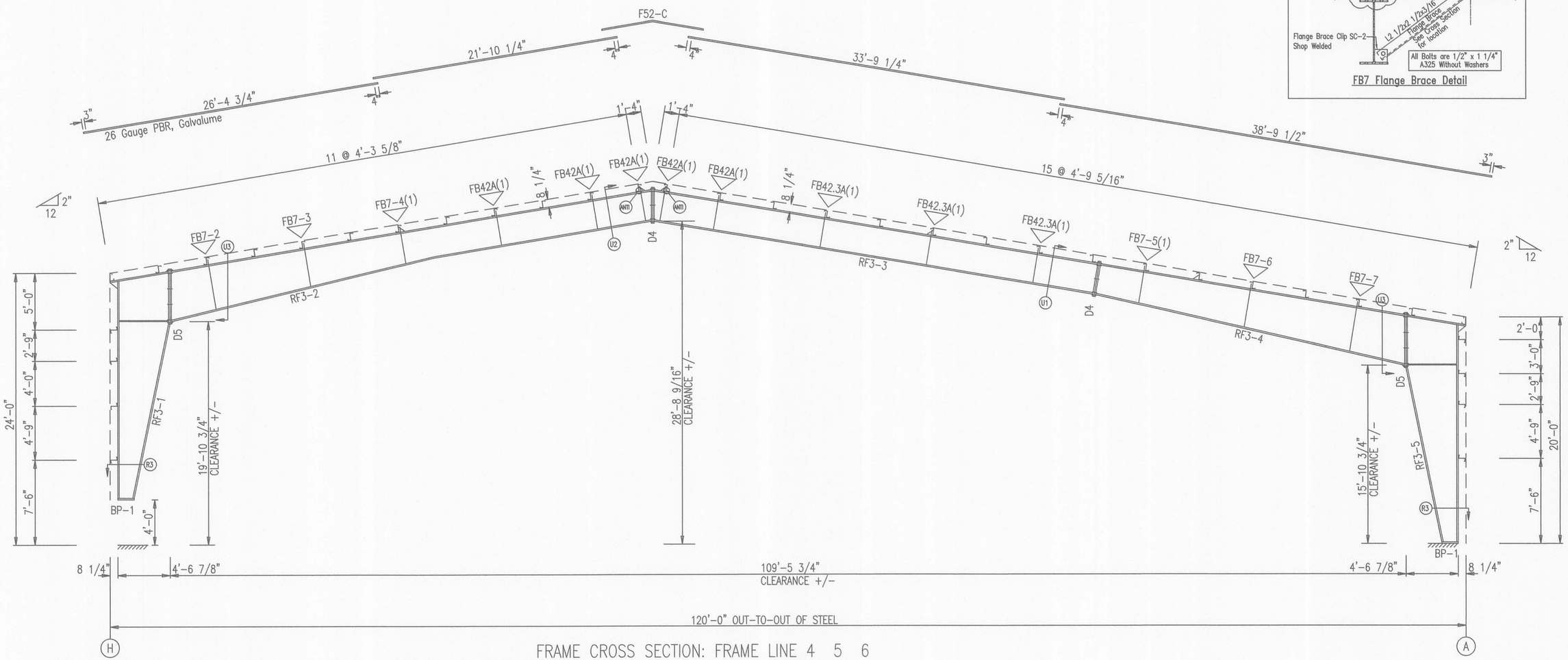

FRAME CROSS SECTION: FRAME LINE 4 5 6

Revision	Date	Description	By	Ck'd
A	11/27/17	FOR CONSTRUCTION PERMIT	RAV	KYG
0	02/12/18	FOR ERECTOR INSTALLATION	ADN	ADR

MID-WEST
7301 FAIRVIEW • HOUSTON, TEXAS • P.O. BOX 40338
ZIP 77041 (713) 466-7788 ZIP 77240

Project Name & Location:
420 EAST HEREFORD AVENUE
RATON, NM, 87740
COLFAX

Customer:
STEEL DEPOT HOBBS
212 S MAGNUM RD
HOBBS, NM, 88240
DARLA JOHNSON

Drawing Status:
☐ Preliminary Not For Construction
☐ For Approval Not For Construction
☒ For Erector Installation

Scale:	NOT TO SCALE
Drawn by:	ADN 02/12/18
Checked by:	ADR 02/12/18
Project Engineer:	MSP
Job Number:	16–B–26319
Sheet Number:	E9

The engineer whose seal appears hereon is an employee for the manufacturer for the materials described herein. Said seal or certification is limited to the products designed and manufactured by manufacturer only.The undersigned engineer is not the overall engineer of record for this project.

SPLICE BOLT TABLE @ GRID-1 & 7					
MARK	QTY	SIZE	TYPE	HARDENED WASHERS	BEVELED WASHERS
D1	8	3/4" x 1 3/4"	A325 B&N	0	0
D2	4	5/8" x 1 1/2"	A325 B&N	0	0

GENERAL NOTES
FRAME CLEARANCES SHOWN ARE APPROXIMATE AND MAY VARY DUE TO CONDITIONS (DEFLECTION).
VERTICAL CLEARANCE DIMENSIONS ARE FROM FINISHED FLOOR REFERENCE ELEVATION.

MEMBER TABLE					
Mark	Web Depth Start/End	Web Plate Thick	Web Plate Length	Outside Flange W x Thk x Length	Inside Flange W x Thk x Length
RF4-1	10.0/10.0	0.134	234.0	6 x 5/16" x 232.3	6 x 5/16" x 220.5
				6 x 5/16" x 18.8	
RF4-2	10.0/10.0	0.134	240.0	5 x 1/4" x 240.0	5 x 1/4" x 240.0
	10.0/10.0	0.134	240.0	5 x 1/4" x 240.0	5 x 1/4" x 240.0
	10.0/10.0	0.134	85.7	5 x 1/4" x 83.9	5 x 1/4" x 83.9
RF4-3	10.0/10.0	0.134	81.8	5 x 1/4" x 81.8	5 x 1/4" x 80.1
	10.0/10.0	0.134	240.0	5 x 1/4" x 240.0	5 x 1/4" x 240.0
RF4-4	10.0/10.0	0.134	55.1	5 x 1/4" x 53.3	5 x 1/4" x 55.1
	10.0/10.0	0.134	240.0	5 x 1/4" x 240.0	5 x 1/4" x 240.0
	10.0/10.0	0.134	240.0	5 x 1/4" x 240.0	5 x 1/4" x 240.0
RF4-5	10.0/10.0	0.134	234.0	6 x 5/16" x 18.8	6 x 5/16" x 220.5
				6 x 5/16" x 232.3	
EC-10	W10X12				
EC-9	W10X12				
EC-8	W10X17				
EC-7	W10X12				
EC-6	W10X12				

BASE PLATE TABLE			
Col Mark	Plate Size Width	Thick	Length
BP-1	6"	3/8"	11"
BP-2	6"	3/8"	10"
BP-3	6"	3/8"	10 1/2"

FLANGE BRACES: BOTH SIDES(UNLESS NOTED)
FBxxA(1): xx=length(in)
A - L2X2X14G

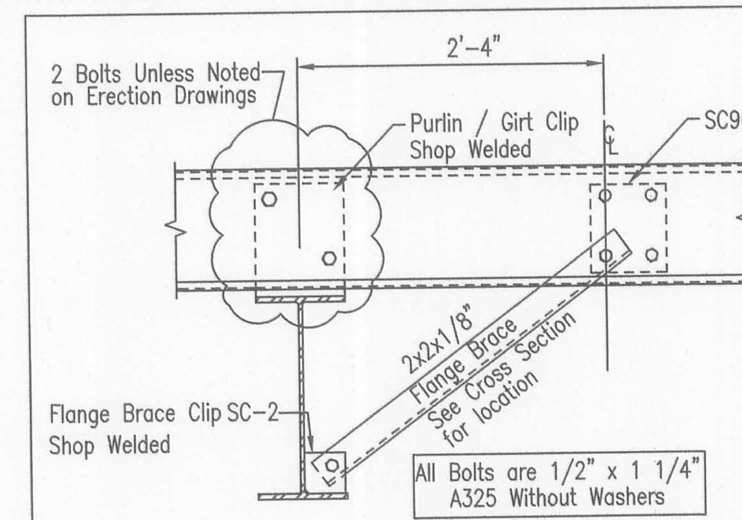

FB6 Flange Brace Detail W/SC90

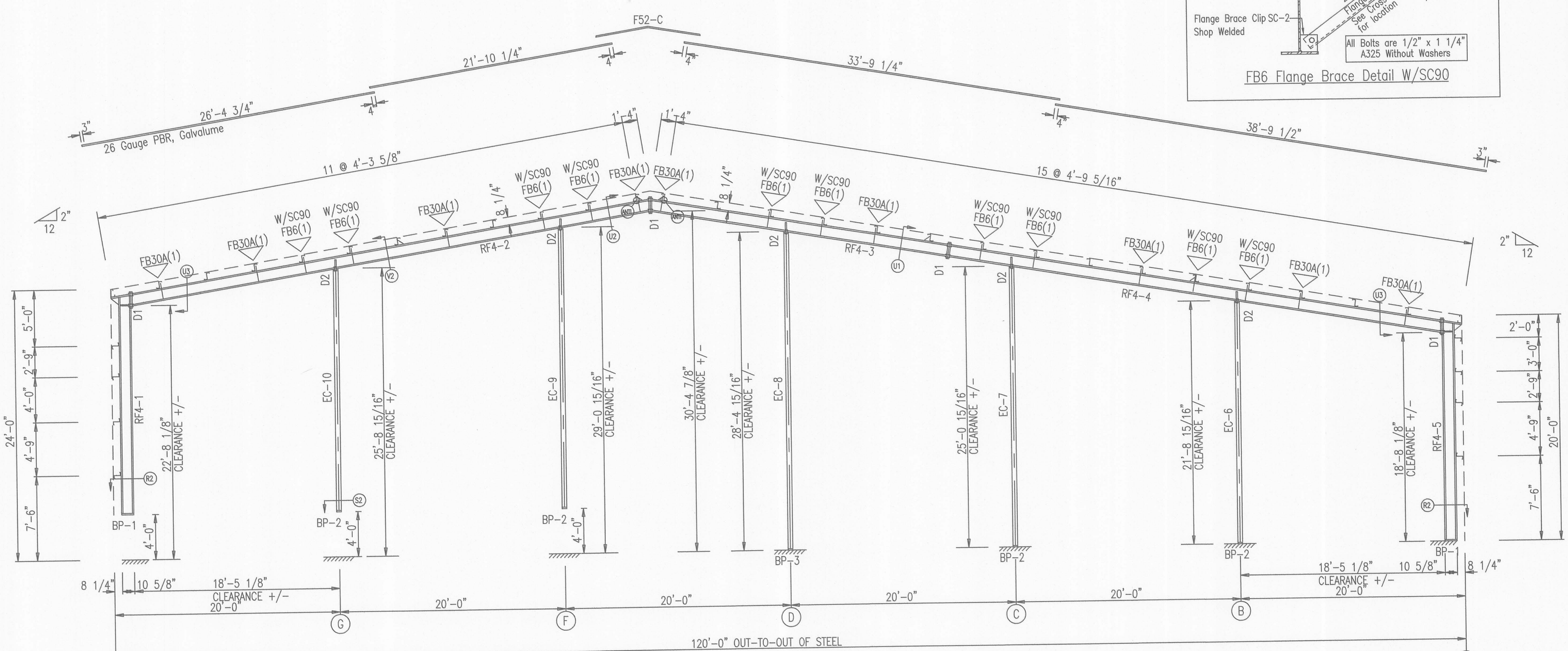

FRAME CROSS SECTION: FRAME LINE 7

Revision	Date	Description	By	Ck'd
A	11/27/17	FOR CONSTRUCTION PERMIT	RAV	KYG
0	02/12/18	FOR ERECTOR INSTALLATION	ADN	ADR

MID-WEST STEEL BUILDING COMPANY
7301 FAIRVIEW ◆ HOUSTON, TEXAS ◆ P.O. BOX 40338
ZIP 77041 (713) 466-7788 ZIP 77240

Customer:
STEEL DEPOT HOBBS
212 S MAGNUM RD
HOBBS, NM, 88240
DARLA JOHNSON

Project Name & Location:
420 EAST HEREFORD AVENUE
RATON, NM, 87740
COLFAX

Drawing Status: ☐ Preliminary (Not For Construction) ☐ For Approval (Not For Construction) ☐ For Construction Permit ☒ For Erector Installation

Scale: NOT TO SCALE
Drawn by: ADN 02/12/18
Checked by: ADR 02/12/18
Project Engineer: MSP
Job Number: 16-B-26319
Sheet Number: E10

The engineer whose seal appears hereon is an employee for the manufacturer for the materials described herein. Said seal or certification is limited to the products designed and manufactured by manufacturer only.The undersigned engineer is not the overall engineer of record for this project.

CONNECTION CODES

(FOR TOP AND BOTTOM BOLT PATTERN)

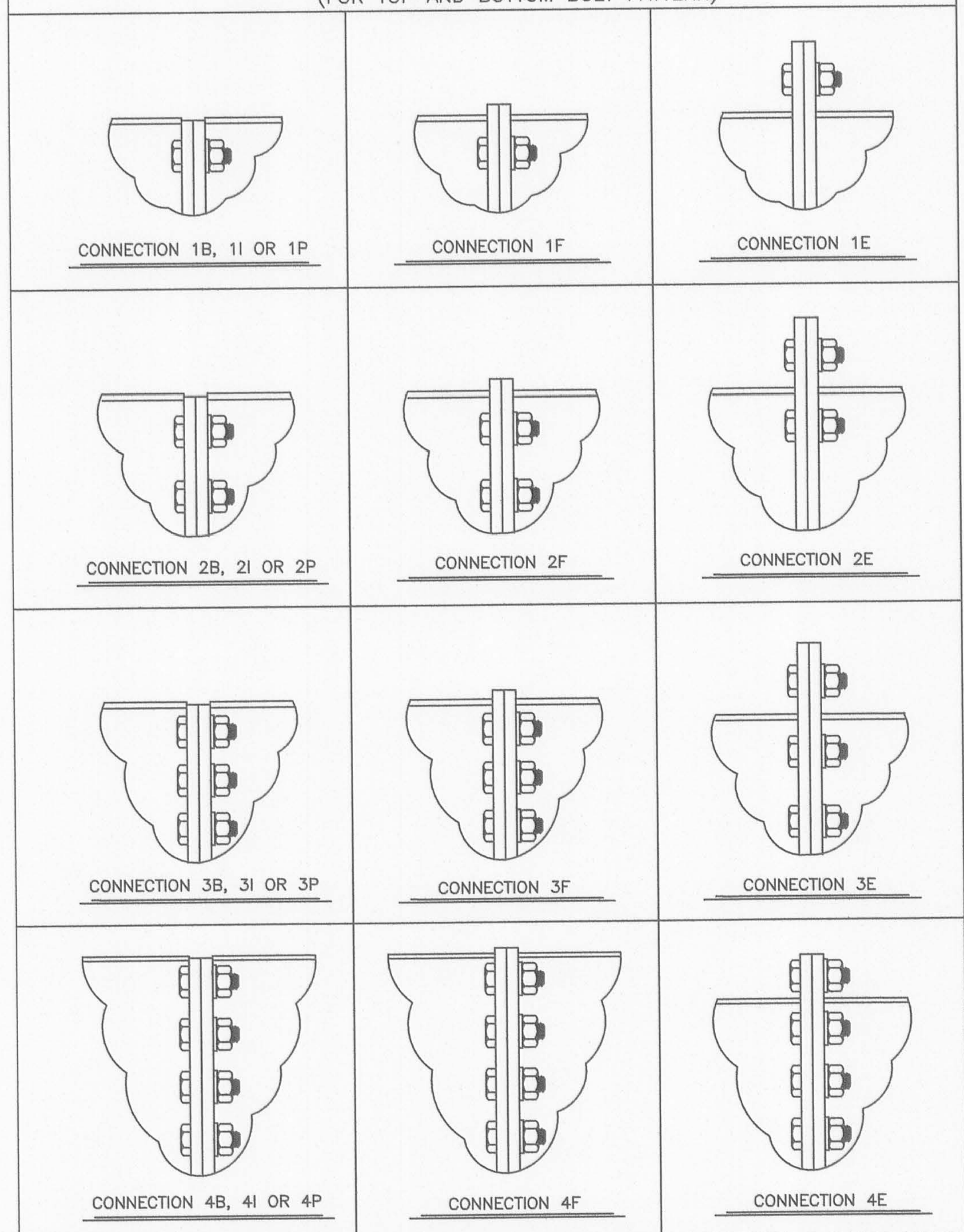

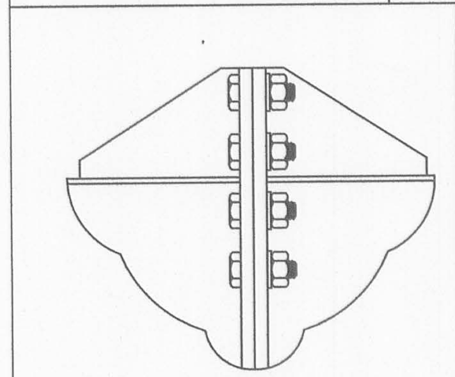

4 E /2 E H

- CONNECTION DESIGNATION
  BLANK = STANDARD CONNECTION
  H = HEAVY CONNECTION
- BOTTOM CONNECTION CODE
- BOTTOM QUANTITY OF BOLT ROWS
- CONNECTION DESIGNATION
  BLANK = STANDARD CONNECTION
  H = HEAVY CONNECTION
- TOP CONNECTION CODE
- TOP QUANTITY OF BOLT ROWS

CONNECTION CODE FORMAT

CONNECTION CODE DESCRIPTION

B = THIS DESCRIPTION CODE IS USED TO DEFINE SHEAR CONNECTIONS. BOLTS ARE LOCATED INSIDE THE TOP FLANGE AND CONNECTION PLATE IS RECESSED 1/8" BELOW THE TOP FLANGE. CONNECTION PLATE LENGTH MUST BE A MINIMUM OF HALF THE RAFTER WEB DEPTH AND SHALL NOT EXCEED THE RAFTER TOTAL DEPTH.

E = THIS DESCRIPTION CODE IS USED TO DEFINE MOMENT CONNECTIONS. BOLTS ARE LOCATED WITH ONE SET OUTSIDE THE TOP OR BOTTOM FLANGE AND THE REMAINING SETS ARE LOCATED INSIDE THE TOP OR BOTTOM FLANGE.

F = THIS DESCRIPTION CODE IS USED TO DEFINE MOMENT CONNECTIONS. BOLTS ARE LOCATED INSIDE THE TOP OR BOTTOM FLANGE AND CONNECTION PLATE PROJECTS 1/2" BEYOND THE TOP OR BOTTOM FLANGE.

I = THIS DESCRIPTION CODE IS USED TO DEFINE MOMENT CONNECTIONS. BOLTS ARE LOCATED INSIDE THE TOP OR BOTTOM FLANGE AND CONNECTION PLATE IS RECESSED 1/8" BELOW THE TOP OR BOTTOM FLANGE.

P = THIS DESCRIPTION CODE IS USED TO DEFINE SHEAR CONNECTIONS. BOLTS ARE LOCATED INSIDE THE TOP FLANGE AND CONNECTION PLATE IS RECESSED 1/8" BELOW THE TOP FLANGE. CONNECTION PLATE LENGTH MUST BE A MINIMUM OF HALF THE RAFTER WEB DEPTH AND SHALL NOT EXCEED THE RAFTER TOTAL DEPTH.

4X = THIS DESCRIPTION CODE IS USED TO DEFINE MOMENT CONNECTIONS. BOLTS ARE LOCATED WITH TWO SETS EACH SIDE OF THE TOP OR BOTTOM FLANGE WITH A GUSSET PLATE OUTSIDE THE TOP AND BOTTOM FLANGE OR COLUMN CAP PLATE.

CONNECTION BOLT DATA

NAME	DESCRIPTION FOR A325 BOLT DIMENSIONS	A325 CONNECTION BOLT DIMENSIONS					
D	DIAMETER OF THE BOLT	1/2"	3/4"	7/8"	1"	1 1/4"	1 1/2"
HD	BOLT HOLE DIAMETER	9/16"	13/16"	15/16"	1 1/16"	1 5/16"	1 9/16"
G	BOLT GAUGE	2 1/2"	3"	4"	3 1/2"	4"	5 1/2"
	MAX. WEB THICKNESS (Max. 5/16" Fillet Weld) WITHOUT WASHER	1"	1 1/8"	1 7/8"	1 1/4"	1 3/8"	2 1/8"
	MAX. WEB THICKNESS (Max. 5/16" Fillet Weld) WITH WASHER	3/4"	7/8"	1 5/8"	7/8"	7/8"	1 7/8"
HG	HEAVY CONN. BOLT GAUGE	N/A	2 1/4"	2 5/8"	3"	3 3/4"	4"
S	NORMAL BOLT SPACING	2 1/2"	3"	3 1/4"	3 1/2"	4"	4 1/2"
BSMIN	MINIMUM SPACING BETWEEN TOP & BOTTOM SETS OF BOLTS	1 1/2"	2 1/4"	2 5/8"	3"	3 3/4"	4"
BSMAX	MAXIMUM BOLT SPACING BETWEEN TOP AND BOTTOM SETS OF BOLTS ON CONNECTION PLATES LESS THAN OR EQUAL TO 3/4" THICK	2'-0"	2'-0"	2'-0"	2'-0"	2'-0"	2'-0"
		SPLICE BOLT SPACING (NOT TO EXCEED 2'-0) 1/2 BSMAX (±1/16") WHEN BSMAX = 2'-0 1/16" TO 4'-0; 1/3 BSMAX (±1/16") WHEN BSMAX = 4'-0 1/16" TO 6'-0; 1/4 BSMAX (±1/16") WHEN BSMAX = 6'-0 1/16 TO 8'-0					
BFCD	MINIMUM BOLT-TO-FLANGE CLEARANCE AT OUT OF NUT SEE BOLT AT FLANGE DETAIL	1 1/2"	1 3/4"	1 7/8"	2 1/4"	2 1/2"	2 3/4"
PF	MINIMUM BOLT-TO-FLANGE CLEARANCE AT CONNECTION PLATE SEE BOLT AT FLANGE DETAIL	(BFCD + RNWT) PF INSIDE OF FLANGE IS INCREASED BASED ON THE YT & YB VALUE. PF FOR CONNECTION B, F, I AND P ARE THE SAME AS USED ON CONNECTION E					
NWT	NUT AND WASHER THICKNESS	SEE BOLT AT FLANGE DETAIL. NUT THICKNESS IS EQUAL TO THE BOLT DIAMETER AND .15625" WASHER THICKNESS IS USED EVEN IF A WASHER IS NOT REQUIRED.					
RNWT	RISE ON NUT AND WASHER THICKNESS						
TT	THICKNESS TOP FLANGE	REFER TO FRAME CROSS SECTION DRAWING FOR LARGEST FLANGE THICKNESS EITHER SIDE OF THE CONNECTION.					
TB	THICKNESS BOTTOM FLANGE						
YT	BOLT SPACING TOP (ROUND UP TO NEXT 1/2", MIN = S)	3" + TT	3 1/2" + TT	3 3/4" + TT	4 1/2" + TT	5" + TT	5 1/2" + TT
YB	BOLT SPACING BOTTOM (ROUND UP TO NEXT 1/2", MIN = S)	or TB Sloped	or TB Sloped	or TB Sloped	or TB Sloped	or TB Sloped	or TB Sloped
EED(S)	MINIMUM SHEARED END EDGE DIMENSION	1 1/4"	1 1/4"	1 1/2"	1 3/4"	2 1/4"	2 5/8"
EED(R)	MINIMUM ROLLED END EDGE DIMENSION	3/4"	1"	1 1/8"	1 1/4"	1 5/8"	2 1/4"
EEDK	END EDGE DIMENSION AT KNEE CONNECTION	1 3/8"	1 3/8"	1 5/8"	1 7/8"	2 3/8"	2 3/4"
BCWM	MINIMUM BOLT CLEARANCE FROM A FLANGE OR WEB WELD — WITHOUT WASHER	7/16"	5/8"	3/4"	13/16"	1"	1 3/8"
	WITH HARDENED WASHER	9/16"	3/4"	7/8"	1"	1 1/4"	1 1/2"
WCSM	MINIMUM WIDTH OF CONNECTION PLATE (Standard Connection)	5"	6"	8"	8"	10"	12"
WCHM	MINIMUM WIDTH OF CONNECTION PLATE (Heavy Connection)	N/A	10"	12"	12"	16"	18"
TCMIN	MINIMUM THICKNESS OF CONNECTION PLATE	1/4"	3/8"	7/16"	1/2"	5/8"	1"

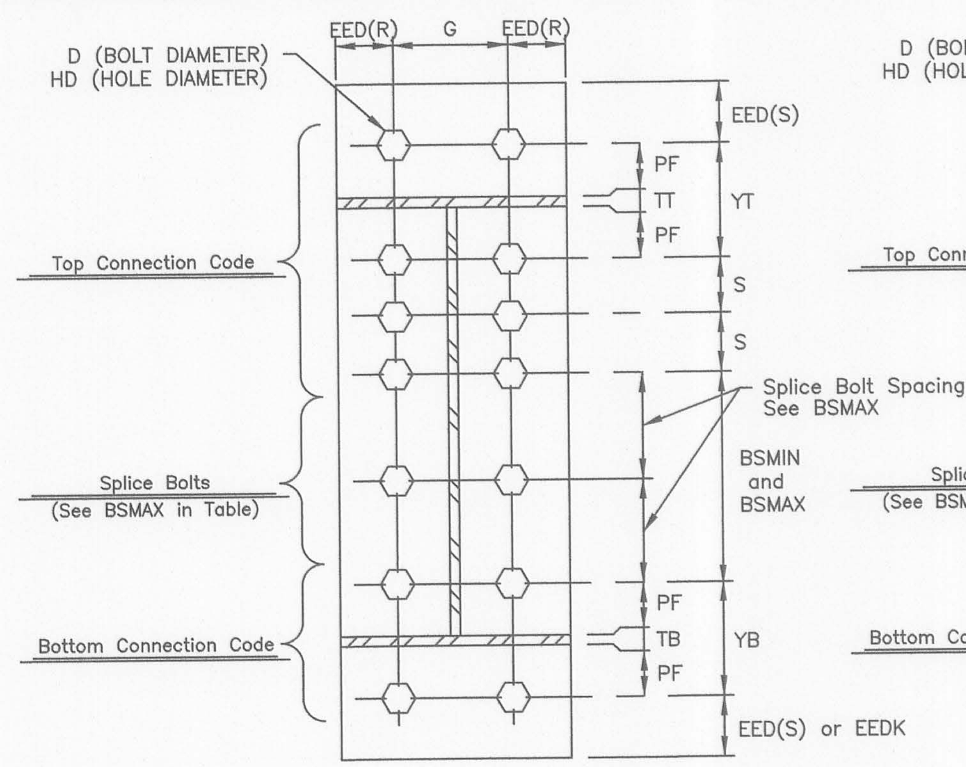

STANDARD CONNECTION DESIGNATION

(CODE 4E/2E SHOWN)

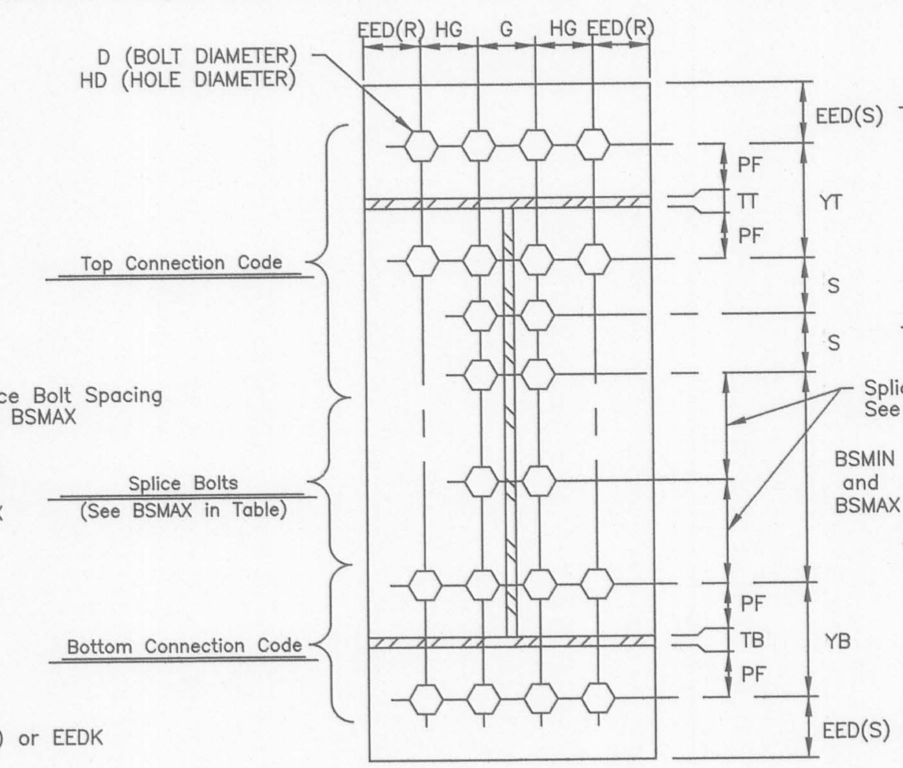

HEAVY CONNECTION DESIGNATION

(CODE 4EH/2EH SHOWN)

Page	Rev.
05-12-10	
Date Sep '14	03

B 4E/2EH

- Connection Code (See "Connection Code Format" on this drawing)
- Connection Location

CROSS SECTION CONNECTION CODE KEY

(AS SHOWN AT CONNECTIONS ON FRAME CROSS SECTION DRAWINGS)

Flange Brace Material Schedule	
Part Mark	Material
FB4_	L 2" x 2" x 14 Ga.
FB5_	L 2" x 2" x 14 Ga.
FB6_	L 2" x 2" x 1/8"
FB7_	L 2 1/2" x 2 1/2" x 3/16"

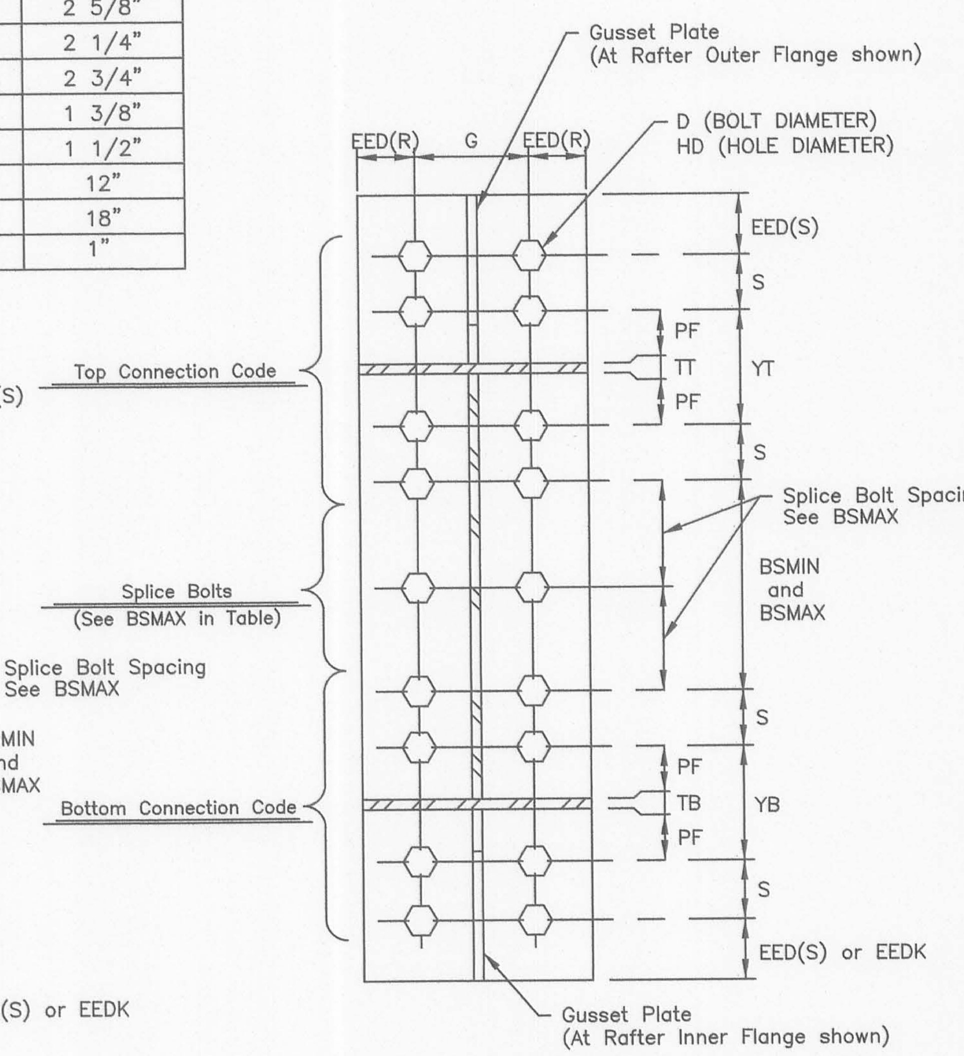

4X CONNECTION DESIGNATION

(CODE 4X/4X SHOWN)

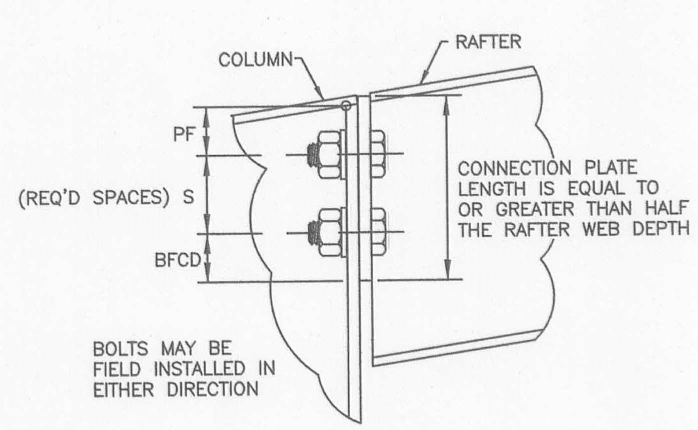

CONNECTION B & P

(Low Side Shown, High Side Similar)

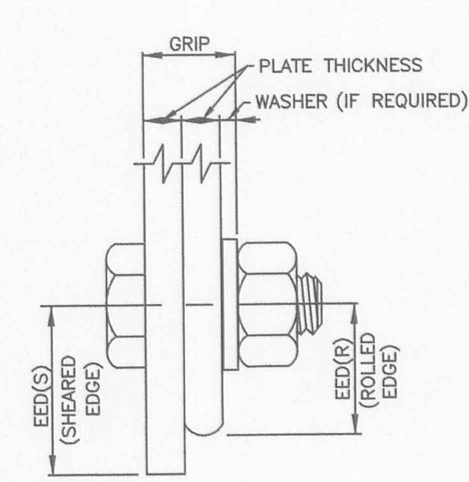

BOLT EDGE DISTANCE

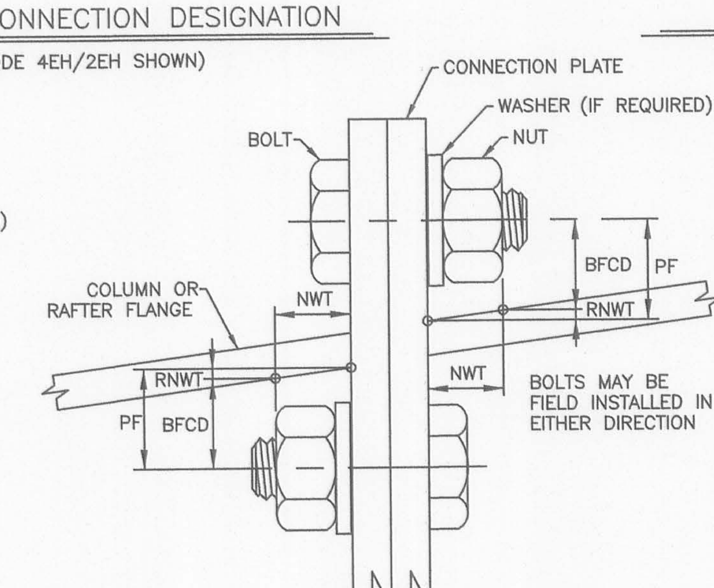

BOLT AT FLANGE DETAIL

(Top Flange Shown, Bottom Flange Similar)

Revision	Date	Description	By	Ck'd
A	11/27/17	FOR CONSTRUCTION PERMIT	RAV	KYG
0	02/12/18	FOR ERECTOR INSTALLATION	ADN	ADR

MID-WEST STEEL BUILDING COMPANY
7301 FAIRVIEW ◆ HOUSTON, TEXAS ◆ P.O. BOX 40338
ZIP 77041 (713) 466-7788 ZIP 77240

Customer:
STEEL DEPOT HOBBS
212 S MAGNUM RD
HOBBS, NM, 88240
DARLA JOHNSON

Project Name & Location:
420 EAST HEREFORD AVENUE
RATON, NM, 87740
COLFAX

Drawing Status:
☐ *Preliminary (Not For Construction)*
☐ *For Approval (Not For Construction)*
☐ *For Construction Permit*
☒ *For Erector Installation*

Scale: NOT TO SCALE
Drawn by: ADN 02/12/18
Checked by: ADR 02/12/18
Project Engineer: MSP
Job Number: 16-B-26319
Sheet Number: E11

The engineer whose seal appears hereon is an employee for the manufacturer for the materials described herein. Said seal or certification is limited to the products designed and manufactured by manufacturer only.The undersigned engineer is not the overall engineer of record for this project.

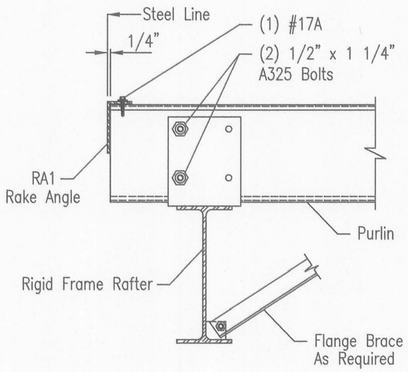

1/2" x 1 1/4" A325 Bolts
(Typ.) (U.N.)

A10 ROOF PURLIN TO ENDWALL RIGID FRAME

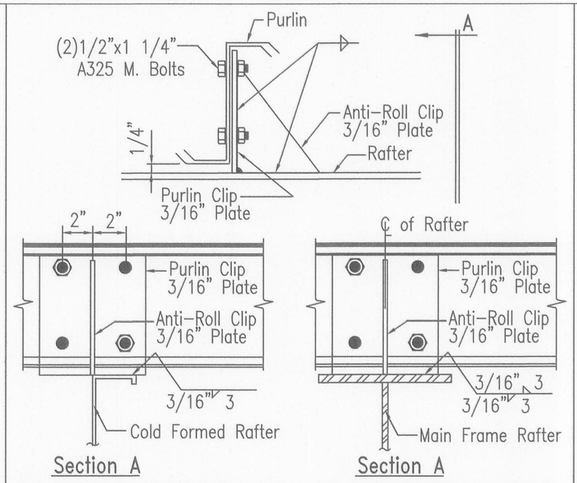

ANTI PURLIN ANTI-ROLL CLIP

*PART	APPLICATION
SC-5	8" Girt Depth
SC-54	10" Girt Depth
SC-55	12" Girt Depth

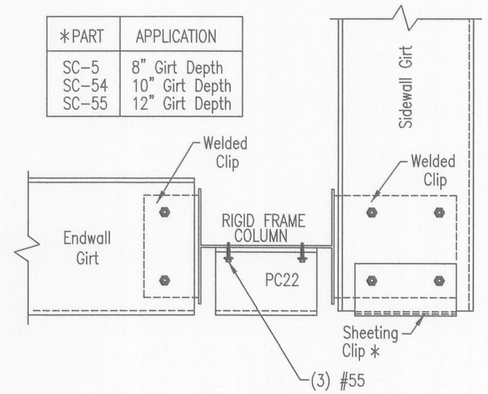

1/2" x 1 1/4" A325 Bolts
(Typ.) (U.N.)

D15 CORNER COLUMN TO WALL GIRT

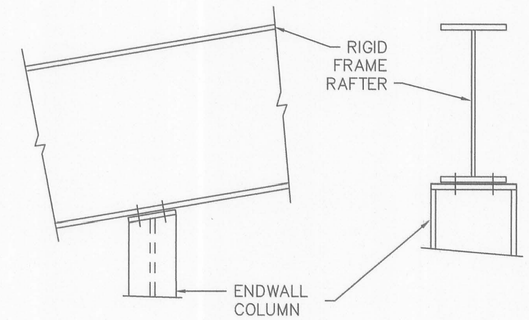

B20 RIGID FRAME RAFTER TO ENDWALL COLUMN

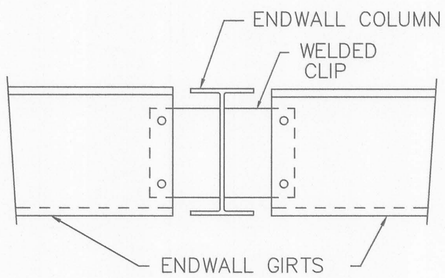

1/2"ø x 1 1/4" A325 BOLTS

C6 ENDWALL COLUMN TO WALL GIRT

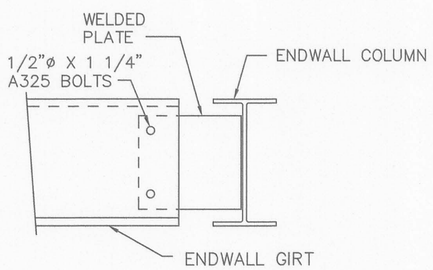

C15 ENDWALL COLUMN TO WALL GIRT

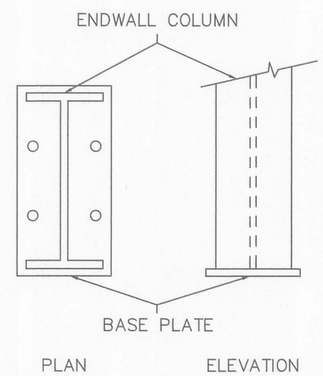

E3 BASE PLATE FOR ENDWALL COLUMN

Revision	Date	Description	By	Ck'd
A	11/27/17	FOR CONSTRUCTION PERMIT	RAV	KYG
0	02/12/18	FOR ERECTOR INSTALLATION	ADN	ADR

MID-WEST
7301 FAIRVIEW ◆ HOUSTON, TEXAS ◆ P.O. BOX 40338
ZIP 77041 (713) 466-7788 ZIP 77240

Project Name & Location:
420 EAST HEREFORD AVENUE
RATON, NM, 87740
COLFAX

Customer:
STEEL DEPOT HOBBS
2112 S MAGNUM RD
HOBBS, NM, 88240
DARLA JOHNSON

Drawing Status:
☐ Preliminary (Not For Construction)
☐ For Approval (Not For Construction)
☒ For Erector Installation

Scale:	NOT TO SCALE	
Drawn by:	ADN	02/12/18
Checked by:	ADR	02/12/18
Project Engineer:	MSP	
Job Number:	16-B-26319	
Sheet Number:	DET1	

The engineer whose seal appears hereon is an employee for the manufacturer for the materials described herein. Said seal or certification is limited to the products designed and manufactured by manufacturer only.The undersigned engineer is not the overall engineer of record for this project.

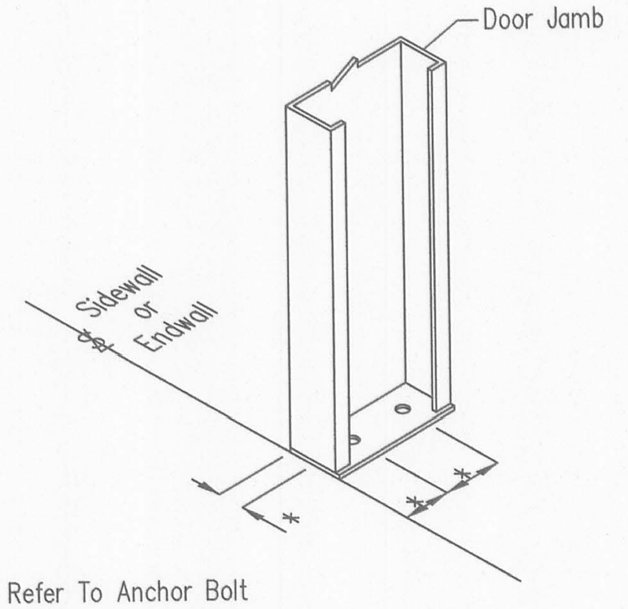

(*) = Refer To Anchor Bolt Plan

E5 BASE PLATE FOR DOOR JAMB

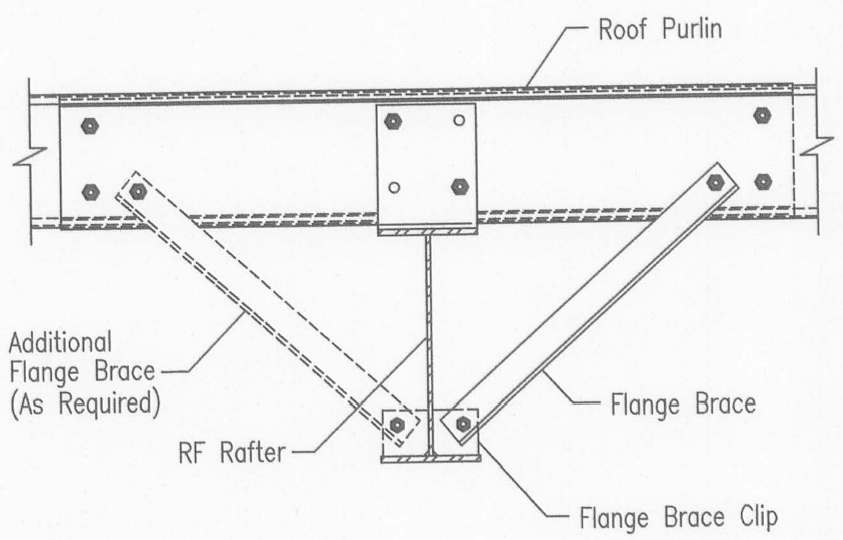

1/2" x 1 1/4" A325 Bolts (Typ.) (U.N.)

G2 ROOF PURLIN TO INTERIOR FRAME RAFTER

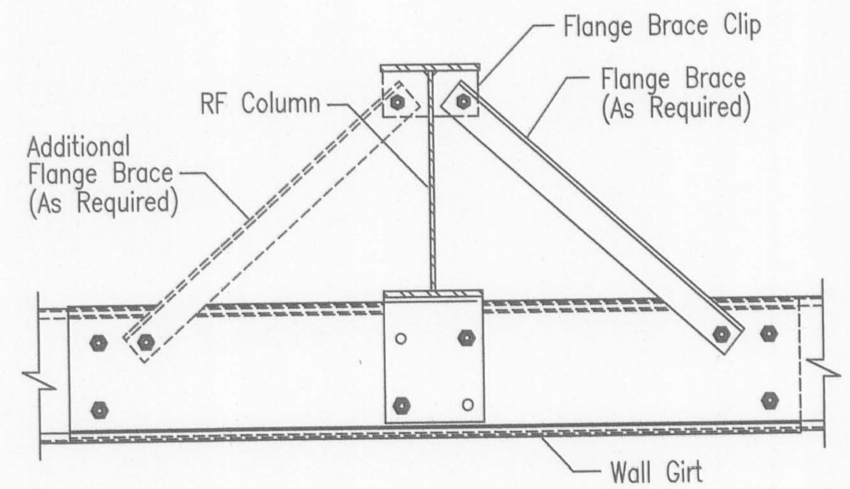

1/2" x 1 1/4" A325 Bolts (Typ.) (U.N.)

H2 WALL GIRT TO RIGID FRAME COLUMN

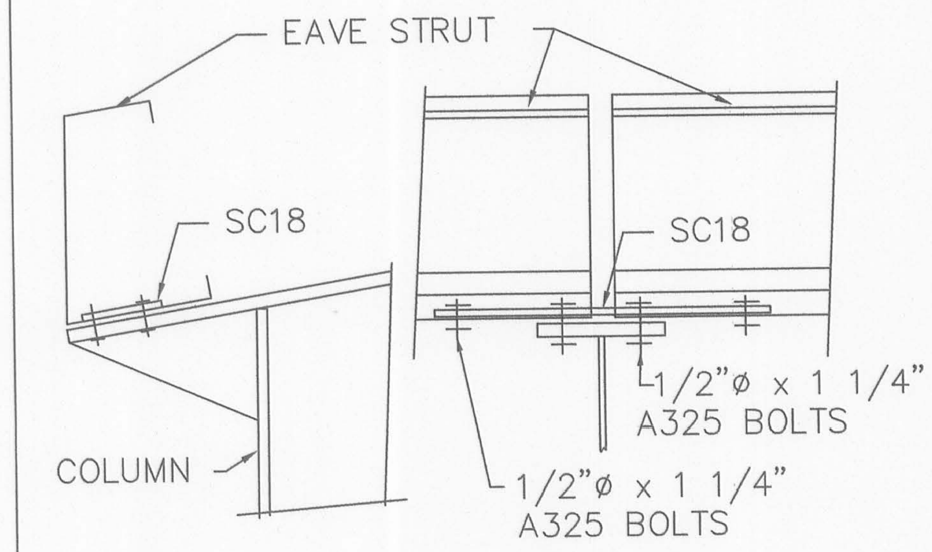

SECTION ELEVATION

J4 EAVE STRUT TO RIGID FRAME

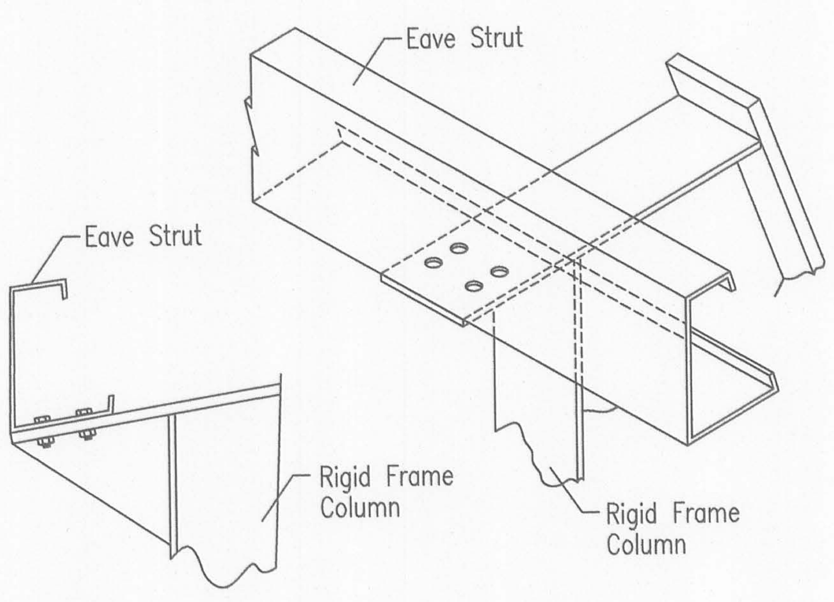

1/2" x 1 1/4" A325 Bolts (Typ.) (U.N.)

J24 EAVE STRUT TO RIGID FRAME

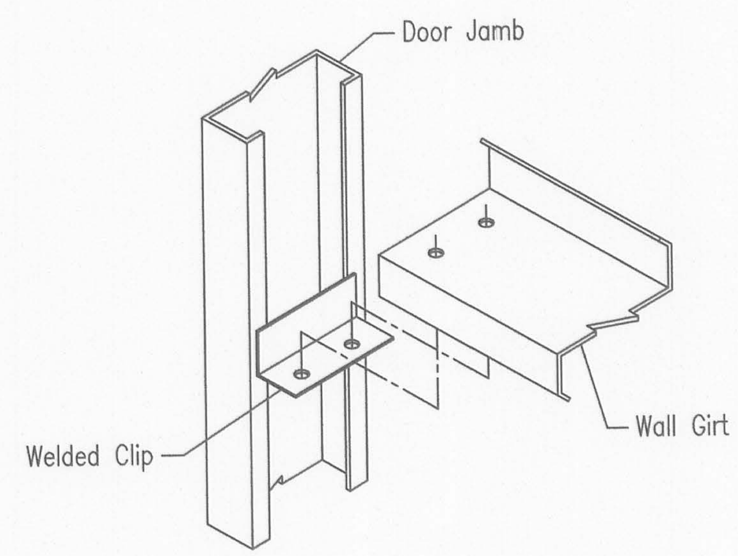

1/2" x 1 1/4" A325 Bolts (Typ.) (U.N.)

K3 WALL GIRT TO DOOR JAMB

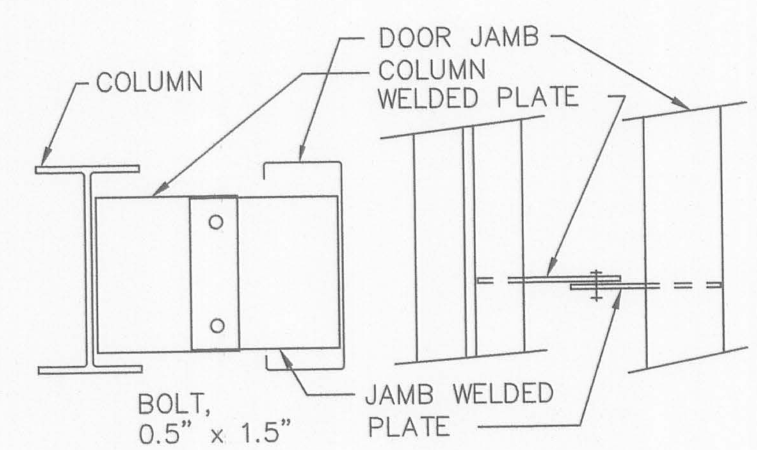

SECTION ELEVATION

K7 WALL COLUMN TO DOOR JAMB

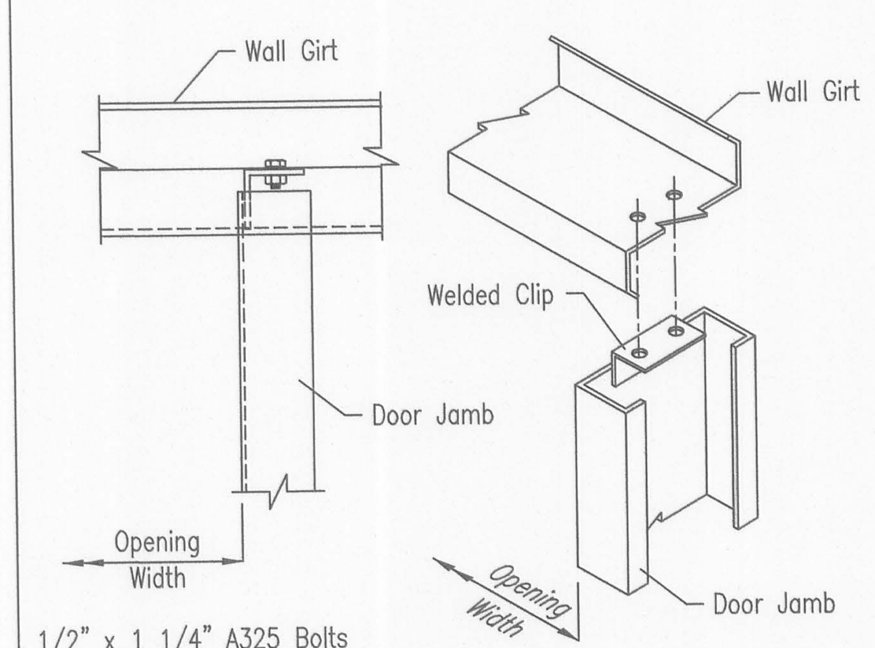

1/2" x 1 1/4" A325 Bolts (Typ.) (U.N.)

L8 DOOR JAMB TO WALL GIRT

Revision	Date	Description	By	Ck'd
A	11/27/17	FOR CONSTRUCTION PERMIT	RAV	KYG
0	02/12/18	FOR ERECTOR INSTALLATION	ADN	ADR

MID-WEST STEEL BUILDING COMPANY
7301 FAIRVIEW ◆ HOUSTON, TEXAS ◆ P.O. BOX 40338
ZIP 77041 (713) 466-7788 ZIP 77240

Customer:
STEEL DEPOT HOBBS
212 S MAGNUM RD
HOBBS, NM, 88240
DARLA JOHNSON

Project Name & Location:
420 EAST HEREFORD AVENUE
RATON, NM, 87740
COLFAX

Drawing Status:
☐ Preliminary (Not For Construction)
☐ For Approval (Not For Construction)
☐ For Construction Permit
☒ For Erector Installation

Scale: NOT TO SCALE
Drawn by: ADN 02/12/18
Checked by: ADR 02/12/18
Project Engineer: MSP
Job Number: 16-B-26319
Sheet Number: DET2

The engineer whose seal appears hereon is an employee for the manufacturer for the materials described herein. Said seal or certification is limited to the products designed and manufactured by manufacturer only.The undersigned engineer is not the overall engineer of record for this project.

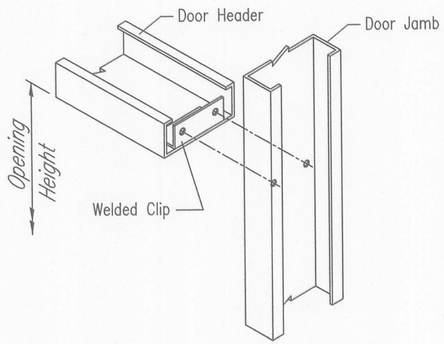

1/2" x 1 1/4" A325 Bolts
(Typ.) (U.N.)

M3 DOOR HEADER TO DOOR JAMB

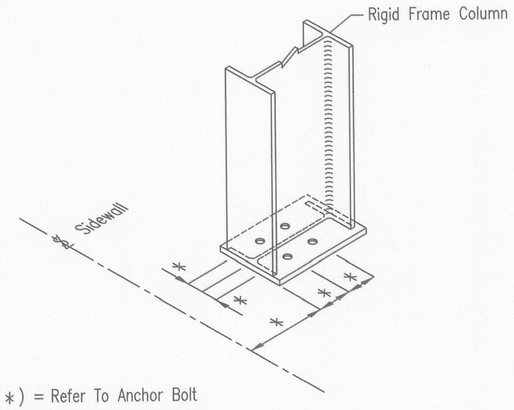

(*) = Refer To Anchor Bolt Plan

R2 ANCHOR BOLTS AT SIDEWALL COLUMNS

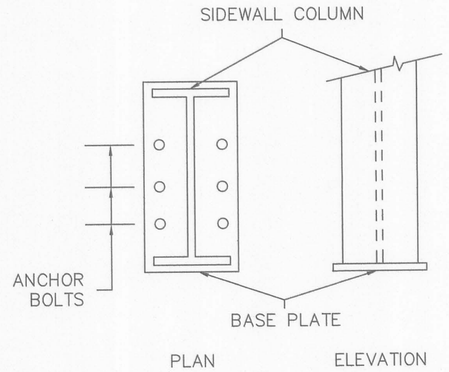

R3 ANCHOR BOLTS AT SIDEWALL COLUMN

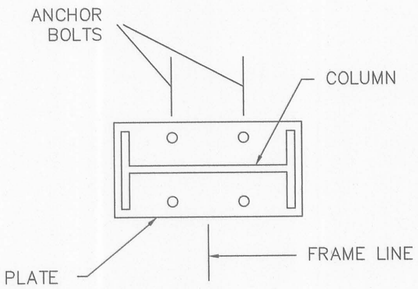

S2 INTERIOR COLUMN ANCHOR BOLTS

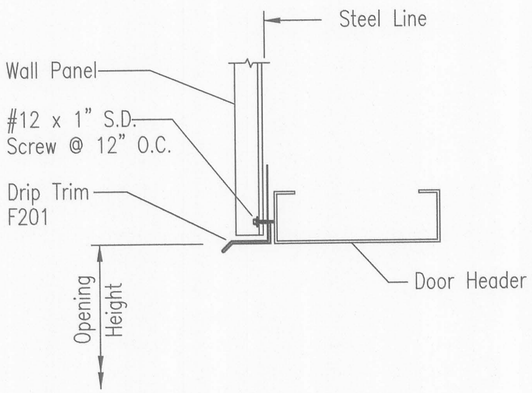

DRIP TRIM DETAIL FOR "R" & "A" PANEL

TRIM_78

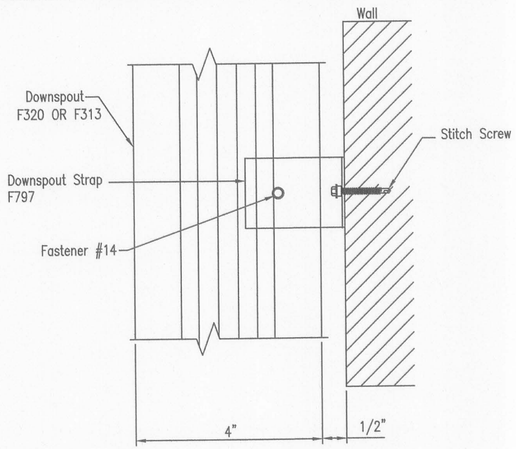

Downspout Strap Attachment Detail

4" x 5" Roll-Form

TRIM_81

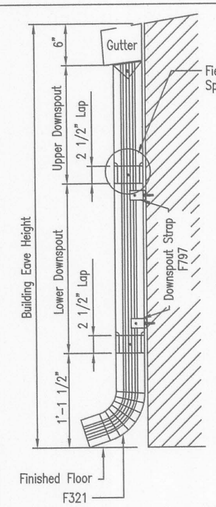

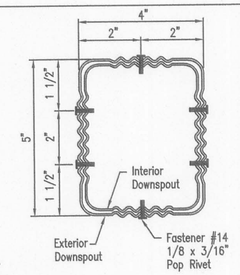

F320 = 10'-6"
F313 = 14'-6"

Field Splice

A field splice is required for eave heights greater than 16'-0".
Cut a 10'-6" or 14'-6" length of downspout. Always measure the required length starting at the swaged end. After cutting to length, insert the swaged end of the cut downspout into the top of the lower downspout. Secure with pop rivets.

4" x 5" Roll Form Downspout

TRIM_96

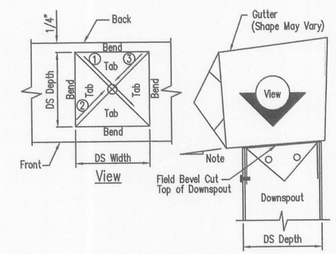

Downspout To Gutter Attachment Detail

1. Refer to the building erection drawings for the location and spacing of the downspouts.
2. Locate all downspouts over a major panel rib if possable.
3. Make a cardboard template of the downspout shape . Place the template on the bottom of the gutter and trace the outline. Remove the template and draw a line from corner to corner, forming an "X" pattern.
4. Drill a whole at the center of the "X". Using tin snips, cut along the lines of the X only. Do not cut along the outside lines of the downspout square.
5. Bend each triangular tab down toward the ground, 90 Degrees to the bottom of the gutter.
6. Position the top of the downspout under the gutter. Make sure all four gutter tabs are on the inside of the downspout.
7. Install Fastener #14 through the downspout into the gutter tab. Only the two sides and the front of the downspout will receive fasteners.

TRIM_98

Revision	Date	Description	By	Ck'd
A	11/27/17	FOR CONSTRUCTION PERMIT	RAV	KYG
0	02/12/18	FOR ERECTOR INSTALLATION	ADN	ADR

MID-WEST
STEEL BUILDING COMPANY
7301 FAIRVIEW • HOUSTON, TEXAS • P.O. BOX 40338
ZIP 77041 (713) 466-7788 ZIP 77240

Customer:
STEEL DEPOT HOBBS
212 S MAGNOLIA RD
HOBBS, NM 88240
DARLA, JOHNSON

Project Name & Location:
420 EAST HEREFORD AVENUE
RATON, NM, 87740
COLFAX

Drawing Status:
☐ Preliminary (Not For Construction)
☐ For Approval (Not For Construction)
☐ For Construction Permit
☒ For Erector Installation

Scale:	NOT TO SCALE	
Drawn by:	ADN	02/12/18
Checked by:	ADR	02/12/18
Project Engineer:	MSP	
Job Number:	16-B-26319	
Sheet Number:	DET3	

The engineer whose seal appears hereon is an employee for the manufacturer for the materials described herein. Said seal or certification is limited to the products designed and manufactured by manufacturer only.The undersigned engineer is not the overall engineer of record for this project.

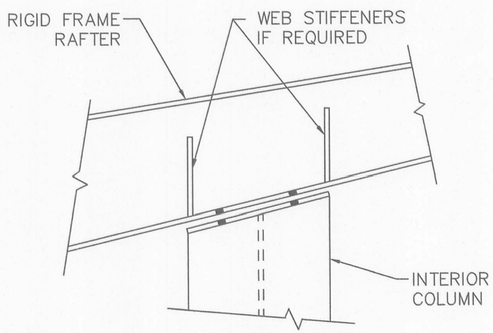

V2 INTERIOR COLUMN TO RAFTER

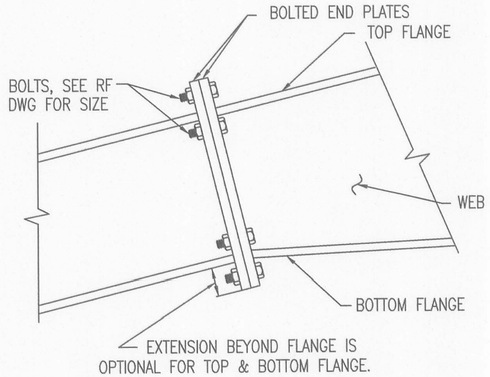

U1 BOLTED END PLATE RAFTER SPLICE

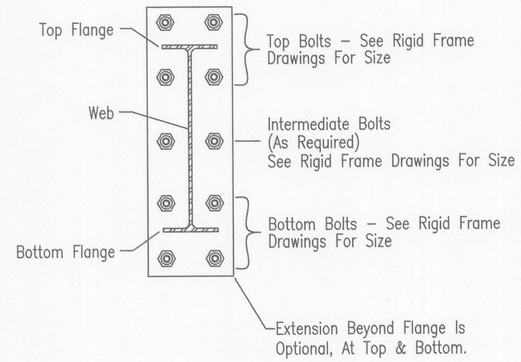

U2 BOLTS FOR RIGID FRAME RAFTER AT BUILDING PEAK

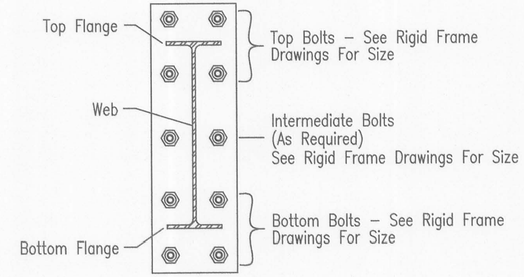

U3 BOLTS FOR RIGID FRAME RAFTER TO COLUMN CONNECTION

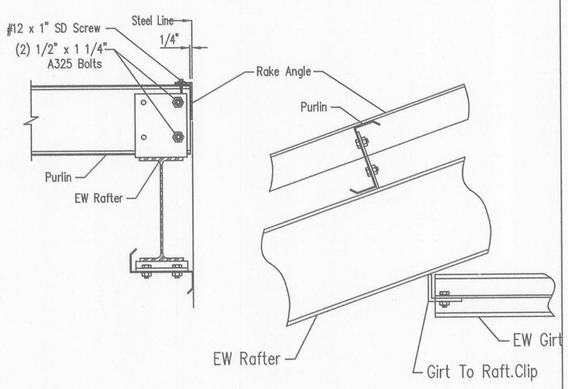

1/2" x 1 1/4" A325 Bolts (Typ.) (U.N.)

W3 ENDWALL GIRT TO HOT ROLLED RAFTER CONNECTION

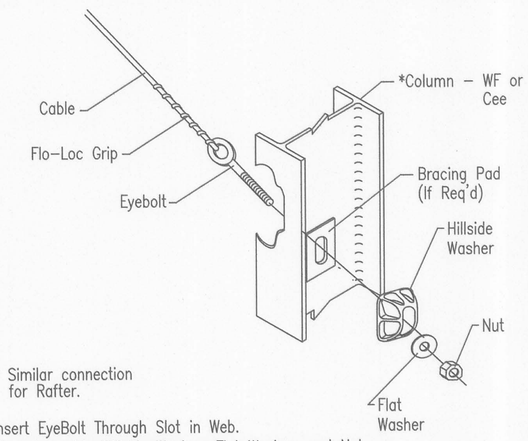

* Similar connection for Rafter.

Insert EyeBolt Through Slot in Web.
Then Assemble Hillside Washer, Flat Washer, and Nut.

Q2 DIAGONAL CABLE, EYEBOLT END

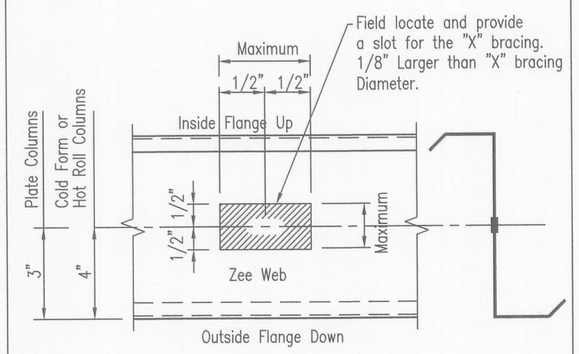

*For Cable, Unravel Flo-Lock Grip and Remove Eye Bolt, Slip Through Slotted Girts, then Reassemble Cable.

CABLE AT FLUSH WALL GIRT

Revision	Date	Description	By	Ck'd
A	11/27/17	FOR CONSTRUCTION PERMIT	RAV	KYG
0	02/12/18	FOR ERECTOR INSTALLATION	ADN	ADR

MID-WEST
STEEL BUILDING COMPANY
7301 FAIRVIEW ◆ HOUSTON, TEXAS ◆ P.O. BOX 40338
ZIP 77040 (713) 466-7188 ZIP 77240

Project Name & Location:
420 EAST HEREFORD AVENUE
RATON, NM, 87740
COLFAX

Customer:
STEEL DEPOT HOBBS
212 S MAGNUM RD
HOBBS, NM, 88240
DARLA JOHNSON

Drawing Status:
☐ Preliminary (Not For Construction)
☐ For Approval (Not For Construction)
☐ For Construction Permit
☒ For Erector Installation

Scale:	NOT TO SCALE
Drawn by:	ADN 02/12/18
Checked by:	ADR 02/12/18
Project Engineer:	MSP
Job Number:	16-B-26319
Sheet Number:	DET4

The engineer whose seal appears hereon is an employee for the manufacturer for the materials described herein. Said seal or certification is limited to the products designed and manufactured by manufacturer only.The undersigned engineer is not the overall engineer of record for this project.

Double Member Zee-Section Welded Girt

Page	Date	Rev.
21-05-26	Dec '12	00

DOUBLE MEMBER ZEE–SECTION GIRT WILL RUN TO THE END OF THE MAIN GIRT IT'S NESTED WITH UNLESS ANOTHER MAIN GIRT LAPS INTO THE BAY. IN THAT CONDITION THE DOUBLE GIRT WILL STOP AND BOLT TO THE END OF THE LAPPING MAIN GIRT, AS SHOWN BELOW. THE STANDARD LAP OF THE NESTED DOUBLE GIRT TO MAIN GIRTS IS 3 1/2".

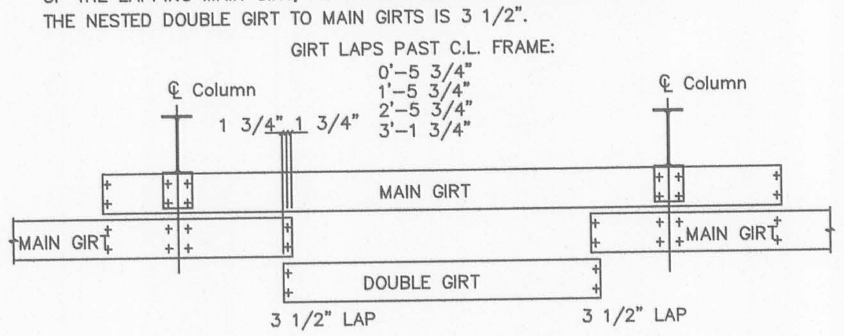

BYPASS INTERIOR BAY WITH DOUBLE ZEE GIRT

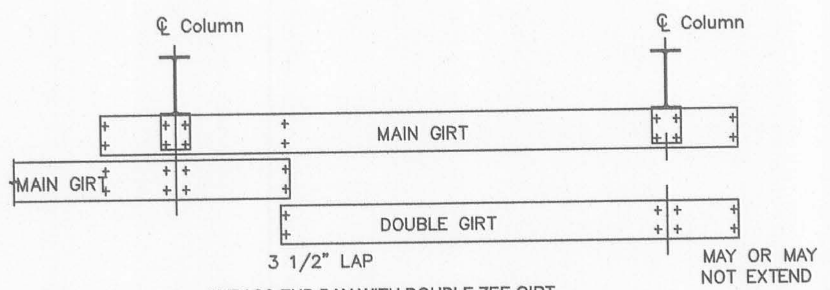

BYPASS END BAY WITH DOUBLE ZEE GIRT

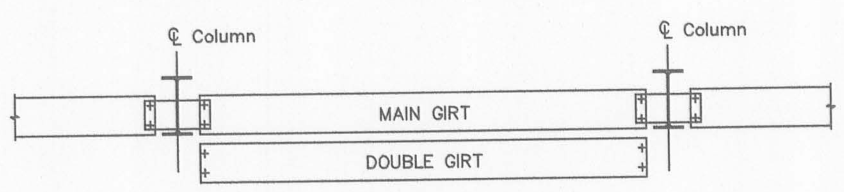

FLUSH AND INSET BAY WITH DOUBLE ZEE GIRT

IF FLANGE BRACE EXTENDS BEYOND LAP REQUIREMENTS, THE NESTED GIRT WILL NEED TO BE PUNCHED AS WELL.

PBR Light Transmitting Wall Panel

Page	Date	Rev
PW11011	Jul '15	04

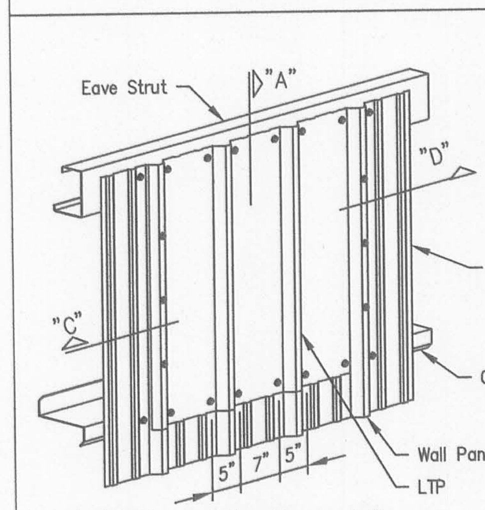

Light Transmitting Panel at Eave

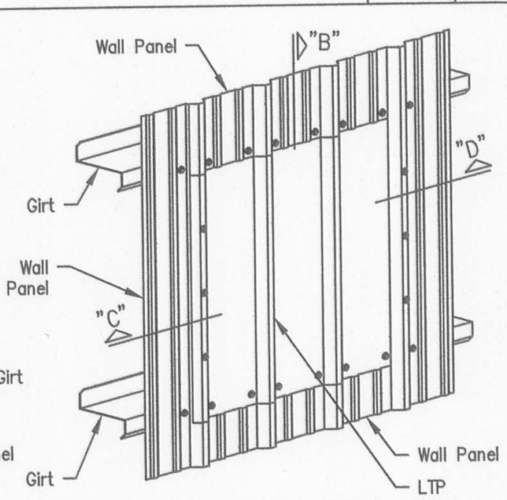

Light Transmitting Panel Between Girts

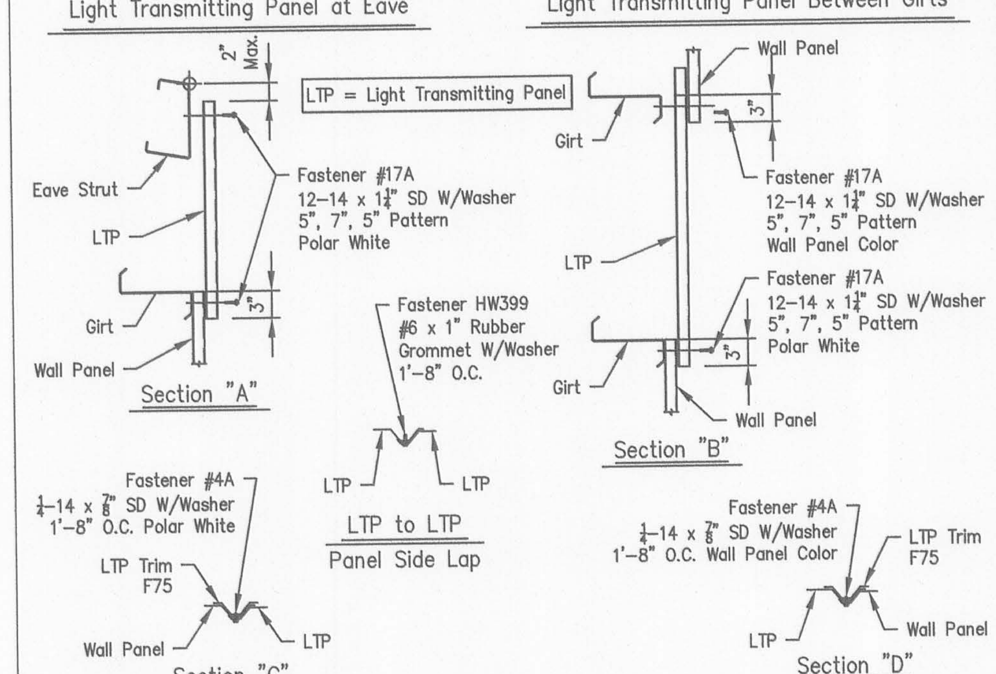

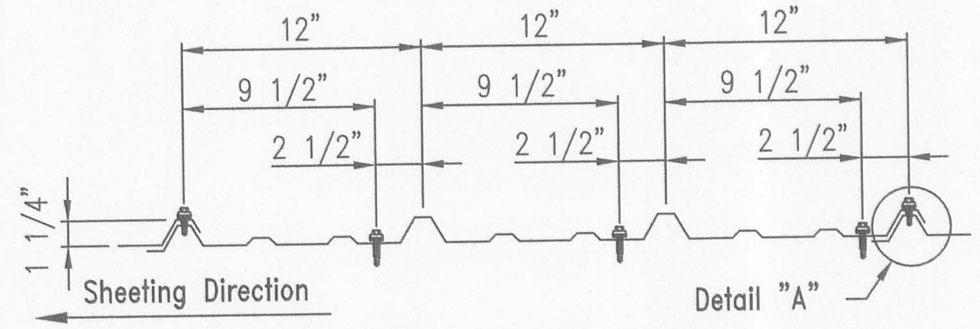

All Roof Members Except As Noted Below

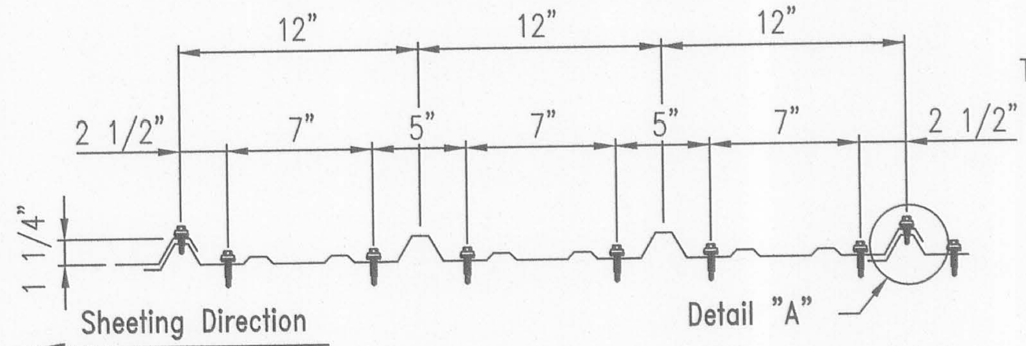

At Eave Strut, Panel End Lap, and Peak Purlin

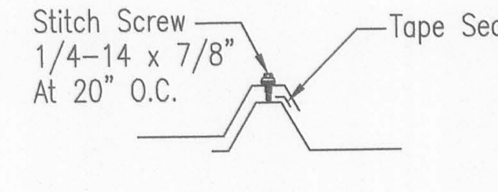

Detail "A"

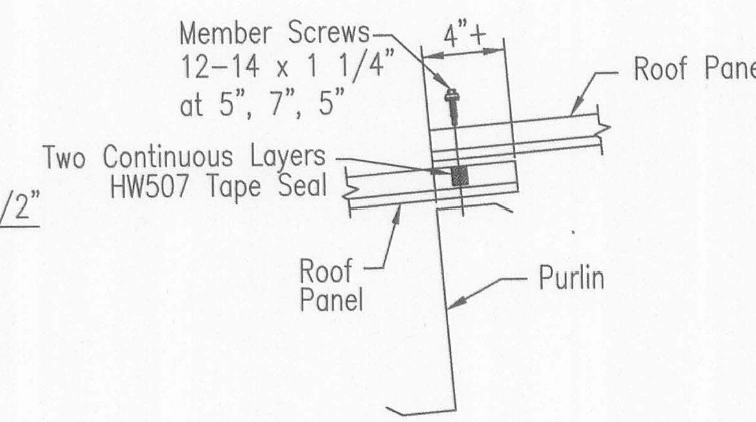

Section Thru Panel End Laps

Fastener Location for "PBR" Roof Panel

TRIM_175

Standard Grade

Description	Fastener Number	Application
1/4"–14 x 7/8"	4A	Stitch & Trim Screw
12–14 x 1 1/4"	17A	Member Screw
12–14 x 1 1/2"	17B	Member Screw
12–14 x 2"	28	Member Screw

Long Life

Description	Fastener Number	Application
1/4"–14 x 7/8"	4	Stitch & Trim Screw
12–14 x 1 1/4"	3	Member Screw
12–14 x 1 1/2"	3A	Member Screw
12–14 x 2"	58	Member Screw

Note:
Standard details call for 1 1/4" fasteners as member screws by default.
Member screws may be 1 1/4", 1 1/2", or 2" depending on insulation, application, or customer request.

Self–Drilling Screw Application

SCRW1

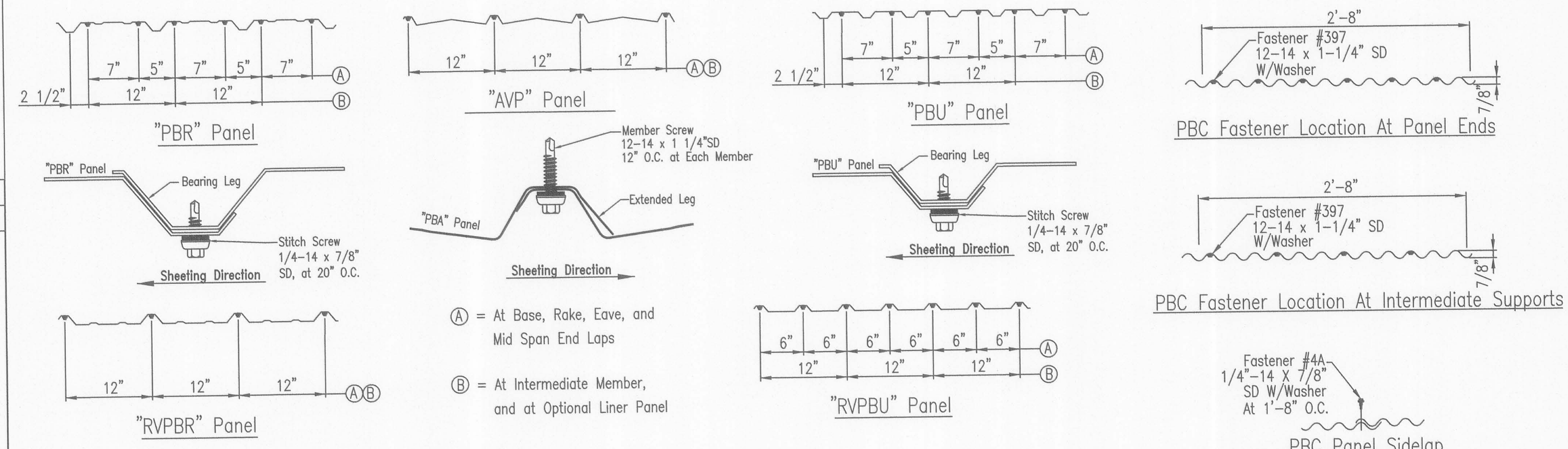

Fastener Location for Panel At Wall

TRIM_174

Revision	Date	Description	By	Ck'd
A	11/27/17	FOR CONSTRUCTION PERMIT	RAV	KYG
0	02/12/18	FOR ERECTOR INSTALLATION	ADN	ADR

MID-WEST STEEL BUILDING COMPANY
7301 FAIRVIEW ◆ HOUSTON, TEXAS ◆ P.O. BOX 40338
ZIP 77041 (713) 466-7788 ZIP 77240

Project Name & Location:
420 EAST HEREFORD AVENUE
RATON, NM, 87740
COLFAX

Customer:
STEEL DEPOT HOBBS
212 S. MAGNUM RD
HOBBS, NM, 88240
DARLA JOHNSON

Drawing Status:
☐ Preliminary (Not For Construction)
☐ For Approval (Not For Construction)
☐ For Construction Permit
☒ For Erector Installation

Scale: NOT TO SCALE
Drawn by: ADN 02/12/18
Checked by: ADR 02/12/18
Project Engineer: MSP
Job Number: 16–B–26319
Sheet Number: DET5

The engineer whose seal appears hereon is an employee for the manufacturer for the materials described herein. Said seal or certification is limited to the products designed and manufactured by manufacturer only. The undersigned engineer is not the overall engineer of record for this project.

PBR Roof Panel - Classic Southern Standard and Southern Large Gutter - Sheeted Wall

Page WPR02001 | Date May '16 | Rev. 08

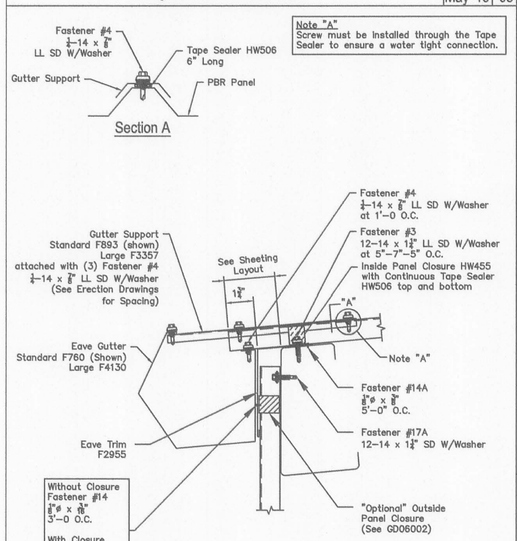

PBR Roof Eave Gutter End Lap Installation

Page WPR04002 | Date Oct '16 | Rev. 04

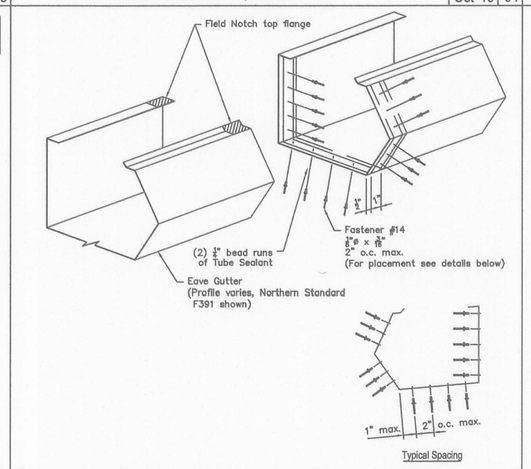

PBR Roof Gutter Expansion Installation - 100'-0" Maximum

Page WPR04003 | Date Nov '16 | Rev. 04

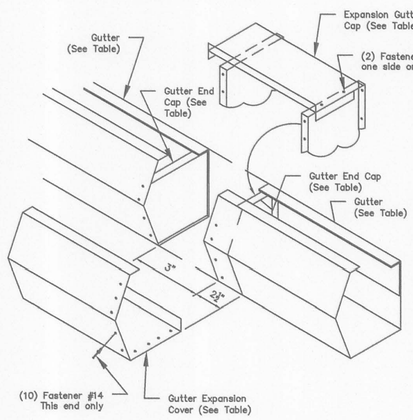

	Gutter	Gutter End Cap	Expansion Cover	Expansion Cap
Southern Standard	F760	F761 (12) Fastener #14	F643	F635
Southern Large	F4130	F4131 (14) Fastener #14	F4102	F4132
Northern Standard	F391	F392 (15) Fastener #14	F656	F658
Northern Large	F883	F894 (17) Fastener #14	F641	F629

PBR Roof Panel - Southern Standard and Southern Large Low Eave Rake Corner with Eave Gutter - 1 1/4" Wall Panel

Page WPR04004 | Date May '16 | Rev. 06

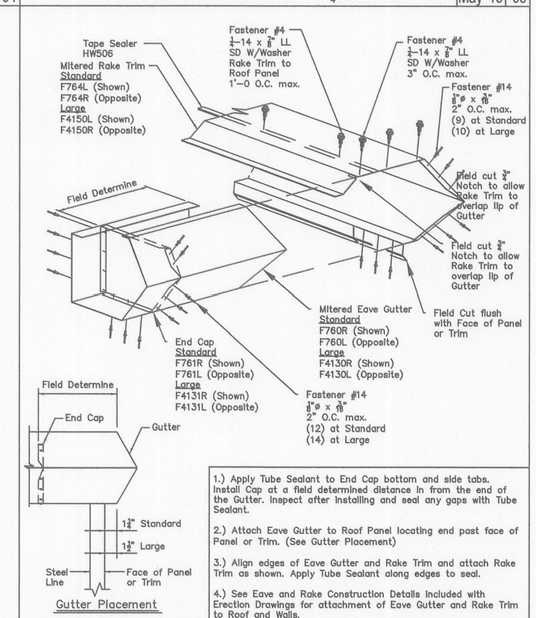

1.) Apply Tube Sealant to End Cap bottom and side tabs. Install Cap at a field determined distance in from the end of the Gutter. Inspect after installing and seal any gaps with Tube Sealant.

2.) Attach Eave Gutter to Roof Panel locating end past face of Panel or Trim. (See Gutter Placement)

3.) Align edges of Eave Gutter and Rake Trim and attach Rake Trim as shown. Apply Tube Sealant along edges to seal.

4.) See Eave and Rake Construction Details Included with Erection Drawings for attachment of Eave Gutter and Rake Trim to Roof and Walls.

PBR Panel - Southern Standard and Southern Large Classic Rake Trim - Sheeted Wall

Page WPR05002 | Date May '16 | Rev. 07

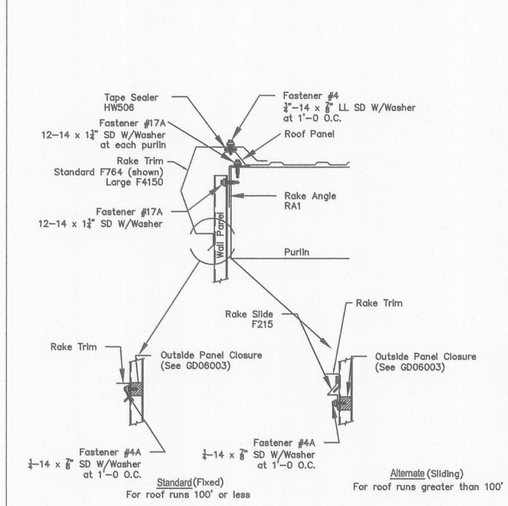

PBR Roof Rake End Lap Installation - 1 1/4" Wall Panel

Page WPR05010 | Date Oct '16 | Rev. 04

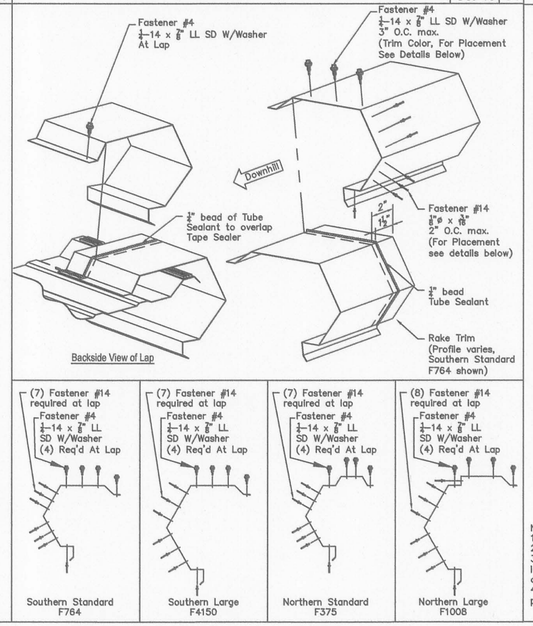

Roll Form Downspout Layout

Date DP00001 | Rev. 02

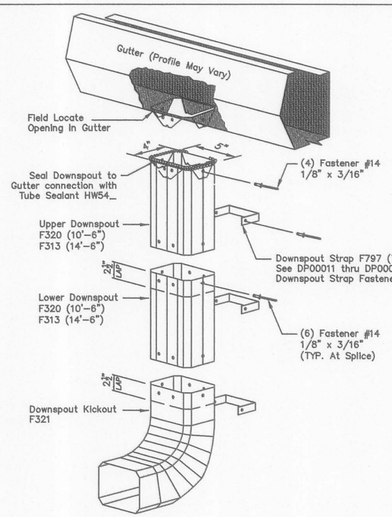

Note:
1. Refer to the building erection drawings for the spacing of the downspouts.
2. Locate all downspouts over a panel major rib if possible.
3. A field splice is required for eave heights greater than 16'-0". Always measure the required length starting at the swaged end. After cutting to length, insert the swaged end of the cut downspout into the top of the lower downspout.
4. Downspout straps F797 are Located at the bottom of a downspout, below a splice, and at mid point of downspout longer than 10'-6". See DP00011 thru DP00014 for downspout strap fasteners.

Downspout Strap Attachment PBR, RBR, AVP, Vistashadow, & IMP Fully Sheeted Wall

Page DP00011 | Date Feb '17 | Rev 03

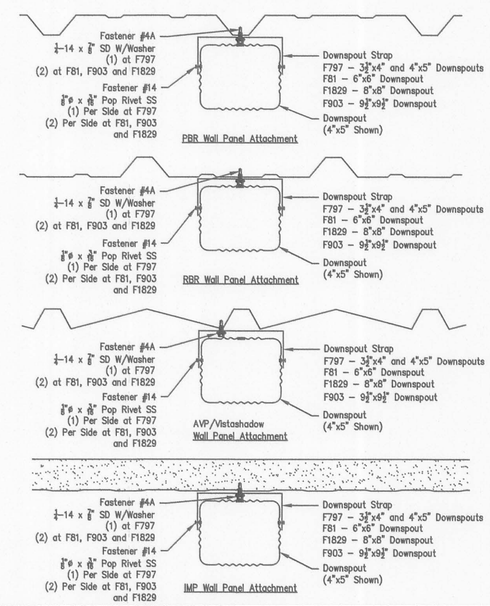

Revision	Date	Description	By	Ck'd
A	11/27/17	FOR CONSTRUCTION PERMIT	RAV	KYG
0	02/12/18	FOR ERECTOR INSTALLATION	ADN	ADR

MID-WEST
7301 FAIRVIEW ZIP 77041
P.O. BOX 40338 ZIP 77240
(713) 466-7788

Project Name & Location:
420 EAST HEREFORD AVENUE
RATON, NM, 87740
COLFAX

Customer:
STEEL DEPOT HOBBS
212 S. MAGNUM RD
HOBBS, NM, 88240
DARLA JOHNSON

Drawing Status:
☐ Preliminary (Not For Construction)
☐ For Approval (Not For Construction)
☐ For Construction Permit
☒ For Erector Installation

Scale:	NOT TO SCALE
Drawn by:	ADN 02/12/18
Checked by:	ADR 02/12/18
Project Engineer:	MSP
Job Number:	16-B-26319
Sheet Number:	DET6

The engineer whose seal appears hereon is an employee for the manufacturer for the materials described herein. Said seal or certification is limited to the products designed and manufactured by manufacturer only. The undersigned engineer is not the overall engineer of record for this project.

PBR Wall Panel
Base Angle With Panel Recess

Page	Date	Rev
PW02102M	Jul '17	01

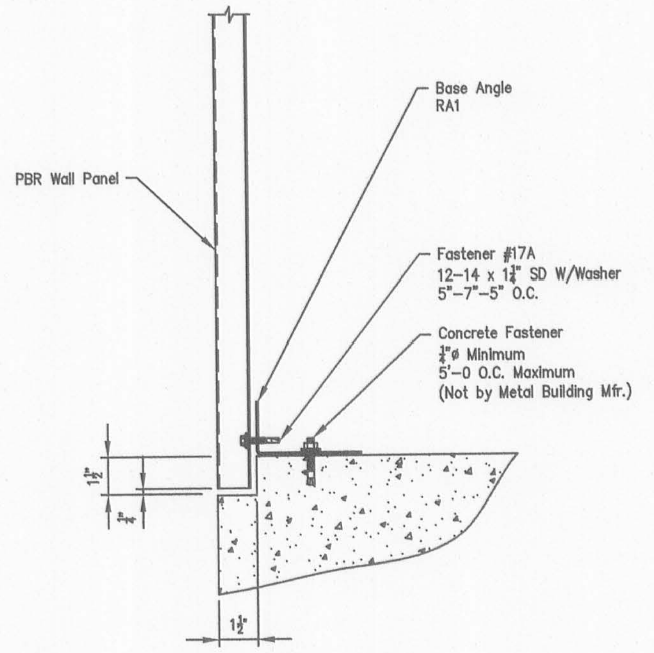

Wall panel must be held off of base trim a minimum of ⅛" to prevent bottom of wall panel from rusting.

PBR Wall Panel
Base Channel With Panel Recess

Page	Date	Rev
PW02106M	Jul '17	01

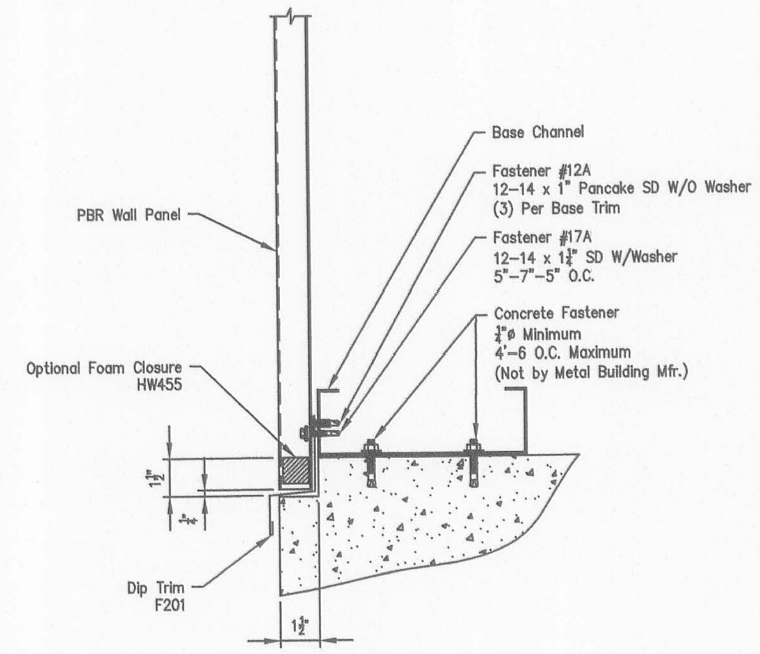

Wall panel must be held off of base trim a minimum of bottom of wall panel from rusting.

PBR Wall Panel
Outside Corner Trim

Page	Date	Rev
PW03001	May '16	06

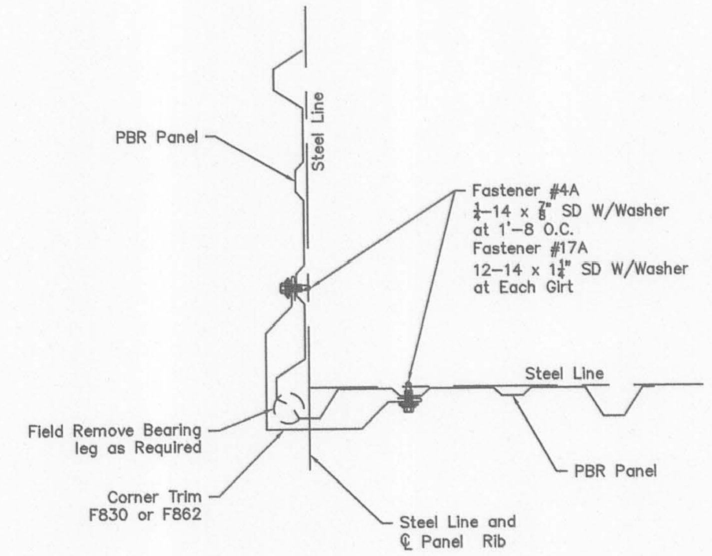

PBR Wall Panel
Fastener Location

Page	Date	Rev
PW05003	Aug '15	04

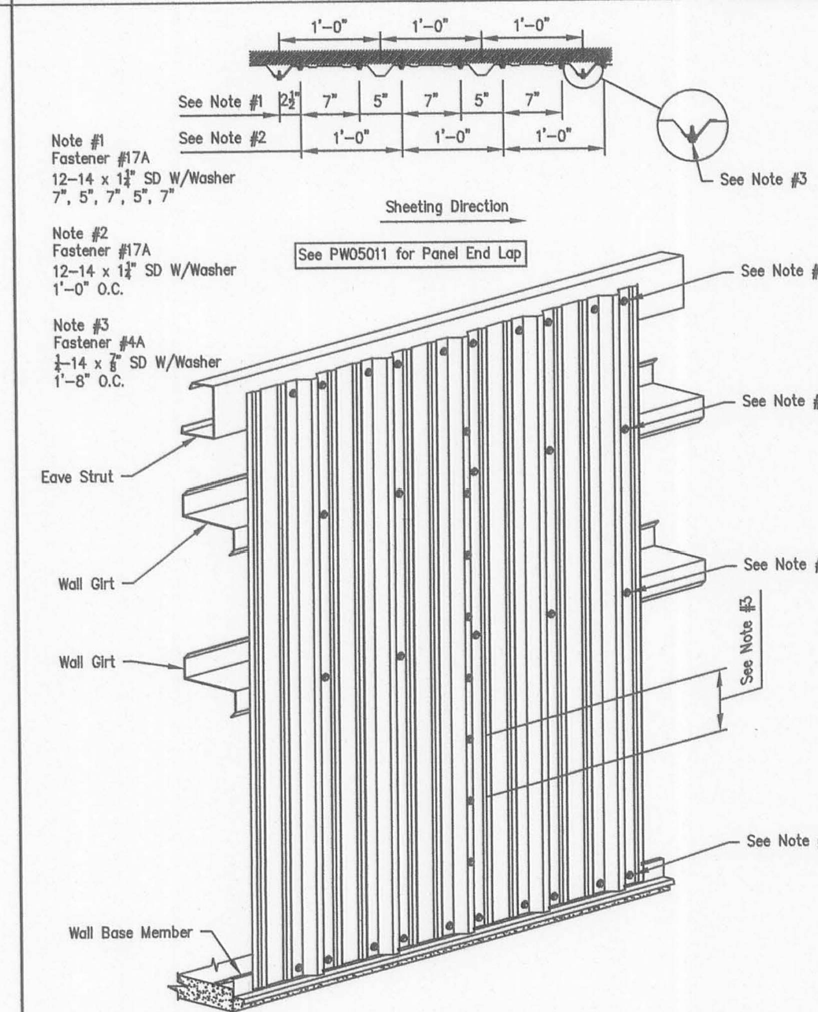

PBR Panel
Fixed Ridge Detail

Page	Date	Rev
GPR06003	Jul '17	03

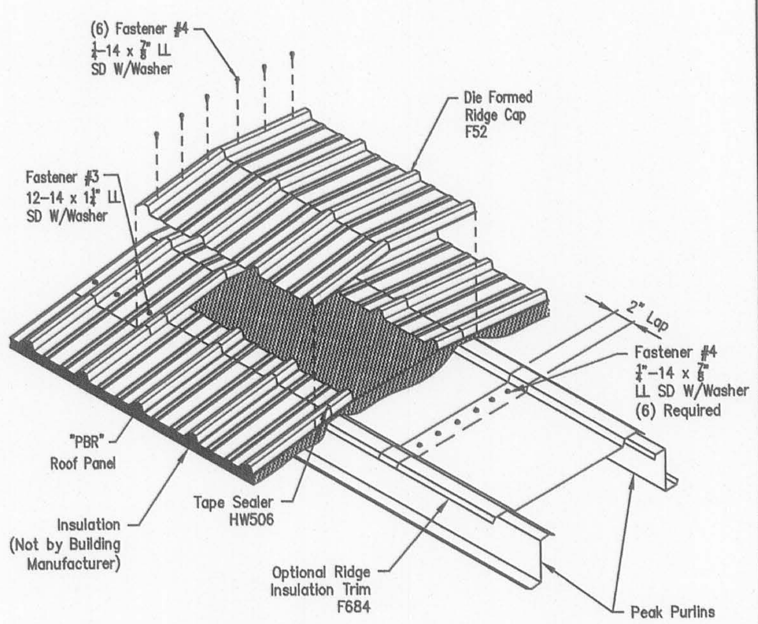

Note:
Install optional ridge insulation trim F684 as insulation and roof sheeting is being applied. Temporary attachment, if required, not by building manufacturer.

PBR Panel
Fixed Ridge Detail

Page	Date	Rev
GPR06004	Jul '17	03

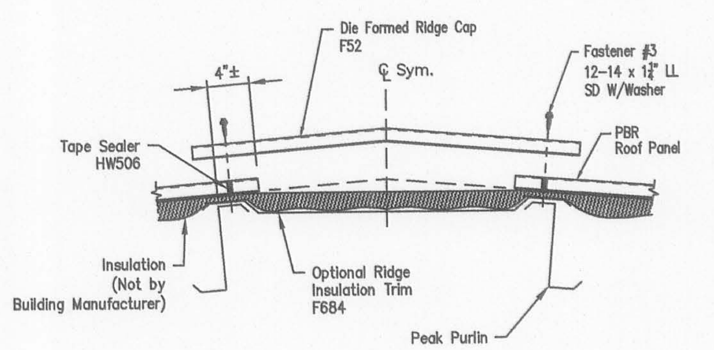

PBR Wall Panel
Panel Side Lap

Page	Date	Rev
PW05002	Mar '14	02

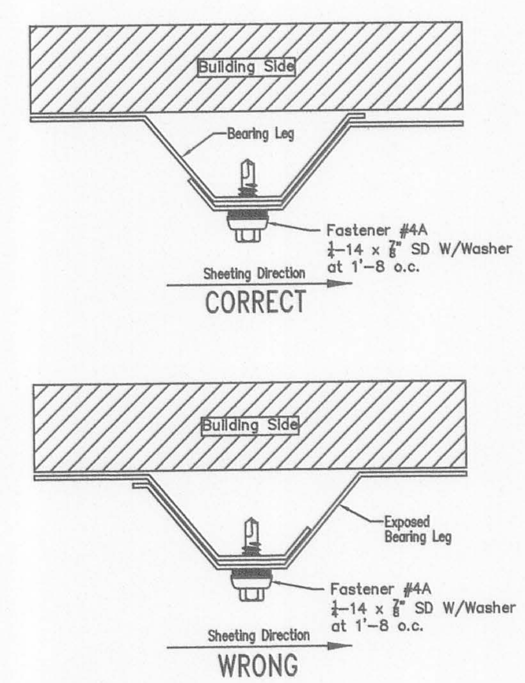

PBR Panel
Peak Box

Page	Date	Rev
GPR05001	Oct '16	05

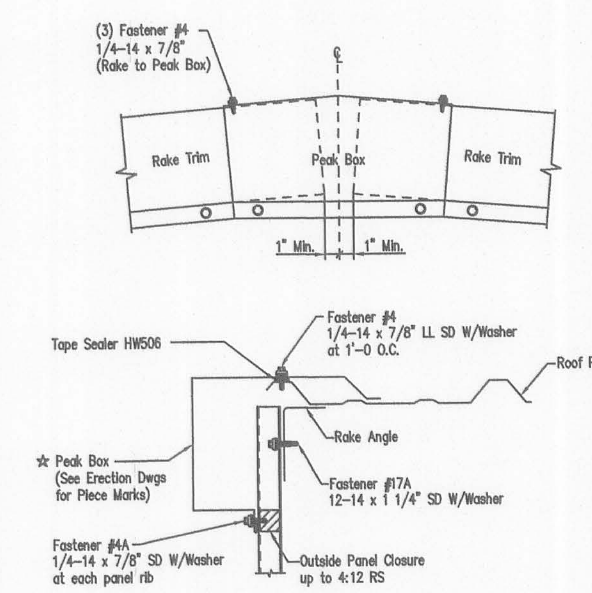

☆

Trim Profile	Piece Mark: Southern Standard	Southern Large	Northern Standard	Northern Large
Cascading	F1519	F1585	F1672	F1760
Classic	F160	F4153	F381	F1024
Contoured	F2219	F2285	F2372	F2460
Signature	F916	F3853	F236	F1018

Flashing profile may vary dependent upon project order. Attachment as illustrated are applicable for all profiles.

Revision	Date	Description	By	Ck'd
A	11/27/17	FOR CONSTRUCTION PERMIT	RAV	KYG
0	02/12/18	FOR ERECTOR INSTALLATION	ADN	ADR

MID-WEST STEEL BUILDING COMPANY
7301 FAIRVIEW • HOUSTON, TEXAS • P.O. BOX 40338
ZIP 77041 (713) 466-7788 ZIP 77240

Project Name & Location:
420 EAST HEREFORD AVENUE
RATON, NM, 87740
COLFAX

Customer:
STEEL DEPOT HOBBS
212 S MAGNUM RD
HOBBS, NM, 88240
DARLA JOHNSON

Drawing Status:
☐ Preliminary (Not For Construction)
☐ For Approval (Not For Construction)
☐ For Construction Permit
☒ For Erector Installation

Scale: NOT TO SCALE
Drawn by: ADN 02/12/18
Checked by: ADR 02/12/18
Project Engineer: MSP
Job Number: 16-B-26319
Sheet Number: DET7

The engineer whose seal appears hereon is an employee for the manufacturer for the materials described herein. Said seal or certification is limited to the products designed and manufactured by manufacturer only. The undersigned engineer is not the overall engineer of record for this project.

Girt Connection At Bypass Column

Page CF01120 | Date Jun '16 | Rev 02

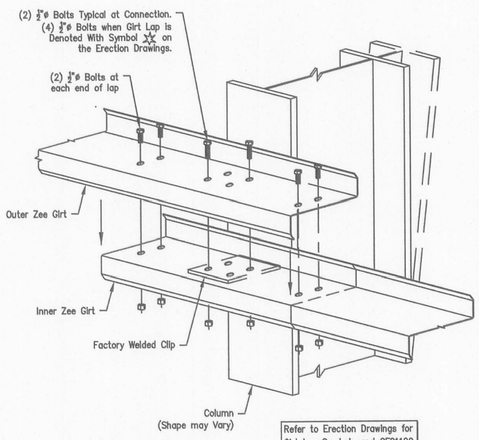

Refer to Erection Drawings for Girt Lap Symbols and CF01122 for Lap Symbols and Lengths.

All Bolts to be 3/4"ø Unless Noted. For Required Length Refer to Grip Table on Erection Drawings.

Girt And Purlin Connection At Bypass Column And Rafter

Page CF01122 | Date Jul '17 | Rev 03

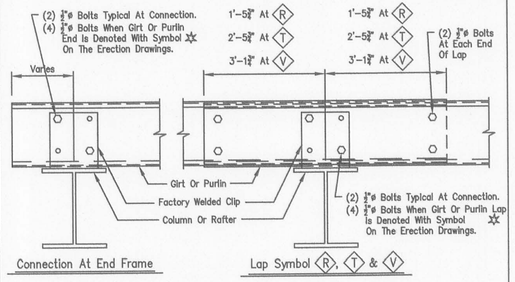

Connection At End Frame

Lap Symbol R, T & V

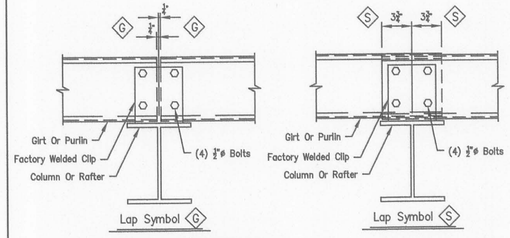

Lap Symbol G

Lap Symbol S

ZEE SECTION LAP TABLE			
SYMBOL	LAP LENGTH	SYMBOL	LAP LENGTH
G	-0'-0 1/4"	T	2'-5 3/4"
S	0'-3 3/4"	V	3'-1 3/4"
R	1'-5 3/4"		

Refer to Erection Drawings for Lap Symbol at Girt and Purlin Connection.

All Bolts to be 3/4"ø Unless Noted. For Required Length Refer to Grip Table on Erection Drawings.

Eave Strut Connection Flush / Bypass Column - Interior Bay Column - Roof Slope 4 1/2:12 Or Less

Page CF02030 | Date Sep '17 | Rev 02

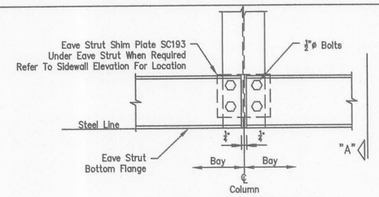

Eave Strut Connection Detail
Flush / Bypass Column – Interior Bay Column

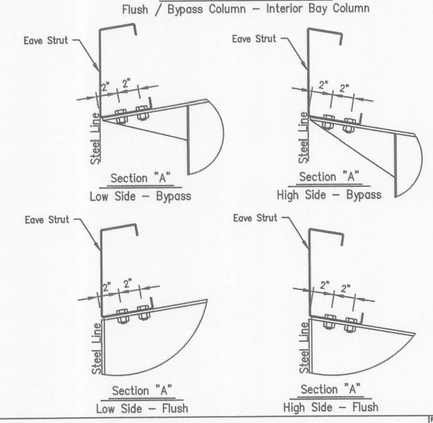

Eave Strut Connection Flush / Bypass Column - End Bay Column - Roof Slope 4 1/2:12 Or Less

Page CF02033 | Date Sep '17 | Rev 04

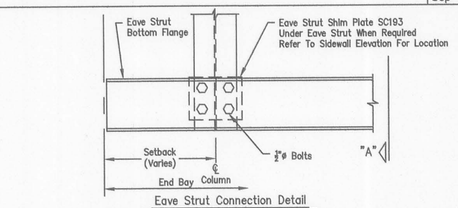

Eave Strut Connection Detail
Flush / Bypass Column – End Bay Column

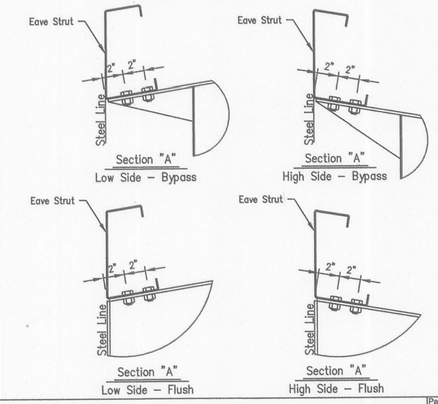

End Frame Bypass Sidewall Girts Endwall Girt Centered on Column Flange

Page EF03014 | Date Jul '14 | Rev. 01

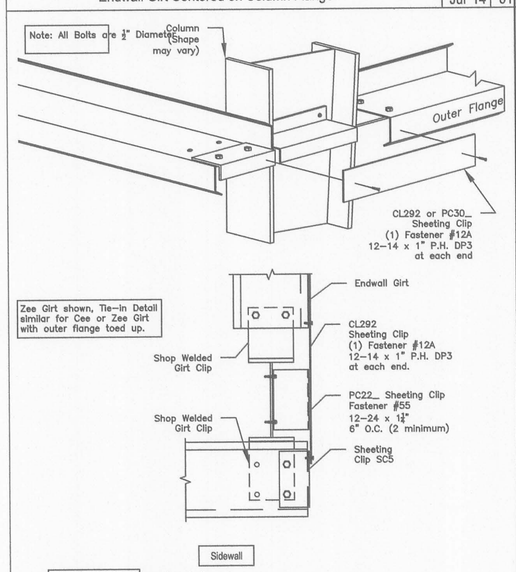

Wall Panels not shown for clarity.

Girts at Column Flush Sidewall or Endwall Girts

Page CF01123 | Date Feb '11 | Rev. 01

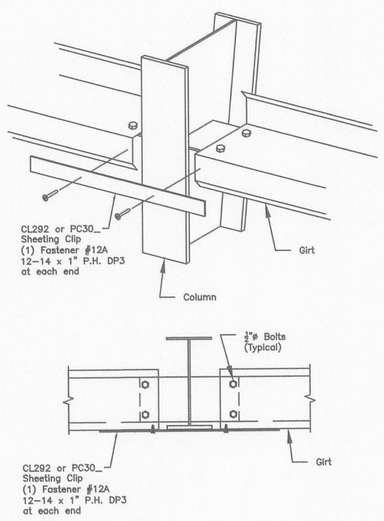

Welded Clips - Framed Opening Connections Cold Form and Hot Rolled - Base, Girt, Header, and Sill to Jamb

Page AC01223 | Date Nov '11 | Rev. 01

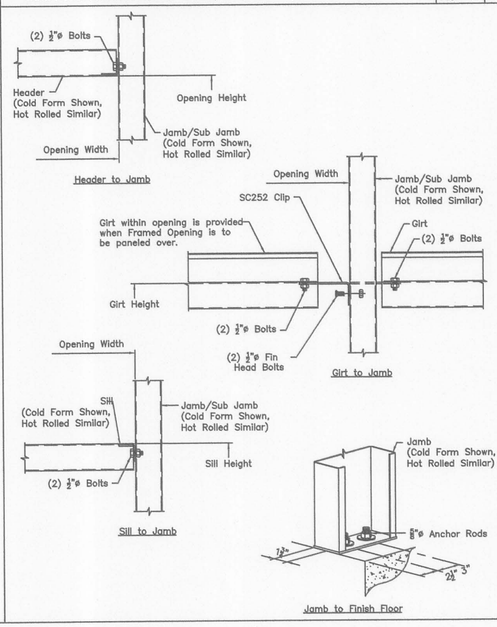

PBR Panel End Lap Detail

Page GPR04015 | Date Jun '14 | Rev 02

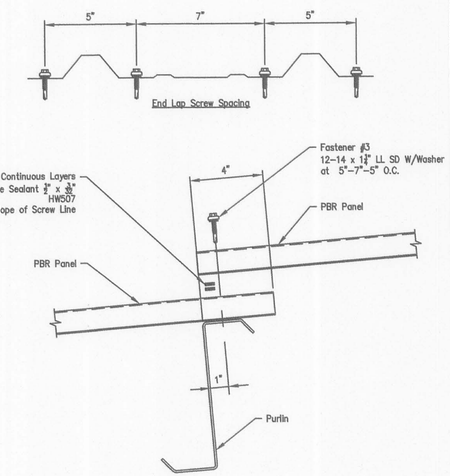

Revision	Date	Description	By	Ck'd
A	11/27/17	FOR CONSTRUCTION PERMIT	RAV	KYG
0	02/12/18	FOR ERECTOR INSTALLATION	ADN	ADR

MID-WEST
STEEL BUILDING COMPANY
7301 FAIRVIEW • HOUSTON, TEXAS • P.O. BOX 40338
ZIP 77041 (713) 466-7160 ZIP 77240

Project Name & Location:
420 EAST HEREFORD AVENUE
RATON, NM, 87740
COLFAX

Customer:
STEEL DEPOT HOBBS
2112 S MAGNUM RD
HOBBS, NM 88240
HARLAN JOHNSON

Drawing Status:
☐ Preliminary (Not For Construction)
☐ For Approval (Not For Construction)
☐ For Construction Permit
☒ For Erector Installation

Scale:	NOT TO SCALE
Drawn by:	ADN 02/12/18
Checked by:	ADR 02/12/18
Project Engineer:	MSP
Job Number:	16–B–26319
Sheet Number:	DET8

The engineer whose seal appears hereon is an employee for the manufacturer for the materials described herein. Said seal or certification is limited to the products designed and manufactured by manufacturer only.The undersigned engineer is not the overall engineer of record for this project.

PBR Wall Panel - Three Sided Framed Opening
Trim Installation with Field Notch Panel at Head Trim

Page PW07022 | Date Sep '14 | Rev. 03

Note: Trim Installation can be done by Field Notch Panel as shown on PW07022 & PW07023 OR with Field Notch and Bend Tabs at Head Trim as shown on PW07024 & PW07025.

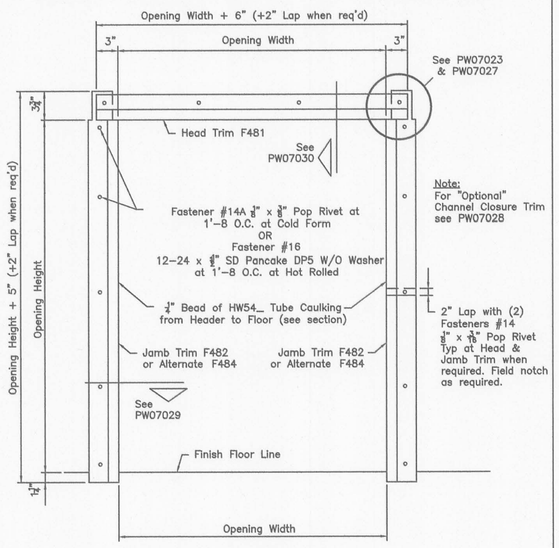

Note: All trim is to be installed BEFORE blanket insulation is applied to walls.

Note: Field measure Opening Width and Height before making field cuts and adjust cut dimensions accordingly.

PBR Wall Panel - Three Sided Framed Opening
Field Notch Panel at Head Trim

Page PW07023 | Date Sep '14 | Rev. 03

Note: Trim Installation can be done by Field Notch Panel as shown on PW07022 & PW07023 OR with Field Notch and Bend Tabs at Head Trim as shown on PW07024 & PW07025.

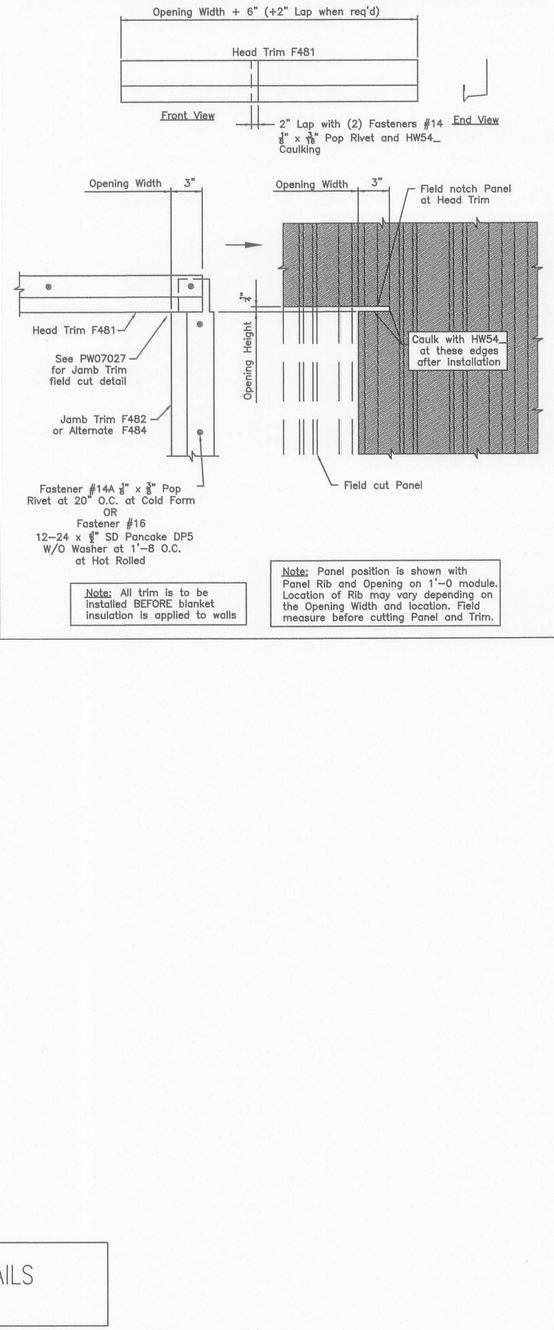

Note: All trim is to be installed BEFORE blanket insulation is applied to walls

Note: Panel position is shown with Panel Rib and Opening on 1'-0 module. Location of Rib may vary depending on the Opening Width and location. Field measure before cutting Panel and Trim.

PBR Wall Panel - Three Sided Framed Opening
Trim Installation with Field Notch and Bend Tabs at Head Trim

Page PW07024 | Date Sep '14 | Rev. 03

Note: Trim Installation can be done by Field Notch Panel as shown on PW07022 & PW07023 OR with Field Notch and Bend Tabs at Head Trim as shown on PW07024 & PW07025.

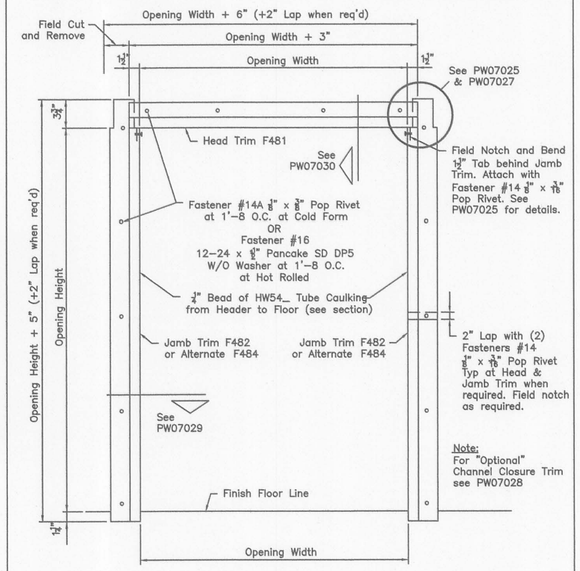

Note: All trim is to be installed BEFORE blanket insulation is applied to walls.

Note: Field measure Opening Width and Height before making field cuts and adjust cut dimensions accordingly.

PBR Wall Panel - Three Sided Framed Opening
Field Notch and Bend Tabs at Head Trim

Page PW07025 | Date Sep '14 | Rev. 03

Note: Trim Installation can be done by Field Notch Panel as shown on PW07022 & PW07023 OR with Field Notch and Bend Tabs at Head Trim as shown on PW07024 & PW07025.

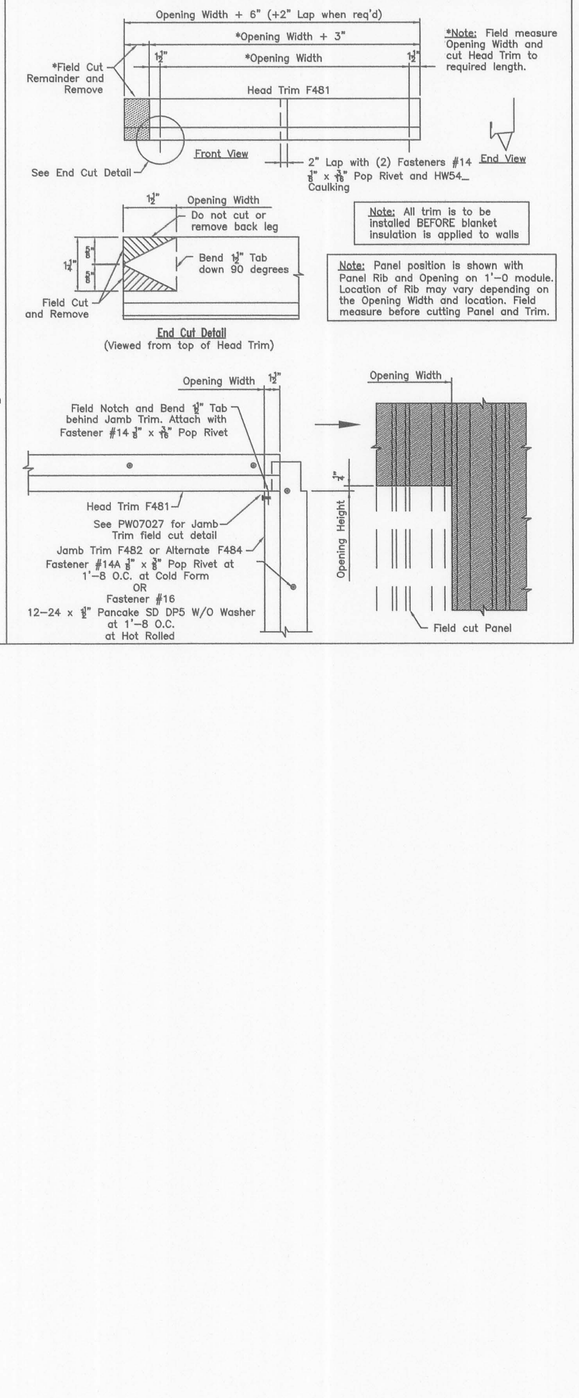

Revision	Date	Description	By	Ck'd
A	11/27/17	FOR CONSTRUCTION PERMIT	RAV	KYG
0	02/12/18	FOR ERECTOR INSTALLATION	ADN	ADR

MID-WEST
STEEL BUILDING CONSTRUCTION
7301 FAIRVIEW ◆ HOUSTON, TEXAS ◆ P.O. BOX 40338
ZIP 77041 (713) 466-7788 ZIP 77240

Project Name & Location:
420 EAST HEREFORD AVENUE
RATON, NM, 87740
COLFAX

Customer:
STEEL DEPOT HOBBS
212 S MAGNUM RD
HOBBS, NM, 88240
DARLA JOHNSON

Drawing Status:
☐ Preliminary (Not For Construction)
☐ For Approval (Not For Construction)
☒ For Erector Installation

Scale:	NOT TO SCALE
Drawn by:	ADN 02/12/18
Checked by:	ADR 02/12/18
Project Engineer:	MSP
Job Number:	16-B-26319
Sheet Number:	DET9

The engineer whose seal appears hereon is an employee for the manufacturer for the materials described herein. Said seal or certification is limited to the products designed and manufactured by manufacturer only.The undersigned engineer is not the overall engineer of record for this project.

STANDARD THREE SIDED FRAMED OPENING DETAILS
(PBR WALL PANEL)

PBR Wall Panel - Three Sided Framed Opening
Jamb Trim Field Cut Details

Page PW07027 | Date Sep '14 | Rev. 01

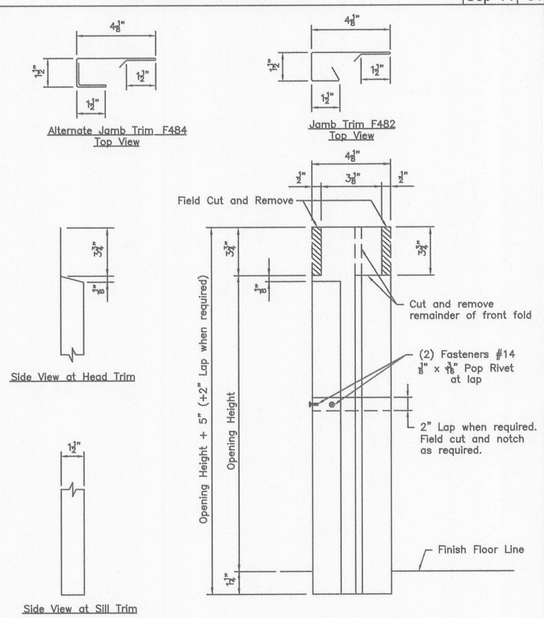

Jamb Trim F482 and
Alternate Jamb Trim F484
Front View
Right Jamb Trim as shown
Left Jamb Trim opposite hand

Note: Field measure Opening Height before making field cuts and adjust cut dimensions accordingly.

PBR Wall Panel - Three Sided Framed Opening
"Optional" Channel Closure Trim

Page PW07028 | Date Mar '15 | Rev. 03

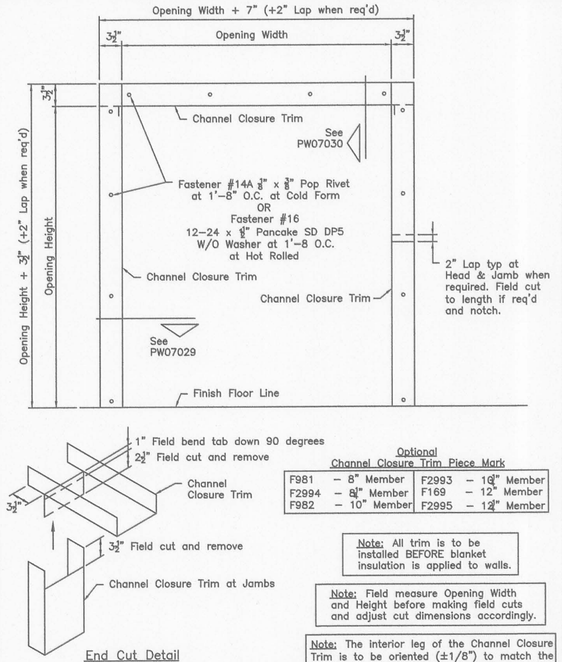

End Cut Detail

Optional
Channel Closure Trim Piece Mark

F981	– 8" Member	F2993	– 10⅞" Member
F2994	– 8⅞" Member	F169	– 12" Member
F982	– 10" Member	F2995	– 12⅞" Member

Note: All trim is to be installed BEFORE blanket insulation is applied to walls.

Note: Field measure Opening Width and Height before making field cuts and adjust cut dimensions accordingly.

Note: The interior leg of the Channel Closure Trim is to be oriented (±1/8") to match the interior leg of the Header or Jamb.

PBR Wall Panel - Three Sided Framed Opening
Jamb Trim Installation

Page PW07029 | Date May '14 | Rev. 02

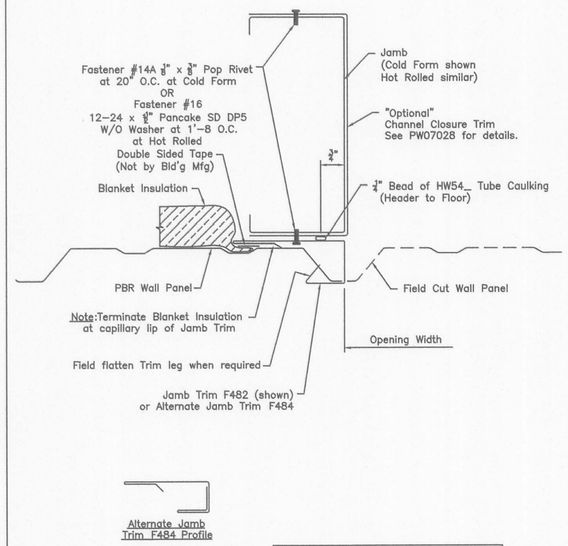

Alternate Jamb
Trim F484 Profile

Note: All trim is to be installed BEFORE blanket insulation is applied to walls.

Note: Panel position is shown with Panel Rib and Opening on 1'-0 module. Location of Rib may vary depending on the Opening Width and location. Field measure before cutting Panel and Trim.

PBR Wall Panel - Three Sided Framed Opening
Head Trim Installation

Page PW07030 | Date Mar '14 | Rev. 01

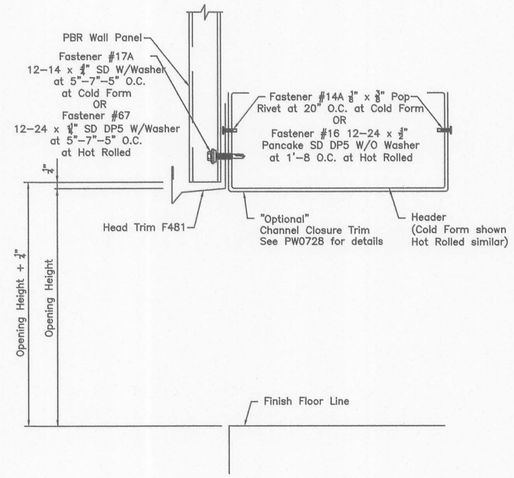

Note: All trim is to be installed BEFORE blanket insulation is applied to walls

Revision	Date	Description	By	Ck'd
A	11/27/17	FOR CONSTRUCTION PERMIT	RAV	KYG
0	02/12/18	FOR ERECTOR INSTALLATION	ADN	ADR

MID-WEST
STEEL BUILDINGS CORPORATION
7301 FAIRVIEW ◆ HOUSTON, TEXAS ◆ P.O. BOX 40338
ZIP 77041 (713) 466-7788 ZIP 77240

Project Name & Location:
420 EAST HEREFORD AVENUE
RATON, NM, 87740
COLFAX

Customer:
STEEL DEPOT HOBBS
212 S MAGNUM RD
HOBBS, NM, 88240
DARLA JOHNSON

Drawing Status:
☐ Preliminary (Not For Construction)
☐ For Approval (Not For Construction)
☒ For Erector Installation

Scale: NOT TO SCALE
Drawn by: ADN 02/12/18
Checked by: ADR 02/12/18
Project Engineer: MSP
Job Number: 16-B-26319
Sheet Number: DET10

The engineer whose seal appears hereon is an employee for the manufacturer for the materials described herein. Said seal or certification is limited to the products designed and manufactured by manufacturer only.The undersigned engineer is not the overall engineer of record for this project.

STANDARD THREE SIDED FRAMED OPENING DETAILS (PBR WALL PANEL)

PBR Wall Panel - Walk Door & Glass-Front Walk Door
Trim Installation with Field Notch Panel at Head Trim

Page PW09022 | Date May '14 | Rev. 01

Note: Trim Installation can be done by Field Notch Panel as shown on PW09022 & PW09023 OR with Field Notch and Bend Tabs at Head Trim as shown on PW09024 & PW09025.

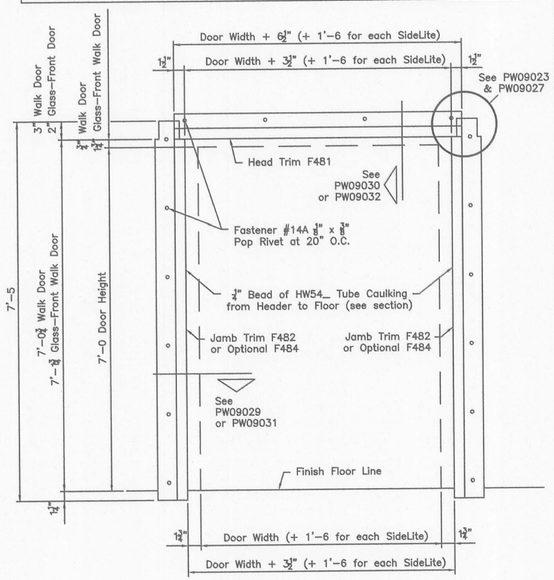

Note: All trim is to be installed BEFORE blanket insulation is applied to walls.

Note: Field measure Door Width and Height before making field cuts and adjust cut dimensions accordingly.

PBR Wall Panel - Walk Door & Glass- Front Walk Door
Field Notch Panel at Head Trim

Page PW09023 | Date Dec '11 | Rev. 00

Note: Trim Installation can be done by Field Notch Panel as shown on PW09022 & PW09023 OR with Field Notch and Bend Tabs at Head Trim as shown on PW09024 & PW09025.

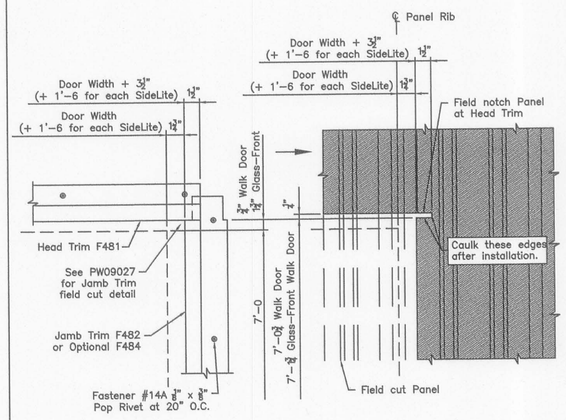

Note: All trim is to be installed BEFORE blanket insulation is applied to walls.

Note: Panel position is shown with Panel Rib and Door on 1'-0 module. Location of Rib may vary depending on the Door Width and location. Field measure before cutting Panel and Trim.

PBR Wall Panel - Walk Door & Glass-Front Walk Door
Trim Installation with Field Notch and Bend Tabs at Head Trim

Page PW09024 | Date May '14 | Rev. 01

Note: Trim Installation can be done by Field Notch Panel as shown on PW09022 & PW09023 OR with Field Notch and Bend Tabs at Head Trim as shown on PW09024 & PW09025.

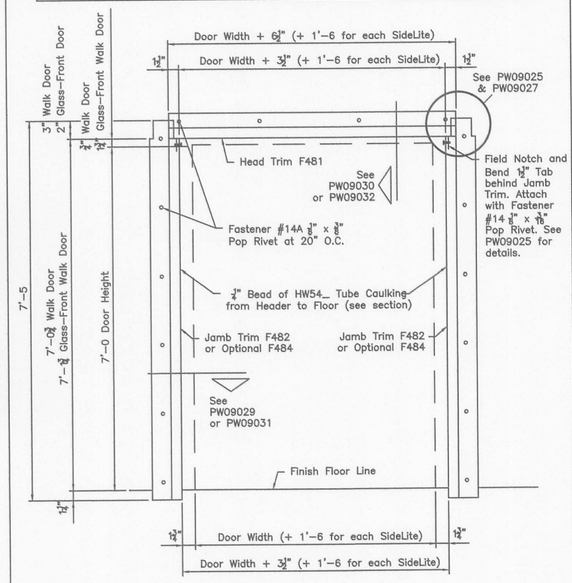

Note: All trim is to be installed BEFORE blanket insulation is applied to walls.

Note: Field measure Door Width and Height before making field cuts and adjust cut dimensions accordingly.

PBR Wall Panel - Walk Door & Glass-Front Walk Door
Field Notch and Bend Tabs at Head Trim

Page PW09025 | Date Dec '11 | Rev. 00

Note: Trim Installation can be done by Field Notch Panel as shown on PW09022 & PW09023 OR with Field Notch and Bend Tabs at Head Trim as shown on PW09024 & PW09025.

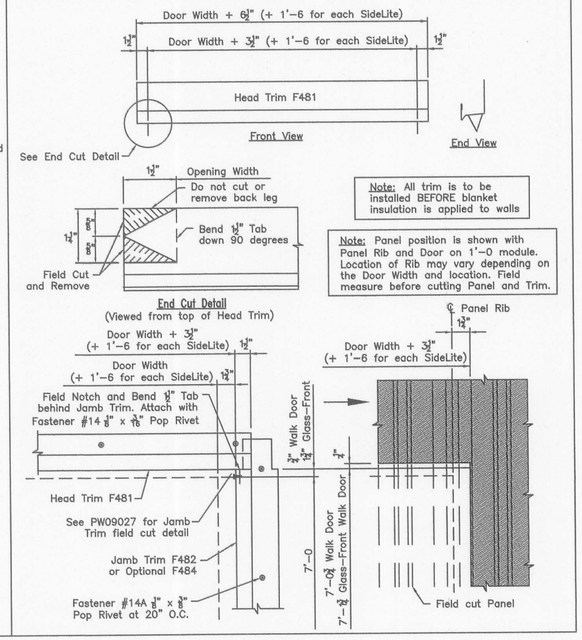

Note: All trim is to be installed BEFORE blanket insulation is applied to walls.

Note: Panel position is shown with Panel Rib and Door on 1'-0 module. Location of Rib may vary depending on the Door Width and location. Field measure before cutting Panel and Trim.

Revision	Date	Description	By	Ck'd
A	11/27/17	FOR CONSTRUCTION PERMIT	RAV	KYG
0	02/12/18	FOR ERECTOR INSTALLATION	ADN	ADR

MID-WEST
STEEL BUILDING COMPANY
7301 FAIRVIEW • HOUSTON, TEXAS, P.O. BOX 40338
(713) 495-7788 ZIP 77240

Project Name & Location:
420 EAST HEREFORD AVENUE
RATON, NM, 87740
COLFAX

Customer:
STEEL DEPOT HOBBS
212 S MAGNUM RD
HOBBS, NM 88240
DARLA JOHNSON

Drawing Status:
☐ Preliminary (Not For Construction)
☐ For Approval (Not For Construction)
☐ For Construction Permit
☒ For Erector Installation

Scale: NOT TO SCALE
Drawn by: ADN 02/12/18
Checked by: ADR 02/12/18
Project Engineer: MSP
Job Number: 16-B-26319
Sheet Number: DET11

The engineer whose seal appears hereon is an employee for the manufacturer for the materials described herein. Said seal or certification is limited to the products designed and manufactured by manufacturer only.The undersigned engineer is not the overall engineer of record for this project.

STANDARD WALKDOOR (KNOCK DOWN)
WITHOUT FRAMED OPENING DETAILS (PBR WALL PANEL)

PBR Wall Panel - Walk Door & Glass-Front Walk Door Jamb Trim Field Cut Details

Page PW09027 | Date Dec '11 | Rev. 00

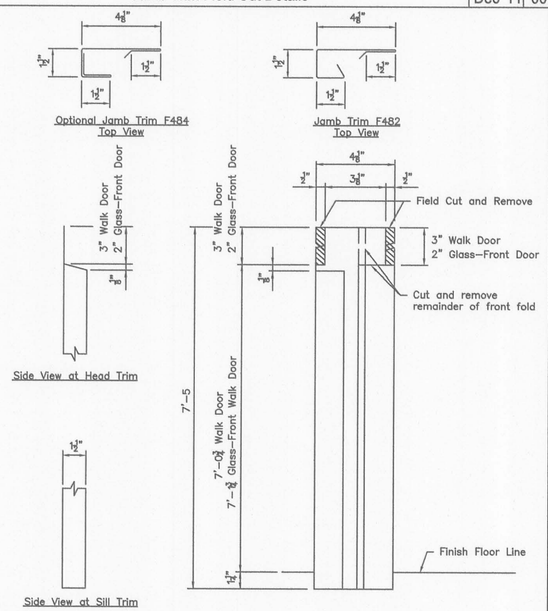

Jamb Trim F482 and Optional Jamb Trim F484
Front View
Right Jamb Trim as shown
Left Jamb Trim opposite hand

Note: Field measure Door Height before making field cuts and adjust cut dimensions accordingly so that Jamb Trim fits to Head Trim & at ¼" below Finish Floor Line.

PBR Wall Panel - Knock Down Walk Door Jamb Trim Installation

Page PW09031 | Date Mar '15 | Rev. 02

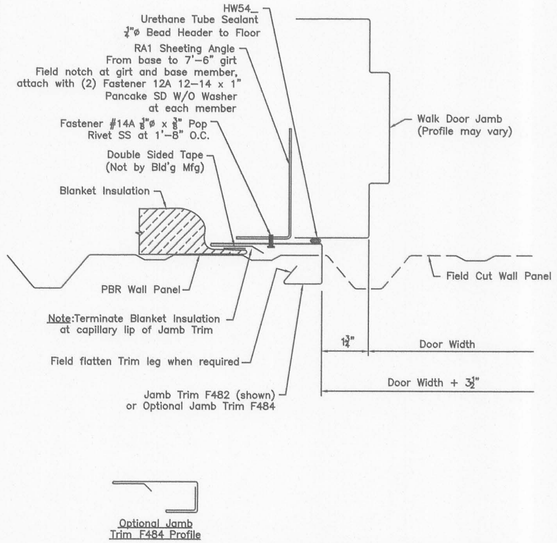

Note: All trim is to be installed BEFORE blanket insulation is applied to walls.

Note: Panel position is shown with Panel Rib and Door on 1'-0 module. Location of Rib may vary depending on the Door Width and location. Field measure before cutting Panel and Trim.

PBR Wall Panel - Knock Down Walk Door Head Trim Installation

Page PW09032 | Date Mar '15 | Rev. 02

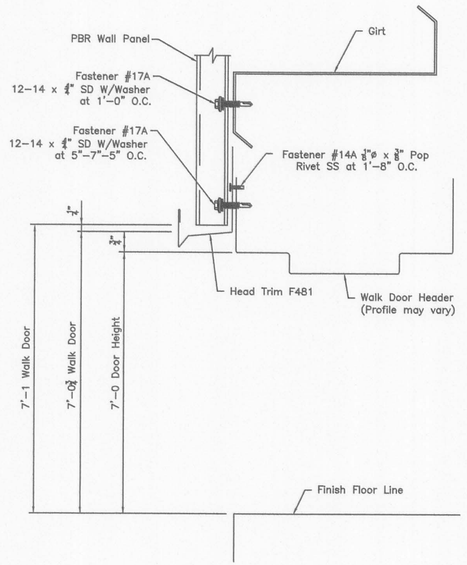

Note: All trim is to be installed BEFORE blanket insulation is applied to walls.

Knock Down Walk Door With Jamb Extensions With Low Girts Attached to Door Frame

Page AC05131 | Date Mar '16 | Rev 02

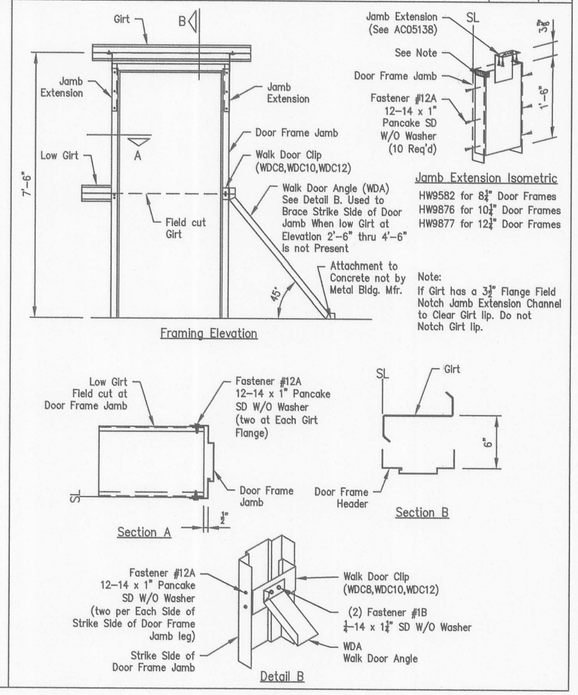

Revision	Date	Description	By	Ck'd
A	11/27/17	FOR CONSTRUCTION PERMIT	RAV	KYG
0	02/12/18	FOR ERECTOR INSTALLATION	ADN	ADR

MID-WEST
STEEL BUILDING MANUFACTURER
7301 FAIRVIEW ◆ HOUSTON, TEXAS ◆ P.O. BOX 40338
ZIP 77041 (713) 466-7788 ZIP 77240

Project Name & Location:
420 EAST HEREFORD AVENUE
RATON, NM, 87740
COLFAX

Customer:
STEEL DEPOT HOBBS
212 S MAGNUM RD
HOBBS, NM, 88240
DARLA JOHNSON

Drawing Status:
☐ Preliminary (Not For Construction)
☐ For Approval (Not For Construction)
☐ For Construction Permit
☒ For Erector Installation

Scale:	NOT TO SCALE
Drawn by:	ADN 02/12/18
Checked by:	ADR 02/12/18
Project Engineer:	MSP
Job Number:	16-B-26319
Sheet Number:	DET12

The engineer whose seal appears hereon is an employee for the manufacturer for the materials described herein. Said seal or certification is limited to the products designed and manufactured by manufacturer only.The undersigned engineer is not the overall engineer of record for this project.

STANDARD WALKDOOR (KNOCK DOWN)
WITHOUT FRAMED OPENING DETAILS (PBR WALL PANEL)

PBR Roof
Perimeter Trim Reference - Southern Standard Trim

Page WPR00001 | Date May '16 | Rev 05

GUTTER	GUTTER LAP	GUTTER CAP	EXPANSION COVER	GUTTER CLIP
F760	2" LAP	F761	F643/F635	F893
Fastener #4 1/4-14 x 7/8" LL SD W/Washer 1'-0" O.C. Roof Color	42" Tube Sealant (12) Fastener #14 Trim Color	19" Tube Sealant (12) Fastener #14 Trim Color	(12) Fastener #14 Trim Color	(2) Fastener #4 1/4-14 x 7/8" LL SD W/Washer Roof Color (1) Fastener #4 1/4-14 x 7/8" LL SD W/Washer Trim Color

$1\frac{1}{4}$" Wall Panel

RAKE	RAKE LAP	CORNER BOX	RAKE CAP	Peak Box
F764	2" LAP	F427	F765	F160
Fastener #4 1/4-14 x 7/8" LL SD W/Washer 1'-0" O.C. Fastener #4A 1/4-14 x 7/8" SD W/Washer 1'-0" O.C. Trim Color	21" Tube Caulking (7) Fastener #14 (3) Fastener #4 1/4-14 x 7/8" LL SD W/Washer Trim Color	17" Tube Caulking (8) Fastener #14 (3) Fastener #4 1/4-14 x 7/8" LL SD W/Washer Trim Color	18" Tube Sealant (7) Fastener #14 Trim Color	(12) Fastener #4 1/4-14 x 7/8" LL SD W/Washer (3) Fastener #4A 1/4-14 x 7/8" SD W/Washer Trim Color

$1\frac{1}{4}$" Wall Panel

HIGHSIDE	HIGHSIDE LAP	OUTSIDE CORNER (Mitered Rake / High Side)	INSIDE CORNER (High Side / Rake)
F768	2" LAP	Right as Shown	Field Work
Fastener #4 1/4-14 x 7/8" LL SD W/Washer 1'-0" O.C. Fastener #4A 1/4-14 x 7/8" SD W/Washer 1'-0" O.C. Trim Color	19" Tube Sealant (8) Fastener #14 (3) Fastener #4 1/4-14 x 7/8" LL SD W/Washer Trim Color	19" Tube Sealant (8) Fastener #14 (5) Fastener #4 1/4-14 x 7/8" LL SD W/Washer Trim Color	19" Tube Sealant (8) Fastener #14 (3) Fastener #4 1/4-14 x 7/8" LL SD W/Washer Trim Color

OUTSIDE CORNER (Mitered Rake / Gutter)	INSIDE CORNER (Rake / Gutter)	OUTSIDE CORNER (Gutter / Gutter)	INSIDE CORNER (Gutter / Gutter)
Right as Shown	Field Work	Field Work	Field Work
21" Tube Sealant (21) Fastener #14 (3) Fastener #4 1/4-14 x 7/8" LL SD W/Washer Trim Color	26" Tube Sealant (13) Fastener #14 (3) Fastener #4 1/4-14 x 7/8" LL SD W/Washer Trim Color	26" Tube Sealant (14) Fastener #14 Trim Color	26" Tube Sealant (14) Fastener #14 Trim Color

Fasteners

Page G000004 | Date Jul '17 | Rev 05

Fastener #14	Fastener #14A	Fastener #24
1/8" x 3/16" Pop Rivet Stainless Steel	1/8" x 3/8" Pop Rivet Stainless Steel	8 x 5/8" Nibbed Driller
Fastener #35 #14 x 1 1/8" O.D. Bonded Washer	**Fastener #43L** L.T.P. Member Screw (Long Life) 1/4"-14 x 1 1/4" 5/16" Hex Washer Head W/ 1 1/8" O.D. Washer	**Fastener #44L** L.T.P. Stitch Screw (Long Life) 1/4"-14 x 7/8" 5/16" Hex Washer Head W/ 1 1/8" O.D. Washer
Fastener #226 3/16" x 9/16" Closed End Rivet	**Fastener #228** 10 x 1/2" Grommet Washer	**Fastener #271** 8-18 x 1/2" Trim Screw
Fastener HW399 #6 x 1" Rubber Grommet 1/4" Hex Head w/ Washer		

Note:
Refer to bill of materials for specific job requirements.

Tape Sealant and Tube Sealant

Page G000005 | Date Oct '15 | Rev 03

TRI-BEAD TAPE SEALER HW504 3/16" X 7/8" X 25'-0"	FLAT TAPE SEALER HW507 3/32" X 1/2" X 50'-0"	TAPE SEALER - SWAGED HW515 3/16" X $2\frac{1}{4}$" X 6" 6" BattenLok HS SuperLok
TRIPLE BEAD TAPE SEALER HW502 3/16" X $2\frac{1}{2}$" X 20'-0"	FLAT TAPE SEALER HW506 3/32" X 1" X 45'-0"	
URETHANE TUBE SEALANT HW540 (White) HW541 (Gray) HW542 (Bronze) Note: 25'-0" per Tube at 1/4" Bead	TAPE SEALER MINOR RIB HW512 4" 7/32" X $1\frac{3}{8}$" X 4"	NON-SKINNING BUTYL TUBE (VAPOR SEALANT) IMP7100 (WHITE) Note: 12'-6" per Tube at 3/8" Bead
DEKSTRIP 7" WIDE = HW5227 DEKSTRIP 9" WIDE = HW5228 DEKSTRIP 12" WIDE = HW5229 COLOR = Gray SCREWS 2" O.C. MAX. PERIMETER TAPE SEALANT BOTH SIDES TUBE SEALANT EACH END TERMINATION STRIP HW5305 EACH END (1" Wide x 4'-0" Long Alum.)	2" WIDE X 24 GA. STRAPPING • FL470 - 25'-0" Roll Galvalume Plus Only • FL471 - 100'-0" Roll Galvalume Plus Only • FL569 - 500'-0" Roll Galvalume Plus or White Wash Coat	FLEXIBLE MEMBRANE (EPDM) 16" or 24" • HW520 - 16" x 50'-0" Roll • HW521 - 24" x 50'-0" Roll NOTE: Refer to bill of materials for specific job requirements

PBR, PBU, AVP, Vistashadow
Panel Fasteners

Page G000006 | Date Mar '17 | Rev 08

Wall Fasteners	Roof Fasteners Long Life (Optional at Wall)	Optional Roof or Wall Fasteners Stainless Steel Cap
Member Screw Fastener #17A 12-14 x $1\frac{1}{4}$" 5/16" Hex Washer Head w/washer	Member Screw Fastener #3 12-14 x $1\frac{1}{4}$" 5/16" Hex Washer Head w/washer	Member Screw Fastener #3SSBX 12-14 x $1\frac{1}{4}$" 5/16" Hex Washer Head w/washer
Member Screw Optional Fastener #17B 12-14 x $1\frac{1}{2}$" 5/16" Hex Washer Head w/washer	Member Screw Optional Fastener #3A 12-14 x $1\frac{1}{2}$" 5/16" Hex Washer Head w/washer	Member Screw Optional Fastener #3ASSBX 12-14 x $1\frac{1}{2}$" 5/16" Hex Washer Head w/washer
Member Screw Optional Fastener #28 12-14 x 2" 5/16" Hex Washer Head w/washer	Member Screw Optional Fastener #58 12-14 x 2" 5/16" Hex Washer Head w/washer	
Stitch Screw Fastener #4A 1/4-14 x 7/8" 5/16" Hex Washer Head w/washer	Stitch Screw Fastener #4 1/4-14 x 7/8" 5/16" Hex Washer Head w/washer	Stitch Screw Fastener #4SSBX 1/4-14 x 7/8" 5/16" Hex Washer Head w/washer

NOTE: Refer to bill of materials for specific job requirements

Fasteners
BattenLok HS / SuperLok and Double-Lok / Ultra-Dek

Page G000007 | Date Jul '17 | Rev 08

Structural Fastener (Fixed) Fastener #1 1/4"-14 x 1" 5/16" Hex Washer Head w/ Washer	**Roof Member Screw Long Life** Fastener #1E - 1/4"-14 x $1\frac{1}{4}$" 5/16" Hex Washer Head w/ Washer Optional Stainless Steel Fastener #1ESS - 1/4"-14 x $1\frac{1}{4}$" 5/16" Hex Washer Head w/ Washer	**Roof Stitch Screw Long Life** Fastener #4 - 1/4"-14 x 7/8" 5/16" Hex Washer Head w/ Washer Optional Stainless Steel Fastener #4SS - 1/4"-14 x 7/8" 5/16" Hex Washer Head w/ Washer
Structural Fastener (Floating) Fastener #5 1/4"-14 x $1\frac{1}{4}$" Shoulder DP2 5/16" Hex Washer Head	**BattenLok/SuperLok Panel Clip Screw** Insulation < = 4" Material < 1/4" Fastener #1B 1/4"-14 x $1\frac{1}{4}$" 5/16" Hex Washer Head	**BattenLok/SuperLok Panel Clip Screw** Insulation > 4" Material < 1/4" Fastener #142 1/4"-14 x $1\frac{1}{2}$" Driller 5/16" Hex Washer Head
BattenLok/SuperLok Panel Clip Screw Insulation<=4" Material >=1/4" Fastener #55 12-24 x $1\frac{1}{4}$" DP5 5/16" Hex Washer Head	**BattenLok/ SuperLok Panel Clip Screw** Insulation > 4" Material > = 1/4" Fastener #70 12-24 x $1\frac{1}{2}$" DP5 5/16" Hex Washer Head	**Double-Lok/Ultra-Dek Panel Clip Screw** Insulation < =4" Material < 1/4" Fastener #1 1/4"-14 x 1" 5/16" Hex Washer Head w/ Washer
Double-Lok/Ultra-Dek Panel Clip Screw Insulation > 4" Material < 1/4" Fastener #1F 1/4"-14 x $1\frac{1}{2}$" Driller 5/16" Hex Washer Head w/ Washer	**Double-Lok/Ultra-Dek Panel Clip Screw** Insulation < = 4" Material > = 1/4" Fastener #67 12-24 x $1\frac{1}{4}$" DP5 5/16" Hex Washer Head w/ Washer	**Double-Lok/Ultra-Dek Panel Clip Screw** Insulation > 4" Material > = 1/4" Fastener #69 12-24 x $1\frac{1}{2}$" DP5 5/16" Hex Washer Head w/ Washer
Double-Lok/Ultra-Dek Panel Clip Screw W/TBA Bracing Insulation ≤ 4" Material < 1/4" Fastener #1D 1/4"-14 x $1\frac{1}{4}$" 5/16" Hex Washer Head w/ Washer	NOTE: Refer to bill of materials for specific job requirements	

Various Fasteners

Page G000009 | Date Nov '16 | Rev 11

Fastener #17 12-14 x 1" SD W/Washer 5/16" Hex Head	Fastener #38 1/4-14 x 7/8" SD W/O Washer 5/16" Hex Head	
	Fastener #12A 12-14 x 1" Pancake SD W/O Washer	
Fastener #55 12-24 x $1\frac{1}{4}$" SD DP5 W/O Washer 5/16" Hex Head	Fastener #70 12-24 x $1\frac{1}{2}$" SD DP5 W/O Washer 5/16" Hex Head	Fastener #142 1/4-14 x $1\frac{1}{2}$" SD W/O Washer 5/16" Hex Head
Fastener #76 12-14 x 2" SD W/O Washer 5/16" Hex Head	Fastener #61 12-14 x $1\frac{1}{2}$" SD W/O Washer 5/16" Hex Head	Fastener #1B 1/4-14 x $1\frac{1}{4}$" SD W/O Washer 5/16" Hex Head
Fastener #16 12-24 x $1\frac{1}{4}$" Pancake SD DP5 W/O Washer	NOTE: Refer to Bill of Materials for Specific Job Requirements	Fastener #46 1/4-14 x 7/8" LL ST Type B W/Washer 5/16" Hex Head

Revision	Date	Description	By	Ck'd
A	11/27/17	FOR CONSTRUCTION PERMIT	RAV	KYG
0	02/12/18	FOR ERECTOR INSTALLATION	ADN	ADR

MID-WEST STEEL BUILDING COMPANY
7301 FAIRVIEW ◆ HOUSTON, TEXAS ◆ P.O. BOX 40338
ZIP 77041 (713) 466-7788 ZIP 77240

Customer:
STEEL DEPOT HOBBS
212 S MAGNUM RD
HOBBS, NM, 88240
DARLA JOHNSON

Project Name & Location:
420 EAST HEREFORD AVENUE
RATON, NM, 87740
COLFAX

Drawing Status:
☐ Preliminary (Not For Construction)
☐ For Approval (Not For Construction)
☐ For Construction Permit
☒ For Erector Installation

Scale: NOT TO SCALE
Drawn by: ADN 02/12/18
Checked by: ADR 02/12/18
Project Engineer: MBB
Job Number: 16-B-26319
Sheet Number: DET13

The engineer whose seal appears hereon is an employee for the manufacturer for the materials described herein. Said seal or certification is limited to the products designed and manufactured by manufacturer only. The undersigned engineer is not the overall engineer of record for this project.

Field Service Procedures

In Order To Give You Prompt Services And Keep Problems To A Minimum, Please Handle Any Shortages Or Back Charges In The Following Manner:

1. Carefully Check Your Packing List While Unloading.
2. Mark Any Items Which Appear To Be Missing And Notify The Field Service Department At The Number Shown In The Title Block As Soon As Possible. Calling Someone Else Could Delay The Proper Response.

INITIAL CLAIM:
In The Event Of An Error, The Customer Must Promptly Make A Written Or Verbal "Initial Claim" to The Manufacturer For The Correction Of Design, Drafting, Bill Of Materials Or Fabrication Error.
The "Initial Claim" Includes:

1. Description Of The Nature And Extent Of The Errors, Including Quantities.
2. Description Of The Nature And Extent Of Proposed Corrective Work, Including Estimated Man-Hours.
3. Materials To Be Purchased From Other Than the Manufacturer, Including Estimated Quantities and Cost.
4. Maximum Total Cost Of Proposed Corrective Work And Materials To Be Purchased From Other Than The Manufacturer.

SHORT MATERIALS:
Immediately Upon Delivery Of Materials, Quantities Are To Be Verified By The Customer Against Quantities That Are Billed On The Shipping Documents. Neither The Manufacturer Nor The Carrier Is Responsible For Material Shortages Against The Quantities Billed On The Shipping Documents If Such Shortages Are Not Noted On The Shipping Documents When The Material Is Delivered And Acknowledged By The Carrier's Agent. If The Carrier Is The Manufacturer, Claims For Shortages Are To Be Made By The Customer To The Common Carrier. If The Material Quantities Received Are Correct According To The Quantities Billed On The Shipping Documents, But Are Less Than The Quantities Ordered Or The Quantities That Are Necessary To Complete The Metal Building According To The Order Documents, Claim Is To Be Made To The Manufacturer.

DAMAGED OR DEFECTIVE MATERIAL:
Damaged Or Defective Material, Regardless Of The Degree Of Damage, Must be Noted On The Shipping Documents By The Customer And Acknowledged By The Carrier's Agent. The Manufacturer Is Not Responsible For Material Damaged In Unloading Of Packages Or Nested Materials, Including, But Not Limited To: Fasteners, Sheet Metal, "C" And "Z" Sections And Covering Panels That Become Wet And/Or Damaged By Water While In The Possession Of Others. Packaged Or Nested Material That Become Wet In Transit Must Be Unpacked, Unstacked And Dried By The Customer. If The Carrier Is The Manufacturer, The Customer Must Make Claim For Damaged Directly To The Manufacturer. If The Carrier Is A Common Carrier, The Customer Must Make The Claim For Damage To The Common Carrier. The Manufacturer Is Not Liable For Any Claim Whatsoever Including, But Not Limited To Labor Charges Of Consequential Damages Resulting From Customer's Use Of Damaged Or Defective Materials That Can Be Detected By Visual Inspection.

EXCESSIVE MATERIAL:
The Manufacturer Reserves The Right To Recover Any Material Delivered In Excess Of Those Required By The Order Documents.

OIL CANNING IS NOT A CAUSE FOR REJECTION

Authorization For Corrective Work

Normal Erection Operations Include The Correction Of Minor Misfits By Amounts Of Reaming, Chipping, Welding Or Cutting And The Drawing Of Elements Into Line Through The Use Of Drift Pins. Errors That Cannot Be Corrected By The Foregoing Means Or Which Require Major Changes In The Member Configuration Should Be Reported Immediately To The Owner And The Fabricator By The Erector, To Enable Whoever Is Responsible Either To Correct The Error Or Approve The Most Efficient And Economical Method Of Correction To Be Used By Others. (AISC 303-10, Section 7.14). If The Error Is The Fault Of The Manufacturer An "Authorization For Corrective Work" Must Be Issued In Writing By The Manufacturer To Authorize The Corrective Work At A Cost Not To Exceed The Maximum Total Cost Set Forth. Alternative Corrective Work Other Than That Proposed In The "Initial Claim" May Be Directed By The Manufacturer In The "Authorization Of Corrective Work". Only The Field Service Department May Authorize Corrective Work.

FINAL CLAIM:
The "Final Claim" In Writing Must Be Forwarded By The Customer To The Manufacturer Within (10) Days Of The Completion Of The Corrective Work Authorized By The Manufacturer.

THE "FINAL CLAIM" MUST INCLUDE:

1. Actual Number Of Man-Hours By Dated Of Direct Labor Use On Corrective Work And Actual Hourly Rate Of Pay.
2. Taxes And Insurance On Total Actual Direct Labor.
3. Other Direct Costs On Actual Direct Labor.
4. Cost Of Materials (Not Minor Supplies) Authorized By The Manufacturer To Be Purchased From Other Than The Manufacturer, Including Copies Of Paid Invoices.
5. Total Actual Direct Cost Of Corrective Work (Sum Of 1, 2, 3, And 4). The "Final Claims Are Credited To The Customer By The Manufacturer In The Amount Not To Exceed The Lesser Of The Maximum Total Cost Set Forth In The "Authorization For Corrective Work" Or The Total Direct Cost Of Corrective Work.

** IMPORTANT NOTE **
Cost Of Equipment (Rental Or Depreciation), Small Tools, Supervision, Overhead And Profit Are Not Subjected To Claims.

SHIPMENT ARRIVAL TIME:
Every Effort Will Be Made To See That The Carrier Arrives At The Jobsite On The Requested Hour. Manufacturer Makes No Warranty And Accepts No Responsibility For Costs Associated With A Shipment Not Arriving At The Requested Time Unless A Separate Agreement Has Been Made In Writing For A Guaranteed Arrival Time.

Unloading, Handling And Storage

STRUCTURAL:
A Great Amount Of Time And Trouble Can Be Saved If The Building Parts Are Unloaded At The Building Site According To A Pre-Arranged Plan. Proper Location And Handling Of Components Will Eliminate Unnecessary Handling.

NOTE:
Piece Marks Are Stenciled On The Primary Structural Members At The Lower End, 1'-0" From The End. Inspect All Shipments Prior To Releasing The Tie-downs For Loads That May Have Shifted During Transit.

REMEMBER SAFETY FIRST:
Blocking Under Columns And Rafters Protect The Splice Plates And The Slab From Damage During The Unloading Process. It Also Facilitates The Placing Of Slings And Cables Around Members For Later Lifting And Allows Members To Be Bolted Together Into Sub-assemblies While On The Ground. Extra Care Should Always Be Exercised In The Unloading Operation To Prevent Injuries From Handling Steel And To Prevent Damage To Materials And The Concrete Slab. If Water Is Allowed To Remain For Extended Periods In Bundles Of Primed Parts Such As Girts, Purlins, Etc., The Pigment Will Fade And The Paint Will Gradually Soften Reducing Its Bond To The Steel. Therefore, Upon Receipt Of A Job, All Bundles Of Primed Parts Should Be Stored At An Angle To Allow Any Trapped Water To Drain Away And Permit Air Circulation For Drying. Puddles Of Water Should Not Be Allowed To Collect And Remain On Columns Or Rafters For Same Reason.

The Coat Of Shop Primer Is Intended To Protect The Steel Framing Only For A Short Period Of Exposure To Ordinary Atmospheric Conditions. The Coat Of Shop Primer Does Not Provide The Uniformity Of Appearance, Or The Durability And Corrosion Resistance Of A Field Applied Finish Coat Of Paint Over Shop Primer.

Roof And Wall Panels

Manufacturer's Roof And Wall Panels Include Color Coated, Galvalume, And Galvanized, Provide Excellent Service Under Widely Varied Conditions. All Unloading And Erection Personnel Should Fully Understand That These Panels Are Quality Merchandise, Which Merits Cautious Care And Handling.

UNDER NO CIRCUMSTANCES SHOULD PANELS BE HANDLED ROUGHLY
Packages Of Sheets Should Be Lifted Off The Truck With Extreme Care Taken To Ensure That No Damage Occurs To Ends Of The Sheets Or to Side Ribs. The Packages Should Be Stored Off The Ground Sufficiently High To Allow Air Circulation Underneath The Packages. This Avoids Ground Moisture And Deters People From Walking On The Packages. One End Of The Package Should Be Elevated To Encourage Drainage In Case Of Rain. The Manufacturer Exercises Caution During Fabrication An Shipping Operations To Ensure That All Panel Stock Is Kept Dry. However Due To Climatic Conditions, Water Formed By Condensation Of Humid Air Become Trapped Between Sheets. Water Can Also Be Trapped Between The Stacked Sheets When Exposed To Rain. This May Discoloration Caused By Trapped Moisture. The Stain Is Usually Superficial And Has Little Effect On The Appearance Or Service Life Of The Panels As Long As It Not Permitted To Remain On The Panel. However, Moisture In Contact With The Surface Of The panel Over An Extended Period Can Severely Attack The Finish And Reduce The Effective Service Life. See R1-07 Titled "Damage From Condensation Or Trapped Water".

CAUTION:
Care Should Always Be Taken When Walking On Panels. Use Safety Lines And Net When Necessary. Panels Are Slippery, Wipe Dry Any Moisture Or Surface Material That Has Puddle From Bundles Stored On A Slope. Dew, Frost, Or Other Forms Of Moisture Greatly Increase The Slipperiness Of The Panels. Always Assume Panel Surface Is Slippery And Act Accordingly. Never Walk Of Step On Skylights Or Translucent Panels.

Use Wood Blocking To Elevate And Slope The Panels In A Manner That Allows Moisture To Drain. Wood Blocking Placed Between Bundles Will Provide Additional Air Circulation. When Handling Or Uncrating The Panels, Lift Rather Than Slide Them Apart. Burred Edges May Scratch The Coated Surfaces When Sheets Are Slid Over One Another. Never Allow Panels To Be Walked On While On The Ground.

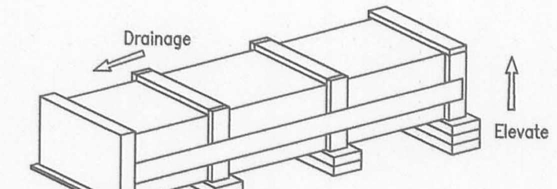

Roof And Wall Panel Damage During Construction

The Quality Of Workmanship In Steel Construction Practices And Handling Methods Used During The Construction Of The Metal Building Can Significantly Affect The Appearance And Performance Of The Building Panels. Panel Damage During Construction Can Be The Result Of Faulty Installation Methods And/or Carelessness.

Overdriven Fasteners Cause Indentations Or Shallow Pockets In The Panel Around The Fastener Head. Rain Water Or Condensation Moisture Combined With Atmospheric Pollutants (principally Sulfur Dioxides) And Dirt Particles Collect In These Pockets. The Combination Of Pollutants And Water Creates Acid Solutions That Will Cause Corrosion Damage To The Panel And Fastener. Rain May Wash Some Pollutants Away, But Moisture In Form Of High Humidity Can Keep These Areas Wet And Continue The Problem. Overdriving The Fastener Also Forces The Sealing Washer From Under The Head Creating A Leak At This Point. Proper Torque Adjustment Of The Screw Gun Or Preferably The Use Of A Depth Gauge Will Eliminate The Problem Of Overdriven Fasteners.

It Is Extremely Important That All Drill Shavings From The Installation Of Panel Fasteners And Fillings From The Saw Cutting Of Panels Be Removed From The Panel Surface. Corrosion Can Occur In A Matter Of Hours When These Shavings Or Fillings Are Not Removed And Are In Contact With Water Or Condensed Moisture. When Panels Are Pre-Drilled Or Cut In The Stack Prior To Erection All Shavings Must Be Cleaned From Both Sides Of The Panel To Prevent Corrosion Of The Panel By These Particles. It Is Imperative That The Roof Be Swept Clean At Least Daily And Certainly At Job Completion. The Final Cleaning Of The Roof Should Be Done Prior To Installing The Gutter So That The Shavings Are Not Deposited Into The Gutter And Left To Corrode. Any Other Foreign Objects Or Debris Left By Construction Personnel Should Also Be Removed From The Roof During The Erection Of The Roof And The Installation Of Such Equipment As Air Condition Units, Etc..

Personnel Walking On The Panel Can Cause Damage. Workmen Should Step Or Walk In The Broad Flat Areas Of The Panel And Avoid Stepping On The Panel Ends And Edges Which Can Be Bent By Careless Handling. If This Damage Is Severe, The Edges Must Be Straighten Prior To Erection Since The Appearance And/or Weather Tightness Of The Panel Could Be Affected. Dragging One Panel Across Another Can Cut Or Abrade The Coating Causing Unsightly Marks On The Panel Surface.

Attempts To Erect Panels During Windy Conditions Should Be Avoided To Prevent Damage And Of Safety Considerations.

Leaving Dirt Piled Against The Exterior Wall Panels At The Foundation Will Cause Panel Damage. This Dirt May Be Wet Or At Least Contain Some Moisture. Mud May Have Splashed Onto The Wall During Construction. Corrosion Damage May Occur Where This Dirt Or Mud Contacts The Panel. In Areas Where Lime Stabilization Of The Soil Is Required, Corrosion Damage From The Soil's Content Will Be Accelerated And Most Likely Be Severe. All Dirt Must Be Removed From The Panel Walls At The Time Of Completion Of Work. Pre-Painted Panels May Require Touch-up If The Coating Has Been Damaged During Handling Or Erection.

The Appearance Of The Building May Be Affected If Damaged Spots Or Scratches Are Located In Highly Visible Places Such As Around Doors, Windows, Etc.. If Damage Is Extensive Then Replacement Of The Entire Panel Should Be Considered.

Types Of Finishes

SHOP PRIMED STEEL:
All Structural Members Of The Metal Building System Not Fabricated Of Corrosion Resistant Material Or Protected By A Corrosion Resistant Coating Are Painted With One Coat Of Shop Primer Meeting The Performance Requirements Of SSPC Paint Specification No.15. The Coat Of Shop Primer Is Intended To Protect The Steel Framing For Only A Short Period Of Exposure To Ordinary Atmospheric Conditions. Shop Primed Steel Which Is Stored In The Field Pending Erection Should Be Kept Free Of The Ground And So Positioned As To Minimize Water Holding Pockets, Dust, Mud And Other Contamination Of The Primer Film. Repairs Of Damaged To Primed Surfaces And/Or Removal Of Foreign Material Due To Improper Field Storage Or Site Conditions Are Not The Responsibility Of The Manufacturer. The Manufacturer Is Not Responsible For Deterioration Of The Shop Coat Of Primer Or Corrosion That May Result From Exposure To Atmospheric And Environmental Conditions, Nor The Compatibility Of The Primer To Any Field Applied Coating. Minor Abrasions To The Shop Coat (Including Galvanizing) Caused By Handling, Loading, Shipping, Unloading And Erection After Painting Or Galvanizing Are Unavoidable. (MBMA 2012, Chapter IV 4.2.4).

GALVALUME:
Galvalume Is The Trade Name For A Patented Steel Sheet And Coil Product Having A Coating Of Corrosion Resistant Aluminum-Zinc Alloy. The Mixture Is Balanced To Obtain The Coating That Retains The Corrosion Resistance And Heat Reflectivity Of Aluminum And Galvanic Protection Of Zinc. The Best Properties Of Both Aluminum And Zinc Are Combined In This Coating And Offer Added Service Life For The Building.

Pre-Painted:
Using Galvalume Steel As A Substrate, Pre-Painted Steel Is Given An Additional Rust Inhibitor Primer Coat. This Primer Coat Further Increases The Corrosion Resistance. These Coatings Are Applied To The Exterior Surface Of The Panels And A Wash Coat Designed Only For Interior Use, Is Applied On The Opposite Side. Galvalume And Pre-Painted Steel Can Give Excellent Service For Many Years If A Few Rules Concerning Their Care And Maintenance Are Observed. All Of These Finishes Are Equally Subject To Damage And Corrosion When Care Is Not Provided.

PAINT AND COATING MAINTENANCE:
Remove Smudge Marks From Bare Galvalume:
Formula 409 Has Proven To Be Somewhat Effective. Lightly Rub With A Clean Cloth And Rinse With Water. Do Not Rub More Than Required To Remove Smudge Marks. No Product Will Remove All Smudge Marks.
Remove Rust Stains:
Soft Scrub Without Bleach Has Proven To be Somewhat Effective. Rub With A Soft Cloth And Rinse With Water. Do Not Rub More Than Required To Remove Stain. No Product Will Completely Remove Rust Stains.
To Touch-Up Scratches In Paint (Not Bare Metal):
Clean Area To Be Painted With Mild Detergent. Rinse Thoroughly And Dry. Using A Small Artist's Brush, Lightly Apply A Minimal Amount Of Color Matched Touch-Up Pain Required To Fill/Cover The Scratch. Contact The Building Manufacturer For Assistance With Ordering/Purchasing Touch-Up Paint As Needed.

Damage From Condensation Or Trapped Water

It Is Extremely Important That The Panels Be Monitored For Evidence Or Trapped Water Or Moisture Condensation While Awaiting Erection. High Humidity Conditions With Temperature Cycling Will Cause Condensation Between Panels Within The Bundle. Condensation Can Occur Frequently Near The Sea Coast Or Other Large Bodies Of Water.

If Jobsite Covers Are Used, They Should Be Tied Away From The Bundle At Corners To Allow Air Circulation Around The Bundle. This Will Help Prevent Moisture Evaporating From The Ground Or Building Floor From Condensing On The Panels. Plastic Or Other Impermeable Covers Are Not Recommended. Immediate Action Is Required If The Panels Are Found To Be Wet From Any Cause. The Bundles Must Be Opened And Each Panel Un-Stacked And Thoroughly Dried On Both Sides. Re-Stacking The Panel At A Slight Angle To Each Other To Prevent Nesting Will Allow Air Circulation And Assist In Keeping The Panel Dry. In Severe Conditions Large Fans Can Be Used To Circulate Air Between The Un-Stacked Panels And Accelerate Drying. Damage To The panel Coating Occurs When Panels Become Wet And Are Allowed To stay wet. damage Can Occur To Nested Panels Within 24 to 48 Hours. This Damage Shows Corrosion And Discoloration Of The Panel Surface And Is Commonly Called Wet Storage. Stain, Zinc Oxidation, Or "White Rust".

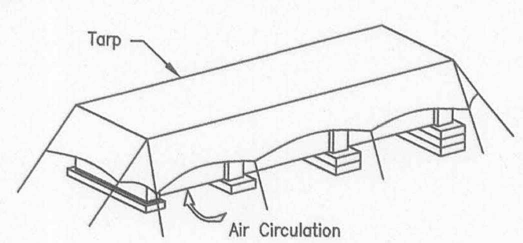

A Softening Of The Paint Film Can Occur With Pre-Painted Steel Under Wet Storage Conditions And The Durability Of The Panel Finish Substantially Decrease. Bare Galvanized And Galvalume Panels React More Quickly To Surface Oxidation Since They Lack The Additional Protection Of Paint. Zinc Coated Or Galvalume Panels Under Normal Exposure Form A Zinc Aluminum Oxide Film On Their Surface Allowing A Slow Oxidation Process Called "Weathering" To Occur That Inhibits Further Corrosion. In Nested Bundles Constant Contact Of The Panels With Condensed Or Trapped Water Prevents This Weathering Process.

Rapid Oxidation Of The Zinc or Zinc Aluminum Coating Can Now Occur And May Lead To "Red Rust" In A Short Time. If Discoloration Or Stains Are Minor A Household Cleaner Of The Type Used On Porcelain Sinks And Bathtubs May Be Used To Remove Stains. Wire Brushing Or Abrasive Materials Should be Avoided Since Scratching Or Removal Of The Coating Could Occur. Panel With Significant Damage Should Be Replaced By The Buyer Prior To Erection.

Safety Commitment

The Builder/Contractor Is Responsible For Applying And Observing All Pertinent Safety Rules And OSHA Standards As Applicable.

The Building Manufacturer Has A Commitment To Manufacture Quality Building Components That Can Be Safely Erected. However The Safety Commitment And Job Site Practices Of The Erector Are Beyond The Control Of The Building Manufacturer.

It Is Strongly Recommended That Safe Working Conditions And Accident Prevention Practices Be The Top Priority Of Any Job Site.

Local, State And Federal Safety And health Standards, Whether Standard Statuary Or Customary, Should Always Be Followed To Help Ensure Worker Safety.

Make Sure All Employees Know The Safest And Most Productive Way Of Erecting A Building. Emergency Procedures Should Be Known To All Employees. Daily Meetings Highlighting Safety Procedures Are Also Recommended. The Use Of Hard Hats, Rubber Sole Shoes For Roof Work, Proper Equipment For Handling Material And Safety Nets Where Applicable Are Recommended
.
For The Purposes Of Determining Lift Requirements, No Bundle Supplied By The Manufacturer Will Exceed 4,000 Pounds. For Further Information Also reference The Bill Of Materials For Individual Member Weights Of Structural Members. If Additional Information Is Required Contact The Field Service Department.

ICE AND SNOW REMOVAL:
Excessive Ice And Snow Removal Should Be Removed From The Roof Immediately To Prevent Damage To Roof And Possible Collapse. Do Not Use Metal Tools To remove The Ice Or Snow As This Can Damage The Paint And/Or Galvalume Coatings. Also Be Careful Around Pipes And Flashing's.
Be Extremely Careful If Your Roof Has Light Transmitting Panels. These Panels Will Not Support A Person's Weight And Will Be Difficult Or Impossible To See If They Are Covered With Ice Or Snow. See MBMA Low-Rise Building Systems Manual, Appendix A8 For Details On Snow Removal Procedures. These Procedures Should Commence When Half Of The Design Roof Snow Load Is Realized.

DEBRIS REMOVAL:
Any Foreign Debris Such As Sawdust,Dirt, Leaves, Animal Droppings, Etc. Will Cause Corrosion Of The Roof, Gutters, Trim, Etc. If Left On The Building Surface For A Long Enough Time. The Roof Should Be Periodically Inspected For Such Conditions And If Found, They Should Be Rectified In A Manner Consistent With These Roof Maintenance Guidelines. Never Allow Treated Lumber Or Concrete/Mortar/Grout To Come In Contact With Roof Panels, Especially Galvalume For Extended Periods Of Time.

PERIODIC INSPECTION:
All High-Strength Shall Be Periodically Be Inspected For Tightness. Particularly In Crane Buildings And After Seismic Or Wind Activity. The Crane Manufacturer Will Specify A Minimum Period But It Should Not Exceed Two Years.

DRAINAGE:

1. Keep Roof Free Of Debris And Keep Debris Out Of Gutter To Allow Water Quickly Drain From The Roof.
2. Do Not Use Wood Blocking To Hold Equipment Off The Panel Seams. This Blocks The Flow Of Water And Hold Moisture.
3. Do Not Allow Rooftop AC Units Or Evaporative Coolers To Drain Onto The Roof.
4. Anything That Traps Or Holds Moisture On A Roof Will Cause Premature Corrosion.

Roof Maintenance Guidelines

1. Inspect Roof For Damage After Heavy Storms.

2. Inspect And Reseal As Necessary All Roof Curbs And Other Penetrations With Urethane Sealant.

3. Always Get Manufacturer Approval Before Making Any Modifications To The Roof.

4. Repaint Any Areas That Are Susceptible To Rust As Required.

5. When Performing Roof Maintenance, Always Take The Following Precautions:
   a. Use Fall Protection And Other Safety Protection As Required.
   b. Do Not Walk On Roof Flashing Such As Gutter, Rake, Hip Or Ridge Flash.
   c. Do Not Walk On Light Transmitting Panels (LTP's). They Will Not Support A Person's Weight.
   d. Guard All LTP's And Roof Openings.
   e. Step Only In The Panel Flat Directly On Or In Close Proximity To A Supporting Roof Structural.

6. After Other Trades Have Been On The Roof For Any Reason, Inspect The Roof For Damage Caused By Workers Including Chemical Or Solvent Spills, Scratches In The Paint Or Galvalume Coating, Excessive Foot Traffic And Punctures. Make Sure That All Debris Or Scrap Left Behind By Workers Is Removed From The Roof Immediately. Avoid Using Cutoff Saws And Welding Equipment Over The Roof. The Roof Must Adequately Protected.

FOOT TRAFFIC:
Keep Foot Traffic To A Minimum. Heavy Foot Traffic Can Cause Ponding On Low Pitched Roofs. This Is Particularly True Just Upslope From The Eave And At Endlaps.
Always Walk In The Flat Of The Panel Near A Supporting Roof Structural. Do Not Walk On Trim Or In Gutters.
On Bare Galvalume Roofs, Excessive Foot Traffic May Cause Black Burnish Marks.
If Regular Foot Traffic Is Planned For A Roof, Provisions Should Be Made For A Properly Designed And Installed Walkway System. In Order To Limit Access To The Roof, Roof Hatches Or Access Ladders Should Be Locked At All Times. A Sign Posted At The Access Site Stating That Only Authorized Personnel Are Allowed On The Roof. In Addition A Log Book Should Be Kept Of All Visits To The Roof And The Reason For Such Visits.

DISSIMILAR METALS:
Never Allow Your Roof To Come In Contact With, Or Water Runoff From Any Dissimilar Metal Including But Not Limited To:
Copper, Lead Or Graphite, This Includes Copper And Arsenic Salts Used In Treated Lumber, Calcium Used In Concrete, Mortar And Grout.

Never Step On Light Transmitting Panels (LTP's) Or Unattended Roof Panels

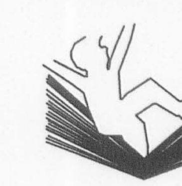

Panels May Collapse
If Not Properly Secured

Roof Panels Must Be Completely Attached To The Purlins And To Panels On Either Side Before They Can Be A Safe Walking Surface. Light Transmitting Panels LTP's) Translucent Panels Can Never Be Considered As A Walking Surface.

Partially Attached Or Unattached Panels Should Never Be Walked On!

Do Not:

1. Step On Rib At Edge Of Panel.
2. Step Near Crease In Rib At Edge Of Panel.
3. Step Within 5 Feet Of Edge On Unsecured Panel.

A Single Roof Panel Must Never Be Used As A Work Platform. An OSHA Approved Runway Should Be Used For Work Platforms. (Consult OSHA Safety And Health Regulations For The Construction Industry). Safety First!

Erection Guide	Page: R1	Date: Jul '17	Rev: 07

Revision	Date	Description	By	Ck'd
A	11/27/17	FOR CONSTRUCTION PERMIT	RAV	KYG
0	02/12/18	FOR ERECTOR INSTALLATION	ADN	ADR

MID-WEST STEEL BUILDING COMPANY
7301 FAIRVIEW ◆ HOUSTON, TEXAS ◆ P.O. BOX 40338
ZIP 77041 (713) 466-7788 ZIP 77240

Project Name & Location:
420 EAST HEREFORD AVENUE
RATON, NM, 87740
COLFAX

Customer:
STEEL DEPOT HOBBS
212 S MAGNUM RD
HOBBS, NM, 88240
DARLA JOHNSON

Drawing Status:
☐ Preliminary (Not For Construction)
☐ For Approval (Not For Construction)
☐ For Construction Permit
☒ For Erector Installation

Scale:	NOT TO SCALE	
Drawn by:	ADN	02/12/18
Checked by:	ADR	02/12/18
Project Engineer:	MSP	
Job Number:	16-B-26319	
Sheet Number:	DET14	

The engineer whose seal appears hereon is an employee for the manufacturer for the materials described herein. Said seal or certification is limited to the products designed and manufactured by manufacturer only.The undersigned engineer is not the overall engineer of record for this project.

Building Anchorage

1. To Determine That The Foundation Is Square, Measure Diagonal Dimensions To Be Sure They Are Of Equal Length.
2. To Determine That The Foundation Is Level, Set Up A Transit Or Level And Use A Level Rod To Obtain The Elevation At All Columns.
3. Carefully Check The Location Of All Anchor Rods Against The Anchor Rod Setting Plan Furnished By The Manufacturer. All Dimensions Must Be Identical To Assure A Proper Start-up.

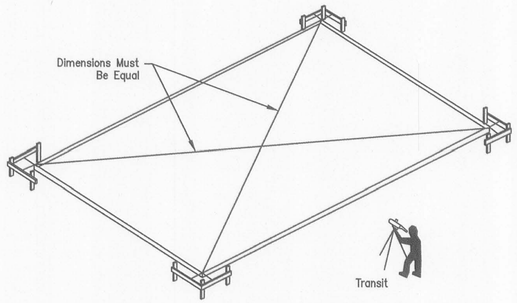

It Is Extremely Important That Anchor Rods Are Placed Accurately And In Accordance With The Anchor Rod Setting Plan. All Anchor Rods Should Be Held In Place With A Template Or Similar Means, So That They Will Remain Plumb And In Correct Location During The Placement Of The Concrete. A Final Check Should Be Made After Completion Of The Concrete Work And Prior To The Steel Installation. This Will Allow Necessary Corrections To Be Made Before Costly Installation Labor And Equipment Arrives.

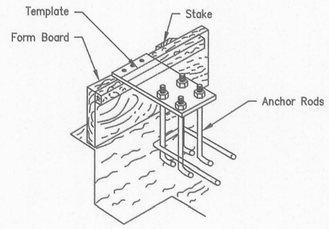

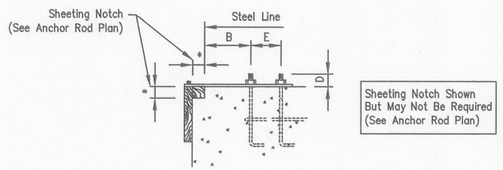

Projection Of Anchor Rods (D) Given On Anchor Rod Plan

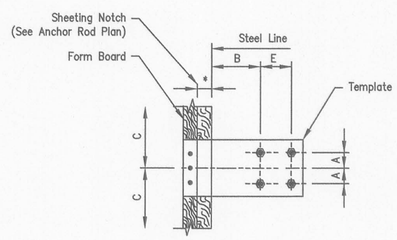

Dimensions A, B, And C Given On Anchor Rod Plan

Pre-Erection Notes:

The Following Notes, Procedures And Suggested Recommendations Are Important Parts Of The Pre-Erection Process.

1.) Prior To The Time The Erection Crew Arrives, A Responsible Person Should Check The Job Site For Foundation Readiness, Square, And Accuracy And Anchor Rod Size And Location.

The Drawing Shown Below Indicates A Method Which May Be Used To Check The Foundation And Bolts For Square.

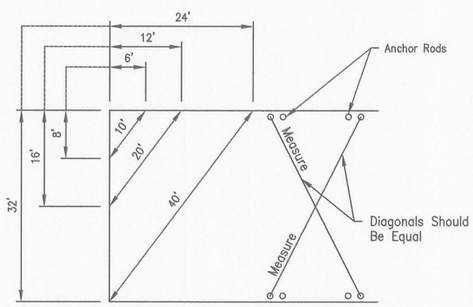

Measure Along Adjacent Sides Of Foundation Using A Pair Of Dimensions Shown. If The Diagonal Distance Between These Points Is As Noted, The Corner Is Square. Diagonal Measurements Between Opposite Anchor Rods Will Indicate If These Bolts Are Set Square.

AISC Code Of Standard Practice For Steel Building And Bridges Tolerances For Setting Anchor Rods

Anchor Rod Diameter, Inches (mm)	*Horizontal Variation, Inches (mm)
¾" and ⅞" (19 And 22 mm)	¼" (6 mm)
1", 1¼", 1½" (25, 31, 38 mm)	⅜" (10 mm)
1¾", 2", 2½" (44, 50, 63 mm)	½" (13 mm)

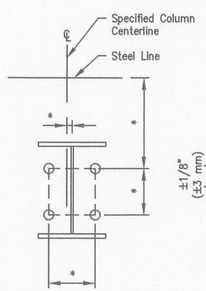

ANCHOR ROD SETTING TOLERANCES

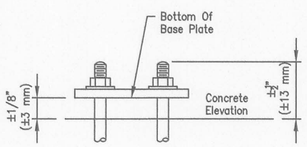

BASE PLATE AND ANCHOR ROD TOLERANCES

* Horizontal Variations Vary Depending On Anchor Rod Diameter. See Above

Erection Tolerances

ERECTION BRACING:
It Is The Responsibility Of The Erector To Determine, Furnish And Install All Temporary Supports Such As Temporary Guys, Beams, Falsework, Cribbing, Or Other Elements Required For The Erection Operation (In Accordance With Section 7.10.3 Of ANSI/AISC 303, Code Of Standard Practice For Steel Building And Bridges).

COLUMN ALIGNMENT TOLERANCES

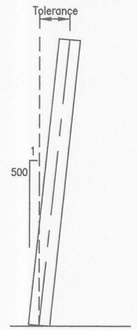

Height	Tolerance (±) H/500
10'	¼"
12'	5/16"
15'	⅜"
20'	½"
25'	⅝"
30'	¾"
45'	1 1/16"
60'	1 7/16"

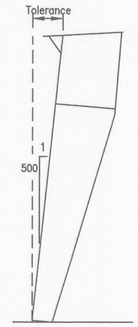

ALIGNMENT TOLERANCE FOR MEMBERS WITH FIELD SPLICES

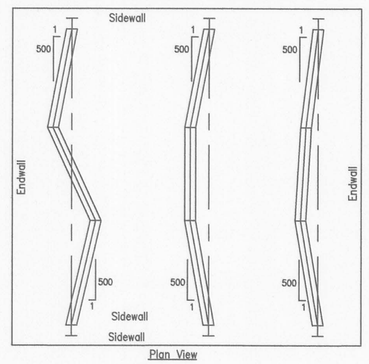

MEZZANINE BEAM HEIGHT TOLERANCE

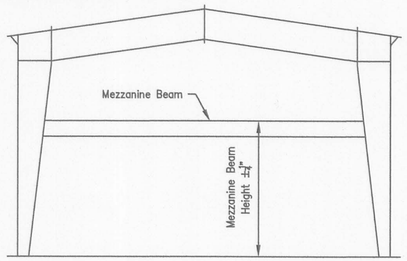

General Erection Notes

1.) All Structural Framing Members, Purlins, Girts, Clips, Flange Braces, Bolts, Bracing Systems, Roof And Wall Panels, Etc. Must Be Installed As Shown On Erection Drawings.

2.) It Is Extremely Important, Especially During Construction, That Panels At The Eaves, Rakes And Ridges Be Kept Secure.

Panel Cautions And Notes

To Minimize Potential Of Corrosive Action At The Bottom Edge Of Wall Panels, The Contractor Must Assure That The Following Procedures Are Followed:

1.) The Concrete Foundation Should Be Cured For A Minimum Of Seven (7) Days Before Wall Panels Are Installed. (Uncured Concrete Is Highly Alkaline And Metal Panels Can Undergo Varying Degrees Of Corrosive Attack When In Direct Contact With The Concrete.) After The First Week Of The Curing Cycle, The Reaction Between Metallic Coatings On Steel And The Concrete Is Essentially Halted.

2.) Top Of Finish Grade At Building To Be A Minimum Of Four (4) Inches Below Bottom Of Panel.

3.) Finish Grade Is To Slope Away From Building To Ensure Proper Drainage.

4.) Upon Completion Of Finish Grading, All Dirt Is To Be Cleaned From Around Base Of Wall Panel Where It May Have Collected In Panel Notch Or On Base Trim.

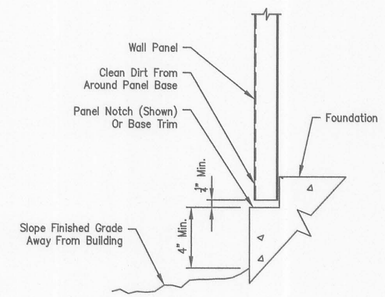

Fastener Installation

Correct Fastener Installation Is One Of The Most Critical Steps When Installing Roof/Wall Panels. Drive The Fastener In Until It Is Tight And The Washer Is Firmly Seated. Do Not Overdrive Fasteners.
A Slight Extrusion Of Neoprene Around The Washer Is A Good Visual Tightness Check. Always Use The Proper Tool To Install Fasteners. A Fastener Driver (Screw Gun) With A RPM Of 1700-2000 Should Be Used For Self-Drilling Screws. A 500-600 RPM Fastener Driver Should Be Used For Self-Tapping Screws. Discard Worn Sockets, These Can Cause The Fastener To Wobble During Installation.

Note: Always Remove Metal Filings From Surface Of Panels At The End Of Each Work Period. Rusting Filings Can Destroy The Paint Finish And Void Any Warranty.

Tape And Tube Sealant

Proper Tape And Tube Sealant Application Is Critical To The Weather Tightness Of A Building. Tape Sealant Should Not Be Stretched When Installed. Apply Only To Clean, Dry Surfaces. Keep Only Enough Sealants On The Roof That Can Be Installed In A Day. During Warm Weather, Store Sealants In A Cool Dry Place. During Cold Weather (below 60°) Sealants Must Be Kept Warm (60°-90°) Until Application. After Tape Sealant Has Been Applied, Keep Protective Paper In Place Until Panel Is Ready To Be Installed.

Important Note

All Details, Recommendations And Suggestions Contained In This Erection Guide Of This Drawings Set Are For General Guidelines Only, And Not Meant To Be All-Inclusive. Industry Accepted Installation Practices With Regard To All Areas Not Specifically Discussed In This Section Should Be Followed. Only Experienced, Knowledgeable Installers Familiar With Accepted Practices Should Be Used To Assure A Quality Project.

It Is Emphasized That The Manufacturer Is Only A Manufacturer Of Metal Building Components And Is Not Engaged In The Installation Of Its Products. Opinions Expressed By The Manufacturer About Installation Practices Noted In The Erection Guide Are Intended To Represent Only A Guide. Both The Quality And Safety Of Installation And The Ultimate Customer Satisfaction With The Completed Building Are Determined By The Experience, Expertise, And Skills Of The Installation Crews, As Well As The Equipment Available For Handling The Materials. Actual Installation Operations, Techniques And Site Conditions Are Beyond The Manufacturers Control.

Revision	Date	Description	By	Ck'd
A	11/27/17	FOR CONSTRUCTION PERMIT	RAV	KYG
0	02/12/18	FOR ERECTOR INSTALLATION	ADN	ADR

MID-WEST
BUILDING SYSTEMS
7301 FAIRVIEW ◆ HOUSTON, TEXAS ◆ P.O. BOX 40338
ZIP 77041 (713) 466-7788 ZIP 77240

Project Name & Location:
420 EAST HEREFORD AVENUE
RATON, NM, 87740
COLFAX

Customer:
STEEL DEPOT HOBBS
212 S MAGNUM RD
HOBBS, NM, 88240
DARLA JOHNSON

Drawing Status:
☐ Preliminary (Not For Construction)
☐ For Approval (Not For Construction)
☒ For Erector Installation

Scale:	NOT TO SCALE
Drawn by:	ADN 02/12/18
Checked by:	ADR 02/12/18
Project Engineer:	MSP
Job Number:	16-B-26319
Sheet Number:	DET15

The engineer whose seal appears hereon is an employee for the manufacturer for the materials described herein. Said seal or certification is limited to the products designed and manufactured by manufacturer only.The undersigned engineer is not the overall engineer of record for this project.

PBR Roof Panels

For PBR Roofs With Ridge Panels, It Is Recommended That Both Sides Of The Ridge Be Sheeted Simultaneously. This Will Keep The Insulation Covered For The Maximum Amount Of Time And The Panel Ribs Can Be Kept In Proper Alignment For The Ridge Panel. This Is Critical On The PBR Panels So That The Ridge Caps Can Be Properly Installed. Check For Proper Coverage As The Sheeting Progresses.

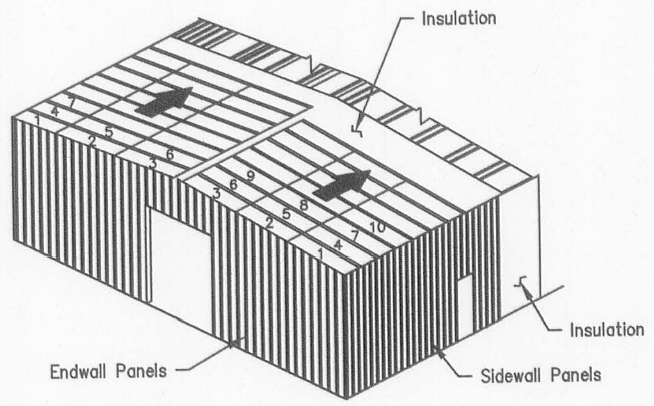

Install The First Run Of Roof Panels Across The Building From Eave To Eave Or Eave To Ridge. To Allow Proper Installation Of The Rake Trim, The Starting Location For The First Panel Must Be As Shown In The Rake Details Included With The Erection Drawings. When The First Run Is Properly Located And Aligned With The Correct Endlaps And Eave Overhangs, Fasten To Purlins. Roof Panels Should Be Installed So That The Sidelap Is In A Direction Away From Prevailing Wind. Refer To Appropriate Lap Details Included With The Erection Drawings.

Install Remaining Roof Insulation And Panels. To Avoid Accumulative Error Due To Panel Coverage Gain Or Loss, Properly Align Each Panel Before It Is Fastened. Occasional Checks Should Be Made To Ensure That Correct Panel Coverage Is Maintained. Special Attention Should Be Given To Fastener, Sealant and Closure Requirements. Refer To Details Included With The Erection Drawings.

At Finishing End Of Roof, The Last panels May Require Field Modification For Installation Of Rake Trim. Refer To Rake Details Included With The Erection Drawings. DO NOT BACK LAP THROUGH FASTENED ROOF PANELS.

NOTE: Roof Types And Installation Requirements Will Vary. Refer To The Appropriate Details For Specific Panel Used.

IMPORTANT: Loose Fasteners, Blind Rivets, Drill shavings, Etc.. Must Be Removed From The Roof To Guard Against Corrosion.

Wall Panels

Proper Horizontal And Vertical Alignment Of Supporting Structure (Girts Or Other Framing) Is The Responsibility Of The Installer. Failure To Align The Secondary members Properly Prior To Wall Installation Can Have A Direct Impact On The Final Appearance And Performance Of The Installed Wall System For Which The Metal Building Manufacturer Is Not Responsible.

Before Installing Wall Panels, The Girts Must Be Aligned To A Level Position So That There Is No Visible Sag. This Should Be Done Directly Ahead Of Panel Installation.

Girt Leveling May Be Accomplished By Standing A Section Of Gable Angle Vertically Against The Outside Girt Flanges At Approximate Mid-bay Location. When Girts Are Level, Attach The Girt Flanges To The Angle With Vise Grip Pliers Or Temporary Screws. Wood Blocking Cut To Fit The Spaces May Also Be Used For Alignment.

Note:
Temporary Girt Blocking Is Not Recommended On Concealed Fastener Panels. The Removal Of The Blocks After Panel Installation Can Cause Oil Canning.

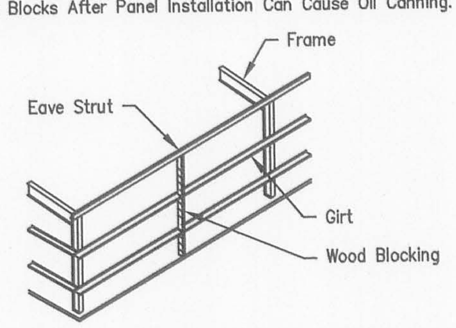

Note:
Wall Panel Type And Installation Details Will Vary. Refer To The Erection Drawings And Details For The Specific Panel Used For Your Building.

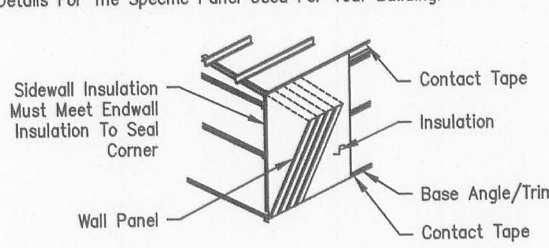

If Walls Are To Be Insulated With Blanket Insulation Over Girt Girt Flanges, Base And Eave, Place A Continuous Run Of Contact Tape Along The Eave Strut And Base Member.

Note:
At The Base, Cut Off The Insulation A Minimum Of $\frac{1}{2}$" Above The Bottom Of The Wall Panel. This Will Prevent The Insulation From Hanging Below The Wall Panel And Wicking Moisture.

Note:
Additional Insulation May Be Required To Fill The Eave Strut And Prevent Condensation In Certain Climate Regions

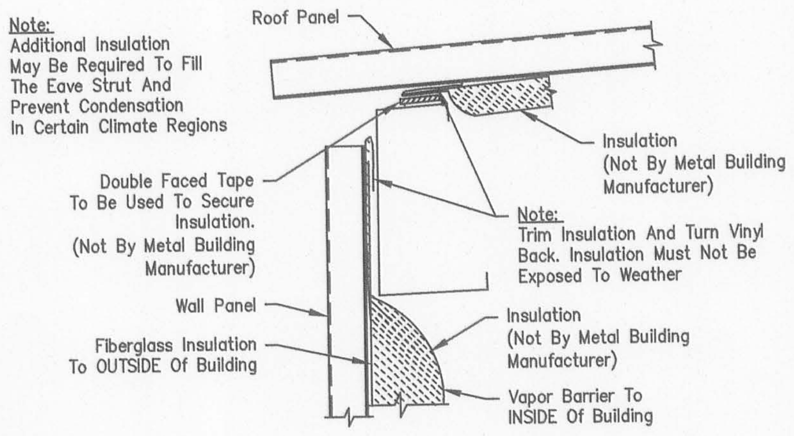

Eave Detail
(See Erection Drawings)

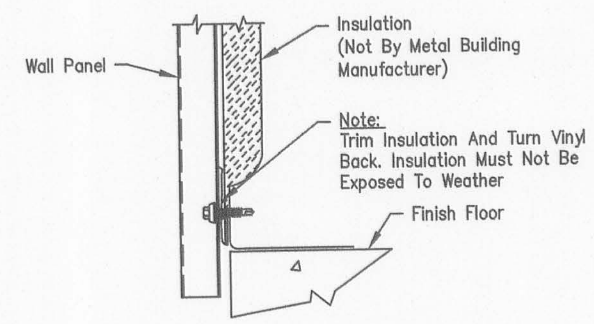

Base Detail
(See Erection Drawings)

Sidewall Panels Should Be Installed So That The Panel Sidelap Is In A Direction Away From The Prevailing Wind. Refer To Appropriate Lap Detail Included With Erection Drawings.)

Note:
Check Periodically To Ensure That All Panels Are Aligned And Plumb.

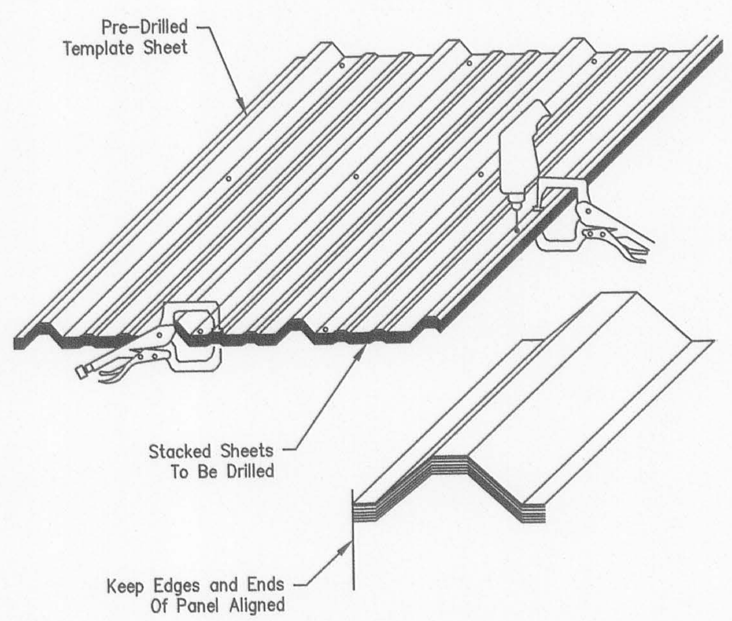

Screw Alignment Panel
(Through Fastened Panel Only)

Note:
After Drilling Panels, It Is Important To Clean Metal Filings Off All Panel Surfaces, Including Between Panels That Are Not Installed That Day, To Avoid Rust Stains.

Suggested Method Of Purlin Attachment For Building Accessories

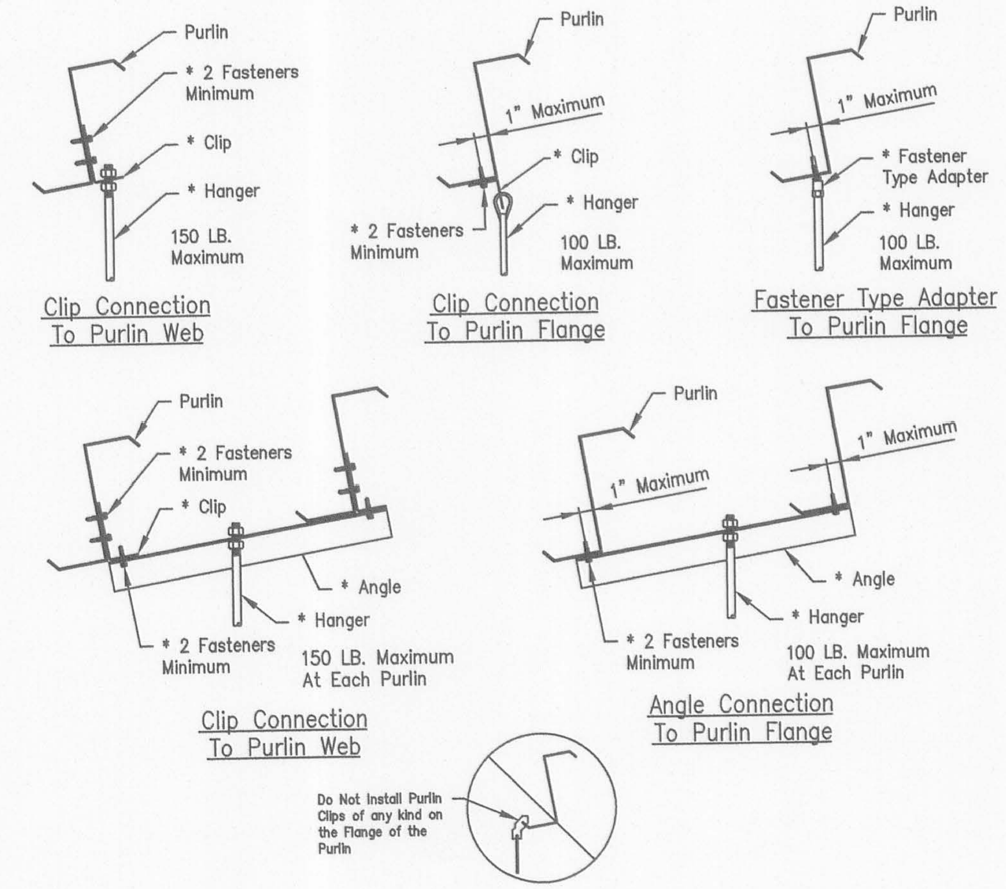

* Denotes Material Not Provided By Metal Building Manufacturer.

The Total Hanger Load Shall Not Exceed The Design Collateral Load For The Building. Example:
5'-0 (Purlin Spacing) X 5'-0 (Hanger Spacing) X 6 PSF (collateral Load) = 150 Lbs.
See Cover Sheet For Design Collateral Load For This Building.
Note: If The Building Is Designed For 0 PSF Collateral Load, Then Adding Any Suspended System (i.e. Duct Work, Piping, Lights, Ceilings, Etc.) Will Correspondingly Reduce The Design Live Load.

Roof Curbs When Not Supplied By Building Manufacturer

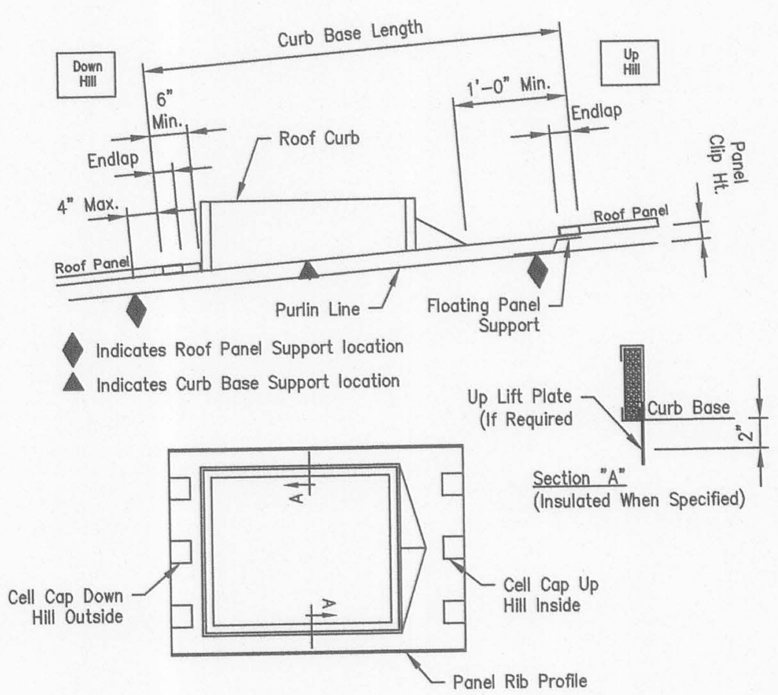

The Curb Details Shown Illustrate The Building Manufacturers Recommended Curb Style And Installation Method. It Is The Erector/Installer's Responsibility To Provide The Proper Curb Style And Install Them In Accordance With The Procedures Established By These Details. Failure By The Erector/Installer To Follow These Recommendations May Result In The Curbs Damaging The Roof System Or Excluded From Warranties.

All Roof Curbs To Be:
1. .080 Aluminum Or 18 Ga. Stainless Steel (No Galvalume® Or Galvanized).
2. Panel Rib To Panel Rib (No Flat Skirt Or Lay-Over Curbs).
3. Installed With Down Hill End Over Panel And Up Hill End Under Panel Application For Water Flow At Panel Splice.
4. Up Lift Prevention For Clip Applied Roof Systems Are Required If:
   a. Wind Loads Exceed 110 MPH.
   b. Curb Base Crosses A Purlin.
5. Supported on (4) Sides By Primary Or Secondary Framing.
6. Maximum Single Curb Weight Recommended Is 1500 Lbs.

Roof Jack Installation when Not Supplied By Building Manufacturer

General Installation Notes
? Do Not Use Galvanized Roof Jacks, Lead Hats, Or Other Residential Grade Roof Jacks. These Roof Jacks Do Not Have 20 Year Service Life And In Case Of Lead Hats Will Cause Galvanic Corrosion Of The Roof Panel.
? Use EPDM Rubber Roof Jacks With An Integral Aluminum Band Bonded Into The Perimeter Of The Base. EPDM Roof Jacks Have A Temperature Range From -65°F To 212°F. Use Silicone Roof Jacks For High Temperatures. Silicone Roof Jacks Have A Temperature Range Of -100°F To 437°F.
? Retrofit Roof Jacks Are Available For Applications In Which The Top Of The Pipe Is Inaccessible, Eliminating The Possibility Of Sliding The Roof Jack Over The Top Of The Pipe.
? Do Not Use Tube Sealant To Seal The Roof Jack To The Roof Panels. Use Roll Tape Sealer Between The Roof Jack And The Roof Panel And Attach The Roof Jack To The Roof Panel With Fastener #4 $\frac{1}{4}$ - 14 X $\frac{7}{8}$" LL SD W/washer At 1" O.C. Around The Base Of The Roof Jack. See Table Below For Quantities.
? Trim The Top Of The Roof Jack To Fit Over The Pipe, Roll Down The Roof Jack Over The Pipe And Apply Tape Sealer For The Perimeter Of The Roof Jack Base Between The Roof Jack And The Roof Panel. Apply Tape Sealer Around The Pipe And Install A Stainless Steel Clamp (Not By Bldg. Mfr.) Over The Top Of The Roof Jack And Firmly Tighten To Form A Secure Compression Seal.
? If The Pipe Diameter Is So Large To Block The Flow Of Water Down The Roof Panel, A Flat Base Roof Curb Must Be Installed Into The Roof And The Roof Jack Will Be Sealed To The Curb. A Two Piece Curb May Be Required When The Top Of The Pipe Is Inaccessible.
? In Northern Climates, The Pipe Penetration Should Be Protected From Moving Ice Or Snow With A Snow Retention System Immediately Up Slope From The Pipe.

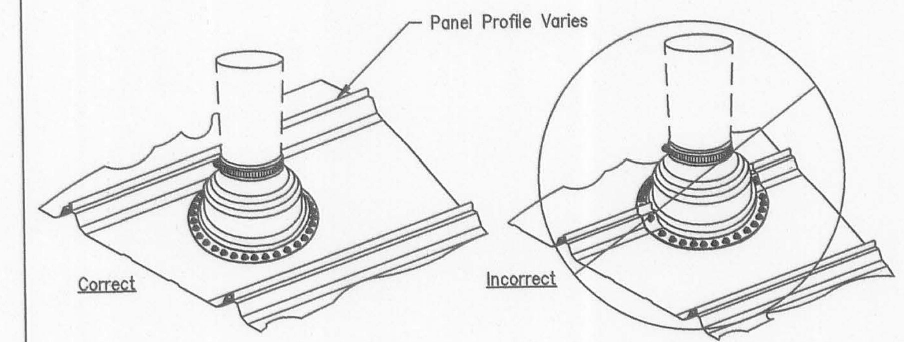

Install Pipe In Center To Allow Base Of Roof Jack To Lay Flat on Panel.
Cannot Encompass More Than 75% Of Panel.

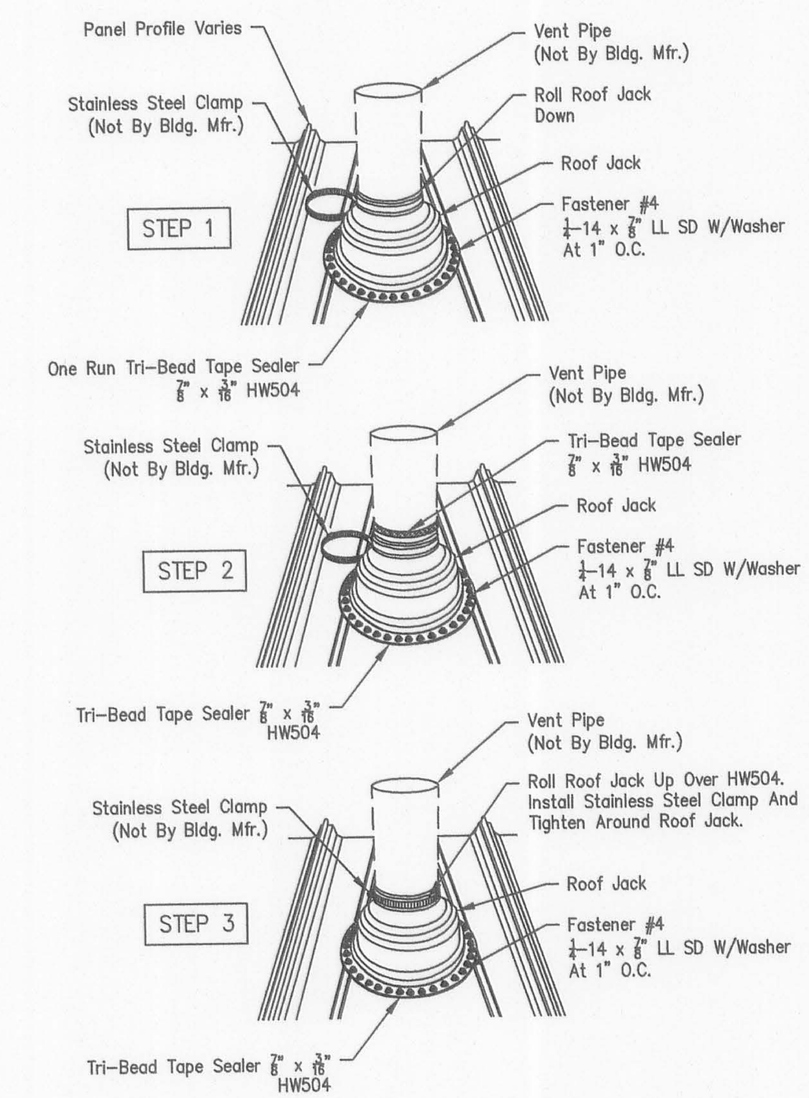

Revision	Date	Description	By	Ck'd
A	11/27/17	FOR CONSTRUCTION PERMIT	RAV	KYG
0	02/12/18	FOR ERECTOR INSTALLATION	ADN	ADR

MID-WEST STEEL BUILDING COMPANY
7301 FAIRVIEW ◆ HOUSTON, TEXAS ◆ P.O. BOX 40338
ZIP 77041 (713) 466-7788 ZIP 77240

Customer:
STEEL DEPOT HOBBS
212 S MAGNUM RD
HOBBS, NM, 88240
DARLA JOHNSON

Project Name & Location:
420 EAST HEREFORD AVENUE
RATON, NM, 87740
COLFAX

Drawing Status:
☐ Preliminary (Not For Construction)
☐ For Approval (Not For Construction)
☐ For Construction Permit
☒ For Erector Installation

Scale: NOT TO SCALE
Drawn by: ADN 02/12/18
Checked by: ADR 02/12/18
Project Engineer: MSP
Job Number: 16-B-26319
Sheet Number: DET16

The engineer whose seal appears hereon is an employee for the manufacturer for the materials described herein. Said seal or certification is limited to the products designed and manufactured by manufacturer only.The undersigned engineer is not the overall engineer of record for this project.