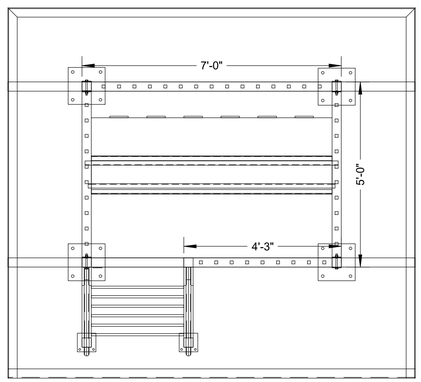

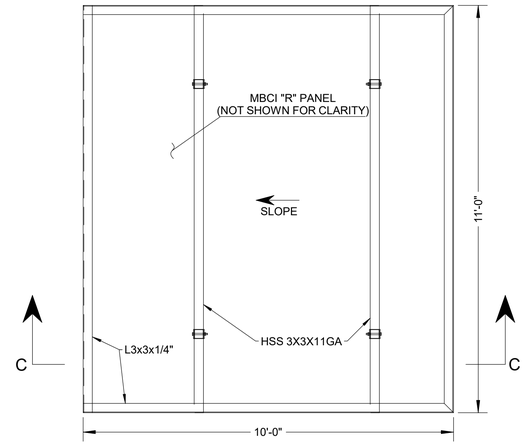

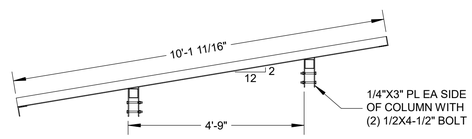

SEC C-C

ROOF PLAN

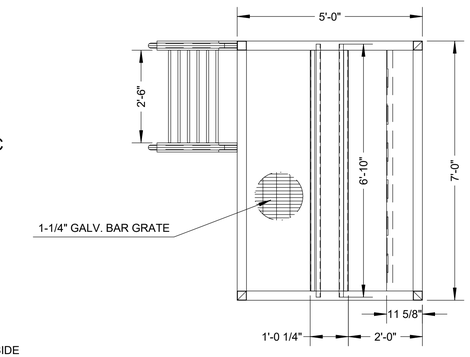

SEC B-B

FLOOR PLAN

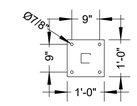

3/4" BASEPLATE DETAIL

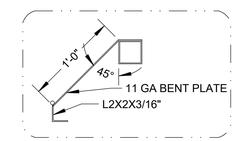

DETAIL B
SCORING TABLE DETAIL

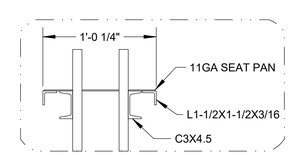

DETAIL A
BENCH DETAIL

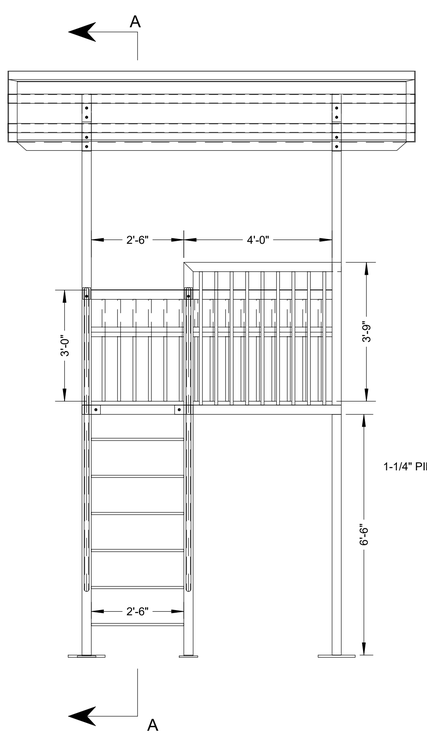

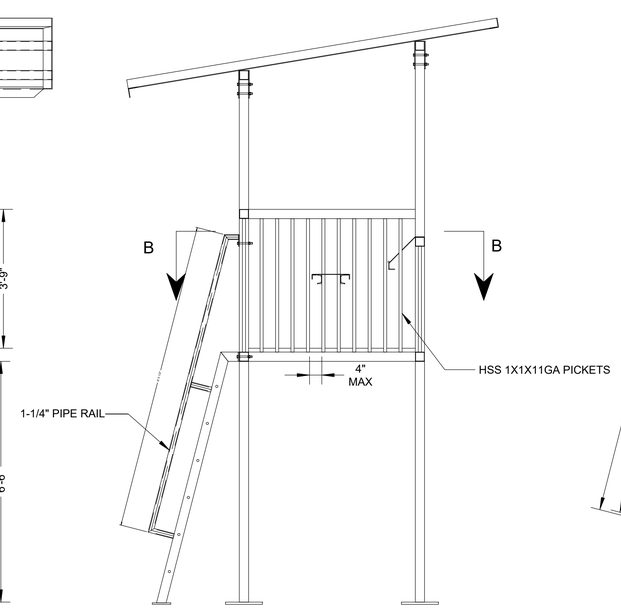

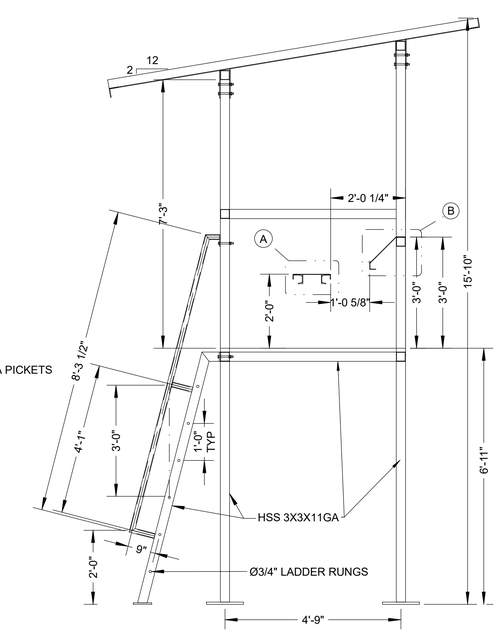

SEC A-A

REV	DATE	DESCRIPTION
.	.	.

JOB .

DRAWN BY ANG DATE 5/23/17

CHECKED BY . DATE .

TITLE SCORING TOWER