Board of County Commissioners • Escambia County, Florida

Paul R. Nobles/Purchasing Manager
Office of Purchasing

August 24, 2018

To: All Known Prospective Bidders

Addendum Number 1:

RE: Beulah Regional Park Restroom Building Resolicit
Specification Number: PD 17-18.090

All:

In response to question:

1: Question: Metal Toilet Partitions – Is the use of AMPCO Products, LLC in lieu of Bradley Corporation acceptable?

Response: The substitution for Section 102113.13 Metal Toilet Compartments as specified for the project Beulah Regional Park Restroom Building PD 17-18.041 has been reviewed and accepted as an alternate manufacturer. AMPCO Products, LLC in lieu of Bradley Corporation. Finishes, hardware, and panel selections will be review during submittal process.

This Addendum Number 1 is furnished to all known prospective Bidders. Please sign and return one copy of this Addendum, with original signature, with your proposal as an acknowledgement of you having received same. You may photo copy for your record.

Sincerely,

Buzz Roggenbuck
Sr. Purchasing Coordinator

Acknowledgement of Receipt of Addendum 1:

SIGNED: _____

COMPANY: _____

213 South Palafox Place, 2nd Floor • Pensacola, Florida 32502
P.O. Box 1591 • Pensacola, Florida 32591-1591
850.595.4980 • www.myescambia.com

Knowledge for Creating and Sustaining the Built Environment

SUBSTITUTION REQUEST

(After the Bidding/Negotiating Phase)

Project: BEULAH REGIONAL PARK RESTROOM BUILDING

Substitution Request Number: _____

From: BILL BURCH SALES

To: DALRYMPLE SALLIS ARCHITECTURE

Date: 06/05/2018

A/E Project Number: 17016

Re: Substitution Request - Metal Toilet Compartments

Contract For: Beulah Regional Park Restroom Building

Specification Title: Metal Toilet Compartments

Description: Manufacturers

Section: 102113.13 Page: 1

Article/Paragraph: 2.2

Proposed Substitution: All American Metal Corporation

Manufacturer: All American Metal Corporation Phone: (516) 623-0222

Address: Post Office Box 108, 200 Buffalo Avenue, Freeport, NY 11520

Trade Name: _____ Model No.: _____

Installer: _____ Phone: _____

Address: _____

History: ☐ New product ☐ 1-4 years old ☐ 5-10 years old ☑ More than 10 years old

Differences between proposed substitution and specified product:

None

☐ Point-by-point comparative data attached — REQUIRED BY A/E

Reason for not providing specified item:

Similar Installation:

Project: _____ Architect: _____

Address: _____ Owner: _____

_____ Date Installed: _____

Proposed substitution affects other parts of Work: ☑ No ☐ Yes; explain _____

Savings to Owner for accepting substitution: _____ ($ _____).

Proposed substitution changes Contract Time: ☐ No ☐ Yes [Add] [Deduct] _____ days.

Supporting Data Attached: ☐ Drawings ☑ Product Data ☐ Samples ☐ Tests ☐ Reports ☐ _____

© Copyright 2007, Construction Specifications Institute,
99 Canal Center Plaza, Suite 300, Alexandria, VA 22314

Form Version: June 2004
CSI Form 13.1A

SUBSTITUTION REQUEST

(After the Bidding/Negotiating Phase — Continued)

The Undersigned certifies:

- Proposed substitution has been fully investigated and determined to be equal or superior in all respects to specified product.
- Same warranty will be furnished for proposed substitution as for specified product.
- Same maintenance service and source of replacement parts, as applicable, is available.
- Proposed substitution will have no adverse effect on other trades and will not affect or delay progress schedule.
- Cost data as stated above is complete. Claims for additional costs related to accepted substitution which may subsequently become apparent are to be waived.
- Proposed substitution does not affect dimensions and functional clearances.
- Payment will be made for changes to building design, including A/E design, detailing, and construction costs caused by the substitution.
- Coordination, installation, and changes in the Work as necessary for accepted substitution will be complete in all respects.

Submitted by: Pamela Silcox

Signed by: Pamela B. Silcox

Firm: Bill Burch Sales

Address: Post Office Box 17092

Pensacola, FL 32522

Telephone: (850) 572-6913

Attachments: ☑

All American Metal Corporation Specifications and Product data

A/E's REVIEW AND ACTION

☐ Substitution approved - Make submittals in accordance with Specification Section 01 25 00 Substitution Procedures.
☐ Substitution approved as noted - Make submittals in accordance with Specification Section 01 25 00 Substitution Procedures.
☐ Substitution rejected - Use specified materials.
☐ Substitution Request received too late - Use specified materials.

Signed by: E. Dolm Date: 06/11/2018

Additional Comments: ☐ Contractor ☐ Subcontractor ☐ Supplier ☐ Manufacturer ☐ A/E ☐ Other:

© Copyright 2007, Construction Specifications Institute,
99 Canal Center Plaza, Suite 300, Alexandria, VA 22314

ALL AMERICAN METAL CORP.

SPECIFICATIONS
TYPE H/B –HEADRAIL BRACED
STAINLESS STEEL PARTITIONS

COMPOSITION / CONSTRUCTION OF MATERIALS:

Doors are 1" thick, constructed with two **22-gauge** sheets of stretcher leveled type 304 stainless steel #4 finish that are formed and then laminated under pressure to a sound deadening double-faced honeycomb core. Face plates are welded together at intervals of 18" on center around entire perimeter to insure a rigid one-piece unit. All edges are then interlocked with a continuous stainless steel roll-formed edge molding. All mitered corners are welded and ground smooth. Corner clips will not be acceptable.

Panels are 1" thick, constructed with two **22-gauge** sheets of stretcher leveled type 304 stainless steel #4 finish that are formed and then laminated under pressure to a sound deadening double-faced honeycomb core. Face plates are welded together at intervals of 18" on center around entire perimeter to insure a rigid one-piece unit. All edges are then interlocked with a continuous stainless steel roll-formed edge molding. All mitered corners are welded and ground smooth. Corner clips will not be acceptable.

Type H/B –Headrail Braced Pilasters are 1-1/4" thick, constructed with two **20-gauge** sheets of stretcher-leveled type 304 stainless steel #4 finish that are formed and then laminated under pressure to a sound deadening double-faced honeycomb core. Face plates are welded together at intervals of 18" on center around entire perimeter to insure a rigid one-piece unit. Edges are then interlocked with a continuous stainless steel roll-formed edge molding. An inverted heavy gauge channel shall be welded into top of the pilaster for additional reinforcing. Pilasters shall have adjustable floor anchor system including an integral jack-leveling device. A polished 3" high stainless steel shoe of one-piece construction shall be supplied to conceal floor anchoring. Tamper proof shoe assembly held in place by means of concealed floor anchor clips –exposed screws are not acceptable. Pilaster tops are securely braced together with a continuous anti-grip headrail of extruded aluminum alloy, polished and clear anodized.

FINISH: All doors, panels and pilasters shall be type 304 stainless steel with a #4 finish and include a durable plastic film covering to safeguard them during shipment and installation. All components shall have vertical grain finish except panels wider than 58½" –seaming is not acceptable.

HARDWARE and FITTINGS: All material components are fully prepared with suitable internal reinforcement to receive all necessary hardware and fittings. AAMCO supplies factory pre-drilled components for a safer, more efficient and trouble-free installation. All door hinges and strike/keeper will be thru-bolted with sex bolts having theft resistant heads. Appropriate screws supplied for all other hardware and fittings. All fastenings have a corrosion resistant finish.

Doors:

- Upper and lower door brackets are heavy non-ferrous Zamac castings that become integral part of door as they are imbedded within pre-formed abscesses at time of assembly. Satin finish shall closely resemble door finish.
- Top hinge bracket (#102) is a heavy, non-ferrous Zamac casting with chrome-plated finish. One-piece design has a 5/8" wrap-around flange that fits over the pilaster edge for maximum durability.
- Stainless steel 5/16" diameter pin (#101) goes through the door and the top hinge bracket for three-point bearing.
- Bottom hinge bracket (#103) is a heavy, non-ferrous Zamac casting with chrome-plated finish. One-piece design has a 5/8" wrap-around flange that fits over pilaster edge for maximum durability. Door operates on opposing nylon cams that are fully recessed and concealed within the lower door bracket. The gravity activated cam assembly provides easy adjustment of door permitting it to rest at any desired open or fully closed position when not latched.
- Concealed latch assembly with stainless steel pin allows for emergency access. Cover plate and turn knob (#104) are heavy, non-ferrous Zamac castings with chrome plated finish. ADA lever handles are supplied on all handicap doors.
- Door strike and keeper (#105) is a heavy, non-ferrous Zamac casting with chrome-plated finish. One-piece design has a 5/8" wrap-around flange that fits over pilaster edge for maximum durability.
- Combination coat hook and bumper (#106) is a heavy, non-ferrous Zamac casting with chrome-plated finish.

Wall and Pilaster Brackets:

- Shall be heavy, non-ferrous Zamac castings with chrome-plated finish. The wall anchored pilasters and dividing partition panels shall be attached with two brackets of either double ear or single ear design depending on existing wall condition. Dividing partition panels shall be attached to the "rear" pilaster face with two "U" brackets.

INSTALLATION: Shall be in accordance with AAMCO's approved shop drawing and installation instructions with partitions being rigid, plumb, straight and level. Unless stated otherwise, doors and panels are 58" high and mounted 12" above finished floor. Pilasters shall measure 82" from floor to top of headrail.

WARRANTY: AAMCO provides for all stainless steel materials, when properly maintained, a ten-year warranty against all defects in workmanship and construction under normal wear and use of this product.

PO Box 108, 200 Buffalo Avenue, Freeport, NY 11520
Phone 516-623-0222 * Fax 516-623-5809
www.allamericanmetal.com

ALL AMERICAN METAL CORP.

TYPE H/B –HEADRAIL BRACED STAINLESS STEEL PARTITIONS

TYPE H/B –HEADRAIL BRACED

For easy, economical installations, the headrail braced design is the best choice. This popular style does not require any special floor construction making it ideal for use in either new or existing buildings. The combined floor mounting system with a continuous overhead aluminum headrail provides for a structurally rigid installation.

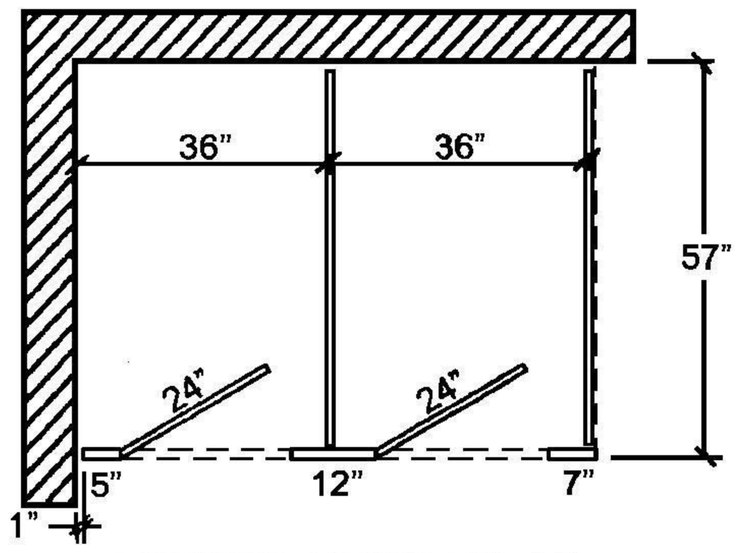

TYPICAL FLOOR PLAN

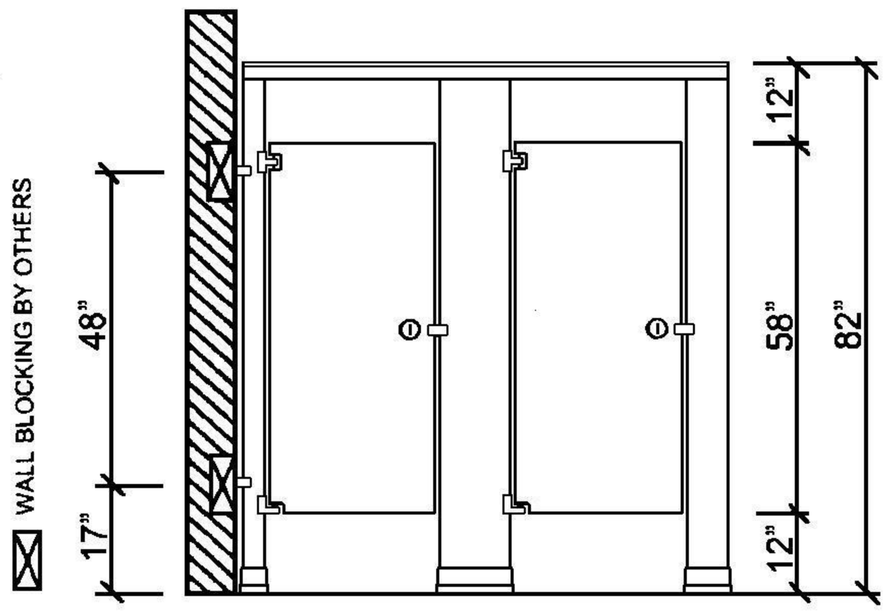

FRONT ELEVATION

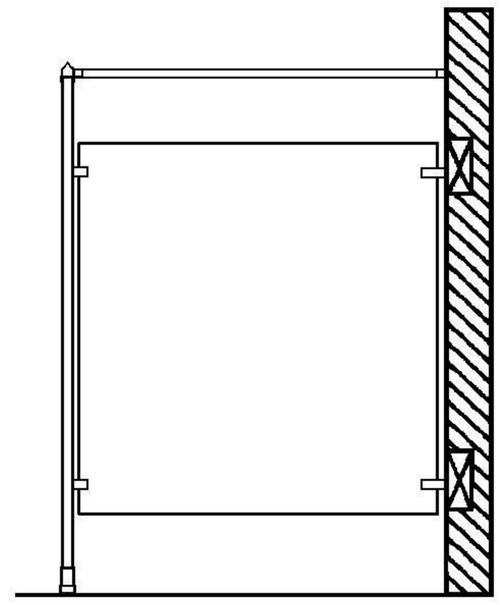

SIDE ELEVATION

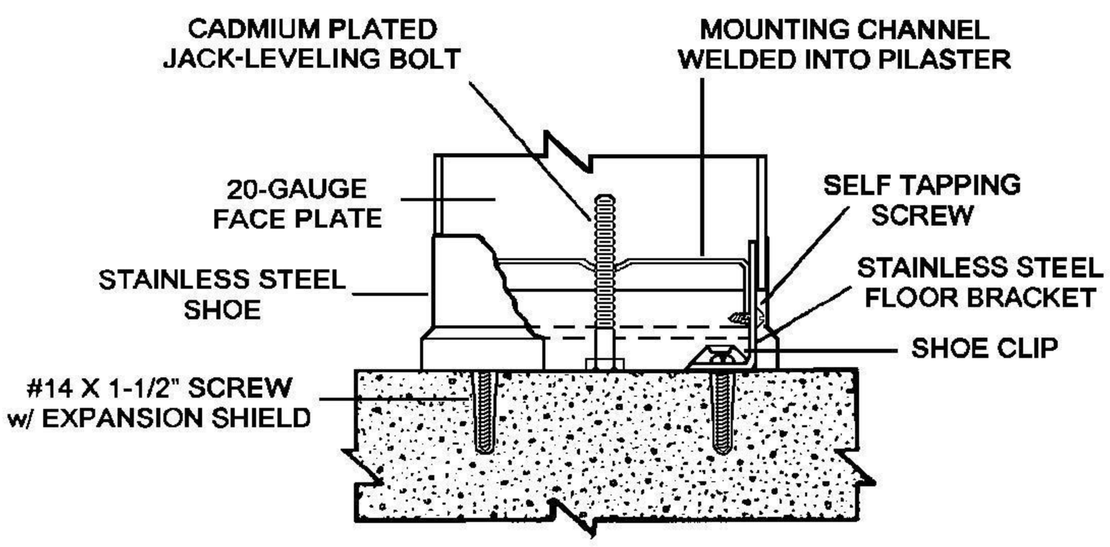

FLOOR MOUNTING DETAIL

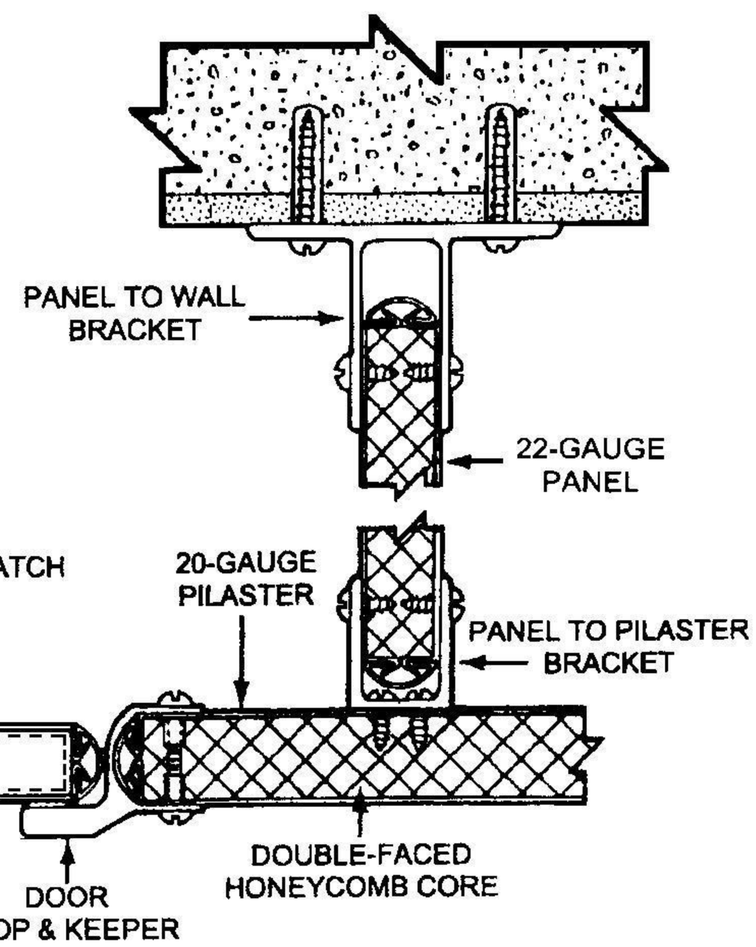

CROSS SECTION

PO Box 108, 200 Buffalo Avenue, Freeport, NY 11520
Phone 516-623-0222 * Fax 516-623-5809
www.allamericanmetal.com

PREMIUM TOILET PARTITIONS

Stainless Steel

Powder Coated Steel

Solid Plastic (HDPE)

Plastic Laminate

Phenolic

Surrounding you when it
matters most, wherever you go.

ALL AMERICAN METAL CORP.

WE GUARANTEE YOU THE LOOK, QUALITY, AND PROMPT DELIVERY YOU DESERVE

For nearly 50 years, these values have come to define the foundation of All American Metal Corp. From the front office to the shop floor, we are totally committed to the design, manufacture, and sales of toilet partitions, screens, shower units, and related products. It's all we do, and all we plan to do. That's the advantage of working with All American Metal.

Complete specifications are available at www.allamericanmetal.com, or Call 516.623.0222

TOILET PARTITION STYLES

TYPE H/B: HEADRAIL-BRACED

For an easy, economical installation, our headrail-braced style is the best choice you can make. This popular design style requires no special floor construction, making it ideal for use in either new or existing buildings. Featuring a combination of floor anchoring with a sturdy, anti-grip aluminum headrail, this option makes for an extremely stable installation with minimal difficulty.

TYPE F/S: FLOOR-SUPPORTED

This highly versatile style of installation offers modern appeal that will suit any architectural decor concept. The uniform, flush-top design easily adapts to any washroom and the lack of overhead hardware provides a more spacious feel. Secure installation of this style partition requires a solid concrete floor allowing for a minimum 2" penetration anchoring system.

TYPE C/H: CEILING-HUNG

The open style of this installation offers a unique blend of aesthetic and practical appeal. The absence of floor hardware provides a clean, contemporary design that will complement any washroom. The unobstructed access to floor also allows for simplified maintenance, making this style especially well-suited to washrooms having wall-hung fixtures. For proper installation of this partition style, structural steel ceiling supports are required.

TYPE F/C: FLOOR-TO-CEILING

For busy washrooms that see an increased level of use and abuse, the floor-to-ceiling style of installation provides the highest degree of protection and resistance to vandalism available. The strongest and most durable style of installation, this incredibly secure design will help keep any high-traffic washroom beautiful for years to come. Proper installation of this style partition requires both structural ceiling supports and concrete floors.

TOILET PARTITION MATERIALS

WORKING TO ACHIEVE YOUR GOALS

We welcome the opportunity to work closely with architects and owners alike to incorporate their ideas into our products. It will always be our goal to provide superior products that are not only attractive and modern in appearance but are built for a lifetime of service.

ADA-COMPLIANT

All American Metal is pleased to offer our partitions in styles which are compliant with all requirements laid out by ADA Code. We work to ensure attractive design, lasting durability, and optimal accessibility.

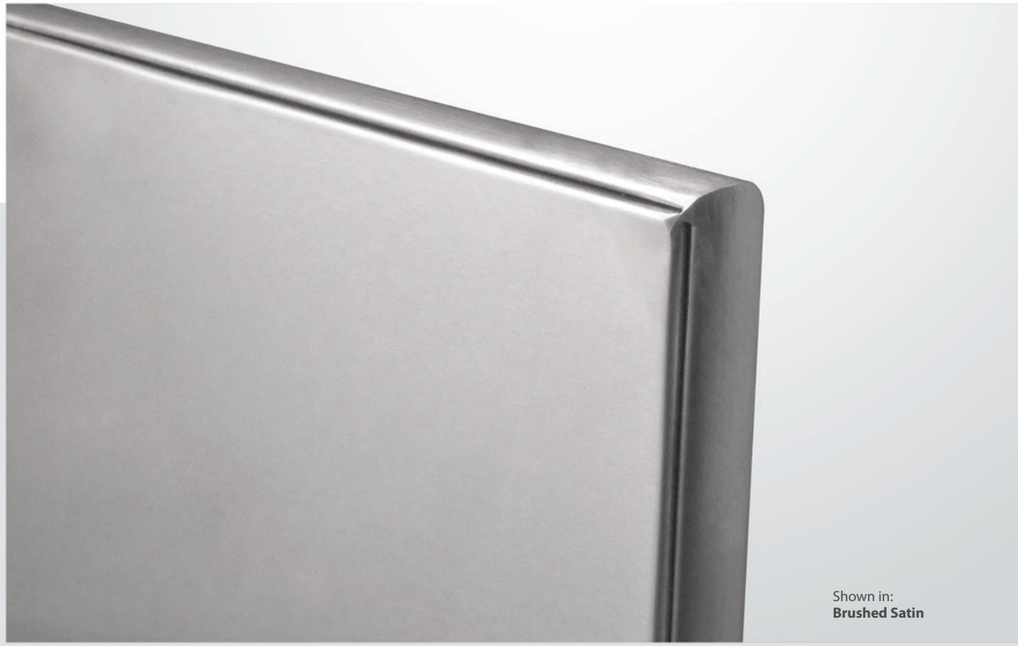

Shown in:
Brushed Satin

STAINLESS STEEL

Stainless steel partitions afford the greatest durability, resilience, and integrity over time. The material's enduring beauty complements any washroom design, making it an ideal choice in either new or existing facilities. The finish is easily cleaned and offers resistance against corrosion, rust, and staining. Rugged construction features of cellular honeycomb core, interlocking edges, and all-welded corners provide unparalleled strength to any installation. Available in a standard #4 brushed finish or in optional textured finishes for superior durability, vandal resistance, and design appeal. The perfect combination of strength and elegance!

Shown in:
Embossed Diamond

Brushed Satin | **Embossed Diamond** | **Embossed Leather Grain**

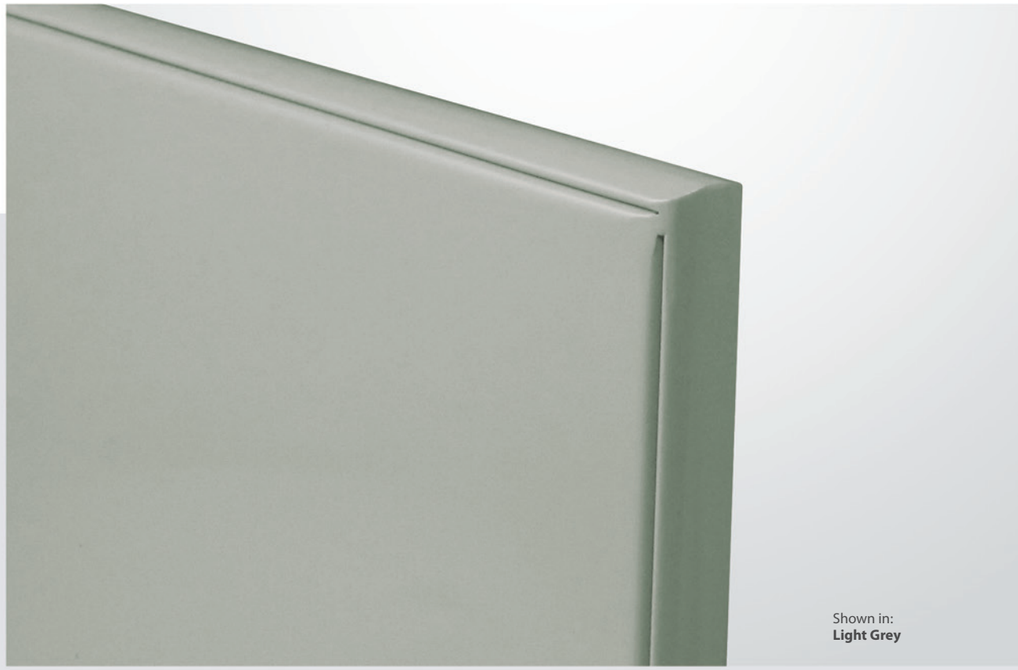

Shown in:
Light Grey

POWDER COATED STEEL

Powder coated steel partitions offer remarkable quality and durability at an affordable price. Electro-galvanized steel is bonded to a cellular honeycomb core with all edges interlocked and corners welded for maximum structural integrity. The thermosetting powder coating is electrostatically applied to ensure a uniform thickness and produces a finish that is highly resistant to fading, scuffing and staining. Availability in a wide range of contemporary colors makes it simple to find an option that will complement any washroom.

53 Ivory	72 Almond	22 Sky Blue	52 Tan	51 Sand	43 Dark Green
30 Light Grey	90 Terra Cotta	50 Brown	21 Light Blue	31 Dark Grey	75 American Rose
70 Burgundy	78 Royal Blue	65 Signal Red	66 White	67 Black	

Complete specifications are available at www.allamericanmetal.com, or
Call 516.623.0222

TOILET PARTITION MATERIALS

PROMPT DELIVERY

All American Metal is able to provide prompt shipment on many items by standardized use of stock sizes and standard layouts. This assures on-time completion of projects with tight or limited time schedules.

GOING GREEN

At All American Metal, we remain focused in our commitment for being an environmentally responsible manufacturer.
We actively participate in the protection and sustainability of our natural resources by observing practices and making investment choices that help promote a "greener" environment. Visit our website for additional information on how our toilet partitions will help contribute credits to the LEED certification program.

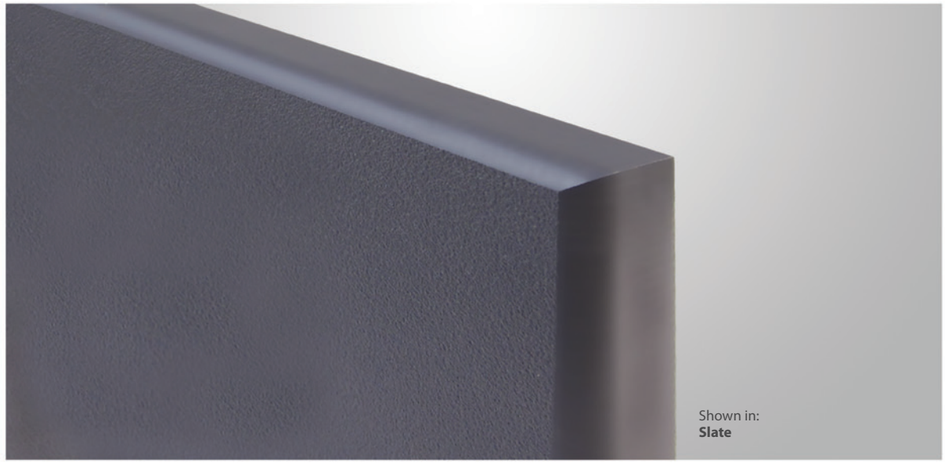

Shown in:
Slate

SOLID PLASTIC (HDPE)

Our High Density Polyethylene (HDPE) partitions are a great option for any washroom where durability and low maintenance are concerns. Solid Plastic composition and color are homogenous throughout and can never delaminate. These partitions are sanitary, waterproof, resistant to denting or graffiti, and impervious to humidity or corrosion, making them a popular choice for many high-volume public facilities.

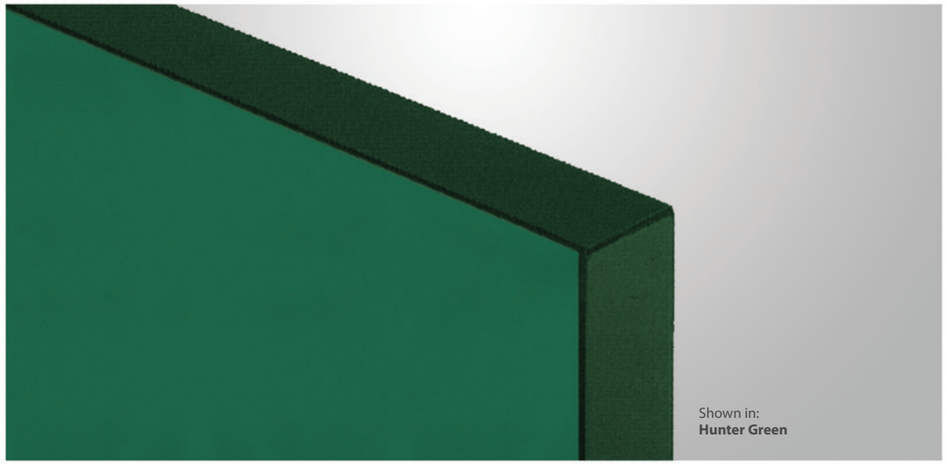

Shown in:
Hunter Green

PLASTIC LAMINATE

The recommended choice when the emphasis is on aesthetics and affordability. The high-pressure plastic laminate finish is bonded under pressure to a solid, impact-resistant particleboard core. The smooth, resilient finish provides an easy-to-clean partition that is resistant to surface dirt, staining, and corrosion. Plastic laminate is available in an incredible range of colors and patterns to offer unlimited design flexibility for any new or existing washroom.

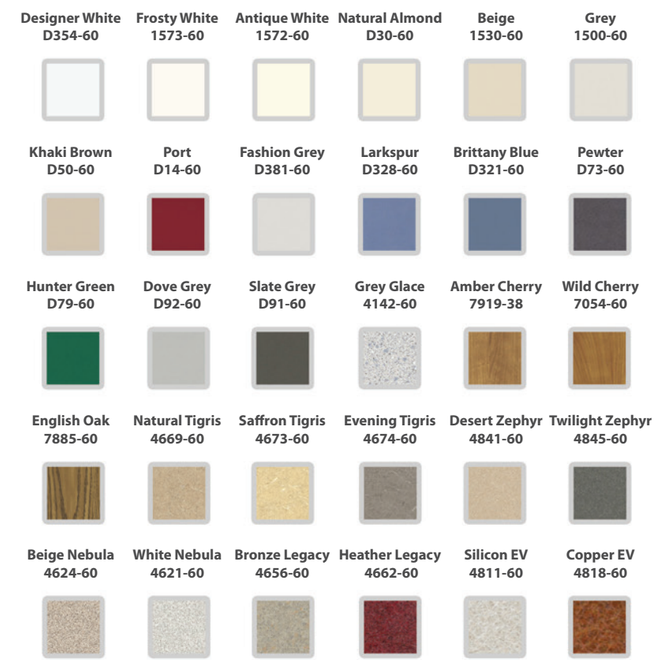

Shown in:
Port

PHENOLIC

An incredibly strong material that can withstand the abuse associated with heavy washroom traffic, solid phenolic core partitions are a great option. Decorative colored face sheets and multiple layers of resin-impregnated core sheets are thermally fused together under pressure to create a solid one-piece construction. Phenolic is water-, impact-, and corrosion-resistant, enabling it to stand up to harsh, high-volume environments. Available in an incredible array of colors and patterns, this material offers great design flexibility and maintains its beauty for many years.

*The color palette is the same for both plastic laminate and Phenolic.

Complete specifications are available at www.allamericanmetal.com, or
Call 516.623.0222

URINAL & PRIVACY SCREENS

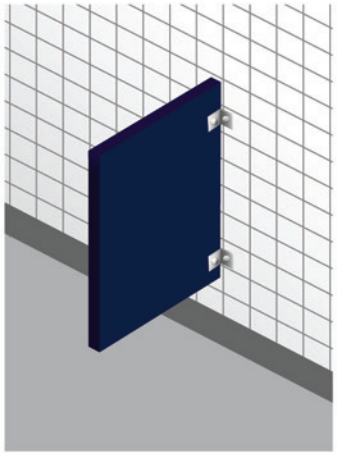

WALL-HUNG URINAL SCREEN (WHUS)

The most commonly specified screen is available in the popular 12" x 42", 18" x 42" and 24" x 42" sizes. In facilities where additional support is a concern, an optional continuous wall bracket is available. This screen can also be supplied in a 48" height when required by code.

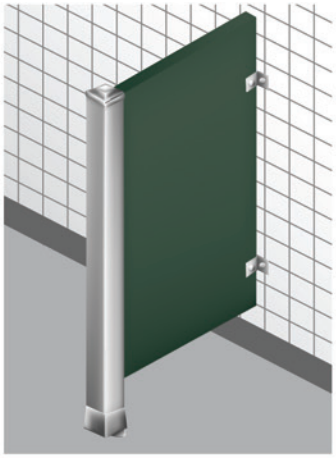

POST-SUPPORTED

A standard height panel is braced to floor with a 1-3/4" square aluminum post. Top of post and panel are aligned at same mounting height for a uniform, flush appearance. Additional support can be achieved by modifying the aluminum post to a floor-and-ceiling-braced design.

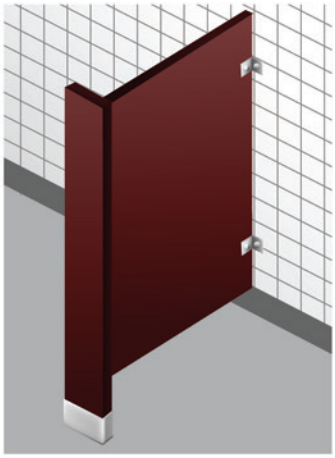

PILASTER-SUPPORTED

This screen utilizes both panel and pilaster of same height, construction and finish as our toilet partitions. With over 20 stock size panels available, depths ranging from 18" to 78" can easily be achieved. The mounting options for this type of screen are offered in Type H/B, Type F/S (as shown), Type C/H, or Type F/C design styles.

SHOWER & DRESSING

In shower rooms that are constructed for multiple person use, All American Metal offers shower and dressing compartments in a wide range of standard or customized configurations to satisfy any requested design concept. With the exception of Plastic Laminate, we can provide compartments in the same matching components and material finishes as our toilet partitions to ensure uniformity on your project's appearance. We provide dressing compartments to include either doors or curtains and benches can always be incorporated into the design if needed.

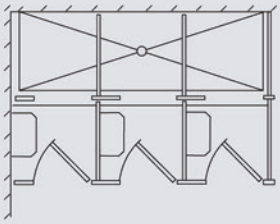

Our flush, Double-Wall Shower is completely self-contained and ideal for single or multiple installations. Each unit features durable double-wall construction of electro-galvanized steel or stainless steel, with rounded inside corners and insulated with a water-resistant, sound-deadening core. Receptor is heavy-duty terrazzo. Unit comes furnished with curtain rod, curtain, and soap dish. Shower head and mixing valves are not supplied. The Double-Wall Shower is available in standard or ADA sizes and can also be furnished with or without an attached dressing room. This shower is available in either stainless steel finish or a wide selection of powder coated colors.

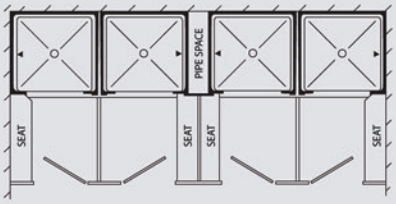

The color charts shown in this catalog are printed reproductions and are for representative purposes only; colors on actual material may vary slightly from the printed samples. Color selection cards are available upon request. All American Metal Corporation reserves the right to change specifications, products, and colors without notice.

All American Metal Corp. • P.O. Box #108 • 200 Buffalo Avenue • Freeport, NY 11520
516.623.0222 / 516.623.5809 • www.allamericanmetal.com

ALL AMERICAN METAL CORP.

~Warranty~

Powder Coated Steel Toilet Partitions

All American Metal Corp. provides for all powder coated materials, when properly maintained, a one-year warranty against all defects in workmanship and construction under normal wear and use of this product. Materials deemed defective during this period shall be replaced free of charge.

Warranty is for material only and no credits or allowances will be issued for labor or any expense related to the replacement of covered components. Installation errors, vandalism or the improper usage, care and maintenance of partitions will void this warranty.

200 Buffalo Ave., Freeport, NY 11520
Phone 516-623-0222 * Fax 516-623-5809
www.allamericanmetal.com

ALL AMERICAN METAL CORP.

Caring for your Powder Coated Steel Toilet Partitions

The high quality Powder Coated finish is highly resistant to wear, fading and scuffing. It is also resistant to most oils and grease. However, to protect the finish and to ensure keeping your toilet partitions looking new, it is important that surfaces be kept clean on a regular basis. With very little effort, maintaining a clean surface is not difficult but is critical in keeping the finish of your Powder Coated partitions bright and shiny for many years to come!

Proper care and maintenance of your powder coated steel partitions should be performed as follows:

- Routine daily maintenance includes wiping down all surfaces and cleaning with a solution of warm water and very mild soap. The cleaning cloth or sponge should be nonabrasive and wrung very dry leaving it just moist enough to gently wipe away any grime. Surfaces should then be rinsed with clean water and thoroughly dried using a soft cloth.
- For tougher stains, mild commercial cleaners (such as *Windex*® or Fantastic®) can be used. Again, all surfaces should then be rinsed with clear water and wiped dry with a clean, soft cloth to remove all traces of the cleaner.
- A periodic, light application of automotive wax may also be used to help protect and preserve the original luster. Always follow the manufacturers' instructions.
- Never scrub with brushes or use steel wool, scouring pads or other abrasive cleaners that will scratch and harm finish.
- Never expose partitions to any type of solution containing acid, alkali or sodium hypochlorite (bleach). Special attention must be given to other bathroom cleaning products that may be used on adjacent toilet fixtures, ceramic wall tiles, grout, floors, etc. The splash from these types of cleaners will cause damage to finish if not properly and immediately removed. Examples include, but are not limited to; drain cleaners, floor & tile cleaners, toilet bowl cleaners, lime scale removers and chlorine bleach.
- It is also important that adequate ventilation for removing excess humidity exists when partitions are installed near wet, damp environments (shower rooms).

Sincerely,
ALL AMERICAN METAL CORP.

P.O. Box 108
200 Buffalo Avenue, Freeport, NY 11520
Phone: 516-623-0222 * Fax: 516-623-5809
www.allamericanmetal.com