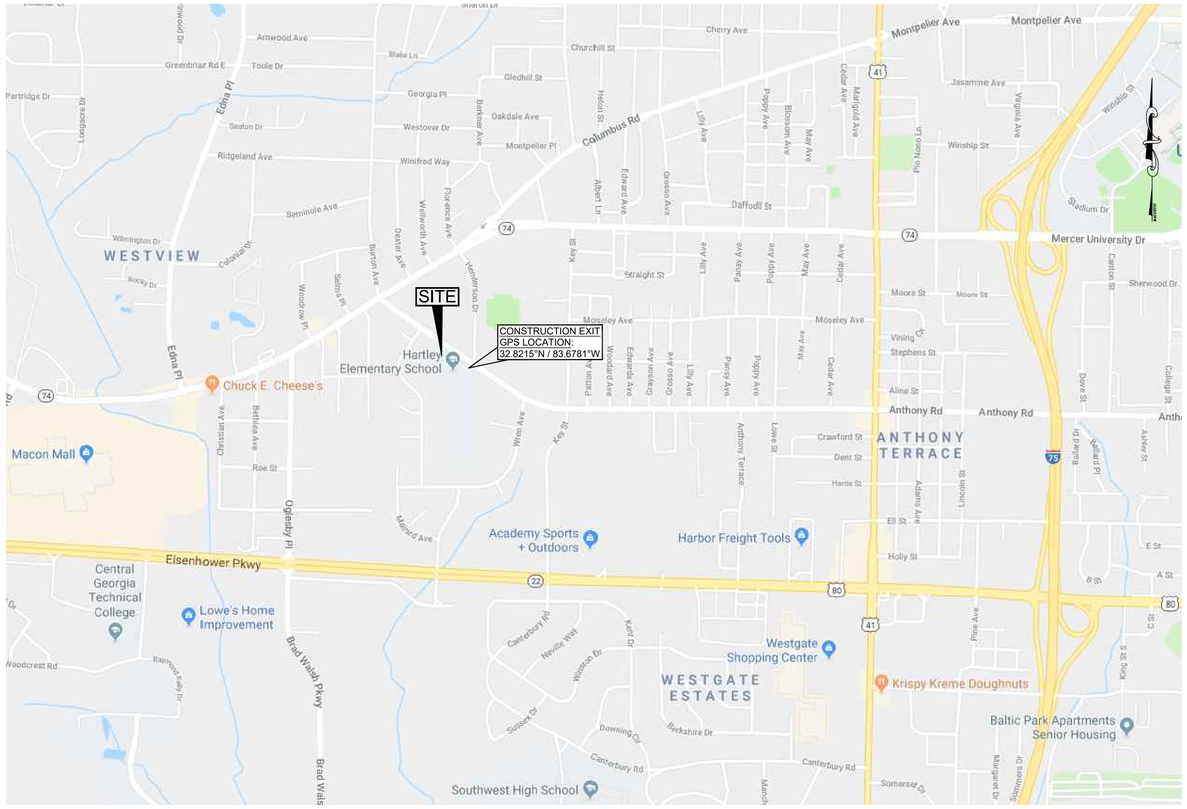

PROJECT LOCATION

CONSTRUCTION PLANS

HARTLEY ELEMENTARY SCHOOL PARKING IMPROVEMENTS

2230 ANTHONY ROAD
MACON-BIBB COUNTY, GEORGIA 31204

FOR BIBB COUNTY SCHOOL DISTRICT
484 MULBERRY STREET
MACON-BIBB COUNTY, GEORGIA 31201

MARCH 18, 2019

NOTIFICATION CONTACTS:

OWNER/DEVELOPER & 24 HOUR CONTACT
BIBB COUNTY SCHOOL DISTRICT
MR. MARTY DRAWHORN
484 MULBERRY STREET
MACON, GEORGIA 31201
TEL: (478) 765-8711 / 765-8506
Marty.Drawhorn@bcsdk12.net

PROJECT NARRATIVE

THIS PROJECT INCLUDES REPAIR AND REPLACEMENT OF EXISTING PAVEMENT, EXPANSION OF PARKING FACILITIES, AND IMPROVEMENTS TO STORM DRAINAGE.

PROJECT INFORMATION

PROJECT ACREAGE:	14.63 AC
DISTURBED AREA:	2.26 AC
PROPERTY INFORMATION:	
- LAND LOT / LAND DISTRICT	LAND LOTS 37 & 38, LAND LOTS 155 & 156 MACON RESERVE WEST, 4TH LAND DISTRICT
- ADDRESS	2230 ANTHONY ROAD MACON-BIBB COUNTY, GEORGIA
- PARCEL NO.	N084-0202
ZONING DISTRICT:	R-2

INDEX TO DRAWINGS

SHEET NO.	TITLE
-	COVER SHEET
C1.0	OVERALL SITE PLAN
C1.1	SITE SURVEY SECTOR 1
C1.2	SITE SURVEY SECTOR 2
C2.1	SITE DEMOLITION PLAN
C3.1	SITE LAYOUT AND PAVING PLAN
C4.1	SITE GRADING AND DRAINAGE PLAN
C5.1	SITE WATER AND SANITARY SEWER PLAN
C6.1	INITIAL STORMWATER POLLUTION PREVENTION PLAN
C6.2	INTERMEDIATE STORMWATER POLLUTION PREVENTION
C6.3	FINAL STORMWATER POLLUTION PREVENTION PLAN
C6.4	NPDES COMPREHENSIVE MONITORING PROGRAM NOTES
C6.5	STORMWATER POLLUTION PREVENTION NOTES
C6.6	STORMWATER POLLUTION PREVENTION DETAILS
C6.7	STORMWATER POLLUTION PREVENTION DETAILS
C7.1	MISCELLANEOUS SITE DETAILS
C7.2	COVERED WALKWAY DETAILS
C7.3	MISCELLANEOUS SITE DETAILS
L1.1	LANDSCAPE PLAN

CARTER
Engineering Group
6310 Peake Road, Suite 200
Macon, GA 31210
478-219-2600

GEORGIA REGISTERED PROFESSIONAL ENGINEER
JON L. CARTER
LEVEL II CERTIFIED
DESIGN PROFESSIONAL # 2061
ISSUED: 11/2/2017 EXPIRES: 11/2/2020

GEORGIA811
Utilities Protection Center, Inc.
Know what's below.
Call before you dig.

B7600.017 Cover.dwg

P:\B7600 - BIBB COUNTY SCHOOL DISTRICT\B7600.017 Hartley Elementary School Parking Improvements\CAD\B7600.017 Cover.dwg, CD COVER, 3/28/2019 7:11:43 PM, mbaker, DWG To PDF.pc3, ANSI C full bleed (11.00x17.00Inches), 1:1

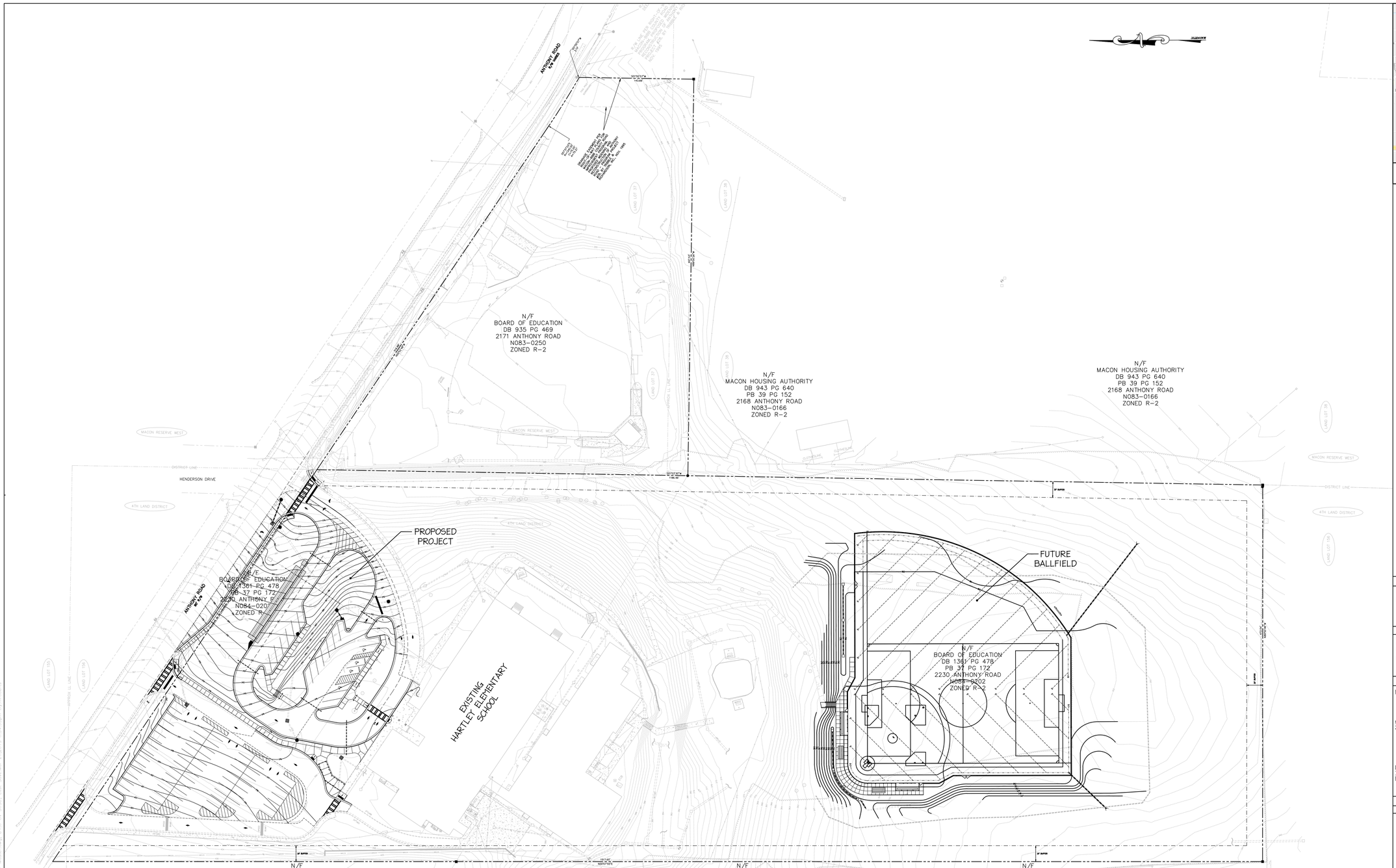

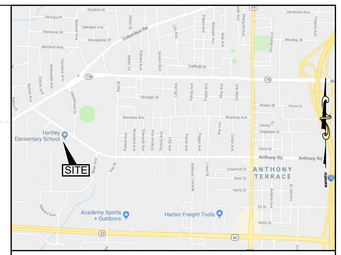

SITE LOCATION MAP

SITE DATA

SITE AREA	14.63 ACRES
PARKING PROVIDED	49 EXISTING SPACES 87 NEW SPACES (38 INCREASE IN SPACES)

FLOODPLAIN NOTE:

NO PORTION OF THE PROPERTY SHOWN ON THE SURVEY LIES WITHIN A FLOOD ZONE AREA, AS DESCRIBED ON THE FLOOD INSURANCE RATE MAP (13021C0135G, DATED JUNE 7, 2017, FOR MACON-BIBB COUNTY.

NO DISTURBANCE OF THE FLOODPLAIN IS ANTICIPATED.

THE PROPOSED PROJECT IS NOT LOCATED IN A 100-YEAR OR 500-YEAR FLOOD ZONE AREA.

PROJECT INFORMATION

PROPERTY LOCATION:	2230 ANTHONY ROAD LAND LOTS 37 & 38, LAND LOTS 155 & 156 MACON RESERVE WEST, 4TH LAND DISTRICT MACON-BIBB COUNTY, GEORGIA
OWNER/DEVELOPER & 24 HR CONTACT:	BIBB COUNTY SCHOOL DISTRICT MR. MARTY DRAUHAGHON 484 MULBERRY STREET MACON, GEORGIA 31201 TEL: (478) 746-8711 / 746-8506 Marty.Drauhorn@bcsdk12.net
BOUNDARY AND TOPOGRAPHIC INFORMATION PREPARED BY:	DONALDSON, GARRETT, & ASSOCIATES, INC. 4675 RIVERSIDE DRIVE MACON, GEORGIA 31210 TEL: (478) 474-5350 FAX: (478) 477-2534

LEGEND (applies to all site plan sheets)

DESCRIPTION	EXISTING	NEW
PROPERTY LINE		
CONTOUR LINE	450	450
POWER POLE		
LIGHT POLE		
OVERHEAD POWER	OHP	
HIGH VOLTAGE LINE	HVL	
UNDERGROUND ELECTRICAL	E	
UNDERGROUND TELEPHONE	T	
UNDERGROUND FIBER OPTIC	FOC	
GAS LINE	G	G
WATER LINE	W	W
FIRE PROTECTION MAIN		FM
DOMESTIC WATER		DW
IRRIGATION MAIN		IRR
FIRE HYDRANT		
WATER VALVE		
SAN. SEWER W/ MANHOLE	SAN	
CLEANOUT		
DRAIN INLET		
CATCH BASIN D.O.T. STD. 1033D		
STORM DRAIN		
SILT FENCE & TYPE		SILT-HD
SPOT ELEVATION		
CONCRETE PAVING		
CONCRETE SIDEWALKS		
PVC IRRIGATION SLEEVE		
SOIL BOUNDARY LINE		
SOIL TYPE		HyB
FENCE		
FENCE W/ 3 STRANDS OF BARBED WIRE		
NOT IN CONTRACT		N.I.C.
TREES TO BE REMOVED		

CARTER Engineering Group
6310 Peake Road, Suite 200
Macon, GA 31210
478-219-2600

THIS DRAWING IS AN INSTRUMENT OF SERVICE AND SHALL REMAIN THE PROPERTY OF CARTER ENGINEERING GROUP, LLC. THIS DRAWING MAY NOT BE REPRODUCED OR USED WITHOUT THE CONSENT OF THE ENGINEER. THIS DRAWING SHALL NOT BE SCALED. © COPYRIGHT 2019 CARTER ENGINEERING GROUP, LLC.

STAMP:

LEVEL II CERTIFIED
DESIGN PROFESSIONAL # 2061
ISSUED: 11/2/2017 EXPIRES: 11/2/2020

RELEASE DATES:

REV #	DATE	DESCRIPTION

CLIENT:
BIBB COUNTY
SCHOOL DISTRICT
MACON-BIBB COUNTY, GA

GEORGIA 811 Utilities Protection Center, Inc.
Know what's below. Call before you dig.

PROJECT:
HARTLEY ELEMENTARY SCHOOL
PARKING IMPROVEMENTS

2230 ANTHONY ROAD
MACON-BIBB COUNTY, GA 31204

DRAWN BY:	CHECKED BY:
CADD	DLC
PROJECT NUMBER: B7600.017	DATE: 03/18/2019

GRAPHIC SCALE: 0 50 100
SCALE: 1" = 50'

DRAWING TITLE:
OVERALL SITE PLAN

DRAWING NUMBER:
C1.0

B7600.017 Master.dwg

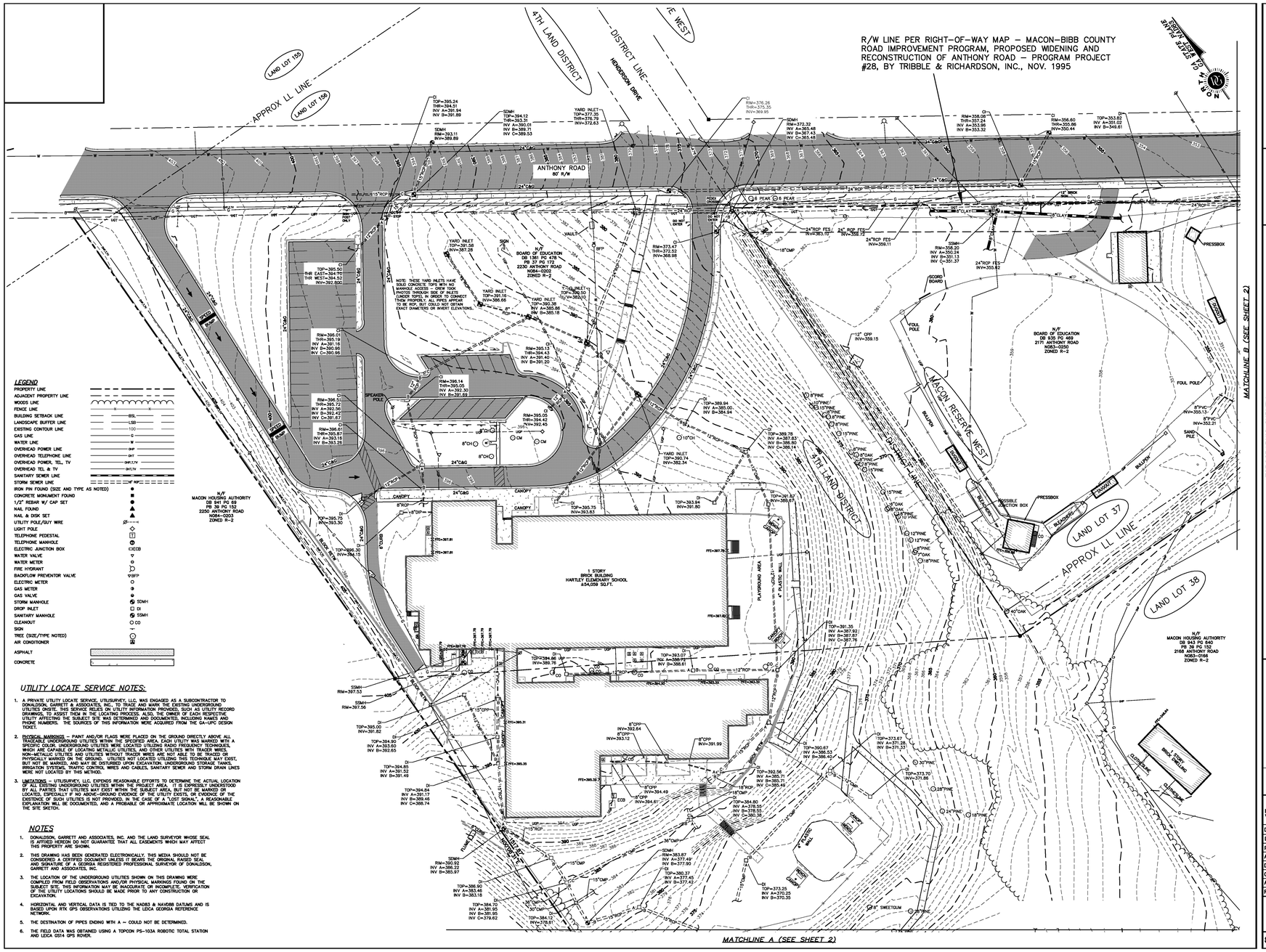

LEGEND

PROPERTY LINE	
ADJACENT PROPERTY LINE	
WOODS LINE	
FENCE LINE	
BUILDING SETBACK LINE	BSL
LANDSCAPE BUFFER LINE	LSB
EXISTING CONTOUR LINE	100
GAS LINE	G
WATER LINE	W
OVERHEAD POWER LINE	OHP
OVERHEAD TELEPHONE LINE	OHT
OVERHEAD POWER, TEL, TV	OHP,T,TV
OVERHEAD TEL & TV	OHT,TV
SANITARY SEWER LINE	SS
STORM SEWER LINE	SS
IRON PIN FOUND (SIZE AND TYPE AS NOTED)	
CONCRETE MONUMENT FOUND	
1/2" REBAR W/ CAP SET	
NAIL FOUND	
NAIL & DISK SET	
UTILITY POLE/GUY WIRE	
LIGHT POLE	
TELEPHONE PEDESTAL	T
TELEPHONE MANHOLE	T
ELECTRIC JUNCTION BOX	E ECB
WATER VALVE	
WATER METER	
FIRE HYDRANT	
BACKFLOW PREVENTOR VALVE	W BFP
ELECTRIC METER	
GAS METER	
GAS VALVE	
STORM MANHOLE	SDMH
DROP INLET	DI
SANITARY MANHOLE	SSMH
CLEANOUT	CO
SIGN	
TREE (SIZE/TYPE NOTED)	
AIR CONDITIONER	
ASPHALT	
CONCRETE	

UTILITY LOCATE SERVICE NOTES:

1. A PRIVATE UTILITY LOCATE SERVICE, UTILISURVEY, LLC. WAS ENGAGED AS A SUBCONTRACTOR TO DONALDSON, GARRETT & ASSOCIATES, INC., TO TRACE AND MARK THE EXISTING UNDERGROUND UTILITIES ONSITE. THIS SERVICE RELIES ON UTILITY INFORMATION PROVIDED, SUCH AS UTILITY RECORD DRAWINGS, TO ASSIST THEM IN THE LOCATING PROCESS. ALSO, THE OWNER OF EACH RESPECTIVE UTILITY AFFECTING THE SUBJECT SITE WAS DETERMINED AND DOCUMENTED, INCLUDING NAMES AND PHONE NUMBERS. THE SOURCES OF THIS INFORMATION WERE ACQUIRED FROM THE GA-UPC DESIGN TICKET.
2. PHYSICAL MARKINGS – PAINT AND/OR FLAGS WERE PLACED ON THE GROUND DIRECTLY ABOVE ALL TRACEABLE UNDERGROUND UTILITIES WITHIN THE SPECIFIED AREA. EACH UTILITY WAS MARKED WITH A SPECIFIC COLOR. UNDERGROUND UTILITIES WERE LOCATED UTILIZING RADIO FREQUENCY TECHNIQUES, WHICH ARE CAPABLE OF LOCATING METALLIC UTILITIES, AND OTHER UTILITIES WITH TRACER WIRES. NON-METALLIC UTILITIES AND UTILITIES WITHOUT TRACER WIRES ARE NOT ABLE TO BE TRACED OR PHYSICALLY MARKED. ON THE GROUND, UTILITIES NOT LOCATED UTILIZING THIS TECHNIQUE MAY EXIST, BUT COULD NOT BE TRACED. THIS MAY INCLUDE DISTURBED UPON EXCAVATION. UNDERGROUND STORAGE TANKS, IRRIGATION SYSTEMS, TRAFFIC CONTROL WIRES AND CABLES, SANITARY SEWER AND STORM DRAIN LINES WERE NOT LOCATED BY THIS METHOD.
3. LIMITATIONS – UTILISURVEY, LLC. EXPENDS REASONABLE EFFORTS TO DETERMINE THE ACTUAL LOCATION OF ALL EXISTING UNDERGROUND UTILITIES WITHIN THE PROJECT AREA. IT IS EXPRESSLY UNDERSTOOD BY ALL PARTIES THAT UTILITIES MAY EXIST WITHIN THE SUBJECT AREA, BUT NOT BE MARKED OR LOCATED, ESPECIALLY IF NO ABOVE-GROUND EVIDENCE OF THE UTILITY EXISTS, OR EVIDENCE OF THE EXISTENCE OF SUCH UTILITIES IS NOT PROVIDED. IN THE CASE OF A "LOST SIGNAL", A REASONABLE EXPLANATION WILL BE DOCUMENTED, AND A PROBABLE OR APPROXIMATE LOCATION WILL BE SHOWN ON THE SITE SKETCH.

NOTES

1. DONALDSON, GARRETT AND ASSOCIATES, INC. AND THE LAND SURVEYOR WHOSE SEAL IS AFFIXED HEREON DO NOT GUARANTEE THAT ALL EASEMENTS WHICH MAY AFFECT THIS PROPERTY ARE SHOWN.
2. THIS DRAWING WAS BEEN GENERATED ELECTRONICALLY. THIS MEDIA SHOULD NOT BE CONSIDERED A CERTIFIED DOCUMENT UNLESS IT BEARS THE ORIGINAL RAISED SEAL AND SIGNATURE OF A GEORGIA REGISTERED PROFESSIONAL SURVEYOR OF DONALDSON, GARRETT AND ASSOCIATES, INC.
3. THE LOCATION OF THE UNDERGROUND UTILITIES SHOWN ON THIS DRAWING WERE COMPILED FROM FIELD OBSERVATIONS AND/OR PHYSICAL MARKINGS FOUND ON THE SUBJECT SITE. THIS INFORMATION MAY BE INACCURATE OR INCOMPLETE. VERIFICATION OF THE UTILITY LOCATIONS SHOULD BE MADE PRIOR TO ANY CONSTRUCTION OR EXCAVATION.
4. HORIZONTAL AND VERTICAL DATA IS TIED TO THE NAD83 & NAVD88 DATUMS AND IS BASED UPON RTK GPS OBSERVATIONS UTILIZING THE LEICA GEORGIA REFERENCE NETWORK.
5. THE DESTINATION OF PIPES ENDING WITH A ~ COULD NOT BE DETERMINED.
6. THE FIELD DATA WAS OBTAINED USING A TOPCON PS-103A ROBOTIC TOTAL STATION AND LEICA GS14 GPS ROVER.

DONALDSON, GARRETT, & ASSOCIATES, INC.
MACON • CHARLOTTE
4975 RIVERSIDE DRIVE P.O. BOX 7308
MACON, GA 31210-7308
(478)474-8395 Fax: (478) 477-2534
http://donaldsongarrett.com/

GEORGIA REGISTERED No. 2466 LAND SURVEYOR DONALDSON, GARRETT & ASSOCIATES, INC.

TOPOGRAPHIC SURVEY
OF
BIBB COUNTY BOARD OF EDUCATION
FOR
HARTLEY ELEMENTARY SCHOOL

MACON RESERVE WEST
4TH LAND DISTRICT
GEORGIA

LAND LOTS 37 & 38
LAND LOTS 155 & 156
MACON-BIBB COUNTY

REVISIONS	DATE	BY
ADDED UTILITY INFORMATION	7/13/18	JPG

SCALE:
HORIZONTAL: 1"=40'
VERTICAL: N/A

DATE: 03/05/2018
DRAWING NO. 807-18-E
PROJ. NO.: 1260-044-D1
ALPH: C1156
DRWN: JH
CHKD: JPG
APVD: JPG
RLS No: 2466

SHEET 1 OF 2

CARTER Engineering Group
6310 Peake Road, Suite 200
Macon, GA 31210
478-219-2600

THIS DRAWING IS AN INSTRUMENT OF SERVICE AND SHALL REMAIN THE PROPERTY OF THE ENGINEER, AND SHALL NOT BE REPRODUCED, PUBLISHED OR USED IN ANY WAY WITHOUT WRITTEN PERMISSION. WRITTEN DIMENSIONS SHALL NOT BE SCALED. © COPYRIGHT 2019 CARTER ENGINEERING GROUP, INC.

STAMP: GEORGIA REGISTERED PROFESSIONAL ENGINEER DON L. CARTER
LEVEL II CERTIFIED DESIGN PROFESSIONAL # 2061
ISSUED: 11/2/2017 EXPIRES: 11/2/2020

RELEASE DATES:

REV #	DATE	DESCRIPTION

CLIENT:
BIBB COUNTY
SCHOOL DISTRICT
MACON-BIBB COUNTY, GA

GEORGIA811 Utilities Protection Center, Inc.
Know what's below. Call before you dig.

PROJECT:
HARTLEY ELEMENTARY SCHOOL
PARKING IMPROVEMENTS

2230 ANTHONY ROAD
MACON-BIBB COUNTY, GA 31204

DRAWN BY: CADD
CHECKED BY: DLC
PROJECT NUMBER: B7600.017
DATE: 03/18/2019
GRAPHIC SCALE: 0 40 80
SCALE: 1" = 40'

DRAWING TITLE:
SITE SURVEY
SECTOR 1

DRAWING NUMBER:
C1.1

B7600.017 Master.dwg

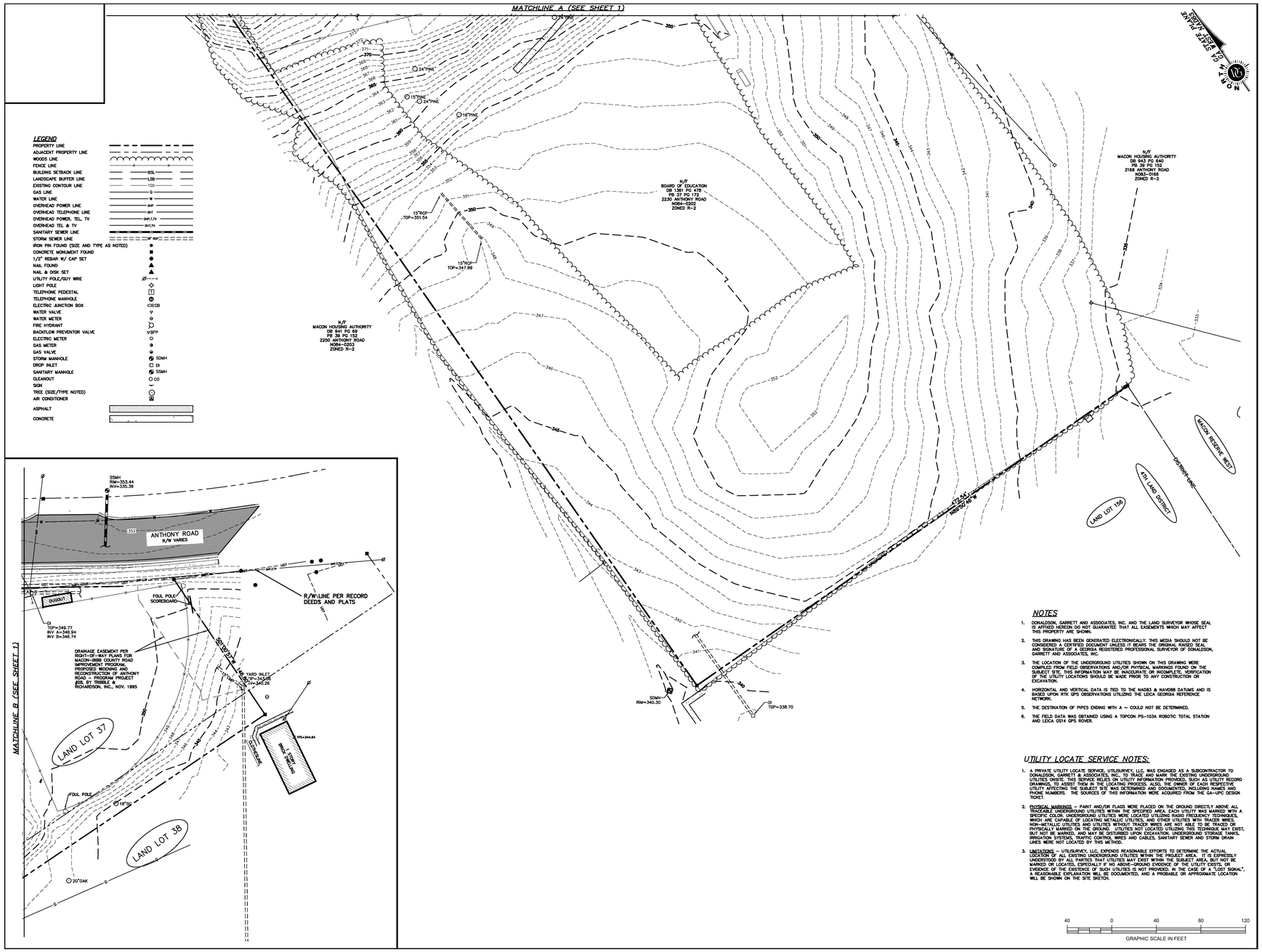

NOTES

1. DONALDSON, GARRETT AND ASSOCIATES, INC. AND THE LAND SURVEYOR WHOSE SEAL IS AFFIXED HEREON DO NOT GUARANTEE THAT ALL EASEMENTS WHICH MAY AFFECT THIS PROPERTY ARE SHOWN.
2. THIS DRAWING HAS BEEN GENERATED ELECTRONICALLY. THIS MEDIA SHOULD NOT BE CONSIDERED A CERTIFIED DOCUMENT UNLESS IT BEARS THE ORIGINAL RAISED SEAL AND SIGNATURE OF A GEORGIA REGISTERED PROFESSIONAL SURVEYOR OF DONALDSON, GARRETT AND ASSOCIATES, INC.
3. THE LOCATION OF THE UNDERGROUND UTILITIES SHOWN ON THIS DRAWING WERE COMPILED FROM FIELD OBSERVATIONS AND/OR PHYSICAL MARKINGS FOUND ON THE SUBJECT SITE. THIS INFORMATION MAY BE INACCURATE OR INCOMPLETE. VERIFICATION OF THE UTILITY LOCATIONS SHOULD BE MADE PRIOR TO ANY CONSTRUCTION OR EXCAVATION.
4. HORIZONTAL AND VERTICAL DATA IS TIED TO THE NAD83 & NAVD88 DATUMS AND IS BASED UPON RTK GPS OBSERVATIONS UTILIZING THE LEICA GEORGIA REFERENCE NETWORK.
5. THE DESTINATION OF PIPES ENDING WITH A -- COULD NOT BE DETERMINED.
6. THE FIELD DATA WAS OBTAINED USING A TOPCON PS-103A ROBOTIC TOTAL STATION AND LEICA GS14 GPS ROVER.

UTILITY LOCATE SERVICE NOTES:

1. A PRIVATE UTILITY LOCATE SERVICE, UTILISURVEY, LLC. WAS ENGAGED AS A SUBCONTRACTOR TO DONALDSON, GARRETT & ASSOCIATES, INC. TO TRACE AND MARK THE EXISTING UNDERGROUND UTILITIES ONSITE. THIS SERVICE RELIES ON UTILITY INFORMATION PROVIDED, SUCH AS UTILITY RECORD DRAWINGS, TO ASSIST THEM IN THE LOCATING PROCESS. ALSO, THE OWNER OF EACH RESPECTIVE UTILITY AFFECTING THE SUBJECT SITE WAS DETERMINED AND DOCUMENTED, INCLUDING NAMES AND PHONE NUMBERS. THE SOURCES OF THIS INFORMATION WERE ACQUIRED FROM THE GA-UPC DESIGN TICKET.
2. PHYSICAL MARKINGS – PAINT AND/OR FLAGS WERE PLACED ON THE GROUND DIRECTLY ABOVE ALL TRACEABLE UNDERGROUND UTILITIES WITHIN THE SPECIFIED AREA. EACH UTILITY WAS MARKED WITH A UNIQUE COLOR AND/OR SYMBOL. THE UTILITIES WERE LOCATED WITH ELECTRONIC LOCATING DEVICES, WHICH ARE CAPABLE OF LOCATING METALLIC UTILITIES, AND OTHER UTILITIES WITH TRACER WIRES. NON-METALLIC UTILITIES AND UTILITIES WITHOUT TRACER WIRES ARE NOT ABLE TO BE TRACED OR PHYSICALLY MARKED ON THE GROUND. UTILITIES NOT LOCATED UTILIZING THIS TECHNIQUE MAY EXIST, BUT NOT BE MARKED, AND MAY BE DISTURBED UPON EXCAVATION. UNDERGROUND STORAGE TANKS, IRRIGATION SYSTEMS, TRAFFIC CONTROL WIRES AND CABLES, SANITARY SEWER AND STORM DRAIN LINES WERE NOT LOCATED BY THIS METHOD.
3. LIMITATIONS – UTILISURVEY, LLC. EXPENDS REASONABLE EFFORTS TO DETERMINE THE ACTUAL LOCATION OF ALL EXISTING UNDERGROUND UTILITIES WITHIN THE PROJECT AREA. IT IS EXPRESSLY UNDERSTOOD BY ALL PARTIES THAT UTILITIES MAY EXIST WITHIN THE SUBJECT AREA, BUT NOT BE MARKED OR LOCATED, ESPECIALLY IF NO ABOVE-GROUND EVIDENCE OF THE UTILITY EXISTS, OR EVIDENCE OF THE EXISTENCE OF SUCH UTILITIES IS NOT PROVIDED. IN THE CASE OF A "LOST SIGNAL", A REASONABLE EXPLANATION WILL BE DOCUMENTED, AND A PROBABLE OR APPROXIMATE LOCATION WILL BE SHOWN ON THE SITE SKETCH.

DONALDSON, GARRETT, & ASSOCIATES, INC.
MACON • CHARLOTTE
SURVEYORS & PLANNERS
4975 BRAGG RD. MACON, GA 31210
(478)474-7620 FAX (478) 477-3534
http://www.dg-a.com

GEORGIA REGISTERED No. 2466 PROFESSIONAL LAND SURVEYOR LEWIS R. GARRETT

TOPOGRAPHIC SURVEY
FOR
BIBB COUNTY BOARD OF EDUCATION
OF
HARTLEY ELEMENTARY SCHOOL

MACON RESERVE, WEST
4TH LAND DISTRICT
GEORGIA

LAND LOTS 37 & 38
LAND LOTS 155 & 156
MACON-BIBB COUNTY

REVISIONS	
DATE	
7/13/18	ADDED UTILITY INFORMATION

SCALE:
HORIZONTAL: 1"=40'
VERTICAL: N/A

DATE: 03/05/2018
DRAWING NO. 807-18-E
PROJ. NO.: 1260-044-D1
ALPH: C1166
DRWN: JH
CHKD: JPG
APVD: JPG
RLS No: 2466

SHEET 2 OF 2

CARTER Engineering Group
6310 Peake Road, Suite 200
Macon, GA 31210
478-219-2600

THIS DRAWING IS AN INSTRUMENT OF SERVICE AND SHALL REMAIN THE PROPERTY OF THE ENGINEER, AND SHALL NOT BE REPRODUCED, PUBLISHED OR USED IN ANY WAY WITHOUT THE CONSENT OF THE ENGINEER. THIS DRAWING SHALL NOT BE SCALED. © COPYRIGHT 2019 CARTER ENGINEERING GROUP, LLC.

STAMP: GEORGIA REGISTERED PROFESSIONAL ENGINEER JOHN L. CARTER

LEVEL II CERTIFIED
DESIGN PROFESSIONAL # 2061
ISSUED: 11/2/2017 EXPIRES: 11/2/2020

RELEASE DATES:

REV #	DATE	DESCRIPTION

CLIENT:
BIBB COUNTY
SCHOOL DISTRICT
MACON-BIBB COUNTY, GA

GEORGIA811 Utilities Protection Center, Inc.
Know what's below. Call before you dig.

PROJECT:
HARTLEY ELEMENTARY SCHOOL
PARKING IMPROVEMENTS

2230 ANTHONY ROAD
MACON-BIBB COUNTY, GA 31204

DRAWN BY: CADD
CHECKED BY: DLC
PROJECT NUMBER: B7600.017
DATE: 03/18/2019
GRAPHIC SCALE: 0 40 80 SCALE: 1" = 40'

DRAWING TITLE:
SITE SURVEY
SECTOR 2

DRAWING NUMBER:
C1.2

B7600.017 Master.dwg

P:\B7600 - BIBB COUNTY SCHOOL DISTRICT\B7600.017 Hartley Elementary School Parking Improvements\CADD\B7600.017 Master.dwg, C1.2 SVY2 40SC, 3/26/2019 6:57:55 PM, mbolick, DWG To PDF.pc3 (DESC=Full Resolution) (JPG=24bit/300dpi), 1:1
Plotted:3/26/2019 6:57:55 PM By:Mary Ann Roberts Paper Size:11x17 Device Name:Canon C3320 UFR ver3 Style:C2 3ft Pen.ctb Scale:1:10
P:\B7600 - BIBB COUNTY SCHOOL DISTRICT\B7600.017 Hartley Elementary School Parking Improvements\CADD\B7600.017 Master.dwg, C1.2 SVY2 40SC, 3/26/2019 6:54:55pm By:mroberts

DEMOLITION NOTES:

1. CONFIRM LOCATION AND DEPTH OF ALL UNDERGROUND UTILITIES PRIOR TO ANY DEMOLITION OR CONSTRUCTION.
2. ALL PAVED SURFACES, SIDEWALKS AND CURBING NOTED ON DRAWINGS TO BE REMOVED AND/OR REQUIRED TO BE REMOVED FOR NEW CONSTRUCTION SHALL BE SAW-CUT AND DISCARDED OFF-SITE IN A LAWFUL MANNER. THIS SHALL INCLUDE ALL BASE MATERIAL.
3. TREES NOTED TO REMAIN SHALL BE PROTECTED FROM DAMAGE (INCLUDING ROOT SYSTEM) DURING CONSTRUCTION.
4. ALL CONCRETE PADS, PAVED SURFACES, FOUNDATIONS, AND OTHER DEBRIS AND STRUCTURE REMNANTS WITHIN AREA OF NEW CONSTRUCTION SHALL BE REMOVED ENTIRELY.
5. ELECTRICAL LINES (OVERHEAD OR UNDERGROUND), POLES, AND GUY LINES WITHIN AREA OF CONSTRUCTION TO BE REMOVED AND REROUTED IN COORDINATION WITH RESPECTIVE UTILITY OWNERS.
6. ALL EXISTING UTILITY LINES AND MAINS, METERS, ETC. FOR WATER AND SANITARY SEWER SYSTEMS, STORM DRAINAGE SYSTEM, ELECTRICAL, TELEPHONE, COMMUNICATIONS AND CABLE LINES, AND GAS MAINS SHALL REMAIN OPERATIONAL DURING CONSTRUCTION UNLESS INTERRUPTION OF SERVICE IS REQUIRED FOR DEMOLITION OR NEW CONSTRUCTION. INTERRUPTION OF SERVICES SHALL BE COORDINATED WITH OWNER AND RESPECTIVE UTILITY OWNER A MINIMUM OF 24 HOURS IN ADVANCE OF SERVICE INTERRUPTION. OWNER SHALL PROVIDE WRITTEN APPROVAL TO CONTRACTOR FOR SERVICE INTERRUPTIONS.
7. CONTRACTOR SHALL NOTIFY OWNER'S REPRESENTATIVE IF UNCHARTED OR UNKNOWN UTILITY LINES AND/OR MAINS ARE ENCOUNTERED. COORDINATE REQUIRED REROUTING WITH OWNER AND UTILITY COMPANY. CONTRACTOR SHALL RECORD UTILITY LOCATION ON AS-BUILT DOCUMENTS.

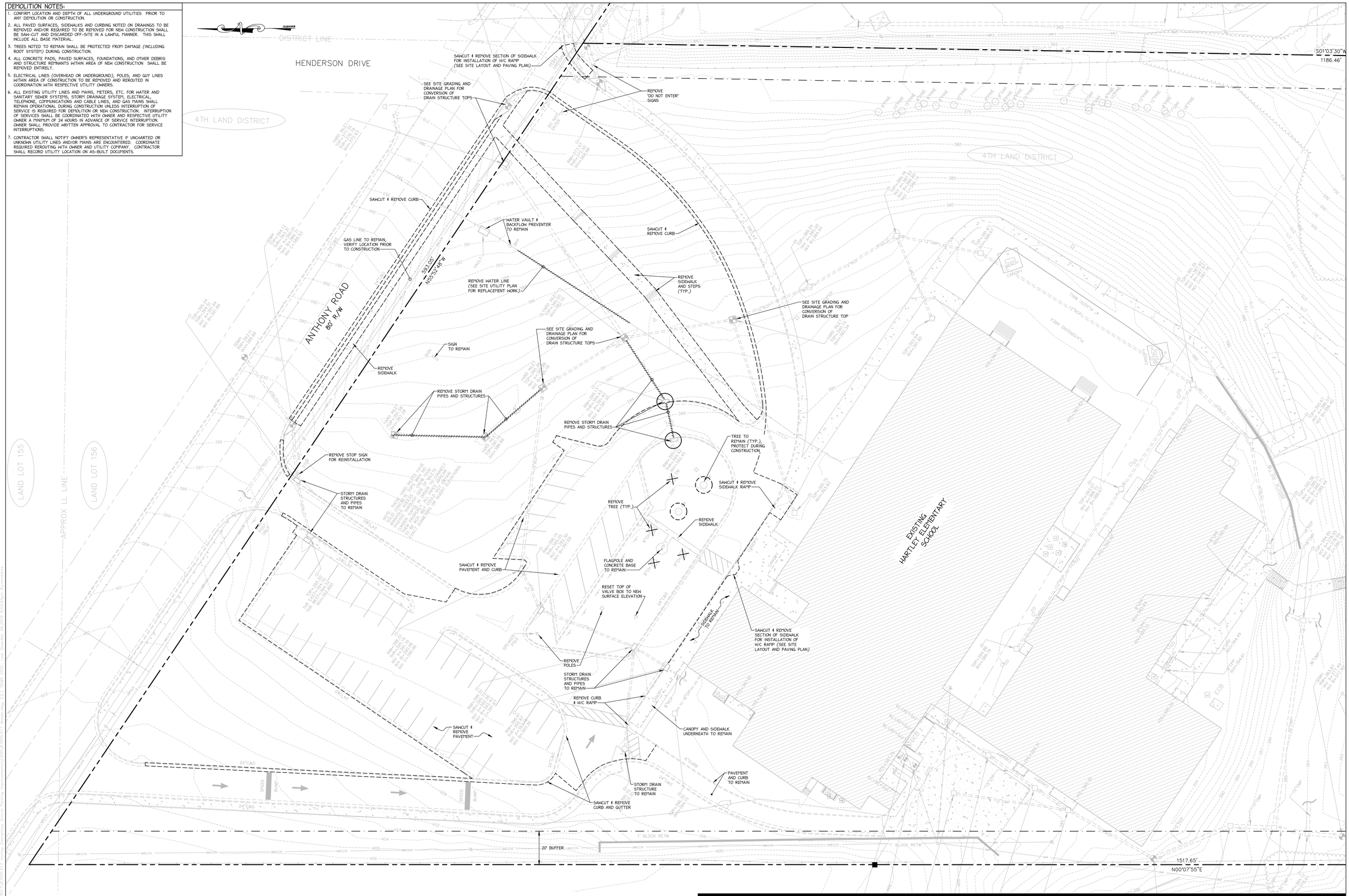

CARTER Engineering Group
6310 Peake Road, Suite 200
Macon, GA 31210
478-219-2600

THIS DRAWING IS AN INSTRUMENT OF SERVICE AND SHALL REMAIN THE PROPERTY OF CARTER ENGINEERING GROUP, LLC. THIS DRAWING MAY NOT BE REPRODUCED IN WHOLE OR IN PART WITHOUT THE CONSENT OF THE ENGINEER. THIS DRAWING SHALL NOT BE SCALED. © COPYRIGHT 2019 CARTER ENGINEERING GROUP, LLC.

STAMP:

LEVEL II CERTIFIED DESIGN PROFESSIONAL # 2061
ISSUED: 11/2/2017 EXPIRES: 11/2/2020

RELEASE DATES:

REV #	DATE	DESCRIPTION

CLIENT:
BIBB COUNTY SCHOOL DISTRICT
MACON-BIBB COUNTY, GA

GEORGIA811 Utilities Protection Center, Inc. Know what's below. Call before you dig.

PROJECT:
HARTLEY ELEMENTARY SCHOOL PARKING IMPROVEMENTS

2230 ANTHONY ROAD
MACON-BIBB COUNTY, GA 31204

DRAWN BY: CADD
CHECKED BY: DLC
PROJECT NUMBER: B7600.017
DATE: 03/18/2019
GRAPHIC SCALE: 0 20 40 — SCALE: 1" = 20'

DRAWING TITLE:
SITE DEMOLITION PLAN

DRAWING NUMBER:
C2.1

P:\B7600- BIBB COUNTY SCHOOL DISTRICT\B7600.017 Hartley Elementary School Parking Improvements\CAD\DB7600.017 Master.dwg, C2.1 DEMO 20SC, Last Save:Mar 26,2019 4:54:50pm Bynimonds
Plotted:3/26/2019 4:58:56 PM, By:dlay, Acc Reports Paper Size:11x17 Device Name:Canon C4530i HR Layout Size:C5 353 Plot-Ctb Scale:1.0
P:\B7600- BIBB COUNTY SCHOOL DISTRICT\B7600.017 Hartley Elementary School Parking Improvements\CAD\DB7600.017 Master.dwg, C2.1 DEMO 20SC, Last Save:Mar 26,2019 4:54:50pm Bynimonds

GENERAL NOTES:

1. DIMENSIONS SHOWN ARE TO FACE OF CURB OR EDGE OF PAVEMENT OR GRAVEL.
2. RADII NOT SHOWN ARE 5'.
3. ANGLES NOT SHOWN ARE 90 DEGREES.
4. LAYOUT AND STAKING INFORMATION IS AVAILABLE TO SUCCESSFUL BIDDER FROM PROJECT ENGINEER ON COMPUTER DISK AUTOCAD 2000 UPON COMPLETION OF A HOLD HARMLESS AGREEMENT.
5. UNDER NO CONDITION SHALL THE WORK OF THE CONTRACTOR STOP OR DISTURB THE OWNER'S USE OF ANY OCCUPIED PORTION OF THE BUILDING OR SITE.
6. THE CONTRACTOR SHALL MAINTAIN THE SITE CLEAN AND ORDERLY AT ALL TIMES.
7. CONTRACTOR SHALL COORDINATE WITH OWNER'S LIGHTING PROVIDER TO PROVIDE ELECTRICAL POWER PRIOR TO INSTALLATION OF PAVING AND SIDEWALKS.
8. PVC IRRIGATION SLEEVES SHALL BE INSTALLED WITH 18" COVER AND SHALL EXTEND 18" BEYOND BACK OF CURB. PVC SLEEVES SHALL BE 4" SDR 35, ASTM D3034. FURNISH AND INSTALL TEMPORARY INDICATOR POST AT EACH END OF CONDUIT. POST SHALL BE 4" DIA. x 24" WOOD.

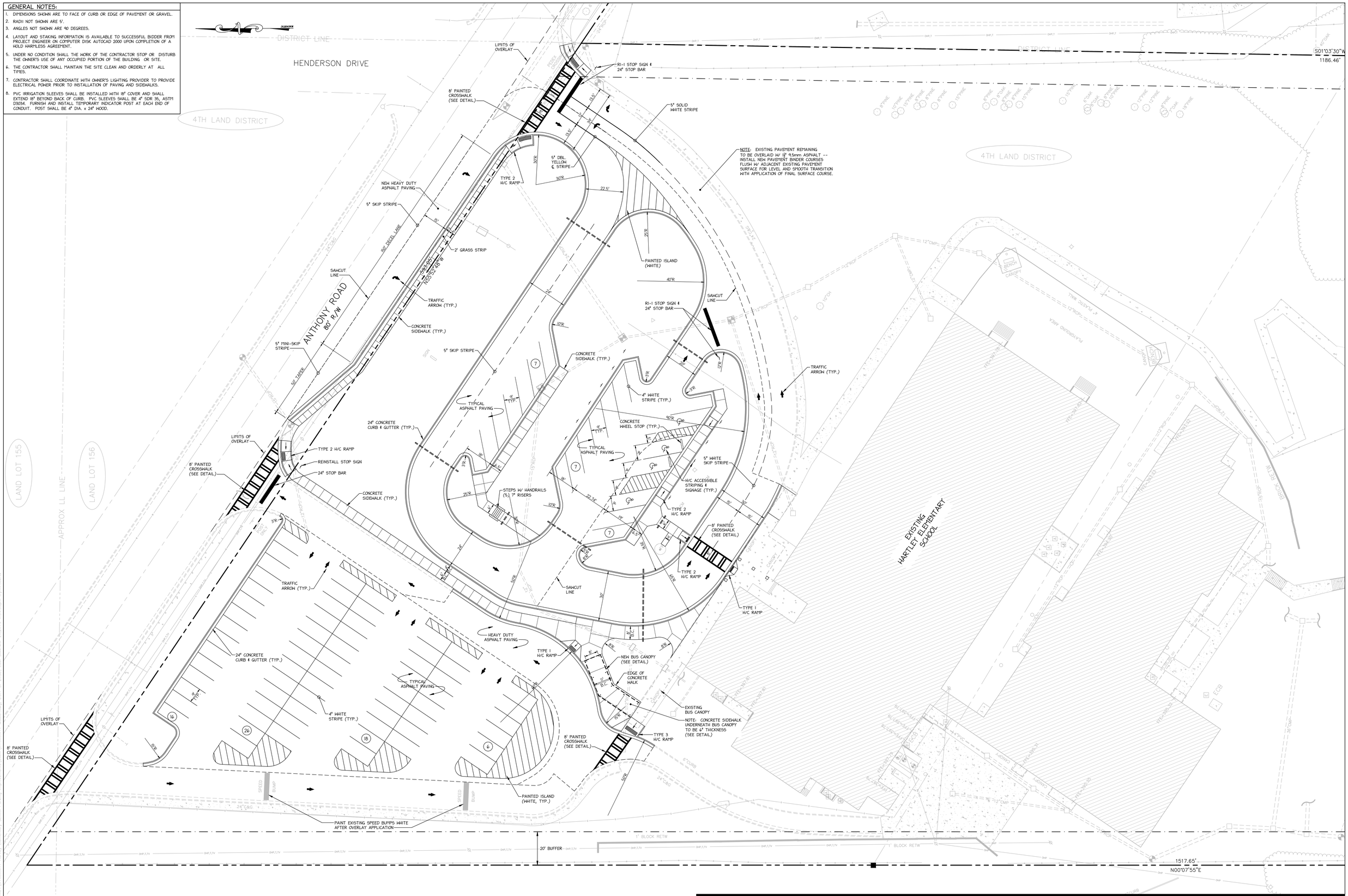

CARTER Engineering Group
6310 Peake Road, Suite 200
Macon, GA 31210
478-219-2600

THIS DRAWING IS AN INSTRUMENT OF SERVICE AND SHALL REMAIN THE PROPERTY OF CARTER ENGINEERING GROUP, LLC. THE REPRODUCTION, ALTERATION OR USE OF THIS DRAWING WITHOUT THE CONSENT OF THE ENGINEER, HAVE DRAWING SHALL NOT BE SCALED. © COPYRIGHT 2019 CARTER ENGINEERING GROUP, LLC.

STAMP:
GEORGIA REGISTERED PROFESSIONAL ENGINEER
DON L. CARTER
LEVEL II CERTIFIED DESIGN PROFESSIONAL # 2061
ISSUED: 11/2/2017 EXPIRES: 11/2/2020

RELEASE DATES:

REV #	DATE	DESCRIPTION

CLIENT:
BIBB COUNTY SCHOOL DISTRICT
MACON-BIBB COUNTY, GA

GEORGIA811 Utilities Protection Center, Inc.
Know what's below. Call before you dig.

PROJECT:
HARTLEY ELEMENTARY SCHOOL PARKING IMPROVEMENTS
2230 ANTHONY ROAD
MACON-BIBB COUNTY, GA 31204

DRAWN BY: CADD
CHECKED BY: DLC
PROJECT NUMBER: B7600.017
DATE: 03/18/2019
GRAPHIC SCALE: 0 20 40
SCALE: 1" = 20'

DRAWING TITLE:
SITE LAYOUT AND PAVING PLAN

DRAWING NUMBER:
C3.1

B7600.017 Master.dwg

P:\B7600-BIBB COUNTY SCHOOL DISTRICT\B7600.017 Hartley Elementary School Parking Improvements\CAD\B7600.017 Master.dwg, C3.1 ST 20SC, 3/20/2019 6:58:15 PM, rhoward, DWG To PDF.pc3, ARCH E (36.00 x 48.00 Inches), 1:1
Plotted:3/26/2019 6:58:16 PM, By:dlcay, Aec Reports Paper Size:1:1-27 Device Name:Canon C4530i HR Layout Size:C5 353 Paper Size:110
P:\B7600-BIBB COUNTY SCHOOL DISTRICT\B7600.017 Hartley Elementary School Parking Improvements\CAD\B7600.017 Master.dwg, C3.1 ST 20SC, Last SaveMar 26,2019 6:54:50pm, Bymoward

CONSTRUCTION NOTES:

1. CONTRACTOR SHALL VERIFY LOCATIONS AND DEPTHS OF ALL EXISTING UTILITIES PRIOR TO BEGINNING EXCAVATION. UTILITY LOCATIONS ARE BASED UPON FIELD OBSERVATIONS AND RECORD DRAWINGS. THESE LOCATIONS ARE APPROXIMATE AND MAY BE INCOMPLETE. THE UTILITIES PROTECTION CENTER MUST BE CONTACTED AT 1-800-282-7411 THREE BUSINESS DAYS PRIOR TO BEGINNING CONSTRUCTION.
2. ALL PAVING SUBGRADE AREAS SHALL BE COMPACTED IN 6" LAYERS TO 98% OF THE MAXIMUM DRY DENSITY AS DETERMINED IN ACCORDANCE WITH ASTM D698, CURRENT EDITION. ALL AREAS SHALL BE PROOFROLLED WITH A 20-TON DUMP TRUCK. UNDERCUT ALL AREAS THAT PUMP AND REPLACE WITH A SUITABLE MATERIAL COMPACTED AS HEREIN SPECIFIED.
3. ALL CONSTRUCTION ON THE SITE SHALL BE IN ACCORDANCE WITH MACON-BIBB COUNTY SPECIFICATIONS AND REQUIREMENTS.
4. MAXIMUM CUT AND FILL SLOPES ARE 3:1.
5. NOTIFY MACON-BIBB COUNTY INSPECTOR 48 HOURS PRIOR TO BEGINNING CONSTRUCTION.

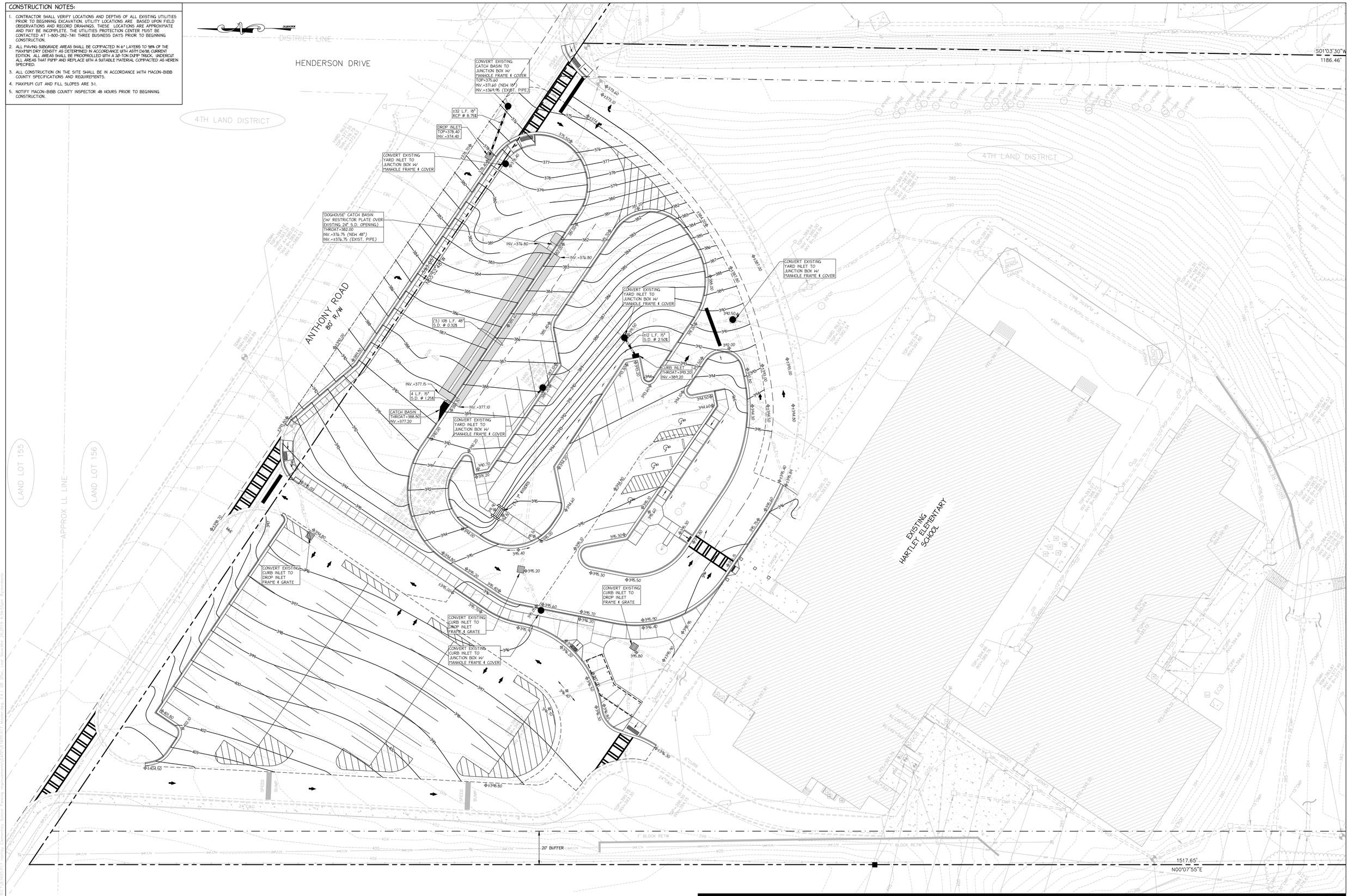

CARTER Engineering Group
6310 Peake Road, Suite 200
Macon, GA 31210
478-219-2600

THIS DRAWING IS AN INSTRUMENT OF SERVICE AND SHALL REMAIN THE PROPERTY OF THE ENGINEER, AND SHALL NOT BE REPRODUCED, PUBLISHED OR USED IN ANY WAY WITHOUT THE WRITTEN CONSENT OF THE ENGINEER. THIS DRAWING SHALL NOT BE SCALED. © COPYRIGHT 2019 CARTER ENGINEERING GROUP, LLC.

STAMP:
LEVEL II CERTIFIED
DESIGN PROFESSIONAL # 2061
ISSUED: 11/2/2017 EXPIRES: 11/2/2020

RELEASE DATES:

REV #	DATE	DESCRIPTION

CLIENT:
BIBB COUNTY
SCHOOL DISTRICT
MACON-BIBB COUNTY, GA

GEORGIA811 Utilities Protection Center, Inc.
Know what's below. Call before you dig.

PROJECT:
HARTLEY ELEMENTARY SCHOOL
PARKING IMPROVEMENTS

2230 ANTHONY ROAD
MACON-BIBB COUNTY, GA 31204

DRAWN BY:	CHECKED BY:
CADD	DLC
PROJECT NUMBER:	DATE:
B7600.017	03/18/2019

GRAPHIC SCALE: 0 20 40
SCALE: 1" = 20'

DRAWING TITLE:
SITE GRADING AND DRAINAGE PLAN

DRAWING NUMBER:
C4.1

B7600.017 Master.dwg

P:\B7600 - BIBB COUNTY SCHOOL DISTRICT\B7600.017 Hartley Elementary School Parking Improvements\CADD\B7600.017 Master.dwg, C4.1 GR-Dnc, 3/20/2019 8:58:25 PM, mbolick, DWG To PDF.pc3, ANSI full bleed (7.00x8.50inches), 1:1
Plotted:3/26/2019 4:54:28 PM Buffer Area Rotate Paper Size:11x17 Dwgs Name:Grav -C3D2 HFR Lev:3 Style:C3 3D Prints Scale:1=10 PV:B7600 - BIBB COUNTY SCHOOL DISTRC NB\B7600.017 Hartley Elementary School Parking Improvements\CADD\B7600.017 Master.dwg, C4.1 GR-2Dnc, cost Sheckler 3/6/2019 4:24:55pm Bjhomonts

WATER & SANITARY SEWER CONSTRUCTION NOTES:

1. CONTRACTOR SHALL VERIFY LOCATIONS, INVERT ELEVATIONS, AND SIZES OF ALL UTILITY MAINS AND LINES PRIOR TO INSTALLATION OF UTILITY MAINS (1-800-282-7411).
2. CONTRACTOR SHALL COORDINATE ALL WATER AND SEWER CONNECTIONS WITH MWA.
3. ALL WATER AND SANITARY SEWER CONSTRUCTION SHALL BE IN ACCORDANCE WITH MACON WATER AUTHORITY STANDARDS LISTED AS FOLLOWS:

   SANITARY SEWER:
   DUCTILE IRON PRESSURE CLASS 350 OR
   PVC ASTM D3034 SDR26

   WATER MAINS & SERVICES:
   - 4" AND LARGER: DUCTILE IRON-PRESSURE CLASS 350
   -3": TYPE 'K' COPPER-TO METER AND THROUGH BFP SCHEDULE 40 PVC-BEYOND METER

   -ALL FITTINGS AND VALVES TO BE RESTRAINED JOINT FITTINS.
4. THE CONTRACTOR SHALL NOTIFY THE MACON WATER AUTHORITY INSPECTIONS DEPARTMENT 72 HOURS PRIOR TO BEGINNING CONSTRUCTION - CALL CHIEF INSPECTOR JOEL HERNDON (478) 464-5639
5. CONTRACTOR TO COORDINATE WATER AND SEWER CONNECTIONS WITH PLUMBING DRAWINGS.
6. CONTRACTOR SHALL PLACE BLACK PLASTIC BAGS OVER TOP OF ALL OUT-OF-SERVICE FIRE HYDRANTS UNTIL THE HYDRANTS ARE IN SERVICE.
7. ALL HYDRANTS AND FITTINGS SHALL HAVE THRUST BLOCKS OR APPROVED EQUAL.
8. METALLIC TAPE LOCATOR SHALL BE USED ON ALL SANITARY SEWER LATERALS.

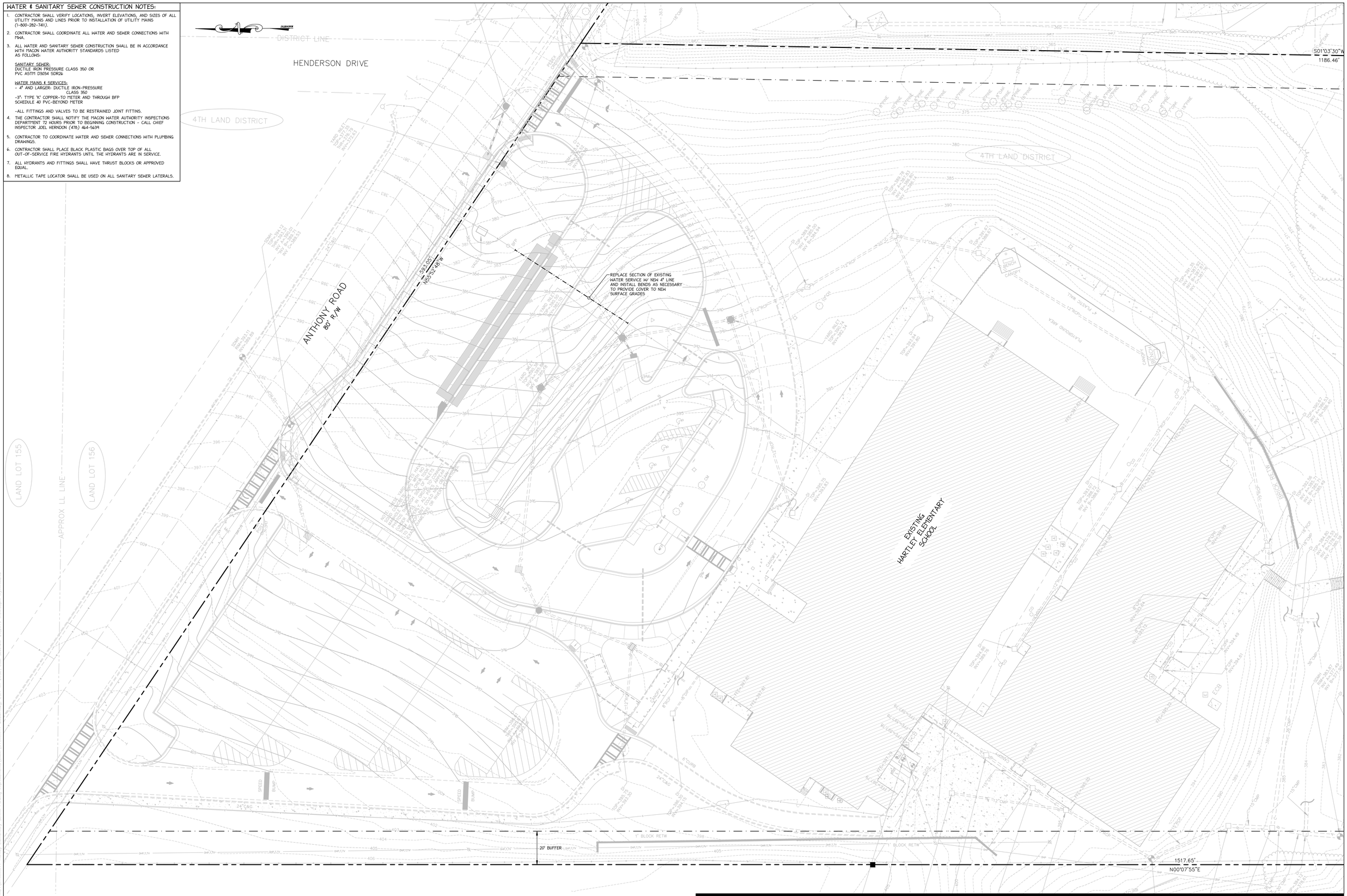

CARTER Engineering Group
6310 Peake Road, Suite 200
Macon, GA 31210
478-219-2600

THIS DRAWING IS AN INSTRUMENT OF SERVICE AND SHALL REMAIN THE PROPERTY OF THE ENGINEER, AND SHALL NOT BE REPRODUCED, PUBLISHED OR USED IN ANY WAY WITHOUT THE WRITTEN CONSENT OF THE ENGINEER. THIS DRAWING SHALL NOT BE SCALED
© COPYRIGHT 2015 CARTER ENGINEERING GROUP, LLC

STAMP:
LEVEL II CERTIFIED
DESIGN PROFESSIONAL # 2061
ISSUED: 11/2/2017 EXPIRES: 11/2/2020

RELEASE DATES:

REV #	DATE	DESCRIPTION

CLIENT:
BIBB COUNTY
SCHOOL DISTRICT
MACON-BIBB COUNTY, GA

GEORGIA811 Utilities Protection Center, Inc.
Know what's below. Call before you dig.

PROJECT:
HARTLEY ELEMENTARY SCHOOL
PARKING IMPROVEMENTS

2230 ANTHONY ROAD
MACON-BIBB COUNTY, GA 31204

DRAWN BY: CADD
CHECKED BY: DLC
PROJECT NUMBER: B7600.017
DATE: 03/18/2019
GRAPHIC SCALE: 0 20 40
SCALE: 1" = 20'

DRAWING TITLE:
SITE WATER AND SANITARY SEWER PLAN

DRAWING NUMBER:
C5.1

B7600.017 Master.dwg

SITE LOCATION MAP

INITIAL PHASE	
DRAINAGE AREA	4.42 ACRES
DISTURBED AREA	0.053 ACRES

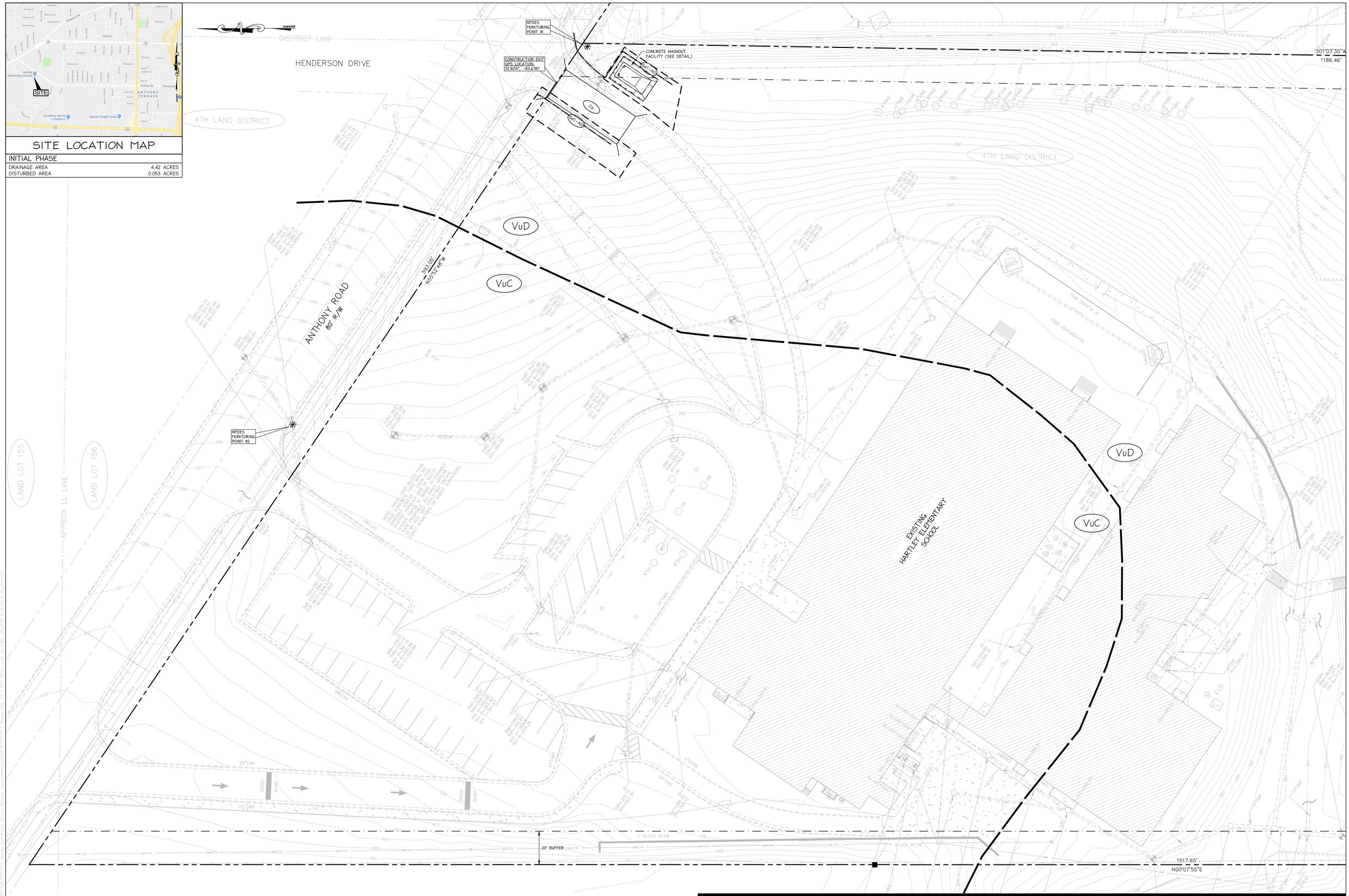

CARTER Engineering Group
6310 Peake Road, Suite 200
Macon, GA 31210
478-219-2600

THIS DRAWING IS AN INSTRUMENT OF SERVICE AND SHALL REMAIN THE PROPERTY OF THE ENGINEER, AND SHALL NOT BE REPRODUCED, PUBLISHED OR USED IN ANY WAY WITHOUT THE CONSENT OF THE ENGINEER. THIS DRAWING SHALL NOT BE SCALED. © COPYRIGHT 2019 CARTER ENGINEERING GROUP, LLC.

STAMP:
LEVEL II CERTIFIED
DESIGN PROFESSIONAL # 2061
ISSUED: 11/2/2017 EXPIRES: 11/2/2020

RELEASE DATES:

REV #	DATE	DESCRIPTION

CLIENT:
BIBB COUNTY
SCHOOL DISTRICT
MACON-BIBB COUNTY, GA

GEORGIA811 Utilities Protection Center, Inc.
Know what's below. Call before you dig.

PROJECT:
HARTLEY ELEMENTARY SCHOOL
PARKING IMPROVEMENTS

2230 ANTHONY ROAD
MACON-BIBB COUNTY, GA 31204

DRAWN BY:	CHECKED BY:
CADD	DLC
PROJECT NUMBER: B7600.017	DATE: 03/18/2019

GRAPHIC SCALE: 0 20 40
SCALE: 1" = 20'

DRAWING TITLE:
INITIAL STORMWATER POLLUTION PREVENTION PLAN

DRAWING NUMBER:
C6.1

B7600.017 Master.dwg

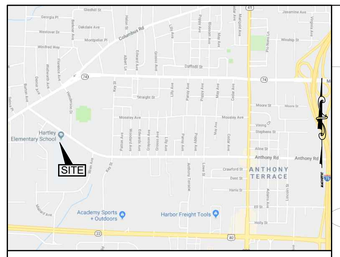

SITE LOCATION MAP

INTERMEDIATE PHASE	
DRAINAGE AREA	4.42 ACRES
DISTURBED AREA	2.26 ACRES

TEMPORARY SEDIMENT STORAGE

A. REQUIRED STORAGE
3.44 AC.* DRAIN AREA x 67 C.Y./AC. = 230.5 C.Y.

B. PROVIDED STORAGE

STORAGE AREA	STORAGE VOLUME
A	34.9 C.Y.
B	61.6 C.Y.
C	96.0 C.Y.
SILT FENCE**	47.5 C.Y.
TOTAL	240 C.Y.

*4.42 AC. TOTAL DRAIN AREA - 0.98 AC. ROOF AREA EXISTING BUILDING = 3.44 AC.

**475 L.F. SILT FENCE x 0.1 C.Y./E.F. = 47.5 C.Y.

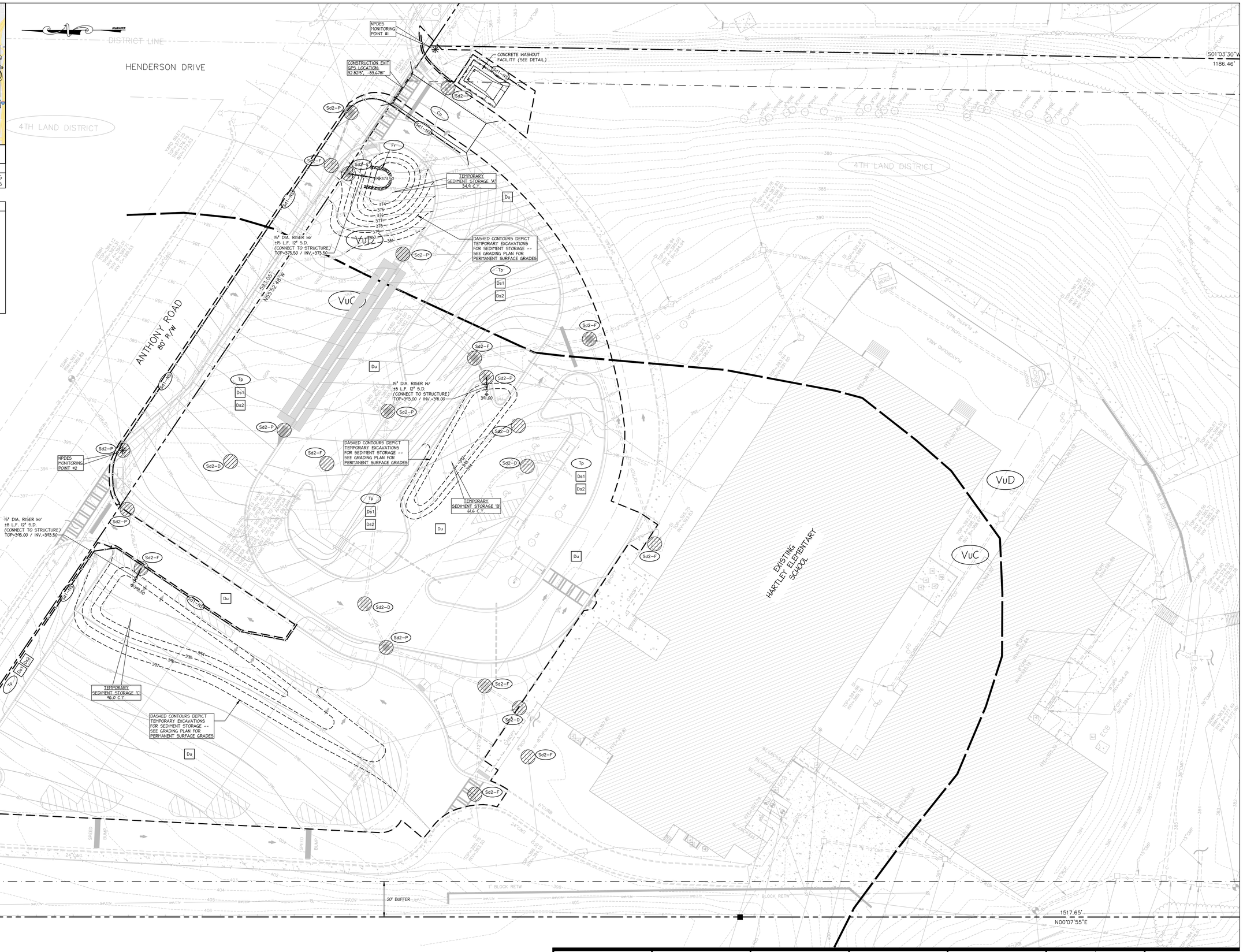

CARTER Engineering Group
6310 Peake Road, Suite 200
Macon, GA 31210
478-219-2600

THIS DRAWING IS AN INSTRUMENT OF SERVICE AND SHALL REMAIN THE PROPERTY OF THE ENGINEER, AND SHALL NOT BE REPRODUCED, PUBLISHED OR USED IN ANY WAY WITHOUT THE CONSENT OF THE ENGINEER. THIS DRAWING SHALL NOT BE SCALED. © COPYRIGHT 2018 CARTER ENGINEERING GROUP, LLC.

STAMP:
LEVEL II CERTIFIED
DESIGN PROFESSIONAL # 2061
ISSUED: 11/2/2017 EXPIRES: 11/2/2020

RELEASE DATES:

REV #	DATE	DESCRIPTION

CLIENT:
BIBB COUNTY
SCHOOL DISTRICT
MACON-BIBB COUNTY, GA

GEORGIA811 Utilities Protection Center, Inc.
Know what's below. Call before you dig.

PROJECT:
HARTLEY ELEMENTARY SCHOOL
PARKING IMPROVEMENTS

2230 ANTHONY ROAD
MACON-BIBB COUNTY, GA 31204

DRAWN BY:	CHECKED BY:
CADD	DLC
PROJECT NUMBER: B7600.017	DATE: 03/18/2019

GRAPHIC SCALE: 0 20 40
SCALE: 1" = 20'

DRAWING TITLE:
INTERMEDIATE STORMWATER POLLUTION PREVENTION PLAN

DRAWING NUMBER:
C6.2

P:\B7600 - BIBB COUNTY SCHOOL DISTRICT\B7600.017 Hartley Elementary School Parking Improvements\CADD\B7600.017 Master.dwg, C6.2 ERZ 20SC, 3/26/2019 6:58:58 PM, mbeckham, DWG To PDF.pc3, ARCH full sheet (24.00 x 36.00 Inches), 1:1
Plotted:3/26/2019 6:58:45 PM By:Mary Ann Rabeck Paper Size:1x1? Device Name:Xerox C9230 (HR mod) Style:CS.253 Plot with Scale:1:10
P:\B7600 - BIBB COUNTY SCHOOL DISTRICT\B7600.017 Hartley Elementary School Parking Improvements\CADD\B7600.017 Master.dwg, C6.2 ERZ 20SC, Layout: Grading, 3/26/2019 6:54:55pm By:mbeckham

SITE LOCATION MAP

PRE- AND POST-DEVELOPED PEAK DISCHARGE*	
PRE-DEVELOPED	31.88 C.F.S.
POST-DEVELOPED	27.84 C.F.S.
*BASED ON 25-YEAR STORM EVENT	
FINAL PHASE	
DRAINAGE AREA	4.42 ACRES
DISTURBED AREA	2.26 ACRES

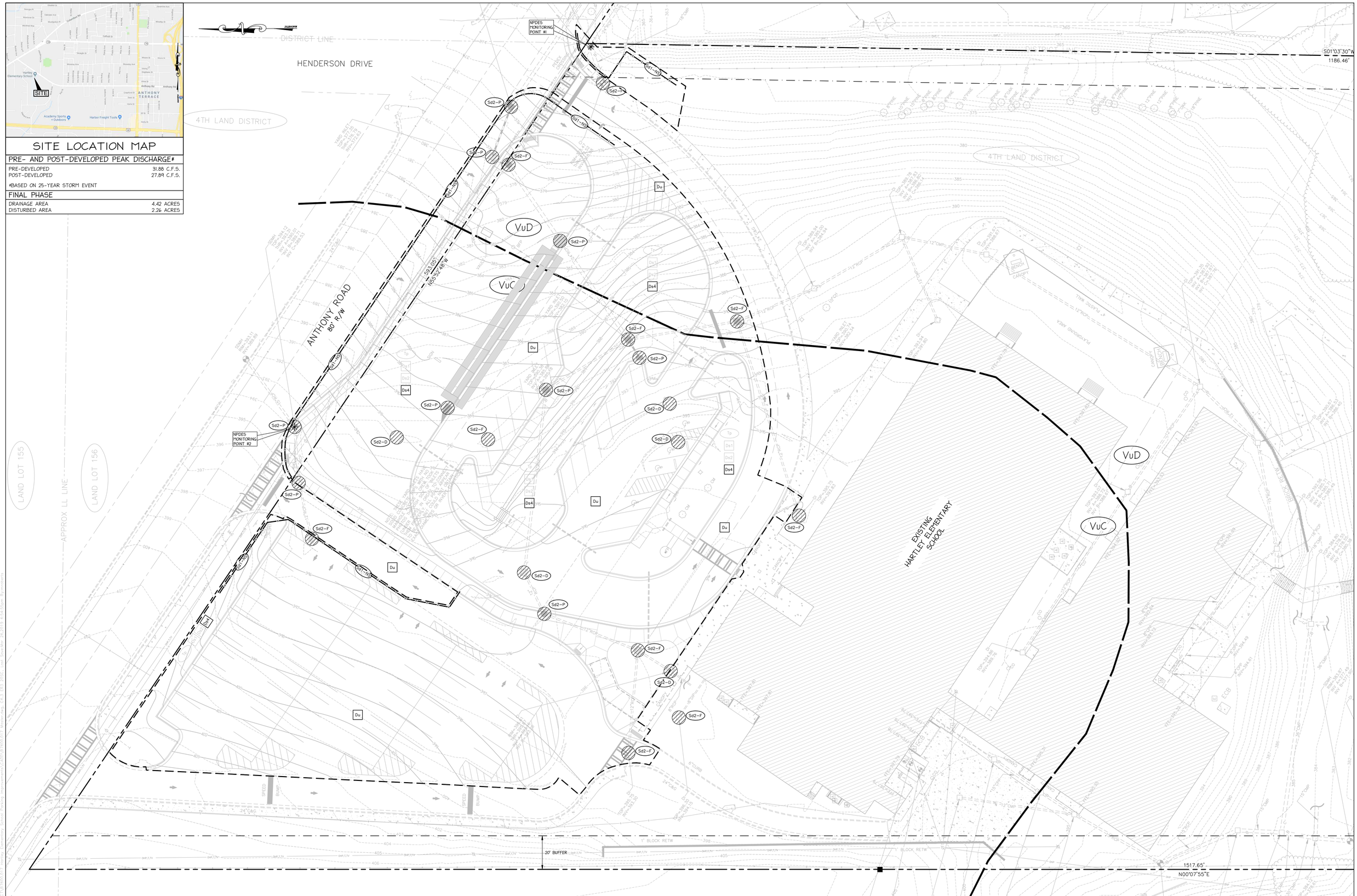

CARTER Engineering Group
6310 Peake Road, Suite 200
Macon, GA 31210
478-219-2600

THIS DRAWING IS AN INSTRUMENT OF SERVICE AND SHALL REMAIN THE PROPERTY OF THE ENGINEER, AND SHALL NOT BE REPRODUCED, PUBLISHED OR USED IN ANY WAY WITHOUT THE CONSENT OF THE ENGINEER. THIS DRAWING SHALL NOT BE SCALED. © COPYRIGHT 2019 CARTER ENGINEERING GROUP, LLC.

STAMP:
GEORGIA REGISTERED PROFESSIONAL ENGINEER
DAVID L. CARTER
LEVEL II CERTIFIED
DESIGN PROFESSIONAL # 2061
ISSUED: 11/2/2017 EXPIRES: 11/2/2020

RELEASE DATES:

REV #	DATE	DESCRIPTION

CLIENT:
BIBB COUNTY
SCHOOL DISTRICT
MACON-BIBB COUNTY, GA

GEORGIA811 Utilities Protection Center, Inc.
Know what's below. Call before you dig.

PROJECT:
HARTLEY ELEMENTARY SCHOOL
PARKING IMPROVEMENTS

2230 ANTHONY ROAD
MACON-BIBB COUNTY, GA 31204

DRAWN BY: CADD
CHECKED BY: DLC
PROJECT NUMBER: B7600.017
DATE: 03/18/2019
GRAPHIC SCALE: 0 20 40
SCALE: 1" = 20'

DRAWING TITLE:
FINAL STORMWATER POLLUTION PREVENTION PLAN

DRAWING NUMBER:
C6.3

B7600.017 Master.dwg

P:\B7600 - BIBB COUNTY SCHOOL DISTRICT\B7600.017 Hartley Elementary School Parking Improvements\CADD\B7600.017 Master.dwg, C6.3 ERS 20SC, 3/26/2019 6:58:06 PM, mbaldwin, DWG To PDF.pc3, ANSI A (Landscape) (11.00 x 8.50 Inches), 1 = 1
Plotted: 26 Mar 2019 6:58:06 PM By:Mary Ann Baldwin Page Size:11x17 Device Name:Canon C4300 uPS Layout Size:25.253 Plot with Scale:1=10
P:\B7600 - BIBB COUNTY SCHOOL DISTRICT\B7600.017 Hartley Elementary School Parking Improvements\CADD\B7600.017 Master.dwg, C6.3 ERS 20SC, Last Save:Mar 26,2019 6:34:55pm By:mbaldwin

COMPREHENSIVE MONITORING PROGRAM
STATE OF GEORGIA
DEPARTMENT OF NATURAL RESOURCES
ENVIRONMENTAL PROTECTION DIVISION
NPDES STORMWATER DISCHARGES
ASSOCIATED WITH CONSTRUCTION ACTIVITIES
GENERAL PERMIT No. GAR100001

GENERAL

THE CONTRACTOR SHALL BE THE PRIMARY PERMITTEE. AS SUCH, THE CONTRACTOR SHALL BE RESPONSIBLE FOR ALL NPDES TESTING AND MONITORING REQUIREMENTS STATED ON THE CONSTRUCTION DOCUMENTS AND WITHIN STATE OF GEORGIA GENERAL PERMIT NO. 100001. CONTRACTOR SHALL BE RESPONSIBLE FOR COMPLETION AND FILING OF NOTICE OF INTENT, NOTICE OF TERMINATION AND ALL OTHER REPORTING DOCUMENTS. ALL COSTS FOR TESTING, MONITORING, REPORTING, FEES AND FILING SHALL BE PAID BY THE CONTRACTOR.

CONTRACTOR SHALL OBTAIN PERMIT COVERAGE ELECTRONICALLY THROUGH GEOS (GEORGIA EPD ONLINE SYSTEM) BY SETTING UP A RESPONSIBLE OFFICIAL (RO) ACCOUNT. ONCE THE ACCOUNT HAS BEEN ESTABLISHED, THE CONTRACTOR MUST ASSOCIATE (LINK) THIS FACILITY WITH THE ACCOUNT. THEY MAY THEN DESIGNATE THE ENGINEER (CARTER ENGINEERING GROUP, LLC) AS THE PLAN PREPARER IF THEY SO WISH TO ASSIST WITH COMPLETION OF THE ONLINE NOTICE OF INTENT (NOI). ONCE THE NOI HAS BEEN COMPLETED, FINAL SUBMISSION ON THE GEOS WEBSITE SHALL BE THE RESPONSIBILITY OF THE CONTRACTOR.

THE CONTRACTOR SHALL UTILIZE THE GEOS SYSTEM AND SUBMIT ALL TESTING, MONITORING, AND REPORTS AS REQUIRED BY GAR100001. CONTRACTOR SHALL ALSO PAY ALL FEES ASSOCIATED WITH PERMIT, BOTH TO THE GEORGIA EPD, AND TO THE LOCAL ISSUING AUTHORITY (LIA), IF APPLICABLE.

FEE SCHEDULE	
EPD PORTION:	DISTURBED AREA x $40/ACRE = 2.3 AC x $40 = $92.00
LOCAL ISSUING AUTHORITY PORTION:	DISTURBED AREA x $40/ACRE = 2.3 AC x $40 = $92.00

I. SITE / OWNER / OPERATOR INFORMATION

PROJECT NAME: HARTLEY ELEMENTARY SCHOOL PARKING IMPROVEMENTS
PROJECT ADDRESS: 2230 ANTHONY ROAD
MACON-BIBB COUNTY, GEORGIA 31204

GPS LOCATION OF CONSTRUCTION EXIT: 32.8215°N / 83.6781°W

OWNER/DEVELOPER: BIBB COUNTY BOARD OF EDUCATION
JASON DANIEL, EXECUTIVE DIRECTOR OF CAPITAL PROGRAMS
484 MULBERRY STREET
MACON, GEORGIA 31201
TEL: (478) 765-8533
FAX: (478) 765-8549

24HR CONTACT PERSON: MR. MARTY DRAWHORN
484 MULBERRY STREET
MACON, GEORGIA 31201
TEL: (478) 765-8711 / 765-8506
Marty.Drawhorn@bcsdk12.net

FACILITY CONTACT: MR. MARTY DRAWHORN
484 MULBERRY STREET
MACON, GEORGIA 31201
TEL: (478) 765-8711 / 765-8506
Marty.Drawhorn@bcsdk12.net

II. STATEMENT

THE PERMITTEE'S COMPREHENSIVE MONITORING PROGRAM PROVIDES FOR THE MONITORING OF THE RECEIVING WATER(S) OR THE MONITORING OF THE STORMWATER OUTFALLS AND IS EXPECTED TO MEET THE MONITORING REQUIREMENTS CONTAINED IN THE GENERAL NPDES PERMIT No. GAR 100001."

DON L. CARTER, P.E. — 18064 LICENSE No. — 03/18/2019 DATE
LEVEL II CERTIFIED DESIGN PROFESSIONAL

CERTIFICATION NUMBER: 0000002061
ISSUED: 11/02/2017 EXPIRES: 11/02/2020

THE FOLLOWING COMPREHENSIVE MONITORING PROGRAM HAS BEEN PREPARED BY A PROFESSIONAL LICENSED BY THE STATE OF GEORGIA IN THE FIELD OF ENGINEERING, ARCHITECTURE, LANDSCAPE ARCHITECTURE, FORESTRY, GEOLOGY, OR LAND SURVEYING.

III. TOPOGRAPHIC INFORMATION FOR THIS PROJECT IS INCLUDED ON THE PLAN SHEETS.

IV. NARRATIVE DESCRIPTION OF ALL RECEIVING WATERS, WITH LOCATIONS OF ALL SAMPLING LOCATIONS AND OUTFALL LOCATIONS.

TWO MONITORING POINTS WILL BE SAMPLED FOR THIS PROJECT. THE MONITORING POINTS ARE LOCATED AS FOLLOWS:

MONITORING POINT No. 1: LOCATED AT EXISTING STORM DRAIN STRUCTURE ADJACENT ANTHONY ROAD.

MONITORING POINT No. 2: LOCATED AT EXISTING STORM DRAIN STRUCTURE ADJACENT ANTHONY ROAD.

THE APPROXIMATE LOCATIONS OF THE MONITORING POINTS ARE SHOWN ON THE PLANS.

V. SAMPLE ANALYSIS METHOD

SAMPLE ANALYSIS SHALL BE CONDUCTED IN ACCORDANCE WITH METHODOLOGY AND TEST PROCEDURES ESTABLISHED BY 40 CFR PART 136, THE GUIDANCE DOCUMENT TITLED "NPDES STORMWATER SAMPLING GUIDANCE DOCUMENT, EPA 833-B-92-001" AND OR ANY OTHER GUIDANCE DOCUMENTS THAT MAY BE PREPARED BY THE EPD.

VI. THE NTU SELECTION IS MADE USING THE TABLES IN APPENDIX B OF THE GENERAL PERMIT AND THE INFORMATION USED IN THE NOI FOR THE SIZE AND THE SURFACE WATER DRAINAGE AREA.

NUMBER OF OUTFALLS: 2
SURFACE WATER DRAINAGE AREA: 0.007 SQUARE MILE
SITE DISTURBED AREA: 2.26 ACRES
APPENDIX B NTU VALUE: 75

WARM WATER (SUPPORTING WARM WATER FISHERIES)
SURFACE WATER DRAINAGE AREA, SQUARE MILES

	0-4.99	5-9.99	10-24.99	25-49.99	50-99.99	100-249.99	250-499.99	500+
1.00-10	75	150	200	400	750	750	750	750
10.01-25	50	100	100	200	300	500	750	750
25.01-50	50	50	100	100	200	300	750	750
50.01-100	50	50	50	100	100	150	300	600
100.01+	50	50	50	50	50	100	200	100

RAINFALL DATA

RAINFALL INFORMATION SHALL BE LOGGED DAILY BY THE OPERATOR. THE RAINFALL DATA SHALL BE LOGGED AT THE SITE, NOT ANOTHER LOCATION.

SAMPLES

ALL SAMPLES TAKEN SHALL BE GRAB SAMPLES. FOR THIS PROJECT, SAMPLES SHALL BE COLLECTED USING A MANUAL METHOD. SAMPLE CONTAINERS SHALL BE LABELED PRIOR TO COLLECTING THE SAMPLES. SAMPLES SHOULD BE WELL MIXED BEFORE TRANSFERRING TO A SECONDARY CONTAINER. SAMPLES SHOULD BE TAKEN IN A LARGE MOUTH, WELL CLEANED AND RINSED GLASS OR PLASTIC JAR. THE JAR SHOULD BE CLEANED THOROUGHLY TO AVOID CONTAMINATION.

IX. SAMPLING

MANUAL SAMPLING SHALL BE UTILIZED. SAMPLES REQUIRED BY THE PERMIT SHOULD BE ANALYZED IMMEDIATELY, BUT IN NO CASE LATER THAN 48 HOURS AFTER COLLECTION. SAMPLES ARE NOT REQUIRED TO BE COOLED. ALL SAMPLES TAKEN SHOULD BE REPRESENTATIVE OF THE MONITORED ACTIVITY AND REPRESENTATIVE OF THE WATER QUALITY OF THE RECEIVING WATERS AND/OR THE STORMWATER OUTFALLS.

X. SAMPLING POINTS: SEE PARAGRAPH IV, ABOVE

XI. SAMPLING REQUIREMENTS

THIS PERMIT REQUIRES THE MONITORING OF NEPHELOMETRIC TURBIDITY IN RECEIVING WATER(S) OR OUTFALLS IN ACCORDANCE WITH THIS PERMIT. THIS PARAGRAPH SHALL NOT APPLY TO ANY LAND DISTURBANCE ASSOCIATED WITH THE CONSTRUCTION OF SINGLE-FAMILY HOMES WHICH ARE NOT PART OF A SUBDIVISION OR PLANNED COMMON DEVELOPMENT UNLESS FIVE (5) ACRES OR MORE WILL BE DISTURBED. THE FOLLOWING PROCEDURES CONSTITUTE EPD'S GUIDELINES FOR SAMPLING TURBIDITY.

A. *SAMPLING REQUIREMENTS* SHALL INCLUDE THE FOLLOWING:

1. A USGS TOPOGRAPHIC MAP, A TOPOGRAPHIC MAP OR A DRAWING (REFERRED TO AS A TOPOGRAPHIC MAP) THAT IS A SCALE EQUAL TO OR MORE DETAILED THAN A 1:24000 MAP SHOWING THE LOCATION OF THE SITE OR THE STAND ALONE CONSTRUCTION; (A) THE LOCATION OF ALL PERENNIAL AND INTERMITTENT STREAMS AND OTHER WATER BODIES AS SHOWN ON A USGS TOPOGRAPHIC MAP, AND ALL OTHER PERENNIAL AND INTERMITTENT STREAMS AND OTHER WATER BODIES LOCATED DURING MANDATORY FIELD VERIFICATION, INTO WHICH THE STORM WATER IS DISCHARGED AND (B) THE RECEIVING WATER AND/OR OUTFALL SAMPLING LOCATIONS. WHEN THE PERMITTEE HAS CHOSEN TO USE A USGS TOPOGRAPHIC MAP AND THE RECEIVING WATER(S) IS NOT SHOWN ON THE USGS TOPOGRAPHIC MAP, THE LOCATION OF THE RECEIVING WATER(S) MUST BE HAND-DRAWN ON THE USGS TOPOGRAPHIC MAP FROM WHERE THE STORM WATER(S) ENTERS THE RECEIVING WATER(S) TO THE POINT WHERE THE RECEIVING WATER(S) COMBINES WITH THE FIRST BLUE LINE STREAM SHOWN ON THE USGS TOPOGRAPHIC MAP;
2. A WRITTEN NARRATIVE OF SITE SPECIFIC ANALYTICAL METHODS USED TO COLLECT, HANDLE AND ANALYZE THE SAMPLES INCLUDING QUALITY CONTROL/QUALITY ASSURANCE PROCEDURES. THIS NARRATIVE MUST INCLUDE PRECISE SAMPLING METHODOLOGY FOR EACH SAMPLING LOCATION;
3. WHEN THE PERMITTEE HAS DETERMINED THAT SOME OR ALL OUTFALLS WILL BE MONITORED, A RATIONALE MUST BE INCLUDED FOR THE NTU LIMIT(S) SELECTED FROM APPENDIX B. THIS RATIONALE MUST INCLUDE THE SIZE OF THE CONSTRUCTION SITE, THE CALCULATION OF THE SIZE OF THE SURFACE WATER DRAINAGE AREA, AND THE TYPE OF RECEIVING WATER(S) (I.E., TROUT STREAM OR SUPPORTING WARM WATER FISHERIES); AND
4. ANY ADDITIONAL INFORMATION EPD DETERMINES NECESSARY TO BE PART OF THE PLAN. EPD WILL PROVIDE WRITTEN NOTICE TO THE PERMITTEE OF THE INFORMATION NECESSARY AND THE TIME LINE FOR SUBMITTAL.

B. *SAMPLE TYPE*. ALL SAMPLING SHALL BE COLLECTED BY "GRAB SAMPLES" AND THE ANALYSIS OF THESE SAMPLES MUST BE CONDUCTED IN ACCORDANCE WITH METHODOLOGY AND TEST PROCEDURES ESTABLISHED BY 40 CFR PART 136 (UNLESS OTHER TEST PROCEDURES HAVE BEEN APPROVED); THE GUIDANCE DOCUMENT TITLED "NPDES STORM WATER SAMPLING GUIDANCE DOCUMENT, EPA 833-B-92-001" AND GUIDANCE DOCUMENTS THAT MAY BE PREPARED BY THE EPD.

1. SAMPLE CONTAINERS SHOULD BE LABELED PRIOR TO COLLECTING THE SAMPLES
2. SAMPLES SHOULD BE WELL MIXED BEFORE TRANSFERRING TO A SECONDARY CONTAINER.
3. LARGE MOUTH, WELL CLEANED AND RINSED GLASS OR PLASTIC JARS SHOULD BE USED FOR COLLECTING SAMPLES. THE JARS SHOULD BE CLEANED THOROUGHLY TO AVOID CONTAMINATION.
4. MANUAL, AUTOMATIC OR RISING STAGE SAMPLING MAY BE UTILIZED. SAMPLES REQUIRED BY THIS PERMIT SHOULD BE ANALYZED IMMEDIATELY, BUT IN NO CASE LATER THAN 48 HOURS AFTER COLLECTION. HOWEVER, SAMPLES FROM AUTOMATIC SAMPLERS MUST BE COLLECTED NO LATER THAN THE NEXT BUSINESS DAY AFTER THEIR ACCUMULATION, UNLESS FLOW THROUGH AUTOMATED ANALYSIS IS UTILIZED. IF AUTOMATIC SAMPLING IS UTILIZED AND THE AUTOMATIC SAMPLER IS NOT ACTIVATED DURING THE QUALIFYING EVENT, THE PERMITTEE MUST UTILIZE MANUAL SAMPLING OR RISING STAGE SAMPLING DURING THE NEXT QUALIFYING EVENT. DILUTION OF SAMPLES IS NOT REQUIRED. SAMPLES MAY BE ANALYZED DIRECTLY WITH A PROPERLY CALIBRATED TURBIDIMETER. SAMPLES ARE NOT REQUIRED TO BE COOLED.
5. SAMPLING AND ANALYSIS OF THE RECEIVING WATER(S) OR OUTFALLS BEYOND THE MINIMUM FREQUENCY STATED IN THIS PERMIT MUST BE REPORTED TO EPD AS SPECIFIED IN PART IV.E.

XI. SAMPLING REQUIREMENTS (continued)

C. *SAMPLING POINTS.*

1. FOR CONSTRUCTION ACTIVITIES THE PRIMARY PERMITTEE MUST SAMPLE ALL RECEIVING WATER(S), OR ALL OUTFALL(S), OR A COMBINATION OF RECEIVING WATER(S) AND OUTFALL(S). SAMPLES TAKEN FOR THE PURPOSE OF COMPLIANCE WITH THIS PERMIT SHALL BE REPRESENTATIVE OF THE MONITORED ACTIVITY AND REPRESENTATIVE OF THE WATER QUALITY OF THE RECEIVING WATER(S) AND/OR THE STORM WATER OUTFALLS USING THE FOLLOWING MINIMUM GUIDELINES:

a. THE UPSTREAM SAMPLE FOR EACH RECEIVING WATER(S) MUST BE TAKEN IMMEDIATELY UPSTREAM OF THE CONFLUENCE OF THE FIRST STORM WATER DISCHARGE FROM THE PERMITTED ACTIVITY (I.E., THE DISCHARGE FARTHEST UPSTREAM AT THE SITE) BUT DOWNSTREAM OF ANY OTHER STORM WATER DISCHARGES NOT ASSOCIATED WITH THE PERMITTED ACTIVITY. WHERE APPROPRIATE, SEVERAL UPSTREAM SAMPLES FROM ACROSS THE RECEIVING WATER(S) MAY NEED TO BE TAKEN AND THE ARITHMETIC AVERAGE OF THE TURBIDITY OF THESE SAMPLES USED FOR THE UPSTREAM TURBIDITY VALUE.

b. THE DOWNSTREAM SAMPLE FOR EACH RECEIVING WATER(S) MUST BE TAKEN DOWNSTREAM OF THE CONFLUENCE OF THE LAST STORM WATER DISCHARGE FROM THE PERMITTED ACTIVITY (I.E., THE DISCHARGE FARTHEST DOWNSTREAM AT THE SITE) BUT UPSTREAM OF ANY OTHER STORM WATER DISCHARGE NOT ASSOCIATED WITH THE PERMITTED ACTIVITY. WHERE APPROPRIATE, SEVERAL DOWNSTREAM SAMPLES FROM ACROSS THE RECEIVING WATER(S) MAY NEED TO BE TAKEN AND THE ARITHMETIC AVERAGE OF THE TURBIDITY OF THESE SAMPLES USED FOR THE DOWNSTREAM TURBIDITY VALUE.

c. IDEALLY THE SAMPLES SHOULD BE TAKEN FROM THE HORIZONTAL AND VERTICAL CENTER OF THE RECEIVING WATER(S) OR THE STORM WATER OUTFALL CHANNEL(S).

d. CARE SHOULD BE TAKEN TO AVOID STIRRING THE BOTTOM SEDIMENTS IN THE RECEIVING WATER(S) OR IN THE OUTFALL STORM WATER CHANNEL.

e. THE SAMPLING CONTAINER SHOULD BE HELD SO THAT THE OPENING FACES UPSTREAM.

f. THE SAMPLES SHOULD BE KEPT FREE FROM FLOATING DEBRIS.

g. PERMITTEES DO NOT HAVE TO SAMPLE SHEET FLOW THAT FLOWS ONTO UNDISTURBED NATURAL AREAS OR AREAS STABILIZED BY THE PROJECT. FOR PURPOSES OF THIS SECTION, STABILIZED SHALL MEAN, FOR UNPAVED AREAS AND AREAS NOT COVERED BY PERMANENT STRUCTURES AND AREAS LOCATED OUTSIDE THE WASTE DISPOSAL LIMITS OF A LANDFILL CELL THAT HAS BEEN CERTIFIED BY EPD FOR WASTE DISPOSAL, 100% OF THE SOIL SURFACE IS UNIFORMLY COVERED IN PERMANENT VEGETATION WITH A DENSITY OF 70% OR GREATER, OR LANDSCAPED ACCORDING TO THE PLAN (UNIFORMLY COVERED WITH LANDSCAPING MATERIALS IN PLANNED LANDSCAPE AREAS, OR EQUIVALENT PERMANENT STABILIZATION MEASURES AS DEFINED IN THE MANUAL (EXCLUDING A CROP OF ANNUAL VEGETATION AND A SEEDING TARGET CROP OF PERENNIALS APPROPRIATE FOR THE REGION.

h. ALL SAMPLING PURSUANT TO THIS PERMIT MUST BE DONE IN SUCH A WAY (INCLUDING GENERALLY ACCEPTED SAMPLING METHODS, LOCATIONS, TIMING, AND FREQUENCY) AS TO ACCURATELY REFLECT WHETHER STORM WATER RUNOFF FROM THE CONSTRUCTION SITE IS IN COMPLIANCE WITH THE STANDARD SET FORTH IN PARTS III.D.3. OR III.D.4.., WHICHEVER IS APPLICABLE.

D. *SAMPLING FREQUENCY.*

1. THE PRIMARY PERMITTEE MUST SAMPLE IN ACCORDANCE WITH THE PLAN AT LEAST ONCE FOR EACH RAINFALL EVENT DESCRIBED BELOW. FOR A QUALIFYING EVENT, THE PERMITTEE SHALL SAMPLE AT THE BEGINNING OF ANY STORM WATER DISCHARGE TO A MONITORED RECEIVING WATER AND OR FROM A MONITORED OUTFALL LOCATION WITHIN FORTY-FIVE (45) MINUTES OR AS SOON AS POSSIBLE.
2. HOWEVER, WHERE MANUAL AND AUTOMATIC SAMPLING ARE IMPOSSIBLE (AS DEFINED IN THIS PERMIT), OR ARE BEYOND THE PERMITTEE'S CONTROL, THE PERMITTEE SHALL TAKE SAMPLES AS SOON AS POSSIBLE, BUT IN NO CASE MORE THAN TWELVE (12) HOURS AFTER THE BEGINNING OF THE STORM WATER DISCHARGE.
3. SAMPLING BY THE PERMITTEE SHALL OCCUR FOR THE FOLLOWING EVENTS:

a. FOR EACH AREA OF THE SITE THAT DISCHARGES TO A RECEIVING STREAM OR FROM AN OUTFALL, THE FIRST RAIN EVENT THAT REACHES OR EXCEEDS 0.5 INCH WITH A STORM WATER DISCHARGE THAT OCCURS DURING NORMAL BUSINESS HOURS* AS DEFINED IN THIS PERMIT. AFTER ALL CLEARING AND GRUBBING OPERATIONS HAVE BEEN COMPLETED BUT PRIOR TO COMPLETION OF MASS GRADING OPERATIONS IN THE DRAINAGE AREA OF THE LOCATION SELECTED AS THE SAMPLING LOCATION;

b. IN ADDITION TO (A) ABOVE, FOR EACH AREA OF THE SITE THAT DISCHARGES TO A RECEIVING WATER OR FROM AN OUTFALL, THE FIRST RAIN EVENT THAT REACHES OR EXCEEDS 0.5 INCH WITH A STORMWATER DISCHARGE THAT OCCURS DURING NORMAL BUSINESS HOURS. AS DEFINED IN THIS PERMIT EITHER 90 DAYS AFTER THE FIRST SAMPLING EVENT OR AFTER ALL MASS GRADING OPERATIONS HAVE BEEN COMPLETED BUT PRIOR TO SUBMITTAL OF A N.O.T. IN THE DRAINAGE AREA OF THE LOCATION SELECTED AS THE SAMPLING LOCATION, WHICHEVER COMES FIRST;

c. AT THE TIME OF SAMPLING PERFORMED PURSUANT TO (A) AND (B) ABOVE. IF BMPS IN ANY AREA OF THE SITE THAT DISCHARGES TO A RECEIVING WATER OR FROM AN OUTFALL ARE NOT PROPERLY DESIGNED, INSTALLED AND MAINTAINED, CORRECTIVE ACTION SHALL BE DEFINED AND IMPLEMENTED WITHIN TWO (2) BUSINESS DAYS, AND TURBIDITY SAMPLES SHALL BE TAKEN FROM DISCHARGES FROM THAT AREA OF THE SITE FOR EACH SUBSEQUENT RAIN EVENT THAT REACHES OR EXCEEDS 0.5 INCH DURING NORMAL BUSINESS HOURS* UNTIL THE SELECTED TURBIDITY STANDARD IS ATTAINED, OR UNTIL POST-STORM EVENT INSPECTIONS DETERMINE THAT BMPS ARE PROPERLY DESIGNED, INSTALLED AND MAINTAINED

d. WHEN SAMPLING PURSUANT TO (a), (b) OR (c) ABOVE IS REQUIRED BUT NOT POSSIBLE (OR NOT REQUIRED BECAUSE THERE WAS NO DISCHARGE), THE PERMITTEE, IN ACCORDANCE WITH PART IV.D.4.a.(6), MUST INCLUDE A WRITTEN JUSTIFICATION IN THE INSPECTION REPORT OF WHY SAMPLING WAS NOT PERFORMED. PROVIDING THIS JUSTIFICATION DOES NOT RELIEVE THE PERMITTEE OF ANY SUBSEQUENT SAMPLING OBLIGATIONS UNDER (a), (b) OR (c) ABOVE, AND

e. EXISTING CONSTRUCTION ACTIVITIES, I.E., THOSE THAT ARE OCCURRING ON OR BEFORE THE EFFECTIVE DATE OF THIS PERMIT, THAT HAVE MET THE SAMPLING REQUIRED BY (A) ABOVE SHALL SAMPLE IN ACCORDANCE WITH (B). THOSE EXISTING CONSTRUCTION ACTIVITIES THAT HAVE MET THE SAMPLING REQUIRED BY (B) ABOVE SHALL NOT BE REQUIRED TO CONDUCT ADDITIONAL SAMPLING OTHER THAN AS REQUIRED BY (C) ABOVE.

*NOTE THAT THE PERMITTEE MAY CHOOSE TO MEET THE REQUIREMENTS OF (A) AND (B) ABOVE BY COLLECTING TURBIDITY SAMPLES FROM ANY RAIN EVENT THAT REACHES OR EXCEEDS 0.5 INCH AND ALLOWS FOR MONITORING AT ANY TIME OF THE DAY OR WEEK.

XII. INSPECTIONS

A. SITE INSPECTIONS BY LICENSED PROFESSIONAL (SITE DESIGN ENGINEER)

1. FOR STAND ALONE PROJECTS THAT BEGIN CONSTRUCTION ACTIVITY AFTER THE EFFECTIVE DATE OF THIS PERMIT, THE PRIMARY PERMITTEE MUST RETAIN THE DESIGN PROFESSIONAL WHO PREPARED THE EROSION, SEDIMENTATION AND POLLUTION CONTROL PLAN, EXCEPT WHEN THE PRIMARY PERMITTEE HAS REQUESTED IN WRITING AND EPD HAS AGREED TO AN ALTERNATE DESIGN PROFESSIONAL, TO INSPECT THE INSTALLATION OF THE INITIAL SEDIMENT STORAGE REQUIREMENTS AND PERIMETER CONTROL BMPS WHICH THE DESIGN PROFESSIONAL DESIGNED WITHIN SEVEN (7) DAYS AFTER INSTALLATION. THE DESIGN PROFESSIONAL SHALL DETERMINE IF THESE BMPS HAVE BEEN INSTALLED AND ARE BEING MAINTAINED AS DESIGNED. THE DESIGN PROFESSIONAL SHALL REPORT THE RESULTS OF THE INSPECTION TO THE PRIMARY PERMITTEE WITHIN SEVEN (7) DAYS AND THE PERMITTEE MUST CORRECT ALL DEFICIENCIES WITHIN TWO (2) BUSINESS DAYS OF RECEIPT OF THE INSPECTION REPORT FROM THE DESIGN PROFESSIONAL UNLESS WEATHER RELATED SITE CONDITIONS ARE SUCH THAT ADDITIONAL TIME IS REQUIRED.
2. THE PRIMARY PERMITTEE SHALL CORRECT ANY DEFICIENCIES IDENTIFIED BY THE LICENSED PROFESSIONAL WITHIN TWO BUSINESS DAYS OF INSPECTION AND AS NOTED IN WRITTEN INSPECTION REPORT.
3. THE PRIMARY PERMITTEE SHALL CORRECT ANY DEFICIENCIES IDENTIFIED BY THE LICENSED PROFESSIONAL WITHIN TWO BUSINESS DAYS OF INSPECTION AND AS NOTED IN WRITTEN INSPECTION REPORT.

B. PRIMARY PERMITTEE/OWNER/PRIMARY CONTRACTOR REQUIREMENTS

1. EACH DAY WHEN ANY TYPE OF CONSTRUCTION ACTIVITY HAS TAKEN PLACE AT A PRIMARY PERMITTEE'S SITE, CERTIFIED PERSONNEL PROVIDED BY THE PRIMARY PERMITTEE SHALL INSPECT: (A) ALL AREAS AT THE PRIMARY PERMITTEE'S SITE WHERE PETROLEUM PRODUCTS ARE STORED, USED, OR HANDLED FOR SPILLS AND LEAKS FROM VEHICLES AND EQUIPMENT; (B) ALL LOCATIONS AT THE PRIMARY PERMITTEE'S SITE WHERE VEHICLES ENTER OR EXIT THE SITE FOR EVIDENCE OF OFF-SITE SEDIMENT TRACKING. THESE INSPECTIONS MUST BE CONDUCTED UNTIL A NOTICE OF TERMINATION IS SUBMITTED.
2. MEASURE RAINFALL ONCE EVERY 24 HOURS EXCEPT ANY NON-WORKING SATURDAY, NON-WORKING SUNDAY AND NON-WORKING FEDERAL HOLIDAY UNTIL A NOTICE OR TERMINATION IS SUBMITTED. MEASUREMENT OF RAINFALL MAY BE SUSPENDED IF ALL AREAS OF THE SITE HAVE UNDERGONE FINAL STABILIZATION OR ESTABLISHED A CROP OF ANNUAL VEGETATION AND A SEEDING OF TARGET PERENNIALS APPROPRIATE FOR THE REGION.
3. CERTIFIED PERSONNEL (PROVIDED BY THE PRIMARY PERMITTEE) SHALL INSPECT THE FOLLOWING AT LEAST ONCE EVERY SEVEN (7) CALENDAR DAYS AND WITHIN 24 HOURS OF THE END OF A STORM THAT IS 0.5 INCHES RAINFALL OR GREATER (UNLESS SUCH STORM ENDS AFTER 5:00 PM ON ANY FRIDAY OR ON ANY NON-WORKING SATURDAY, NON-WORKING SUNDAY OR ANY NON-WORKING FEDERAL HOLIDAY IN WHICH CASE THE INSPECTION SHALL BE COMPLETED BY THE END OF THE NEXT BUSINESS DAY AND/OR WORKING DAY, WHICHEVER OCCURS FIRST): (A) DISTURBED AREAS OF THE PRIMARY PERMITTEE'S CONSTRUCTION SITE (B) AREAS USED BY THE PRIMARY PERMITTEE FOR STORAGE OF MATERIALS THAT ARE EXPOSED TO PRECIPITATION. AND (C) STRUCTURAL CONTROL MEASURES. EROSION AND SEDIMENT CONTROL MEASURES IDENTIFIED IN THE PLAN APPLICABLE TO THE PRIMARY PERMITTEE'S SITE SHALL BE OBSERVED TO ENSURE THAT THEY ARE OPERATING CORRECTLY. WHERE DISCHARGE LOCATIONS OR POINTS ARE ACCESSIBLE, THEY SHALL BE INSPECTED TO ASCERTAIN WHETHER EROSION CONTROL MEASURES ARE EFFECTIVE IN PREVENTING SIGNIFICANT IMPACTS TO RECEIVING WATER(S). FOR AREAS OF A SITE THAT HAVE UNDERGONE FINAL STABILIZATION, OR ESTABLISHED A CROP OF ANNUAL VEGETATION AND A SEEDING OF TARGET PERENNIALS APPROPRIATE FOR THE REGION. THE PERMITTEE MUST COMPLY WITH PART IV.D.4.A.(4). THESE INSPECTIONS MUST BE CONDUCTED UNTIL A NOTICE OF TERMINATION IS SUBMITTED.
4. CERTIFIED PERSONNEL (PROVIDED BY THE PRIMARY PERMITTEE) SHALL INSPECT AT LEAST ONCE PER MONTH DURING THE TERM OF THIS PERMIT (I.E., UNTIL A NOTICE OF TERMINATION IS RECEIVED BY EPD) THE AREAS OF THE SITE THAT HAVE UNDERGONE FINAL STABILIZATION. THESE AREAS SHALL BE INSPECTED FOR EVIDENCE OF, OR THE POTENTIAL FOR, POLLUTANTS ENTERING THE DRAINAGE SYSTEM AND THE RECEIVING WATER(S). EROSION AND SEDIMENT CONTROL MEASURES IDENTIFIED IN THE PLAN SHALL BE OBSERVED TO ENSURE THAT THEY ARE OPERATING CORRECTLY. WHERE DISCHARGE LOCATIONS OR POINTS ARE ACCESSIBLE, THEY SHALL BE INSPECTED TO ASCERTAIN WHETHER EROSION CONTROL MEASURES ARE EFFECTIVE IN PREVENTING SIGNIFICANT IMPACTS TO RECEIVING WATER(S).
5. BASED ON THE RESULTS OF EACH INSPECTION, THE SITE DESCRIPTION AND THE POLLUTION PREVENTION AND CONTROL MEASURES IDENTIFIED IN THE EROSION, SEDIMENTATION AND POLLUTION CONTROL PLAN, THE PLAN SHALL BE REVISED AS APPROPRIATE NOT LATER THAN SEVEN (7) CALENDAR DAYS FOLLOWING EACH INSPECTION. IMPLEMENTATION OF SUCH CHANGES SHALL BE MADE AS SOON AS PRACTICAL BUT IN NO CASE LATER THAN SEVEN (7) CALENDAR DAYS FOLLOWING EACH INSPECTION.
6. A REPORT OF EACH INSPECTION THAT INCLUDES THE NAME(S) OF PERSONNEL MAKING EACH INSPECTION, THE DATE(S) OF EACH INSPECTION, CONSTRUCTION PHASE (i.e. INITIAL, INTERMEDIATE OR FINAL) MAJOR OBSERVATIONS RELATING TO THE IMPLEMENTATION OF THE EROSION, SEDIMENTATION AND POLLUTION CONTROL PLAN, AND ACTIONS TAKEN IN ACCORDANCE WITH PART IV.D.4.A.(5). OF THE PERMIT SHALL BE MADE AND RETAINED AT THE SITE OR BE READILY AVAILABLE AT A DESIGNATED ALTERNATE LOCATION UNTIL THE ENTIRE SITE OR THAT PORTION OF A CONSTRUCTION PROJECT THAT HAS BEEN PHASED HAS UNDERGONE FINAL STABILIZATION AND A NOTICE OF TERMINATION IS SUBMITTED TO EPD. SUCH REPORTS SHALL BE READILY AVAILABLE BY THE END IF THE SECOND BUSINESS DAY AND/OR WORKING DAY AND SHALL IDENTIFY ALL INCIDENTS OF BEST MANAGEMENT PRACTICES THAT HAVE NOT BEEN PROPERLY INSTALLED AND OR MAINTAINED AS DESCRIBED IN THE PLAN WHERE THE REPORT DOES NOT IDENTIFY ANY INCIDENTS OF NON-COMPLIANCE, THE INSPECTION REPORT SHALL CONTAIN A CERTIFICATION THAT THE BEST MANAGEMENT PRACTICES ARE IN COMPLIANCE WITH THE EROSION, SEDIMENTATION AND POLLUTION CONTROL PLAN AND THIS PERMIT. THE REPORT SHALL BE SIGNED IN ACCORDANCE WITH PART V.G.2 OF THIS PERMIT.

XIII. REPORTING

1. THE APPLICABLE PERMITTEES ARE REQUIRED TO SUBMIT A SUMMARY OF THE SAMPLING RESULTS TO THE EPD AT THE ADDRESS SHOWN IN PART II.C. BY THE FIFTEENTH DAY OF THE MONTH FOLLOWING THE REPORTING PERIOD. REPORTING PERIODS ARE MONTHS DURING WHICH SAMPLES ARE TAKEN IN ACCORDANCE WITH THIS PERMIT. SAMPLING RESULTS SHALL BE IN A CLEARLY LEGIBLE FORMAT. UPON WRITTEN NOTIFICATION, EPD MAY REQUIRE THE APPLICABLE PERMITTEE TO SUBMIT THE SAMPLING RESULTS ON A MORE FREQUENT BASIS. SAMPLING AND ANALYSIS OF A STORMWATER DISCHARGE(S) OR THE RECEIVING WATER(S) BEYOND THE MINIMUM FREQUENCY STATED IN THIS PERMIT MUST BE REPORTED IN A SIMILAR MANNER TO THE EPD. THE SAMPLING REPORTS MUST ME SIGNED IN ACCORDANCE WITH PART V.G. SAMPLING REPORTS MUST BE SUBMITTED TO EPD UNTIL SUCH TIME AS A NOT IS SUBMITTED IN ACCORDANCE WITH PART VI.
2. ALL SAMPLING REPORTS SHALL INCLUDE THE FOLLOWING:

a. THE RAINFALL AMOUNT, DATE, EXACT PLACE, AND TIME OF SAMPLING OR MEASUREMENTS;
b. THE NAME(S) OF THE CERTIFIED PERSONNEL WHO PERFORMED THE SAMPLING AND MEASUREMENTS;
c. THE DATE(S) ANALYSES WERE PERFORMED;
d. THE TIME(S) ANALYSES WERE INITIATED;
e. THE NAME(S) OF THE CERTIFIED PERSONNEL WHO PERFORMED THE ANALYSES;
f. REFERENCES AND WRITTEN PROCEDURES, WHEN AVAILABLE, FOR THE ANALYTICAL TECHNIQUES OR METHODS USED;
g. THE RESULTS OF SUCH ANALYSES, INCLUDING THE BENCH SHEETS, INSTRUMENT READOUTS, COMPUTER DISKS OR TAPES, ETC., USED TO DETERMINE THESE RESULTS;
h. RESULTS WHICH EXCEED 1000 NTU SHALL BE REPORTED AS "EXCEEDS 1000 NTU; AND
i. CERTIFICATION STATEMENT THAT SAMPLING WAS CONDUCTED AS PER THE PLAN.

3. ALL WRITTEN CORRESPONDENCE REQUIRED BY THIS PERMIT SHALL BE SUBMITTED BY RETURN RECEIPT MAIL (OR SIMILAR SERVICE) TO THE APPROPRIATE DISTRICT OFFICE OF THE EPD ACCORDING TO THE SCHEDULE IN APPENDIX A OF THIS PERMIT. THE PERMITTEE SHALL RETAIN A COPY OF SUBMITTAL AT THE CONSTRUCTION SITE OR THE PROOF OF SUBMITTAL SHALL BE READILY AVAILABLE AT A DESIGNATED LOCATION FROM COMMENCEMENT OF CONSTRUCTION UNTIL SUCH TIME AS A NOT IS SUBMITTED IN ACCORDANCE WITH PART VI. IF AN ELECTRONIC SUBMITTAL IS PROVIDED BY EPD THEN THE WRITTEN CORRESPONDENCE MAY BE SUBMITTED ELECTRONICALLY, IF REQUIRED, A PAPER COPY MUST ALSO BE SUBMITTED BY RETURN RECEIPT CERTIFIED MAIL OR SIMILAR SERVICE.

XIV. RETENTION OF RECORDS

1. THE PRIMARY PERMITTEE SHALL RETAIN THE FOLLOWING RECORDS AT THE CONSTRUCTION SITE OR THE RECORDS SHALL BE READILY AVAILABLE AT A DESIGNATED ALTERNATE LOCATION FROM COMMENCEMENT OF CONSTRUCTION UNTIL SUCH TIME AS A NOT IS SUBMITTED IN ACCORDANCE WITH PART VI:

a. A COPY OF ALL NOTICES OF INTENT SUBMITTED TO EPD;
b. A COPY OF THE EROSION, SEDIMENTATION AND POLLUTION CONTROL PLAN REQUIRED BY THIS PERMIT;
c. THE DESIGN PROFESSIONAL'S REPORT OF THE RESULTS OF THE INSPECTION CONDUCTED IN ACCORDANCE WITH PART IV.A.5. OF THIS PERMIT;
d. A COPY OF ALL MONITORING INFORMATION, RESULTS, AND REPORTS REQUIRED BY THIS PERMIT;
e. A COPY OF ALL INSPECTION REPORTS GENERATED IN ACCORDANCE WITH PART IV.D.4.A. OF THIS PERMIT;
f. A COPY OF ALL VIOLATION SUMMARIES AND VIOLATION SUMMARY REPORTS GENERATED IN ACCORDANCE WITH PART III.D.2. OF THIS PERMIT; AND
g. DAILY RAINFALL INFORMATION COLLECTED IN ACCORDANCE WITH PART IV.D.4.A.(1)(C) OF THIS PERMIT.

2. COPIES OF ALL NOTICES OF INTENT, NOTICES OF TERMINATION, REPORTS, PLANS, SAMPLING REPORTS, (INCLUDING ALL CALIBRATION AND MAINTENANCE RECORDS AND ALL ORIGINAL STRIP CHART RECORDINGS FOR CONTINUOUS MONITORING INSTRUMENTATION) OR OTHER REPORTS REQUESTED BY THE EPD. EROSION, SEDIMENTATION AND POLLUTION CONTROL PLANS, RECORDS OF ALL DATA USED TO COMPLETE THE NOTICE OF INTENT TO BE COVERED BY THIS PERMIT AND ALL OTHER RECORDS REQUIRED BY THIS PERMIT SHALL BE RETAINED BY THE PERMITTEE WHO EITHER PRODUCED OR USED IT FOR A PERIOD OF AT LEAST THREE YEARS FROM THE DATE THAT THE NOT IS SUBMITTED IN ACCORDANCE WITH PART VI OF THIS PERMIT. THESE RECORDS MUST BE MAINTAINED AT THE PERMITTEE'S PRIMARY PLACE OF BUSINESS OR AT A DESIGNATED ALTERNATIVE LOCATION ONCE THE CONSTRUCTION ACTIVITY HAS CEASED AT THE PERMITTED SITE. THIS PERIOD MAY BE EXTENDED BY REQUEST OF THE EPD AT ANY TIME UPON WRITTEN NOTIFICATION TO THE PERMITTEE.

XV. REPORT SUBMITTAL

ALL NOTICE OF INTENTS; NOTICE OF TERMINATIONS; CERTIFICATIONS; EROSION, SEDIMENTATION AND POLLUTION CONTROL PLANS; COMPREHENSIVE MONITORING PROGRAMS; REPORTS AND ANY OTHER INFORMATION SHALL BE SUBMITTED TO THE GEORGIA EPD ONLINE SYSTEM (GEOS) FOR PERMITTING, COMPLIANCE AND FACILITY INFORMATION.

EROSION, SEDIMENTATION & POLLUTION CONTROL PLAN CHECKLIST
STAND ALONE CONSTRUCTION PROJECTS
SWCD: OCMULGEE

PROJECT NAME: HARTLEY ELEMENTARY SCHOOL PARKING IMPROVEMENTS — ADDRESS: 2230 ANTHONY ROAD
CITY/COUNTY: MACON-BIBB — DATE ON PLANS: 03/18/2019
NAME AND EMAIL OF PERSON FILLING OUT CHECKLIST: DON SMITH dsmith@carterenggrp.com

TO BE SHOWN ON ES&PC PLAN

PLAN PAGE #	INCLUDED Y/N		
C6.4	Y	1.	THE APPLICABLE EROSION, SEDIMENTATION AND POLLUTION CONTROL PLAN CHECKLIST ESTABLISHED BY THE COMMISSION AS OF JANUARY 1 OF THE YEAR IN WHICH THE LAND-DISTURBING ACTIVITY WAS PERMITTED. (THE COMPLETED CHECKLIST MUST BE SUBMITTED WITH THE ES&PC PLAN OR THE PLAN WILL NOT BE REVIEWED)
C6.1-C6.7	Y	2.	LEVEL II CERTIFICATION NUMBER ISSUED BY THE COMMISSION, SIGNATURE AND SEAL OF THE CERTIFIED DESIGN PROFESSIONAL. (SIGNATURE, SEAL AND LEVEL II NUMBER MUST BE ON EACH SHEET PERTAINING TO ES&PC PLAN OR THE PLAN WILL NOT BE REVIEWED)
N/A	Y	3.	LIMIT OF DISTURBANCE SHALL BE NO GREATER THAN 50 ACRES AT ANY ONE TIME WITHOUT PRIOR WRITTEN AUTHORIZATION FROM THE EPD DISTRICT OFFICE. IF EPD APPROVES THE REQUEST TO DISTURB 50 ACRES OR MORE AT ANY ONE TIME, THE PLAN MUST INCLUDE AT LEAST 4 OF THE BMPS LISTED IN APPENDIX 1 OF THIS CHECKLIST.* (A COPY OF THE WRITTEN APPROVAL BY EPD MUST BE ATTACHED TO THE PLAN FOR THE PLAN TO BE REVIEWED.)
C6.4	Y	4.	THE NAME AND PHONE NUMBER OF THE 24-HOUR LOCAL CONTACT RESPONSIBLE FOR EROSION, SEDIMENTATION AND POLLUTION CONTROLS.
C6.5	Y	5.	PROVIDE THE NAME, ADDRESS AND PHONE NUMBER OF PRIMARY PERMITTEE. NOTE: SUCCESSFUL BIDDER (CONTRACTOR) SHALL BECOME PRIMARY PERMITTEE.
C6.1-C6.3	Y	6.	NOTE TOTAL AND DISTURBED ACREAGE OF THE PROJECT OR PHASE UNDER CONSTRUCTION.
C6.1-C6.3	Y	7.	PROVIDE THE GPS LOCATION OF THE CONSTRUCTION EXIT FOR THE SITE. GIVE THE LATITUDE AND LONGITUDE IN DECIMAL DEGREES.
C6.1-C6.7	Y	8.	INITIAL DATE OF THE PLAN AND THE DATES OF ANY REVISIONS MADE TO THE PLAN INCLUDING THE ENTITY WHO REQUESTED THE REVISIONS.
C6.5	Y	9.	DESCRIPTION OF THE NATURE OF CONSTRUCTION ACTIVITY.
C6.1-C6.3	Y	10.	PROVIDE VICINITY MAP SHOWING SITE'S RELATION TO SURROUNDING AREAS. INCLUDE DESIGNATION OF SPECIFIC PHASE, IF NECESSARY.
C6.5	Y	11.	IDENTIFY THE PROJECT RECEIVING WATERS AND DESCRIBE ALL SENSITIVE ADJACENT AREAS INCLUDING STREAMS, LAKES, RESIDENTIAL AREAS, WETLANDS, ETC. WHICH MAY BE AFFECTED.
C6.5	Y	12.	DESIGN PROFESSIONAL'S CERTIFICATION STATEMENT AND SIGNATURE THAT THE SITE WAS VISITED PRIOR TO DEVELOPMENT OF THE ES&PC PLAN AS STATED ON PAGE 15 OF THE PERMIT.
C6.5	Y	13.	DESIGN PROFESSIONAL'S CERTIFICATION STATEMENT AND SIGNATURE THAT THE PERMITTEE'S ES&PC PLAN PROVIDES FOR AN APPROPRIATE AND COMPREHENSIVE SYSTEM OF BMPS AND SAMPLING TO MEET PERMIT REQUIREMENTS AS STATED ON PAGE 15 OF THE PERMIT.*
C6.5	Y	14.	CLEARLY NOTE THE STATEMENT THAT "THE DESIGN PROFESSIONAL WHO PREPARED THE ES&PC PLAN IS TO INSPECT THE INSTALLATION OF THE INITIAL SEDIMENT STORAGE REQUIREMENTS AND PERIMETER CONTROL BMPS WITHIN 7 DAYS AFTER INSTALLATION."*
C6.5	Y	15.	NON-EXEMPT ACTIVITIES SHALL NOT BE CONDUCTED WITHIN THE 25 OR 50-FOOT UNDISTURBED STREAM BUFFERS AS MEASURED FROM THE POINT OF WRESTED VEGETATION OR WITHIN 25-FEET OF THE COASTAL MARSHLAND BUFFER AS MEASURED FROM THE JURISDICTIONAL DETERMINATION LINE WITHOUT FIRST ACQUIRING THE NECESSARY VARIANCES AND PERMITS.
C6.5	Y	16.	PROVIDE A DESCRIPTION OF ANY BUFFER ENCROACHMENTS AND INDICATE WHETHER A BUFFER VARIANCE IS REQUIRED.
C6.5	Y	17.	CLEARLY NOTE THE STATEMENT THAT "AMENDMENTS/REVISIONS TO THE ES&PC PLAN WHICH HAVE A SIGNIFICANT EFFECT ON BMPS WITH A HYDRAULIC COMPONENT MUST BE CERTIFIED BY THE DESIGN PROFESSIONAL."*
C6.5	Y	18.	CLEARLY NOTE THE STATEMENT THAT "WASTE MATERIALS SHALL NOT BE DISCHARGED TO WATERS OF THE STATE, EXCEPT AS AUTHORIZED BY A SECTION 404 PERMIT."*
C6.5	Y	19.	CLEARLY NOTE STATEMENT THAT "THE ESCAPE OF SEDIMENT FROM THE SITE SHALL BE PREVENTED BY THE INSTALLATION OF EROSION AND SEDIMENT CONTROL MEASURES AND PRACTICES PRIOR TO LAND DISTURBING ACTIVITIES."
C6.5	Y	20.	CLEARLY NOTE STATEMENT THAT "EROSION CONTROL MEASURES WILL BE MAINTAINED AT ALL TIMES. IF FULL IMPLEMENTATION OF THE APPROVED PLAN DOES NOT PROVIDE FOR EFFECTIVE EROSION CONTROL, ADDITIONAL EROSION AND SEDIMENT CONTROL MEASURES SHALL BE IMPLEMENTED TO CONTROL OR TREAT THE SEDIMENT SOURCE."
C6.5	Y	21.	CLEARLY NOTE THE STATEMENT "ANY DISTURBED AREA LEFT EXPOSED FOR A PERIOD GREATER THAN 14 DAYS SHALL BE STABILIZED WITH MULCH OR TEMPORARY SEEDING."
N/A	Y	22.	ANY CONSTRUCTION ACTIVITY WHICH DISCHARGES STORM WATER INTO AN IMPAIRED STREAM SEGMENT, OR WITHIN 1 LINEAR MILE UPSTREAM OF AND WITHIN THE SAME WATERSHED AS, ANY PORTION OF AN BIOTA IMPAIRED STREAM SEGMENT MUST COMPLY WITH PART III. C. OF THE PERMIT. INCLUDE THE COMPLETED APPENDIX 1 LISTING ALL THE BMPS THAT WILL BE USED FOR THOSE AREAS OF THE SITE WHICH DISCHARGE TO THE IMPAIRED STREAM SEGMENT.*
N/A	Y	23.	IF A TMDL IMPLEMENTATION PLAN FOR SEDIMENT HAS BEEN FINALIZED FOR THE IMPAIRED STREAM SEGMENT (IDENTIFIED IN ITEM 21 ABOVE) AT LEAST SIX MONTHS PRIOR TO SUBMITTAL OF NOI, THE ES PLAN MUST ADDRESS ANY SITE-SPECIFIC CONDITIONS OR REQUIREMENTS INCLUDED IN THE TMDL IMPLEMENTATION PLAN.* (SEE PROJECT RECEIVING WATERS NOTE ON C6.5.)
C6.5	Y	24.	BMPS FOR CONCRETE WASHDOWN OF TOOLS, CONCRETE MIXER CHUTES, HOPPERS AND THE REAR OF THE VEHICLES. WASHOUT OF THE DRUM AT THE CONSTRUCTION SITE IS PROHIBITED.*
C6.5	Y	25.	PROVIDE BMPS FOR THE REMEDIATION OF ALL PETROLEUM SPILLS AND LEAKS.
C6.5	Y	26.	DESCRIPTION OF THE MEASURES THAT WILL BE INSTALLED DURING THE CONSTRUCTION PROCESS TO CONTROL POLLUTANTS IN STORM WATER THAT WILL OCCUR AFTER CONSTRUCTION OPERATIONS HAVE BEEN COMPLETED.*
C6.5	Y	27.	DESCRIPTION OF PRACTICES TO PROVIDE COVER FOR BUILDING MATERIALS AND BUILDING PRODUCTS ON SITE.*
C6.5	Y	28.	DESCRIPTION OF THE PRACTICES THAT WILL BE USED TO REDUCE THE POLLUTANTS IN STORM WATER DISCHARGES.*
C6.5	Y	29.	DESCRIPTION AND CHART OR TIMELINE OF THE INTENDED SEQUENCE OF MAJOR ACTIVITIES WHICH DISTURB SOILS FOR THE MAJOR PORTIONS OF THE SITE (I.E., INITIAL PERIMETER AND SEDIMENT STORAGE BMPS, CLEARING AND GRUBBING ACTIVITIES, EXCAVATION ACTIVITIES, UTILITY ACTIVITIES, TEMPORARY AND FINAL STABILIZATION).
C6.4	Y	30.	PROVIDE COMPLETE REQUIREMENTS OF INSPECTIONS AND RECORD KEEPING BY THE PRIMARY PERMITTEE.*
C6.4	Y	31.	PROVIDE COMPLETE REQUIREMENTS OF SAMPLING FREQUENCY AND REPORTING OF SAMPLING RESULTS.*
C6.4	Y	32.	PROVIDE COMPLETE DETAILS FOR RETENTION OF RECORDS AS PER PART IV.F. OF THE PERMIT.*
C6.4	Y	33.	DESCRIPTION OF ANALYTICAL METHODS TO BE USED TO COLLECT AND ANALYZE THE SAMPLES FROM EACH LOCATION.*
C6.4	Y	34.	APPENDIX B RATIONALE FOR NTU VALUES AT ALL OUTFALL SAMPLING POINTS WHERE APPLICABLE.*
C6.1-C6.3	Y	35.	DELINEATE ALL SAMPLING LOCATIONS, PERENNIAL AND INTERMITTENT STREAMS AND OTHER WATER BODIES INTO WHICH STORM WATER IS DISCHARGED.*
C6.5	Y	36.	A DESCRIPTION OF APPROPRIATE CONTROLS AND MEASURES THAT WILL BE IMPLEMENTED AT THE CONSTRUCTION SITE INCLUDING: (1) INITIAL SEDIMENT STORAGE REQUIREMENTS AND PERIMETER CONTROL BMPS, (2) INTERMEDIATE GRADING AND DRAINAGE BMPS, AND (3) FINAL BMPS. FOR CONSTRUCTION SITES WHERE THERE WILL BE NO MASS GRADING AND THE INITIAL PERIMETER CONTROL BMPS, INTERMEDIATE GRADING AND DRAINAGE BMPS, AND FINAL BMPS ARE THE SAME, THE PLAN MAY COMBINE ALL OF THE BMPS INTO A SINGLE PHASE.
C6.1-C6.3	Y	37.	GRAPHIC SCALE AND NORTH ARROW.
C6.1-C6.3	Y	38.	EXISTING AND PROPOSED CONTOUR LINES WITH CONTOUR LINES DRAWN AT AN INTERVAL IN ACCORDANCE WITH THE FOLLOWING:

MAP SCALE	GROUND SLOPE	CONTOUR INTERVALS, FT.
1 INCH=100FT OR LARGER SCALE	FLAT 0-2% ROLLING 2-8% STEEP 8%+	0.5-1 1 OR 2 2,5 OR 10

PLAN PAGE #	INCLUDED Y/N		
N/A	Y	39.	USE OF ALTERNATIVE BMPS WHOSE PERFORMANCE HAS BEEN DOCUMENTED TO BE EQUIVALENT TO OR SUPERIOR TO CONVENTIONAL BMPS AS CERTIFIED BY A DESIGN PROFESSIONAL (UNLESS DISAPPROVED BY EPD OR THE GEORGIA SOIL AND WATER CONSERVATION COMMISSION). PLEASE REFER TO THE ALTERNATIVE BMP GUIDANCE DOCUMENT FOUND AT WWW.GASWCC.ORG.
N/A	Y	40.	USE OF ALTERNATIVE BMP FOR APPLICATION TO THE EQUIVALENT BMP LIST. PLEASE REFER TO APPENDIX A-2 OF THE MANUAL FOR EROSION AND SEDIMENT CONTROL IN GEORGIA 2016 EDITION.
C6.1-C6.3	Y	41.	DELINEATION OF THE APPLICABLE 25-FOOT OR 50-FOOT UNDISTURBED BUFFERS ADJACENT TO STATE WATERS AND ANY ADDITIONAL BUFFERS REQUIRED BY THE LOCAL ISSUING AUTHORITY. CLEARLY NOTE AND DELINEATE ALL AREAS OF IMPACT.
C6.5	Y	42.	DELINEATION OF ON-SITE WETLANDS AND ALL STATE WATERS LOCATED ON AND WITHIN 200 FEET OF THE PROJECT SITE.
HYDRO	Y	43.	DELINEATION AND ACREAGE OF CONTRIBUTING DRAINAGE BASINS ON THE PROJECT SITE.
HYDRO	Y	44.	PROVIDE HYDROLOGY STUDY AND MAPS OF DRAINAGE BASINS FOR BOTH THE PRE- AND POST-DEVELOPED CONDITIONS.*
C6.3	Y	45.	AN ESTIMATE OF THE RUNOFF COEFFICIENT OR PEAK DISCHARGE FLOW OF THE SITE PRIOR TO AND AFTER CONSTRUCTION ACTIVITIES ARE COMPLETED.
C6.1-C6.3	Y	46.	STORM-DRAIN PIPE AND WEIR VELOCITIES WITH APPROPRIATE OUTLET PROTECTION TO ACCOMMODATE DISCHARGES WITHOUT EROSION. IDENTIFY/DELINEATE ALL STORM WATER DISCHARGE POINTS.
C6.1-C6.3	Y	47.	SOIL SERIES FOR THE PROJECT SITE AND THEIR DELINEATION.
C6.1-C6.3	Y	48.	THE LIMITS OF DISTURBANCE FOR EACH PHASE OF CONSTRUCTION.
C6.2	Y	49.	PROVIDE A MINIMUM OF 67 CUBIC YARDS OF SEDIMENT STORAGE PER ACRE DRAINED USING A TEMPORARY SEDIMENT BASIN, RETROFITTED DETENTION POND, AND/OR EXCAVATED INLET SEDIMENT TRAPS FOR EACH COMMON DRAINAGE LOCATION. SEDIMENT STORAGE VOLUME MUST BE IN PLACE PRIOR TO AND DURING ALL LAND DISTURBANCE ACTIVITIES UNTIL FINAL STABILIZATION OF THE SITE HAS BEEN ACHIEVED. A WRITTEN JUSTIFICATION EXPLAINING THE DECISION TO USE EQUIVALENT CONTROLS WHEN A SEDIMENT BASIN IS NOT ATTAINABLE MUST BE INCLUDED IN THE PLAN FOR EACH COMMON DRAINAGE LOCATION IN WHICH A SEDIMENT BASIN IS NOT PROVIDED. A WRITTEN JUSTIFICATION AS TO WHY 67 CUBIC YARDS OF STORAGE IS NOT ATTAINABLE MUST ALSO BE GIVEN. WORKSHEETS FROM THE MANUAL MUST BE INCLUDED FOR STRUCTURAL BMPS AND ALL CALCULATIONS USED BY THE DESIGN PROFESSIONAL TO OBTAIN THE REQUIRED SEDIMENT STORAGE WHEN USING EQUIVALENT CONTROLS. WHEN DISCHARGING FROM SEDIMENT BASINS AND IMPOUNDMENTS, PERMITTEES ARE REQUIRED TO UTILIZE OUTLET STRUCTURES THAT WITHDRAW WATER FROM THE SURFACE, UNLESS INFEASIBLE. IF OUTLET STRUCTURES THAT WITHDRAW WATER FROM THE SURFACE ARE NOT FEASIBLE, A WRITTEN JUSTIFICATION EXPLAINING THIS DECISION MUST BE INCLUDED IN THE PLAN.
C6.1-C6.3	Y	50.	LOCATION OF BEST MANAGEMENT PRACTICES THAT ARE CONSISTENT WITH AND NO LESS STRINGENT THAN THE MANUAL FOR EROSION AND SEDIMENT CONTROL IN GEORGIA. USE UNIFORM CODING SYMBOLS FROM THE MANUAL, CHAPTER 6, WITH LEGEND.
C6.6-C6.7	Y	51.	PROVIDE DETAILED DRAWINGS FOR ALL STRUCTURAL PRACTICES. SPECIFICATIONS MUST, AT A MINIMUM, MEET THE GUIDELINES SET FORTH IN THE MANUAL FOR EROSION AND SEDIMENT CONTROL IN GEORGIA.
C6.5	Y	52.	PROVIDE VEGETATIVE PLAN, NOTING ALL TEMPORARY AND PERMANENT VEGETATIVE PRACTICES. INCLUDE SPECIES, PLANTING DATES AND SEEDING, FERTILIZER, LIME AND MULCHING RATES. VEGETATIVE PLAN SHALL BE SITE SPECIFIC FOR APPROPRIATE TIME OF YEAR THAT SEEDING WILL TAKE PLACE AND FOR THE APPROPRIATE GEOGRAPHIC REGION OF GEORGIA.

*IF USING THIS CHECKLIST FOR A PROJECT THAT IS LESS THAN 1 ACRE AND NOT PART OF A COMMON DEVELOPMENT BUT WITHIN 200 FT OF A PERENNIAL STREAM THE * CHECKLIST ITEMS WOULD BE N/A.

EFFECTIVE: JANUARY 1, 2019

CARTER Engineering Group
6310 Peake Road, Suite 200
Macon, GA 31210
478-219-2600

THIS DRAWING IS AN INSTRUMENT OF SERVICE AND SHALL REMAIN THE PROPERTY OF THE ENGINEER, AND SHALL NOT BE REPRODUCED, PUBLISHED OR USED IN ANY WAY WITHOUT THE CONSENT OF THE ENGINEER. THIS DRAWING SHALL NOT BE SCALED. © COPYRIGHT 2019 CARTER ENGINEERING GROUP, LLC.

GEORGIA 811 Utilities Protection Center, Inc. Know what's below. Call before you dig.

STAMP:
GEORGIA REGISTERED No. 18064 PROFESSIONAL ENGINEER DON L. CARTER
LEVEL II CERTIFIED DESIGN PROFESSIONAL # 2061
ISSUED: 11/2/2017 EXPIRES: 11/2/2020

RELEASE DATES:

REV #	DATE	DESCRIPTION

CLIENT:
BIBB COUNTY SCHOOL DISTRICT
MACON-BIBB COUNTY, GA

PROJECT:
HARTLEY ELEMENTARY SCHOOL PARKING IMPROVEMENTS

2230 ANTHONY ROAD
MACON-BIBB COUNTY, GA 31204

DRAWN BY:	CHECKED BY:
CADD	DLC
PROJECT NUMBER:	DATE:
B7600.017	03/18/2019

GRAPHIC SCALE:
SCALE: AS SHOWN

DRAWING TITLE:
NPDES COMPREHENSIVE MONITORING PROGRAM NOTES

DRAWING NUMBER:
C6.4

P:\B7600 - BIBB COUNTY SCHOOL DISTRICT\B7600.017 Hartley Elementary School Parking Improvements\CADD\B7600.017 Details.dwg, C6.4 NPDES, 3/26/2019 6:59:32 PM, mroberts, DWG To PDF.pc3, ARCH full bleed E1 (30.00 x 42.00 Inches), 1:1
Plotted:3/26/2019 6:59:32 PM By:Mary Ann Roberts Paper Size:11x17 Device Name:Color C5250 UFR II.pc3 Style:CS 253 Plot.ctb Scale:1:10
P:\B7600 - BIBB COUNTY SCHOOL DISTRICT\B7600.017 Hartley Elementary School Parking Improvements\CADD\B7600.017 Details.dwg, C6.4 NPDES, Last Save:Mar 21,2019 5:08:54pm By:mroberts

P:\B7600 - BIBB COUNTY SCHOOL DISTRICT\B7600.017 Hartley Elementary School Parking Improvements\CADD\B7600.017 Details.dwg, C6.5 ErNotes, 3/26/2019 6:59:41 PM, mroberts, DWG To PDF.pc3, ARCH full bleed E1 (30.00 x 42.00 Inches), 1:1
Plotted:3/26/2019 6:59:41 PM By:Mary Ann Roberts Paper Size:11x17 Device Name:Color C5250 UFR II.pc3 Style:CS 253 Plot.ctb Scale:1:10
P:\B7600 - BIBB COUNTY SCHOOL DISTRICT\B7600.017 Hartley Elementary School Parking Improvements\CADD\B7600.017 Details.dwg, C6.5 ErNotes, Last Save:Mar 21,2019 5:08:54pm By:mroberts

PRIMARY PERMITTEE:

CONTACT PERSON

COMPANY

ADDRESS

TELEPHONE

EMAIL

(THE CONTRACTOR WILL SIGN THESE DRAWINGS AS THE PRIMARY PERMITTEE AT SAME TIME N.P.D.E.S. NOTICE OF INTENT IS FILED.)

CERTIFICATION STATEMENTS:

"I CERTIFY UNDER PENALTY OF LAW THAT THIS PLAN WAS PREPARED AFTER A SITE VISIT TO THE LOCATIONS DESCRIBED HEREIN BY MYSELF OR MY AUTHORIZED AGENT, UNDER MY SUPERVISION."

"I CERTIFY THAT THE PERMITTEE'S EROSION, SEDIMENTATION AND POLLUTION CONTROL PLAN PROVIDES FOR AN APPROPRIATE AND COMPREHENSIVE SYSTEM OF BEST MANAGEMENT PRACTICES REQUIRED BY THE GEORGIA WATER QUALITY CONTROL ACT AND THE DOCUMENT "MANUAL FOR EROSION AND SEDIMENT CONTROL IN GEORGIA," (MANUAL) PUBLISHED BY THE STATE SOIL AND WATER CONSERVATION COMMISSION AS OF JANUARY 1 OF THE YEAR IN WHICH THE LAND-DISTURBING ACTIVITY WAS PERMITTED, PROVIDES FOR THE SAMPLING OF THE RECEIVING WATER(S) OR THE SAMPLING OF THE STORM WATER OUTFALLS AND THAT THE DESIGNED SYSTEM OF BEST MANAGEMENT PRACTICES AND SAMPLING METHODS IS EXPECTED TO MEET THE REQUIREMENTS CONTAINED IN THE GENERAL NPDES PERMIT NO. GAR 100001."

"I UNDERSTAND THAT AS THE PLAN PREPARER, RETAINED BY THE PRIMARY PERMITTEE, I MUST VISIT THE SITE WITHIN 7 DAYS AFTER INSTALLATION ONCE THE CONSTRUCTION ACTIVITIES COMMENCE, TO INSPECT THE INSTALLATION OF THE INITIAL SEDIMENT STORAGE REQUIREMENTS AND PERIMETER CONTROL BMP'S."

"THE OWNER/DEVELOPER AND ENGINEER HAVE REVIEWED THE APPROPRIATE LOCAL, STATE AND FEDERAL REGULATIONS REGARDING DEVELOPMENT ACTIVITIES ADJACENT TO FLOODPLAINS, STATE WATERS AND WETLANDS AND HAVE DETERMINED THAT THIS DEVELOPMENT PLAN SATISFIES THE STANDARDS PRESENTED IN ALL APPLICABLE REGULATIONS."

"I CERTIFY THAT GEORGIA'S 2014 305(b)/303(d) LIST DOCUMENTS HAVE BEEN CONSULTED TO DETERMINE IF SITE DISCHARGES TO AN IMPAIRED STREAM SEGMENT OR WITHIN 1 MILE UPSTREAM OF A BIOTA IMPAIRED STREAM SEGMENT."

03/18/2019

DON L. CARTER, P.E. LEVEL II CERTIFIED
DESIGN PROFESSIONAL

CERTIFICATION NUMBER: 0000002061
ISSUED: 11/2/2017 EXPIRES: 11/2/2020

MAINTENANCE STATEMENT:

EROSION CONTROL MEASURES WILL BE MAINTAINED AT ALL TIMES. IF FULL IMPLEMENTATION OF THE APPROVED PLAN DOES NOT PROVIDE FOR EFFECTIVE EROSION CONTROL, ADDITIONAL EROSION AND SEDIMENT CONTROL MEASURES SHALL BE IMPLEMENTED TO CONTROL OR TREAT THE SEDIMENT SOURCE.

14 DAY DISTURBANCE NOTE:

ANY DISTURBED AREA LEFT EXPOSED FOR A PERIOD GREATER THAN 14 DAYS SHALL BE STABILIZED WITH MULCH OR TEMPORARY SEEDING.

EROSION CONTROL NOTE:

THE ESCAPE OF SEDIMENT FROM THE SITE SHALL BE PREVENTED BY THE INSTALLATION OF EROSION CONTROL MEASURES AND PRACTICES PRIOR TO LAND DISTURBING ACTIVITIES.

FLOODPLAIN NOTE:

NO PORTION OF THE PROPERTY SHOWN ON THE SURVEY LIES WITHIN A FLOOD ZONE AREA, AS DESCRIBED ON THE FLOOD INSURANCE RATE MAP 13021C0133G, DATED JUNE 7, 2017, FOR MACON-BIBB COUNTY.

NO DISTURBANCE OF THE FLOODPLAIN IS ANTICIPATED.

THE PROPOSED PROJECT IS NOT LOCATED IN A 100-YEAR 0R 500-YEAR FLOOD ZONE AREA.

WETLANDS NOTE:

NO JURISDICTIONAL WETLANDS ARE LOCATED ON OR WITHIN 200 FEET OF THE PROJECT AREA.

STATE WATERS NOTE:

ALL STATE WATERS AND STATE WATERS BUFFERS LOCATED ON OR WITHIN 200 FEET OF THE PROJECT AREA HAVE BEEN DELINEATED AND SHOWN ON THE CONSTRUCTION PLANS.

STATE WATERS BUFFER REQUIREMENTS:

-ALL STATE WATERS BUFFERS AND UNDISTURBED BUFFERS SHALL BE FIELD LOCATED, STAKED AND FLAGGED OR MARKED WITH "TENZAL" OR SIMILAR TYPE FENCING AND SHALL BE SUBMITTED TO THE COUNTY FOR APPROVAL PRIOR TO GRADING.

-EXISTING VEGETATION SHALL BE PRESERVED WITHIN ALL BUFFER AREAS.

-ANY CONTEMPLATED DISTURBANCES SHALL FIRST BE BROUGHT TO THE ATTENTION OF THE MACON-BIBB COUNTY DEPARTMENT OF PLANNING & DEVELOPMENT AND FORMAL APPROVAL SECURED PRIOR TO INITIATING ACTIVITY WITHIN THE REQUIRED BUFFER AREAS.

-NO BUFFER ENCROACHMENTS OR BUFFER VARIANCES ARE NECESSARY FOR THIS PROJECT.

-NON-EXEMPT ACTIVITIES SHALL NOT BE CONDUCTED WITHIN THE 25 OR 50-FOOT UNDISTURBED STREAM BUFFERS AS MEASURED FROM THE POINT OF WRESTED VEGETATION OR WITHIN 25-FEET OF THE COASTAL MARSHLAND BUFFER AS MEASURED FROM THE JURISDICTIONAL DETERMINATION LINE WITHOUT FIRST ACQUIRING THE NECESSARY VARIANCES AND PERMITS.

PROJECT RECEIVING WATERS:

INITIAL PROJECT RECEIVING WATERS ARE THE CITY MUNICIPAL STORM SYSTEM THAT DISCHARGES INTO AN UNNAMED TRIBUTARY OF ROCKY CREEK. THE PROJECT SITE IS GREATER THAN 1 MILE UPSTREAM FROM THE CONFLUENCE WITH ROCKY CREEK (LISTED IN THE 2012 303(b) AS NOT SUPPORTING DESIGNATED AS VIOLATING USES 4a/UR.

ADJACENT PROPERTIES:

ADJACENT PROPERTIES ARE A COMBINATION OF COMMERCIAL, RECREATIONAL, INSTITUTIONAL AND RESIDENTIAL USES. NO ADVERSE IMPACTS TO ADJACENT PROPERTIES WILL RESULT FROM DEVELOPMENT OF THIS PROJECT.

EROSION NOTES:

1. EXISTING LAND USE: ELEMENTARY SCHOOL CAMPUS WITH DRIVES, PARKING, AND RECREATIONAL FACILITIES.

   PROPOSED PROJECT: REPAIR AND REPLACEMENT OF PAVEMENTS WITH ADDITIONAL IMPROVEMENTS TO STORM DRAINAGE.

2. OWNER/DEVELOPER: BIBB COUNTY BOARD OF EDUCATION
   JASON DANIEL, EXECUTIVE DIRECTOR OF CAPITAL PROGRAMS
   484 MULBERRY STREET
   MACON, GEORGIA 31201
   TEL: (478) 765-8533
   FAX: (478) 765-8549

   24HR CONTACT PERSON: JASON DANIEL
   EXECUTIVE DIRECTOR OF CAPITAL PROGRAMS
   TEL: (478) 765-8533
   FAX: (478) 765-8549

   FACILITY CONTACT: JASON DANIEL
   EXECUTIVE DIRECTOR OF CAPITAL PROGRAMS
   TEL: (478) 765-8533
   FAX: (478) 765-8549

3. PROJECT ACREAGE: 14.63 ACRES
4. DISTURBED AREA: 2.26 ACRES
5. CRITICAL AREAS ONSITE: POTENTIAL ONSITE EROSION AND SEDIMENT PROBLEMS INCLUDE FILL SLOPES AND STORMWATER DISCHARGE FROM STORM SEWERS. SEDIMENT BARRIER SILT FENCING WILL BE PLACED ALONG THE PERIMETER OF THE SITE AT CRITICAL LOCATIONS. BERMS, SWALES AND DIVERSION DITCHES WILL BE EMPLOYED TO PREVENT RUNOFF FROM WASHING OVER SLOPES. RIP RAP STONE AND RIP RAP SEDIMENT BARRIERS WILL BE USED AT STORM DRAIN OUTLETS AND ALONG DITCHES. A FLOATING SKIMMER WILL BE UTILIZED TO PREVENT SILT FROM BEING DISCHARGED FROM THE SEDIMENT/DETENTION BASINS. CONSTRUCTION ACTIVITIES AT THIS SITE SHOULD HAVE NO ADVERSE EFFECTS TO DOWNSTREAM PROPERTIES.
6. AMENDMENTS / REVISIONS TO THE ES&PC PLAN WHICH HAVE A SIGNIFICANT EFFECT ON BMP's WITH A HYDRAULIC COMPONENT MUST BE CERTIFIED BY THE DESIGN PROFESSIONAL.
7. WASTE MATERIALS SHALL NOT BE DISCHARGED TO WATERS OF THE STATE, EXCEPT AS AUTHORIZED BY A SECTION 404 PERMIT.

DESIGN PROFESSIONAL 7-DAY VISIT CERTIFICATION:

DATE OF INSPECTION ____________

I CERTIFY THE SITE WAS IN COMPLIANCE WITH THE ES&PC PLAN ON THE DATE OF INSPECTION.

DON L. CARTER, P.E. 0000002061
GSWCC LEVEL II DESIGN PROFESSIONAL CERTIFICATION #

INSPECTION REVEALED THE FOLLOWING DISCREPANCIES FROM THE ES&PC PLAN:

THESE DISCREPANCIES MUST BE ADDRESSED IMMEDIATELY AND A RE-INSPECTION SCHEDULED. WORK SHALL NOT PROCEED ON THE SITE UNTIL DESIGN PROFESSIONAL CERTIFICATION IS OBTAINED.

THE DESIGN PROFESSIONAL WHO PREPARED THE ES & PC PLAN IS TO INSPECT THE INSTALLATION OF THE INITIAL SEDIMENT STORAGE REQUIREMENTS AND PERIMETER CONTROL BMP's WITHIN 7 DAYS AFTER INSTALLATION.

INITIAL PHASE EROSION CONTROL NOTES:

THE CONTRACTOR SHALL OBSERVE THE PROJECT SEQUENCE SHOWN ON THE PLANS. THE CONTRACTOR SHALL MAINTAIN CAREFUL SCHEDULING AND PERFORMANCE TO ENSURE THAT LAND AREA STRIPPED OF ITS NATURAL COVER IS EXPOSED ONLY IN MANAGEABLE QUANTITIES.

THE ESCAPE OF SEDIMENT FROM THE SITE SHALL BE PREVENTED BY THE INSTALLATION OF EROSION AND SEDIMENT CONTROL MEASURES AND PRACTICES PRIOR TO LAND DISTURBING ACTIVITIES.

IMMEDIATELY AFTER THE ESTABLISHMENT OF CONSTRUCTION ENTRANCE/EXITS, ALL PERIMETER EROSION CONTROL AND STORMWATER MANAGEMENT DEVICES SHALL BE INSTALLED AS SHOWN ON THE CLEARING PHASE EROSION CONTROL PLAN.

TYPE "S" SILT FENCE SHOULD BE INSTALLED AT THE PERIMETER OF THE DISTURBED AREA AS SHOWN ON THE PLAN. THE SILT FENCE SHOULD BE PLACED IN ACCORDANCE WITH THE MANUAL FOR EROSION CONTROL IN GEORGIA, TABLE 6-20.2. THE SILT FENCE SHOULD BE KEPT ERECT AT ALL TIMES AND REPAIRED WHEN REQUESTED BY THE SITE INSPECTOR OR THE PROJECT DESIGN PROFESSIONAL OF RECORD. SILT SHOULD BE REMOVED WHEN ACCUMULATION REACHES ½ HEIGHT OF THE BARRIER. THE PERIMETER SILT FENCE SHOULD BE INSPECTED DAILY FOR ANY FAILURES. ANY FAILURES OF SAID FENCING SHOULD BE REPAIRED IMMEDIATELY.

AFTER INSTALLATION OF INITIAL EROSION CONTROL MEASURES THE SITE CONTRACTOR SHALL SCHEDULE AN INSPECTION BY THE PROJECT DESIGN PROFESSIONAL. NO OTHER CONSTRUCTION ACTIVITY SHALL OCCUR UNTIL THE PROJECT DESIGN PROFESSIONAL APPROVES THE INSTALLATION OF SAID EROSION CONTROL MEASURES. IF UNFORESEEN CONDITIONS EXIST IN THE FIELD THAT WARRANT ADDITIONAL EROSION CONTROL MEASURES, THE CONTRACTOR MUST CONSTRUCT ANY ADDITIONAL EROSION CONTROL DEVICES DEEMED NECESSARY BY THE SITE INSPECTION.

AFTER APPROVAL OF THE INITIAL EROSION CONTROL INSTALLATION, THE CONTRACTOR MAY PROCEED WITH CLEARING AND GRUBBING ACTIVITIES. THE CONTRACTOR SHALL CONSTRUCT TEMPORARY SEDIMENT PONDS AND DIVERSION DIKES AS SHOWN ON THE PLAN TO CONTROL EROSION AND STORMWATER RUNOFF.

THE CONTRACTOR CAN UTILIZE MULCHED CLEARED TREES AS BARRIER BRUSH SEDIMENT CONTROL IN AREAS SHOWN ON PLAN WHERE INITIAL GRADING ACTIVITIES WILL NOT OCCUR.

NO BURN PITS SHALL BE PERMITTED ON THE CONSTRUCTION SITE WITHOUT WRITTEN PERMISSION BY THE OWNER AND THE GOVERNING AUTHORITIES. IF BURNING IS NOT PERMITTED, THE CONTRACTOR SHALL BE RESPONSIBLE FOR REMOVING FROM THE SITE ALL WASTE MATERIALS AND MATERIALS FROM CLEARING AND GRUBBING OPERATIONS.

NO GRADING SHALL TAKE PLACE UNTIL SILT BARRIER INSTALLATION AND SEDIMENT PONDS ARE CONSTRUCTED AS SHOWN ON THE INITIAL PHASE EROSION CONTROL PLAN.

NO BURY PITS SHALL BE PERMITTED ON SITE.

INTERMEDIATE PHASE EROSION CONTROL NOTES:

EROSION CONTROL DEVICES SHALL BE INSTALLED IMMEDIATELY AFTER GROUND DISTURBANCE OCCURS. THE LOCATION OF SOME OF THE EROSION CONTROL DEVICES MAY HAVE TO BE ALTERED FROM THAT SHOWN ON THE APPROVED PLANS IF DRAINAGE PATTERNS DURING CONSTRUCTION ARE DIFFERENT FROM THE PROPOSED DRAINAGE PATTERNS. IT IS THE CONTRACTOR'S RESPONSIBILITY TO ACCOMPLISH EROSION CONTROL FOR ALL DRAINAGE PATTERNS CREATED AT VARIOUS STAGES DURING CONSTRUCTION. ANY DIFFICULTY IN CONTROLLING EROSION DURING ANY PHASE OF CONSTRUCTION SHALL BE REPORTED TO THE DESIGN PROFESSIONAL IMMEDIATELY.

EARTHWORK OPERATIONS IN THE VICINITY OF STREAM BUFFERS SHALL BE CAREFULLY CONTROLLED TO AVOID ENCROACHMENT INTO THE BUFFER AREAS.

AFTER PRELIMINARY GRADING ACTIVITIES, THE CONTRACTOR SHALL CONSTRUCT TEMPORARY SEDIMENT BASINS AND DIVERSION DIKES AS SHOWN ON THE PLAN. THE CONTRACTOR SHALL MAINTAIN THE SEDIMENT POND UNTIL PERMANENT GROUND COVER IS ESTABLISHED. SEDIMENT SHALL BE CLEANED OUT OF THE PONDS WHEN IT REACHES THE 1/3 DEPTH OF BASIN. SEE SEPARATE DETAILS FOR ADDITIONAL INFORMATION.

CUT AND FILL SLOPES ARE NOT TO EXCEED "2.5H:IV"

ALL SLOPES STEEPER THAN 2.5:1 AND WITH A HEIGHT OF TEN FEET OR GREATER, AND CUTS AND FILLS WITHIN STREAM BUFFERS, SHALL BE STABILIZED WITH APPROPRIATE EROSION CONTROL MATTING OR BLANKETS. SEE SEPARATE DETAILS FOR ADDITIONAL INFORMATION.

TYPE "NS" SILT FENCE SHALL BE PLACED AT THE TOE OF ALL DIRT STOCK PILE AREAS. SEE SEPARATE DETAILS FOR ADDITIONAL INFORMATION.

INLET SEDIMENT PROTECTION MEASURES SHALL BE INSTALLED ON ALL STORM STRUCTURES AS THEY ARE CONSTRUCTED. SEE PLAN VIEW FOR SPECIFIC TYPE AND SEPARATE DETAILS FOR ADDITIONAL INFORMATION ON TYPE OF INLET PROTECTION SPECIFIED.

SEDIMENT SHALL NOT BE WASHED INTO INLETS. IT SHALL BE REMOVED FROM THE SEDIMENT TRAPS AND DISPOSED AND STABILIZED SO IT WILL NOT ENTER THE INLETS.

STORM DRAIN OUTLET PROTECTION SHALL BE PLACED AT ALL OUTLET HEADWALLS AS SOON AS THE HEADWALL IS CONSTRUCTED. SEE SEPARATE DETAILS FOR ADDITIONAL INFORMATION.

ALL GRADED AREAS SHALL BE APPLIED WITH VEGETATIVE COVER AS SOON AS FINAL GRADE IS ACHIEVED.

FINAL PHASE EROSION CONTROL NOTES:

THE CONTRACTOR SHALL MAINTAIN ALL SEDIMENT PONDS AND EROSION CONTROL MEASURES UNTIL PERMANENT GROUND COVER IS ESTABLISHED. SEDIMENT SHALL BE CLEANED OUT OF THE PONDS WHEN IT REACHES THE HALF WAY POINT ON THE RISER.

AFTER CURBING, GRADED AGGREGATE BASE, AND PAVEMENT HAS BEEN INSTALLED, ALL INLET SEDIMENT TRAPS ON CATCH BASINS AND CURB INLETS SHALL BE REMOVED AND REPLACED WITH CURB FILTER INLET PROTECTION. SEE SEPARATE DETAIL FOR ADDITIONAL INFORMATION.

ALL ROADWAY SHOULDERS SHALL BE APPLIED WITH VEGETATIVE COVER AS SOON AS FINAL GRADE IS ACHIEVED BEHIND CURBS.

UPON COMPLETION OF THE PROJECT AND RECEIPT OF CERTIFICATE OF OCCUPANCY, THE CONTRACTOR SHALL REMOVE ALL TEMPORARY EROSION CONTROL MEASURES (SILT FENCING, MULCH BARRIERS, TEMPORARY PIPING AND STRUCTURES, CONSTRUCTION EXIT PADS, TEMPORARY SEDIMENT TRAPS, ETC.) AND DISPOSE OF THEM UNLESS OTHERWISE NOTED ON PLANS.

APPROX. STARTING DATE: MAY 15, 2019
APPROX. COMPLETION DATE: AUGUST 16, 2019

EROSION CONTROL PHASE	ITEM	DESCRIPTION	MONTHS OF CONSTRUCTION ACTIVITY 1	2	3
INITIAL PHASE	1	SILT BARRIER INSTALLATION			
	2	CLEARING AND GRUBBING			
	3	SEDIMENT STORAGE AREAS			
INTERMEDIATE PHASE	4	GRADING			
	5	STORM DRAINAGE			
	6	TEMPORARY GRASSING			
FINAL PHASE	7	CURB AND GUTTER			
	8	BASE AND PAVING			
	9	FINAL GRASSING & REMOVAL OF TEMPORARY STRUCTURES			
ALL PHASES	10	MAINTAIN SOIL AND EROSION CONTROL MEASURES			

NOTES: STARTING & COMPLETION DATES ARE APPROXIMATE AND ARE NOT INTENDED TO BE CONTRACTUAL.

THE INSTALLATION OF SOIL EROSION CONTROL MEASURES & PRACTICES SHALL BE INSTALLED PRIOR TO LAND-DISTURBING ACTIVITIES.

SOIL DATA

NAME	SYMBOL	DEPTH FROM SURFACE (inches)	USDA TEXTURE	PERMEABILITY (in./hr.)	AVAIL. WATER CAPACITY (in./in. of soil)
VAUCLUSE	VuC,VuD	0-8 8-23 23-60	LOAMY SAND SANDY CLAY LOAM, SANDY LOAM SANDY CLAY LOAM, SANDY LOAM, SANDY CLAY	6.0-20 0.6-6.0 0.06-0.2	0.04-0.08 0.10-0.15 0.05-0.08

EROSION & SEDIMENTATION, & POLLUTION CONTROL NOTES:

1. SEDIMENT AND EROSION CONTROL MEASURES SHALL BE INSTALLED AND MAINTAINED IN ACCORDANCE WITH THE PLANS AND SPECIFICATIONS, AND LOCAL AND STATE REQUIREMENTS AND SPECIFICATIONS MUST MEET, AT A MINIMUM, GUIDELINES SET FORTH IN THE "MANUAL FOR EROSION AND SEDIMENT CONTROL IN GEORGIA." FAILURE TO INSTALL, OPERATE, OR MAINTAIN ALL EROSION CONTROL MEASURES CAN RESULT IN CONSTRUCTION BEING HALTED ON THE JOB UNTIL SUCH MEASURES ARE CORRECTED.
2. EROSION CONTROL MEASURES WILL BE MAINTAINED AT ALL TIMES. IF FULL IMPLEMENTATION OF THE APPROVED PLAN DOES NOT PROVIDE FOR EFFECTIVE EROSION CONTROL, ADDITIONAL EROSION AND SEDIMENT CONTROL MEASURES SHALL BE IMPLEMENTED TO CONTROL OR TREAT THE SEDIMENT SOURCE AS DIRECTED BY THE ON SITE INSPECTOR OR THE CIVIL ENGINEER.
3. EACH DAY WHEN ANY TYPE OF CONSTRUCTION ACTIVITY HAS TAKEN PLACE, CERTIFIED PERSONNEL SHALL INSPECT (A) ALL AREAS WHERE PETROLEUM PRODUCTS ARE STORED, USED OR HANDLED AND (B) ALL LOCATIONS WHERE VEHICLES ENTER OR EXIT THE SITE.
4. A SITE INSPECTION SHALL BE CONDUCTED WITHIN 24 HOURS OF THE END OF ANY RAINFALL EVENT THAT IS GREATER THAN OR EQUAL TO 0.5-IN., AND AT LEAST, EVERY SEVEN (7) DAYS. EACH DEVICE IS TO BE MAINTAINED OF REPLACED IF SEDIMENT ACCUMULATION HAS REACHED ON HALF THE CAPACITY OF THE DEVICE. ADDITIONAL DEVICES MUST BE INSTALLED IF NEW CHANNELS HAVE DEVELOPED.
5. ANY DEFICIENCIES IDENTIFIED DURING THE INSPECTION OF BMP's SHALL BE CORRECTED WITHIN SEVEN (7) DAYS OF THE INSPECTION.
6. EACH DAY THERE IS A FAILURE TO PROPERLY INSTALL AND MAINTAIN ES&PC BMP's CONSTITUTES A VIOLATION OF THE NPDES PERMIT. A VIOLATION OF THE TURBIDITY LIMITS FOR RECEIVING STREAMS DEFINED BY THE NPDES PERMIT SHALL CONSTITUTE A SECOND VIOLATION OF THE PERMIT.
7. PRIOR TO COMMENCING LAND DISTURBANCE ACTIVITY, THE LIMITS OF LAND DISTURBANCE SHALL BE CLEARLY AND ACCURATELY DEMARCATED WITH STAKES, RIBBONS, OR OTHER APPROPRIATE MEANS. THE LOCATION AND EXTENT OF ALL AUTHORIZED LAND DISTURBANCE ACTIVITY SHALL BE DEMARCATED FOR THE DURATION OF THE CONSTRUCTION ACTIVITY. NO LAND DISTURBANCE SHALL OCCUR OUTSIDE THE APPROVED LIMITS INDICATED ON THE APPROVED PLANS.
8. IMMEDIATELY AFTER THE ESTABLISHMENT OF CONSTRUCTION ENTRANCES AND EXITS, ALL PERIMETER EROSION CONTROL DEVICES AND STORMWATER MANAGEMENT DEVICES SHALL BE INSTALLED PRIOR TO ANY OTHER CONSTRUCTION. THE LOCATION OF CERTAIN EROSION CONTROL DEVICES MAY REQUIRE ALTERING FROM THE LOCATIONS SHOWN ON THE DRAWING IF DRAINAGE PATTERNS DURING CONSTRUCTION DIFFER FROM THE FINAL GRADING PLANS. IT IS THE CONTRACTOR'S RESPONSIBILITY TO ACCOMPLISH EROSION CONTROL FOR DRAINAGE PATTERNS CREATED AT VARIOUS STAGES DURING CONSTRUCTION. AT ALL TIMES, 67 CUBIC YARDS OF SEDIMENT STORAGE MUST BE AVAILABLE FOR EACH ACRE OF DISTURBED LAND.
   -- ALL B.M.P. DEVICES, PRACTICES, AND MATERIALS SHALL BE DESIGNED AND INSTALLED TO WITHSTAND EFFECTS OF A MINIMUM 25-YEAR STORM EVENT.
   -- DIVERSION DITCHES, BERMS AND TEMPORARY DOWN DRAINS SHALL BE USED DURING GRADING OPERATIONS TO PROVIDE SEDIMENT CONTROL FOR DISTURBED AREAS. THE CONTRACTOR SHALL BE RESPONSIBLE FOR INSTALLATION OF THESE MEASURES DURING THE VARIOUS PHASES OF GRADING. THESE MEASURES MAY OR MAY NOT BE INDICATED ON THE DRAWINGS.
   -- SILT MATERIALS SHALL BE REMOVED WHEN ACCUMULATION REACHES ONE HALF THE HEIGHT OF SILT BARRIER.
9. NO STAGING AREAS, MATERIAL STORAGE, CONCRETE WASH OUT AREAS, OR DEBRIS BURN AND BURIAL HOLES SHALL BE LOCATED WITHIN 300 FEET OF DESIGNATED TREE PROTECTION AREAS.
10. SEDIMENT BARRIERS SHALL MEET D.O.T. STANDARDS AND SPECIFICATIONS AND SHALL BE INSTALLED AS DETAILED ON THE DRAWINGS.
11. CONSTRUCT CONSTRUCTION EXITS AT LOCATIONS SHOWN ON THE EROSION CONTROL PLAN. EXIT SHALL BE CONSTRUCTED AND MAINTAINED IN ACCORDANCE WITH THE FOLLOWING:

    AGGREGATE SIZE: WILL BE IN ACCORDANCE WITH NATIONAL STONE ASSOCIATION ASTM D448 SIZE #1 (1.5 TO 3.5 INCH STONE). STONE SHALL BE UNDERLAYED WITH GEOTEXTILE FABRIC.
    PAD THICKNESS: 6-INCH MINIMUM.
    PAD WIDTH: AT AT MINIMUM, SHOULD EQUAL FULL WIDTH OF ALL POINTS OF VEHICULAR EGRESS, BUT NOT LESS THAN 20 FEET WIDE AND 50 FEET LONG.

    WASHING: WHEELS SHALL BE CLEANED TO REMOVE MUD PRIOR TO ENTRANCE ONTO PUBLIC RIGHT-OF-WAY. WASHING SHALL BE PERFORMED ON AN AREA STABILIZED WITH CRUSHED STONE WHICH DRAINS INTO AN APPROVED SEDIMENT TRAP OR SEDIMENT BASIN.

    MAINTENANCE: THE EXIT SHALL BE MAINTAINED IN A CONDITION WHICH WILL PREVENT TRACKING OR FLOW OF MUD ONTO PUBLIC RIGHT-OF-WAY. THIS MAY REQUIRE PERIODIC TOP DRESSING WITH 1.5-3.5 INCH STONE, AS CONDITIONS DEMAND, AND REPAIR AND/OR CLEAN OUT OF ANY STRUCTURES USED TO TRAP SEDIMENT. ALL MATERIALS SPILLED, DROPPED, WASHED, OR TRACKED FROM VEHICLES OR SITE ONTO ROADWAYS OR INTO STORM DRAINS MUST BE REMOVED IMMEDIATELY.
12. ADDITIONAL EROSION AND SEDIMENTATION CONTROL MEASURES WILL BE INSTALLED BY CONTRACTOR IF DEEMED NECESSARY BY ON-SITE INSPECTION.
13. ESTABLISHMENT OF TEMPORARY AND PERMANENT VEGETATION FOR THIS PROJECT SHALL CONSIST OF THE FOLLOWING: THE GROUND PREPARATION, SEEDING, MULCHING AND HYDROSEEDING OF ALL DISTURBED AREAS IN THE PROJECT AREA IN ACCORDANCE WITH THE FOLLOWING SCHEDULE. GROUND PREPARATION SEEDING, MULCHING AND HYDROSEEDING METHODS SHALL CONFORM TO THE SPECIFICATIONS.
    MULCH, TEMPORARY VEGETATION, OR PERMANENT (PERENNIAL) VEGETATION SHALL BE COMPLETED ON ALL EXPOSED AREAS BY THE 7TH DAY AFTER CONSTRUCTION ACTIVITIES TEMPORARILY OR PERMANENTLY CEASE.
    MULCHING ALONE: MULCHING ALONE CAN BE USED ON ROUGH GRADED AREAS FOR UP TO SIX MONTHS. IT SHALL BE APPLIED AT THE APPROPRIATE DEPTH, ANCHORED, AND MAINTAIN A CONTINUOUS 90% COVER OR GREATER OF THE SOIL SURFACE. SEE MULCHING TABLE.
    TEMPORARY SEEDING: SHALL BE USED ON AREAS THAT WILL BE UNDISTURBED FOR LESS THAN SIX MONTHS. SEE GRASSING TABLE.
    PERMANENT VEGETATION: SHALL BE USED ON AREAS THAT ARE AT FINAL GRADE OR ON AREAS THAT WILL BE UNDISTURBED FOR MORE THAN SIX MONTHS. SEE GRASSING TABLE AND MULCHING SCHEDULE.
14. EROSION CONTROL BLANKETS OR SODDING SHALL BE USED ON (1) ALL SLOPES STEEPER THAN 2 1/2:1 AND GREATER THAN OR EQUAL TO 10 FEET IN HEIGHT, (2) ALL CONCENTRATED FLOW AREAS, AND (3) CUTS AND FILLS ADJACENT TO STATE WATERS. REFER TO DRAWINGS FOR AREAS REQUIRING THESE MEASURES.
15. CONTRACTOR SHALL MAINTAIN ON PROJECT SITE DIRECTIONS FOR NECESSARY ACTIONS SHOULD ANY FUEL OR HAZARDOUS CHEMICAL SPILL OCCUR AT THE PROJECT SITE OR DURING TRANSPORTATION OPERATIONS TO OR FROM THE PROJECT SITE.
16. CONTRACTOR SHALL EMPLOY APPROPRIATE MEASURES TO CONTROL DUST WITH THE UNDERSTANDING WATER USE RESTRICTIONS COULD BE IMPOSED DURING SOME OR ALL PHASES OF CONSTRUCTION.
17. PREPARATION OF ES&PC PLAN AND ACTIVITIES OF CONTRACTOR SHALL BE IN COMPLIANCE WITH WASTE DISPOSAL, SANITARY SEWER, OR SEPTIC TANK REGULATIONS.
18. TEMPORARY MEASURES SUCH AS SILT FENCING SHALL BE REMOVED AND DISPOSED OF BY THE CONTRACTOR ONCE THE AREA DRAINING TO THE BMP HAS REACHED FINAL STABILIZATION. FINAL STABILIZATION MEANS THAT ALL LAND-DISTURBING ACTIVITIES HAVE BEEN COMPLETED AND THAT FOR UNPAVED AREAS AND AREAS NOT COVERED BY PERMANENT STRUCTURES, THE SOIL SURFACE IS UNIFORMLY COVERED IN PERMANENT VEGETATION OR THAT EQUIVALENT PERMANENT STABILIZATION MEASURES (SUCH AS RIP RAP, GABIONS, PERMANENT MULCHES, OR GEOTEXTILES) HAVE BEEN EMPLOYED.
19. PERMANENT CONTROL STRUCTURES SHALL BE MAINTAINED BY THE CONTRACTOR FOR A PERIOD OF 1 YEAR FOLLOWING ACCEPTANCE OF THE PROJECT.
20. A COPY OF THE LDA PERMIT, APPROVED ES&PC PLAN, AND ALL REQUIRED NPDES DOCUMENTATION SHALL BE PRESENT ON THE SITE UNTIL A NOTICE OF TERMINATION IS FILED.

REMEDIATION OF PETROLEUM SPILLS AND LEAKS

SOIL CLEANUP AND CONTROL PRACTICES

- LOCAL, STATE AND MANUFACTURER'S RECOMMENDED METHODS FOR SPILL CLEANUP WILL BE CLEARLY POSTED AND PROCEDURES WILL BE MADE AVAILABLE TO SITE PERSONNEL.
- MATERIAL AND EQUIPMENT NECESSARY FOR SPILL CLEANUP WILL BE KEPT IN THE MATERIAL STORAGE AREAS. TYPICAL MATERIALS AND EQUIPMENT INCLUDES, BUT IS NOT LIMITED TO, BROOMS, DUSTPANS, MOPS, RAGS, GLOVES, GOGGLES, CAT LITTER, SAND, SAWDUST AND PROPERLY LABELED PLASTIC AND METAL WASTE CONTAINERS.
- SPILL PREVENTION PRACTICES AND PROCEDURES WILL BE REVIEWED AFTER A SPILL AND ADJUSTED AS NECESSARY TO PREVENT FUTURE SPILLS.
- ALL SPILLS WILL BE CLEANED UP IMMEDIATELY UPON DISCOVERY. ALL SPILLS WILL BE REPORTED AS REQUIRED BY LOCAL, STATE AND FEDERAL REGULATIONS.
- FOR SPILLS THAT IMPACT SURFACE WATER (LEAVE A SHEEN ON SURFACE WATER), THE NATIONAL RESPONSE CENTER (NRC) WILL BE CONTACTED WITHIN 24 HOURS AT 1-800-426-2675.
- FOR SPILLS OF AN UNKNOWN AMOUNT, THE NATIONAL RESPONSE CENTER (NRC) WILL BE CONTACTED WITHIN 24 HOURS AT 1-800-426-2675.
- FOR SPILLS GREATER THAN 25 GALLONS AND NO SURFACE WATER IMPACTS, THE GEORGIA EPD WILL BE CONTACTED WITHIN 24 HOURS.
- FOR SPILLS LESS THAN 25 GALLONS AND NO SURFACE WATER IMPACTS, THE SPILL WILL BE CLEANED UP AND LOCAL AGENCIES WILL BE CONTACTED AS REQUIRED.
- THE CONTRACTOR SHALL NOTIFY THE LICENSED PROFESSIONAL WHO PREPARED THIS PLAN IF MORE THAN 1320 GALLONS OF PETROLEUM IS STORED ONSITE (THIS INCLUDES CAPACITIES OF EQUIPMENT) OR IF ANY ONE PIECE OF EQUIPMENT HAS A CAPACITY GREATER THAN 660 GALLONS. THE CONTRACTOR WILL NEED A SPILL PREVENTION CONTAINMENT AND COUNTERMEASURES PLAN PREPARED BY THAT LICENSED PROFESSIONAL.

WASTE DISPOSAL, SANITARY SEWER, AND/OR SEPTIC TANK REGULATIONS

ALL HAZARDOUS WASTE MATERIALS WILL BE DISPOSED OF IN THE MANNER SPECIFIED BY LOCAL, STATE, AND/OR FEDERAL REGULATIONS AND BY THE MANUFACTURER OF SUCH PRODUCTS. THE JOB SITE SUPERINTENDENT, WHO WILL ALSO BE RESPONSIBLE FOR SEEING THAT THESE PRACTICES ARE FOLLOWED, WILL INSTRUCT SITE PERSONNEL IN THESE PRACTICES. MATERIAL SAFETY DATA SHEETS (MSDS'S) FOR EACH SUBSTANCE WITH HAZARDOUS PROPERTIES THAT IS USED ON THE JOB SITE WILL BE OBTAINED AND USED FOR THE PROPER MANAGEMENT OF POTENTIAL WASTES THAT MAY RESULT FROM THESE PRODUCTS. AN MSDS WILL BE POSTED IN THE IMMEDIATE AREA WHERE SUCH PRODUCT IS STORED AND/OR USED AND ANOTHER COPY OF EACH MSDS WILL BE MAINTAINED IN THE ESPCP FILE AT THE JOB SITE CONSTRUCTION TRAILER OFFICE. EACH EMPLOYEE WHO MUST HANDLE A SUBSTANCE WITH HAZARDOUS PROPERTIES WILL BE INSTRUCTED ON THE USE OF MSDS SHEETS AND THE SPECIFIC INFORMATION IN THE APPLICABLE MSDS FOR THE PRODUCT HE/SHE IS USING, PARTICULARLY REGARDING SPILL CONTROL TECHNIQUES.

THE CONTRACTOR WILL IMPLEMENT THE SPILL PREVENTION CONTROL AND COUNTERMEASURES (SPCC) PLAN FOUND WITHIN THIS ESPCP AND WILL TRAIN ALL PERSONNEL IN THE PROPER CLEANUP AND HANDLING OF SPILLED MATERIALS. NO SPILLED HAZARDOUS MATERIALS OR HAZARDOUS WASTES WILL BE ALLOWED TO COME IN CONTACT WITH STORM WATER DISCHARGES. IF SUCH OCCURS, THE STORM WATER DISCHARGE WILL BE CONTAINED ONSITE UNTIL APPROPRIATE MEASURES IN COMPLIANCE WITH STATE AND FEDERAL REGULATIONS ARE TAKEN TO DISPOSE OF SUCH CONTAMINATED STORM WATER. IT SHALL BE THE RESPONSIBILITY OF THE JOB SITE SUPERINTENDENT TO PROPERLY TRAIN ALL PERSONNEL IN THE USE OF THE SPCC PLAN.

SANITARY WASTES

A MINIMUM OF ONE PORTABLE SANITARY UNIT WILL BE PROVIDED FOR EVERY TEN (10) WORKERS ON THE SITE. ALL SANITARY WASTE WILL BE COLLECTED FROM THE PORTABLE UNITS A MINIMUM OF ONE TIME PER WEEK BY A LICENSED PORTABLE FACILITY PROVIDER IN COMPLETE COMPLIANCE WITH LOCAL AND STATE REGULATIONS.
ALL SANITARY WASTE UNITS WILL BE LOCATED IN AN AREA WHERE THE LIKELIHOOD OF THE UNIT CONTRIBUTING TO STORM WATER DISCHARGE IS NEGLIGIBLE. ADDITIONAL CONTAINMENT BMP'S MUST BE IMPLEMENTED, SUCH AS GRAVEL BAGS OR SPECIALLY DESIGNED PLASTIC SKID CONTAINERS AROUND THE BASE, TO PREVENT WASTES FROM CONTRIBUTING TO STORM WATER DISCHARGES. THE LOCATION OF SANITARY WASTE UNITS MUST BE IDENTIFIED ON THE EROSION CONTROL PLAN GRADING PHASE, BY THE CONTRACTOR ONCE THE LOCATIONS HAVE BEEN DETERMINED.

SANITARY SEWER WILL BE PROVIDED BY MUNICIPAL AUTHORITY/SEPTIC SYSTEM AT THE COMPLETION OF THIS PROJECT.

PRACTICES TO REDUCE POLLUTANTS IN STORM WATER DISCHARGE

PRODUCT SPECIFIC PRACTICES

PETROLEUM BASED PRODUCTS - CONTAINERS FOR PRODUCTS SUCH AS FUELS, LUBRICANTS AND TARS SHALL BE INSPECTED DAILY FOR LEAKS AND SPILLS. THIS INCLUDES ONSITE VEHICLE AND MACHINERY DAILY INSPECTIONS AND REGULAR PREVENTATIVE MAINTENANCE OF SUCH EQUIPMENT. EQUIPMENT MAINTENANCE AREAS SHALL BE LOCATED AWAY FROM STATE WATER, NATURAL DRAINS AND STORM WATER DRAINAGE INLETS. IN ADDITION, TEMPORARY FUELING TANKS SHALL HAVE A SECONDARY CONTAINMENT LINER TO PREVENT/MINIMIZE SITE CONTAMINATION. DISCHARGE OF OILS, FUELS AND LUBRICANTS IS PROHIBITED. PROPER DISPOSAL METHODS SHALL INCLUDE COLLECTION IN A SUITABLE CONTAINER AND DISPOSAL AS REQUIRED BY LOCAL AND STATE REGULATIONS.
PAINTS/FINISHES/SOLVENTS - ALL PRODUCTS SHALL BE STORED IN TIGHTLY SEALED ORIGINAL CONTAINERS WHEN NOT IN USE. EXCESS PRODUCT SHALL NOT BE DISCHARGED TO THE STORM WATER COLLECTION SYSTEM. EXCESS PRODUCT, MATERIALS USED WITH THESE PRODUCTS AND PRODUCT CONTAINERS SHALL BE DISPOSED OF ACCORDING TO MANUFACTURER'S SPECIFICATIONS AND RECOMMENDATIONS.

CONCRETE TRUCK WASHING - NO CONCRETE TRUCKS SHALL BE ALLOWED TO WASH OUT OR DISCHARGE SURPLUS CONCRETE OR DRUM WASH WATER ONSITE. CONCRETE WASHDOWN OF TOOLS, CONCRETE MIXER CHUTES, HOPPERS AND THE REAR OF VEHICLES SHALL BE CONTAINED IN A PIT OR TRENCH WITH NO MATERIAL LEAVING THE SITE OR IMPACTING VEGETATED OR NON-DISTURBED AREAS. CONTRACTOR SHALL DISPOSE OF MATERIAL BY BREAKING OF MATERIAL INTO SMALL AMOUNTS AND DISPOSING OF MATERIAL OFF-SITE INTO A LANDFILL APPROVED TO ACCEPT SUCH WASTE.

FERTILIZER/HERBICIDES - THESE PRODUCTS SHALL BE APPLIED AT RATES THAT DO NOT EXCEED THE MANUFACTURER'S SPECIFICATIONS OR ABOVE THE GUIDELINES SET FORTH IN THE CROP ESTABLISHMENT OR IN THE GSWCC MANUAL FOR EROSION AND SEDIMENT CONTROL IN GEORGIA. ANY STORAGE OF THESE MATERIALS WILL BE UNDER ROOF IN SEALED CONTAINERS.

SOLID WASTE DISPOSAL:

1. BUILDING MATERIALS - NO BUILDING OR CONSTRUCTION MATERIALS SHALL BE BURIED OR DISPOSED OF ONSITE. ALL SUCH MATERIAL WILL BE DISPOSED OF IN PROPER WASTE DISPOSAL PROCEDURES.
2. SOLID MATERIALS, INCLUDING BUILDING MATERIALS, SHALL NOT BE DISCHARGED TO WATERS OF THE STATE OR BURIED ON SITE.
3. WASTE DISPOSAL CONTAINERS WILL BE PROVIDED BY CONTRACT HAULER FOR WASTE MATERIALS GENERATED DURING CONSTRUCTION.
4. THE COMPLETED FACILITY WILL HAVE WASTE DUMPSTERS THAT WILL BE SERVICED BY A CONTRACT HAULER.

COVER FOR BUILDING MATERIALS & PRODUCTS - FOR BUILDING MATERIALS, BUILDING PRODUCTS, CONSTRUCTION WASTES, TRASH, LANDSCAPE MATERIALS, FERTILIZERS, PESTICIDES, HERBICIDES, DETERGENTS, SANITARY WASTE AND OTHER MATERIALS PRESENT ON THE SITE, PROVIDE COVER (E.G. PLASTIC SHEETING, TEMPORARY ROOFS) TO MINIMIZE THE EXPOSURE OF THESE PRODUCTS TO PRECIPITATION AND TO STORMWATER, OR A SIMILARLY EFFECTIVE MEANS DESIGNED TO MINIMIZE THE DISCHARGE OF POLLUTANTS FROM THESE AREAS. MINIMIZATION OF EXPOSURE IS NOT REQUIRED IN CASES WHERE EXPOSURE TO PRECIPITATION AND TO STORMWATER WILL NOT RESULT IN A DISCHARGE OF POLLUTANTS, OR WHERE EXPOSURE OF A SPECIFIC MATERIAL OR PRODUCT POSES LITTLE RISK TO STORMWATER CONTAMINATION (SUCH AS FINAL PRODUCTS AND MATERIALS INTENDED FOR OUTDOOR USE).

SOUTHERN PIEDMONT VEGETATIVE COVERS

MONTH	TEMPORARY SEED	TEMP RATE/ACRE	PERMANENT SEED (LANDSCAPES/SHOULDERS)	PERM. RATE/ACRE	PERMANENT SEED (SLOPES 2:1 AND STEEPER)	PERM. RATE/ACRE
JANUARY	ANNUAL RYEGRASS	40 LB.	UNHULLED BERMUDA	40 LB.		
FEBRUARY	ANNUAL RYEGRASS	40 LB.	UNHULLED BERMUDA	40 LB.		
MARCH	ANNUAL RYEGRASS	40 LB.	HULLED BERMUDA	40 LB.	SERICEA LESPEDEZA & WEEPING LOVEGRASS	75 LB. 4 LB.
APRIL	BROWN TOP MILLET	40 LB.	HULLED BERMUDA	40 LB.	SERICEA LESPEDEZA & WEEPING LOVEGRASS	75 LB. 4 LB.
MAY	BROWN TOP MILLET	40 LB.	HULLED BERMUDA	40 LB.	SERICEA LESPEDEZA & WEEPING LOVEGRASS	75 LB. 4 LB.
JUNE	BROWN TOP MILLET	40 LB.	HULLED BERMUDA	40 LB.	SERICEA LESPEDEZA & WEEPING LOVEGRASS	75 LB. 4 LB.
JULY	BROWN TOP MILLET	40 LB.	HULLED BERMUDA	40 LB.	SERICEA LESPEDEZA & WEEPING LOVEGRASS	75 LB. 4 LB.
AUGUST	ANNUAL RYEGRASS	40 LB.	HULLED BERMUDA	40 LB.		
SEPTEMBER	ANNUAL RYEGRASS	40 LB.	UNHULLED BERMUDA	40 LB.		
OCTOBER	ANNUAL RYEGRASS	40 LB.	UNHULLED BERMUDA	40 LB.		
NOVEMBER	ANNUAL RYEGRASS	40 LB.	UNHULLED BERMUDA	40 LB.		
DECEMBER	ANNUAL RYEGRASS	40 LB.	UNHULLED BERMUDA	40 LB.		

TEMPORARY VEGETATION/ MULCHING - DS2

LIME: APPLY AGRICULTURAL LIME AT A RATE OF ONE TON PER ACRE.

FERTILIZER: APPLY 10-10-10 FERTILIZER AT A RATE OF 500 LBS PER ACRE.

MULCHING RATES: FOR TEMPORARY VEGETATION

1 - DRY STRAW: 2 TONS PER ACRE
2 - DRY HAY: 2.5 TONS PER ACRE
3 - WOOD CELLULOSE MULCH OR WOOD PULP FIBER: 500 LBS PER ACRE

PERMANENT VEGETATION/ MULCHING - DS3

LIME: APPLY AGRICULTURAL LIME AT A RATE OF ONE TO TWO TONS PER ACRE AS RECOMMENDED BY SOIL TESTS.

FERTILIZER: APPLY 6-12-12 FERTILIZER AT A RATE OF 1500 LBS PER ACRE.

MULCHING RATES: FOR PERMANENT VEGETATION

1 - DRY STRAW: 2 TONS PER ACRE
2 - DRY HAY: 2.5 TONS PER ACRE
3 - WOOD CELLULOSE MULCH OR WOOD PULP FIBER: 500 LBS PER ACRE

NOTE: PERMANENT VEGETATION INDICATED ABOVE IS REQUIRED FOR ALL DISTURBED AREAS OF THE SITE EXCEPT:
1 - AREAS TO BE SODDED
2 - SPORTS FIELDS WHICH ARE TO BE PERMANENTLY SEEDED WITH PRINCESS-77 BERMUDA 80 LBS./ACRE (SEE SPECS.)

POLYACRYLAMIDE - PM

CONTRACTOR SHALL INCORPORATE USE OF POLYACRYLAMIDE WITH ALL TEMPORARY AND PERMANENT GRASSING FOR AREAS THAT HAVE NOT BEEN STABILIZED WITH TEMPORARY OR PERMANENT COVER WITHIN 7 DAYS OF INITIAL DISTURBANCE.

ANIONIC PAM APPLICATION SHALL COMPLY WITH ALL FEDERAL, STATE AND LOCAL LAWS, RULES, OR REGULATIONS GOVERNING ANIONIC PAM. THE OPERATOR IS RESPONSIBLE FOR SECURING REQUIRED PERMITS.

USERS OF ANIONIC PAM SHALL OBTAIN AND FOLLOW ALL MATERIAL SAFETY DATA SHEET REQUIREMENTS AND MANUFACTURER'S RECOMMENDATIONS.

STRUCTURAL PRACTICES

CODE	PRACTICE	DETAIL	MAP SYMBOL	DESCRIPTION
Cd	CHECKDAM			A small temporary barrier or dam constructed across a swale, drainage ditch or area of concentrated flow.
Ch	CHANNEL STABILIZATION			Improving, constructing or stabilizing an open channel, existing stream, or ditch.
Co	CONSTRUCTION EXIT		Co (LABEL)	A crushed stone pad located at the construction site exit to provide a place for removing mud from tires thereby protecting public streets.
Cr	CONSTRUCTION ROAD STABILIZATION		Cr	A travelway constructed as part of a construction plan including access roads, subdivision roads, parking areas and other on-site vehicle transportation routes.
Dc	STREAM DIVERSION CHANNEL			A temporary channel constructed to convey flow around a construction site while a permanent structure is being constructed.
Di	DIVERSION			An earth channel or dike located above, below, or across a slope to divert runoff. This may be a temporary or permanent structure.
Dn1	TEMPORARY DOWNDRAIN STRUCTURE		Dn1 (LABEL)	A flexible conduit of heavy-duty fabric or other material designed to safely conduct surface runoff down a slope. This is temporary and inexpensive.
Dn2	PERMANENT DOWNDRAIN STRUCTURE		Dn2 (LABEL)	A paved chute, pipe, sectional conduit or similar material designed to safely conduct surface runoff down a slope.
Fr	FILTER RING			A temporary stone barrier constructed at storm drain inlets and pond outlets.
Ga	GABION			Rock filter baskets which are hand-placed into position forming soil stabilizing structures.
Gr	GRADE STABILIZATION STRUCTURE		Gr (LABEL)	Permanent structures installed to protect channels or waterways where otherwise the slope would be sufficient for the running water to form gullies.
Lv	LEVEL SPREADER			A structure to convert concentrated flow of water into less erosive sheet flow. This should be constructed only on undisturbed soils.
Rd	ROCK FILTER DAM			A permanent or temporary stone filter dam installed across small streams or drainageways.
Re	RETAINING WALL		Re (LABEL)	A wall installed to stabilize cut and fill slopes where maximum permissible slopes are not obtainable. Each situation will require special design.
Rt	RETRO FITTING		Rt (LABEL)	A device or structure placed in front of a permanent stormwater detention pond outlet structure to serve as a temporary sediment filter.
Sd1	SEDIMENT BARRIER		(INDICATE TYPE)	A barrier to prevent sediment from leaving the construction site. It may be sandbags, bales of straw or hay, brush, logs and poles, gravel, or a silt fence.
Sd2	INLET SEDIMENT TRAP			An impounding area created by excavating around a storm drain drop inlet. The excavated area will be filled and stabilized on completion of construction activities.
Sd3	TEMPORARY SEDIMENT BASIN		Sd3 (LABEL)	A basin created by excavation or a dam across a waterway. The surface water runoff is temporarily stored allowing the bulk of the sediment to drop out.
Sd4	TEMPORARY SEDIMENT TRAP			A small temporary pond that drains a disturbed area so that sediment can settle out. The principle feature distinguishing a temporary sediment trap from a temporary sediment basin is the lack of a pipe or riser.
Sk	FLOATING SURFACE SKIMMER		Sk (LABEL)	A buoyant device that releases/drains water from the surface of sediment ponds, traps, or basins at a controlled rate of flow.
Spb	SEEP BERM		Spb (LABEL)	Linear control device constructed as a diversion perpendicular to the direction of runoff to enhance dissipation and infiltration, while creating multiple sedimentation chambers with the employment of intermediate dikes.
Sr	TEMPORARY STREAM CROSSING		Sr (LABEL)	A temporary bridge or culvert-type structure protecting a stream or watercourse from damage by crossing construction equipment.
St	STORMDRAIN OUTLET PROTECTION		St	A paved or short section of riprap channel at the outlet of a storm drain system preventing erosion from the concentrated runoff.
Su	SURFACE ROUGHENING		Su	A rough soil surface with horizontal depressions on a contour or slopes left in a roughened condition after grading.
Tc	TURBIDITY CURTAIN		Tc	A floating or staked barrier installed within the water (it may also be referred to as a floating boom, silt barrier, or silt curtain).
Tp	TOPSOILING		Tp (SHOW STRIPING AND STORAGE AREAS)	The practice of stripping off the more fertile soil, storing it, then spreading it over the disturbed area after completion of construction activities.
Tr	TREE PROTECTION		(DENOTE TREE CENTERS)	To protect desirable trees from injury during construction activity.
Wt	VEGETATED WATERWAY OR STORMWATER CONVEYANCE CHANNEL			Paved or vegetative water outlets for diversions, terraces, berms, dikes or similar structures.

VEGETATIVE PRACTICES

CODE	PRACTICE	DETAIL	MAP SYMBOL	DESCRIPTION
Bf	BUFFER ZONE		Bf (LABEL)	Strip of undisturbed original vegetation, enhanced or restored existing vegetation or the reestablishment of vegetation surrounding an area of disturbance or bordering streams.
Cs	COASTAL DUNE STABILIZATION (WITH VEGETATION)		Cs	Planting vegetation on dunes that are denuded, artificially constructed, or re-nourished.
Ds1	DISTURBED AREA STABILIZATION (WITH MULCHING ONLY)		Ds1	Establishing temporary protection for disturbed areas where seedlings may not have a suitable growing season to produce an erosion retarding cover.
Ds2	DISTURBED AREA STABILIZATION (WITH TEMP SEEDING)		Ds2	Establishing a temporary vegetative cover with fast growing seedings on disturbed areas.
Ds3	DISTURBED AREA STABILIZATION (WITH PERM SEEDING)		Ds3	Establishing a permanent vegetative cover such as trees, shrubs, vines, grasses, or legumes on disturbed areas.
Ds4	DISTURBED AREA STABILIZATION (SODDING)		Ds4	A permanent vegetative cover using sods on highly erodable or critically eroded lands.
Du	DUST CONTROL ON DISTURBED AREAS		Du	Controlling surface and air movement of dust on construction site, roadways and similar sites.
Fl-Co	FLOCCULANTS AND COAGULANTS		Fl-Co	Substance formulated to assist in the solids/liquid separation of suspended particles in solution.
Sb	STREAMBANK STABILIZATION (USING PERM VEGETATION)		Sb	The use of readily available native plant materials to maintain and enhance streambanks, or to prevent, or restore and repair small streambank erosion problems.
Ss	SLOPE STABILIZATION		Ss	A protective covering used to prevent erosion and establish temporary or permanent vegetation on steep slopes, shore lines, or channels.
Tac	TACKIFIERS AND BINDERS		Tac	Substance used to anchor straw or hay mulch by causing the organic material to bind together.

CARTER Engineering Group
6310 Peake Road, Suite 200
Macon, GA 31210
478-219-2600

THIS DRAWING IS AN INSTRUMENT OF SERVICE AND SHALL REMAIN THE PROPERTY OF THE ENGINEER, AND SHALL NOT BE REPRODUCED, PUBLISHED OR USED IN ANY WAY WITHOUT THE CONSENT OF THE ENGINEER. THIS DRAWING SHALL NOT BE SCALED. © COPYRIGHT 2019 CARTER ENGINEERING GROUP, LLC.

GEORGIA811 Utilities Protection Center, Inc.
Know what's below. Call before you dig.

STAMP:

GEORGIA REGISTERED PROFESSIONAL ENGINEER DON L. CARTER

LEVEL II CERTIFIED
DESIGN PROFESSIONAL # 2061
ISSUED: 11/2/2017 EXPIRES: 11/2/2020

RELEASE DATES:

REV #	DATE	DESCRIPTION

CLIENT:
BIBB COUNTY
SCHOOL DISTRICT
MACON-BIBB COUNTY, GA

PROJECT:
HARTLEY ELEMENTARY SCHOOL
PARKING IMPROVEMENTS

2230 ANTHONY ROAD
MACON-BIBB COUNTY, GA 31204

DRAWN BY:	CHECKED BY:
CADD	DLC
PROJECT NUMBER:	DATE:
B7600.017	03/18/2019

GRAPHIC SCALE:

SCALE: AS SHOWN

DRAWING TITLE:

STORMWATER POLLUTION PREVENTION NOTES

DRAWING NUMBER:
C6.5

EXIT DIAGRAM

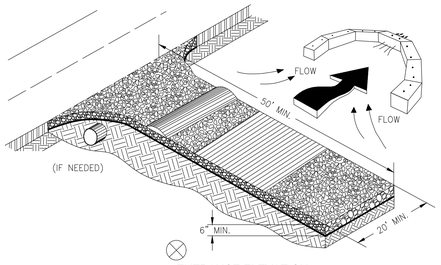

ENTRANCE ELEVATION

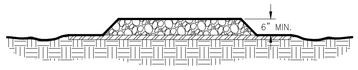

NOTES:
1. AVOID LOCATING ON STEEP SLOPES OR AT CURVES ON PUBLIC ROADS.
2. REMOVE ALL VEGETATION AND OTHER UNSUITABLE MATERIAL FROM THE FOUNDATION AREA, GRADE, AND CROWN FOR POSITIVE DRAINAGE.
3. AGGREGATE SIZE SHALL BE IN ACCORDANCE WITH NATIONAL STONE ASSOCIATION R-2 (1.5"-3.5" STONE).
4. GRAVEL PAD SHALL HAVE A MINIMUM THICKNESS OF 6".
5. PAD WIDTH SHALL BE EQUAL FULL WIDTH AT ALL POINTS OF VEHICULAR EGRESS, BUT NO LESS THAN 20'.
6. A DIVERSION RIDGE SHOULD BE CONSTRUCTED WHEN GRADE TOWARD PAVED AREA IS GREATER THAN 2%.
7. INSTALL PIPE UNDER THE ENTRANCE IF NEEDED TO MAINTAIN DRAINAGE DITCHES.
8. WHEN WASHING IS REQUIRED, IT SHOULD BE DONE ON AN AREA STABILIZED WITH CRUSHED STONE THAT DRAINS INTO AN APPROVED SEDIMENT TRAP OR SEDIMENT BASIN (DIVERT ALL SURFACE RUNOFF AND DRAINAGE FROM THE ENTRANCE TO A SEDIMENT CONTROL DEVICE).
9. WASHRACKS AND/OR TIRE WASHERS MAY BE REQUIRED DEPENDING ON SCALE AND CIRCUMSTANCE. IF NECESSARY, WASHRACK DESIGN MAY CONSIST OF ANY MATERIAL SUITABLE FOR TRUCK TRAFFIC THAT REMOVE MUD AND DIRT.
10. MAINTAIN AREA IN A WAY THAT PREVENTS TRACKING AND/OR FLOW OF MUD ONTO PUBLIC RIGHTS-OF-WAYS. THIS MAY REQUIRE TOP DRESSING, REPAIR AND/OR CLEANOUT OF ANY MEASURES USED TO TRAP SEDIMENT.

Co CONSTRUCTION EXIT
N.T.S.

PIPE OUTLET TO FLAT AREA -- NO WELL DEFINED CHANNEL

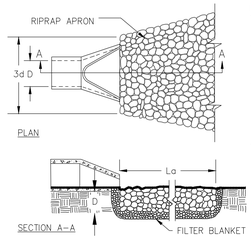

NOTES:
1. La IS THE LENGTH OF THE RIPRAP APRON.
2. D = 1.5 TIMES THE MAXIMUM STONE DIAMETER BUT NOT LESSTHAN 6".
3. IN A WELL-DEFINED CHANNEL, EXTEND THE APRON UP THE CHANNEL BANKS TO AN ELEVATION OF 6" ABOVE THE MAXIMUM TAILWATER DEPTH OR TO THE TOP OF THE BANK (WHICHEVER IS LESS).
4. A FILTER BLANKET OR FILTER FABRIC SHOULD BE INSTALLED BETWEEN THE RIPRAP AND THE SOIL FOUNDATION.

PIPE OUTLET TO WELL DEFINED CHANNEL

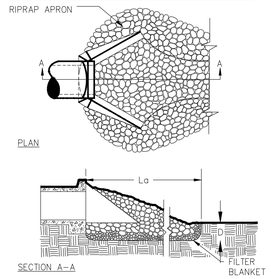

St STORM DRAIN OUTLET PROTECTION
N.T.S.

SIDE VIEW

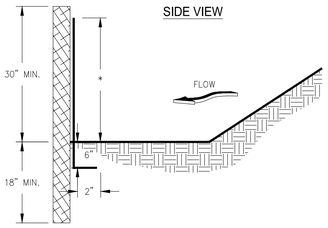

FRONT VIEW

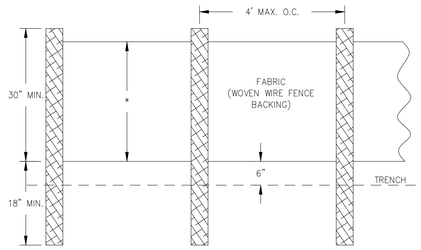

NOTES:
1. USE STEEL OR WOOD POSTS OR AS SPECIFIED BY THE EROSION, SEDIMENTATION, AND POLLUTION CONTROL PLAN.
2. HEIGHT (*) IS TO BE SHOWN ON THE EROSION, SEDIMENTATION, AND POLLUTION CONTROL PLAN.

Sd1-S SILT FENCE-TYPE SENSITIVE
N.T.S.

PLAN

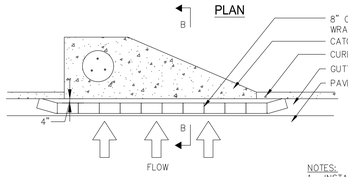

SECTION B-B

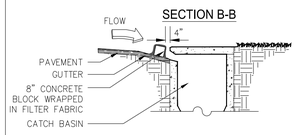

NOTES:
1. INSTALL FILTER AFTER ANY ASPHALT PAVEMENT INSTALLATION.
2. WRAP 8" CONCRETE BLOCKS IN FILTER FABRIC AND SPAN ACROSS CATCH BASIN INLET.
3. FACE OPENINGS IN BLOCKS OUTWARD.
4. LEAVE A GAP OF APPROXIMATELY 4 INCHES BETWEEN THE CURB AND THE FILTERS TO ALLOW FOR OVERFLOW TO PREVENT HAZARDOUS PONDING.
5. INSTALL OUTLET PROTECTION BELOW STORM DRAIN OUTLETS.

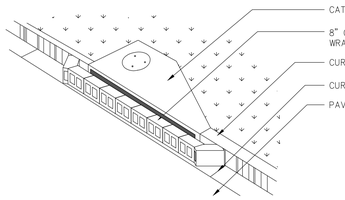

INLET SEDIMENT TRAP
Sd2-P CURB INLET PROTECTION
N.T.S.

STEEL FRAME AND SILT FENCE INSTALLATION

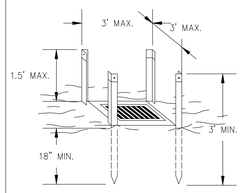

NOTES:
1. DESIGN IS FOR SLOPES NO GREATER THAN 5% (NOT DESIGNED FOR CONCENTRATED FLOWS).
2. THE STEEL POSTS SUPPORTING THE SILT FENCE MATERIAL SHOULD BE SPACED EVENLY AROUND THE PERIMETER OF THE INLET (MAXIMUM OF 3' APART).
3. THE STEEL POSTS SHOULD BE SECURELY DRIVEN AT LEAST 18" DEEP.
4. THE FABRIC SHOULD BE ENTRENCHED AT LEAST 12" AND THEN BACKFILLED WITH CRUSHED STONE OR COMPACTED SOIL.

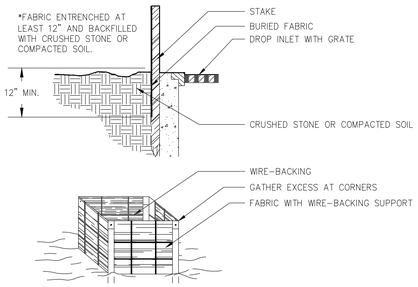

INLET SEDIMENT TRAP
Sd2-F FILTER FABRIC W/ SUPPORTING FRAME
N.T.S.

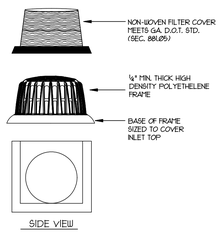

Sd2-D TEMPORARY SEDIMENT TRAP (ALTERNATE TO SD2-F)
N.T.S.

TYPICAL CONSTRUCTION SEQUENCE FOR FRAME & FILTER ASSEMBLY

1. EXCAVATE APPROXIMATELY 4" TO 6" BELOW THE TOP OF THE INLET STRUCTURE.

2. PLACE THE FRAME ONTO THE INLET STRUCTURE. ENSURE THE FRAME COVERS STRUCTURE COMPLETELY

3. PLACE THE FILTER OVER THE FRAME.

4. FILL THE FILTER POCKETS WITH SOIL, #57 GRAVEL OR EQUIVALENT. THE FILTER POCKETS SHOULD BE COMPLETELY FILLED TO ENSURE A GOOD SEAL BETWEEN THE GROUND AND THE INLET STRUCTURE.

5. BACKFILL AROUND THE FRAME AND FILTER ASSEMBLY IS NOT REQUIRED TO COMPLETE INSTALLATION; HOWEVER, BACKFILLING MAY BE NECESSARY TO COMPLETE EXCAVATION REQUIREMENTS FOR THE SITE.

MAINTENANCE REQUIREMENTS FOR FRAME AND FILTER ASSEMBLY

1. MAINTENANCE IS REQUIRED WHEN ERODED SOILS REACH A POINT OF 65% OF THE TOTAL HEIGHT OF THE FRAME OR APPROXIMATELY 7 TO 9 INCHES OF THE GREY FILTER MATERIAL IS SHOWING.

2. REMOVE THE IMAPCTED MATERIAL BY HAND OR MACHINE METHOD, PAYING CLOSE ATTENTION NOT TO DAMAGE THE FRAME OR FILTER.

3. BRUSH, SWEEP OR WASH FILTER AND INSPECT FOR ANY CUTS AND/OR ABRASIONS. REPLACE FILTER AS NECESSARY. INSPECT FRAME FOR ANY STRESS OR DAMAGE, REPLACE AS NECESSARY

4. REFILL FILTER POCKETS. BACKFILL AS REQUIRED BY JOBSITE CONDITIONS.

CARTER Engineering Group
6310 Peake Road, Suite 200
Macon, GA 31210
478-219-2600

THIS DRAWING IS AN INSTRUMENT OF SERVICE AND SHALL REMAIN THE PROPERTY OF THE ENGINEER, AND SHALL NOT BE REPRODUCED, PUBLISHED OR USED IN ANY WAY WITHOUT THE WRITTEN CONSENT OF THE ENGINEER. DRAWINGS SHALL NOT BE SCALED.
© COPYRIGHT 2014 CARTER ENGINEERING GROUP, LLC.

GEORGIA 811 Utilities Protection Center, Inc.
Know what's below. Call before you dig.

STAMP:

LEVEL II CERTIFIED
DESIGN PROFESSIONAL # 2061
ISSUED: 11/2/2017 EXPIRES: 11/2/2020

RELEASE DATES:

REV #	DATE	DESCRIPTION

CLIENT:
BIBB COUNTY
SCHOOL DISTRICT
MACON-BIBB COUNTY, GA

PROJECT:
HARTLEY ELEMENTARY SCHOOL
PARKING IMPROVEMENTS

2230 ANTHONY ROAD
MACON-BIBB COUNTY, GA 31204

DRAWN BY:	CHECKED BY:
CADD	DLC
PROJECT NUMBER:	DATE:
B7600.017	03/18/2019

GRAPHIC SCALE:

SCALE:

DRAWING TITLE:
STORMWATER POLLUTION PREVENTION DETAILS

DRAWING NUMBER:
C6.6

B7600.017 Details.dwg

PERSPECTIVE VIEW

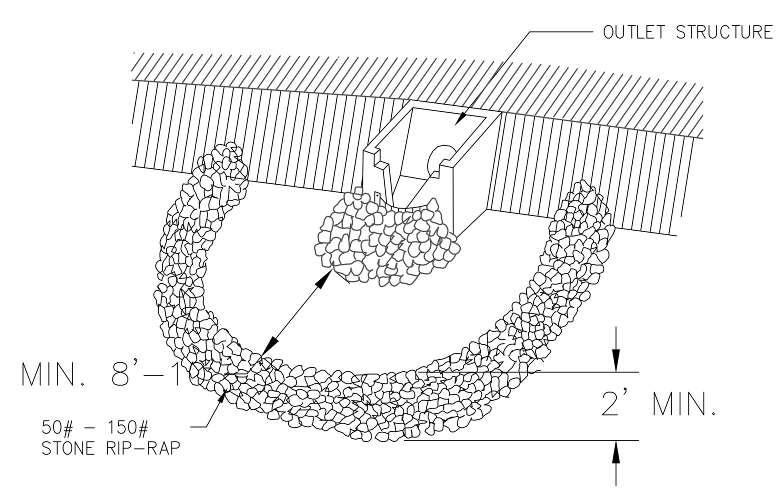

PLAN VIEW (NOT TO SCALE)

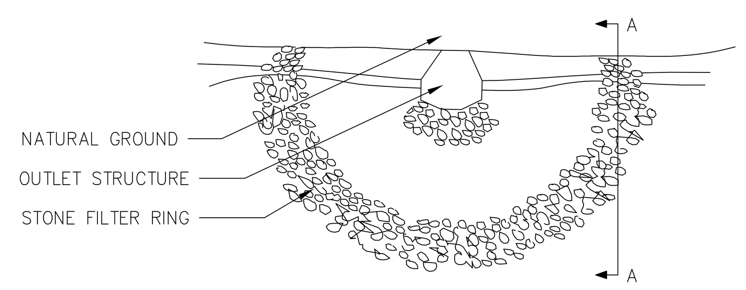

CROSS SECTION (NOT TO SCALE)

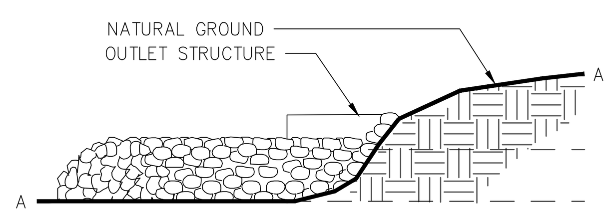

Fr FILTER RING
N.T.S.

ISOMETRICS

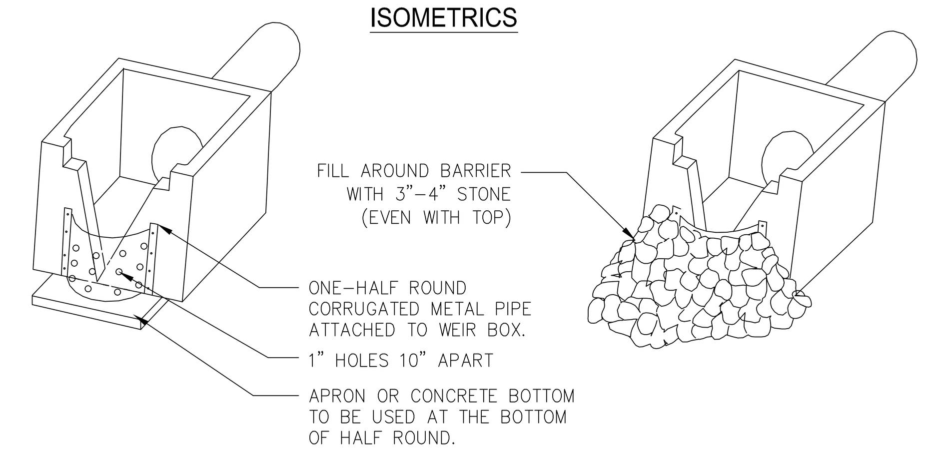

PLAN

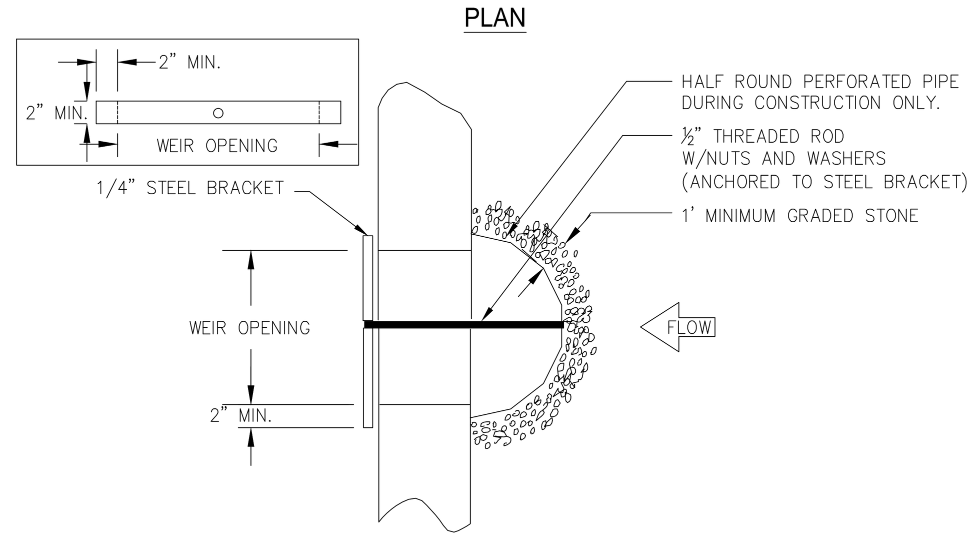

Rt RETROFIT
N.T.S.

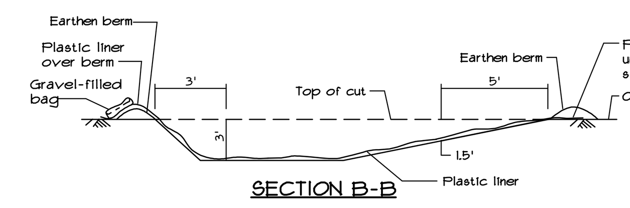

SECTION B-B

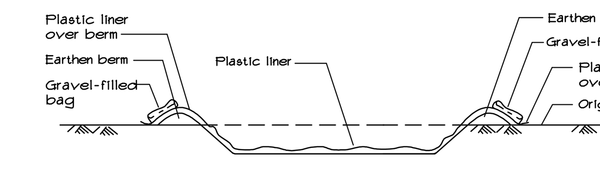

SECTION A-A

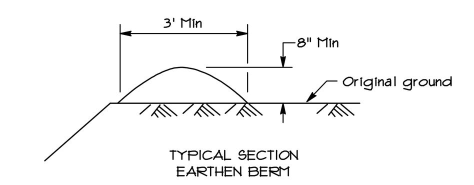

TYPICAL SECTION
EARTHEN BERM

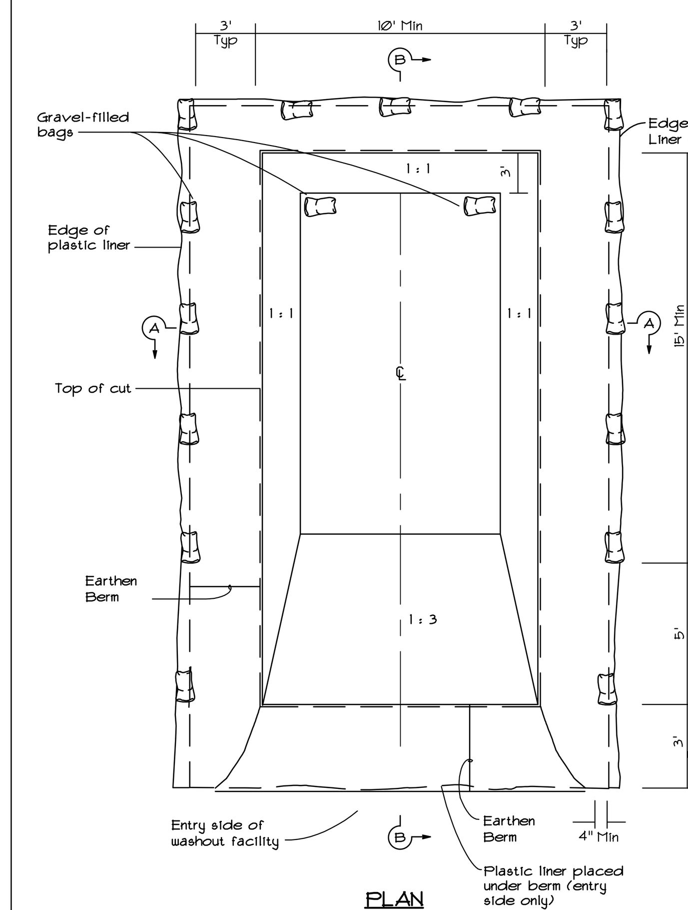

PLAN
TEMPORARY
CONCRETE WASHOUT FACILITY
N.T.S.

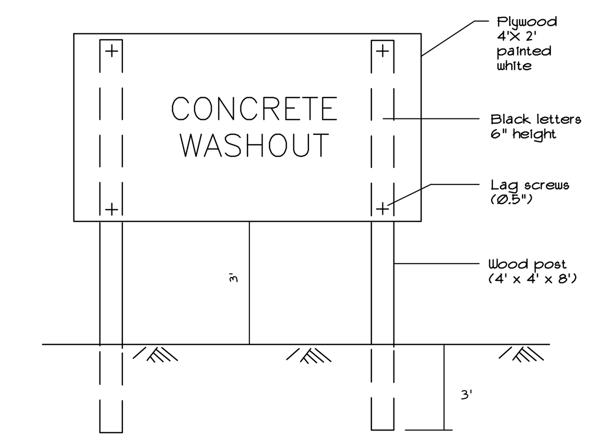

CONCRETE WASHOUT
SIGN DETAIL

NOTES

1. The concrete washout sign shall be installed within 30' of the temporary concrete washout facility.
2. 10 Mil Plastic liner shall be anchored with gravel-filled bags for below grade concrete washout facility.
3. Site Contractor shall install concrete washout facility. General Contractor shall assume responsibility for regulating maintenance, replacement and costs for use, upkeep and disposal operations associated with the washout facility.
4. Washout of the drum at the construction site is prohibited.

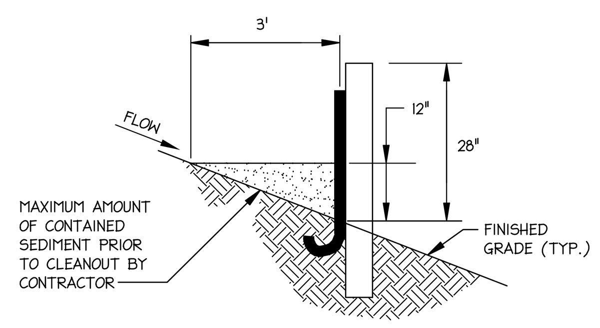

CALCULATION: 3'L X 1.00' H X 1' W X 0.5 = 1.50 C.F. STORAGE PER 1 L.F. OF SILT FENCE. THIS MEASURE WILL EFFECTIVELY MITIGATE EROSION ON ALL SITE AREAS WHICH WILL NOT FLOW DIRECTLY TO SEDIMENT BASINS OR TEMPORARY SEDIMENT STORAGE AREAS DURING INITIAL SITE PREPARATION.

1 SEDIMENT STORAGE BEHIND SILT FENCE
N.T.S.

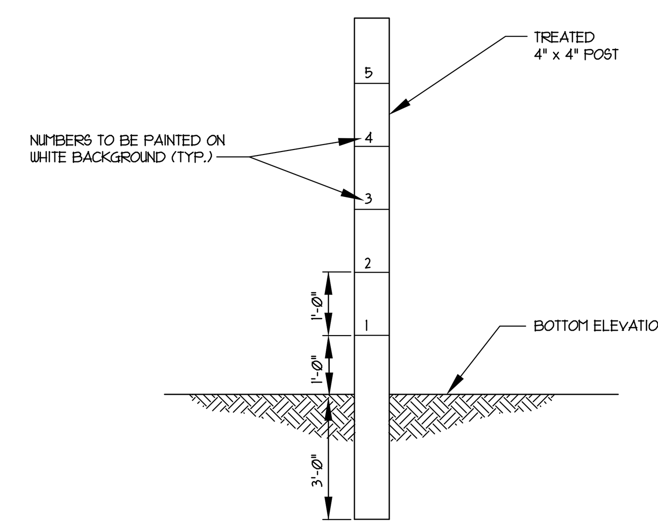

(INSTALL ONE PER SEDIMENT BASIN)

2 SILT GAGE
N.T.S.

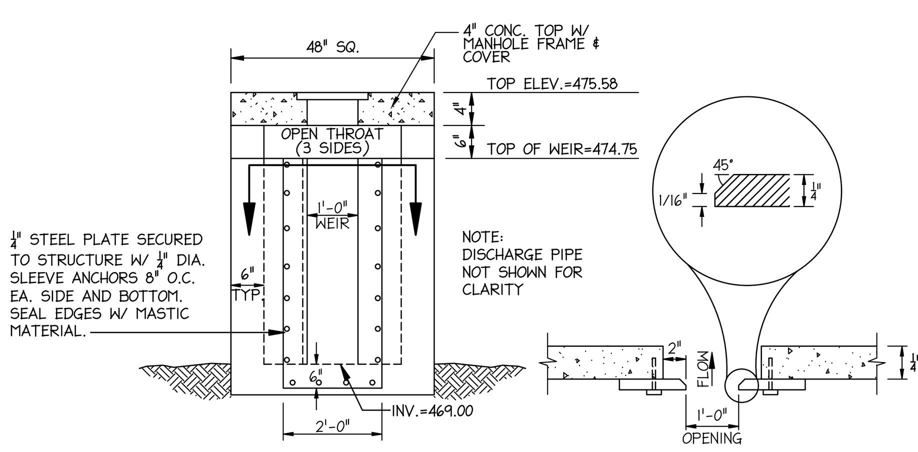

St2

SECTION A-A

3 RECTANGULAR WEIR
N.T.S.

CONSTRUCTION SPECIFICATIONS

1. STRIPPING SHOULD BE CONFINED TO THE IMMEDIATE CONSTRUCTION AREA. A 4 TO 6 INCH STRIPPING DEPTH IS COMMON, BUT MAY VARY DEPENDING ON THE PARTICULAR SOIL.

2. IF pH VALUE IS LESS THAN 6.0. LIME SHALL BE APPLIES AND INCORPORATED WITH THE TOPSOIL TO ADJUST THE pH TO 6.5 OR HIGHER. TOPSOILS CONTAINING SOLUBLE SALTS GREATER THAN 500 PARTS PER MILLION SHALL NOT BE USED.

3. THE LOCATION OF TOPSOIL STOCKPILES SHOULD NOT OBSTRUCT NATURAL DRAINAGE OR CAUSE OFF-SITE ENVIRONMENTAL DAMAGE.

4. STOCKPILES SHALL BE CONTAINED BY SEDIMENT BARRIERS TO PREVENT SEDIMENTATION ON ADJACENT AREAS. STOCKPILES SHALL BE STABILIZED ON ACCORDANCE WITH SPECIFICATIONS FOR DS1, DS2, PM OR TB.

SITE PREPARATION:

1. TOPSOILING: WHEN TOPSOILING, MAINTAIN NEEDED EROSION CONTROL PRACTICE SUCH AS DIVERSIONS, GRADE STABILIZATION STRUCTURES, BERMS, DIKES, LEVEL SPREADERS, WATERWAYS, SEDIMENT BASINS, ETC.

2. GRADING: GRADES ON THE AREAS TO BE TOP SOILED WHICH HAVE BEEN PREVIOUSLY ESTABLISHED SHALL BE MAINTAINED.

3. LIMING: SOIL TESTS SHOULD BE USED TO DETERMINE THE pH OF THE SOIL. WHERE THE pH OF THE SUBSOIL IS 5.0 OR LESS OR COMPOSED OF HEAVY CLAYS, AGRICULTURAL LIMESTONE SHALL BE SPREAD AT THE RATE OF 100 POUNDS PER 1,000 SQUARE FEET. LIME SHALL BE DISTRIBUTED UNIFORMLY OVER DESIGNATED AREAS AND WORKED INTO THE SOIL IN CONJUNCTION WITH TILLAGE OPERATIONS AS DESCRIBED IN THE FOLLOWING PROCEDURES.

4. BONDING: USE ONE OF THE FOLLOWING METHODS TO INSURE BONDING OF TOPSOIL:

A. TILLING: AFTER THE AREAS TO BE TOPSOILED HAVE BEEN BROUGHT TO GRADE, AND IMMEDIATELY PRIOR TO DUMPING AND SPREADING THE TOPSOIL, THE SUB GRADE SHALL BE LOOSENED BY DISCING OR SCARIFYING TO A DEPTH OF AT LEAST 3 INCHES TO PERMIT BONDING OF THE TOPSOIL TO THE SUBSOIL.

B. TRACKING: PASSING A BULLDOZER OVER THE ENTIRE SURFACE AREA OF THE SLOPE TO LEAVE HORIZONTAL DEPRESSIONS.

5. APPLYING TOPSOIL:

A. TOPSOIL SHOULD BE HANDLED ONLY WHEN IT IS DRY ENOUGH TO WORK WITH WITHOUT DAMAGING SOIL STRUCTURE.

B. A UNIFORM APPLICATION OF6 INCHES (UNSETTLED) IS RECOMMENDED, BUT MAY BE ADJUSTED AT THE DISCRETION OF THE ENGINEER OR LANDSCAPE ARCHITECT.

TOPSOILING

Tp

MULCHING MATERIALS:

SELECT ONE OF THE FOLLOWING MATERIALS AND APPLY AT THE DEPTH INDICATED:

1. DRY STRAW OR HAY SHALL BE APPLIED AT A DEPTH OF 2 TO 4 INCHES PROVIDING COMPLETE SOIL COVERAGE.
2. CUTBACK ASPHALT (SLOW CURLING) SHALL BE APPLIED AT 1200 GALLONS PER ACRE

APPLYING MULCH:

WHEN MULCH IS USED WITH OUT SEEDING, MULCH SHALL BE APPLIED TO PROVIDE FULL COVERAGE OF THE EXPOSED AREA.
1. DRY STRAW OR HAY MULCH SHALL BE APPLIED UNIFORMLY BY HAND OR BY MECHANICAL EQUIPMENT.
2. CUTBACK ASPHALT SHALL BE APPLIED UNIFORMLY. CARE SHOULD BE TAKEN IN AREAS OF PEDESTRIAN TRAFFIC DUE TO PROBLEMS OF "TRACKING IN" OR DAMAGE TO SHOES, CLOTHING, ETC.

ANCHORING MULCH:

1. STRAW OR HAY MULCH CAN BE PRESSED INTO THE SOIL WITH A DISK HARROW WITH THE DISK SET STRAIGHT OR WITH A SPECIAL "PACKER DISK". DISKS MAY BE SMOOTH OR SERRATED AND SHOULD BE 20 INCHES OR MORE IN DIAMETER AND 8 TO 12 INCHES APART. THE EDGES OF THE DISK SHOULD BE DULL ENOUGH NOT TO CUT THE MULCH BUT TO PRESS IT INTO THE SOIL LEAVING MULCH IN AN ERECT POSITION. STRAW OR HAY MULCH SHALL BE ANCHORED IMMEDIATELY AFTER APPLICATION.
2. STRAW OR HAY MULCH SPREAD WITH SPECIAL BLOWER-TYPE EQUIPMENT MAY BE ANCHORED WITH EMULSIFIED ASPHALT (GRADE AE-5 OR SS-1). THE ASPHALT EMULSION SHALL BE SPRAYED ONTO THE MULCH AS IT IS EJECTED FROM THE MACHINE. USE 100 GALLONS OF EMULSIFIED ASPHALT AND 100 GALLONS OF WATER PER TON OF MULCH. TACKIFIERS ON BINDERS CAN BE SUBSTITUTED FOR EMULSIFIED ASPHALT.

DISTURBED AREA STABILIZATION
(W/ MULCH ONLY)

Ds1

THIS PRACTICE SHALL BE EMPLOYED TO CONTROL SURFACE AND AIR MOVEMENT OF DUST ON SITE.
METHOD SHALL INCLUDE SPRAYING OF DISTURBED AREAS WITH WATER ON A PERIODIC BASIS WHEN EXPOSED SOIL BECOMES DRY. CONTRACTOR SHALL MONITOR THESE AREAS AND APPLY DUST CONTROL BEFORE SOIL BECOMES EXCESSIVELY DRY.

Du

CARTER Engineering Group
6310 Peake Road, Suite 200
Macon, GA 31210
478-219-2600

THIS DRAWING IS AN INSTRUMENT OF SERVICE AND SHALL REMAIN THE PROPERTY OF THE ENGINEER, AND SHALL NOT BE REPRODUCED, PUBLISHED OR USED IN ANY WAY WITHOUT THE CONSENT OF THE ENGINEER. THIS DRAWING SHALL NOT BE SCALED.
© COPYRIGHT 2019 CARTER ENGINEERING GROUP, LLC.

GEORGIA 811
Utilities Protection Center, Inc.
Know what's below. Call before you dig.

STAMP:

LEVEL II CERTIFIED
DESIGN PROFESSIONAL # 2061
ISSUED: 11/2/2017 EXPIRES: 11/2/2020

RELEASE DATES:

REV #	DATE	DESCRIPTION

CLIENT:
BIBB COUNTY
SCHOOL DISTRICT
MACON-BIBB COUNTY, GA

PROJECT:
HARTLEY ELEMENTARY SCHOOL
PARKING IMPROVEMENTS

2230 ANTHONY ROAD
MACON-BIBB COUNTY, GA 31204

DRAWN BY:	CHECKED BY:
CADD	DLC
PROJECT NUMBER:	DATE:
B7600.017	03/18/2019

GRAPHIC SCALE:

SCALE:

DRAWING TITLE:
STORMWATER
POLLUTION
PREVENTION
DETAILS

DRAWING NUMBER:
C6.7

B7600.017 Details.dwg
P:\B7600 - BIBB COUNTY SCHOOL DISTRICT\B7600.017 Hartley Elementary School Parking Improvements\CADD\B7600.017 Details.dwg, C6.7 ErDetails2, 3/26/2019 7:00:01 PM, mroberts, DWG To PDF.pc3, ARCH full bleed E1 (30.00 x 42.00 Inches), 1:1
Plotted:3/26/2019 7:00:01 PM By:Mary Ann Roberts Paper Size:11x17 Device Name:Color C5250 UFR II.pc3 Style:CS 253 Plot.ctb Scale:1:10
P:\B7600 - BIBB COUNTY SCHOOL DISTRICT\B7600.017 Hartley Elementary School Parking Improvements\CADD\B7600.017 Details.dwg, C6.7 ErDetails2, Last Save:Mar 21,2019 5:08:54pm By:mroberts

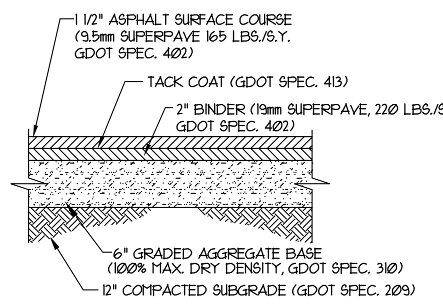

1 TYPICAL ASPHALT PAVING

N.T.S.

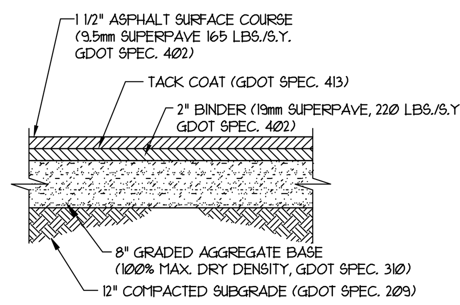

2 NEW HEAVY DUTY PAVING

N.T.S.

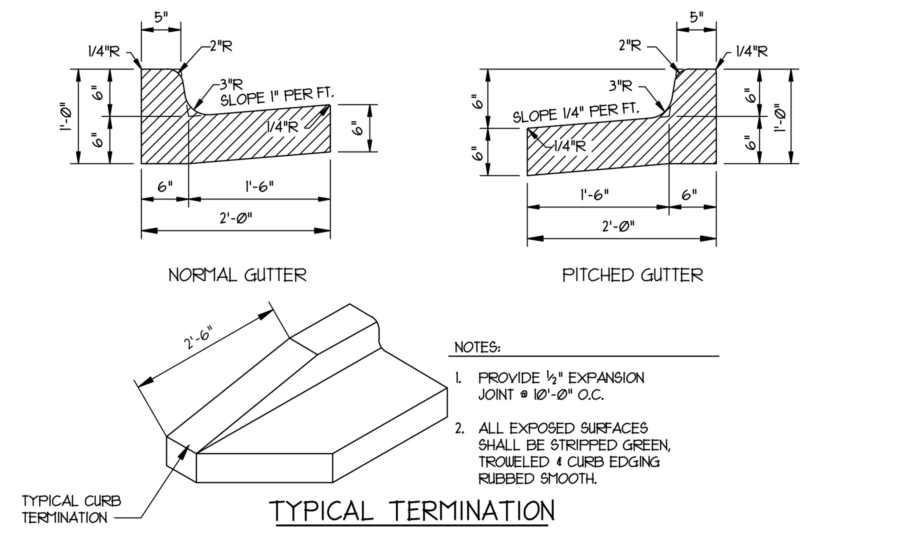

NOTES:

1. PROVIDE ½" EXPANSION JOINT @ 10'-0" O.C.
2. ALL EXPOSED SURFACES SHALL BE STRIPPED GREEN, TROWELED & CURB EDGING RUBBED SMOOTH.

TYPICAL TERMINATION

3 TYPICAL CURB & GUTTER

N.T.S.

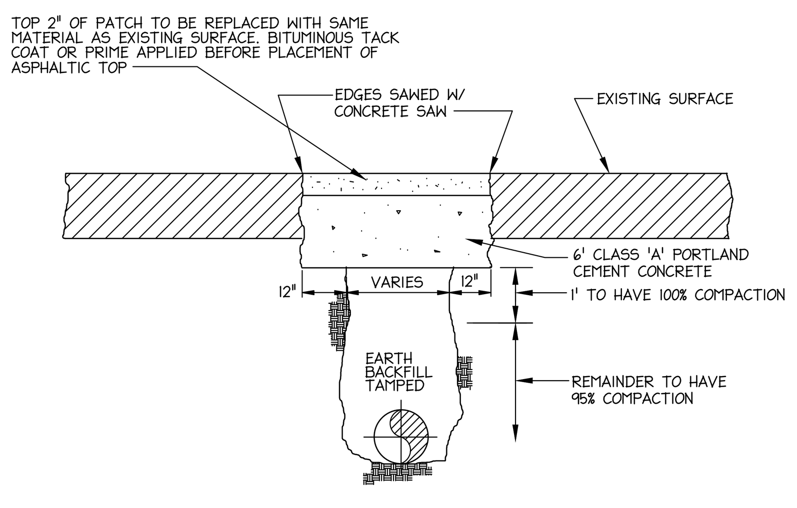

4 CLASS 'A' PAVEMENT REPLACEMENT FOR REPAIR OF UTILITY TRENCH AND WIDENING OF DRIVE

N.T.S.

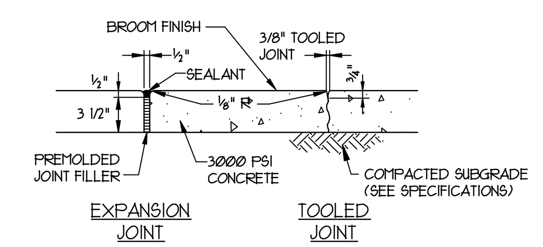

TOOLED JOINTS: 15' OC UNLESS SHOWN OTHERWISE ON PLAN. ALL JOINTS AND EDGES SHALL BE TOOLED TO HAVE A ¼-INCH RADIUS.

EXPANSION JOINTS: WHERE PAVEMENTS ABUT ANY FIXED OBJECT SUCH AS WALLS, CURB, MANHOLES, ETC. AND AT INTERVALS NOT EXCEEDING 40 FEET.

5 CONCRETE SIDEWALK AND SIDEWALK JOINTING

N.T.S.

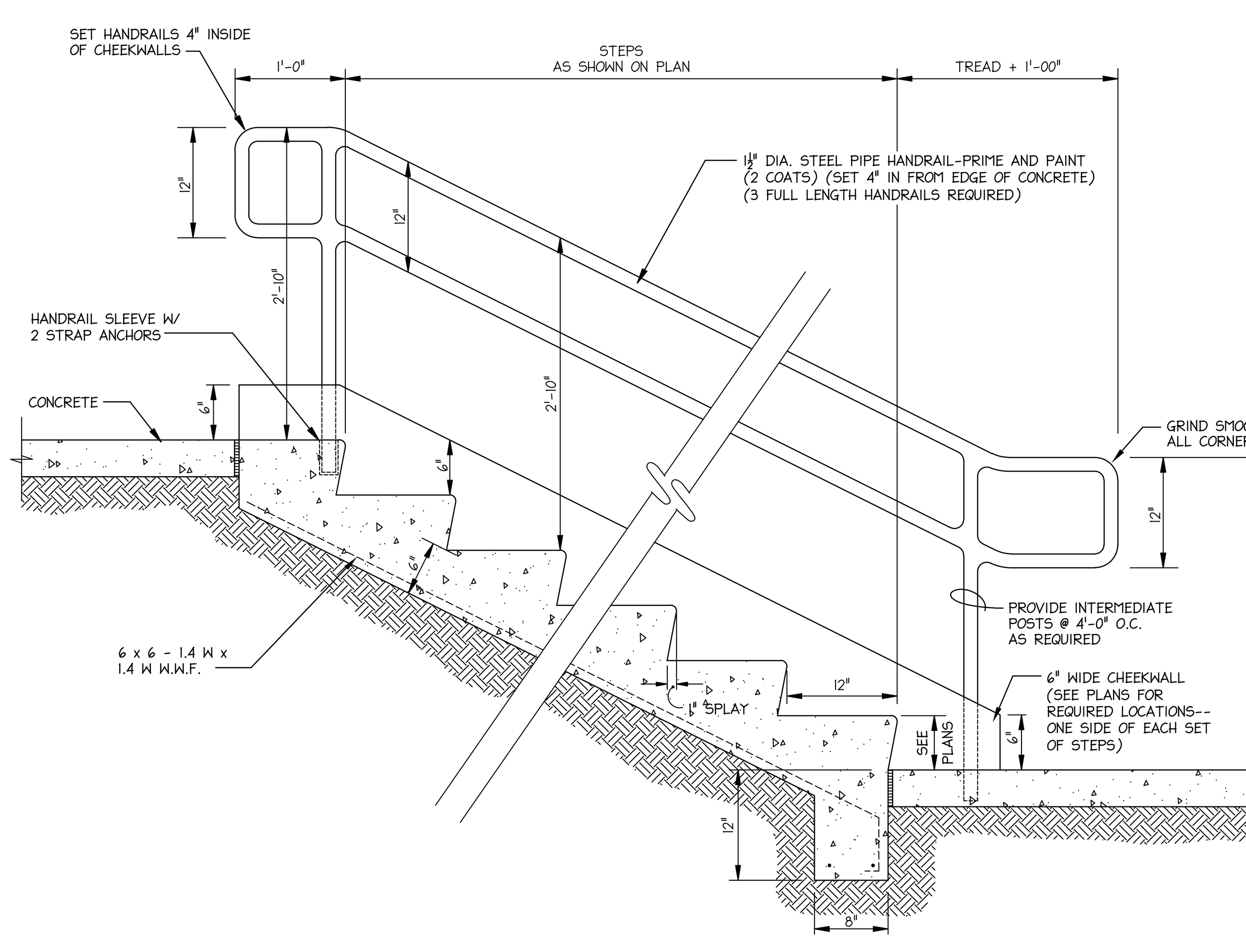

6 CONCRETE STEPS W/ HANDRAILS

N.T.S.

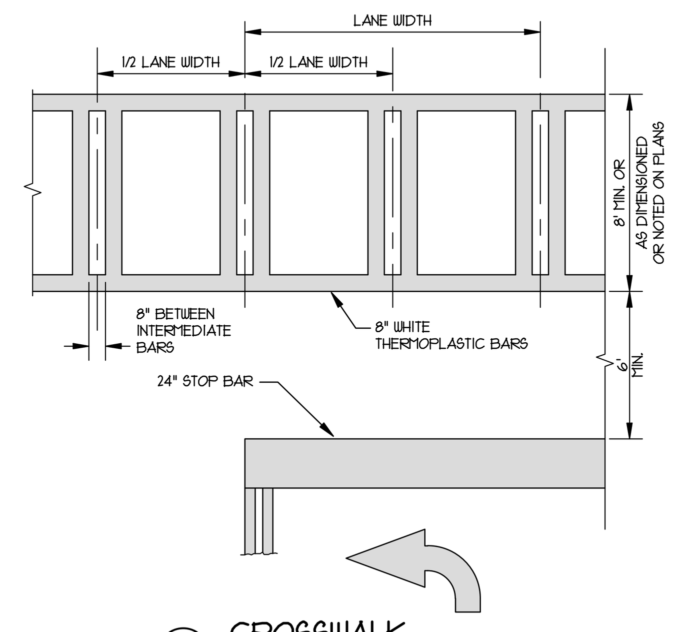

7 CROSSWALK

N.T.S.

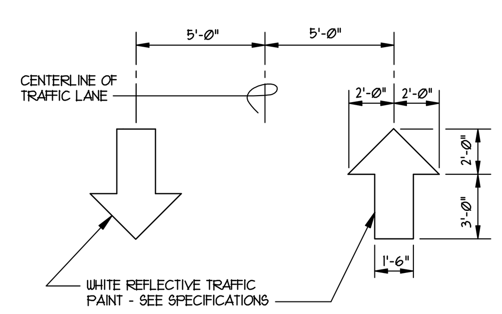

8 TRAFFIC ARROWS

N.T.S.

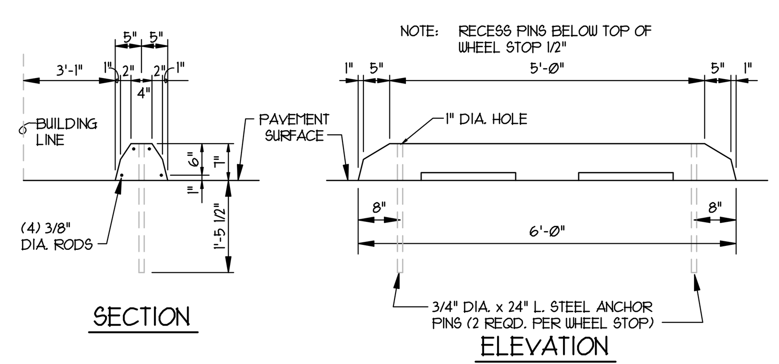

9 CONCRETE WHEEL STOP

N.T.S.

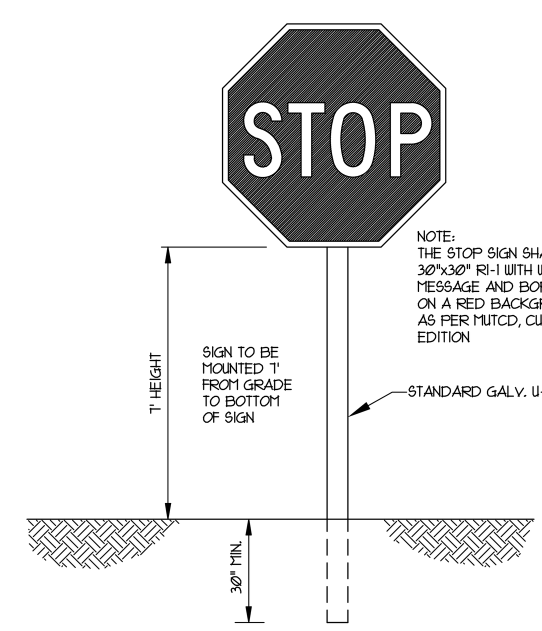

10 STOP SIGN-R1-1

N.T.S.

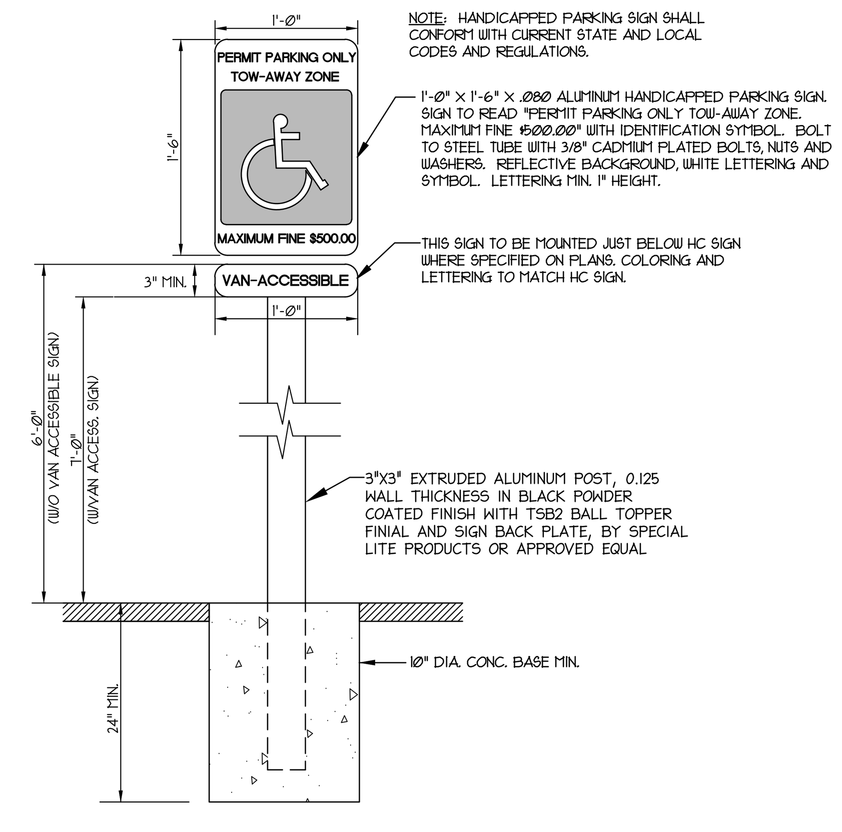

NOTE: HANDICAPPED PARKING SIGN SHALL CONFORM WITH CURRENT STATE AND LOCAL CODES AND REGULATIONS.

1'-0" X 1'-6" X .080 ALUMINUM HANDICAPPED PARKING SIGN. SIGN TO READ "PERMIT PARKING ONLY TOW-AWAY ZONE. MAXIMUM FINE $500.00" WITH IDENTIFICATION SYMBOL. BOLT TO STEEL TUBE WITH 3/8" CADMIUM PLATED BOLTS, NUTS AND WASHERS. REFLECTIVE BACKGROUND, WHITE LETTERING AND SYMBOL. LETTERING MIN. 1" HEIGHT.

THIS SIGN TO BE MOUNTED JUST BELOW HC SIGN WHERE SPECIFIED ON PLANS. COLORING AND LETTERING TO MATCH HC SIGN.

3"X3" EXTRUDED ALUMINUM POST, 0.125 WALL THICKNESS IN BLACK POWDER COATED FINISH WITH TSB2 BALL TOPPER FINIAL AND SIGN BACK PLATE, BY SPECIAL LITE PRODUCTS OR APPROVED EQUAL

11 HANDICAP PARKING SIGN

N.T.S.

HANDICAP PARKING SIGN SHALL COMPLY WITH OFFICIAL CODE OF GEORGIA SECTION 40-6-221

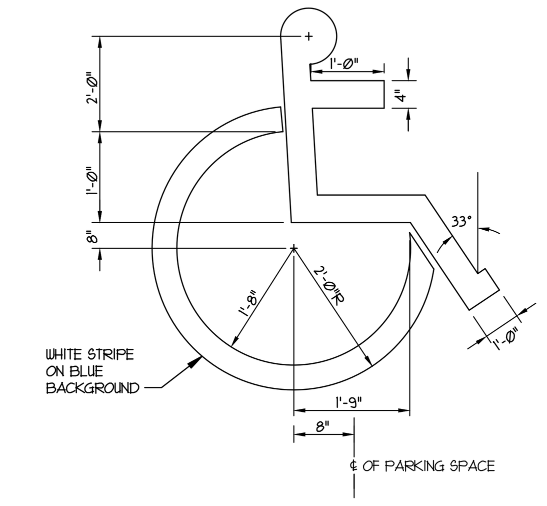

12 HANDICAP SYMBOL

N.T.S.

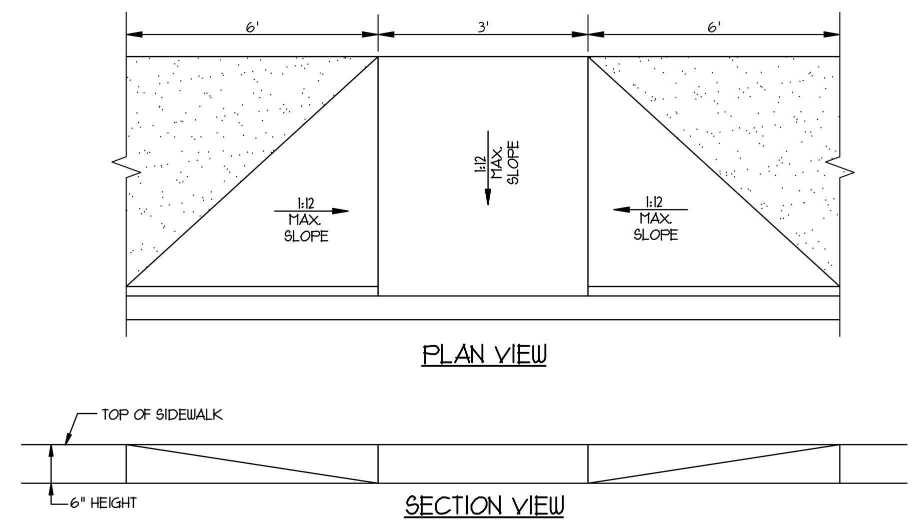

13 TYPE 1 HANDICAP RAMP

N.T.S.

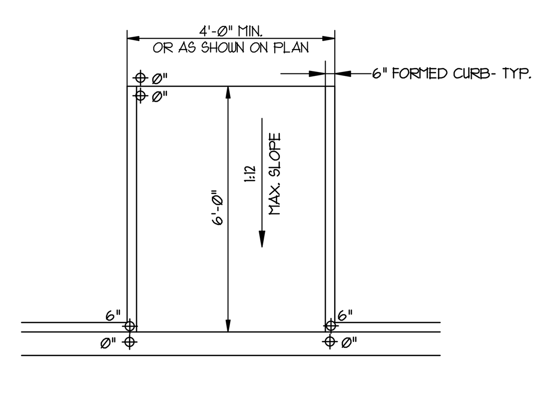

14 TYPE 2 HANDICAP RAMP

N.T.S.

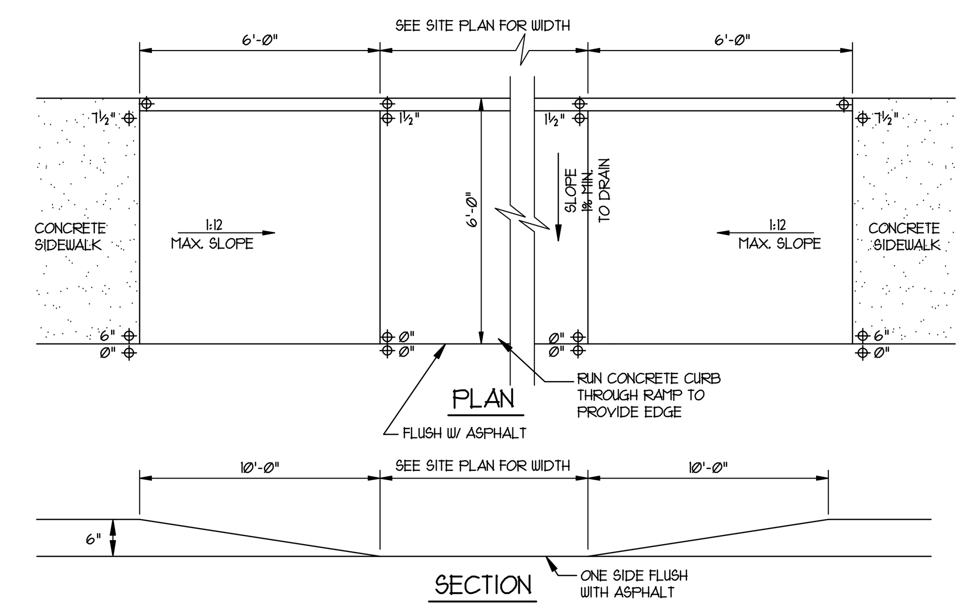

15 TYPE 3 HANDICAP RAMP

N.T.S.

CONCRETE SIDEWALK DETAILS

STATE	PROJECT NUMBER	SHEET NO.	TOTAL SHEETS
GA.			

TYPICAL LOCATIONS FOR CURB CUT RAMPS - PLAN VIEW

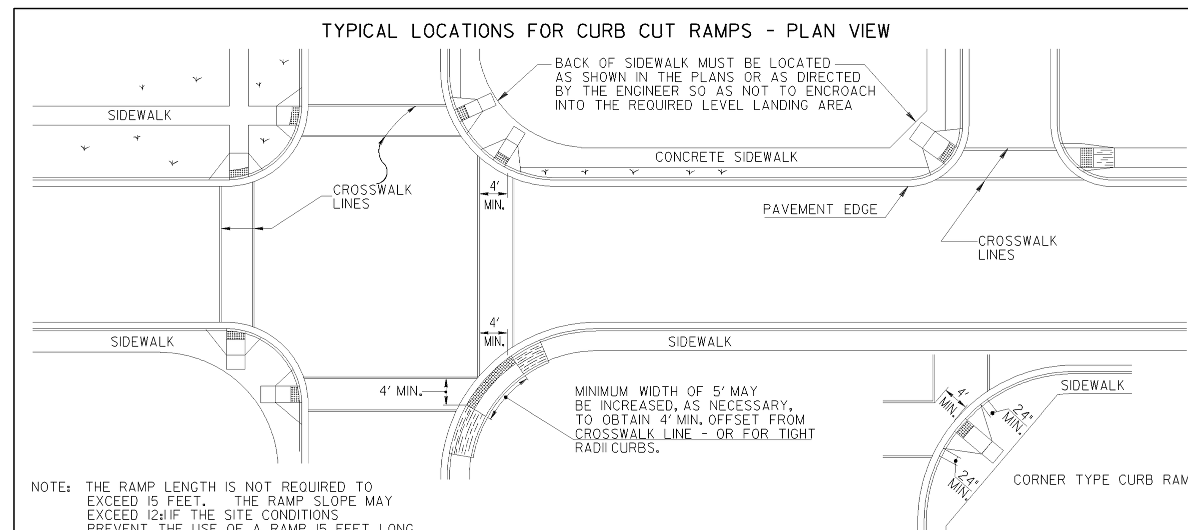

NOTE: THE RAMP LENGTH IS NOT REQUIRED TO EXCEED 15 FEET. THE RAMP SLOPE MAY EXCEED 12:1 IF THE SITE CONDITIONS PREVENT THE USE OF A RAMP 15 FEET LONG.

GUTTER TRANSITION DETAIL

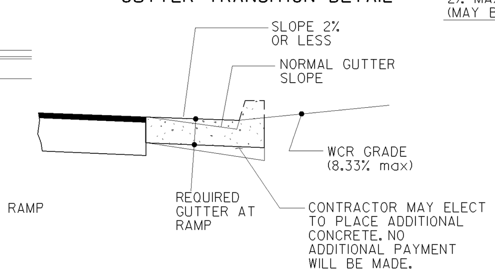

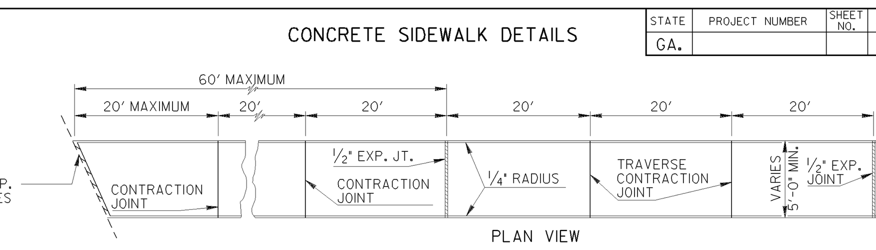

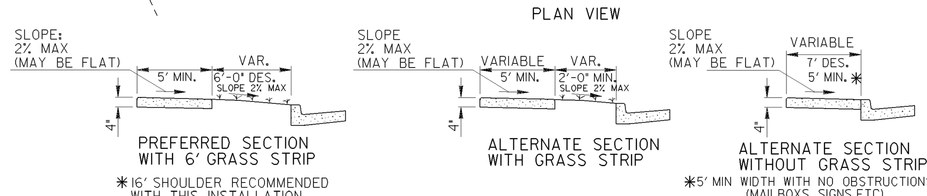

✱16' SHOULDER RECOMMENDED WITH THIS INSTALLATION

✱5' MIN WIDTH WITH NO OBSTRUCTIONS (MAILBOX, SIGNS, ETC)

7' PREFERRED WIDTH WITH A 2' AREA OF CONTRASTING COLOR & TEXTURE ADJACENT TO THE CURB. (COST OF TEXTURE, COLORING & HOLES REQUIRED FOR MAILBOX AND SIGN POST SHALL BE INCLUDED IN THE PRICE BID FOR SIDEWALK)

NOTES FOR CONCRETE SIDEWALK:

A. CONCRETE TO BE PLACED 4" THICK AND FINISHED WITH TAMPS, WOOD FLOATS AND STIFF-BRISTLE BROOMS.
B. TRANSVERSE CONTRACTION JOINTS SHALL BE PLACED AT 20 FT. INTERVALS. ALL EDGES TO BE ROUNDED TO ¼" RADIUS.
C. ½" EXPANSION JOINTS SHALL BE PLACED, WHERE SIDEWALK TIE INTO A STRUCTURE OR TERMINATE AT CURB, RAMPS OR DRIVEWAYS AND AT 60' INTERVALS.

NOTES FOR CURB CUT RAMPS:

1. CURB CUT RAMPS WILL BE LOCATED AS FOLLOWS UNLESS PLANS OR CONTRACT SPECIFY OTHERWISE.
   a) AT ALL PEDESTRIAN CROSSWALKS WHERE CURB IS CONSTRUCTED OR REPLACED.
   b) WHERE THE SIDEWALK, CONCRETE OR UNPAVED, IS INTERRUPTED BY THE CURB AT TURNOUTS OR AT INTERSECTIONS.
   c) AT OTHER LOCATIONS SUCH AS HOSPITALS, NURSING HOMES, REST AREAS, ETC., WHERE THE CURB WOULD OTHERWISE BE AN OBSTRUCTION TO THE PHYSICALLY DISABLED.
2. RAMPS WILL BE CONSTRUCTED FROM CONCRETE. SPECIFICATIONS FOR RAMPS WILL BE THE SAME AS FOR CONCRETE SIDEWALK. RAMPS SHALL HAVE EITHER A ROUGH OR A TEXTURED FINISH.
3. DROP INLETS ARE NOT TO BE LOCATED DIRECTLY IN FRONT OF RAMPS. CATCH BASINS SHOULD BE LOCATED AT LEAST 10 FT. FROM RAMPS WHEN FEASIBLE.
4. WHERE RAMPS ARE LOCATED IN RADII, THE DIMENSIONS SHOWN FOR RAMP WIDTHS AND TAPERS ARE MEASURED PERPENDICULAR TO THE RAMP AND NOT ALONG THE CURVE.
5. WHERE UTILITY STRUCTURES CONFLICT, WHERE SIDEWALK GEOMETRY VARIES, AT SKEWED INTERSECTIONS, OR IN OTHER SPECIAL CASES, THE RAMP DESIGNS MAY BE MODIFIED BY THE DESIGNER OR ENGINEER, PROVIDED THAT THE WIDTH REMAINS A MINIMUM OF 48 INCHES, AND NO SLOPE ON THE ACCESSIBLE PART OF THE RAMP IS STEEPER THAN 12:1.
6. LIN. FT. OF CURB AND GUTTER WILL INCLUDE THE TRANSITIONED CURB IN FRONT OF RAMPS. SQ. YDS. OF CONCRETE SIDEWALK AND CONCRETE MEDIAN PAVING WILL INCLUDE RAMPS. NO ADDITIONAL PAYMENT WILL BE MADE FOR CURB RAMPS. NO ADDITIONAL PAYMENT WILL BE MADE FOR SAWING AND REMOVING EXISTING SIDEWALK OR CURB WHERE NECESSARY FOR RAMP CONSTRUCTION.
7. WHEN A CURB RAMP IS PLACED ON EXISTING PAVEMENT. THE PAVEMENT SHALL BE REMOVED TO PROVIDE A MINIMUM THICKNESS OF 3 INCHES OF CONCRETE AT ALL LOCATIONS. NO SEPARATE PAYMENT WILL BE MADE FOR REMOVAL OF THE PAVEMENT.
8. DETECTABLE WARNING SURFACES ARE REQUIRED ON ALL INTERSECTIONS WITH PUBLIC STREETS, SIGNALIZED COMMERCIAL DRIVEWAYS, AND COMMERCIAL DRIVEWAYS WITH AN AADT OF 25 VPD.

This Detail Replaces Ga Standard 9031W

Guidelines For Usage On Metric Projects

When these details are incorporated into plans and or projects that are being prepared or constructed in metric units, exact or precise conversion to metric units is not required. The dimensions shown that are in feet and inches may be converted to corresponding metric units using the following " Rounded-Off" conversion factors: 1" =25mm, 4"=100mm, and 12" or 1' =300mm. All measurement notes that refer to linear feet and square yards shall be interpreted to mean linear meters and square meters.

Type A

(The Prefered Ramp)

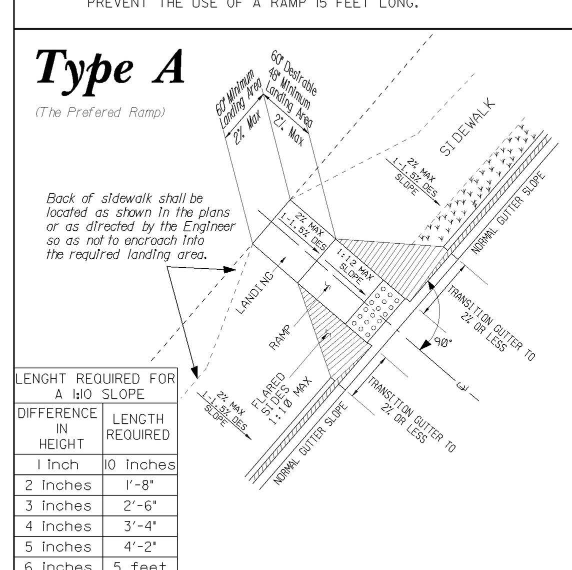

LENGHT REQUIRED FOR A 1:10 SLOPE	
DIFFERENCE IN HEIGHT	LENGTH REQUIRED
1 Inch	10 Inches
2 Inches	1'-8"
3 Inches	2'-6"
4 Inches	3'-4"
5 Inches	4'-2"
6 Inches	5 feet

Type B

(Normally used when space is not available for a landing at the top of a Type A Ramp)

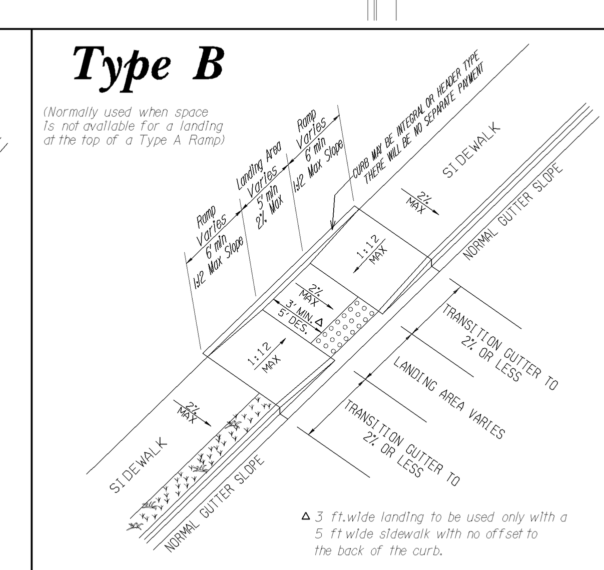

Δ 3 ft.wide landing to be used only with a 5 ft wide sidewalk with no offset to the back of the curb.

Type D

(Normally used when the sidewalk ties directly into the crosswalk)

LENGHT REQUIRED FOR A 1:12 SLOPE	
DIFFERENCE IN HEIGHT	LENGTH REQUIRED
1 Inch	1 foot
2 Inches	2 feet
3 Inches	3 feet
4 Inches	4 feet
5 Inches	5 feet
6 Inches	6 feet

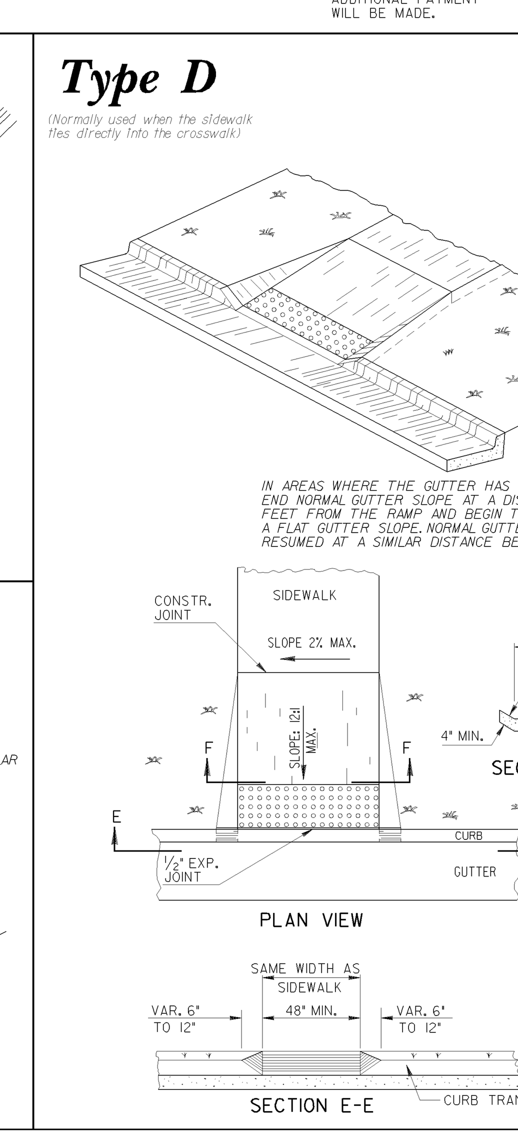

IN AREAS WHERE THE GUTTER HAS A SLOPE 1" IN 1' END NORMAL GUTTER SLOPE AT A DISTANCE OF 6 TO 10 FEET FROM THE RAMP AND BEGIN TRANSITION TO A FLAT GUTTER SLOPE. NORMAL GUTTER SLOPE SHALL BE RESUMED AT A SIMILAR DISTANCE BEYOND THE RAMP.

Type C

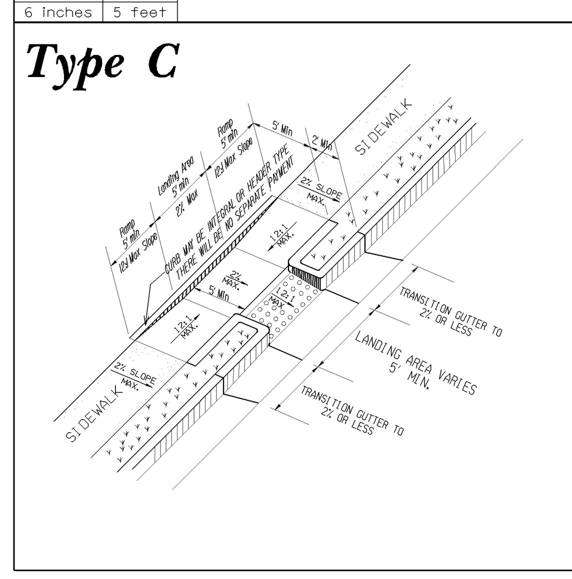

Skewed Ramp Details

(Applies to Type A & Type D Ramps Only)

WHEN THE RAMP CENTERLINE IS NOT PERPENDICULAR TO THE CURB A LEVEL LANDING AREA WITH SLOPES LESS THAN 2% MUST BE PROVIDED AT THE BOTTOM OF THE RAMP.

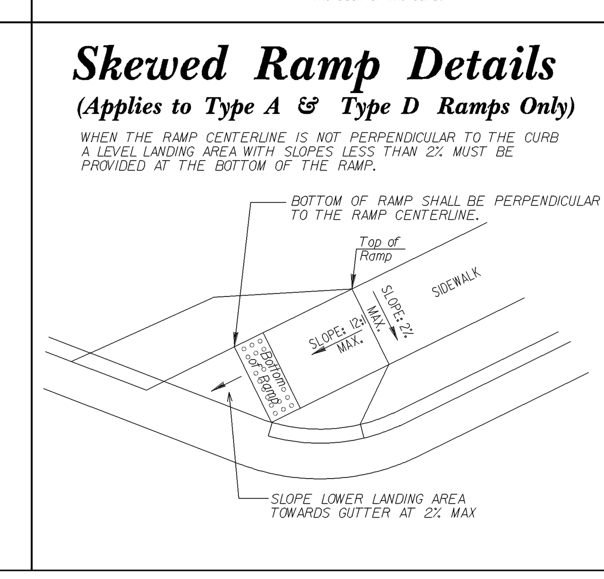

DATE	REVISION	
6-18-09	REV. SLOPES TO PERCENT AND ADDED 12:1 & 10:1 CHART.	GLO
	ADDED GEN. NOTE NO. 8.	
5-10-06	REV. TRUNCATED DOMES	GLO
2-21-03	REVISED	
2-10-03	REVISED	
7-29-02	REVISED	
5-29-02	REVISED	
5-23-02	REVISED	
5-13-02	REVISED	
4-29-02	REVISED	
4-11-02	REVISED	
4-3-02	REVISED	
3-28-02	REVISED	

DEPARTMENT OF TRANSPORTATION
STATE OF GEORGIA

SPECIAL DETAIL
CONCRETE SIDEWALK DETAILS
CURB CUT (WHEELCHAIR) RAMPS

NO SCALE — MARCH 12, 2002

NUMBER A3

CARTER Engineering Group
6310 Peake Road, Suite 200
Macon, GA 31210
478-219-2600

THIS DRAWING IS AN INSTRUMENT OF SERVICE AND SHALL REMAIN THE PROPERTY OF THE ENGINEER, AND SHALL NOT BE REPRODUCED, PUBLISHED OR USED IN ANY WAY WITHOUT THE CONSENT OF THE ENGINEER. THIS DRAWING SHALL NOT BE SCALED. © COPYRIGHT 2019 CARTER ENGINEERING GROUP, LLC.

GEORGIA 811 Utilities Protection Center, Inc. Know what's below. Call before you dig.

STAMP:

LEVEL II CERTIFIED
DESIGN PROFESSIONAL # 2061
ISSUED: 11/2/2017 EXPIRES: 11/2/2020

RELEASE DATES:

REV #	DATE	DESCRIPTION

CLIENT:
BIBB COUNTY
SCHOOL DISTRICT
MACON-BIBB COUNTY, GA

PROJECT:
HARTLEY ELEMENTARY SCHOOL
PARKING IMPROVEMENTS

2230 ANTHONY ROAD
MACON-BIBB COUNTY, GA 31204

DRAWN BY:	CHECKED BY:
CADD	DLC
PROJECT NUMBER:	DATE:
B7600.017	03/18/2019

GRAPHIC SCALE:

SCALE:

DRAWING TITLE:
MISCELLANEOUS
SITE DETAILS

DRAWING NUMBER:
C7.1

P:\B7600 - BIBB COUNTY SCHOOL DISTRICT\B7600.017 Hartley Elementary School Parking Improvements\CADD\B7600.017 Details.dwg, C7.1 MiscDetails1, 3/26/2019 7:00:11 PM, mroberts, DWG To PDF.pc3, ARCH full bleed E1 (30.00 x 42.00 Inches), 1:1

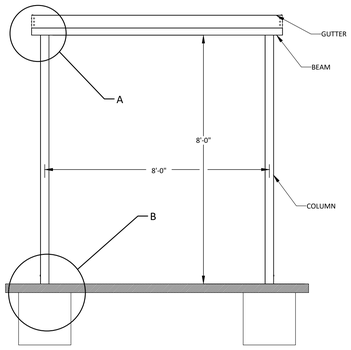

SECTION VIEW OF CANOPY

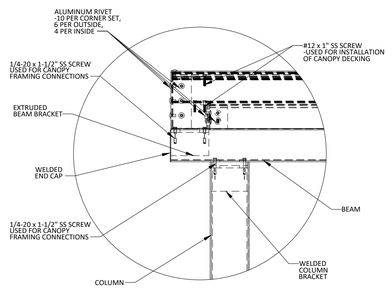

DETAIL A

N.T.S.

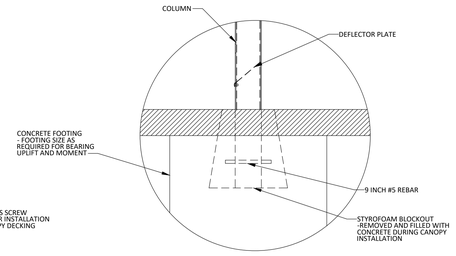

DETAIL B

N.T.S.

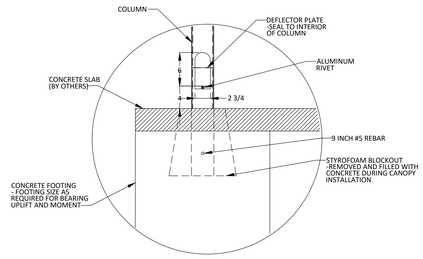

DETAIL B SIDE VIEW

N.T.S.

SPECIFICATIONS
Section 107300 - Aluminum Walkway Covers

1.01 General Description of Work:
A. Work in this section shall include design and fabrication of pre-engineered aluminum canopies.
B. Canopies are to be fabricated and installed according to approved shop drawings.

1.02 Design Criteria:
A. International Building Code 2015
B. ASCE 7-10
C. Aluminum Design Manual 2015
D. Local governing codes and standards for site location

1.03 Materials:
A. All materials shall be extruded from aluminum unless indicated otherwise on the drawing.
B. Material sizes shall meet or exceed the design criteria on 1.02

1.04 Finishes:
A. Factory applied baked enamel to comply with AAMA 2603
B. Color selected from manufacturers standard colors

1.05 Manufacturers:
A. Mitchell Metals, LLC -www.mitchellmetals.net - 770-431-7300
B. Dittmer - www.dittdeck.com - 407-699-1755
C. See Specifications 2.1-C for conditions of equivalent systems by other manufacturers.

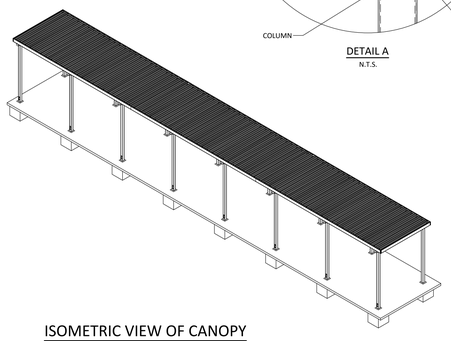

ISOMETRIC VIEW OF CANOPY

NOTES:
* DC = DRAINING COLUMN (IF APPLICABLE)
* CANOPY WIDTH RECOMMENDED NOT TO EXCEED 13'-0"
* COLUMN HEIGHT RECOMMENDED NOT TO EXCEED 12'-0" OR WIDTH OF CANOPY, WHICHEVER IS LOWER
* ALL FASTENERS TO BE 300 SERIES STAINLESS STEEL OR ALUMINUM

STAMP

JOB NAME: Aluminum Walkway Covers

TITLE: SHORTWAYS WITH BEAMS

REVISION # :

DATE:

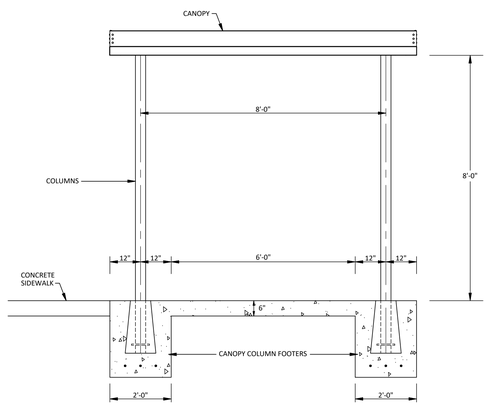

CANOPY SECTION

N.T.S.

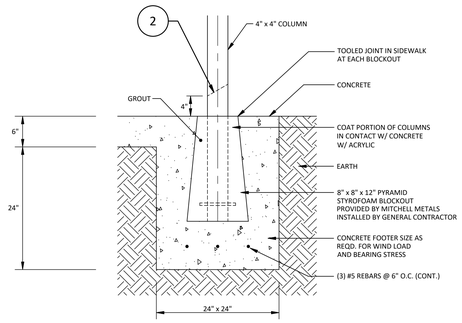

CANOPY COLUMN FOOTER

N.T.S.

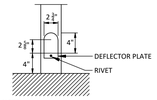

NOTE:
* CAULK DEFLECTOR PLATE INSIDE POST

DETAIL 2

CANOPY COLUMN DRAIN

N.T.S.

CARTER Engineering Group
6310 Peake Road, Suite 200
Macon, GA 31210
478-219-2600

THIS DRAWING IS AN INSTRUMENT OF SERVICE AND SHALL REMAIN THE PROPERTY OF THE ENGINEER, AND SHALL NOT BE REPRODUCED, PUBLISHED OR USED IN ANY WAY WITHOUT THE WRITTEN CONSENT OF THE ENGINEER. THIS DRAWING SHALL NOT BE SCALED.
© COPYRIGHT 2014 CARTER ENGINEERING GROUP, LLC.

GEORGIA 811 Utilities Protection Center, Inc.
Know what's below. Call before you dig.

STAMP:

LEVEL II CERTIFIED
DESIGN PROFESSIONAL # 2061
ISSUED: 11/2/2017 EXPIRES: 11/2/2020

RELEASE DATES:

REV #	DATE	DESCRIPTION

CLIENT:
BIBB COUNTY
SCHOOL DISTRICT
MACON-BIBB COUNTY, GA

PROJECT:
HARTLEY ELEMENTARY SCHOOL
PARKING IMPROVEMENTS

2230 ANTHONY ROAD
MACON-BIBB COUNTY, GA 31204

DRAWN BY:	CHECKED BY:
CADD	DLC
PROJECT NUMBER:	DATE:
B7600.017	03/18/2019

GRAPHIC SCALE:

SCALE:

DRAWING TITLE:
COVERED WALKWAY DETAILS

DRAWING NUMBER:
C7.2

B7600.017 Details.dwg

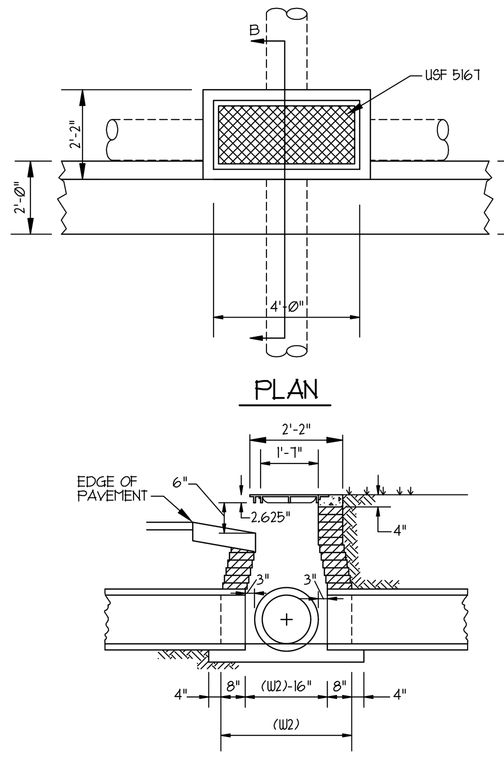

1 CURB INLET

N.T.S.

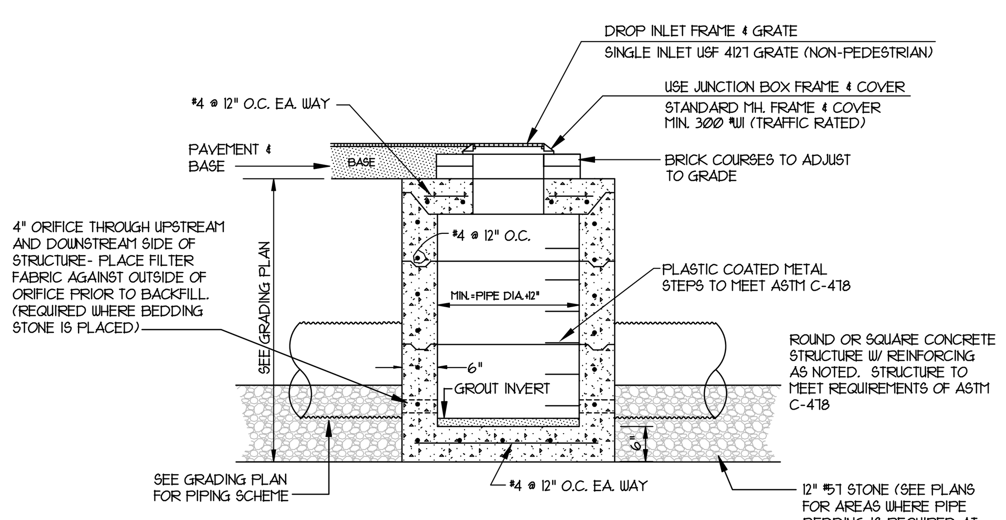

2 DROP INLET / JUNCTION BOX

N.T.S.

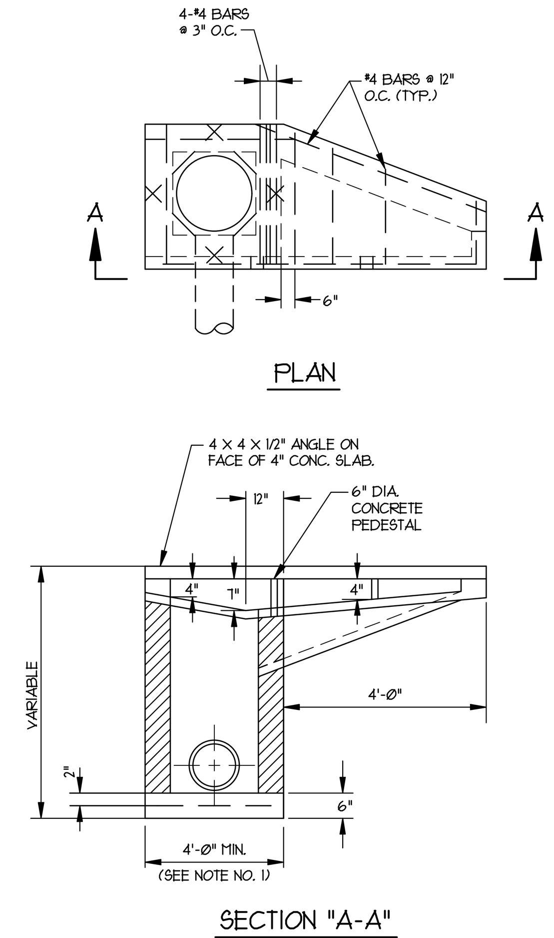

NOTES:

1. THESE DIMENSIONS MAY INCREASE TO ACCOMMODATE PIPE SIZES LARGER THAN 30" DIA.
2. FOR DOUBLE WING TRAP, MOVE LOW POINT ON GUTTER TO MIDDLE OF BOX & CONSTRUCT ADDITIONAL WING.
3. SEE PLANS FOR INVERT ELEVATIONS.
4. CATCH BASIN TO BE CONSTRUCTED IN ACCORDANCE W/ GDOT STD. 1033D OR 1034D.

3 CATCH BASIN

N.T.S.

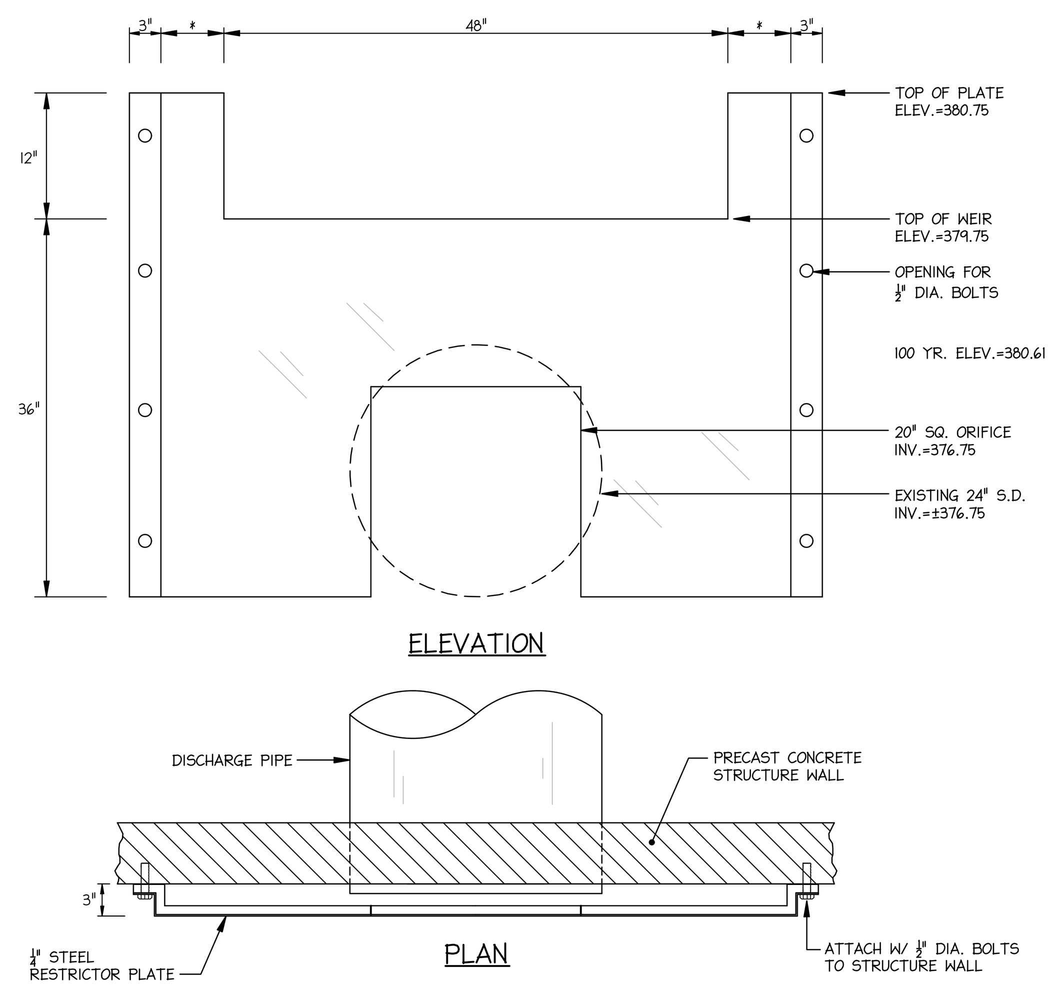

* VERIFY RESTRICTOR PLATE WIDTH WITH INSIDE DIMENSION OF DRAIN STRUCTURE FOR PROPER PLACEMENT TO SECURE TO STRUCTURE WALL.

NOTE: RESTRICTOR PLATE SHALL BE MOUNTED OVER OUTLET SIDE OF STRUCTURE

4 RESTRICTOR PLATE

N.T.S.

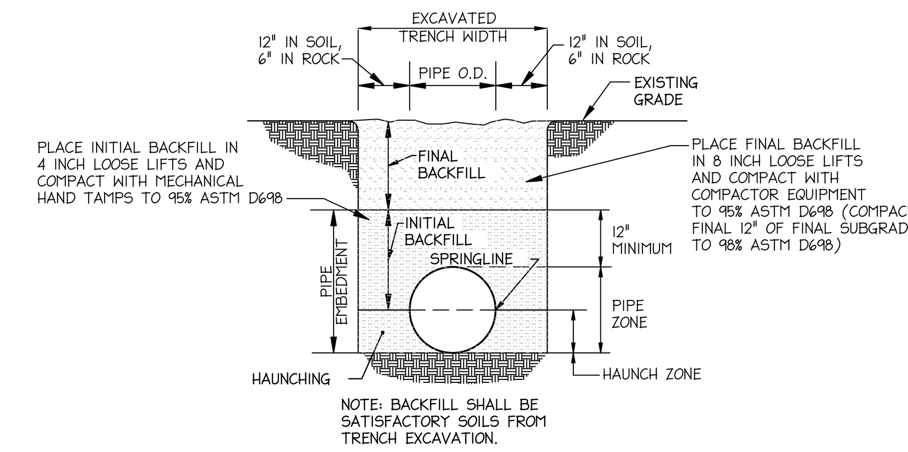

5 TYPICAL STORM SEWER TRENCH CROSS SECTION (FOR RCP & DIP)

N.T.S.

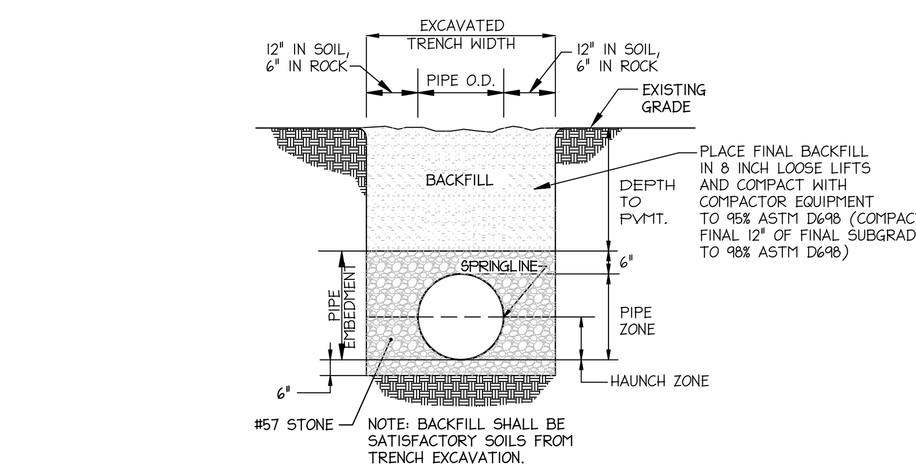

NOTE: BEDDING STONE SHALL BE PLACED TO HALF THE PIPE DIAMETER FOR ALL DEPTHS GREATER THAN FOUR FEET MEASURED FROM THE INVERT OF THE PIPE TO FINISHED GRADE.

6 TYPICAL STORM SEWER TRENCH CROSS SECTION (FOR HDPE ONLY)

N.T.S.

CARTER Engineering Group
6310 Peake Road, Suite 200
Macon, GA 31210
478-219-2600

THIS DRAWING IS AN INSTRUMENT OF SERVICE AND SHALL REMAIN THE PROPERTY OF THE ENGINEER, AND SHALL NOT BE REPRODUCED, PUBLISHED OR USED IN ANY WAY WITHOUT THE CONSENT OF THE ENGINEER. THIS DRAWING SHALL NOT BE SCALED. © COPYRIGHT 2019 CARTER ENGINEERING GROUP, LLC.

GEORGIA 811 Utilities Protection Center, Inc. Know what's below. Call before you dig.

STAMP:

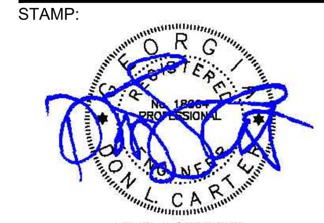

LEVEL II CERTIFIED
DESIGN PROFESSIONAL # 2061
ISSUED: 11/2/2017 EXPIRES: 11/2/2020

RELEASE DATES:

REV #	DATE	DESCRIPTION

CLIENT:
BIBB COUNTY
SCHOOL DISTRICT
MACON-BIBB COUNTY, GA

PROJECT:
HARTLEY ELEMENTARY SCHOOL
PARKING IMPROVEMENTS

2230 ANTHONY ROAD
MACON-BIBB COUNTY, GA 31204

DRAWN BY:	CHECKED BY:
CADD	DLC
PROJECT NUMBER:	DATE:
B7600.017	03/18/2019

GRAPHIC SCALE:

SCALE:

DRAWING TITLE:
MISCELLANEOUS
SITE DETAILS

DRAWING NUMBER:
C7.3

B7600.017 Details.dwg

P:\B7600 - BIBB COUNTY SCHOOL DISTRICT\B7600.017 Hartley Elementary School Parking Improvements\CADD\B7600.017 Details.dwg, C7.3 STORM, 3/26/2019 7:00:31 PM, mroberts, DWG To PDF.pc3, ARCH full bleed E1 (30.00 x 42.00 Inches), 1:1
Plotted:3/26/2019 7:00:31 PM By:Mary Ann Roberts Paper Size:11x17 Device Name:Color C5250 UFR II.pc3 Style:CS 253 Plot.ctb Scale:1:10
P:\B7600 - BIBB COUNTY SCHOOL DISTRICT\B7600.017 Hartley Elementary School Parking Improvements\CADD\B7600.017 Details.dwg, C7.3 STORM, Last Save:Mar 21,2019 5:08:54pm By:mroberts

PLANT MATERIALS LIST

QUANTITY	COMMON NAME	BOTANICAL NAME	SIZE/HT	NOTES
7	CHINESE ELM	ULMUS PARVIFOLIA	10'-12'	MATCHED
5	REDBUD	CERCIS CANADENSIS 'FOREST PANSY'	6'-8'	-
5	SWEETBAY MAGNOLIA	MAGNOLIA VIRGINIANA	6'-8'	-
1	YAUPON HOLLY	ILEX VOMITORIA	6'-8'	TREE-FORM
2	CAPE JASMINE	GARDENIA JASMINOIDES	7 GAL.	-
13	CARISSA HOLLY	'CARISSA'	5 GAL.	3'-6" O.C.
*	SOD	BERMUDA HYBRID (TIFT 419)	S.F.	-

*CONTRACTOR TO DETERMINE QUANTITY FROM PLANS AND CONSTRUCTED FIELD CONDITIONS.

LANDSCAPE NOTES:

1. EXAMINE SUBGRADE UPON WHICH WORK IS TO BE PERFORMED. VERIFY SUBGRADE ELEVATIONS. OBSERVE CONDITIONS UNDER WHICH WORK IS TO BE PERFORMED, AND PROVIDE PERCOLATION TESTS AND ALL OTHER TESTS NECESSARY TO ASCERTAIN THAT ADEQUATE GROWING CONDITIONS WILL BE PROVIDED FOR PLANTS. IF PERCOLATION TESTS OR SUBSOIL CONDITIONS INDICATE RETENTION OF WATER IN PLANTING AREAS, AS SHOWN BY SEEPAGE OR OTHER EVIDENCE INDICATING PRESENCE OF UNDERGROUND WATER, NOTIFY ENGINEER IN WRITING OF THIS FACT OR OTHER UNSATISFACTORY CONDITIONS BEFORE BACKFILLING. A CHANGE ORDER MAY BE ISSUED TO DIRECT INSTALLATION OF DRAIN TILE OR OTHER MEASURES BEYOND DRAINAGE REQUIREMENTS INDICATED. DO NOT PROCEED WITH THE WORK UNTIL UNSATISFACTORY CONDITIONS HAVE BEEN CORRECTED. COMMENCEMENT OF PLANTING WORK INDICATES THAT SITE CONDITIONS HAVE BEEN ACCEPTED "AS IS."
2. PROVIDE 3" DEEP LONGLEAF PINE STRAW MULCH.
3. PROVIDE ONLY PLANTS THAT ARE FREE FROM DISEASE AND PESTS AND THAT COMPLY WITH THE LATEST EDITION OF PUBLICATION ANSI Z60.1, "AMERICAN STANDARDS FOR NURSERY STOCK," BY THE AMERICAN ASSOCIATION OF NURSERYMEN.
4. REMOVE ALL STRINGS AND OTHER TIES FROM ALL ROOT BALLS.
5. REMOVE UPPER 1/3 OF BURLAP FROM ALL ROOT BALLS.
6. DO NOT PIERCE ROOT BALLS WITH SUPPORT STAKES.
7. FERTILIZE ALL PLANTS WITH 16-16-16 FERTILIZER AT THE RATE RECOMMENDED BY MANUFACTURER.
8. DO NOT MAKE SUBSTITUTIONS REGARDING PLANT SIZES OR SPECIES WITHOUT WRITTEN PERMISSION FROM THE LANDSCAPE ARCHITECT.
9. UNDERGROUND UTILITIES EXIST ON SITE. VERIFY LOCATIONS AND DEPTH BEFORE COMMENCING PLANTING WORK.
10. ACTUAL AS-BUILT SITE CONDITIONS MAY VARY FROM THIS PLAN. PLANT AND MATERIAL QUANTITIES AS SHOWN ON THE PLAN ARE FOR UNIFORM COMPARISON AND ESTIMATE PURPOSES ONLY. NOTIFY ENGINEER OF ALL SITE CONDITIONS WHICH WILL AFFECT PLANT QUANTITIES REQUIRED AND/OR THEIR LOCATION.
11. ALL SHRUBS AND PLANTING BEDS SHALL HAVE WEED BARRIER INSTALLED UNDER MULCH. NO WEED BARRIER IS REQUIRED FOR GROUND COVERS (I.E. LIRIOPE).
12. TREES TO BE INSTALLED WITH SLOW-RELEASE WATERING BAGS. CONTRACTOR SHALL MONITOR AND REFILL AS NECESSARY.

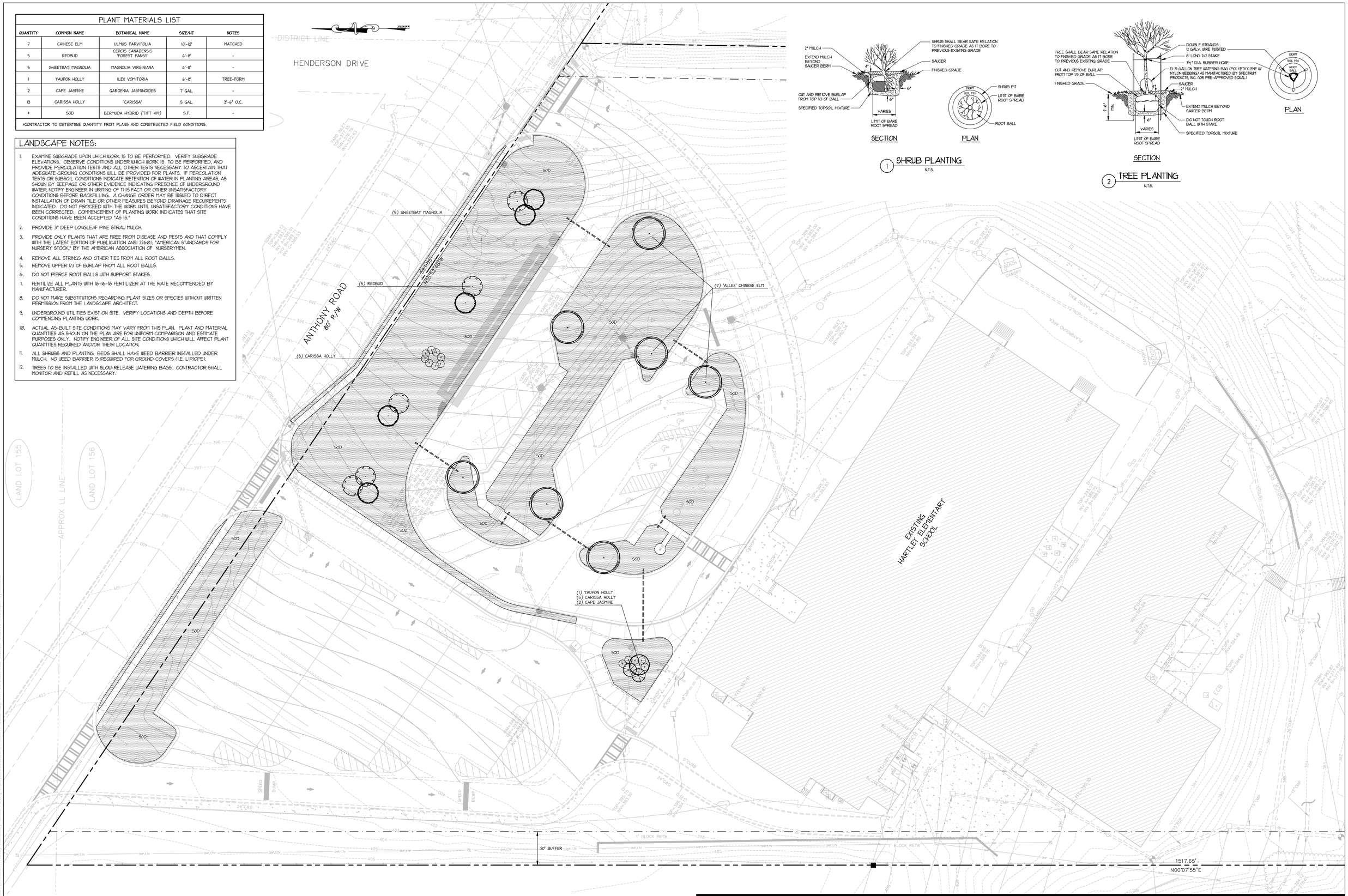

1 SHRUB PLANTING
N.T.S.

2 TREE PLANTING
N.T.S.

CARTER Engineering Group
6310 Peake Road, Suite 200
Macon, GA 31210
478-219-2600

THIS DRAWING IS AN INSTRUMENT OF SERVICE AND SHALL REMAIN THE PROPERTY OF CARTER ENGINEERING GROUP, LLC. THE REPRODUCTION OF THIS DRAWING IN WHOLE OR PART WITHOUT THE CONSENT OF THE ENGINEER - THIS DRAWING SHALL NOT BE SCALED. © COPYRIGHT 2019 CARTER ENGINEERING GROUP, LLC.

STAMP:

GEORGIA REGISTERED PROFESSIONAL ENGINEER DONALD L. CARTER

LEVEL II CERTIFIED
DESIGN PROFESSIONAL # 2061
ISSUED: 11/2/2017 EXPIRES: 11/2/2020

RELEASE DATES:

REV #	DATE	DESCRIPTION

CLIENT:
BIBB COUNTY
SCHOOL DISTRICT
MACON-BIBB COUNTY, GA

GEORGIA811 Utilities Protection Center, Inc.
Know what's below. Call before you dig.

PROJECT:
HARTLEY ELEMENTARY SCHOOL
PARKING IMPROVEMENTS

2230 ANTHONY ROAD
MACON-BIBB COUNTY, GA 31204

DRAWN BY:	CHECKED BY:
CADD	DLC
PROJECT NUMBER: B7600.017	DATE: 03/18/2019

GRAPHIC SCALE: 0 20 40
SCALE: 1" = 20'

DRAWING TITLE:
LANDSCAPE PLAN

DRAWING NUMBER:
L1.1

B7600.017 Master.dwg

P:\B7600 - BIBB COUNTY SCHOOL DISTRICT\B7600.017 Hartley Elementary School Parking Improvements\CADD\B7600.017 Master.dwg, L1.1 LS 20sc, 3/26/2019 6:09:15 PM, mbooks, DWG To PDF.pc3, ANSI E LARGE (36.00 x 48.00 Inches), 1:1
Plotted:3/26/2019 4:50:18 PM By:Mary Ann Roberts Page Size:11x17 Device Name:Canon C5230 (VER v1.x-5.5) Style:CS 223 Pen Units Scale:1:1
P:\B7600 - BIBB COUNTY SCHOOL DISTRICT\B7600.017 Hartley Elementary School Parking Improvements\CADD\B7600.017 Master.dwg, L1.1 LS 20sc, Last Save/Mar 26,2019 6:04:50pm Byrnemarb