ARLINGTON COUNTY, VIRGINIA
WATER POLLUTION CONTROL PLANT

RE-GEN
BIOSOLIDS FACILITIES UPGRADES

FACILITIES PLAN

VOLUME 2 OF 3

DECEMBER 2022

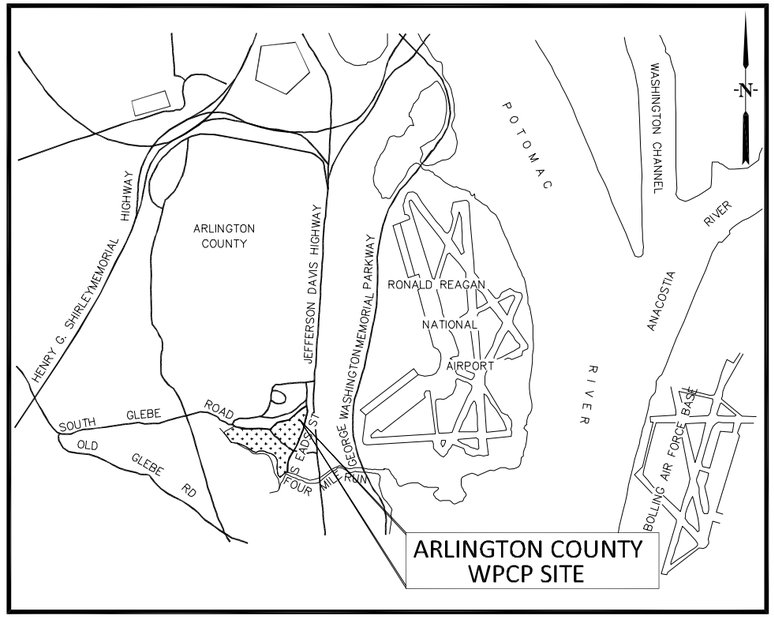

VICINITY MAP

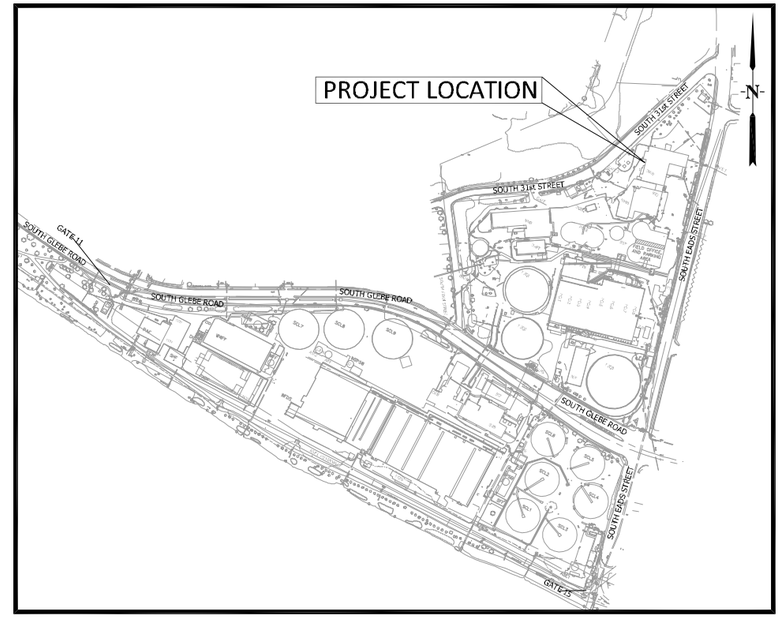

LOCATION PLAN

OWNER:

ARLINGTON COUNTY WPCP
3402 S. GLEBE ROAD
ARLINGTON, VA 22202

C:\PWWORKING\east01\d1907715\G-001.dwg, 12/16/2022 10:50:47 AM, TLOKEY

DRAWING INDEX

GENERAL

G-001 COVER SHEET
G-002 DRAWING INDEX AND ABBREVIATIONS
G-003 GENERAL LEGEND AND SYMBOLS
G-004 EXISTING OVERALL SOLIDS PROCESS FLOW DIAGRAM
G-005 OVERALL SOLIDS PROCESS FLOW DIAGRAM 1
G-006 OVERALL SOILDS PROCESS FLOW DIAGRAM 2
G-007 OVERALL GAS AND STEAM PROCESS FLOW DIAGRAM 1
G-008 SOLIDS MASS BALANCE - 2052 DESIGN YEAR (30.8 MGD)

CIVIL

C-001 EXISTING SITE PLAN
C-002 EXISTING SITE PLAN - UNDERGROUND UTILITIES
C-003 RENOVATE DEWATERING BUILDING - DEMOLITION PLAN
C-004 RENOVATE DEWATERING BUILDING - SITE PLAN
C-005 RENOVATE DEWATERING BUILDING - GRADING PLAN
C-006 DECOMMISSION DEWATERING BUILDING - DEMOLITION PLAN
C-007 DECOMMISSION DEWATERING BUILDING - SITE PLAN
C-008 DECOMMISSION DEWATERING BUILDING - GRADING PLAN

MECHANICAL

M-200 RENOVATE DEWATERING BUILDING - SOLIDS STORAGE TANKS - PLANS
M-201 RENOVATE DEWATERING BUILDING - SOLIDS STORAGE TANKS - SECTIONS
M-202 DECOMMISSION DEWATERING BUILDING - SOLIDS STORAGE TANKS - PLANS
M-203 DECOMMISSION DEWATERING BUILDING - SOLIDS STORAGE TANKS - SECTIONS

M-300 RENOVATE DEWATERING BUILDING - DEWATERING BUILDING - DEMOLITION PLAN AT EL 25.00
M-301 RENOVATE DEWATERING BUILDING - DEWATERING BUILDING - ODOR CONTROL SYSTEM DEMOLITION PLAN AND SECTION
M-302 RENOVATE DEWATERING BUILDING - DEWATERING BUILDING - DEMOLITION PLAN AT EL 43.00
M-303 RENOVATE DEWATERING BUILDING - DEWATERING BUILDING - DEMOLITION PLAN AT EL 66.00
M-304 RENOVATE DEWATERING BUILDING - DEWATERING BUILDING - DEMOLITION PLAN AT EL 82.00
M-305 RENOVATE DEWATERING BUILDING - SCREENING AND PRE-DEWATERING BUILDING DEMOLITION PLAN AT EL 25.00
M-306 RENOVATE DEWATERING BUILDING - SCREENING AND PRE-DEWATERING BUILDING DEMOLITION PLAN AT EL 43.00
M-307 RENOVATE DEWATERING BUILDING - SCREENING AND PRE-DEWATERING BUILDING DEMOLITION PLAN AT EL 66.00
M-308 RENOVATE DEWATERING BUILDING - SCREENING AND PRE-DEWATERING BUILDING DEMOLITION PLAN AT EL 82.00
M-309 RENOVATE DEWATERING BUILDING - SCREENING AND PRE-DEWATERING BUILDING-SECTION 1
M-310 RENOVATE DEWATERING BUILDING - SCREENING AND PRE-DEWATERING BUILDING-SECTION 2

M-350 DECOMMISSION DEWATERING BUILDING - SOLIDS PROCESS BUILDING - PLAN AT EL 24.00
M-351 DECOMMISSION DEWATERING BUILDING - SOLIDS PROCESS BUILDING - PLAN AT EL 42.00
M-352 DECOMMISSION DEWATERING BUILDING - SOLIDS PROCESS BUILDING - PLAN AT EL 60.00
M-353 DECOMMISSION DEWATERING BUILDING - SOLIDS PROCESS BUILDING - PLAN AT EL 74.33
M-354 DECOMMISSION DEWATERING BUILDING - SOLIDS PROCESS BUILDING - PARTIAL PLANS 1
M-355 DECOMMISSION DEWATERING BUILDING - SOLIDS PROCESS BUILDING - PARTIAL PLANS 2
M-356 DECOMMISSION DEWATERING BUILDING - SOLIDS PROCESS BUILDING - PARTIAL PLANS 3
M-357 DECOMMISSION DEWATERING BUILDING - SOLIDS PROCESS BUILDING - PARTIAL PLANS 4
M-358 DECOMMISSION DEWATERING BUILDING - SOLIDS PROCESS BUILDING - PARTIAL PLANS 5
M-359 DECOMMISSION DEWATERING BUILDING - SOLIDS PROCESS BUILDING - PARTIAL PLANS 6
M-360 DECOMMISSION DEWATERING BUILDING - SOLIDS PROCESS BUILDING - SECTIONS 1
M-361 DECOMMISSION DEWATERING BUILDING - SOLIDS PROCESS BUILDING - SECTIONS 2

M-400 RENOVATE DEWATERING BUILDING - THS COOLING AND DIGESTER FEED - PLAN

M-500 RENOVATE DEWATERING BUILDING - DIGESTER BUILDING - UPPER LEVEL PLAN
M-501 RENOVATE DEWATERING BUILDING - DIGESTER BUILDING - LOWER LEVEL PLAN
M-502 RENOVATE DEWATERING BUILDING - SECTION

M-700 RENOVATE DEWATERING BUILDING - FINAL DEWATERING BUILDING - PLAN AT EL 24.00
M-701 RENOVATE DEWATERING BUILDING - FINAL DEWATERING BUILDING - PLAN AT EL 59.95
M-702 RENOVATE DEWATERING BUILDING - FINAL DEWATERING BUILDING - PLAN AT EL 70.60
M-703 RENOVATE DEWATERING BUILDING - FINAL DEWATERING BUILDING - SECTION 1
M-704 RENOVATE DEWATERING BUILDING - FINAL DEWATERING BUILDING - SECTION 2

M-800 GAS UPGRADING - PLAN
M-801 GAS INTERCONNECT - PLAN

M-900 ODOR CONTROL SYSTEM - PLAN
M-901 CHEMICAL BUILDING - PLAN
M-902 CHEMICAL BUILDING - SECTIONS

ELECTRICAL

E-001 EXISTING ONE-LINE DIAGRAM
E-002 PROPOSED ONE-LINE DIAGRAM
E-003 EXISTING SITE PLAN

INSTRUMENTATION

I-001 INSTRUMENTATION LEGEND AND SYMBOLS

I-100 GRAVITY THICKENING - PROCESS AND INSTRUMENTATION DIAGRAM
I-101 THICKENED PRIMARY SOLIDS PUMPING - PROCESS AND INSTRUMENTATION DIAGRAM

I-200 SOLIDS STORAGE - PROCESS AND INSTRUMENTATION DIAGRAM
I-201 SOLIDS SCREENING - PROCESS AND INSTRUMENTATION DIAGRAM
I-202 SCREEN FEED PUMPS - PROCESS AND INSTRUMENTATION DIAGRAM

I-300 PRE-DEWATERING CENTRIFUGE FEED PUMPS - PROCESS AND INSTRUMENTATION DIAGRAM
I-301 PRE-DEWATERING CENTRIFUGE - PROCESS AND INSTRUMENTATION DIAGRAM
I-302 CAKE BIN AND THP FEED PUMPS - PROCESS AND INSTRUMENTATION DIAGRAM
I-303 PRE-DEWATERING POLYMER - PROCESS AND INSTRUMENTATION DIAGRAM

I-400 THERMAL HYDROLYSIS - PROCESS AND INSTRUMENTATION DIAGRAM
I-401 THS FEED CONTROL VALVE - PROCESS AND INSTRUMENTATION DIAGRAM

I-450 SOLIDS COOLING SYSTEM - PROCESS AND INSTRUMENTATION DIAGRAM

I-500 PRIMARY DIGESTER NO. 1 - PROCESS AND INSTRUMENTATION DIAGRAM
I-501 PRIMARY DIGESTER NO. 3 - PROCESS AND INSTRUMENTATION DIAGRAM
I-502 SECONDARY DIGESTER NO. 2 - PROCESS AND INSTRUMENTATION DIAGRAM
I-503 DIGESTED SOLIDS TRANSFER PUMPS - PROCESS AND INSTRUMENTATION DIAGRAM

I-600 BOILER FEEDWATER PRETREATMENT AND CHEMICAL FEED PROCESS AND INSTRUMENTATION DIAGRAM
I-601 DEAERATOR - PROCESS AND INSTRUMENTATION DIAGRAM
I-602 STEAM BOILERS - PROCESS AND INSTRUMENTATION DIAGRAM
I-603 STEAM DISTRIBUTION - PROCESS AND INSTRUMENTATION DIAGRAM
I-604 BOILER BLOWDOWN SEPARATOR - PROCESS AND INSTRUMENTATION DIAGRAM

I-700 FINAL DEWATERING CENTRIFUGE - PROCESS AND INSTRUMENTATION DIAGRAM
I-701 FINAL DEWATERED CAKE BIN - PROCESS AND INSTRUMENTATION DIAGRAM
I-702 FINAL DEWATERING POLYMER FEED SYSTEM - PROCESS AND INSTRUMENTATION DIAGRAM 1
I-703 FINAL DEWATERING POLYMER FEED SYSTEM - PROCESS AND INSTRUMENTATION DIAGRAM 2

I-800 DIGESTER GAS DISTRIBUTION PROCESS AND INSTRUMENTATION DIAGRAM
I-801 WASTE GAS BURNER PROCESS AND INSTRUMENTATION DIAGRAM
I-802 DIGESTER GAS BLOWERS PROCESS AND INSTRUMENTATION DIAGRAM
I-803 BIOGAS COMPRESSION PROCESS AND INSTRUMENTATION DIAGRAM

I-900 ODOR CONTROL FACILITY B PROCESS AND INSTRUMENTATION DIAGRAM
I-901 ODOR CONTROL FACILITY A PROCESS AND INSTRUMENTATION DIAGRAM
I-902 ODOR CONTROL CHEMICAL FEED PROCESS AND INSTRUMENTATION DIAGRAM

ABBREVIATIONS

AS	AIR SUPPLY
ALP	AIR LOW PRESSURE
APPROX	APPROXIMATELY
BBD	BOILER BLOWDOWN
BCT	BOILER CHEMICAL TREATMENT
BFP	BELT FILTER PRESS
BFW	BOILER FEED WATER
BM	BENCHMARK, BEAM
BMP	BEST MANAGEMENT PRACTICES
BYP	BYPASS
CA	COMPRESSED AIR
℄	CENTERLINE
CCK	CAKE
CCT	CENTRATE
CDR	CHEMICAL DRAIN
CHEX	COOLING HEAT EXCHANGER
CHD	CHORD
CHH	COMMUNICATION OR CONTROL HANDHOLE
CHP	COMBINED HEAT AND POWER
CI	CURB INLET
CIP	CAST-IN-PLACE
CIRC	CIRCULATION, CIRCULAR
CKT	CIRCUIT
CL	CENTERLINE, CLASS, CLOSE
CLKG	CAULKING
CONC	CONCENTRATION, CONCENTRATED, CONCRETE
COND	CONDENSATE
COW	COUNTY WATER
CUW	CHLORINATED UTILITY WATER
CUYD	CUBIC YARD
CWR	COOLING WATER RETURN
CWS	COOLING WATER SUPPLY
DBR	DIRTY BACKWASH RETURN
DEG	DEGREE
DEG C	DEGREE CENTIGRADE
DEG F	DEGREE FAHRENHEIT
Ø	DIAMETER
DG	DIGESTER GAS
DN	DOWN
DR	DRAIN
DS	DIGESTED SLUDGE
DSR	DIGESTED SLUDGE RECYCLE
DSRF	DIGESTED SLUDGE RECYCLE PLUS FEED
DTON	DRY TON
DW	DILUTION WATER
EH	ENGINE EXHAUST
EL	ELEVATION
EX, EXIST	EXISTING
EXH	EXHAUST
F	DEGREES FAHRENHEIT
FA	FOUL AIR
FAD	FOUL AIR DUCT
FFE	FINISHED FLOOR ELEVATION
FG	FINISHED GRADE
FH	FIRE HYDRANT
FIT	FLOW INDICATING TRANSMITTER
FL	FLOOR
FLA	FULL LOAD AMPERES
FLT	FILTRATE
FM	FLOW METER, FORCE MAIN
FOG	FATS OIL AND GREASE
FS	FLASH STEAM
GEN	GENERAL, GENERATOR
GPD	GALLONS PER DAY
GPM	GALLONS PER MINUTE
GTI	GRAVITY THICKENER INFLUENT
GTO	GRAVITY THICKENER OVERFLOW
HB	HOSE BIB
HDG	HIGH PRESSURE DIGESTER GAS
HEX	HEXAGONAL, HEAT EXCHANGER
HOA	HAND/OFF/AUTO
HOR	HAND/OFF/REMOTE
HT - LOOP	HIGH TEMPERATURE LOOP (JACKET WATER)
HWR	HOT WATER RETURN
HWS	HOT WATER SUPPLY
H2S	HYDROGEN SULFIDE
IN	INCH
INF	INFLUENT
IN WC	INCHES WATER COLUMN
LB/D	POUNDS PER DAY
LBVS	POUND OF VOLATILE SOLIDS
LE	LEVEL ELEMENT
LIT	LEVEL INDICATING TRANSMITTER
LO	LOADOUT
LOD	LIMITS OF DISTURBANCE
LS	LEVEL SWITCH, LIMIT SWITCH
LSH	LEVEL SWITCH
L-STOP	LOCAL STOP
LSL	LEVEL SWITCH LOW
LT - LOOP	LOW TEMPERATURE LOOP (AFTER COOLER)
MCC	MOTOR CONTROL CENTER
MFR	MANUFACTURER
MG	MILLION GALLONS
mg/L	MILLIGRAMS PER LITER
MGD	MILLION GALLONS PER DAY
MH	MANHOLE, METAL HALIDE, MOUNTING HEIGHT
MIN	MINIMUM
MISC	MISCELLANEOUS
MOV	MOTOR OPERATED VALVE
MPC	MEDIUM PRESSURE CONDENSATE
MPS	MEDIUM PRESSURE STEAM
MW	MAKE UP WATER
N/A	NOT APPLICABLE
NEMA	NATIONAL ELECTRICAL MANUFACTURERS ASSOCIATION
NFPA	NATIONAL FIRE PROTECTION ASSOCIATION
NG	NATURAL GAS (NG)
NGM	NATURAL GAS METER
NGVD	NATIONAL GEODETIC VERTICAL DATUM
NIC	NOT IN CONTRACT
NO	NORMALLY OPEN, NUMBER
NOS	NUMBERS
NTS	NOT TO SCALE
NaOH	SODIUM HYDROXIDE
OA	ODOROUS AIR
OCS	ODOR CONTROL STATION
OFLW	OVERFLOW
ORP	OXIDATION REDUCTION POTENTIAL
OVRF	OVERFLOW
PD	PLANT DRAIN
PDS	DIFFERENTIAL PRESSURE SWITCH
PDSH	DIFFERENTIAL PRESSURE SWITCH HIGH
PDSL	DIFFERENTIAL PRESSURE SWITCH LOW
PEW	PLANT EFFLUENT WATER
PG	PROCESS GAS
PGCON	PROCESS GAS CONDENSATE
PGU	PROCESS GAS UNIT
PIT	PRESSURE INDICATING TRANSMITTER
PL	PROPERTY LINE
PLC	PROGRAMMABLE LOGIC CONTROLLER
PMP	PUMP
PNL	PANEL
POLY	POLYMER
POLYS	POLYMER SOLUTION
PS	PIPE SUPPORT, PRESSURE SWITCH, PUMP STATION, PRIMARY SLUDGE
PSH	PRESSURE SWITCH HIGH
PSI	POUNDS PER SQUARE INCH
PSIA	POUNDS PER SQUARE INCH ABSOLUTE
PSIG	POUNDS PER SQUARE INCH GAGE
PSL	PRESSURE SWITCH LOW
PW	POTABLE WATER
Q	RATE OF FLOW
QTY	QUANTITY
RAS	RETURN ACTIVATED SLUDGE
RG	RAW GAS
RNG	RENEWABLE NATURAL GAS
RDB	RENOVATE DEWATERING BUILDING
SCE	SECONDARY CLARIFIER EFFLUENT
SC	SCUM
SCFM	STANDARD CUBIC FEET PER MINUTE
SDB	SOLIDS DISTRIBUTION BOX
SDS	STORED DIGESTED SOLIDS
SEPT	SEPTAGE
SHC	SODIUM HYPOCHLORITE
SL	SLUDGE
SNT	SUPERNATANT
SR	SCRUBBER RECIRCULATION
SST	STAINLESS STEEL
STD	STANDARD
STL	STEEL
STS	SCREENED THICKENED SLUDGE
SUL	SULFURIC ACID
SWM	STORMWATER MANAGEMENT
TBD	TO BE DETERMINED
T/GRADE	TOP OF GRADE
THP	THERMAL HYDROLYSIS PROCESS
THPF	THERMAL HYDROLYSIS FEED (SOLIDS CAKE)
THS	THERMALLY HYDROLYZED SLUDGE
THSR	THERMALLY HYDROLYZED SOLIDS RECYCLE
TIT	TEMPERATURE INDICATING TRANSMITTER THICKENED SOLIDS, TEMPERATURE SWITCH
TPS	THICKENED PRIMARY SLUDGE
TSH	TEMPERATURE SWITCH HIGH
TSL	TEMPERATURE SWITCH LOW
TS	THICKENED SLUDGE
TSS	TOTAL SUSPENDED SOLIDS
TW	????????
TWAS	THICKENED WASTE ACTIVATED SLUDGE
TYP	TYPICAL
UG	UNDERGROUND
UGE	UNDERGROUND ELECTRIC
UGT	UNDERGROUND TELEPHONE
UNO	UNLESS NOTED OTHERWISE
UON	UNLESS OTHERWISE NOTED
UV	UTILITY VAULT, ULTRAVIOLET
W/O	WITHOUT
WAS	WASTE ACTIVATED SLUDGE
WSE	WATER SURFACE ELEVATION
YH	YARD HYDRANT

ABBREVIATION NOTES:

1. THESE ABBREVIATIONS APPLY TO THE ENTIRE SET OF DRAWINGS.
2. LISTING OF ABBREVIATIONS DOES NOT IMPLY THAT ALL ABBREVIATIONS ARE USED IN THE DRAWINGS.

ISSUE	DATE	DESCRIPTION
A	12/2022	FACILITIES PLAN

PROJECT MANAGER	BALCHUNAS, BRIAN
CIVIL	A. CALTON
STRUCTURAL	H. ANTSHEL
ARCHITECTURAL	J. REDDRICK
PROCESS	S. SPALDING
MECHANICAL	C. MOLINE
ELECTRICAL	B. CUNNINGHAM
INSTRUMENTATION	
PROJECT NUMBER	10263882

DRAFT FACILITIES PLAN NOT FOR CONSTRUCTION

ARLINGTON VIRGINIA

ARLINGTON COUNTY WPCP RE-GEN

DRAWING INDEX AND ABBREVIATIONS

0 1" 2"

FILENAME G-002.dwg
SCALE NOT TO SCALE
SHEET G-002

C:\pwworking\east01\d1907715\G-002.dwg, 6/29/2022 12:37:49 PM, Cute_PDF Printer.pc3

GENERAL SYMBOLOGY

ARROW INDICATES DIRECTION OF TRUE/PLAN NORTH

N

PLAN

1/4" = 1'-0"

PLAN TITLE

SECTION LETTER

FLAG INDICATES DIRECTION OF SECTION CUT

X / XXX

SHEET WHERE SECTION IS LOCATED

SECTION CUT MARKER

SECTION LETTER

X / XXX — SECTION 3" = 1'-0"

SHEET WHERE DETAIL WAS CALLED OUT *

SECTION TITLE

DETAIL NUMBER

/ XXX

SHEET WHERE DETAIL IS LOCATED *

DETAIL MARKER

FOR REFERENCING DETAILS INCLUDED IN DRAWING SET.

XXXXXXXXX

DETAIL MARKER

FOR REFERENCING DETAILS BOUND IN SPECIFICATIONS OR SEPARATE VOLUME.

DETAIL NUMBER

X / XXX — DETAIL 3" = 1'-0"

SHEET WHERE DETAIL WAS CALLED OUT *

DETAIL TITLE

ELEVATION NUMBER

ARROW INDICATES POINT OF VIEW

X / XXX

SHEET WHERE ELEVATION IS LOCATED *

SINGLE ELEVATION OR PHOTO MARKER

A / B / C / D

ELEVATION NUMBER

ARROW INDICATES POINT OF VIEW ELEVATION

X / XXX

INDICATES SHEET WHERE ELEVATION IS LOCATED

MULTIPLE ELEVATION OR PHOTO MARKER

ELEVATION IDENTIFICATION NUMBER

X / XXX — ELEVATION 3" = 1'-0"

SHEET WHERE POINT OF VIEW MARKER CAN BE FOUND *

ELEVATION TITLE

* EXCEPTIONS WHERE THE SHEET NUMBER IS REPLACED BY A DASH (-).
1) FOR COMMON DETAILS, SECTIONS, ELEVATIONS OR DETAILS THAT ARE CUT OR CALLED OUT ON MULTIPLE SHEETS.
2) SECTIONS, ELEVATIONS OR DETAILS THAT ARE LOCATED ON THE SAME SHEET THEY ARE CUT OR CALLED OUT ON.

GENERAL LEGEND AND SYMBOLS NOTES:

1. THIS SHEET IS A STANDARD SHEET SHOWING COMMON SYMBOLOGY. NOT ALL SYMBOLS ARE NECESSARILY USED ON THIS PROJECT.
2. SCREENING OR SHADING OF WORK IS USED TO INDICATE EXISTING COMPONENTS OR TO DE-EMPHASIZE PROPOSED IMPROVEMENTS TO HIGHLIGHT SELECTED TRADE WORK. REFER TO CONTEXT OF EACH SHEET FOR USAGE.

TARGET ELEVATION

ARCHITECTURAL

ROOM NAME / XX-XX	ROOM NUMBER
XXX	DOOR NUMBER
A	COLUMN GRID LINE
X	WALL TYPE

KEY NOTE DESIGNATION

KEY NOTE NUMBER

#

IDENTIFICATION SYMBOLOGY

PIPING

FIGURE — 36-NPW — EXAMPLE

LINE SIZE — 36"

SERVICE — NON POTABLE WATER

CIVIL SYMBOLOGY

CO	CLEAN OUT
	MANHOLE
	FIRE HYDRANT
YH	YARD HYDRANT
	TRUCK, WB-67
	TRUCK, WB-40
	TRUCK, SU-30
	BENCHMARK
	TEST PITS
BR-1	BORING
	VALVE (GENERIC)
	LIGHT POLE
	POWER POLE
10	CONTOUR

CIVIL SYMBOLOGY CONTINUED

	VEGETATION
10.3	SPOT ELEVATION
T	TRANSFORMER
CB	CATCH BASIN
PD	PROCESS DRAIN MANHOLE
SD	STORM DRAIN MANHOLE
SS	SANITARY SEWER MANHOLE
	PIPE SUPPORT (FOR PIPE LARGER THAN 12" DIA.)
	CONCRETE WASHOUT

EXISTING CIVIL CONDITIONS

	EXISTING VALVE
	EXISTING PIPELINE
	EXISTING LARGE PIPELINE
	EXISTING LIGHT POLE
	EXISTING POWER POLE
10	EXISTING CONTOUR
	EXISTING VEGETATION
10.3	EXISTING SPOT ELEVATION
X	EXISTING FENCE

LINE SYMBOLOGY

T	TELEPHONE LINE
E	ELECTRIC LINE
F	FIBER OPTIC
C	COMMUNICATION
	HANDRAIL AND GUARDRAIL
	PIPELINE
	LARGE PIPELINE
	DRAINAGE FLOW
	NATURAL WATERWAY
X X	BARBED WIRE CHAIN LINK FENCE
O O	CHAIN LINK FENCE
XX XX	TEMPORARY BARRIER
	PROPERTY LINE
	CENTERLINE
SF	SILT FENCE
	EASEMENT
	ALUMINUM COVER
	LIMITS OF CONSTRUCTION
	ROW
	LIMITS OF WETLANDS
	VEGETATED SWALE
	MATCH LINE
	DRAINAGE DITCH
	COLUMN GRID LINE/CENTERLINE

EQUIPMENT SYMBOLOGY

	ARCHIMEDES SCREW
	CENTRIFUGE
	CENTRIFUGAL PUMP
	CHEMICAL FEED PUMP
	COMPRESSOR
	DOUBLE DISC POSITIVE DISPLACEMENT PUMP
	GRINDER
	HEAT EXCHANGER
	RADIATOR
	U-TUBE HEAT EXCHANGER
	TUBE IN TUBE HEAT EXCHANGER
M	MIXER - PROPELLER TYPE
M OR M	MOTOR
	PLATE TYPE HEAT EXCHANGER
	PROGRESSING CAVITY PUMP
	ROTARY LOBE PUMP
	POSITIVE DISPLACEMENT PUMP
	INCLINED BELT CONVEYOR
	SCREW CONVEYOR
	SHELL AND TUBE TYPE HEAT EXCHANGER
	SLUDGE GATE / WEIR GATE
M	VERTICAL TURBINE CAN PUMP
	EDUCTOR
	SOLIDS SCREEN
	POSITIVE DISPLACEMENT BLOWER

PIPING AND VALVE SYMBOLOGY

	BALL VALVE
	BUTTERFLY VALVE
	DIAPHRAGM VALVE
	GATE VALVE
	GLOBE VALVE
	KNIFE GATE VALVE
	NEEDLE VALVE
	PINCH VALVE
	PLUG VALVE
	THREE WAY BALL VALVE
	THREE WAY PLUG VALVE
	BALL CHECK VALVE
	CHECK VALVE
	DOUBLE DISK CHECK VALVE
	CONE VALVE
OR	PRESSURE RELIEF VALVE
	PRESSURE REDUCING VALVE
X	AIR RELEASE VACUUM VALVE A = AIR RELEASE V = VACUUM
	AIR RELEASE VALVE
	PRESSURE REGULATING VALVE
	BACK PRESSURE VALVE
S	SOLENOID VALVE
36"-RWI	TYPICAL PIPE LINE CALLOUT
	OA DAMPER
	BACKFLOW PREVENTER
M	FLOW METER
NGM	NATURAL GAS METER
	UNION
	WYE-STRAINER
	FLEXIBLE HOSE OR TUBING
	FLEXIBLE PIPING CONNECTION
	LINE SIZE CHANGE
	LINE TURNING DOWN
	LINE TURNING UP
	BLIND FLANGE
	PIPE BREAK
	V-PORT BALL VALVE
	THREE-WAY CONTROL VALVE

NOTE:
1. VALVES SHOWN AS BLACK /SOLID ARE TO INDICATE NORMALLY CLOSED VALVES.

	3-WAY VALVE
	4-WAY VALVE
	CALIBRATION POT
	BASKET STRAINER
	QUICK CONNECT
	PNEUMATIC ACTUATOR
	SUCTION DIFFUSER-STRAINER
	PUMP DISCHARGE (TRIPLE DUTY) VALVE
	THERMOSTATIC MIXING VALVE
	INJECTION RING
	PIPE JOINT (SEE SPECIFICATIONS FOR REQUIREMENTS)
	PIPE JOINT (SEE SPECIFICATIONS FOR REQUIREMENTS)
	PIPE JOINT (SEE SPECIFICATIONS FOR REQUIREMENTS)
	PIPE JOINT (SEE SPECIFICATIONS FOR REQUIREMENTS)
	PIPE JOINT (SEE SPECIFICATIONS FOR REQUIREMENTS)
	COMPRESSION SLEEVE TYPE COUPLING
	FLANGED COUPLING ADAPTER (FCA)
	FLEXIBLE CONNECTION
	HARNESSED MECHANICAL COUPLING
	EXPANSION COUPLING/JOINT
	PRESSURE GAUGE (WITH COCK)
	TRAP
	QUICK DISCONNECT CAM & GROOVE COUPLING
	CAP OR PLUG
CO	INTERIOR CLEANOUT
	HOSE BIBB -1
	HOSE BIBB -2
HR	HOSE REEL
FD-X	FLOOR DRAIN

X = TYPE DESIGNATED IN SPECIFICATIONS

	PIPE IN SECTION
BU	BELL UP (PLAN)
BU	BELL UP (SECTION OR SCHEMATIC)
D	DRAIN (SECTION OR SCHEMATIC)

ISSUE	DATE	DESCRIPTION
A	12/2022	FACILITIES PLAN

PROJECT MANAGER	BALCHUNAS, BRIAN
CIVIL	A. CALTON
STRUCTURAL	H. ANTSHEL
ARCHITECTURAL	J. REDDRICK
PROCESS	S. SPALDING
MECHANICAL	C. MOLINE
ELECTRICAL	B. CUNNINGHAM
INSTRUMENTATION	
PROJECT NUMBER	10263882

DRAFT FACILITIES PLAN NOT FOR CONSTRUCTION

ARLINGTON VIRGINIA

ARLINGTON COUNTY WPCP RE-GEN

GENERAL LEGEND AND SYMBOLS

0 1" 2"

FILENAME: G-003.dwg

SCALE: NOT TO SCALE

SHEET: **G-003**

C:\pwworking\east01\d1907715\G-003.dwg, 6/29/2022 12:37:53 PM, Cute_PDF Printer.pc3

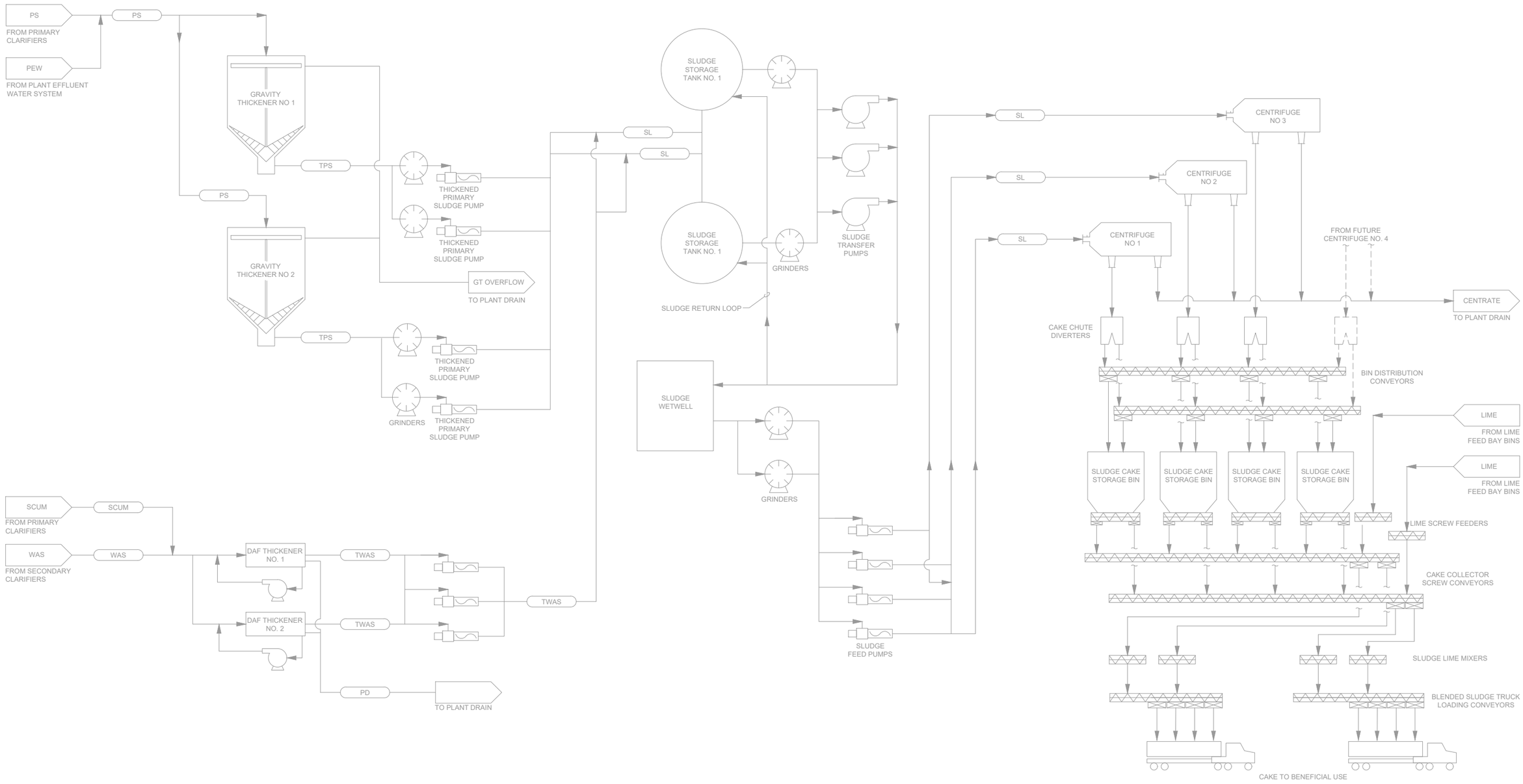

ISSUE	DATE	DESCRIPTION
A	12/2022	FACILITIES PLAN

PROJECT MANAGER	BALCHUNAS, BRIAN
CIVIL	A. CALTON
STRUCTURAL	H. ANTSHEL
ARCHITECTURAL	J. REDDRICK
PROCESS	S. SPALDING
MECHANICAL	C. MOLINE
ELECTRICAL	B. CUNNINGHAM
INSTRUMENTATION	
PROJECT NUMBER	10263882

DRAFT FACILITIES PLAN NOT FOR CONSTRUCTION

ARLINGTON VIRGINIA

ARLINGTON COUNTY WPCP RE-GEN

EXISTING OVERALL SOLIDS PROCESS FLOW DIAGRAM

0 1" 2"

FILENAME G-004.dwg

SCALE NOT TO SCALE

SHEET **G-004**

C:\pwworking\east01\d1907715\G-004.dwg, 6/29/2022 12:37:59 PM, Cute_PDF Printer.pc3

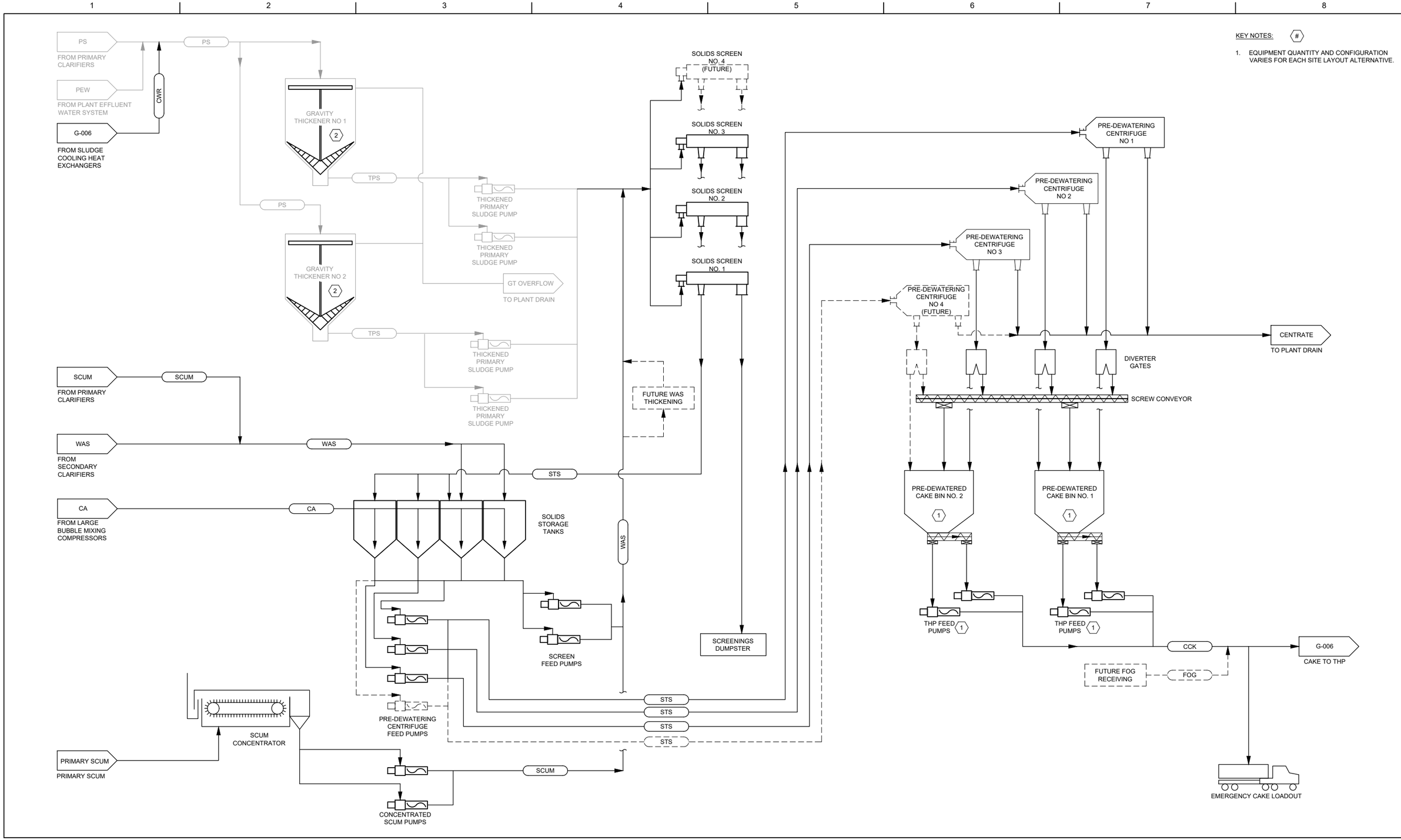

ISSUE	DATE	DESCRIPTION
A	12/2022	FACILITIES PLAN

PROJECT MANAGER	BALCHUNAS, BRIAN
CIVIL	A. CALTON
STRUCTURAL	H. ANTSHEL
ARCHITECTURAL	J. REDDRICK
PROCESS	S. SPALDING
MECHANICAL	C. MOLINE
ELECTRICAL	B. CUNNINGHAM
INSTRUMENTATION	
PROJECT NUMBER	10263882

DRAFT FACILITIES PLAN NOT FOR CONSTRUCTION

ARLINGTON VIRGINIA

ARLINGTON COUNTY WPCP RE-GEN

OVERALL SOLIDS PROCESS FLOW DIAGRAM 1

0 1" 2"

FILENAME: G-005.dwg

SCALE: NOT TO SCALE

SHEET: **G-005**

GENERAL NOTES:

A. FUTURE FOURTH DIGESTER NOT SHOWN.

B. DIGESTER EMERGENCY OVERFLOW PIPING NOT SHOWN. REFER TO P&IDS.

KEY NOTES: (#)

1. DIGESTED SOLIDS RECIRCULATION PUMPS.
2. DIGESTER MIXING PUMPS.

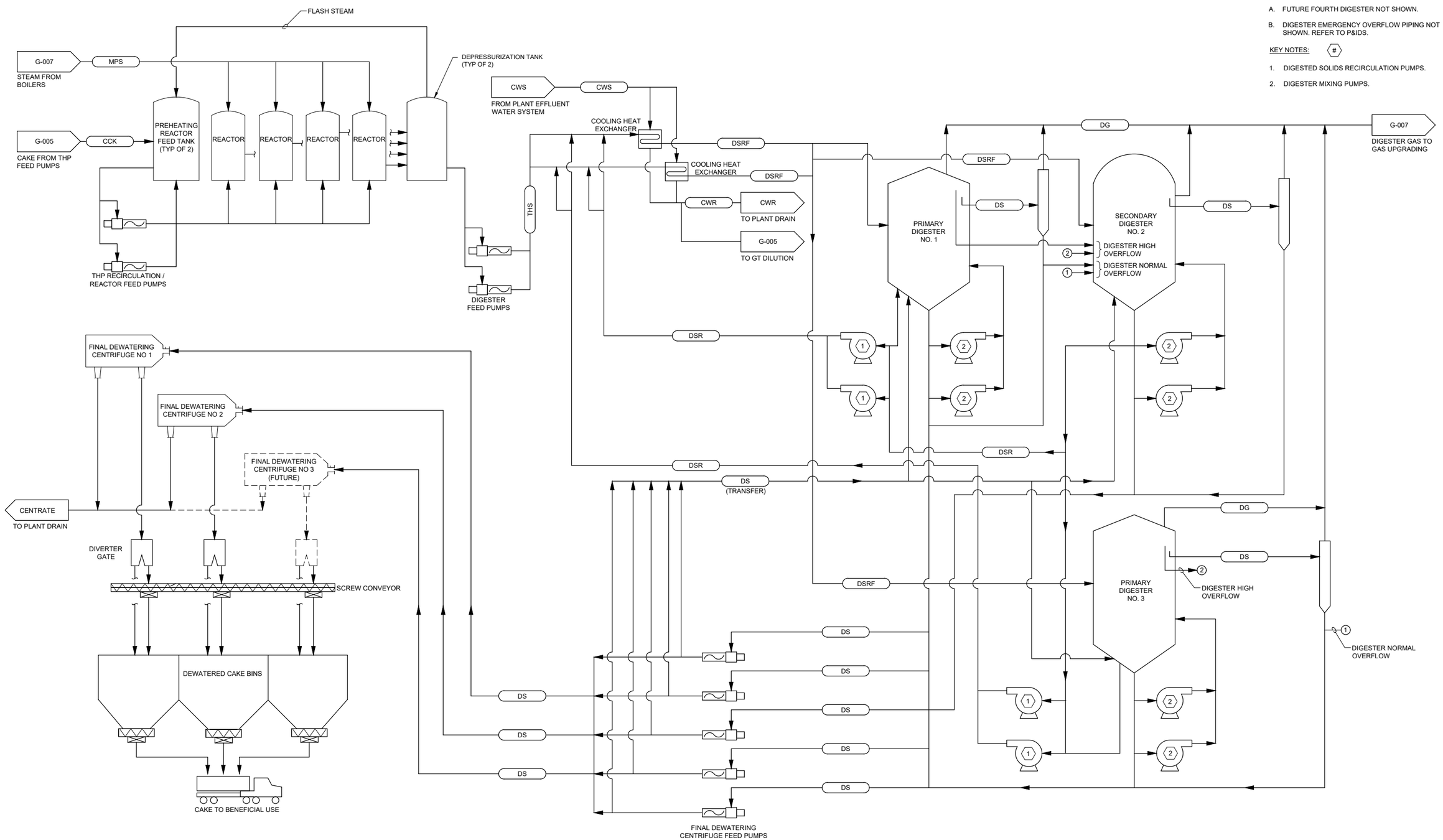

ISSUE	DATE	DESCRIPTION
A	12/2022	FACILITIES PLAN

PROJECT MANAGER	BALCHUNAS, BRIAN
CIVIL	A. CALTON
STRUCTURAL	H. ANTSHEL
ARCHITECTURAL	J. REDDRICK
PROCESS	S. SPALDING
MECHANICAL	C. MOLINE
ELECTRICAL	B. CUNNINGHAM
INSTRUMENTATION	
PROJECT NUMBER	10263882

DRAFT FACILITIES PLAN NOT FOR CONSTRUCTION

ARLINGTON VIRGINIA

ARLINGTON COUNTY WPCP RE-GEN

OVERALL SOLIDS PROCESS FLOW DIAGRAM 2

0 1" 2"

FILENAME: G-006.dwg

SCALE: NOT TO SCALE

SHEET: **G-006**

C:\pwworking\east01\d1907715\G-006.dwg, 6/29/2022 12:38:21 PM, Cute PDF Printer.pc3

KEY NOTES: (#)

1. GAS UPGRADING TECHNOLOGY HAS NOT YET BEEN SELECTED. EXAMPLE GAS FLOW PATH IS SHOWN.

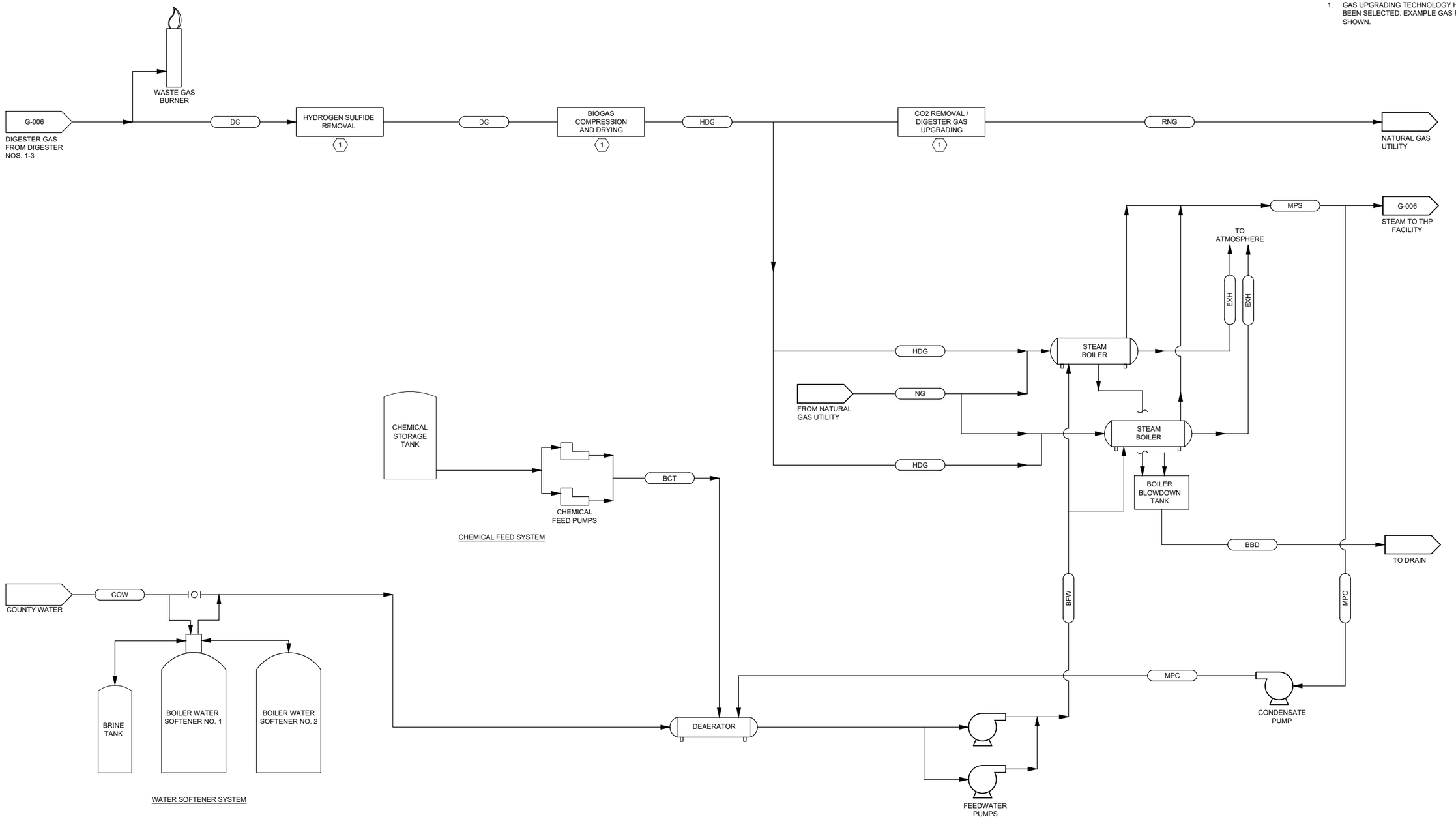

ISSUE	DATE	DESCRIPTION
A	12/2022	FACILITIES PLAN

PROJECT MANAGER	BALCHUNAS, BRIAN
CIVIL	A. CALTON
STRUCTURAL	H. ANTSHEL
ARCHITECTURAL	J. REDDRICK
PROCESS	S. SPALDING
MECHANICAL	C. MOLINE
ELECTRICAL	B. CUNNINGHAM
INSTRUMENTATION	
PROJECT NUMBER	10263882

DRAFT FACILITIES PLAN NOT FOR CONSTRUCTION

ARLINGTON VIRGINIA

ARLINGTON COUNTY WPCP RE-GEN

OVERALL GAS AND STEAM PROCESS FLOW DIAGRAM

0 1" 2"

FILENAME: G-007.dwg

SCALE: NOT TO SCALE

SHEET: **G-007**

C:\pwworking\east01\d1907715\G-007.dwg, 6/29/2022 12:38:31 PM, Cute_PDF Printer.pc3

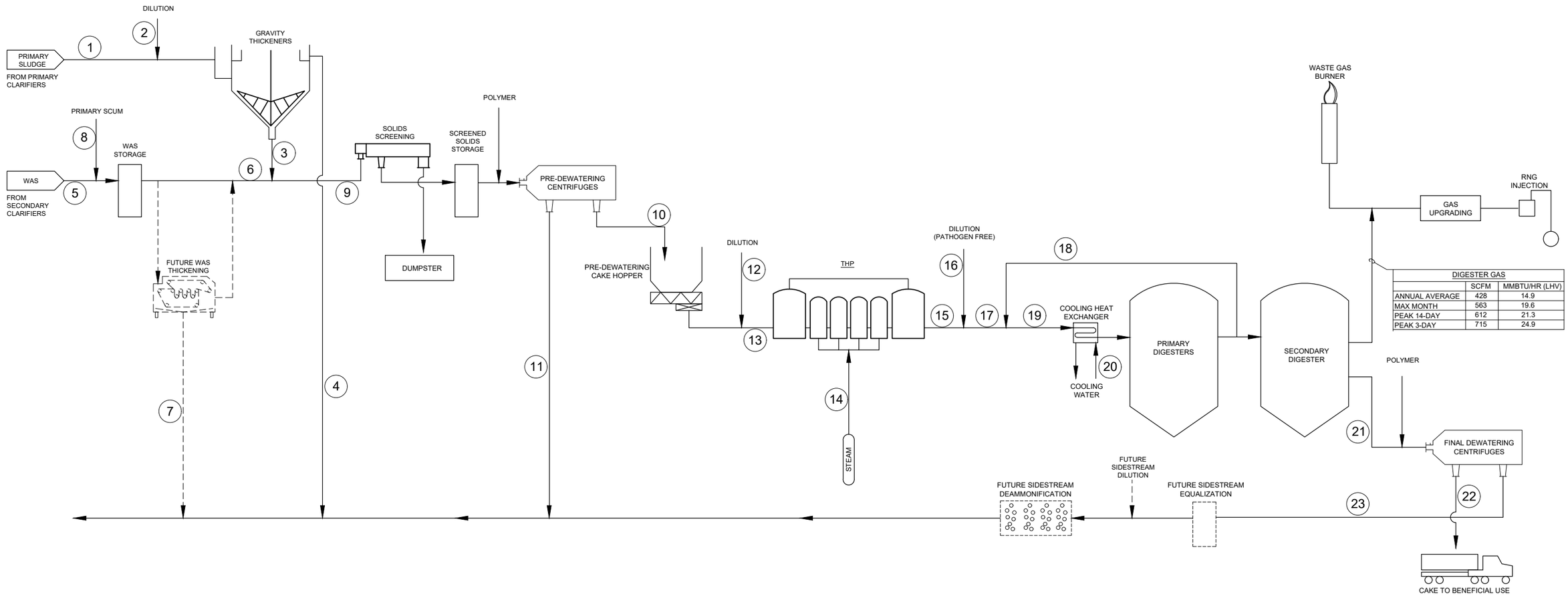

DIGESTER GAS	SCFM	MMBTU/HR (LHV)
ANNUAL AVERAGE	428	14.9
MAX MONTH	563	19.6
PEAK 14-DAY	612	21.3
PEAK 3-DAY	715	24.9

MASS BALANCE DATA TABLE

	PROCESS FLOW	PS	GT DILUTION	TPS	GTO	WAS	WAS TO SCREENS	WAS THICK RECYCLE	PRIMARY SCUM	SCREEN FEED	PRE DEWATER CAKE	PRE DEWATER RECYCLE	PULPER DILUTION	PULPER FEED W/ DILUTION	STEAM	THS	THS DILUTION	THS W/ DILUTION	DSR	DSRF	COOLING WATER	DS	CAKE	FINAL DEWATER RECYCLE
	FLOW IDENTIFIER	1	2	3	4	5	6	7	8	9	10	11	12	13	14	15	16	17	18	19	20	21	22	23
ANNUAL AVERAGE	TS LOAD (LB-TS / D)	53,464	-	50,791	2,673	29,228	35,634	-	6,406	86,425	82,104	4,321	-	82,104	-	82,104	-	82,104	202,252	284,355	-	40,450	38,428	2,023
	VS LOAD (LB-TS / D)	44,532	-	42,305	2,227	21,161	26,927	-	5,766	69,232	65,771	3,462	-	65,771	-	65,771	-	65,771	120,586	186,357	-	24,117	22,911	1,206
	CONCENTRATION (LB-TS / LB)	0.010	-	0.040	0.000	0.010	0.008	-	0.005	0.016	0.250	0.001	-	0.165	-	0.142	-	0.090	0.044	0.052	-	0.044	0.330	0.002
	VOLATILE FRACTION (VS / TS)	0.83	-	0.83	0.83	0.72	0.76	-	0.90	0.80	0.80	0.80	-	0.80	-	0.80	-	0.80	0.60	0.66	-	0.60	0.60	0.60
	FLOW (GAL / D)	641,053	1,008,000	152,250	1,496,803	350,454	504,084	-	153,631	656,334	39,378	627,319	20,286	59,664	9,845	69,509	39,875	109,384	546,920	656,304	460,000	109,384	7,728	139,164
PEAK 14 - DAY	TS LOAD (LB-TS / D)	77,983	-	74,084	3,899	39,750	49,103	-	9,353	123,187	117,028	6,159	-	117,028	-	117,028	-	117,028	202,252	319,279	-	57,445	54,572	2,872
	VS LOAD (LB-TS / D)	64,972	-	61,723	3,249	28,779	37,197	-	8,418	98,920	93,974	4,946	-	93,974	-	93,974	-	93,974	121,083	215,057	-	34,391	32,671	1,720
	CONCENTRATION (LB-TS / LB)	0.010	-	0.040	0.000	0.010	0.009	-	0.006	0.017	0.250	0.001	-	0.165	-	0.142	-	0.090	0.044	0.054	-	0.044	0.330	0.002
	VOLATILE FRACTION (VS / TS)	0.83	-	0.83	0.83	0.72	0.76	-	0.90	0.80	0.80	0.80	-	0.80	-	0.80	-	0.80	0.60	0.67	-	0.60	0.60	0.60
	FLOW (GAL / D)	935,049	1,008,000	222,074	1,720,975	476,617	649,417	-	172,800	871,491	56,128	830,133	28,915	85,043	14,032	99,075	56,837	155,912	546,900	702,812	650,000	155,912	7,728	197,630
PEAK 3 - DAY	TS LOAD (LB-TS / D)	91,832	-	87,240	4,592	45,303	56,322	-	11,019	143,562	136,384	7,178	-	136,384	-	136,384	-	136,384	202,252	338,636	-	66,833	63,491	3,342
	VS LOAD (LB-TS / D)	76,518	-	72,692	3,826	32,799	42,717	-	9,917	115,409	109,638	5,770	-	109,638	-	109,638	-	109,638	121,312	230,951	-	40,087	38,083	2,004
	CONCENTRATION (LB-TS / LB)	0.010	-	0.040	0.000	0.010	0.009	-	0.008	0.018	0.250	0.001	-	0.165	-	0.142	-	0.090	0.044	0.050	-	0.044	0.330	0.002
	VOLATILE FRACTION (VS / TS)	0.83	-	0.83	0.83	0.72	0.76	-	0.90	0.80	0.80	0.80	-	0.80	-	0.80	-	0.80	0.60	0.68	-	0.60	0.60	0.60
	FLOW (GAL / D)	1,101,101	1,008,000	261,512	1,847,590	543,203	716,003	-	172,800	977,515	65,412	929,316	33,697	99,109	16,353	115,462	66,238	181,700	635,951	817,652	720,000	181,700	7,728	229,929

ISSUE	DATE	DESCRIPTION
A	12/2022	FACILITIES PLAN

PROJECT MANAGER	BALCHUNAS, BRIAN
CIVIL	A. CALTON
STRUCTURAL	H. ANTSHEL
ARCHITECTURAL	J. REDDRICK
PROCESS	S. SPALDING
MECHANICAL	C. MOLINE
ELECTRICAL	B. CUNNINGHAM
INSTRUMENTATION	
PROJECT NUMBER	10263882

DRAFT FACILITIES PLAN NOT FOR CONSTRUCTION

ARLINGTON VIRGINIA

ARLINGTON COUNTY WPCP RE-GEN

SOLIDS MASS BALANCE
2052 DESIGN YEAR - (30.8 MGD)

0 1" 2"

FILENAME G-008.dwg
SCALE NOT TO SCALE

SHEET **G-008**

C:\pwworking\east01\d1907715\G-008.dwg, 6/29/2022 12:38:42 PM, Cute_PDF Printer.pc3

GENERAL NOTES

1. EXISTING SITE PLAN PREPARED FROM DRAWINGS PROVIDED BY ARLINGTON COUNTY.
2. SITE IS ZONED PUBLIC-SERVICE DISTRICT (P-S).

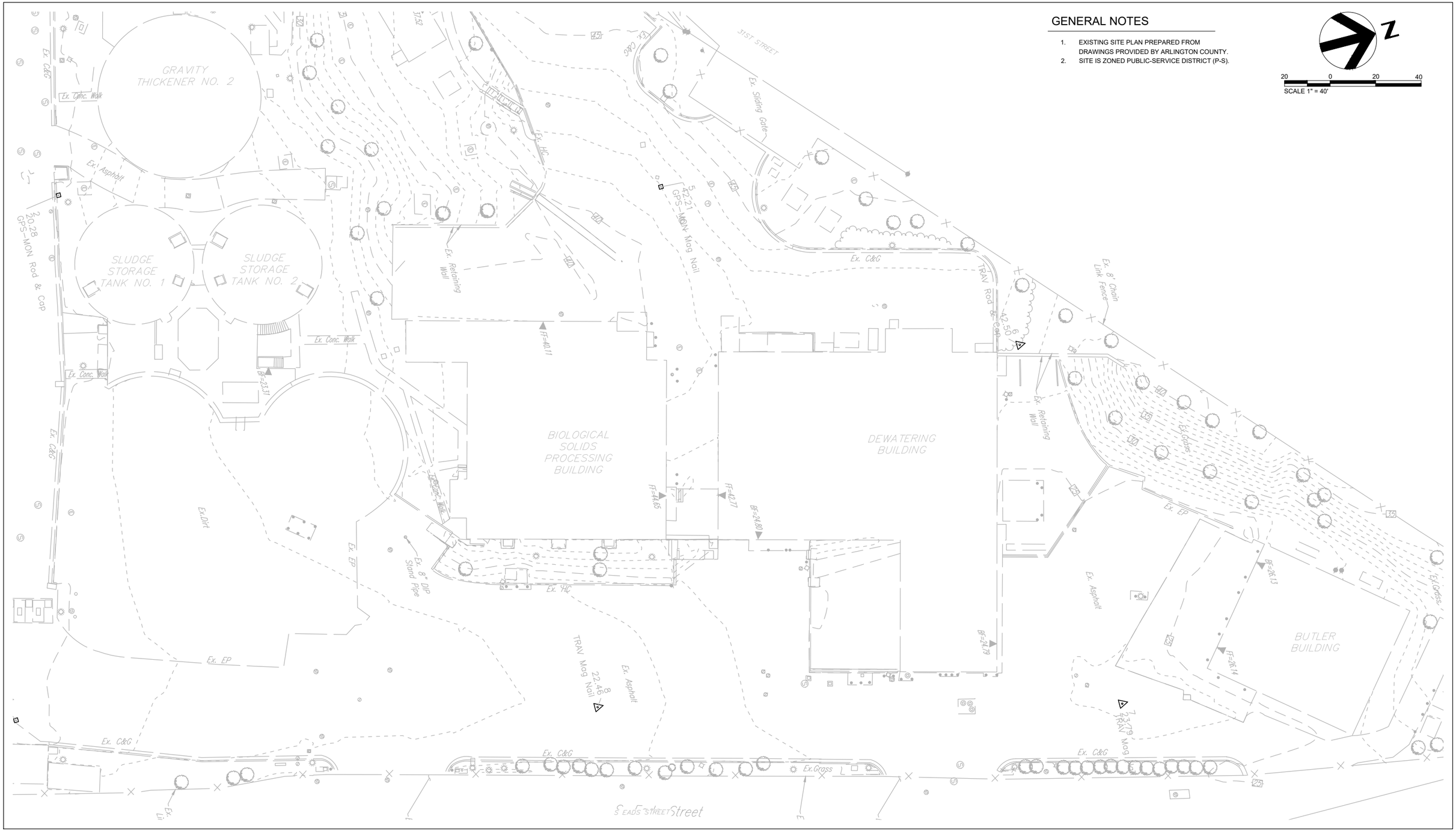

ISSUE	DATE	DESCRIPTION
A	12/2022	FACILITIES PLAN

PROJECT MANAGER	BALCHUNAS, BRIAN
CIVIL	J.GISSENDANNER
STRUCTURAL	H.ANTSHEL
ARCHITECTUAL	J.REDDRICK
PROCESS	S.SPALDING
MECHANICAL	C.MOLINE
ELECTRICAL	B.CUNNINGHAM
INSTRUMENTATION	
PROJECT NUMBER	10263882

DRAFT FACILITIES PLAN NOT FOR CONSTRUCTION

ARLINGTON COUNTY WATER POLLUTION CONTROL BIOSOLIDS REGEN

EXISTING SITE PLAN

0 1" 2"

FILENAME	C-001.DWG
SCALE	1" = 40'
SHEET	C-001

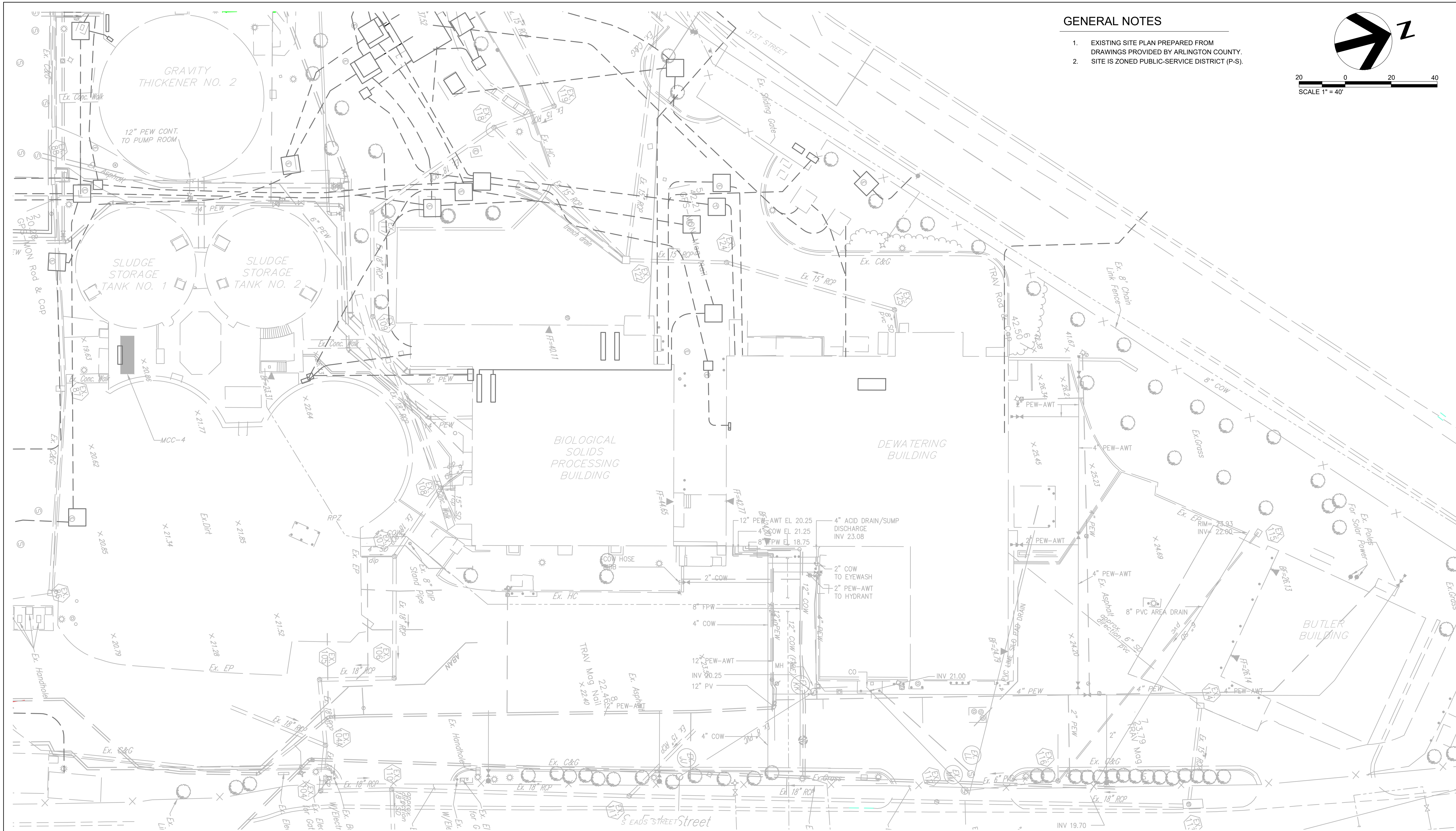

GENERAL NOTES

1. EXISTING SITE PLAN PREPARED FROM DRAWINGS PROVIDED BY ARLINGTON COUNTY.
2. SITE IS ZONED PUBLIC-SERVICE DISTRICT (P-S).

SCALE 1" = 40'

HDR

ISSUE	DATE	DESCRIPTION
A	12/2022	FACILITIES PLAN

PROJECT MANAGER	BALCHUNAS, BRIAN
CIVIL	J.GISSENDANNER
STRUCTURAL	H.ANTSHEL
ARCHITECTUAL	J.REDDRICK
PROCESS	S.SPALDING
MECHANICAL	C.MOLINE
ELECTRICAL	B.CUNNINGHAM
INSTRUMENTATION	
PROJECT NUMBER	10263882

DRAFT FACILITIES PLAN NOT FOR CONSTRUCTION

ARLINGTON COUNTY WATER POLLUTION CONTROL BIOSOLIDS REGEN

EXISTING SITE PLAN UNDERGROUND UTILITIES

FILENAME: C-002.DWG

SCALE: 1" = 40'

SHEET: C-002

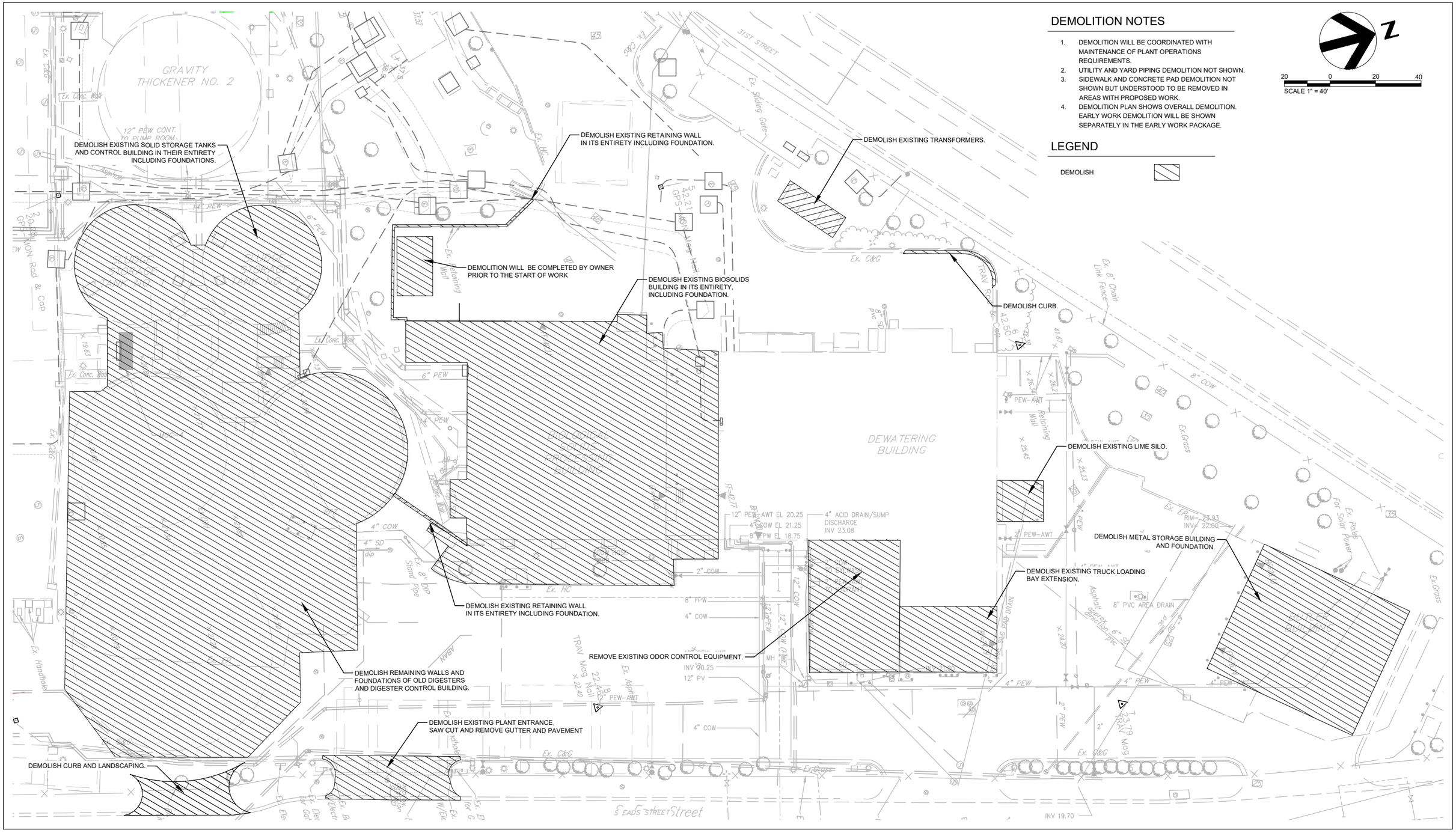

DEMOLITION NOTES

1. DEMOLITION WILL BE COORDINATED WITH MAINTENANCE OF PLANT OPERATIONS REQUIREMENTS.
2. UTILITY AND YARD PIPING DEMOLITION NOT SHOWN.
3. SIDEWALK AND CONCRETE PAD DEMOLITION NOT SHOWN BUT UNDERSTOOD TO BE REMOVED IN AREAS WITH PROPOSED WORK.
4. DEMOLITION PLAN SHOWS OVERALL DEMOLITION. EARLY WORK DEMOLITION WILL BE SHOWN SEPARATELY IN THE EARLY WORK PACKAGE.

LEGEND

DEMOLISH

20 0 20 40
SCALE 1" = 40'

ISSUE	DATE	DESCRIPTION
A	12/2022	FACILITIES PLAN

PROJECT MANAGER	BALCHUNAS, BRIAN
CIVIL	J.GISSENDANNER
STRUCTURAL	H.ANTSHEL
ARCHITECTUAL	J.REDDRICK
PROCESS	S.SPALDING
MECHANICAL	C.MOLINE
ELECTRICAL	B.CUNNINGHAM
INSTRUMENTATION	
PROJECT NUMBER	10263882

DRAFT FACILITIES PLAN NOT FOR CONSTRUCTION

ARLINGTON COUNTY WATER POLLUTION CONTROL BIOSOLIDS REGEN

RENOVATE DEWATERING BUILDING DEMOLITION PLAN

0 1" 2"

FILENAME C-003.DWG
SCALE 1" = 40'

SHEET C-003

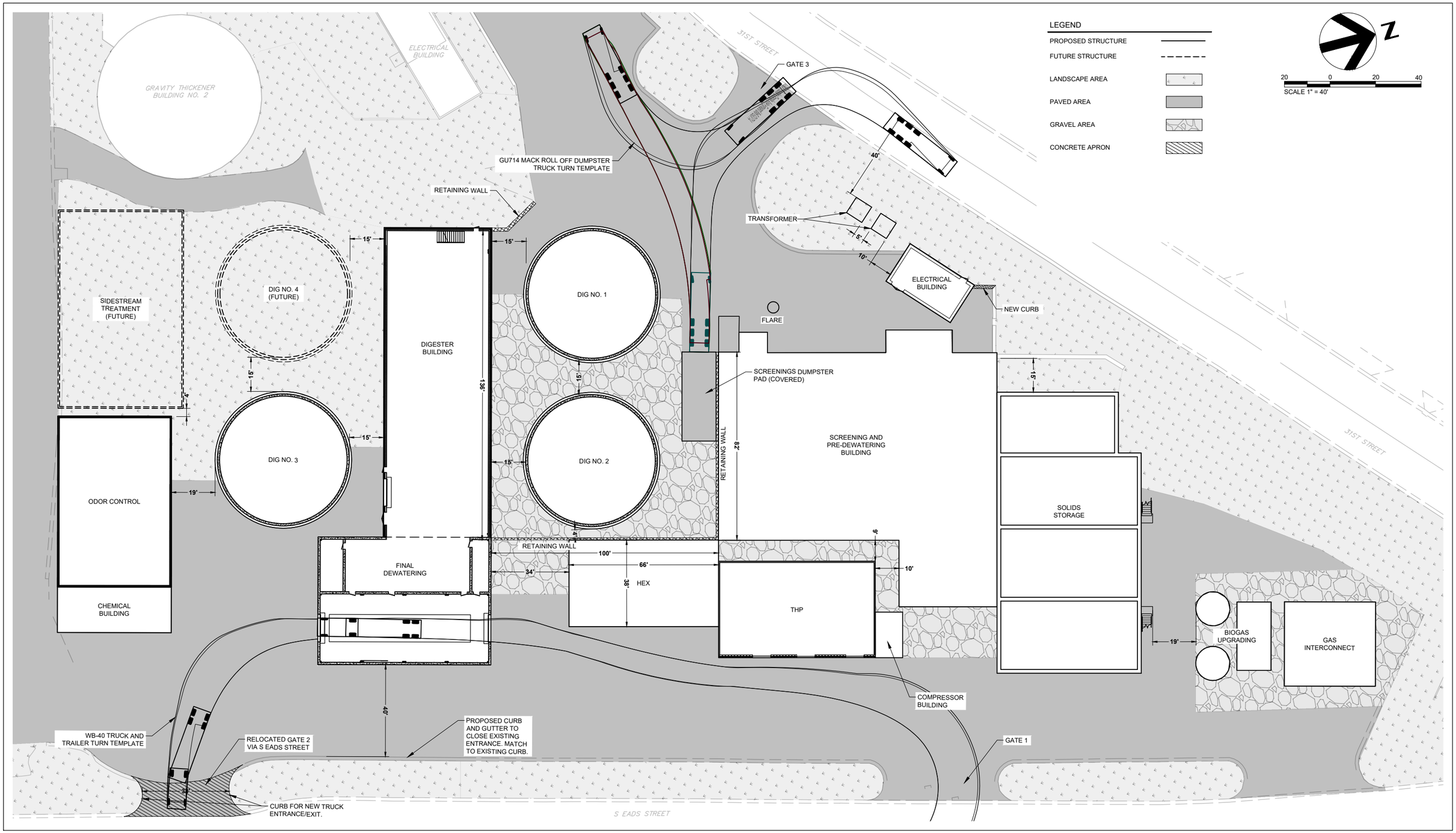

ISSUE	DATE	DESCRIPTION
A	12/2022	FACILITIES PLAN

PROJECT MANAGER	BALCHUNAS, BRIAN
CIVIL	J.GISSENDANNER
STRUCTURAL	H.ANTSHEL
ARCHITECTUAL	J.REDDRICK
PROCESS	S.SPALDING
MECHANICAL	C.MOLINE
ELECTRICAL	B.CUNNINGHAM
INSTRUMENTATION	
PROJECT NUMBER	10263882

DRAFT FACILITIES PLAN NOT FOR CONSTRUCTION

ARLINGTON COUNTY WATER POLLUTION CONTROL BIOSOLIDS REGEN

RENOVATE DEWATERING BUILDING SITE PLAN

0 1" 2"

FILENAME C-004.DWG

SCALE 1" = 40'

SHEET C-004

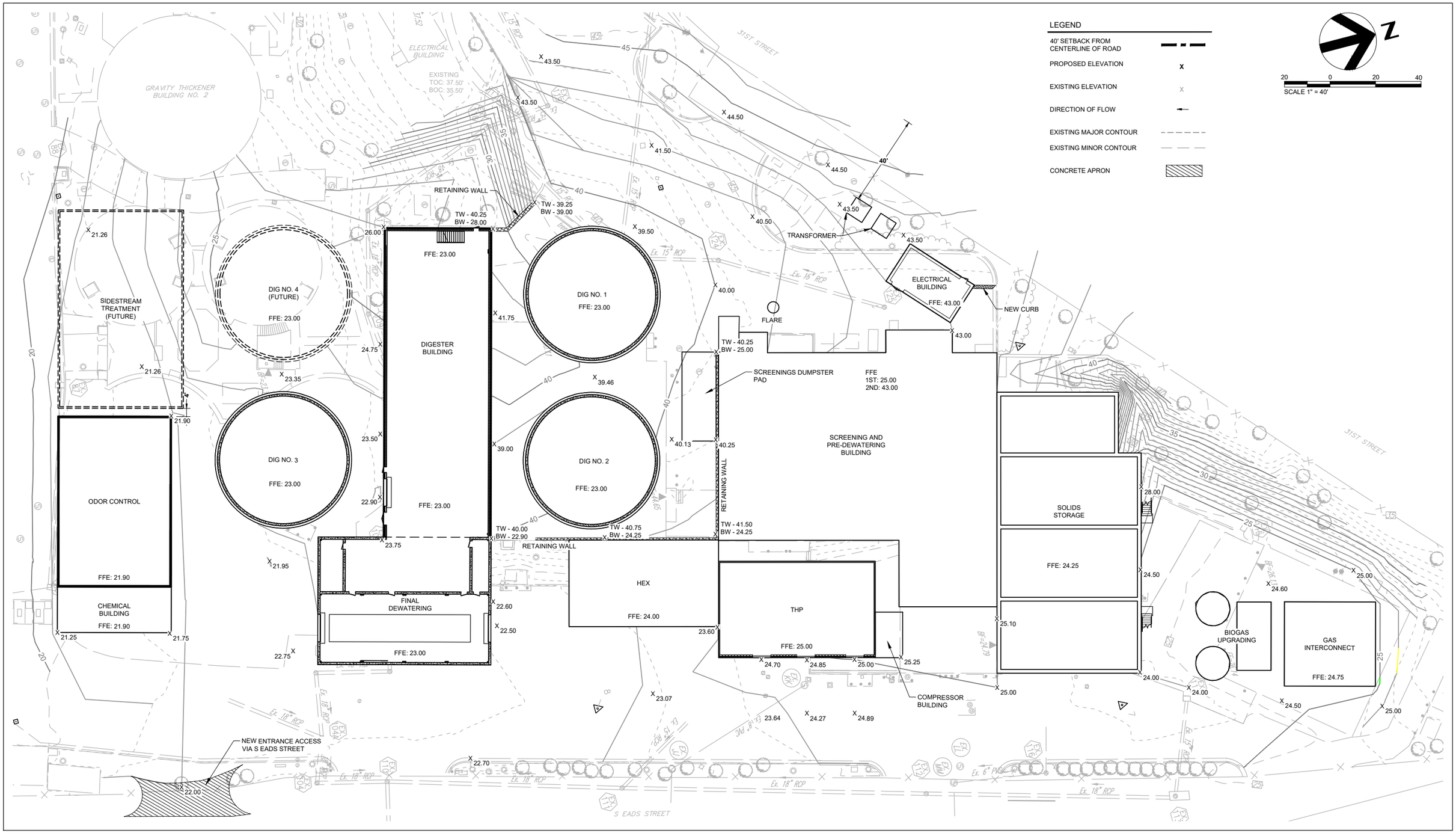

A	12/2022	FACILITIES PLAN
ISSUE	DATE	DESCRIPTION

PROJECT MANAGER	BALCHUNAS, BRIAN
CIVIL	J.GISSENDANNER
STRUCTURAL	H.ANTSHEL
ARCHITECTUAL	J.REDDRICK
PROCESS	S.SPALDING
MECHANICAL	C.MOLINE
ELECTRICAL	B.CUNNINGHAM
INSTRUMENTATION	
PROJECT NUMBER	10263882

DRAFT FACILITIES PLAN NOT FOR CONSTRUCTION

ARLINGTON COUNTY WATER POLLUTION CONTROL BIOSOLIDS REGEN

RENOVATE DEWATERING BUILDING GRADING PLAN

0 1" 2"

FILENAME C-005.DWG

SCALE 1" = 40'

SHEET C-005

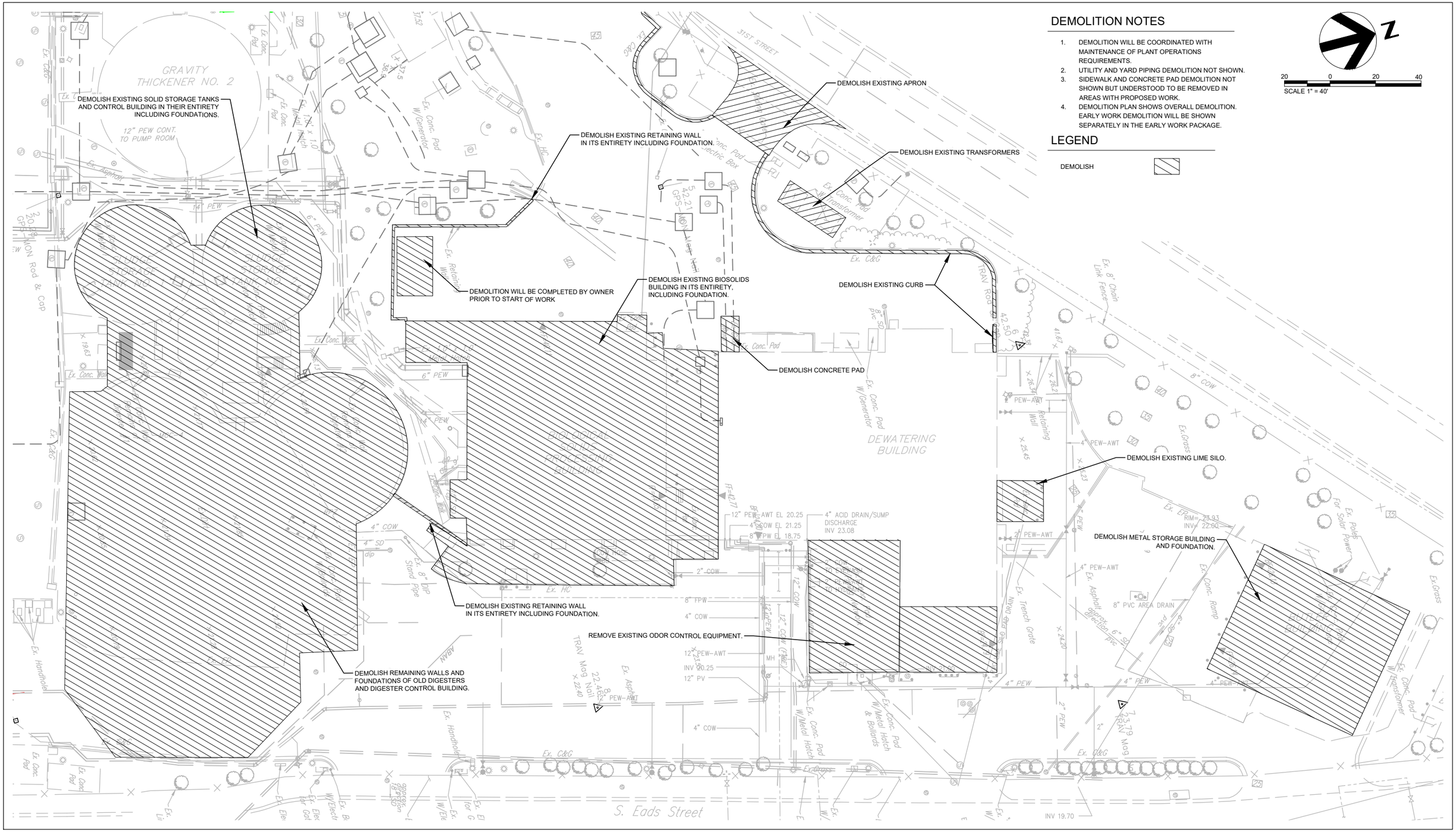

DEMOLITION NOTES

1. DEMOLITION WILL BE COORDINATED WITH MAINTENANCE OF PLANT OPERATIONS REQUIREMENTS.
2. UTILITY AND YARD PIPING DEMOLITION NOT SHOWN.
3. SIDEWALK AND CONCRETE PAD DEMOLITION NOT SHOWN BUT UNDERSTOOD TO BE REMOVED IN AREAS WITH PROPOSED WORK.
4. DEMOLITION PLAN SHOWS OVERALL DEMOLITION. EARLY WORK DEMOLITION WILL BE SHOWN SEPARATELY IN THE EARLY WORK PACKAGE.

LEGEND

DEMOLISH

N

20 0 20 40

SCALE 1" = 40'

ISSUE	DATE	DESCRIPTION
A	12/2022	FACILITIES PLAN

PROJECT MANAGER	BALCHUNAS, BRIAN
CIVIL	J.GISSENDANNER
STRUCTURAL	H.ANTSHEL
ARCHITECTUAL	J.REDDRICK
PROCESS	S.SPALDING
MECHANICAL	C.MOLINE
ELECTRICAL	B.CUNNINGHAM
INSTRUMENTATION	
PROJECT NUMBER	10263882

DRAFT FACILITIES PLAN NOT FOR CONSTRUCTION

ARLINGTON COUNTY WATER POLLUTION CONTROL BIOSOLIDS REGEN

DECOMMISSION DEWATERING BUILDING DEMOLITION PLAN

0 1" 2"

FILENAME C-006.DWG

SCALE 1" = 40'

SHEET C-006

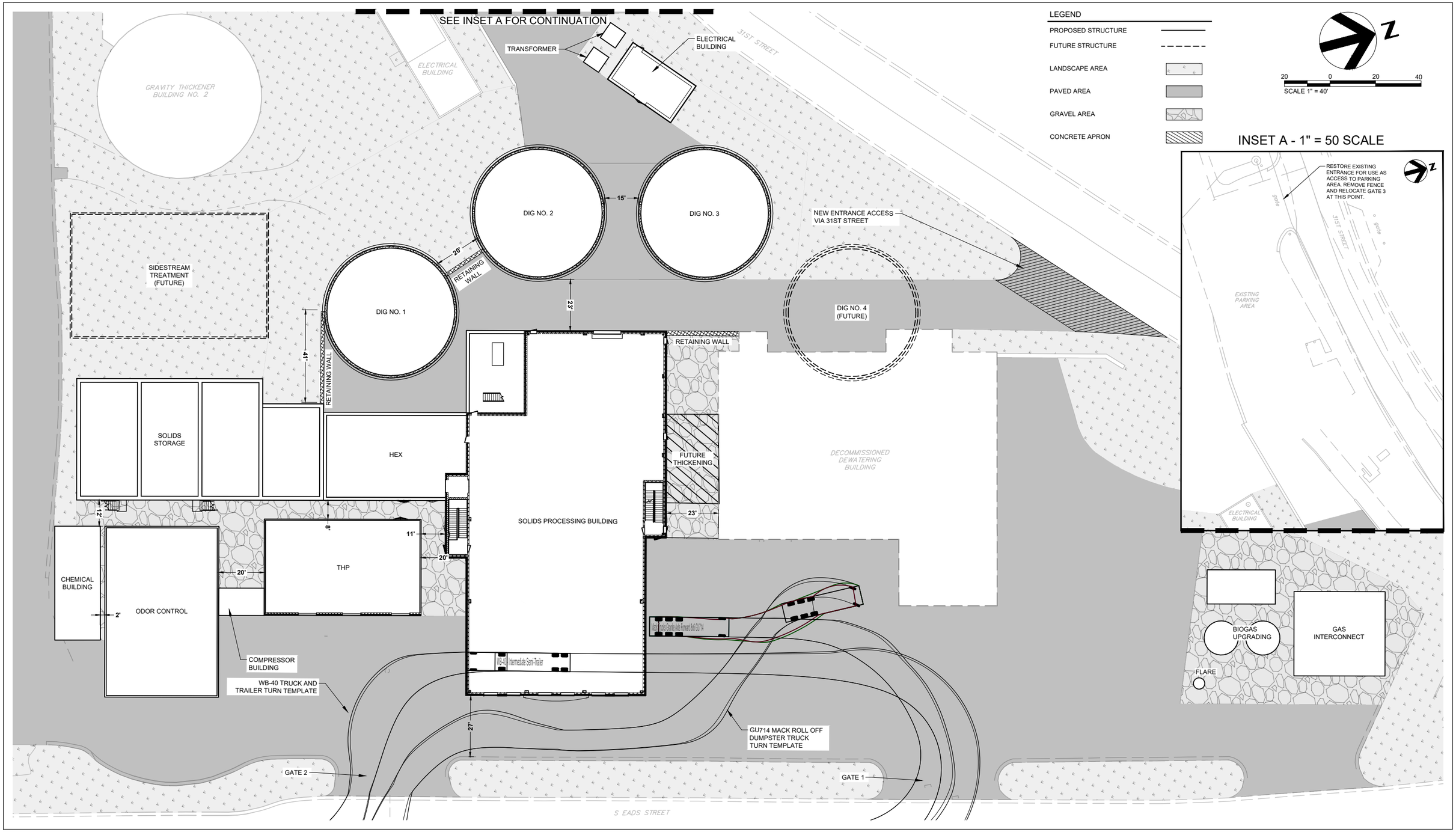

ISSUE	DATE	DESCRIPTION
A	12/2022	FACILITIES PLAN

PROJECT MANAGER	BALCHUNAS, BRIAN
CIVIL	J.GISSENDANNER
STRUCTURAL	H.ANTSHEL
ARCHITECTUAL	J.REDDRICK
PROCESS	S.SPALDING
MECHANICAL	C.MOLINE
ELECTRICAL	B.CUNNINGHAM
INSTRUMENTATION	
PROJECT NUMBER	10263882

DRAFT FACILITIES PLAN NOT FOR CONSTRUCTION

ARLINGTON COUNTY WATER POLLUTION CONTROL BIOSOLIDS REGEN

DECOMMISSION DEWATERING BUILDING SITE PLAN

0 1" 2"

FILENAME	C-007.DWG
SCALE	1" = 40'

SHEET C-007

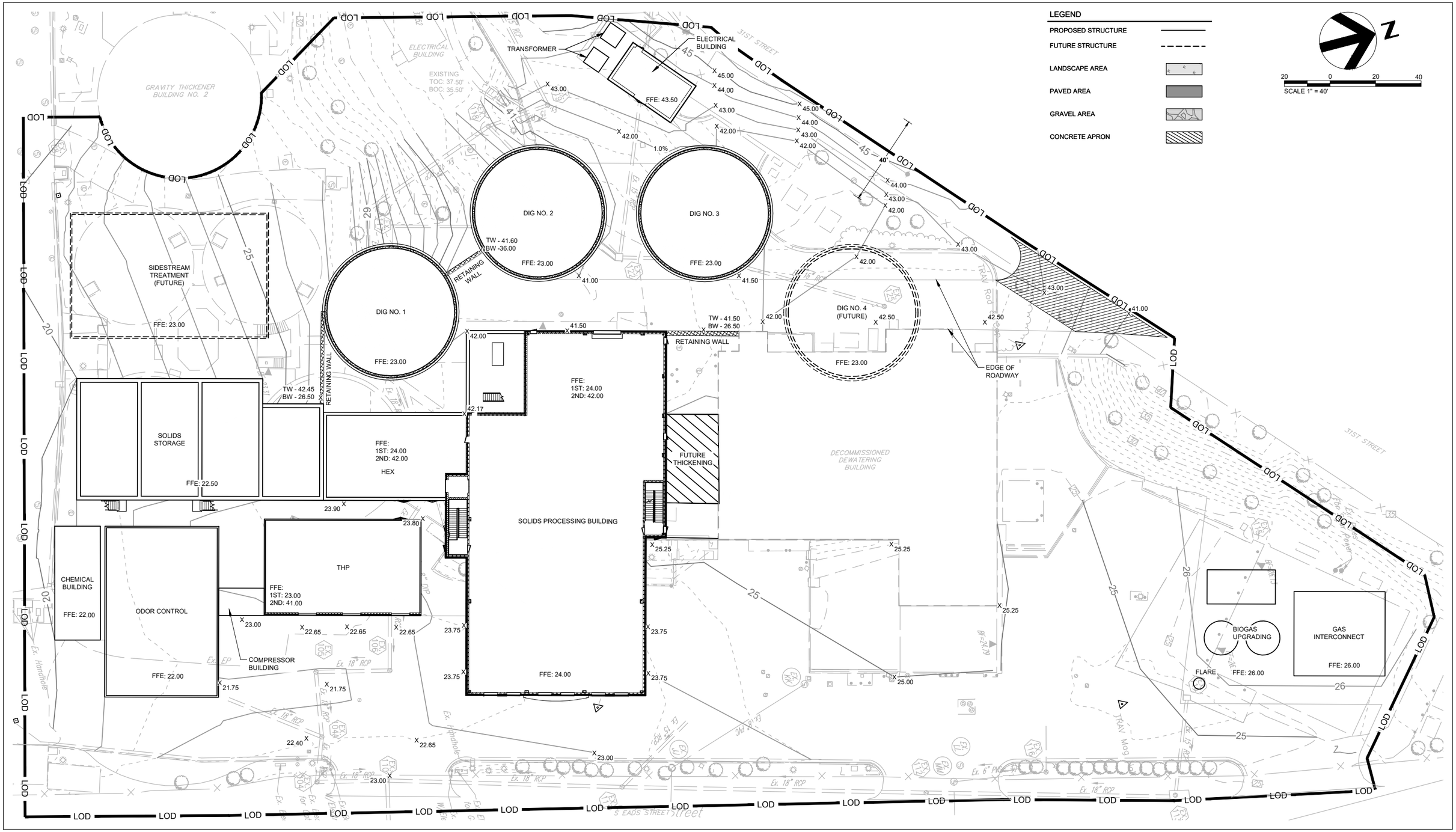

ISSUE	DATE	DESCRIPTION
A	12/2022	FACILITIES PLAN

PROJECT MANAGER	BALCHUNAS, BRIAN
CIVIL	J.GISSENDANNER
STRUCTURAL	H.ANTSHEL
ARCHITECTUAL	J.REDDRICK
PROCESS	S.SPALDING
MECHANICAL	C.MOLINE
ELECTRICAL	B.CUNNINGHAM
INSTRUMENTATION	
PROJECT NUMBER	10263882

DRAFT FACILITIES PLAN NOT FOR CONSTRUCTION

ARLINGTON COUNTY WATER POLLUTION CONTROL BIOSOLIDS REGEN

DECOMMISSION DEWATERING BUILDING GRADING PLAN

0 1" 2"

FILENAME C-008.DWG

SCALE 1" = 40'

SHEET C-008

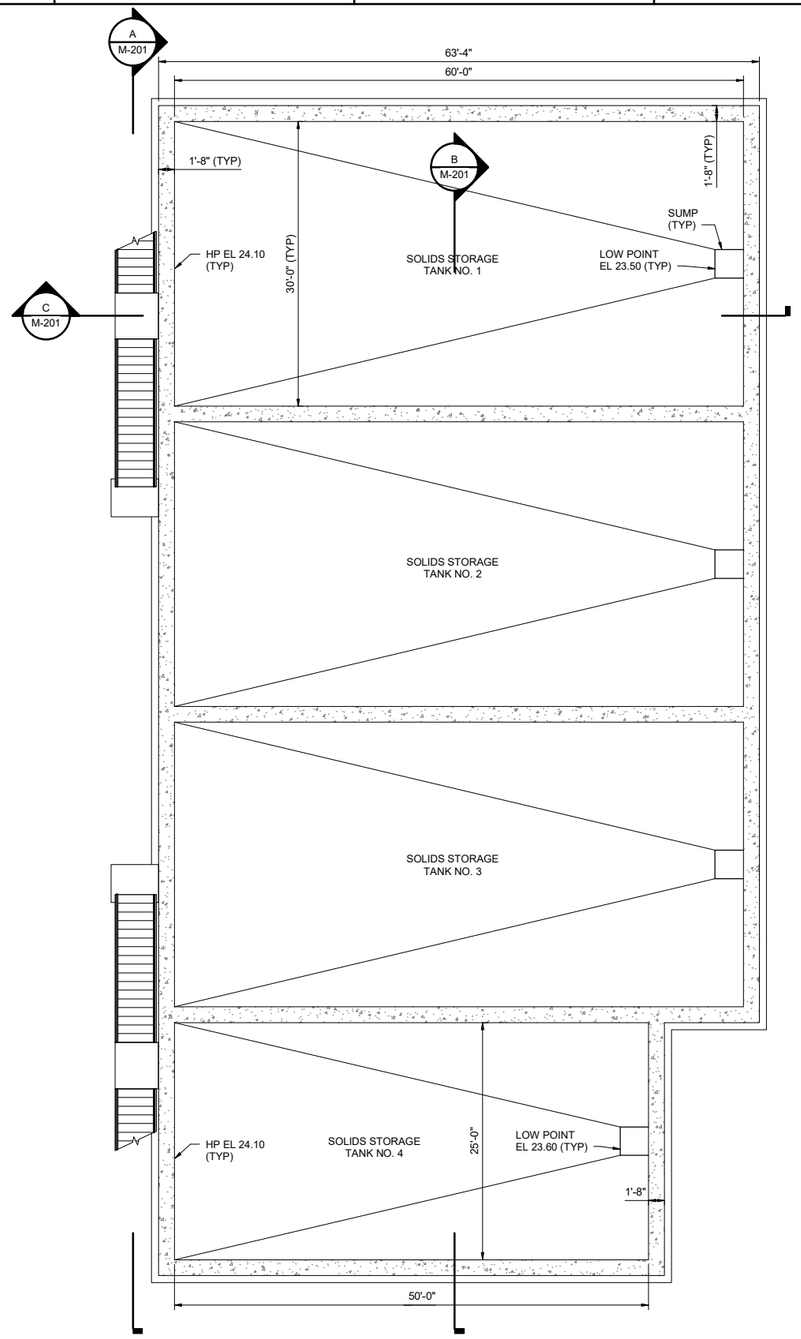

PLAN AT EL 24.00

1/8" = 1'-0"

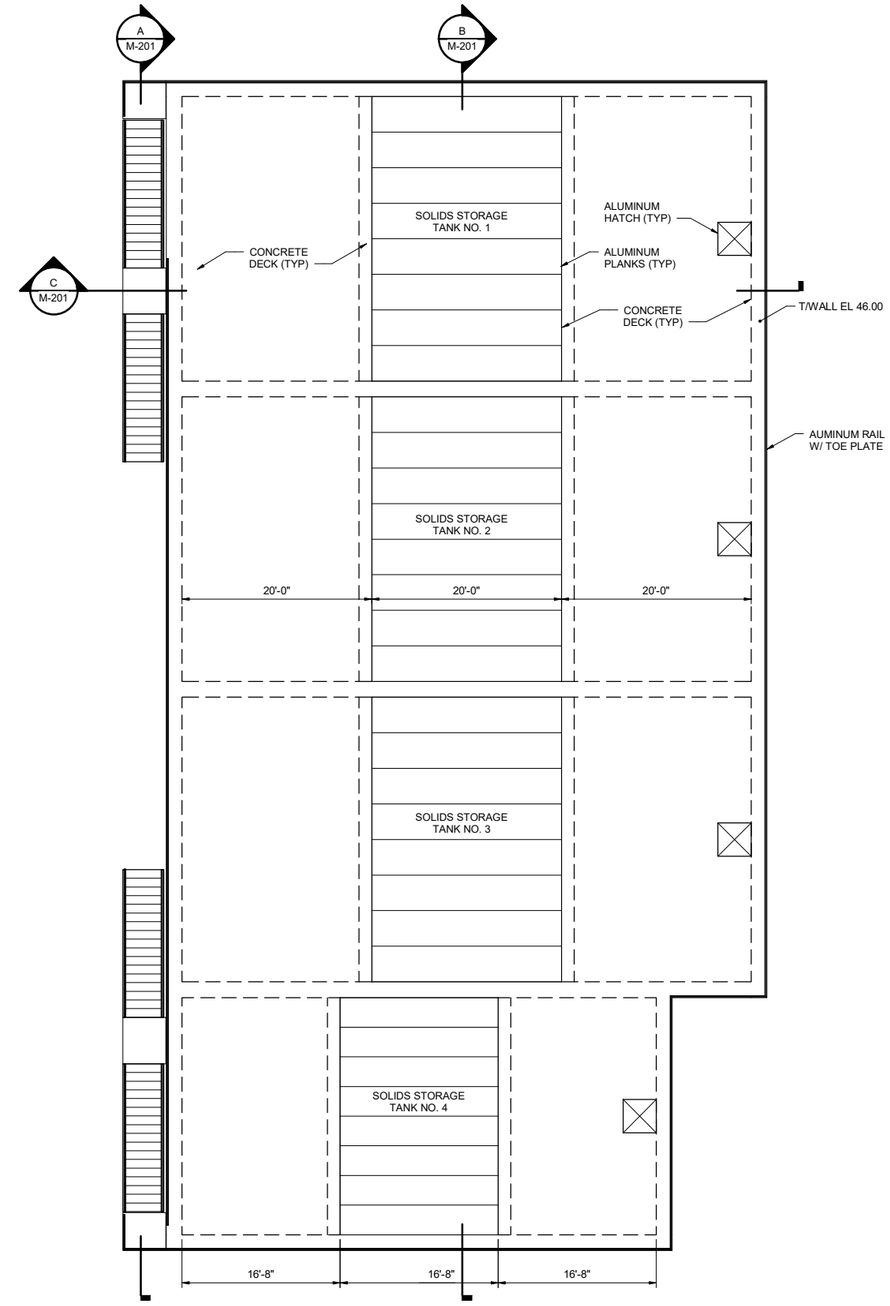

PLAN AT EL 46.00

1/8" = 1'-0"

ISSUE	DATE	DESCRIPTION
A	12/2022	FACILITIES PLAN

PROJECT MANAGER	BALCHUNAS, BRIAN
CIVIL	A. CALTON
STRUCTURAL	H. ANTSHEL
ARCHITECTURAL	J. REDDRICK
PROCESS	S. SPALDING
MECHANICAL	C. MOLINE
ELECTRICAL	B. CUNNINGHAM
INSTRUMENTATION	
PROJECT NUMBER	10263882

DRAFT
FACILITIES PLAN
NOT FOR
CONSTRUCTION

ARLINGTON
VIRGINIA

ARLINGTON COUNTY
WPCP
RE-GEN

RENOVATE DEWATERING BUILDING
SOLIDS STORAGE TANKS PLAN

0 1" 2"

FILENAME 10263882-40-S_v20.rvt

SCALE 1/8" = 1'-0"

SHEET **M-200**

BIM 360://10263882_ARL_Biosolids_Program_Management_2020/10263882-40_opt2-S_v20.rvt
6/30/2022 9:03:51 AM

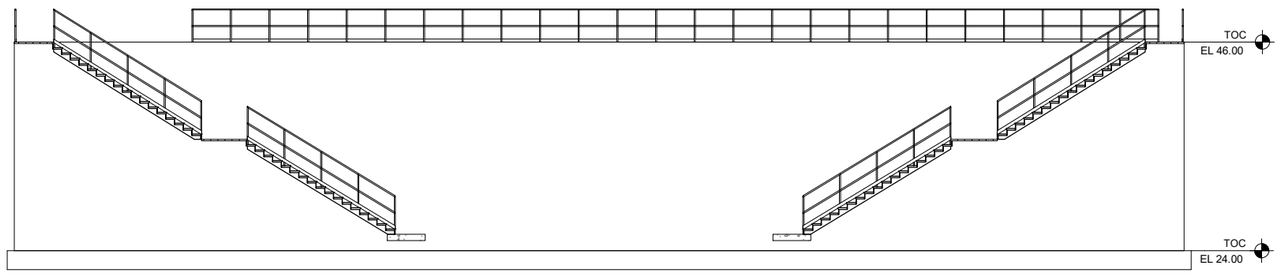

A M-200 SECTION
1/8" = 1'-0"

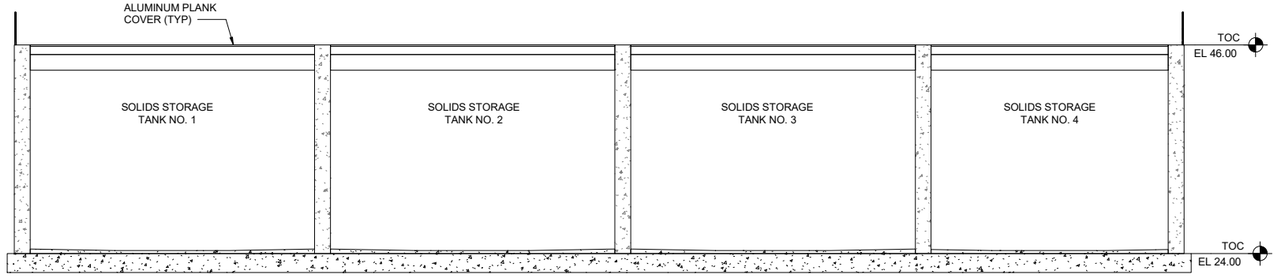

B M-200 SECTION
1/8" = 1'-0"

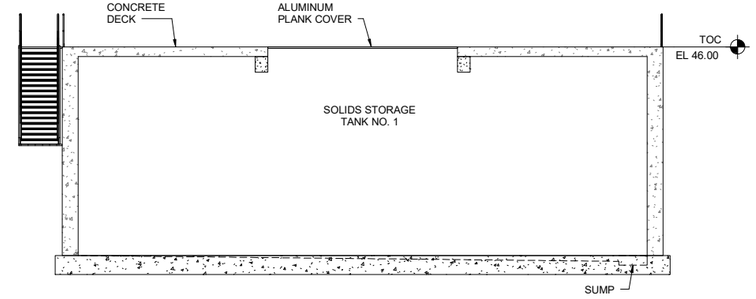

C M-200 SECTION
1/8" = 1'-0"

BIM 360://10263882_ARL_Biosolids_Program_Management_2020/10263882-40_opt2-S_v20.rvt
6/30/2022 9:03:51 AM

ISSUE	DATE	DESCRIPTION
A	12/2022	FACILITIES PLAN

PROJECT MANAGER	BALCHUNAS, BRIAN
CIVIL	A. CALTON
STRUCTURAL	H. ANTSHEL
ARCHITECTURAL	J. REDDRICK
PROCESS	S. SPALDING
MECHANICAL	C. MOLINE
ELECTRICAL	B. CUNNINGHAM
INSTRUMENTATION	
PROJECT NUMBER	10263882

DRAFT
FACILITIES PLAN
NOT FOR
CONSTRUCTION

ARLINGTON
VIRGINIA

ARLINGTON COUNTY
WPCP
RE-GEN

RENOVATE DEWATERING BUILDING
SOLIDS STORAGE TANKS SECTIONS

0 1" 2"

FILENAME	10263882-40-S_v20.rvt
SCALE	1/8" = 1'-0"

SHEET
M-201

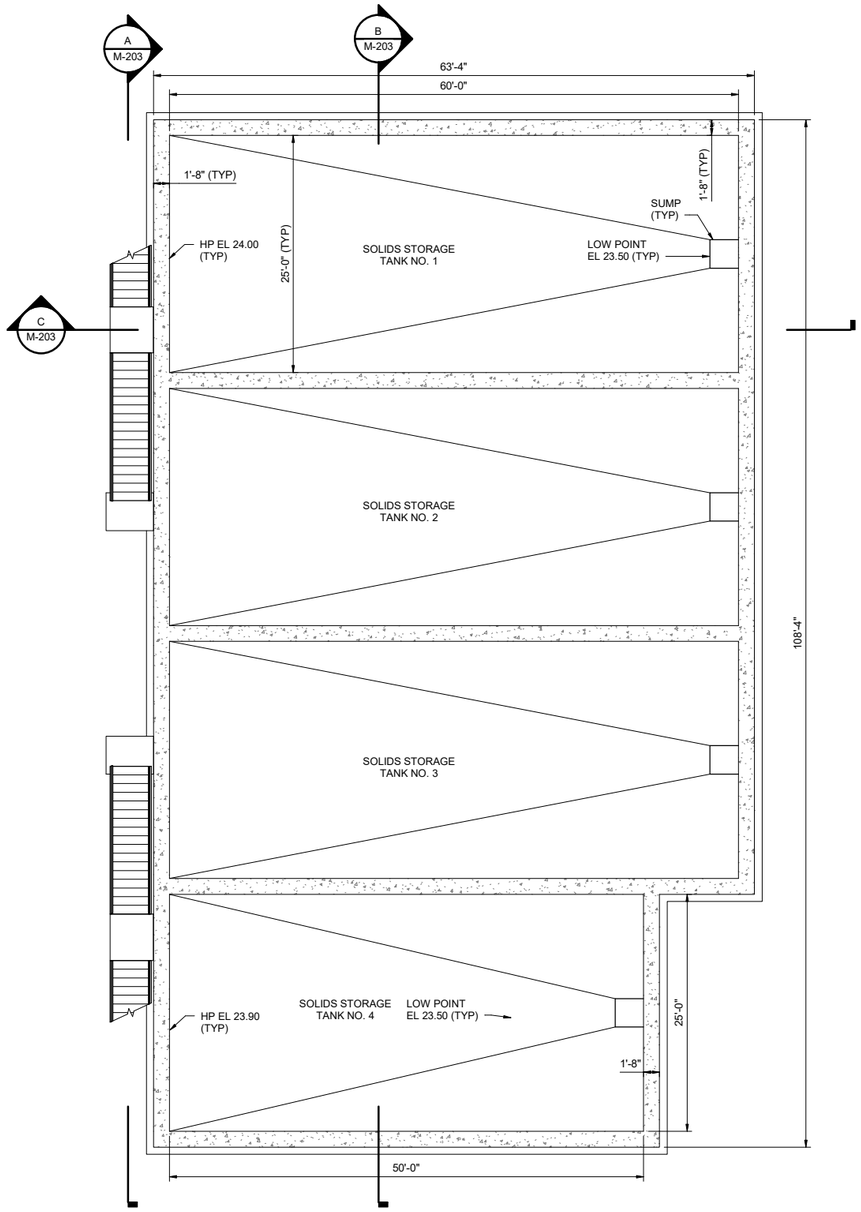

FIRST FLOOR PLAN AT EL 24.00

1/8" = 1'-0"

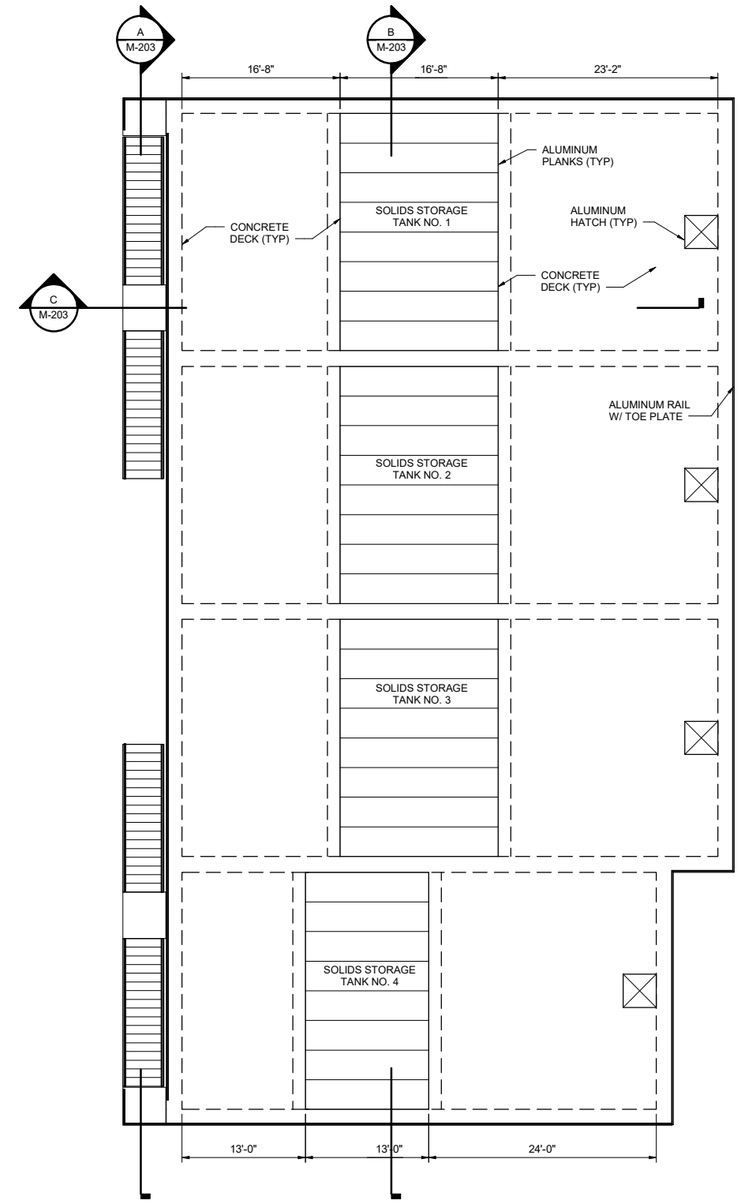

PLAN AT EL 46.00

1/8" = 1'-0"

ISSUE	DATE	DESCRIPTION
A	12/2022	FACILITIES PLAN

PROJECT MANAGER	BALCHUNAS, BRIAN
CIVIL	A. CALTON
STRUCTURAL	H. ANTSHEL
ARCHITECTURAL	J. REDDRICK
PROCESS	S. SPALDING
MECHANICAL	C. MOLINE
ELECTRICAL	B. CUNNINGHAM
INSTRUMENTATION	
PROJECT NUMBER	10263882

DRAFT
FACILITIES PLAN
NOT FOR
CONSTRUCTION

ARLINGTON
VIRGINIA

ARLINGTON COUNTY
WPCP
RE-GEN

DECOMISSION DEWATERING BUILDING
SOLIDS STORAGE TANKS PLANS

0 1" 2"

FILENAME 10263882-40-S_v20.rvt

SCALE 1/8" = 1'-0"

SHEET **M-202**

BIM 360://10263882_ARL_Biosolids_Program_Management_2020/10263882-40-S_v20.rvt
6/30/2022 9:03:18 AM

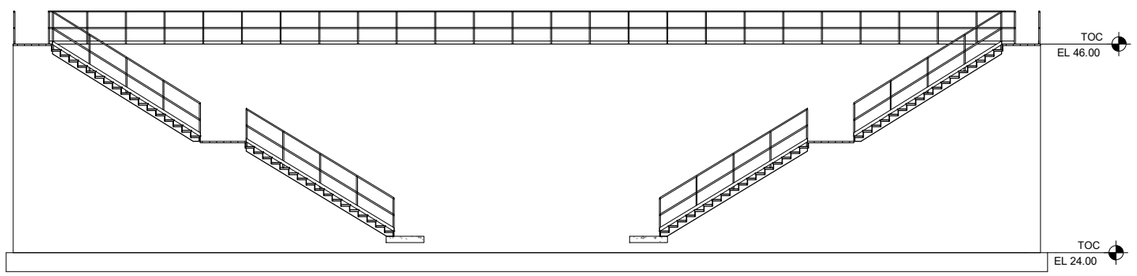

A M-202 SECTION
1/8" = 1'-0"

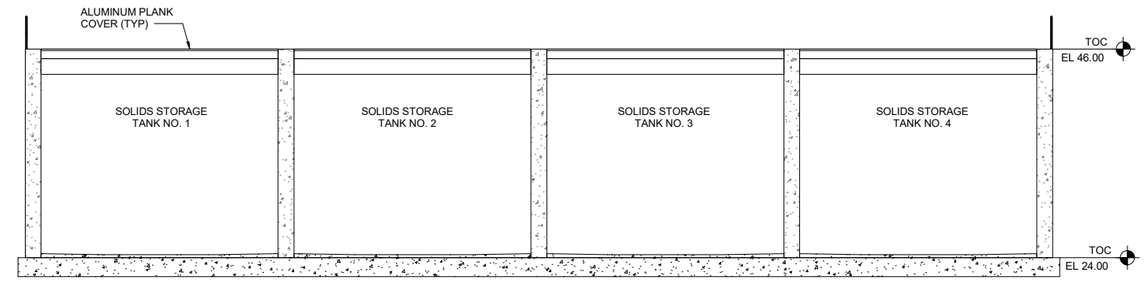

B M-202 SECTION
1/8" = 1'-0"

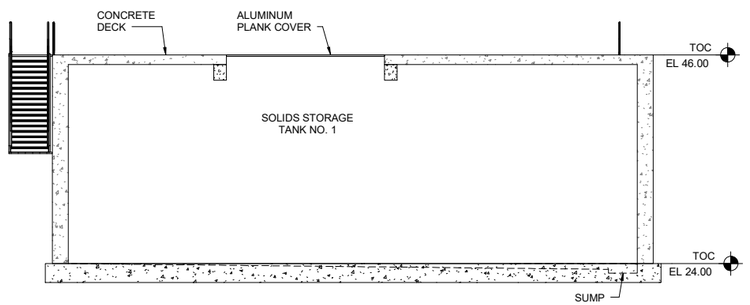

C M-202 SECTION
1/8" = 1'-0"

ISSUE	DATE	DESCRIPTION
A	12/2022	FACILITIES PLAN

PROJECT MANAGER	BALCHUNAS, BRIAN
CIVIL	A. CALTON
STRUCTURAL	H. ANTSHEL
ARCHITECTURAL	J. REDDRICK
PROCESS	S. SPALDING
MECHANICAL	C. MOLINE
ELECTRICAL	B. CUNNINGHAM
INSTRUMENTATION	
PROJECT NUMBER	10263882

DRAFT
FACILITIES PLAN
NOT FOR
CONSTRUCTION

ARLINGTON
VIRGINIA

ARLINGTON COUNTY
WPCP
RE-GEN

DECOMISSION DEWATERING BUILDING
SOLIDS STORAGE TANKS SECTIONS

0 1" 2"

FILENAME 10263882-40-S_v20.rvt
SCALE 1/8" = 1'-0"

SHEET
M-203

BIM 360://10263882_ARL_Biosolids_Program_Management_2020/10263882-40-S_v20.rvt
6/30/2022 9:03:18 AM

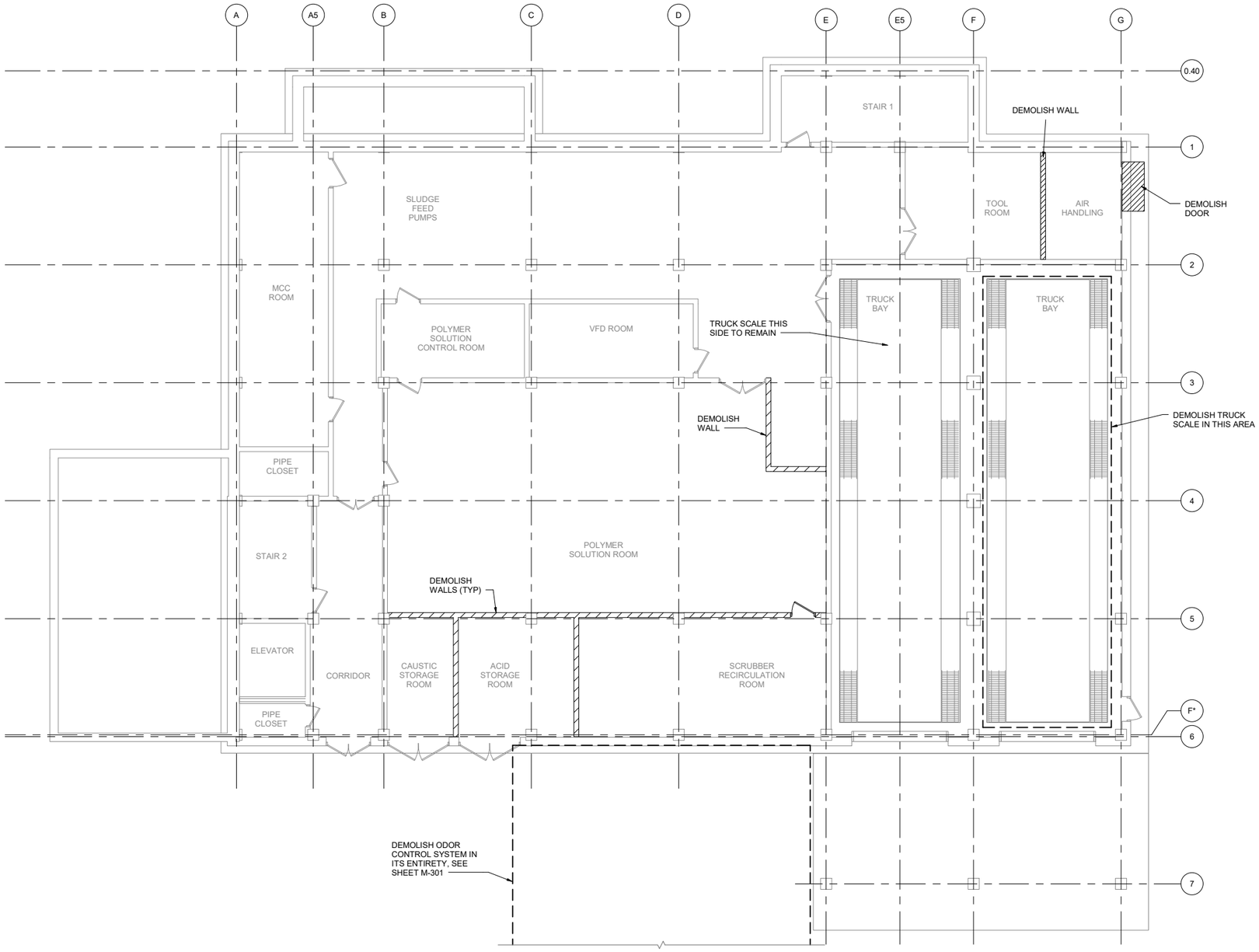

PLAN AT EL 25.00

1/8" = 1'-0"

GENERAL NOTES

1. ALL INTERIOR MECHANICAL, ODOR CONTROL (INCLUDING EXTERIOR), HOISTS, BRIDGE CRANE, ELECTRICAL, HVAC, LIGHTING, CONDUITS, ETC TO BE DEMOLISHED TO LEAVE BARE SHELL UNLESS OTHERWISE NOTED. REFER TO CONTRACT 93-02-WPC PHASE 3A SOLIDS PROCESSING FACILITIES FOR DETAILS OF FACILITIES.
2. DEMOLISH WALLS AS SHOWN.

LEGEND

DEMOLISHED ITEMS

ISSUE	DATE	DESCRIPTION
A	12/2022	FACILITIES PLAN

PROJECT MANAGER	BALCHUNAS, BRIAN
CIVIL	A. CALTON
STRUCTURAL	H. ANTSHEL
ARCHITECTURAL	J. REDDRICK
PROCESS	S. SPALDING
MECHANICAL	C. MOLINE
ELECTRICAL	B. CUNNINGHAM
INSTRUMENTATION	
PROJECT NUMBER	10263882

DRAFT FACILITIES PLAN NOT FOR CONSTRUCTION

ARLINGTON VIRGINIA

ARLINGTON COUNTY WPCP RE-GEN

RENOVATE DEWATERING BUILDING
DEWATERING BUILDING
DEMOLITION PLAN AT EL 25.00

0 1" 2"

FILENAME 10263882-01-D_v20.rvt

SCALE 1/8" = 1'-0"

SHEET **M-300**

BIM 360://10263882_ARL_Biosolids_Program_Management_2020/10263882-01-D_v20.rvt
6/30/2022 4:41:21 PM

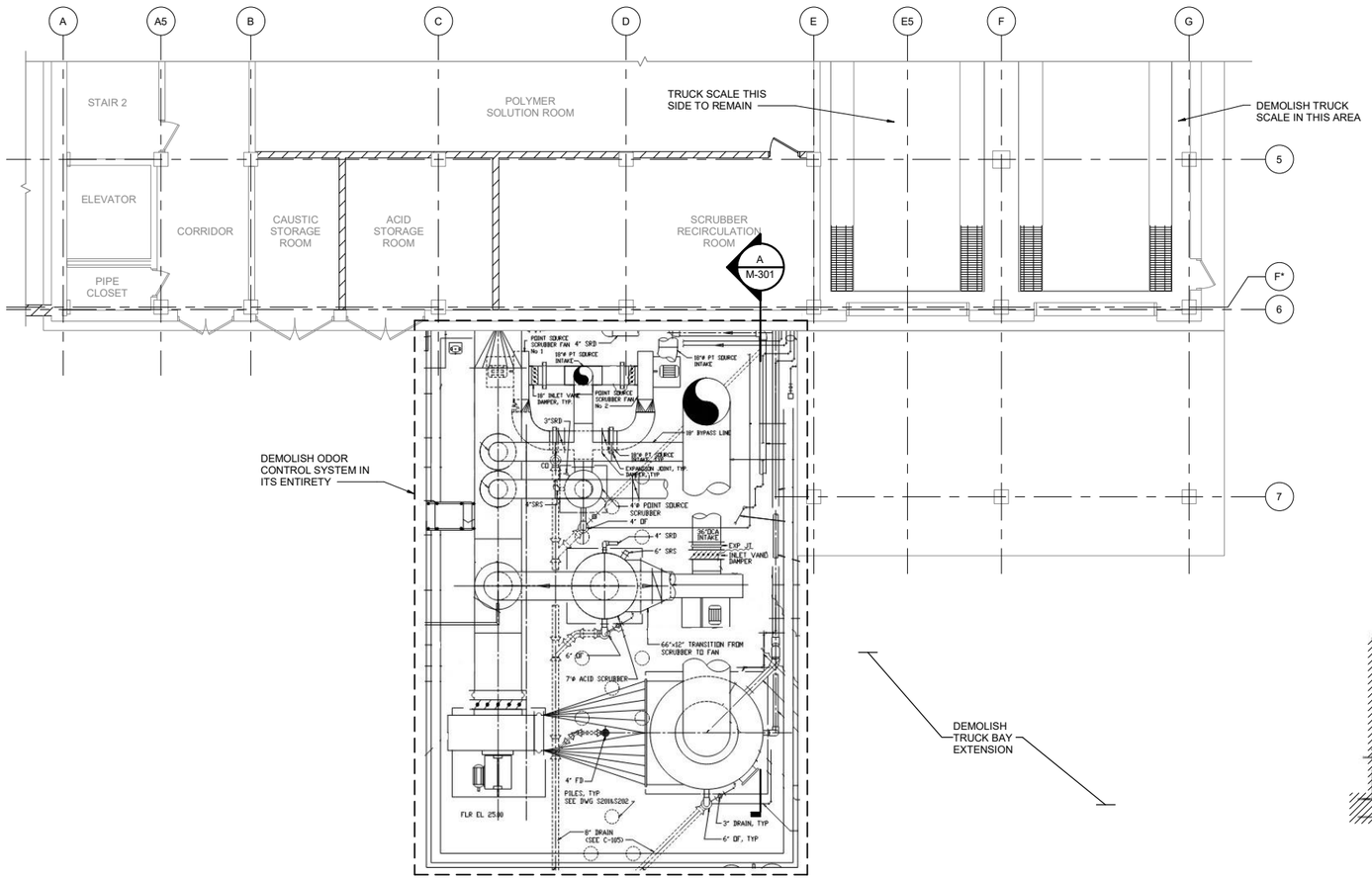

PLAN AT EL 25.00

1/8" = 1'-0"

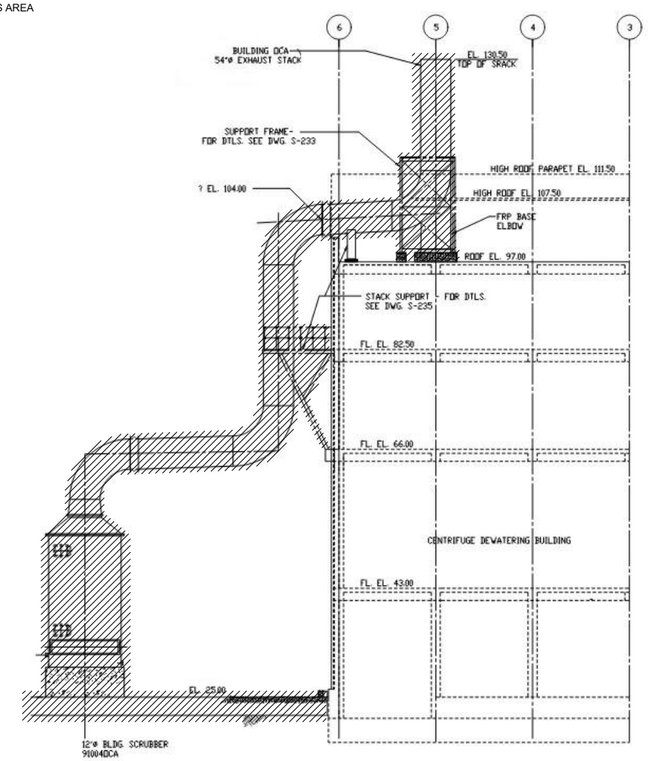

A M-301 FOUL AIR SECTION DEMO

1/8" = 1'-0"

GENERAL NOTES

1. ALL INTERIOR MECHANICAL, ODOR CONTROL (INCLUDING EXTERIOR), HOISTS, BRIDGE CRANE, ELECTRICAL, HVAC, LIGHTING, CONDUITS, ETC TO BE DEMOLISHED TO LEAVE BARE SHELL UNLESS OTHERWISE NOTED. REFER TO CONTRACT 93-02-WPC PHASE 3A SOLIDS PROCESSING FACILITIES FOR DETAILS OF FACILITIES.
2. DEMOLISH WALLS AS SHOWN.

LEGEND

DEMOLISHED ITEMS

ISSUE	DATE	DESCRIPTION
A	12/2022	FACILITIES PLAN

PROJECT MANAGER	BALCHUNAS, BRIAN
CIVIL	A. CALTON
STRUCTURAL	H. ANTSHEL
ARCHITECTURAL	J. REDDRICK
PROCESS	S. SPALDING
MECHANICAL	C. MOLINE
ELECTRICAL	B. CUNNINGHAM
INSTRUMENTATION	
PROJECT NUMBER	10263882

DRAFT FACILITIES PLAN NOT FOR CONSTRUCTION

ARLINGTON VIRGINIA

ARLINGTON COUNTY WPCP RE-GEN

RENOVATE DEWATERING BUILDING DEWATERING BUILDING ODOR CONTROL SYSTEM DEMOLITION PLAN AND SECTION

0 1" 2"

FILENAME 10263882-01-D_v20.rvt

SCALE 1/8" = 1'-0"

SHEET **M-301**

BIM 360://10263882_ARL_Biosolids_Program_Management_2020/10263882-01-D_v20.rvt
6/30/2022 9:06:42 AM

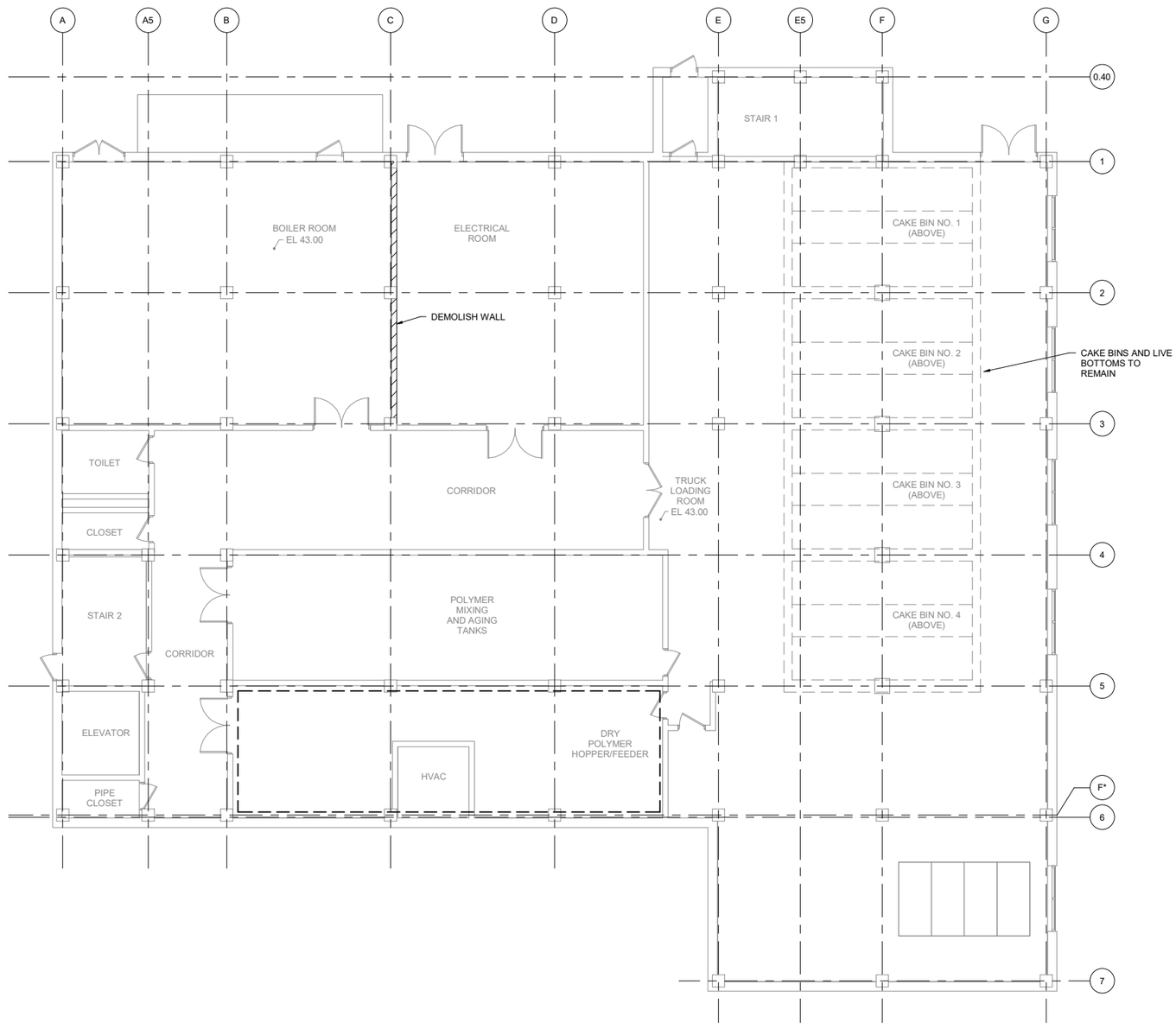

PLAN AT EL 43.00

1/8" = 1'-0"

GENERAL NOTES

1. ALL INTERIOR MECHANICAL, ODOR CONTROL (INCLUDING EXTERIOR), HOISTS, BRIDGE CRANE, ELECTRICAL, HVAC, LIGHTING, CONDUITS, ETC TO BE DEMOLISHED TO LEAVE BARE SHELL UNLESS OTHERWISE NOTED. REFER TO CONTRACT 93-02-WPC PHASE 3A SOLIDS PROCESSING FACILITIES FOR DETAILS OF FACILITIES.
2. DEMOLISH WALLS AS SHOWN.

LEGEND

DEMOLISHED ITEMS

ISSUE	DATE	DESCRIPTION
A	12/2022	FACILITIES PLAN

PROJECT MANAGER	BALCHUNAS, BRIAN
CIVIL	A. CALTON
STRUCTURAL	H. ANTSHEL
ARCHITECTURAL	J. REDDRICK
PROCESS	S. SPALDING
MECHANICAL	C. MOLINE
ELECTRICAL	B. CUNNINGHAM
INSTRUMENTATION	
PROJECT NUMBER	10263882

DRAFT FACILITIES PLAN NOT FOR CONSTRUCTION

ARLINGTON VIRGINIA

ARLINGTON COUNTY WPCP RE-GEN

RENOVATE DEWATERING BUILDING
DEWATERING BUILDING
DEMOLITION PLAN AT EL 43.00

0 1" 2"

FILENAME 10263882-01-D_v20.rvt

SCALE 1/8" = 1'-0"

SHEET **M-302**

BIM 360://10263882_ARL_Biosolids_Program_Management_2020/10263882-01-D_v20.rvt
6/30/2022 9:06:42 AM

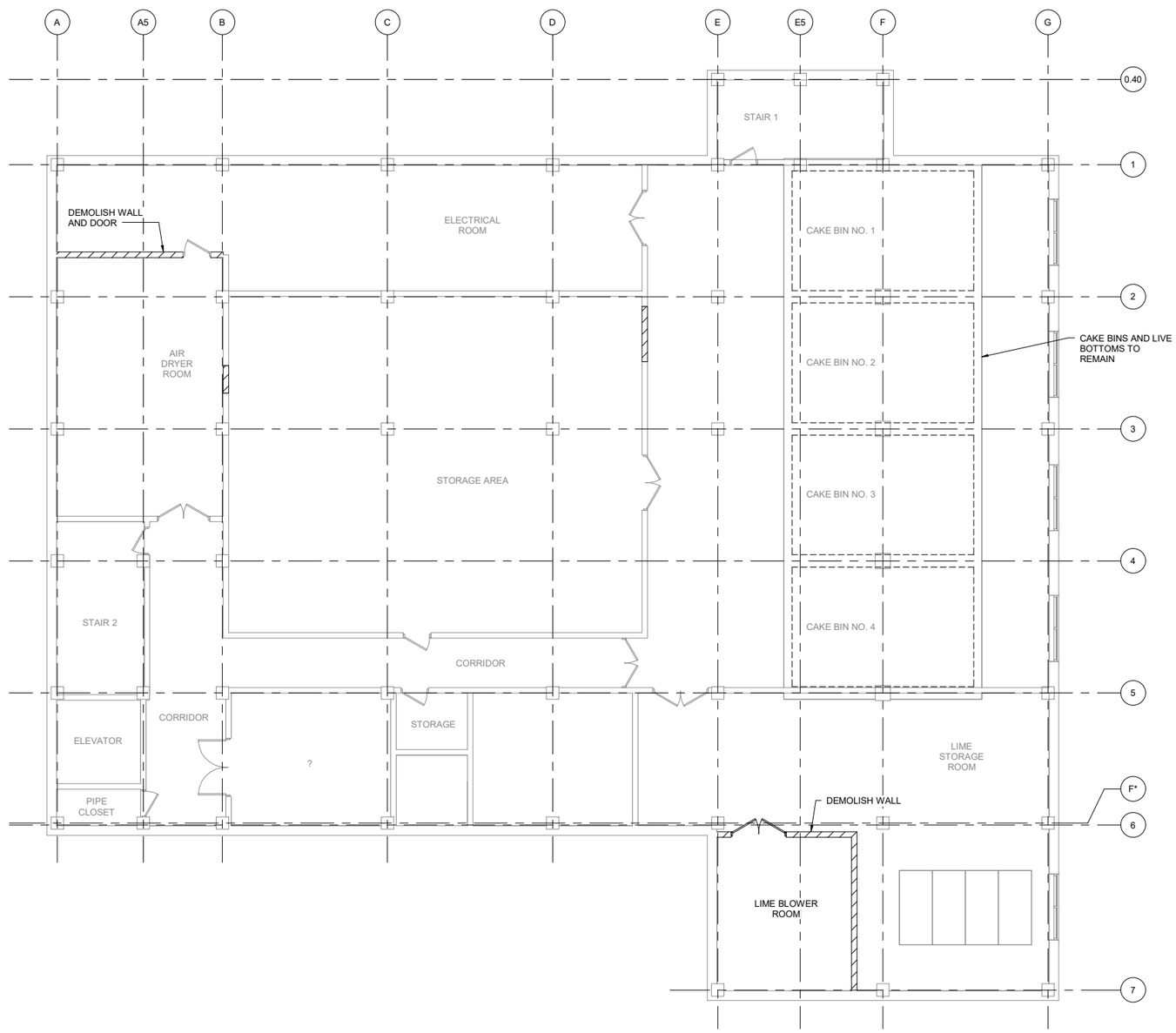

PLAN AT EL 66.00

1/8" = 1'-0"

GENERAL NOTES

1. ALL INTERIOR MECHANICAL, ODOR CONTROL (INCLUDING EXTERIOR), HOISTS, BRIDGE CRANE, ELECTRICAL, HVAC, LIGHTING, CONDUITS, ETC TO BE DEMOLISHED TO LEAVE BARE SHELL UNLESS OTHERWISE NOTED. REFER TO CONTRACT 93-02-WPC PHASE 3A SOLIDS PROCESSING FACILITIES FOR DETAILS OF FACILITIES.
2. DEMOLISH WALLS AS SHOWN.

LEGEND

DEMOLISHED ITEMS

ISSUE	DATE	DESCRIPTION
A	12/2022	FACILITIES PLAN

PROJECT MANAGER	BALCHUNAS, BRIAN
CIVIL	A. CALTON
STRUCTURAL	H. ANTSHEL
ARCHITECTURAL	J. REDDRICK
PROCESS	S. SPALDING
MECHANICAL	C. MOLINE
ELECTRICAL	B. CUNNINGHAM
INSTRUMENTATION	
PROJECT NUMBER	10263882

DRAFT
FACILITIES PLAN
NOT FOR
CONSTRUCTION

ARLINGTON VIRGINIA

ARLINGTON COUNTY
WPCP
RE-GEN

RENOVATE DEWATERING BUILDING
DEWATERING BUILDING
DEMOLITION PLAN AT EL 66.00

0 1" 2"

FILENAME 10263882-01-D_v20.rvt

SCALE 1/8" = 1'-0"

SHEET **M-303**

BIM 360://10263882_ARL_Biosolids_Program_Management_2020/10263882-01-D_v20.rvt
6/30/2022 9:06:43 AM

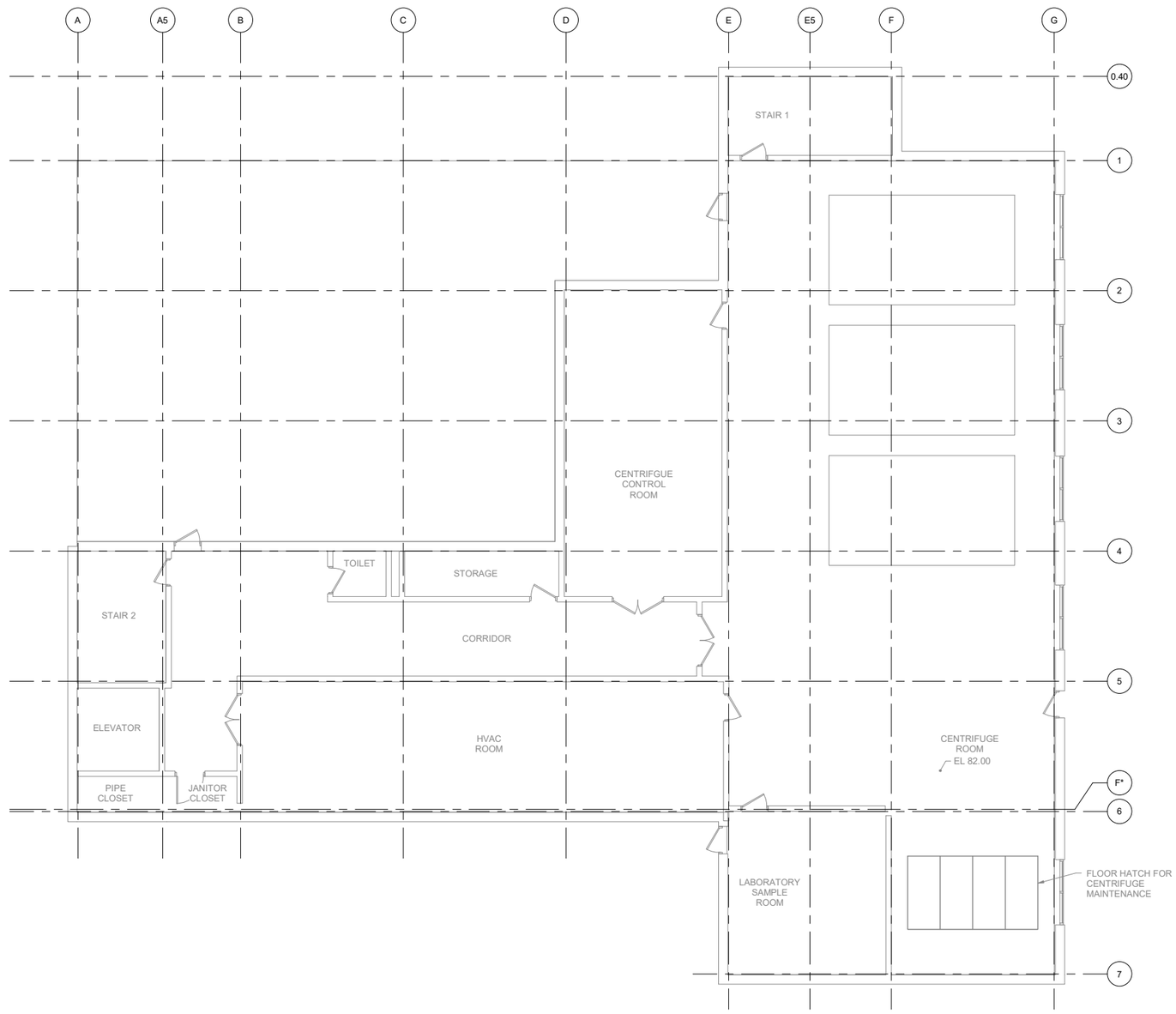

PLAN AT EL 82.00

1/8" = 1'-0"

GENERAL NOTES

1. ALL INTERIOR MECHANICAL, ODOR CONTROL (INCLUDING EXTERIOR), HOISTS, BRIDGE CRANE, ELECTRICAL, HVAC, LIGHTING, CONDUITS, ETC TO BE DEMOLISHED TO LEAVE BARE SHELL UNLESS OTHERWISE NOTED. REFER TO CONTRACT 93-02-WPC PHASE 3A SOLIDS PROCESSING FACILITIES FOR DETAILS OF FACILITIES.
2. DEMOLISH WALLS AS SHOWN.

LEGEND

DEMOLISHED ITEMS

ISSUE	DATE	DESCRIPTION
A	12/2022	FACILITIES PLAN

PROJECT MANAGER	BALCHUNAS, BRIAN
CIVIL	A. CALTON
STRUCTURAL	H. ANTSHEL
ARCHITECTURAL	J. REDDRICK
PROCESS	S. SPALDING
MECHANICAL	C. MOLINE
ELECTRICAL	B. CUNNINGHAM
INSTRUMENTATION	
PROJECT NUMBER	10263882

DRAFT FACILITIES PLAN NOT FOR CONSTRUCTION

ARLINGTON VIRGINIA

ARLINGTON COUNTY WPCP RE-GEN

RENOVATE DEWATERING BUILDING
DEWATERING BUILDING
DEMOLITION PLAN AT EL 82.00

0 1" 2"

FILENAME 10263882-01-D_v20.rvt

SCALE 1/8" = 1'-0"

SHEET **M-304**

BIM 360://10263882_ARL_Biosolids_Program_Management_2020/10263882-01-D_v20.rvt
6/30/2022 9:06:43 AM

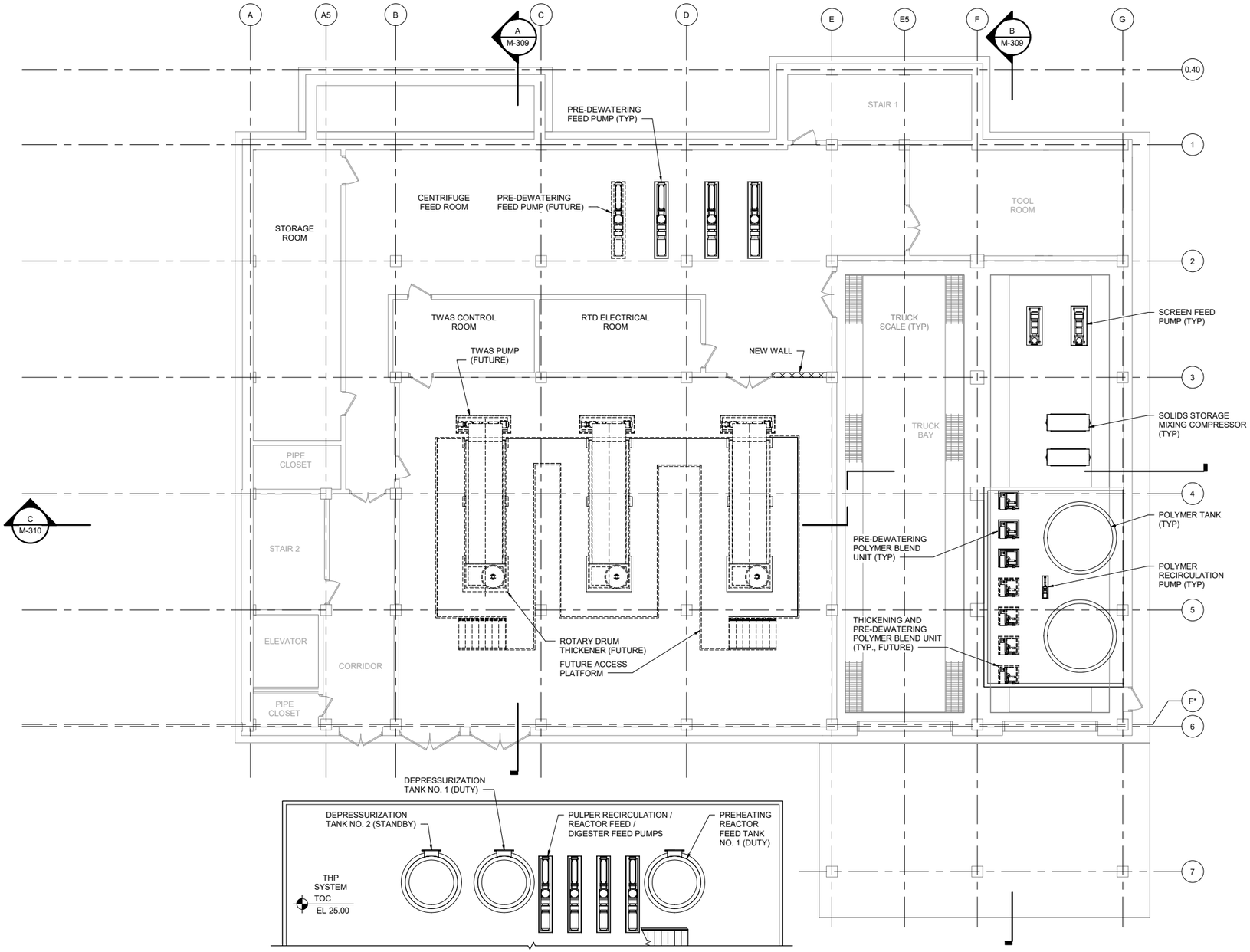

PLAN AT EL 25.00

1/8" = 1'-0"

A	12/2022	FACILITIES PLAN
ISSUE	DATE	DESCRIPTION

PROJECT MANAGER	BALCHUNAS, BRIAN
CIVIL	A. CALTON
STRUCTURAL	H. ANTSHEL
ARCHITECTURAL	J. REDDRICK
PROCESS	S. SPALDING
MECHANICAL	C. MOLINE
ELECTRICAL	B. CUNNINGHAM
INSTRUMENTATION	
PROJECT NUMBER	10263882

DRAFT FACILITIES PLAN NOT FOR CONSTRUCTION

ARLINGTON VIRGINIA

ARLINGTON COUNTY WPCP RE-GEN

RENOVATE DEWATERING BUILDING SCREENING AND PRE-DEWATERING BUILDING PLAN AT EL 25.00

0 1" 2"

FILENAME 10263882-01-D_v20.rvt

SCALE 1/8" = 1'-0"

SHEET **M-305**

BIM 360://10263882_ARL_Biosolids_Program_Management_2020/10263882-01-D_v20.rvt
6/30/2022 9:06:44 AM

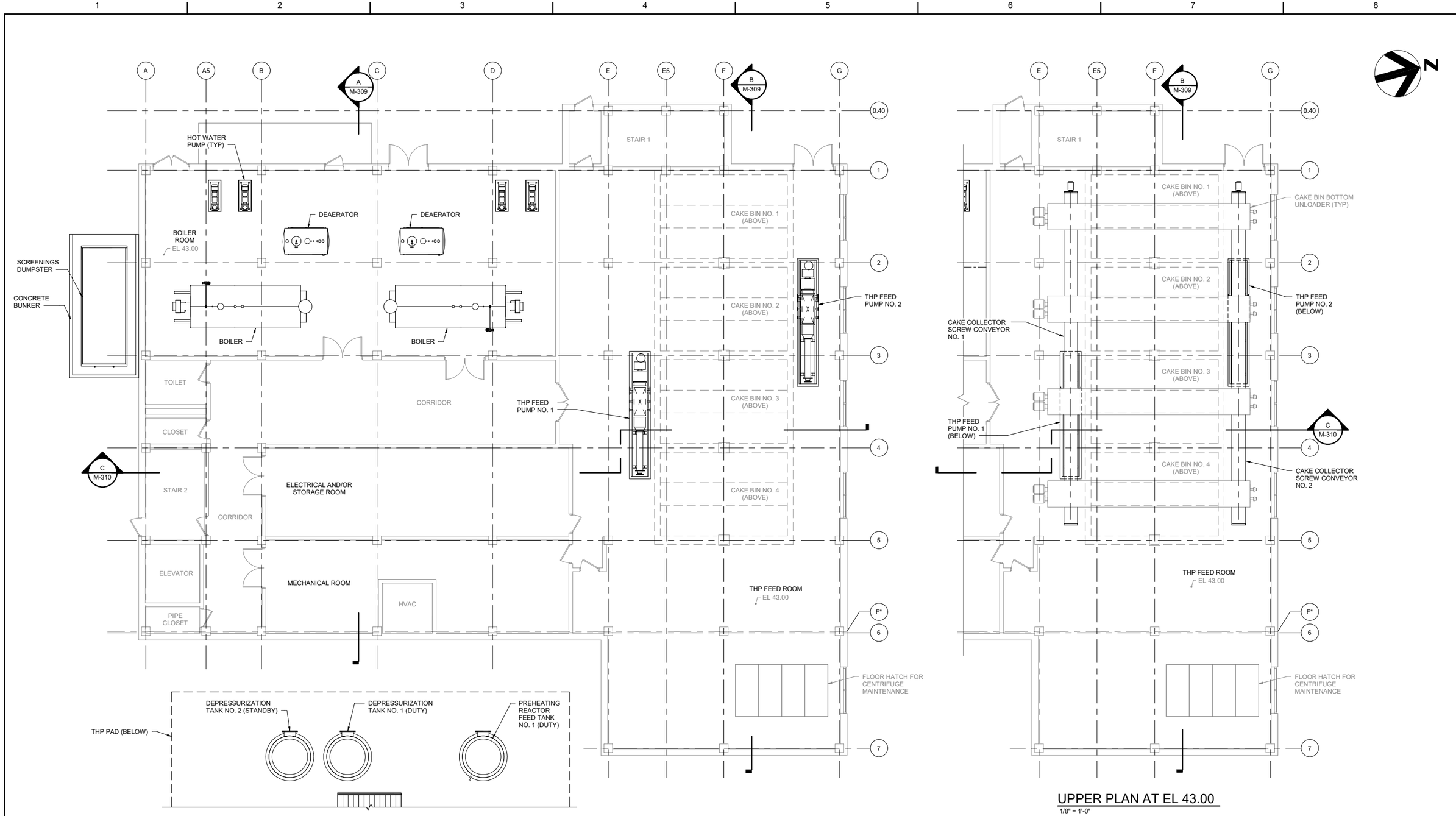

PLAN AT EL 43.00
1/8" = 1'-0"

UPPER PLAN AT EL 43.00
1/8" = 1'-0"

ISSUE	DATE	DESCRIPTION
A	12/2022	FACILITIES PLAN

PROJECT MANAGER	BALCHUNAS, BRIAN
CIVIL	A. CALTON
STRUCTURAL	H. ANTSHEL
ARCHITECTURAL	J. REDDRICK
PROCESS	S. SPALDING
MECHANICAL	C. MOLINE
ELECTRICAL	B. CUNNINGHAM
INSTRUMENTATION	
PROJECT NUMBER	10263882

DRAFT FACILITIES PLAN NOT FOR CONSTRUCTION

ARLINGTON VIRGINIA

ARLINGTON COUNTY WPCP RE-GEN

RENOVATE DEWATERING BUILDING SCREENING AND PRE-DEWATERING BUILDING PLAN AT EL 43.00

0 1" 2"

FILENAME 10263882-01-D_v20.rvt

SCALE 1/8" = 1'-0"

SHEET **M-306**

BIM 360://10263882_ARL_Biosolids_Program_Management_2020/10263882-01-D_v20.rvt
6/30/2022 9:06:44 AM

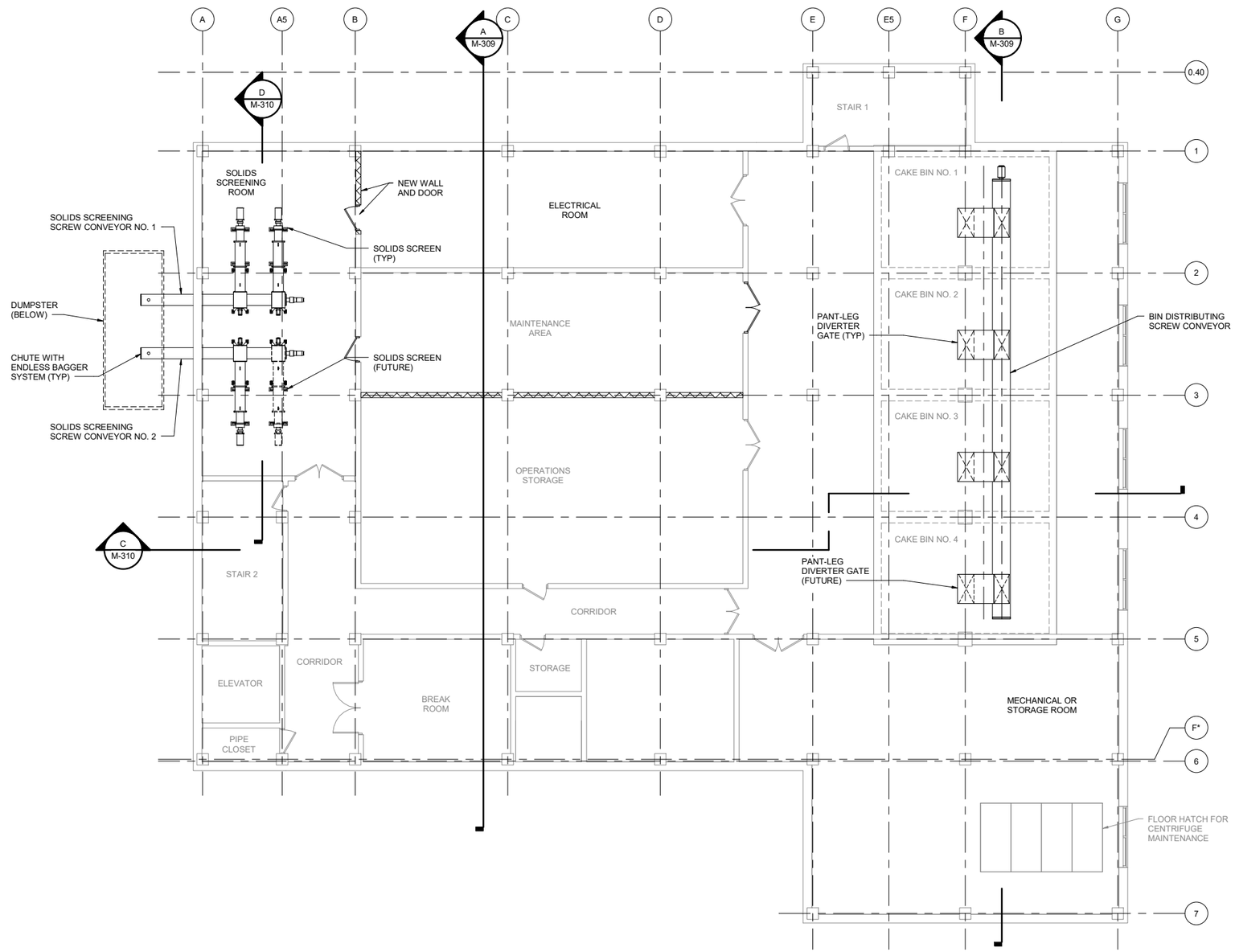

PLAN AT EL 66.00

1/8" = 1'-0"

ISSUE	DATE	DESCRIPTION
A	12/2022	FACILITIES PLAN

PROJECT MANAGER	BALCHUNAS, BRIAN
CIVIL	A. CALTON
STRUCTURAL	H. ANTSHEL
ARCHITECTURAL	J. REDDRICK
PROCESS	S. SPALDING
MECHANICAL	C. MOLINE
ELECTRICAL	B. CUNNINGHAM
INSTRUMENTATION	
PROJECT NUMBER	10263882

DRAFT
FACILITIES PLAN
NOT FOR
CONSTRUCTION

ARLINGTON VIRGINIA

ARLINGTON COUNTY
WPCP
RE-GEN

RENOVATE DEWATERING BUILDING
SCREENING AND PRE-DEWATERING BUILDING
PLAN AT EL 66.00

0 1" 2"

FILENAME 10263882-01-D_v20.rvt

SCALE 1/8" = 1'-0"

SHEET **M-307**

BIM 360://10263882_ARL_Biosolids_Program_Management_2020/10263882-01-D_v20.rvt
6/30/2022 9:06:45 AM

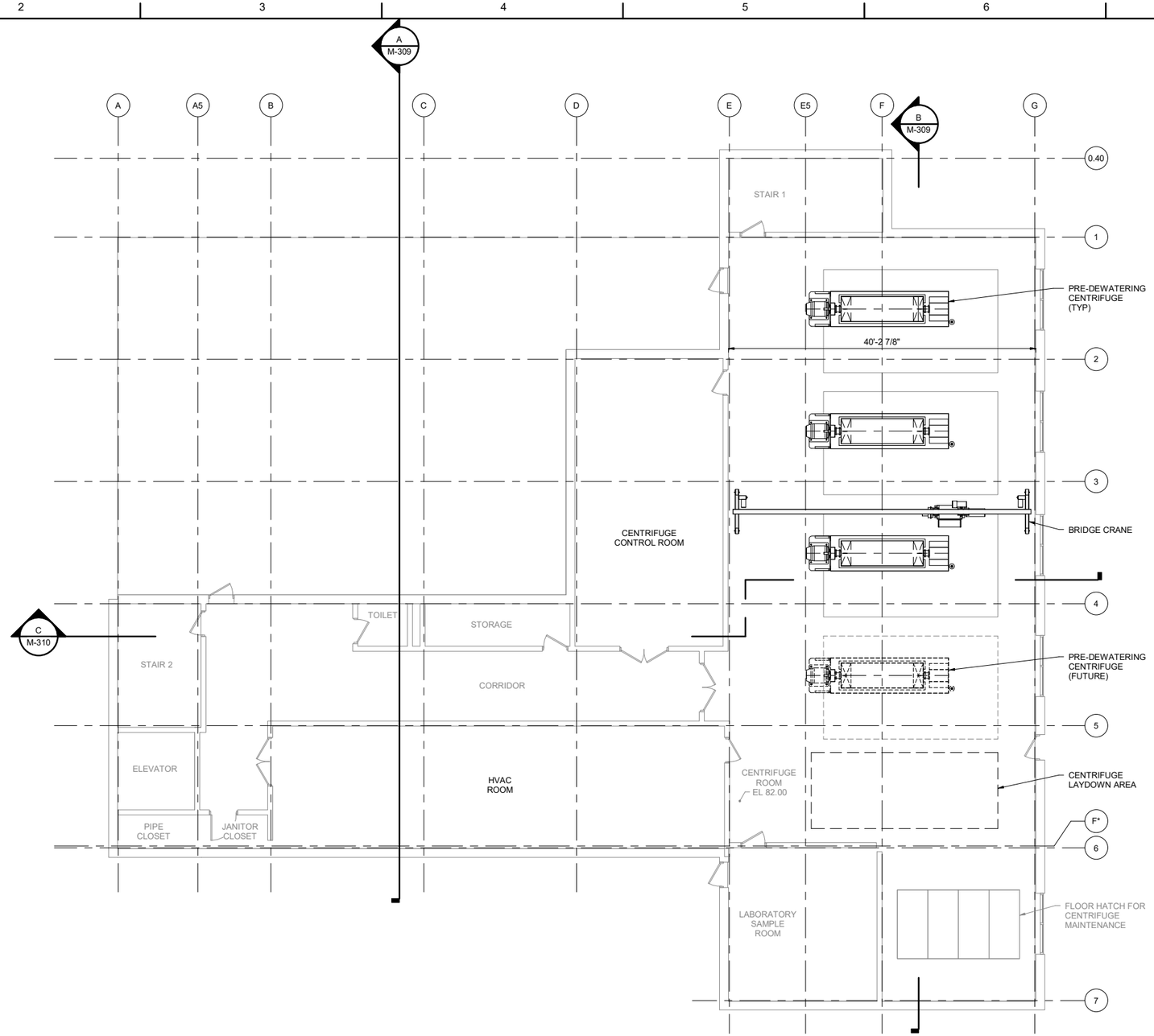

PLAN AT EL 82.00

1/8" = 1'-0"

ISSUE	DATE	DESCRIPTION
A	12/2022	FACILITIES PLAN

PROJECT MANAGER	BALCHUNAS, BRIAN
CIVIL	A. CALTON
STRUCTURAL	H. ANTSHEL
ARCHITECTURAL	J. REDDRICK
PROCESS	S. SPALDING
MECHANICAL	C. MOLINE
ELECTRICAL	B. CUNNINGHAM
INSTRUMENTATION	
PROJECT NUMBER	10263882

DRAFT FACILITIES PLAN NOT FOR CONSTRUCTION

ARLINGTON VIRGINIA

ARLINGTON COUNTY WPCP RE-GEN

RENOVATE DEWATERING BUILDING SCREENING AND PRE-DEWATERING BUILDING PLAN AT EL 82.00

0 1" 2"

FILENAME 10263882-01-D_v20.rvt

SCALE 1/8" = 1'-0"

SHEET **M-308**

BIM 360://10263882_ARL_Biosolids_Program_Management_2020/10263882-01-D_v20.rvt
6/30/2022 9:06:45 AM

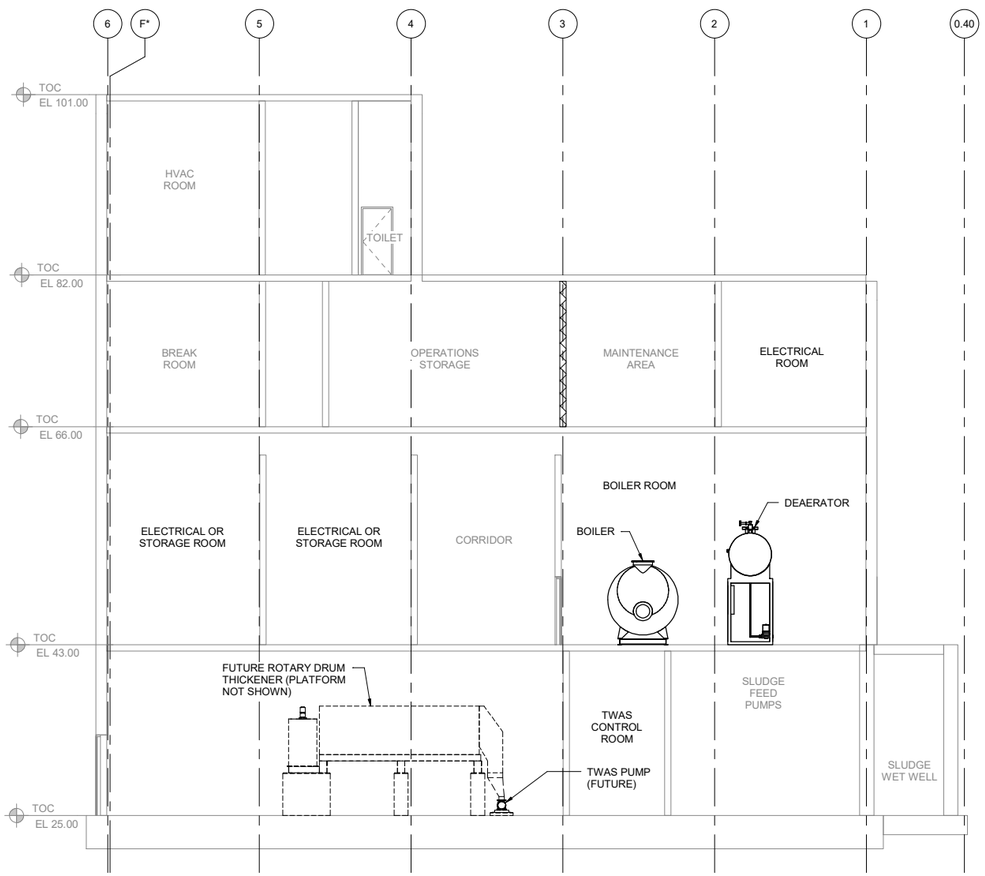

A M-305 SECTION
1/8" = 1'-0"

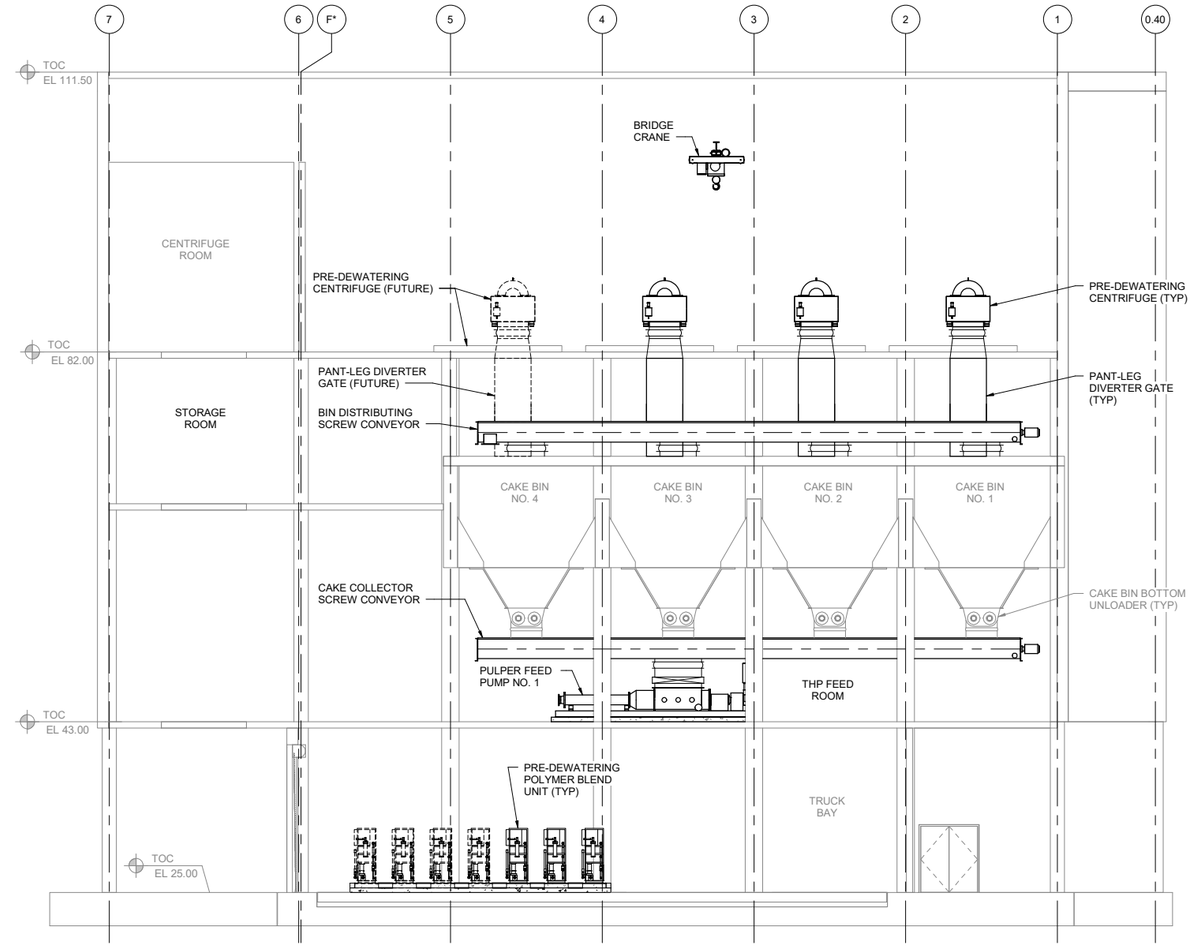

B M-305 SECTION
1/8" = 1'-0"

BIM 360://10263882_ARL_Biosolids_Program_Management_2020/10263882-01-D_v20.rvt
6/30/2022 9:06:46 AM

ISSUE	DATE	DESCRIPTION
A	12/2022	FACILITIES PLAN

PROJECT MANAGER	BALCHUNAS, BRIAN
CIVIL	A. CALTON
STRUCTURAL	H. ANTSHEL
ARCHITECTURAL	J. REDDRICK
PROCESS	S. SPALDING
MECHANICAL	C. MOLINE
ELECTRICAL	B. CUNNINGHAM
INSTRUMENTATION	
PROJECT NUMBER	10263882

DRAFT
FACILITIES PLAN
NOT FOR
CONSTRUCTION

ARLINGTON
VIRGINIA

ARLINGTON COUNTY
WPCP
RE-GEN

RENOVATE DEWATERING BUILDING
SCREENING AND PRE-DEWATERING BUILDING
SECTIONS 1

0 1" 2"

FILENAME	10263882-01-D_v20.rvt
SCALE	1/8" = 1'-0"

SHEET
M-309

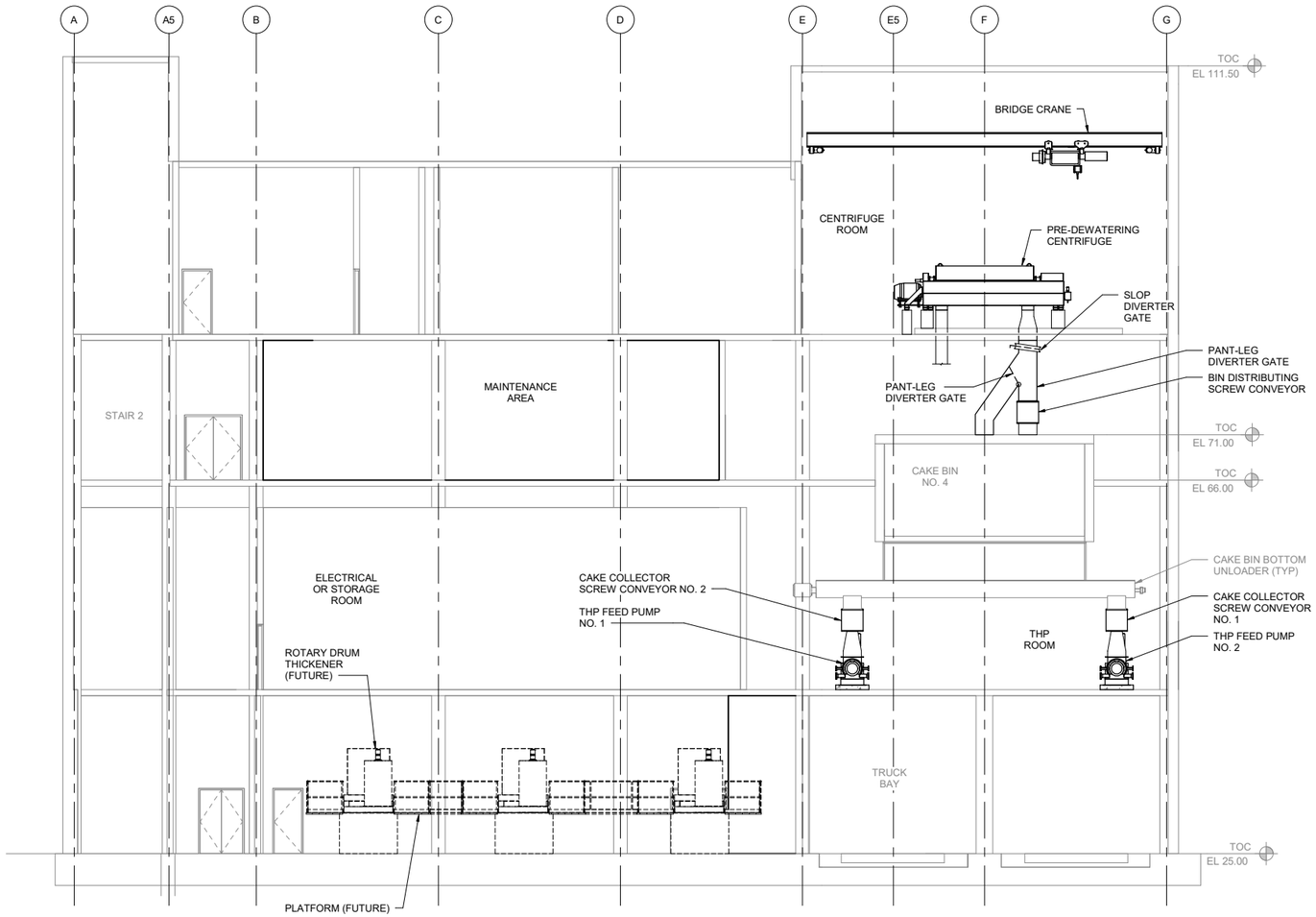

C M-305 SECTION
1/8" = 1'-0"

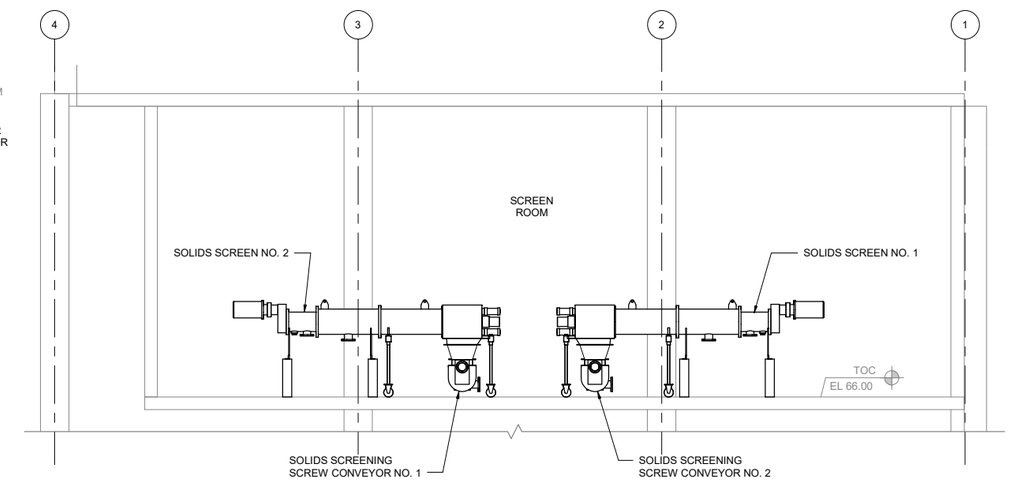

D M-307 SECTION
1/4" = 1'-0"

ISSUE	DATE	DESCRIPTION
A	12/2022	FACILITIES PLAN

PROJECT MANAGER	BALCHUNAS, BRIAN
CIVIL	A. CALTON
STRUCTURAL	H. ANTSHEL
ARCHITECTURAL	J. REDDRICK
PROCESS	S. SPALDING
MECHANICAL	C. MOLINE
ELECTRICAL	B. CUNNINGHAM
INSTRUMENTATION	
PROJECT NUMBER	10263882

DRAFT
FACILITIES PLAN
NOT FOR
CONSTRUCTION

ARLINGTON
VIRGINIA

ARLINGTON COUNTY
WPCP
RE-GEN

RENOVATE DEWATERING BUILDING
SCREENING AND PRE-DEWATERING BUILDING
SECTIONS 2

0 1" 2"

FILENAME 10263882-01-D_v20.rvt
SCALE As indicated

SHEET
M-310

BIM 360://10263882_ARL_Biosolids_Program_Management_2020/10263882-01-D_v20.rvt
6/30/2022 9:06:46 AM

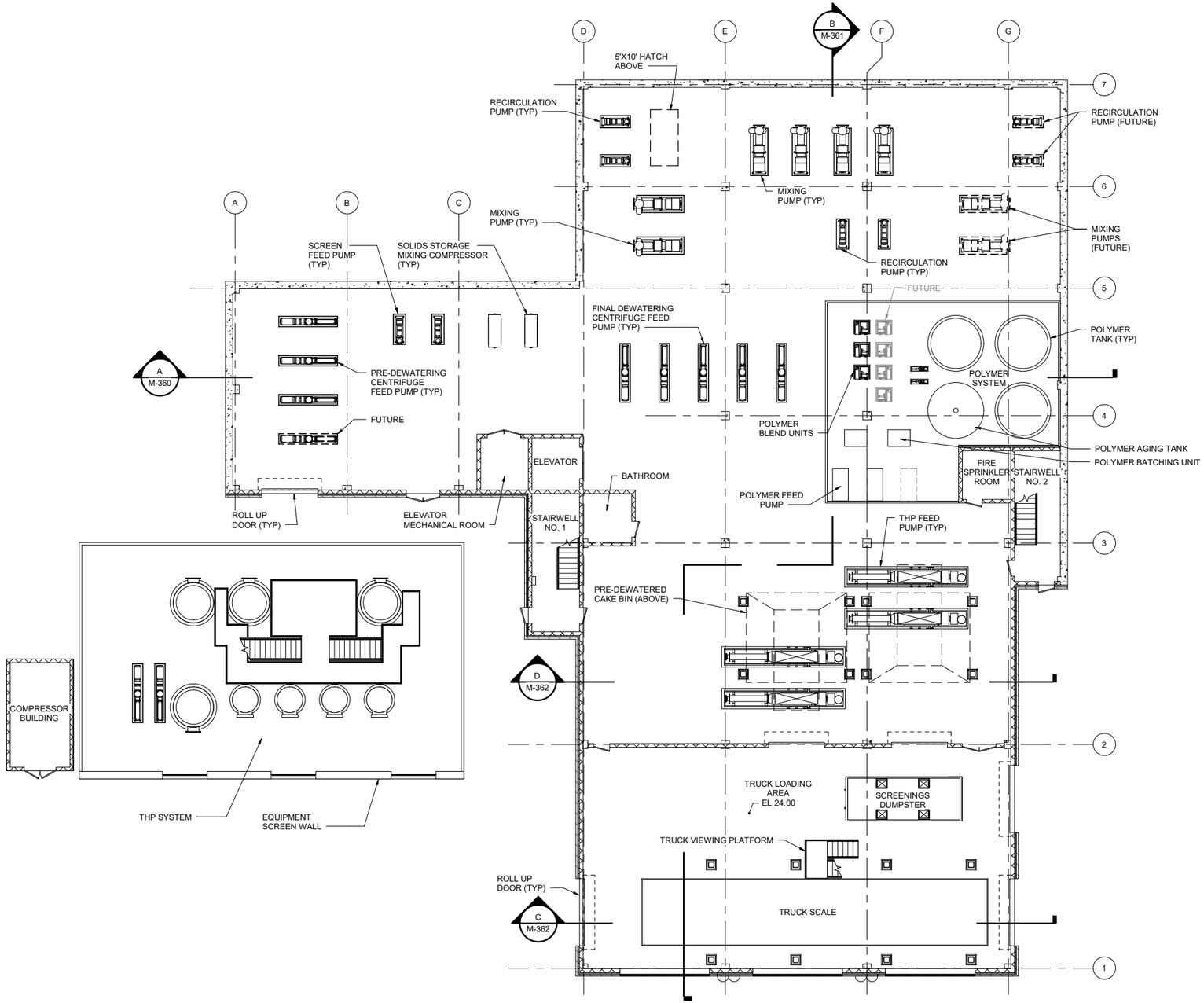

PLAN AT EL 24.0

3/32" = 1'-0"

ISSUE	DATE	DESCRIPTION
A	12/2022	FACILITIES PLAN

PROJECT MANAGER	BALCHUNAS, BRIAN
CIVIL	A. CALTON
STRUCTURAL	H. ANTSHEL
ARCHITECTURAL	J. REDDRICK
PROCESS	S. SPALDING
MECHANICAL	C. MOLINE
ELECTRICAL	B. CUNNINGHAM
INSTRUMENTATION	
PROJECT NUMBER	10263882

DRAFT FACILITIES PLAN NOT FOR CONSTRUCTION

ARLINGTON VIRGINIA

ARLINGTON COUNTY WPCP RE-GEN

DECOMISSION DEWATERING BUILDING SOLIDS PROCESSING BUILDING PLAN AT EL 24.00

0 1" 2"

FILENAME 10263882-10-D_v20.rvt

SCALE 3/32" = 1'-0"

SHEET **M-350**

BIM 360://10263882_ARL_Biosolids_Program_Management_2020/10263882-10-D_v20.rvt
6/30/2022 9:08:37 AM

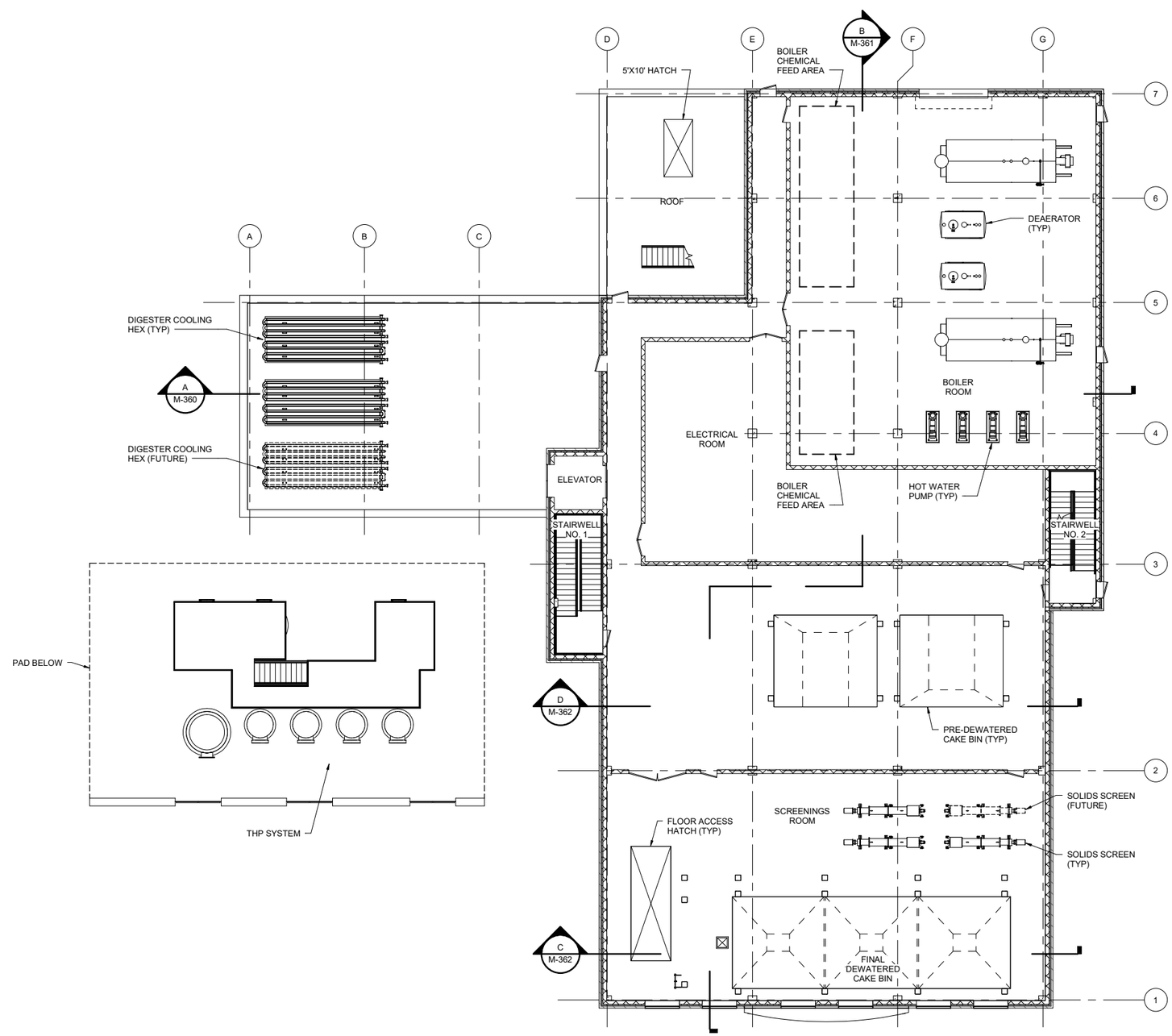

PLAN AT EL 42.00

3/32" = 1'-0"

ISSUE	DATE	DESCRIPTION
A	12/2022	FACILITIES PLAN

PROJECT MANAGER	BALCHUNAS, BRIAN
CIVIL	A. CALTON
STRUCTURAL	H. ANTSHEL
ARCHITECTURAL	J. REDDRICK
PROCESS	S. SPALDING
MECHANICAL	C. MOLINE
ELECTRICAL	B. CUNNINGHAM
INSTRUMENTATION	
PROJECT NUMBER	10263882

DRAFT FACILITIES PLAN NOT FOR CONSTRUCTION

ARLINGTON VIRGINIA

ARLINGTON COUNTY WPCP RE-GEN

DECOMISSION DEWATERING BUILDING SOLIDS PROCESSING BUILDING PLAN AT EL 42.00

0 1" 2"

FILENAME 10263882-10-D_v20.rvt

SCALE 3/32" = 1'-0"

SHEET **M-351**

BIM 360://10263882_ARL_Biosolids_Program_Management_2020/10263882-10-D_v20.rvt
6/30/2022 9:08:38 AM

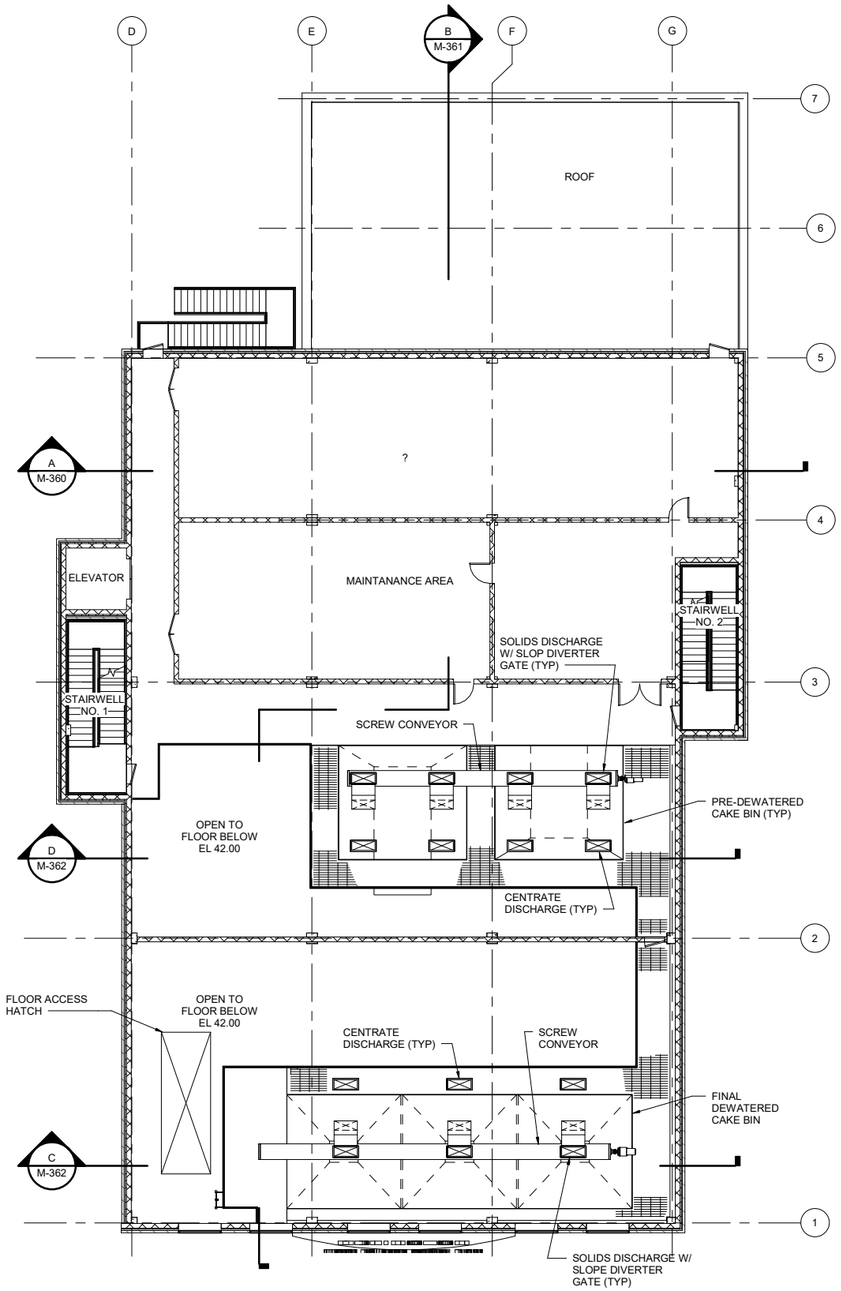

PLAN AT EL 60.00

3/32" = 1'-0"

ISSUE	DATE	DESCRIPTION
A	12/2022	FACILITIES PLAN

PROJECT MANAGER	BALCHUNAS, BRIAN
CIVIL	A. CALTON
STRUCTURAL	H. ANTSHEL
ARCHITECTURAL	J. REDDRICK
PROCESS	S. SPALDING
MECHANICAL	C. MOLINE
ELECTRICAL	B. CUNNINGHAM
INSTRUMENTATION	
PROJECT NUMBER	10263882

DRAFT
FACILITIES PLAN
NOT FOR
CONSTRUCTION

ARLINGTON VIRGINIA

ARLINGTON COUNTY
WPCP
RE-GEN

DECOMISSION DEWATERING BUILDING
SOLIDS PROCESSING BUILDING
PLAN AT EL 60.00

0 1" 2"

FILENAME 10263882-10-D_v20.rvt

SCALE 3/32" = 1'-0"

SHEET **M-352**

BIM 360://10263882_ARL_Biosolids_Program_Management_2020/10263882-10-D_v20.rvt
6/30/2022 9:08:39 AM

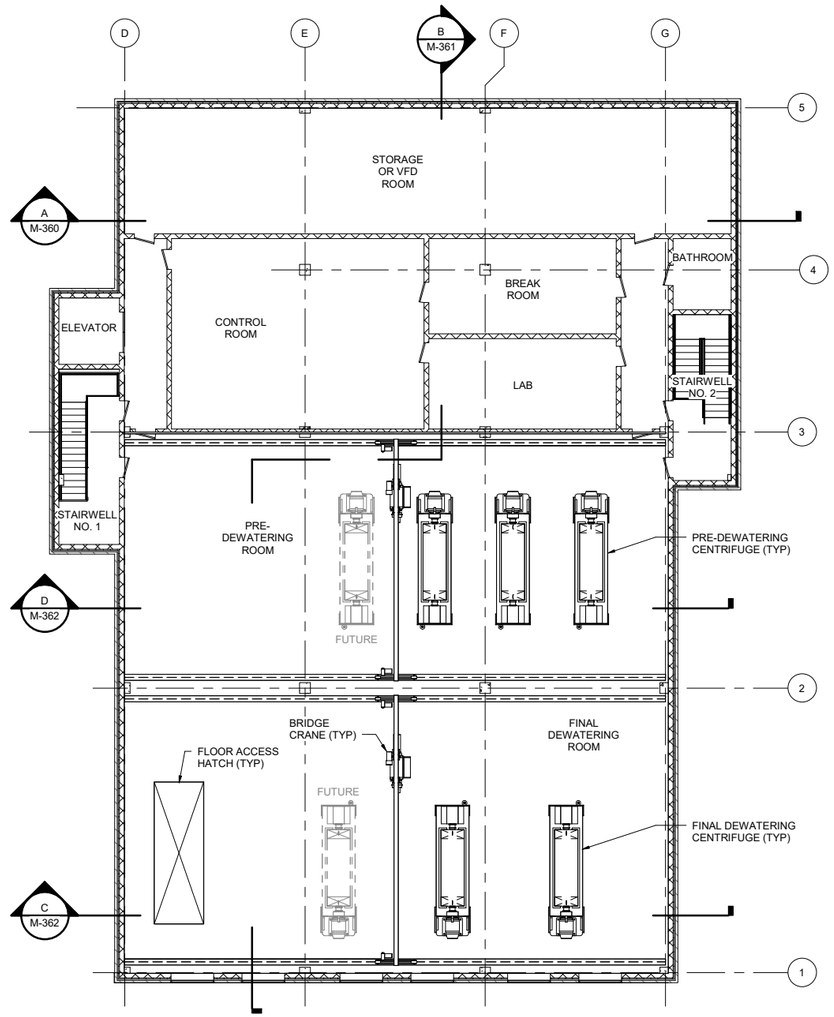

PLAN AT EL 74.33

3/32" = 1'-0"

ISSUE	DATE	DESCRIPTION
A	12/2022	FACILITIES PLAN

PROJECT MANAGER	BALCHUNAS, BRIAN
CIVIL	A. CALTON
STRUCTURAL	H. ANTSHEL
ARCHITECTURAL	J. REDDRICK
PROCESS	S. SPALDING
MECHANICAL	C. MOLINE
ELECTRICAL	B. CUNNINGHAM
INSTRUMENTATION	
PROJECT NUMBER	10263882

DRAFT
FACILITIES PLAN
NOT FOR
CONSTRUCTION

ARLINGTON
VIRGINIA

ARLINGTON COUNTY
WPCP
RE-GEN

DECOMISSION DEWATERING BUILDING
SOLIDS PROCESSING BUILDING
PLAN AT EL 74.33

0 1" 2"

FILENAME 10263882-10-D_v20.rvt

SCALE 3/32" = 1'-0"

SHEET **M-353**

BIM 360://10263882_ARL_Biosolids_Program_Management_2020/10263882-10-D_v20.rvt
6/30/2022 9:08:39 AM

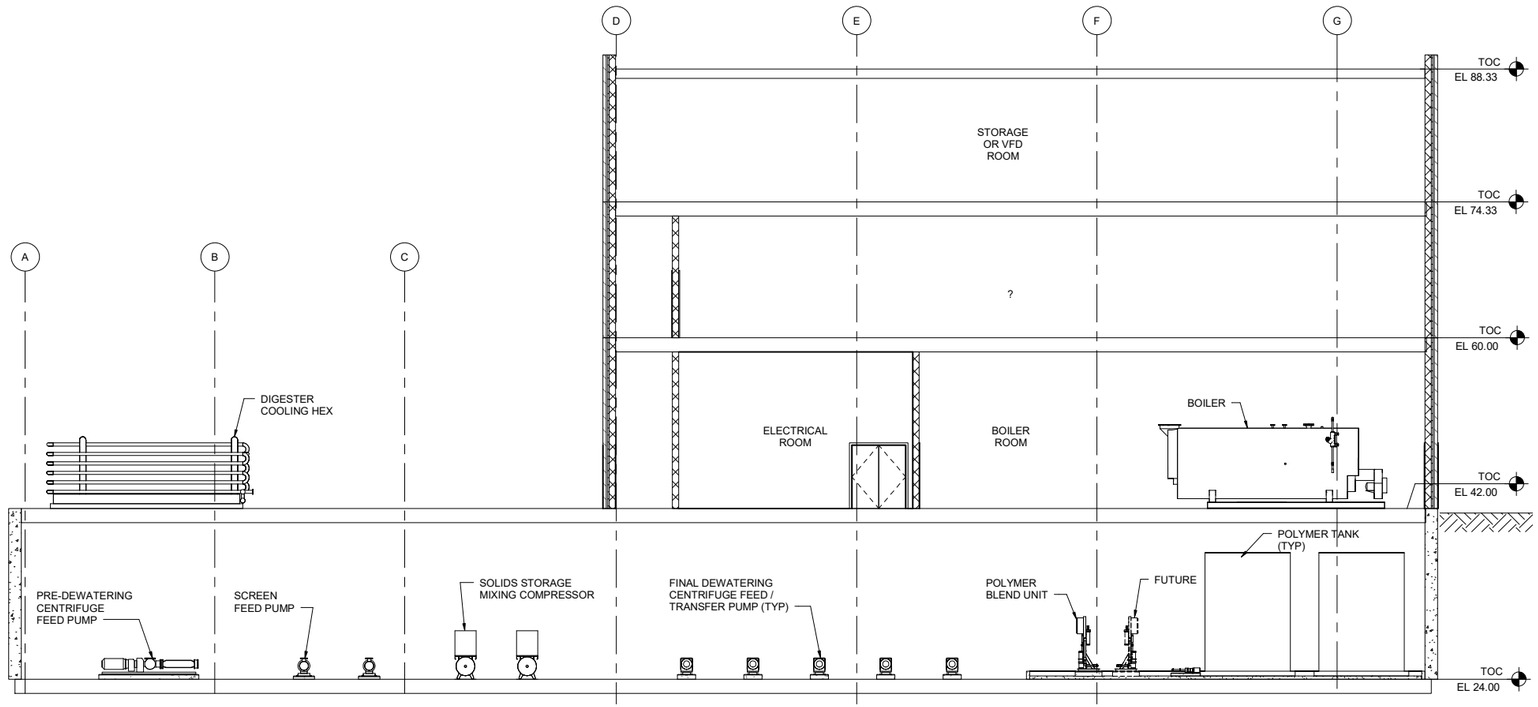

A
M-350
SECTION
1/8" = 1'-0"

A	12/2022	FACILITIES PLAN
ISSUE	DATE	DESCRIPTION

PROJECT MANAGER	BALCHUNAS, BRIAN
CIVIL	A. CALTON
STRUCTURAL	H. ANTSHEL
ARCHITECTURAL	J. REDDRICK
PROCESS	S. SPALDING
MECHANICAL	C. MOLINE
ELECTRICAL	B. CUNNINGHAM
INSTRUMENTATION	
PROJECT NUMBER	10263882

DRAFT
FACILITIES PLAN
NOT FOR
CONSTRUCTION

ARLINGTON
VIRGINIA

ARLINGTON COUNTY
WPCP
RE-GEN

DECOMISSION DEWATERING BUILDING
SECTIONS 1

0 1" 2"

FILENAME	10263882-10-D_v20.rvt
SCALE	1/8" = 1'-0"

SHEET
M-360

BIM 360://10263882_ARL_Biosolids_Program_Management_2020/10263882-10-D_v20.rvt
6/30/2022 9:08:40 AM

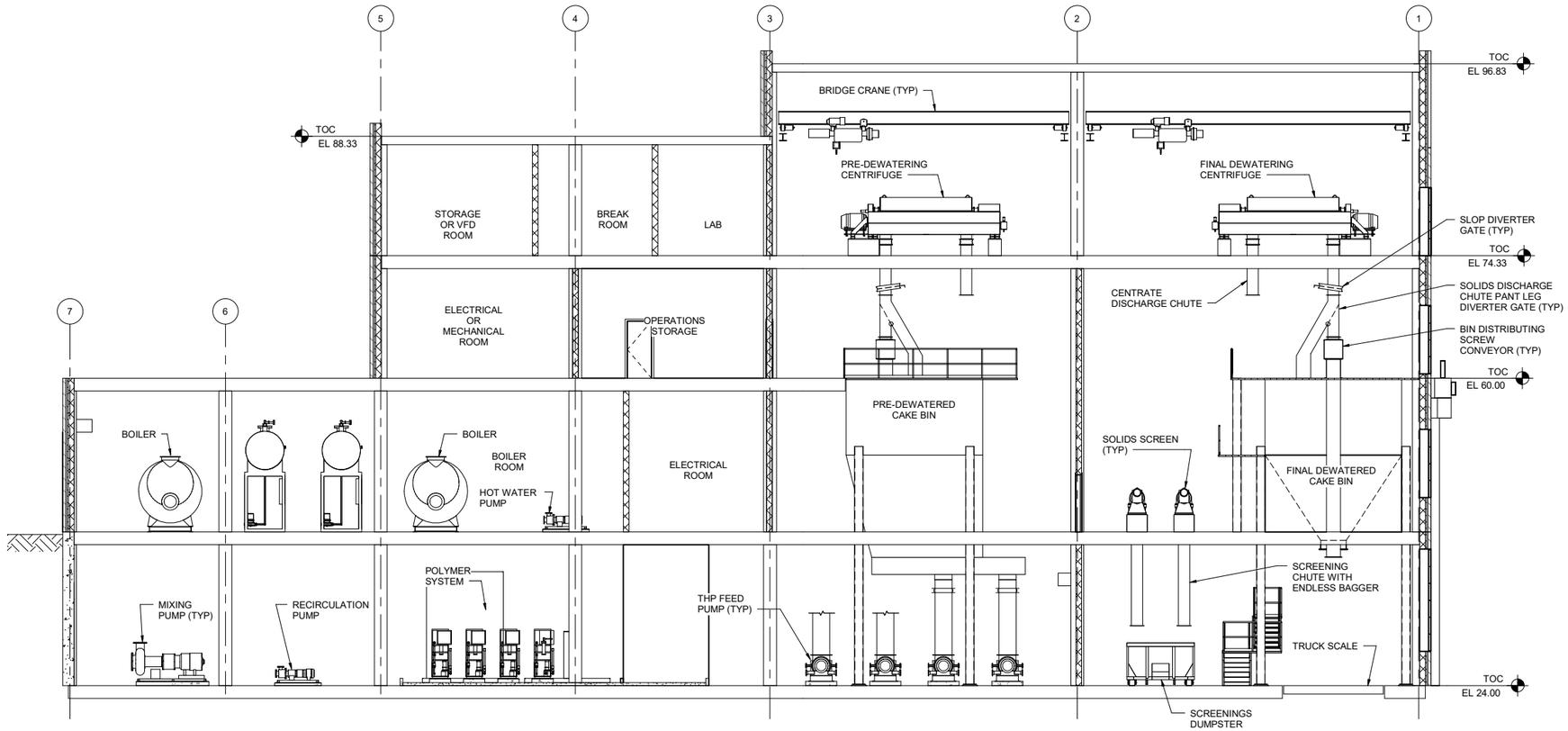

B / M-350 SECTION
1/8" = 1'-0"

ISSUE	DATE	DESCRIPTION
A	12/2022	FACILITIES PLAN

PROJECT MANAGER	BALCHUNAS, BRIAN
CIVIL	A. CALTON
STRUCTURAL	H. ANTSHEL
ARCHITECTURAL	J. REDDRICK
PROCESS	S. SPALDING
MECHANICAL	C. MOLINE
ELECTRICAL	B. CUNNINGHAM
INSTRUMENTATION	
PROJECT NUMBER	10263882

DRAFT
FACILITIES PLAN
NOT FOR
CONSTRUCTION

ARLINGTON
VIRGINIA

ARLINGTON COUNTY
WPCP
RE-GEN

DECOMISSION DEWATERING BUILDING
SECTIONS 2

0 1" 2"

FILENAME	10263882-10-D_v20.rvt
SCALE	1/8" = 1'-0"

SHEET
M-361

BIM 360://10263882_ARL_Biosolids_Program_Management_2020/10263882-10-D_v20.rvt
6/30/2022 9:08:41 AM

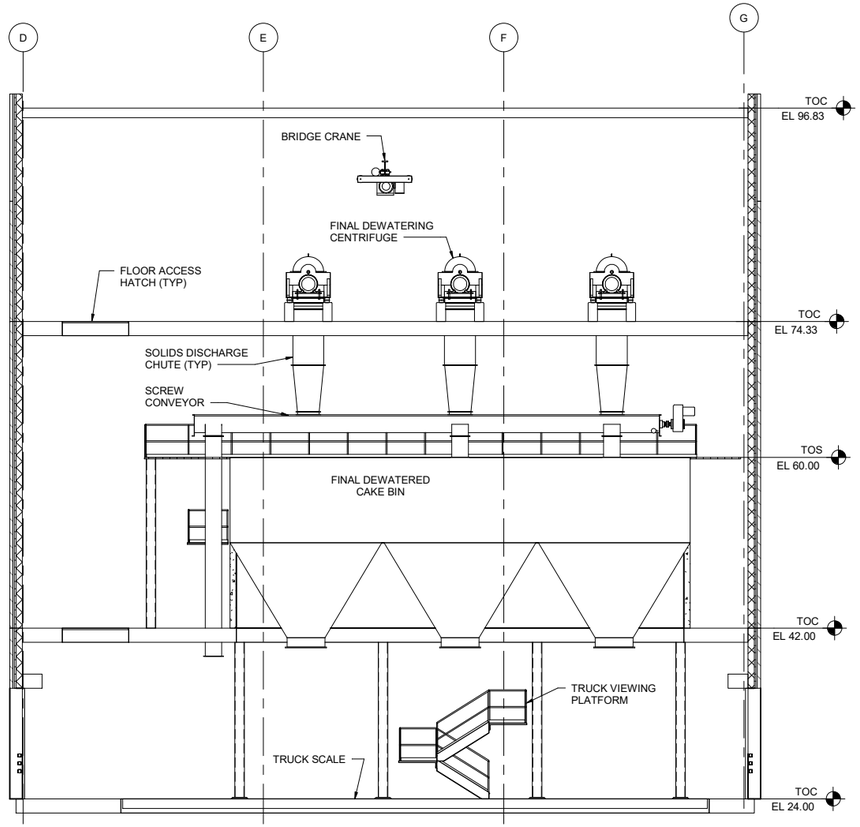

C M-350 SECTION
1/8" = 1'-0"

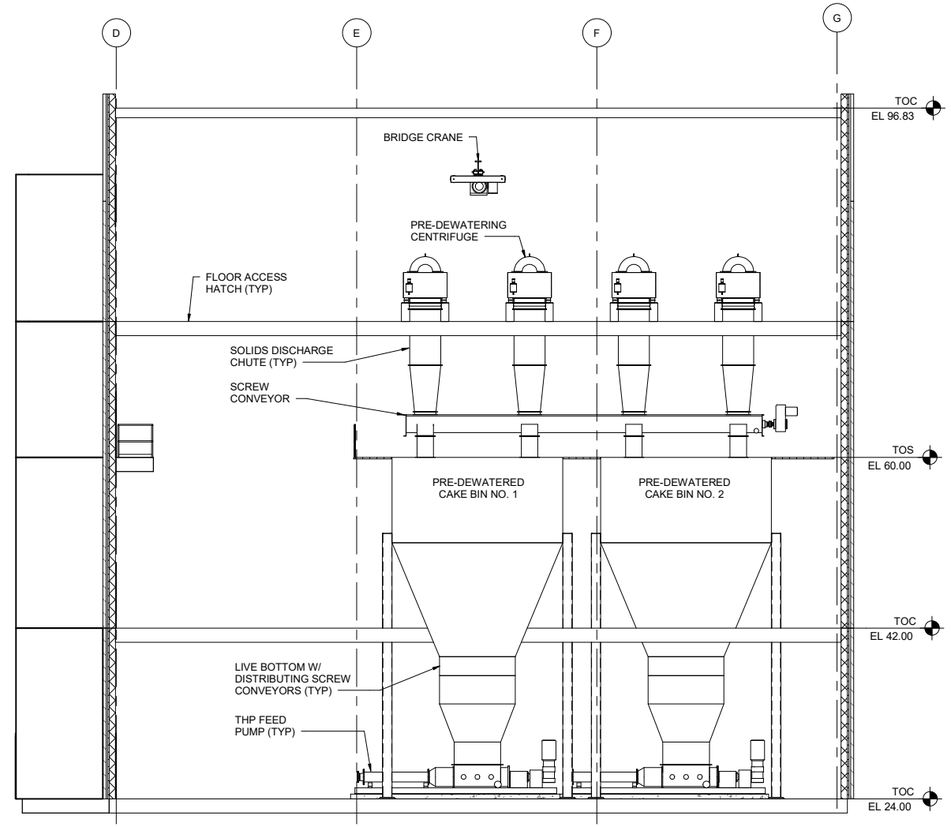

D M-350 SECTION
1/8" = 1'-0"

ISSUE	DATE	DESCRIPTION
A	12/2022	FACILITIES PLAN

PROJECT MANAGER	BALCHUNAS, BRIAN
CIVIL	A. CALTON
STRUCTURAL	H. ANTSHEL
ARCHITECTURAL	J. REDDRICK
PROCESS	S. SPALDING
MECHANICAL	C. MOLINE
ELECTRICAL	B. CUNNINGHAM
INSTRUMENTATION	
PROJECT NUMBER	10263882

DRAFT
FACILITIES PLAN
NOT FOR
CONSTRUCTION

ARLINGTON
VIRGINIA

ARLINGTON COUNTY
WPCP
RE-GEN

DECOMISSION DEWATERING BUILDING
SECTIONS 3

0 1" 2"

FILENAME 10263882-10-D_v20.rvt
SCALE 1/8" = 1'-0"

SHEET
M-362

BIM 360://10263882_ARL_Biosolids_Program_Management_2020/10263882-10-D_v20.rvt
6/30/2022 9:08:41 AM

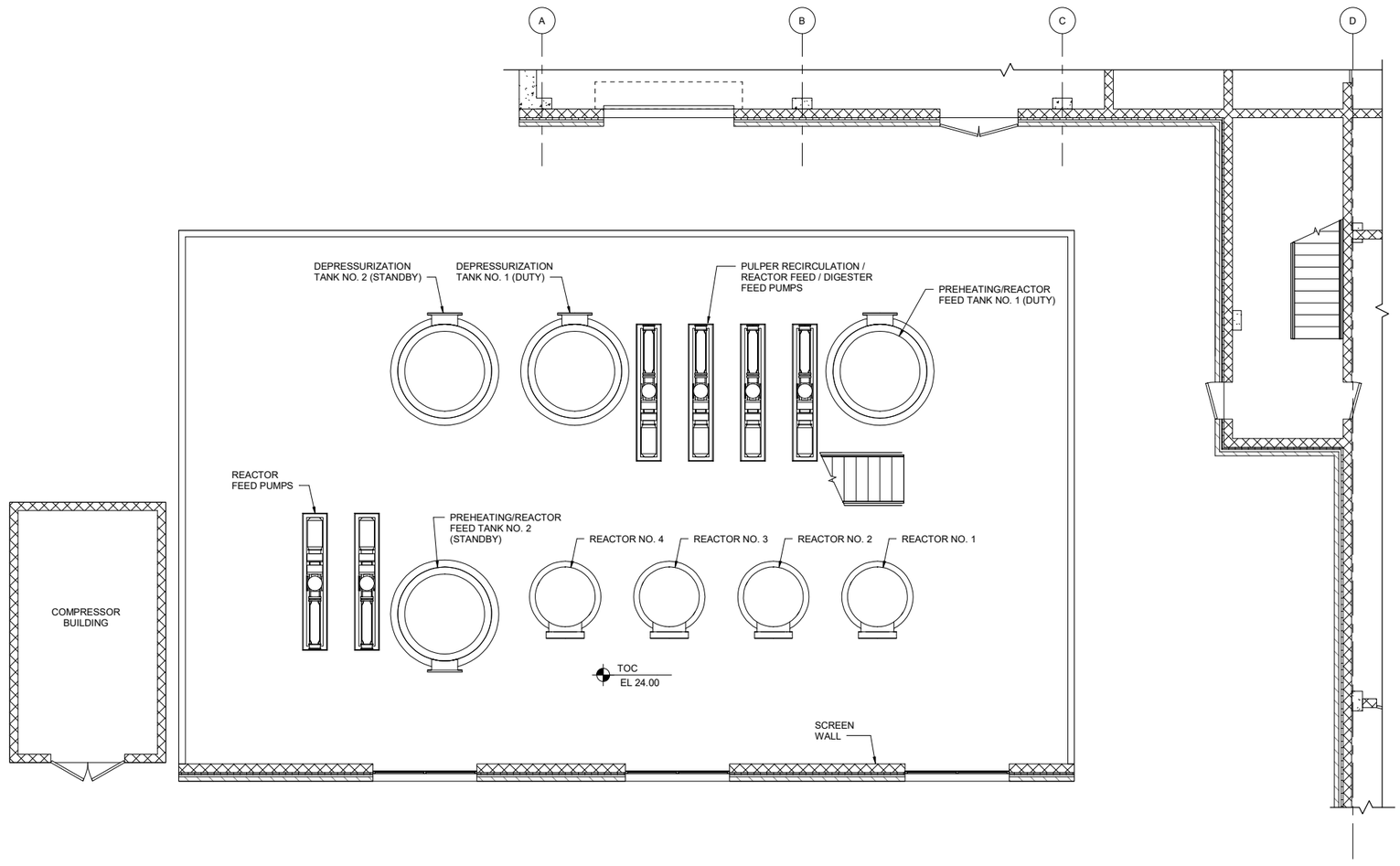

PLAN AT EL 24.00

3/16" = 1'-0"

GENERAL NOTES

1. MAINTAIN 10' CLEAR AROUND PRE-FABRICATED THERMAL HYDROLYSIS SYSTEM.

ISSUE	DATE	DESCRIPTION
A	12/2022	FACILITIES PLAN

PROJECT MANAGER	BALCHUNAS, BRIAN
CIVIL	A. CALTON
STRUCTURAL	H. ANTSHEL
ARCHITECTURAL	J. REDDRICK
PROCESS	S. SPALDING
MECHANICAL	C. MOLINE
ELECTRICAL	B. CUNNINGHAM
INSTRUMENTATION	
PROJECT NUMBER	10263882

DRAFT FACILITIES PLAN NOT FOR CONSTRUCTION

ARLINGTON VIRGINIA

ARLINGTON COUNTY WPCP RE-GEN

THERMAL HYDROLYSIS PROCESS PLAN

0 1" 2"

FILENAME 10263882-10-D_v20.rvt

SCALE 3/16" = 1'-0"

SHEET **M-400**

BIM 360://10263882_ARL_Biosolids_Program_Management_2020/10263882-10-D_v20.rvt
6/30/2022 9:10:03 AM

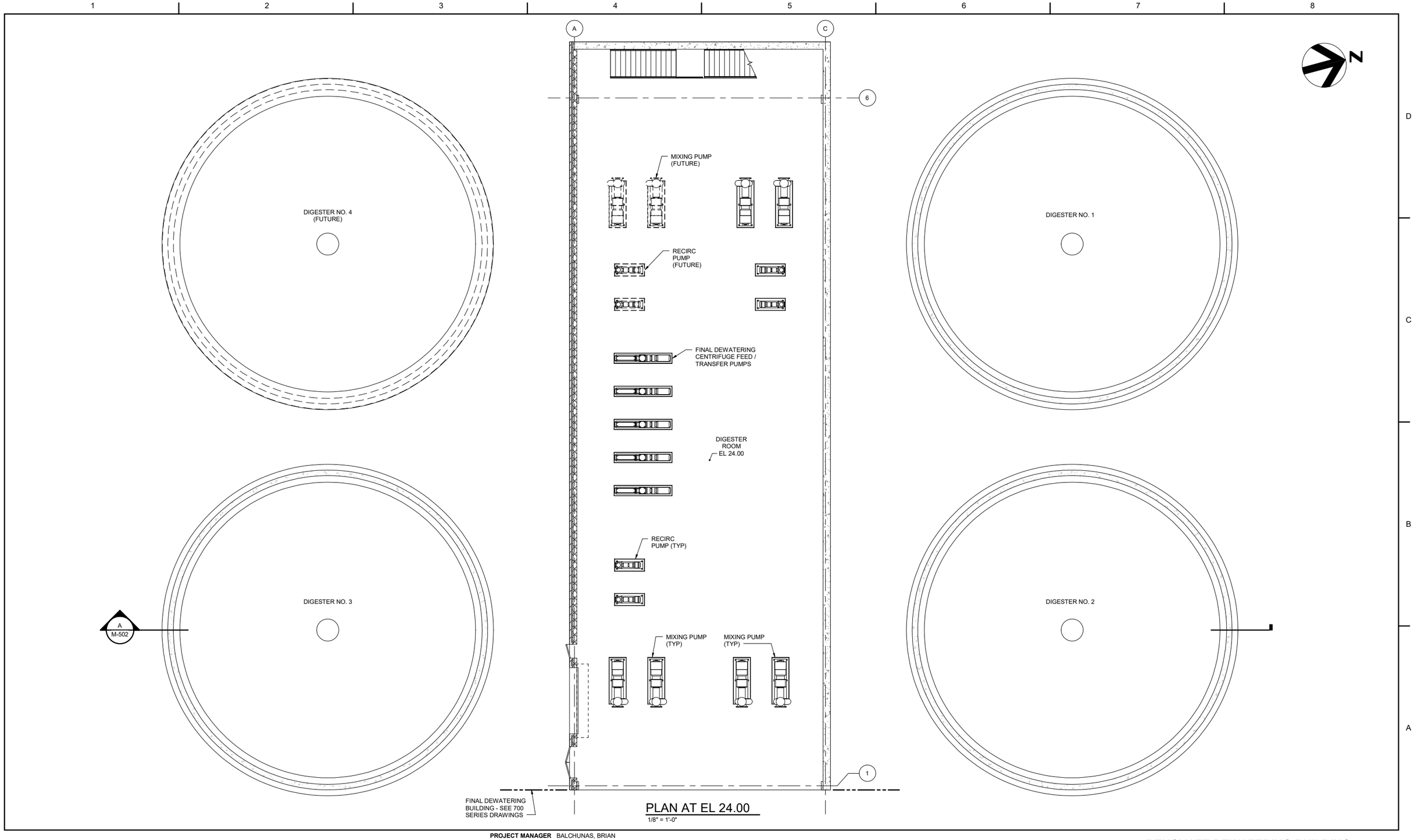

ISSUE	DATE	DESCRIPTION
A	12/2022	FACILITIES PLAN

PROJECT MANAGER	BALCHUNAS, BRIAN
CIVIL	A. CALTON
STRUCTURAL	H. ANTSHEL
ARCHITECTURAL	J. REDDRICK
PROCESS	S. SPALDING
MECHANICAL	C. MOLINE
ELECTRICAL	B. CUNNINGHAM
INSTRUMENTATION	
PROJECT NUMBER	10263882

DRAFT
FACILITIES PLAN
NOT FOR
CONSTRUCTION

ARLINGTON
VIRGINIA

ARLINGTON COUNTY
WPCP
RE-GEN

RENOVATE DEWATERING BUILDING
DIGESTER FACILITY - PLAN 1

0 1" 2"

FILENAME	10263882-30-D_v20.rvt
SCALE	1/8" = 1'-0"

SHEET
M-500

BIM 360://10263882_ARL_Biosolids_Program_Management_2020/10263882-30-D_v20.rvt
6/30/2022 9:11:09 AM

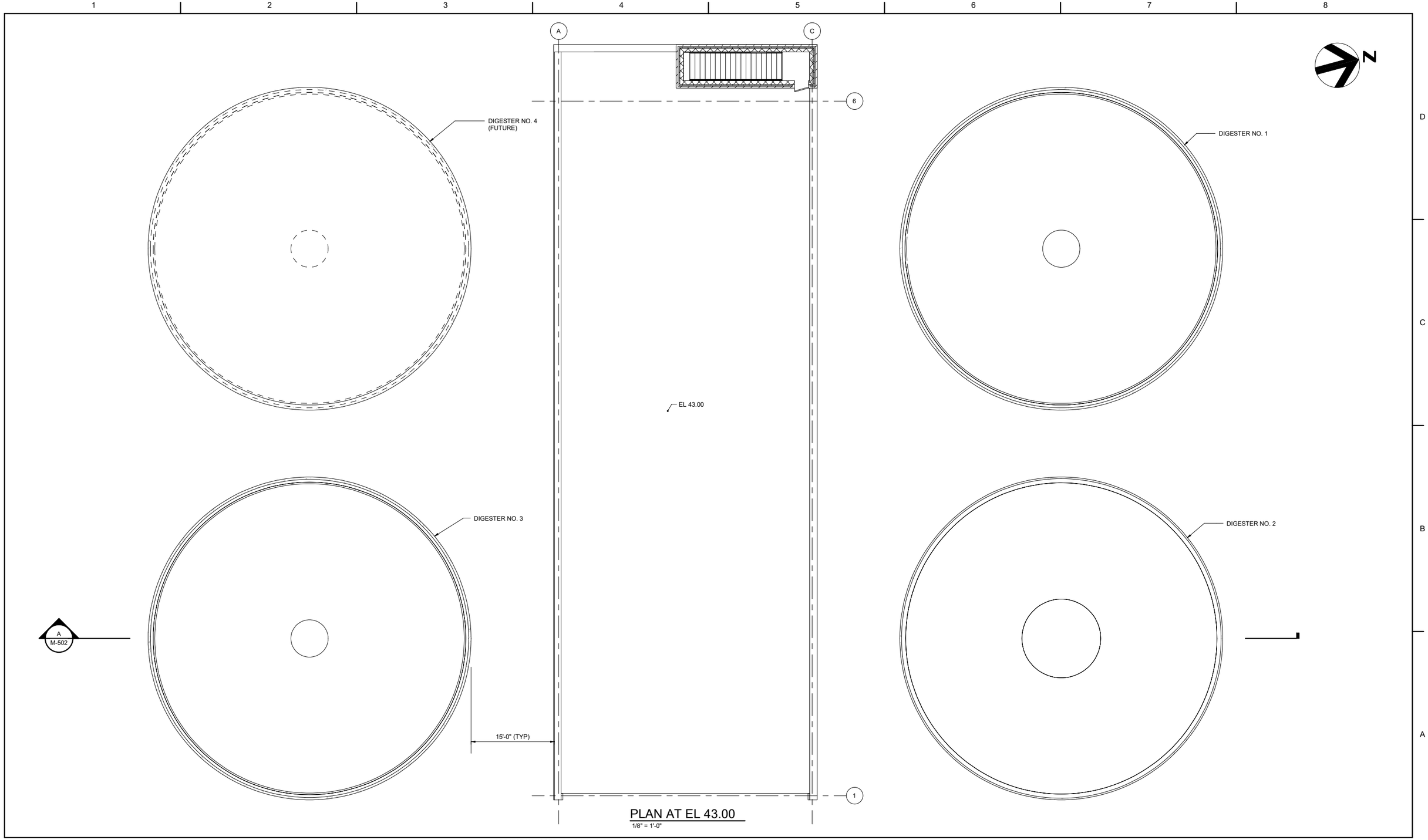

PLAN AT EL 43.00

1/8" = 1'-0"

ISSUE	DATE	DESCRIPTION
A	12/2022	FACILITIES PLAN

PROJECT MANAGER	BALCHUNAS, BRIAN
CIVIL	A. CALTON
STRUCTURAL	H. ANTSHEL
ARCHITECTURAL	J. REDDRICK
PROCESS	S. SPALDING
MECHANICAL	C. MOLINE
ELECTRICAL	B. CUNNINGHAM
INSTRUMENTATION	
PROJECT NUMBER	10263882

DRAFT
FACILITIES PLAN
NOT FOR
CONSTRUCTION

ARLINGTON
VIRGINIA

ARLINGTON COUNTY
WPCP
RE-GEN

RENOVATE DEWATERING BUILDING
DIGESTER FACILITY - PLAN 2

0 1" 2"

FILENAME 10263882-30-D_v20.rvt

SCALE 1/8" = 1'-0"

SHEET
M-501

BIM 360://10263882_ARL_Biosolids_Program_Management_2020/10263882-30-D_v20.rvt
6/30/2022 9:11:10 AM

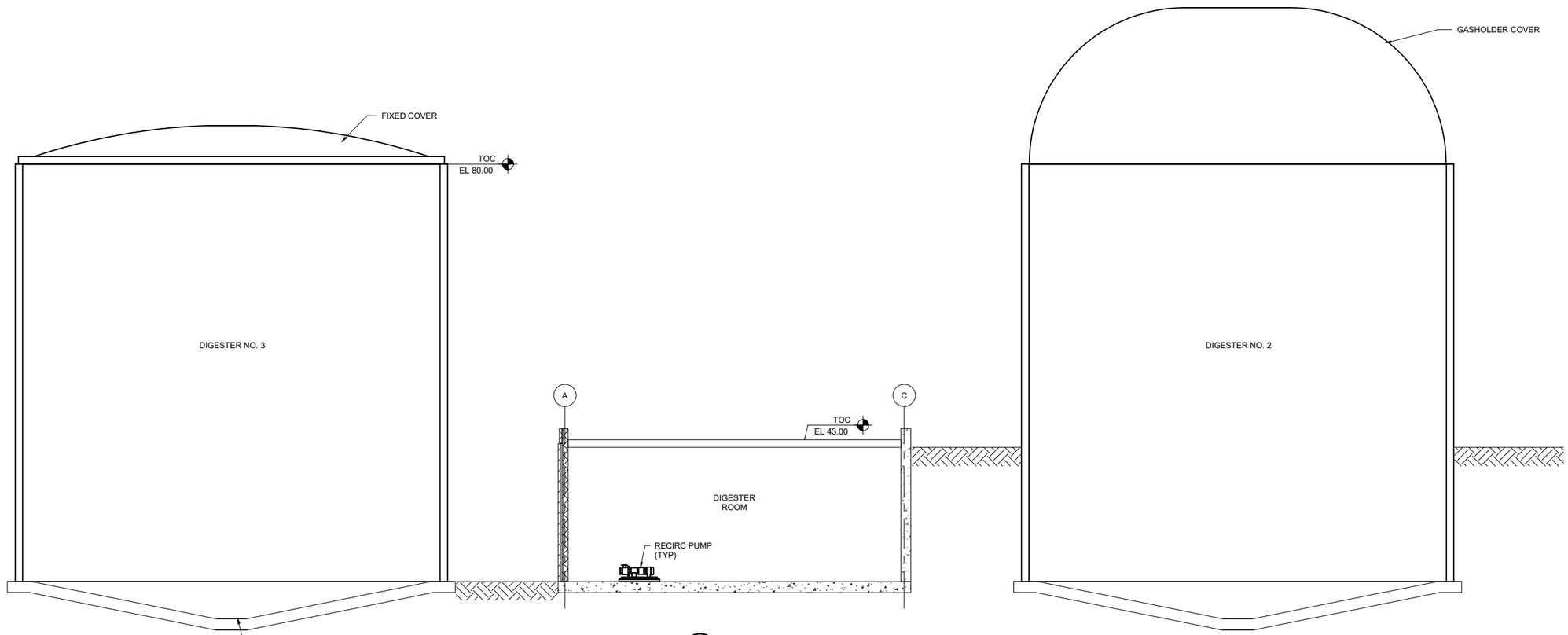

A M-500 SECTION
1/8" = 1'-0"

ISSUE	DATE	DESCRIPTION
A	12/2022	FACILITIES PLAN

PROJECT MANAGER	BALCHUNAS, BRIAN
CIVIL	A. CALTON
STRUCTURAL	H. ANTSHEL
ARCHITECTURAL	J. REDDRICK
PROCESS	S. SPALDING
MECHANICAL	C. MOLINE
ELECTRICAL	B. CUNNINGHAM
INSTRUMENTATION	
PROJECT NUMBER	10263882

DRAFT
FACILITIES PLAN
NOT FOR
CONSTRUCTION

ARLINGTON
VIRGINIA

ARLINGTON COUNTY
WPCP
RE-GEN

RENOVATE DEWATERING BUILDING
DIGESTER FACILITY - SECTION

0 1" 2"

FILENAME 10263882-30-D_v20.rvt
SCALE 1/8" = 1'-0"

SHEET
M-502

BIM 360://10263882_ARL_Biosolids_Program_Management_2020/10263882-30-D_v20.rvt
6/30/2022 9:11:10 AM

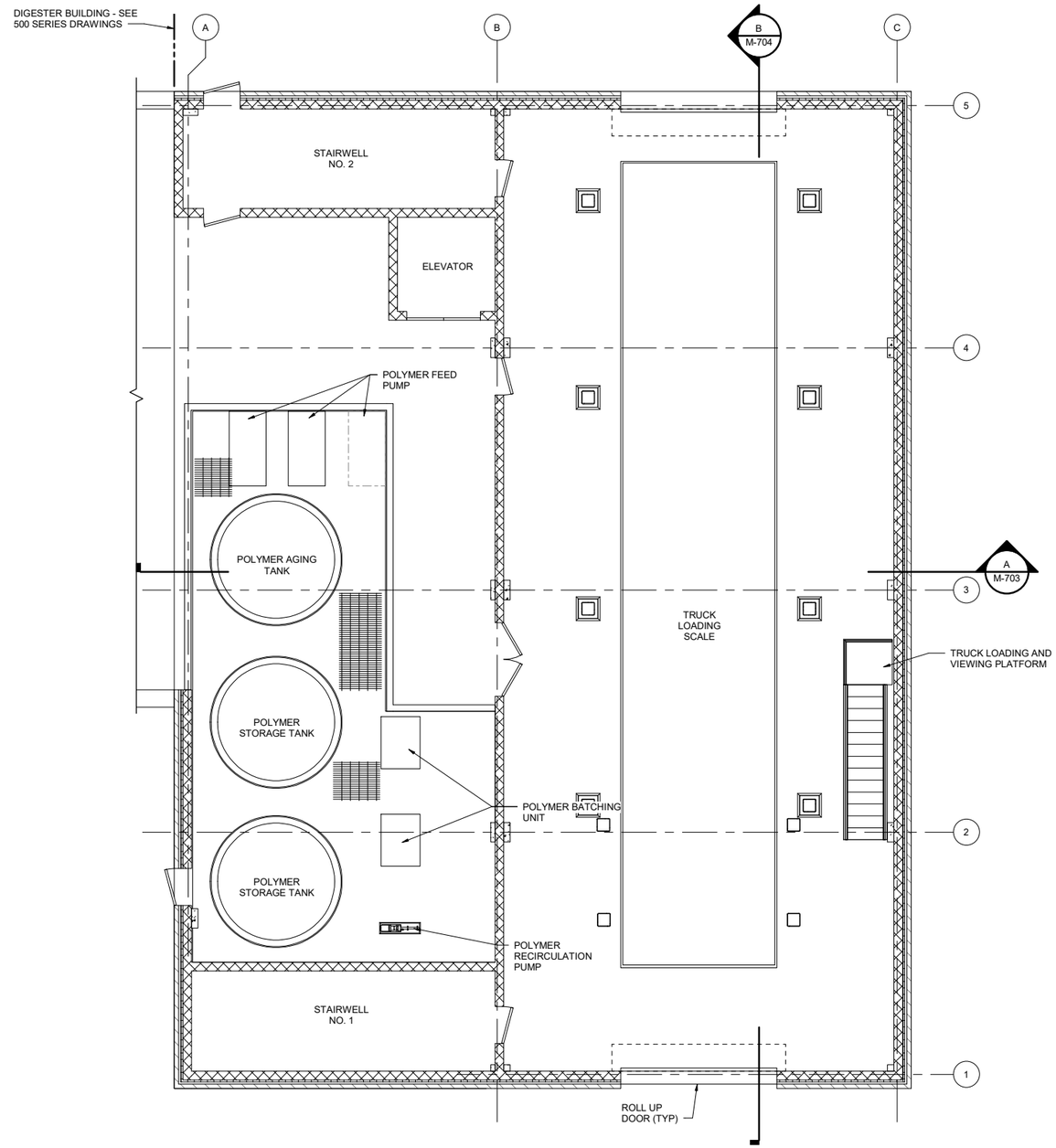

PLAN AT EL 24.00

3/16" = 1'-0"

ISSUE	DATE	DESCRIPTION
A	12/2022	FACILITIES PLAN

PROJECT MANAGER	BALCHUNAS, BRIAN
CIVIL	A. CALTON
STRUCTURAL	H. ANTSHEL
ARCHITECTURAL	J. REDDRICK
PROCESS	S. SPALDING
MECHANICAL	C. MOLINE
ELECTRICAL	B. CUNNINGHAM
INSTRUMENTATION	
PROJECT NUMBER	10263882

DRAFT
FACILITIES PLAN
NOT FOR
CONSTRUCTION

ARLINGTON VIRGINIA

ARLINGTON COUNTY
WPCP
RE-GEN

RENOVATE DEWATERING BUILDING
FINAL DEWATERING BUILDING - PLAN AT EL 24.00

0 1" 2"

FILENAME 10263882-20-D_v20.rvt

SCALE 3/16" = 1'-0"

SHEET **M-700**

BIM 360://10263882_ARL_Biosolids_Program_Management_2020/10263882-20-D_v20.rvt
6/30/2022 9:12:21 AM

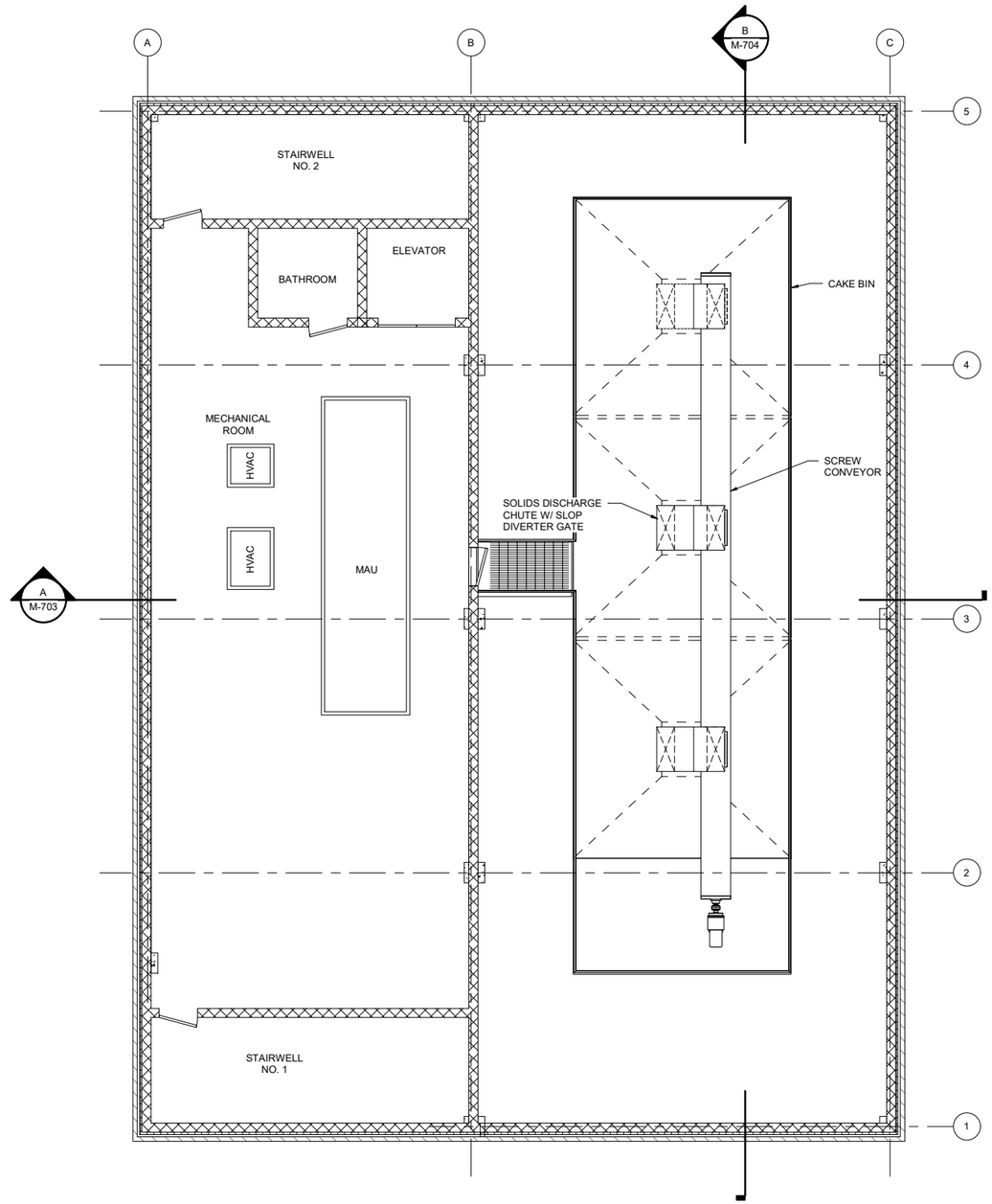

PLAN AT EL 59.95

3/16" = 1'-0"

ISSUE	DATE	DESCRIPTION
A	12/2022	FACILITIES PLAN

PROJECT MANAGER	BALCHUNAS, BRIAN
CIVIL	A. CALTON
STRUCTURAL	H. ANTSHEL
ARCHITECTURAL	J. REDDRICK
PROCESS	S. SPALDING
MECHANICAL	C. MOLINE
ELECTRICAL	B. CUNNINGHAM
INSTRUMENTATION	
PROJECT NUMBER	10263882

DRAFT
FACILITIES PLAN
NOT FOR
CONSTRUCTION

ARLINGTON
VIRGINIA

ARLINGTON COUNTY
WPCP
RE-GEN

RENOVATE DEWATERING BUILDING
FINAL DEWATERING BUILDING - PLAN AT EL 59.95

0 1" 2"

FILENAME 10263882-20-D_v20.rvt

SCALE 3/16" = 1'-0"

SHEET **M-701**

BIM 360://10263882_ARL_Biosolids_Program_Management_2020/10263882-20-D_v20.rvt
6/30/2022 9:12:21 AM

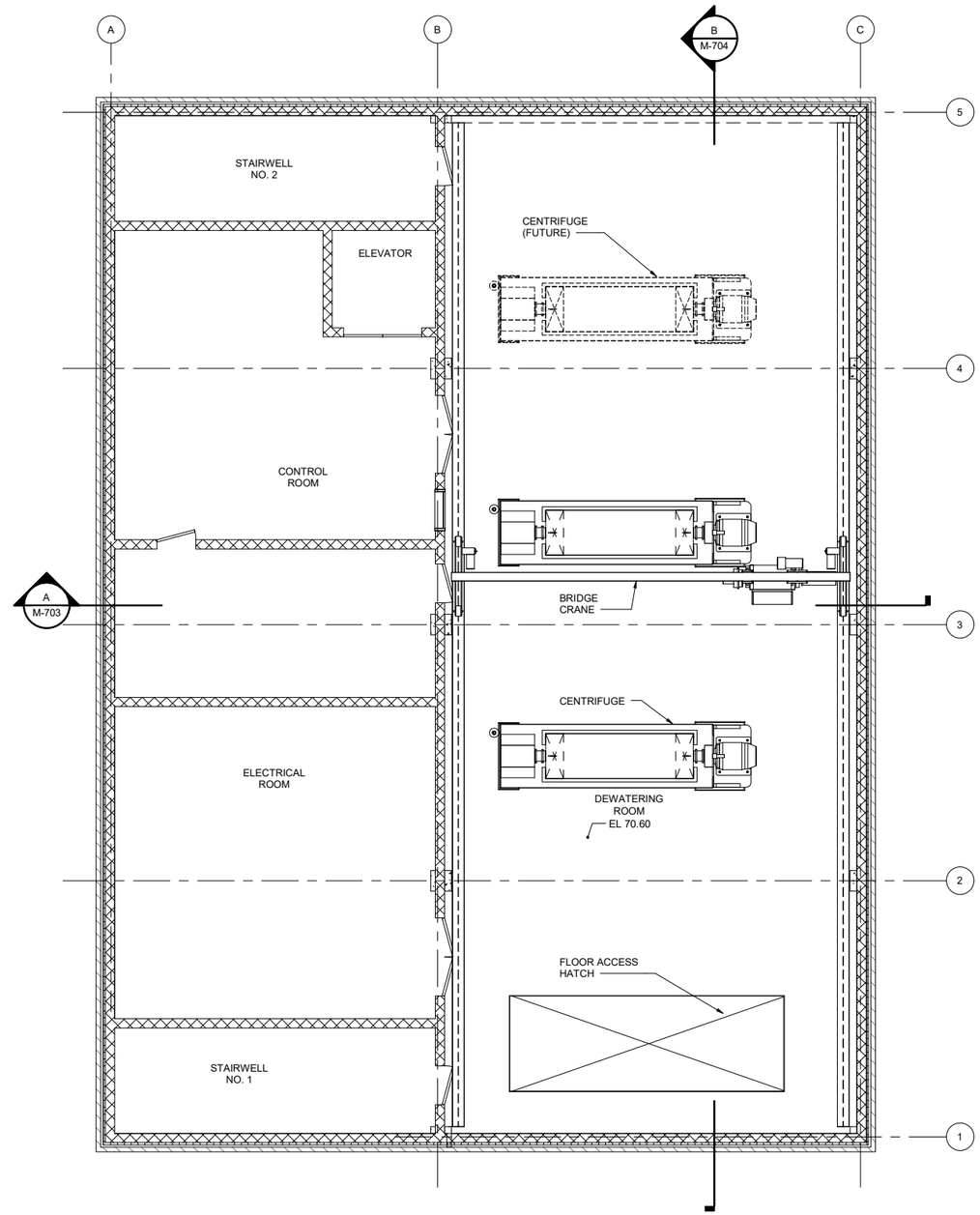

PLAN AT EL 70.60

3/16" = 1'-0"

ISSUE	DATE	DESCRIPTION
A	12/2022	FACILITIES PLAN

PROJECT MANAGER	BALCHUNAS, BRIAN
CIVIL	A. CALTON
STRUCTURAL	H. ANTSHEL
ARCHITECTURAL	J. REDDRICK
PROCESS	S. SPALDING
MECHANICAL	C. MOLINE
ELECTRICAL	B. CUNNINGHAM
INSTRUMENTATION	
PROJECT NUMBER	10263882

DRAFT
FACILITIES PLAN
NOT FOR
CONSTRUCTION

ARLINGTON
VIRGINIA

ARLINGTON COUNTY
WPCP
RE-GEN

RENOVATE DEWATERING BUILDING
FINAL DEWATERING BUILDING - PLAN AT EL 70.60

0 1" 2"

FILENAME 10263882-20-D_v20.rvt

SCALE 3/16" = 1'-0"

SHEET **M-702**

BIM 360://10263882_ARL_Biosolids_Program_Management_2020/10263882-20-D_v20.rvt
6/30/2022 9:12:21 AM

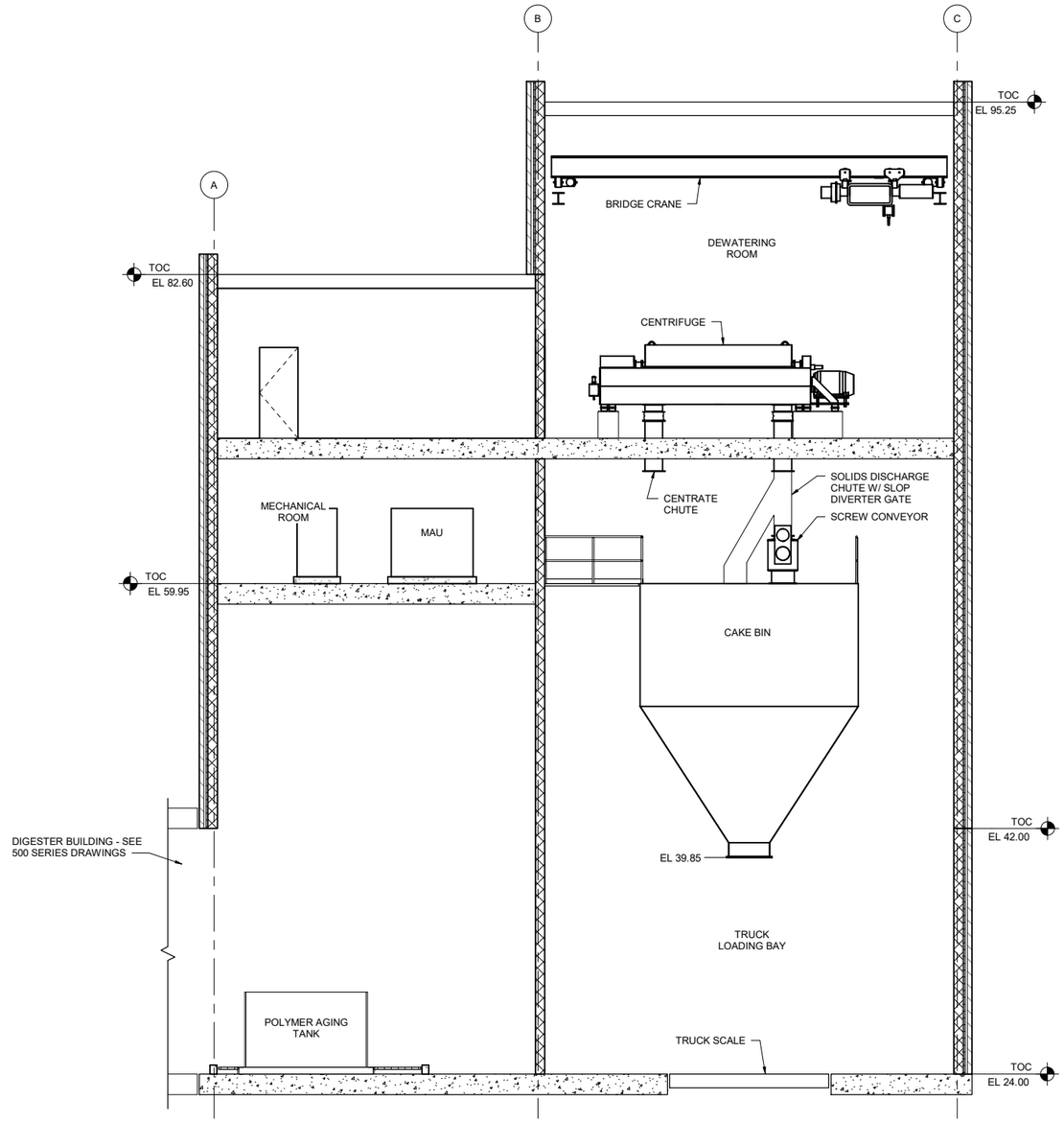

A / M-700 SECTION
3/16" = 1'-0"

ISSUE	DATE	DESCRIPTION
A	12/2022	FACILITIES PLAN

PROJECT MANAGER	BALCHUNAS, BRIAN
CIVIL	A. CALTON
STRUCTURAL	H. ANTSHEL
ARCHITECTURAL	J. REDDRICK
PROCESS	S. SPALDING
MECHANICAL	C. MOLINE
ELECTRICAL	B. CUNNINGHAM
INSTRUMENTATION	
PROJECT NUMBER	10263882

DRAFT
FACILITIES PLAN
NOT FOR
CONSTRUCTION

ARLINGTON
VIRGINIA

ARLINGTON COUNTY
WPCP
RE-GEN

RENOVATE DEWATERING BUILDING
FINAL DEWATERING BUILDING - SECTION 1

0 1" 2"

FILENAME 10263882-20-D_v20.rvt
SCALE 3/16" = 1'-0"

SHEET
M-703

BIM 360://10263882_ARL_Biosolids_Program_Management_2020/10263882-20-D_v20.rvt
6/30/2022 9:12:22 AM

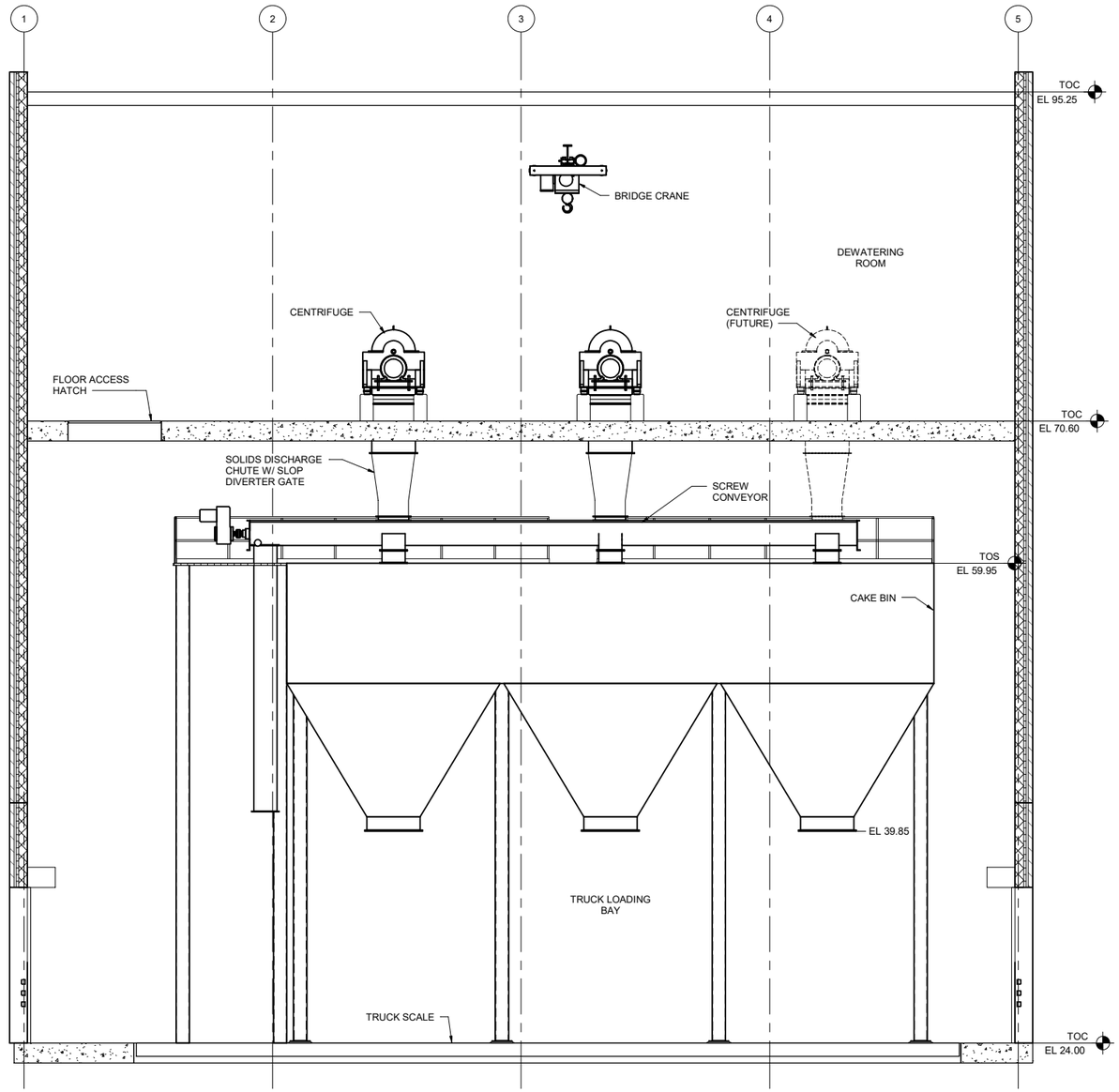

B
M-700
SECTION
3/16" = 1'-0"

ISSUE	DATE	DESCRIPTION
A	12/2022	FACILITIES PLAN

PROJECT MANAGER	BALCHUNAS, BRIAN
CIVIL	A. CALTON
STRUCTURAL	H. ANTSHEL
ARCHITECTURAL	J. REDDRICK
PROCESS	S. SPALDING
MECHANICAL	C. MOLINE
ELECTRICAL	B. CUNNINGHAM
INSTRUMENTATION	
PROJECT NUMBER	10263882

DRAFT
FACILITIES PLAN
NOT FOR
CONSTRUCTION

ARLINGTON
VIRGINIA

ARLINGTON COUNTY
WPCP
RE-GEN

RENOVATE DEWATERING BUILDING
FINAL DEWATERING BUILDING - SECTION 2

0 1" 2"

FILENAME 10263882-20-D_v20.rvt
SCALE 3/16" = 1'-0"

SHEET
M-704

BIM 360://10263882_ARL_Biosolids_Program_Management_2020/10263882-20-D_v20.rvt
6/30/2022 9:12:22 AM

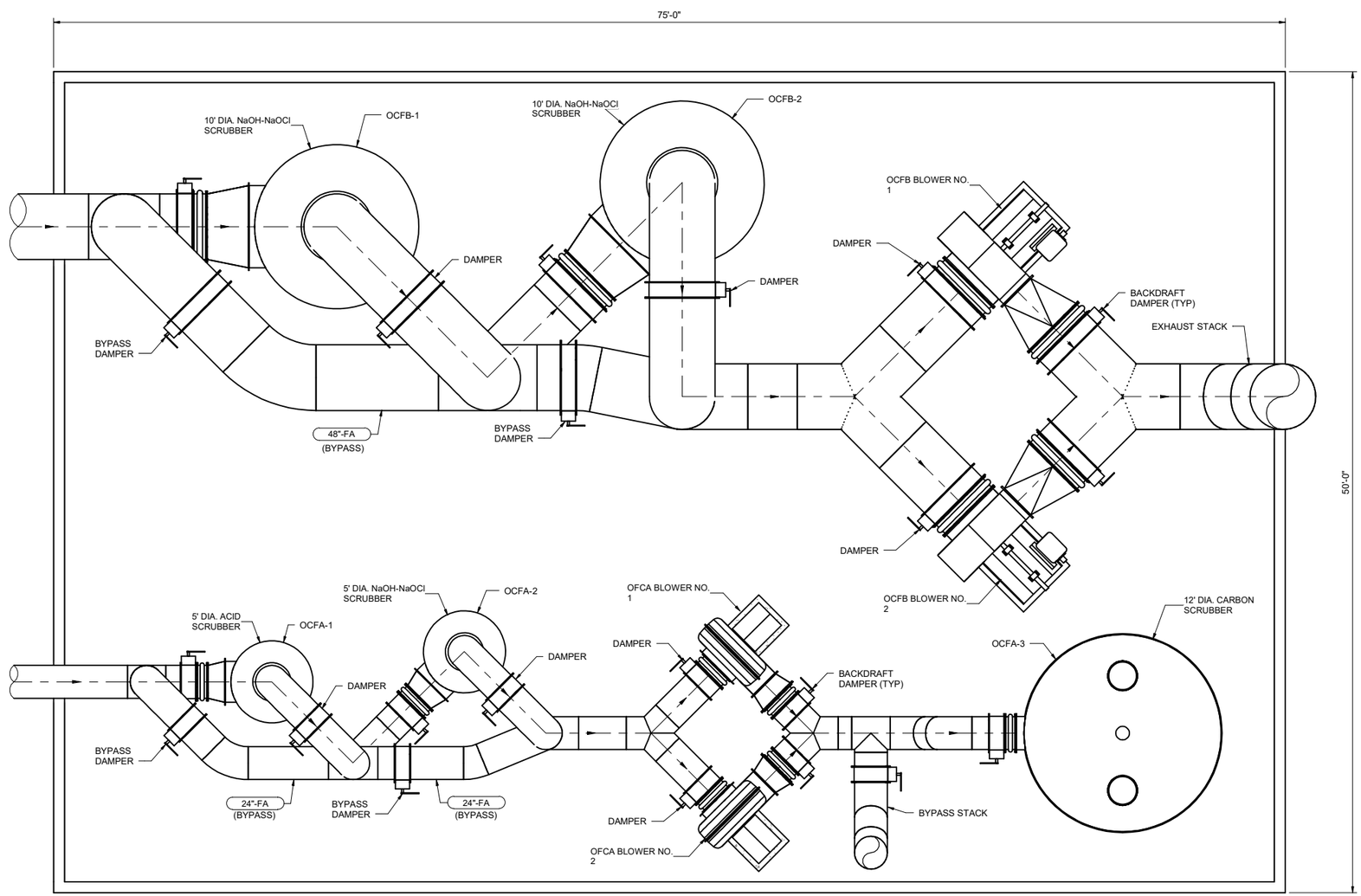

FOUL AIR SYSTEM PLAN

1/4" = 1'-0"

ISSUE	DATE	DESCRIPTION
A	12/2022	FACILITIES PLAN

PROJECT MANAGER	BALCHUNAS, BRIAN
CIVIL	A. CALTON
STRUCTURAL	H. ANTSHEL
ARCHITECTURAL	J. REDDRICK
PROCESS	S. SPALDING
MECHANICAL	C. MOLINE
ELECTRICAL	B. CUNNINGHAM
INSTRUMENTATION	
PROJECT NUMBER	10263882

DRAFT FACILITIES PLAN NOT FOR CONSTRUCTION

ARLINGTON VIRGINIA

ARLINGTON COUNTY WPCP RE-GEN

ODOR CONTROL SYSTEM PLAN

0 1" 2"

FILENAME 10263882-50-D_v20.rvt

SCALE 1/4" = 1'-0"

SHEET **M-900**

BIM 360://10263882_ARL_Biosolids_Program_Management_2020/10263882-50-D_v20.rvt
6/30/2022 9:13:31 AM

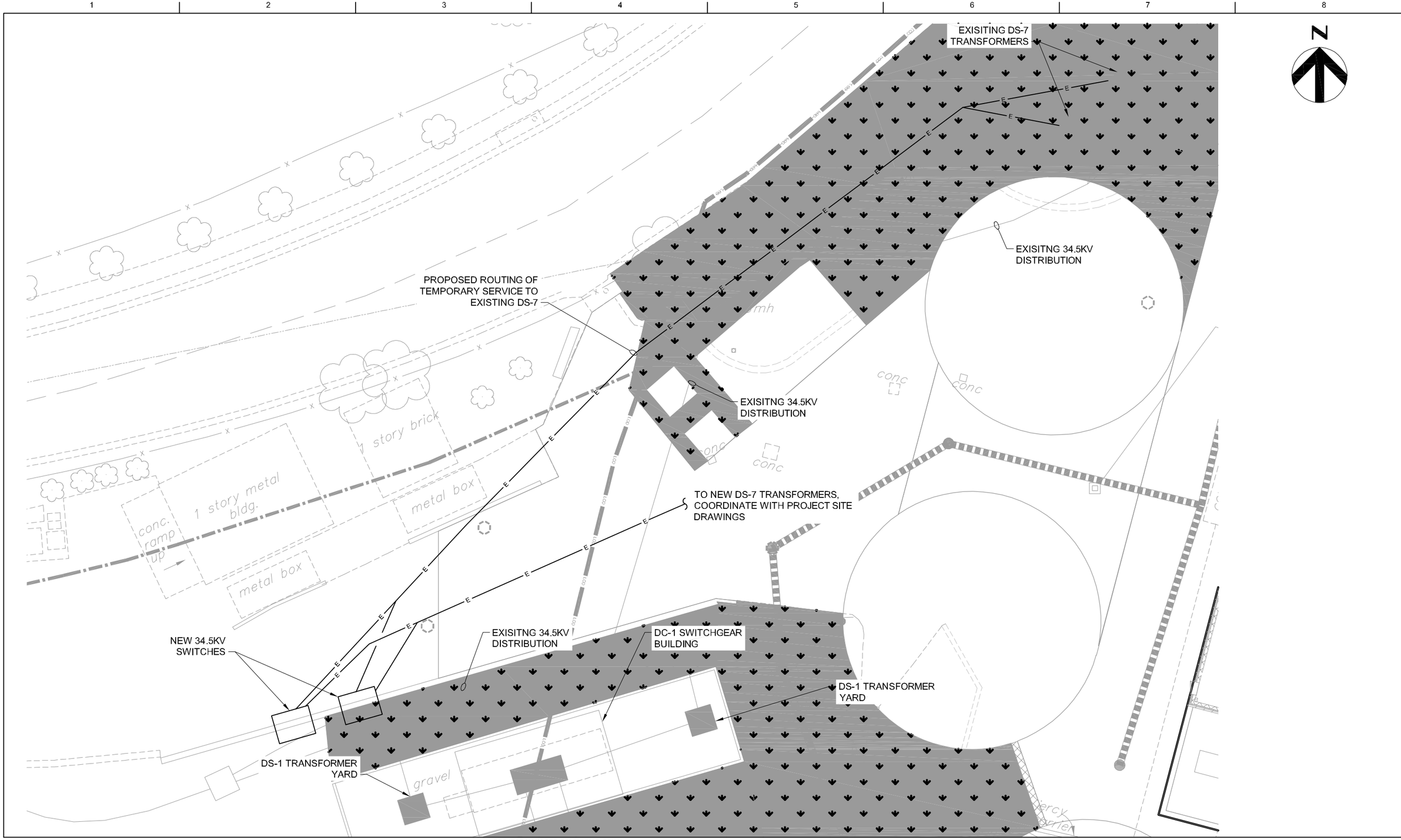

ISSUE	DATE	DESCRIPTION
A	12/2022	FACILITIES PLAN

PROJECT MANAGER	BALCHUNAS, BRIAN
CIVIL	A. CALTON
STRUCTURAL	H. ANTSHEL
ARCHITECTURAL	J. REDDRICK
PROCESS	S. SPALDING
MECHANICAL	C. MOLINE
ELECTRICAL	B. CUNNINGHAM
INSTRUMENTATION	
PROJECT NUMBER	10263882

DRAFT FACILITIES PLAN NOT FOR CONSTRUCTION

ARLINGTON VIRGINIA

ARLINGTON COUNTY WPCP RE-GEN

ELECTRICAL SITE PLAN

0 1" 2"

FILENAME E-001.dwg

SCALE 1" = 10'

SHEET **E-001**

C:\PWWORKING\east01\d1907715\E-001.dwg, 12/16/2022 10:55:44 AM, TLOKEY

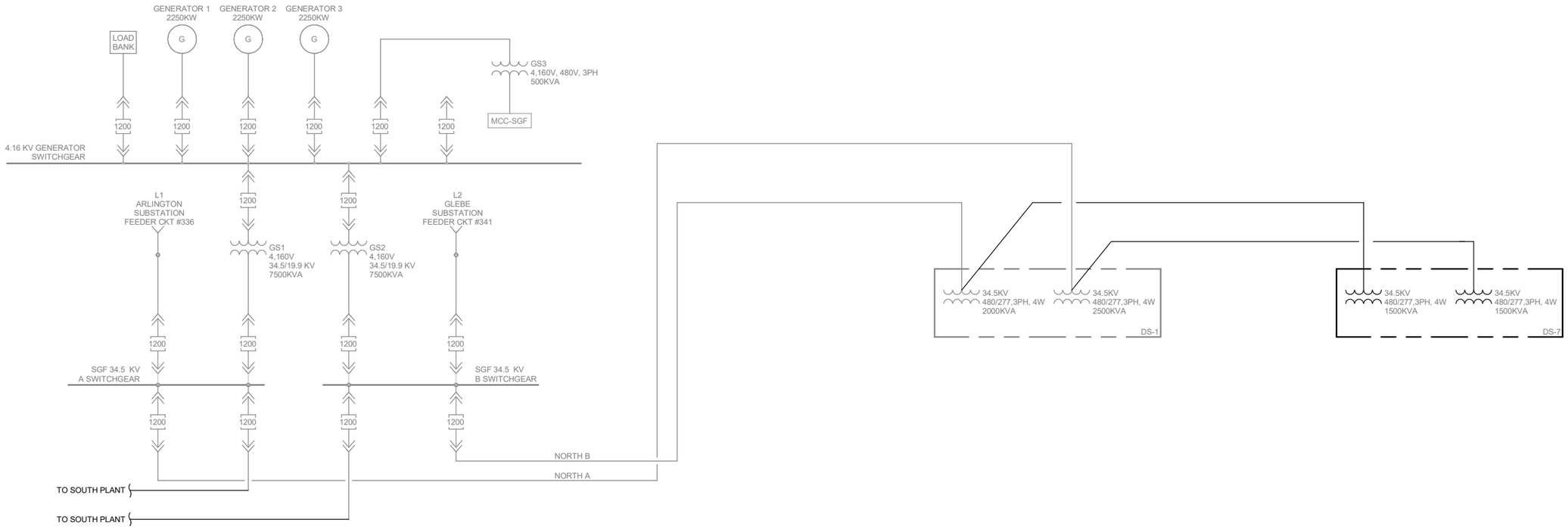

A	12/2022	FACILITIES PLAN
ISSUE	DATE	DESCRIPTION

PROJECT MANAGER	BALCHUNAS, BRIAN
CIVIL	A. CALTON
STRUCTURAL	H. ANTSHEL
ARCHITECTURAL	J. REDDRICK
PROCESS	S. SPALDING
MECHANICAL	C. MOLINE
ELECTRICAL	B. CUNNINGHAM
INSTRUMENTATION	
PROJECT NUMBER	10263882

DRAFT
FACILITIES PLAN
NOT FOR
CONSTRUCTION

ARLINGTON VIRGINIA

ARLINGTON COUNTY
WPCP
RE-GEN

EXISTING ONE-LINE DIAGRAM

0 1" 2"

FILENAME	10263882-02-E_v20.rvt
SCALE	NONE

SHEET
E-02

BIM 360://10263882_ARL_Biosolids_Program_Management_2020/10263882-02-E_v20.rvt
2/25/2022 9:32:24 AM

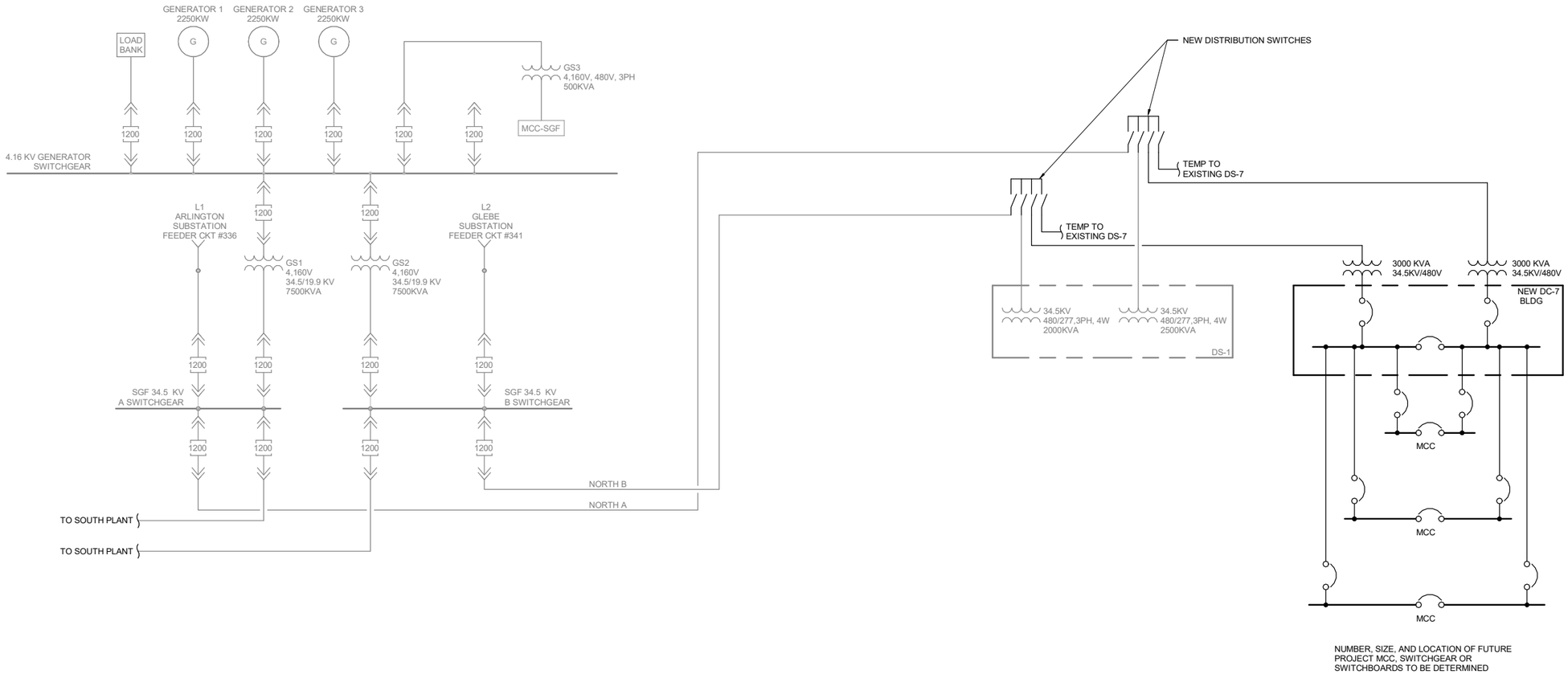

ISSUE	DATE	DESCRIPTION
A	12/2022	FACILITIES PLAN

PROJECT MANAGER	BALCHUNAS, BRIAN
CIVIL	A. CALTON
STRUCTURAL	H. ANTSHEL
ARCHITECTURAL	J. REDDRICK
PROCESS	S. SPALDING
MECHANICAL	C. MOLINE
ELECTRICAL	B. CUNNINGHAM
INSTRUMENTATION	
PROJECT NUMBER	10263882

DRAFT FACILITIES PLAN NOT FOR CONSTRUCTION

ARLINGTON VIRGINIA

ARLINGTON COUNTY WPCP RE-GEN

REVISED ONE-LINE DIAGRAM

0 1" 2"

FILENAME 10263882-02-E_v20.rvt

SCALE NONE

SHEET **E-03**

BIM 360://10263882_ARL_Biosolids_Program_Management_2020/10263882-02-E_v20.rvt
2/25/2022 9:32:24 AM

PRIMARY ELEMENT SYMBOLOGY

- ORIFICE PLATE
- PITOT TUBE OR ANNUBAR
- FI — ROTAMETER
- SONIC OR ULTRASONIC FLOWMETER
- M — MAGNETIC FLOWMETER
- FT — MASS DISPERSION FLOWMETER
- FLUME
- WEIR
- PROPELLER OR TURBINE METER
- VENTURI TUBE
- FLOAT SWITCH
- TE — TEMPERATURE ELEMENT WITH THERMOWELL
- FG — SIGHT FLOW GLASS
- TD — THERMAL DISPERSION METER
- ULTRASONIC LEVEL TRANSMITTER
- RADAR TYPE LEVEL TRANSMITTER
- DIFFERENTIAL PRESSURE FLOW METER

LINE TYPES

- MAIN PROCESS LINE
- SECONDARY PROCESS LINE
- AUXILIARY PROCESS LINE
- DIRECTION OF FLOW
- PNEUMATIC SIGNAL
- ELECTRICAL SIGNAL
- HYDRAULIC SIGNAL
- SOFTWARE OR DATA LINK
- SIGNAL CONNECTION
- CROSSOVER - NO CONNECTION
- CAPILLARY

CROSS REFERENCE SYMBOLOGY

- Y-3 — CONTINUATION ON SHEET Y-3
- Y-3 — CONTINUATION ON SHEET Y-3

INSTRUMENT SYMBOLOGY

- LOCALLY MOUNTED FIELD INSTRUMENTATION
- MOUNTED ON PANEL FRONT
- MOUNTED INSIDE PANEL
- XXX — FRONT PANEL MOUNTED ON AUXILIARY PANEL (SUBSCRIPT INDICATES PANEL)
- MOUNTED INSIDE AUXILIARY PANEL
- PILOT LIGHT
- INSTRUMENT FUNCTIONS SHARING COMMON HOUSING
- I — COMPLEX INTERLOCK AS DEFINED IN CONTROL DIAGRAM OR IN SPECIFICATIONS
- SHARED DISPLAY, SHARED CONTROL, FIELD MOUNTED
- SHARED DISPLAY, SHARED CONTROL, PRIMARY LOCATION - NORMALLY ACCESSIBLE TO OPERATOR
- PROGRAMMABLE LOGIC CONTROL, PRIMARY LOCATION - NORMALLY ACCESSIBLE TO OPERATOR
- PROGRAMMABLE LOGIC CONTROL, FIELD MOUNTED

ACTUATOR SYMBOLOGY

- X — OPERATOR ABBREVIATIONS:
  M = MOTOR
  P = PNEUMATIC
  S = SOLENOID
- FLOAT OPERATOR
- SPRING-OPPOSED SINGLE-ACTING PNEUMATIC CYLINDER
- DOUBLE-ACTING PNEUMATIC CYLINDER
- PNEUMATIC DIAPHRAGM
- PNEUMATIC DIAPHRAGM WITH POSITIONER

TYPES OF POWER SUPPLY

A	PLANT COMPRESSED AIR
IA	INSTRUMENTATION AIR
ES	ELECTRIC SUPPLY
NG	NATURAL GAS
HYD	HYDRAULIC

INSTRUMENT IDENTIFICATION LETTERS

	FIRST LETTER		SUCCEEDING LETTERS		
	MEASURED OR INITIATING VARIABLE	MODIFIER	READOUT OR PASSIVE FUNCTION	OUTPUT FUNCTION	MODIFIER
A	ANALYSIS		ALARM		
B	BURNER, COMBUSTION		USER'S CHOICE	USER'S CHOICE	USER'S CHOICE
C	USERS CHOICE			CONTROL	CLOSED
D	USERS CHOICE	DIFFERENTIAL			
E	VOLTAGE		SENSOR (PRIMARY ELEMENT)		
F	FLOW RATE	RATIO (FRACTION)			
G	USER'S CHOICE		GLASS, VIEWING DEVICE		
H	HAND				HIGH
I	CURRENT (ELECTRICAL)		INDICATE		
J	POWER	SCAN			
K	TIME, TIME SCHEDULE	TIME; RATE OF CHANGE		CONTROL STATION	
L	LEVEL		LIGHT		LOW
M	USER'S CHOICE	MOMENTARY			MIDDLE, INTERMEDIATE
N	USER'S CHOICE		USER'S CHOICE	USER'S CHOICE	USER'S CHOICE
O	USER'S CHOICE		ORIFICE, RESTRICTION		
P	PRESSURE, VACUUM		POINT (TEST) CONNECTION		
Q	QUANTITY	INTEGRATE, TOTALIZE			
R	RADIATION		RECORD		
S	SPEED, FREQUENCY	SAFETY		SWITCH	
T	TEMPERATURE			TRANSMIT	
U	MULTIVARIABLE		MULTIFUNCTION	MULTIFUNCTION	MULTIFUNCTION
V	VIBRATION, MECH. ANALYSIS			VALVE, DAMPER, LOUVER	
W	WEIGHT, FORCE		WELL		
X	UNCLASSIFIED	X AXIS	UNCLASSIFIED	UNCLASSIFIED	UNCLASSIFIED
Y	EVENT, STATE OR PRESENCE	Y AXIS		RELAY, COMPUTE, CONVERT	
Z	POSITION, DIMENSION	Z AXIS		DRIVER, ACTUATOR, UNCLASSIFIED FINAL CONTROL ELEMENT	

MISCELLANEOUS INSTRUMENTATION ABBREVIATIONS

AI	ANALOG INPUT
AO	ANALOG OUTPUT
CL2	CHLORINE (ANALYZER MODIFIER)
CO	CARBON MONOXIDE (ANALYZER MODIFIER)
CO2	CARBON DIOXIDE (ANALYZER MODIFIER)
COMB	COMBUSTIBLES (ANALYZER MODIFIER)
COND	CONDUCTIVITY (ANALYZER MODIFIER)
DEN	DENSITY (ANALYZER MODIFIER)
DI	DIGITAL INPUT
DO	DIGITAL OUTPUT
DO	DISSOLVED OXYGEN (ANALYZER MODIFIER)
E/P	VOLTAGE TO PNEUMATIC
H2S	HYDROGEN SULFIDE (ANALYZER MODIFIER)
HCL	HYDROGEN CHLORIDE (ANALYZER MODIFIER)
I/O	INPUT/OUTPUT
I/P	CURRENT TO PNEUMATIC
NOX	NITROGEN OXIDE (ANALYZER MODIFIER)
OI	OPERATOR INTERFACE
OIT	OPERATOR INTERFACE TERMINAL
O2	OXYGEN (ANALYZER MODIFIER)
P&ID	PROCESS AND INSTRUMENTATION DIAGRAM
SS	SUSPENDED SOLIDS (ANALYZER MODIFIER)
TURB	TURBIDITY (ANALYZER MODIFIER)
WAN	WIDE AREA NETWORK

CONTROL SWITCH NOTATION ABBREVIATIONS

XXX / XXXX — XXX

ACK	ACKNOWLEDGE
E-STOP	EMERGENCY STOP
FAIL	FAILURE
FOR	FORWARD-OFF-REVERSE
FR	FORWARD-REVERSE
FS	FAST-SLOW
HA	HAND-AUTO
HOA	HAND-OFF-AUTO
HOR	HAND-OFF-REMOTE
LL	LEAD-LAG
LLS	LEAD-LAG-STANDBY
LOR	LOCAL-OFF-REMOTE
LR	LOCAL-REMOTE
LS	LEAD-STANDBY
MA	MANUAL-AUTO
OAC	OPEN-AUTO-CLOSE
OC	OPEN-CLOSE
OO	ON-OFF
OSC	OPEN-STOP-CLOSE
RJ	RUN-JOG
RJR	RUN-JOG-REVERSE
SIL	SILENCE
SS	START-STOP

VALVES

- BALL VALVE
- BUTTERFLY VALVE
- CONE VALVE
- CHECK VALVE
- DOUBLE-DISK CHECK VALVE
- BALL CHECK VALVE
- DIAPHRAGM VALVE
- GATE VALVE
- GLOBE VALVE
- KNIFE GATE VALVE
- NEEDLE VALVE
- PINCH VALVE
- PLUG VALVE
- THREE-WAY BALL VALVE
- THREE-WAY PLUG VALVE
- PRESSURE-REDUCING VALVE
- PRESSURE-REGULATING VALVE
- THREE-WAY CONTROL VALVE
- OR — PRESSURE-RELIEF VALVE
- X — AIR-RELEASE VACUUM VALVE
  A = AIR RELEASE
  VAC = VACUUM
- LUBRICATED PLUG VALVE
- NORMALLY CLOSED VALVE (FILLED IN)

MISCELLANEOUS SYMBOLOGY

- PROGRESSIVE CAVITY PUMP
- PROGRESSIVE CAVITY CAKE PUMP
- M — MIXER - PROPELLER TYPE
- SUMP PUMP
- CHEMICAL FEED PUMP
- CENTRIFUGAL PUMP
- M — MOTOR
- BAG FILTER
- FLEXIBLE CHUTE
- CALIBRATION COLUMN
- SIGHT GLASS
- FLEXIBLE CONNECTION
- R — ROTAMETER
- QUICK DISCONNECT COUPLING WITH BALL VALVE (CAMBI'S INTERPRETATION)
- GRINDER
- 3W — C — 3W=NPW, THE "C" STANDS FOR A SEAL WATER CONTROL UNIT
- D — DRAIN
- DT — D — DRIP TRAP
- DRAIN WITH CONCRETE CONTAINMENT
- SLIDE GATE
- REDUCER
- PULSATION DAMPENER
- FLAME ARRESTER

GENERAL NOTES:

1. THIS IS A STANDARD INSTRUMENTATION SYMBOLOGY AND ABBREVIATIONS SHEET. LISTING OF SYMBOLS AND ABBREVIATIONS DOES NOT IMPLY ALL SYMBOLS AND ABBREVIATIONS HAVE BEEN USED ON THIS PROJECT.
2. SEE PROCESS, MECHANICAL AND PLUMBING LEGEND SHEET FOR MISCELLANEOUS PIPING SYMBOLS.
3. SCREENING OR SHADING OF WORK IS USED TO INDICATE EXISTING COMPONENTS OR TO DE-EMPHASIZE PROPOSED IMPROVEMENTS TO HIGHLIGHT SELECTED TRADE WORK. REFER TO CONTEXT OF EACH SHEET FOR USAGE.
4. VALVE SYMBOLS SHOWN HERE ARE APPLICABLE ONLY TO INSTRUMENTATION DIAGRAMS. SEE PROCESS, MECHANICAL AND PLUMBING LEGEND SHEET FOR VALVE SYMBOLS USED ELSEWHERE ON THE SHEETS.

ISSUE	DATE	DESCRIPTION
A	12/2022	FACILITIES PLAN

PROJECT MANAGER	BALCHUNAS, BRIAN
CIVIL	A. CALTON
STRUCTURAL	H. ANTSHEL
ARCHITECTURAL	J. REDDRICK
PROCESS	S. SPALDING
MECHANICAL	C. MOLINE
ELECTRICAL	B. CUNNINGHAM
INSTRUMENTATION	
PROJECT NUMBER	10263882

DRAFT FACILITIES PLAN NOT FOR CONSTRUCTION

ARLINGTON VIRGINIA

ARLINGTON COUNTY WPCP RE-GEN

INSTRUMENTATION LEGEND AND SYMBOLS

0 1" 2"

FILENAME: I-001.dwg
SCALE: NOT TO SCALE
SHEET: I-001

C:\PWWORKING\east01\d1907715\I-001.dwg, 12/16/2022 10:55:48 AM, TLOKEY

PLC

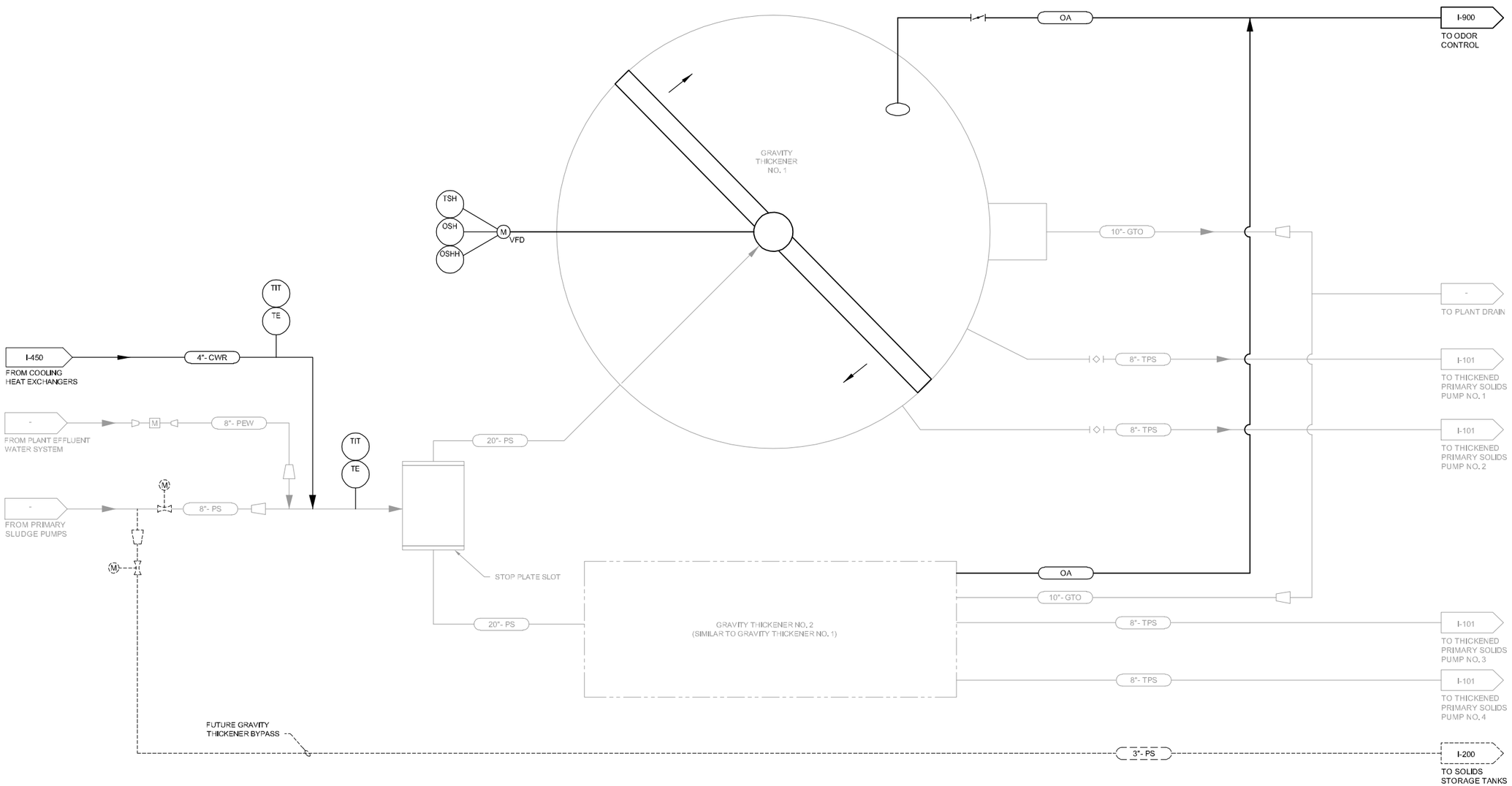

ISSUE	DATE	DESCRIPTION
A	12/2022	FACILITIES PLAN

PROJECT MANAGER	BALCHUNAS, BRIAN
CIVIL	A. CALTON
STRUCTURAL	H. ANTSHEL
ARCHITECTURAL	J. REDDRICK
PROCESS	S. SPALDING
MECHANICAL	C. MOLINE
ELECTRICAL	B. CUNNINGHAM
INSTRUMENTATION	
PROJECT NUMBER	10263882

DRAFT FACILITIES PLAN NOT FOR CONSTRUCTION

ARLINGTON VIRGINIA

ARLINGTON COUNTY WPCP RE-GEN

GRAVITY THICKENING PROCESS AND INSTRUMENTATION DIAGRAM

0 1" 2"

FILENAME: I-100.dwg

SCALE: NOT TO SCALE

SHEET: I-100

C:\PWWORKING\east01\d1907715\I-100.dwg, 12/16/2022 10:55:51 AM, TLOKEY

PLC

KEY NOTE: #

1. THICKENED PRIMARY SOLIDS PUMPS CAN BE USED TO DRAIN GRAVITY THICKENER TANKS BY CONNECTION TO SUMP PUMP PIPING, NOT SHOWN.

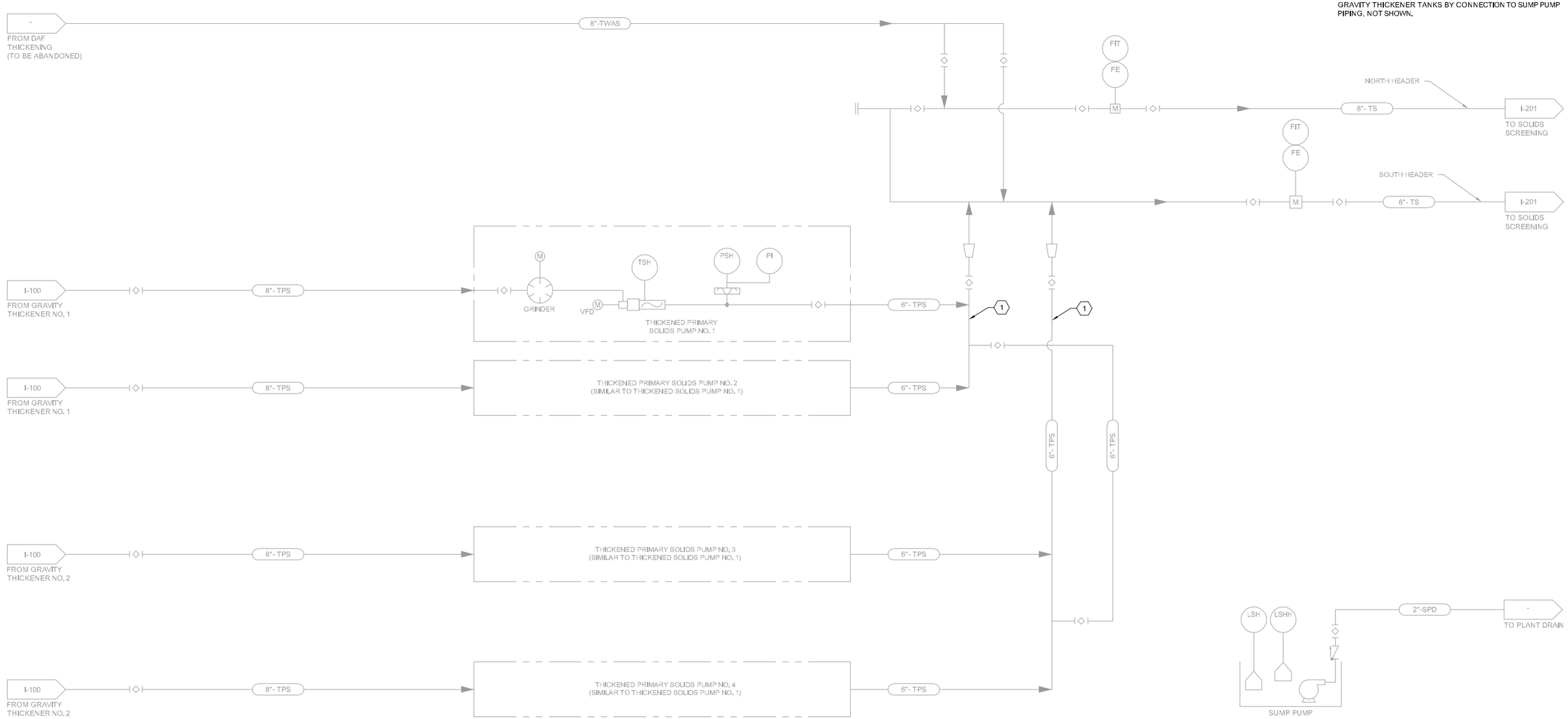

ISSUE	DATE	DESCRIPTION
A	12/2022	FACILITIES PLAN

PROJECT MANAGER	BALCHUNAS, BRIAN
CIVIL	A. CALTON
STRUCTURAL	H. ANTSHEL
ARCHITECTURAL	J. REDDRICK
PROCESS	S. SPALDING
MECHANICAL	C. MOLINE
ELECTRICAL	B. CUNNINGHAM
INSTRUMENTATION	
PROJECT NUMBER	10263882

DRAFT FACILITIES PLAN NOT FOR CONSTRUCTION

ARLINGTON VIRGINIA

ARLINGTON COUNTY WPCP RE-GEN

THICKENED PRIMARY SOLIDS PUMPING PROCESS AND INSTRUMENTATION DIAGRAM

0 1" 2"

FILENAME: I-101.dwg

SCALE: NOT TO SCALE

SHEET: I-101

C:\PWWORKING\east01\d1907715\I-101.dwg, 12/16/2022 10:55:54 AM, TLOKEY

PLC

KEY NOTES: (#)

1. EQUIPMENT PACKAGE PROVIDED BY VENDOR.

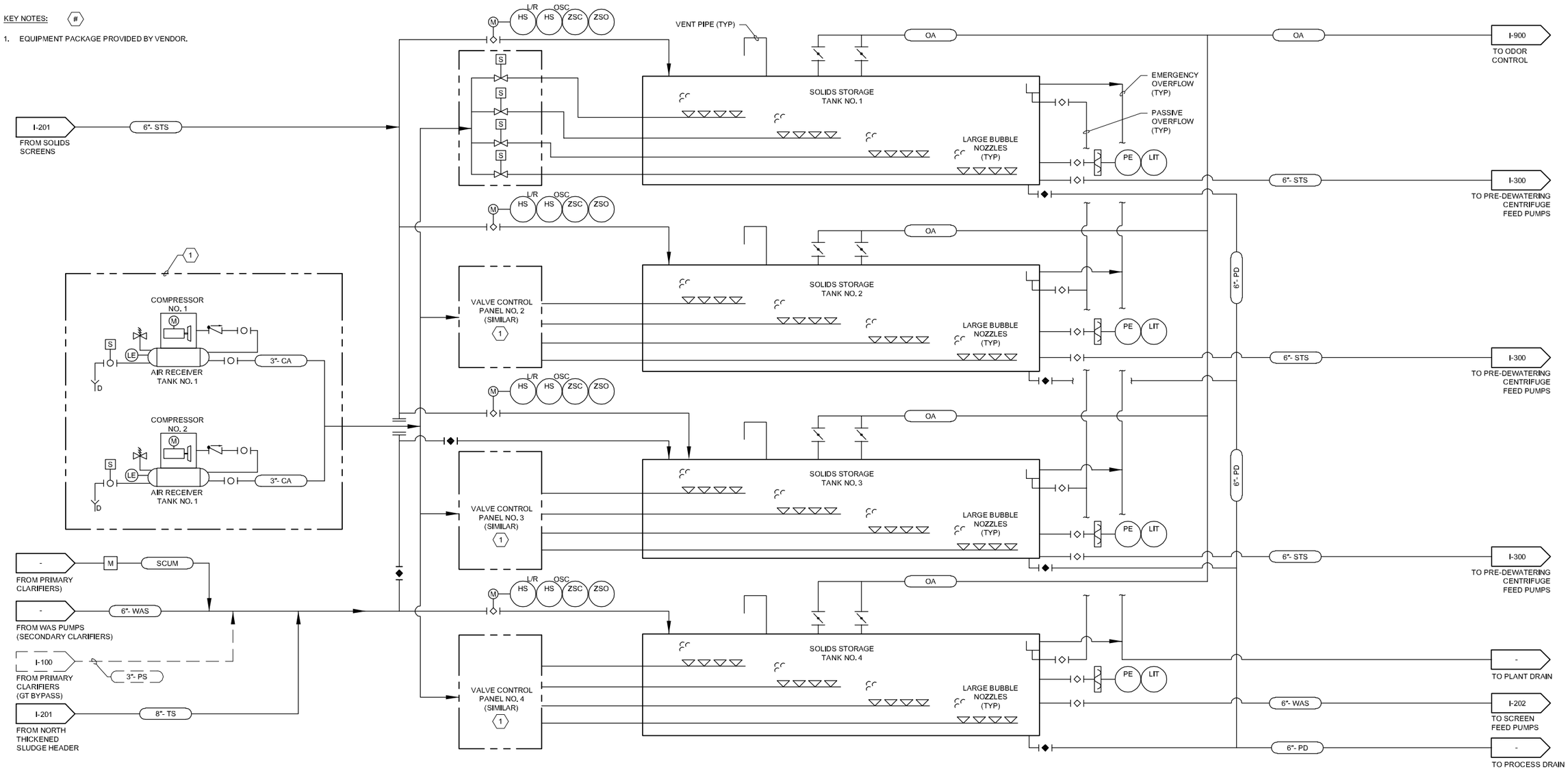

ISSUE	DATE	DESCRIPTION
A	12/2022	FACILITIES PLAN

PROJECT MANAGER	BALCHUNAS, BRIAN
CIVIL	A. CALTON
STRUCTURAL	H. ANTSHEL
ARCHITECTURAL	J. REDDRICK
PROCESS	S. SPALDING
MECHANICAL	C. MOLINE
ELECTRICAL	B. CUNNINGHAM
INSTRUMENTATION	
PROJECT NUMBER	10263882

DRAFT FACILITIES PLAN NOT FOR CONSTRUCTION

ARLINGTON VIRGINIA

ARLINGTON COUNTY WPCP RE-GEN

SOLIDS STORAGE PROCESS AND INSTRUMENTATION DIAGRAM

0 1" 2"

FILENAME: I-200.dwg

SCALE: NOT TO SCALE

SHEET: I-200

C:\PWWORKING\east01\d1907715\I-200.dwg, 12/16/2022 10:55:57 AM, TLOKEY

PLC

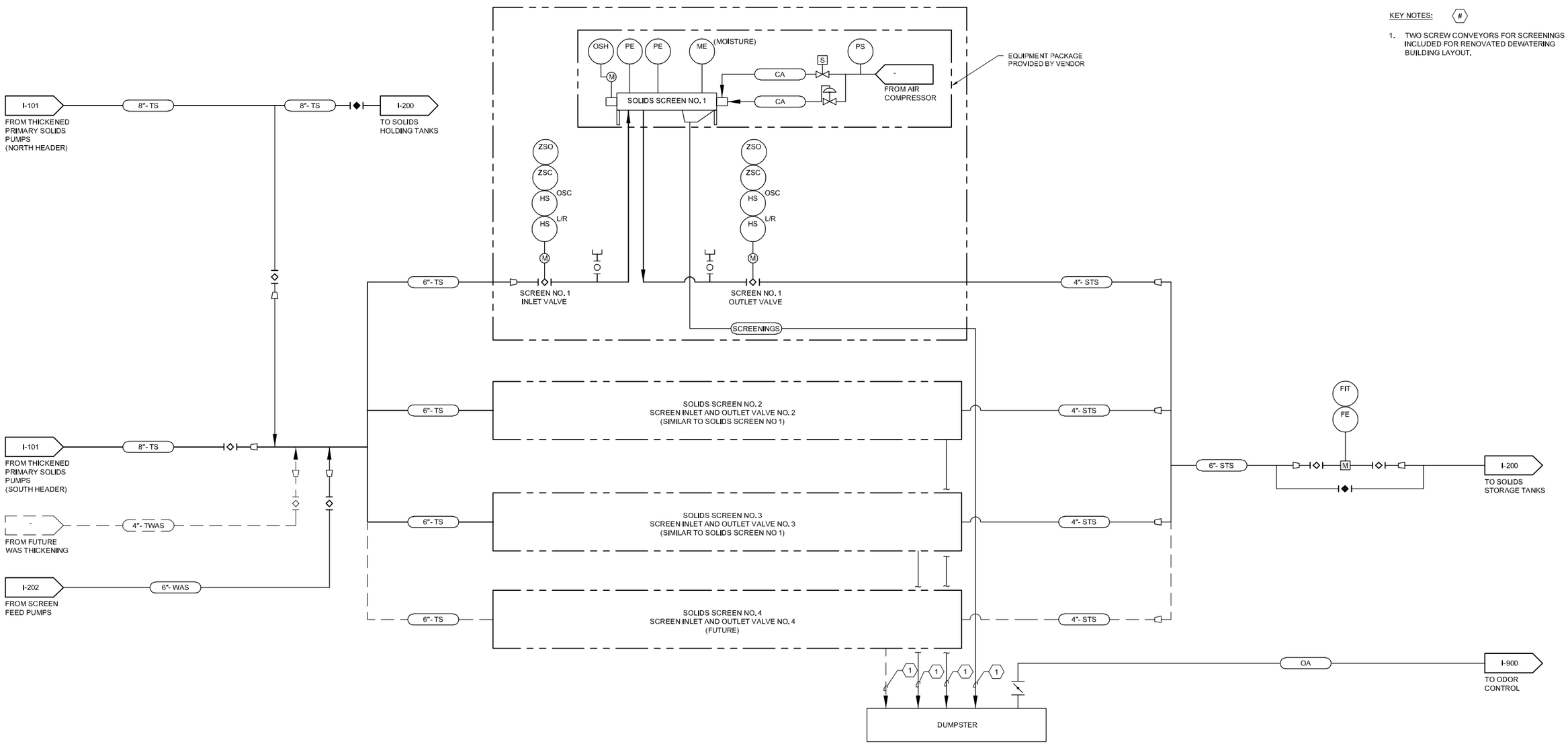

KEY NOTES: #

1. TWO SCREW CONVEYORS FOR SCREENINGS INCLUDED FOR RENOVATED DEWATERING BUILDING LAYOUT.

ISSUE	DATE	DESCRIPTION
A	12/2022	FACILITIES PLAN

PROJECT MANAGER	BALCHUNAS, BRIAN
CIVIL	A. CALTON
STRUCTURAL	H. ANTSHEL
ARCHITECTURAL	J. REDDRICK
PROCESS	S. SPALDING
MECHANICAL	C. MOLINE
ELECTRICAL	B. CUNNINGHAM
INSTRUMENTATION	
PROJECT NUMBER	10263882

DRAFT FACILITIES PLAN NOT FOR CONSTRUCTION

ARLINGTON VIRGINIA

ARLINGTON COUNTY WPCP RE-GEN

SOLIDS SCREENING PROCESS AND INSTRUMENTATION DIAGRAM

0 1" 2"

FILENAME I-201.dwg

SCALE NOT TO SCALE

SHEET I-201

C:\PWWORKING\east01\d1907715\I-201.dwg, 12/16/2022 10:56:01 AM, TLOKEY

PLC

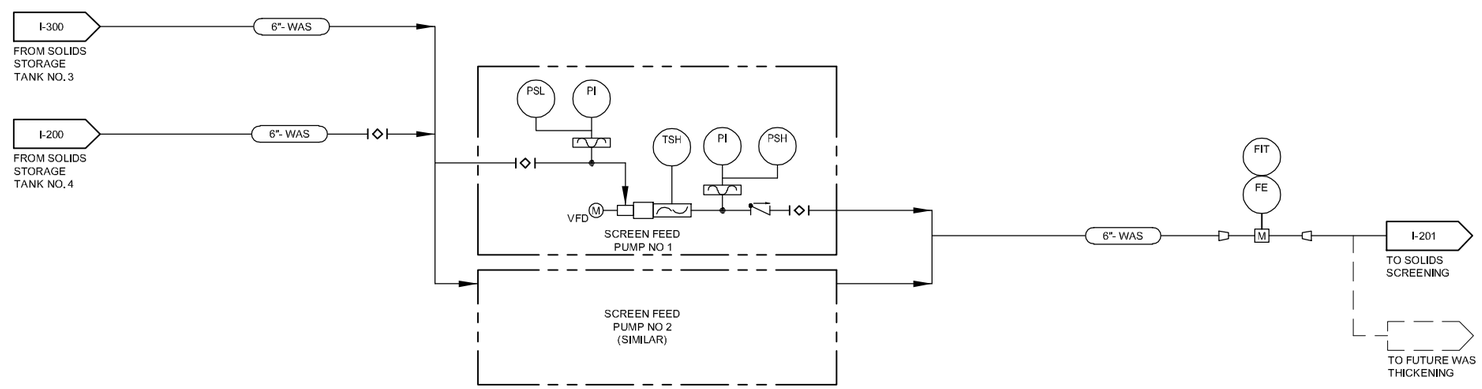

ISSUE	DATE	DESCRIPTION
A	12/2022	FACILITIES PLAN

PROJECT MANAGER	BALCHUNAS, BRIAN
CIVIL	A. CALTON
STRUCTURAL	H. ANTSHEL
ARCHITECTURAL	J. REDDRICK
PROCESS	S. SPALDING
MECHANICAL	C. MOLINE
ELECTRICAL	B. CUNNINGHAM
INSTRUMENTATION	
PROJECT NUMBER	10263882

DRAFT
FACILITIES PLAN
NOT FOR CONSTRUCTION

ARLINGTON VIRGINIA

ARLINGTON COUNTY
WPCP
RE-GEN

SCREEN FEED PUMPS
PROCESS AND INSTRUMENTATION DIAGRAM

0 1" 2"

FILENAME: I-202.dwg
SCALE: NOT TO SCALE

SHEET
I-202

C:\PWWORKING\east01\d1907715\I-202.dwg, 12/16/2022 10:56:05 AM, TLOKEY

PLC

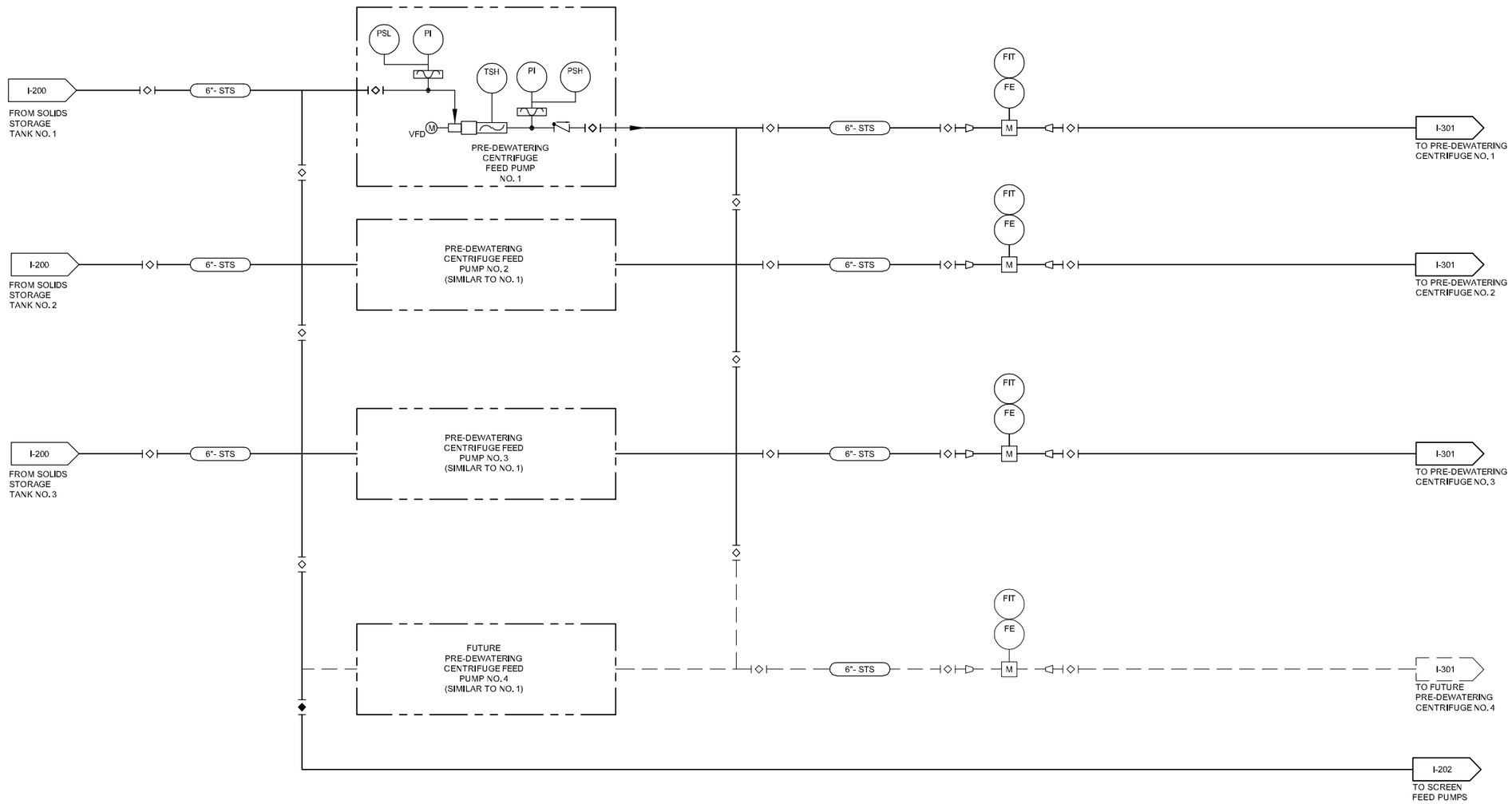

ISSUE	DATE	DESCRIPTION
A	12/2022	FACILITIES PLAN

PROJECT MANAGER	BALCHUNAS, BRIAN
CIVIL	A. CALTON
STRUCTURAL	H. ANTSHEL
ARCHITECTURAL	J. REDDRICK
PROCESS	S. SPALDING
MECHANICAL	C. MOLINE
ELECTRICAL	B. CUNNINGHAM
INSTRUMENTATION	
PROJECT NUMBER	10263882

DRAFT FACILITIES PLAN NOT FOR CONSTRUCTION

ARLINGTON VIRGINIA

ARLINGTON COUNTY WPCP RE-GEN

PRE-DEWATERING CENTRIFUGE FEED PUMPS PROCESS AND INSTRUMENTATION DIAGRAM

0 1" 2"

FILENAME: I-300.dwg

SCALE: NOT TO SCALE

SHEET: **I-300**

C:\PWWORKING\east01\d1907715\I-300.dwg, 12/16/2022 10:56:09 AM, TLOKEY

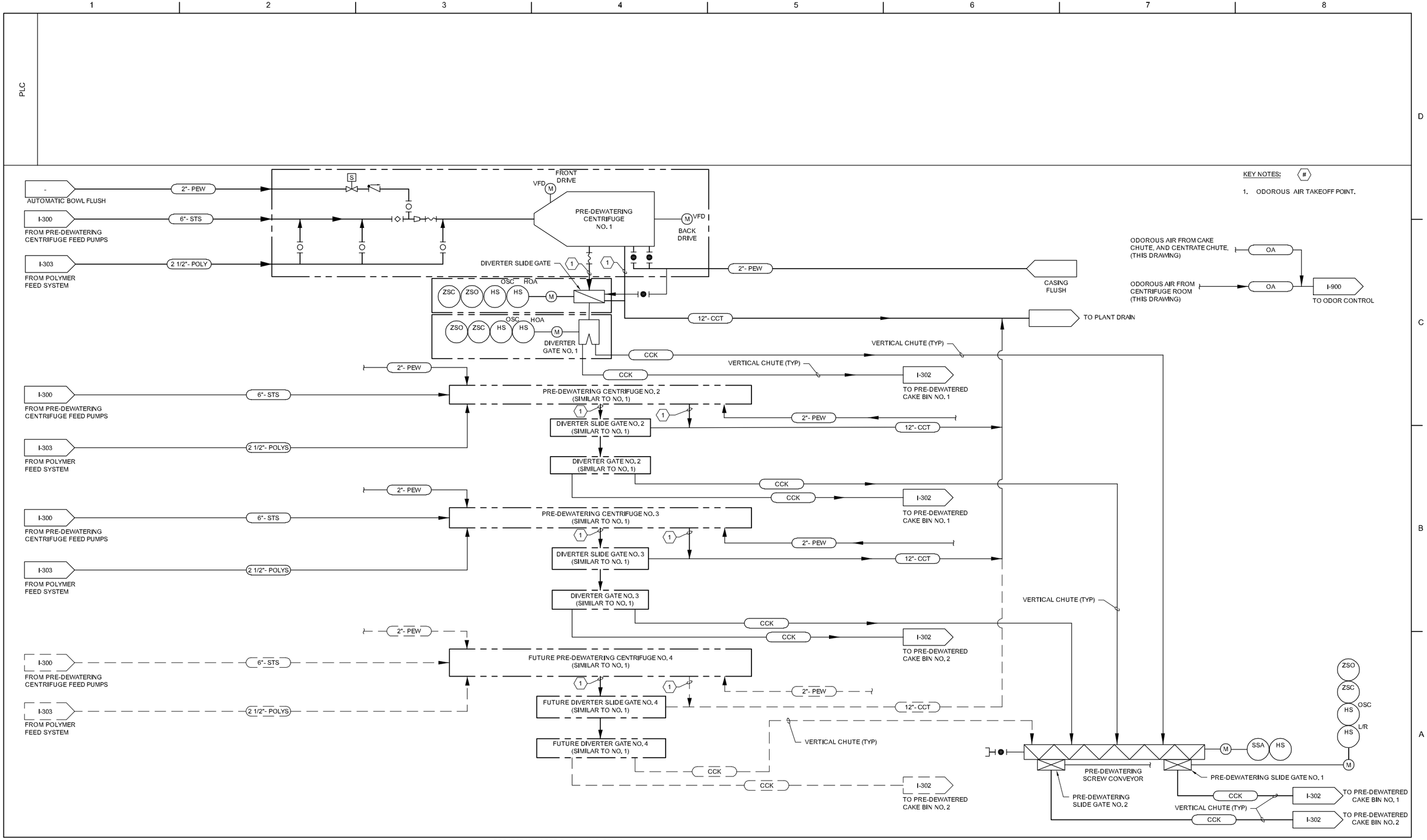

A	12/2022	FACILITIES PLAN
ISSUE	DATE	DESCRIPTION

PROJECT MANAGER	BALCHUNAS, BRIAN
CIVIL	A. CALTON
STRUCTURAL	H. ANTSHEL
ARCHITECTURAL	J. REDDRICK
PROCESS	S. SPALDING
MECHANICAL	C. MOLINE
ELECTRICAL	B. CUNNINGHAM
INSTRUMENTATION	
PROJECT NUMBER	10263882

DRAFT FACILITIES PLAN NOT FOR CONSTRUCTION

ARLINGTON VIRGINIA

ARLINGTON COUNTY WPCP RE-GEN

PRE-DEWATERING CENTRIFUGE PROCESS AND INSTRUMENTATION DIAGRAM

0 1" 2"

FILENAME I-301.dwg

SCALE NOT TO SCALE

SHEET **I-301**

C:\PWWORKING\east01\d1907715\I-301.dwg, 12/16/2022 10:56:12 AM, TLOKEY

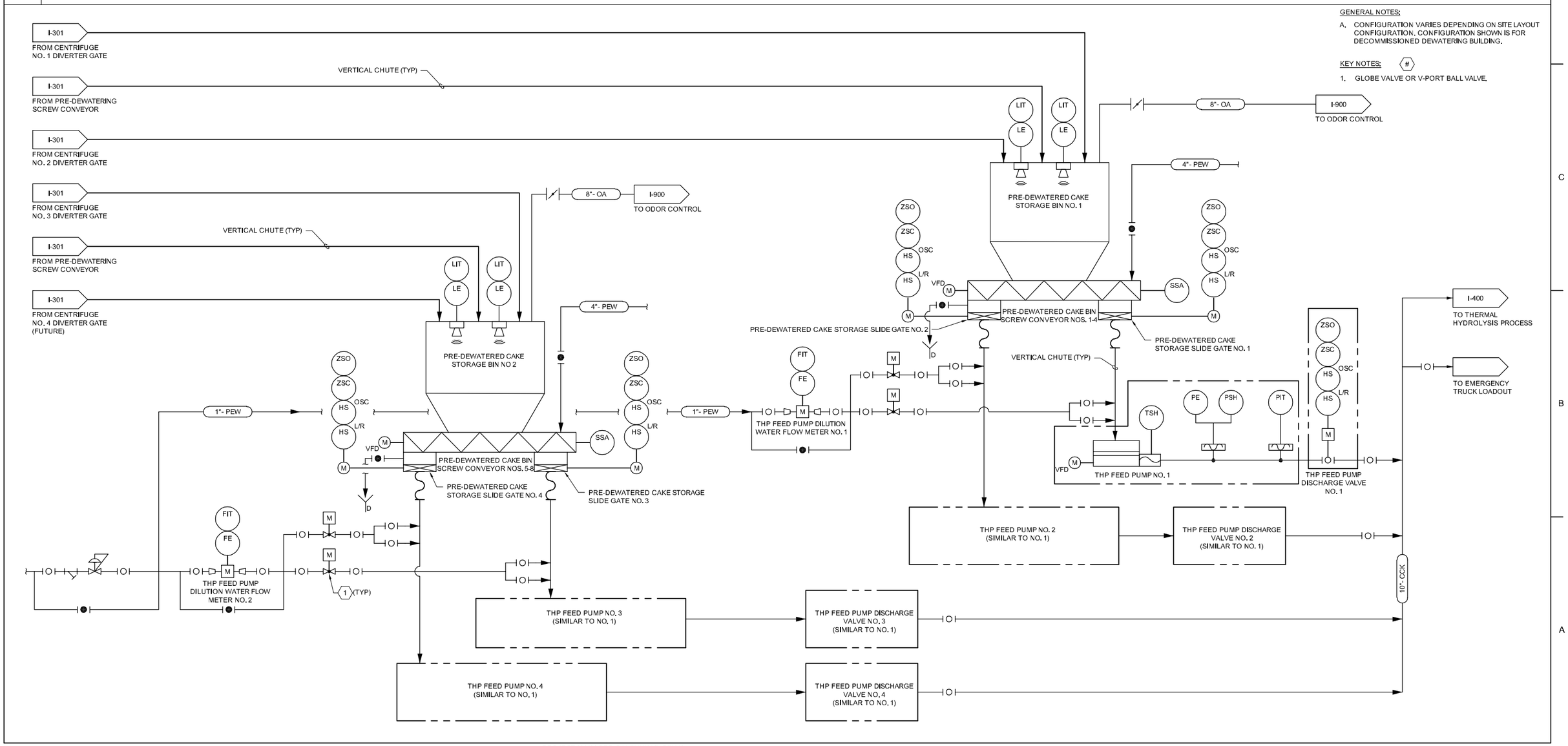

ISSUE	DATE	DESCRIPTION
A	12/2022	FACILITIES PLAN

PROJECT MANAGER	BALCHUNAS, BRIAN
CIVIL	A. CALTON
STRUCTURAL	H. ANTSHEL
ARCHITECTURAL	J. REDDRICK
PROCESS	S. SPALDING
MECHANICAL	C. MOLINE
ELECTRICAL	B. CUNNINGHAM
INSTRUMENTATION	
PROJECT NUMBER	10263882

DRAFT FACILITIES PLAN NOT FOR CONSTRUCTION

ARLINGTON VIRGINIA

ARLINGTON COUNTY WPCP RE-GEN

CAKE BIN AND THP FEED PUMPS PROCESS AND INSTRUMENTATION DIAGRAM

0 1" 2"

FILENAME: I-302.dwg

SCALE: NOT TO SCALE

SHEET: **I-302**

C:\PWWORKING\east01\d1907715\I-302.dwg, 12/16/2022 10:56:16 AM, TLOKEY

PLC

KEY NOTES: #

1. FUTURE POLYMER BLEND UNITS INCLUDE BLEND UNIT NO. 4 FOR FUTURE PRE-DEWATERING CENTRIFUGE NO. 4 PLUS THREE ADDITIONAL BLEND UNITS FOR FUTURE WAS THICKENING.

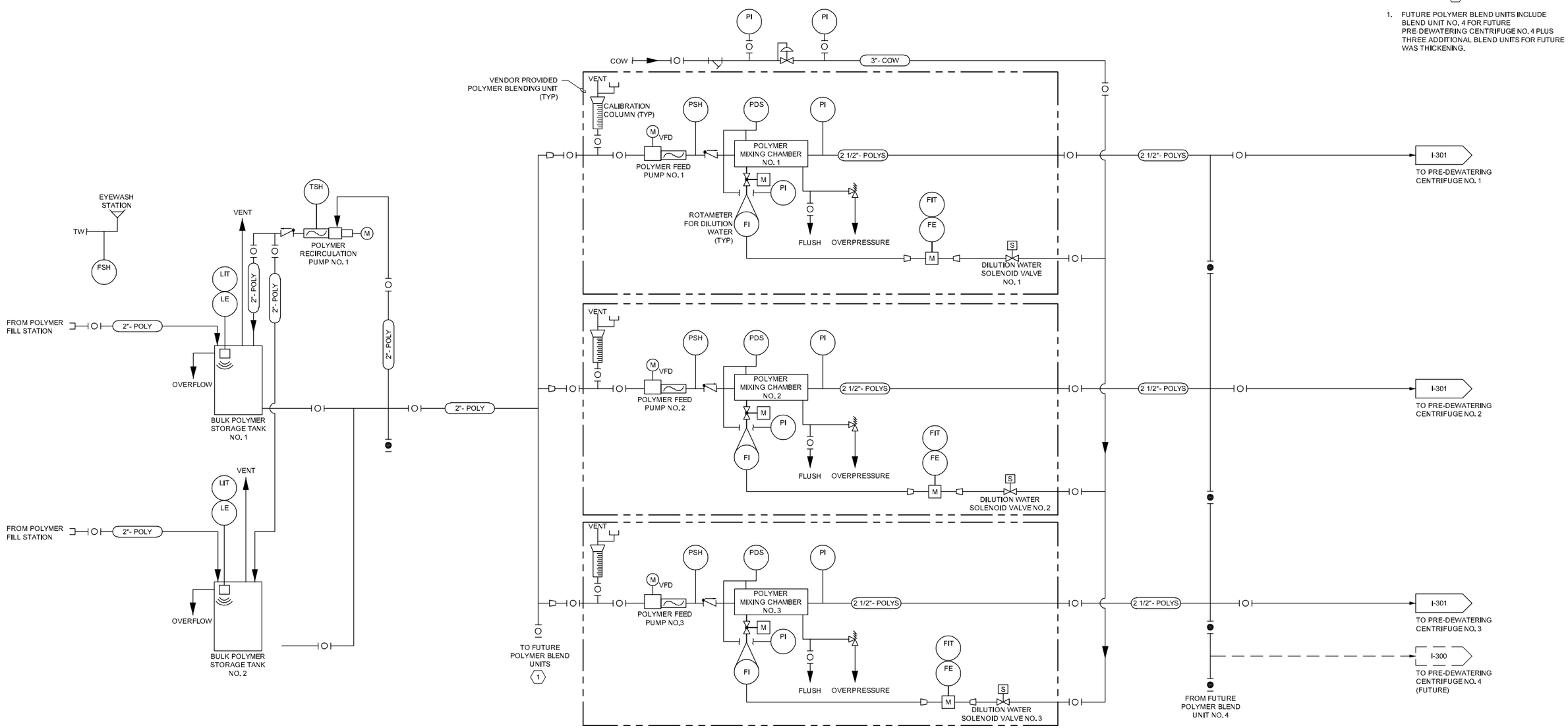

ISSUE	DATE	DESCRIPTION
A	12/2022	FACILITIES PLAN

PROJECT MANAGER	BALCHUNAS, BRIAN
CIVIL	A. CALTON
STRUCTURAL	H. ANTSHEL
ARCHITECTURAL	J. REDDRICK
PROCESS	S. SPALDING
MECHANICAL	C. MOLINE
ELECTRICAL	B. CUNNINGHAM
INSTRUMENTATION	
PROJECT NUMBER	10263882

DRAFT FACILITIES PLAN NOT FOR CONSTRUCTION

ARLINGTON VIRGINIA

ARLINGTON COUNTY WPCP RE-GEN

PRE-DEWATERING POLYMER PROCESS AND INSTRUMENTATION DIAGRAM

0 1" 2"

FILENAME: I-303.dwg

SCALE: NOT TO SCALE

SHEET: **I-303**

C:\PWWORKING\east01\d1907715\I-303.dwg, 12/16/2022 10:56:19 AM, TLOKEY

PLC

GENERAL NOTES:

A. THP SYSTEM HAS NOT BEEN SELECTED. GENERAL PROCESS CONNECTIONS ARE SHOWN.

B. FLUSHING CONNECTIONS ARE REQUIRED AND ARE NOT SHOWN.

ISSUE	DATE	DESCRIPTION
A	12/2022	FACILITIES PLAN

PROJECT MANAGER	BALCHUNAS, BRIAN
CIVIL	A. CALTON
STRUCTURAL	H. ANTSHEL
ARCHITECTURAL	J. REDDRICK
PROCESS	S. SPALDING
MECHANICAL	C. MOLINE
ELECTRICAL	B. CUNNINGHAM
INSTRUMENTATION	
PROJECT NUMBER	10263882

DRAFT FACILITIES PLAN NOT FOR CONSTRUCTION

ARLINGTON VIRGINIA

ARLINGTON COUNTY WPCP RE-GEN

THERMAL HYDROLYSIS PROCESS AND INSTRUMENTATION DIAGRAM

0 1" 2"

FILENAME I-400.dwg

SCALE NOT TO SCALE

SHEET I-400

C:\PWWORKING\east01\d1907715\I-400.dwg, 12/16/2022 10:56:23 AM, TLOKEY

PLC

GENERAL NOTES:

A. FLUSHING CONNECTIONS ARE REQUIRED AND ARE NOT SHOWN.

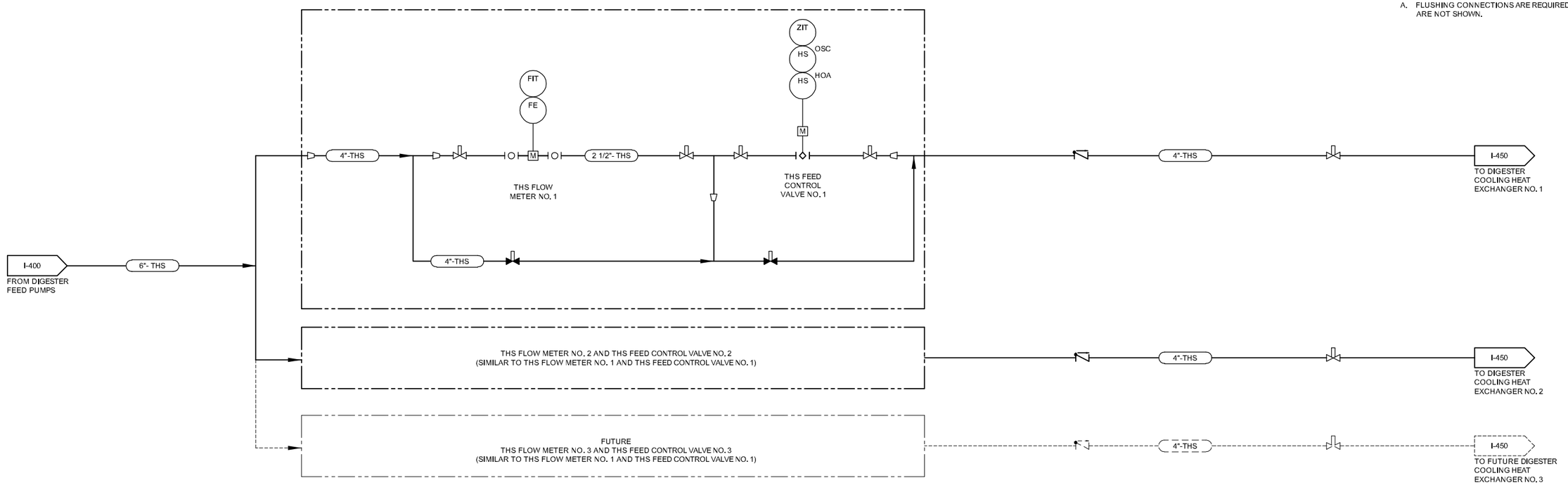

ISSUE	DATE	DESCRIPTION
A	12/2022	FACILITIES PLAN

PROJECT MANAGER	BALCHUNAS, BRIAN
CIVIL	A. CALTON
STRUCTURAL	H. ANTSHEL
ARCHITECTURAL	J. REDDRICK
PROCESS	S. SPALDING
MECHANICAL	C. MOLINE
ELECTRICAL	B. CUNNINGHAM
INSTRUMENTATION	
PROJECT NUMBER	10263882

DRAFT FACILITIES PLAN NOT FOR CONSTRUCTION

ARLINGTON VIRGINIA

ARLINGTON COUNTY WPCP RE-GEN

THS FEED CONTROL VALVE PROCESS AND INSTRUMENTATION DIAGRAM

0 1" 2"

FILENAME I-401.dwg

SCALE NOT TO SCALE

SHEET **I-401**

C:\PWWORKING\east01\d1907715\I-401.dwg, 12/16/2022 10:56:27 AM, TLOKEY

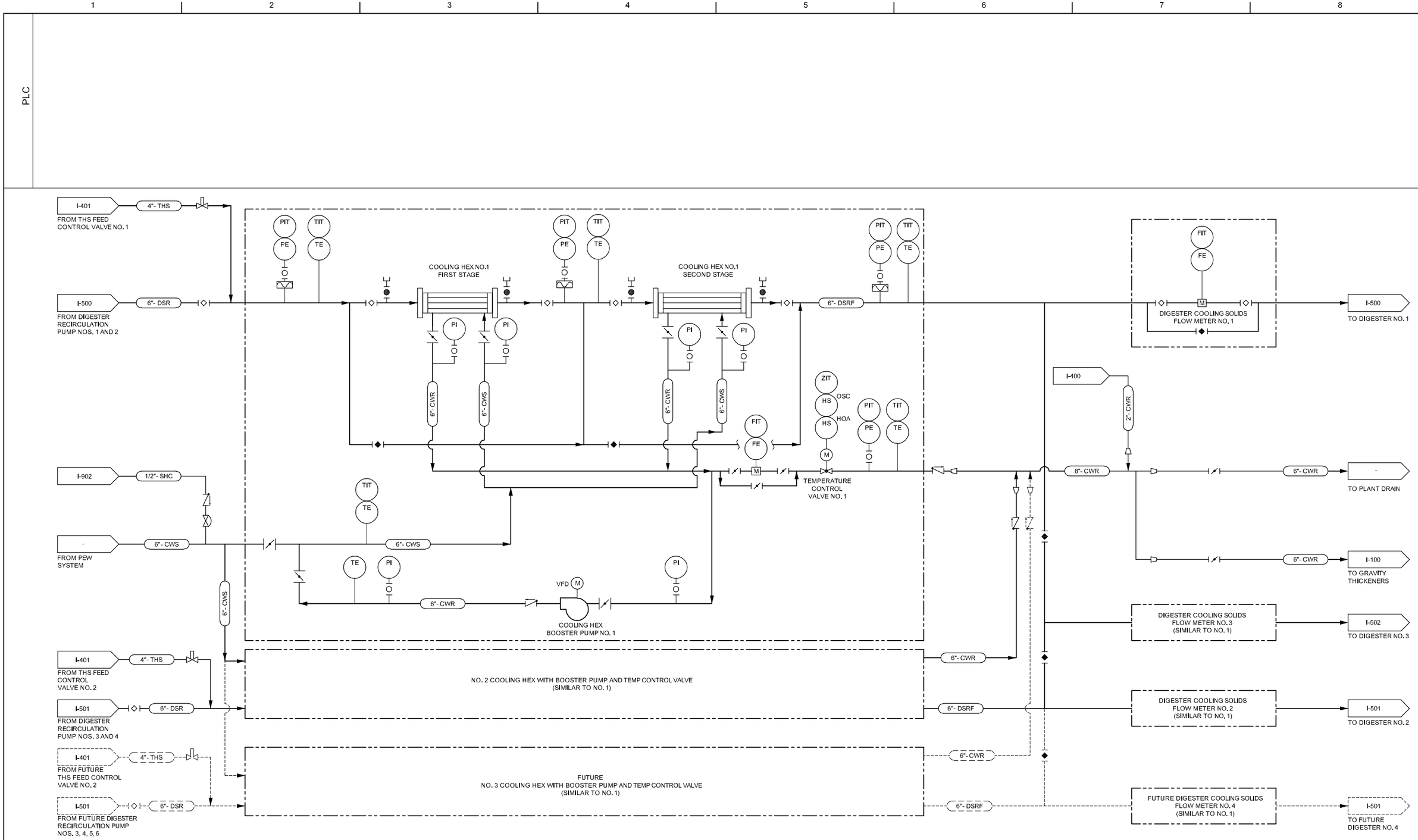

ISSUE	DATE	DESCRIPTION
A	12/2022	FACILITIES PLAN

PROJECT MANAGER	BALCHUNAS, BRIAN
CIVIL	A. CALTON
STRUCTURAL	H. ANTSHEL
ARCHITECTURAL	J. REDDRICK
PROCESS	S. SPALDING
MECHANICAL	C. MOLINE
ELECTRICAL	B. CUNNINGHAM
INSTRUMENTATION	
PROJECT NUMBER	10263882

DRAFT FACILITIES PLAN NOT FOR CONSTRUCTION

ARLINGTON VIRGINIA

ARLINGTON COUNTY WPCP RE-GEN

SOLIDS COOLING SYSTEM PROCESS AND INSTRUMENTATION DIAGRAM

0 1" 2"

FILENAME I-450.dwg

SCALE NOT TO SCALE

SHEET **I-450**

C:\PWWORKING\east01\d1907715\I-450.dwg, 12/16/2022 10:56:31 AM, TLOKEY

PLC

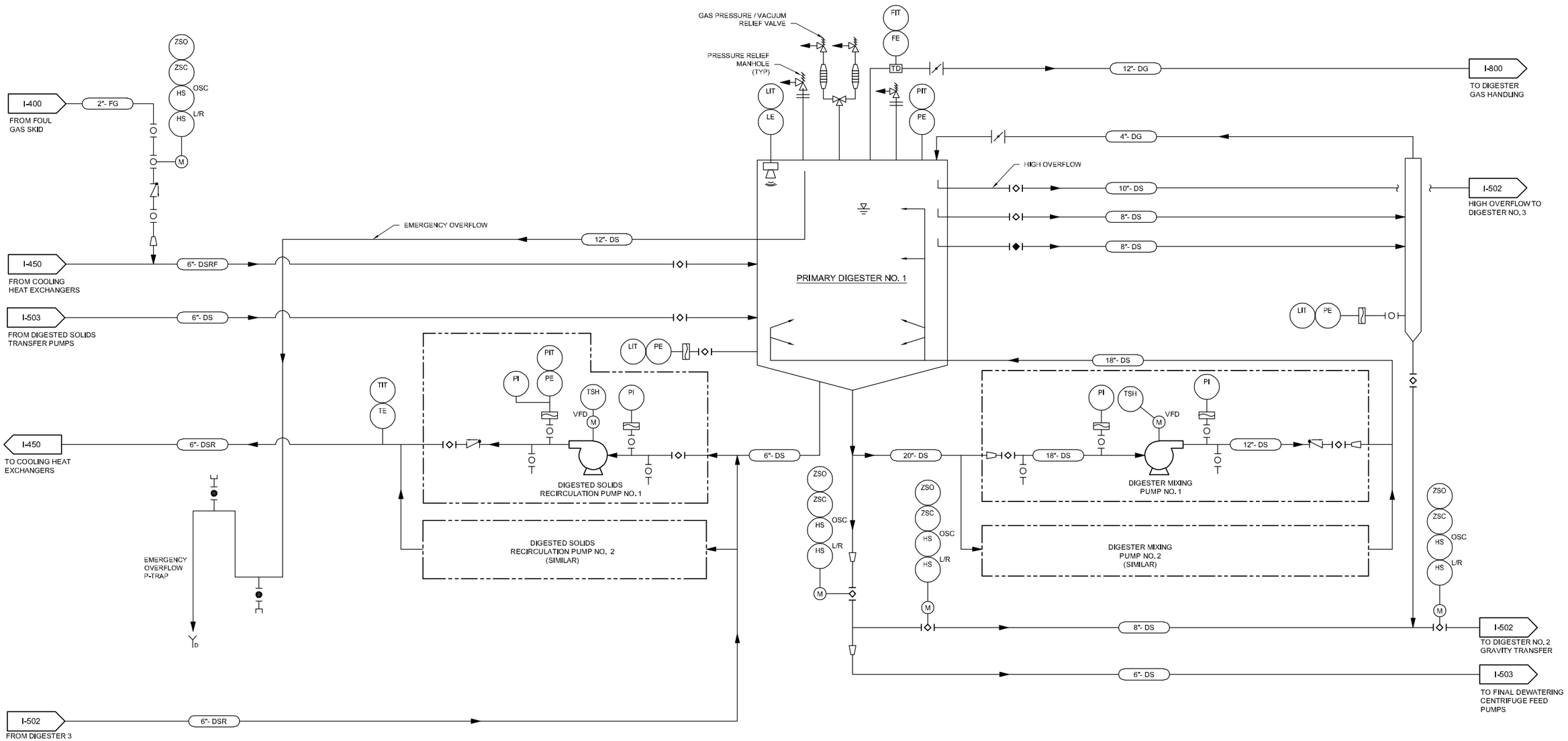

ISSUE	DATE	DESCRIPTION
A	12/2022	FACILITIES PLAN

PROJECT MANAGER	BALCHUNAS, BRIAN
CIVIL	A. CALTON
STRUCTURAL	H. ANTSHEL
ARCHITECTURAL	J. REDDRICK
PROCESS	S. SPALDING
MECHANICAL	C. MOLINE
ELECTRICAL	B. CUNNINGHAM
INSTRUMENTATION	
PROJECT NUMBER	10263882

DRAFT
FACILITIES PLAN
NOT FOR CONSTRUCTION

ARLINGTON VIRGINIA

ARLINGTON COUNTY
WPCP
RE-GEN

PRIMARY DIGESTER NO. 1
PROCESS AND INSTRUMENTATION DIAGRAM

0 1" 2"

FILENAME: I-500.dwg
SCALE: NOT TO SCALE

SHEET
I-500

C:\PWWORKING\east01\d1907715\I-500.dwg, 12/16/2022 10:56:34 AM, TLOKEY

PLC

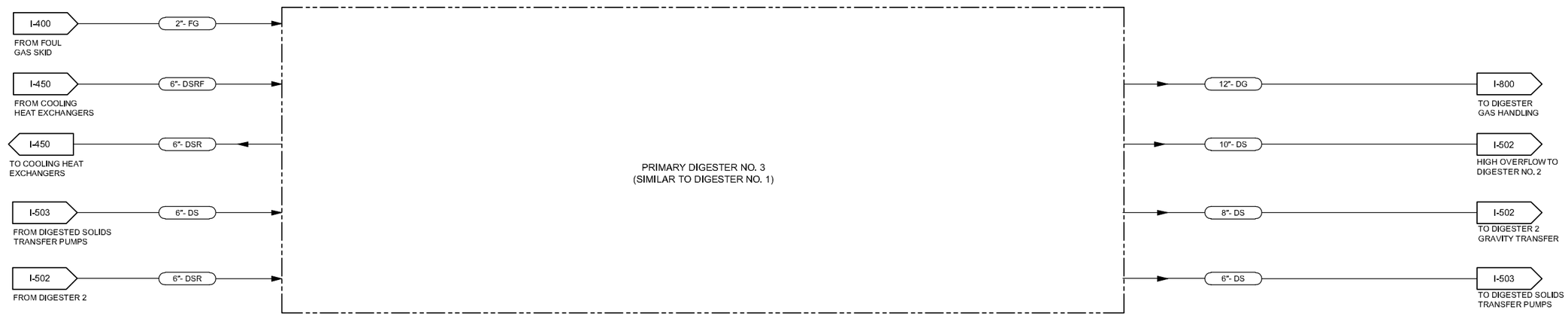

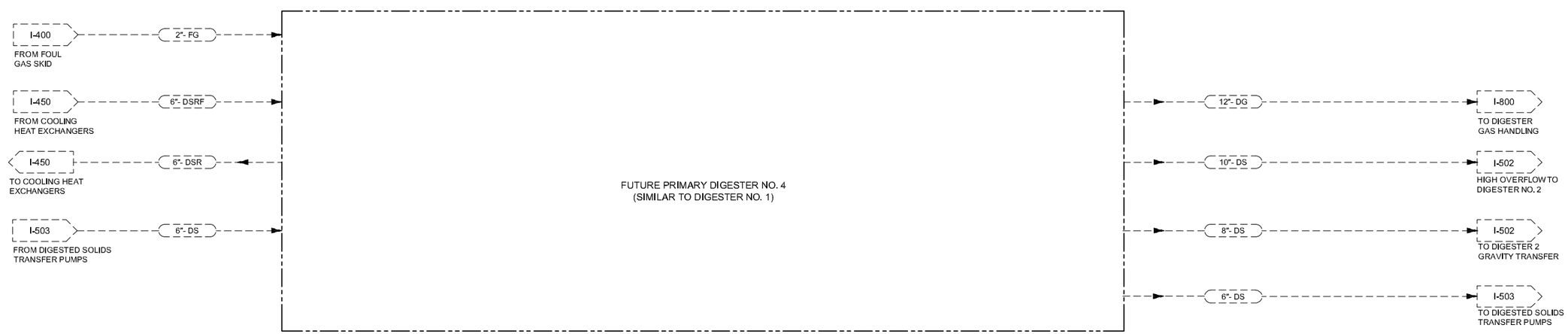

ISSUE	DATE	DESCRIPTION
A	12/2022	FACILITIES PLAN

PROJECT MANAGER	BALCHUNAS, BRIAN
CIVIL	A. CALTON
STRUCTURAL	H. ANTSHEL
ARCHITECTURAL	J. REDDRICK
PROCESS	S. SPALDING
MECHANICAL	C. MOLINE
ELECTRICAL	B. CUNNINGHAM
INSTRUMENTATION	
PROJECT NUMBER	10263882

DRAFT FACILITIES PLAN NOT FOR CONSTRUCTION

ARLINGTON VIRGINIA

ARLINGTON COUNTY WPCP RE-GEN

PRIMARY DIGESTER NO. 3
PROCESS AND INSTRUMENTATION DIAGRAM

0 1" 2"

FILENAME I-501.dwg
SCALE NOT TO SCALE

SHEET **I-501**

C:\PWWORKING\east01\d1907715\I-501.dwg, 12/16/2022 10:56:37 AM, TLOKEY

PLC

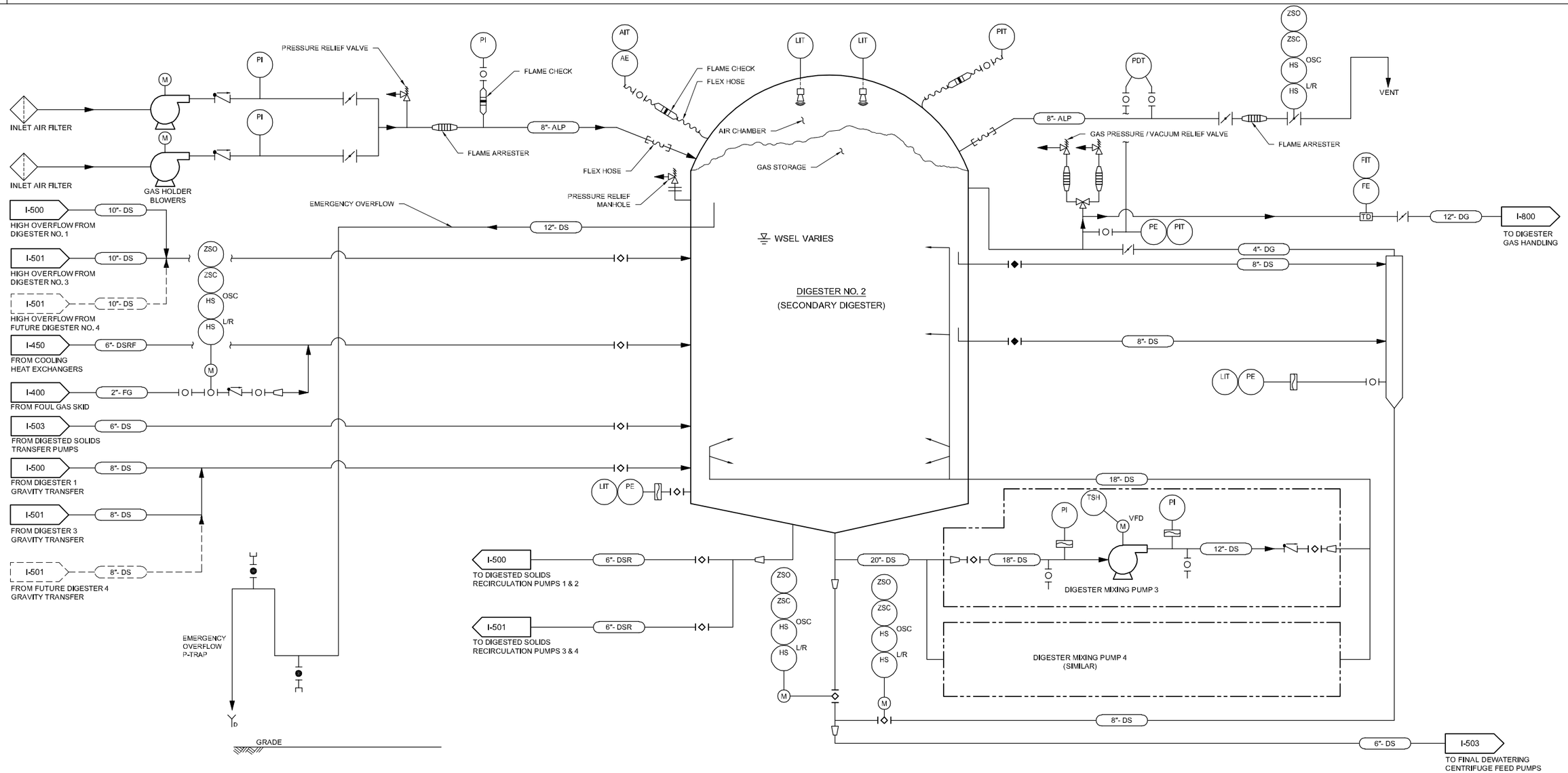

A	12/2022	FACILITIES PLAN
ISSUE	DATE	DESCRIPTION

PROJECT MANAGER	BALCHUNAS, BRIAN
CIVIL	A. CALTON
STRUCTURAL	H. ANTSHEL
ARCHITECTURAL	J. REDDRICK
PROCESS	S. SPALDING
MECHANICAL	C. MOLINE
ELECTRICAL	B. CUNNINGHAM
INSTRUMENTATION	
PROJECT NUMBER	10263882

DRAFT FACILITIES PLAN NOT FOR CONSTRUCTION

ARLINGTON VIRGINIA

ARLINGTON COUNTY WPCP RE-GEN

SECONDARY DIGESTER NO. 2 PROCESS AND INSTRUMENTATION DIAGRAM

0 1" 2"

FILENAME I-502.dwg

SCALE NOT TO SCALE

SHEET **I-502**

C:\PWWORKING\east01\d1907715\I-502.dwg, 12/16/2022 10:56:41 AM, TLOKEY

PLC

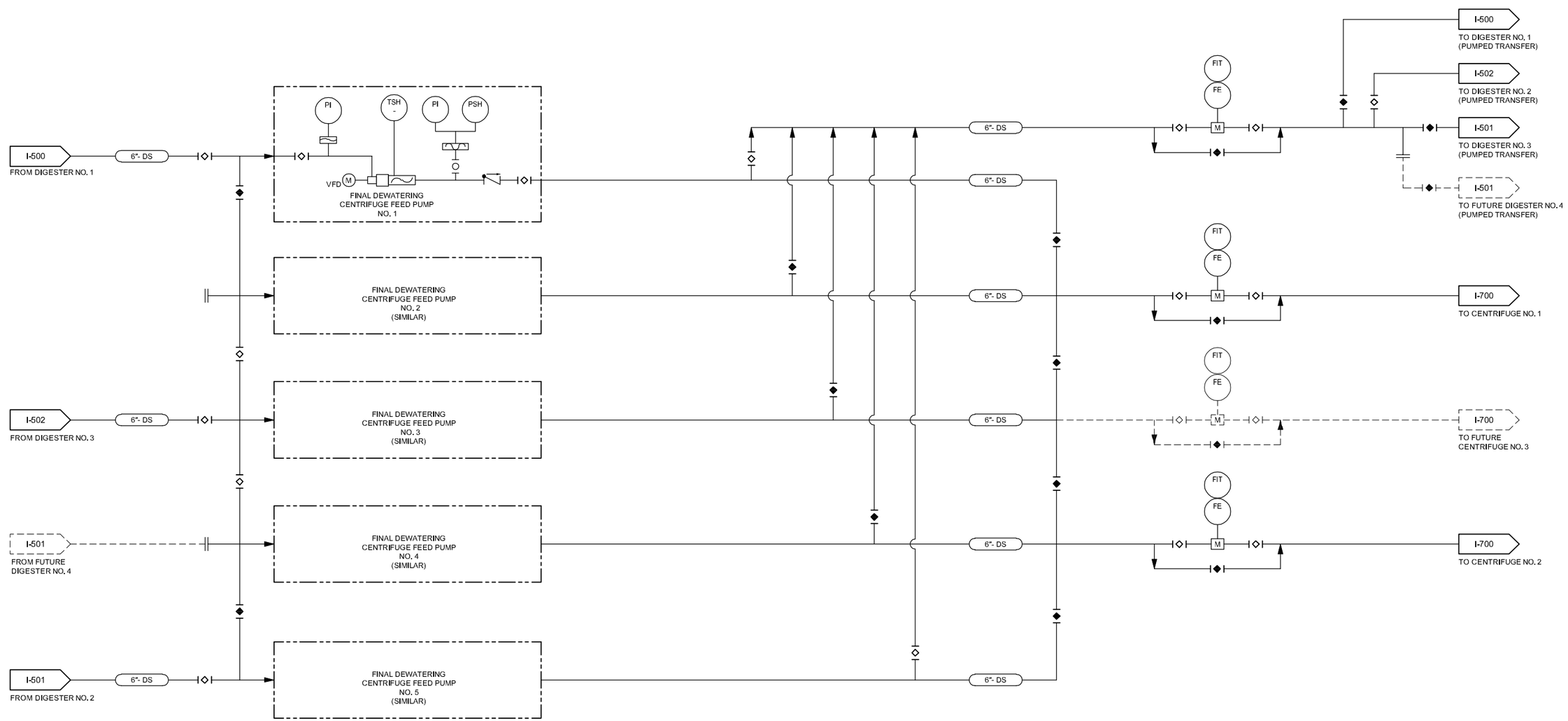

ISSUE	DATE	DESCRIPTION
A	12/2022	FACILITIES PLAN

PROJECT MANAGER	BALCHUNAS, BRIAN
CIVIL	A. CALTON
STRUCTURAL	H. ANTSHEL
ARCHITECTURAL	J. REDDRICK
PROCESS	S. SPALDING
MECHANICAL	C. MOLINE
ELECTRICAL	B. CUNNINGHAM
INSTRUMENTATION	
PROJECT NUMBER	10263882

DRAFT FACILITIES PLAN NOT FOR CONSTRUCTION

ARLINGTON VIRGINIA

ARLINGTON COUNTY WPCP RE-GEN

DIGESTED SOLIDS TRANSFER PUMPS PROCESS AND INSTRUMENTATION DIAGRAM

0 1" 2"

FILENAME: I-503.dwg

SCALE: NOT TO SCALE

SHEET: I-503

C:\PWWORKING\east01\d1907715\I-503.dwg, 12/16/2022 10:56:46 AM, TLOKEY

PLC

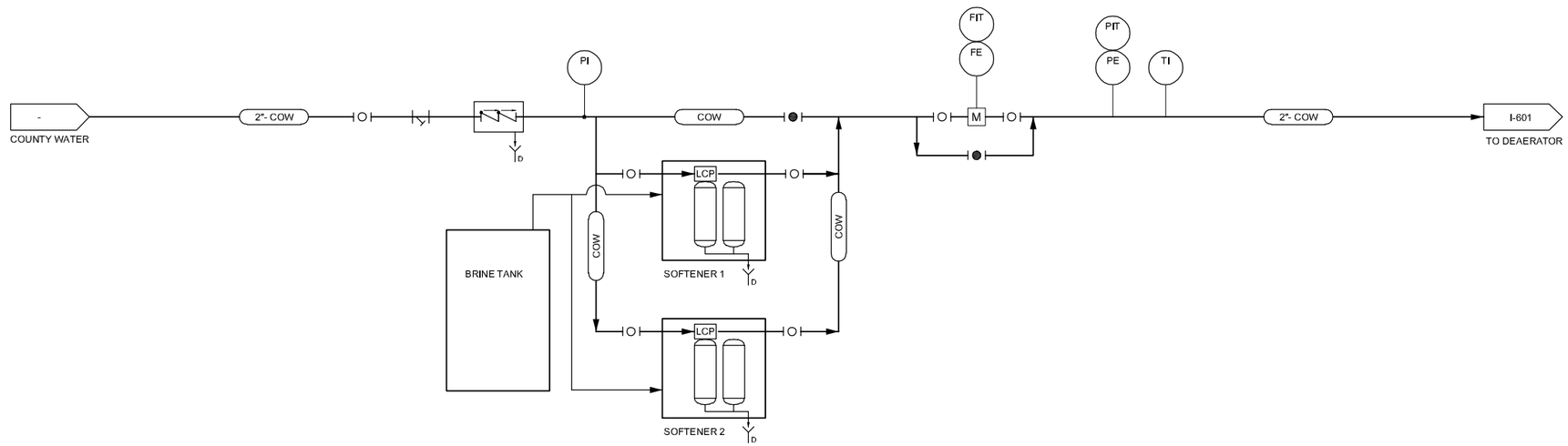

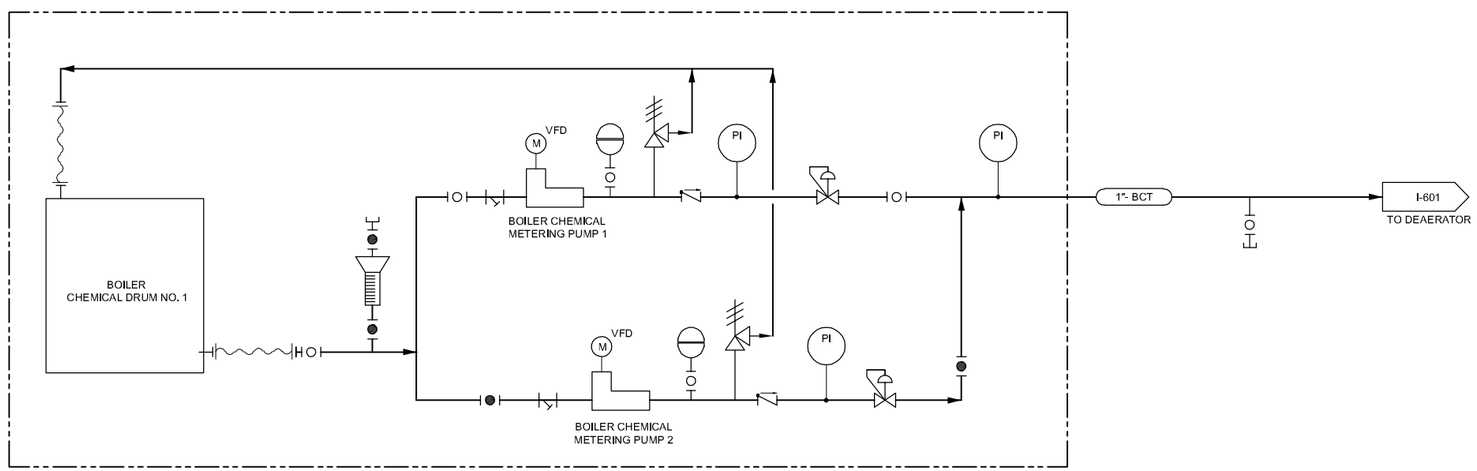

ISSUE	DATE	DESCRIPTION
A	12/2022	FACILITIES PLAN

PROJECT MANAGER	BALCHUNAS, BRIAN
CIVIL	A. CALTON
STRUCTURAL	H. ANTSHEL
ARCHITECTURAL	J. REDDRICK
PROCESS	S. SPALDING
MECHANICAL	C. MOLINE
ELECTRICAL	B. CUNNINGHAM
INSTRUMENTATION	
PROJECT NUMBER	10263882

DRAFT
FACILITIES PLAN
NOT FOR
CONSTRUCTION

ARLINGTON VIRGINIA

ARLINGTON COUNTY
WPCP
RE-GEN

BOILER FEEDWATER PRETREATMENT
AND CHEMICAL FEED
PROCESS AND INSTRUMENTATION DIAGRAM

0 1" 2"

FILENAME I-600.dwg
SCALE NOT TO SCALE
SHEET **I-600**

C:\PWWORKING\east01\d1907715\I-600.dwg, 12/16/2022 10:56:51 AM, TLOKEY

PLC

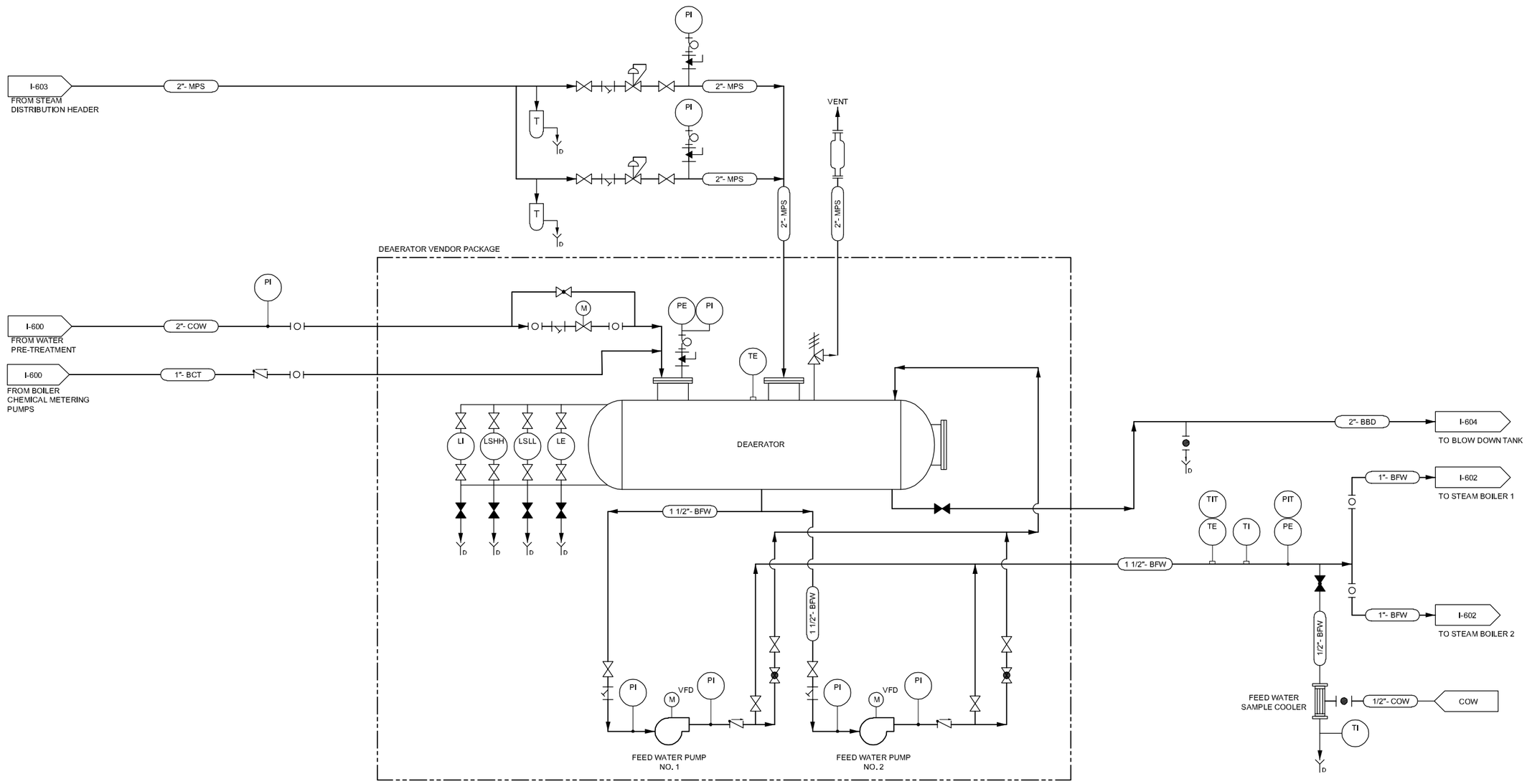

ISSUE	DATE	DESCRIPTION
A	12/2022	FACILITIES PLAN

PROJECT MANAGER	BALCHUNAS, BRIAN
CIVIL	A. CALTON
STRUCTURAL	H. ANTSHEL
ARCHITECTURAL	J. REDDRICK
PROCESS	S. SPALDING
MECHANICAL	C. MOLINE
ELECTRICAL	B. CUNNINGHAM
INSTRUMENTATION	
PROJECT NUMBER	10263882

DRAFT FACILITIES PLAN NOT FOR CONSTRUCTION

ARLINGTON VIRGINIA

ARLINGTON COUNTY WPCP RE-GEN

DEAERATOR PROCESS AND INSTRUMENTATION DIAGRAM

0 1" 2"

FILENAME I-601.dwg

SCALE NOT TO SCALE

SHEET **I-601**

C:\PWWORKING\east01\d1907715\I-601.dwg, 12/16/2022 10:56:54 AM, TLOKEY

PLC

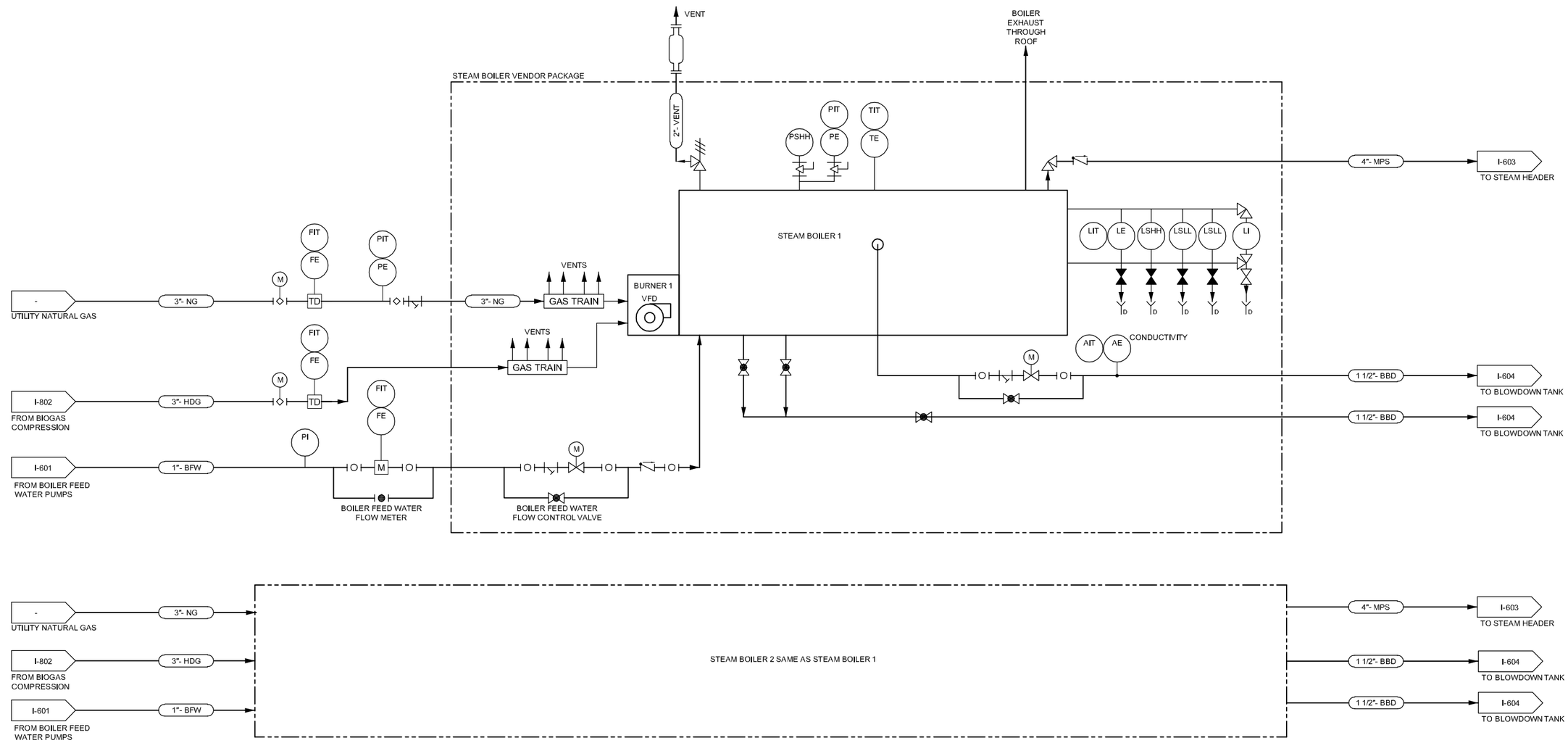

ISSUE	DATE	DESCRIPTION
A	12/2022	FACILITIES PLAN

PROJECT MANAGER	BALCHUNAS, BRIAN
CIVIL	A. CALTON
STRUCTURAL	H. ANTSHEL
ARCHITECTURAL	J. REDDRICK
PROCESS	S. SPALDING
MECHANICAL	C. MOLINE
ELECTRICAL	B. CUNNINGHAM
INSTRUMENTATION	
PROJECT NUMBER	10263882

DRAFT FACILITIES PLAN NOT FOR CONSTRUCTION

ARLINGTON VIRGINIA

ARLINGTON COUNTY WPCP RE-GEN

STEAM BOILERS PROCESS AND INSTRUMENTATION DIAGRAM

0 1" 2"

FILENAME I-602.dwg

SCALE NOT TO SCALE

SHEET **I-602**

C:\PWWORKING\east01\d1907715\I-602.dwg, 12/16/2022 10:56:58 AM, TLOKEY

PLC

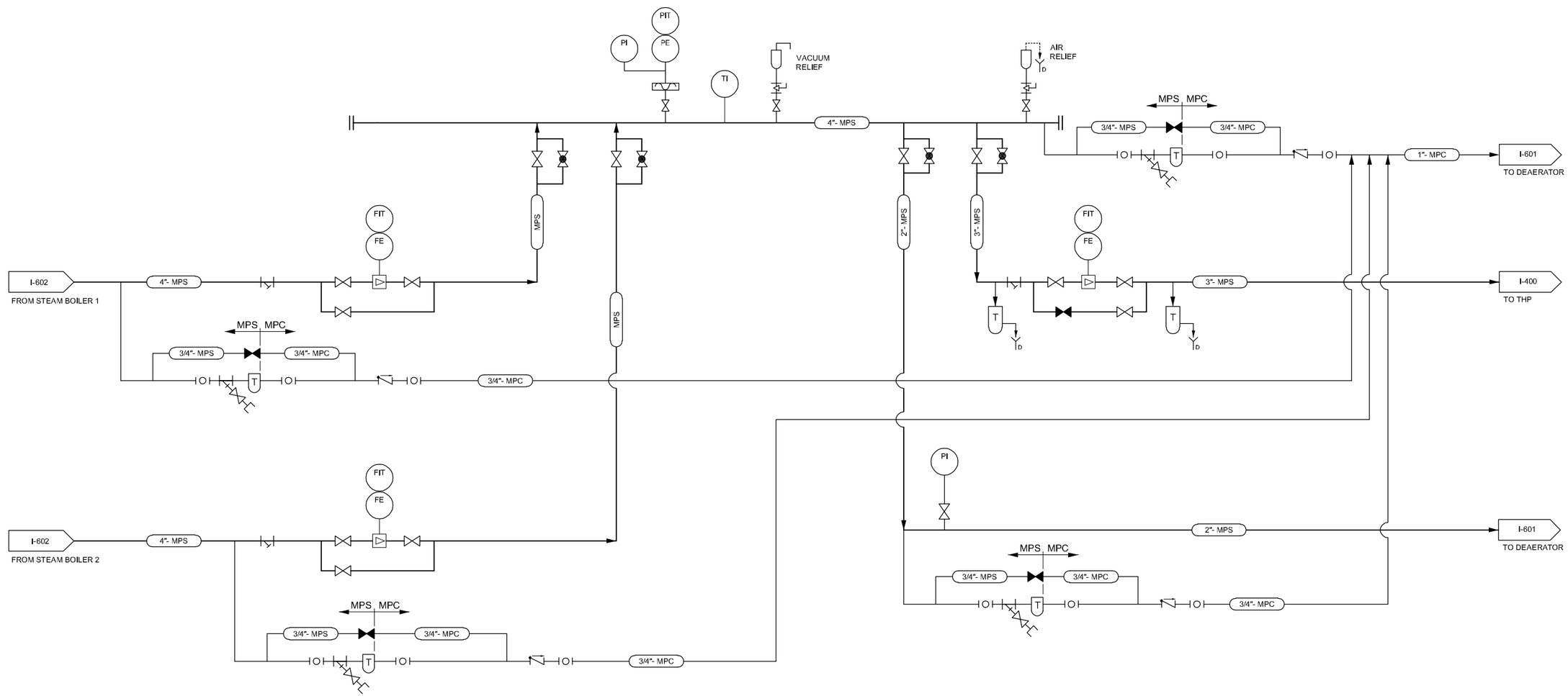

ISSUE	DATE	DESCRIPTION
A	12/2022	FACILITIES PLAN

PROJECT MANAGER	BALCHUNAS, BRIAN
CIVIL	A. CALTON
STRUCTURAL	H. ANTSHEL
ARCHITECTURAL	J. REDDRICK
PROCESS	S. SPALDING
MECHANICAL	C. MOLINE
ELECTRICAL	B. CUNNINGHAM
INSTRUMENTATION	
PROJECT NUMBER	10263882

DRAFT FACILITIES PLAN NOT FOR CONSTRUCTION

ARLINGTON VIRGINIA

ARLINGTON COUNTY WPCP RE-GEN

STEAM DISTRIBUTION PROCESS AND INSTRUMENTATION DIAGRAM

0 1" 2"

FILENAME: I-603.dwg

SCALE: NOT TO SCALE

SHEET: **I-603**

C:\PWWORKING\east01\d1907715\I-603.dwg, 12/16/2022 10:57:02 AM, TLOKEY

PLC

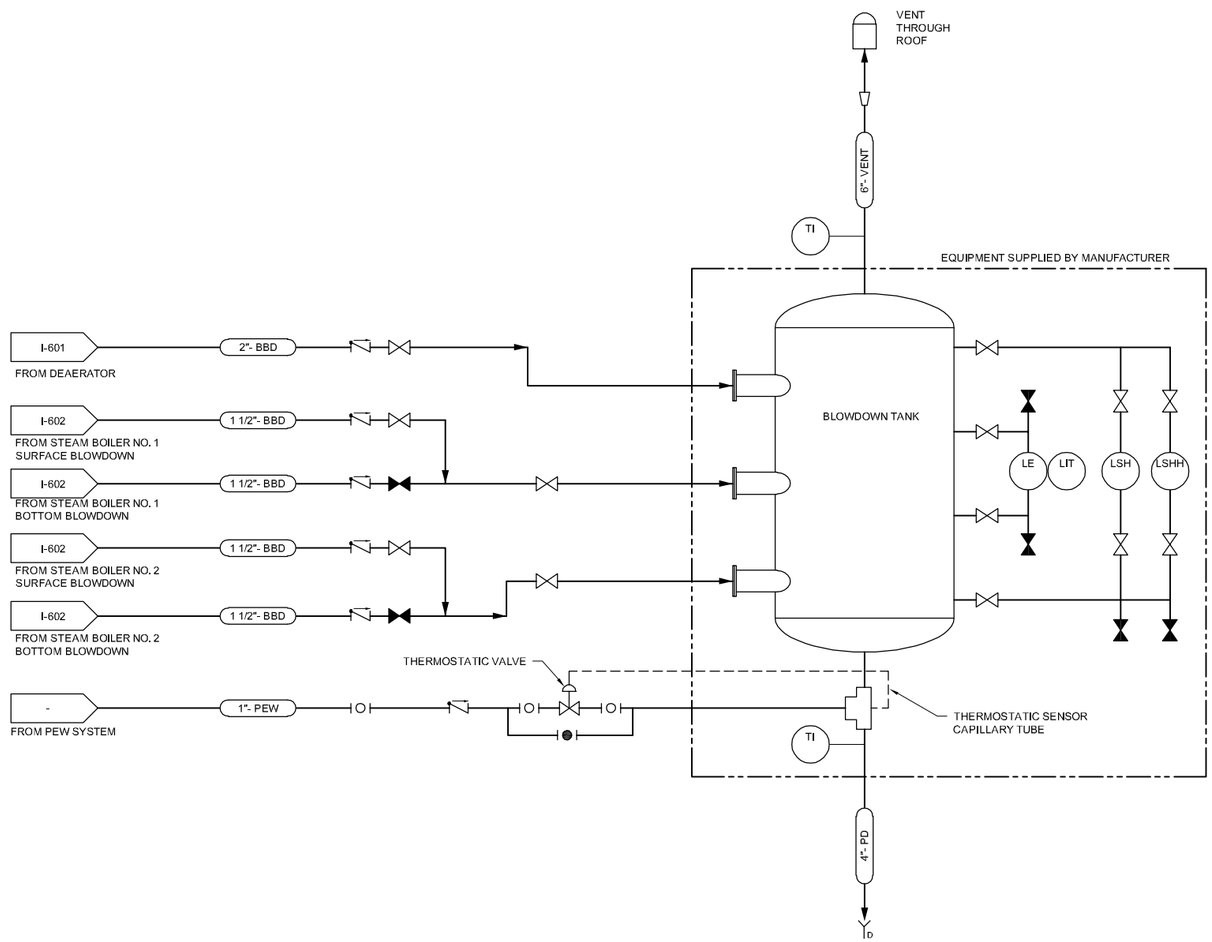

ISSUE	DATE	DESCRIPTION
A	12/2022	FACILITIES PLAN

PROJECT MANAGER	BALCHUNAS, BRIAN
CIVIL	A. CALTON
STRUCTURAL	H. ANTSHEL
ARCHITECTURAL	J. REDDRICK
PROCESS	S. SPALDING
MECHANICAL	C. MOLINE
ELECTRICAL	B. CUNNINGHAM
INSTRUMENTATION	
PROJECT NUMBER	10263882

DRAFT
FACILITIES PLAN
NOT FOR
CONSTRUCTION

ARLINGTON
VIRGINIA

ARLINGTON COUNTY
WPCP
RE-GEN

BOILER BLOWDOWN SEPARATOR
PROCESS AND INSTRUMENTATION DIAGRAM

0 1" 2"

FILENAME I-604.dwg
SCALE NOT TO SCALE

SHEET
I-604

C:\PWWORKING\east01\d1907715\I-604.dwg, 12/16/2022 10:57:05 AM, TLOKEY

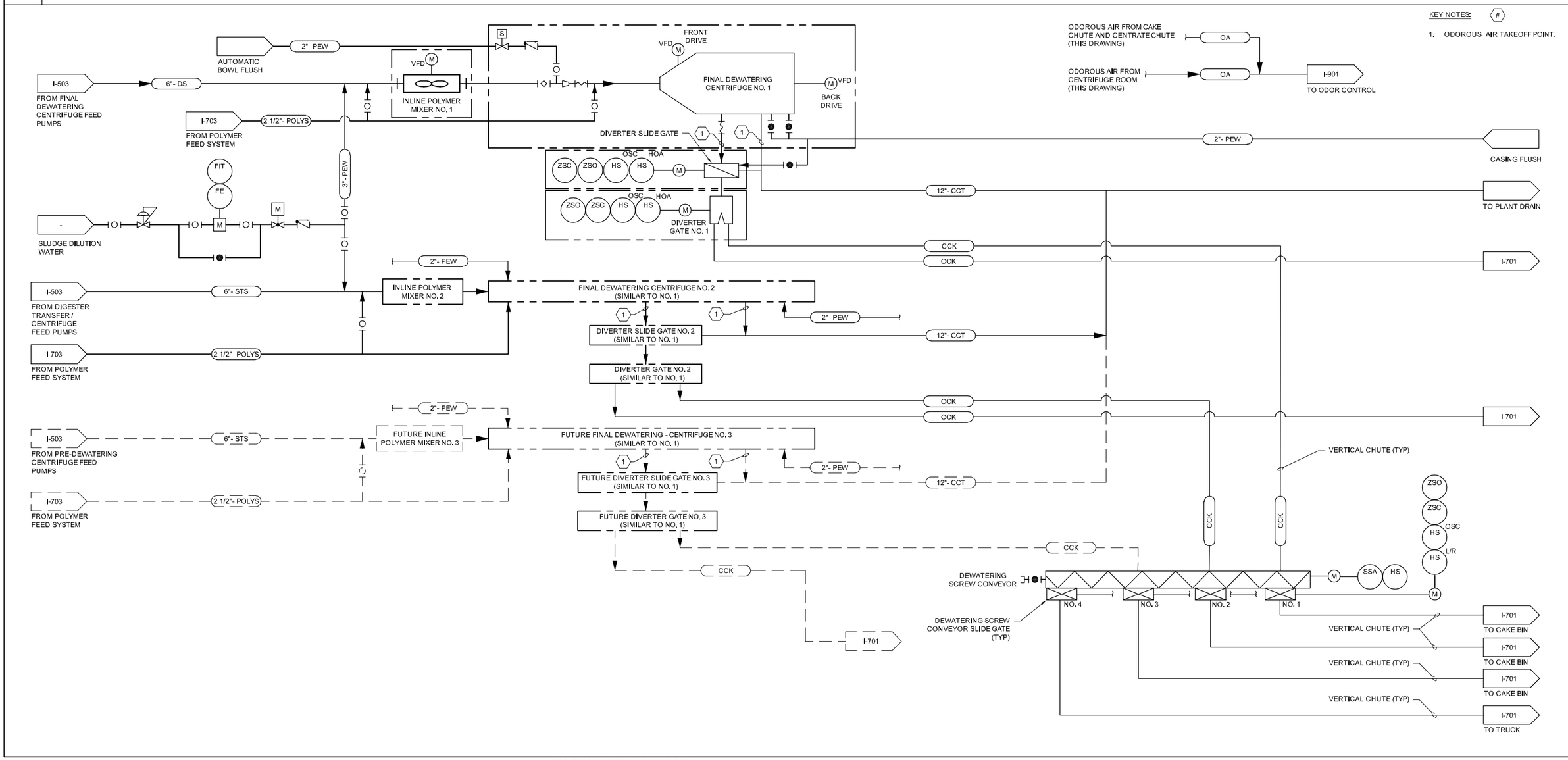

A	12/2022	FACILITIES PLAN
ISSUE	DATE	DESCRIPTION

PROJECT MANAGER	BALCHUNAS, BRIAN
CIVIL	A. CALTON
STRUCTURAL	H. ANTSHEL
ARCHITECTURAL	J. REDDRICK
PROCESS	S. SPALDING
MECHANICAL	C. MOLINE
ELECTRICAL	B. CUNNINGHAM
INSTRUMENTATION	
PROJECT NUMBER	10263882

DRAFT FACILITIES PLAN NOT FOR CONSTRUCTION

ARLINGTON VIRGINIA

ARLINGTON COUNTY WPCP RE-GEN

FINAL DEWATERING CENTRIFUGE PROCESS AND INSTRUMENTATION DIAGRAM

0 1" 2"

FILENAME I-700.dwg

SCALE NOT TO SCALE

SHEET **I-700**

C:\PWWORKING\east01\d1907715\I-700.dwg, 12/16/2022 10:57:10 AM, TLOKEY

PLC

KEY NOTES: #

1. DEWATERED CAKE BIN SCREW CONVEYOR NOS. 1-6.

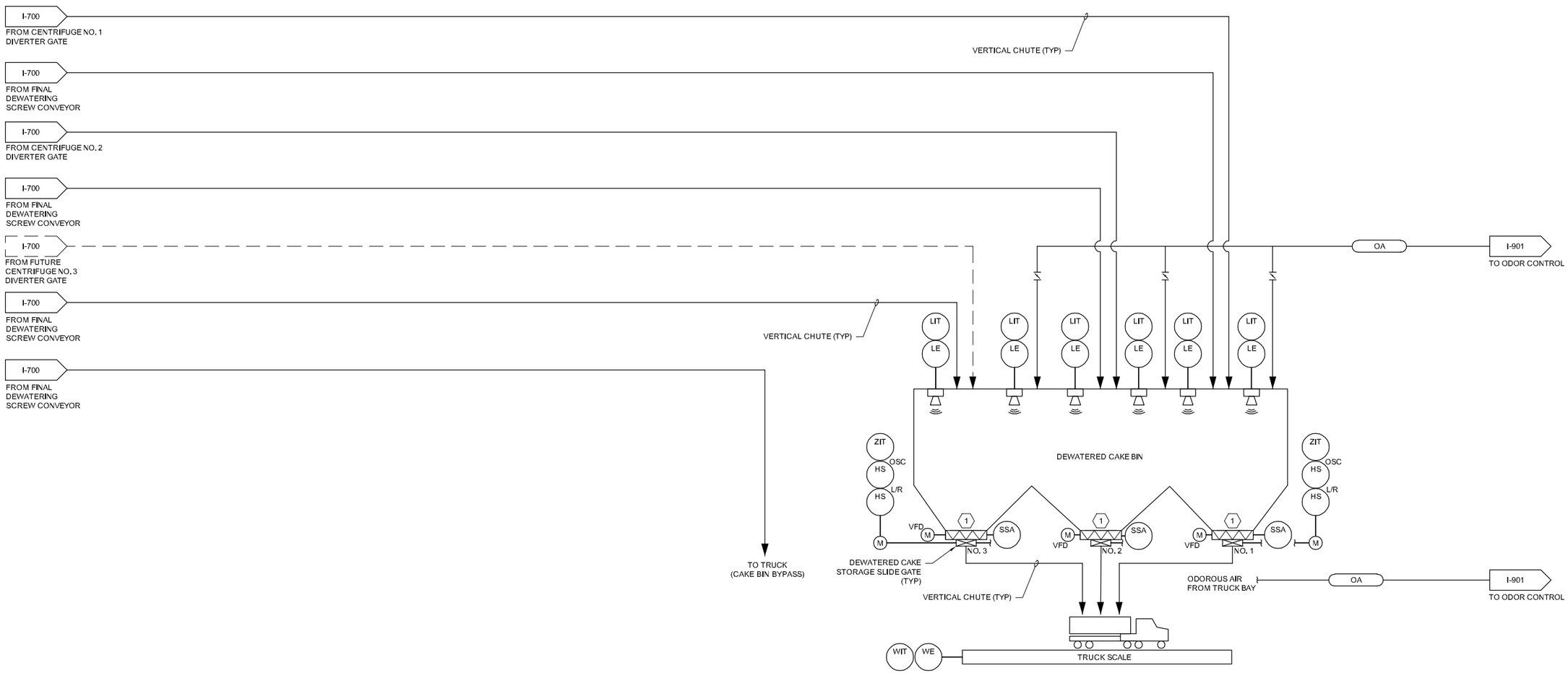

ISSUE	DATE	DESCRIPTION
A	12/2022	FACILITIES PLAN

PROJECT MANAGER	BALCHUNAS, BRIAN
CIVIL	A. CALTON
STRUCTURAL	H. ANTSHEL
ARCHITECTURAL	J. REDDRICK
PROCESS	S. SPALDING
MECHANICAL	C. MOLINE
ELECTRICAL	B. CUNNINGHAM
INSTRUMENTATION	
PROJECT NUMBER	10263882

DRAFT FACILITIES PLAN NOT FOR CONSTRUCTION

ARLINGTON VIRGINIA

ARLINGTON COUNTY WPCP RE-GEN

FINAL DEWATERING CAKE BIN PROCESS AND INSTRUMENTATION DIAGRAM

0 1" 2"

FILENAME I-701.dwg

SCALE NOT TO SCALE

SHEET **I-701**

C:\PWWORKING\east01\d1907715\I-701.dwg, 12/16/2022 10:57:16 AM, TLOKEY

PLC

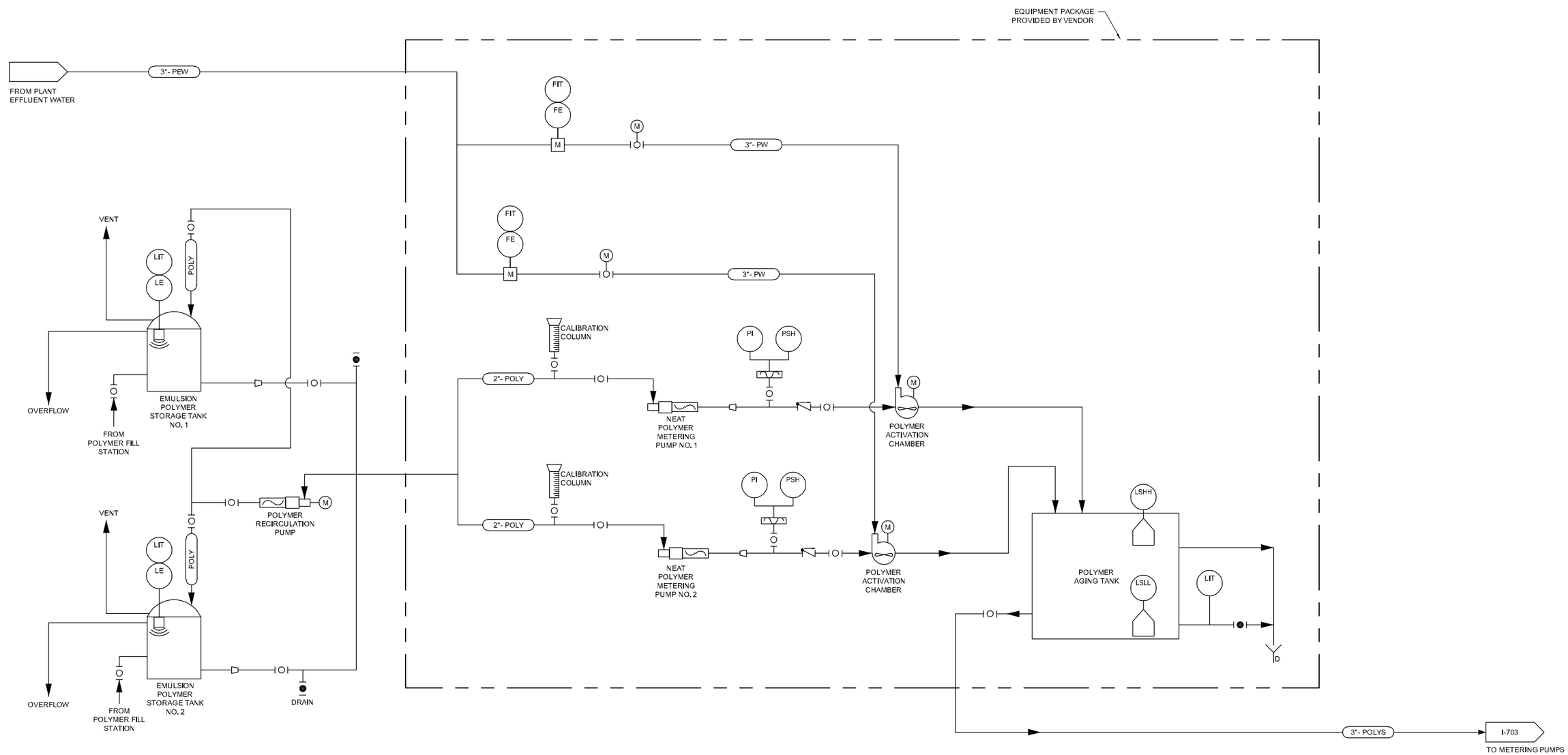

A	12/2022	FACILITIES PLAN
ISSUE	DATE	DESCRIPTION

PROJECT MANAGER	BALCHUNAS, BRIAN
CIVIL	A. CALTON
STRUCTURAL	H. ANTSHEL
ARCHITECTURAL	J. REDDRICK
PROCESS	S. SPALDING
MECHANICAL	C. MOLINE
ELECTRICAL	B. CUNNINGHAM
INSTRUMENTATION	
PROJECT NUMBER	10263882

DRAFT FACILITIES PLAN NOT FOR CONSTRUCTION

ARLINGTON VIRGINIA

ARLINGTON COUNTY WPCP RE-GEN

FINAL DEWATERING POLYMER PROCESS AND INSTRUMENTATION DIAGRAM 1

0 1" 2"

FILENAME I-702.dwg

SCALE NOT TO SCALE

SHEET **I-702**

C:\PWWORKING\east01\d1907715\I-702.dwg, 12/16/2022 10:57:21 AM, TLOKEY

PLC

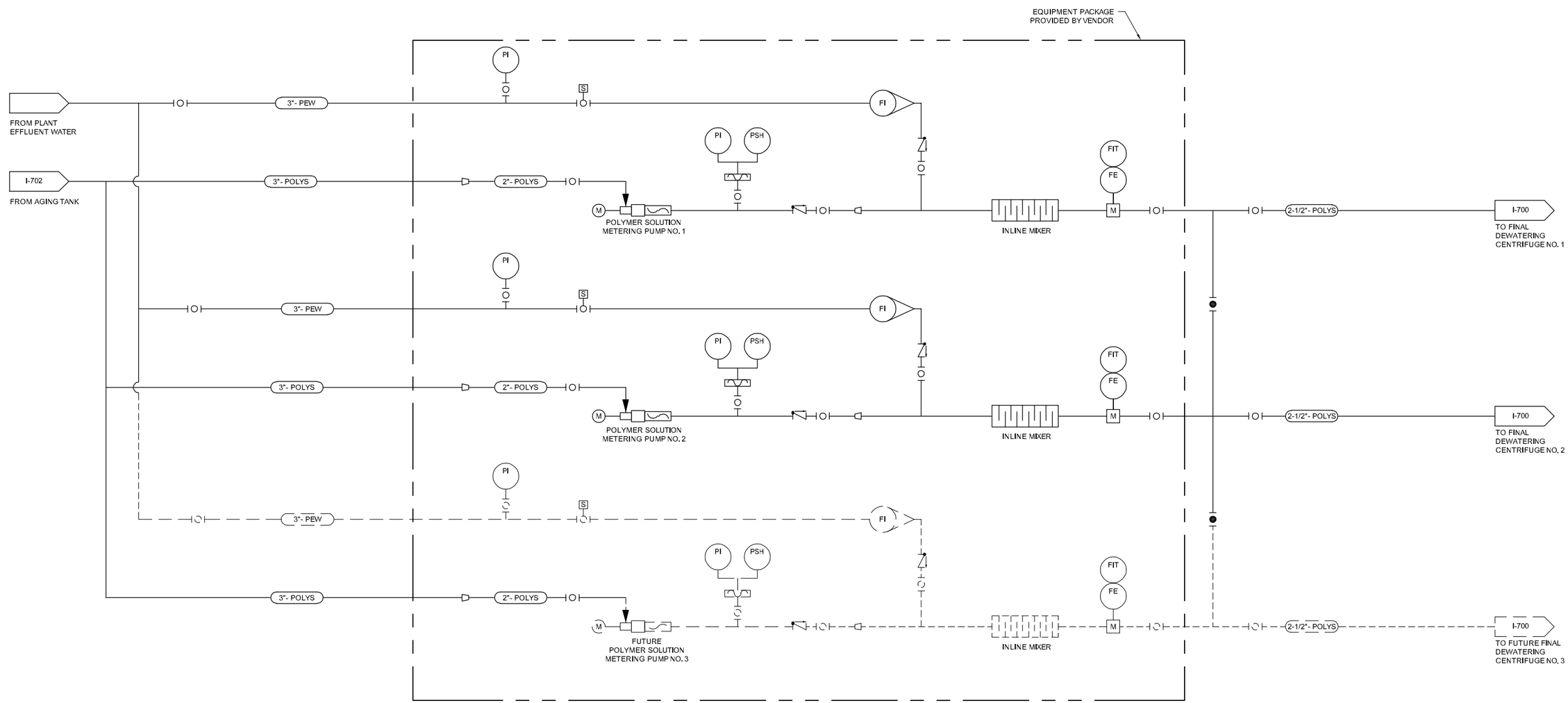

ISSUE	DATE	DESCRIPTION
A	12/2022	FACILITIES PLAN

PROJECT MANAGER	BALCHUNAS, BRIAN
CIVIL	A. CALTON
STRUCTURAL	H. ANTSHEL
ARCHITECTURAL	J. REDDRICK
PROCESS	S. SPALDING
MECHANICAL	C. MOLINE
ELECTRICAL	B. CUNNINGHAM
INSTRUMENTATION	
PROJECT NUMBER	10263882

DRAFT FACILITIES PLAN NOT FOR CONSTRUCTION

ARLINGTON VIRGINIA

ARLINGTON COUNTY WPCP RE-GEN

FINAL DEWATERING POLYMER PROCESS AND INSTRUMENTATION DIAGRAM 2

0 1" 2"

FILENAME: I-703.dwg

SCALE: NOT TO SCALE

SHEET: **I-703**

C:\PWWORKING\east01\d1907715\I-703.dwg, 12/16/2022 10:57:27 AM, TLOKEY

PLC

KEY NOTES: (#)

1. DRIP TRAPS REQUIRED AT ALL DIGESTER GAS LOW POINTS.

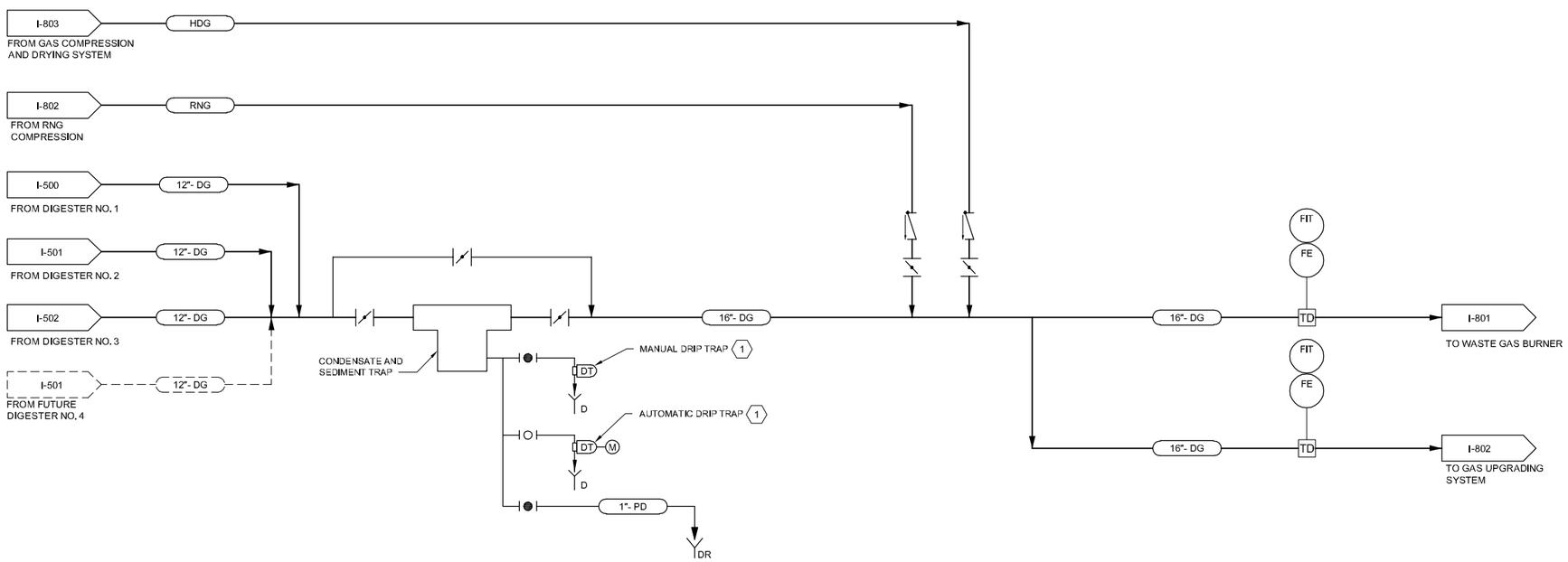

ISSUE	DATE	DESCRIPTION
A	12/2022	FACILITIES PLAN

PROJECT MANAGER	BALCHUNAS, BRIAN
CIVIL	A. CALTON
STRUCTURAL	H. ANTSHEL
ARCHITECTURAL	J. REDDRICK
PROCESS	S. SPALDING
MECHANICAL	C. MOLINE
ELECTRICAL	B. CUNNINGHAM
INSTRUMENTATION	
PROJECT NUMBER	10263882

DRAFT FACILITIES PLAN NOT FOR CONSTRUCTION

ARLINGTON VIRGINIA

ARLINGTON COUNTY WPCP RE-GEN

DIGESTER GAS DISTRIBUTION PROCESS AND INSTRUMENTATION DIAGRAM

0 1" 2"

FILENAME I-800.dwg

SCALE NOT TO SCALE

SHEET **I-800**

C:\PWWORKING\east01\d1907715\I-800.dwg, 12/16/2022 10:57:31 AM, TLOKEY

PLC

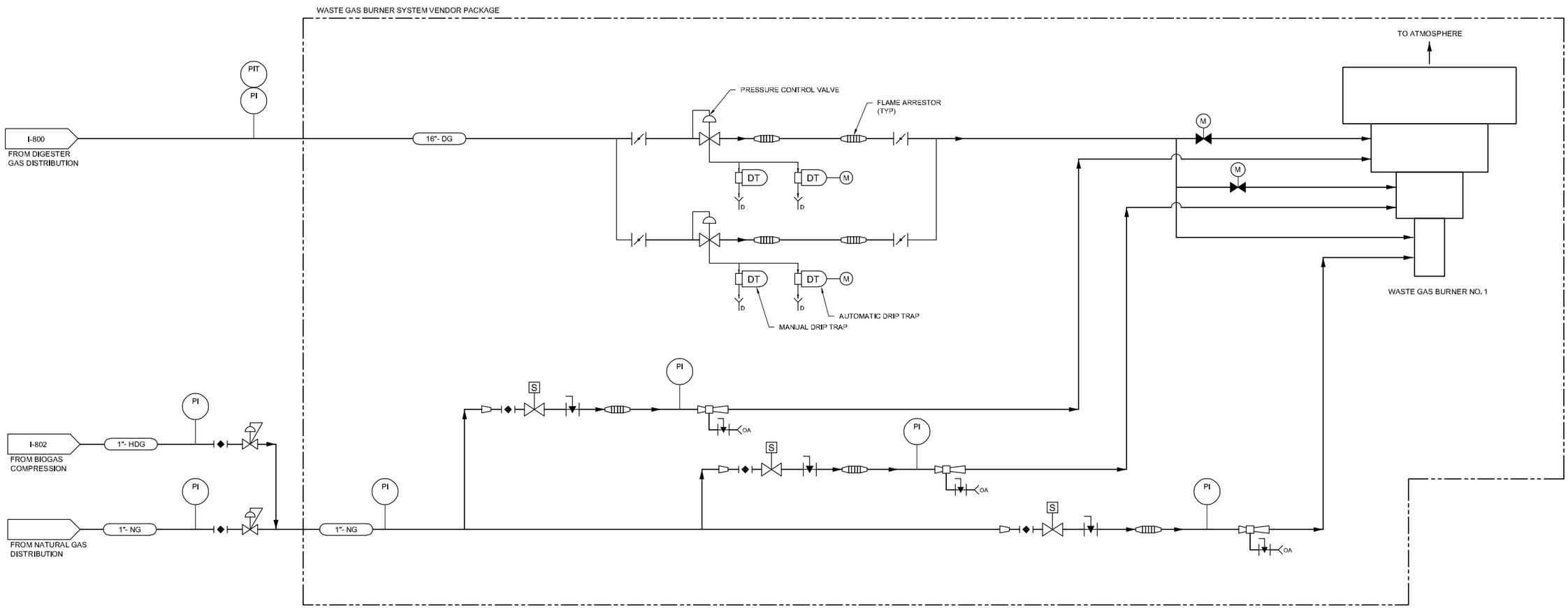

ISSUE	DATE	DESCRIPTION
A	12/2022	FACILITIES PLAN

PROJECT MANAGER	BALCHUNAS, BRIAN
CIVIL	A. CALTON
STRUCTURAL	H. ANTSHEL
ARCHITECTURAL	J. REDDRICK
PROCESS	S. SPALDING
MECHANICAL	C. MOLINE
ELECTRICAL	B. CUNNINGHAM
INSTRUMENTATION	
PROJECT NUMBER	10263882

DRAFT FACILITIES PLAN NOT FOR CONSTRUCTION

ARLINGTON VIRGINIA

ARLINGTON COUNTY WPCP RE-GEN

WASTE GAS BURNER PROCESS AND INSTRUMENTATION DIAGRAM

0 1" 2"

FILENAME: I-801.dwg

SCALE: NOT TO SCALE

SHEET: **I-801**

C:\PWWORKING\east01\d1907715\I-801.dwg, 12/16/2022 10:57:35 AM, TLOKEY

PLC

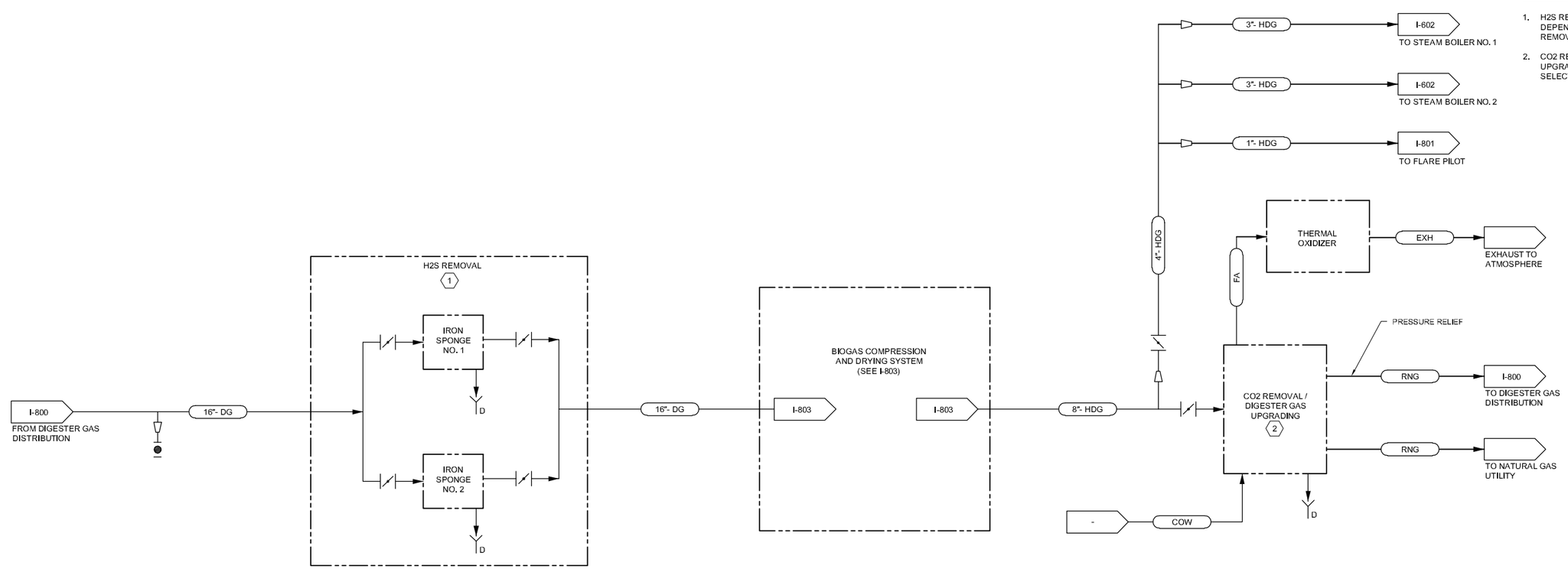

KEY NOTES: #

1. H2S REMOVAL SYSTEM DESIGN DEPENDS ON THE SELECTED CO2 REMOVAL TECHNOLOGY.
2. CO2 REMOVAL AND DIGESTER GAS UPGRADING PROCESS TO BE SELECTED DURING DESIGN PHASE.

ISSUE	DATE	DESCRIPTION
A	12/2022	FACILITIES PLAN

PROJECT MANAGER	BALCHUNAS, BRIAN
CIVIL	A. CALTON
STRUCTURAL	H. ANTSHEL
ARCHITECTURAL	J. REDDRICK
PROCESS	S. SPALDING
MECHANICAL	C. MOLINE
ELECTRICAL	B. CUNNINGHAM
INSTRUMENTATION	
PROJECT NUMBER	10263882

DRAFT FACILITIES PLAN NOT FOR CONSTRUCTION

ARLINGTON VIRGINIA

ARLINGTON COUNTY WPCP RE-GEN

DIGESTER GAS UPGRADING PROCESS AND INSTRUMENTATION DIAGRAM

0 1" 2"

FILENAME: I-802.dwg

SCALE: NOT TO SCALE

SHEET: **I-802**

C:\PWWORKING\east01\d1907715\I-802.dwg, 12/16/2022 10:57:38 AM, TLOKEY

PLC

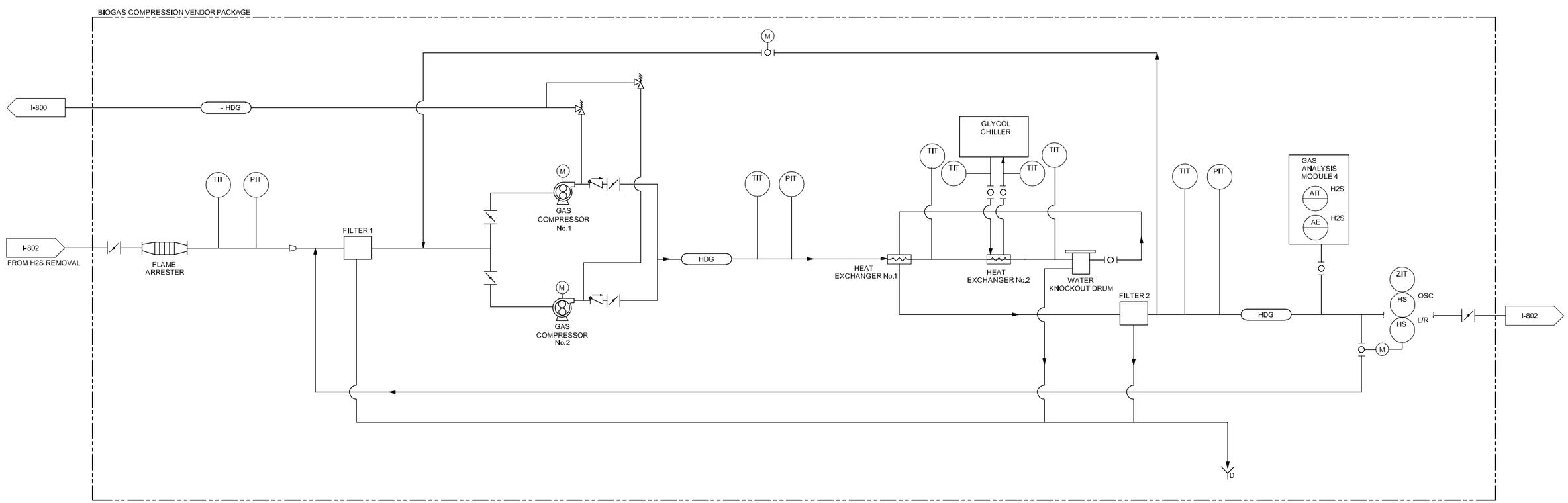

A	12/2022	FACILITIES PLAN
ISSUE	DATE	DESCRIPTION

PROJECT MANAGER	BALCHUNAS, BRIAN
CIVIL	A. CALTON
STRUCTURAL	H. ANTSHEL
ARCHITECTURAL	J. REDDRICK
PROCESS	S. SPALDING
MECHANICAL	C. MOLINE
ELECTRICAL	B. CUNNINGHAM
INSTRUMENTATION	
PROJECT NUMBER	10263882

DRAFT FACILITIES PLAN NOT FOR CONSTRUCTION

ARLINGTON VIRGINIA

ARLINGTON COUNTY WPCP RE-GEN

BIOGAS COMPRESSION PROCESS AND INSTRUMENTATION DIAGRAM

0 1" 2"

FILENAME I-803.dwg

SCALE NOT TO SCALE

SHEET **I-803**

C:\PWWORKING\east01\d1907715\I-803.dwg, 12/16/2022 10:57:42 AM, TLOKEY

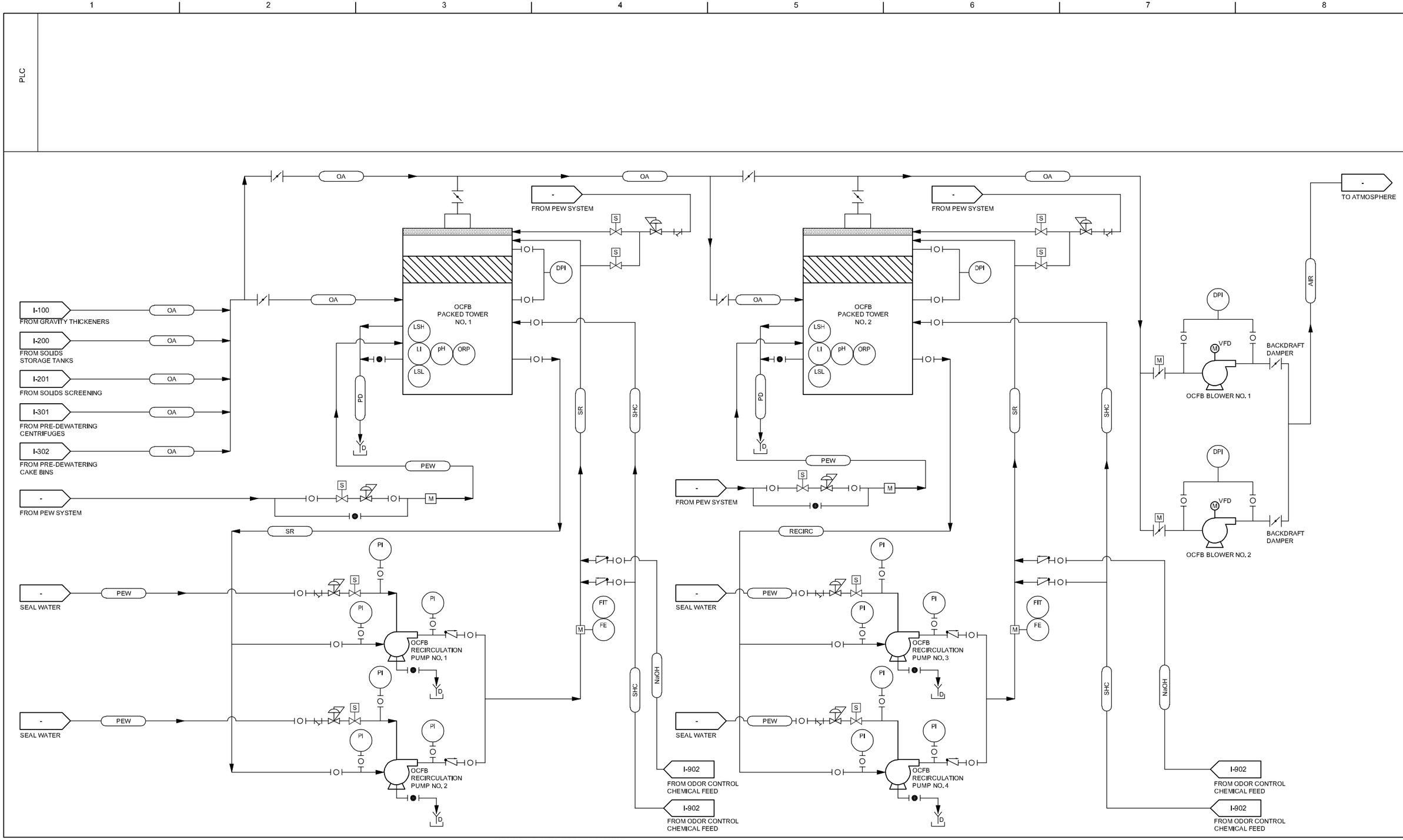

ISSUE	DATE	DESCRIPTION
A	12/2022	FACILITIES PLAN

PROJECT MANAGER	BALCHUNAS, BRIAN
CIVIL	A. CALTON
STRUCTURAL	H. ANTSHEL
ARCHITECTURAL	J. REDDRICK
PROCESS	S. SPALDING
MECHANICAL	C. MOLINE
ELECTRICAL	B. CUNNINGHAM
INSTRUMENTATION	
PROJECT NUMBER	10263882

DRAFT FACILITIES PLAN NOT FOR CONSTRUCTION

ARLINGTON VIRGINIA

ARLINGTON COUNTY WPCP RE-GEN

ODOR CONTROL FACILITY B
PROCESS AND INSTRUMENTATION DIAGRAM

0 1" 2"

FILENAME: I-900.dwg
SCALE: NOT TO SCALE
SHEET: I-900

C:\PWWORKING\east01\d1907715\I-900.dwg, 12/16/2022 10:57:46 AM, TLOKEY

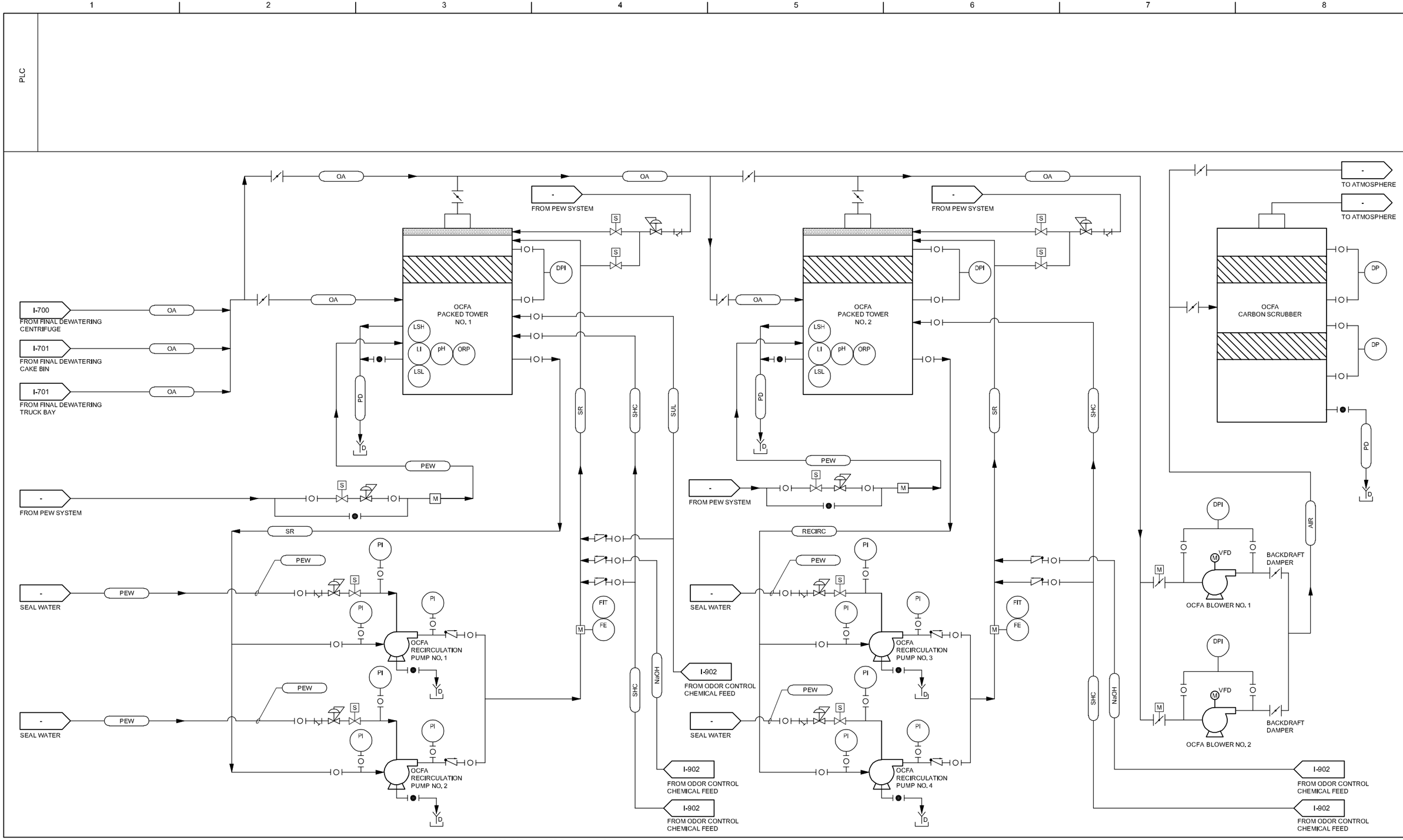

A	12/2022	FACILITIES PLAN
ISSUE	DATE	DESCRIPTION

PROJECT MANAGER	BALCHUNAS, BRIAN
CIVIL	A. CALTON
STRUCTURAL	H. ANTSHEL
ARCHITECTURAL	J. REDDRICK
PROCESS	S. SPALDING
MECHANICAL	C. MOLINE
ELECTRICAL	B. CUNNINGHAM
INSTRUMENTATION	
PROJECT NUMBER	10263882

DRAFT FACILITIES PLAN NOT FOR CONSTRUCTION

ARLINGTON VIRGINIA

ARLINGTON COUNTY WPCP RE-GEN

ODOR CONTROL FACILITY A PROCESS AND INSTRUMENTATION DIAGRAM

0 1" 2"

FILENAME I-901.dwg

SCALE NOT TO SCALE

SHEET **I-901**

C:\PWWORKING\east01\d1907715\I-901.dwg, 12/16/2022 10:57:51 AM, TLOKEY

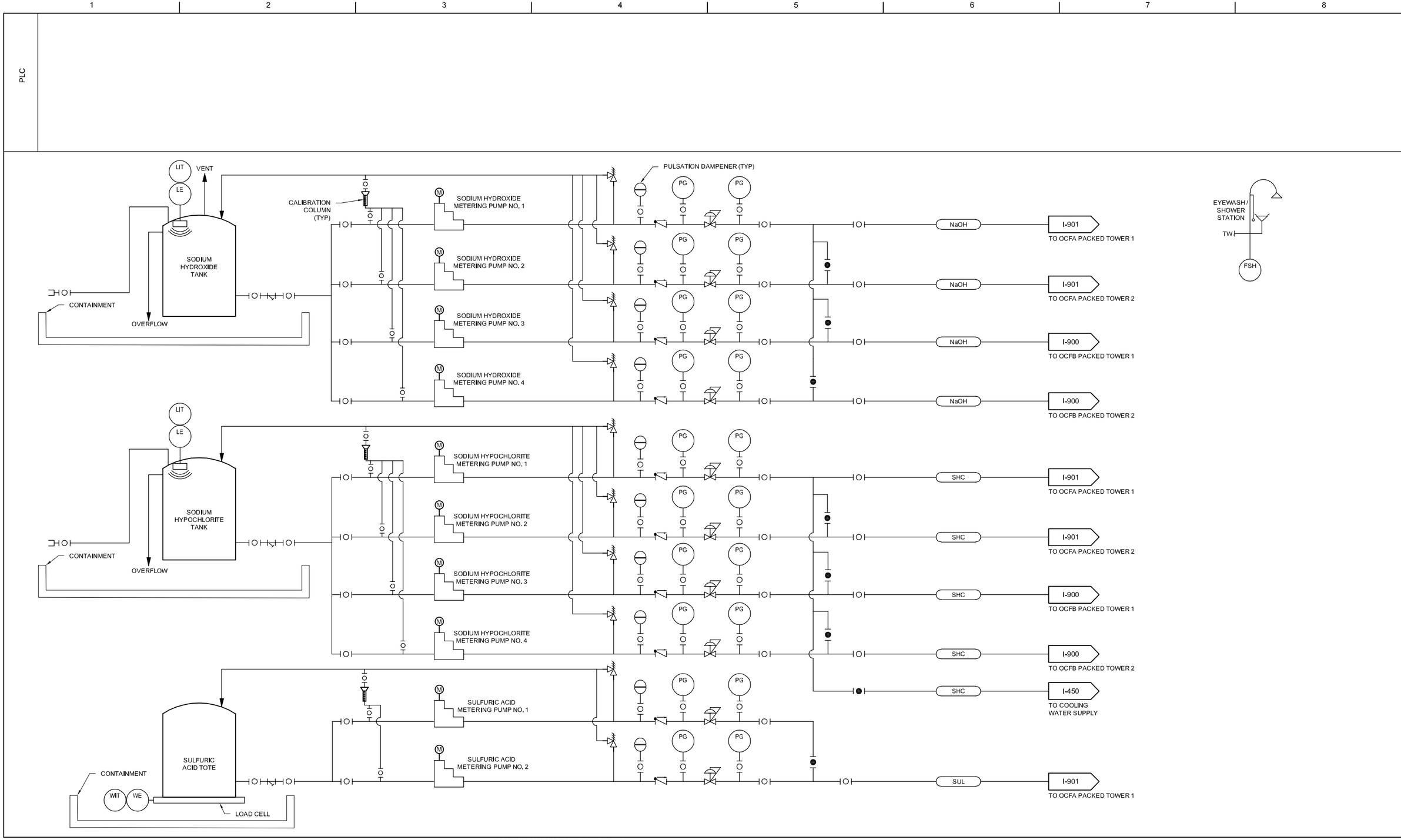

A	12/2022	FACILITIES PLAN
ISSUE	DATE	DESCRIPTION

PROJECT MANAGER	BALCHUNAS, BRIAN
CIVIL	A. CALTON
STRUCTURAL	H. ANTSHEL
ARCHITECTURAL	J. REDDRICK
PROCESS	S. SPALDING
MECHANICAL	C. MOLINE
ELECTRICAL	B. CUNNINGHAM
INSTRUMENTATION	
PROJECT NUMBER	10263882

DRAFT FACILITIES PLAN NOT FOR CONSTRUCTION

ARLINGTON VIRGINIA

ARLINGTON COUNTY WPCP RE-GEN

ODOR CONTROL CHEMICAL FEED PROCESS AND INSTRUMENTATION DIAGRAM

0 1" 2"

FILENAME I-902.dwg

SCALE NOT TO SCALE

SHEET **I-902**

C:\PWWORKING\east01\d1907715\I-902.dwg, 12/16/2022 10:57:54 AM, TLOKEY