ARLINGTON RE-GEN

FACILITIES PLAN

Volume 1

HDR

December 16, 2022

CONTENTS

1 Introduction 1
1.1 Background and Purpose 2
1.2 Description of Existing Facility 2
1.3 Solids Master Plan 3
1.4 Arlington Re-Gen Program 4
1.4.1 Mission Statement 4
1.4.2 Program Goals 4
1.5 Program Management 5
1.6 Organization of the Facilities Plan 6
2 Design Basis 7
2.1 Design Basis Summary 8
2.2 Overall Process Description 8
2.2.1 Primary Solids Thickening 8
2.2.2 WAS Thickening 8
2.2.3 Solids Screening 8
2.2.4 Pre-Dewatering 9
2.2.5 Thermal Hydrolysis Process 9
2.2.6 Hydrolyzed Solids Cooling 10
2.2.7 Anaerobic Digestion 10
2.2.8 Final Dewatering 10
2.2.9 Biogas Management and Upgrading 10
2.2.10 Other Systems 10
2.3 Facility and Site Plan 11
2.3.1 Site and Process Constraints 11
2.3.2 Facility Layout Alternatives Overview 11
2.4 Program Design Preferences 12
2.5 Program Sustainability 24
2.6 Envision Rating System 24
3 Solids Production and Design Criteria 26

3.1 Background and Purpose 27
3.2 Current Solids Production 27
3.3 Design Solids Production Methodology 30
3.3.1 Solids Characteristics 30
3.3.2 Design Mass Balance 30
3.4 Solids Loading Design Criteria 34
3.4.1 Design Peaking Factors by Solids Unit Process 34
3.4.2 Design Solids Loading Rates by Solids Unit Process 35
4 Primary Solids Thickening 50
4.1 Background and Purpose 51
4.2 Existing Facility 51
4.3 Basis of Design 53
4.4 Primary Solids Thickening Description and Design Criteria 53
4.4.1 Gravity Thickeners 53
4.4.2 Thickened Solids Pumps 54
4.4.3 Odor Control 55
4.5 Equipment Operation and Control 55
5 Waste Activated Solids Thickening 56
5.1 Background and Purpose 57
5.2 Existing Facility 57
5.3 Basis of Design for Future WAS Thickening 58
5.4 System Location 59
5.5 WAS Thickening Description and Design Criteria 60
5.5.1 Rotary-Drum Thickeners 60
5.5.2 Gravity Belt Thickeners 61
5.6 Equipment Operation and Control 63
6 Solids Screening 64
6.1 Background and Purpose 65
6.2 Basis of Design 65
6.3 System Location 66

6.4 Solids Screening Description and Design Criteria 66
6.4.1 Screen Feed Pumps 66
6.4.2 Solids Screens 67
6.4.3 Screenings Handling 69
6.4.4 Odor Control 70
6.5 Equipment Operation and Control 70
7 Solids Storage 72
7.1 Background and Purpose 73
7.2 Existing Facility 73
7.3 Basis of Design 73
7.4 System Location 74
7.5 Solids Storage Tanks Description and Design Criteria 74
7.5.1 Solids Storage Tanks 75
7.5.2 Mixing System 75
7.5.3 Odor Control 76
7.6 Equipment Operation and Control 76
8 Pre-dewatering System 78
8.1 Background and Purpose 79
8.2 Process Objectives 79
8.3 Basis of Design 80
8.4 System Location 81
8.5 Pre-Dewatering Description and Design Criteria 82
8.5.1 Pre-Dewatering Centrifuge Feed Pumps 82
8.5.2 Pre-Dewatering Polymer System 83
8.5.3 Pre-Dewatering Centrifuges 85
8.5.4 Pre-Dewatered Cake Storage Bins 87
8.5.5 THP Feed Pumps 88
8.5.6 Cake Dilution System 91
8.5.7 Odor Control 93
8.6 Equipment Operation and Control 93

8.6.1 Centrifuge Feed 93
8.6.2 Polymer System 93
8.6.3 Centrifuges and Cake Conveyance 94
8.6.4 Cake Storage, THP Feed, and Cake Dilution 94
9 Thermal Hydolysis Process 96
9.1 Background and Purpose 97
9.2 Process Objectives 97
9.3 Basis of Design 98
9.4 System Location 99
9.5 THP Installation 99
9.6 Thermal Hydrolysis Facility Description and Design Criteria 99
9.6.1 Preheating/Reactor Feed Tank 100
9.6.2 Reactors 101
9.6.3 Depressurization Tank 102
9.6.4 THS Dilution System 102
9.6.5 Digester Feed Pumps 103
9.6.6 Process Gas Treatment System 103
9.7 Equipment Operations and Control 105
10 Process Steam System 107
10.1 Background and Purpose 108
10.2 Basis of Design 108
10.2.1 Steam Boiler 108
10.2.2 Feedwater System 109
10.3 System Location 112
10.4 Process Steam Description and Design Criteria 112
10.4.1 Steam Boilers 112
10.4.2 Deaerator and Feedwater Pumps 113
10.4.3 Water Softener 114
10.4.4 Chemical Feed System 114
10.4.5 Boiler Blowdown Separator 115

10.4.6 Process Steam Safety Features 115
10.5 Equipment Operations and Control 116
11 Hydrolyzed Solids Cooling System 118
11.1 Background and Purpose 119
11.2 Process Objectives 119
11.3 Cooling System Description and Design Criteria 120
11.3.1 Cooling System Configuration 120
11.3.2 Cooling Water Supply 121
11.3.3 Digester Cooling Solids Recirculation Pumps 123
11.3.4 Cooling Heat Exchanger 123
11.3.5 Cooling Heat Exchanger Recirculation Booster Pump 125
11.4 Equipment Operations and Control 125
12 Anaerobic Digestion 126
12.1 Background and Purpose 127
12.2 Process Objectives 127
12.3 Basis of Design 127
12.4 Anaerobic Digester Description and Design Criteria 129
12.4.1 Digester System Configuration 129
12.4.2 Digester System Design Criteria 129
12.4.3 Digester Tanks and Covers 132
12.4.4 Digested Solids Transfer and Withdrawal 134
12.4.5 Digester Mixing System 135
12.4.6 Digester Emergency Overflow and Volume Expansion 139
12.4.7 Biogas Management and Safety Systems 139
12.5 Equipment Operations and Control 141
12.5.1 Digester Feed 141
12.5.2 Digester Mixing 142
12.5.3 Digester Recirculation 142
12.5.4 Digester Transfer Pumps 142
12.5.5 Dual-Membrane Gas Holder Cover 142

12.5.6 Biogas Pressure and Safety 142
13 Final Dewatering System 144
13.1 Background and Purpose 145
13.2 Process Objectives 146
13.3 Basis of Design 146
13.4 System Location 147
13.5 Final Dewatering Description and Design Criteria 148
13.5.1 Final Dewatering Centrifuge Feed Pumps 148
13.5.2 Final Dewatering Polymer System 149
13.5.3 Final Dewatering Centrifuges 152
13.5.4 Final Dewatered Cake Bin 154
13.5.5 Final Dewatered Cake Truck Loadout 155
13.5.6 Odor Control 155
13.6 Equipment Operation and Control 156
13.6.1 Centrifuge Feed 156
13.6.2 Polymer System 156
13.6.3 Centrifuges and Cake Conveyance 157
14 Biogas Management and Upgrading 158
14.1 Background and Purpose 159
14.2 Process Objectives 160
14.3 Basis of Design 160
14.3.1 RNG Quality Requirements 161
14.4 Biogas System Description and Design Criteria 161
14.4.1 Equipment Capacity Summary 163
14.4.2 Low-Pressure Biogas System 164
14.5 Biogas Conditioning System Details 164
14.6 Equipment Operation and Controls 166
14.6.1 Alternative Modes of Operation 166
14.6.2 Safety Features 166
15 Odor Control 167

15.1 Background and Purpose 168
15.2 Existing Facilities 168
15.2.1 South Odor Control 170
15.2.2 North Odor Control 171
15.2.3 Dewatering Building Odor Control 171
15.3 Process Objectives 171
15.4 Basis of Design 172
15.4.1 Foul-Air Collection 172
15.4.2 Foul Air Loading 173
15.4.3 Minimum Required Treatment 174
15.4.4 System Configuration 174
15.5 Odor Control Facility Description and Design Criteria 175
15.5.1 Process Flow Diagram 175
15.5.2 Equipment 178
15.5.3 Facility Layout 179
15.6 Equipment Operation and Controls 180
16 WPCP Support Systems 182
16.1 Background and Purpose 183
16.2 Plant Effluent Water System 183
16.2.1 Existing PEW System 183
16.2.2 Modifications to the PEW System 186
16.3 County Water System 188
16.4 Recycle Management and Conveyance 188
16.4.1 Recycle Flows 188
16.4.2 Recycle Treatment 189
16.4.3 Existing Recycle Conveyance 190
16.4.4 Modifications to Recycle Conveyance 191
16.5 Sodium Hypochlorite Storage and Feed Facility 193
16.5.1 Existing Facility 193
16.5.2 New Facility 193

17 Facility and Site Plan 194
17.1 Background and Purpose 195
17.2 Site Layout Options 195
17.2.1 Options Evaluated and Site Selection 195
17.2.2 Facilities to Be Demolished 197
17.2.3 Major New Facilities 197
17.2.4 Future Facilities 198
17.2.5 Site Evaluation and Site Selection 199
17.3 Site Design Considerations 202
17.3.1 Existing Conditions 202
17.3.2 Neighborhood 203
17.3.3 Site Civil Design and Landscaping 203
17.3.4 Traffic Management 204
17.3.5 Utility Relocations 205
17.3.6 Stormwater Management 207
18 Facilities Design Criteria 208
18.1 Background and Purpose 209
18.2 Structural Design Criteria 209
18.2.1 Codes and Standards 209
18.2.2 Dead Load 209
18.2.3 Live Loads 210
18.2.4 Process Loads 211
18.2.5 Wind Loads 211
18.2.6 Snow Loads 211
18.2.7 Seismic Loads 212
18.2.8 Geotechnical 212
18.2.9 Specific Structure Considerations 212
18.2.10 Materials of Construction 215
18.2.11 Material Usage 216
18.2.12 Foundations 216

18.2.13 Modifications to Existing Structures 216
18.3 Architectural Design Criteria 216
18.3.1 Design Options 216
18.3.2 Safety 217
18.3.3 Life-Cycle 217
18.3.4 Building Design Materials and Finishes 218
18.3.5 Operator Spaces 220
18.4 Heating, Ventilation, and Air Conditioning 220
18.4.1 Codes and Standards 220
18.4.2 HVAC Design Criteria 221
18.4.3 HVAC Systems 222
18.5 Plumbing Design Criteria 224
18.5.1 Codes and Standards 224
18.5.2 Plumbing Fixtures 225
18.5.3 Domestic Water 225
18.5.4 Drainage System 225
18.6 Fire Protection Systems 225
18.6.1 Codes and Standards 225
18.6.2 Building Height and Area 232
18.6.3 Hazardous Materials 232
18.6.4 Site Fire Flow and Hydrants 232
18.6.5 Fire Alarm System 232
18.6.6 Fire Suppression Systems 232
18.6.7 Fire Department Access 232
18.6.8 Occupancy Separations 232
18.6.9 Vertical Openings 232
18.6.10 Means of Egress 232
18.7 Sustainable Facility Design 233
19 Electrical Distribution System 234
19.1 Background and Purpose 235

19.2 Existing Electrical Distribution System 235
19.2.1 Plantwide 235
19.2.2 North Plant 235
19.3 Existing WPCP Electrical Demand 236
19.3.1 Plant-wide Demand 236
19.3.2 North Plant Demand 236
19.3.3 Generation Capacity 236
19.4 Design Approach 237
19.5 Area Classifications of New and Existing Facilities 238
19.5.1 Interior Spaces 238
19.5.2 Exterior Spaces 238
19.5.3 Hazardous Areas 238
19.6 Electrical Design Criteria 238
19.6.1 Lighting 238
19.6.2 Wire and Cable 239
19.6.3 Conduit 239
19.6.4 Variable-Frequency Drives 240
19.6.5 Power Monitoring 240
19.6.6 Lightning Protection 240
19.6.7 Dry-Type Transformers 240
19.6.8 Pad-Mounted Transformers 241
19.6.9 Low-Voltage Switchgear 241
19.6.10 Motor Control Centers 242
20 Control System 243
20.1 Background and Purpose 244
20.2 Control System Architecture 244
20.3 Project Coordination 246
20.4 Control System Design Criteria 246
20.5 Design Approach 247
20.5.1 Equipment 248

20.5.2 Control Panels ... 250
20.5.3 Control Modes and Priority ... 251
20.5.4 Graphics ... 251
20.5.5 Programming ... 251
21 Permit and Approval Requirements ... 252
21.1 Background and Purpose ... 253
21.2 Arlington County Permitting ... 253
21.2.1 Building Permits ... 253
21.2.2 Trade Permits ... 253
21.2.3 Site Plan Permitting and Zoning ... 253
21.2.4 Stormwater Permitting ... 254
21.2.5 Other Permits ... 255
21.3 Virginia Department of Environmental Quality ... 255
21.3.1 Construction Permits ... 255
21.3.2 Air Permitting ... 256
21.4 Virginia Department of Labor and Industry ... 257
21.5 Federal Aviation Administration ... 257
22 Program Implementation ... 259
22.1 Background and Purpose ... 260
22.2 Program Delivery Approach ... 260
22.3 Project Schedule and Sequencing ... 261
22.3.1 Gravity Thickener Upgrades Phase 10A ... 261
22.3.2 Comprehensive Biosolids Upgrades Phase 10C/D ... 262
22.4 Maintenance of Plant Operations ... 266
22.4.1 Maintaining Solids Handling Operations during Construction ... 267
22.4.2 Temporary Facilities ... 268
22.4.3 Electrical ... 271
22.5 Demolition of Existing Facilities ... 272
22.5.1 Mass Demolition and Existing Foundations ... 272
22.5.2 Select Demolition ... 273

22.5.3 Hazardous Materials 273
22.6 Startup and Commissioning 273
22.7 Contractor Laydown/Storage Areas and WPCP Access 277
22.8 Neighborhood Impacts during Construction 277
22.9 Envision Verification 277
22.10 Opinion of Probable Program Costs 278
22.10.1 Opinion of Probable Construction Costs 278
22.10.2 Opinion of Probable Program Costs 281
22.10.3 Escalation to Midpoint of Construction 281
23 Planning Considerations for Future Facilities 283
23.1 Background and Purpose 284
23.2 Fats, Oils, and Grease Receiving Facility 284
23.2.1 Basis of Design 285
23.2.2 FOG Receiving Facility Description and Design Criteria 285
23.3 Sidestream Treatment Facility 288
23.3.1 Basis of Design 288
23.3.2 Sidestream Treatment Description and Design Criteria 289
23.4 Future Solids Post-Processing Facility 294
23.4.1 Basis of Design 295
23.4.2 Drying Facility Description and Design Criteria 296
23.4.3 Pyrolysis Facility Description and Design Criteria 299

VOLUME 2: DRAWINGS

VOLUME 3: APPENDICES

Appendix A Technical Memoranda A-1
Appendix B Biogas Utilization Report B-1
Appendix C Draft Sustainability Management Plan Outline C-1

FIGURES

Figure 1-1. Location of the Arlington County WPCP 3
Figure 3-1. Current Simplified Process Schematic 28
Figure 3-2. Proposed Overall Process Flow Diagram 32
Figure 5-1. RDT and Floc Tank 60
Figure 5-2. Enclosed GBT 62
Figure 6-1. Solids Screen Diagram 69
Figure 8-1. Progressive-Cavity Pump with Anti-Bridging Devices (source: Netzsch) 89
Figure 8-2. Boundary Layer Injection Ring System (Source: Schwing Bioset) 93
Figure 9-1. Process Gas Cooler 104
Figure 9-2. Process Gas Skid 104
Figure 11-1. Hydrolyzed Solids Cooling System Configuration 121
Figure 11-2. Plant Effluent Water Historical Temperatures, 2018–2021 122
Figure 12-1. Cutaway of a Typical Progressive-cavity Pump 135
Figure 12-2. Cutaway of Typical Screw Pump 135
Figure 12-3. Typical Pump Mixing System 136
Figure 12-4. Typical Draft Tube Mixers 137
Figure 12-5. Draft Tube Mixer Design for Digesters with Membrane Covers 138
Figure 12-6. Flame Arrester 140
Figure 12-7. PVRVs and Pressure Relief Manhole Cover 141
Figure 14-1. Biogas to RNG Schematic 162
Figure 14-2. Biogas to RNG Energy Balance: Average Condition 2037 163
Figure 15-1. Locations of Existing Odor Control Facilities 170
Figure 15-2. Schematic of Recommended Alternative for New Odor Control 177
Figure 16-1. Average Historical PEW Usage 185
Figure 16-2. RIPS Isolation and Bypass Arrangement 192
Figure 17-1. Option 2: Decommission Existing Dewatering Building as Presented in Facilities Plan 200
Figure 17-2. Option 2: Decommission Existing Dewatering Building—Alternative Concept 1 201
Figure 17-3. Option 2: Decommission Existing Dewatering Building—Alternative Concept 2 202
Figure 20-1. Existing Dewatering Building Communication Diagram 245
Figure 20-2. Site Communication Backbone Block Diagram 248
Figure 22-1. Gravity Thickener Upgrades: Phase 10A Preliminary Timeline 262
Figure 22-2. Comprehensive Biosolids Upgrades: Phase 10 Preliminary Timeline 263
Figure 22-3. Temporary Lime Stabilization in Howard County, Maryland 269
Figure 23-1. FOG Receiving Facility Process Flow Diagram 286
Figure 23-2. FOG Receiving Facility Conceptual Layout 287

Figure 23-3. ANITA™ Mox IFAS General Process Flow Diagram 291
Figure 23-4. Sidestream Deammonification Conceptual Facility Layout 294
Figure 23-5. Drying Facility Process Flow Diagram 297
Figure 23-6. Drying Facility Conceptual Layout: Plan View (Source: Huber) 298
Figure 23-7. Drying Facility Conceptual Layout: Section View (Source: Huber) 298
Figure 23-8. Pyrolysis Facility Process Flow Diagram 300

TABLES

Table 2-1. Program Design Preferences 13
Table 2-2. Program Sustainability Goals 24
Table 3-1. Current Solids Production Factors (2017–2020) 29
Table 3-2. Current Solids Production Summary (2017–2020, 23 mgd) 29
Table 3-3. Design Mass Balance Assumptions 33
Table 3-4. Peaking Factor by Solids Unit Process 35
Table 3-5. Process Design Criteria Summary, 23 mgd Condition 36
Table 3-6. Process Design Criteria Summary, 30.8 mgd Design Condition 40
Table 3-7. Process Design Criteria Summary, 40 mgd Buildout Condition 44
Table 3-8. Energy Calculations, 23 mgd Condition 48
Table 3-9. Energy Calculations, 30.8 mgd Design Condition 48
Table 3-10. Energy Calculations, 40 mgd Buildout Condition 49
Table 4-1. Existing Gravity Thickener Characteristics 52
Table 4-2. Primary Solids Design Loading 53
Table 4-3. Gravity Thickener Design Criteria 54
Table 5-1. Existing DAFT Characteristics 58
Table 5-2. Waste Activated Solids Thickening Design Loading 59
Table 5-3. Thickened Waste Activated Solids Design Flows (at 5% TS) 59
Table 5-4. RDT Design Criteria 61
Table 5-5. GBT Design Criteria 62
Table 6-1. Solids Screening Design Loading 66
Table 6-2. Screen Feed Pumps Design Criteria 67
Table 6-3. Solids Screens Design Criteria 68
Table 6-4. Screenings Production and Storage 70
Table 7-1. Solids Storage Design Flows 74
Table 7-2. Solids Storage Tank Parameters 75
Table 7-3. Solids Storage Tank Mixing System Design Parameters 76
Table 8-1. Anticipated Combined Thickened Solids Production 80
Table 8-2. Anticipated Flows and Loads to Pre-Dewatering 81
Table 8-3. Centrifuge Feed Pump Design Criteria 83

Table 8-4. Polymer Storage Design Criteria 84
Table 8-5. Polymer Blending and Feed System Design Criteria 85
Table 8-6. Centrifuge Design Criteria 86
Table 8-7. Cake Conveyance Design Criteria 87
Table 8-8. THP Pump Design Criteria 90
Table 8-9. Anticipated Dilution Water Flows 92
Table 9-1. Thermal Hydrolysis Process Design Loading 98
Table 10-1. THP Steam Design Criteria 109
Table 10-2. Feedwater Design Criteria 110
Table 10-3. Boiler Water Quality Design Criteria 111
Table 10-4. Arlington County 2022 Water Report 111
Table 10-5. Boiler Design Criteria 113
Table 10-6. Feedwater System Design Criteria 114
Table 10-7. Water Softener Design Criteria 114
Table 10-8. Chemical Feed Design Criteria 115
Table 10-9. Blowdown Separator Design Criteria 115
Table 11-1. Cooling System Design Criteria at 30.8 mgd Peak 3-day 120
Table 11-2. Plant Effluent Water Monthly Temperature Data, 2018–2021 122
Table 11-3. Digester Recycle Pump Design Criteria 123
Table 11-4. Cooling HEX Design Criteria 124
Table 11-5. Cooling HEX Startup and Future Buildout Conditions 124
Table 11-6. Cooling Water Recirculation Pump Design Criteria 125
Table 12-1. Digester Configuration 129
Table 12-2. Digester Sizing Design Criteria 130
Table 12-3. Digester Configuration: Sizing Metrics 131
Table 12-4. Comparison of Digester Mixing Technologies 138
Table 12-5. Yearly Mixing Costs 139
Table 13-1. Anticipated Digested Solids Production 146
Table 13-2. Anticipated Flows and Loads to Final Dewatering 147
Table 13-3. Centrifuge Feed Pump Design Criteria 149
Table 13-4. Polymer Storage Design Criteria 150
Table 13-5. Polymer Blending System Design Criteria 151
Table 13-6. Polymer Aging Tank and Feed System Design Criteria 151
Table 13-7. Inline Polymer Mixer Design Criteria 152
Table 13-8. Centrifuge Design Criteria 153
Table 13-9. Cake Conveyance Design Criteria 154
Table 13-10. Cake Bin Design Criteria 155
Table 14-1. Biogas Production, scfm 161
Table 14-2. Anticipated RNG Pipeline Specification 161
Table 14-3. Equipment Capacity Summary 164

Table 14-4. Technology Comparison 165
Table 15-1. Expected Ventilation 171
Table 15-2. Basis of Design for Foul-air Collection 173
Table 15-3. Basis of Design for Foul-air Loading 174
Table 15-4. Vessels Required 178
Table 15-5. Blowers Required 178
Table 15-6. Recirculation Pumps Required 178
Table 15-7. Chemical Metering Pumps Required 179
Table 16-1. PEW Design Flows 184
Table 16-2. PEW Demand Revisions 186
Table 16-3. Solids Handling Processes PEW Demands 187
Table 16-4. Recycle Flows Summary (all flows in mgd) 189
Table 16-5. Mainstream Treatment Impacts from Recycle Load (28.0 mgd, Design Midpoint) 190
Table 16-6. Existing Recycle Flows Summary (all flows in mgd) 191
Table 18-1. Building Codes and Standards 217
Table 18-2. Building Exterior Envelope Systems 218
Table 18-3. Building Interior Finishes 218
Table 18-4. NFPA 820 Process Classification and Requirements 226
Table 18-5. Sustainability Recommended Criteria 233
Table 20-1. Programmable Logic Controllers 248
Table 20-2. Control Panel Components 249
Table 20-3. Networking Equipment 249
Table 20-4. Device-Level Networks (in order of preference) 249
Table 20-5. Field Devices 250
Table 20-6. Uninterruptible Power Supplies 250
Table 22-1. Temporary Stabilization Comparison 271
Table 22-2. Preliminary PG Concepts 275
Table 22-3. Factored Direct Costs 279
Table 22-4. Factored Indirect Costs 279
Table 22-5. Arlington Re-Gen Opinion of Probable Construction Costs 280
Table 22-6. Arlington Re-Gen Opinion of Probable Program Costs 281
Table 22-7. Arlington Re-Gen Opinion of Probable Program Costs Escalated to Mid-Point of Construction 282
Table 23-1. Anticipated FOG Quantities 285
Table 23-2. Projected Final Dewatering Sidestream Flows and Loads 289
Table 23-3. Example Effluent Nitrogen Concentrations with THP-generated rDON 289
Table 23-4. Sidestream Treatment Equipment and Instrumentation 293
Table 23-5. Final Dewatered Cake Solids Production 295
Table 23-6. Drying Facility Design Loading 296

ABBREVIATIONS

°C	degree(s) Celsius
°F	degrees Fahrenheit
3D	three-dimensional
A	ampere(s)
AA	Aluminum Association
AACE	Association for the Advancement of Cost Engineering International
AC	alternating current
ACH	air change(s) per hour
ACI	American Concrete Institute
ACM	asbestos-containing materials
ACT	acoustical ceiling tile
AD	anaerobic digestion
ADA	Americans with Disabilities Act
ADM	Aluminum Design Manual
AISC	American Institute for Steel Construction
AISI	American Iron and Steel Institute
ANSI	American National Standards Institute
AOB	ammonia-oxidizing bacteria
ASCE	American Society of Civil Engineers
ASHRAE	American Society of Heating, Refrigerating and Air Conditioning Engineers
ASME	American Society of Mechanical Engineers
ASPE	American Society of Plumbing Engineers
ASTM	American Society of Testing and Materials
AWG	American Wire Gauge
AWWA	American Water Works Association
BFP	belt filter press
BMP	best management practice
BPVC	Boiler and Pressure Vessel Code
Btu	British thermal unit(s)
$CaCO_3$	calcium carbonate
cc	cubic centimeter(s)
CFD	computational fluid dynamics
cfm	cubic foot/feet per minute
CFR	Code of Federal Regulations
CH_4	methane
CHP	combined heat and power
CIP	Capital Improvement Program

CL	cement-lined
CMU	concrete masonry unit
CO_2	carbon dioxide
COD	chemical oxygen demand
County	Arlington County
COW	County water
cP	centipoise
CRAC	computer room air conditioning
CTC	Certificate to Construct
CTO	Certificate to Operate
CY	cubic yard(s)
d	day(s)
DAFT	dissolved air flotation thickener
DB	design-build
DC	distribution center
DC Water	District of Columbia Water and Sewer Authority
DCU	distributed control unit
DE	Dominion Energy
DES	(Arlington County) Department of Environmental Services
DLR	device level ring
DMZ	demilitarized zone
DO	dissolved oxygen
DOE	U.S. Department of Energy
DS	digested solids
DSST	digested solids storage tank
DT	dry ton(s)
dtpd	dry ton(s) per day
DWB	Dewatering Building
DX	direct expansion
EBPR	enhanced biological phosphorus removal
EL	elevation
EMC	electromagnetic compatibility
Envision	Envision® V3 Sustainable Infrastructure Framework
EPA	Environmental Protection Agency
EQ	Exceptional Quality
ETAP	Ethernet Tap
ETL	Electrical Testing Laboratories
FAA	Federal Aviation Administration
FCC	Federal Communications Commission
$FeCl_3$	ferric chloride

FEMA	Federal Emergency Management Agency
FER	Final Engineering Report
FIRM	Flood Insurance Rate Map
FLA	full load amp
FM	Factory Mutual Research Corporation
FOG	fats, oils, and grease
FRP	fiberglass-reinforced plastic
ft	foot/feet
ft^2	square foot/feet
ft^3	cubic foot/feet
ft/s	foot/feet per second
gal	gallon(s)
GBT	gravity-belt thickener
GHG	greenhouse gas
GMP	guaranteed maximum price
gpd	gallon(s) per day
gph	gallon(s) per hour
gpm	gallon(s) per minute
GT	gravity thickener
GTO	gravity thickener overflow
H_2O	water
H_2S	hydrogen sulfide
HDR	HDR Engineering, Inc.
HEX	heat exchanger
HHM	household hazardous materials
HMI	human-machine interface
HOA	Hand/Off/Auto
hp	horsepower
HPHMI	High-Performance Human-Machine Interface
HPIC	high-performance industrial coating
hr	hour(s)
HRSD	Hampton Roads Sanitation District
HRSG	heat recovery steam generator
HVAC	heating, ventilation, and air conditioning
IBC	International Building Code
ICEA	Insulated Cable Engineers Association
ICS	Industrial Control and Systems
IEC	Independent Electrical Contractors
IEEE	Institute of Electrical and Electronics Engineers, Inc.
IESNA	Illuminating Engineering Society of North America

IFAS	integrated fixed-film activated solids
ILFI	International Living Futures Institute
I/O	input/output
IP	Internet Protocol
ISA	International Society of Automation
kg	kilogram(s)
kV	kilovolt(s)
kVA	kilovolt-ampere(s)
kW	kilowatt(s)
kWh	kilowatt-hour(s)
L	liter(s)
lb	pound(s)
lbm	pound(s) mass
LCP	local control panel
LED	light-emitting diode
LEED	Leadership in Energy and Environmental Design
LEL	lower explosive limit
LTE	Long-Term Evolution
m^3	cubic meter(s)
mA	milliampere(s)
Master Plan	2018 *Arlington County WPCP Solids Master Plan*
MBH	1,000 British thermal units per hour
MCC	motor control center
mg	milligram(s)
MG	million gallons
mgd	million gallons per day
MIC	microbial-induced corrosion
mm	millimeter(s)
MMBtu	million British thermal units
MOPO	maintenance of plant operations
MP01	Master Plan 2001
mph	mile(s) per hour
N	nitrogen
N/A	not applicable
NACE	National Association of Corrosion Engineers
NEC	National Electrical Code
NEMA	National Electrical Manufacturers Association
NFPA	National Fire Protection Association
NG	natural gas
NH_3	ammonia

NH_4-N	ammonium-nitrogen
NMB	New Maintenance Building
NOC	network operations center
NO_x	nitrogen oxides
NSR	new source review
O_2	oxygen
OE3A	Obstruction Evaluation/Airport Airspace Analysis
OEM	original equipment manufacturer
OIT	operator interface terminal
O&M	operations and maintenance
OPCC	opinion of probable construction costs
OPPTS	Office of Prevention, Pesticides and Toxic Substances
orgS	organic reduced sulfur compounds
ORP	oxidation-reduction potential
OSHA	Occupational Safety and Health Administration
PC	primary clarifier
PCS	process control system
pcf	pound(s) per cubic foot
PEW	plant effluent water
PF	peaking factor
PFAS	per- and polyfluoroalkyl substances
PFRP	process to further reduce pathogens
PG	Performance Guarantee
P&ID	process and instrumentation diagram
Plan	Facilities Plan
PLC	programmable logic controller
plf	pound(s) per linear foot
ppm	part(s) per million
ppmv	part(s) per million by volume
PPU	positive pressurization unit
Program	Arlington Re-Gen Biosolids Upgrade Program
PS	primary solids
P-S	Public Service District *(zoning designation)*
PSA	pressure swing adsorption
psf	pound(s) per square foot
psi	pound(s) per square inch
psig	pound(s) per square inch gauge
PTB	Preliminary Treatment Building
PTB Upgrades	Preliminary Treatment Upgrades (WPB2) Phase 9B
PVC	polyvinyl chloride

PVDF	polyvinylidene fluoride
PVRV	pressure and vacuum relief valve
PYPS	Potomac Yard Pump Station
QA	quality assurance
RAS	return activated solids
rDON	refractory dissolved organic nitrogen
RDT	rotary-drum thickener
RFP	Request for Proposals
RGS	rigid galvanized steel
RH	relative humidity
RIN	Renewable Identification Number
RIO	remote input/output
RIPS	Recycle Interceptor Pump Station
RNG	renewable natural gas
rpm	revolution(s) per minute
RTO	regenerative thermal oxidizer
SBS	styrene-butadiene-styrene
SCADA	supervisory control and data acquisition
SCAT	Sewage Collection and Treatment
scf	standard cubic foot/feet
scfd	standard cubic foot/feet per day
scfm	standard cubic foot/feet per minute
SCM	supplementary cementing materials
SCWD	scrubber waste drain
SDC	services during construction
SGF	Standby Generation Facility
SMACNA	Sheet Metal and Air Conditioning Contractors National Association
SMP	Sustainability Management Plan
SOP	standard operating procedure
SPB	Solids Processing Building
SRT	solids retention time
SSPC	Steel Structures Painting Council
SST	solids storage tank
sTKN	soluble total Kjeldahl nitrogen
SWD	side water depth
TBD	to be determined
TCP	Transmission Control Protocol
TDH	total dynamic head
THD	total harmonic distortion
TH	thermal hydrolysis

THHN-2	thermoplastic high-heat-resistant nylon-2
THP	thermal hydrolysis process
THS	thermally hydrolyzed solids
TKN	total Kjeldahl nitrogen
TM	technical memorandum
TMS	The Masonry Society
TN	total nitrogen
TPS	thickened primary solids
TS	total solids
TSS	total suspended solids
TWAS	thickened waste activated solids
UL	Underwriters Laboratories, Inc.
UPS	uninterruptible power supply
V	volt(s)
VAC	volt(s) alternating current
VCC	Virginia Construction Code
VDC	volt(s) direct current
VDEQ	Virginia Department of Environmental Quality
VECC	Virginia Energy Conservation Code
VFD	variable-frequency drive
VFGC	Virginia Fuel Gas Code
VMC	Virginia Mechanical Code
VOC	volatile organic compound
VPA	Virginia Pollution Abatement
VPC	Virginia Plumbing Code
VPDES	Virginia Pollutant Discharge Elimination System
VPN	virtual private network
VRRM	Virginia Runoff Reduction Management
VS	volatile solids
VSFPC	Virginia Statewide Fire Prevention Code
VSMP	Virginia Stormwater Management Program
VSr	volatile solids reduction
VUSBC	Virginia Uniform Statewide Building Code
WAS	waste activated solids
w.c.	water column
WIMS	Water Information Management Software
WMO	World Meteorological Organization
WPCB	(Arlington County) Water Pollution Control Bureau
WPCP	water pollution control plant
WSSC	Washington Suburban Sanitary Commission

wtpd	wet ton(s) per day
WWTP	wastewater treatment plant
XHHW-2	cross-linked polyethylene high heat-resistant water-resistant-2
yd	yard(s)
yr	year(s)

1 INTRODUCTION

1.1 Background and Purpose

Arlington County (County) has initiated the implementation of the Arlington Biosolids Upgrade Program (Program), referred to as Re-Gen, for the next generation of biosolids management facilities at the Arlington County Water Pollution Control Plant (WPCP). This comprehensive Program will include engineering, design, construction, and startup and commissioning services to add sustainable equipment and systems to effectively recover the County's renewable resources, produce a Class A biosolids product, and most efficiently utilize the biogas. The new solids handling processes (Facilities) will entail upgrades or replacement of nearly all existing solids handling processes. A thermal hydrolysis process (THP) followed by anaerobic digestion (AD) form the backbone of the new treatment train. The THP process uses temperature and pressure to break down the solids and remove pathogens, while the AD process stabilizes the solids and generates a methane (CH_4)-rich biogas. A marketable Class A biosolids product and biogas utilization system to clean and make use of recovered biogas either on or off site are also envisioned. The completed Program will enhance operating conditions and reliability of the Facilities while continuing to meet all permit requirements and ensure a persistent commitment to environmental stewardship.

1.2 Description of Existing Facility

The WPCP is located on an approximately 32-acre campus at 3402 S Glebe Road in Arlington, Virginia. The WPCP has a permitted design capacity of 40 million gallons per day (mgd) and provides enhanced nutrient removal wastewater treatment through physical, chemical, and biological processes. The WPCP currently treats an average of 23 mgd each day from Arlington County and portions of the neighboring localities of Alexandria, Fairfax, and Falls Church. The location of the WPCP is shown on Figure 1-1.

Wastewater reaches the WPCP via three interceptors and then passes through bar screens and grit cyclones before flowing to the primary clarifiers (PCs). Primary effluent is sent to aeration basins for biological nutrient removal followed by secondary clarifiers. At times of high flow, primary effluent is diverted to equalization tanks for flow attenuation before being discharged in a controlled manner to the secondary treatment processes. Iron salts (ferric chloride) are added at multiple locations for chemical phosphorus removal. Secondary effluent is pumped to deep-bed denitrification filters, followed by chlorination and dechlorination. Treated effluent is discharged into the Four Mile Run, part of the Potomac River Subbasin in the Chesapeake Bay Watershed.

Primary solids (PS) are thickened in gravity thickeners (GTs) and waste activated solids (WAS) are thickened in dissolved air flotation thickeners (DAFTs). Thickened solids are

dewatered by centrifuges and combined with lime to stabilize them to a Class B biosolids product that are beneficially used by land application throughout central and southern Virginia.

Figure 1-1. Location of the Arlington County WPCP

1.3 Solids Master Plan

The Program is largely the implementation of the plans developed during the master planning efforts completed in March 2018 and described in the *Arlington County WPCP Solids Master Plan* (Master Plan) authored by CDM Smith. The Master Plan effort evaluated several solids handling alternatives and developed a recommendation that addressed the many needs of the WPCP. The overall goals of the Master Plan work were as follows:

- Replace failing and end-of-life equipment

- Mitigate the risk of potential future regulatory changes to the current practice of recycling Class B biosolids through application to agricultural land
- Provide a solution that reduces the energy and greenhouse gas (GHG) footprint of the WPCP
- Achieve additional County-wide sustainability goals
- Develop a solids management strategy that offers long-term reliability
- Establish an implementation plan compatible with County Capital Improvement Program (CIP) funding

The alternatives evaluated in the Master Plan to achieve these goals included continuing lime stabilization, mesophilic anaerobic digestion (AD), THP followed by AD, and AD followed by heat drying. The evaluation took into consideration 19 criteria, including the energy balance of each alternative. The recommended alternative from the Master Plan was THP followed by AD.

1.4 Arlington Re-Gen Program

The Program seeks to implement the recommendations made in the Master Plan. The Program will enhance operating performance and reliability while continuing to meet all permit requirements and ensuring continued commitment to environmental stewardship at the WPCP.

1.4.1 Mission Statement

A mission statement can be a valuable tool to help set the tone for a program during internal meetings and workshops. The Program's mission statement is to:

Upgrade resource recovery facilities to produce Class A biosolids and renewable energy, maximizing sustainability and community acceptance. Collaborate with team members to select and implement processes that are safe, reliable, and financially responsible throughout planning, design, construction, operations and maintenance.

1.4.2 Program Goals

Building on the mission statement and related drivers for the Program, below are the Program goals developed by the County:

- **Produce a Class A Exceptional Quality (EQ) end product:** high-quality, low-odor product suitable for beneficial use and reduced risk of regulatory impact for land application
- **Recover biogas for beneficial use:** recovering and beneficially using renewable resources to help achieve County-wide sustainability goals

- **Provide ease of maintenance and repairs:** easy to work with equipment, updated technology with high efficiency and long-term ability to find replacement parts
- **Keep safety in mind:** throughout process, design, construction, and ongoing operations
- **Apply proper process selection and configuration:** appropriate choice of processes, well-designed and coordinated across the entire system, reliable with adequate redundancy
- **Implement an open, transparent, and collaborative process between all team members**
- **Achieve and maintain community acceptance:** maintain "good neighbor" status, including construction, and produce an outcome that is an asset to the community
- **Implement cost-effective solutions:** make the most out of the investment
- **Develop operator-friendly solutions:** comprehensive training on reliable and accessible equipment with clear operations and maintenance (O&M) and troubleshooting guidance
- **Design for long-term reliability:** eliminate nuisance-causing, aging equipment and processes
- **Actively engage staff throughout process:** during design, construction, startup, and training
- **Ensure that staff are well prepared to operate and maintain the new processes:** via comprehensive training, ample transition time, and appropriate staffing levels for new systems

1.5 Program Management

Arlington County has contracted with HDR Engineering, Inc. (HDR) to be the Program Manager for the County on this Program. Various delivery teams will contract with the County for design and construction services (refer to Section 22 for additional information). The delivery teams will interface with the Program Manager during all phases of the Program.

The Program Manager reports to the County and is responsible for assisting the County with the following activities:

- Preparation of this Facilities Plan (Plan) that describes the scope elements

- Preparation of 30 percent bridging documents for the early utility relocation and demolition activities
- Advice and assistance to the County on procurement (in a non-voting role)
- Administrative monitoring and contract management during design and construction in a quality assurance (QA) role
- Review of delivery team deliverables, including design documents, pre-construction submittals, and construction submittals
- Assistance with negotiations with delivery teams
- Outreach activities
- Commissioning assistance
- Arlington County O&M training coordination—the delivery teams will be responsible for vendor and County staff training
- Monitoring closeout
- Coordinating with all Re-Gen projects
- Leading Envision verification
- Other activities as may be deemed appropriate by the County

1.6 Organization of the Facilities Plan

This Plan is organized into three volumes. Volume 1 contains the body of the Plan, including all referenced tables and figures. Drawings referenced in Volume 1 are provided in 11-by-17-inch format separately in Volume 2. Volume 3 consists of all appendices, including technical memoranda (TMs) and other reports referenced in Volume 1 that were generated during the facilities planning process.

The remaining sections of Volume 1 describe the recommended process alternatives, design criteria, and configuration options for the recommended Program improvements, as well as key permitting, construction, and project implementation considerations. A summary of design solids production rates and other key design criteria is followed by process-by-process descriptions of the recommended improvements. Construction sequencing and maintenance of plant operations (MOPO) considerations are also discussed. The preliminary opinion of probable Program costs and a preliminary Program timeline are also presented.

2 DESIGN BASIS

2.1 Design Basis Summary

The design basis and approach for the Program were refined through multiple collaborative workshops with Arlington County and the Program Manager, as described in this Plan and appendices. All facilities shall be designed for projected solids load at 30.8 mgd, with space allocated for buildout loads at 40.0 mgd. Summaries of the overall and unit processes are provided below, followed by an introduction of the site plans and overall Program design preferences.

2.2 Overall Process Description

Several new processes and facilities will be added to the WPCP as part of the Program and there will also be modifications to some existing solids handling processes and equipment. The overall solids process flow diagram for the Program is shown on Drawings G-005 and G-006. Each unit process is described in detail in subsequent sections of this Plan; a brief summary of each is provided in this section.

2.2.1 Primary Solids Thickening

The existing GTs will be refurbished and used to thicken PS. This will maximize the capacity in the new solids storage tanks (SSTs) while reinvesting in an existing process. Thickened primary solids (TPS) will be combined with the stored WAS upstream of the solids screens. The combined screened solids will be stored in the new SSTs.

2.2.2 WAS Thickening

No thickening for WAS will be installed as part of this Program. WAS will be pumped by the existing WAS pumps to a new dedicated SST, and from there pumped to new solids screens where the WAS will combine with TPS prior to screening. Provisions for future WAS thickening are recommended using either gravity belt thickeners (GBTs) or rotary-drum thickeners (RDTs). When WAS thickening is included in the future, WAS will be pumped from the SST to the GBT or RDT, and new thickened waste activated solids (TWAS) pumps will pump the thickened WAS to the screens.

2.2.3 Solids Screening

Screening at the WPCP is performed on the influent flow at the Preliminary Treatment Building (PTB). New multi-rake bar screens with ½-inch openings between bars are currently being installed as part of the Preliminary Treatment Upgrades: Phase 9B project. Even with the improved influent screening, the PS and WAS generated at the WPCP contain debris that enters the downstream solids handling process. The implementation of THP requires solids to be screened to 5 millimeters (mm) to prevent adverse impacts on the THP equipment and to reduce excess debris in the final Class A

biosolids product. Solids screens upstream of THP equipment will be used to mitigate these impacts and to ensure proper operation of the THP equipment.

2.2.4 Pre-Dewatering

The THP requires that undigested PS and WAS are pre-dewatered to a solids concentration of approximately 15 to 18 percent dry solids. New centrifuges will be provided to pre-dewater the solids to the recommended solids concentration.

At least two pre-dewatered cake storage bins will be provided to store the pre-dewatered cake, provide redundancy, and provide equalization to attenuate fluctuations in the upstream solids handling processes. The THP feed pumps will pump cake from the pre-dewatered cake storage bins to the THP preheating/reactor feed tank. The bins will also provide short-term storage for both planned and unplanned THP shutdowns.

2.2.5 Thermal Hydrolysis Process

THP uses medium-pressure steam to create high temperature and pressure conditions to lyse cells and to promote the release and solubilization of particulate organic material. THP further hydrolyzes large biological macromolecules, carbohydrates, and long-chain fatty acids to lower molecular weight intermediates, significantly improving the rate of digestion. Therefore, ADs can be operated at shorter retention times with equivalent process stability as conventional mesophilic ADs. In addition, the THP increases volatile solids (VS) destruction and biogas generation by approximately 10 to 20 percent relative to conventional digestion.

Another characteristic of THP is a decrease in viscosity of the digester feed solids, allowing higher feed solids concentrations in the ADs, in the range of 9 to 12 percent compared to 4 to 6 percent total solids (TS) for a conventional digestion process. As a result, the volume requirement of the ADs can be greatly reduced compared to the required capacity of conventional mesophilic ADs. Finally, the digested solids (DS) from a THP system provide less odorous cake and typically provide increased dewaterability compared to conventional AD, as well as Class A biosolids.

In general, the THP will be a batch process with redundancy provided for each component of the key unit processes, excluding process gas treatment. While the pressure vessels of the THP require annual shutdowns and inspection, the redundancy provided will eliminate the need for emergency storage.

THP systems from different manufacturers vary widely in their process configurations, equipment arrangement, and operational strategies. Additionally, the solids handling facility interfaces upstream and downstream of the THP are different with each technology. Therefore, the THP equipment manufacturer and equipment details will be

pre-selected by the County via competitive negotiation so that the designer has adequate information about the technology to design the interfaces properly.

2.2.6 Hydrolyzed Solids Cooling

Following THP, the thermally hydrolyzed solids (THS) must be cooled to mesophilic digestion temperatures prior to digestion. The cooling will be accomplished by cooling heat exchangers (HEXs) using plant effluent water (PEW) as the cooling medium. Careful design of this system is required, including blending the THS with recycled DS prior to the HEXs in order to reduce viscosity of the cooled THS and ensure that the material remains easily pumpable.

2.2.7 Anaerobic Digestion

The WPCP currently stabilizes thickened PS and WAS using lime stabilization. This Program will construct new digesters, with two primary digesters and one secondary digester, to stabilize the THP preconditioned solids, reduce the mass of solids to be hauled, produce biogas to be beneficially used, and produce Class A biosolids. Space will be reserved for a future third primary digester.

2.2.8 Final Dewatering

DS will be dewatered using new centrifuges to produce a high-quality dewatered Class A biosolids cake suitable for beneficial reuse. The dewatered cake will be stored in final dewatered cake storage bins. The cake will be loaded into trucks in a new fully enclosed, drive-through truck loading bay and then hauled to beneficial reuse.

2.2.9 Biogas Management and Upgrading

Biogas generated during the AD process will be upgraded and beneficially used as renewable natural gas (RNG). The biogas will be treated to remove contaminants and carbon dioxide (CO_2) and then used off site. A biogas flare will be provided to safely combust biogas during startup and maintenance.

2.2.10 Other Systems

The Program requires new support systems and modifications to existing support systems; these are also described in the subsequent sections of this Plan. These systems include:

- New process steam system
- New odor control system
- Modifications to the PEW system
- Modifications to the electrical distribution system
- Modifications to the distributed control system

2.3 Facility and Site Plan

This section presents a facility and site plan, including site and process constraints and facility layout concept overview.

2.3.1 Site and Process Constraints

The WPCP site has limited available space, with the solids handling facilities situated on the triangular northernmost part of the WPCP. Refer to the Drawings in Volume 2 for the existing site and utilities plans. The location for the new facilities is bordered on all sides by critical buried infrastructure including major electrical ductbank, the Potomac Interceptor influent to the WPCP, and the common influent channel, which carries all influent wastewater flow to the PTB. Multiple facilities, including foundations from previously demolished facilities, will require demolition to construct the new Facilities for this Program. Careful planning with Arlington County and the Program Manager will be necessary to ensure continuous reliable operation of the existing solids handling processes during Program implementation, including major utility relocation. For preliminary MOPO considerations, refer to Section 22.

The WPCP is bordered by residential neighborhoods, and as stated in Section 1, the vision of this Program is to be a good neighbor within the community and maximize community acceptance. Therefore, the new Facilities will be designed to fit in with the existing WPCP aesthetics. Where feasible, process equipment will be located inside buildings, and where not feasible, screening walls will be installed to provide visual screening from large, exposed process equipment and pipe racks. Noise and vibration excursions from the WPCP also can adversely impact the neighbors, so the new Facilities will also be designed to minimize noise and vibrations leaving the WPCP.

2.3.2 Facility Layout Alternatives Overview

Two options for laying out the facilities to house the new unit processes are presented in this Plan, based on either renovating or decommissioning the existing Dewatering Building (DWB) (Options 1 and 2, respectively). Both options are feasible and will be further considered for the facility design by the delivery team. If the existing DWB is renovated, then it will be modified to house the screening and pre-dewatering processes as well as the process steam system. If the DWB is decommissioned, then a Solids Processing Building (SPB) will be constructed to incorporate both pre-dewatering and final dewatering. Refer to the Drawings for site plans for the two options (e.g., C-004 and C-007) and building concepts for the new facilities. The site plans and site considerations are described in greater detail in Section 17.

2.4 Program Design Preferences

During the development of the Plan's technical design criteria, a set of design preferences were developed by Arlington County. These criteria, listed in Table 2-1, identify criteria into the following three categories:

- **Requirement:** Based on evaluations during the planning period Arlington County has determined these criteria are a requirement to be implemented by the delivery team.
- **Preference:** Based on evaluations during the planning period Arlington County prefers these criteria, but the delivery team may propose alternatives for the County's consideration.
- **Further Evaluation:** The delivery team will perform additional evaluation and work with the County and Program Manager to reach an agreed solution.

Table 2-1. Program Design Preferences

Unit Process/ Area	Item	Requirement	Preference	Further Evaluation
Site Plan	Site plan design	Site plan shall be designed to accommodate future facilities (digester, etc.) required for 40 mgd.		
	Renovate DWB			Renovate or decommission DWB
	Decommission DWB			Renovate or decommission DWB
	Stormwater	Meet stormwater regulations		
	Stormwater	Drains in solids processing and hauling areas will go to process		Determine which areas can go to the head of the WPCP and how to route overflows
	Facilities siting	Avoid impacts to existing 480-volt (V) buried infrastructure and utility corridors as identified on site plan		
	Fats, oils, and grease (FOG)		Future but reserve space	Location
	Post-processing		Future but reserve space	Location, technology
	Sidestream treatment	Future but reserve space		Location
Thickening	Primary thickening	Existing GTs and underflow pumps	Use existing underflow pumps	GT drain pump approach
	WAS thickening	Plan for future and reserve space		Location, technology
Solids storage	Thickened solids storage		24 hours (hr) at peak 3-day solids	
	Unthickened WAS storage		8 hr at peak 3-day solids	
	Unthickened primary storage	None		
	Solids storage	Combined PS/WAS storage must be post-screening	Combined PS/WAS storage	
	Solids storage	Maintain ability to store screened PS/WAS separately or combined		
	SST mixing			Mixing technology (shown as large bubble mixing for SSTs)

Unit Process/ Area	Item	Requirement	Preference	Further Evaluation
Solids screening	Solids screening process design criteria		As defined in Sections 3 and 6 of the Plan	Separate screening of TPS and WAS
	Solids screening equipment type	Inline solids screens (5 mm)		
	Solids screening redundancy	N+1		
	Solids screening equipment manufacturer	Huber Strainpress Hydro-Sludge screen		Equipment manufacturer evaluation
	Solids screens materials of construction	Stainless steel		
	Solids screenings storage	Provide means of controlling odors from screenings		Enclosure or endless bagging system
Pre-dewatering	Pre-dewatering process design criteria		As defined in Sections 3 and 8 of the Plan	
	Pre-dewatering equipment	Centrifuges		
	Pre-dewatering equipment		Centrifuge manufacturers: Alfa Laval, Centrisys, GEA	Equipment manufacturer evaluation
	Pre-dewatered cake conveyance		As defined in Section 8	
	Pre-dewatering centrifuge redundancy	N+1		
	Pre-dewatered cake storage	No fewer than 2 bins		
	Pre-dewatered cake storage	24 hr at 40 mgd (350 cubic yards [CY])		
	Pre-dewatered cake loadout	Provide means of loading out pre-dewatered cake to trucks for hauling	For renovated DWB, maintain one existing truck scale and loading	

Unit Process/ Area	Item	Requirement	Preference	Further Evaluation
			bay for pre-dewatered cake emergency operations	
Renovated DWB /SPB	Operation spaces	Plant-wide redundant control room		
	Operation spaces	Separate break room from control room		
	Operation spaces	Bathroom and lab space (1,000 square feet [ft^2])		
	Operations storage	Dedicated storage for operations (1,000 ft^2)		
Renovated DWB /SPB	Maintenance space	Dedicated space must be provided for maintenance (600 ft^2 for maintenance and 600 ft^2 for electrical)		
THP	THP equipment	To be pre-selected by Arlington County		
	THP feed	Progressive cavity with dilution and lubrication		
	Dilution water (including THP downstream)	PEW with County water (COW) backup		
Steam	Steam boiler design criteria	As defined in Section 10 of the Plan, 10,000 pounds (lb)/hr, 350 horsepower (hp)		
	Steam boiler equipment	Conventional boilers, dual-fuel both natural gas (NG) and biogas		
	Steam boiler equipment	N+1		
Cooling	Cooling process design criteria	As defined in Section 11 of the Plan		
	Cooling method		Once-through cooling using PEW with COW backup	Once through vs. cooling tower with plume abatement (as described in Section 11)
	HEX type	Tube-in-tube		
	HEX redundancy	50% of the installed HEX can cool 100% of the solids in winter conditions	Two bifurcated HEX: provides redundancy	
Digestion	Digester process design criteria	12-day minimum solids retention time (SRT) 0.4 lb VS/cubic foot (ft^3) max 3,000 milligrams per liter (mg/L) ammonia (NH_3) max		
	Digester configuration	2 primary, 1 secondary sized for 30.8 mgd		

Unit Process/ Area	Item	Requirement	Preference	Further Evaluation
	Digester configuration	Secondary digester designed to function as redundant primary digester		
	Digester configuration	3 digesters now		Digester location
	Digester configuration	1 digester future		Planning for future digester (location/foundation)
	Digester feed approach		Direct feed to each digester	
	Digester mixing	Draft tubes and/or pumped mixing ONLY		Draft tubes or pumped mixing
Digestion	Digester mixing	Secondary digester fully mixed at 20% full		
	Digester construction method	Digester concrete material of construction		Digester construction method
	Digester geometry		1:1 diameter:height	
	Primary digester covers	Concrete covers for primaries without columns		
	Secondary digester covers		Membrane cover for secondary digester	
Final dewatering	Final dewatering design criteria		As defined in Sections 3 and 13 of the Plan	
	Final dewatering equipment	Centrifuges		
	Final dewatering equipment	Match pre-dewatering centrifuge (size, make, model)		
	Final dewatering equipment		Centrifuge manufacturers: Alfa Laval, Centrisys, GEA	
	Final-dewatering centrifuge redundancy	N+1		
	Final dewatering cake storage	Minimum 200 CY		

Unit Process/ Area	Item	Requirement	Preference	Further Evaluation
	Final dewatering cake storage	Minimum of two bins		
	Final dewatering truck loadout operations	Drive-through enclosed loadout area		
	Final dewatering truck loadout operations	Fully load truck without moving trailer		
	Final dewatering truck loadout operations		Fully load trailer within 45 minutes	
	Operation spaces in Final DWB (Renovate DWB option)	Viewing platform, bathroom, lab space, centrifuge control room in Final DWB		
	Centrate handling	Plan for future deammonification	Centrate equalization prior to installing deammonification	
Biogas	Biogas process design criteria		As defined in Section 14 of the Plan	
	Biogas storage	Provide low pressure biogas storage as defined in Section 12	Membrane cover to secondary digester	Means/location of storage
	Biogas utilization	Renewable natural gas		
	Biogas utilization	Provide pipe for on-site biogas use		
Biogas	Biogas upgrading technology		Membrane separation	Equipment manufacturer evaluation
	Tail gas combustion	Tail gas treatment/combustion		Method/technology for tail gas treatment/combustion
	Biogas flare	Enclosed flare technology, minimum 10:1 turndown, dual fuel pilots		
	Biogas flare	Redundancy required		Mode of redundancy

Unit Process/ Area	Item	Requirement	Preference	Further Evaluation
	Biogas upgrading technology	Redundancy required		Mode of redundancy
Chemicals	Polymer	Liquid emulsion	Final dewatering aging tank	
Odor control	Odor control	Performance requirements throughout construction		
	Odor control		Central scrubbers as defined in Section 15 of the Plan	
	Odor control		Consider future expansion capabilities when designing odor control system	
Utilities	Drains		Eliminate Recycle Interceptor Pump Station (RIPS)	
	Recycle management	Provide flow monitoring and efficient means to sample for each individual recycle stream		
	PEW	Use existing PEW system; provide COW as a backup to PEW in critical locations		Confirm PEW network is adequate
	COW	Provide looped COW system on north side of WPCP to improve COW resilience		Confirm loop arrangement and adequate fire flows
Electrical	Electrical equipment	Located in a building		
	DC-7 standby power	Provide a generator tap box to facilitate connection of a mobile generator		
	Potomac Yard Pump Station (PYPS) power reliability	Provide dual electrical services to PYPS at all times throughout project	Provide temporary generators to provide dual service to PYPS	
	Lighting	Light-emitting diode (LED)	Manufacturers: Holophane, Crouse Hinds, Appleton	
	Wire	Wire for process feeders or branch circuits: cross-linked polyethylene high heat-resistant water-resistant-2 (XHHW-2) Lighting and receptacle circuits and #14 American Wire Gauge (AWG) Class 1 control circuits: thermoplastic high-heat-resistant nylon-2 (THHN-2)		
Electrical	Conduit	Hazardous/corrosive spaces: polyvinyl chloride-coated rigid galvanized steel (PVC-RGS) Dry/wet spaces: RGS		

Unit Process/ Area	Item	Requirement	Preference	Further Evaluation
		Buried: PVC-RGS or Schedule 40 PVC when encased in a concrete ductbank.		
	Variable-frequency drive (VFD)	Allen-Bradley PowerFlex VFDs		
	Switchgear	Eaton or Schneider Electric (Square D)	Schneider Electric (Square D)	
	Motor control centers (MCCs)	Eaton or Schneider Electric (Square D)	Schneider Electric (Square D)	
	34.5-kilovolt (kV) switches		Prefer gas-filled instead of oil-filled	
Instrumentation	Distributed control unit (DCU) panels	ControlLogix 5580 controllers (or latest version)		
	Remote input/output (RIO) panels	ControlLogix platform, FLEX 5000™ input/output (I/O) distributed I/O platform (or latest version)		
	Local control panels (LCPs)	CompactLogix 5380 controllers (or latest version), Micro850 and Micro870 controllers (or latest version)		
	Electrical switchgear	Modicon programmable logic controllers (PLCs) (Schneider Electric)		
	Operator interface terminals (OITs)	Allen-Bradley PanelView Terminals	Thin Clients with touchscreen panels are preferred instead of industrial personal computers	
	Panel power supplies	Allen-Bradley Bulletin 1606 (or latest version), Pepperl+Fuchs, Phoenix Contact		
	Terminal blocks band breakers	Allen-Bradley, Phoenix Contact	Circuit breakers are preferred to fuses whenever possible	
	Relays	Allen-Bradley, Phoenix Contact		
	DCU panels	Allen-Bradley Stratix 5700 industrial access switch (or latest version)		
	RIO panels	Allen-Bradley Stratix 5700 industrial access switch (or latest version)		
	LCPs	Allen-Bradley Stratix 2500 switch (or latest version), Ethernet Tap (ETAP)		
Instrumentation	Network operations center (NOC)	Cisco Catalyst distribution switch, latest version		

Unit Process/ Area	Item	Requirement	Preference	Further Evaluation
	Distribution switch rack enclosure	Cisco Catalyst distribution switch, latest version		
	Zone enclosure	Allen-Bradley Stratix 5400 industrial access switch (or latest version)		
	Device-level networks: Ethernet-based protocols	Flow meter, analyzers, power monitors, and APL transmitters	Ethernet is preferred where possible	
	Device-level networks: HART/4–20 milliamperes (mA)	Pressure, temperature and level transmitters, actuators	HART/4–20 mA	
	Device-level networks: Foundation Fieldbus	Actuators, pH/ oxidation-reduction potential (ORP), mass flow. Foundation Fieldbus devices will be used only when existing Fieldbus infrastructure is present.		
	Device-level networks: wireless protocols	WirelessHART, WiFi, cellular/ Long-Term Evolution (LTE)		
	Device-level networks: BACnet	Heating, ventilation, and air conditioning (HVAC) controls		
	Pressure transmitters	Rosemount		
	Temperature transmitters	Rosemount		
	Level transmitters	Differential pressure: Rosemount		
	Level transmitters	Radar preferred to ultrasonic: Rosemount		
	Flow meters: mag meter	Endress+Hauser		
	Flow meters: differential type	Rosemount		
	pH/ORP	Yokogawa		
	Fixed-point gas detection	Sierra monitoring		

Unit Process/ Area	Item	Requirement	Preference	Further Evaluation
	Dissolved oxygen (DO)/total suspended solids (TSS)	Insite		
	Online TSS		Valmet	
	Weight (load cells)	Mettler-Toledo		
	Electric actuators		Rotork	
Instrumentation	Uninterruptible power supplies (UPSs): 120 volts alternating current (VAC) output	Vertiv/Leibert GXT series		
	UPSs: 24 volts direct current (VDC) output	Allen-Bradley 1606-XLS240-UPS, 1606-XLS480-UPS		
Architectural	Facility external appearance		Consistent with existing facilities	
	Facility and equipment external appearance		Provide screening walls to limit visual impact	
	External vibration and noise mitigation		Design facilities to limit noise and vibration excursions beyond WPCP fence line	
	Elevators	Freight elevator required if the building is 3 or more stories high		
	Facility sustainability		As described in Sections 2 and 18 of the Plan	
HVAC	HVAC	Conditioned space for all electrical rooms, control rooms, and break rooms	Design criteria as specified in Section 19	
	HVAC		Temperature design set points as identified in other sections	
	HVAC	National Fire Protection Association (NFPA) 820 compliance		

Unit Process/ Area	Item	Requirement	Preference	Further Evaluation
	HVAC equipment		Trane: one manufacturer for all systems Liebert for computer room air conditioning (CRAC) systems	
	HVAC controls	Siemens		
	Heating method			Overall approach to heating and cooling, including use of boilers, NG, and/or electricity for heating
Temporary facilities	Electrical	Limit temporary electrical		
	Solids stabilization			Temporary operations (pending site plan selection)
	Solids stabilization	Provide odor control for all temporary solids stabilization		
General	Overall design	Facilities and equipment shall be designed for 30.8 MGD design condition. New buildings shall be designed with space for future equipment required for 40 mgd.		
	Facility sustainability	Minimum Envision Silver verification	Envision Gold verification	
	Pump redundancy	N+1 for all process pumps		
	Positive-displacement pump		Progressive cavity or rotary lobe	
	Progressive-cavity pump manufacturers		Seepex or Moyno. Split-casing is preferred where possible.	
	Valve		Valve preferences to be provided	
	Grinders		Prefer Franklin Miller Super shredder instead of JMC Muffin Monster	
	Centrifugal pumps		Hayward Gordon	
	Screw pumps		Goulds or Hayward Gordon	
	Valves	DeZurik: full port preferred where applicable		

Unit Process/ Area	Item	Requirement	Preference	Further Evaluation
	Valves		Provide electric actuator with remote pushbuttons for all valves out of reach	
	Process piping	Cleanouts and flushing provisions on all solids and chemical lines, with hot water		
	Process piping		Provide standard (per American Water Works Association [AWWA] C110) piping sizes only, for all piping materials and systems	
	Process piping	4" and larger: ductile-iron. Glass lining for solids piping. Concrete lining for PEW.	Flange or Victaulic couplings acceptable	
	Process piping		3" and smaller: PEW—stainless steel or galvanized steel. Unions or flanges preferred to welding.	
	Process piping insulation	Insulation will have PVC jacketing. Insulation will be removable (via removable blankets) at access points, including fittings, valves, and instruments.		Consider/evaluate Dragon jacket manufacturer
	Process piping and instruments	Outside piping at risk for freezing will be heat traced and insulated.		
	Process piping		Maximize accessibility of all valves and instruments	

2.5 Program Sustainability

The completed Program will not only enhance operating conditions and reliability of the Facilities while continuing to meet all permit requirements; it will also ensure a persistent commitment to environmental stewardship by the County. Sustainability goals have been developed to support the Arlington County Facility Sustainability Policy for New Construction and Major Renovation (Green Building Policy, April 30, 2019). Table 2-2 below presents the Program sustainability goals and their aligned purpose from the Facility Sustainability Policy.

Table 2-2. Program Sustainability Goals

Re-Gen Sustainability Goals	Arlington County Facility Sustainability Policy Purpose
Demonstrate Arlington's commitment to environmental, economic, and social stewardship	Demonstrate Arlington's commitment to environmental, economic, and social stewardship
Produce a high-performing, durable, adaptable, and efficient project that is easy to operate and maintain	Achieve high-performing, durable, and efficient buildings that are easy to operate and maintain
Support staff and community health and well-being through the implementation of safe facilities	Invest in healthy indoor environments for staff and visitors
Support the County's goal of becoming carbon neutral by 2050	Reduce operating costs through energy and water efficiency
Facilitate an open, transparent, and collaborative process	Set a community standard of sustainable building practices
Convert wastewater to Class A biosolids and biogas for renewable energy	

2.6 Envision Rating System

The Green Building Policy requires that "all County buildings and public facilities will strive to incorporate the highest environmental performance standards using the Leadership in Energy and Environmental Design (LEED), International Living Futures Institute (ILFI), or Viridiant's EarthCraft Virginia green building rating system." Further, the policy notes that all eligible new construction must achieve at least LEED Silver certification "to demonstrate and communicate comprehensive sustainability to the public, including management of energy, water, materials, indoor environment, and sustainable sites."

Because of the industrial, process-oriented nature of the Program, it would be difficult for the Facilities to meet several of the LEED prerequisites. The Envision® V3 Sustainable Infrastructure Framework (Envision) was developed to foster "the dramatic and necessary improvement in the sustainable performance and resiliency of physical

infrastructure" (*Purpose of Envision®,* Institute of Sustainable Infrastructure). Whereas LEED is intended to evaluate interior spaces with the primary purpose of human occupancy, Envision covers projects in broad civil infrastructure. As the nature of the Arlington Re-Gen Biosolids Upgrade Program is a broad and complex civil infrastructure project, the Program will proceed with the Envision verification system as a means to achieve a more sustainable Program while fulfilling the intent of the Arlington County Green Building Policy. The WPCP will use the Envision framework to improve sustainable performance, as a component of the forthcoming Program Sustainability Management Plan (SMP), and to pursue Envision verification. The SMP will be provided to the delivery teams as a separate document.

Based on the initial evaluations completed during the planning phase, the Program is well-suited to pursue credits that could result in an Envision verification, provided that the required supporting documentation is compiled. The Program currently demonstrates that it can achieve a Silver verification goal, which aligns with the Green Building Policy's requirement for LEED Silver certification. There may be sufficient points to target a Gold verification when submitted.

Envision is similar in structure to the LEED rating system. While LEED is intended to be used for buildings, Envision provides industry-wide sustainability metrics for all infrastructure types, including industrial facilities such as the WPCP. Envision provides a holistic framework for evaluating and rating the community, environmental, and economic benefits of all types and sizes of infrastructure projects, giving recognition to those projects that use transformational, collaborative approaches to assess the sustainability indicators over the course of a project's life cycle. The majority of credits included in LEED correlate to Envision credits, refer to TM No. 15: *Envision Rating System Recommendations*. Additionally, to ensure that the intent of Arlington's Green Building Policy is met, is it recommended that all Envision credits that correlate to LEED prerequisites be included, other than those intended for indoor occupied spaces.

3 SOLIDS PRODUCTION AND DESIGN CRITERIA

3.1 Background and Purpose

The purpose of this section is to establish the projected solids production and design criteria for the Arlington Re-Gen Project. Based on an evaluation of historical operating data and projected wastewater flows, design criteria were established for current, design, and ultimate WPCP buildout conditions. TM No. 1: *Solids Production and Design Criteria* (Appendix A) provides additional background of the plant data evaluation. This section presents the current solids production at the Arlington WPCP, the approach for developing solids loading design criteria, and the resulting design criteria. Additionally, the design condition is listed for each process along with the justification behind the design condition selection.

3.2 Current Solids Production

Three years of WPCP operation data from December 2017 through November 2020 were analyzed to evaluate current solids production and to serve as a basis for projecting future solids loads. This section summarizes the current solids production along with the methods for calculating these loads.

The overall goals of the current solids production analysis were to determine the following:

- WPCP solids production in terms of dewatered cake hauled (dry tons [DT] per million gallons [MG] of flow treated)
- PS and TPS production
- Primary scum production
- WAS and TWAS production
- Capture rates for existing thickening and dewatering processes
- 30-day, 14-day, 7-day, and 3-day load peaking factors (PFs) for PS, WAS, and cake

Figure 3-1 illustrates the current simplified overall plant process flow schematic. The approaches used for calculating key solids loads are also shown. The dewatered cake load prior to lime addition was calculated using two methods to provide additional confidence. These methods used liquid solids data (centrifuge feed minus centrate loads, “Method 1”) and hauled solids data (hauled cake minus lime, “Method 2”). Over the 2017–2020 period, the average WPCP effluent flow was 23 mgd, and overall solids production from the dewatering centrifuges was 1.30 DT/MG. WAS load was calculated using the total WAS flow and average TS concentration to the DAFT.

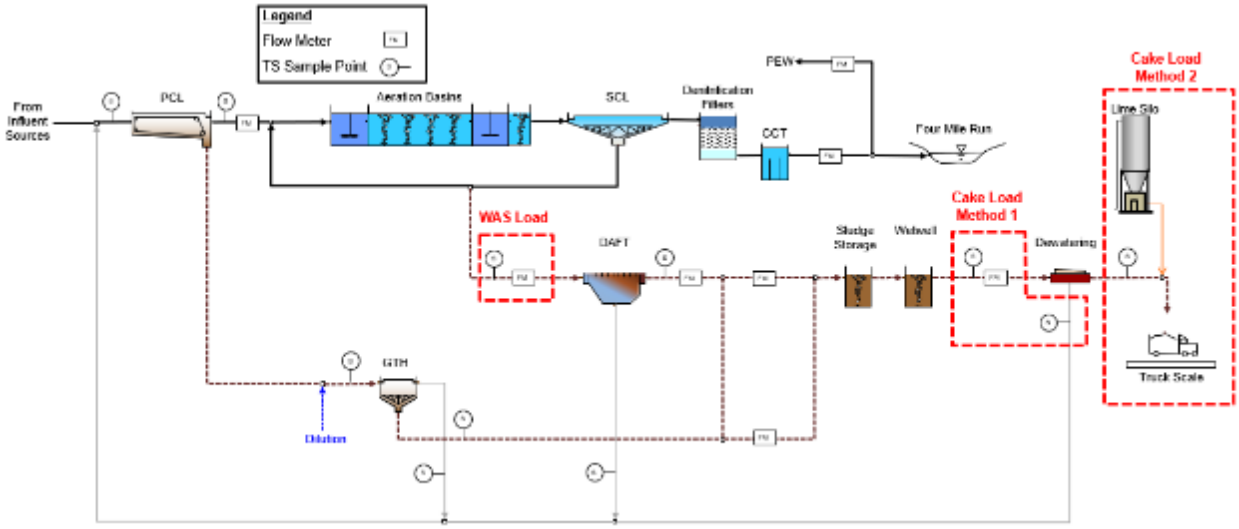

Figure 3-1. Current Simplified Process Schematic

PS production is influenced by the use of enhanced primary clarification. TPS and primary scum loads were calculated based on an overall mass balance using the cake load, WAS load, and capture rates for thickening and dewatering processes. Historically, primary scum has been added to the DAFT influent. Given the calculation approach used for this analysis, primary scum and TPS loads were initially quantified together, calculated as centrifuge feed minus TWAS.

Primary scum quantity was estimated based on total solids (TS) analysis of primary scum samples on 22 days in 2021, daily data for scum pump runtime, and the scum pumping rate as measured with a strap-on flow meter. The current primary scum production is estimated at 4,800 pounds per day (lb/d) based on an average primary scum pump runtime of 16 hours per day, flow of 120 gallons per minute (gpm) when running, and 0.50 percent TS. Peaking factors for scum were assumed to be the same as those for PS. Currently, primary scum is sent to the DAFT and ultimately to dewatering. As part of the Phase 9B project, scum will be concentrated separately and added to screenings sent to landfill. It is recommended that primary scum be added to the WAS storage tanks for processing through screening, THP and AD to recover biogas from the scum. This approach for primary scum is discussed in Section 7. The primary scum concentrator should be maintained as a backup.

Current solids production factors are summarized in Table 3-1, along with the method used for developing each factor. These parameters were used to generate a solids mass balance for current conditions, which then served as the basis for developing future loading conditions. These solids production factors are considered valid for the existing treatment process and are based on existing data. Solids production factors

would need to be reevaluated if the liquid treatment process were changed (e.g., for biological phosphorus removal).

Table 3-1. Current Solids Production Factors (2017–2020)

Parameter	Value				Notes
Dewatered cake production	1.3 DT/MG treated				Based on analysis of centrifuge operating data and hauling records
Capture rates	Centrifuge: 95.0%, GT: 95.0%, DAFT: 99.5%				Based on analysis of operating data
TWAS load fraction [TWAS/(TWAS+TPS)]	34.5% of dry solids to dewatering				Based on average WAS load along with overall solids production and capture rates
Parameter	**30-day PF**	**14-day PF**	**7-day PF**	**3-day PF**	**Notes**
PS peaking factor	1.35	1.46	1.53	1.72	Based on blended solids load minus WAS load
WAS peaking factor	1.23	1.36	1.46	1.55	Based on WAS load to DAFT
Centrifuge feed peaking factor	1.31	1.41	1.51	1.66	Based on simultaneous TWAS and TPS peak

Current solids loads are summarized in Table 3-2 below.

Table 3-2. Current Solids Production Summary (2017–2020, 23 mgd)

Parameter	Average	30-day	14-day	7-day	3-day
Primary solids (lb/d)	38,400	51,800	56,000	59,100	66,000
Primary scum (lb/d)	4,800	6,500	7,000	7,400	8,200
WAS (lb/d)	21,800	26,800	29,700	31,600	33,800
Combined thickened solids (lb/d)	62,900	82,400	89,800	95,000	104,600
Centrifuge cake (lb/d)	59,800	78,300	85,200	90,200	99,300

The VS fraction of the solids is an important factor for evaluating future AD and digester gas utilization strategies. Based on the average WPCP data, the TPS was 84.2 percent volatile and the TWAS with primary scum added was 72.4 percent volatile. The primary scum alone is approximately 90 percent volatile. The TWAS without scum is approximately 68.5 percent volatile. Using these average values along with the solids production factors in Table 3-1, the mixed solids or cake is expected to be 80.6 percent volatile by mass balance. WPCP data indicate that blended solids were 78.0 percent volatile and dewatered cake was 81.4 percent volatile, so this calculated value is reasonable.

3.3 Design Solids Production Methodology

This section provides details regarding the methodology used to develop projections for future solids production.

3.3.1 Solids Characteristics

The design solids production values assume that operation of liquid treatment processes is similar in the future, including use of ferric chloride for enhanced primary clarification. This section discusses the solids concentrations at various points in the solids handling processes. VS fractions and relative WAS and PS loadings were presented in the previous section.

Typical TS concentrations through the processes include the following:

- **Primary solids:** PS was approximately 1.0 percent TS based on available data.
- **Thickened primary solids:** TPS from the GT averaged 5.0 percent TS. TPS concentrations can vary widely, so 4.0 percent TS was used for design criteria purposes.
- **Dilute primary scum:** Grab samples of dilute primary scum have been taken and percent TS varied widely, with average values typically between 0.5 and 1.0 percent TS. Dilute primary scum was assumed to be 0.5 percent TS on average.
- **Waste activated solids:** WAS has averaged 1.08 percent TS, and 1.0 percent TS was used for design criteria purposes.
- **Thickened waste activated solids:** TWAS samples from the existing DAFTs showed highly variable solids concentrations. It is expected that the TWAS from the DAFTs averages about 3.2 percent TS. With future mechanical thickening (GBT or RDT), it is expected that the TWAS would be 5 percent TS.
- **Dewatered cake:** The existing dewatered cake averages 31.5 percent TS prior to lime addition. The future pre-dewatering process does not require such a dry cake, but in practice, it may not be feasible to produce a cake with much lower TS.

3.3.2 Design Mass Balance

Solids load projections were evaluated for future WPCP flows of 30.8 mgd and 40.0 mgd. The 30.8 mgd WPCP flow condition represents approximately 40 dry tons per day (dtpd) from the centrifuges with the existing process configuration and was selected as the design condition for this project. Based on Arlington County growth projections (Arlington County Forecast Round 9.1) and assuming linear growth, the 30.8 mgd condition is expected to be met around year 2052. The 40.0 mgd WPCP flow condition represents the WPCP buildout capacity and the design capacity of the liquid side of the WPCP.

A solids process mass balance spreadsheet was developed to generate flows and loads for the future solids process configuration at 23.0 mgd (current), 30.8 mgd (design), and 40.0 mgd (buildout) WPCP conditions. The mass balance includes all major unit processes for the proposed solids handling configuration, as presented in the overall process flow diagram in Figure 3-2. Solids quantities and peaking factors used as inputs to the mass balance are based on the analysis of WPCP data presented in the previous section. This includes overall dewatered solids production of 1.30 DT/MG treated, stated peaking factors and VS fractions, and assumption of similar liquid treatment process operation in the future. It should be noted that if the liquid treatment process is changed to an enhanced biological phosphorus removal (EBPR) process in the future, the mass balance and design criteria would be affected. A change from enhanced primary clarification to EBPR may result in less PS production, more WAS production, lower dewatered cake solids concentrations, and higher hydrogen sulfide (H_2S) concentrations in digester gas and odorous air. Additionally, with EBPR it is recommended to include provisions to chemically remove soluble phosphorus from the digested sludge and/or centrate to help mitigate nuisance struvite scaling and high-phosphorus recycle loads.

Future changes in solids recycle loads relative to current thickening and dewatering operations are reflected in the model as additional PS. Capture rates for pre-dewatering and final dewatering should be evaluated by the design engineer.

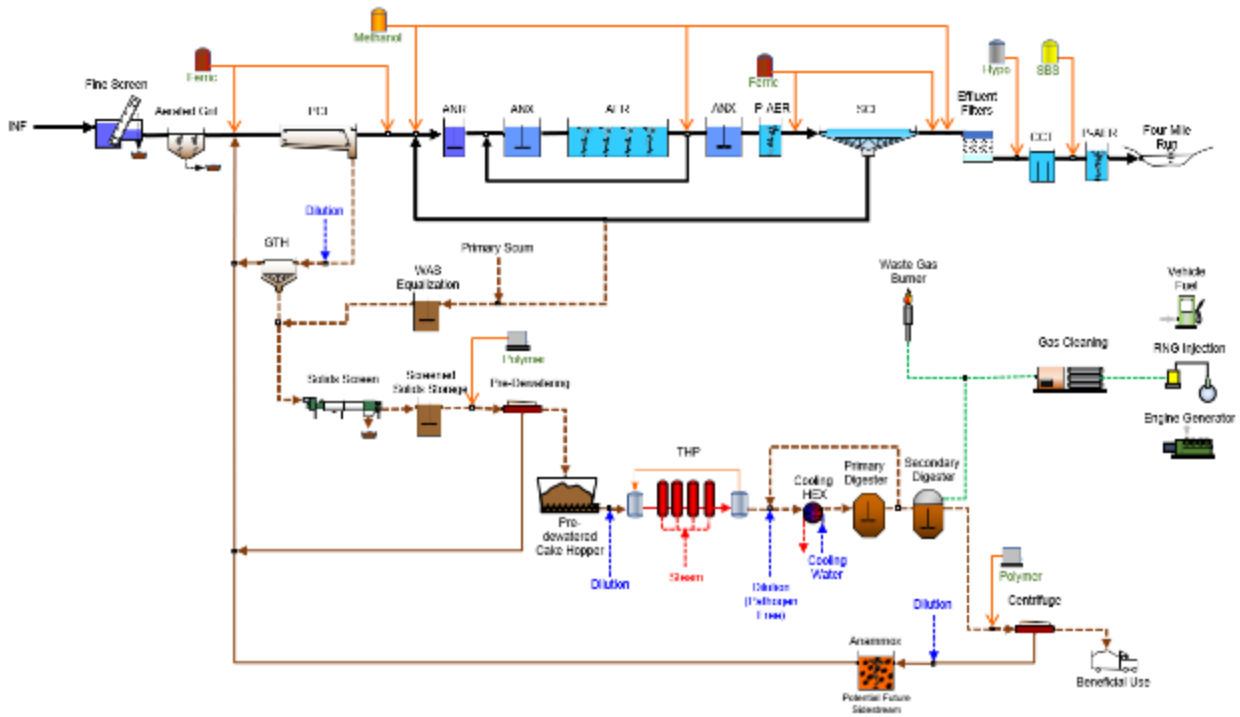

Figure 3-2. Proposed Overall Process Flow Diagram

Inputs to the mass balance include operating assumptions for each unit process, which are based on WPCP data, typical industry values, vendor information, and results from the THP/AD pilot testing with Virginia Tech. Initial pilot results for final dewatered cake percent TS were lower than expected, and the model assumption for this parameter has not yet been revised as investigation remains ongoing. Assumptions for process operation are listed in Table 3-3.

Table 3-3. Design Mass Balance Assumptions

Parameter	Value	Source
Primary Solids and Thickened Primary Solids		
PS solids concentration	1.0%	Based on analysis of special sampling 3/9/2021 and 4/15/2021
TPS solids concentration	4.0%	Based on analysis of WPCP data, average was 5%
Solids capture: PS thickening	95%	Based on analysis of WPCP data for GT influent and overflow
Primary Scum		
Dilute primary scum concentration	0.5%	Ranged from 0.5% to 1.0% during 2021 special sampling. Scum flow capped at 120 gpm in model and concentration increased accordingly.
WAS and TWAS		
WAS solids concentration	1.0%	Based on analysis of WPCP data, average was 1.08%
Future TWAS solids concentration	5.0%	Typical industry value
Solids capture: future WAS thickening	98%	Based on historical DAFT capture of >99%
WAS thickening polymer dose (lb active polymer/DT)	5	Typical industry value
Pre-dewatering		
Pre-dewatered solids concentration	25%	High solids not required for pre-dewatering; feasibility to be evaluated further
Pre-dewatering solids capture	95%	Based on current centrifuge dewatering
Dewatering polymer dose (lb active polymer/DT)	10	Based on historical operation at 8 lb/DT
THP/AD		
THP steam demand (ton steam per ton dry solids)	1.0	Typical value for Cambi
DS recycle ratio to HEX feed	3.5–5.0	Typically set to 3.5:1 recycle ratio at peak 3-day condition
Digester feed solids concentration	9.0%	Typical value for THP
VS reduction	60%	Typical industry value, supported by pilot results
Solids nitrogen content (lb-N/lb-VS)	0.045	Based on replicating THP/AD pilot digester NH_4-N
Biogas yield (ft^3-biogas/lb-VSr)	15	Based on THP/AD pilot results
Biogas higher heating value (Btu/ft^3-biogas)	650	Typical industry value
Biogas lower heating value (Btu/ft^3-biogas)	580	Typical industry value
Post-dewatering		
Post-dewatering solids capture	95%	Typical industry value for centrifuge dewatering
Post-dewatered solids concentration	33%	Estimate; evaluations ongoing
Dewatering polymer dose (lb active polymer/DT)	30	Estimate

Btu = British thermal units; DS = digested solids; ft^3 = cubic feet; NH_4-N = ammonium-nitrogen; VSr = volatile solids reduction.

The spreadsheet output is a mass balance at each step in the solids processes. Parameters specific to each unit process are also included, such as steam demand for THP, solids cooling requirements, nitrogen (N) released in the AD process, digester gas

production, and estimated polymer use. These outputs are presented in Section 3.4 below.

3.4 Solids Loading Design Criteria

The solids loading design criteria for each unit process were established using biosolids projections at 30.8 mgd WPCP flow. The 40 mgd WPCP condition was used to establish facility footprint requirements for potential future equipment. All facilities must function properly at startup conditions. Flows and loads at 23 mgd WPCP flow are included in this section as a reference for startup conditions. Additional details are provided in this section and in the respective section for each unit process. Note that process loadings presented in this section are based on 24/7 operation, which may not be the design operating schedule for certain facilities (e.g., final dewatering). Design criteria in this section include primary scum but do not include future fats, oils, and grease (FOG) receiving, which is covered in Section 23. Design values used in TMs may vary from the values presented herein because of changes in design assumptions and process configurations during development of the Plan. Mass balance values provided in this section have been updated based on the most recent parameters and assumptions presented herein, and values may differ slightly from those listed in the remainder of the Facilities Plan. However, the slight variations in the parameters do not impact the findings of the unit process analyses included in subsequent sections. Design values would also need to be reevaluated if the liquid treatment process were changed (e.g., for biological phosphorus removal).

3.4.1 Design Peaking Factors by Solids Unit Process

Through collaborative workshops with Arlington County, individual facility design basis peaking factors were established for each unit process and are presented in Table 3-4. In general, processes upstream of THP are sized based on peak 3-day conditions. AD and downstream processes are sized based on peak 14-day conditions because of the equalization capacity provided by the secondary anaerobic digester as well as upstream cake and thickened solids storage. Loading rates for each unit process are provided in Section 3.4.2 with additional information included in the Plan section for each unit process.

Table 3-4. Peaking Factor by Solids Unit Process

Unit Process	Peaking Factor	Notes
PS thickening	Peak 3-day	Minimal upstream storage in PCs
WAS thickening (future)	Peak 3-day	Minimal upstream storage in secondary treatment process and SST
Solids storage	Peak 3-day	Minimal upstream storage in PCs, secondary treatment process, and GTs
Pre-dewatering and pre-dewatered cake storage	Peak 3-day	24 hours of screened solids storage upstream
THP	Peak 7-day	Attenuated by pre-dewatered cake storage and screened solids storage
Anaerobic Digestion	Peak 14-day	Attenuated by digester retention time and secondary digester
Final dewatering and final dewatered cake storage	Peak 14-day	Attenuated by all upstream processes

3.4.2 Design Solids Loading Rates by Solids Unit Process

Table 3-5, Table 3-6, and Table 3-7 summarize the solids loading criteria for the major unit processes at 23.0 mgd, the 30.8 mgd design condition, and the 40.0 mgd WPCP buildout condition, respectively. These tables include process flows at annual average, peak 30-day, 14-day, 7-day, and 3-day conditions. Model input parameters listed in the first column of these tables are italicized. Values shown in bold text represent the design basis loadings for the respective unit process. The 30.8 mgd design condition is used for equipment sizing and the 40.0 mgd buildout condition is used for sizing facility footprints, space for future equipment, and process piping. The key process design criteria for each unit process are described in greater detail in the corresponding sections of the Plan. The 30.8 mgd design condition is also shown on Drawing G-008.

Table 3-5. Process Design Criteria Summary, 23 mgd Condition

Parameter	Average	30-day	14-day	7-day	3-day
Primary Solids					
Total solids load (lb-TS/d)	39,924	53,831	58,234	61,434	68,576
Volatile solids load (lb-VS/d)	33,254	44,853	48,518	51,181	57,140
Total solids concentration	1.0%	1.0%	1.0%	1.0%	1.0%
Volatile fraction (lb-VS/lb-TS)	83.3%	83.3%	83.3%	83.3%	83.3%
Flow (gpd)	478,709	645,460	698,251	736,614	822,251
Flow (gpm)	332	448	485	512	571
Thickened Primary Solids					
Total solids load (lb-TS/d)	37,928	51,140	55,322	58,362	65,147
Volatile solids load (lb-VS/d)	31,592	42,610	46,092	48,622	54,283
Total solids concentration	4.0%	4.0%	4.0%	4.0%	4.0%
Volatile fraction (lb-VS/lb-TS)	83.3%	83.3%	83.3%	83.3%	83.3%
Flow (gpd)	113,693	153,297	165,835	174,946	195,285
Flow (gpm)	79	106	115	121	136
Waste Activated Solids					
Total solids load (lb-TS/d)	21,826	26,846	29,683	31,648	33,830
Volatile solids load (lb-VS/d)	14,951	18,389	20,333	21,679	23,174
Total solids concentration	1.0%	1.0%	1.0%	1.0%	1.0%
Volatile fraction (lb-VS/lb-TS)	68.5%	68.5%	68.5%	68.5%	68.5%
Flow (gpd)	261,702	321,894	355,915	379,468	405,639
Flow (gpm)	182	224	247	264	282
Primary Scum (to Solids Storage Tank with WAS)					
Total solids load (lb-TS/d)	4,784	6,458	6,985	7,367	8,228
Volatile solids load (lb-VS/d)	4,306	5,813	6,286	6,631	7,406
Total solids concentration (lb-TS/lb-solids)	0.50%	0.50%	0.50%	0.51%	0.57%
Volatile fraction (lb-VS/lb-TS)	90.0%	90.0%	90.0%	90.0%	90.0%

Parameter	Average	30-day	14-day	7-day	3-day
Flow (gpd)	114,724	154,878	167,497	172,800	172,800
Flow (gpm)	80	108	116	120	120
Combined Thickened Solids/Pre-dewatering Feed					
Total solids load (lb-TS/d)	64,538	84,444	91,990	97,377	107,206
Volatile solids load (lb-VS/d)	50,848	66,812	72,711	76,932	84,863
Total solids concentration	1.6%	1.6%	1.6%	1.6%	1.6%
Volatile fraction (lb-VS/lb-TS)	78.8%	79.1%	79.0%	79.0%	79.2%
Flow (gpd)	490,120	630,068	689,247	727,214	773,723
Flow (gpm)	340	438	479	505	537
Pre-dewatered Solids					
Total solids load (dtpd)	30.7	40.1	43.7	46.3	50.9
Total solids load (lb-TS/d)	61,311	80,222	87,391	92,508	101,845
Volatile solids load (lb-VS/d)	48,306	63,472	69,076	73,085	80,619
Total solids concentration (lb-TS/lb-solids)	25.0%	25.0%	25.0%	25.0%	25.0%
Flow (gpd)	29,406	38,476	41,914	44,368	48,847
Flow (gpm)	20	27	29	31	34
Cake mass (wtpd)	123	160	175	185	204
Cake volume (CY/d at 45 lb/ft^3)	202	264	288	305	335
Thermal Hydrolysis Feed Solids with Dilution Water					
Total solids load (lb-TS/d)	61,311	80,222	87,391	92,508	101,845
Volatile solids load (lb-VS/d)	48,306	63,472	69,076	73,085	80,619
Total solids concentration (lb-TS/lb-solids)	16.5%	16.5%	16.5%	16.5%	16.5%
Flow (gpd)	44,554	58,297	63,506	67,225	74,010
Flow (gpm)	31	40	44	47	51
Thermal Hydrolysis Depressurization Tank Solids with Steam Condensate					
Total solids load (lb-TS/d)	61,311	80,222	87,391	92,508	101,845
Volatile solids load (lb-VS/d)	48,306	63,472	69,076	73,085	80,619

Parameter	Average	30-day	14-day	7-day	3-day
Total solids concentration (lb-TS/lb-solids)	14.2%	14.2%	14.2%	14.2%	14.2%
Flow (gpd)	51,906	67,916	73,985	78,317	86,222
Flow (gpm)	36	47	51	54	60
Temperature (°F)	221	221	221	221	221
Diluted THP Solids: Depressurization Tank Output and Pathogen-Free Dilution Water					
Total solids load (lb-TS/d)	61,311	80,222	87,391	92,508	101,845
Volatile solids load (lb-VS/d)	48,306	63,472	69,076	73,085	80,619
Total solids concentration (lb-TS/lb-solids)	9.0%	9.0%	9.0%	9.0%	9.0%
Flow (gpd)	81,683	106,877	116,428	123,246	135,685
Flow (gpm)	57	74	81	86	94
Temperature (°F)	168	168	168	168	168
Digested Solids Recycle: to Cooling Heat Exchanger					
Total solids concentration (lb-TS/lb-solids)	4.5%	4.5%	4.5%	4.5%	4.5%
Flow (gpd)	408,414	408,395	408,399	474,909	474,899
Flow (gpm)	284	284	284	330	330
Temperature (°F)	98	98	98	98	98
Digester Feed Solids: Diluted THP Solids with Recycled Digested Solids					
Total solids concentration (lb-TS/lb-solids)	5.1%	5.2%	5.2%	5.2%	5.2%
Flow (gpd)	490,097	515,272	524,827	598,155	610,584
Flow (gpm)	340	358	364	415	424
Temperature before HEX (°F)	110	113	114	112	114
Temperature after HEX (°F)	98	98	98	98	98
Digested Solids (to Final Dewatering)					
Total solids load (lb-TS/d)	30,692	39,930	43,557	46,137	50,660
Volatile solids load (lb-VS/d)	17,686	23,180	25,241	26,714	29,434
Total solids concentration (lb-TS/lb-solids)	4.5%	4.5%	4.5%	4.5%	4.5%
Volatile fraction (lb-VS/lb-TS)	57.6%	58.1%	58.0%	57.9%	58.1%

Parameter	Average	30-day	14-day	7-day	3-day
Flow (gpd)	81,683	106,877	116,428	123,246	135,685
Flow (gpm)	57	74	81	86	94
Ammonia-N concentration (mg/L)	1,996	2,006	2,004	2,003	2,007
Final Dewatered Cake Product					
Total solids load (dtpd)	15	19	21	22	24
Total solids load (lb-TS/d)	29,157	37,934	41,379	43,831	48,127
Volatile solids load (lb-VS/d)	16,802	22,021	23,979	25,379	27,962
Total solids concentration (lb-TS/lb-solids)	33.0%	33.0%	33.0%	33.0%	33.0%
Cake mass to end use (wtpd)	44	57	63	66	73
Cake volume (CY/d at 45 lb/ft^3)	73	95	103	109	120
Combined Recycles (Thickening, Pre-dewatering, and Final Dewatering)					
Total solids load (lb-TS/d)	6,758	8,910	9,689	10,247	11,322
Flow (mgd)	1.95	2.24	2.35	2.42	2.54
Post-dewatering recycle ammonia load (lb-N/d)	1,274	1,676	1,823	1,929	2,129

°F = degrees Fahrenheit; CY = cubic yards; gpd = gallons per day; wtpd = wet ton(s) per day.

Table 3-6. Process Design Criteria Summary, 30.8 mgd Design Condition

Parameter	Average	30-day	14-day	7-day	3-day
Primary Solids					
Total solids load (lb-TS/d)	53,464	72,087	77,983	82,268	**91,832**
Volatile solids load (lb-VS/d)	44,532	60,064	64,972	68,539	**76,518**
Total solids concentration	1.0%	1.0%	1.0%	1.0%	**1.0%**
Volatile fraction (lb-VS/lb-TS)	83.3%	83.3%	83.3%	83.3%	**83.3%**
Flow (gpd)	641,053	864,356	935,049	986,422	**1,101,101**
Flow (gpm)	445	600	649	685	**765**
Thickened Primary Solids					
Total solids load (lb-TS/d)	50,791	68,483	74,084	78,154	**87,240**
Volatile solids load (lb-VS/d)	42,305	57,061	61,723	65,112	**72,692**
Total solids concentration	4.0%	4.0%	4.0%	4.0%	**4.0%**
Volatile fraction (lb-VS/lb-TS)	83.3%	83.3%	83.3%	83.3%	**83.3%**
Flow (gpd)	152,250	205,285	222,074	234,275	**261,512**
Flow (gpm)	106	143	154	163	**182**
WAS					
Total solids load (lb-TS/d)	29,228	35,950	39,750	42,380	**45,303**
Volatile solids load (lb-VS/d)	20,021	24,626	27,229	29,031	**31,033**
Total solids concentration	1.0%	1.0%	1.0%	1.0%	**1.0%**
Volatile fraction (lb-VS/lb-TS)	68.5%	68.5%	68.5%	68.5%	**68.5%**
Flow (gpd)	350,454	431,058	476,617	508,158	**543,203**
Flow (gpm)	243	299	331	353	**377**

Parameter	Average	30-day	14-day	7-day	3-day
Primary Scum (to Solids Storage Tank with WAS)					
Total solids load (lb-TS/d)	6,406	8,649	9,353	9,866	**11,019**
Volatile solids load (lb-VS/d)	5,766	7,784	8,418	8,879	**9,917**
Total solids concentration (lb-TS/lb-solids)	0.50%	0.60%	0.65%	0.68%	**0.76%**
Volatile fraction (lb-VS/lb-TS)	90%	90%	90%	90%	**90%**
Flow (gpd)	153,631	172,800	172,800	172,800	**172,800**
Flow (gpm)	107	120	120	120	**120**
Combined Thickened Solids/Pre-dewatering Feed					
Total solids load (lb-TS/d)	86,425	113,082	123,187	130,400	**143,562**
Volatile solids load (lb-VS/d)	68,092	89,470	97,370	103,022	**113,642**
Total solids concentration	1.6%	1.7%	1.7%	1.7%	**1.8%**
Volatile fraction (lb-VS/lb-TS)	78.8%	79.1%	79.0%	79.0%	**79.2%**
Flow (gpd)	656,334	809,142	871,491	915,233	**977,515**
Flow (gpm)	456	562	605	636	**679**
Pre-dewatered Solids					
Total solids load (dtpd)	41.1	53.7	58.5	61.9	**68.2**
Total solids load (lb-TS/d)	82,104	107,428	117,028	123,880	**136,384**
Volatile solids load (lb-VS/d)	64,688	84,997	92,501	97,870	**107,960**
Total solids concentration (lb-TS/lb-solids)	25.0%	25.0%	25.0%	25.0%	**25.0%**
Flow (gpd)	39,378	51,524	56,128	59,415	**65,412**
Flow (gpm)	27	36	39	41	**45**
Cake mass (wtpd)	164	215	234	248	**273**
Cake volume (CY/d at 45 lb/ft^3)	270	354	385	408	**449**

Parameter	Average	30-day	14-day	7-day	3-day
Thermal Hydrolysis Feed Solids with Dilution Water					
Total solids load (lb-TS/d)	82,104	107,428	117,028	**123,880**	136,384
Volatile solids load (lb-VS/d)	64,688	84,997	92,501	**97,870**	107,960
Total solids concentration (lb-TS/lb-solids)	16.5%	16.5%	16.5%	**16.5%**	16.5%
Flow (gpd)	59,664	78,067	85,043	**90,023**	99,109
Flow (gpm)	41	54	59	**63**	69
Thermal Hydrolysis Depressurization Tank Solids with Steam Condensate					
Total solids load (lb-TS/d)	82,104	107,428	117,028	**123,880**	136,384
Volatile solids load (lb-VS/d)	64,688	84,997	92,501	**97,870**	107,960
Total solids concentration (lb-TS/lb-solids)	14.2%	14.2%	14.2%	**14.2%**	14.2%
Flow (gpd)	69,509	90,948	99,075	**104,877**	115,462
Flow (gpm)	48	63	69	**73**	80
Temperature (°F)	221	221	221	**221**	221
Diluted THP Solids: Depressurization Tank Output and Pathogen-Free Dilution Water					
Total solids load (lb-TS/d)	82,104	107,428	117,028	**123,880**	136,384
Volatile solids load (lb-VS/d)	64,688	84,997	92,501	**97,870**	107,960
Total solids concentration (lb-TS/lb-solids)	9.0%	9.0%	9.0%	**9.0%**	9.0%
Flow (gpd)	109,384	143,122	155,912	**165,042**	181,700
Flow (gpm)	76	99	108	**115**	126
Temperature (°F)	168	168	168	**168**	168
Digested Solids Recycle: to Cooling Heat Exchanger					
Total solids concentration (lb-TS/lb-solids)	4.5%	4.5%	4.5%	**4.5%**	4.5%
Flow (gpd)	546,920	546,894	546,900	**635,965**	635,951
Flow (gpm)	380	380	380	**442**	442
Temperature (°F)	98	98	98	**98**	98

Parameter	Average	30-day	14-day	7-day	3-day
Digester Feed Solids: Diluted THP Solids with Recycled Digested Solids					
Total solids concentration (lb-TS/lb-solids)	5.1%	5.2%	5.2%	**5.2%**	5.2%
Flow (gpd)	656,304	690,016	702,812	**801,007**	817,652
Flow (gpm)	456	479	488	**556**	568
Temperature before HEX (°F)	110	113	114	**112**	114
Temperature after HEX (°F)	98	98	98	**98**	98
Digested Solids (to Final Dewatering)					
Total solids load (lb-TS/d)	41,100	53,472	**58,328**	61,784	67,840
Volatile solids load (lb-VS/d)	23,684	31,041	**33,802**	35,774	39,416
Total solids concentration (lb-TS/lb-solids)	4.5%	4.5%	**4.5%**	4.5%	4.5%
Volatile fraction (lb-VS/lb-TS)	57.6%	58.1%	**58.0%**	57.9%	58.1%
Flow (gpd)	109,384	143,122	**155,912**	165,042	181,700
Flow (gpm)	76	99	**108**	115	126
Ammonia-N concentration (mg/L)	1,996	2,006	**2,004**	2,003	2,007
Final Dewatered Cake Product					
Total solids load (dtpd)	20	25	**28**	29	32
Total solids load (lb-TS/d)	39,045	50,798	**55,412**	58,695	64,448
Volatile solids load (lb-VS/d)	22,500	29,489	**32,112**	33,985	37,445
Total solids concentration (lb-TS/lb-solids)	33.0%	33.0%	**33.0%**	33.0%	33.0%
Cake mass to end use (wtpd)	59	77	**84**	89	98
Cake volume (CY/d at 45 lb/ft^3)	97	127	**138**	146	161
Combined Recycles (Thickening, Pre-dewatering, and Final Dewatering)					
Total solids load (lb-TS/d)	9,049	11,932	12,975	13,723	15,162
Flow (mgd)	2.26	2.62	2.75	2.84	3.01
Post-dewatering recycle ammonia Load (lb-N/d)	1,706	2,244	2,441	2,583	2,850

Table 3-7. Process Design Criteria Summary, 40 mgd Buildout Condition

Parameter	Average	30-day	14-day	7-day	3-day
Primary Solids					
Total solids load (lb-TS/d)	69,434	93,620	101,277	106,841	119,262
Volatile solids load (lb-VS/d)	57,834	78,005	84,379	89,011	99,374
Total solids concentration	1.0%	1.0%	1.0%	1.0%	1.0%
Volatile fraction (lb-VS/lb-TS)	83.3%	83.3%	83.3%	83.3%	83.3%
Flow (gpd)	832,537	1,122,540	1,214,350	1,281,068	1,430,002
Flow (gpm)	578	780	843	890	993
Thickened Primary Solids					
Total solids load (lb-TS/d)	65,962	88,939	94,572	94,572	94,572
Volatile solids load (lb-VS/d)	54,942	74,105	78,792	78,789	78,801
Total solids concentration	4.0%	4.0%	4.0%	4.0%	4.0%
Volatile fraction (lb-VS/lb-TS)	83.3%	83.3%	83.3%	83.3%	83.3%
Flow (gpd)	197,727	266,603	283,488	283,488	283,488
Flow (gpm)	137	185	197	197	197
Primary Solids Bypassed to WAS Storage Tank (with max. GT loading set to 30 lb/ft^2/d with one GT in service)					
Total solids load (lb-TS/d)	0	0	1,728	7,292	19,713
Volatile solids load (lb-VS/d)	0	0	1,439	6,075	16,426
Total solids concentration	-	-	1.0%	1.0%	1.0%
Volatile fraction (lb-VS/lb-TS)	-	-	83.3%	83.3%	83.3%
Flow (gpd)	0	0	20,714	87,432	236,366
Flow (gpm)	0	0	14	61	164
WAS					
Total solids load (lb-TS/d)	37,958	46,689	51,623	55,039	58,835
Volatile solids load (lb-VS/d)	26,001	31,982	35,362	37,702	40,302
Total solids concentration	1.0%	1.0%	1.0%	1.0%	1.0%
Volatile fraction (lb-VS/lb-TS)	68.5%	68.5%	68.5%	68.5%	68.5%

Parameter	Average	30-day	14-day	7-day	3-day
Flow (gpd)	455,134	559,815	618,983	659,945	705,458
Flow (gpm)	316	389	430	458	490
Primary Scum (to Solids Storage Tank with WAS)					
Total solids load (lb-TS/d)	8,320	11,232	12,147	12,813	14,310
Volatile solids load (lb-VS/d)	7,488	10,109	10,932	11,532	12,879
Total solids concentration (lb-TS/lb-solids)	0.58%	0.78%	0.84%	0.89%	0.99%
Volatile fraction (lb-VS/lb-TS)	90%	90%	90%	90%	90%
Flow (gpd)	172,800	172,800	172,800	172,800	172,800
Flow (gpm)	120	120	120	120	120
Combined Thickened Solids/Pre-dewatering Feed					
Total solids load (lb-TS/d)	112,240	146,859	160,070	169,716	187,430
Volatile solids load (lb-VS/d)	88,432	116,195	126,526	134,098	148,408
Total solids concentration	1.6%	1.8%	1.8%	1.7%	1.6%
Volatile fraction (lb-VS/lb-TS)	78.8%	79.1%	79.0%	79.0%	79.2%
Flow (gpd)	825,662	999,219	1,095,985	1,203,666	1,398,113
Flow (gpm)	573	694	761	836	971
Pre-dewatered Solids					
Total solids load (dtpd)	53.3	69.8	76.0	80.6	89.0
Total solids load (lb-TS/d)	106,628	139,516	152,066	161,230	178,059
Volatile solids load (lb-VS/d)	84,010	110,386	120,200	127,393	140,988
Total solids concentration (lb-TS/lb-solids)	25.0%	25.0%	25.0%	25.0%	25.0%
Flow (gpd)	51,141	66,914	72,933	77,329	85,400
Flow (gpm)	36	46	51	54	59
Cake mass (wtpd)	213	279	304	322	356
Cake volume (CY/d at 55 lb/ft^3)	351	459	501	531	586
Thermal Hydrolysis Feed Solids with Dilution Water					
Total solids load (lb-TS/d)	106,628	139,516	152,066	161,230	178,059

Parameter	Average	30-day	14-day	7-day	3-day
Volatile solids load (lb-VS/d)	84,010	110,386	120,200	127,393	140,988
Total solids concentration (lb-TS/lb-solids)	16.5%	16.5%	16.5%	16.5%	16.5%
Flow (gpd)	77,486	101,385	110,505	117,164	129,394
Flow (gpm)	54	70	77	81	90
Thermal Hydrolysis Depressurization Tank Solids with Steam Condensate					
Total solids load (lb-TS/d)	106,628	139,516	152,066	161,230	178,059
Volatile solids load (lb-VS/d)	84,010	110,386	120,200	127,393	140,988
Total solids concentration (lb-TS/lb-solids)	14.2%	14.2%	14.2%	14.2%	14.2%
Flow (gpd)	90,271	118,114	128,739	136,497	150,744
Flow (gpm)	63	82	89	95	105
Temperature (°F)	221	221	221	221	221
Diluted THP Solids: Depressurization Tank Output and Pathogen-Free Dilution Water					
Total solids load (lb-TS/d)	106,628	139,516	152,066	161,230	178,059
Volatile solids load (lb-VS/d)	84,010	110,386	120,200	127,393	140,988
Total solids concentration (lb-TS/lb-solids)	9.0%	9.0%	9.0%	9.0%	9.0%
Flow (gpd)	142,057	185,873	202,593	214,802	237,222
Flow (gpm)	99	129	141	149	165
Temperature (°F)	168	168	168	168	168
Digested Solids Recycle: to Cooling Heat Exchanger					
Total solids concentration (lb-TS/lb-solids)	4.5%	4.5%	4.5%	4.5%	4.5%
Flow (gpd)	710,286	710,252	710,643	827,707	830,277
Flow (gpm)	493	493	494	575	577
Temperature (°F)	98	98	98	98	98
Digester Feed Solids: Diluted THP Solids with Recycled Digested Solids					
Total solids concentration (lb-TS/lb-solids)	5.1%	5.2%	5.2%	5.2%	5.2%
Flow (gpd)	852,343	896,125	913,236	1,042,508	1,067,499
Flow (gpm)	592	622	634	724	741

Parameter	Average	30-day	14-day	7-day	3-day
Temperature before HEX (°F)	110	113	114	112	114
Temperature after HEX (°F)	98	98	98	98	98
Digested Solids (to Final Dewatering)					
Total solids load (lb-TS/d)	53,377	69,444	75,792	80,412	88,572
Volatile solids load (lb-VS/d)	30,759	40,313	43,926	46,575	51,501
Total solids concentration (lb-TS/lb-solids)	4.5%	4.5%	4.5%	4.5%	4.5%
Volatile fraction (lb-VS/lb-TS)	57.6%	58.1%	58.0%	57.9%	58.1%
Flow (gpd)	142,057	185,873	202,593	214,802	237,222
Flow (gpm)	99	129	141	149	165
Ammonia-N concentration (mg/L)	1,996	2,006	2,004	2,003	2,008
Final Dewatered Cake Product					
Total solids load (dtpd)	25	33	36	38	42
Total solids load (lb-TS/d)	50,708	65,972	72,002	76,392	84,143
Volatile solids load (lb-VS/d)	29,221	38,297	41,729	44,246	48,926
Total solids concentration (lb-TS/lb-solids)	33.0%	33.0%	33.0%	33.0%	33.0%
Cake mass to end use (wtpd)	77	100	109	116	127
Cake volume (CY/d at 55 lb/ft^3)	126	165	180	191	210
Combined Recycles (Thickening, Pre-dewatering, and Final Dewatering)					
Total solids load (lb-TS/d)	11,753	15,496	16,771	17,484	18,778
Flow (mgd)	2.61	3.05	3.22	3.34	3.55
Post-dewatering recycle ammonia load (lb-N/d)	2,215	2,914	3,172	3,362	3,722

Table 3-8 through Table 3-10 show the energy calculations for the current, design, and buildout conditions.

Table 3-8. Energy Calculations, 23 mgd Condition

Parameter	Average	30-day	14-day	7-day	3-day
THP Steam Demands					
Steam to THP (ton-steam/d)	31	40	44	46	51
Steam as condensate to solids (gpd)	7,351	9,619	10,479	11,092	12,212
Solids Cooling Demands					
Cooling demand (MMBtu/d)	48	63	68	72	79
Cooling demand (MMBtu/hr)	2.0	2.6	2.8	3.0	3.3
Digester Gas Production					
Biogas generated (scfd)	453,158	596,095	648,553	686,112	757,234
Biogas generated (scfm)	315	414	450	476	526
Biogas generated from scum only (scfm)	38	52	56	59	66
Lower heating value (MMBtu/hr)	11.0	14.4	15.7	16.6	18.3

hr = hours; MMBtu = million British thermal units; scfd = standard cubic feet per day; scfm = standard cubic feet per minute.

Table 3-9. Energy Calculations, 30.8 mgd Design Condition

Parameter	Average	30-day	14-day	7-day	3-day
THP Steam Demands					
Steam to THP (ton-steam/d)	41	54	59	62	68
Steam as condensate to solids (gpd)	9,845	12,881	14,032	14,854	16,353
Solids Cooling Demands					
Cooling demand (MMBtu/d)	64	84	91	97	106
Cooling demand (MMBtu/hr)	2.7	3.5	3.8	4.0	4.4
Digester Gas Production					
Biogas generated (scfd)	606,837	798,248	868,498	918,793	1,014,036
Biogas generated (scfm)	421	554	603	638	704
Biogas generated from scum only (scfm)	51	69	75	79	88
Lower heating value (MMBtu/hr)	14.7	19.3	21.0	22.2	24.5

Table 3-10. Energy Calculations, 40 mgd Buildout Condition

Parameter	Average	30-day	14-day	7-day	3-day
THP Steam Demands					
Steam to THP (ton-steam/d)	53	70	76	81	89
Steam as condensate to solids (gpd)	12,785	16,729	18,233	19,332	21,350
Solids Cooling Demands					
Cooling demand (MMBtu/d)	83	109	119	126	139
Cooling demand (MMBtu/hr)	3.5	4.5	4.9	5.2	5.8
Digester Gas Production					
Biogas generated (scfd)	788,101	1,036,686	1,128,534	1,195,835	1,323,951
Biogas generated (scfm)	547	720	784	830	919
Biogas generated from scum only (scfm)	67	90	97	103	115
Lower heating value (MMBtu/hr)	19.0	25.1	27.3	28.9	32.0

4 PRIMARY SOLIDS THICKENING

4.1 Background and Purpose

Multiple options for thickening PS and WAS were presented in TM No. 6: *Thickening Evaluation* (Appendix A). The purpose of thickening PS or WAS is to reduce the hydraulic loading to downstream processes including screening, solids storage, and pre-dewatering. WAS and PS thickening were evaluated together in TM No. 6 to allow consideration of co-thickening options and downstream impacts to solids storage, screening, and pre-dewatering. Thickening technologies that were evaluated included GTs (which are currently used for PS thickening), DAFTs (which are currently used for WAS thickening), and alternative processes including GBTs and RDTs. Evaluations were based on 30.8 mgd design conditions with considerations for future 40.0 mgd buildout. Conceptual process sizing, configurations, site layouts, and conceptual costs for thickening facilities as well as downstream solids storage, screening, and pre-dewatering were prepared for each alternative. These alternatives were further compared based on capital and O&M costs, site and process impacts, odors generated, energy requirements, and operability.

The selected thickening approach is to use the GTs for PS thickening and no thickening for WAS. Provisions for future WAS thickening using GBTs or RDTs were recommended, as discussed in Section 5. The selected alternative of gravity thickening for PS and no thickening for WAS was selected based on the overall best value to Arlington County. Rehabilitation of the existing GTs will be handled as an early project (Phase 10A) from the rest of the Program; refer to Section 22. The overall process flow diagram with gravity thickening is illustrated on Drawing G-005, with additional detail on Drawings I-100 and I-101.

This section presents the existing facilities for PS thickening, basis of design, and description of system improvements.

4.2 Existing Facility

Currently PS is thickened using GTs. PS is pumped from the PCs to the GTs at approximately 1.0 percent solids, prior to the addition of elutriation water. One of two GTs is typically in operation. PEW is added to the PS for dilution, increasing the hydraulic loading rate to the thickener. PS is thickened to approximately 4 to 5 percent solids in the GT. TPS is pumped to the existing SSTs where it is blended with TWAS prior to dewatering. The existing GT characteristics and TPS pump details are included in Table 4-1.

Table 4-1. Existing Gravity Thickener Characteristics

Characteristic	Value	Unit
Gravity thickeners		
Number of units	2 (1 operating, 1 standby)	
GT diameter	65	ft
Surface area, ea.	3,300	ft^2
Side water depth (SWD)	10	ft
Tank material	Concrete	
Drive	Two 1½ hp gear motors per GT	
TPS pump		
Number of pumps	4 (1 operating, 1 standby per GT)	
Pump type	Progressive cavity (Seepex)	
Motor and drive	25 hp, variable speed	
Flow rate	350	gpm
Pressure	32.5	psi
Speed	219	rpm
Grinders		
Number of units	4 (1 per pump)	
Type	Franklin Miller, Super Shredder Model SS8000	
Motor and drive	5 hp, constant speed	

ft = feet; ft^2 = square feet; hp = horsepower; psi = pounds per square inch; rpm = revolutions per minute.

A condition assessment of the existing GT facility was conducted and is summarized in TM No. 2: *Condition of Existing Facilities*. The GTs were originally constructed in 1967. The GT mechanisms were replaced in 1994. The TPS pumps and grinders were installed in 2013. Recommended improvements to the GTs include the following:

- GT interior concrete repairs, including:
  - Thorough hydro-cleaning of the wall and launder surfaces
  - Preparing exposed reinforcing and applying corrosion inhibitor
  - Protecting such reinforcing with a repair mortar to add cover
  - Spray-applying a mortar (fiber reinforced, with silica fume) to replace lost cement paste (approximately ⅜ to ½ inch) over full wall and launder areas
- GT exterior repairs, including mortar repointing and masonry crack repair
- Replacement of GT tank dome covers
- GT equipment replacement and modifications, including:
  - Replacement of mechanical equipment internal to the tanks

  - Potentially replacing the flat weirs with V-notch weirs to allow for reduced hydraulic loading

- GT Building repairs and upgrades, including:
  - Upgrading electrical and ventilation to National Fire Protection Association (NFPA) 820 standards
  - Miscellaneous corrosion protection and improvements to pipe supports

4.3 Basis of Design

Process equipment selections and facility concepts were based on a 30.8 mgd design condition for equipment sizing and a 40.0 mgd buildout condition for overall facility sizing. Peak 3-day solids loadings were used for sizing thickening processes because there is limited ability to store solids upstream and therefore any thickening processes will be subjected to such peak loadings. PS design loading criteria are summarized in Table 4-2.

Table 4-2. Primary Solids Design Loading

Design Condition	PS Flow (gpm)	Solids Concentration	Solids Loading (lb-DS/hr)
30.8 mgd, average	450	1.0%	2,300
30.8 mgd, peak 3-day	770	1.0%	3,900
40.0 mgd, peak 3-day	1,000	1.0%	5,000

4.4 Primary Solids Thickening Description and Design Criteria

This section presents a description and design criteria for PS thickening, including GTs, thickened solids pumps, and odor control.

4.4.1 Gravity Thickeners

The existing GTs will continue to be used to thicken PS. Existing PS pumps will convey the PS from the PCs to the GTs. Thickened PS will be pumped to the new solids screening process using the existing thickened solids pumps. The grinder associated with each thickened solids pump will also remain in service.

GT design criteria are summarized in Table 4-3. This table shows operation at peak 3-day loading conditions, which are the design basis for thickening processes. At the 40 mgd buildout condition, solids loading with one GT in service exceeds the recommended maximum loading of 30 pounds per day per square foot (lb/d/ft^2). To address this future loading without operating both GTs, it is assumed that a portion of the PS will bypass the GT and go to the WAS storage tank. Flows and loads for this

condition are shown in the right column. While the second GT could be put in service for this condition if available, this operating condition with a future GT bypass was carried forward for sizing facilities downstream, including solids storage, screening, and pre-dewatering.

Table 4-3. Gravity Thickener Design Criteria

Parameter	Unit	Typical Range	30.8 mgd Peak 3-day	40.0 mgd Peak 3-day	40.0 mgd Peak 3-day with PS Bypass[a]
Number of GTs operating	No.	N/A	1 of 2	1 of 2	1 of 2
PS flow to GT at 1% solids	gpm	N/A	770	1,000	835
PS flow bypassing GT at 1% solids	gpm	N/A	0	0	165
Solids loading rate	lb/d/ft^2	20–30	28	36	30[a]
Hydraulic loading rate without dilution water	gal/d/ft^2	370–760	330	430	360[a]
TPS flow at 4% TS	gpm	N/A	182	236	197[a]

a. Primary solids bypass flow around GT is 165 gpm, 10 dtpd to limit loading to 30 lb/d/ft^2 at 40 mgd peak condition.
gal = gallons.

Currently PEW is added to the PS upstream of the GTs for dilution. In the future, there will be a source of PEW from the cooling HEXs after THP that could be reused for GT dilution water. The cooling water cannot be easily conveyed to the WPCP effluent, so it would be returned to the WPCP influent if it is not reused for GT dilution. Using the cooling water for GT dilution would offset much of GT dilution water demand, reducing the overall PEW demand by about 320 gpm at average conditions. However, one concern with this configuration is that cooling water will increase the temperature in the GT, which could impact thickening. The current WPCP effluent temperature ranges from about 61 to 82 degrees Fahrenheit (°F) throughout the year. Based on the cooling demand after THP, the use of cooling water for GT dilution could raise the temperature in the GT by up to 6°F at design average THP loading and up to a maximum of 10°F at peak THP loading. It is recommended to provide the ability to send cooling water to either the drain or to the GT for dilution, allowing operational flexibility in cases of high temperatures or thickener upsets.

4.4.2 Thickened Solids Pumps

The existing thickened solids pumps will be used for pumping thickened solids from the GT to the solids screens. Pump discharge pressure is expected to increase with the new configuration pumping to the screens, and this pressure may exceed the original design point. Based on the pump data sheet, at a 60-pound per square inch (psi) operating condition the pump would deliver about 320 gpm at 22 break horsepower

(hp). The discharge pressure should be evaluated along with the existing pumps and instrumentation to confirm suitability.

4.4.3 Odor Control

The existing GTs have dome covers with ducting for odor control. The dome covers will be replaced, and new ducting will be provided to a new combined sodium hypochlorite scrubber system. Odorous air from the GTs will be treated in the new sodium hypochlorite scrubbers along with the odorous air collected from other solids processing facilities. The odor control system is discussed further in Section 15.

4.5 Equipment Operation and Control

The GT mechanism will have a center drive with a local on/off control station and torque overload protection. Status will be monitored by the WPCP's process control system (PCS). The thickened solids pumps are operated by variable-frequency drives (VFDs) which have a Hand/Off/Auto (HOA) selector switch. In Hand mode, the thickened solids pump on/off control and speed adjustments will be controlled manually from the VFD panel. In Auto mode, the thickened solids pump on/off and speed control will be controlled remotely by the WPCP's PCS based on operator input and manual solids blanket depth measurements. The thickened solids pumps include a stator temperature sensor to provide run-dry protection. A high-pressure switch on the discharge of each pump will shut down the associated pump at high pressure. The PCS will monitor a common flow meter on the discharge piping.

The WPCP PCS will monitor the status of all equipment. Monitoring by the operators will include the following:

- Measuring and tracking solids depths via Sludge Judges or other means
- Observing weir overflows and sampling for total suspended solids (TSS)
- Sampling and monitoring TS percentage in the underflow

5 WASTE ACTIVATED SOLIDS THICKENING

5.1 Background and Purpose

This section presents the existing facilities for WAS thickening, basis of design, location for future WAS thickening, and a description of the future system.

The purpose of thickening is to reduce the hydraulic loading to downstream processes including screening, solids storage, and pre-dewatering. TM No. 6: *Thickening Evaluation* considered multiple options for thickening PS and WAS. Thickening technologies that were evaluated included GTs (which are currently used for PS thickening), DAFTs (which are currently used for WAS thickening), and alternative processes including GBTs and RDTs. As discussed in the previous section, PS and WAS thickening were evaluated together to allow consideration of co-thickening options and impacts to downstream processes.

The selected thickening approach is to use the GTs for PS thickening and no thickening for WAS. Provisions for future WAS thickening are recommended using GBTs or RDTs. The overall process flow diagram with future WAS thickening is illustrated on Drawing G-005. In the configuration without WAS thickening, WAS will be pumped by the existing WAS pumps to a new SST, and from there pumped to new solids screens where the WAS will combine with TPS. WAS piping will be provided to at least two of the storage tanks to allow tank cleaning during operation. With future WAS thickening, WAS will be pumped from the SST to the GBT or RDT, and new TWAS pumps will pump the thicken solids to the screens.

5.2 Existing Facility

WAS is currently thickened using DAFTs. WAS is pumped at approximately 1 percent solids from the RAS discharge header to the DAFTs. The three WAS pumps are 4-inch, 15 hp Fairbanks Morse end-suction pumps, each with a rated design capacity of 400 gpm at 68 feet total dynamic head (TDH). The WAS pumps are approximately 15 years old and are expected to continue operating in the near term with regular maintenance. These pumps may be replaced with the future secondary clarifier upgrades, and any pump replacement should be coordinated with this Program. In the future, WAS will be pumped to a new SST instead of the DAFT. The capacity and discharge head of these pumps must be evaluated with the proposed SSTs location and piping configuration. Any replacement of these pumps must be coordinated with the design of the new solids facilities.

The existing DAFT characteristics are summarized in Table 5-1. Additional information is provided in TM No. 2. Complete details of the system components are not provided here as the DAFTs will not be used in the future process configuration. The DAFT

mechanical equipment is nearing the end of its useful life, and the bottom chain and flights do not work. The DAFT uses a dry polymer system that is manually batched. One DAFT unit is typically in operation at a time. WAS is thickened to approximately 3 to 4 percent solids. TWAS pumps operate based on hopper level. The TWAS is pumped to the SSTs where it is blended with TPS prior to dewatering.

Table 5-1. Existing DAFT Characteristics

Characteristic	Value	Unit
DAFT		
Number of units	2 (1 operating, 1 standby)	
Length	50	ft
Width	12	ft
Height	10.75	ft
Surface area, ea.	600	ft^2
TWAS pumps		
Number of pumps	3	
Type	Progressive cavity (Moyno)	
Motor and drive	7.5 hp, variable speed	

psig = pounds per square inch gauge.

5.3 Basis of Design for Future WAS Thickening

Process equipment selections and facility concepts were based on a 30.8 mgd design condition for equipment sizing and a 40.0 mgd buildout condition for overall facility sizing. Peak 3-day solids loadings were used for sizing thickening processes because there is limited ability to store solids upstream and therefore any thickening processes will be subjected to such peak loadings. WAS is generated continuously, and it is assumed that any future WAS thickening process will operate 24 hours per day, 7 days per week. The WAS design loading criteria are summarized in Table 5-2. This table includes scum flows and loads from the PCs. The primary scum may be sent to one of the new SSTs with WAS, and the combined flow pumped to screening or future WAS thickening. Alternatively, primary scum may be concentrated and send to landfill if there are operational issues with processing the scum with WAS.

Table 5-2. Waste Activated Solids Thickening Design Loading

Design Condition	WAS Flow (gpm at 1% solids)	WAS Solids Loading (lb-DS/hr)	Primary Scum Flow (gpm at 0.5% solids)	Primary Scum Solids Loading (lb-DS/hr)	Combined Flow (gpm)	Combined Solids Loading (lb-DS/hr)
30.8 mgd, average	243	1,200	107	270	350	1,470
30.8 mgd, peak 3-day	377	1,900	184	460	561	2,360
40.0 mgd, peak 3-day	490	2,450	238	600	728	3,050
40.0 mgd, peak 3-day with PS bypass	490	2,450	238	600	892[a]	3,870[a]

a. Includes PS bypassed around GT to limit GT loading to 30 lb/ft^2/d with one GT in service.

It is expected that the existing WAS pumps will be used to pump WAS to the new SSTs. As such, they must be evaluated to confirm that they will be acceptable for pumping to the new SSTs. These pumps may be replaced with the future secondary clarifier upgrades, and any pump replacement should be coordinated with this Program. Any upgrades to the WAS pumps must consider the future discharge point to the SSTs. The existing primary scum pumps should also be evaluated as part of the new processes.

Initially, WAS will not be thickened. Space will be reserved for future WAS thickening using GBTs or RDTs. WAS would be pumped from an SST to the future thickeners by the proposed screen feed pumps as described in Section 6. The WAS thickening process would include polymer blend units, GBTs/RDTs, and TWAS pumps. WAS thickening may be implemented to increase the available storage time for screened solids and reduce the hydraulic loading to the screens and pre-dewatering centrifuges. Table 5-3 lists the future TWAS flows from GBTs/RDTs at 5 percent TS concentration.

Table 5-3. Thickened Waste Activated Solids Design Flows (at 5% TS)

Design Condition	TWAS Flow without Primary Scum (gpm)	TWAS Flow with Primary Scum (gpm)
30.8 mgd, average	48	58
30.8 mgd, peak 3-day	74	92
40.0 mgd, peak 3-day	96	119
40.0 mgd, peak 3-day with PS bypass	128[a]	152[a]

a. Includes PS bypassed around GT to limit GT loading to 30 lb/ft^2/d with one GT in service.

5.4 System Location

The new facilities will be designed to accommodate future WAS thickening using either GBTs or RDTs. Two building options are discussed in Section 17. If the existing DWB is

renovated, structural modifications will be implemented to allow thickening equipment to be installed on the first floor. If the existing DWB is decommissioned, then space on the site will be allocated for future thickening. The pre-dewatering polymer system will also be designed to allow for expansion to accommodate the additional polymer blend units required for WAS thickening.

5.5 WAS Thickening Description and Design Criteria

Future WAS thickening alternatives include GBT and RDT. These technologies and the design criteria for implementation are described below.

5.5.1 Rotary-Drum Thickeners

RDT is a proven mechanical thickening technology and offers similar performance to GBTs. Polymer is added and mixed with the solids feed in a flocculation tank upstream of the RDT. An image of an RDT with floc tank is shown in Figure 5-1. Solids are fed into a rotating cylindrical screen fitted with a screw and flights to furrow and convey solids forward. Water is drained through the screen into a filtrate drain. Solids are discharged into a hopper at the downstream end of the RDT. A spray water system with booster pump is used to constantly clean the screen. The system is completely enclosed and odor control takeoffs will be provided.

Figure 5-1. RDT and Floc Tank

RDT design criteria are summarized in Table 5-4. A total of three units will be installed. An inline polymer blend unit with polymer feed pump will be included for each RDT (three total). A progressive-cavity pump will be paired with each thickener unit (three total) to convey TWAS to screening, prior to pre-dewatering.

Table 5-4. RDT Design Criteria

Parameter	Value	Unit
Number of units at 30.8 mgd (duty/standby)	2/1	-
Number of units at 40.0 mgd (duty/standby)	2/1[a]	-
Hydraulic loading per unit	350	gpm
Solids loading per unit	1,800	lb-DS/hr
Typical polymer dosages	5–15	lb/DT
Typical RDT thickened solids concentration	5.0	Percent
Typical motors per unit	Drum: 3 hp, VFD Floc tank mixer: 0.5 hp, VFD Booster pump: 5 hp TWAS pump: 10 hp	

a. Primary scum is assumed to be concentrated and sent to landfill at peak 3-day 40.0 mgd condition to maintain one RDT as standby.
DS = digested solids.

5.5.2 Gravity Belt Thickeners

GBTs are a proven technology for mechanical thickening and provide a competitive balance of thickening performance per footprint, operational cost, and power usage. GBTs typically require a slightly larger building footprint than RDTs. Typically, polymer is injected into the solids stream and mixed upstream of the GBT. The solids/polymer slurry is fed into a feedbox for a consistent distribution across the belt. The belt conveys the solids through stationary plows that furrow the slurry to promote water/solids separation. The belt discharges the thickened solids into a hopper, which is connected to a pump. Filtrate is collected in a drain pan and flows by gravity to the process drain system. A spray water system, including a booster pump and spray header, is used to clean the belt on the bottom side of the GBT as it returns to the feedbox. GBTs can be open to allow for easy observation of the thickening process; however, this can lead to local odor issues as the solids are exposed to the atmosphere, especially for co-thickened solids. GBTs can be covered to contain odors but covers can hinder the ability to easily observe the thickening process. GBTs are typically located indoors and off-site odors can be managed through ventilation and odor treatment. An image of an enclosed GBT is shown in Figure 5-2.

Figure 5-2. Enclosed GBT

GBT design criteria are summarized in Table 5-5. Two GBTs would be required to meet 30.8 mgd and 40.0 mgd design conditions. Similar to the RDT, each GBT will be paired with a polymer feed system and progressive-cavity pump for TWAS.

Table 5-5. GBT Design Criteria

Parameter	Value	Unit
Number of units at 30.8 mgd (duty/standby)	2/1	-
Number of units at 40.0 mgd (duty/standby)	2/1[a]	-
Belt width	2.0	Meters
Hydraulic loading per unit	400	gpm
Solids loading per unit	2,000	lb-DS/hr
Typical polymer dosages	6–10	lb/DT
Typical GBT thickened solids concentration	5.0	Percent
Typical motors per unit	Belt drive: 2 hp, VFD Booster pump: 5 hp TWAS pump: 10 hp, VFD	

a. Primary scum is assumed to be concentrated and sent to landfill at peak 3-day 40.0 mgd condition to maintain one GBT as standby.

5.6 Equipment Operation and Control

The overall system operation and control is similar for GBT or RDT. Each thickener will be provided with a local control panel (LCP) located near the equipment. Status will be monitored by the WPCP's PCS. VFDs will be provided for the thickener feed pumps, polymer feed pumps, TWAS pumps, and thickener motors (belt drive for GBT and floc tank mixer and drum for RDT). The VFDs will normally be operated with the HOA selector switch in Auto mode, with speed controlled through the WPCP PCS. The thickener LCP may have primary control over some components such as the TWAS pumps, depending upon the ultimate system configuration.

The operator will align the valves to pump from the thickener feed pump (pulling suction from the SST) to the thickeners that will be in operation, and from the thickeners to the screens. A flow meter and motorized flow control valve will be provided to each thickener to split flow to each unit and allowing two thickeners to be fed from one thickener feed pump. The operator will select the thickener feed pump, polymer blend unit(s), and thickener unit(s) to begin operation. With the system in Auto mode, the selected thickeners will begin operation (spray water, GBT belt, or RDT flocculation mixer and drum). When operation is confirmed by the thickener LCP, the system will start the thickener feed pump and polymer feed pump(s). The polymer will be flow-paced to the thickener feed based on a dosing set point. The TWAS pump will begin operation when a level is reached in the TWAS hopper.

For each progressive-cavity pump, a high-pressure switch on the discharge of the pump will shut down the system at high pressure, and a stator temperature sensor will provide run dry protection and shut down the system at high temperature. A failure or critical alarm for a polymer blend unit, thickener unit, or TWAS pump will shut down the paired equipment. The PCS will monitor a common flow meter on the TWAS discharge piping.

The WPCP PCS will monitor the status of all equipment. Monitoring by the operators will include the following activities:

- Checking flocculation
- Observing the filtrate and sampling for TSS
- Sampling and monitoring TS percentage from the thickener
- Adjusting the polymer dose and/or rotational speeds to maintain acceptable capture and thickened solids concentration

6 SOLIDS SCREENING

6.1 Background and Purpose

Screening at the WPCP is performed on the influent flow at the PTB. New multi-rake bar screens with ½-inch openings between bars are currently being installed as part of the Preliminary Treatment Upgrades: Phase 9B project. Even with the improved influent screening, the PS and WAS generated at the WPCP contain debris that enters the downstream solids handling process. Screens are required upstream of THP equipment to remove all debris greater than 5 mm. This is necessary to protect the nozzles within THP depressurization tanks from clogging. Screening also improves the quality of the final cake and helps prevent issues with ragging in downstream processes.

The screening design criteria were presented in TM No. 6: *Thickening Evaluation* (Appendix B). Screening and thickening were evaluated together because solids thickening directly impacts the number of solids screens that are required. Screening will be fed with WAS from the SSTs and TPS from the GTs. The overall process flow diagram with solids screening is shown on Drawing G-005, with additional detail on Drawings I-201 and I-202. Potential plan views of the screening system are shown on Drawings M-307 and M-351, for site Options 1 and 2, respectively. The purpose of this section is to present the basis of design, location, and description of the new solids screening.

6.2 Basis of Design

Process equipment selections and facility concepts were based on a 30.8 mgd design condition for equipment sizing and a 40.0 mgd buildout condition for overall facility sizing. Peak 3-day solids loadings were used for sizing the screening process because there is limited ability to store solids upstream during peak solids loading conditions. Screening will be operated 24 hours per day, 7 days per week.

The solids screening design loading criteria are summarized in Table 6-1. These flows and loads include TPS, WAS, and primary scum. Flows for each of these sources were presented in Section 3, as well as in Section 4 (TPS) and Section 5 (WAS). TPS will be pumped from the GT to the screens and WAS and primary scum will be pumped from an SST to the screens using positive displacement pumps. The peak future flow scenario is at 40 mgd buildout condition with one GT in service, with a portion of the PS bypassing the GT to the SST containing WAS. This scenario was discussed in Section 4. If WAS thickening is implemented in the future, the solids concentration to the screens will increase and flow to the screens will decrease.

Table 6-1. Solids Screening Design Loading

Design Condition	Without Primary Scum			With Primary Scum		
	Flow (gpm)	Solids Concentration	Solids Loading (lb-DS/hr)	Flow (gpm)	Solids Concentration	Solids Loading (lb-DS/hr)
30.8 mgd, average	349	1.9%	3,300	456	1.6%	3,600
30.8 mgd, peak 3-day	559	2.0%	5,520	742	1.6%	5,980
40.0 mgd, peak 3-day	726	2.0%	7,170	964	1.6%	7,760
40.0 mgd, peak 3-day with primary solids GT bypass	851	1.7%	7,210	1,089	1.4%	7,810

6.3 System Location

Two building options are discussed in Section 17 and the location of the screens will depend on which option is selected. The screens will be on an upper level so that the screenings can fall to the dumpster at grade level. Elevating the screens provides an added benefit of avoiding excessive back pressure on the screen itself. The screens are best operated without significant pressure in the discharge pipe from the screen. If the existing DWB is renovated, the solids screens will be located in that building with two screw conveyors to transfer the screens to a dumpster. This layout is shown on Drawing M-307. If a new SPB is constructed, it is expected that the screenings will drop directly into a dumpster through a chute, without using conveyors as shown on Drawing M-351.

6.4 Solids Screening Description and Design Criteria

This section presents a description and design criteria for solids screening, including screen feed pumps, solids screens, screenings handling, and odor control.

6.4.1 Screen Feed Pumps

Screen feed pumps will transfer WAS and primary scum from an SST to the solids screens, where the WAS will be screened with TPS. The combined screen solids will return to the adjacent SSTs. Screen feed pump design criteria are listed in Table 6-2. The screen feed pumps will operate in a duty/standby configuration. The design capacity is based on peak 3-day WAS and primary scum flow at 30.8 mgd conditions, with a 20 percent safety factor on the flow. These pumps would be replaced with larger pumps to reach the 40 mgd buildout conditions.

Table 6-2. Screen Feed Pumps Design Criteria

Parameter	Value
Number of pumps	2 (1 duty, 1 standby)
Pump type	Progressive cavity, rotary lobe, or screw centrifugal
Design capacity	670 gpm at 1% TS
Drive type	VFD

Pump type will be evaluated by the delivery team. Considerations will need to be given to capacity requirements, combined with operation of the TPS pumps and systems to the same screens. Consideration should also be given to maintaining operational flexibility to separately screen WAS and TPS, if desired by the County.

6.4.2 Solids Screens

The most common solids screening technology is enclosed, inline solids screens. This type of screen has a successful history in THP applications and is used in the District of Columbia Water and Sewer Authority (DC Water) Blue Plains Advanced Wastewater Treatment Plant (WWTP) THP system, Hampton Roads Sanitation District (HRSD) Atlantic Treatment Plant THP system, Washington Suburban Sanitary Commission (WSSC) Piscataway WWTP THP system, and various other THP installations in Europe. The basis of design for the screens is the Huber model SP290. The maximum hydraulic loading to the screen depends on the total suspended solids concentration. Inline solids screens can be fed at up to 6 percent solids and cannot be used on dewatered product.

Design criteria for the solids screens are listed in Table 6-3. This includes the maximum hydraulic loading to each screen as a function of solids concentration. Without primary scum, three screens are required for the 30.8 mgd design condition, with two screens operating and one on standby. A fourth screen will be installed to meet the 40 mgd design condition with one unit as standby. At design conditions with primary scum the standby screen can be operated or scum can be sent to the scum concentrator and landfill. The design will provide for an acceptable flow split to each screen, which may be achieved through hydraulic symmetry, derating the screen capacity, assigning separate screens to PS and WAS, or active flow control. Flow meters will be provided for the TPS and WAS flows to the screen and the combined flow leaving the screens.

Table 6-3. Solids Screens Design Criteria

Parameter	Value
Number of screens	3 + 1 future
Configuration/type	Inline
Size	5 mm (perforations)
Manufacturer/model	Huber/SP290, Hydro International/Hydro-Sludge
Body, screw, and screen material	304L stainless steel
Maximum hydraulic loading (values are 80% of Huber SP290 listed maximum)	352 gpm at 1.0% TS 288 gpm at 2.0% TS 260 gpm at 3.0% TS 228 gpm at 4.0% TS 208 gpm at 5.0% TS 192 gpm at 6.0% TS
Screen motor	5 hp

The operation of the screen is illustrated in Figure 6-1. The thickened solids from the GTs, WAS, and primary scum flow into the solids screen from the bottom and enter the tapered screening area. Here, the screenings are captured and screened solids flow out of the bottom. The stationary, tapered screening area contains 5 mm perforations, and the screen removes even smaller debris as a mat builds up. The screenings accumulate on the perforated screening section and are conveyed by rotation of the screw into the cylindrical dewatering section with smaller perforations. The cone forms a plug to hold the screenings back as they are pressed and extruded. The material is squeezed to approximately 45 percent dry solids by the screw and the pressure-actuated restriction cone. The screenings are extruded past the restriction cone and are discharged to a dumpster below. An air compressor is provided for each screen to supply the air pressure required at the cone.

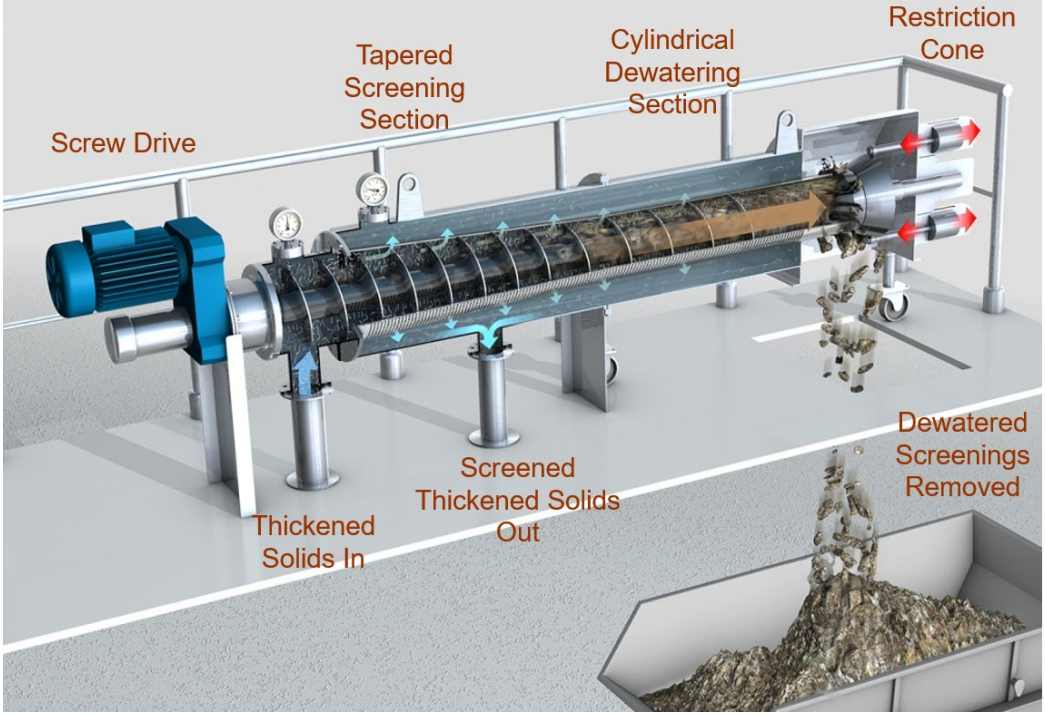

Figure 6-1. Solids Screen Diagram

The screens will be provided with flushing connections upstream and downstream of each unit to allow flushing prior to taking a screen out of service. A hose bibb will be provided nearby for flushing and washdown as well as a floor drain.

6.4.3 Screenings Handling

Screenings production was estimated based on 0.15 cubic yard (CY) per MG treated, based on experience at other facilities in the region. Based on this factor, average screening production at 30.8 mgd would be about 4.6 CY per day. Actual screenings production will not be known until they are in operation, and production could be higher than estimated from other facilities. The influent screens are being replaced as part of the Preliminary Treatment Upgrades project with ½-inch multi-rake bar screens. Screen opening size for these new screens is limited by hydraulics. Because the solids screens will be ¼ inch (5 mm), they may capture a significant amount of material that passes through the influent screens. Screening production can also vary widely from day to day depending on changes in the WPCP influent.

Screenings production and estimated storage times are listed in Table 6-4. The facility should be designed for a 20 CY dumpster with ability to accommodate up to a 40 CY dumpster to allow flexibility in operation. Leveling systems or baggers should be considered during design to maximize capacity and odor control. The layouts and odor control system presented in the Plan assume a continuous bagger system. Screening

conveyors may also be required depending on the final building layout. The concept for the renovated DWB includes two conveyors for screenings because the screens are not located directly above the dumpster.

Table 6-4. Screenings Production and Storage

Parameter	Value
Average screening quantity estimate	4.6 CY/d at 30.8 mgd
Screenings dumpster quantity	1 + 1 standby
Storage capacity, ea.	20 CY
Dimensions	22.0 ft long × 7.5 ft wide × 4.5 ft high
Approximate storage time, ea.	~3 days at 75% fill

The screenings area will be provided a curb around the dumpster location, bollards, and 316 stainless steel skid plates for the dumpster. A trench drain will be provided with a hose bibb for washdown.

6.4.4 Odor Control

A bagging system is assumed to contain the screenings and control odor from the stored screenings. Alternatively, if screenings are stored in a room without a bagging system, a dumpster hood will be vented to the odor control system (and the sizing of the odor control system will need to accommodate this ventilation), where all solids treatment odor sources (except final dewatering) will be combined and treated with a common scrubber system. The odor control system is discussed in detail in Section 15.

6.5 Equipment Operation and Control

The solids screens are controlled by an LCP with programmable logic controller (PLC) and human-machine interface (HMI). The solids screens will provide a “ready” status signal and operate automatically as screenings build up and are discharged to the dumpster below. Motorized valves upstream and downstream of each screen will be opened when the screen is in operation and closed when out of service. The plant control system will have the ability to automatically bring screens from “standby” to “in service” when the total flow to the screens exceeds operator-entered setpoints for maximum flow with one, two, or three screens operating. A screen is brought in service by opening the motorized valves upstream and downstream of the screen.

It is important to interlock the pumps feeding the screens with a pressure switch or sensors to reduce the risk of a plug blowout. A failure of the pneumatic cone pressurization system can also result in a plug blowout. If excessive moisture is detected in the screenings by the moisture sensor at the screenings outlet, this should

also generate a screen failure alarm and shut down the screen. These measures help to avoid a scenario where excessive liquid is discharged to the dumpster. In the case of a screen failure, the motorized valves upstream and downstream of the screen will be automatically closed and an alarm will be generated. The plant control system will have the ability to automatically bring another screen in service. If flow to the screens exceeds the capacity of the available screens, then the pumps feeding the screens will be shut down.

The screw will wear slowly and must be adjusted periodically, shifting it into the screen, so it can properly remove the screenings and keep the perforations clear. The screw should be replaced when adjustments are no longer possible. The perforated screen element will eventually need replacement but less frequently if proper maintenance is performed.

When taking a screen out of service for maintenance, operators should open and close valves to send flow to the other screen and then isolate the unit to be serviced. It is critical to keep debris out of the THP system and therefore the screens should not be bypassed.

7 SOLIDS STORAGE

7.1 Background and Purpose

Solids storage volumes upstream of pre-dewatering were considered as part of TM No. 6: *Thickening Evaluation*. SSTs are required for WAS upstream of screening, and for screened solids (WAS plus TPS) upstream of pre-dewatering. The overall process flow diagram with solids storage is shown on Drawing G-005, with additional detail on Drawing I-200. Plan views are shown on Drawings M-200 and M-202. The main purpose for solids storage is to provide a “wide spot” to decouple operation of two processes in series. WAS storage will allow continuous operation of wasting from the activated solids process during any unexpected shutdowns of solids screening. WAS storage will provide similar benefits for a future WAS thickening process and allow for steady loading to thickeners. TPS and WAS are combined, screened, and then stored upstream of pre-dewatering to allow the pre-dewatering centrifuges and polymer feed to be controlled independently from TPS pumping and solids screening. The purpose of this section is to present the basis of design, location, and description of the new SSTs.

7.2 Existing Facility

The WPCP has two SSTs. The SSTs provides adequate capacity to hold solids over the weekends to reduce dewatering operations. Each SST has two mixers. TM No. 2: *Condition of Existing Facilities* includes the condition assessment of these SSTs. Both SSTs are approximately 53 feet in diameter, with a side wall depth of 25.5 feet, not including the sloped bottom. The SSTs receive solids from the GTs and DAFTs. The current normal operation is to fill and draw from one SST.

The existing SSTs will be demolished and will not be reused as part of the new facilities. New SSTs will be constructed.

7.3 Basis of Design

The sizing for new solids storage is based on providing 8 hours of WAS storage and 24 hours of screened solids storage (TPS + WAS) at 30.8 mgd, peak 3-day conditions. Piping connections will be provided to deliver dilute primary scum to an SST with WAS or to the scum concentrator. Primary scum is not included in the design criteria for SST sizing because primary scum can be sent to the scum concentrator and landfill if needed. The amount of thickening impacts the required size of the SSTs. Table 7-1 shows the WAS and screened solids flows at a range of conditions including the design condition.

Table 7-1. Solids Storage Design Flows

Parameter	30.8 mgd, Annual Average	30.8 mgd, Peak 3-day (design condition)	40.0 mgd, Peak 3-day	40.0 mgd, Peak 3-day with PS Bypass
WAS (mgd)	0.350	0.543	0.705	0.942[a]
Screened solids (mgd)	0.505	0.809	0.105	0.123
Target WAS storage volume (MG)	-	0.18	-	-
Target screened solids storage volume (MG)	-	0.81	-	-
Hours WAS storage	12.4	8.0	6.2	4.6
Hours screened solids storage	38.4	24.0	18.5	15.8

a. Includes PS bypass around GT to avoid overloading one thickener in operation.

The County is open to considering reduced volumes for solids storage with further evaluation, considering wide spots in other areas of the facility and equipment redundancy.

7.4 System Location

The SSTs will receive flow from the WAS pumps and from the solids screens (WAS and TPS). The design will include WAS and screened solids piping to the SSTs, and piping from the SSTs to the screen feed pumps and pre-dewatering feed pumps

Two building options are discussed in Section 17. With either configuration, the SSTs will be located adjacent to the screen feed pumps and the pre-dewatering feed pumps to minimize the length of suction piping. If the existing DWB is renovated, then the SSTs will be located north of the DWB where the pumps will be located (refer to Drawing C-004). If the existing DWB is decommissioned and a new SPB is constructed, then the SSTs will be located on the south side of the new SPB (refer to Drawing C-007).

7.5 Solids Storage Tanks Description and Design Criteria

This section presents a description and design criteria for the SSTs, including SSTs, mixing system, and odor control.

7.5.1 Solids Storage Tanks

The SSTs will be rectangular concrete tanks with aluminum covers. The SSTs will be configured with one SST for WAS and three SSTs for screened solids. The SSTs for screened solids should be able to store screened WAS and PS separately or combined. Approximately 1 MG of storage is required to meet the design conditions presented in Table 7-2. The SST volume and configuration may vary depending on the site layout.

Table 7-2 lists the SST parameters for the design basis and the two site layouts. The SST for WAS is shorter to comply with the roadway setback in Option 1 and to accommodate the digesters in Option 2. The three SSTs for screened solids are slightly smaller for Option 2, and further modifications to the site layout should be evaluated to achieve the design basis storage volume. WAS will be piped to at least two of the SSTs to allow cleaning of a tank during operation.

Table 7-2. Solids Storage Tank Parameters

Parameter	Design Basis	Renovate DWB	Decommission DWB
WAS Storage			
Number of SSTs	1	1	1
Dimensions each	25 ft × 50 ft × 20 ft SWD	25 ft × 50 ft × 20 ft SWD	25 ft × 50 ft × 20 ft SWD
Total volume (MG)	0.18	0.18	0.18
Hours storage at design condition	8	8	8
Screened Solids Storage			
Number of SSTs	3	3	3
Dimensions each	30 ft × 60 ft × 20 ft SWD	30 ft × 60 ft × 20 ft SWD	25 ft × 60 ft × 20 ft SWD
Total volume (MG)	0.81	0.81	0.67
Hours storage at design condition	24	24	20
Total storage volume (MG)	0.99	0.99	0.85

Provisions for tank access for cleaning will be evaluated by the delivery team and will take into account factors such as top versus side access, vertical distance from access point to tank floor, ventilation provisions, and site location restrictions on access options. It is preferred that tank access for cleaning be provided from both the top and the side.

7.5.2 Mixing System

A large-bubble mixing system is proposed for the SSTs, although other mixing systems should be considered during design, particularly for mixing a blend of primary scum and WAS. The large-bubble mixing system is effective for tanks that operate with variable level and it consumes less energy than mechanical mixing equipment. The large-bubble

mixing system uses compressors and stores compressed air in air receiver tanks. The compressors and air receiver tanks will be located in the building adjacent to the storage tanks. The compressed air is piped to a valve control panel at each SST. The valve control panel contains poppet valves, which are controlled by the panel to open for less than 1 second at a programmed time interval. The air from each valve is piped separately to a bubble-forming plate near the bottom of the SST. The pulse of air creates a large, flat bubble that rises to create mixing. The layout of the bubble-forming plates is provided by the manufacturer based on computational fluid dynamics (CFD) modeling, and the bubble sequence and timing are programmed in the control panel. Adjustments to the bubble sequence and timing can be made to change the level of mixing. The system is typically designed to create a rolling mixing pattern in the SST, with the bubbles pushing the mixture up and outward toward the wall, and flow returning down the wall and back to the bubble source.

The conceptual design for the mixing system is included in Table 7-3 below. The complete system is provided as a package from the system supplier (e.g., EnviroMix, Pulsed Hydraulics, Inc.). The mixing system design parameters are preliminary and should be provided by the system supplier based on the selected mixing tank dimensions and operational strategy.

Table 7-3. Solids Storage Tank Mixing System Design Parameters

Parameter	Value
Number of compressors and air accumulator tanks	2 (duty/standby)
Compressor type	Rotary screw
Discharge pressure	125 psig
Number of valve control panels	4 (one per SST)

7.5.3 Odor Control

To control odors from the SSTs, the SSTs will be covered and ventilated to an odor control system. All odor sources except final dewatering will be combined and sent to a common scrubber system. Details of the odor control system can be found in Section 15.

7.6 Equipment Operation and Control

The SST levels will be monitored by PCS as well as the status of the mixing system. Operators will check the level in the SSTs and verify that the mixing system is operating as intended. WAS and TPS flow rates to the SSTs will generally be consistent except for manual changes in solids flows. The WAS flow from the SSTs to the screens may be set manually or adjusted automatically. For automatic operation, screen feed pump

speed will adjust based on SST level, with pump speed increasing if level exceeds the desired level range and decreasing if level drops below this range. Pumped flow to pre-dewatering will typically be operated manually. Alarms will be generated at high and low SST levels. High-high levels will be interlocked to shut down the pumps feeding the SST, and low-low levels will be interlocked to shut down the pumps drawing suction from the SST.

8 PRE-DEWATERING SYSTEM

8.1 Background and Purpose

Pre-dewatering is required because THP operates with a feed solids concentration of approximately 16 percent (the solids concentration of the combined screened and thickened solids is anticipated to be approximately 1.6 percent).

The new pre-dewatering system will rely on centrifuges, based on the findings of an alternatives analysis, which included a review of equipment sizing, footprint requirements, capital costs, and O&M costs. Dewatering alternatives evaluated included belt filter presses (BFPs), screw presses, centrifuges, rotary fan presses, and Bucher presses. Options were presented and reviewed at two workshops with the County, on April 26 and May 10, 2021. At the second workshop, the team shortlisted centrifuges and BFPs for further consideration. After further evaluation, the team selected centrifuges as the preferred technology for pre-dewatering, based on the compact footprint requirements, lower life-cycle costs, County familiarity, and other factors. For more information regarding this analysis, refer to TM No. 7: *Dewatering Equipment Evaluation*.

The new pre-dewatering system consists of the following equipment, which is described in further detail in this section:

- Pre-dewatering feed pumps (centrifuge feed pumps)
- Liquid emulsion polymer storage, blending, and feed systems
- Centrifuges
- Cake conveyance equipment: diverter gates and screw conveyors
- Pre-dewatered cake storage bins

The THP feed pumps are also included in this section but will be provided in the THP manufacturer's scope of supply.

An overall schematic of the pre-dewatering process is shown on Drawing G-005 with detail provided on Drawings I-300 through I-303.

8.2 Process Objectives

The purpose of pre-dewatering is to remove water from the thickened solids, to meet the process requirements of the THP. As noted in Section 9 of this Plan, THP operates with a feed solids concentration of approximately 16.5 percent. It is anticipated that the pre-dewatering process will dewater the thickened solids to approximately 20 to 25 percent. Dilution water is added upstream of the THP feed pumps to reach the target 16.5 percent solids, the typical feed solids concentration for THP, as noted in Section 9.

8.3 Basis of Design

Process equipment selections and facility concepts were based on a 30.8 mgd design condition for equipment sizing and a 40.0 mgd buildout condition for overall facility sizing. The solids loadings from Section 3 are summarized in Table 8-1.

Table 8-1. Anticipated Combined Thickened Solids Production

Design Condition	Total Solids Load (lb-DS/d)			
	Average	Peak 30-day	Peak 14-day	Peak 3-day
23.0 mgd	64,538	84,444	91,990	107,206
30.8 mgd	86,425	113,082	123,187	143,562
40.0 mgd	112,240	146,859	160,070	187,430

Total solids load includes TPS, unthickened WAS, and primary scum.

Peak 3-day solids loadings were used for sizing the pre-dewatering process. The pre-dewatering process will operate 24 hours per day, 7 days per week, to provide a continuous flow of solids to THP.

The flow to pre-dewatering will vary depending on the solids concentration of the feed; therefore, the system must be designed for a range of conditions. Three scenarios were considered:

- Typical conditions present anticipated values during normal operation. The flows are calculated assuming that PS are thickened to 4 percent solids, WAS is unthickened (1 percent solids), and primary scum is unconcentrated (0.5 percent solids). The total combined solids concentration is estimated to be approximately 1.6 percent.
- “Upper bound” presents a more conservative range of flows, assuming a TPS concentration of 2 percent, which results in a total combined pre-dewatering feed solids concentration of approximately 1.3 percent.
- “Lower bound” presents a lower range of flows, thickening of WAS to 5 percent solids, which results in a total combined pre-dewatering feed solids concentration of approximately 4 percent.

The anticipated flows and loads to pre-dewatering are summarized in Table 8-2. The projected peak 3-day flows at 1.3 percent solids are used to establish the 500 gpm minimum capacity for the pre-dewatering centrifuge feed pumps and centrifuges (849 gpm ÷ 2 units * 120 percent safety factor = approximately 500 gpm).

Table 8-2. Anticipated Flows and Loads to Pre-Dewatering

Design Condition	Solids Loading (lb-DS/hr)	Anticipated Values [a] (Typical Conditions)		Upper Bound [b] (TPS 2% solids)		Lower Bound [c] (WAS 5% solids)	
		Solids Conc.	Flow (gpm)	Solids Conc.	Flow (gpm)	Solids Conc.	Flow (gpm)
23.0 mgd, average	2,689	1.6%	340	1.3%	413	4.3%	125
23.0 mgd, peak 3-day	4,467	1.6%	554	1.3%	687	4.4%	203
30.8 mgd, average	3,601	1.6%	456	1.3%	513	4.3%	167
30.8 mgd, peak 3-day	5,982	1.6%	742	1.3%	849	4.4%	272
40.0 mgd, average	4,677	1.6%	592	1.3%	719	4.3%	217
40.0 mgd, peak 3-day	7,810	1.4%	1,089	1.3%	1,201	4.4%	355

a. All values in table above assume continuous (24/7) operation of the pre-dewatering system.
b. "Anticipated values" are based on the following feed flows to the pre-dewatering centrifuges:
- TPS solids concentration of 4.0%
- Unthickened WAS solids concentration of 1.0%
- Unconcentrated primary scum (solids concentration 0.5%)

a. "Upper bound" values are based on TPS solids concentration of 2% (half of anticipated value).
b. "Lower bound" values are based on thickened WAS solids concentration of 5%.

8.4 System Location

The location of the pre-dewatering system depends on which of the two shortlisted site layout options is selected. Further information on the site layout options is presented in Section 17. Below is a summary of the two shortlisted options:

- **Option 1: renovate existing Dewatering Building.** If the existing DWB is renovated, the existing dewatering area would be repurposed for the pre-dewatering system. The existing concrete cake bins would be reused, and a new polymer system would be installed in one of the existing truck bays. The other existing truck bay would remain, to be used for emergency pre-dewatered cake loadout, in the event that solids must be removed from the WPCP while the THP is out of service.
- **Option 2: decommission existing Dewatering Building.** If the existing DWB is decommissioned, then a new SPB would be constructed, containing both pre-dewatering and final dewatering equipment.

The THP feed pumps would be located on level 2 for Option 1, and on the ground level for Option 2. For both options, the remainder of the pre-dewatering equipment in the building would be laid out as follows:

- **Level 4 (elevation [EL] 70±):** pre-dewatering centrifuge, bridge crane, and control room
- **Level 3 (EL 60±):** centrifuge solids discharge chute, and cake screw conveyor
- **Level 2 (EL 40±):** dewatered cake bin
- **Ground level (EL 24±):** pre-dewatered cake bin screw conveyors, centrifuge feed pumps, polymer storage, blend, and feed system

Drawings M-309 and M-310 provide section views of the DWB showing the equipment listed above for Option 1, renovate DWB; M-361 and M-362 provide section views for Option 2, decommission DWB.

8.5 Pre-Dewatering Description and Design Criteria

The following sections provide a description and design criteria for the individual components of the pre-dewatering system.

8.5.1 Pre-Dewatering Centrifuge Feed Pumps

The centrifuges will be fed using pre-dewatering centrifuge feed pumps, which will withdraw solids from the SSTs. The pumps are located on the ground floor of the building. Three pumps will be provided (one for each centrifuge); floor space and pipe stubs will be provided to add a fourth pump to provide capacity for 40 mgd design conditions.

The pre-dewatering centrifuge feed pumps will have a common suction and discharge header, such that an alternate pump can be operated to serve each SST and centrifuge if the normally used pump is out of service. A magnetic flow meter will be provided on the discharge line to each centrifuge.

A schematic of the pumping system is provided in Drawing I-300: Pre-Dewatering Centrifuge Feed Pumps. Design criteria for the centrifuge feed pumps are shown in Table 8-3.

Table 8-3. Centrifuge Feed Pump Design Criteria

Parameter	Value
Number of units	3 (one per centrifuge), space for 1 future
Type	Progressive cavity
Manufacturers	Moyno, Netzsch, or Seepex
Design flow	500 gpm or greater
Drive type	VFD, direct-coupled motor
Maximum pump speed at design point	260 rpm
Rotor-shaft connection	Pin joint or gear joint
Maximum pressure per pump stage	50 psi

8.5.2 Pre-Dewatering Polymer System

A new polymer feed system will be installed to provide polymer to the pre-dewatering centrifuges. The system will be designed for deliveries of emulsion polymer (as opposed to dry polymer) and consist of the following equipment:

- One fill station
- Two bulk polymer storage tanks
- One polymer recirculation pump
- Three skid-mounted polymer blending and feed systems
- Eyewash station, with tempered water and flow switch

The polymer fill stations will have a level readout for the storage tank, and alarm indicators for high level.

The discharge piping of the polymer feed pumps will be interconnected so that the polymer feed systems are not dedicated to a specific centrifuge. However, not all combinations of polymer feed pump/centrifuge would be possible when more than one centrifuge is operating. Space and capped piping connections will be provided for a future fourth pre-dewatering polymer skid. The system will be located on the ground level.

A separate polymer storage, blend, and feed system will be provided for the pre-dewatering centrifuges (this applies to both site layout options). The final dewatering and pre-dewatering polymer systems will not be interconnected, because it is anticipated that each system may require different types of polymer to optimize dewatering performance. However, for ease of maintenance and interchangeability of parts, the same model of polymer blend system may be used for pre-dewatering and final dewatering.

One skid-mounted polymer blending and feed systems will be provided for each centrifuge. The blending and feed systems will have a common discharge header, such that an alternate skid can be operated to serve each centrifuge if the normally used skid is out of service. Floor space and pipe stubs will be provided to add four additional polymer blending units: a fourth skid for a future fourth pre-dewatering centrifuge, and three skids for future WAS thickening.

A schematic of the pre-dewatering polymer system is provided in Drawing I-303: Pre-Dewatering Polymer. Design criteria for the polymer storage tanks and recirculation pump are provided in Table 8-4. Design criteria for the polymer skids are provided in Table 8-5. Note that the design criteria are based on an assumed polymer dose of 10 pounds of active polymer per ton dry solids. Because the polymer dose may be affected by the centrifuge selection, the delivery team will verify the polymer dose and system sizing during detailed design.

Table 8-4. Polymer Storage Design Criteria

Parameter	Value			
Total final dewatering polymer consumption, gallons neat polymer per day	Average	Peak 30-day	Peak 14-day	Peak 3-day
23.0 mgd	90	117	127	135
30.8 mgd	120	157	171	181
40.0 mgd	156	203	222	235
Storage volume basis of design	Total storage volume provided ≥ 30-day consumption at 40 mgd peak 30-day			
Total storage volume required (30-day consumption at 40 mgd peak 30-day)	~6,000 gallons			
Number of tanks	2			
Volume per tank	3,000 gallons			
Total storage volume provided	6,000 gallons			
Tank dimensions	8 ft diameter, 10.5 ft tall			
Tank material of construction	FRP			
Tank accessories and instrumentation	One ultrasonic level sensor per tank One ladder and cage per tank			
Storage tank mixing system				
Quantity	One recirculation pump serving both tanks			
Pump type	Progressive cavity			

Total neat polymer consumption is based on the solids production values in Section 3, an assumed neat polymer dose rate of 10 lb per ton of dry solids, and an as-delivered concentration of 40% active polymer by weight.

Table 8-5. Polymer Blending and Feed System Design Criteria

Parameter	Value
Basis of design	
Number of polymer skids	3 (one per centrifuge), plus space for 4 future skids: 1 for pre-dewatering, 3 for thickening
Neat polymer feed rate, per skid	1.5–15 gallons per hour (gph)
Dilution water feed rate, per skid	6–60 gpm
Manufacturers	Fluid Dynamics or Velodyne
Polymer mixing chamber	
Type	Either non-mechanical without motor or hydro-mechanical with motor
Accessories/instrumentation	Differential pressure switch, inlet/outlet pressure gauges
Neat polymer metering pump	
Quantity	1 per skid
Type	Progressive cavity
Skid dilution water inlet assembly	
On/off valve	Solenoid valve, normally closed
Flow control valve	Motor operated needle/orifice valve
Instrumentation	One dilution water magnetic flow meter, one rotameter
Other skid accessories	calibration column, flush/drain valve, pressure relief valve
Dilution water main (not provided in skid)	One pressure-reducing valve (to serve all skids). Two stainless duplex basket strainers: one 40-mesh, one 80-mesh. Pressure gauges before and after each strainer and PRV.

The dilution water feed is based on an assumed polymer make down solution concentration range of 0.25 to 0.5 percent (i.e., 0.25 [0.5] pounds of neat polymer per 99.75 [99.5] pounds of dilution water).

8.5.3 Pre-Dewatering Centrifuges

Design criteria for the centrifuges are listed in Table 8-6. Three centrifuges (two duty plus one standby) will be provided for the 30.8 mgd design condition. Additional space will be provided to install a fourth centrifuge in the future to provide additional capacity and redundancy for the 40 mgd design conditions. A schematic of the pre-dewatering centrifuges is provided in Drawing I-301: Pre-Dewatering Centrifuge. The centrifuges will be located on the upper level of the building. A bridge crane sized to lift the rotating assembly and floor opening large enough to fit the rotating assembly will be provided in the centrifuge room to lift and lower the centrifuges for maintenance and repairs.

For ease of maintenance and interchangeability of parts, the same model of centrifuge will be used for pre-dewatering and final dewatering. The delivery team will be responsible for evaluating sizing and selection of the centrifuge manufacturer and model. The selected system must be sized to reliably meet the full range of flows and loads at the 23.0 and 30.8 mgd design conditions, with space to expand to meet the 40 mgd design conditions. For reference, the evaluations and layouts presented in this

Plan were based on a 29-inch diameter bowl and assumed capacity of 4,200 lb/hr (equal to 6,000 lb/hr nameplate capacity, de-rated by 30 percent as a safety factor).

Table 8-6. Centrifuge Design Criteria

Parameter	Value
Number of units	3 (2 duty and 1 standby), (plus space for 1 future)
Manufacturer	Alfa Laval, Centrisys, or GEA
Hydraulic capacity per unit	500 gpm or greater at 1.3% feed solids
Target solids capture	95%
Target cake dryness	20-25% solids
Motor size	To be determined by delivery team
Drive type	VFD

Centrate will be sent to the WPCP drain. The centrate drain piping for each centrifuge will be a minimum size of 10 inches, sloped at 1/4-inch per foot or greater, with flushing connections throughout. The delivery team will be responsible for sizing the main centrate header piping and centrate drain vent to provide adequate capacity and reduce the risk of foaming issues. More information about the centrate drain piping is provided in Section 16.

8.5.3.1 Cake Conveyance

Solids from each centrifuge will fall through a chute into a “slop” diverter slide gate below the machine. During centrifuge startup, before the cake reaches a target dryness, the diverter gate will close to send “slop” to the WPCP drain via the centrate piping. Once the centrifuge is producing cake, the diverter gate will open, allowing solids to fall into a “pant-leg” diverter gate.

When the “pant-leg” diverter gate is an “open” position, cake will fall directly into the pre-dewatered cake bin. When the gate is “closed,” cake will fall into a “bin distributing” horizontal screw conveyor. The purpose of the screw conveyor will be to transport cake to a different bin, to allow even distribution of cake. The conveyor will be able to operate in forward or reverse. Design criteria for the cake conveyance equipment are provided in Table 8-7.

Table 8-7. Cake Conveyance Design Criteria

Parameter	Value
Materials of construction, frame	Type 304L stainless steel
Materials of construction, wetted parts	Type 316 stainless steel
"Slop" diverter slide gates	
Quantity	3 (one per centrifuge), plus space for 1 future
"Pant leg" diverter gates	
Quantity	3 (one per centrifuge), plus space for 1 future
"Bin distributing" screw conveyor	
Quantity	1
Maximum screw speed	20 rpm
Materials of construction	Stainless steel shaft Flights with abrasion-resistant wear shoes
Safety features	Zero speed switch and emergency stop pull cord
Screw conveyor slide gates	
Quantity	To be determined in detailed design

8.5.3.2 PEW Connections

The dewatering system will be provided with the following PEW connections:

- Centrifuge automatic rotating assembly/bowl flush, with one motorized valve and one check valve per centrifuge, or as required by the centrifuge manufacturer
- Centrifuge manual casing flush, with manually operated ball valves
- Flushing water for cake conveyance and storage equipment:
  - "Slop" diverter slide gates
  - "Pant leg" diverter gates
  - Screw conveyor
  - Cake bin live-bottom screws
- THP feed dilution water (see Section 8.5.6)

8.5.4 Pre-Dewatered Cake Storage Bins

A minimum 24 hours of usable storage at 40 mgd average conditions is recommended between the pre-dewatering centrifuges and THP preheating/reactor feed tank. The storage hopper will serve multiple purposes:

- Attenuate fluctuations in the solids flow upstream of the hopper.
- Provide storage during temporary shutdowns of THP equipment (planned and unplanned) to keep upstream process equipment operational.
- Provide additional storage capacity during an emergency storage situation.

The layout and design of the pre-dewatered cake bin will depend on which of the two shortlisted site layout options is selected. Further information on the site layout options is presented in Section 17 of the Plan. Below is a summary of the two shortlisted options:

- **Option 1: renovate existing Dewatering Building.** If the existing DWB is renovated, the existing four concrete cake bins would be reused. The total capacity of the existing cake bins is approximately 430 CY. The cake conveyance equipment (screw conveyors and slide gates) would be replaced. Each cake bin has a horizontal screw conveyor on the bottom that, depending on the rotation of the screw, unloads cake from the bin into one of two cake "collector screws" (one dedicated for each THP feed pump). This configuration allows any centrifuge to be paired with any cake bin and THP feed pump. Refer to Section C, Drawing M-309 and Section B, Drawing M-310).
- **Option 2: decommission existing Dewatering Building.** In this option, two new pre-dewatering cake storage bins would be provided below the pre-dewatering centrifuges. Each bin would have a capacity of 175 CY, which would provide more than one day's worth of storage at 40 mgd design average conditions. Each cake bin would have horizontal screw conveyors on the bottom that would unload cake from the bin towards either end of the conveyor, feeding one of the two THP feed pumps.

The requirements for the pre-dewatered cake storage bins are as follows:

- Two radar level sensors for each bin
- Type 304L stainless steel for the bin
- Type 316 stainless steel for moving parts
- Adequate clearance for removal of live-bottom screws
- Abrasion-resistant wear shoes for the screw flights
- Rectangular knife gate valves for cake discharge
- Minimum sidewall slope of 70 degrees
- Outlets sized to avoid bridging/clogging of cake at anticipated solids concentrations

A schematic of the cake bins is provided in Drawing I-302: Cake Bin and THP Feed Pumps.

8.5.5 THP Feed Pumps

THP feed pumps located below the pre-dewatered cake bins will convey solids from the cake bins to the THP preheating/reactor feed tank or to the emergency pre-dewatered cake loadout.

Progressive-cavity pumps are recommended for the THP Feed Pumps. This type of pump has been successfully applied at similar facilities such as DC Water, HRSD, and many others in North America, Europe, and other places around the world. More powerful piston type pumps were not considered because of the success and relatively modest expected operating pressures of the PC pumps (i.e., less than 350 psi). Pump inlets will be an open throat or hopper-type with anti-bridging auger incorporated into the pump shaft as depicted in Figure 8-1. Figure 8-1 also depicts an additional anti-bridging device incorporated into the pump feed hopper; this additional anti-bridging device at the pump inlet is recommended. Several pump manufacturers offer various configurations that serve the same purpose.

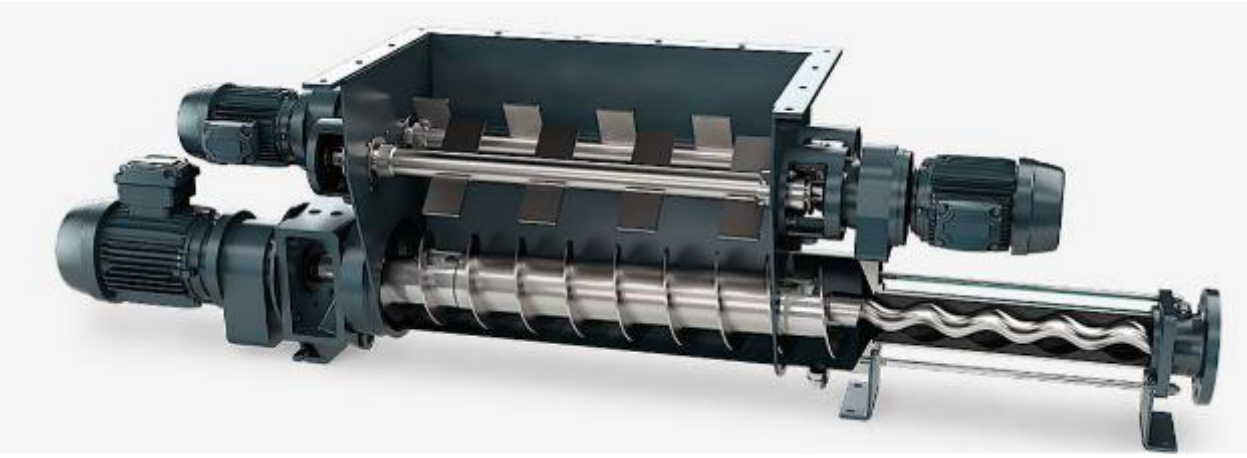

Figure 8-1. Progressive-Cavity Pump with Anti-Bridging Devices (source: Netzsch)

The pump speed will be limited to about 50 revolution per minute (rpm) at maximum design flow. Higher speeds lead to excessive maintenance. Progressive-cavity pump manufacturers generally recommend this speed when pumping cake at 20 percent solids or greater.

The THP feed pumps will be designed for conservative pressure requirements. Solids pumping can be unpredictable and prone to clogging, which warrants a conservative approach.

The THP preheating/reactor feed pump flow is based on the THP system design. As noted in Section 9, the THP system will be sized to handle the peak 7-day solids production at 40 mgd or greater.

Pipeline velocities need to be minimized in order to reduce pressure loss. Design of Municipal Wastewater Treatment Plants (Water Environment Federation, Manual of Practice No. 8, 5th Edition, 2010) suggests a 0.25 ft/s preferred maximum velocity for

dewatered solids. A typical pipeline diameter used at other THP facilities is 12 inch or smaller. DC Water was designed for 0.31 ft/s and experienced pressure losses of 0.98 psi per linear foot when pumping 16 percent solids. The delivery team will further evaluate the pipeline sizing to reduce pressure loss. Additional cake pumping data are being collected from other installations in the United States, as well as from Thames Water in the United Kingdom. Thames Water operates seven THP/AD plants and has a broad experience with different types of cake pumping situations at different distances. This data will be evaluated along with other information to refine the system pumping needs and system design attributes.

Check valves are not recommended downstream of the THP feed pumps. Instead, motor operated three-piece trunnion ball valves are recommended.

A schematic of the pumping system is provided in Drawing I-302: Cake Bin and THP Feed Pumps. Design criteria for the THP feed pumps are shown in Table 8-8.

Table 8-8. THP Pump Design Criteria

Parameter	Value
Number of units Renovate existing DWB Decommission DWB	 2 pumps (one duty, one standby) 4 pumps (2 per cake bin)
Type	Progressive cavity
Manufacturers	Moyno, Netzsch, or Seepex
Design flow	80 gpm or greater [a]
Design pressure	To be determined by delivery team
Drive type	VFD, direct-coupled motor
Maximum pump speed at maximum flow	50 rpm
Minimum number of pump stages	4
Rotor-shaft connection	Pin joint or gear joint

a. THP feed pump will be sized to match the maximum throughput of the THP system.

8.5.5.1 Requirements for Cake Feed Piping

Defining pressure loss in solids pipelines with cakes in the 16 to 30 percent solids range requires cautious evaluation. A conservative approach is recommended, based on the experience at several domestic cake pumping facilities (including DC Water's THP/AD facility) and other THP/AD facilities in the United Kingdom.

Seven facilities with cake solids of 25 to 30 percent had a median pressure loss of 2.0 psig/ft-length. Note that the piping layout of the reference facilities is unknown and the impact of fitting losses in the system is also unknown. The cake piping must be designed to limit the number of fittings and reduce friction losses by use of long (minimum three times diameter) radius elbows and wyes. The cake pipe lengths for the

THP feed pumps may up to 100 feet based on the current layout. Also, each system is expected to experience about 15 psig of static head. A design discharge pressure of 350 psig has been used in several United Kingdom installations.

Pumping of dewatered cake will not be at greater than 20 percent solids under normal operating conditions. Dilution water is added directly at the pump inlet for process purposes and to maintain consistency in the downstream solids content (see Section 8.5.6). The application of boundary layer water injection ring technology in the solids pipelines is an additional design feature that should be evaluated by the delivery team in an effort to minimize pumping pressures.

The evaluation of discharge pressure should also account for the possibility of pumping cake to a loadout area for hauling off site when the THP is out of service. The distance to the loadout area may be further than the preheating/reactor feed tank. During these conditions, the cake solids concentration may be higher (possibly 30 percent), to reduce the net volume of solids hauled off site.

The recommended material of construction for cake feed piping is Type 304 stainless steel.

The system should be designed to accommodate potential pressure buildup caused by off-gassing of the pre-dewatered solids. Recommendations include providing minimum 0.25-inch-thick stainless steel chutes with gusset reinforcement between the THP feed pumps and downstream valves, as well as vent lines with motorized valves that could be opened when the pipe is offline.

8.5.6 Cake Dilution System

As noted earlier, a cake dilution system will be provided to reduce pressure loss in the cake pumping systems and provide process control over the cake in the cake bin and the cake feed to THP. PEW is recommended for this purpose. Each cake pump will have a utility water injection point at, or just upstream from, the pump. The amount of dilution water added will be controlled by the pumping pressure. An algorithm will be created during startup for the pre-dewatered cake material. The algorithm will provide a relationship between percent solids and pumping pressure so that dilution water is added to achieve the correlated pumping pressure. This type of control system has been successfully used for several years by Thames Water and other agencies which have THP/AD systems. It is not perfect in its control of cake percent solids but is close enough to provide relatively consistent thickness in the cake bins, and to provide proper dilution when feeding to the THP system. The feed into the THP preheating/reactor vessel is anticipated to average 16.5 percent solids, with an acceptable range of 15to 18 percent solids. This may vary based on the THP vendor selected.

The dilution water system will include the following components:

- Strainers and pressure reducing valve(s) to reduce pressure for the flow control valve
- Magnetic flow meter (one per cake bin)
- Motor operated flow control valve (one per THP feed pump, either v-port ball valve or globe valve)

The dilution water demands will depend on the solids concentration of the pre-dewatered cake: drier cake will require more dilution water. Table 8-9 summarizes the anticipated dilution water flow requirements for various conditions to achieve the target 16.5 percent solids.

Table 8-9. Anticipated Dilution Water Flows

Design Condition	THP Feed Dilution Water Flows, gpm	
	Anticipated Values (25% cake solids)	Conservative Design Condition (30% solids)
23.0 mgd, average	11	14
23.0 mgd, peak 7-day	17	23
30.8 mgd, average	13	17
30.8 mgd, peak 7-day	22	29
40.0 mgd, average	18	24
40.0 mgd, peak 7-day	31	40

Values above are based on a target THP feed solids concentration of 16.5%.

8.5.6.1 Boundary Layer Injection Rings

Boundary layer injection rings may be considered to further reduce pumping pressure in the pipeline. Boundary layer injection rings usually consist of a short spool piece with three water injection points around the circumference of the pipe. Figure 8-2 depicts the boundary layer injection ring system. Typical flow rates are less than 1 gpm for each THP feed pump in service. Booster pumps may be required to provide adequate pressure to overcome the high pressures in the cake piping. The locations of the injection rings can be determined by the pump manufacturer and delivery team at a later time when the piping systems have been routed.

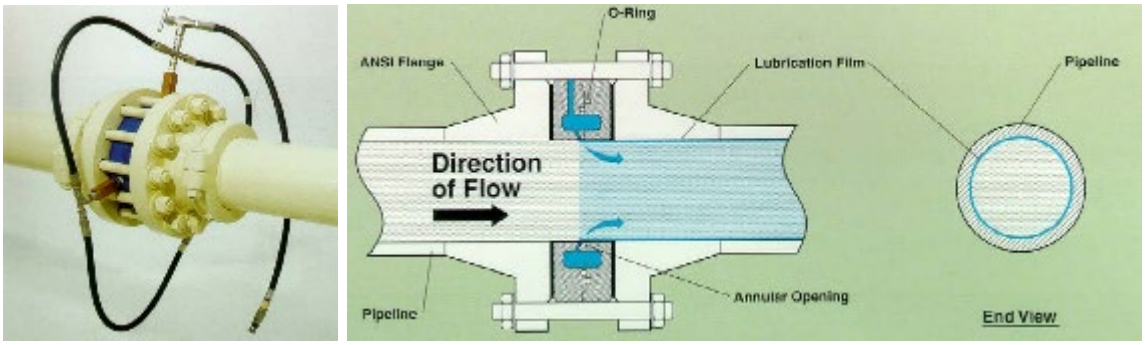

Figure 8-2. Boundary Layer Injection Ring System (Source: Schwing Bioset)

8.5.7 Odor Control

Foul air will be withdrawn from the following areas:

- Centrifuge centrate discharge chute
- Centrifuge solids discharge chute
- Cake conveyor
- Pre-dewatered cake bin

The odor control system is discussed further in Section 15.

8.6 Equipment Operation and Control

8.6.1 Centrifuge Feed

The centrifuge feed pumps will operate continuously while the pre-dewatering centrifuges are in service. A magnetic flow meter will be provided on the feed line to each centrifuge.

The centrifuge feed pumps will be provided with VFDs. The PCS will automatically adjust the pump speed so that the recorded flow matches the operator-adjustable flow set point.

8.6.2 Polymer System

The polymer feed to each centrifuge will be automatically adjusted to maintain an operator-adjustable dose rate, based on the following parameters:

- Solids feed flow, as measured by flow meter on the pre-dewatering centrifuge feed pump discharge
- Solids concentration of STS, entered in the PCS by the operator on a regular interval based on sampling and testing results
- Polymer dose rate (pounds of active polymer per dry ton of solids), entered in the PCS

The polymer blending unit will receive a polymer demand from the PCS, in units of pounds per hour (lb/hr). A PLC on the polymer blending unit will automatically adjust the speed of the neat polymer metering pump to deliver the polymer demand. The dilution water flow into the polymer blending unit will be adjusted manually via needle/orifice valve to achieve a target polymer solution concentration.

The polymer recirculation pump will be operated on a timer cycle. The suction and discharge tanks of the pump will be adjusted using manual valves.

8.6.3 Centrifuges and Cake Conveyance

The centrifuges will be controlled by the manufacturer's PLC. During commissioning, the polymer dosage, mixing, washwater, and centrifuge control will be adjusted to optimize the system to achieve the highest cake dryness while minimizing the total polymer usage. Every installed centrifuge should be operated periodically to distribute wear and ensure that each is functional when needed.

The "slop" diverter slide gate will be automatically opened and closed by the centrifuge PLC but could also be manually controlled from the centrifuge control panel or local control station.

The cake conveyance system will be controlled from the PCS. The system will be interlocked with the centrifuge and will send a stop command to the centrifuge PLC if a critical fault is detected. Before starting a centrifuge, the operator will select the discharge location of the cake by adjusting the following settings:

- Position of the pant leg diverter gate
- Cake screw conveyor direction of rotation, and
- Position of the slide gates below the screw conveyor

If the cake bin level exceeds a high-level set point, a warning alarm will be triggered, to notify the operator that the cake discharge location should be adjusted to prevent cake from overflowing the bin. If the level exceeds a high-high level, the PCS will send a stop signal to the centrifuge feed pumps.

8.6.4 Cake Storage, THP Feed, and Cake Dilution

The Cake Storage Bins will be equipped with load cells and contain sensors to monitor the actual cake levels within the bins. Level switches will be included to detect high level conditions. Inventory will be monitored to avoid over-filling as the cake receiving pumps transfer material to the Cake Storage Bins.

As noted in Section 9, the THP PLC will automatically control the THP feed pumps. The anti-bridging mechanism of the bin will be initiated when the THP feed pumps are called to run.

Pipeline lubrication with the boundary layer injection ring will be initiated when a cake pump is called to start and turn off when the pump is stopped.

Cake pipeline valves that have the capability to contain cake within the pipeline when closed, should be left open during inactive conditions. Off-gases from the cake with a blocked pipeline can drive up the pressure to unsafe levels.

Various levels of automation are possible and will be further discussed with the Delivery team.

9 THERMAL HYDOLYSIS PROCESS

9.1 Background and Purpose

Thermal hydrolysis (TH) has been selected as the process best able to achieve the Re-Gen Program's goals and objectives. It produces a Class A EQ biosolids product while minimizing the total quantity of final product produced and maximizing energy recovery from the solids in the form of biogas generated in the anaerobic digesters.

Multiple technologies were evaluated for TH. These alternatives are discussed in TM No. 4: *Thermal Hydrolysis Process Evaluation*.

All TH technologies use steam and pressure to hydrolyze solids. However, these systems vary widely in their process configurations, equipment arrangement, and operational strategies. Additionally, the solids handling facility interfaces upstream and downstream of the THP are different with each technology.

Because of the differences in technologies and the desire to select the THP configuration before proceeding into detailed design, the County is proceeding with a competitive negotiation process to pre-select the THP equipment manufacturer.

An overall schematic of THP is shown on Drawing G-006 with additional detail provided on Drawings M-400 and I-400.

9.2 Process Objectives

THP consists of a high-temperature, high-pressure steam pretreatment of solids to create THS, prior to treatment, in a MAD process. THP requires upstream screening and pre-dewatering of the solids and is classified as a pasteurization "process to further reduce pathogens" (PFRP), as listed in Appendix B of the U.S. Environmental Protection Agency (EPA) Part 503 federal regulations. THP involves heating sewage solids and maintaining its temperature above 70 degrees Celsius (°C) (158°F) for 30 minutes or longer. As one example, the Cambi THP maintains temperatures above 70°C (158°F) through the preheating/reactor feed tank and reactors and provides a total detention time greater than 30 minutes. The THP/AD system satisfies time and temperature requirements necessary to produce Class A biosolids.

Medium-pressure steam (90 psig) is used to create high temperature and pressure conditions to lyse bacterial cells and to promote the release and solubilization of particulate organic material upon depressurization. THP further hydrolyzes large biological macromolecules, carbohydrates, and long-chain fatty acids to lower molecular weight intermediates. The process also significantly increases the rate of digestion and the destruction of feed solids as these constituents are much more easily digested. The digesters can operate at shorter retention times with equivalent process stability as

conventional mesophilic digesters. In addition, THP can increase volatile solids reduction (VSr) and biogas generation by approximately 10 percent, compared to AD alone.

One characteristic of THS is a decrease in the viscosity of DS, allowing the operation of higher feed and mixed solids concentrations in digesters as it is both easier to pump and mix. THS digester feed solids are from 8 to 12 percent TS versus 4 to 6 percent TS for a conventional digestion process. As a result, the required volume of the digesters can be greatly reduced, requiring only half the volume relative to the required volume of conventional MAD systems. Additionally, the DS from THP provide increased dewaterability, less odorous cake, and Class A biosolids.

All TH technologies use steam and pressure to hydrolyze solids. However, these systems vary widely in their process configurations, equipment arrangement, and operational strategies. Additionally, the solids handling interfaces upstream and downstream of the THP are different with each technology. It is therefore necessary to select the specific THP configuration before proceeding to detailed design.

9.3 Basis of Design

The pre-dewatered solids will be pumped from the pre-dewatered cake storage bins to the THP by the THP feed pumps, located in the renovated DWB or the new SPB, depending on the selected site layout. The THP design loading criteria are summarized in Table 9-1.

Table 9-1. Thermal Hydrolysis Process Design Loading

Design Condition	Total Solids Load (lb-TS/d)	Volatile Solids Load (lb-VS/d)	Flow (gpd)[a]	Flow (gpm)[a]
30.8 mgd, average	82,104	65,771	56,664	41
30.8 mgd, peak 7-day	123,880	99,441	90,023	63
40.0 mgd, peak 7-day	161,230	129,432	117,164	81

a. At a pre-dewatered cake concentration of 16.5% TS.

The selected operating condition for the THP is the peak 7-day operating condition at 40 mgd, as the equipment will be a single train (with redundancy) and therefore it is recommended to size the THP for the 40 mgd design condition, rather than trying to expand the system at a later date. The batch-wise operation of the THP makes it very flexible to turn down to a lower throughput. This can be achieved by either lengthening the duration of the reactor “hold” time or increasing the time between batches.

9.4 System Location

The location of the THP equipment at the Arlington WPCP is shown on the site plans for the two configuration options, Drawings C-4 and C-6. The location of the THP is critical because of the material handling complexities of pumping pre-dewatered cake from the cake bins to the preheating/reactor feed tank. The location was selected because of its proximity to the pre-dewatered cake bins for the renovated DWB or the new SPB. It is also desirable to locate the THS cooling HEXs (see Section 10) near the THP to minimize the distance pumping the hot, undiluted THS. If outages or interruptions of service occur and the THS is allowed to cool before diluting with DS, the cooled THS will clog the pipe resulting in maintenance headaches. Therefore, the design should minimize the distance for pumping the undiluted THS to reduce the risk of this occurrence and reduce the impact should it happen.

9.5 THP Installation

The THP equipment will be installed outdoors on a concrete pad. The equipment package will arrive to the site from the manufacturer. The slab will be sized to accommodate the THP equipment and to provide access around the equipment. The pad will have a perimeter concrete curb and a trench drain to allow rainwater and washwater drainage from the THP train to the WPCP drain system. The concrete walkway around the system will be sloped to the perimeter curb to facilitate washdown and cleaning. A hose big and reel will be located on each end of the equipment train to accommodate cleaning operations. Floor drains will be provided at pumps for seal water drainage.

Outdoor lighting in this area will also be provided along with supplementary lights and convenience receptacles if not provided by THP manufacturer. The THP equipment will also be equipped with lightning protection. Site grading will provide positive drainage to prevent ponding or flooding around the slab.

The THP feed pumps will be located at the pre-dewatered cake bins. The THS flow control valves and flow meters will be located at the cooling system, adjacent to the cooling HEXs. The entire area surrounding the THP equipment flow control valves, and cooling heat exchanges will have a perimeter concrete curb, trench drains, and hose bib/reels for maintenance. Refer to Section 11 for additional information on the cooling system.

9.6 Thermal Hydrolysis Facility Description and Design Criteria

The THP will be a batch process system (rather than continuous), installed outdoors on a concrete slab, and will consist of one train with installed redundancy to ensure

continuous operation. The THS flow meters and digester feed flow control valves will be located adjacent to the THP equipment near the cooling HEXs. The THP equipment details and configuration will be finalized following the competitive negotiation with the THP manufacturers and a manufacturer is selected.

The THP has multiple interfaces with the rest of the solids handling processes, which require careful coordination to ensure optimal and efficient operation of the THP and the downstream processes. The primary interfaces are:

- Pre-dewatering and cake storage bins
- Steam system
- Plant effluent water
- Anaerobic digestion

THP manufacturer will be responsible for designing and selecting the following equipment to provide a complete and functioning system:

- THP equipment skid, including redundant preheating/reactor feed tanks, reactors and depressurization tanks, all associated pumps, valves, instruments
- Process gas treatment system
- THP PLC and controls system
- THP feed pumps
- THS feed control valves and flow meters
- Spare parts package

9.6.1 Preheating/Reactor Feed Tank

The preheating/reactor feed tank represents the first vessel in the THP sequence. At least two preheating/reactor feed tanks will be provided to provide redundancy and continuous operations when a tank is removed from service during the required annual shutdown and inspection. Diluted pre-dewatered solids are continuously fed to the preheating/reactor feed tank from the upstream pre-dewatered cake storage bins. The quantity of dilution water needed will depend on the THP manufacturer, as the preferred feed rates to the THP vary. Variances in the pre-dewatered cake solids concentration will be offset by the addition of dilution water to the preheating/reactor feed tank, which further reduces the solids concentration to a steady, targeted feed to the THP. The solids are preheated to about 90°C to 105°C (194°F to 221°F) by injection of the recycled steam from the depressurization tank. The specific process temperature is dependent on the feed solids concentration and temperature, as well as operational parameters upstream of the THP. The increase in temperature decreases the viscosity of the solids, increasing the homogeneity of the solids and enabling them to remain in

suspension. The preheating/reactor feed further provides the required storage capacity for recovery of energy in the form of recycled steam from the depressurization tank.

The solids in the preheating/reactor feed tank are circulated and homogenized by two variable-speed, progressive-cavity pumps. One pump operates in a continuous-duty mode. The second pump operates as standby and is started upon the failure of the operating pump. One circulation pump runs continuously at a constant speed, set by the THP control system, so long as the level transmitter in the preheating/reactor feed tank indicates that there is sufficient quantity of solids in the tank. The circulation pump serves as the reactor feed pump. It conveys preheated solids from the preheating/reactor feed tank into the reactors when the system reaches the solids-filling stage. In the case of one manufacturer, steam is added to the reactor feed line and mixed into the preheated solids using a dynamic mixer.

9.6.2 Reactors

TH occurs in the reactors, which function as a batch process consisting of the following steps (with general times for approximation use only):

1. **Solids fill (10 minutes):** At the start of the reactor cycle, the preheated solids are discharged from the reactor feed pump to the empty, non-pressurized reactor.
2. **Steam fill (10 minutes):** This step applies only to one manufacturer. If not added upstream of the reactor, steam is added to hydrolyze the solids by further increasing pressure and temperature. The steam control valve is opened gradually to minimize the effects of thermal shock. The steam control valve will close partially to a preset position, to decrease the rate of steam injection, when a set pressure in the reactor is reached.
3. **Retention (20 minutes):** Once the target pressure is reached, it is maintained in the reactor to provide batch treatment of the solids at the required temperature and pressure for Class A pathogen reduction.
4. **Depressurization (1 minute):** The main outlet valve at the bottom of the reactor is opened and the THS is depressurized to the depressurization tank because of the differential pressure between these vessels, when the hydrolysis process is complete. This is done at the maximum pressure differential to achieve the largest pressure drop.
5. **Blowdown (5 minutes):** Following the explosive depressurization, the remainder of the THS from the reactor completes the transfer to the depressurization tank.

During a typical cycle, each reactor of the THP train reaches a process temperature of 149°C to 182°C (300°F to 360°F). The process starts over when the cycle is completed. The total time for one reactor cycle is optimized during startup based on energy balance and actual steam consumption. Multiple reactors operate on a staggered basis, allowing continuous discharge from the pre-dewatering process through the THP to the AD system. At least two reactors will be provided to provide redundancy and continuous operations when a tank is removed from service during the required annual shutdown and inspection. The total reactor cycle time ranges from 40 to 50 minutes.

Most of the process gases are returned to the preheating/reactor feed tank from the depressurization tank during the depressurization. However, a small gas vent line from each reactor is also connected to the preheating/reactor feed tank, for the purpose of discharging an accumulation of insoluble gases (e.g., CO_2, nitrite, amines, alcohol, etc.) periodically during the batch cycle. A valve in the venting line is opened by the PLC to transfer these gases to the preheating/reactor feed tank. The gases are then conveyed for treatment.

9.6.3 Depressurization Tank

The main purpose of a depressurization tank is to release the steam contained in the THS and recycle it to the preheating tank. This is achieved by returning steam to the preheating/reactor feed tank to preheat the cake feed, using the pressure differential between the depressurization tank and the preheating tank. The depressurization tank inlet takes the pressure drop from the reactor (approximately 100 psi) to the depressurization tank pressure of approximately 10 psi. This generates a fast and powerful expansion of the steam referred to as steam “explosion,” leading to the biomass cell destruction. Following the initial “explosive” depressurization, the remaining THS from the reactor are transferred by differential pressure to the depressurization tank; no pumps are used. The depressurization tank further provides short-term storage equalization, so that the digesters can be fed continuously. At least two depressurization tanks will be provided to provide redundancy and continuous operations when a tank is removed from service during the required annual shutdown and inspection.

9.6.4 THS Dilution System

Prior to the digester feed pumps and after discharge from the depressurization tank, THS are reduced from 13–16 percent to 8–12 percent with dilution water. Filtered and disinfected utility water is used as dilution water to maintain Class A solids. Dilution water is required to achieve the following objectives:

- Decrease the temperature of the THS to protect the digester feed pump rotor, stators and seals

- Reduce the THS viscosity, avoiding larger digester feed pumps
- Control ammonia concentrations in the digesters to below 3,000 milligrams per liter (mg/L) by reducing the solids feed loading

Laboratory pilot testing, currently underway, shows that a 9 percent solids feed is maintaining ammonia concentrations in the digester below 3,000 mg/L. The THP digesters will operate at a higher ammonia concentration than conventional digestion and the management of ammonia concentration in the digesters is a critical operational point.

The dilution water system, using chlorinated PEW includes a modulating control valve and flow meter to control the flow of dilution water as directed by the THP control system. A discussion of the PEW system is provided in Section 16. Potable water (County Water [COW]) will be provided as a backup water supply to avoid contamination of the THS, in the case of an interruption or contamination of the PEW.

9.6.5 Digester Feed Pumps

Progressive-cavity digester feed pumps will continuously convey diluted THS from the depressurization tank to the THS feed system control valves. The diluted and cooled THS will be equally split to the cooling HEX/DS circulation system. One duty and one standby PC pump and associated discharge control valves will be mounted on the THP train.

The speed of the digester feed pumps is the primary control parameter of the THP. An increase of the feed rate of the digester feed pumps will result in a corresponding increase in the speed of the reactor feed pumps as they work to maintain a set level in the preheating/reactor feed tank. The overall effect will be more throughput to the THP. Operators will set the digester feed rate based upon the pre-dewatered solids cake production rate and the desired feed rate to the digesters.

9.6.6 Process Gas Treatment System

The gas/steam released from the preheating/reactor feed tank is highly odorous and is saturated with water. The description of the process gas treatment system is based around a single manufacturer, Cambi, Inc. Other manufacturers will be required to provide a system that is proved to condense, convey and treat the process gasses resulting from TH. The process gas system treating this stream consists of two elements:

- A process gas cooler, which is a tube-in-tube HEX and is located at the upper level of the THP train and shown on Figure 9-1.
- A process gas skid, located on the second level of the THP train, and shown on Figure 9-2.

Figure 9-1. Process Gas Cooler

Figure 9-2. Process Gas Skid

The treatment of odorous air has improved with the evolution of the Cambi THP. The Cambi THP B6-4 train includes several upgrades from Cambi's earlier foul-gas treatment skids, including an overall simplification of the system as well as modifications to the piping system and valving, in order to reduce the opportunities for leaks.

The process gas from the THP is treated as follows:

1. Process gas from depressurization tank and reactors is sent to the preheating/reactor feed tank along with the steam from the depressurization process.
2. The process gas is sent from the preheating/reactor feed tank to the process gas cooler. The process gas cooler is used to remove condensable gases from the stream, and to cool down gases from the preheating/reactor feed tank. The condensed liquid drains back to the preheating/reactor feed tank.
3. The cooled gas is conveyed to the process gas skid, where ejectors compress and convey it into the process gas tank using disinfected utility water. The compressing capacity of the ejectors is controlled by the water flow (i.e., speed of the water pumps). The process gas tank is operated at a fixed level and constant temperature.
4. Two process gas pumps circulate disinfected utility water through the system, which served as carrying fluid for the cooled gases, as well as to maintain constant level and temperature in the tank.
5. The resulting process gas condensate overflows from the process gas tank and is conveyed in a pressurized line to the digester feed piping. It is critical to avoid intermediate high or low points in the process gas condensate line between the process gas skid on the THP train and the point of injection into the digester feed lines.

The condensed process gas from the THP will be transported to the digesters in a process gas header pipe and will be injected into the operating digesters via the DS recirculation piping, downstream of the HEXs. The entire system is operated at a controlled pressure in order to overcome the pressure in the digester feed lines. The pressure in the system is controlled by a modulating valve on the process gas tank outlet.

Under normal operations, the process gas will be discharged to one or the other operating primary digesters. It is recommended to alternate the receiving digester as it has been shown that the process gas condensate can cause process issues in the digesters, such as digestion inhibition or a reduction in biogas generation. It is recommended to review the findings from recent operational experiences for other THP facilities for additional information.

9.7 Equipment Operations and Control

The THP PLC will control the THP equipment, as well as the speed of the digester feed pumps and the flow control valves. The speed of the digester feed pumps is the primary

control parameter of the THP. Increased feed rate of the digester feed pumps at the PLC will cascade to upstream components and increase the overall solids throughput of the THP. Operators will set the digester feed rate, number of reactors in service and reactor cycle time, based upon the pre-dewatered solids cake production rate and the desired feed rate to the digesters.

Operator walk-throughs are required to look and listen for problems and make occasional adjustments to the digester feed rate. Dramatic changes in digester feed rate have shown to cause an increased risk of digester upsets or rapid volume expansion events. To maintain stable digester conditions and reduce the risk of rapid volume expansion, it is recommended to limit changes to the digester federate to less than 5 percent daily. The operators' main objective is to keep the pre-dewatered cake percentage of solids consistent. To this end, the primary operation efforts are sampling and analyzing the percentage of solids being fed to the preheating/reactor feed tank and correlate that to the THP feed pump discharge pressure. The THP feed pump controls the pumping to maintain constant pressure, thereby providing a consistent feed to the THP. It is also valuable to regularly confirm the percent solids feeding to the digesters. Sampling locations will be provided at the discharge of the THP feed pumps at the discharge of the digester feed pumps to facilitate these activities. During startup and commissioning, samples of the pre-dewatered cake will be analyzed multiple times each day to develop and adjust the dilution system controls. After steady-state operation is achieved, samples are typically taken once per operations shift to confirm the functionality and accuracy of the dilutions system feeding the pre-dewatered solids to the preheating/reactor feed tank.

Regular maintenance activities will include inspecting the duty pumps on the THP equipment, including the THP feed pumps, reactor feed pumps and digester feed pumps and performing preventative and corrective maintenance as required. Additionally, the packing on the knife gate valves will need to be tightened and greased periodically.

Most of the maintenance required will be performed during the annual shutdown of each pressure vessels, at which time the tank will be cleaned, welds inspected, and the valves and instruments associated with tank will be replaced with spares so that the valves can be rebuilt and instruments calibrated. The annual shutdown will require close planning with the THP equipment manufacturer to minimize downtime of each vessel and to ensure the proper materials are ordered and on hand.

10 PROCESS STEAM SYSTEM

10.1 Background and Purpose

The THP requires steam injected into the system's reactors in a batch process to heat the incoming solids mixture before depressurization. The process steam system consists primarily of the steam boilers and the feedwater system. Multiple steam production technologies were analyzed and discussed in the *Biogas Utilization Report.* The recommendation from this report was to produce RNG on site and to provide standalone boilers for steam generation.

The selected alternative is to install two firetube-type steam boilers (one duty/one standby) with two deaerators (one duty/one standby), two feedwater pumps, water treatment, chemical feed equipment and blowdown tanks in a new boiler room located near the new THP equipment. The boilers will be equipped with dual fuel capability to fire on either municipal-supplied natural gas or cleaned biogas.

An overall schematic of the process steam system is shown on Drawing G-007 with detail provided on Drawings I-600 through I-604.

10.2 Basis of Design

The basis of design is presented below for the steam boiler and the boiler feedwater system. The steam system process flow diagram is shown on Drawing G-7. Refer to Section 9 for details regarding the THP.

10.2.1 Steam Boiler

The average steam demand required by the THP is based on an assumed steam demand of 1 ton steam per ton of dry solids. The THP solids feed design loading criteria are detailed in Section 3. According to THP equipment providers, peak demand for the process is nearly 9,000 lb/hr. Accounting for a 10% margin and other preheating needs 10,000 lb/hr will be used as the design basis for the boiler. Each fill lasts for approximately 20 minutes and is then held at the design temperature and pressure for approximately 20 minutes. An additional amount of steam may be required throughout this "hold" process to maintain temperature and pressure. The minimum steam demand from the THP may conceivably go to zero, and the design should consider the full operating range.

The steam sent to the THP reactors will be consumed in the process, however, a small amount of condensate will be filtered from the steam traps. The design should consider sending this condensate back to the deaerator tank. Table 10-1 below presents the design loads for the various solids load projections as detailed in Section 3.

Table 10-1. THP Steam Design Criteria

Design Criteria	Solids Feed to THP, DTPD	Average Steam Demand, lb/hr[a]	Peak Instantaneous Steam Demand, lb/hr
23.0 mgd			
3-day	50.9	4,244	9,000
7-day	46.3	3,855	
14-day	43.7	3,642	
30-day	40.1	3,343	
Average	30.7	2,555	
30.8 mgd			
3-day	68.2	5,683	9,000
7-day	61.9	5,162	
14-day	58.5	4,877	
30-day	53.7	4,477	
Average	41.1	3,421	
40.0 mgd			
3-day	89.0	7,381	9,000
7-day	80.6	6,704	
14-day	76.0	6,333	
30-day	69.8	5,814	
Average	53.3	4,443	

a. Average steam demand based on assumption of 1 ton of steam for every 1 dry ton of solids processed. Actual steam demands will be updated with selected THP vendor.

The THP requires steam at a pressure of 160 to 170 pounds per square inch gauge (psig) and the recommended steam boiler pressure at the main steam outlet is 175 to 185 psig to account for system pressure drop between the boiler outlet and reactor inlet. Reference Section 9 for details on THP model assumptions and explanations.

A firetube boiler was selected over a water tube boiler because of the proportionately larger water volume in the firetube type, which allows it to handle greater process flow swings. However, cold startup time is generally longer with the firetube design. As such, both boilers should include a standby heating coil to be kept warm for quick startup in the event of a trip of the operating boiler. The firetube boiler will typically come pre-packaged with the burner and controls, allowing for lower installation costs from an installation contractor. The firetube type boiler will typically have larger service clearances than a water tube type, so space considerations between boilers and within the boiler room should be considered early in the detailed design process.

10.2.2 Feedwater System

The boiler feedwater system will consist of deaerating feedwater heater(s) and two feedwater pumps with one in constant operation and the second serving as standby

with each rated for a minimum of 125 percent of peak boiler feedwater flow rating for process reliability. Table 10-2 below provides approximate feedwater flow rates accounting for steam demand and a 5 percent continuous surface blowdown based on the density of water at 227°F and 200 psig for the various solids load projections.

Table 10-2. Feedwater Design Criteria

Design Criteria	Steam Demand, lb/hr	Boiler Feedwater, gpm
23.0 mgd		
3-day	4,244	9.3
7-day	3,855	8.5
14-day	3,642	8.0
30-day	3,343	7.4
Average	2,555	5.6
30.8 mgd		
3-day	5,683	12.5
7-day	5,162	11.4
14-day	4,877	10.7
30-day	4,477	9.9
Average	3,421	7.5
40.0 mgd		
3-day	7,381	16.2
7-day	6,704	14.8
14-day	6,333	13.9
30-day	5,814	12.8
Average	4,443	9.8
Peak instantaneous	10,000	22.0

COW will be used as the source of makeup water for the boilers. PEW is not recommended as a backup to COW. Rather, the COW system should be looped to increase over reliability and protection from inadvertent pipe breaks (reference Section 16 for additional information). The COW will be chemically treated before entering a deaerator, which will remove the dissolved gases. Two water softeners (duty/standby) are recommended to provide soft water if one softener is out of service. A backflow preventer will be required in the COW supply line before entering the water softeners. Additional treatment of potable water including filtration and/or chemical treatment may be required to remove impurities based on detailed evaluation of makeup water analysis to support design. Additional treatment will be handled by a chemical feed system that will inject directly into the deaerator. Sample coolers will be included in the steam

header line and the feedwater line that will use County water to cool the liquid to be able to analyze the quality.

The deaerator's makeup water design condition will be based on the amount of condensate returned from the steam traps and the full consumption of instantaneous steam demand in the THP. This Plan assumes that two deaerators will be supplied (one duty/one standby); however, further analysis should be completed during detailed design on the requirements for full redundancy on the deaerator tank, as these tanks do not have any moving parts and typically require a short service outage for an annual inspection and cleaning. Deaerator and feedwater pump models from similar projects should be investigated by the delivery team to ensure a reliable system.

Table 10-3 below provides the typical design criteria and treatment methods for the boiler feedwater system. Criteria limits should be confirmed during detailed design and chemical feed and filtration design should be designed to satisfy requirements.

Table 10-3. Boiler Water Quality Design Criteria

Feedwater Criteria	Typical Limits	Treatment Method
pH	8.5–9.2	Chemical
Hardness	<0.3 ppm	Softener
Silica	Dependent on blowdown frequency	Softener/blowdown
Total copper	<0.05 ppm	Chemical
Total dissolved solids	Dependent on blowdown frequency	Softener/blowdown
Dissolved oxygen	<0.007 ppm	Deaeration and oxygen scavenger
Suspended matter	0	Blowdown
Oil and grease	0	

ppm = parts per million.

A drinking water quality report obtained from Arlington County is summarized in Table 10-4, which describes the expected quality of source water for the feedwater treatment system.

Table 10-4. Arlington County 2022 Water Report

Parameter	Unit	Value
pH	N/A	7.7
Hardness	mg/L	125
Copper	ppm	0.06
Chlorides	mg/L	30

10.3 System Location

The steam boiler, blowdown tank, and feedwater equipment will be located together in a boiler room, whose location is dependent on the site plan option chosen. The two options proposed focus on renovating the existing DWB or decommissioning the existing DWB. Design and installation challenges can occur with items such as exhaust piping, drains, electrical, equipment clearances and equipment access in the renovated DWB option and should be considered when choosing between configurations. Refer to Section 17 for additional details on the DWB options.

For Option 1 in the renovated DWB, the boiler room will be located on the second floor on the southwest corner of the existing DWB as shown on Drawing M-306. Structural analysis of the DWB has not yet been completed. An evaluation during detailed design will be completed to confirm location of the equipment.

For Option 2, with the existing DWB being decommissioned, the boiler room would be located on the second floor of the northwest corner of the new SPB as shown on Drawing M-351. Note the second floor will exit at grade to the west.

10.4 Process Steam Description and Design Criteria

This section describes the design criteria, and operations for individual equipment or packaged systems that make up the process steam system, including the steam boiler, deaerator and feedwater pumps, water softener, chemical feed system, and blowdown separator.

10.4.1 Steam Boilers

Two packaged firetube-type steam boilers will be installed with each having a nominal boiler horsepower of 300 hp capable of supplying 10,000 lb/hr of saturated steam at 175 to 185 psig. The boiler will be a three- or four-pass wet back design outfitted with a forced draft low-nitrogen oxides (NO_x) burner that is capable of meeting standard 30 parts per million by volume (ppmv) NO_x emissions at 3 percent oxygen (O_2). This NO_x level is typical for meeting air permit regulations at industrial facilities but would need to be confirmed to be capable of meeting state and local emissions requirements. The burners will have a 10:1 turndown control that will allow the boilers to maintain the quick cycling that is required for the THP batch process. The boilers will be designed to American Society of Mechanical Engineers (ASME) Boiler and Pressure Vessel Code (BPVC) Section I and have all safety features as outlined per NFPA 85.

Natural gas piping will be installed per NFPA 54 fuel gas code as dictated by NFPA 85 and all state and local codes. Separate fuel trains will be required for the natural gas and biogas supplies for each boiler that will feed a burner that is capable of firing both

fuels. Depending on the natural gas distribution line supply pressure, a pressure regulating and metering station would be required before the boiler fuel skid designed for the natural gas flow rates and pressures of a single boiler in operation.

The boiler will connect to a steam header where steam pressure is controlled and has a takeoff for the THP and the deaerator steam supply. Table 10-5 below provides the design parameters for the steam boilers.

Table 10-5. Boiler Design Criteria

Parameter	Unit	Value
Quantity	No.	2 (1 duty/1 backup)
Type		Firetube
Steam pressure	psig	175 - 185
Steam quality description	N/A	Saturated
Peak steam output	lb/hr steam at 175 - 185 psig	10,000
Nominal capacity	BHP	300
Fuel	N/A	Natural gas/clean digester gas
Burner turndown	N/A	10:1
NO_x emissions	ppmv at 3% O_2	30

Each boiler will be equipped with a forced draft fan for its burner and the flue gas will be vented through a dedicated stack to the atmosphere.

10.4.2 Deaerator and Feedwater Pumps

The deaerators reduce oxygen in the feedwater to less than 0.007 ppm (0.005 cubic centimeters per liter [cc/L]) using a small amount of steam from either the steam header or the blowdown separator to preheat the feedwater to the boiling temperature in the pressurized tank. The deaerators will typically operate at a pressure between 5 and 15 psig.

The one deaerator in operation will be selected locally by the plant operator. The deaerators will be installed as packaged systems with the feedwater pumps and makeup water control valves. The deaerators will each be sized for a minimum of 15 minutes of storage with one steam boiler operating at the boiler design capacity of 10,000 lb/hr and up to 5 percent continuous blowdown from the boiler. A spray/tray type of deaerator is recommended to achieve more dependable elimination of oxygen. Two packaged feedwater pumps will be installed directly below each deaerator. Pumps will be of the multistage centrifugal or vertical-turbine type and will have 316 stainless-steel housings and impellers to protect against corrosion. Feedwater flow to the boiler is continuous and is controlled with a modulating valve controlled by the boiler's control

system and recirculation line back to the deaerator that protects the feedwater pumps. Feedwater pumps are typically designed for capacities higher than the peak evaporation rate of the boiler to make up the water level and are capable of supplying water to the boiler at a pressure of 3 percent higher than the boiler's pressure relief valve. Additional feedwater pump head is required to account for losses in the feedwater piping. Table 10-6 below provides the design parameters for the deaerator and feedwater system.

Table 10-6. Feedwater System Design Criteria

Parameter	Unit	Value
Deaerator tank quantity	No.	2
Type	N/A	Spray/tray
Makeup water	Percent	100
Storage, minimum	gal	425
Deaerator operating pressure	psig	5–15
Oxygen removal, maximum	ppm	0.007
Feedwater pumps per deaerator	No.	2
Feedwater pump flow, each	gpm	30

H_2O = water.

10.4.3 Water Softener

Water softening is required to control the levels of equivalent calcium carbonate ($CaCO_3$), which at levels exceeding ASME guidelines, can lead to scaling and damage to the boiler. The duty/standby water softeners will be the dual-tower regenerative type with a brine tank. Total hardness will be reduced to below 0.3 ppm $CaCO_3$. The regeneration is controlled by the softener control panel that is mounted locally to the equipment. Periodic filling of salt into the brine tank is required. Table 10-7 below provides the design parameters for the water softener system.

Table 10-7. Water Softener Design Criteria

Parameter	Unit	Value
Quantity	No.	2 (duty/standby)
Type	N/A	Alternating system

10.4.4 Chemical Feed System

A pre-packaged chemical feed system is recommended for chemical dilution and metering to the deaerator to provide extra protection against scaling and corrosion. The chemical feed system will add chemicals to the deaerator based on the feedwater flow to ensure the proper ratio of chemical addition to fresh makeup water. The packaged system will consist of a minimum of one premixed chemical tank and two chemical feed pumps per tank (one duty/one standby). The chemical feed system is designed to accommodate feeding of multiple chemicals as determined during detailed design.

Table 10-8 below provides the relevant design parameters for the chemical feed system.

Table 10-8. Chemical Feed Design Criteria

Parameter	Unit	Value
Quantity	No.	1
Type	N/A	Preassembled packaged
Chemical feed pump, number	No.	2 per tank (one duty/one standby)
Mixing type	N/A	Pre-mixed

10.4.5 Boiler Blowdown Separator

The single blowdown separator will be an ASME Code Section VIII Division 1 tank capable of safely handling the continuous surface blowdown and intermittent bottom blowdowns from both boilers. Design criteria is provided in Table 10-9. The blowdown water will be cooled below 140°F (60°C) and mixed with non-potable water prior to being conveyed to a drain using a temperature control valve. For Option 1, design would need to consider the existing drains capacity to handle the additional blowdown drainage. The steam from the depressurization process will be vented to a safe location. Considerations for steam recovery from the separator vent line for injection into the process and blowdown drainage recovery into the process should be investigated during detailed design.

Table 10-9. Blowdown Separator Design Criteria

Parameter	Unit	Value
Quantity	No.	1
Capacity	gal	518
Blowdown capacity	lb/hr	500
Blowdown tank operating pressure	psig	5

10.4.6 Process Steam Safety Features

All steam, feedwater and natural gas piping will be designed and constructed per ASME B31.1 Power Piping Code. A detailed pipe stress analysis will need to be completed in accordance with the piping code for pipe support design. The boilers and deaerator will each be equipped with pressure relief valves connected to the equipment that comply with the applicable sections in the ASME BPVC. Vent piping will not have any intervening valves between the relief valve and point of discharge and will be piped to a safe location outdoors, typically above roof level away from any platforms or areas used by personnel. The vent piping diameter will not be less than the size of the discharge of the safety relief valve and is typically larger to limit velocity and noise when release occurs. All vent piping will require drains at low points to be sent to plant drains.

Discharge piping and supports for the pressure relief valves will consider deadweight, thermal expansion, earthquake, flow induced reaction forces, and any other mechanical loads that are applied to the system. The safety relief valve discharge piping may require installation of a silencer to reduce the noise level during discharge depending on facility requirements. The additional back pressure due to a silencer will be considered during detailed design. Drainage from condensation in the discharge line will be considered and piped to plant drains or deaerator tank to be determined during detailed design.

The boiler will be equipped with additional safety controls including high and low water level cutoff and burner safeties, including loss of flame and loss of fuel flow. The deaerators will also be equipped with water level cutoff and safety relief valves.

10.5 Equipment Operations and Control

The boiler is supplied as a packaged system with the burner, pressure and level controls, and the combustion controls/flame safety system. The boilers will have local PLC-based control panels that control the burners and water level with status, alarms, and start/stop controls and can be integrated into the plant master control system. The THP packaged control system will be PLC-based and will control the amount of steam injection to the reactors by opening and closing steam valves. As the steam header pressure drops, the boiler will ramp up in load by increasing the heat input to the burner to produce more steam to maintain the steam header pressure setpoint. The THP valves will then close, and the boiler will ramp down in load during the hold cycle.

The boiler duty/standby operation will be initiated locally. Consideration should be given during detailed design for corrosion within the boiler and piping while a boiler is in standby for extended periods of time. Wet storage is recommended where the boiler is filled to the top with chemically treated water and maintained at a pressure greater than atmospheric.

The boiler level controller will modulate the feedwater control valves to allow the feedwater to flow into the boiler. Refer to Section 9 for additional details on the THP control system.

The boiler draft will be controlled by a draft damper assembly that will provide the optimal excess air for the fuel air mixture and to provide the proper draft pressure in the boiler. Because of the low turndown expected for the boiler during certain operational conditions of the THP, a feed forward control may be required to improve the system response to load fluctuations. Additional analysis should be completed during detailed design to confirm the control methodology.

The continuous blowdown rate from the boilers to the blowdown separator tank will be set by plant operators based on water chemistry in the boilers. The drain water cooling flow will either be sent to the THP steam header as heat recovery or sent to drain with an automatic temperature control valve using County water to maintain a mixed drain flow of less than 140°F.

The water softener system will have an LCP and will measure water usage and regenerate the system as soon as the calculated system capacity is depleted. A manual regeneration can also be initiated locally. The operator will monitor the salt levels in the brine tank and add salt when necessary. The chemical feed system will have an LCP and be set to automatically inject the correct amount of chemicals into the deaerator.

11 HYDROLYZED SOLIDS COOLING SYSTEM

11.1 Background and Purpose

This section provides the process description and design conditions for the hydrolyzed solids cooling system that will cool the THS from the THP system to mesophilic digestion temperatures before entering the primary and secondary digesters.

Conceptual process conditions, configurations, cooling technology sizing, and conceptual operation costs were summarized and a comparative analysis of technologies is included in TM 12: *Cooling Technologies Evaluation*. The recommendation from TM 12 was to include the once-through cooling configuration using PEW in this Plan. However, alternative configurations could be considered in the future as design progresses.

An overall schematic of the cooling system is shown on Drawing G-006 with detail provided on Drawing I-450.

11.2 Process Objectives

After the hydrolyzed solids leave the THP depressurization tank at approximately 221°F, pathogen-free dilution water is added, allowing the solids concentration to be reduced to approximately 9 percent. DS recycle is subsequently added to the stream to reduce viscosity of stream and lower the solids temperature before entering the cooling HEXs. The target digester recycle to THP solids ratio is 3.5 to 5.0 (3.5 was used for the design criteria basis). The HEXs cool the solids further to the mesophilic digestion design temperature of 98°F. There will be two primary digesters and one secondary digester that could act as a primary during maintenance. Each primary digester will have a HEX available and both HEXs will be piped to the secondary digester to provide the required redundancy when the secondary digester is acting as a primary. Space is currently allocated for a third HEX for a future primary digester.

The cooling water for the HEXs will come from the PEW where it will pass through the HEX and be sent to the GTs as elutriation or to the plant drain. The system is expected to operate on a continuous basis, 24 hours per day, 7 days per week.

The cooling system is designed with a capacity for the 30.8 mgd design average peak 3-day loading to the WPCP. The third HEX would be installed to achieve the full 40,0 mgd design capacity. Table 11-1 below summarizes important design criteria for the cooling system including hydrolyzed solids properties and the energy balance for the THS cooling.

Table 11-1. Cooling System Design Criteria at 30.8 mgd Peak 3-day

Parameter	Unit	Value
Diluted THP output	gpm	126
Digester recycle (3.5 recycle ratio)	gpm	442
Total mixed solids flow to digesters	gpm	568
Mixed solids flow per digester	gpm	284
Mixed solids temperature post-dilution/recycle, maximum	°F	114
Mixed solids viscosity	cP	25.0
Mixed solids density	lbm/ft^3	61.3
Target digester feed temperature	°F	98.0
Total cooling demand	MMBtu/hr	4.43
Cooling demand per digester	MMBtu/hr	2.22

cP = centipoise; lbm = pound(s) mass.

11.3 Cooling System Description and Design Criteria

This section describes the design criteria and operations for the cooling system including the HEXs, cooling water supply, and control valves for temperature and flow.

11.3.1 Cooling System Configuration

The pre-digester cooling HEXs will be located downstream of the THP system before the primary and secondary digesters. The THS feed will be mixed with the digester recirculation solids before entering the HEX. For each of the two primary digesters, there will be one dedicated HEX with two stages, each of which can be isolated and bypassed. Each HEX will also be able to feed the secondary digester as a backup to the primary digesters. If a HEX is taken out of service, both the solids and water side of the HEX should be flushed and drained.

PEW taken from the existing distribution header will be used as the heat transfer fluid for the HEX where it will extract heat from the THS feed and digester recirculation mixture and subsequently be sent to the GTs as elutriation or to the plant drain. Refer to Section 4 for additional details on the design criteria of the GTs and elutriation water. Refer to Section 16 for details on the PEW system design. A new tie-in point to an existing underground PEW distribution header would be required for sending the PEW to the new HEXs.

Temperature control for the HEXs will be achieved with a motorized control valve that will control the flow of PEW to the inlet of the HEX to bring the solids temperature to the

mesophilic digestion design temperature of 98°F. The cooling water recirculation line from the HEX will have a variable-speed centrifugal pump that will boost the cooling water return flow to cooling water supply pressure.

The cooling system is summarized in Figure 11-1 and additional detail can be found in Drawing I-450.

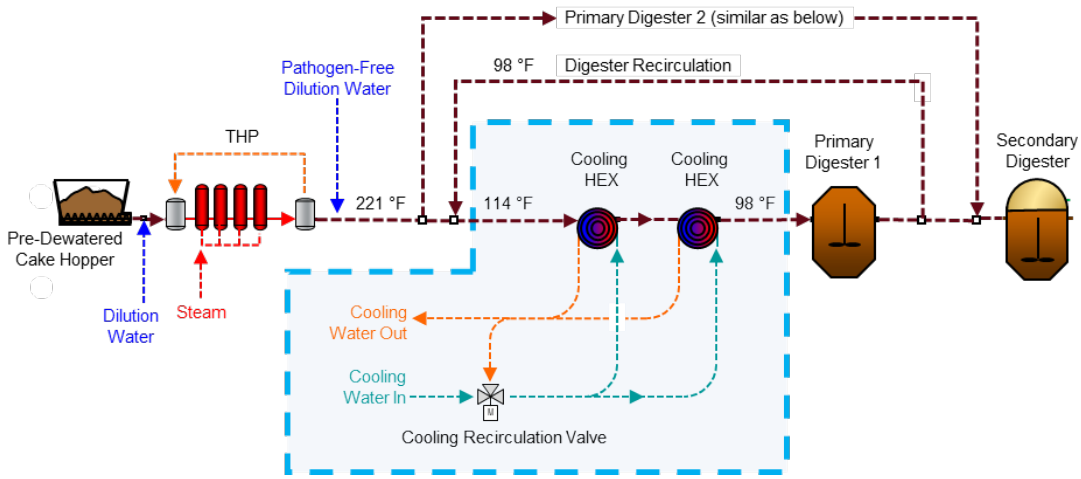

Figure 11-1. Hydrolyzed Solids Cooling System Configuration

11.3.2 Cooling Water Supply

For the once-through cooling method, PEW would provide the required cooling through the concentric-tube HEX and then be sent to the GTs to provide elutriation water with the option to send the water to the plant drain. Refer to Section 4 for more details on the usage of the PEW as elutriation for the GTs.

The PEW temperature varies throughout the year depending on outdoor ambient temperature conditions. Three years of temperature data were given and the monthly average, maximum, and minimum temperatures were extracted and are presented in Figure 11-2 and Table 11-2 below. The highest effluent temperature recorded (84°F) should be used as the design condition for sizing the HEX.

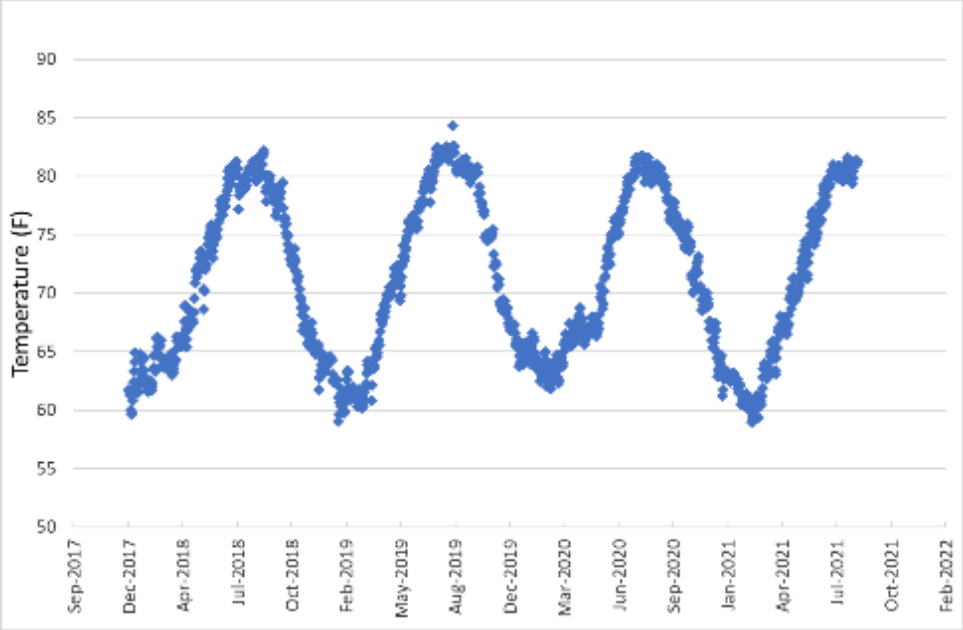

Figure 11-2. Plant Effluent Water Historical Temperatures, 2018–2021

Table 11-2. Plant Effluent Water Monthly Temperature Data, 2018–2021

Temperature	Jan	Feb	Mar	Apr	May	Jun	Jul	Aug	Sep	Oct	Nov	Dec
Effluent average (°F)	62.9	62.1	63.8	67.2	71.4	76.3	80.2	80.8	79.4	75.8	69.7	65.0
Effluent maximum (°F)	66.6	66.2	67.4	70.6	76.2	79.5	82.5	84.3	82.2	80.8	73.8	67.6
Effluent minimum (°F)	59.1	58.9	59.4	63.1	66.3	73.4	77.2	78.9	76.1	71.2	65.4	61.2

The lower effluent temperatures in the winter reduce the required flow through the HEXs, allowing one pass of the HEX to be taken offline for maintenance. The average effluent winter temperature of 64°F should be used as a design case where the winter temperature effluent could handle the entire cooling duty with one pass. This eliminates the need to provide a redundant third HEX that would serve both primary digesters. Refer to Section 16.2 for additional system characteristics of the PEW.

11.3.2.1 Sodium Hypochlorite Dosing

Sodium hypochlorite dosing will be used in the PEW line to minimize bio-fouling of the HEXs to ensure that optimal heat transfer is maintained between cleaning operations. If optimal residual chlorine concentrations are maintained, hypochlorite dosing will be

effective in reducing the frequency of invasive mechanical cleaning. The hypochlorite dosing system will ensure that a residual chlorine concentration between 1 and 2 mg/L is maintained and will be capable of momentarily shock-dosing the cooling water at a rate of up to 15 mg/L. Residual chlorine concentration will be measured upstream of the cooling HEXs inlet. For additional information on the sodium hypochlorite plant system, refer to Section 16, WPCP Support Systems.

11.3.3 Digester Cooling Solids Recirculation Pumps

DS from the two primary digesters will be recirculated and mixed with the THS upstream of the two new cooling HEX inlets. DS are recycled and blended with THS to reduce the acidity and viscosity of THS and improve the overall operation of the digester. The expected digester recycle flow ranges from 140 gpm per digester at 23 mgd average conditions to 220 gpm per digester at 30.8 mgd (2 digesters) gpm at 40 mgd peak 3-day loading conditions.

DS will be recycled with variable-speed, screw-centrifugal pumps to maintain a target recycle to feed ratio from 3.5 to 5.0 for every unit of THP solids.

Table 11-3 provides the digester recycle pump design criteria.

Table 11-3. Digester Recycle Pump Design Criteria

Parameter	Unit	Value
Quantity	No.	2 per digester (1 duty/1 standby)
Type		Screw-centrifugal, variable speed
Target recycle to feed ratio		3.5:1 to 5:1
Capacity, each	gpm	140-220

11.3.4 Cooling Heat Exchanger

One HEX will be required for each primary digester and will be a concentric steel tube-in-tube, counterflow design with two stages in series. The two-stage design allows flow to bypass one or both sections, allowing each stage to operate independently of the other during low-flow operating conditions or during maintenance operations. The HEX design will include the condition of one stage taken offline and the other stage able to handle the entire cooling duty (typically during winter months when the HEX cooling load can be met with less HEX area). The two-stage design will also allow a lower pressure drop for the solids and water sides, lowering pumping costs.

The HEXs will be designed for a flow rate that produces a minimum velocity of the solids at 6.5 feet per second (ft/s) to maintain turbulent flow, optimal temperature for microbe health, acidity for materials compatibility, and a favorable solids rheology for heat transfer and minimum long-term maintenance.

Elevated PEW temperatures have a potential risk of higher corrosion in piping due to microbial-induced corrosion (MIC) from manganese-consuming bacteria among other factors. Based on previous experience, and the uncertainty associated with long-term corrosion resistance of Type 316 stainless steel with solids cooling operations using PEW as the cooling liquid, Super Duplex 2507 alloy is recommended for the HEX tubes. This higher alloy material provides exceptional resistance to MIC.

Table 11-4 provides the 30.8 mgd design average, peak 3-day design criteria for the cooling HEXs.

Table 11-4. Cooling HEX Design Criteria

Parameter	Unit	Value
Type		Concentric tube counterflow
Quantity	No.	2 × 2 stage
Tube material		Seamless Super Duplex 2507
Solids flow per HEX	gpm	283
THS	gpm	63
Digested solids (3.5 recycle ratio)	gpm	220
Mixed solids density	lbm/ft^3	61.3
Solids temperature, in	°F	114
Solids temperature, out	°F	98
PEW maximum inlet temperature	°F	84
PEW maximum outlet temperature	°F	103
PEW winter average inlet temperature	°F	64
PEW winter average outlet temperature	°F	98
Total cooling demand	MMBtu/hr	4.4
Cooling demand per digester	MMBtu/hr	2.2
Maximum PEW demand per HEX	gpm	250

Table 11-5. Cooling HEX Startup and Future Buildout Conditions

Parameter	Unit	20.8 mgd – Average (startup conditions)	40.0 mgd – 3 day (future buildout conditions)
Solids flow	gpm	308	737
THS	gpm	51	164
Digested solids	gpm	257	574
Solids temperature, in	°F	110	114
Solids temperature, out	°F	98	98
Total cooling demand	MMBtu/hr	2.0	5.8
Number of primary digesters	No.	2	3
Cooling demand per digester	MMBtu/hr	1.0	1.9

11.3.5 Cooling Heat Exchanger Recirculation Booster Pump

A new pump will be required for each PEW recirculation line at the HEX inlet for additional temperature control. During the winter months when the PEW temperature is colder, there is a risk of FOG buildup in the solids tubes due to the colder PEW contacting the solids tubes. To mitigate this risk, recirculation of the warm PEW from the outlet of the HEX inlet is required to raise the temperature of the PEW entering the HEX. The PEW temperature downstream of the HEXs will be used to control the speed of the recirculation booster pump, which will be equipped with a VFD.

The booster pump will provide the additional pressure head to mix with the incoming PEW flow. Further analysis of the minimum PEW temperature to prevent FOG buildup will need to be included in detailed design to determine the amount of PEW recirculation required and the pump sizing.

Table 11-6. Cooling Water Recirculation Pump Design Criteria

Parameter	Unit	Value
Quantity	No.	2
Type		Centrifugal, variable speed

11.4 Equipment Operations and Control

The solids flow through the HEXs will be controlled by the plant PCS. The THS flow control valves based on the THP demand and the variable-speed digester recirculation pumps using the target digester to feed recycle ratio. The PEW cooling flow will be modulated using the flow control valve to maintain a solids temperature set point downstream of the HEX before entering the digester. The PEW flow control should be programmed to use the flows and inlet and outlet temperatures to calculate heat exchange rate and efficiency and warn of fouling. Additionally, inlet and outlet pressures can be compared against expected head loss to warn of potential clogging in the HEX.

Periodic cleaning of the HEX tubes will be required to maintain the necessary HEX efficiency. Space should be allocated to provide the necessary clearance to pull the HEX tubes.

12 ANAEROBIC DIGESTION

12.1 Background and Purpose

The purpose of this section is to present the selected digester configuration. The results of the evaluation detailed in TM No. 11: *Digestion Facilities Evaluation* informed the recommendations given in this Plan.

An overall schematic of the digestion process is shown on Drawing G-006 with detail provided on Drawings I-500 through I-503.

12.2 Process Objectives

This following process objectives for the digesters at the WPCP have been established through collaborative workshops:

- **Stabilize solids:** Achieve 60 percent VSr in the digesters. The primary process controls that control the VSr are solids retention time (SRT) and digester temperature. The SRT basis of design is discussed in this section. Mesophilic digester temperatures typically range between 95°F and 100°F. Control of digester temperature is discussed in depth in Section 11.
- **Digester redundancy:** Maintain target SRT in primary digesters with one digester out of service at peak 14-day loading.
- **Solids storage:** Minimum 4 days of DS at peak 14-day loading.
- **Biogas storage:** Provide storage to minimize the potential for flaring during interruption of RNG operations.
- **Safety:** Meet or exceed the current standard of practice for digester safety on both the biogas and solids sides of the process. Potential safety concerns and mitigation measures are discussed in Section 12.4.7.
- **Operations and maintenance considerations:** Mitigate foreseeable O&M issues. The foreseeable issues and mitigation measures are expounded upon in the following sections but generally cover topics such as access, resilience, contingent/alternate operation, process monitoring, and ability to mitigate potential process upsets.

12.3 Basis of Design

The following three design loading conditions were considered for digester equipment evaluation:

- **23.0 mgd)—current conditions:** annual average loading was considered for “minimum” operating conditions and as a baseline for annual O&M costs

- **30.8 mgd—2052 projected conditions:** used as the basis for equipment sizing and number of units required for this Plan
- **40.0 mgd—buildout conditions:** used to establish total footprint requirements and facility sizing, with space reserved for future digester tanks and equipment

The proposed process consists of MAD in a primary/secondary configuration. THS from the THP will be fed to primary digesters (in parallel), and the DS from the primary digesters will be fed to the secondary digester. The system will be designed to provide a minimum SRT in the primary digesters; the volume of the secondary digester is not included in the SRT calculations.

Typically, anaerobic digesters are sized for 15-day SRT to meet EPA requirements for Class B pathogen reduction. However, because THP meets the requirements for Class A pathogen reduction, the proposed digesters for this project can be sized for a lower SRT. THP pilot testing recently performed by Virginia Tech using solids generated at Arlington WPCP evaluated digester performance at 10.0-, 12.5-, and 15.0-day SRTs; digester performance was determined to be acceptable at the lower SRTs. A 12-day SRT target at peak 14-day loading will be used to size the primary digesters. The possibility of operating the digesters at a 10-day SRT can be evaluated in the future, but the project team selected 12 days as a more conservative basis of design. In addition, all configurations were checked to make sure peak VS loading rates were lower than 0.4 lb-VS/ft^3-d and that predicted ammonia concentrations in the digesters were below 3,000 mg/L. These parameters are important to maintain digester health.

The project team selected a minimum 4 days of storage downstream of the primary digesters. This value was based on the County's preference to avoid operating the dewatering system during a 3-day weekend, plus 1 additional day for operational reliability. The DS storage can also help mitigate disruptions that prevent biosolids from being hauled from the WPCP, such as inclement weather or scheduling issues with the biosolids hauling contractor.

The option to provide digested solids storage tanks (DSSTs) was considered and eliminated in preliminary evaluations. Instead, the project team opted for a secondary digester downstream of the primary digesters, as the volume, equipment, and energy requirements were similar to DSSTs. In addition to providing DS storage, a secondary digester provides operational flexibility of being able to function as a primary if one of the other digesters is out of service. Furthermore, using a similar shape and dimensions for the secondary digester as the other digester tanks is anticipated to reduce the complexity and cost of construction.

12.4 Anaerobic Digester Description and Design Criteria

This section presents a description and design criteria for the anaerobic digesters.

12.4.1 Digester System Configuration

Given the preference to reduce construction costs and minimize impacts to the viewshed, a conventional cylindrical digester configuration with a 1:1 height-to-diameter ratio was selected. This ratio balances footprint and height and aligns with the recommendations of one THP supplier, based on multiple installations. To reduce the cost and complexity of construction, a gradual floor slope of 1:6 (2 inches per foot) was selected.

In the digester evaluation four configurations were considered each with a different number of digester tanks and tank volume. The recommended configuration is presented in Table 12-1.

Table 12-1. Digester Configuration

Feature Evaluated	Value
Number of digesters (primary + secondary)	2 + 1 with space for 1 future
Compatible with site plan options? Renovate DWB Decommission DWB	 ✓ ✓
Able to meet target SRT at peak 14-day flows and loads at 30.8 mgd condition?	✓
Excess digester volume to avoid 24/7 dewatering when one digester offline 30.8 mgd condition?	No
Total (primary + secondary) volume provided ÷ primary volume required for 30.8 mgd condition, MG	2.81 ÷ 1.87 150%
Sufficient capacity to accept FOG? Start-up (24.2 mgd) peak loads Average loading at 30.8 mgd condition Peak 14-day load at 30.8 mgd condition	 ✓ ✓ No
Storage provided in secondary digester at 14-day peak load loads at 30.8 mgd, days (percentage of target 4 days)	5.4 (134%)
Secondary digester membrane volume, ft^3	46,000
Hours of biogas storage at current average loading, assuming 10,000 gpd of FOG at 40 mgd condition	2.0
Mitigation options to accommodate rapid volume expansion, between now and design year of 2052	Use the 12% excess freeboard then use excess secondary digester volume or divert overflow to external containment
Able to meet target SRT at 40 mgd?	Only for average loads, a third primary digester is required for 14-day peak loads

12.4.2 Digester System Design Criteria

Digester sizing is determined by the design SRT and maximum allowable organic loading rate. Selected values for this project are presented in Table 12-2.

Table 12-2. Digester Sizing Design Criteria

Process Metric	Unit	Basis of Design at 14-day Peak Loads
Maximum organic loading rate	lb-VS/ft^3-digester-day	0.4
Minimum solids residence time (days)	Days	12
Maximum total ammonia-N concentration	mg-N/L	3,000

lb-VS/ft^3 = pounds volatile solids per cubic foot; mg-N/L = milligrams nitrogen per liter.

To provide redundancy and comply with Virginia Sewage Collection and Treatment (SCAT) regulations, the digesters will be sized for a target SRT of 12 days at peak 14-day flows and loads with one digester out of service. As noted in Section 12.3, one of these digesters will be a secondary digester that can provide solids storage or serve as a primary digester if another digester is out of service. Therefore, the dimensions are based on achieving a 12-day SRT with all primary digesters in service.

The metrics for the preferred configuration are listed in Table 12-3 below:

As noted previously, a 1:1 height-to-diameter ratio was selected. The normal liquid operating level, also referred to as the side water depth (SWD), is assumed to be 88 percent of the digester tank height, to provide 12 percent freeboard to accommodate fluctuations in liquid level.

Table 12-3. Digester Configuration: Sizing Metrics

Process Metric		Value
1.	Basis of design	30.8 mgd: 2052 projected conditions
2.	Number of primary digesters	2
3.	Number of secondary digesters	1
4.	Diameter and height, ft	56
5.	Side wall depth, ft	50
6.	Volume including freeboard, MG	1.05
7.	Liquid volume per digester, MG	0.94
8.	SRT provided by one tank at peak 14-day loading, days [a] 30.8 mgd condition 40.0 mgd condition	 6.0 4.6
9.	Storage provided by one tank at peak 14-day loading, days [b] 30.8 mgd condition 40.0 mgd condition	 5.4 4.1
10.	Total primary digester volume, MG	1.87
11.	SRT, all primary digesters, days Average loading at 30.8 mgd condition Peak 14-day load at 30.8 mgd condition	 17.1 (exceeds target) 12.0 (meets target)
12.	SRT, all primary digesters, days Average loading at 40.0 mgd condition Peak 14-day load at 40.0 mgd condition	 13.2 (exceeds target) 9.2 (below target)
13.	Total primary + secondary volume, MG	2.81
14.	SRT, primary + secondary, days Peak 14-day load at 30.8 mgd condition Peak 14-day load at 40.0 mgd condition	 18 14
15.	SWD in primary digesters for 12-day SRT at peak 14-day 30.8 mgd condition, ft (percentage of tank height)	50 (90%)
16.	Freeboard available when operating at SWD required for peak 14-day loads at 30.8 mgd, ft (percentage of tank height) MG of freeboard Volume expansion (ft freeboard ÷ SWD) Equiv. days of storage at 14-day peak	6 ft (10%) 0.22 12% 1.4
17.	SWD required to provide 4-day storage in one tank, ft (percentage of tank height) [b] Peak 14-day load at 30.8 mgd condition Peak 14-day load at 40.0 mgd condition	 34 (60%) 44 (80%)

a. The SRTs shown in row 8 were calculated based on the liquid volume per digester, which is 88% of the total tank volume, to account for 12% freeboard. Flow is peak 14-day flow.

b. The days of storage shown in row 9 were calculated based on 80% of the total digester tank volume because approximately 20% of the digester tank height must always remain full to ensure proper mixing. For this reason, the SWD shown in row 17 must be no more than 80% of the digester tank height to ensure that 4 days' worth of storage volume is available above the minimum operating level.

If one of the digesters is out of service, then the remaining digesters must operate as primary digesters at 88 percent of digester tank height to meet the 12-day SRT target at 14-day peak flows and loads (row 15). The remaining space available to accommodate volume expansion or solids storage would be the 12 percent freeboard. Therefore, if a digester outage occurred with the selected digester configuration, either the DS would be dewatered continuously (7 days per week) to reduce the risk of over-filling the digesters or the digesters would operate at a reduced level and use the freeboard for solids storage.

The selected configuration does not provide adequate primary digester volume to meet the 12-day SRT target at peak 14-day loads for the 40 mgd buildout conditions (row 12); however, there is adequate volume for the average loads at buildout (row 14). If operating at a lower SRT during peak loading is considered acceptable (as demonstrated in pilot testing), addition of the future digester could be deferred.

The County would like to consider accepting FOG in the future. The selected configuration does not provide adequate primary digester volume to accept FOG at peak 14-day loads at 30.8 mgd conditions, but it is able to accept FOG at current peak conditions and future average conditions. Refer to Section 23 for additional discussion of potential future FOG facilities, including sizing approaches.

A minimum 4 days of DS storage in the secondary digester is recommended for operational reliability, to accommodate the preferred dewatering schedule. The volume of each digester tank is able to provide approximately 6 days of storage at the 30.8 mgd condition. The liquid level required to provide 4 days of storage (row 17 of Table 12-3) must be no more than 80 percent of the digester tank height to ensure that 4 days' worth of storage volume is available above the minimum operating level to ensure mixing: approximately 20 percent of the digester tank height.

In addition to the 4 days of storage, additional volume is desired to accommodate a potential rapid volume expansion in the primary digesters caused by a process upset.

The layout and location of the digesters depends on the selected option for the existing DWB. Two options are under consideration for the DWB: Option 1—renovate existing DWB and Option 2—decommission existing DWB. Refer to Section 17 for additional discussion of the options. Refer to Drawings C-004 and C-007 for the site layouts of the different options.

12.4.3 Digester Tanks and Covers

As mentioned previously, the digester tanks for both primary and secondary digesters will have a conventional cylindrical configuration with a 1:1 height-to-diameter ratio. Cylindrical digesters can be constructed of concrete or steel. Concrete was chosen for

its low maintenance requirements compared to steel. In addition to cast-in-place, the following two methods of American Water Works Association (AWWA) D110 concrete construction are considered:

- **Type III** tanks use precast concrete walls with an embedded steel diaphragm. The tank wall is placed in permanent compression with horizontal prestressing.
- **Type I** tanks use a cast-in-place concrete wall, horizontal strand prestressing, and vertical post-tensioning. The tank wall is placed in permanent compression with horizontal prestressing, like the Type III tanks.

No recommendation is being made at this time for the construction method. If an AWWA D110 construction method is selected there is value in an early pre-selection because of the need to keep manufacturers closely involved in the design process. The type of construction can be further evaluated by the delivery team.

Provisions for tank access for cleaning will be evaluated by the delivery team and will take into account factors such as top versus side access, vertical distance from access point to tank floor, cover type, ventilation provisions, and site location restrictions on access options. It is preferred that tank access for cleaning be located as low in the digester as possible.

12.4.3.1 Primary Digester Covers

Fixed concrete covers are recommended for the primary digesters, as they provide more advantages over all other options, except for the ability to store biogas.

Fixed covers are the most common type of covers used in THP applications. They are typically constructed of steel, but concrete fixed covers have become more common in the past few years and require less maintenance. Fixed covers (versus submerged or floating non-gasholder) provide a large headspace, large surface area for biogas release, the possibility of top-mounted mixers, and the ability to withdraw solids from the liquid surface. However, the underside is exposed to the corrosive atmosphere in the digester. Steel fixed covers are easier and less costly to install, but they require a side skirt and biogas seal, which can be exposed to the corrosive digester tank atmosphere if the digester is operated at a low liquid level. Steel fixed covers require repainting approximately every 10 years. Concrete fixed covers are sealed regardless of liquid level and do not require periodic painting, but they are more costly and difficult to install.

12.4.3.2 Secondary Digester

A dual membrane gas holder cover is recommended for the secondary digester to provide biogas storage. The headspace of all digesters would be connected to allow biogas to flow from the primary digesters to the biogas storage.

Membrane covers are inflatable hemispherical domes made of polyvinyl chloride (PVC)-impregnated fabric with the ability to store biogas. They typically consist of two membranes: the inner membrane contains the biogas headspace, and the outer membrane holds air kept at a constant pressure. The air pressure provides structural support for the cover and is designed to resist wind and snow loads. Air is introduced or vented between the two membranes to regulate biogas pressure. When more biogas is being consumed than generated, the chamber is filled with air and the inner membrane "deflates." When more biogas is being generated than consumed, the chamber is vented and the inner membrane "inflates."

The main benefit of membrane covers is the variable headspace volume, which provides flexibility for biogas management and utilization. The most common mixing systems used with membrane covers are pumping or outboard draft tube systems. Membrane covers typically cannot be used with most types of roof-mounted mixers, although some inboard mounted draft tube options are available. Membrane covers typically have a life span of 10 to 20 years.

12.4.4 Digested Solids Transfer and Withdrawal

Digester transfer pumps will be provided and are sized based on final dewatering centrifuge feed requirements. Those sizing criteria are summarized in Section 13.3 of this Plan. The digester transfer pumps are multi-purpose; they can feed the centrifuges, transfer solids from one digester to another, and be automated to convey settled solids in the primary digesters to the secondary digester. The automation of these pumps is discussed in section 12.5.4. Pump layouts and process flow diagrams are shown in Volume 2 of the Plan.

Digester recirculation pumps provide DS to dilute and cool solids leaving THP prior to the cooling heat exchangers. Sizing for these pumps is summarized in Section 11 of this Plan. Automation of these pumps is described in Section 12.5.3. Pump layouts and process flow diagrams are shown in Volume 2 of the Plan.

12.4.4.1 Digested Solids Pump Types

Building layouts currently assume that DS are pumped using progressive-cavity pumps. Progressive-cavity pumps have the largest footprint of the various typical solids pumping options so other suitable pumps are compatible with the current layouts (Figure 12-1). Typically, positive-displacement pumps are used for solids conveyance that involves high pressure, intermittent flow, or varying head loss across the pump. DS recycle back to THP does not typically meet that criterion and centrifugal or screw-centrifugal pumps (Figure 12-2) can be used for their higher efficiency.

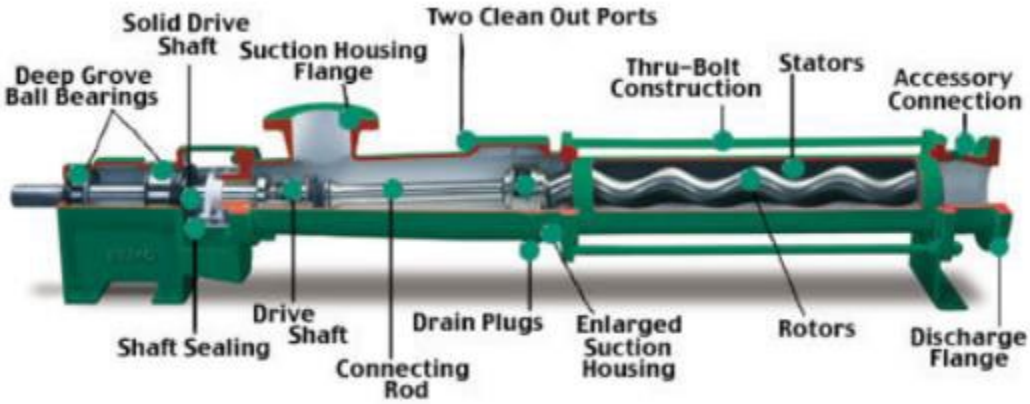

Figure 12-1. Cutaway of a Typical Progressive-cavity Pump

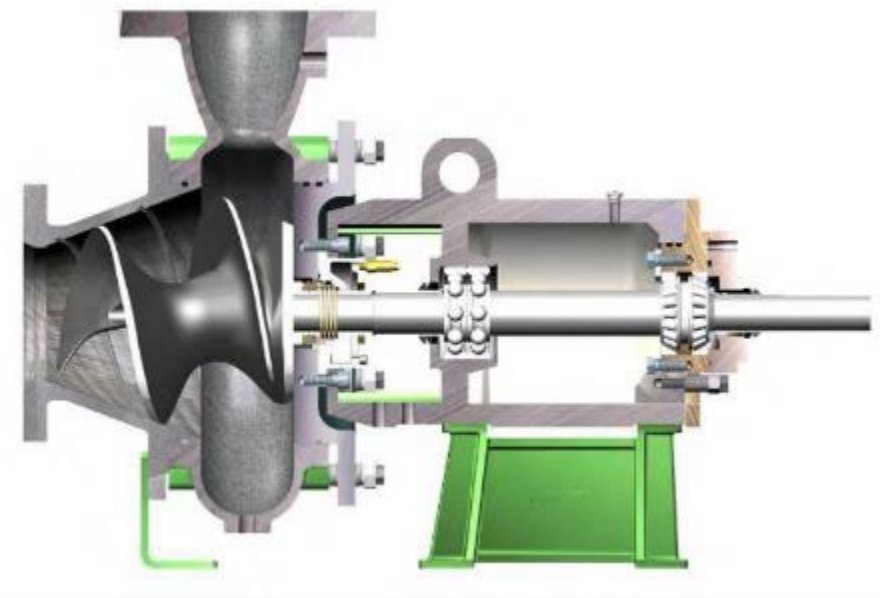

Figure 12-2. Cutaway of Typical Screw Pump

12.4.5 Digester Mixing System

Digester mixing is intended to homogenize the contents of the digester, prevent settling of solids, prevent stratification, reduce short circuiting, promote biogas release, and prevent foaming. Mixing should minimize dead volume and distribute feed throughout the digester tank. Inadequate mixing can negatively impact digester performance (reduced VSr and biogas production), increase the risk of rapid volume expansions, and increase the frequency of digester tank cleaning. The shortlisted alternatives are pump mixing and mechanical draft tube mixing.

12.4.5.1 Pump Mixing

Pump mixing systems withdraw solids from the digester and discharge the solids through nozzles located throughout the digester tank at a high velocity to maintain circulation and mixing in each digester. An example of a typical mixing pump and mixing nozzles is pictured in Figure 12-3.

Mixing pump **Mixing nozzle**

Figure 12-3. Typical Pump Mixing System

The main advantages of pump mixing systems are that there is no mechanical equipment within the digesters, it is compatible with all types of digester tank covers, and it does not require a minimum liquid level to operate. Redundancy can be provided by installing spare mixing pumps. Multiple manufacturers exist, so the system can be competitively bid to vendors.

The main disadvantage of pump mixing systems is the higher energy requirements compared to other options because of the head loss associated with pumping solids through the mixing nozzles at high velocity. Additionally, biogas entrainment or plugging of the pumps, nozzles, and piping can reduce system efficiency, further raising energy requirements to ensure adequate mixing. Because the pump suction and the majority of the discharge nozzles are located in the lower portion of the digester tank, pump mixing has limited ability to fight stratification.

12.4.5.2 Draft Tube Mixing

Mechanical draft tube mixers continuously transfer high volumes of solids from the upper layer of the digester to the bottom using a propeller pump.

The main advantages of draft tube mixing systems are the lower energy requirements and better mixing performance compared to pump mixing. The propeller rotation can be

reversed to change the direction of mixing. Redundancy can be provided by installing additional draft tubes.

Draft tube mixers can be located either inside or outside the digester (Figure 12-4, top). External draft tube mixers are easier to maintain but typically cost 10 percent more than internal draft tube mixers because of the additional piping and maintenance platform. The motor for internal draft tube mixers can be mounted directly on a fixed digester cover. For digesters with membrane covers, the motor can be mounted on a platform on the inside edge of the digester tank; in this application, the sides of the mixer platform can be provided with walls that follow the slope of the membrane cover (Figure 12-5).

Internal roof-mounted draft tube External draft tube

Figure 12-4. Typical Draft Tube Mixers

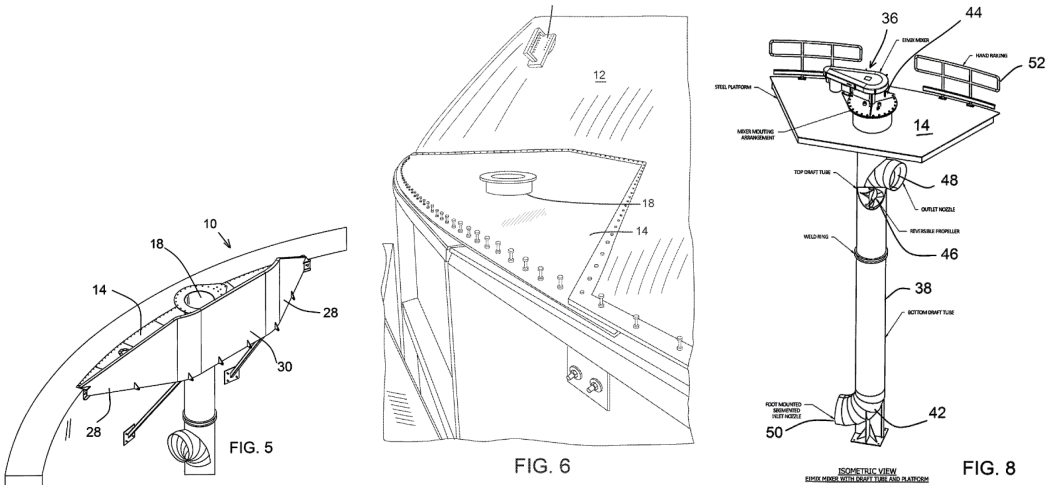

Figure 12-5. Draft Tube Mixer Design for Digesters with Membrane Covers

Draft tube mixing systems typically require a crane for removal and maintenance of the mixing propeller; however, maintenance of other components, such as the motor and gearbox, can generally be performed without a crane. Unlike pump mixing systems, draft tubes are sensitive to the liquid level and require a minimum level to operate effectively. Internal draft tubes are typically recommended for digester tanks with varying liquid levels.

Table 12-4 provides a side-by-side comparison of the relative advantages and disadvantages of pump versus draft tube mixing.

Table 12-4. Comparison of Digester Mixing Technologies

Evaluation Consideration	Pump Mixing	Draft Tube
Mechanical equipment located outside liquid	✓	No
Low energy requirements	No	✓
Ability to prevent stratification	Limited	✓
Can be designed for redundancy	✓	✓
Implemented with THP	✓	✓
Compatible with membrane covers	✓	✓
Applicable for tanks with varying liquid levels	✓	Medium
Common O&M challenges and other considerations	Air entrainment Nozzle plugging	Requires crane for mixer replacement

The energy requirements for pump mixing and draft tube mixing are compared for the recommended digester configuration in Table 12-5. Annual costs assume an electricity cost of $0.06 per kilowatt-hour (kWh).

Table 12-5. Yearly Mixing Costs

Mixing Option	Digester Configuration: 2+1 56 ft digesters	
	Total hp	Annual Electricity Cost
Pump mixing	283	$111,000
Draft tube mixing	77	$30,000

Pump mixing systems are generally easier to operate and maintain than draft tube mixing, especially for digester tanks with varying liquid levels, but they are not as effective at preventing stratification and require nearly four times as much energy as draft tube mixing systems. The decision between draft tube and pump mixing systems will be further evaluated by the delivery team.

12.4.6 Digester Emergency Overflow and Volume Expansion

The primary digesters will have overflows that normally convey DS to the secondary digester by gravity. A larger backup gravity overflow from the primary digesters to the secondary digester will be sized to convey a rapid volume expansion event. The backup overflow inlets will be higher than the regular overflows. The regular and backup digester overflows will have valves to allow isolating the digester tanks from one another. Digesters will have emergency overflows sized to convey a rapid volume expansion event to a designated area that can be drained or pumped back into the process. The emergency overflows will have liquid-filled pea traps to ensure that they cannot be shut yet maintain a barrier between the biogas and the outside atmosphere.

12.4.7 Biogas Management and Safety Systems

This section presents a description and design criteria for biogas management and safety systems, including flame arresters, pressure relief valves, and biogas storage.

12.4.7.1 Flame Arresters

Flame arresters (see Figure 12-6) will be placed in locations where there is the potential for biogas to come in contact with oxygen such as pressure relief valves, dual-membrane cover air supply, flares, and boiler fuel trains. Often on smaller biogas lines such as sensing lines for pressure regulators, flame checks are used in place of larger flame arresters. A flame arrester prevents flame propagation into the biogas piping by cooling a flame front temperature to below the ignition temperature. A flame check protects biogas piping by closing when an element inside the valve melts from flame temperature.

Figure 12-6. Flame Arrester

12.4.7.2 Pressure Relief Valves

Each digester will have two combination pressure and vacuum relief valves (PVRVs) to structurally protect the digester from high pressure or vacuum condition (see Figure 12-7). Each of these PVRVs will be mounted on a flame arrester and both assemblies will be mounted on a “safety selector valve” that ensures that one of the two pressure protection devices is always online. In addition to the PVRVs each digester will be equipped with at least one 48-inch-diameter pressure relief manhole cover. The pressure relief manhole cover is the last structural line of defense if a rapid volume expansion event exceeds the digester tank freeboard volume and the flow capacity of the overflows.

Figure 12-7. PVRVs and Pressure Relief Manhole Cover

12.4.7.3 Biogas Storage

The outer membrane of the dual-membrane biogas holder cover will be monitored for combustible gas to detect any inner membrane leaks. Any detected leak will both trigger an alarm and increase ventilation between the two membranes to keep the leak diluted to below the lower explosive limit (LEL).

12.5 Equipment Operations and Control

This section describes AD equipment operations and control.

12.5.1 Digester Feed

The digesters will be continuously fed by pumps located at the TH system. These pumps will be provided by and controlled by the THP PLC. Refer to Section 9.6.5.

12.5.2 Digester Mixing

Digester mixers will be controlled with VFDs through the PCS. The speed can either be set manually or it can be controlled automatically based on digester level. It is recommended that the percentage speed setting corresponds to the percentage of mixer full load amp (FLA) rating versus revolutions per minute (rpm) rating so that the mixing energy per unit volume remains constant regardless of solids density. This will help prevent rapid volume expansion, which is a lowering of solids density because of entrained biogas in the solids. Mixing is the primary tool to fight this biogas holdup, but if the solids density decreases, the mixing energy per unit volume decreases, which further compounds the issue. Controlling the pump speed to maintain a percentage of FLA will actively increase pump speed to prevent the holdup of biogas.

12.5.3 Digester Recirculation

Digester recirculation pump speed will be controlled by the PCS to maintain an operator-entered recirculation rate that is based on a percentage of solids forward flow.

12.5.4 Digester Transfer Pumps

The digester transfer pumps will each be able to act as either centrifuge feed pumps or transfer pumps that can transfer from one digester to another. The pumps that are valved to serve the acting secondary digester will serve as centrifuge feed pumps and their speed will be controlled from the centrifuge control system. The pumps not acting as centrifuge feed pumps are available to transfer solids from one digester to another. Normal configuration for pumps serving the active primary digesters will have them valved to send solids from their respective primary to the secondary digester and a timer control will occasionally have them pump solids to the secondary digester to remove grit accumulation. This timer will be operator configurable and is intended to convey settled solids to the secondary digester.

12.5.5 Dual-Membrane Gas Holder Cover

The dual-membrane gas holder covers will be controlled by a vendor-supplied PLC that will report status to the PCS. The biogas storage level will be used to inform biogas utilization decisions; low level would trigger a decision to decrease biogas utilization and high level would trigger a decision to increase biogas utilization. During final design options to automate these decisions will be considered. Alarms will alert operators when the inner membrane is near full or empty.

12.5.6 Biogas Pressure and Safety

Digester level will be monitored with both pressure and radar level instruments. A difference in level reading between these two instruments will trigger an alarm indicating a change in digester density. The digester pressure level indication will automatically subtract out biogas pressure. There will be different tiers of high- and low-level alarms

each corresponding to the level approaching different danger such as level diverging from the level set point, dropping low enough to break a liquid biogas seal, high enough to emergency overflow, approaching top of sidewall elevation, and approaching pressure relief manhole elevation. High level indications will inform decisions to increase digester outflow/limit inflow and the opposite for low level indications. During final design options to automate these decisions will be considered.

Biogas pressure will be monitored at each digester and in select locations in the biogas distribution system. There will be different tiers of high- and low-pressure alarms each corresponding to the pressure diverging from the pressure set point, nearing zero, and approaching the set point of each type of safety device.

The outer membrane in the dual-membrane gas holder cover will monitor the LEL of the atmosphere to detect leaks in the inner membrane. Detection of LEL will generate an alarm. If the dual-membrane gas holder cover is a design that does not normally ventilate air through the outer cover, detection of LEL will initiate a ventilation sequence.

The biogas flare will be controlled by a vendor LCP. Operators will be able to remotely select the pilot fuel source between NG or biogas. Flare status will be viewable remotely at the plant control system.

13 FINAL DEWATERING SYSTEM

13.1 Background and Purpose

This section presents design criteria, location, and related improvements required for the final dewatering process. The current process primarily consists of three centrifuges on the upper floor of the existing DWB. Dewatered solids from the centrifuge fall into a pant-leg diverter gate located below each centrifuge, which directs cake into one of the two bin diverting screw conveyors. Slide gates on the bottom of the screw conveyor direct the cake into one of four cake bins. The total capacity of the four cake bins is 430 CY. Cake stored in the bins is conveyed to a lime mixer to meet Class B stabilization requirements. The lime-stabilized product is then loaded onto trucks. The existing centrifuges were installed in 1996 and will be replaced. The existing dewatering system equipment includes the following equipment:

- Dry and liquid polymer storage and feed
- Centrifuge feed well and centrifuge feed pumps
- Dewatering centrifuges
- Dewatered cake bins and conveyors
- Lime storage and feed, including storage silo, day bins, and lime metering system
- Solids/lime mixers
- Two truck loading bays

Additional details regarding the existing dewatering system and the justification for replacement are provided in TM No. 2: *Condition of Existing Facilities*.

The new final dewatering system will also rely on centrifuges, based on the findings of an alternatives analysis, which included a review of equipment sizing, footprint requirements, capital costs, and O&M costs. Dewatering alternatives evaluated included BFPs, screw presses, centrifuges, rotary fan presses, and Bucher presses. Options were presented and reviewed at two project workshops with the County, on April 26 and May 10, 2021. At the second workshop, the project team shortlisted centrifuges and BFPs for further consideration. After further evaluation, the project team selected centrifuges as the preferred technology for final dewatering, based on the compact footprint requirements, lower life-cycle costs, County familiarity, and other factors. For more information regarding this analysis, refer to TM No. 7: *Dewatering Equipment Evaluation*.

The new final dewatering system consists of the following equipment, which is described in further detail in this section:

- DS transfer pumps (centrifuge feed pumps)
- Liquid polymer storage, blending, and feed systems
- Inline polymer mixers
- Centrifuges
- Cake conveyance equipment: diverter gates and screw conveyors
- Final dewatered cake bin
- Truck loading bay, with weight scale

An overall schematic of the final dewatering process is shown on Drawing G-006 and further detailed on Drawings I-503 and I-700 through I-702.

13.2 Process Objectives

The purpose of final dewatering is to remove water from the DS, thereby reducing the volume of biosolids to be hauled off site and enhancing the handleability of the end product. As noted in TM No. 5: *Biosolids Product Market Analysis*, the moisture content can affect the end product desirability. Some end users, such as commercial soil blenders and construction contractors, may prefer a product that is at least 30 percent solids. Based on experience from other facilities with THP, the final dewatering system is anticipated to achieve 32 to 38 percent solids. This will be validated by dewatering tests from the THP and AD pilot study being completed by Virginia Tech.

13.3 Basis of Design

Process equipment selections and facility concepts were based on a 30.8 mgd design condition for equipment sizing and a 40.0 mgd buildout condition for overall facility sizing. The anticipated digested solids productions at various conditions are summarized in Table 13-1.

Table 13-1. Anticipated Digested Solids Production

Design Condition	Total Solids Load (lb-DS/d)		
	Average	Peak 30-day	Peak 14-day
23.0 mgd	30,206	39,333	42,897
30.8 mgd	40,450	52,672	57,445
40.0 mgd	52,533	68,406	74,644

Notes: Solids loads above represent average weekly solids production based on a 24/7 schedule; the actual loading to final dewatering will be higher because the system will not be operated 24/7.

Peak 14-day solids loadings were used for sizing final dewatering processes because of the equalization capacity provided by the secondary anaerobic digester as well as upstream cake and thickened solids storage. The final dewatering process is sized to operate 24 hours per day, 5.5 days per week at peak 14-day loading conditions. The anticipated flows and loads to final dewatering are summarized in Table 13-2.

The third column of the table represents anticipated typical flows, when the DS solids concentration is 4.4 percent; the final column presents more conservative values, assuming that the DS solids concentration is lower than normal. The projected peak 14-day flow at 30.8 mgd and 3 percent solids (~200 gpm) is used as the minimum capacity for the final dewatering centrifuge feed pumps and centrifuges.

Table 13-2. Anticipated Flows and Loads to Final Dewatering

Design Condition	Solids Loading (lb-DS/hr)	Flow at 4.4 percent Solids (gpm)	Flow at 3 percent Solids (gpm)
23.0 mgd, average	1,602	72	107
23.0 mgd, peak 14-day	2,275	103	152
30.8 mgd, average	2,145	97	143
30.8 mgd, peak 14-day	3,046	138	203
40.0 mgd, average	2,786	126	186
40.0 mgd, peak 14-day	3,956	179	n/a

Notes: Flows and loads were developed assuming a 132 hours (5.5 days) per week operating schedule. No value is presented for 40 mgd peak flow at 3% solids because it is assumed the centrifuges would be operated longer hours under those conditions.

13.4 System Location

The location of the final dewatering system depends on which of the two shortlisted site layout alternatives is selected. Further information on the site layout options is presented in Section 17 of this Plan.

- **Option 1: renovate existing Dewatering Building.** If the existing DWB is renovated, the existing dewatering area would be repurposed for the pre-dewatering system, and a new Final DWB would be constructed to house the final dewatering centrifuges, as well as ancillary equipment such as the polymer storage and feed equipment, cake storage, screw conveyors, and truck loadout.
- **Option 2: decommission existing Dewatering Building.** If the existing DWB is decommissioned, then a new SPB would be constructed, containing both pre-dewatering and final dewatering equipment.

For both options, the final dewatering equipment is laid out as follows:

- **Level 4 (EL 70±):** final dewatering centrifuge, bridge crane, and control room
- **Level 3 (EL 60±):** centrifuge solids discharge chute, and cake screw conveyor
- **Level 2 (EL 42±):** final dewatered cake bin
- **Ground level (EL 24±):** truck scale, polymer storage, blend, and feed system

13.5 Final Dewatering Description and Design Criteria

The following sections provide a description and design criteria for ancillary equipment systems related to final dewatering.

13.5.1 Final Dewatering Centrifuge Feed Pumps

The centrifuges will be fed using final dewatering centrifuge feed pumps, which withdraw solids from the bottom of the digesters. The pumps will be located in the digester pump room. Design criteria for the centrifuge feed pumps are listed in Table 13-3. Five pumps will be provided (one for each installed centrifuge, and two spares).

The primary purpose of the final dewatering centrifuge feed pumps is to pump solids from the primary digesters to the secondary digester, and from the secondary digester to final dewatering. It will also be possible to pump from the primary digesters directly to the centrifuges if the there is no secondary digester in operation. As noted in Section 12, there will be two means of solids transfer from the primary digesters to the secondary digesters: gravity overflow and pumped transfer.

The final dewatering centrifuge feed pumps will have a common suction and discharge header, such that an alternate pump can be operated to serve each digester and centrifuge if the normally used pump is out of service. A magnetic flow meter will be provided on the discharge line to each centrifuge. A single magnetic flow meter will be provided on the “pumped transfer” pipe (the pipe connecting the centrifuge feed pump discharge back into the digesters).

A schematic of the pumping system is provided in Drawing I-503: Digested Solids Transfer Pumps.

Table 13-3. Centrifuge Feed Pump Design Criteria

Parameter	Value
Number of units	3 duty, 2 standby
Type	Progressive cavity
Manufacturers	Moyno, Netzsch, or Seepex
Design flow	200 gpm or greater
Drive type	VFD, direct-coupled motor
Maximum pump speed at design point	260 rpm
Rotor-shaft connection	Pin joint or gear joint
Maximum pressure per stage	40 psi

13.5.2 Final Dewatering Polymer System

A new polymer feed system will be installed to provide polymer to the final dewatering centrifuges. The system will be designed for bulk deliveries of emulsion polymer (as opposed to dry polymer) and consist of the following equipment:

- Two fill stations (one per storage tank)
- Two bulk polymer storage tanks
- One polymer recirculation pump
- Two polymer blending and activation units
- One aging tank
- Two polymer solution metering pumps
- Two inline polymer solution mixers (to blend polymer and dilution water)
- Two motorized polymer injection mixers (to blend polymer and solids)
- Eyewash station, with tempered water and flow switch

The polymer fill stations will have a level readout for the storage tank, and alarm indicators for high level.

The discharge piping of the polymer feed pumps will be interconnected so that the polymer feed systems will not be dedicated to a specific centrifuge. However, not all combinations of polymer feed pump/centrifuge will be possible when more than one centrifuge is operating. Space and capped piping connections will be provided for a future third polymer skid. The system will be located on the ground level.

A separate polymer storage, blend, and feed system will be provided for the final dewatering centrifuges (this applies to both site layout options: renovate existing DWB and decommission existing DWB). The final dewatering and pre-dewatering polymer systems will not be interconnected, because it is anticipated that each system may require different types of polymer to optimize dewatering performance.

Unlike the pre-dewatering polymer system, the polymer solution from the final dewatering blend units will not be fed directly to the centrifuges. Instead, the polymer blending units will deliver polymer solution to an aging tank.

A schematic of the final dewatering polymer system is provided in Drawing I-702: Final Dewatering Polymer. Design criteria for the polymer storage tanks and recirculation pump are provided in Table 13-4. Design criteria for the polymer skids are provided in Table 13-5. Note that the design criteria are based on an assumed polymer dose of 30 pounds of active polymer per ton dry solids. The delivery team will further evaluate the polymer system sizing during detailed design, including evaluating information gleaned from the pilot studies.

Table 13-4. Polymer Storage Design Criteria

Parameter	Value		
Total final dewatering polymer consumption, gallons neat polymer per week	Average	Peak 30-day	Peak 14-day
23.0 mgd	951	1,238	1,350
30.8 mgd	1,273	1,658	1,808
40.0 mgd	1,653	2,153	2,349
Storage volume basis of design	Total storage volume provided ≥ 30-day consumption at 40 mgd peak 30-day		
Total storage volume required (30-day consumption at 40 mgd peak 30-day)	9,230 gallons		
Number of bulk storage tanks	2		
Volume per tank	5,000 gallons		
Tank material of construction	FRP		
Tank accessories and instrumentation	One ultrasonic level sensor per tank One ladder and cage per tank		
Storage tank mixing system			
Quantity	One recirculation pump serving both tanks		
Pump type	Progressive cavity		

Note: Total neat polymer consumption is based on the solids production values in Section 3, an assumed neat polymer dose rate of 30 lb per ton of dry solids, and an as-delivered concentration of 40% active polymer by weight.

Table 13-5. Polymer Blending System Design Criteria

Parameter	Value
Basis of design	
Number of polymer blending units	2 (one duty, one standby)
Neat polymer feed rate, per skid	1.5–15 gallons per hour (gph)
Dilution water feed rate, per skid	6–60 gpm
Manufacturers	Fluid Dynamics or Velodyne
Polymer mixing chamber	
Type	Either non-mechanical without motor or hydro-mechanical with motor
Accessories/instrumentation	Differential pressure switch, inlet/outlet pressure gauges
Neat polymer metering pump	
Quantity	1 per skid
Type	Progressive cavity
Skid dilution water inlet assembly	
On/off valve	Solenoid valve, normally closed
Flow control valve	Manually operated needle/orifice valve
Instrumentation	One dilution water magnetic flow meter, one rotameter
Other skid accessories	Calibration column, flush/drain valve, pressure relief valve
Dilution water main (not provided in skid)	One pressure-reducing valve (to serve all skids). Two stainless duplex basket strainers: one 40-mesh, one 80-mesh. Pressure gauges before and after each strainer and PRV

Note: The dilution water feed is based on an assumed polymer make down solution concentration of 0.25% (i.e., 0.25 pounds of neat polymer per 99.75 pounds of dilution water).

Table 13-6. Polymer Aging Tank and Feed System Design Criteria

Parameter	Value
Polymer aging tank	
Number of units	1
Minimum volume	3,000 gallons
Tank material of construction	FRP
Tank accessories and instrumentation	Ultrasonic level sensor High level switch (stop blend units) Low level switch (start blend units) Low-low level switch (alarm) Ladder and cage
Polymer solution metering pumps	
Quantity	2 (one per centrifuge) 1 per skid
Type	Progressive cavity
Flow range	20–90 gpm
Pressure requirements	Account for head loss at injection quill of inline polymer mixer
Other accessories	One static mixer on the discharge of each polymer solution feed pump

13.5.2.1 Inline Polymer Mixer

Inline mixers will be provided upstream of each centrifuge, to rapidly mix polymer into the centrifuge feed solids and enhance dewatering performance. Polymer solution injection points will be provided both upstream and downstream of the mixer. Design criteria for the mixer are provided in Table 13-7.

Table 13-7. Inline Polymer Mixer Design Criteria

Parameter	Value
Number of units	2 (one per centrifuge)
Manufacturer	SNF
Materials of construction	Type 316 stainless steel
Approximate motor size	7.5 hp
Drive type	VFD

13.5.3 Final Dewatering Centrifuges

Design criteria for the centrifuges are listed in Table 13-8. Two centrifuges (one duty plus one standby) will be provided for the 30.8 mgd design condition. Additional space will be provided to install a third centrifuge in the future to provide additional capacity and redundancy for the 40 mgd design conditions. A schematic of the final dewatering centrifuges and cake conveyance equipment is provided in Drawing I-700: Final Dewatering Centrifuge. The centrifuges will be on the upper level of the building. A bridge crane sized to lift the rotating assembly and floor opening large enough to fit the rotating assembly will be provided in the centrifuge room to lift and lower the centrifuges for maintenance and repairs.

For ease of maintenance and interchangeability of parts, the same model of centrifuge will be used for pre-dewatering and final dewatering. The delivery team will be responsible for evaluating sizing and selection of the centrifuge manufacturer and model. The selected system must be sized to reliably meet the full range of flows and loads at the 23.0 and 30.8 mgd design conditions, with space to expand to meet the 40 mgd design conditions. For reference, the evaluations and layouts presented in this Plan were based on a 29-inch diameter bowl and assumed capacity of 4,200 lb/hr (equal to 6,000 lb/hr nameplate capacity, de-rated by 30 percent as a safety factor).

Table 13-8. Centrifuge Design Criteria

Parameter	Value
Number of units	1 duty and 1 standby (space for 1 future)
Manufacturer	To be determined
Hydraulic capacity per unit	200 gpm or greater at 3% feed solids
Target solids capture	95%
Target cake dryness	32%–38% solids
Motor size	To be determined by delivery team
Drive type	VFD

Centrate will be sent to the plant drain. The centrate drain piping will be a minimum size of 12 inches, sloped at 1/4-inch per foot or greater, and have flushing connections throughout. The delivery team will be responsible for sizing the centrate pipe piping and centrate drain vent. More information about the centrate drain piping is provided in Section 16.

Centrate equalization is desirable to limit impacts to the liquid treatment process prior to implementation of future sidestream treatment. The delivery team will need to evaluate potential sizing and location of centrate equalization and integration into the future sidestream treatment system, as described in Section 23.

13.5.3.1 Cake Conveyance

Solids from each centrifuge will fall through a chute into a “slop” diverter slide gate below the machine. During centrifuge startup, before the cake reaches a target dryness, the diverter gate will close to send “slop” to the plant drain via the centrate piping. Once the centrifuge is producing cake, the diverter gate will open, allowing solids to fall into a “pant-leg” diverter gate.

When the “pant-leg” diverter gate is in “open” position, cake will fall directly into the final dewatered cake bin. When the gate is “closed,” cake will fall into a “bin distributing” horizontal screw conveyor. The purpose of the screw conveyor will be to transport cake to a different compartment of the dewatered cake bin, to allow the cake to be evenly distributed throughout the cake bin. The conveyor will be able to operate in forward or reverse. An outlet at the end of the conveyor will allow direct discharge into a truck, in the event that the cake bin is out of service. Design criteria for the cake conveyance equipment are provided in Table 13-9.

Table 13-9. Cake Conveyance Design Criteria

Parameter	Value
Materials of construction, frame	Type 304L stainless steel
Materials of construction, wetted parts	Type 316 stainless steel
"Slop" diverter slide gates	
Quantity	2 (one per centrifuge), plus space for 1 future
"Pant leg" diverter gates	
Quantity	2 (one per centrifuge), plus space for 1 future
"Bin distributing" screw conveyor	
Quantity	1
Maximum speed	20 rpm
Safety features	Zero speed switch and emergency stop pull cord
Screw conveyor slide gates	
Quantity	3

13.5.3.2 PEW Connections

The dewatering system will be provided with the following PEW connections:

- Centrifuge automatic rotating assembly/bowl flush, with one motorized valve and one check valve per centrifuge
- Centrifuge manual casing flush, with manually operated ball valves
- Flushing water for cake conveyance equipment:
  - "Slop" diverter slide gates
  - "Pant leg" diverter gates
  - Screw conveyor
- Solids dilution water assembly, provided for the purpose of reducing the solids concentration of the centrifuge feed. The assembly includes the following components:
  - One pressure-reducing valve
  - One magnetic flow meter, with bypass
  - One motorized valve
  - Check valve
  - Isolation valves

13.5.4 Final Dewatered Cake Bin

A single bin will be provided for the short-term storage of final dewatered cake. The bin will be sized to provide 1.5 days of usable storage at 30.8 mgd peak 14-day conditions, with the assumption that dewatering and hauling operation schedule could be adjusted

at peak 40 mgd design conditions. The bin will consist of three compartments, each with a live-bottom mixer, a motorized slide gate, and discharge chute. Each compartment could be isolated for maintenance or repair. Design criteria for the dewatered cake bin are provided in Table 13-10. A schematic is provided in Drawing I-701: Final Dewatering Cake Bin.

Table 13-10. Cake Bin Design Criteria

Parameter	Value
Number of units	1 (with three compartments)
Materials of construction	Type 304 stainless steel
Instrumentation	Radar level sensors (two per compartment)

13.5.5 Final Dewatered Cake Truck Loadout

The indoor truck loading area will be located below the final dewatered cake bin, on the ground floor of the DWB. A truck scale will record the weight as cake is loaded into the trailer. The truck loading area will have hose bibbs on each side of the truck and floor drains to convey washdown and spills to the plant process drain.

A roll-up garage door will be located on each side of the room, allowing trucks to pull in and continue through without having to back up. A truck viewing platform will provide access for the operator and truck driver to look inside the trailer. Bollards will be provided to protect equipment and building components.

The truck loading area is shown on the following drawings:

- Option 1: renovate existing Dewatering Building. Plan: M-700; Sections: M-703 and 704.
- Option 2: decommission existing Dewatering Building. Plan: M-350; Sections: M-361 and 362.

13.5.6 Odor Control

Foul air will be withdrawn from the following areas:

- Centrifuge centrate discharge chute
- Centrifuge solids discharge chute
- Cake conveyor
- Dewatered cake bin
- Truck bay

The odor control system is discussed further in Section 15.

13.6 Equipment Operation and Control

13.6.1 Centrifuge Feed

The final dewatering centrifuge feed pumps will operate in “Digester Transfer” or “Digester Waste” mode. In the former mode, solids will be transferred from one digester to another; in the latter mode, solids will be withdrawn from the digester and pumped to the final dewatering centrifuges. Pipe cross connections and manual valves on the discharge lines will provide flexibility to feed any centrifuge or digester with any pump.

A magnetic flow meter will be provided on the discharge line to each centrifuge. A single magnetic flow meter will also be provided on the “pumped transfer” pipe (the pipe connecting the DS transfer pumps discharge back into the digesters).

When adjusting the operational mode of a final dewatering centrifuge feed pumps, the operator will enter the withdrawal location and discharge location via the PCS. The PCS will use this information to record the flow meter reading to and from each process.

The final dewatering centrifuge feed pumps will be provided with VFDs. The PCS will automatically adjust the pump speed so that the recorded flow matches the operator-adjustable flow set point.

13.6.2 Polymer System

The polymer feed to each centrifuge will be automatically adjusted to maintain an operator-adjustable dose rate, based on the following parameters:

- Solids feed flow, as measured by flow meter on centrifuge feed pump discharge
- Solids concentration of DS, entered in the PCS by the operator on a regular interval based on sampling and testing results
- Polymer dose rate (pounds of active polymer per dry ton of solids), entered in the PCS

The polymer blending unit will receive a polymer demand from the PCS, in units of pounds per hour. A PLC on the polymer blending unit will automatically adjust the speed of the neat polymer metering pump to deliver the polymer demand. The dilution water flow into the polymer blending unit will be adjusted manually via needle/orifice valve to achieve a target polymer solution concentration.

The polymer recirculation pump will be operated on a timer cycle. The suction and discharge tanks of the pump will be adjusted using manual valves.

13.6.3 Centrifuges and Cake Conveyance

The centrifuges will be controlled by the manufacturer's PLC. During commissioning, the polymer dosage, mixing, washwater, and centrifuge control will be adjusted to optimize the system to achieve the highest cake dryness while minimizing the total polymer usage. Every installed centrifuge should be operated periodically to distribute wear and ensure that each is functional when needed.

The "slop" diverter slide gate will automatically be opened and closed by the centrifuge PLC, but it can also be manually controlled from the centrifuge control panel or local control station.

The cake conveyance system will be controlled from the PCS. The system will be interlocked with the centrifuge and will send a stop command to the centrifuge PLC if a critical fault is detected. Before starting a centrifuge, the operator will select the discharge location of the cake by adjusting the following settings:

- Position of the pant leg diverter gate
- Cake screw conveyor direction of rotation
- Position of the slide gates below the screw conveyor

If the cake bin level exceeds a high-level set point, a warning alarm will be triggered, to notify the operator that the cake discharge location should be adjusted to prevent cake from overflowing the bin. If the level exceeds a high-high level, the PCS will send a stop signal to the centrifuge feed pumps.

The live-bottom screws and slide gates in the cake storage bin will be manually operated from an LCP in the truck loading bay, for convenient operator access. A digital readout in the truck bay will report the truck weight. The operator will tare the weight when the empty truck pulls into the bay. The level reading for each compartment of the cake bins will be displayed on the LCP to assist the operator in deciding which of the bin discharge chutes to use.

14 BIOGAS MANAGEMENT AND UPGRADING

14.1 Background and Purpose

The Program will produce a marketable biosolids product and biogas that could be used on site to produce electricity and/or heat or further conditioned and used off site as RNG.

The objective of the previously developed Biogas Utilization Report (see Appendix A) was to look at all feasible alternatives for the beneficial use of the biogas to assist in meeting Arlington County's sustainability goals while also reliably meeting the WPCP's heating and electrical needs. Monetary, non-monetary, and sustainability evaluations were completed to determine the recommended alternative for the County.

The range of feasible alternatives includes using the biogas for one or a combination of the following:

- On-site use for process and building heating
- Production of electrical power and recovering waste heat (CHP)
- Production of RNG for off-site use as vehicle fuel or pipeline injection

Based on the results presented in the Biogas Utilization Report, the County recommended proceeding with RNG as the selected biogas utilization approach. The basis for this recommendation is as follows:

- The RNG sub-alternatives have the lowest net present value (i.e., lowest total cost to the County) for the baseline conditions.
- Sub-alternative 3A (RNG into Pipeline) scored the highest in the County's non-financial scoring. In particular, the County found that the RNG sub-alternatives would be less complex and would result in fewer localized impacts than the CHP alternatives.
- A sensitivity analysis concluded that when considering multiple variables, including Renewable Identification Number (RIN) volatility, Sub-alternative 3A (RNG into Pipeline) had a very high likelihood of being more financially advantageous than Sub-alternative 2A.
- The County has the ability to retain GHG credits if the biogas is used within Arlington County. With County operations projected to be 100 percent renewable by 2023, it is likely that the CHP sub-alternatives would not result in any GHG reduction.
- Benefits of on-site CHP are limited because the CHP size would not be sufficient to power the entire WPCP and the existing WPCP is already protected with backup generators.

The County's current preference is for converting biogas into RNG; however, the final decision to inject RNG into the natural gas (NG) utility pipeline or to use CNG will be made in the future as more discussions with the stakeholders are conducted.

An overall schematic of the biogas management process is shown on Drawing G-007 with detail provided on Drawings I-800 through I-803.

14.2 Process Objectives

Below is a summary of the major process objectives for the biogas utilization systems. Other non-financial criteria such as flexibility, aesthetics, noise, and local emissions were captured in the Biogas Utilization Report.

- **Minimize flaring:** Minimize the flaring of biogas produced within the digester system. This will be accomplished by providing adequate storage, utilization capacity for the primary end use, and flexibility to use the biogas on site as a secondary end use
- **Maximize Beneficial Use:** Several biogas end uses were explored and evaluated on a financial and non-financial basis along with a sensitivity analysis to select the end use with the highest benefit to the County.
- **Biogas Storage:** Provide storage to minimize the potential for flaring during interruption of RNG operations.
- **Safety:** Meet or exceed the current standard of practice for digester safety on both the biogas and solids sides of the process. Potential safety concerns and mitigation measures are discussed in Section 12.4.7.
- **Operations and Maintenance Considerations:** Mitigate foreseeable O&M issues. The foreseeable issues and mitigation measures are expounded upon in the following sections but generally cover topics such as access, resilience, contingent/alternate operation, process monitoring, and ability to mitigate potential process upsets.

14.3 Basis of Design

Future biogas production is based on the criteria presented in Section 3, which includes 95 percent solids capture in the pre-dewatering system, 60 percent VSr for primary and secondary biosolids, and 90 percent VSr of primary scum and FOG. The assumed biogas yield is 15 standard cubic feet (scf) of biogas produced per pound of VS reduced.

Table 14-1 below presents the biogas production values for the planning period.

Table 14-1. Biogas Production, scfm

Parameter	2027	2037	2047	Design 2052
Average	343	378	413	428
30-day max	451	497	543	563
14-day max	491	541	590	612
7-day max	520	572	625	648
3-day max	573	631	689	715

14.3.1 RNG Quality Requirements

The American Biogas Council has developed a recommended RNG-quality specification for pipeline injection, which is presented in Table 14-2 below. RNG-quality specifications will continue to be updated based on the ultimate end user.

Table 14-2. Anticipated RNG Pipeline Specification

Parameter Maximum (unless noted otherwise)	Unit	Acceptable Limit	Typical Raw Biogas
Minimum high heating value	Btu/scf	960	580–680
H_2S	ppm	0.0057	300–1,000
Total sulfur	ppm	0.458	300–1,200
CO_2	Percentage by volume	2.0%	32%–42%
O_2	Percentage by volume	0.4%	<1.0%
Total inerts	Percentage by volume	5.0%	33%–45%
Water	lb/MMscf	7.0	~2,000
Siloxanes	ppm	1.0	5–20
Dust, gum, bacteria, and pathogens	Filter microns	Commercially free	N/A
Minimum and maximum limits of acceptable temperature range	°F	50–120	90–110

14.4 Biogas System Description and Design Criteria

For the recommended biogas to RNG alternative, shown schematically in Figure 14-1, all the biogas produced will be conditioned to RNG quality for use off site. The

production of RNG from biogas requires treatment of the biogas to remove contaminants such as H_2S, moisture, siloxanes, volatile organic compounds (VOCs), and CO_2. A discussion on the technologies available to accomplish this treatment is presented in Section 14.5. At this point it is assumed that all of the biogas would be conditioned and used off site and NG would be purchased and used in boilers to meet the process and building heating needs to maximize the amount of RINs. However, piping and valving should be provided as necessary to use biogas in the boilers in lieu of natural gas, should County operations decide that is the preferred method of operation.

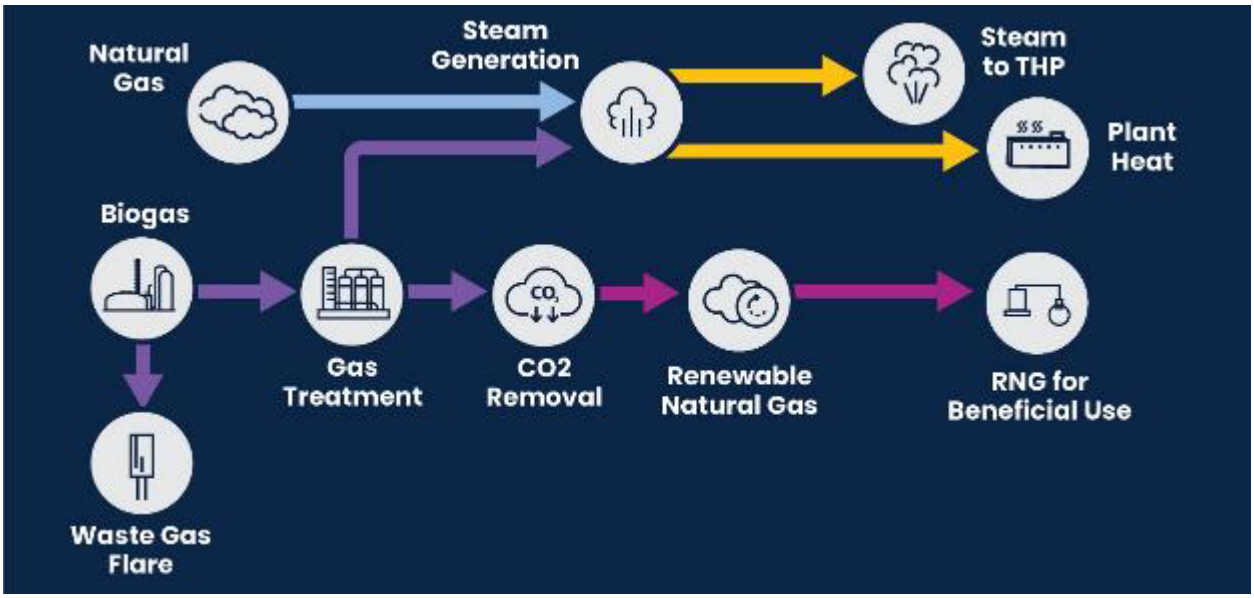

Figure 14-1. Biogas to RNG Schematic

The removal of contaminants from the raw biogas, regardless of the technology used, results in some loss of CH_4 in the waste biogas stream, or tail gas. The disposal of the tail gas is site-specific and dependent on air quality regulations and sustainability goals as it contains a small amount of CH_4 as well as some H_2S and other contaminants. It is assumed that the tail gas was combusted in a regenerative thermal oxidizer (RTO) designed to oxidize low-Btu gas streams, effectively converting CH_4 to CO_2 and other contaminants to oxidized states. The overall CH_4 capture is technology-dependent but is generally in the range of 95 to 98 percent.

The RNG conditioning equipment will have downtime for maintenance. During these periods it was assumed that the biogas would be diverted directly to the boilers to minimize flaring.

Figure 14-2 illustrates the energy balance for the RNG and boiler alternatives. This energy balance does not distinguish between injecting the RNG into the NG utility pipeline or piping the RNG directly to bus fleet fueling.

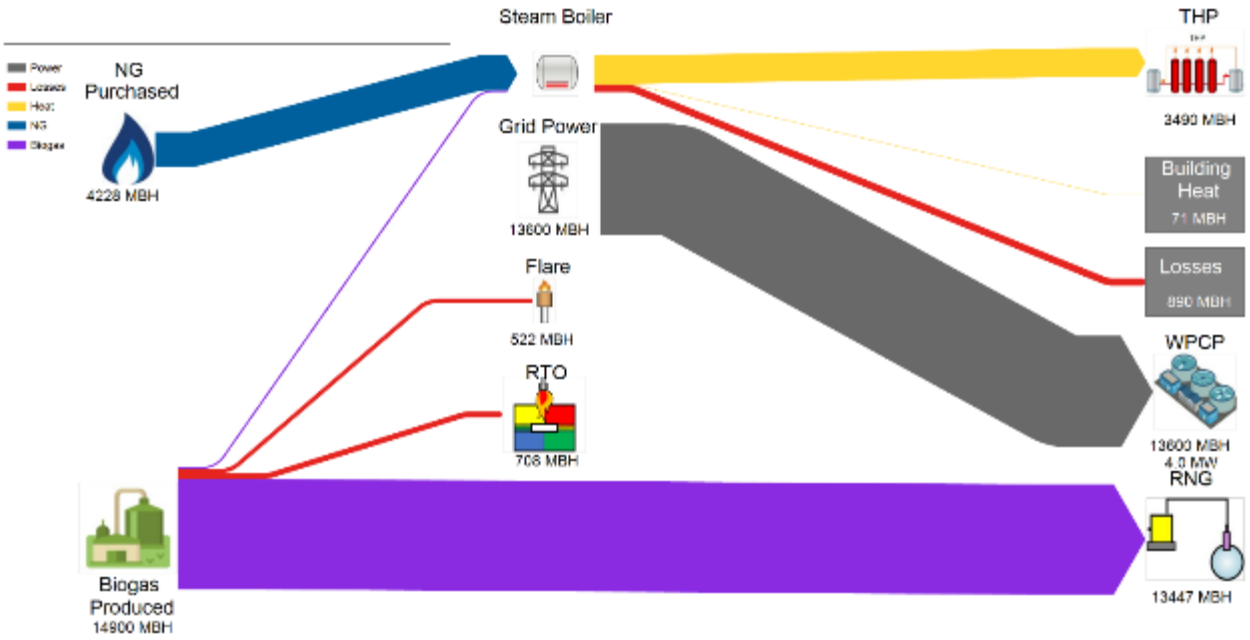

Figure 14-2. Biogas to RNG Energy Balance: Average Condition 2037

14.4.1 Equipment Capacity Summary

Based on the biogas production summary and the selected end use as RNG, a summary of the major equipment component capacities was developed and is summarized in Table 14-3.

Table 14-3. Equipment Capacity Summary

Component	Quantity	Unit	Basis
Waste gas flare capacity	1,200	scfm	Future peak biogas production
	50,000	MBH	Peak flow at 650 Btu/scf
Conditioning system inlet capacity	600	scfm	Future max month
	23,000	MBH	Design flow and 650 Btu/scf
Conditioning system performance			
Minimum CH_4 capture	95	Percent	Design target
Minimum uptime	95	Percent	Design target
Gas quality requirements	See Table 2	See Table 2	To be confirmed with NG utility
RNG injection system	400	scfm	
	23,000	MBH	Match conditioning system
RTO inlet capacity	300	scfm	
	2,500	MBH	
Raw biogas to boiler capacity	10,000	MBH	Boiler fuel requirement
	290	scfm	Fuel requirement at 580 Btu/scf
RNG to boiler capacity	170	scfm	Fuel requirement at 980 Btu/scf

14.4.2 Low-Pressure Biogas System

For details and requirements on the low-pressure biogas system, see Chapter 12.

14.5 Biogas Conditioning System Details

With the recommended alternative of conditioning the biogas to be used as RNG off site, an additional analysis was completed to select the most appropriate CO_2 removal conditioning technology along with the necessary pretreatment, compression, post-treatment, and tail gas management equipment for each type. There are three main types of biogas conditioning technologies available to produce RNG: membrane separation, pressure swing adsorption (PSA), and water wash scrubbing.

A suite of alternatives using various biogas conditioning technologies was developed. Conceptual process conditions, configurations, cooling technology sizing, and conceptual operation costs were prepared, documented in TM No. 16: *Gas Cleaning Evaluation*, and were presented at project workshops with the County. The technologies were evaluated and compared based on budgetary capital equipment costs, conceptual operating cost estimates, and non-cost considerations including space requirements and noise. A 20-year life-cycle cost analysis was also conducted.

Overall, the three biogas conditioning technologies are comparable in present value and performance; however, some differences should be considered before the final technology selection is made. Table 14-4 presents these differences graphically where the green indicates positive, red is negative and yellow is neutral.

Table 14-4. Technology Comparison

Criterion	Membranes	PSA	Water Wash
Capital cost	↑	↓	↑
O&M cost	↑	↓	↓
Methane capture	↑	↓	↑
Uptime	↔	↔	↔
Noise	↓	↑	↓
Aesthetics	↑	↑	↓
Flexibility for future CHP	↑	↓	↓
Tail gas management	↑	↑	↓

Arlington County participated in additional discussions with the equipment vendors and conducted site visits to existing installations to see the equipment in person and talk to O&M staff who have experience with the equipment options. Based on the analysis presented in TM No. 16 and the lessons learned from vendor discussions and site visits to existing installations, the preferred biogas treatment technology for implementation at the WPCP is membrane separation.

The Biogas Utilization Report includes costs for enclosing most of the biogas conditioning equipment in a building. Enclosing this equipment inside a building has several advantages for weather protection, access for O&M activities, and reduced noise production. The final layout of the Biogas Conditioning Building and equipment will occur after facility site visits and selection of a conditioning technology.

14.6 Equipment Operation and Controls

The biogas upgrading system is a complete system that will be packaged by a single vendor. During normal operation, the biogas upgrading system will operate in response to variable digester gas production as indicated by a pressure signal, and automatically increase or decrease compressor speed to feed biogas through the system.

The biogas upgrading system will include local control panels for the individual process, scrubbing, and compression skids with a PLC to provide operational and safety controls, including startup cycles, shutdown cycles, normal operation, capacity adjustment, and product gas quality control. The PLC will control and monitor the gas upgrading system in both Hand and Auto modes. The main scrubbing LCP will include an HMI touchscreen.

The biogas upgrading system will perform the following primary functions:

1. Compress and cool digester gas
2. Remove H2S (if required), siloxanes, water, and other contaminants from the digester gas
3. Separate CO2 and residual contaminants from the CH4 in the digester gas to produce RNG and tail gas
4. Measure and control biomethane quality prior to pipeline injection

14.6.1 Alternative Modes of Operation

Piping, valves, and the necessary pressure-reducing equipment will be provided to send raw or conditioned biogas to fuel the steam boilers. Raw biogas will be sent to the boiler if biogas production exceeds the capacity of the biogas conditioning system and biogas storage capacity is exceeded or if the biogas conditioning system is out of operation for maintenance. Conditioned biogas will be sent to the boilers in the event that the RNG quality does not meet pipeline standards and the gate station valve is closed.

14.6.2 Safety Features

The biogas handling system will be designed to provide safe operations and proper disposal of the biogas throughout the entire range of anticipated and emergency conditions. Pressure relief valves will be provided to send the biogas to the waste gas flare in the event that biogas production exceeds the capacities of the biogas conditioning system and the on-site uses and biogas storage capacity are at maximum capacity. Emergency flaring will be controlled by pressure set points to prevent damage to the biogas storage system and associated equip

15 ODOR CONTROL

15.1 Background and Purpose

Planned improvements to replace the existing lime stabilization process with THP and AD will result in either the rehabilitation of the existing DWB or decommissioning of the DWB and construction of a new SPB. Both will involve replacement of all existing processes with new ones, requiring new odor control takeoffs and ductwork. The existing DWB is served by an odor control system; however, that system is approaching the end of its useful life and should be replaced.

TM No. 13: *Odor Control Evaluation* includes a comparison of four alternatives for establishing permanent odor control to replace the existing DWB odor control system. The four alternatives were developed for comparison based on preliminary design criteria established through:

- Estimated foul-air exhaust rates for the potential odor sources
- Estimated peak and average concentrations of odorants in combined foul-air exhaust flows
- Identified odor treatment system design parameters
- Identified odor collection and treatment system arrangement and redundancy requirements

Based on the results of the assessment and comparison, one alternative was recommended to serve as a basis for design: treatment of the combined exhaust from GTs, SSTs, and pre-dewatering with a two-stage packed-tower scrubber system targeting sulfur odor and treatment of the combined exhaust from final dewatering with a one-stage packed-tower scrubber targeting ammonia odor followed by a one-stage packed-tower scrubber and carbon polishing unit targeting sulfur odor.

The purpose of this section is to provide background on the existing odor control at the WPCP, describe the preliminary design criteria used to develop the contemplated alternatives, and review the recommended alternative, including its impacts on utility requirements and site planning.

Details of the odor control system are provided on Drawings I-900 through I-902.

15.2 Existing Facilities

There are three existing odor control systems at the WPCP: the south odor control system, north odor control system, and DWB odor control system.

The south odor control system currently serves the following:

- Four Mile Run Pump Station
- PTB
- DAFT
- GTs
- SSTs

The north odor control system primarily serves the equalization tanks and the PC effluent channel. The DWB odor control system serves the entire DWB including multiple process points within the DWB and the truck bays.

The locations of the three scrubber systems and facilities served are shown in Figure 15-1.

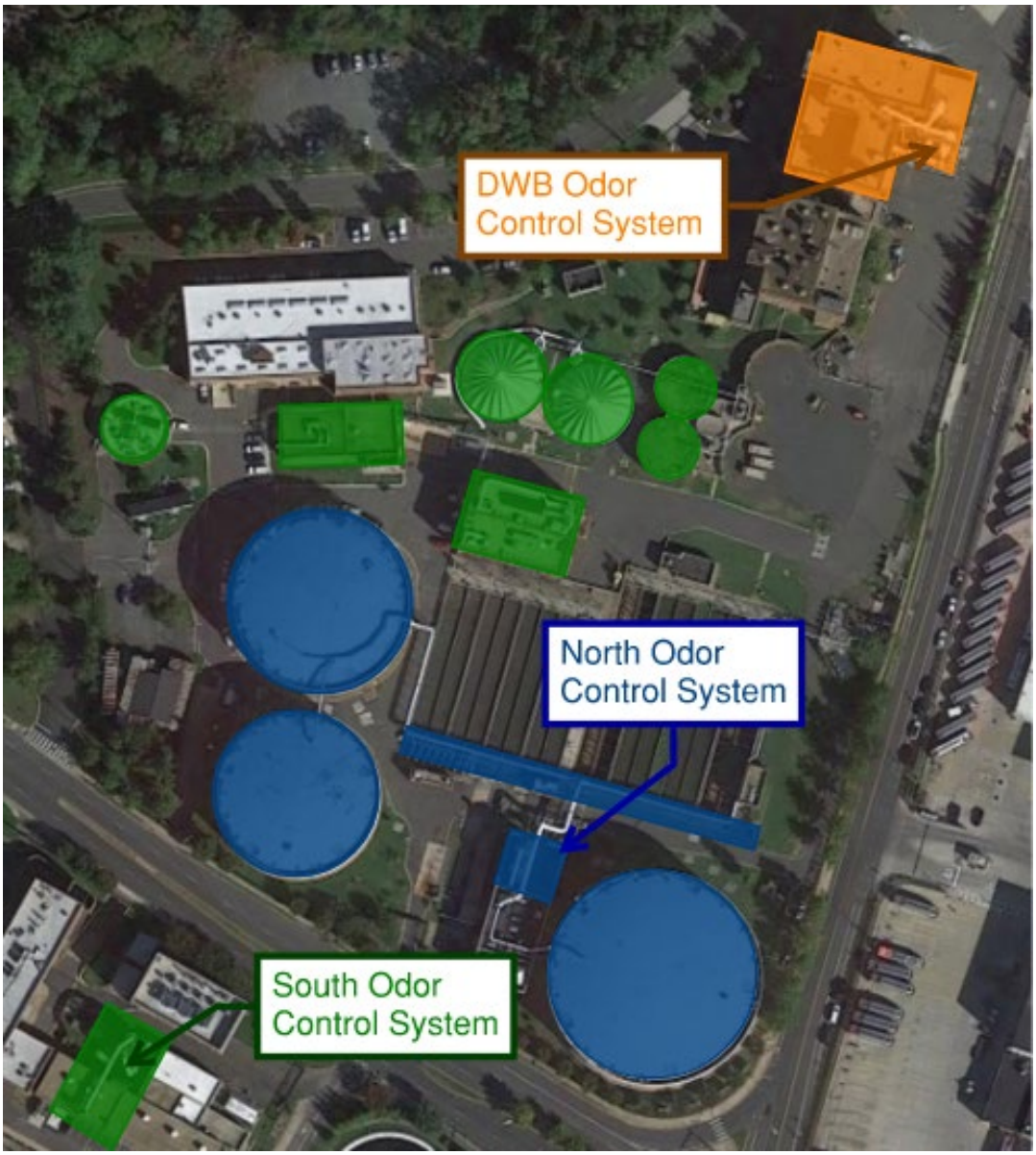

Figure 15-1. Locations of Existing Odor Control Facilities

15.2.1 South Odor Control

The south odor control system includes a two-stage packed-tower scrubber for removal of H_2S and low molecular weight organic sulfur compounds. This system has a capacity of approximately 31,000 cubic feet per minute (cfm). Many recent studies have been completed to review the design and capacity of the south odor control system and the DWB odor control system, including the *Foul Air Study for Preliminary Treatment Building and Dewatering Building* (CDM Smith 2017) and the *Preliminary Treatment Upgrades (WPB2) Phase 9B Odor Control Alternatives Ventilation System Evaluation and Recommendations* (CDM Smith 2019).

The design for the Preliminary Treatment Upgrades (WPB2) Phase 9B (PT Upgrades) includes new ventilation for the PTB. Odor control for this new ventilation will be provided by directing the PTB airflow through the GTs, and then on to the south odor control system. The expected odor control ventilation rates to the south odor control system subsequent to the PT Upgrades are listed in Table 15-1.

Table 15-1. Expected Ventilation

Source	Flow (cfm)	Notes
PTB	23,000	Directed through GTs
GTs	20,000	Captures PTB airflow
DAFTs	5,300	
Four Mile Run PS	4,800	
SSTs	700	
Minor sources	450	
Total to south odor control	**34,250**	Airflow from GTs not additive as it receives air from PTB

15.2.2 North Odor Control

The north odor control system treats odors from equalization and primary effluent in a two-stage packed-tower scrubber for removal of H_2S and low molecular weight organic sulfur compounds. No modifications to the north odor control system are expected as part of the Arlington Re-Gen Program.

15.2.3 Dewatering Building Odor Control

The DWB odor control system treats odors collected from the existing DWB in a multistage process: packed-tower scrubbers with acid to remove ammonia (NH_3) followed by two-stage packed-tower scrubbers with hypochlorite to remove H_2S and a wide range of organic sulfur compounds.

15.3 Process Objectives

The fundamental objective of any odor control system should be to prevent the occurrence of corrosive odors in spaces on site, unsafe odors in occupied spaces on site, and nuisance odors in occupied spaces on site and at sensitive locations off site.

The following facilities will generate odors that should be addressed as part of the Arlington Re-Gen Program:

- GTs
- WAS equalization storage tanks
- Solids screens
- Thickened solids storage tanks
- Screw conveyors

- Pre-dewatering centrifuges
- Pre-dewatered cake bins
- Final dewatering centrifuges
- Final dewatered cake bins
- Truck bay
- Future

It is assumed that screenings from the solids screens will be bagged prior to discharge into the screenings dumpsters and the screenings dumpsters will not generate odors. Future facilities may include future WAS thickening, future FOG receiving, or other facilities as described in Section 23.

15.4 Basis of Design

To guide development of the contemplated odor control alternatives, a common set of preliminary design criteria were established. The preliminary design criteria, constituting the basis of design, consist of the following:

- Estimated foul-air exhaust rates for the potential odor sources
- Estimated peak and average concentrations of odorants in combined foul-air exhaust flows
- Identified odor treatment system design parameters
- Identified odor collection and treatment system arrangement and redundancy requirements

15.4.1 Foul-Air Collection

Foul-air exhaust rates were estimated to either maintain a specific rate of air changes per hour (ACH) in an odorous space or to be consistent with manufacturer-recommended exhaust rates maintained for similar equipment at other sites. Table 15-2 presents the estimated exhaust rates for the processes and facilities to be served by the new odor control system.

The values listed in Table 15-2 are preliminary for initial sizing purposes and will change based on the final configuration designed by the delivery team. During design, it is recommended that the estimates be revisited and the design rates be coordinated with manufacturers, to ensure that exhaust rates will both maintain vacuum (i.e., a maximum of -0.1 inch water column [w.c.] pressure) in odor spaces and avoid wasting treatment capacity with over-generous ventilation.

Table 15-2. Basis of Design for Foul-air Collection

Source	Ventilation Criteria	Ventilation Basis	Number of Units	Ventilation Rate, Unit (cfm)	Ventilation Rate, Total (cfm)
GTs	12	ACH	2[b]	10,000	20,000[b]
Storage tank (WAS equalization)	2	ACH	1	1,050	1,050
Storage tanks (thickened and screened solids)	2	ACH	3	1,050	3,150
Solids screens	-	Mfr	3	200	600
Screw conveyors	-	Mfr	2	100	200
Pre-dewatering centrifuge cake discharges	-	Mfr	4	100	400
Pre-dewatering centrifuge centrate drains	-	Mfr	4	100	400
Pre-dewatered cake bins	12	ACH	2	950	1,900
Final dewatering centrifuge cake discharges	-	Mfr	3	100	300
Final dewatering centrifuge centrate drains	-	Mfr	3	100	300
Final dewatering cake bins	12	ACH	1	1,100	1,100
Truck bay	6	ACH	1	5,500	5,500
Future[a]	-	Mfr	2	600	1,200
Total					36,100

a. Reserve capacity for future facilities is captured via the inclusion of future GBTs for WAS thickening
b. The WPCP operates only a single GT at present; ventilation is continuously provided from both GTs.

Odorous air from the TH skid will be vented separately and directly to the digesters and is not considered in this evaluation. Staff will need to follow proper procedures for preventing odor release during maintenance of the TH system (including flushing vessels and piping before exposing to the atmosphere). These procedures will be documented separately.

15.4.2 Foul Air Loading

Peak and average concentrations of H_2S, organic reduced sulfur compounds (orgS), and NH_3 were estimated to provide a basis for evaluating potential treatment options and sizing treatment stages, chemical dosing pumps, and chemical storage required.

The design concentrations presented in Table 15-3 reflect the Program Manager's experience at other sites; however, the concentrations are subject to significant uncertainty. Actual concentrations will be a function of site-specific factors including liquid-phase wastewater chemistry and operating conditions.

Table 15-3. Basis of Design for Foul-air Loading

Exhaust	Airflow (cfm)		H_2S (ppmv)		orgS (ppmv)		NH_3 (ppmv)	
		Average	Peak	Average	Peak	Average	Peak
GTs	20,000	1.0	10.0	0.5	2.0	0.0	0.0
Solids storage and pre-dewatering	8,900	5.0	25.0	2.0	10.0	0.0	0.0
Final dewatering	7,200	1.0	10.0	1.0	5.0	10.0	50.0

15.4.3 Minimum Required Treatment

To evaluate potential treatment options, preliminary design criteria addressing minimum required treatment of each type of odorant were also established:

- 99 percent removal of H_2S
- 90 percent removal of orgS
- 99 percent removal of NH_3

15.4.4 System Configuration

TM No. 13 detailed additional design criteria to address the following potential causes of incidental odor emission:

- Deficient ductwork under positive pressure
- Equipment breakdown
- Variable (i.e., "shock") odorant loading

Ultimately, it was recommended that new odor control satisfy the following criteria:

- Minimize the length of collection ductwork (i.e., ductwork carrying untreated exhaust flow) under positive pressure by locating blowers near odor treatment, rather than odor sources
- Provide fully redundant (i.e., spare) equipment (i.e., blower, recirculation pump, chemical metering pump) capacity
- Provide redundant treatment capacity of sulfur odor via provision of multiple treatment stages in series

15.5 Odor Control Facility Description and Design Criteria

As detailed in TM No. 13, the preferred approach to new odor control is to treat the combined exhaust from GTs, SSTs, and pre-dewatering with a two-stage packed-tower scrubber system targeting sulfur odor and to treat the combined exhaust from final dewatering with a one-stage packed-tower scrubber targeting ammonia odor followed by a one-stage packed-tower scrubber and carbon polishing unit targeting sulfur odor.

15.5.1 Process Flow Diagram

The recommended approach includes the following:

- Treatment of the estimated 7,200 cfm exhaust from final dewatering and the truck bay with:
- One-stage chemical treatment of NH_3 odor with sulfuric acid
- One-stage chemical treatment of sulfur odor with sodium hydroxide and/or sodium hypochlorite
- One-stage carbon polishing of sulfur odor
- Treatment of the estimated 28,900 cfm exhaust from the GTs, SSTs, and pre-dewatering processes with:
- Two-stage chemical treatment of sulfur odor with sodium hydroxide and/or sodium hypochlorite

For clarity, the former is subsequently referred to as OCFA and the latter as OCFB.

A schematic representation of the alternative identifying the estimated gas loading, required liquid loading, makeup water demand, and chemical demand (at both peak and average odorant loading) is provided as Figure 15-2.

Both treatments, OCFA and OCFB, include two stages designed to remove sulfur odor. While H_2S can usually be reduced to satisfactory levels by one stage of chemical treatment, reduction of reduced organic sulfur compounds to satisfactory levels typically requires two stages of chemical treatment (or a single stage of carbon adsorption). OCFA also includes an additional stage to remove NH_3, which, if left untreated, could cause local odor issues and consume significant sodium hypochlorite dosed in the sulfur odor removal stage(s), potentially impairing sulfur odor removal or requiring higher dosing of sodium hypochlorite.

Redundant sulfur odor treatment capacity is provided via multiple stages of sulfur odor treatment. With OCFB, even if one packed tower was removed from service, adequate H_2S removal could be maintained by the other vessel, though that vessel would only be able to remove up to approximately 75 percent of reduced organic sulfur compounds. With OCFA, if the carbon scrubber was removed from service, adequate H_2S removal

and up to 75 percent organic sulfur removal could be maintained by the packed-tower scrubber designed for sulfur odor.

Redundant (i.e., spare) blower, recirculation pump, and chemical metering pump capacity will be provided. The blowers and recirculation pumps shown on Figure 15-2 reflect pairs of blowers and recirculation pumps respectively, sized for duty/standby operation. Each NaOH and sodium hypochlorite input shown on Figure 15-2 is associated with a dedicated chemical metering pump.

The final criteria from Section 15.4, minimization of ductwork under positive pressure upstream of treatment, is satisfied via the location of the blowers within the two treatment schemes. The OCFA blowers are located downstream of the two packed towers, the latter designed for sulfur odor removal; the OCFB blowers are located downstream of the two packed towers, both designed for sulfur odor removal, as well. The location of the blowers should ensure that untreated (i.e., odorous) exhaust is never under positive pressure and thus at risk of uncontrolled release from deficient ductwork.

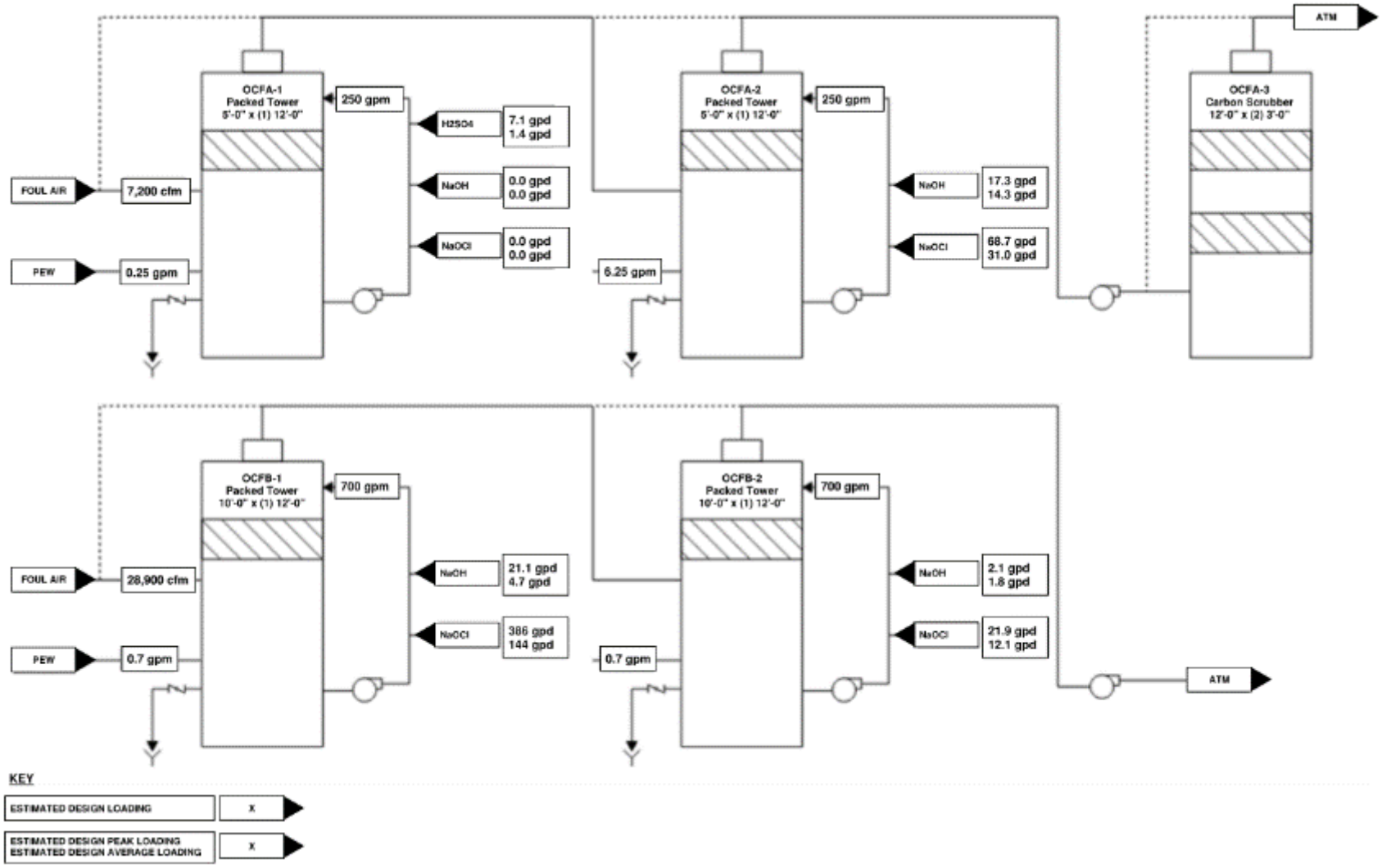

Figure 15-2. Schematic of Recommended Alternative for New Odor Control

15.5.2 Equipment

The recommended alternative requires the following equipment:

- Treatment vessels
- Blowers
- Recirculation pumps
- Chemical metering pumps
- Chemical storage

The quantity and size of the treatment vessels associated with the preferred alternative are listed in Table 15-4.

Table 15-4. Vessels Required

Qty.	Diameter		Packing Height	Equipment
2	5 ft	×	12 ft	Packed towers
2	10 ft	×	12 ft	Packed towers
1	12 ft	×	6 ft[a]	Dual-bed carbon scrubber

a. Each carbon bed has a depth of 3 feet.

All treatment vessels should be provided with integral demisters.

Two blowers will be provided for each exhaust flow, each sized to convey 100 percent of the flow. All blowers will be driven by VFDs. The preliminary quantity and size of the blowers are listed in Table 15-5.

Table 15-5. Blowers Required

Qty.	Size	Equipment
2	7,200 cfm	OCFA blowers
2	28,900 cfm	OCFB blowers

Two recirculation pumps should be provided for each packed-tower vessel, each sized to pump 100 percent of the design recirculation rate. All recirculation pumps should be provided with constant-speed motors. The quantity and size of the recirculation pumps required for the preferred alternative are listed in Table 15-6.

Table 15-6. Recirculation Pumps Required

Qty.	Size	Equipment
4	250 gpm	OCFA recirculation pumps
4	750 gpm	OCFB recirculation pumps

The chemical storage required to treat peak odorant loading over a 14-day period is estimated as follows:

- 105 gallons of sulfuric acid (97.0 percent active concentration by weight)
- 610 gallons of sodium hydroxide (25.0 percent active concentration by weight)
- 7,000 gallons of sodium hypochlorite (12.5 percent active concentration by weight)

Accordingly, the following chemical storage should be provided:

- One 300-gallon (i.e., 4-foot-long by 3.5-foot-wide by 3.5-foot-tall) tote for sulfuric acid
- One 6,000-gallon (i.e., 8-foot-diameter by 13.5-foot-tall) tank for sodium hydroxide
- One 7,000-gallon (i.e., 10-foot-diameter by 12-foot-tall) tank for sodium hypochlorite

As previously noted, one spare chemical metering pump should be provided for each of the three chemicals: sulfuric acid, sodium hydroxide, and sodium hypochlorite. Each set of chemical metering pumps, in order to provide maximum flexibility, should be sized to provide up to the maximum chemical dose estimated to treat peak odorant loading required by any of the four packed towers, with turndown to deliver the minimum estimated to treat average odorant loading. The quantity and size of the chemical metering pumps associated with the preferred alternative are listed in Table 15-7.

Table 15-7. Chemical Metering Pumps Required

Qty.	Design Flow Range (gpd)			Service
2	1	to	8	Sulfuric acid
4	1	to	25	Sodium hydroxide
4	10	to	400	Sodium hypochlorite

15.5.3 Facility Layout

The two treatment facilities under the preferred alternative, OCFA and OCFB, should be co-located on the same pad, both for convenience and in order to compact the overall odor control footprint. It is estimated that the pad would need to be a minimum of 50-feet-wide by 75-feet-long in order to fit all of the requisite vessels, equipment (i.e., blowers and recirculation pumps), and ductwork and have the ductwork configured in such a way that appropriate loading conditions are maintained at all vessels and

blowers. Only the chemical storage and chemical metering pumps will be located elsewhere.

15.6 Equipment Operation and Controls

Maintaining continuous odor collection simply requires continuously running one blower associated with each treatment and maintaining a free flow path to and from it. The pairs of blowers will be operated as duty/standby. The duty blower will be alternated at intervals in order to preserve blower life.

The dampers located immediately upstream of the blowers will be used for isolation and motor actuated. The actuators will be configured to open and close according to the logic governing the duty/standby operation of the respective blowers. The dampers located immediately downstream of each fan will be backdraft dampers.

The dampers located at the inlet and discharge of each packed-tower scrubber will be manually adjusted dampers and used to isolate vessels. Those dampers will only be closed to remove a vessel from service; when a vessel is removed from service, the manually adjusted dampers on the respective bypass, which will normally be closed, will be opened. The open position of each bypass damper will be set such that roughly equal flow is maintained regardless of whether flow is through the bypass or the associated vessel.

The damper located at the inlet to the carbon scrubber and the damper located on the line to the OCFA bypass stack will also be manually adjusted and be used to isolate the carbon scrubber and block flow to the bypass stack respectively. The damper at the inlet to the carbon scrubber will be kept open unless the scrubber is removed from service (e.g., for carbon media replacement); the damper on the line to the bypass stack will normally be kept closed and only opened if the carbon scrubber is removed from service. Its open position will maintain flow close to the OCFA design rate.

The blower VFDs will adjust blower motor speed to maintain constant flow.

The pair of recirculation pumps associated with each packed-tower scrubber will also operate as duty/standby. The duty recirculation pump will run continuously as long as the respective scrubber is in service. The duty pump will be alternated manually, periodically to preserve pump life. When a standby pump is set to become the duty pump, the previous duty pump will be manually stopped and the isolation valves upstream and downstream of it manually closed. Then the isolation valves on either side of the new duty pump will be manually opened and the new duty pump manually started. Seal water to the recirculation pumps will be controlled by solenoid valve. The valve will open and close according to recirculation pump run status.

PEW will be used to supply make-up water to each of the packed-tower scrubbers. PEW flow to each vessel will be controlled by a solenoid valve, set to open and close to maintain a pre-set flow as set through a control valve and magnetic flow meter. A high level and low float switch will also be provided in each vessel and programmed to generate alarms.

PEW will also be used to supply water for spray nozzle cleaning and for demister cleaning. PEW flow to each spray nozzle and integral demister will be controlled by solenoid valve, normally closed but set to open in response to a PCS command to initiate cleaning.

Dedicated chemical metering pumps and spare metering pumps will operate as duty/standby. The dedicated chemical metering pumps will be used as the duty pumps unless removed from service. If a spare pump is to be used as a duty pump, the manual isolation valves upstream and downstream of the dedicated pump will be closed and the manual isolation valves upstream of the spare pump and downstream of the pump on the appropriate crossover line opened.

Duty metering pump operation will be automatic. Each duty pump for dosing sulfuric acid and sodium hydroxide will be set to run to maintain pH in the vessel being dosed within a target range. Each duty pump for dosing sodium hypochlorite will be set to run to maintain oxidation-reduction potential (ORP) in the vessel being dosed within a target ORP range.

Connections will be provided to allow for dosing sulfuric acid to OCFA-1, either into the recirculation line or directly into the vessel sump, dosing sodium hydroxide into the recirculation line of each of the four packed-tower scrubbers, and dosing sodium hypochlorite into each of the four packed-tower scrubbers, either into the respective recirculation lines or directly into the vessel sumps. All connections will be provided with manual isolation valves; chemical piping connecting to recirculation lines will be provided with a check valve immediately upstream of the connection. For safety, the piping supplying sodium hydroxide and sodium hypochlorite to OCFA-1 will be left disconnected. Prior to using OCFA-1 for sulfur odor treatment and connecting sodium hydroxide and sodium hypochlorite piping, the sulfuric acid piping to OCFA-1 will be purged with water and disconnected.

16 WPCP SUPPORT SYSTEMS

16.1 Background and Purpose

The solids handling process at the Arlington WPCP require support from several auxiliary, including non-potable water, chemicals added to the solids process, and process drains that recycle waste streams back into the liquid treatment process. The purpose of this section is to describe the existing support systems and the modifications anticipated. Modifications are described for both layout options: Option 1—renovate existing DWB, and Option 2—decommission the existing DWB. Modifications to existing support systems to support operations during construction are discussed in Section 22.

16.2 Plant Effluent Water System

This section describes the PEW system, including the existing PEW system and modifications to the PEW system.

16.2.1 Existing PEW System

Non-potable water at the Arlington WPCP is sourced from the plant effluent, so it is called PEW. The existing PEW pumps are located on the south side of the WPCP, west of the sodium hypochlorite facility, and are used to pump PEW throughout the facility for use in various processes. The PEW pumps draw previously disinfected water from the system. There are open-top tanks prior to the PEW pumps; consideration should be given to whether these tanks should be covered with netting or other materials to prevent debris (leaves) from entering the PEW system.

There are currently four vertical line shaft pumps configured in parallel, each rated for 3,650 gpm at 181 feet of head. Each is equipped with a 250 hp motor and a variable-speed drive. The basis for PEW system sizing, from MP01, is provided in Table 16-1 below.

Table 16-1. PEW Design Flows

Process Unit	Average (gpm)	Peak (gpm)	Notes
Elutriation water for GTs	1,200	2,400	Assumes two thickeners for peak
AT foam control spray	4,200	4,200	Assumes spray water to all tanks
AT hoods	50	200	Hypochlorite dose of 2 mg/L at 144 mgd
AT hoses	240	0	
AT effluent channel	910	910	
Chemical dilution	430	450	
Dewatering Building	60	550	Based on cleaning two centrifuges simultaneously
Secondary clarifiers	540	310	Foam spray nozzles
PTB	510	700	
Maintenance Building	500	500	Chillers (seasonal)
Miscellaneous	160	380	
Total	**8,800**	**10,600**	

Existing historical PEW usage is shown in Figure 16-1 below. As shown in this figure, average historical PEW usage is around 6 mgd (4,170 gpm). There was a sustained peak in excess of 9 mgd (6,250 gpm) in 2020. Operations reported this was a period of higher PEW use in the aeration tanks for foam control.

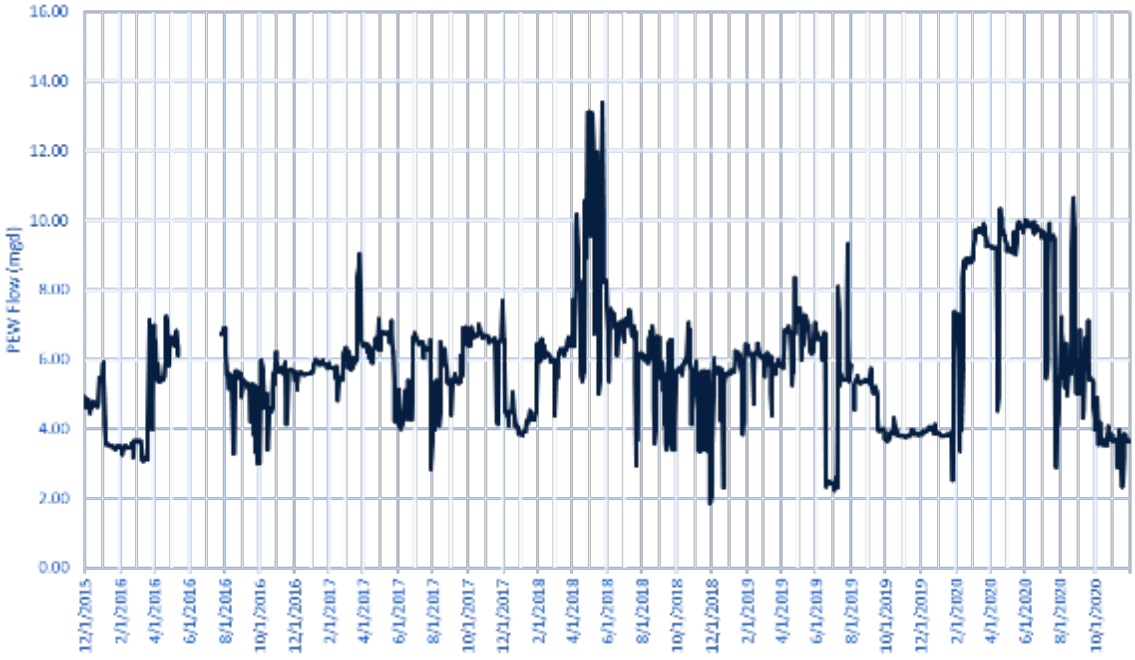

Figure 16-1. Average Historical PEW Usage

Based on discussion with operations, it was agreed that the existing design peak was very conservative. Suggested PEW design peaks for the liquid side treatment process are provided in Table 16-2 below.

Table 16-2. PEW Demand Revisions

Process Unit	Design Peak (gpm)	Revised Peak (gpm)	Notes
Elutriation water for GTs	2,400	700	One GT maximum (typically 600–700 gpm, less if HEX cooling water is recycled as elutriation)
AT foam control spray	4,200	2,400	Spray water to three tanks at a time
AT hoods	200	0	Not used
AT hoses	0	0	Used periodically, but not continuously
AT effluent channel	910	450	Used partially
Chemical dilution	450	450	
Dewatering Building	550	--	Analyzed below
Secondary clarifiers	310	310	
PTB	700	700	
Maintenance Building	500	500	Chillers (seasonal)
Miscellaneous	380	380	
Wet weather facility	--	2,080	Used when wet weather facility is off line, looking to eliminate—currently at 1,040 gpm
Total	**10,600**	**7,970**	

Flushing water from the preliminary treatment backup system is not included because of the short duration of the flow (30 to 60 minutes). The maximum liquid side usage of 7,970 gpm (11.5 mgd) aligns with recent historical usage and leaves 2,630 gpm (3.8 mgd) available capacity for solids handling process usage.

Sodium hypochlorite can be added to the discharge header from the pumping station to maintain a chlorine residual in the piping, although this is not current operating practice. PEW is supplied to the solids handling area of the WPCP through a 12-inch-diameter main located close to S Eads Street and a 14-inch-diameter main located between the existing GTs and SSTs. Both of these mains will remain in service for both layout options.

16.2.2 Modifications to the PEW System

The Program will retain the existing uses of PEW. In general, PEW will be used in similar ways as the existing solids handling processes – GT elutriation (accounted for above), polymer dilution, seal water, odor control, and centrifuge flushing and cleaning.

In addition, as discussed in Section 11, PEW will be used for cooling water at the HEX. PEW will be used for dilution of THS prior to digestion and could be added for dilution of centrate in the future if a deammonification system is added. Total peak PEW demands for the new solids handling processes are provided in Table 16-3 below.

Table 16-3. Solids Handling Processes PEW Demands

Process Unit	Design Peak (gpm)	Notes
Centrifuge clean in place	500	Two centrifuges simultaneously
Polymer	120	Pre-dewatering and final dewatering
Odor control	20	Refer to Section 15
HEX cooling	500	Refer to Section 11
Cake and THS dilution	80	Refer to Section 3
Future centrate dilution	100	To prevent inhibition
Miscellaneous	180	
Total	**1,500**	

The estimated pumping capacity available (2,630 gpm) is higher than the solids handling processes estimated PEW demand of 1,500 gpm. Some peak PEW loads could likely be reduced, if needed for capacity reasons, such as flows to the wet weather facility. In addition, the 14- and 12-inch-diameter PEW mains to the solids handling processes appear to be adequately sized to convey the maximum amount of water needed. The delivery team will complete a hydraulic model to confirm adequate water supply and pressure at all demand locations.

The dilution downstream of THP must be pathogen-free, so it would normally be supplied by the potable water (COW) system. Because the PEW can be chlorinated in the distribution system, it may be used as a backup supply for the post-THP dilution water.

Staff at the Arlington WPCP have considered operating the PEW system at a lower pressure on the south side of the WPCP and adding booster pumps for the north side where the solids handling process is located. If this occurs, a survey of all the PEW demands on the north campus should be competed to calculate the design parameters

of the booster pumps. Isolation valves and pressure-reducing valves may be required to create a northern pressure zone in the PEW system.

16.3 County Water System

COW is provided to the north side of the WPCP through a 12-inch-diameter main off of S Eads Street. The New Maintenance Building (NMB) is fed COW from an 8-inch-diameter main off of 31st Street S. To improve resilience, the COW should be looped between S Eads Street and 31st Street S through existing connections or a new metered connection on 31st Street S. The delivery team will evaluate configuration and also confirm adequate COW for fire protection needs.

16.4 Recycle Management and Conveyance

This section describes recycle management and conveyance at the WPCP.

16.4.1 Recycle Flows

Table 16-4 provides the recycle flows at various design conditions. Drain piping will be designed for peak buildout flows. Major recycle flows include GT overflow, pre-dewatering centrate, final dewatering centrate, and HEX cooling water. Additional minor flows include washdown and seal water. The gravity thickener overflow (GTO) is based on a dilution water flow of 700 gpm, which could be reduced at peak flows. The pre-dewatering centrate is based on continuous operation at the specified loading condition except for peak day, which is based on all duty centrifuges operating at capacity (one centrifuge standby). The final dewatering centrate is based on operating 24 hours per day, 5.5 days per week at the specified loading condition without dilution of the feed to the centrifuges, with the exception of peak day, which is based on all duty centrifuges operating at capacity and diluting the centrifuge feed to 3.5 percent solids. HEX cooling water may be directed to the GT to offset a portion of the dilution water used there, but also may be directed to drain and contribute to the combined recycle flow.

Table 16-4. Recycle Flows Summary (all flows in mgd)

Source	30.8 mgd Average	30.8 mgd Peak 3-day	30.8 mgd Peak Day[a]	40 mgd Peak 3-day	40 mgd Peak Day[a]
GTO	1.50	1.85	1.85	1.92	1.92
Pre-dewatering centrate	0.63	1.02	1.09	1.50	1.63
Final dewatering centrate[b]	0.14	0.23	0.34	0.29	0.69
HEX cooling water	0.46	0.72	0.72	0.94	0.94
Combined recycles	**2.73**	**3.82**	**4.00**	**4.65**	**5.18**

a. Peak day is based on all duty centrifuges operating at full capacity of 400 gpm or 4,240 lb DS/hr and diluting the final dewatering feed to 3.5% solids.
b. Final dewatering centrate flows for average and peak 3-day conditions are based on 5.5 days per week operation.

16.4.2 Recycle Treatment

After startup of the new solids facilities, the final dewatering nitrogen recycle load will be returned to the WPCP and treated in the existing mainstream process. Design criteria for this recycle load are presented in Section 23 as part of the future sidestream treatment design criteria. The new facilities will be designed to accommodate a future sidestream deammonification process for the final dewatering centrate, as discussed in Section 23. This section addresses the treatment of the final dewatering recycle stream in the mainstream process.

The mainstream activated solids process uses conventional nitrification and denitrification for nitrogen removal. The major operating costs for mainstream treatment of the recycle load are methanol for denitrification, supplemental alkalinity, handling of solids generated from denitrification, and additional air for nitrification. Table 16-5 lists the estimated impacts to the mainstream process at 28 mgd plant flow (design midpoint). These values represent average or continuous operation, and it should be noted that the centrate will be returned approximately 24 hours per day, 5.5 days per week during final dewatering operation, prior to implementing future centrate equalization and sidestream deammonification. This final dewatering operating schedule will result in higher daily loads during operation. Consideration could be given during design to installing centrate equalization now instead of with future sidestream deammonification.

Table 16-5. Mainstream Treatment Impacts from Recycle Load (28.0 mgd, Design Midpoint)

Item	Unit	Value	Notes
Additional methanol	gpd	1,050	Assuming 100% of ammonia recycled to mainstream is denitrified with methanol at 3.5 lb methanol/lb-N ratio.
Additional caustic	gpd at 25wt%	740	Supplementing 35% of alkalinity deficiency for complete nitrification prior to denitrification
Additional electricity	kWh/d	2,400	From aeration for nitrification, based on a literature value of 1.2 kWh/lb-N
Additional solids to THP (from methanol)	DT/d	1.23	From use of additional methanol for denitrification

While Arlington WPCP does not currently feed supplemental alkalinity to the mainstream treatment process, supplemental alkalinity is recommended to reliably treat the new nitrogen recycle load. Additional capacity for storing and feeding supplemental alkalinity may be required. Preliminary estimates for supplemental alkalinity feed to the mainstream process include two new 12,500-gallon storage tanks for 25 percent caustic, providing an estimated 30 days of storage at 30.8 mgd plant flow, as well as feed pumps and accessories. Additional details regarding preliminary estimates for supplemental alkalinity are provided in TM No. 8: *Recycle Management and Sidestream Treatment*. Supplemental alkalinity demand and storage capacity should be evaluated further and expanded as required. This evaluation should include process modeling and evaluations of equipment and processes to confirm sufficient nitrogen removal capacity and to develop measures for improving nitrogen removal performance. The activated sludge process likely has excess aeration capacity because the blowers are sized for plant buildout flow, and aeration capacity for nitrification should be confirmed. It is expected that the liquid treatment process consultant will provide evaluation of the chemical requirements as well as optimization measures for mainstream treatment.

16.4.3 Existing Recycle Conveyance

This section describes the recycle loads from the existing solid processes and the facilities that convey them. Table 16-6 lists the design conditions for recycle flows.

Table 16-6. Existing Recycle Flows Summary (all flows in mgd)

Source	40 mgd Average	40 mgd Peak 7-day
GTO	1.40	1.60
DAFT subnatant	0.43	0.80
Centrate	0.55	0.65
Combined recycles	**2.38**	**3.05**

Source: Process Flow Diagram, Drawing G00-08, Upgrade and Expansion Phase 7B, Malcolm Pirnie, 2005.

16.4.3.1 Plant Drains

Each of the existing flows in Table 16-6 has a gravity drain into one of the influent channels. The centrate from the DWB is connected to 24-inch scrubber waste drain (SCWD) in the basement of the Biological SPB (Bio-building) where the abandoned incinerator is located. The SCWD goes between GT 2 and the SSTs into the Potomac Interceptor. The DAFT subnatant can flow from the west side of the DAFT Building through a 14-inch drain into the Four Mile Run Interceptor. A 20-inch GTO drain discharges to the influent channel into the PTB.

16.4.3.2 Recycle Interceptor Pump Station

Under normal circumstances, the existing recycle flows are not discharged into the influent sewers through the gravity drains. In the Arlington WPCP Upgrade and Expansion Phase 7B Project a Recycle Interceptor Pump Station (RIPS) was installed to pump these recycle flows around the preliminary treatment processes. The centrate and DAFT subnatant are directed through alternate gravity drains to the 20-inch GTO drain. A valve was inserted into the 20-inch GTO drain to direct all the recycle flows into the RIPS. The RIPS is an 8-foot-diameter concrete manhole with two submersible pumps. The RIPS discharge goes to the PC gallery where it can be directed to either the grit effluent channel or the primary effluent channel.

16.4.4 Modifications to Recycle Conveyance

The pumps in the RIPS are approximately 15 years old and approaching the end of their useful lives. They are not reliable and have significant maintenance costs. They also have significant operating power costs. Therefore, WPCP staff would like to replace the RIPS with gravity drains downstream of preliminary treatment and influent sampling. The centrate and DAFT subnatant could be diverted to the PCs 5–8 influent channel by installing a valve in the 24-inch SCWD just prior to the Potomac Interceptor and installing a gravity extension to the west end of the channel. The extension would have to avoid potential conflicts with the Potomac Interceptor under the access road, storm drains on the north side of the access road, and the RIPS discharge pipe.

Preliminary hydraulic calculations show that the GTO could be redirected to flow by gravity through the RIPS discharge pipe. Hydraulic calculations should be confirmed during detailed design after a pipe route is laid out. A schematic layout is shown in Figure 16-2 below.

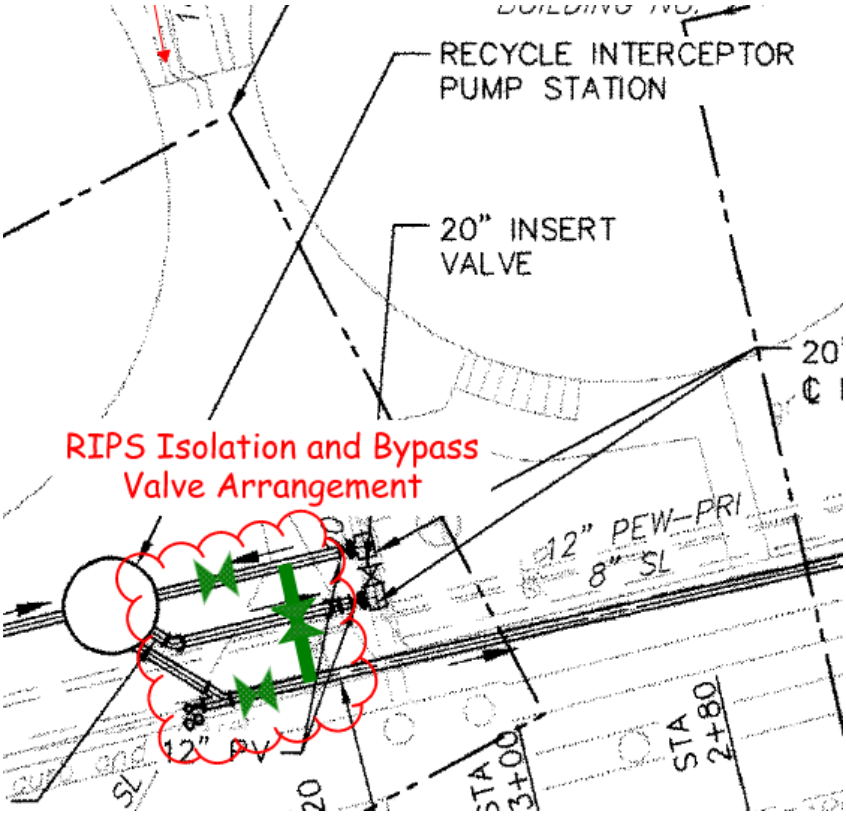

Figure 16-2. RIPS Isolation and Bypass Arrangement

The modifications to the recycle conveyance facilities also need to provide drains for the new recycle flows created by the Program—final dewatering centrate and HEX cooling water. In Option 1—renovate existing DWB, the final centrifuges would be installed on the east side of the solids process away from existing process drains. For this option, a new process drain to the PCs 5–8 influent channel would be installed. In Option 2—decommission existing DWB—the final dewatering centrate would be combined with the pre-dewatering centrate and recycled through the modified 24-inch SCWD described above.

The HEX cooling water could be used for elutriation water in the GTs. In this case, the cooling water would be recycled as GTO as described above. If cooling water is not used for elutriation, it could be recycled to the liquid treatment process through the same drain as the final dewatering centrate. All recycle streams shall be independently

monitored for flow and shall be provided with an efficient means to be individually sampled.

16.5 Sodium Hypochlorite Storage and Feed Facility

This section is limited to the sodium hypochlorite system for the existing and proposed odor control facilities on the north side of the Arlington WPCP. It does not include details of the sodium hypochlorite system on the south side of the WPCP.

16.5.1 Existing Facility

The existing sodium hypochlorite system on the north side of the WPCP for the DWB (odor control) only consists of the following:

- A delivery station located off S Eads Street
- A storage tank with approximately 10,000 gallons of capacity located in the basement of the Bio-building
- Two transfer pumps located near the 10,000-gallon storage tank
- A storage tank with a working volume of 3,300 gallons located on the ground floor of the DWB
- Metering pumps located near the 3,300-gallon tank to feed sodium hypochlorite to the odor control system adjacent to the DWB

This existing facility will be demolished because the existing odor control system it serves will be demolished as discussed in Section 15. Refer to Section 22 for temporary facilities and MOPO during construction.

16.5.2 New Facility

A new sodium hypochlorite facility is required for the new odor control system and to supplement PEW chlorination for the HEX cooling water. The new odor control facility will be located in the area of the abandoned digesters north of PCs 5–8. The new sodium hypochlorite facility will be located in a new Chemical Building next to the odor control facility.

Because of the size and demand for sodium hypochlorite, a bulk storage tank with independent delivery from south side sodium hypochlorite is recommended. Peak demands for odor control are expected to be infrequent and approximately 10 times higher than average demands. Therefore, it is recommended to size the facilities for peak 14-day storage. One storage tank with a working volume of 7,000 gallons is required. The tanks will be situated in a containment area large enough to hold the contents of one full storage tank. The delivery station will include safety features such as an eyewash/shower and a drain line to direct spills into the containment area.

17 FACILITY AND SITE PLAN

17.1 Background and Purpose

This section presents preliminary site layout options and site design considerations.

17.2 Site Layout Options

This section describes the two site layout options for the Program.

17.2.1 Options Evaluated and Site Selection

This section presents two options for the site layout based on either renovating or decommissioning the existing DWB (Options 1 and 2, respectively). These two options were developed to confirm feasibility and may not represent the final site layout developed collaboratively with the delivery team, County, and Program Manager.

For both options, equipment sizing was based on a 30.8 mgd design flow and building space was sized for future equipment required at the 40.0 mgd plant buildout condition. Design flow conditions for each process were presented in Section 3. If the existing DWB is renovated, then it will be modified for the pre-dewatering process as well as screening and steam boilers. If the DWB is decommissioned, then a new SPB will be constructed that incorporates pre-dewatering, final dewatering, screening, and steam boilers.

Key considerations for the initial development of the site layouts included the following:

- Locating pre-dewatering close to THP to minimize cake pumping distance
- Locating SSTs close to screen feed pumps and pre-dewatering centrifuge feed pumps to minimize suction piping distance
- Minimizing piping distance between other facilities
- Locating flare at least 50 feet away from the anaerobic digesters
- Providing adequate truck access to final dewatering
- Providing adequate space for digester construction
- Maintaining WPCP operations during construction by avoiding critical electrical infrastructure, construction sequencing, and/or providing temporary systems
-
- These same considerations should be carried forward for all site layouts considered by the delivery team.

17.2.1.1 Option 1: Renovate Existing Dewatering Building

The proposed site plan for Option 1—renovate existing DWB—is shown on Drawing C-004. Modifications to the existing DWB are shown on the M-300 series drawings. For this option, the existing DWB would be repurposed for pre-dewatering, solids screening and future WAS thickening. The existing DWB is not being considered for final

dewatering because the size and loadout configuration are better suited for pre-dewatering. A separate Digester Building and Final DWB would be required for this option. The new Final DWB will have a drive-through truck loadout.

The existing DWB was constructed in the 1990s. A condition assessment of the existing facilities including the DWB was conducted and is documented in TM No. 2: *Condition of Existing Facilities*. This condition assessment evaluated processes being considered for replacement as a part of the new solids handling processes and evaluated whether the existing facilities can be expected to operate for the next 5 years until the new process starts up. The evaluation determined that the existing DWB is structurally sound and could be used for future facilities. If the existing DWB is renovated it would be reconfigured as necessary to serve the new treatment processes.

The following building components would be repaired, replaced, or upgraded to renovate the DWB:

- Repair cracks in exterior brick, repointing, and sealant
- Replace all doors and windows
- Replace roof
- Replace all electrical systems
- Overhaul and replace all heating, ventilation, and air conditioning (HVAC) equipment as required for the new process configuration and to meet NFPA 820 requirements
- Complete an overall code compliance check to confirm upgrade requirements
- Structural modifications including a WAS thickening area (EL 25.00), boiler room (EL 43.00), and screening area (EL 66.00)

The following equipment would be upgraded or replaced as part of the DWB renovation:

- Replace solids feed pumps with new pre-dewatering centrifuge feed pumps
- Replace centrifuges
- Replace polymer systems
- Install new cake diverter gates and conveyors, and completely rehabilitate any conveyors and gates being reused
- Retain one existing truck bay for emergency loading of pre-dewatering cake and repurpose the other truck bay for polymer storage and feed system, screen feed pumps, and SST mixing system
- Install odor control ducting to new odor control system

The existing cake storage bins would be used to store pre-dewatered cake. These bins have a total capacity of 428 CY and would provide 29 hours of storage at 40 mgd

average conditions. The pre-dewatered cake would be pumped to THP on the east side of the DWB.

17.2.1.2 Option 2: Decommission Existing Dewatering Building

The proposed site plan for Option 2—decommission existing DWB—is shown on Drawing C-007. For this option, the existing DWB would no longer be used, and a new SPB would be constructed. The concept for the new SPB is shown on the M-350 series drawings. The new SPB would include equipment serving the SSTs, screening, pre-dewatering, final dewatering, anaerobic digester pumps, polymer systems, and steam boilers and would include provisions for future expansion to add WAS thickening equipment.

The first level of the SPB (EL 24.00) would be accessible from grade from the east side where truck loading bays are located for final dewatered cake and screenings. The second level (EL 42.00) would be accessible from grade on the west side. The digester cooling HEXs are shown on top of the south side of the SPB at this level. The third level (EL 60.00) would provide access to the top of the cake bins, and the centrifuges would be located on the fourth level (EL 74.33).

17.2.2 Facilities to Be Demolished

The overall site demolition plan is shown on Drawings C-003 and C-006. The following existing facilities would be demolished:

- SSTs including solids pumping station
- Bio-building and existing retaining wall
- Odor control system located outside the existing DWB and DWB truck bay extension
- Lime silo and associated lime handling equipment
- Remaining walls and foundation of original digesters and digester control building
- Metal storage building at the north end of the site (Butler Building)

17.2.3 Major New Facilities

Major new facilities for both site layout options would include the following:

- SSTs
- THP and THS cooling systems
- Anaerobic digesters
- Odor Control and Chemical Building
- Biogas upgrading facilities and flare
- Electrical Building

Additionally, Option 1—renovate existing DWB—would include:

- Renovated DWB with pre-dewatering, screening, and steam boilers
- Digester Building
- Final DWB

Option 2—decommission existing DWB—would include a new SPB with digester pumps, pre-dewatering, final dewatering, screening, and steam boilers.

17.2.4 Future Facilities

Future facilities include WAS thickening, FOG receiving, sidestream deammonification, and solids post-processing. This section describes the site layout implications for these future facilities. Design information for the future facilities is provided in Section 5 (Waste Activated Solids Thickening) and Section 23 (FOG, Sidestream, and Post-processing). Space must be reserved for WAS thickening, FOG receiving, and sidestream deammonification. Solids post-processing facilities must be evaluated to determine if they can fit on the site.

Mechanical WAS thickening will not initially be included, and un-thickened WAS will be combined with thickened PS prior to pre-dewatering. For both site layout options, space will be allocated for future WAS thickening should process changes be implemented at the WPCP. For Option 1—renovate existing DWB—RDTs are assumed for future WAS thickening because they have a more compact footprint than GBTs. The future RDTs in the existing DWB are shown on Drawing M-305. For Option 2—decommission existing DWB—GBTs or RDTs could be implemented in a new facility. Drawing C-007 shows the future WAS thickening location for Option 2—decommission existing DWB.

Future FOG receiving should ideally be located close to THP. For Option 2—decommission existing DWB—future FOG receiving could be configured in the location of the existing DWB truck loading bays. For Option 1—renovate existing DWB—there is limited space for FOG receiving in the vicinity of THP. FOG receiving may be configured at the north end of the site but would require close coordination with the layout of solids storage and biogas upgrading. This location would also put a source of potential odors near the roadway. For both site layout options, FOG receiving could be configured in the location of the existing DAFT Building, but this location is a long distance from THP and therefore not ideal due the length of FOG piping required. The location for future FOG receiving must evaluated and coordinated with the overall site plan.

The proposed location for the future sidestream deammonification process is south of the anaerobic digesters. The location and orientation of the system may vary between Options 1 and 2 (refer to Drawings C-004 and C-007, respectively). The sidestream

treatment location is near final dewatering to minimize the length of centrate piping between these two processes.

Post-processing could include drying and potentially an additional pyrolysis process after drying. Ideally, post-processing should be located close to final dewatering to minimize the distance for cake conveyance. For Option 2—decommission existing DWB—a dryer facility could be configured on the north side of final dewatering in the location of the existing DWB. For Option 1—renovate existing DWB—incorporating a dryer facility would require more significant changes to the conceptual site layout. Odors and dust near roadways would be key considerations for dryer facility locations.

17.2.5 Site Evaluation and Site Selection

The County will work collaboratively with the delivery team to finalize a site layout. The delivery team is not constrained to the two site layouts presented. Rather, the site considerations presented in Section 17.2.1 should be considered while evaluating whether the existing DWB should be renovated or decommissioned.

It is understood that Option 2—decommission existing DWB—presents site challenges associated with grading, utility locations, and existing structure locations. However, Option 2 also has the potential benefits of consolidated facilities, elimination of temporary operations, and greater space for future accommodations.

The site layout for Option 2 presented in the Facilities Plan drawings is shown schematically below in Figure 17-1.

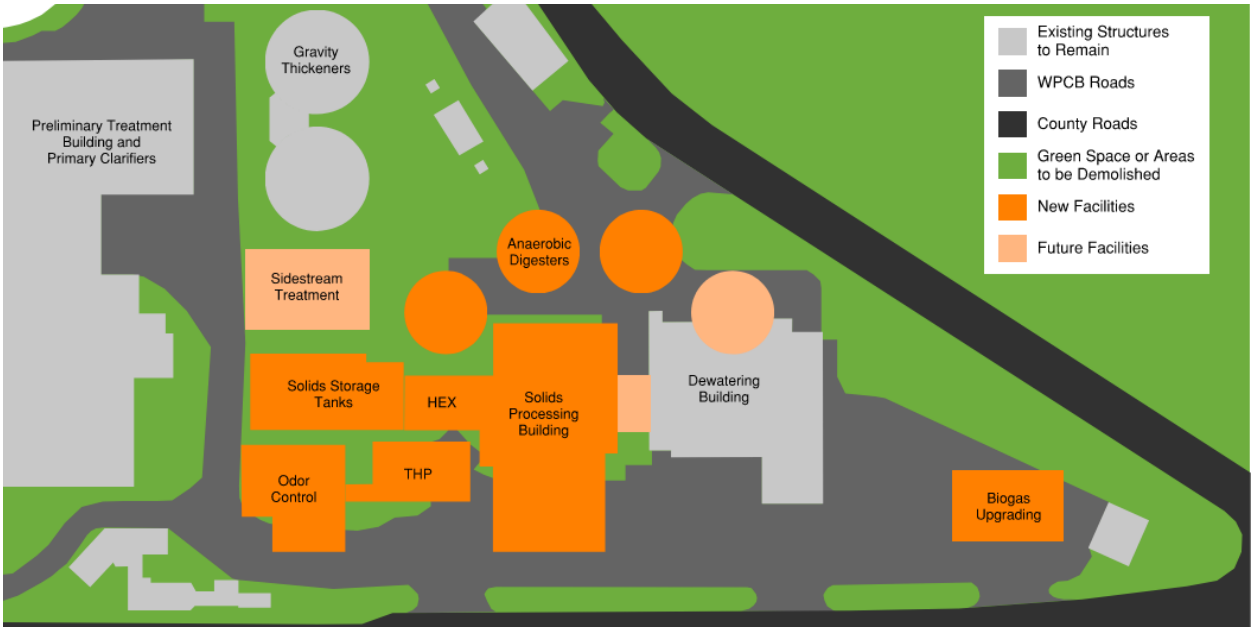

Figure 17-1. Option 2: Decommission Existing Dewatering Building as Presented in Facilities Plan

There are likely multiple permutations of this site layout that could be considered. Two alternative concepts are presented in Figure 17-2 and Figure 17-3 below.

Figure 17-2. Option 2: Decommission Existing Dewatering Building—Alternative Concept 1

Alternative Concept 1 relocates the digesters to the area of the existing Bio-building, while relocating the SPB to the south.

Figure 17-3. Option 2: Decommission Existing Dewatering Building—Alternative Concept 2

Alternative Concept 2 would relocate the digesters to the area of the old digesters and retain the SPB in the area of the existing Bio-building.

These are presented not to convey preferences but to show that alternatives will be considered should they offer benefits to the concept presented in the Facilities Plan.

17.3 Site Design Considerations

The site civil design will include drainage structures, grading, erosion control, landscaping, truck and vehicle access, utility relocations, and other appurtenances to support the proposed improvements. The civil design will be coordinated with all other deign disciplines. The Program Manager developed an existing-conditions base file using information provided by Arlington County to prepare the facilities' civil conceptual plans. A new topographic survey will be required for the design of this project to establish a site control or benchmark for construction of the improvements. No assessment of existing retaining walls on site was performed for this study as it is not anticipated that any existing retaining walls would remain.

17.3.1 Existing Conditions

The WPCP is bordered by 31st Street S on the north, S Eads Street on the east, S Glebe Road on the south, and S Fern Street on the west. The northwest portion of the

site can currently be accessed from two entrances on S Eads Street and one entrance on 31st Street S. The site is zoned P-S (Public Service District).

The WPCP site is a very congested site, with the solids handling facilities situated on the triangular northernmost part of the WPCP. The location for the new facilities is bordered on all sides by critical buried infrastructure including major electrical ductbank, the Potomac Interceptor influent to the WPCP and the influent channel, which carries all influent wastewater flow to the PTB.

Drainage patterns on site are generally from north to south toward Four Mile Run stream. The site is in Flood Hazard Zone X according to Federal Emergency Management Agency (FEMA) Flood Insurance Rate Map (FIRM) Panel 51013C0081C effective August 19, 2013. Zone X is an area of minimal flood hazard.

17.3.2 Neighborhood

As the WPCP is surrounded by residential neighborhoods, and as stated in the Section 1, the vision of this Program is to be a good neighbor within the community and maximize community acceptance.

17.3.2.1 Visuals/Aesthetic

Design considerations will be taken for the new biosolids facilities to provide a pleasant visual aesthetic to the public as they travel along 31st Street S and S Eads Street bordering the north section of the WPCP. Where feasible, process equipment will be located inside buildings, and where not feasible, screening walls will be installed to provide visual screening from large, exposed process equipment and pipe racks. New buildings will be designed to blend in with the existing treatment plan aesthetics.

New facilities at the WPCP will be designed to coordinate with the existing structures on site. Refer to Section 17 for architectural details.

17.3.2.2 Noise

Design considerations will consider noise reduction for both equipment selection and facility location and design. Rooms where noise is a concern (such as centrifuge operating floors) will have sound attenuation panels, both to reduce noise impacts to operators and to reduce any noise leaving the building envelope. Where outdoor equipment noise is a concern, such as air compressors for the THP pneumatic valve actuators, enclosures will be considered for sound attenuation.

17.3.3 Site Civil Design and Landscaping

All site plan options will require demolition of pavement and buildings to install proposed improvements. Major grading will be necessary for both options. New retaining walls will need to be constructed around Digester 2 for Option 1—renovate existing DWB—and

new retaining walls will need to be constructed between the solids storage tanks and Digester 1 and Digesters 1 and 2 for Option 2—decommission existing DWB—as shown on the drawings. Proposed water and sewer utilities will be designed to avoid conflicts with other utilities, storm drains, buildings, and walls. Depending on proximity of new structures to existing utilities, some existing utilities may need to be rerouted.

Tree replacement will be required where construction activities impact existing trees. Street trees will need to be replaced along 31st Street S according to the standards described in the Arlington County Zoning Ordinance, Article 14.2 Landscaping, where the existing entrance will be closed and landscaped.

There may be a slight increase in impervious area, but the increase is not anticipated to be at a degree that will require additional stormwater detention facilities. The proposed site design, for both options, will preserve existing drainage patterns. Stormwater management performance will meet the requirements of the Virginia Stormwater Management Act. More information about stormwater management is provided in Section 17.3.6 below.

Building setbacks from streets are required for buildings on this site. Setbacks for this P-S zoned site are 40 feet from the centerline of any street. No side or rear yard setbacks are required. The maximum height of structures according to the ordinance is 75 feet. Smokestacks and water towers may, by use permit, exceed 75 feet.

Specific parking requirements for wastewater treatment plants are not listed in the Arlington County Zoning Ordinance; however, Section 14.3.7.B of the ordinance states that by the interpretation of the zoning administrator, spaces will be provided on the same basis as required for the most similar listed use in the table provided in Section 14.3.7. This site seems to align closely with the listing for Warehouse and Freight Movement—uses consisting of manufacture, processing, assembly, storage, warehousing, wholesale. The required spaces for this use are one space per 1,000 ft^2 of floor area, or one space for each two employees, whichever is greater.

17.3.4 Traffic Management

This section presents traffic management considerations for the two site layout options considered for the project. Truck considerations were evaluated with a WB40 truck for solids loadout and a GU714 for solids screenings.

17.3.4.1 Option 1: Renovate Existing Dewatering Building

For Option 1—renovate existing DWB—there would be no change to vehicle access along 31st Street S. However, the southernmost entrance off S Eads Street (Gate 2) would be moved farther to the south to accommodate solids hauling trucking operations.

Solids hauling trucks would enter the site from the newly relocated Gate 2 entrance off S Eads Street and proceed to the drive-through Final DWB to be loaded with solids. Trucks would then exit the WPCP through the northern entrance (Gate 1) off S Eads Street entrance.

Access to the solids screenings dumpster would be from the existing 31st Street S entrance (Gate 3) to the plant. Trucks would back into the dumpster bay and load/unload the screenings dumpster then exit out of the WPCP through the 31st Street S entrance.

17.3.4.2 Option 2: Decommission Existing Dewatering Building

For Option 2—decommission existing DWB—there would be no change to vehicle access along S Eads Street. However, the Gate 3 entrance would be relocated to accommodate the construction of the new digesters. A new entrance would also be required to maintain access to the NMB.

Solids hauling trucks would enter the site from Gate 2 off S Eads Street and proceed to the easternmost drive-through SPB to be loaded with solids. Trucks would then exit the WPCP through Gate 1.

Access to the solids screenings dumpster would be from Gate 2 with the trucks driving past the SPB and backing into the dumpster bay, which is adjacent to the solids loading bay, and load/unload the screenings dumpster. The truck would then exit out of the WPCP through Gate 1.

17.3.5 Utility Relocations

The extensive demolition of existing structures and construction of new facilities will impact the utilities on the site. Utilities include different water systems, energy systems, and communications. Process-related site piping such as chemicals and process drains are discussed in Section 16. Construction sequencing and MOPO are discussed in Section 22.

The utilities on site include:

- COW
- WPCP PEW
- Storm drains
- Natural gas
- Electricity
- Communications

The two options have similar utility impacts because demolition and construction activity are concentrated in the area occupied by the existing Bio-building, SSTs, and abandoned digesters. However, there are significant differences as described below.

17.3.5.1 COW and PEW Piping

COW is supplied to the existing solids processing facilities from a 12-inch-diameter main in S Eads Street. Construction activities will not impact the street or the COW main. For both options there will be only limited modifications to the driveway in the WPCP along S Eads Street, so major piping relocations are not anticipated.

PEW is sourced from the WPCP effluent and the PEW pumps are located on the south side of the WPCP. PEW is supplied to the solids handling area of the WPCP through a 12-inch-diameter main located close to S Eads Street and a 14-inch-diameter main located between the existing GTs and SSTs. Both of these mains will remain in service for both layout options, so major piping relocations are not anticipated.

17.3.5.2 Natural Gas

NG service for the existing DWB and Biological Solids Building is provided through a 4-inch-diameter line that enters the site from 31st Street S. The existing NG meter is adjacent to the Bio-building. For Option 1—renovate existing DWB—the NG meter could be permanently relocated nearby where the NG line enters the DWB. For Option 2—decommission existing DWB—the existing DWB is designated for Digester 4 in the future. The NG meter could be permanently relocated close to 31st Street S or adjacent to the new SPB. A plan for maintaining NG service would have to be developed for this option.

Coordination with the NG utility is required to determine sufficient pressure and flow is available for the new solids process. The NG pressure and existing regulators need to be evaluated during design because the new boilers may use NG as a fuel source.

17.3.5.3 RNG

An RNG interconnect will be required with the local utility to supply RNG to the gas distribution system. This RNG interconnect will be designed and constructed by the gas utility and will contain all necessary infrastructure for injection and monitoring of RNG into the gas grid. It is anticipated that this interconnect will be located near the gas upgrading equipment at the northern tip of the site. This location is near the existing utility's existing distribution line.

17.3.5.4 Electrical and Communications

For electrical relocations, refer to Section 19, Electrical Distribution System.

17.3.6 Stormwater Management

The Arlington WPCP site generally slopes from north to south with runoff from the WPCP draining to Four Mile Run stream, which is a tributary to the Potomac River, which ultimately discharges into Chesapeake Bay. Because this project site is in the Chesapeake Bay Preservation Area, any land disturbance activities greater than or equal to 2,500 ft^2 must meet the requirements of Virginia Stormwater Management Act.

As required under this act, water quality and quantity requirements must be met for this project in compliance with Virginia Administrative Code Title 9 Agency 25 Chapter 870, Sections 65 and 66.

This site has been previously developed so this project would qualify as a redevelopment project. Based on our initial assessment of the two design options—Option 1, renovate existing DWB, and Option 2, decommission existing DWB—it was determined that the limit of disturbance (LOD) area associated with both options is approximately 3.5 acres. The LOD area for the Option 1—renovate existing DWB—is slightly greater than that for Option 2—decommission existing DWB.

In accordance with Virginia Stormwater Management Program (VSMP) Part IIB water quality criteria, preliminary evaluation using the Virginia Runoff Reduction Management (VRRM) spreadsheet was performed and it was concluded that the total phosphorus reduction requirement for this project for both options is less than 10 pounds per year (lb/yr). In accordance with Virginia Administrative Code Title 9 Agency 25 Chapter 870, Section 69, this project would be eligible for purchase of nutrient credits based on the facts that total limit of disturbance is less than 5 acres and the total required phosphorus reduction is less than 10 lb/yr, and on-site stormwater best management practices (BMPs) to meet the water quality requirements are not required and not anticipated.

In the proposed condition for both options, approximately 0.4 acre of site area will be collected and treated by the wastewater process. For both options the total area that contributes to stormwater runoff is less than the runoff in the existing condition. Therefore, on-site stormwater BMPs to manage channel protection and flood control flows are also not anticipated to comply with Virginia Administrative Code Title 9 Agency 25 Chapter 870, Section 66.

18 FACILITIES DESIGN CRITERIA

18.1 Background and Purpose

This section summarizes the general design criteria for the Program design specialties including structural, architectural, HVAC, plumbing, and fire protection. It also highlights some of the sustainable building design features that will be included in the Program to align new and renovated facilities with Arlington County's Green Building Policy.

18.2 Structural Design Criteria

18.2.1 Codes and Standards

All buildings and structures will be designed to meet or exceed the minimum requirements as required by applicable codes and standards using commonly accepted engineering methods and practices. Structural design will be in accordance with the following codes and standards:

- 2018 Virginia Uniform Statewide Building Code (VUSBC) (referencing the International Building Code [IBC], 2018) with Virginia and local amendments (hereafter called "Building Code" or "Code")
- American Society of Civil Engineers (ASCE) 7-16 "Minimum Design Loads and Associated Criteria for Buildings and Other Structures"
- American Concrete Institute (ACI) 318-14 "Building Code Requirements for Structural Concrete"
- ACI 350-20 "Code Requirements for Environmental Engineering Concrete Structures"
- ACI 350.3-06 "Seismic Design of Liquid Containing Concrete Structures"
- Aluminum Association (AA) ADM-2015, Aluminum Design Manual
- American National Standards Institute (ANSI)/American Institute for Steel Construction (AISC) 341, Seismic Provisions for Structural Steel Buildings
- ANSI/AISC 360, Specification for Structural Steel Buildings
- AISC Design Guide 27, Structural Stainless Steel
- AWWA, D110 Wire and Strand Wound Circular, Prestressed Concrete Tanks
- The Masonry Society (TMS) 402-2016, Building Code Requirements for Masonry Structures

18.2.2 Dead Load

Dead load includes the weight of all permanent or semi-permanent loads imposed on a structure. These loads include, but are not limited to, the weight of materials used for construction; walls; floors; ceilings; stairways; built-in partitions; finishes; cladding; equipment; and other architectural, mechanical, and structural components incorporated into the structure.

18.2.3 Live Loads

Live loads are forces imposed on a structure from its use or occupancy. Floor loads will be applied to buildings and structures as specified in the Building Code but typically will not be less than 100 pounds per square foot (psf). Floor and other service live loads used for design are given below:

Corridors and egress	100 psf reducible
Stairs	100 psf reducible/300 lb concentrated
Light storage	125 psf non-reducible
Heavy storage	250 psf non-reducible
Shop and maintenance	250 psf minimum
Mechanical rooms	150 psf minimum
Electrical rooms	300 psf minimum
Roof	20 psf reducible/300 lb concentrated
Guardrails/handrails	50 plf/200 lb concentrated
Bollards	6,000 lb concentrated, static
Roof load	20 psf minimum
Operating floors	250 psf minimum
Pump room floors	300 psf minimum
Stairs and grating	100 psf, unless otherwise required

Pipes less than 12 inches in diameter will be accounted for in a uniform piping load. The uniform load will be evaluated after preliminary piping layouts are known. A minimum load of 5 psf will be used. Where fire protection piping is present an additional minimum uniform load of 10 psf will be applied.

For piping 12 inches and greater in diameter, pipe racks, piping corridors, and valves produce heavier concentrated loads on pipe racks and structures supporting the pipes. Pipe racks will include an allowance for future piping as recommended by the process engineer and consideration given to any electrical equipment that may be supported therefrom. Pipe support reactions, including any thrust loads, will be calculated and structural members will be designed for the appropriate loads.

18.2.4 Process Loads

Lateral and vertical loads imposed on the structure due to static and dynamic content forces will be considered in the design of tanks, channels, and basins. The specific gravity of the content will be verified during the design phase, but typical densities for municipal sewage are as follows:

Water	62.4 pcf
Raw sewage	63 pcf
Digested solids	65–70 pcf
Dewatered solids (non-compacted)	45–50 pcf

18.2.5 Wind Loads

Wind forces will be determined in accordance with ASCE 7. Site specific parameters for wind design are as follows:

Basic wind speed, V	119 mph
Wind direction factor, Kd	0.85
Topographic factor, Kzt	1.0
Exposure	C
Gust effect factor, G	0.85
Internal pressure coefficient, GCpi	+/-0.18 enclosed, +/-0.0 open

18.2.6 Snow Loads

The code-prescribed ground snow load will be used for determination of snow loads for the roofs of buildings and other structures. Drifting snow will be considered in the design. Site-specific parameters are as follows:

Ground snow load	25 psf
Risk category	III
Importance factor	1.10

18.2.7 Seismic Loads

Seismic forces will be determined as prescribed by the VUSBC and ASCE 7. Site-specific parameters determined per the ASCE 7 Hazard Report are as follows:

Risk category	III
Soil classification	D (assumed—to be verified)
MCE 5% damped spec, acceleration, S_S	0.133 g
MCE 5% damped spec, acceleration, S_1	0.043 g
Design 5% damped spec, acceleration, S_{DS}	0.142 g
Design 5% damped spec, acceleration, S_{D1}	0.069 g
Importance factor	1.25
Seismic design category	B

18.2.8 Geotechnical

Lateral earth and groundwater pressures and coefficients will be obtained from the Program's geotechnical report. Geotechnical investigations will be coordinated and implemented during the early stages of the detailed design phase of the Program. Historical geotechnical information is available from past projects at the site. Geotechnical loads will not be used to offset other lateral loads.

Frost depth for construction will be as specified by the geotechnical report; designs will avoid damage due to soil heaving.

18.2.9 Specific Structure Considerations

Facility descriptions in this section are based on conceptual design and are subject to the delivery team's final recommendations.

18.2.9.1 Solids Processing Building (only for Option 2: Decommission Existing Dewatering Building)

The SPB is a four-story structure that will house pumps, centrifuges, truck scales, cake bins, polymer tanks, boilers, and other process mechanical and controls. Columns and floor framing located at and below the centrifuge level will be cast-in-place concrete. Columns and framing above the centrifuge core will be structural steel; lateral resistance for this uppermost area will be provided by steel bracing between columns or precast shear wall sections. The remainder of the SPB floor framing may be cast-in-place, load-bearing precast concrete or structural steel with concrete on metal deck. Walls will be precast concrete panels with thin-set brick veneer or concrete masonry

unit (CMU) with brick veneer (to be coordinated with architect). All roof framing will be metal deck placed over steel beams or joists. Auger cast piles supporting cast concrete will be used for the foundation system.

An analysis will be performed to evaluate the impact of centrifuge operation on the SPB structure. Centrifuge operating frequencies will be compared to the fundamental natural frequency of the SPB structure. The SPB structure will be designed to ensure that the structural fundamental frequency is well above the centrifuge operating frequencies to keep resonance within acceptable limits.

18.2.9.2 Solids Storage

The SST will be an at-grade cast-in-place reinforced concrete structure and will be divided into four compartments. The walls will bear upon a base slab, which will be supported on auger cast piles. A cast-in-place reinforced concrete or precast concrete roof will be used to cover the tanks. Aluminum access hatches will be provided at each compartment. An aluminum stair system will be used to provide access to the top of the tanks. The perimeter of the structure deck will be protected with a guardrail system.

18.2.9.3 Digesters

Digester walls will be constructed of prestressed concrete. The digester base will be a cast-in-pace reinforced concrete slab supported on auger-cast piles. The digesters will have fixed roofs constructed of concrete. Design will meet or exceed the requirements of ACI 350, AWWA D110 Type II, and other applicable code requirements.

18.2.9.4 Digester Building (only for Option 1: Renovate Existing Dewatering Building)

The Digester Building will be constructed using load-bearing reinforced CMU with a brick exterior. Retaining walls will be cast-in-place concrete. Roof framing will use precast prestressed double tees or hollow-core planks. The building will be founded on a shallow foundation system. As an alternative to CMU, load-bearing precast concrete wall panels with a thin-set brick veneer may be used.

18.2.9.5 Odor Control

Odor control equipment, fans, piping, and ductwork will be placed on a slab-on-grade. A containment curb will be placed around the perimeter of the slab. The top of the slab will be sloped to provide drainage.

18.2.9.6 Final Dewatering Building (only for Option 1: Renovate Existing Dewatering Building)

The Final DWB will be a three-story structure. The lower floor is at grade and will house polymer tanks and a truck loading scale, and will provide support for the cake bins. The second floor will house mechanical and support systems. Centrifuges and the electrical

and control rooms will be located on the third floor. A reinforced concrete frame will be used at and below the centrifuge level; the balance of the Final DWB may be cast concrete, precast or steel framed. Framing located above the third floor will be either cast-in-place concrete or braced structural steel. Roof framing will be structural steel with a metal roof deck over steel beams or bar joists. Auger cast piles will be used to support the complete foundation system.

18.2.9.7 Thermal Hydrolysis Process

THP equipment and piping will be placed on a reinforced concrete slab-on-grade. A containment curb will be placed around the perimeter of the slab. The top of the slab will be sloped to provide drainage.

18.2.9.8 Electrical Building

The Electrical Building will be constructed using load-bearing reinforced CMU with a brick exterior. Roof framing will use precast prestressed concrete hollow-core planks. The building will be founded on a slab-on-grade shallow foundation system. As an alternative to CMU, load-bearing precast concrete wall panels with a thin-set brick veneer may be used.

18.2.9.9 Chemical Building

The Chemical Building will be constructed using load-bearing reinforced CMU with a brick exterior. Roof framing will use precast prestressed concrete double tees or hollow-core planks. The building will be founded on a slab-on-grade shallow foundation system. As an alternative to CMU, load-bearing precast concrete wall panels with a thin-set brick veneer may be used.

18.2.10 Materials of Construction

Minimum design strength and specification requirements are as follows:

Cast-in-place concrete, f'c	4,000 psi
Cast-in-place concrete (water retaining), f'c	4,500 psi
Precast or prestressed concrete, f'c	5,000 psi
Reinforcing steel, Fy	60,000 psi
Structural steel, Fy	50,000 psi
Structural aluminum alloy	6061-T6
Bolts for aluminum structures	ASTM F593/594 (stainless Type 304)
Concrete masonry, f'm	2,000 psi
Stainless steel, Fy	30,000 psi
Concrete	
Aggregate	ASTM C33
Cement (blended)	Type I/II (or IL-10) Portland cement
Target content (including SCM)	517 lb/yd (4,000 psi) 564 lb/yd (4,500 psi)
Max. w.c.	0.40 typical for water-retaining concrete
Air content	4%–7% typical 1%–3% troweled indoor slabs
Concrete reinforcing	ASTM A615 deformed bar, 60,000 psi
Masonry	
Compressive strength of masonry (f'm)	2,000 psi
Masonry reinforcing	ASTM A615 deformed bar, 60,000 psi
Structural Steel	
Angle, plate, channel, bar	ASTM A36, 36,000 psi
Wide flange	ASTM A992, 50,000 psi
Rectangular and square HSS	ASTM A500, 46,000 psi
Round HSS	ASTM A500, 46,000 psi
Pipe	ASTM A53, 35,000 psi
Bolts	ASTM F3125, galvanized per ASTM A153

18.2.11 Material Usage

Materials used for the construction of specific items will be as stated below:

- Guardrails, handrails and hatches: aluminum
- Channel covers: aluminum
- Grating: serrated or “I” bar, aluminum
- Exterior pipe/utility supports and structures: aluminum or galvanized steel
- Interior pipe supports: galvanized steel
- Stairs, exterior: all aluminum, non-slip
- Stairs, interior: aluminum, galvanized steel or concrete, non-slip
- Stair Treads: same material as stringer
- Bollards: galvanized steel and painted
- Metal decking: galvanized and painted
- Anchor bolts: stainless steel Type 304 typical unless noted otherwise; stainless steel Type 316 for submerged conditions; galvanized steel for dry interior locations

18.2.12 Foundations

Before foundations are designed, a subsurface investigation will be made to confirm foundation requirements and establish the geotechnical design criteria.

18.2.13 Modifications to Existing Structures

Existing buildings or structures that require modifications or partial demolition will be analyzed to confirm that the structure is stable and safe to support the applied loads and forces. Analysis should include the stability of the structure, both as work progresses and for the completed structure.

18.3 Architectural Design Criteria

18.3.1 Design Options

The delivery team will evaluate options for the program facilities as listed below:

1. New SPB
2. Chemical Building
3. Electrical Building
4. Renovation of the existing DWB
5. New Final DWB
6. New Digester Building

The architectural considerations will include:

1. Safety
2. Life cycle and cost
3. Building design materials and finishes
4. Operator spaces

Sustainability is also a consideration and is discussed further in Section 18.7 below.

18.3.2 Safety

All building structures will be designed to meet or exceed the minimum construction and life-safety requirements as required by applicable codes and criteria. Appropriate access and egress provisions will be maintained, and emergency lighting, alarms, and signage will be provided in equipment rooms in compliance with all applicable fire and life-safety codes and per process design criteria.

Appropriate definition of all life-safety provisions will be provided on the Drawings in accordance with local jurisdictional authority. This definition will include preparation of a Life Safety Analysis Plan and code compliance summary for each building floor area. Table 18-1 includes various codes and standards to govern the design of the facility. (See Section 18.6 for additional in-depth, life-safety and fire protection requirements.)

Table 18-1. Building Codes and Standards

Criterion	Code
Building safety	2018 Virginia Construction Code (VUSBC)
Existing building safety	2018 Virginia Existing Building Code
Building fire safety	2018 Virginia Statewide Fire Prevention Code
Building energy compliance	2018 Virginia Energy Code or ASHRAE 90.1
Building fixture count compliance	2018 Virginia Plumbing Code
Equipment safety	OSHA 1910 General Industry
Standard for wastewater plants	NFPA 820
Accessibility standards	2010 ADA Standards (as applicable)
Sustainability goals	Envision Rating System
Sustainability goals	Arlington Facility Sustainability Policy
Local context requirements	Arlington Zoning Ordinance

ADA = Americans with Disabilities Act; ASHRAE = American Society of Heating, Refrigerating and Air Conditioning; NFPA = National Fire Protection Association; OSHA = Occupational Safety and Health Administration.

18.3.3 Life-Cycle

The design life of the building structures will be 50 years. Surfaces exposed to view will have an aesthetic service life of 20 years, covering color fade, crazing, and delamination of applied coatings. Roof coverings will be specified to provide a minimum 20-year weathertightness warranty.

18.3.4 Building Design Materials and Finishes

Design documents will be submitted that include material elevation studies and three-dimensional (3D) renderings for owner approval and fit the allotted construction budget. The 3D renderings will include model walk-through and context imagery to evaluate how the new buildings fit contextually with adjacent buildings. Schedules of doors, finishes, windows, and other criteria will also be submitted during design submissions for owner approval and evaluated based on cost. Table 18-2 and Table 18-3 include recommended building materials and finishes that are to be considered in the design.

Table 18-2. Building Exterior Envelope Systems

Criterion	Roof System	Wall System	Doors/Frames	Natural Light
Type	PVC	CMU or precast with brick veneer	Aluminum (hollow metal at rated walls)	Translucent wall panels
Finish/color	Membrane/white	Integral color	PVDF/TBD	Factory/white
Maintenance	Biannual inspection	Clean annually	Clean annually	Clean annually
Life span	20–30 years	30–50 years	20–40 years	20–40 years
Benefits	Common aesthetic	Durable/low cost	Corrosive resistant	Corrosive resistant
Notes	Requires insulation	Requires insulation	Requires insulation	Maximizes natural light

PVC = polyvinyl chloride; PVDF = polyvinylidene fluoride coating; SBS = styrene-butadiene-styrene; TBD = to be determined.

Table 18-3. Building Interior Finishes

Criterion	Floor	Wall	Doors/Frames	Ceiling
Type	Concrete Non-skid or non-skid coated	CMU or precast concrete	Aluminum	None/ACT/gypsum verify
Finish/color	Sealed/HPIC	Paint/TBD	Anodized/clear	Factory finish/ painted
Maintenance	None	None	None	Clean annually
Life span	50–100 years	30–50 years	20–40 years	20–40 years
Benefits	Durable/low cost	Durable/low cost	Corrosive resistant	Durable/low cost

ACT = acoustical ceiling tile; CMU = concrete masonry unit; HPIC = high-performance industrial coating; TBD = to be determined.

18.3.4.1 Exterior Wall System

Exterior wall systems are recommended to be CMU backup with brick veneer that is compatible with the existing façades within the WPCP campus. As an option, precast walls with thin-set brick may be considered. The walls are to be insulated to meet local Energy Code requirements and/or Envision sustainability goals.

18.3.4.2 Interior Walls and Partitions

Interior wall systems are recommended to be CMU with a durable finish that prolongs the life of the wall and has low maintenance requirements. Examples of acceptable finishes include coatings or tile finishes.

18.3.4.3 Doors and Hardware

Pedestrian doors will be a minimum 7 feet high and 3 feet wide, except for special-purpose doors where an increased size may be appropriate. Door openings and hardware in accessible areas will be configured and specified to satisfy Americans with Disabilities Act (ADA) standards (if applicable). Door sizes will be of adequate size to accommodate installation and removal of equipment and other items. Monorail doors will also be provided if required.

Door hardware will be compatible with the existing WPCP keying system. Door hardware security will be coordinated with the security system of the existing WPCP.

18.3.4.4 Windows

Exterior windows are recommended to be fiberglass translucent wall panels that have dual capacity to be used as removable openings to allow for the installation or removal of large process equipment. Standard windows will also be considered.

18.3.4.5 Roofing and Rainwater Conveyance

The minimum roof slope for nominally flat roofs will be ¼ inch per foot. Roof crickets will be a minimum of ½ inch per foot. Roofing is recommended to be a low-VOC PVC membrane system, but other systems such as styrene-butadiene-styrene (SBS) or modified bitumen will be considered. Insulation will be furnished to meet applicable Energy Code or Envision rating system guidelines. Roofing attachments will satisfy local wind loading requirements.

Internal primary roof drains and secondary roof drains are recommended means to convey water from the roof structure and into the underground stormwater drain system. Downspouts and gutters are NOT recommended as conveyance of surface drainage of stormwater may not be feasible for the site.

18.3.4.6 Painting and Protective Coatings

Detailed coating systems and finishes will be provided by the design team that are appropriate for WWTPs. Painting, protective coatings, and high-performance industrial coatings will be applied. It is recommended that the design team use the expertise of a National Association of Corrosion Engineers (NACE) Level 3 certified coatings expert to define the extent of the coating systems and applications. Design specifications and drawings will be provided that identify coating locations in various environments, including corrosive areas.

18.3.4.7 Vertical Circulation

Roof access will be a full IBC-compliant egress stair. All stairways will satisfy IBC requirements.

18.3.4.8 Architectural Screenings

Equipment screen walls will be provided to obscure exterior some process equipment from public view, as determined by the County and delivery team through design. Screen walls are recommended to limit visibility by at least 50 percent. Screen walls will be designed to allow removal of process equipment via removable panel. Screen walls will also be used as an architectural aesthetic to fit contextually within the adjacent properties.

18.3.5 Operator Spaces

Design documents will be submitted that include the layout of control rooms, restrooms, break rooms, laboratory and sample labs, and other user-oriented spaces as required. The designers will work with the County and Program Manager to develop the space adjacencies, locations, and details. Specific space needs include the following:

- Control room (in renovated DWB or SPB): sufficient for controlling plant-wide operations, redundant to the control room in the Operations and Control Building
- Separate break room from control room
- Bathroom and laboratory space
- Operations storage space (1,000 ft^2)
- Maintenance storage and working space (1,200 ft^2)

18.3.5.1 Design Goals

The operator spaces will have access to natural light and interior views to process equipment as needed. Sound attenuation will be included as needed to allow workers to work within these areas without being required to wear hearing protection. The sizes of these rooms will be approved by County staff but will accommodate at least four people. The finishes in these rooms will match other portions of the facilities as listed in the interior finishes section of this section. A specialist laboratory designer will be included in the project team for the layout of laboratory cabinets, hoods, and other specialized equipment.

18.4 Heating, Ventilation, and Air Conditioning

18.4.1 Codes and Standards

The following list of codes and standards will be followed in the design:

- Virginia Construction Code (VCC)
- Virginia Mechanical Code (VMC)

- Virginia Fuel Gas Code (VFGC)
- Virginia Energy Conservation Code (VECC)
- National Fire Protection Association (NFPA):
  - NFPA 90A: Standard for the Installation of Air-Conditioning and Ventilation Systems
  - NFPA 90B: Standard for the Installation of Warm-Air Heating and Air-Conditioning Systems
  - NFPA 91: Standard for Exhaust Systems for Air Conveying of Vapors, Gases, Mists, and Particulate Solids
  - NFPA 820: Standard for Fire Protection in Wastewater Treatment and Collection Facilities
- American Society for Testing and Materials (ASTM)
- Steel Structures Painting Council (SSPC)
- American National Standards Institute (ANSI)
- Sheet Metal and Air Conditioning Contractors National Association (SMACNA)
- American Society of Heating, Refrigerating, and Air-Conditioning Engineers (ASHRAE)
- Underwriters Laboratories, Inc. (UL)

18.4.2 HVAC Design Criteria

Outdoor air HVAC design conditions will be as follows (Ronald Reagan Washington National Airport, Virginia, United States, World Meteorological Organization [WMO]: 724050):

- Summer: 94.7°F dry bulb/75.5 F wet bulb
- Winter: 17.9°F dry bulb

HVAC design criteria will generally be as follows:

- Occupied spaces: 70°F winter, 75°F summer and 50 percent relative humidity (RH)
  - Split-system heat pumps
  - Manufacturer preference: Trane
- Electrical and control rooms: 55°F winter, 75°F summer and 50 percent RH
  - Positive pressurization units (PPUs)
  - Split-system heat pumps
  - Manufacturer preference: Trane
- Process areas: 55°F winter, 10°F above ambient summer temperature

- Mechanical rooms: 55°F winter, 10°F above ambient summer temperature
- Required controls: Siemens

18.4.3 HVAC Systems

The approach to heating all facilities will be evaluated by the delivery team, taking into account the operability, maintenance, controls, and sustainability goals of the Program. The delivery team will evaluate the feasibility of heating by connecting to the process steam boiler plant, installing a standalone hydronic boiler plant, using NG-fired equipment, and using equipment with electric heat. The delivery team will evaluate the feasibility of cooling using RNG/NG adsorption/absorption chillers and direct expansion (DX) split systems. The chillers require chilled water piping to cooling coils serving electrical and control room. All HVAC system evaluations shall take into account the County Board Guidance for the Fiscal Year 2023–2032 Capital Improvement Plan, noting that the County's default policy is to use high-efficiency electric heating where use of such systems is feasible.

NFPA 820 identifies process areas within WWTPs and lists the National Electrical Code (NEC) classification, minimum ventilation requirements, required materials of construction, and fire protection measures that must be incorporated. Table 18-4 below summarizes the areas in Option 1—renovate existing DWB—and the areas in Option 2—decommission existing DWB—and identifies the NFPA 820 ventilation requirements for each of the options.

Differential air pressures between unclassified spaces/ambient and classified spaced/ambient will be provided as required. All ventilation supply fans and exhaust fans will be monitored for fan failure and provided with alarms. All continuous ventilation systems that are used to reduce the classification of a space will be fitted with visual and audible alarm signaling systems within the process space and at the entrances to the process space.

18.4.3.1 Option 1: Renovate Existing Dewatering Building

NG-fired hydronic boilers are currently installed in the existing DWB for building heat. The boilers provide heating hot water for the makeup air units and unit heaters throughout the process spaces. The existing makeup air units, unit heaters, boilers, pumps, piping, controls, and all related accessories will be removed.

If a standalone plant is installed, the plant location is anticipated to be in either the mechanical room or HVAC room. New makeup air units, unit heaters, and piping will be installed. The existing exhaust fans will be removed and replaced with new exhaust fans. All new equipment will be sized and configured according to the proposed process ventilation requirements for declassifying the electrical hazard per NFPA 820.

Process spaces in the Final DWB and Digester Building will have ventilation air supplied by makeup air units located inside the building. Exhaust air will be pulled from the process spaces by inline, wall-mounted, or roof-mounted exhaust fans. Supplemental heat will be provided by unit heaters as required. Explosion-proof heaters will be provided for hazardous locations.

Acid and caustic storage rooms will be ventilated with a dedicated exhaust system. Chemicals will be evaluated, and spark-resistant fan construction and explosion-proof motors will be provided as required. Unit heaters will be provided for freeze protection.

Mechanical rooms will be ventilated for temperature control as required to maintain 10°F above ambient. Unit heaters will be provided for freeze protection.

Occupied spaces, such as break rooms and occupied control rooms, throughout all buildings will be provided with DX split-system heat pump units. Heat pumps will be mounted outside the building and indoor units will be mounted within the associated space. Ventilation air will be provided to the spaces as required.

Electrical control rooms throughout all buildings will be provided with DX split-system heat pump units. The heat pumps will be mounted outside the building and indoor units will be mounted within the associated space. The heat pumps will be provided with low ambient capability to provide cooling at low outdoor temperatures. PPU will be provided for the electrical and control rooms. Outdoor air that has passed through dual-media filters within the PPU will be supplied to the space to maintain a positive pressure in the electrical room relative to the exterior. Existing computer room air conditioning (CRAC) units may be reused to serve electrical and control rooms contingent upon the condition, capacity, and life expectancy of the equipment.

The HVAC equipment throughout all buildings will be controlled by local temperature control panels. Each control panel will be equipped with HOA switches, controls, temperature sensors, indicating lights, flow pressure switches, and alarms as required. The smoke detector signals from the temperature control panel will be connected to the fire alarm control panel. Hazardous gas detection from the PCS will be connected to the temperature control panel. Other signals, such as space temperatures or fan status, from the temperature control panel will be connected to the PCS as required for monitoring.

18.4.3.2 Option 2: Decommission Existing Dewatering Building

Process spaces in the new SPB will have ventilation air supplied by makeup air units located inside the SPB or on the roof. Exhaust air will be pulled from the process spaces by inline, wall-mounted, or roof-mounted exhaust fans. Supplemental heat will be provided by unit heaters as required. Spark-resistant fan construction and explosion-proof heaters will be provided as required. All ventilation equipment will be sized and

configured according to the proposed process ventilation requirements for declassifying the electrical hazard per NFPA 820.

Mechanical rooms will be ventilated for temperature control as required to maintain 10°F above ambient. Unit heaters will be provided for freeze protection.

Occupied spaces, such as break rooms, will be provided with DX split-system heat pump units. Heat pumps will be mounted outside the SPB and indoor units will be mounted within the associated space. Ventilation air will be provided to the spaces as required.

Electrical and control rooms will be provided with DX split-system heat pump units. The heat pumps will be mounted outside the SPB and indoor units will be mounted within the associated space. The heat pumps will be provided with low ambient capability to provide cooling at low outdoor temperatures. PPUs will be provided for the electrical and control rooms. Outdoor air that has passed through dual-media filters in the PPU will be supplied to the space to maintain a positive pressure in the electrical room relative to the exterior.

The HVAC equipment throughout the SPB will be controlled by local temperature control panels. Each control panel will be equipped with HOA switches, controls, temperature sensors, indicating lights, flow pressure switches, and alarms as required. The smoke detector signals from the temperature control panel will be connected to the fire alarm control panel. Hazardous gas detection from the PCS will be connected to the temperature control panel. Other signals, such as space temperatures or fan status, from the temperature control panel will be connected to the PCS as required for monitoring.

18.5 Plumbing Design Criteria

18.5.1 Codes and Standards

The following list of codes and standards will be followed in the design:

- VCC
- Virginia Plumbing Code (VPC)
- VECC
- ASTM
- ANSI
- AWWA
- UL
- American Society of Plumbing Engineers (ASPE) Plumbing Engineering Handbook

18.5.2 Plumbing Fixtures

Emergency shower and eyewashes with tepid water per ANSI Z358.1 will be provided as required. Emergency stations will be provided with flow switches that will be tied into the PCS. Floor drains will be located throughout the SPB. Floor drains will be equipped with trap seal devices. Hose bibs will be located around the perimeter of the SPB and as required in the SPB.

18.5.3 Domestic Water

Domestic cold water and domestic hot water will be provided to each plumbing fixture as required.

The source of the SPB domestic hot water will be an NG water heater with storage tank. A domestic hot water recirculation pump and domestic hot water return will be provided to ensure that hot water is readily available at remote fixtures. The source of the tepid water for emergency fixtures will be an electric instantaneous water heater.

Potable water will be used for WPCP service water for all parts of the project. Water for domestic use and water for process use will each use an independent backflow prevention device.

18.5.4 Drainage System

A gravity flow sanitary system will be installed per local and state codes and regulations. Roof drains and secondary roof drains and associated rain leaders will channel water from the roof to the stormwater system.

18.6 Fire Protection Systems

18.6.1 Codes and Standards

The following list of codes and standards will be followed in the design:

- VCC
- Virginia Statewide Fire Prevention Code (VSFPC)
- NFPA
    - NFPA 820, 2020 Edition: Standard for Fire Protection in Wastewater Treatment and Collection Facilities
    - NFPA 72, 2019 Edition: National Fire Alarm and Signaling Code
    - NFPA 10, 2022 Edition: Standard for Portable Fire Extinguishers

Table 18-4. NFPA 820 Process Classification and Requirements

Area	Extent of Classification	NEC Classification	Required Ventilation	Required Materials of Construction	Required Fire Protection Measures	NFPA Reference
Solids Storage Tanks						
SSTs	Area under cover	Class I, Division 1	Not ventilated, or ventilated at less than 6 ACH	Non-combustible	Hydrants, portable fire extinguishers, and fire alarm system. Assume permanently installed combustible gas detection system would not be required because this area will be defined as a permitted confined space. Portable gas detection equipment would be required by the confined-space entry permit.	NFPA 820, Table 6.2.2(a), Row 11, Line a
SSTs	Area above cover. Envelope 18 inches above water surface 10 feet horizontally from wetted walls.	Class I, Division 2	Not required (open to atmosphere)	Non-combustible, limited-combustible, or low flame spread materials.	Not enclosed within the structure, no fire protection measures required.	NFPA 820, Table 6.2.2(a), Row 11, Line c
Renovated Dewatering Building (only for Option 1: Renovate Existing Dewatering Building)						
Screenings dumpster bay	Entire room	Unclassified	Not required	Non-combustible, limited-combustible, or low flame spread materials	Hydrants and fire extinguishers, and fire alarm	NFPA 820, Table 6.2.2(a), Row 1
Centrifuge feed pumps	Entire dry well	Unclassified	Continuously at 6 ACH	Non-combustible, limited-combustible, or low flame spread materials	Hydrants and fire extinguishers	NFPA 820, Table 6.2.2(a), Row 9, Line b
Future thickening room	Entire room	Unclassified	Continuously at 6 ACH	Non-combustible, limited-combustible, or low flame spread materials	Hydrants and fire extinguishers	NFPA 820, Table 6.2.2(a), Row 12, Line a

Area	Extent of Classification	NEC Classification	Required Ventilation	Required Materials of Construction	Required Fire Protection Measures	NFPA Reference
Truck bay/truck loading	Entire area	Unclassified	Continuously at 6 ACH	Non-combustible, limited-combustible, or low flame spread materials	Hydrants, fire extinguishers, and fire alarm systems	NFPA 820, Table 6.2.2(a), Row 13, Line a
Screen feed pump and polymer room	Entire dry well	Unclassified	Continuously at 6 ACH	Non-combustible, limited-combustible, or low flame spread materials	Hydrants and fire extinguishers	NFPA 820, Table 6.2.2(a), Row 9, Line b
Pre-dewatered cake storage hoppers	Entire area	Unclassified	Continuously at 6 ACH	Non-combustible, limited-combustible, or low flame spread materials	Hydrants, fire extinguishers, and fire alarm systems	NFPA 820, Table 6.2.2(a), Row 13, Line a
Solids screening room	Entire area	Unclassified	Continuously at 6 ACH	Non-combustible, limited-combustible, or low flame spread materials	Hydrants and fire extinguishers	NFPA 820, Table 6.2.2(a), Row 9, Line b
THP feed pump room	Entire area	Unclassified	Continuously at 6 ACH	Non-combustible, limited-combustible, or low flame spread materials	Hydrants and fire extinguishers	NFPA 820, Table 6.2.2(a), Row 9, Line b
Centrifuge room	Entire area	Unclassified	Continuously at 6 ACH	Non-combustible, limited-combustible, or low flame spread materials	Hydrants, fire extinguishers, and fire alarm systems	NFPA 820, Table 6.2.2(a), Row 12, Line a
Centrifuge control	NFPA 820 not applicable; design will comply with VCC					
Lab sample	NFPA 820 not applicable; design will comply with VCC					
Tool room, compressor room	NFPA 820 not applicable; design will comply with VCC					
Boiler room, mechanical room, HVAC room	NFPA 820 not applicable; design will comply with VCC					
Electrical room, switchgear room, MCC room	NFPA 820 not applicable; design will comply with VCC					

Area	Extent of Classification	NEC Classification	Required Ventilation	Required Materials of Construction	Required Fire Protection Measures	NFPA Reference
Stairwells, bathrooms, corridors, janitor closet	NFPA 820 not applicable; design will comply with VCC					
Solids Processing Building (only for Option 2: Decommission Existing Dewatering Building)						
Pump room	Entire dry well	Unclassified	Continuously at 6 ACH	Non-combustible, limited-combustible, or low flame spread materials	Hydrants and fire extinguishers	NFPA 820, Table 6.2.2(a), Row 9, Line b
Truck loading area	Entire area	Unclassified	Continuously at 6 ACH	Non-combustible, limited-combustible, or low flame spread materials	Hydrants, fire extinguishers, and fire alarm systems	NFPA 820, Table 6.2.2(a), Row 13, Line a
Screenings dumpster bay	Entire room	Unclassified	Not required	Non-combustible, limited-combustible, or low flame spread materials	Hydrants and fire extinguishers, and fire alarm	NFPA 820, Table 6.2.2(a), Row 1
Solids screening room	Entire area	Unclassified	Continuously at 6 ACH	Non-combustible, limited-combustible, or low flame spread materials	Hydrants and fire extinguishers	NFPA 820, Table 6.2.2(a), Row 9, Line b
Pre-dewatered cake storage bins	Entire area	Unclassified	Continuously at 6 ACH	Non-combustible, limited-combustible, or low flame spread materials	Hydrants, fire extinguishers, and fire alarm systems	NFPA 820, Table 6.2.2(a), Row 13, Line a
Pre-dewatering room	Entire area	Unclassified	Continuously at 6 ACH	Non-combustible, limited-combustible, or low flame spread materials	Hydrants, fire extinguishers, and fire alarm systems	NFPA 820, Table 6.2.2(a), Row 12, Line a
Final dewatering room	Entire Area	Unclassified	Continuously at 6 ACH	Non-combustible, limited-combustible, or low flame spread materials	Hydrants, fire extinguishers, and fire alarm systems	NFPA 820, Table 6.2.2(a), Row 12, Line a
Break room	NFPA 820 not applicable; design will comply with VCC					
Lab	NFPA 820 not applicable; design will comply with VCC					
Boiler room	NFPA 820 not applicable; design will comply with VCC					

Area	Extent of Classification	NEC Classification	Required Ventilation	Required Materials of Construction	Required Fire Protection Measures	NFPA Reference
Mechanical room	NFPA 820 not applicable; design will comply with VCC					
Electrical room, control room	NFPA 820 not applicable; design will comply with VCC					
Stairwells, bathrooms, corridors	NFPA 820 not applicable; design will comply with VCC					
THP and Cooling Area						
THP	Entire area	Unclassified	Not required (open to atmosphere)	Non-combustible, limited-combustible, or low flame spread materials	Hydrant and fire extinguishers	NFPA 820, Table 6.2.2(a), Row 15
THS cooling area	Entire area	Unclassified	Not required (open to atmosphere)	Non-combustible, limited-combustible, or low flame spread materials	Hydrant and fire extinguishers	NFPA 820, Table 6.2.2(a), Row 15
Digester Building (only for Option 1: Renovate Existing Dewatering Building)						
Digester pump room	Entire area	Unclassified	Continuously at 6 ACH	Non-combustible, limited-combustible, or low flame spread materials	Hydrants and fire extinguishers	NFPA 820, Table 6.2.2(a), Row 9, Line b
Digesters						
Digesters	Tank interior, envelope 10 ft above cover and 5 ft from any wall	Class 1, Division 1	Not enclosed, open to atmosphere	Non-combustible	Hydrants and fire extinguishers	NFPA 820, Table 6.2.2(a), Row 16, Line a
	15 ft above Division 1 area over cover and 5 ft beyond	Class 1, Division 2	Not enclosed, open to atmosphere	Non-combustible	Hydrants and fire extinguishers	NFPA 820, Table 6.2.2(a), Row 16, Line b

Area	Extent of Classification	NEC Classification	Required Ventilation	Required Materials of Construction	Required Fire Protection Measures	NFPA Reference
	Division 1 area around tank walls					
Electrical	NFPA 820 not applicable; design will comply with VCC					
Final Dewatering Building (only for Option 1: Renovate Existing Dewatering Building)						
Truck loading	Entire Area	Unclassified	Continuously at 6 ACH	Non-combustible, limited-combustible, or low flame spread materials	Hydrants, fire extinguishers, and fire alarm systems	NFPA 820, Table 6.2.2(a), Row 13, Line a
Polymer room						
Final dewatered cake storage hoppers	Entire area	Unclassified	Continuously at 6 ACH	Non-combustible, limited-combustible, or low flame spread materials	Hydrants, fire extinguishers, and fire alarm systems	NFPA 820, Table 6.2.2(a), Row 13, Line a
Centrifuge room	Entire area	Unclassified	Continuously at 6 ACH	Non-combustible, limited-combustible, or low flame spread materials	Hydrants, fire extinguishers, and fire alarm systems	NFPA 820, Table 6.2.2(a), Row 12, Line a
Mechanical room	NFPA 820 not applicable; design will comply with VCC					
Electrical room, control room	NFPA 820 not applicable; design will comply with VCC					
Stairwells, bathrooms, corridors	NFPA 820 not applicable; design will comply with VCC					
Gas Handling						
Gas upgrading equipment	Within 10 ft envelope of all fixtures, appurtenances, and housing	Class 1, Division 1	Not enclosed, open to the atmosphere	Non-combustible	Not required	NFPA 820, Table 6.2.2(a), Row 20, Line a

Area	Extent of Classification	NEC Classification	Required Ventilation	Required Materials of Construction	Required Fire Protection Measures	NFPA Reference
	15 ft above Division 1 envelope and 5 ft on all sides	Class 1, Division 2	Not enclosed, open to the atmosphere	Non-combustible	Not required	NFPA 820, Table 6.2.2(a), Row 20, Line b
Flare	Within 10 ft envelope of all fixtures, appurtenances, and housing	Class 1, Division 1	Not enclosed, open to the atmosphere	Non-combustible	Not required	NFPA 820, Table 6.2.2(a), Row 20, Line a
	15 ft above Division 1 envelope and 5 ft on all sides	Class 1, Division 2	Not enclosed, open to the atmosphere	Non-combustible	Not required	NFPA 820, Table 6.2.2(a), Row 20, Line b
Odor Control						
Odor control	Areas within 3 feet of fans, dampers, flanges, vessels, etc.	Class 1, Division 2	Not enclosed, open to the atmosphere	Non-combustible, limited-combustible, or low flame spread materials	Fire extinguishers	NFPA 820, Table 4.2.2, Row 18, Line d
Odor control	Areas beyond 3 feet	Unclassified	Not enclosed, open to the atmosphere	Non-combustible, limited-combustible, or low flame spread materials	Fire extinguishers	NFPA 820, Table 4.2.2, Row 18, Line e
Chemical Building						
Chemical storage and feed room	NFPA 820 not applicable; design will comply with VCC					
Electrical Building						
MCC room	NFPA 820 not applicable; design will comply with VCC					

18.6.2 Building Height and Area

Building area limitations will be in accordance with VCC Section 506. Building height will be in accordance with VCC Section 504. Mechanical mezzanines, equipment platforms, and elevated equipment will be in accordance with VCC Section 505. Buildings designed to house special industrial processes will be exempt from the sections above in accordance with VCC Section 503.1.1.

Federal Aviation Administration (FAA) notification and coordination will be the responsibility of the design-build (DB) entity pursuant to FAA regulation, Title 14, Part 77 (link). For additional information, refer to Section 21.5.

18.6.3 Hazardous Materials

Hazardous materials will be identified in accordance with Section 307 of VCC and Chapter 50 of VFC.

18.6.4 Site Fire Flow and Hydrants

Fire hydrant locations and fire flow requirements will be in accordance with Appendices B and C of VFC respectively and Chapter 9 of VCC.

18.6.5 Fire Alarm System

The automatic fire alarm system will be designed in accordance with Chapter 907 of the VCC.

18.6.6 Fire Suppression Systems

The automatic fire sprinkler system will be designed in accordance with Chapter 903 of the VCC.

18.6.7 Fire Department Access

Fire department access will be provided in accordance with Part III Chapter 5 of VFC.

18.6.8 Occupancy Separations

Separation of occupancies will be in accordance with VCC Section 508.

18.6.9 Vertical Openings

Shafts, stairs, etc. will be designed based on Section 712 of VCC.

18.6.10 Means of Egress

Structures will be classified as F-1 Factory Occupancy with an occupant load factor of 300 ft^2 per person. The maximum common path will be limited to 75 feet. The maximum travel distance to any exit will not exceed 200 feet. Dead-end corridors will not exceed 50 feet. Each building will have a minimum of two exits from each story.

18.7 Sustainable Facility Design

Design documents will be submitted that include the Envision Rating System checklist at each milestone deliverable. Envision rating credits will be selected by the design team that are appropriate for the Program. Table 18-5 features recommended applicable goals for the Program team to achieve but is not limited to this list. (Use Envision Rating System for full list.)

Table 18-5. Sustainability Recommended Criteria

Criterion	Code
Natural lighting	5% of the floor plans will be used as ft^2 for minimum of natural light entering the building via translucent wall panels, windows, or skylights.
Photovoltaic solar panels	Investigate providing 15% of electrical power of building lighting using solar panels. The building will be designed to accommodate the weight and anchoring of future roof- or wall-mounted solar panels that could be installed at a future date.
Recyclable material	Specify materials that used recycled materials.
Regional material	Specify materials that used regional materials.
Construction waste	Manage construction waste to minimize waste going to the landfill through both materials reuse and diversion to recycling.
Noise pollution	Recommend acoustical panels as needed to reduce noise generated from leaving property lines.

19 ELECTRICAL DISTRIBUTION SYSTEM

19.1 Background and Purpose

This section describes the existing WPCP electrical distribution, anticipated future demand, and proposed criteria for new facilities. Proposed configurations are based upon preliminary concepts and will need to be conformed to the final facility design. In all cases, fully redundant distribution is required in feeders to distribution equipment. Branch circuits to specific process equipment do not need to be redundant but, where redundant equipment (e.g., redundant pumps or conveyors) is provided, branch circuits will originate at separate sources.

19.2 Existing Electrical Distribution System

This section describes the existing electrical distribution system, both plant-wide and at the North Plant.

19.2.1 Plantwide

The Arlington WPCP has two 34.5-kilovolt (kV) electrical services from Dominion Energy (DE) (see Sheet E-02). These service feeders are routed to 34.5 kV Switchgear A and B. The 34.5 kV switchgear also can be powered from the Standby Generation Facility (SGF) that has three 2,250-kilowatt (kW) generators used for standby or occasional peak shaving use. Switchgear A and B provide A and B distribution feeders, respectively, to the North and South Plant. The extents of the Re-Gen Biosolids Facilities Upgrades project are located in the North Plant, so the following sections discuss only the North Plant.

19.2.2 North Plant

The north side of the WPCP, north of S Glebe Road, has a dedicated pair of 34.5 kV A and B distribution feeders. The feeders currently serve the whole north side via Distribution Centers (DCs) 1 and 7. DC-1 has redundant 2,500-kilovolt-ampere (kVA) 34.5 kV/480-volt (V) transformers; DC-7 has redundant 1,500 kVA 34.5 kV/480 V transformers. The transformers are pad-mounted, exterior transformers while the low-voltage switchgear is located inside an adjacent Electrical Building. The 34.5 kV feeders are arranged in a selective radial configuration with no switching. If it is necessary to de-energize a transformer at one DC, the same transformer at the other DC will also be de-energized. To transfer load from one feeder to the other, one of the main secondary circuit breakers needs to be opened while closing the tie circuit breakers.

Prior to the Phase 7 expansion, DE served each of the WPCP's DC separately. As part of the SGF project, the primary feeders for each DC were routed to the new 34.5 kV switchgear. This work was done by DE and is not reflected in record drawings. It was reported that DE used either 1/0 or 2/0 American Wire Gauge (AWG) 34.5 kV cables to

provide that extension. Therefore, the capacity of the feeders is at least 145 amperes (A), or 6,931 kW, at 34.5 kV with a 0.8 power factor.

19.3 Existing WPCP Electrical Demand

This section presents existing electrical demand, both plant-wide and at the North Plant, and describes generation capacity.

19.3.1 Plant-wide Demand

Power usage is monitored at each DC and stored for future reference and analysis. The two DE 34.5 kV services provide the primary power source to the plant DE totalizes the demand (sums demand coincidentally) on each feeder to provide the total WPCP demand over each 30-minute integration period. DE records and charges for distribution demand, which is the highest 30-minute kW demand over the last year. The reported distribution demand for 2020 was 4,699 kW, which represents the peak demand of the whole WPCP.

19.3.2 North Plant Demand

Power demand (kW) of individual DCs is recorded and has been provided for review. Sorted results for the North Plant indicate a peak demand of 1,610 kW in 2020 and 1,671 kW in 2021. This total includes some diversity between DC-1 and DC-7 but most readings for DC-7 indicate a maximum demand of approximately 500–600 kW. Given the 34.5 kV Feeder A and B capacity indicated above, the redundant feeders have about 5,200 kW of available capacity.

19.3.3 Generation Capacity

The WPCP has three 2,250 kW engine-generators for an installed nameplate capacity of 6,750 kW. These types of engines cannot be operated at 100 percent for a long duration. For planning purposes, a good sustained operating limit around 80 to 85 percent of nameplate capacity, or 5,600 kW, is recommended. This is adequate for the existing WPCP maximum demand but may not allow for full operation of the new biosolids treatment during a peak flow period.

Adding a generator would be challenging. There is no space at the SGF for a fourth generator. Generation added at another WPCP location would need to synchronize with the SGF and be able to control load sharing. It is recommended that a load-shedding plan be developed to drop less critical load in the event that generation is not adequate. In general, the liquid stream equipment has an immediate priority. It is recommended, when running on generation, that liquid stream equipment be given priority and only essential solids processes be operated. However, load shedding must be holistic and will be developed during detailed design to integrate the overall needs of the WPCP.

Some solids loads will be determined to be critical, such as digester mixing and biogas flare control. It will be necessary to determine through a criticality assessment if lower-priority liquid stream loads could be shed to ensure adequate capacity for these solids handling loads. If overall demand is low enough, other solids processes may be elected to run with deference to the total generation demand.

19.4 Design Approach

A preliminary demand estimate for the new biosolids facilities has been developed, and an increase of the size of the North A and B feeders is not anticipated. Refer to Drawing E-02 for the existing electrical distribution configuration. It is estimated that the existing DC-7 transformers are not adequate, and the age of the DC-7 switchgear is such that replacement is recommended. To facilitate project phasing, new 34.5 kV distribution switches will be installed in the 34.5 kV A and B feeders (refer to Drawings E-01 and E-03). These switches will allow transformers to be isolated for construction and future maintenance. The existing DC-7 will be replaced with new outdoor pad-mounted transformers and low-voltage switchgear installed in a dedicated Electrical Building similar to DC-1 transformers and switchgear.

Future biosolids area motor control centers (MCCs) or switchboards will be fed from the new DC-7 with redundant feeders. A main-tie-main configuration will be used on all switchgear, MCCs, and switchboards. In addition, the new DC-7 will include a generator tap box to facilitate the connection of a mobile generator as a third alternate source. Equipment will be organized and connected to a bus, such that any auxiliary equipment required for a process is served from the same A or B bus. Therefore, if one bus experiences an outage, all the redundant equipment served from the opposite bus can be used.

The existing biosolids process must remain active during construction. Any outages will be minimized and approved by the Owner. Redundant sources are expected to be used to the maximum extent to limit equipment that will experience an outage. Brief outages (a few hours) may be easy to accommodate. Longer-duration outages, 2 or 3 days, will need an extensive plan and schedule describing how the system will be re-energized if the redundant source fails during an outage. If an outage is expected to last more than 5 days, temporary measures will be required to provide a backup source (e.g., rental generator) during the outage. It will be possible to re-energize the process within 30 minutes from the temporary source.

The existing DC-7 provides dual services to the adjacent Potomac Yard Pump Station (PYPS). It is essential that the PYPS have dual services throughout all phases of the

project. This may be accomplished with temporary generators but other alternatives meeting the dual-service requirement can be considered.

19.5 Area Classifications of New and Existing Facilities

All project areas will be classified according to the use. It may be possible for a space to have more than one classification (i.e., Wet and Hazardous). Equipment in that space will meet the requirements of all the space classifications. The NEC provides definitions for both Damp and Wet spaces. Any space exposed to moisture will be classified as Wet; the Damp classification will not be used. Space classification will be approved by the Owner.

19.5.1 Interior Spaces

Interior spaces not exposed to process flows or chemicals may be classified as Dry and Dusty. This generally applies to electrical and control rooms or office space.

All spaces containing process flow or equipment will, at a minimum, be classified as Wet. Additionally, areas where chemicals are stored, pumped or applied will be considered Corrosive. Areas exposed to process generated vapors (i.e., H_2S, CH_4, or NH_3) will also be classified as Corrosive.

19.5.2 Exterior Spaces

All exterior spaces will, at a minimum, be classified as Wet. There may also be a space near or around equipment where a corrosive or hazardous classification is also appropriate. Drawings will identify these areas and include a radius or dimensioned extent for these spaces.

19.5.3 Hazardous Areas

Electrically hazardous areas (interior or exterior) will be identified on the Drawings. NFPA 820, Standard for Fire Protection in Wastewater Treatment and Collection Facilities, will be referenced to define the type and extent of electrically hazardous areas. Other NFPA codes may be referenced to define areas not covered by NFPA 820. The code and article referenced for the classification will be included in the documents.

19.6 Electrical Design Criteria

Only equipment meeting the design criteria listed below will be used in this project. The most current edition of reference standards, codes, or listings will be used.

19.6.1 Lighting

All lighting design and equipment will meet the applicable requirements of the following:

- American National Standards Institute (ANSI) C78.377
- Institute of Electrical and Electronics Engineers, Inc. (IEEE) C62.41
- Illuminating Engineering Society of North America (IESNA) LM-79 and LM-80
- National Electrical Manufacturers Association (NEMA) 250, 410, and LE 4 and NEMA/ANSI SSL 1
- National Fire Protection Association (NFPA) 70 and 101
- Underwriters Laboratories, Inc. (UL) 248-4, 844, 924, 1012, 1310, 1598, and 8750

All lighting fixtures will be light-emitting diode (LED) fixtures rated for a minimum 50°C, a minimum lumens per watt of 120, and marine grade and/or hazardous as appropriate. Recommended manufacturers include Holophane, Crouse Hinds, and Appleton.

19.6.2 Wire and Cable

All wire and cable will meet the applicable requirements of the following:

- Insulated Cable Engineers Association (ICEA) S-58-679
- National Electrical Manufacturers Association (NEMA) ICS 4
- National Electrical Manufacturers Association/Insulated Cable Engineers Association (NEMA/ICEA) WC 57/S-73-532 and 70/S-95-658
- National Fire Protection Association (NFPA) 70 and 262
- Underwriters Laboratories, Inc. (UL) 44, 83, 467, 486A, 486C, 510, and 1581

Wire for process feeders or branch circuits will be XHHW-2 Lighting and receptacle circuits and #14 AWG class 1 control circuits can be THHN-2

19.6.3 Conduit

All conduit will meet the applicable requirements of the following:

- Aluminum Association (AA)
- American Iron and Steel Institute (AISI)
- National Electrical Manufacturers Association (NEMA) 250, RN 1, TC 2, and TC 3
- National Electrical Manufacturers Association/American National Standards Institute (NEMA/ANSI) C80.1, C80.5, and OS 1
- National Fire Protection Association (NFPA) 70
- Underwriters Laboratories, Inc. (UL) 1, 6, 50, 360, 467, 514A, 514B, 651, 797, 870, and 1203

Exposed conduit in hazardous or corrosive spaces will be PVC-coated rigid steel (PVC-RGS) conduit. Exposed conduit in dry or wet spaces will be rigid galvanized steel (RGS)

or aluminum. Buried conduit will be PVC-RGS or, in a concrete-encased ductbank, Schedule 40 PVC.

19.6.4 Variable-Frequency Drives

All VFDs will meet the applicable requirements of the following:

- American National Standards Institute (ANSI)
- Electrical Testing Laboratories (ETL)
- IEEE 399, 519, and C62.41
- National Electrical Manufacturer's Association (NEMA) 250 and MG-1
- National Fire Protection Association (NFPA) 70
- Occupational Safety and Health Administration (OSHA)
- Underwriters Laboratory, Inc. (UL) 508 and 508A

VFDs rated for 75 hp motors and less can have a six-pulse input rectifier. VFDs for 100 hp motors and higher will have an 18-pulse input rectifier or an approved active front end to mitigate harmonic impacts. In all cases, if total harmonic distortion (THD) is greater than allowed by IEEE 519 than harmonic mitigation methods will be employed. Avoid VFDs mounted in MCCs. Allen-Bradley PowerFlex VFDs are the County's preferred drive.

19.6.5 Power Monitoring

All power monitoring will meet the applicable requirements of the following:

- UL 61010A-1, EN 610101
- Accuracy: ANSI C12.20 Class 0.2, IEC/EN60687 0.2 for revenue meters.
- EMC: FCC Part 15 Subpart B Class A immunity
- Applicable IEC standards
- MODBUS TCP or Ethernet IP communication capability

19.6.6 Lightning Protection

All facilities will be provided with a lightning protection system. All lightning protection design will meet the applicable requirements of the following:

- NFPA 780: Standard for Installation of Lightning Protection Systems
- UL 96A: Standard for Installation Requirements for Lightning Protection Systems

19.6.7 Dry-Type Transformers

All dry-type transformers will meet the applicable requirements of the following:

- U.S. Department of Energy (DOE), Code of Federal Regulations (CFR) Title 10 Part 431
- IEEE C57.96

- National Electrical Manufacturers Association (NEMA) 250 and ST 20
- Underwriters Laboratories, Inc. (UL) 506 and 1561

All indoor transformers will be dry type with rating based upon 115°C temperature rise with copper windings.

19.6.8 Pad-Mounted Transformers

Exterior DS transformers will meet the applicable requirements of the following:

- IEEE 386, Standard for Separable Insulated Connector Systems for Power Distribution Systems Rated 2.5 kV through 35 kV
- IEEE C57.12.00, Standard General Requirements for Liquid-Immersed Distribution, Power, and Regulating Transformers
- IEEE C57.12.28, Standard for Pad-Mounted Equipment—Enclosure Integrity
- IEEE C57.12.34, Standard Requirements for Pad-Mounted, Compartmental-Type, Self-Cooled, Three-Phase Distribution Transformers—High-Voltage: 34 500 GrdY/19 920 Volts and Below; Low-Voltage: 480 Volts and Below
- IEEE C57.12.70, Standard for Standard Terminal Markings and Connections for Distribution and Power Transformers
- IEEE C57.12.80, Standard Terminology for Power and Distribution Transformers
- IEEE C57.12.90, Standard Test Code for Liquid-Immersed Distribution, Power, and Regulating Transformers
- IEEE C62.11, Standard for Metal-Oxide Surge Arresters for Alternating Current Power Circuits (>1 kV)
- Factory Mutual Research Corporation (FM) 3990, Approval Standard for less or non-flammable Liquid Insulated Transformers

Pad-mounted transformer rating is based upon a 55°C/65°C temperature rating and includes fans (and temperature control) to achieve a KNAN/KNAF rating. Insulating fluid will be a less-flammable, natural or synthetic ester fluid that is biodegradable per EPA Office of Prevention, Pesticides and Toxic Substances (OPPTS) 835.3100.

19.6.9 Low-Voltage Switchgear

Low-voltage, metal-enclosed switchgear will meet the requirements of the following:

- American National Standards Institute (ANSI)
- IEEE C37.20.1, Standard for Metal-Enclosed Low-Voltage (1000 VAC and below, 3200 VDC and below) Power Circuit Breaker Switchgear
- NEMA 250, Enclosures for Electrical Equipment (1000 Volts Maximum)
- UL 1558, Standard for Metal-Enclosed Low-Voltage Power Circuit Breaker Switchgear

Low-voltage switchgear will be main-tie-main configured, draw-out switchgear with 100 percent rated circuit breakers.

Low-voltage switchgear will include automatic, open transition, transfer of sources in response to outages.

Recommended manufacturers include Eaton or Schneider Electric.

19.6.10 Motor Control Centers

MCCs will meet the requirements of the following:

- NEMA 250, Enclosures for Electrical Equipment (1000 Volt Maximum)
- NEMA ICS 2, Controllers, Contactors and Overload Relays Rated 600 V
- NEMA ICS 18, Motor Control Centers
- UL 508, Standard for Industrial Control Equipment
- UL 845, Motor Control Centers

MCCs will be main-tie-main configured with 100 percent rated main and tie circuit breakers.

Source transfer will be manual and all motor overloads will be the electronic type.

Recommended manufacturers include Eaton or Schneider Electric.

20 CONTROL SYSTEM

20.1 Background and Purpose

This section describes the existing WPCP control system architecture, upgrades in progress, and proposed criteria for new facilities. Proposed criteria are based upon preliminary site and process control concepts and will require adaptation to conform to the final facility design.

20.2 Control System Architecture

The existing PCS at the WPCP is built upon a structure supporting redundant process area controllers with subunit process input/output (I/O) aggregation accomplished by distributed remote input/output (RIO) panels. Redundant area programmable logic controllers (PLCs) are connected to the plant backbone via area network cabinets and communicate with the plant PCS via Ethernet-IP communication protocol over a redundant, single-mode fiber ring. Communication between area PLCs and their associated RIOs is accomplished using ControlNet open industrial network protocol via multimode fiber-optic link. Monitoring and control of original equipment manufacturer (OEM) panels and VFDs are accomplished by peer-to-peer communication over Ethernet-based copper links using Modbus-TCP protocol or Ethernet-IP where supported by end devices.

Figure 20-1 presents the existing DWB communication diagram.

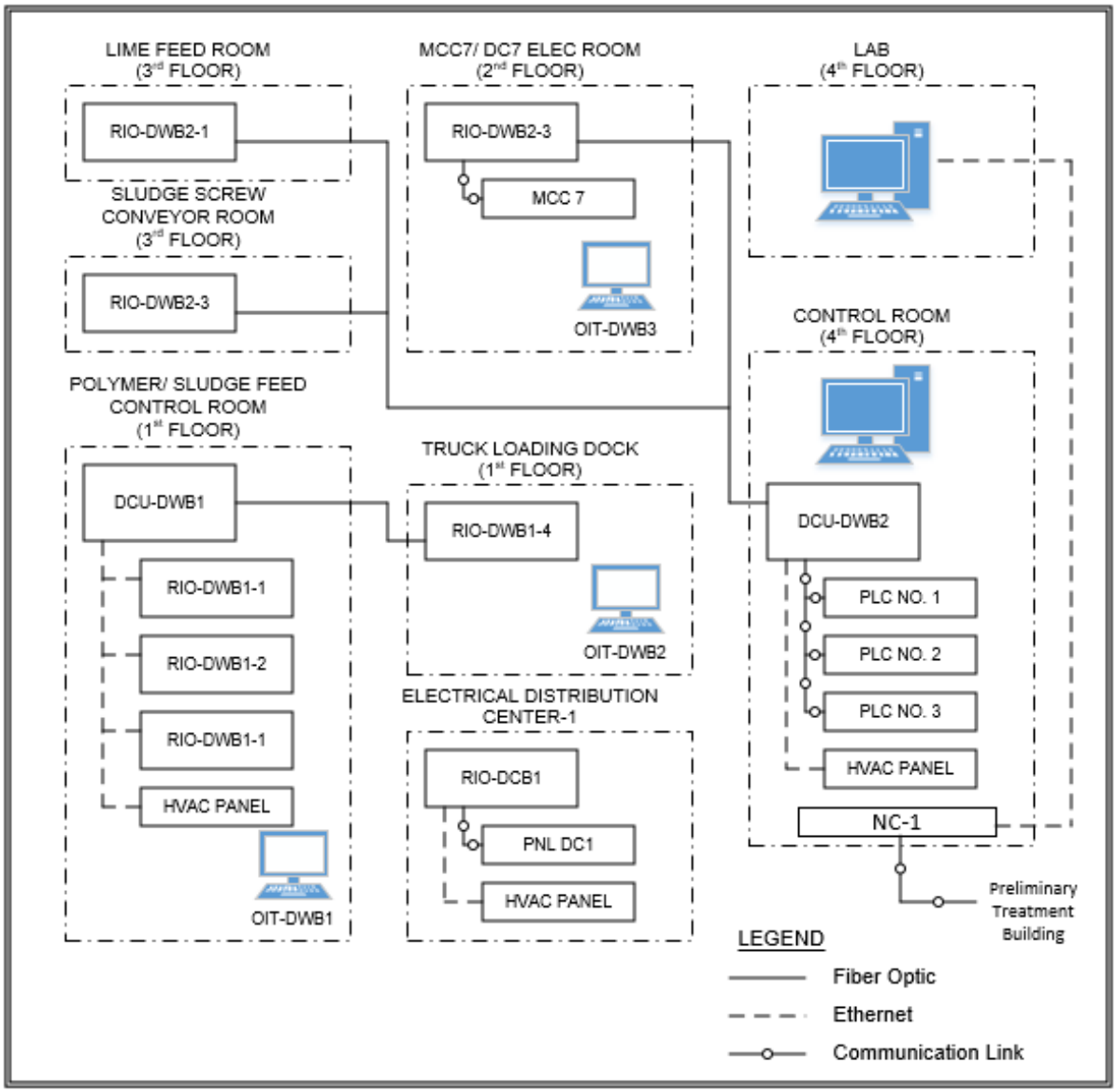

Figure 20-1. Existing Dewatering Building Communication Diagram

Central monitoring and control are accomplished with FactoryTalk v10 data acquisition from the Operations Building main control room. Rockwell ThinManager and thin clients are used to provide local visualization and operator interface in each process and subunit process area. Hach Water Information Management Software (WIMS) is used in coordination with FactoryTalk Transaction Manager for Tier 2 historical data collection. Primary and backup data acquisition servers are geographically separated. Backups of applications and data are maintained locally and off site.

A demilitarized zone (DMZ) exists between the PCS network and the WPCP enterprise network to allow for storage and access to Tier 2 historical data as well as handshaking for remote access to the PCS network.

Secure remote access to the PCS network is accomplished through the enterprise virtual private network (VPN) with multifactor authentication on the control system network.

Domain controllers are used to manage the access privileges and passwords for control system user groups.

20.3 Project Coordination

Ongoing projects related to the WPCP PCS that are scheduled for completion in 2022 include the following:

- **ControlLogix processor upgrades:** replace L63 processors with L83 processors running v33 firmware
- Network conversion:
  - Replace ControlNet networks with Ethernet-IP
  - Implement device level ring (DLR) for local I/O and RIO
  - Replace area and I/O switches

20.4 Control System Design Criteria

Standards and best practices that will be followed when performing design or construction of WPCP control systems include the following:

- Arlington County Water Control Bureau Plant Control Systems Standards, Revision 03/25/2019 (DRAFT Recommendations for Establishing Standards)
- Rockwell Automation, Ethernet Network Design, June 18, 2016
- International Society of Automation (ISA) S5.1, Instrumentation Symbols and Identification
- ISA 88, Batch Control
- ISA 101, Human Machine Interface
- ISA/IEC 62443, Security for Industrial Automation and Control Systems
- UL 508A, Standard for Industrial Control Panels
- UL 698A, Standard for Safety Industrial Control Equipment for Use in Hazardous (Classified) Locations
- NEMA 250, Enclosure Types
- NFPA 79, Electrical Standard for Industrial Machinery

- NFPA 70, National Electric Code

Unless specifically noted, the latest revision of the referenced standards will be required.

20.5 Design Approach

Options presented for modifications to the dewatering and solids handling process in preceding sections of this Plan will require modifications to the PCS network. During implementation of the modifications, the existing dewatering process operations will be maintained.

The Program will require modifications to the control system network infrastructure requiring new network drops and possible temporary connections depending upon the options selected.

Modifications to the network will maintain the network conversion project being implemented based upon the design by Rockwell for the WPCP and as described in Section 20.3. Close coordination with the network conversion project will be required to determine impact to DWB facility modifications and identify if there is an opportunity to reuse network equipment installed as part of the conversion.

If Option 2 (decommission DWB) is selected, the backbone will be modified with a tie-in to the PTB to insert the segment for the new SPB into the fiber ring for the WPCP. Once construction is completed, the segment to the existing DWB will be decommissioned.

For both facilities option considered herein, a new control room will be constructed in either the existing DWB (Option 1) or in the new SPB (Option 2). This control room will serve the operations of the solids handling facilities and serve as a backup to the Operations Building main control room. This control room will include appropriate audio/visual equipment and workstations to accomplish dewatering and WPCP operations monitoring and control. Network equipment will be located in a secure network room in the building.

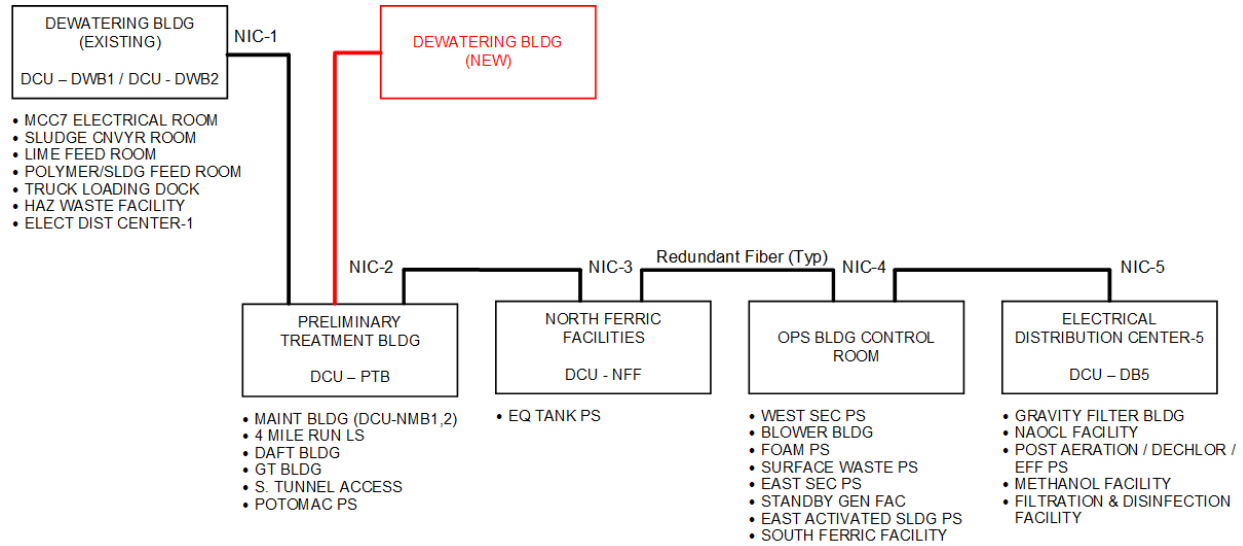

Figure 20-2. Site Communication Backbone Block Diagram

20.5.1 Equipment

Preferences for control systems equipment instrumentation include the following:

- PLCs (Table 20-1)

Control panel components (Table 20-2)

- Networking equipment (Table 20-3)
- Device level networks (Table 20-4)

Field devices (Table 20-5)

- Uninterruptible power supplies (UPS) (Table 20-6)

Table 20-1. Programmable Logic Controllers

Type	Products
Distributed control unit (DCU) panels	ControlLogix 5580 controllers (or latest version)
RIO panels	ControlLogix platform, FLEX 5000™ I/O distributed I/O platform (or latest version)
Local control panels (LCP)	CompactLogix 5380 controllers (or latest version), Micro850 and Micro870 controllers (or latest version)
Electrical switchgear	Modicon PLCs (Schneider Electric)

Table 20-2. Control Panel Components

Type	Products
Operator interface terminals (OITs)	Allen-Bradley PanelView Terminals[a]
Panel power supplies	Allen-Bradley Bulletin 1606 (or latest version), Pepperl+Fuchs, Phoenix Contact
Terminal blocks band breakers	Allen-Bradley, Phoenix Contact[b]
Relays	Allen-Bradley, Phoenix Contact

a. The County's preference is to use thin clients with touchscreen panels instead of industrial PCs.
b. The County's preference is to use circuit breakers instead of fuses whenever possible.

Table 20-3. Networking Equipment

Type	Products[a]
DCU panels	Allen-Bradley Stratix 5700 industrial access switch (or latest version)
RIO panels	Allen-Bradley Stratix 5700 industrial access switch (or latest version)
LCPs	Allen-Bradley Stratix 2500 switch (or latest version), Ethernet Tap (ETAP)
Network operations center (NOC)	Cisco Catalyst 4500X core switch (or latest version)
Distribution switch rack enclosure	Cisco Catalyst 4500X distribution switch (or latest version)
Zone enclosure	Allen-Bradley Stratix 5400 industrial access switch (or latest version)

a. The County's preference is to avoid the use of unmanaged switches whenever possible.

Table 20-4. Device-Level Networks (in order of preference)

Type	Products
Ethernet-based protocols	Flow meter, analyzers, power monitors, and APL transmitters
HART/4–20 mA	Pressure, temperature and level transmitters, actuators
Foundation Fieldbus[b]	Actuators, pH/ORP, mass flow
Wireless protocols	WirelessHART, cellular/LTE
BACnet	HVAC controls

a. Foundation Fieldbus devices will be used only when existing Fieldbus infrastructure is present.

Table 20-5. Field Devices

Type	Products[a]
Pressure transmitters	Rosemount
Temperature transmitters	Rosemount
Level transmitters (differential pressure)	Rosemount
Level transmitters (radar)	Rosemount
Flow meters (magmeter)	Endress+Hauser
Flow meters (differential type)	Rosemount
pH/ORP[b]	Yokogawa
Fixed-point gas detection	Sierra Monitoring
Dissolved oxygen/TSS	Insite
Online TSS	Valmet
Weight (load cells)	Mettler-Toledo
Electric actuators	Rotork
Variable-frequency drive	Allen-Bradley PowerFlex

a. Endress+Hauser and Rosemount are the County's primary field device manufacturers.
b. Yokogawa pH/ORP transmitters will be used with existing Foundation Fieldbus infrastructure.

Table 20-6. Uninterruptible Power Supplies

Type	Products
120 VAC output	Vertiv/Leibert GXT series
24 VDC output	Allen-Bradley 1606-XLS240-UPS, 1606-XLS480-UPS[a]

a. The ControlLogix, CompactLogix, and Flex 5000 I/O platforms have both alternating current (AC) and direct current (DC) power supply options.

20.5.2 Control Panels

For new process areas, a distributed control unit (DCU) cabinet housing redundant PLCs, local I/O, and operator interface terminal (OIT) will be used to monitor and control the process area with RIO cabinets for I/O distribution.

The DCU cabinet will be located in an environmentally controlled area such as an air-conditioned electrical room. RIO cabinets may be located in the process area near the equipment or end devices.

DCU cabinets will be designed for no more than 300 hardwired I/O. RIO cabinets will be used to allow for distribution of hardwired I/O.

For new construction, bottom conduit entry is required in DCU and RIO panels. In existing facilities, side and top entry may be permitted upon approval from the Arlington County WPCB.

20.5.3 Control Modes and Priority

PCS modes will include the following:

- **Local Manual:** Operator controls equipment from an LCP installed physically near the equipment.
- **Local Auto:** For LCPs with PLCs, this mode allows for automatic control at the LCP. Automatic control will not be duplicated at the PCS.
- **Remote PCS Manual:** Operator manually operates equipment from control operators on the HMI.
- **Remote PCS Auto:** Operator enters set points and process area equipment is automatically controlled to achieve defined control descriptions for the area.

20.5.4 Graphics

HMI graphics will be developed to meet High-Performance Human-Machine Interface (HPHMI) best practices. Workshops will be required to define the degree to which the HPHMI standards will be applied. Currently, the WPCB does not have a library of standard objects to be used by programming teams but are in development. These workshops will be used to collaboratively present and agree upon graphic standards to be applied for the process area.

20.5.5 Programming

The programming and configuration for this system will be performed by a system integrator. Ladder logic and function block programming will be acceptable programming methods.

21 PERMIT AND APPROVAL REQUIREMENTS

21.1 Background and Purpose

The Program will require communication with and oversight by two major regulating bodies throughout the design and construction phases of the Program: Arlington County's Permit Office for building and site permitting, and the Virginia Department of Environmental Quality (VDEQ) for state and federal laws and regulations associated with air quality, water quality, and water supply and land protection. The Program team will communicate with each of these regulating bodies early in the Program's development to ensure that a smooth Program is executed.

This section of the Plan details the known permitting requirements needed for the Program. The delivery team is responsible for verification of permit requirements as the design progresses and updating the register of permits as needed.

21.2 Arlington County Permitting

The Arlington County Permit Office maintains a robust website with online applications, online plan review status, online payment, and other vital permitting process and tracking needs for this Program. The delivery team should review this website for Arlington's Design Standards and Guidelines associated with buildings and stormwater within the county. The delivery team will provide completed permit applications and the appropriate supporting documentation required for each permit. The County will officially submit the permit applications to the code officials and pay associated permit fees (trade permits excluded).

21.2.1 Building Permits

Arlington County has adopted the 2018 VUSBC. Appropriate building permits must be received prior to the start of construction activities. The County will be responsible for all special inspections required based on delivery team interpretation of the code and confirmed by the code officials.

21.2.2 Trade Permits

The delivery team contractor will be responsible for applying and paying for all necessary trade permits for the work.

21.2.3 Site Plan Permitting and Zoning

The Contractor will be responsible for the Site Plan Permitting for the Program. The following reviews and permits associated with the site civil design may be required for this Program and can be obtained through the Permit Arlington system on Arlington County's website:

- Conceptual Site Plan Review (*Site Plan Applications: Official Website of Arlington County Virginia Government [arlingtonva.us]*)
- Civil Engineering Plan Review (*Civil Engineering Plan: Official Website of Arlington County Virginia Government [arlingtonva.us]*)
- Landscape Plan Review (*Landscape Plan Application: Official Website of Arlington County Virginia Government [arlingtonva.us]*)
- Chesapeake Bay Preservation Ordinance (*Chesapeake Bay Preservation Ordinance: Official Website of Arlington County Virginia Government [arlingtonva.us]*)

Additional permits may be required per Arlington County once preliminary plans have been reviewed during the County's pre-submittal processes.

As noted in Section 17.3.2, the site is zoned P-S (Public Service District). According to the Arlington County Zoning Ordinance dated 01-12-2022, wastewater treatment plans are allowed by right, therefore no zoning or special use permits are necessary.

21.2.4 Stormwater Permitting

To reduce pollution from sediment runoff and manage stormwater runoff from the land disturbance related to this Program, a land disturbance and stormwater management permit needs to be obtained from Arlington County, Virginia.

A land-disturbing activity/stormwater permit is required for any activities that disturb equal to or greater than 2,500 ft^2 of land, as required by the Erosion and Sediment Control Ordinance in Chapter 57 of the Arlington County Code, Chapter 60 of the Stormwater Management Ordinance, and the Virginia Erosion and Sediment Control Program. Based on evaluation of both design options (Option 1—renovate existing DWB, and Option 2—decommission existing DWB), expected land disturbance will be more than 2,500 ft^2 and thus a land-disturbing activity/stormwater permit will be required.

The permitting process and related permit fee details can be found on the Arlington County website: Land Disturbing Activity/Stormwater Permit Details: Official Website of Arlington County Virginia Government [arlingtonva.us]).

All land disturbance and proposed work is located outside of FEMA Flood Zone AE as depicted in the effective flood insurance rate maps dated August 19, 2013; therefore, compliance with Chapter 48, Floodplain Management, of the Arlington County Code is not anticipated. However, if at any point during the design process, work is performed within the above-mentioned flood zone, adherence to the Arlington County floodplain management ordinance will be required.

21.2.5 Other Permits

The delivery team will be responsible for identifying any other permits required and coordinating submission of these permits with the County.

21.3 Virginia Department of Environmental Quality

VDEQ administers state and federal laws and regulations for air quality, water quality, water supply, and land protection. The agency provides technical and financial assistance for air and water quality improvements projects, such as this Program. Through its local office, VDEQ issues permits, conducts inspections and monitoring, and enforces regulations and permits. For this Program, Arlington County will continue to work with the Northern Regional Office (13901 Crown Court, Woodbridge, VA 22193: (703) 583-3800).

VDEQ will require multiple permits associated with the design and construction of the Program, including a series of construction permits and an air permit update.

21.3.1 Construction Permits

VDEQ will require permits associated with the design and construction of the Program: the Certificate to Construct (CTC) and the Certificate to Operate (CTO).

21.3.1.1 Certificate to Construct

VDEQ requires a CTC for construction projects at wastewater treatment facilities. Prior to any construction activities on the Program, Arlington County must obtain a CTC from VDEQ. The delivery team engineer will be required to submit a signed and sealed statement that the design is in compliance with the requirements of the *Sewage Collection and Treatment Regulations* (Virginia Administrative Code Title 9 Section 25-790) along with a brief description of the project, including the Reliability Classification and any deviations from the *Sewage Collection and Treatment Regulations*.

Application forms for the CTC can be found on the VDEQ website and generally contain project information including the following:

- Project title
- Project location
- Receiving systems
- Project owner and project engineer
- Design sewage flow
- Virginia Pollutant Discharge Elimination System (VPDES)/Virginia Pollution Abatement (VPA) Permit number

21.3.1.2 Certificate to Operate

VDEQ requires that a CTO be obtained by Arlington County following the application and approval of a CTC earlier in the Program. The CTO is regulated under the *Sewage Collection and Treatment Regulations* (Virginia Administrative Code Title 9 Section 25-790). Nearing the end of the construction phase, the delivery team will issue a signed statement of completion that the Program has been fully commissioned and inspected and is ready to be placed into service. At this time, Arlington County will apply for the CTO for the new facilities from the VDEQ Regional Office.

Application forms for the CTO can be found on the VDEQ website and generally contain project information including the following:

- Project title
- Project location
- Receiving systems
- Project owner and project engineer
- PTL number
- Original CTC
- Design sewage flow
- VPDES/VPA Permit number
- Reliability class

After the signature from VDEQ on the CTO, it is anticipated that Arlington's VPDES permit will require full Facility Operation and Maintenance Manuals for the Program. The delivery team will prepare these documents in concert with Owner and Program Manager.

21.3.2 Air Permitting

The WPCP currently operates under Stationary Source Permit to Construct and Operate Registration 70026, issued by VDEQ and effective July 2, 2012. Although several facility changes have been made since that date, none of these changes have resulted in a requirement to modify the existing permit. The facility changes will need to be captured in the modified permit required for the Re-Gen Program, based on information provided by the County.

Based on a preliminary evaluation of each of the possible scenarios, implementation of the Program will include the installation and operation of several new sources that will require modification of the existing permit through VDEQ's minor new source review (NSR) construction permitting program. The modified facility air permit will need to be issued by VDEQ prior to beginning construction of any of the applicable equipment.

Minor NSR permits do not go through public participation unless VDEQ determines that public interest concerning air quality issues warrants it. The air permitting process should be started well in advance of when construction is scheduled to commence in order to avoid undue delays associated with the permitting process. VDEQ indicates the following time frames associated with processing and issuing a minor NSR permit:

- **Completeness review:** 30 days from receipt of application
- **Processing of application:** 90 days from receiving a complete application; 180 days if public participation is required

One key term in the application processing timeline is "complete." If VDEQ determines that additional information is required to process the submitted application, VDEQ will request that information and the time clock will pause until it receives the information and deems the application complete. The processing timeline then resumes.

21.4 Virginia Department of Labor and Industry

The Virginia Department of Labor and Industry, Boiler and Pressure Vessel Regulations has an inspection and certification program for boilers and pressure vessels within Virginia. The new steam boilers and pressure vessels (such as the THP vessels) added as part of the Program will be subject to the Virginia Boiler and Pressure Vessel Regulations (https://law.lis.virginia.gov/admincode/title16/agency25/chapter50/) in the Virginia Administrative Code.

There is no state requirement by the Commonwealth of Virginia to have a license to operate a boiler. However, the Virginia Administrative Code allows any city or county in Virginia the option of requiring certain persons to obtain a certificate from the locality. At the present time, no locality in the commonwealth requires such a certification.

21.5 Federal Aviation Administration

Pending decisions made during detailed design regarding new building construction and site plan, the project might require notice to the FAA per FAA Regulation, Title 14, Part 77. It is the responsibility of the delivery team to identify the requirements and provide the notice in a timely manner as required in FAA Regulation, Title 14, Section 77.5.

A Pre-Screening Tool can be found at the following link: Obstruction Evaluation/Airport Airspace Analysis (OE3A) (faa.gov).

The filing process can be found at the following link: Obstruction Evaluation/Airport Airspace Analysis (OE/AAA) (faa.gov).

The forms can be found at the following link: Forms (faa.gov).

22 PROGRAM IMPLEMENTATION

22.1 Background and Purpose

The Arlington Re-Gen Program is a large, complex comprehensive upgrade to the existing solids handling processes that involves multiple delivery risks and opportunities. These risks and opportunities were evaluated to identify different delivery packages and delivery methods for ultimate design, construction, and commissioning of the Program.

22.2 Program Delivery Approach

To facilitate the evaluation of project packaging and delivery methods for implementation, the Program Manager and the County completed a thorough risk review of the Program elements. This risk review and analysis is summarized in TM No. 14: *Program Delivery Recommendation.*

During the risk review and analysis, the Program team determined that there were no significant drivers for dividing the Program into multiple delivery packages, as was done with the Master Plan 2001 (MP01) projects. The Program elements will be constructed on a tight site, with very limited space for new construction and challenging construction sequencing. In addition, the proposed solids handling processes are significantly more complex than the existing process, with numerous additional unit processes in a highly integrated facility. The existing solids handling process will also need to remain fully functional throughout construction such that the County can continue to meet all permitted treatment requirements. These risks can best be managed by a single entity responsible for all of the construction and commissioning of the new facilities.

However, one exception for a separate project delivery was identified: the existing GTs. The existing mechanical components within the GTs are near the end of their useful life and at risk of imminent failure. In addition, the GT unit process is less critical and less integrated from the remainder of the Program elements. Finally, the size of the GT rehabilitation allows for it to be designed by a County on-call engineer, through Agreement 17-348-RFP. The Program team agreed to proceed with the design and construction of the GT upgrades through an on-call engineer and constructed through a traditional competitive sealed bidding approach. This project will be titled the *Gravity Thickener Upgrades Phase 10A.*

As mentioned in Section 9, TH systems vary widely in their process configurations, equipment arrangement, and operational strategies. Additionally, the solids handling interfaces upstream and downstream of the THP are different with each technology. It is therefore necessary to select the specific THP configuration before proceeding to detailed design. The County is proceeding with a pre-selection of the THP equipment. This project will be titled *Thermal Hydrolysis Process Pre-Selection Phase 10B.*

Through the risk analysis and discussion of potential delivery approaches, the WPCB determined that the traditional competitive sealed bidding approach does not adequately address key project risks for the remaining elements of the Program. The WPCB recommended and is proceeding with the use of the DB delivery method through competitive negotiations for delivery of the major portions of the Program, as authorized by the Arlington County Purchasing Resolution (July 2021), Section 4-102(3)D. The main advantages to the WPCB of the DB delivery method for this Program are as follows:

- Single point of responsibility for design and construction, including startup and performance requirements
- Contractor input during design, both to inform the design and to allow the contractor to be more informed to accurately price the work
- Decision making informed through real-time pricing discussions
- Deliberate teaming of design and construction partners in a collaborative manner to drive innovative solutions

The DB project will be titled the *Comprehensive Biosolids Upgrades Phase 10C/D.* By selecting the DB delivery approach, Arlington County expects to secure substantial benefits for its ratepayers including ability to design to a budget and develop cost certainty, optimal risk allocations, and certainty of project design and construction scheduling. Key components of the preconstruction and design efforts will include construction sequence and phasing, MOPO, optimized facility layouts, and final site plan development with a focus on whether existing facilities should be reused. The delivery team, working collaboratively with Arlington County and Program Manager, will establish a final project configuration that will comply with the County's vision for, and the budget constraints of, the project. The delivery team will have opportunities throughout the project for innovation to improve the initial design concepts and to realize cost or schedule improvements.

22.3 Project Schedule and Sequencing

The final project schedule will be refined as delivery teams are procured. Preliminary schedules for the different phases are provided below.

22.3.1 Gravity Thickener Upgrades Phase 10A

As noted above, the GT upgrades will be designed by one of the County's on-call engineers and construction will be procured through a competitive sealed bidding (design-bid-build) approach. A preliminary timeline for Phase 10A is provided in Figure 22-1 below.

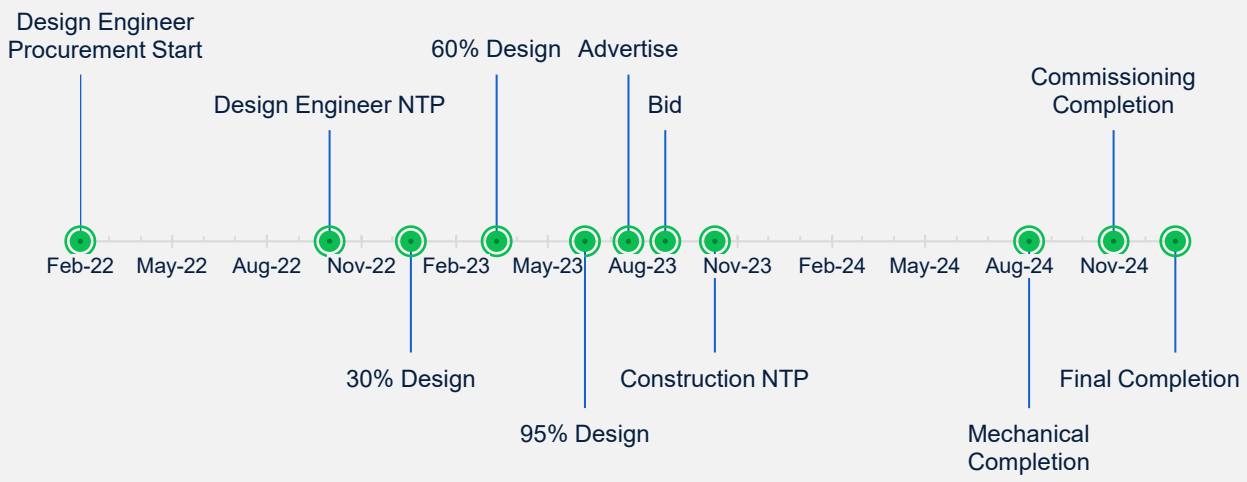

Figure 22-1. Gravity Thickener Upgrades: Phase 10A Preliminary Timeline

22.3.2 Comprehensive Biosolids Upgrades Phase 10C/D

Phase 10C/D is expected to be completed in two phases: an Early Work phase (10C) to include mass demolition and site preparation and the Main Project phase (10D) to include all structural, process, and mechanical work. Subject to approval of the County and County Board, the two phases will proceed using the same DB delivery team. A preliminary timeline for Phase 10C/D is provided in Figure 22-2 below. The overall Program is expected to continue through the end of 2028.

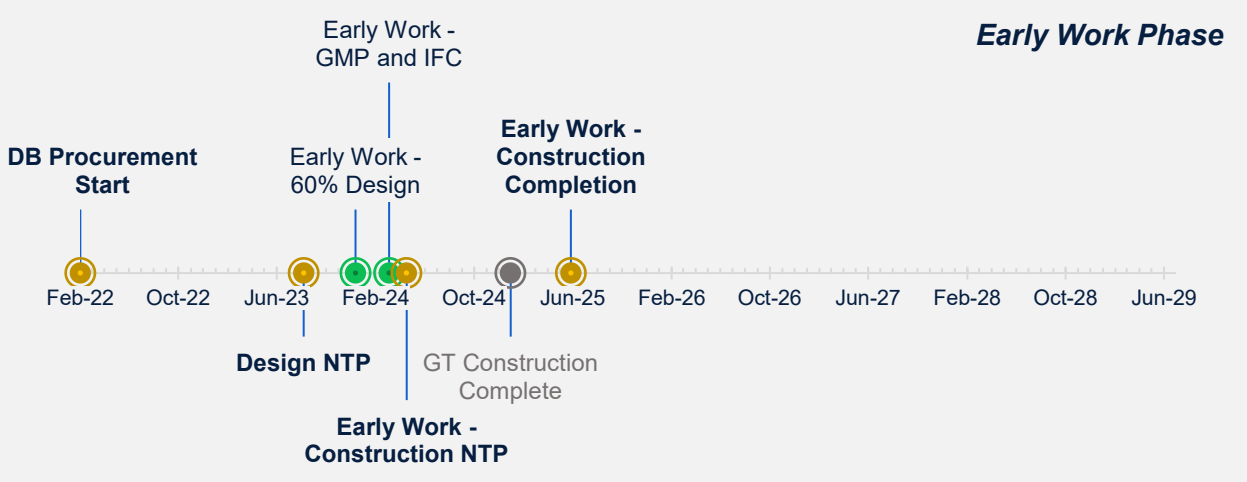

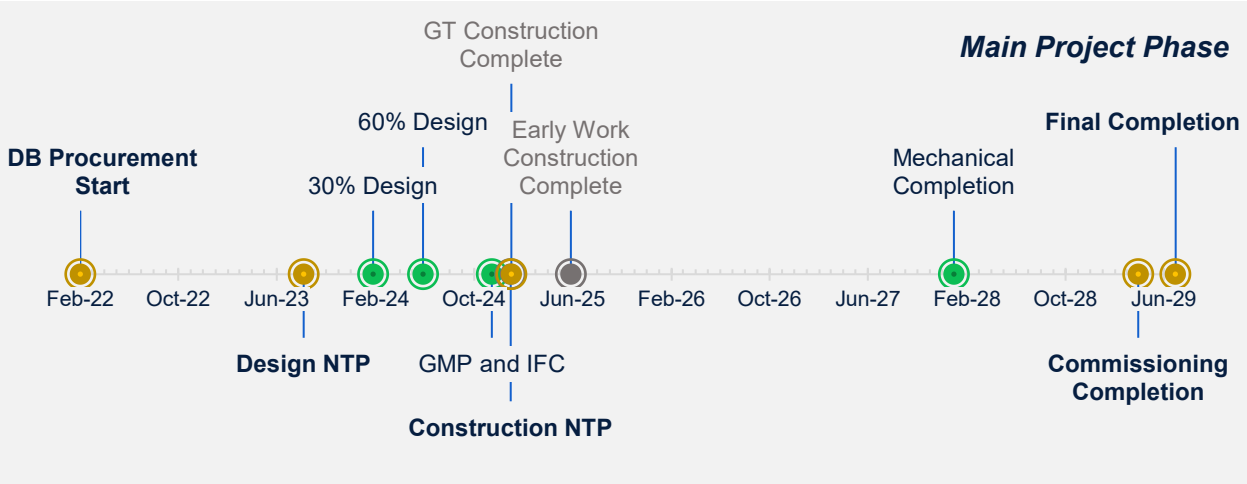

Figure 22-2. Comprehensive Biosolids Upgrades: Phase 10 Preliminary Timeline

22.3.2.1 Early Work Phase

The Early Work phase will be defined through additional bridging documents to be provided in the DB Request for Proposals (RFP), representing approximately 30 percent design of the required elements. The main components of the Early Work phase include:

- Demolition of existing Bio-building and remnants from abandoned structures, including old digesters
- Relocation of bulk chemicals (polymer and sodium hypochlorite) from Bio-building
- Rerouting of existing thickened solids lines and existing centrate drain from Bio-building
- General site preparation for main construction
- Potential early electrical gear procurement

These scope items are preliminarily discussed below. They will be further defined in the RFP bridging documents.

Relocation of Chemicals

The basement of the Bio-building includes bulk storage for emulsion polymer (dewatering) and sodium hypochlorite (odor control). There are also two abandoned $FeCl_3$ tanks. To allow for demolition of the Bio-building, the bulk storage for polymer and sodium hypochlorite must be relocated.

Existing polymer demand for dewatering is relatively low at approximately 60 to 80 gpd. An existing 6,200-gallon spare blend tank (Blend Tank 3) in the DWB polymer feed room will be repurposed as a bulk storage tank. Blend Tank 3 will provide adequate storage volume (90 days at average use). To use this tank for bulk polymer storage, the following modifications will be required:

- Provide new polymer fill connection and fill panel.
- Add level instruments for monitoring of bulk storage level and connect to the WPCP process control system. All process control will be the same as the existing operation for transfer and dilution of the polymer. The polymer tie-in location will be upstream of all control devices, with the exception that a new flow meter will be provided.
- Determine modifications to existing tank that are required based on recent inspection report. The inspection report notes missing welds on baffles. However, these baffles are not anticipated to be required when Blend Tank 3 is used as a bulk storage tank.
- Provide transfer pump and associated controls including flow meter for transferring polymer from Blend Tank 3 to Blend Tanks 1 and 2 for aging.
- Provide shelf-spare transfer pump for redundancy.
- Provide necessary piping connections for the work.

Existing sodium hypochlorite demand is approximately 130 gpd for odor control purposes. There are two options for providing sodium hypochlorite to the existing 3,300-gallon hypochlorite storage in the DWB:

- Use the existing hypochlorite fill connection at the DWB to accept partial deliveries of sodium hypochlorite. Deliveries can be coordinated to coincide with deliveries to the South Hypochlorite Facility to avoid partial delivery charges. The existing 3,300-gallon tank provides approximately 25 days of storage.
- Provide new transfer pump and use existing transfer line to pump from the South Hypochlorite Facility to the DWB. A transfer line currently exists from the South

Hypochlorite Facility to the PTB. This line would be extended from the PTB to the DWB.

Based on discussions with the County, the preferred option is to use the existing hypochlorite fill connection at the DWB to accept partial deliveries of sodium hypochlorite.

Rerouting of Utilities

Two major utilities currently pass through the existing Bio-building:

- 8-inch-diameter thickened solids line, which is looped from the SSTs to the solids wet well
- 16-inch-diameter centrate/building drain, which eventually ties in to an old 24-inch-diameter incinerator scrubber drain

Both utilities will be rerouted to the west of the existing DWB and Bio-building while being sure to avoid areas of new construction. The operation of the existing RIPS will not be changed through the relocation of these utilities. Refer to Section 16 for discussion of permanent changes to the RIPS.

Demolition

Major demolition activities are required to clear the site for the new facilities, as shown on Drawings C-03 and C-06. The Early Work phase will include the demolition of the Bio-building and potential remnants of abandoned digesters.

The Bio-building was constructed in 1977 and primarily housed two multiple-hearth incinerators. The incinerators were decommissioned with construction of the existing DWB and lime stabilization systems in the 1990s. The Bio-building is nearly completely abandoned. Existing chemicals and utilities are running through the building as mentioned above. In addition, the Arlington County Household Hazardous Materials (HHM) Facility collection area is located on the first floor in the west portion of the building. The previously adjacent Solids Filter Building and Lime Building were demolished when the existing DWB was constructed. Under all site plan scenarios, the Bio-building will be demolished. The County will relocate the HHM Facility prior to commencement of demolition.

Old Digesters 1 through 3 were demolished as a change order to Phase 7D. No records exist to confirm if the digesters were demolished completely (including foundations) or if the foundations were left in place. Investigations will continue to determine what remnants of the digesters are remaining—any remnants will be removed in the Early Work phase.

The SSTs and adjacent building housing the pumping equipment, MCCs and electrical room will ultimately be demolished but need to remain in operation, at least temporarily, during construction.

Site Preparation

During and following the major demolition activities, the site will be prepared for future construction activities. It is anticipated that this preparation will include significant supported excavation and drainage improvements to create a workable site at approximately EL 22.

Early Electrical Gear Procurement

New electrical distribution equipment will be required. As discussed in Section 22.4.2 below, this new distribution equipment could be used to power existing DC-1 and DC-7 loads such that the existing DC-7 could be removed from service to facilitate construction. Consideration will be given to early shop drawing review of the new electrical equipment to facilitate fabrication release date and arrival onsite. This is not included in the initial Early Work scope of work but may be added to the Early Work during initial design phases.

22.3.2.2 Main Project Phase

The Main Project phase will be authorized separately from the Early Work phase, and it will include all of the major process components of the facility. It will also include all startup, commissioning, and training activities. Once the site has been prepared under the Early Work phase, limited schedule and sequencing constraints will be associated with the Main Project phase. Generally, these constraints include:

- Solids handling operations will need to be maintained at all times (see Section 22.4 below).
- WPCB O&M staff will need safe access to operational facilities at all times.
- Demolition of existing SSTs or DAFT facilities cannot occur until new SSTs are constructed and commissioned.
- Startup will need to proceed in a sequential and integrated manner (see Section 22.7 below).

22.4 Maintenance of Plant Operations

MOPO will be a key consideration of project implementation moving forward. It is critical that the WPCP be able to remove solids from the process effectively and efficiently throughout construction. MOPO planning will be a considerable focus of the design and preconstruction phases of the work. Critical components of the MOPO planning include:

1. Maintaining the capability to beneficially land-apply biosolids throughout construction through a combination of:

    a. MOPO of existing DWB
    b. Temporary dewatering and/or stabilization options to allow for renovations in existing DWB
    c. Use of new facilities for dewatering and truck loading to off-site stabilization during construction

2. Maintaining electrical service to existing facilities throughout construction through a combination of:

    a. Maintaining existing electrical service
    b. Providing new electrical feed and distribution that can temporarily feed existing facilities

22.4.1 Maintaining Solids Handling Operations during Construction

Arlington County solids will continue to be produced throughout construction. The MOPO considerations will be a key decision point in selecting a final site layout (as discussed in Section 17.2).

The MOPO constraints for Option 2—decommission existing DWB—are relatively straightforward:

- Complete utility relocation, demolition, and site preparation as discussed for the Early Work phase.
- Construct new facilities completely. As envisioned, the existing DWB would remain in service throughout construction. Access for WPCB O&M staff will need to be maintained throughout construction.
- Commission new facilities.
- Demolish existing DWB truck bay extension and odor control facilities (as shown on the drawings) and SSTs.
- Decommission and/or demolish the existing DAFT and DWB.

Option 1—renovate existing DWB—would involve a significant shutdown of the existing DWB prior to new facilities being fully available for solids processing. Therefore, temporary facilities or use of new facilities for alternative purposes would be required to continue processing the solids for beneficial reuse. Note, landfilling of solids to facilitate construction will not be acceptable.

The MOPO constraints for Option 1—renovate existing DWB—would include the following:

- Complete utility relocation, demolition, and site preparation as discussed for the Early Work phase.
- Construct and commission the new Final DWB and truck loadout with temporary connections for dewatering unstabilized solids. Permanent or temporary odor control is also required for these facilities.
- Provide for stabilization of dewatered solids through one of the following:
    - On-site temporary lime stabilization, including truck loadout and odor control
    - Off-site stabilization
- Transition solids operations through new Final DWB, including any temporary facilities
- Decommission and demolish interior of existing DWB
- Construct new pre-dewatering facilities within existing DWB
- Construct new THP facilities in location of existing DWB odor control
- Commission new facilities
- Remove temporary facilities
- Decommission and/or demolish existing SSTs
- Decommission and/or demolish existing DAFT

Options for temporary lime stabilization and off-site stabilization are discussed further in Section 22.4.2 below. Other facilities outside of pre-dewatering and final dewatering would be constructed as available. Temporary dewatering could be considered in place of using the new Final DWB for dewatering unstabilized solids.

22.4.2 Temporary Facilities

Option 1—renovate existing DWB—would require stabilization of the solids either on site through temporary lime stabilization or off site. Dewatering would be through the new Final DWB and truck loadout. As noted above, landfilling of solids during construction is not acceptable.

22.4.2.1 On-site Temporary Lime Stabilization

On-site stabilization would occur by mixing lime in with the dewatered solids, similar to the current process. An example temporary lime stabilization system (without odor control) is shown in Figure 22-3 below.

Figure 22-3. Temporary Lime Stabilization in Howard County, Maryland

A temporary enclosure would be provided outside the new Final DWB to contain lime dust and odors. A temporary odor control system would treat the ventilation exhaust from the temporary stabilization structure. Because of site constraints the structure could only be large enough to house two dewatered cake trailers at a time so staging operations over the extended operations would be difficult. Additionally, because of the limitations of the temporary lime addition system the stabilized biosolids would have to be hauled off site throughout the day.

22.4.2.2 Off-site Stabilization

Off-site stabilization would involve the trucking of unstabilized dewatered solids for stabilization to another facility. The cake bins in the Final DWB would be used to store the dewatered solids and load the trucks. Use of the cake bins could provide the ability to maintain the current nighttime hauling schedule, although the cake bins would need to be decontaminated prior to receiving Class A dewatered cake. The stabilization techniques used by the off-site providers that have been contacted include lime, thermal with lime, and composting.

The following off-site stabilization providers were contacted to determine whether they could potentially accept unstabilized dewatered solids from Arlington over an extended period:

- Spotsylvania County, Virginia (composting)
- Synagro (Old Line) in Baltimore, Maryland (thermal with lime)
- Veolia in Baltimore, Maryland (composting)

- McGill in Waverly, Virginia (composting)
- Nutri-Blend in Cumberland, Virginia (lime)

Of the off-site stabilization providers listed above, only McGill and Nutri-Blend have the capacity to fully accept unstabilized dewatered solids from Arlington. Both indicated that they currently expect to have the capacity in the 2025 time frame to accept the solids, but both indicate that capacity is allotted on a first come, first served basis.

22.4.2.3 Comparison of Temporary Alternatives

Table 22-1 below provides a comparison of on-site versus off-site stabilization options. For Option 1—renovate existing DWB—it is assumed that 18 months of temporary operations would be required. The total costs for on-site and off-site composting are comparable for this duration. The costs for off-site lime are significantly higher. The lime options (on-site or off-site) will also fluctuate with the price of quicklime. Off-site hauling has less odor impact on the community because of the potential for nighttime hauling, although hauling and delivery schedules would need to be coordinated with the receiving facility. Off-site stabilization also has less of an impact on construction site constraints because of no temporary facility footprint and no lime deliveries.

Table 22-1. Temporary Stabilization Comparison

Parameter	On-site Lime Stabilization	Off-site: Composting	Off-site: Lime Stabilization
Temporary facilities and operations	✖ $700,000	$0	$0
Annual lime usage	✖ $560,000	$0	$0
Total annual stabilization + hauling cost [a]	! $2,810,000	✔ $2,750,000	✖ $6,760,000
Total cost for 18 months of operation	! $4,920,000	✔ $4,130,000	✖ $10,140,000
Odorous trailers?	✖ Yes	! Less so	! Less so
Nighttime hauling?	✖ No	✔ Yes	✔ Yes
Site footprint, ft^2	✖ 5,600	✔ 0	✔ 0
Lime delivery?	✖ Yes	✔ No	✔ No
Backup disposal options?	✔ Yes	! Potentially	! Potentially
Decontaminate cake bin?	! Depends on operations	✖ $50,000	✖ $50,000

a. Assumes 150-mile trip and Recyc doing the hauling. McGill hauling raw cake is $3,400,000/yr. This line includes the cost of stabilization.

The decision on the temporary stabilization method will be made in conjunction with the review of site plan options with the selected delivery team. The County preference if Option 1—renovate existing DWB—is the preferred approach, would be for off-site stabilization. If that path is chosen, it is recommended to start preparing procurement documents for off-site stabilization as soon as a site plan decision is made. These contracts would reserve capacity beginning in 2025 with options to extend the contracts.

22.4.3 Electrical

The electrical service to the existing DWB must remain in service, at least partially, during construction of the new facilities. Drawings E-01, E-02, and E-03 show a suggested method to assist that effort.

The existing north plant electrical distribution comprises two 34.5 kV redundant feeders that serve DC-1 and DC-7. These feeders are configured such that an outage of one feeder removes both associated DC transformers from service. In addition, this makes it difficult to add transformers for future facilities. The recommended approach is to add distribution switches through the following sequence:

1. Take down one feeder while the other serves all loads. See Section 19.4 for outage support requirements.
2. Connect the existing DC-1 and DC-7 transformers to switch legs.
3. Follow the same process for the second feeder.

When the distribution switches have been installed, they will serve as a connection point for new DC-7. This will allow existing DC-1 and DC-7 loads to remain in service during construction. When the existing DC-7 transformers need to be removed, a pair of 480 V circuits would be run from the new DC-7 to the existing DC-7. When the existing DC-7 is replaced those two feeders can supply the new equipment.

Given the long lead time of switchgear and criticality of maintaining electrical service during construction, it is recommended that budget be allocated in the Early Work phase for initial switchgear procurement activities, including selection of equipment and shop drawing review. The equipment could be released immediately upon approval of the Main Project phase.

22.5 Demolition of Existing Facilities

As discussed in Section 22.3.2.1 above, mass demolition of existing facilities will be required. In addition, selective demolition will be required to integrate new facilities with the existing facilities.

22.5.1 Mass Demolition and Existing Foundations

The selected site plan option may impact the extent of planned demolition of concrete and deep foundations. Some deep foundations below demolished structures could be repurposed to reduce the construction cost of new support systems. The same could apply to existing concrete foundations (and other elements, such as integrally cast walls), whether at grade or pile supported. In either case, all of the locations and sizes of the existing piles and foundations to be repurposed should be confirmed for location and geometry. Pile load tests on existing piles may be appropriate to verify capacity assumptions. Should none of the existing construction be incorporated into the selected site plan option, the in situ piles would need to be cut off at appropriate levels and locations would need to be verified not to interfere with new deep foundation

construction. Also, the proximity of new piles to existing piles would be evaluated for any effect due to group capacity reduction.

All foundation design and geotechnical evaluations will be completed by the delivery team.

22.5.2 Select Demolition

Select demolition will be required in certain areas to integrate new facilities with existing facilities. The select demolition will need to be properly planned and coordinated to ensure continued service and MOPO and to avoid damage to existing operational facilities.

22.5.3 Hazardous Materials

Limited quantities of hazardous materials, namely asbestos-containing materials (ACM) and lead paint, are known to be present in facilities that will be demolished. Previous hazardous-materials studies were completed, most recently in 2003. The Program Manager and the County may revisit these studies and provide additional investigations prior to the DB RFP. Delivery teams will be fully responsible for mitigating any hazardous materials during demolition, including compliance with all laws, rules, and regulations. All available hazardous-materials survey information will be provided to prospective delivery teams in the DB RFP.

22.6 Startup and Commissioning

A commissioning program will be collaboratively developed with the delivery team. The commissioning program will include the three stages listed below:

- **Planning:** includes developing the plan; identifying a commissioning team; and developing WPCP O&M manuals, standard operating procedures (SOPs), and a training plan
- **Individual equipment testing:** includes defining and conducting the field equipment testing procedures, including installation checks (Manufacturer's Certificate of Proper Installation), preliminary and pre-final (dry and wet) testing, and open- and closed-loop testing (witnessed combined-loop testing) for all equipment that interfaces with the WPCP process control system
- **Startup testing (operational demonstration):** includes functional testing of equipment systems and processes, meeting Performance Guarantees (PGs) and standard specifications, all leading to beneficial occupancy of the entire system
- **Training:** includes training O&M personnel through both process and vendor-led training sessions

The delivery team will define all commissioning requirements in the project specifications. Additional information will be included with the scope of the DB RFP.

PGs will be discussed and developed with the delivery team as the design phase of the project progresses. All PGs will be fully defined and finalized by the time of guaranteed maximum price (GMP) determination. Acceptance testing will be required separately from the PGs on all equipment, and the delivery teams will be responsible for defining those testing requirements. Preliminary concepts for PGs are provided in Table 22-2 below.

Table 22-2. Preliminary PG Concepts

Facility	Criteria	Description
Entire facility	Operational reliability	Operate all project facilities for a prescribed duration over multiple days without operational/process issues. All facilities operated in automatic mode continuously. Feed rate would match solids production at startup/current operating conditions.
Entire facility	Maximum throughput	Achieve throughput of 68 dtpd through all facilities, including digestion, for a prescribed duration. Matches 2052 peak 3-day design condition. Will need to be carefully coordinated with County operations staff to avoid process upsets.
End product	Proof of Class A product	Fecal coliform, salmonellae, enteric virus, and viable helminth densities.
All unit processes	Demonstrate equipment capacity and reliability	All process equipment will be functionally tested for a prescribed duration over multiple days. Equipment will operate in automatic mode at specified design capacity continuously to demonstrate reliability and capacity.
Solids screens	Solids screenings moisture content	Compacted screenings will have a minimum dry solids content to be determined, with no standing water in the screenings dumpster.
Solids storage tanks	Confirm SST mixing efficacy	Demonstrate that the SSTs are well mixed.
Pre-dewatering centrifuges	Capacity and performance	Achieve specified cake solids, capture efficiency, and polymer consumption at the design throughput capacity and turndown conditions.
Pre-dewatered cake storage bins	Cake storage bin watertight	Cake bins will be tested hydrostatically to confirm watertightness of cake bin.
Pre-dewatered cake storage bins	Watertight gates under bins	Cake bins will be tested hydrostatically to confirm watertightness of gates or live bottom at bottom of bins.
THP	Cake dilution system	Dilute to specified THP feed concentration (+/- 1%) when operating in fully automatic operation.
THP	Throughput capacity	Demonstrate that the entire THP system can process the design capacity solids throughput and flow rates.
THP	Steam consumption	Steam usage per try don of solids throughput will not exceed the prescribed values. Steam usage will not exceed a maximum instantaneous steam demand.
THP	THS flow split	Demonstrate that the THS flow control valves and flow meters control the THS flow split within 5% accuracy range.

Facility	Criteria	Description
Steam	Steam production	Achieve required steam output from each boiler system. Demonstrate turndown requirements are met for each steam boiler.
Steam boiler	Boiler feedwater conditioning confirmation	Sampling to confirm chemical dosing is adequate for steam boiler performance.
Steam boiler	Emission limits	Achieve required air emission limits required for the boiler system.
THS cooling	Adequate cooling capacity	Confirmation system can transfer prescribed Btu/hr during automatic operations at a prescribed worst-case scenario condition.
THS cooling	Digester temperature control	Maintain digester temperature at a prescribed temperature range for a prescribed period.
Digester	Secondary digester operation	Operate the secondary digesters as a primary digester and confirm performance is similar to the primary digesters.
Digester	Confirm digester mixing efficacy	Demonstrate at least 90% of the primary digester is active volume at a prescribed throughput rate.
Final dewatering	Centrifuge performance	Achieve specified cake solids, capture efficiency, and polymer consumption at the design throughput capacity and turndown conditions.
Final dewatering	Cake storage bin watertight	Cake bins will be tested hydrostatically to confirm watertightness of cake bin.
Final dewatering	Watertight gates under bins	Cake bins will be tested hydrostatically to confirm watertightness of gates or live bottom at bottom of bins.
Gas cleaning system	System throughput capacity	Demonstrate through testing and calculations that the system can achieve the prescribed throughput rate when operating in automatic mode without significant equipment failure. Demonstrate turndown requirements are met for the system.
Gas cleaning system	Gas quality	Demonstrate cleaned gas quality meets required criteria.
Flare	Flare capacity	Demonstrate maximum and minimum capacity of flare.
Flare	Flare emissions	Achieve required flare emission limits.
Odor control	Performance	Verify required odorant removal through testing and sampling.

22.7 Contractor Laydown/Storage Areas and WPCP Access

Space on site is very limited for contractor laydown and storage and off-site facilities may be required. The County and Program Manager will work with the delivery team to identify space on site that could be used and how access to existing facilities for WPCB staff will be maintained. It is anticipated that the trailer complex constructed for MP01 projects on the corner of Fern and Glebe will be rebuilt and contain all necessary facilities for the delivery team and Program Manager. The Arlington County Department of Environmental Services (DES) is currently renovating the vacant lot across 31st Street S from the WPCP, and it is anticipated that this lot could be used for delivery team parking and limited storage. Once the Early Work phase is complete, the areas of the old digesters and Bio-building can be used for limited laydown and storage. All excavated materials will likely need to be taken off site as there are very limited areas for stockpiling soils on site.

WPCP access to the existing DWB will need to be maintained while the DWB is in use and will likely be from behind the NMB or exterior to the WPCP through Gate 3 off of 31st Street S or Gate 1 off of S Eads Street.

22.8 Neighborhood Impacts during Construction

The County and Program Manager will work with the delivery team on constraints relative to neighborhood impacts. Key considerations will include:

- Work hour and weekend work limitations
- Evaluation of deep foundation types and construction methods
- Limitations on pile driving operations if driven piles are required
- Truck traffic patterns
- Parking limitations

The Program Manager and County will implement a robust community outreach plan to keep neighbors informed of ongoing construction activities and the impacts that such activities may have on the surrounding neighborhoods.

22.9 Envision Verification

As discussed in Section 2, the Re-Gen Program will be aligned with the Arlington County Facility Sustainability Policy and will pursue an Envision Silver verification as one of the means for supporting Arlington County's Sustainability Goals. During preliminary design, Arlington County, facilitated by the Program Manager, completed an internal assessment of the Program, including a review of the Program's sustainable

attributes, as well as the potential effort required to earn recognition through the Envision verification process, ensuring that the Program scope is aligned with the Envision scope. As the Program enters detailed design and construction, the discussions will continue to refine the credit levels of achievement and determine the documentation needs and responsibilities required to submit the Program's projects for verification.

In alignment with the Program's SMP, at key design and construction milestones, the Program Manager will conduct an Envision review with the delivery team, assessing the Program elements relative to the Envision scorecard, adjusting as the Program progresses. The Program is targeting Envision Silver verification via Pathway A (Design and Post-construction), allowing for the Program and team members to have the benefits of the preliminary award designation before the construction phase is completed. The Program Manager will continue to lead coordination and organization efforts for verification in preparation for compiling credit packages for the verification submission. The delivery team will be responsible for implementing Envision-aligned sustainability criteria, as well as generating, collecting, and supplying design and construction-phase supporting documentation required to support credits being submitted for verification. This collaborative process between Arlington County, the Program Manager, and the delivery team will ensure that the Program supports Arlington County' Sustainability Goals and results in an Envision verification that reflects the sustainable attributes of the Program and its overall benefit to Arlington County and the surrounding community.

22.10 Opinion of Probable Program Costs

The Program Manager developed an overall opinion of probable Program costs, as described below.

22.10.1 Opinion of Probable Construction Costs

The first step in defining the overall Program costs was development of an opinion of probable construction costs (OPCC). The OPCC is based on the facilities identified in this Plan and is considered a Class 4 estimate as defined by the Association for the Advancement of Cost Engineering International (AACE). AACE Class 4 estimates are typically done at the feasibility or study phase of a project and have an expected range of accuracy of -30 percent to +50 percent.

The OPCC is a combination of direct and indirect costs. Direct costs are based on building layouts and quantity takeoffs, estimated using a combination of manufacturer quotations, the Program Manager's database pricing, similar project costs, and historical data. Where areas have not yet been sufficiently defined to complete quantity

takeoffs, factored costs (as a percentage of other direct costs) were applied. These factored costs are identified in Table 22-3 below.

Table 22-3. Factored Direct Costs

Table redacted

Indirect costs are included as percentages and these are based on experience, current market conditions, and historical data. Indirect percentages are identified in Table 22-4 below. Note, no sales tax is included as it is assumed that the Program is exempt from state and local taxation per Code of Virginia 58.1-3660.

Table 22-4. Factored Indirect Costs

Table redacted

The OPCC was done in current-day dollars—escalation to midpoint of construction is done separately and discussed further in Section 22.10.3 below. In addition, no market volatility factor was included. The current construction market is extremely volatile, influenced by the global COVID-19 pandemic and supply-chain issues. As construction of the Re-Gen Program is not expected to start until 2024, it is not possible to predict market volatility at that time.

The total OPCC for Option 1—renovate existing DWB, and Option 2—decommission existing DWB—is provided in Table 22-5 below by facility, including all factored direct and indirect costs.

Table 22-5. Arlington Re-Gen Opinion of Probable Construction Costs

Table redacted

Note, the discrepancy between the options for screening and dewatering and anaerobic digesters is related to the configuration of the buildings for the options. Option 1 has separate buildings for pre-dewatering, final dewatering, and digestion control—the Digester Control Building is allocated to anaerobic digesters. Option 2 has a single combined SPB and no Digester Control Building. All building costs are allocated to screening and dewatering.

Assumptions used in developing the OPCC are provided below:

- The Program will be built in two phases as described above.
- The work of each phase will be completed uninterrupted, with only one mobilization and demobilization.
- The Program trades will work a standard work week.
- Phase 10A will be competitively bid, with a minimum of three bidders.
- Phase 10C/10D will be competitively bid in “bid packages” with a minimum of three bidders per bid package.
- All regulatory approvals will be obtained prior to mobilization.
- Subcontractors and trade labor can be procured locally or within a radius that does not require per diem upcharges.
- No off-site laydown and staging area will be provided.

- Water and power for construction activities are available on site at no cost to the contractor.
- Landfill for disposal of non-contaminated construction debris is within a 20-mile round trip of the Program site.

The OPCC does not include any of the following:

- Cost associated with accelerated schedules
- Off-site storage facilities
- Site security measures
- Extended warranty costs
- Extreme weather conditions that would affect working days/lost productivity
- Cost increases related to recently imposed tariffs
- Costs associated with endangered-species mitigation
- Special coatings on the interior of SSTs
- Replacement of the roofing system on the existing DWB
- Interior painting of the existing DWB

22.10.2 Opinion of Probable Program Costs

Program costs include all costs required to execute the Program. In addition to construction, these costs include pre-construction services for the DB phase (Phase 10C/D), design services, design services during construction (SDC), Program management services, and administrative costs for the County. The total opinion of probable Program costs is provided in Table 22-6 below.

Table 22-6. Arlington Re-Gen Opinion of Probable Program Costs

Table redacted

Section 22.10.3 Redacted

23 PLANNING CONSIDERATIONS FOR FUTURE FACILITIES

23.1 Background and Purpose

This section presents descriptions, design criteria, footprints, and additional information for the following facilities that could potentially be constructed after the Arlington Re-Gen Project:

- FOG Receiving Facility
- Sidestream Treatment Facility
- Post-Processing Facility (heat drying and pyrolysis)

The primary purpose of this section is to provide the delivery team with adequate information to account for the layout and site requirements of future facilities during the design and construction of the Arlington Re-Gen Project. This section is not intended to prescribe specific design details of the future facilities.

The delivery team must evaluate the footprint requirements based on the design criteria established herein and set aside area on the site plan for the future FOG Receiving and Sidestream Treatment Facilities.

Additionally, the delivery team must estimate the footprint requirements for future Post-Processing Facilities but is not required to provide space if the project team determines that it is infeasible to fit the facilities on site.

23.2 Fats, Oils, and Grease Receiving Facility

This section summarizes the conceptual design elements of a potential future FOG Receiving Facility at the Arlington WPCP. The benefits of a FOG Receiving Facility include:

- Increased biogas production from anaerobic digestion of FOG
- Ability to screen FOG and remove debris, reducing the risk of damage to downstream processes such as THP and improving biosolids end product quality
- Ability to equalize FOG and maintain a relatively consistent feed flow and load to the THP and anaerobic digesters, enhancing process stability and performance
- Ability to heat FOG to reduce risk of stratification or solidification, as well as to achieve a relatively consistent feed temperature to the THP
- Provides an environmentally responsible disposal option for grease haulers
- Provides revenue opportunities for the County from tipping fees

23.2.1 Basis of Design

Anticipated FOG quantities were approximated from publicly available information and per capita metrics. A detailed FOG study and/or market analysis is recommended to refine the estimate. Table 23-1 presents conceptual estimates for current and future FOG deliveries.

Table 23-1. Anticipated FOG Quantities

Design Condition	Grease Production in Arlington County, lb/d [a]	Grease in Plant Influent, lb/d [b]	FOG Deliveries Anticipated, lb/d [c]	FOG Deliveries Anticipated, gpd [d]
23.0 mgd (year 2020)	14,000	5,000	9,000	18,000
30.8 mgd (year 2045)	19,000	6,000	13,000	26,000

a. Grease production was estimated by multiplying the current/projected population of Arlington County by 22.68 lb of total grease per year per capita (National Renewable Energy Laboratory 1998).
b. Estimate of grease in plant influent was provided by Pretreatment Program staff at Arlington County Department of Environmental Services.
c. FOG deliveries anticipated (lb/d) was calculated as grease production minus grease in plant influent.
d. FOG deliveries anticipated (gpd) was calculated assuming an average 6% solids concentration.
e. Values shown are annual averages.

23.2.2 FOG Receiving Facility Description and Design Criteria

The introduction of FOG to THP requires a higher level of treatment than a conventional digestion system would need. To promote process stability and consistent biogas production, a relatively consistent feed flow, load, and temperature is required.

The FOG Receiving Facility must meet the following design and quality parameters:

- The FOG Receiving Facility will be designed to receive, process, and store a maximum 3-day production rate at 40 mgd buildout conditions.
- FOG will be screened to 5 mm or less.
- FOG will be concentrated to 7–9 percent TS prior to feeding the THP.
- FOG will be heated downstream of the receiving screens to prevent it from congealing.
- FOG will be heated while being transferred from the FOG Receiving Facility to the connection location at the THP system, just prior to the preheating/reactor feed unit.
- The FOG Receiving Facility will have sufficient storage capacity to provide a constant flow to the THP system.
- A truck loading scale and washdown area will be provided at or near the FOG Receiving Facility.

Figure 23-1 depicts a recommended process flow diagram for the proposed FOG Receiving Facility, based on a similarly sized facility at the Atlantic Treatment Plant in Virginia Beach, Virginia.

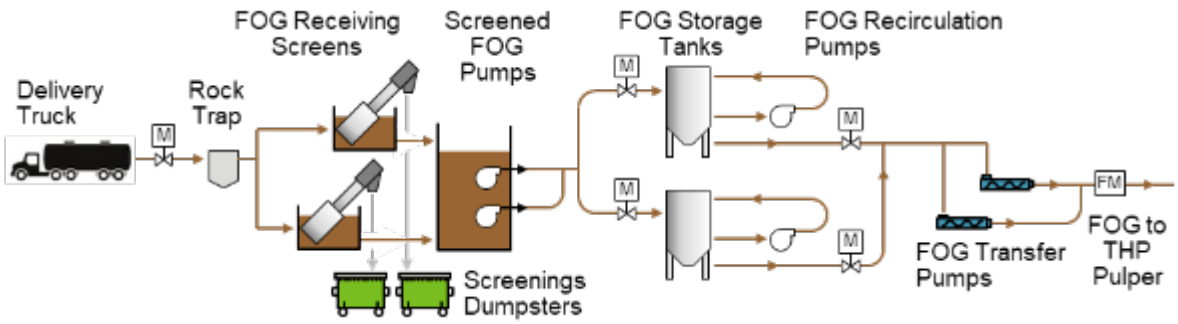

Figure 23-1. FOG Receiving Facility Process Flow Diagram

The future FOG Receiving Facility is assumed to consist of the following major equipment:

- One rock trap
- Two (one duty + one standby) 5 mm FOG receiving screens
- Two (one duty + one standby) screened FOG pumps (submersible chopper pumps)
- Two (one duty + one standby) 14,000-gallon storage tanks
- Cone-bottom steel tanks are shown, with immersion HEXs heated from the hot water system. delivery team
- Two (one per storage tank) tank recirculation pumps
- Two (one duty + one standby) FOG transfer pumps

Multiple hot water washdown and flushing connections are recommended throughout the system, for ease of cleanup and maintenance. The receiving screens will have sufficient hot water supply to clean the screen if it is blinded with FOG.

A conceptual layout for the FOG Receiving Facility is provided in Figure 23-2. The dimensions of the facility are approximately 85 feet long by 35 feet wide. These dimensions do not include space for the following additional components:

- Delivery truck access for unloading, queuing, weighing, and washdown. The washdown area will be contained with a curb, provide hot water hose bibs, and drain to the plant drain.
- Ancillary FOG heating equipment, such as hot water pumps and spray water HEXs (approximately 16 feet by 8 feet of indoor space; can be located in a nearby building)

- Odor control for treatment of foul air from FOG storage tank headspace, screened FOG pump wet well, and FOG receiving screens

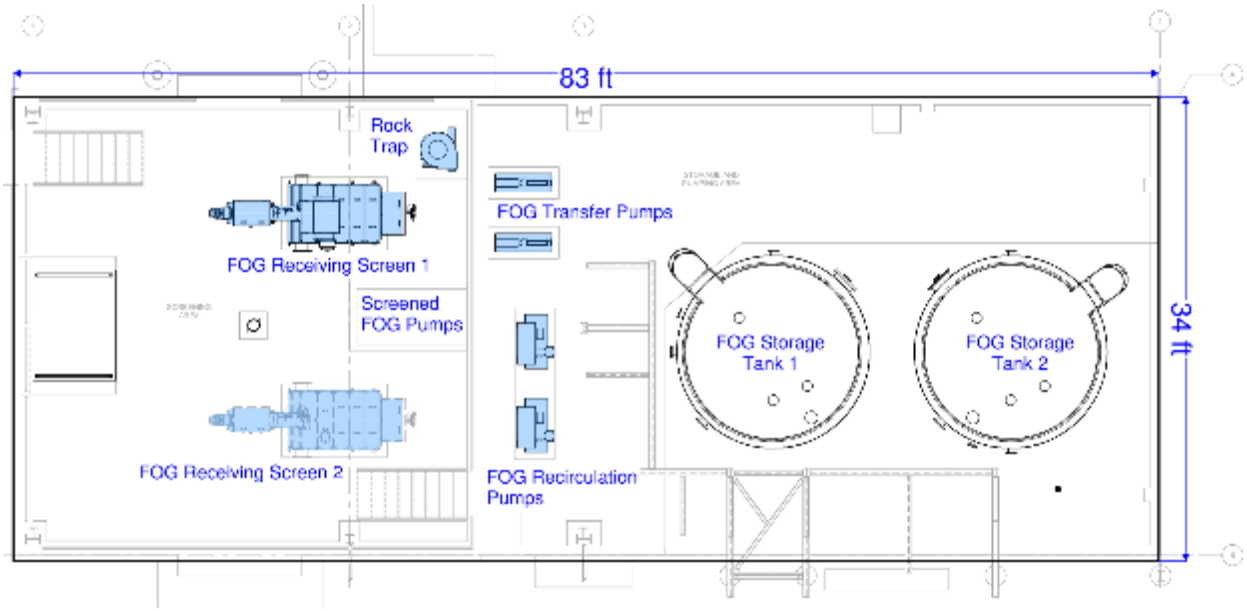

Figure 23-2. FOG Receiving Facility Conceptual Layout

The location of the future FOG Receiving Facility should consider the following:

- Traffic flow for FOG delivery trucks, including truck queuing for peak periods
- Distance to THP (shorter distance is recommended for minimizing FOG pumping and heating requirements)
- Location of other future facilities, such as sidestream treatment and future post-processing

The location of the FOG Receiving Facility depends on which of the two shortlisted site layout options is selected. Further information on the site layout options is presented in Section 17 of this Plan. Potential locations of the FOG Receiving Facility are as follows:

- **Option 1: renovate existing Dewatering Building.** If the existing DWB is renovated, the future FOG Receiving Facility could potentially be located east of the SSTs or in the location of the existing DAFT Building (which is planned to be decommissioned).
- **Option 2: decommission existing Dewatering Building.** If the existing DWB is decommissioned, the future FOG Receiving Facility could be located on the northern corner of the site, the location of the existing DAFT Building, or the current location of the existing DWB.

23.3 Sidestream Treatment Facility

The THP/AD process will generate a concentrated nitrogen recycle stream from final dewatering, which will increase the nitrogen load to the WPCP. This section presents the basis of design for the sidestream nitrogen recycle load as well as process descriptions and design criteria for the two treatment options: the baseline approach of treating the full nitrogen recycle load in the mainstream activated solids process, and a dedicated sidestream deammonification nitrogen removal process. These treatment approaches were evaluated in TM No. 8: *Recycle Management and Sidestream Treatment*.

Initially the nitrogen recycle load will be treated in the activated solids process, as discussed in Section 16.3, resulting in several impacts to that process. Methanol use will increase significantly, and it is likely that supplemental alkalinity will be required. Chemical demands and chemical storage and feed facilities for the existing activated solids process must be further evaluated and expanded as required. Additional aeration will also be required.

Space will be reserved for a future sidestream deammonification process, which will be selected and constructed at a later date. The new solids processing facilities will be designed to accommodate this future sidestream process, with consideration for centrate and dilution water conveyance to the process and return flow from the process. While sidestream deammonification requires construction of a new facility, the operating costs are significantly less than those for full mainstream treatment because of less overall methanol use, supplemental alkalinity, energy for aeration, and solids production. Postponing design and construction of a new deammonification process to a future project will allow for additional local experience treating TH recycles in similar processes. The design criteria and economic justification for a new sidestream deammonification process can also be confirmed based on full-scale operating data for mainstream treatment at Arlington WPCP.

23.3.1 Basis of Design

Final dewatering nitrogen recycle load projections are summarized in Table 23-2 below. These loads are based on assumptions for VSr and nitrogen content of the THP feedstock and were informed by THP/AD pilot testing conducted in collaboration with Virginia Tech. The ammonia-nitrogen concentration in the anaerobic digester is expected to be approximately 2,000 mg/L with a 9 percent TS feed to the digester. The filtrate will also contain approximately 400 mg/L of soluble total Kjeldahl nitrogen (sTKN). Without sidestream treatment, the final dewatering recycle would increase the total Kjeldahl nitrogen (TKN) load to the aeration basins by approximately 15 to 20 percent. The values in Table 23-2 represent continuous operation, but in practice final

dewatering will be operated approximately 5.5 days per week, resulting in higher daily loads during dewatering operation. Equalization should be provided to maintain a consistent loading to the process. The flow rate does not include dilution water that may be added before final dewatering or at the feed point to a sidestream deammonification process. A "design midpoint" condition of 28 mgd plant flow is included for evaluation of typical loads between startup and the design condition.

Table 23-2. Projected Final Dewatering Sidestream Flows and Loads

Condition	Plant Effluent Flow (mgd)	Recycle Ammonia Load (lb/d)	Recycle Flow before Dilution (gpd)
Design midpoint annual average	28.0	1,550	100,000
Design year annual average	30.8	1,710	110,000
Design year maximum month	36.7	2,240	144,000
Buildout annual average	40.0	2,250	143,000

The THP/AD process also produces refractory dissolved organic nitrogen (rDON), which is not removed by sidestream or mainstream biological treatment and will contribute to plant effluent organic nitrogen. The rDON generated from THP was estimated based on conversion of 2.2 percent of the total nitrogen (TN) fed to THP, resulting in an additional 0.35 mg/L of effluent organic nitrogen. Table 23-3 illustrates the expected change in effluent TN due to rDON, assuming a similar level of treatment in the future. Current discharge permit limits are also listed. It should be noted that because of rDON, effluent organic nitrogen will increase with THP, and maintaining the current effluent TN will require using more methanol to achieve additional denitrification.

Table 23-3. Example Effluent Nitrogen Concentrations with THP-generated rDON

Effluent Nitrogen Species	Average Effluent, 2018–2020 (mg/L)	Effluent with THP-generated rDON (mg/L)	Effluent Limits (mg/L)
rDON from THP	-	0.35	-
Organic nitrogen (without THP)	0.7	0.7	-
Ammonia N	0.0	0.0	1.0/2.7 Apr.–Oct.[a] 3.5/4.2 Nov.–Mar.[a]
NO_x	1.8	1.8	-
TN	2.5	2.85	3.0[b]

a. Weekly/monthly ammonia limits.
b. Annual TN limit.

23.3.2 Sidestream Treatment Description and Design Criteria

This section describes the process configuration for sidestream treatment of the final dewatering nitrogen recycle. A dedicated sidestream deammonification process is

recommended for future treatment of the nitrogen recycle load. Sidestream deammonification takes advantage of the warm, concentrated recycle stream to remove nitrogen in a compact footprint and with less air and chemicals compared to mainstream treatment. The deammonification process converts a portion of the ammonia to nitrite aerobically by ammonia-oxidizing bacteria (AOB), and anaerobic ammonia-oxidizing biomass (anammox) consumes the combination of ammonia and nitrite. These reactions occur simultaneously in one reactor at low dissolved oxygen (DO) conditions. This process is successful on sidestreams because the warm temperature increases activity of the slow-growing anammox biomass, and the dewatering stream provides a consistent ammonia load to the process.

Benefits of sidestream deammonification include:

- **Less aeration:** Deammonification has 60 percent less oxygen demand than full nitrification/denitrification and operates at a low DO concentration.
- **Less supplemental alkalinity:** Deammonification typically operates without supplemental alkalinity.
- **Less methanol:** Supplemental carbon is not used in the process.
- **Less solids production:** Deammonification has a low biomass yield and avoids biomass growth from supplemental carbon.

Sidestream deammonification systems typically achieve nearly 85 percent ammonia removal and 75 percent TN removal without supplemental alkalinity. Some systems are designed to add a small amount of supplemental alkalinity, typically in the form of sodium hydroxide, to improve system performance or replace alkalinity consumed by upstream chemical addition. The nitrogen that is not removed in the sidestream process will be returned to the mainstream treatment process.

While multiple vendors have provided systems for deammonification downstream of THP, a single system, ANITA™ Mox, was used as the basis for conceptual design. A separate process selection evaluation should be conducted prior to detailed design.

The process configuration is shown schematically in Figure 23-3. Centrate will likely be pumped from the final dewatering process to an equalization tank. Pumping requirements will depend on the deammonification system location and equalization tank elevation and must be considered in the design of the final dewatering facility. Centrate will be pumped from the equalization tank to the deammonification reactor, and dilution water will be added. The ANITA™ Mox system is a continuous-flow process, where anammox biomass is retained on plastic media. Suspended biomass will be wasted periodically from the return activated solids (RAS) with a motorized valve. With THP, the ANITA™ Mox is configured as an integrated fixed-film activated solids

(IFAS) process with a clarifier. Aeration is typically operated continuously in the ANITA™ Mox IFAS system to maintain a DO concentration of 0.2 to 0.5 mg/L. Effluent from the process will be returned to the plant drain.

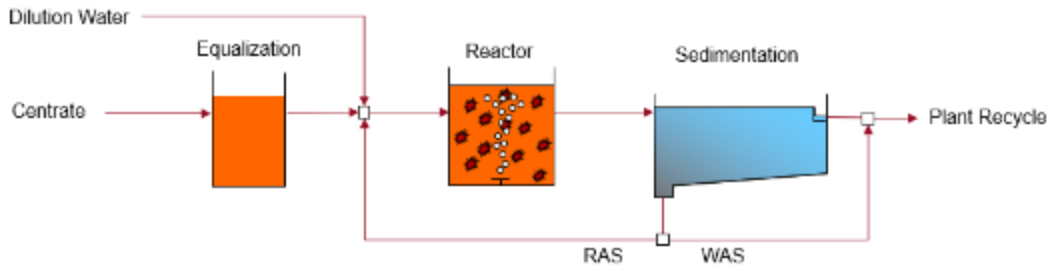

Figure 23-3. ANITA™ Mox IFAS General Process Flow Diagram

The design of the sidestream deammonification process must consider the following aspects:

- **Full-scale THP/AD and final dewatering performance:** The system design should consider the typical centrate nitrogen and TSS concentrations observed after startup of the THP/AD facilities.
- **Impacts of THP:** Because of biological inhibition, deammonification systems downstream of THP are designed for lower nitrogen loading rates compared to systems paired with conventional anaerobic digestion.
- **Centrate equalization:** Deammonification systems achieve better nitrogen removal performance when the nitrogen load is consistent. The size of the equalization tank should be refined during detailed design, with consideration to dewatering schedule and the selected deammonification process. For conceptual design the equalization tank was sized based on 24 hours of equalization volume at design average conditions.
- **Centrate dilution:** Dilution water is required to help mitigate biological inhibition, which has been attributed to chemical oxygen demand (COD) in the THP recycle stream, and to control temperature rise in the reactor because of the exothermic biological process. Dilution ratios are typically in the range of 1:1 to 2:1.
- **Process temperature:** Deammonification systems perform best when operated between 25°C and 35°C. The biological process is exothermic, which can cause the operating temperature to exceed this range if there is low dilution water flow, warm dilution water, or covered equalization or reactor tanks.
- **Odor control:** THP recycle streams have a high ammonia concentration, which results in a strong ammonia odor near the equalization tank. The ammonia is

expected to dissipate quickly and not result in off-site odors. Because the deammonification process is aerobic it has low odor potential.

- **Foam management:** Deammonification reactors often generate foam. Surface spray and surface wasting can be implemented to knock down and waste foam from the process.

The structures, equipment, and instrumentation for the ANITA™ Mox system are listed in Table 23-4. The proposed configuration includes one reactor and one clarifier. The use of one large reactor rather than parallel reactors results in lower construction cost and simpler operation and monitoring. Reactor volume is based on the nitrogen loading rate at design maximum month conditions. The ANITA™ Mox vendor recommended a design loading rate of 1.0-kilogram nitrogen per cubic meter per day (kg-N/m^3/d), which results in a reactor volume of approximately 0.34 MG.

Table 23-4. Sidestream Treatment Equipment and Instrumentation

Structure	Size and Details
Equalization tank	0.11 MG, 35 ft × 21 ft × 20 ft SWD
Reactor	0.34 MG, 50 ft × 45 ft × 20 ft SWD
Clarifier	35 ft × 13 ft × 13 ft SWD
Building	Two levels, 35 ft × 16 ft
Equipment	Quantity and Details
Plastic carrier media	20,900 ft^3
Media retention screens	2
Medium-bubble diffusers	5 grids
Airlift pumps for foam control	5
Hybrid screw blowers with VFD	1 duty/1 standby, 125 hp ea.
Top-entry mixer with VFD	1, 20 hp
Reactor feed pumps with VFD	1 duty/1 standby, 7.5 hp ea.
RAS/WAS pumps with VFD	1 duty/1 standby, 5 hp ea.
Chain and flight clarifier mechanism	1
Equipment	Quantity and Details
PLC control panel	1
RAS/WAS control valves	2
RAS/WAS flow meters	2
Reactor feed flow meter	1
Dilution water flow control valve	1
Dilution water flow meter	1
Air supply flow meter	1
Level indication transmitter: equalization	1
Level float: reactor and equalization	2
DO probe: reactor	1
pH probe: reactor	1
Nitrate probe: reactor	1
Ammonia analyzer: reactor and equalization	1

A conceptual layout for the sidestream treatment system is shown in Figure 23-4. Common wall construction was used where possible, and tank dimensions in the figure account for typical wall thicknesses. The building is configured between the tanks with pumps on the lower level for RAS/WAS and feeding from the equalization tank to the reactor. The upper level would be used for blowers, VFDs, and controls. The reactor and clarifier would not be covered because it is an aerobic process with relatively low odor, similar to aerobic activated solids. The equalization tank may be covered if there is a need to limit ammonia odors in the selected location. The location for future sidestream deammonification is expected to be near the existing SSTs, and the configuration will depend on the overall facility layout.

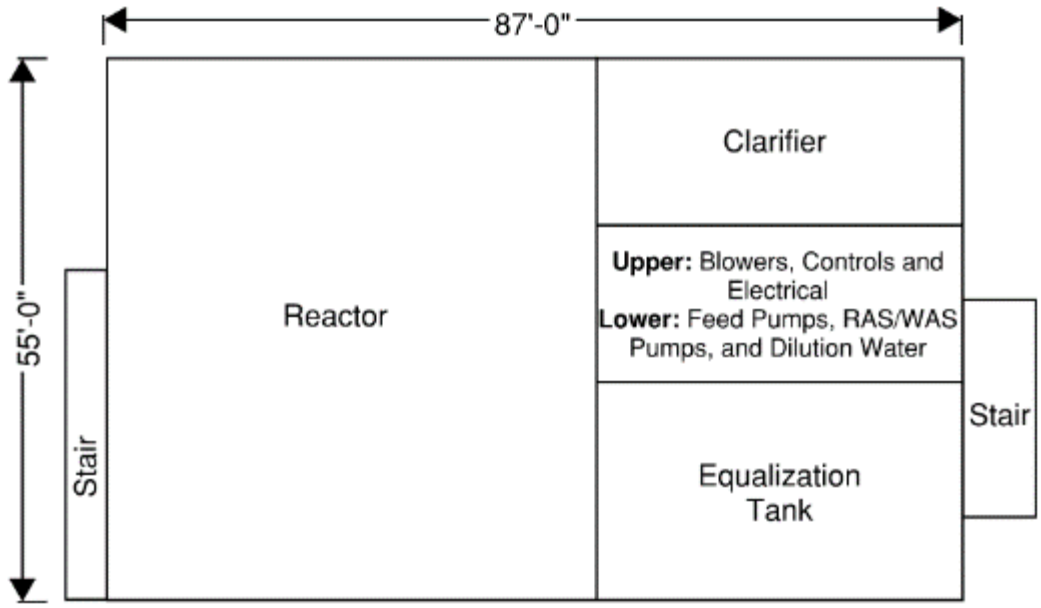

Figure 23-4. Sidestream Deammonification Conceptual Facility Layout

23.4 Future Solids Post-Processing Facility

This section summarizes the conceptual design elements of potential post-processing facilities at the Arlington WPCP. Two technologies were considered: heat drying and pyrolysis.

Heat drying consists of applying heat to dewatered cake to further reduce the moisture content of the final product. Typically, biosolids drying processes are designed to achieve a solids content of 90 percent or greater, to meet the EPA's requirements for Class A. However, as the dewatered product from the Program will already be Class A, it is not critical to achieve a 90 percent solids content for the dried product (60–70 percent may be acceptable). The benefits of heat drying include:

- 60 percent volume reduction of final product, compared to dewatered cake
- 60 percent lower annual hauling costs because of fewer wet tons hauled per year
- Higher-value product: easier to handle and spread, more end use markets, and potentially lower annual hauling costs because of enhanced product marketability

Pyrolysis consists of heating dried solids at 500°C in the absence of oxygen, to produce the following end products: biochar (similar to activated carbon), pyrolysis gas (similar to biogas, consisting primarily of methane, hydrogen, carbon monoxide, and carbon dioxide), and pyrolysis oil (a high-energy tar). The benefits of pyrolysis include:

- 90 percent volume reduction of final product, compared to dewatered cake
- 90 percent lower annual hauling costs because of fewer wet tons hauled per year
- Potential destruction of per- and polyfluoroalkyl substances (PFAS) and other contaminants of emerging concern
- Generation of biochar, which may have a higher market value than Class A biosolids
- Opportunities for additional energy generation from pyrolysis gas and pyrolysis oil

It should be noted that drying and pyrolysis of THP solids is an emerging biosolids management strategy. There are fewer than ten facilities in the world that dry THP solids, and there are no full-scale pyrolysis facilities that process only biosolids. Further evaluation would be needed to refine the design concept and process feasibility.

23.4.1 Basis of Design

Conceptual facility plans were based on the 40.0 mgd buildout condition. The solids loadings from Section 3 are summarized in Table 23-5.

Table 23-5. Final Dewatered Cake Solids Production

Design Condition	Total Solids Load (dtpd)		
	Average	Peak 30-day	Peak 14-day
23.0 mgd	14	19	20
30.8 mgd	19	25	27
40.0 mgd	25	32	35

Notes: Solids loads above represent average weekly solids production based on a 24/7 schedule; the actual loading to post-processing will be higher because the system will not be operated 24/7.

The project team reviewed the basis of design for the post-processing facilities at Workshop 7.2 on November 18, 2021. A redundant train was determined to be unnecessary because the Class A cake could be hauled off site in the event that the post-processing is taken out of service.

The post-processing facilities would be sized for annual average conditions. The project team agreed it would not be necessary to size for peak loading conditions. During peak conditions, the County could pursue one of the following options:

- Reduce the loading to the post-processing facilities by diverting the excess dewatered cake directly to truck loading for land application.
- Increase the throughput of the dryer, resulting in a dried solids concentration below the target value of 90 percent. While not ideal, partial heat drying to 60–70 percent would still reduce the volume of solids hauled off site and enhance product marketability.

The post-processing facilities would be sized to operate 24 hours per day, 6 days per week, to allow 1 day per week of maintenance. The design criteria for heat drying are summarized in Table 23-6.

Table 23-6. Drying Facility Design Loading

Design Condition	Dryer Feed			Dryer Output		Tons Water Evaporated per Hour
	Dry Tons per Hour	Percent Solids	Wet Tons per Hour	Target Percent Solids	Wet Tons per Hour	
40.0 mgd, average	1.2	33%	3.7	90%	1.4	2.3
40.0 mgd, peak 30-day	1.6	33%	4.7	65%	2.4	2.3
40.0 mgd, peak 14-day	1.7	33%	5.2	60%	2.8	2.3

Notes: Flows and loads were developed assuming a 132 hours (6 days) per week operating schedule. The target percent solids for peak conditions were back-calculated assuming a 2.3-ton per hour evaporation capacity.

23.4.2 Drying Facility Description and Design Criteria

The drying facility would meet the following design and quality parameters:

- The dryer will be designed and sized to achieve 90 percent solids at the annual average solids production rate at 40 mgd buildout conditions. As shown in Table 23-6, the total evaporative capacity of the system is approximately 2.3 tons of water per hour.
- The system will include a dryer feed cake bin, sized to provide a minimum of 8 hours of storage at average conditions.
- The drying technology and configuration will have successful operational experience with processing of THP solids. Belt dryers are recommended, as drum dryers have been observed to generate excessive amounts of dust when processing THP solids.
- The drying facility will have one or two silos for dried biosolids storage, sized for a minimum of 24 hours of total storage at average conditions.

Figure 23-5 presents a simplified overall process flow diagram of a future drying facility at the Arlington WPCP. A future dryer feed cake bin is shown in the figure, but it may also be possible to instead use the final dewatered cake bin as the dryer feed cake bin and install dryer feed pumps in the truck loadout area below the bin.

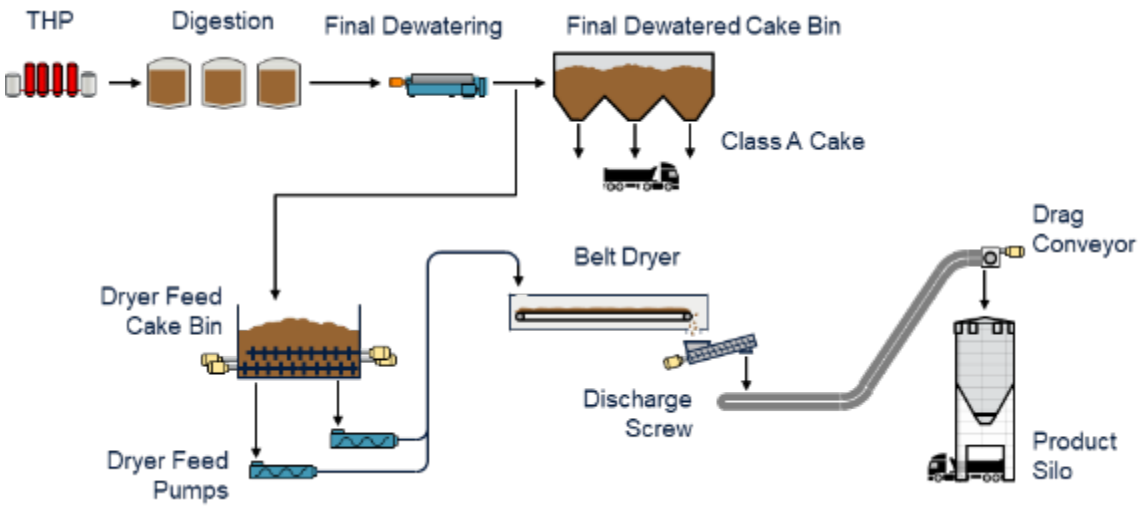

Figure 23-5. Drying Facility Process Flow Diagram

Conceptual layouts for the drying facility are provided in Figure 23-6 (plan view) and Figure 23-7 (section view). The dimensions of the facility are approximately 100 feet long by 50 feet wide, not including area for truck loading/wet cake bin, product storage silo, and odor control. The dimensions of the facility will vary depending on the manufacturer. For the purposes of this Plan, conceptual equipment sizing was provided by belt dryer manufacturers Griffin, Haarslev, Veolia, and Huber.

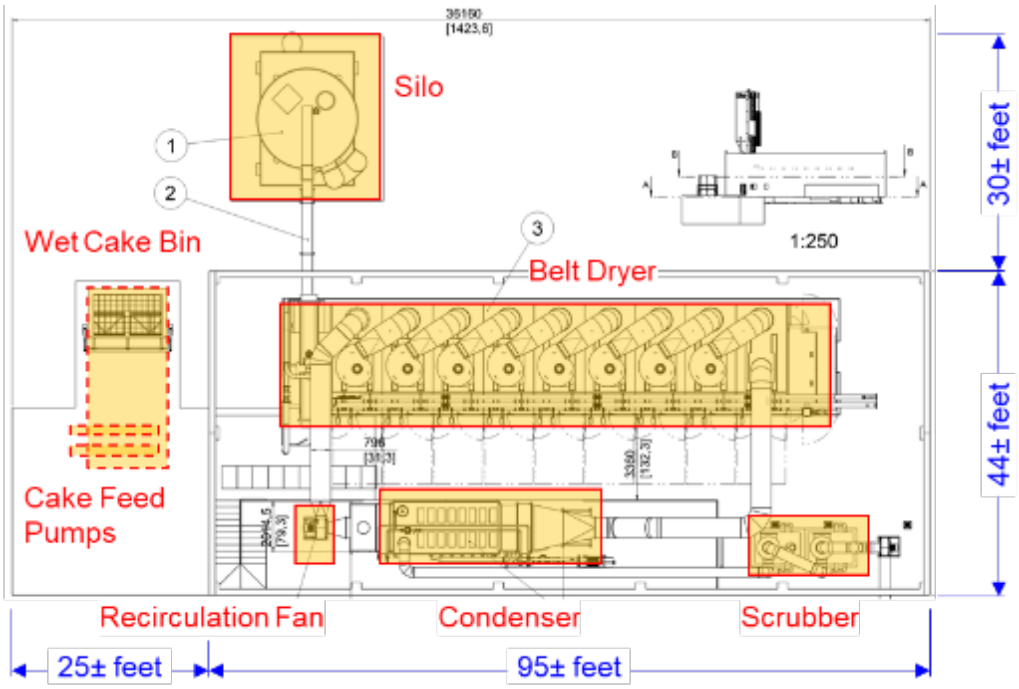

Figure 23-6. Drying Facility Conceptual Layout: Plan View (Source: Huber)

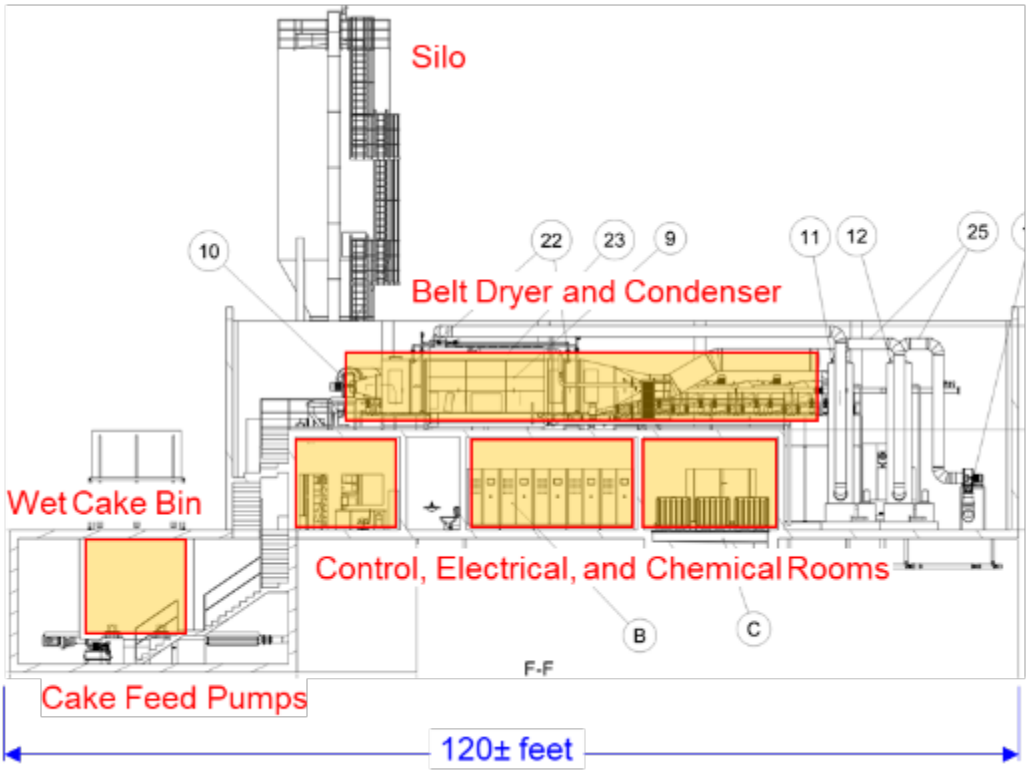

Figure 23-7. Drying Facility Conceptual Layout: Section View (Source: Huber)

The location of the future drying facility should consider the following:

- Traffic flow for biosolids haulers, including provisions for unloading both dewatered cake and dried product
- Distance to final dewatering (shorter distance is critical to minimize pumping of cake)
- Location of other future facilities, such as sidestream treatment and FOG receiving

The location of the drying facility depends on which of the two shortlisted site layout options is selected. Further information on the site layout options is presented in Section 17 of this Plan. Potential locations of the drying facility are as follows:

- **Option 1: renovate existing Dewatering Building.** If the existing DWB is renovated, the future drying facility could potentially be located above the proposed Digester Building. The Digester Building would have to be designed and constructed to accommodate the loads from the drying facility. It is unlikely that the drying facility could be constructed along S Eads Street because of the limited site footprint.
- **Option 2: decommission existing Dewatering Building.** If the existing DWB is decommissioned, the future drying facility could be constructed adjacent to the proposed SPB, in the location of the existing DWB, as shown in Drawing C-007.

23.4.3 Pyrolysis Facility Description and Design Criteria

Pyrolysis is an emerging technology in the biosolids industry, with no full-scale installations to date in the United States. Several pilot facilities are in operation or in design. Leading manufacturers include BioForceTech, CharTech, and Kore Infrastructure.

The pyrolysis system would be designed and sized to process the annual average solids production rate at 40 mgd buildout conditions. As shown in Table 23-6, the total quantity of dried solids is estimated to be 1.4 wet tons per hour at 90 percent solids.

Figure 23-8 presents a simplified overall process flow diagram of a future pyrolysis facility at the Arlington WPCP. A dryer is required upstream of the pyrolysis reactor, as the process requires the feed to be at 80 to 90 percent solids concentration.

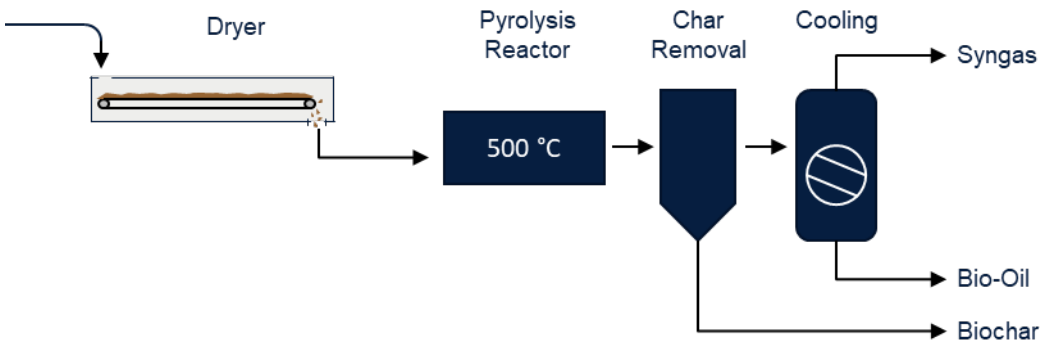

Figure 23-8. Pyrolysis Facility Process Flow Diagram

Conceptual layouts for pyrolysis are not provided in this Plan, as the three manufacturers contacted offered vastly different facility dimensions, ranging from 50 by 50 feet to 140 by 64 feet.

The location of the future pyrolysis facility should consider the following:

- Traffic flow for biosolids haulers, including provisions for unloading dewatered cake, dried product, and biochar
- Distance to dryer facility (shorter distance is preferable to minimize conveyance)
- Location of other future facilities, such as sidestream treatment and FOG receiving

The location of the pyrolysis facility depends on which of the two shortlisted site layout options is selected. Further information on the site layout options is presented in Section 17 of this Plan. Potential locations of the pyrolysis facility are as follows:

- **Option 1: renovate existing Dewatering Building.** If the existing DWB is renovated, it is unlikely that a drying and pyrolysis facility could fit in the area adjacent to final dewatering.
- **Option 2: decommission existing Dewatering Building.** If the existing DWB is decommissioned, the future dryer and pyrolysis facility could be constructed adjacent to the proposed SPB, in the location of the existing DWB, as shown in Drawing C-006.