ARLINGTON COUNTY, VIRGINIA
WATER POLLUTION CONTROL PLANT

UPGRADE AND EXPANSION
PHASE IIB

CONTRACT NO. **90 - 02 -WPC**

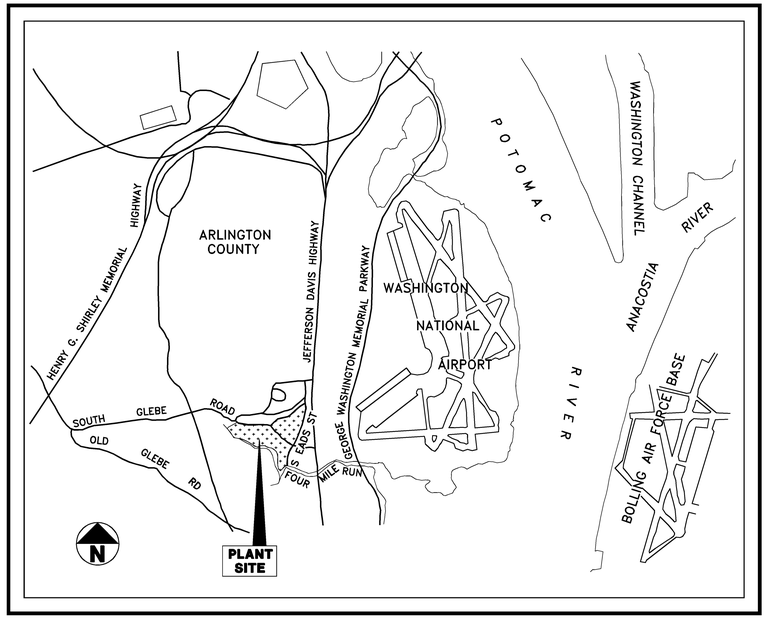

VICINITY MAP

RECORD DRAWINGS
PREPARED BY
HAZEN AND SAWYER, P.C.

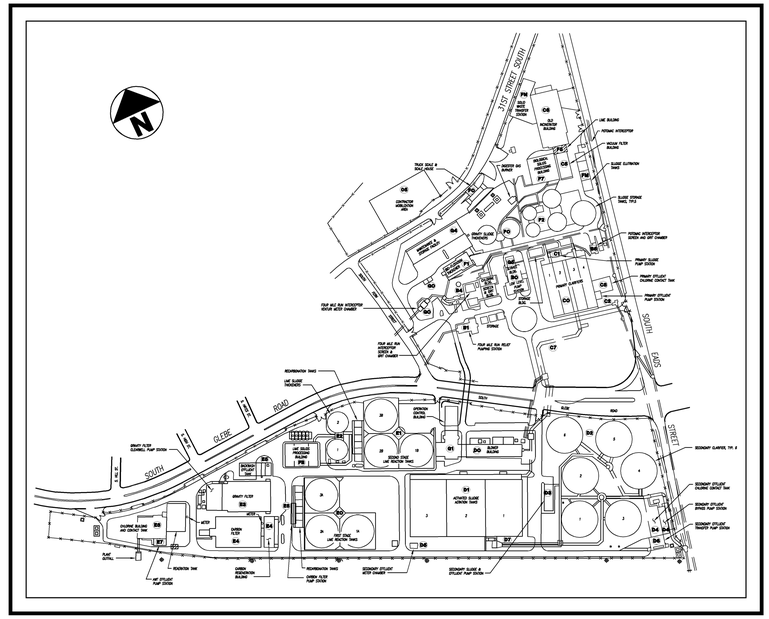

SITE PLAN

PREPARED BY
CAMP DRESSER & McKEE
ANNANDALE, VIRGINIA

RECORD DRAWING

RECORD DRAWING
VOLUME 1 OF 2

PROJECT NO.
5002-033
SHEET NO.
GV1-1

10/25/90 - 11:07

ABBREVIATIONS

WPCP	ARLINGTON COUNTY WATER POLLUTION CONTROL PLANT
AFF	ABOVE FINISHED FLOOR
AS	ACTIVATED SLUDGE
ADPT	ADAPTER
ADD	ADDENDUM
ADJ	ADJACENT
ADJT	ADJUSTABLE
AER	AERATION
ARV	AIR RELEASE VALVE
ALM	ALARM
ALT	ALTERNATE
ALUM	ALUMINUM
ASTM	AMERICAN SOCIETY FOR TESTING MATERIALS
ASA	AMERICAN STANDARDS ASSOCIATION
&	AND
APPROX	APPROXIMATE
ARCH	ARCHITECT(URAL)
ASPH	ASPHALT
ASSY	ASSEMBLY
ASSOC	ASSOCIATION
@	AT
AUTH	AUTHORITY
AUTO	AUTOMATIC
AVG	AVERAGE
AWL	AVERAGE WATER LEVEL
ASE	ACTIVATED SLUDGE (SECONDARY) EFFLUENT
AWT	ADVANCED WASTEWATER TREATMENT
BK	BACK
BPRV	BACK PRESSURE REGULATING VALVE
BWS	BACKWASH SUPPLY
BWD	BACKWASH DRAIN
BV	BALL VALVE
BSMT	BASEMENT
BM	BEAM, BENCH MARK
BRG	BEARING
BS	BELL AND SPIGOT (PUSH–ON)
BM	BENCH MARK
BET	BETWEEN
BIT	BITUMINOUS
BF	BLIND FLANGE
BOT	BOTTOM
BR	BRANCH
BLDG	BUILDING
BUSH	BUSHING
BFV	BUTTERFLY VALVE
CAB	CABINET
CAL	CALIBRATION
CAP	CAPACITY
CI	CAST IRON
CIS	CAST IRON SOIL (PIPE)
CSTG	CASTING
CLG	CEILING
CL OR ℄	CENTER LINE
CC	CENTER TO CENTER, CONC. CURB
CENT	CENTRIFIGAL
CHMBR	CHAMBER
CV	CHECK VALVE
CL	CHLORINE LIQUID
CG	CHLORINE GAS
CS	CHLORINE SOLUTION
CPVC	CHLORINATED POLYVINYL CHLORIDE
CIRCUM	CIRCUMFERENCE
CLAR	CLARIFIER
CO	CLEAN OUT
CLR	CLEARANCE
COL	COLUMN
COMB	COMBINATION
COMP	COMPRESSOR
CC	COMPRESSION (SLEEVE) COUPLING
CA	COMPRESSED AIR
CCG	CONC. CURB & GUTTER
CONC	CONCRETE
CS	CONDITIONED SLUDGE
CNV	CONE VALVE
CONN	CONNECTION, CONNECTOR
CONST	CONSTRUCTION
CONT	CONTINUOUS/CONTINUATION
CTRL	CONTROL
CU	COPPER
CORP	CORPORATION
CORR	CORRUGATED
CSNK	COUNTERSUNK
CPLG	COUPLING
COW	COUNTY WATER
CFM	CUBIC FEET PER MINUTE
CF	CUBIC/FEET
CY	CUBIC YARD
CIS	CURB INLET STRUCTURE
DP	DEEP, DEPTH
DEG	DEGREE
DET	DETAIL
DIA OR ø	DIAMETER
DPI	DIAPHRAM PRESSURE ISOLATOR
DV	DIAPHRAGM VALVE
DIFFR	DIFFUSER
DS	DIGESTED SLUDGE
DIM	DIMENSION
DISCH	DISCHARGE
DISTR	DISTRIBUTION
DN	DOWN
D	DRAIN
DWG	DRAWING
DIV	DIVISION
DI	DUCTILE IRON
EA	EACH
EE	EACH END
EF	EACH FACE
EW	EACH WAY
ESMT	EASEMENT
ECC	ECCENTRIC
EFF	EFFLUENT
ELB, ELL	ELBOW
ELECT	ELECTRIC(AL)
EUH	ELECTRIC UNIT HEATER
EP	EDGE OF PAVEMENT
EL	ELEVATION
EMER	EMERGENCY
ENCSMT	ENCASEMENT
ENC	ENCLOSE(URE)
ENT	ENTRANCE
EQ	EQUAL
EQUIP	EQUIPMENT
EQUIV	EQUIVALENT
EXH	EXHAUST
EXIST,EX	EXISTING
EXP	EXPANSION
EXTEN	EXTENSION
EXT	EXTERIOR

FA	FLANGE ADAPTER
FO	FACE OF
FAC	FACILITY
FT OR ' '	FEET OR FOOT
FPM	FEET PER MINUTE
FPS	FEET PER SECOND
FPT	FEMALE PIPE THREAD
$FeCl_3$	FERRIC CHLORIDE
FRP	FIBERGLASS REINFORCED PLASTIC
FIG	FIGURE
FILT	FILTER
F	FILTRATE
FIN	FINISH(ED)
FH	FIRE HYDRANT
FLG	FLANGE
FES	FLARED END SECTION
FA	FLANGE ADAPTER, FOUL AIR
FPI	FLANGE PRESSURE ISOLATOR
FLEX	FLEXIBLE
FL	FLOOR
FE	FLOW MEASURING ELEMENT
FM	FLOW METER
FW	FLUSHING WATER
FTG	FOOTING
FM	FORCE MAIN
FDN	FOUNDATION
FOR	FUEL OIL RETURN
FOS	FUEL OIL SUPPLY
FOV	FUEL OIL VENT
FURN	FURNISH OR FURNISHED
GA	GAGE
GPM	GALLONS PER MINUTE
GALV	GALVANIZED
G	GAS
GV	GATE VALVE
GEN	GENERATOR
GLV	GLOBE VALVE
GR	GRADE
GRAV	GRAVITY
GTE	GRAVITY THICKENER EFFLUENT
GE	GROOVED END
GND	GROUND
HARN ASSY	HARNESS ASSEMBLY
HWO	HANDWHEEL OPERATOR
HDW	HARDWARE
HD	HEAD
HDR	HEADER
HTG	HEATING
HVAC	HEATING, VENTILATING & AIR CONDITIONING
HT	HEIGHT
HP	HIGH POINT
HWL	HIGH WATER LEVEL
HS	HIGH STRENGTH
HWY	HIGHWAY
HORIZ	HORIZONTAL
HP	HORSEPOWER
HB	HOSE BIBB
HW	HOT WATER
HUH	HOT WATER UNIT HEATER
HWS	HOT WATER SUPPLY
HWR	HOT WATER RETURN
HR	HOUR
HYD	HYDRANT
IN OR " ' "	INCH(ES)
INCIN	INCINERATOR
INC	INCORPORATION
INDUST	INDUSTRIAL
INF	INFLUENT
ID	INSIDE DIAMETER OR DIMENSION
IND	INDICATOR
INSTALL	INSTALLATION
INST	INSTRUMENT
INSUL	INSULATION, OR INSULATED
INT	INTERIOR
INV	INVERT
JT	JOINT
JCT	JUNCTION
KGV	KNIFE GATE VALVE
LAB	LABORATORY
LB	POUNDS
LE	LEVEL MEASURING ELEMENT
LT	LEFT
LTG	LIGHTING
LS	LIME SLURRY
LG	LONG, LENGTH
LR	LONG RADIUS
LP	LOW POINT
LWL	LOW WATER LEVEL
MACH	MACHINE
MAG	MAGNETIC
MH	MANHOLE
MFR	MANUFACTURER
MATL	MATERIAL
MAX	MAXIMUM
MECH	MECHANICAL
MJ	MECHANICAL JOINT
MGD	MILLION GALLONS PER DAY
MIN	MINIMUM
MISC	MISCELLANEOUS
MON	MONUMENT
MTR OR M	MOTOR
MCC	MOTOR CONTROL CENTER
MTR OPER	MOTOR OPERATED OR OPERATOR
MTD	MOUNTED
MTG	MOUNTING
MV	MUD VALVE
NPT	NATIONAL PIPE THREAD
NOM	NOMINAL
NRS	NON–RISING STEM
N	NORTH
NIC	NOT IN CONTRACT
NTS	NOT TO SCALE
NO OR #	NUMBER
NTS	NOT TO SCALE
NO OR #	NUMBER
NaOCL OR SH	SODIUM HYPOCHLORITE
$NaHSO_2$ OR SB	SODIUM BISULFITE

OC	ON CENTERS
OPNG	OPENING
OPER	OPERATOR OR OPERATED
OD	OUTSIDE DIAMETER OR DIMENSION
PNL	PANEL
PVMT	PAVEMENT
PWL	PEAK WATER LEVEL
%	PERCENT
PE	PLAIN END, POLYETHYLENE
PV	PLUG VALVE
PT	PLANT EFFLUENT WATER
P	PNEUMATIC
PCC	POINT OF COMPOUND CURVE
PC	POINT OF CURVE
PEW	POINT OF TANGENT
PCVC	POINT OF COMPOUND VERTICAL CURVE
PIVC	POINT OF INTERSECTION VERTICAL CURVE
PVC	POINT OF VERTICAL CURVE, POLYVINYL CHLORIDE
PVT	POINT OF VERTICAL TANGENT
PPY	POLYPROPYLENE
PY	POLYMER
PVC	POLYVINYL CHLORIDE
PCF	POUNDS PER CUBIC FOOT
PSF	POUNDS PER SQUARE FOOT
PSI	POUNDS PER SQUARE INCH
PWR	POWER
℄	PROPERTY LINE
PRESS	PRESSURE
PG	PRESSURE GAUGE
PS	PRESSURE SWITCH
PRRV	PRESSURE REDUCING REGULATOR VALVE
PRV	PRESSURE RELIEF VALVE
PIS	PRESSURE INDICATING SWITCH
PVRV	PRESSURE/VACUUM RELIEF VALVE
PRI	PRIMARY
PRI EFF	PRIMARY EFFLUENT
PS	PRIMARY SLUDGE
PWCSA	PRINCE WILLIAM COUNTY SERVICE AUTHORITY
QTY	QUANTITY
RAD OR R	RADIUS
RW	RAW WASTEWATER
RJ	RESTRAINED PUSH–ON JOINT
RCVR	RECEIVER
RC	REINFORCED CONCRETE
RECIRC	RECIRCULATION, RECIRCULATED
RPBP	REDUCED PRESSURE BACKFLOW PREVENTER
RED	REDUCER
REF	REFERENCE
REF PT	REFERENCE POINT
REG	REGULATOR
REINF	REINFORCING OR REINFORCEMENT
REQD	REQUIRED
RAS	RETURN ACTIVATED SLUDGE
REV	REVISION
RT	RIGHT
RE	RIGHT END
RS	RISING STEM
RD	ROAD
RM	ROOM
RFC	RUBBER FLEX CONNECTION
SS	SANITARY SEWER, STAINLESS STEEL
SSMH	SANITARY SEWER MANHOLE
SCH	SCHEDULE
SC	SCUM
SCS	SCUM SLURRY
SEC	SECONDARY
SECT	SECTION
SH or SHT	SHEET
SWD	SIDE WATER DEPTH
SIM	SIMILAR
SG	SLIDE GATE
SLG	SLUICE GATE
S	SOLENOID
SV	SOLENOID VALVE
$NaHSO_2$ OR SB	SODIUM BISULFITE
SBS	SODIUM BISULFITE SOLUTION
NaOCL OR SH	SODIUM HYPOCHLORITE
SQ	SQUARE
ST STL OR SS	STAINLESS STEEL
STD	STANDARD
STA	STATION
STL OR S	STEEL
STOR	STORAGE
STRUCT	STRUCTURAL OR STRUCTURE
SD	STORM DRAIN
SDMH	STORM DRAIN MANHOLE
SUBM	SUBMERSIBLE
SUCT	SUCTION
SUP	SUPPLY
SPRT	SUPPORT
SW	SWITCH
SYM	SYMMETRICAL
SYS	SYSTEM
TK	TANK
TEMP	TEMPORARY
THK	THICK OR THICKNESS
TS	THICKENED SLUDGE
THICK	THICKENER
THD	THREAD(ED)
TIS	TOP INLET STRUCTURE
TYP	TYPICAL
T & B	TOP & BOTTOM
TE	THICKENER EFFLUENT
U	UNION
U/G	UNDERGROUND
VB	VALVE BOX
V	VENT OR VALVE
VERT	VERTICAL
VC	VERTICAL CURVE
VDOT	VIRGINIA DEPARTMENT OF TRANSPORTATION
WHS	WASH HOSE STATION
WAS	WASTE ACTIVATED SLUDGE
WL	WATER LEVEL
W	WIDTH, WASTE, WELDED
W/	WITH
W/O	WITHOUT
WLD OR W	WELDED
YD	YARD
YH	YARD HYDRANT

PIPING SYMBOLS

- UNION (U)
- PRESSURE REDUCING REGULATOR VALVE (PRRV)
- PRESSURE RELIEF VALVE (PRV)
- GATE VALVE (GV)
- GLOBE VALVE (GLV)
- KNIFE GATE VALVE (KGV)
- BALL VALVE (BV)
- CONE VALVE (CNV)
- BUTTERFLY VALVE (BFV)
- PLUG VALVE (PV)
- CHECK VALVE (CV)
- SOLENOID VALVE (SV)
- DIAPHRAGM VALVE (DV)
- (M) ELECTRIC MOTOR ACTUATOR
- [P] PNEUMATIC ACTUATOR
- [S] SOLENOID ACTUATOR
- DIRECTION OF FLOW IN PIPE
- DIAPHRAM PRESSURE ISOLATOR (DPI)
- FLANGE PRESSURE ISOLATOR (FPI)

- NEW PIPE
- EXISTING PIPE
- WELDED JOINT (W)
- FLANGED JOINT (F)
- GROOVED END JOINT (GE)
- BELL & SPIGOT JOINT (BS)
- MECHANICAL JOINT (MJ)
- RESTRAINED BS JOINT (RJ) ⚠1
- FLANGE ADAPTER (FA)
- DIAPHRAM PRESSURE ISOLATOR (DPI)
- COMPRESSION (SLEEVE) COUPLING (CC)
- HARNESS ASSEMBLY (HARN ASSY)
- FLEXIBLE CONNECTOR
- FLANGE PRESSURE ISOLATOR (FPI)

DETAIL & SECTION IDENTIFICATION

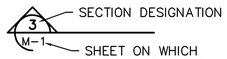

SECTION REFERENCE

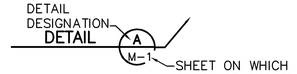

DETAIL REFERENCE

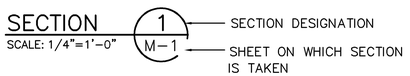

SECTION SHOWN

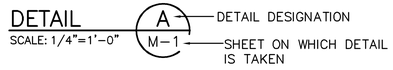

DETAIL SHOWN

GENERAL NOTES

1. ALL ELEVATIONS OF EXISTING STRUCTURES ARE REFERRED TO MEAN SEA LEVEL DATUM AND ARE TAKEN FROM PREVIOUS CONTRACT DRAWINGS AND SHALL BE CHECKED BY CONTRACTOR. ELEVATIONS AND LOCATIONS OF NEW STRUCTURES ARE BASED ON SURVEY CONTROL STATIONS A & B SHOWN ON SHEETS 00C–15 & 00C–16.
2. LOCATIONS, ELEVATIONS, AND DIMENSIONS OF EXISTING UTILITIES, STRUCTURES, AND OTHER FEATURES ARE SHOWN ACCORDING TO THE BEST INFORMATION AVAILABLE AT THE TIME OF THE PREPARATION OF THESE PLANS, BUT DO NOT PURPORT TO BE CORRECT THE CONTRACTOR SHALL VERIFY THE LOCATIONS, ELEVATIONS, AND OTHER FEATURES AFFECTING HIS WORK PRIOR TO CONSTRUCTION OR FABRICATION.
3. IN GENERAL FOR MECHANICAL AND STRUCTURAL WORK ON EXISTING FACILITIES, EXISTING FACILITIES ARE SHOWN IN LIGHT LINES; FACILITIES INVOLVED IN CONTRACT WORK (NEW, MODIFIED, REMOVED, ETC.) ARE SHOWN IN HEAVY LINES; CONCEALED FACILITIES ARE SHOWN IN DASHED LINES (LIGHT OR HEAVY AS APPROPRIATE)

PIPE IDENTIFICATION CODE

EXAMPLE: 20 PW–DI/MJ

- 20 — NOMINAL PIPE DIA
- PW — PROCESS LIQUID OR GAS (SEE CODES BELOW)
- DI — PIPE MATERIAL (SEE CODES BELOW)
- MJ — JOINT TYPE (SEE CODES BELOW)

SELECTED LIQUID AND GAS CODES

ASE – ACTIVATED SLUDGE (SECONDARY) EFFLUENT	PEW AWT – PLANT EFFLUENT WATER–ADVANCED WASTEWATER TREATMENT
BTE – BACKWASH TANK EFFLUENT	PEW PRI – PLANT EFFLUENT WATER–PRIMARY TREATMENT
CA – COMPRESSED AIR	PEW SEC – PLANT EFFLUENT WATER–SECONDARY TREATMENT
CL – LIQUID CHLORINE	PEW – PLANT EFFLUENT WATER
CLG – CHLORINE GAS	RSFM – RAW SEWAGE FORCE MAIN
CL S – CHLORINE SOLUTION	RAS – RETURN ACTIVATED SLUDGE
COW – COUNTY WATER (POTABLE)	RSL – RECIRCULATED SLUDGE
D OR DR – DRAIN	RW – RAW WASTEWATER
DG – DIGESTER GAS	SS – SANITARY SEWER
DS – DIGESTED SLUDGE	SR – SCREENINGS
EG – EXHAUST GAS	SC – SCUM
FB – FILTER BACKWASH	SCS – SCUM SLURRY
FL – FILTRATE	SCT – SCUM – THICKENED
FeCL – FERRIC CHLORIDE	SWD – SCRUBBER WATER DRAIN
FTO – FLOTATION THICKENER OVERFLOW	SE – SECONDARY EFFLUENT
FA – FOUL AIR	SL – SLUDGE
FOR – FUEL OIL RETURN	SBS – SODIUM BISULFITE SOLUTION
FO – FUEL OIL	SW – SPRAY WATER
FOS – FUEL OIL SUPPLY	SPW – SPRINKLER WATER
FOV – FUEL OIL VENT	STM – STEAM
FW – FLUSHING WATER	SD – STORM DRAIN
G – NATURAL GAS	SPD – SUMP PUMP DISCHARGE
GS – GRIT SLURRY	SU – SUPERNATANT
GTO – GRAVITY THICKENER OVERFLOW	TE – THICKENER EFFLUENT
HWS – HOT WATER SUPPLY	TSL – THICKENED SLUDGE
HWR – HOT WATER RETURN	U – UNDER DRAIN
LS – LIME SLURRY	VT – VENT
NaOCL– SODIUM HYPOCHLORITE	WAS – WASTE ACTIVATED SLUDGE
NaOS – SODIUM BISULFITE	
PY – POLYMER	
PSW – PUMP SEAL WATER	

PIPE MATERIAL CODES

AL – ALUMINUM
CIS – CAST IRON SOIL
CPVC – CHLORINATED POLYVINYL CHLORIDE
CU – COPPER
DI – DUCTILE IRON
FRP – FIBERGLASS REINFORCED PLASTIC
GS – GALVANIZED STEEL
H – HOSE
PE – POLYETHYLENE
PPY – POLYPROPYLENE
PVC – POLYVINYL CHLORIDE
RC – REINFORCED CONCRETE
S – STEEL
SS – STAINLESS STEEL
SSP – SEAMLESS STEEL PIPE

NOTE: SEE SPECIFICATIONS FOR PIPE LININGS AND MATERIALS REQUIREMENTS

PIPE JOINT CODES

BS – BELL & SPIGOT (PUSH–ON)
F OR FLG – FLANGED
GE – GROOVED END
MJ – MECHANICAL JOINT
S – SOLDERED
T – THREADED
V – SOLVENT WELD
W – BUTT WELDED
RJ – RESTRAINED PUSH–ON JOINT
TG – TONGUE & GROOVE
PE – PLAIN END
BW – BUTT AND WRAP (FRP)

NO.	DATE	DRWN	CHK'D	DESCRIPTION
1	9/97	FXP	ASG	RECORD DRAWING

REVISIONS

DESIGNED BY: TDH
DRAWN BY: GPB
CHECKED BY/DATE: TDH 9/91
APPRV'D BY/DATE: TDH 9/91

COMMONWEALTH OF VIRGINIA — THOMAS D. HALL No. 12502 — PROFESSIONAL ENGINEER

CAMP DRESSER & McKEE

THIS DRAWING HAS BEEN REVISED BY HAZEN AND SAWYER, P.C. TO REFLECT MODIFICATIONS MADE DURING CONSTRUCTION

environmental engineers, scientists, planners, & management consultants

CDM

ARLINGTON COUNTY, VIRGINIA
WATER POLLUTION CONTROL PLANT
UPGRADE AND EXPANSION– PHASE IIB

ABBREVIATIONS, SYMBOLS, LEGEND & GENERAL NOTES

SCALE NOTE

SCALE BAR SHOWN BELOW IS ONE INCH LONG ON A FULL SIZE DRAWING. WHEN SCALING DRAWINGS, MEASURE BAR TO DETERMINE IF SCALES SHOWN WILL REQUIRE ADJUSTING.

ONE INCH

CONTRACT NO. 90–02–WPC
YEAR 1991
LOCATION CODE 00
SPECIALTY CODE G
PROJECT NO. 5002–33
FILE NAME 00G–0003.DWG
DRAWING NO. 00G–3
SHEET NO. 3

RECORD DRAWING

09/16/91 – 18:34

FACILITY CODES

CODE	FACILITY
01	SITE PIPING
02	SITE ELECTRICAL
03	SITE ROADS & WALKWAYS
04	MISC. SITE FACILITIES
05	CONTRACTOR MOBILIZATION AREA
B1	FOUR MILE RUN RELIEF PUMPING STATION
B4	FOUR MILE RUN INTERCEPTOR SCREEN & GRIT CHAMBER
B5	POTOMAC INTERCEPTOR SCREEN & GRIT CHAMBER
B6	POTOMAC INTERCEPTOR METER CHAMBER & JUNCTION CHAMBER
C0	PRIMARY CLARIFIERS
C2	PRIMARY EFFLUENT PUMP STATION
C5	VACUUM FILTER BUILDING
C6	OLD INCINERATOR BUILDING
C7	PRIMARY EFFLUENT FLUME
C8	PRIMARY EFFLUENT CHLORINE CONTACT TANK
D0	BLOWER BUILDING
D1	ACTIVATED SLUDGE AERATION TANKS
D2	SECONDARY CLARIFIERS
D3	SECONDARY SLUDGE & EFFLUENT PUMP STATION
D4	SECONDARY EFFLUENT CHLORINE CONTACT TANK
D4	SECONDARY BYPASS PUMP STATION
D5	SECONDARY EFFLUENT METER CHAMBER
D6	SECONDARY EFFLUENT TRANSFER PUMP STATION
D7	MIXED LIQUOR FLUME

CODE	FACILITY
E0	FIRST STAGE LIME REACTION TANKS
E1	SECOND STAGE LIME REACTION TANKS
E2	LIME SLUDGE THICKENERS
E3	GRAVITY FILTER
E4	CARBON FILTER
E4	CARBON REGENERATION BUILDING
E5	BACKWASH EFFLUENT TANK
E6	CHLORINE BUILDING & CONTACT TANK
E7	AWT EFFLUENT PUMP STATION
E8	CARBON FILTER PUMP STATION
F0	GRAVITY SLUDGE THICKENERS
F1	FLOTATION SLUDGE THICKENER
F2	SLUDGE STORAGE TANKS
F5	LIME BUILDING
F7	SOLIDS PROCESSING BUILDING
FB	LIME SOLIDS PROCESSING BUILDING
FM	SLUDGE ELUTRIATION TANKS
FN	SOLID WASTE TRANSFER STATION
FO	TRUCK SCALE & SCALE HOUSE
G1	OPERATIONS CONSTROL BUILDING
G4	MAINTENANCE & STORAGE BUILDING
G5	PLANT SERVICE BUILDING

LEGEND

LOCATION OF REMOVAL WORK UNDER THIS CONTRACT

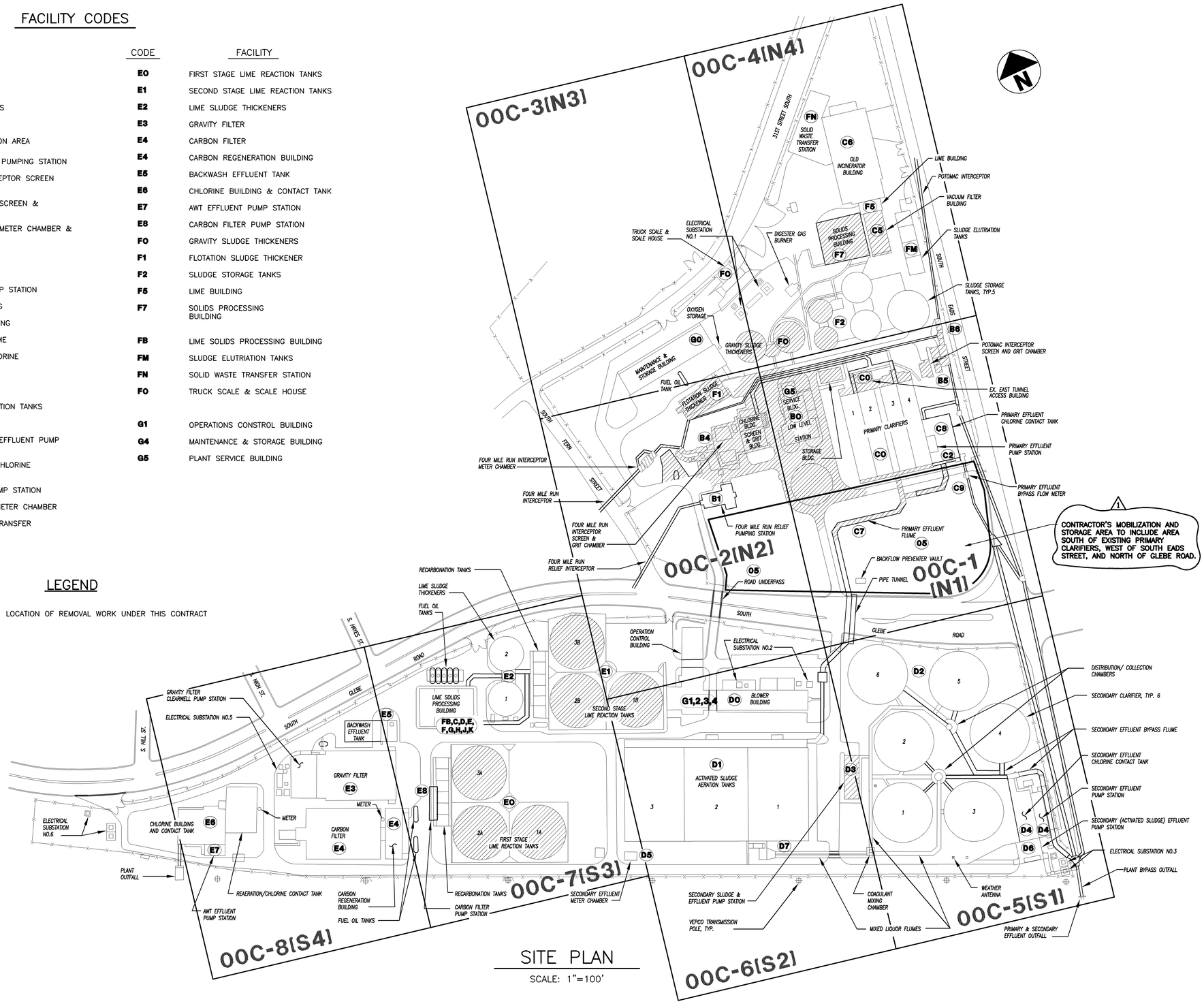

SITE PLAN

SCALE: 1"=100'

NO.	DATE	DRWN	CHK'D	DESCRIPTION
1	9/97	FXP	ASG	RECORD DRAWING

REVISIONS

DESIGNED BY: —
DRAWN BY: PLR
CHECKED BY/DATE: TDH 9/91
APPRV'D BY/DATE: TDH 9/91

COMMONWEALTH OF VIRGINIA — THOMAS D. HALL — No. 12502 — PROFESSIONAL ENGINEER

CAMP DRESSER & McKEE

PER DRAWING HAS BEEN REVISED BY HAZEN AND SAWYER, P.C. TO REFLECT MODIFICATIONS MADE DURING CONSTRUCTION

environmental engineers, scientists, planners, & management consultants

CDM

ARLINGTON COUNTY, VIRGINIA
WATER POLLUTION CONTROL PLANT
UPGRADE AND EXPANSION- PHASE IIB

EXISTING FACILITIES LOCATION PLAN
GENERAL REMOVALS

SCALE NOTE

SCALE BAR SHOWN BELOW IS ONE INCH LONG ON A FULL SIZE DRAWING. WHEN SCALING DRAWINGS, MEASURE BAR TO DETERMINE IF SCALES SHOWN WILL REQUIRE ADJUSTING.

ONE INCH

CONTRACT NO. 90-02-WPC
YEAR 1991
LOCATION CODE 00
SPECIALTY CODE G
PROJECT NO. 5002-33
FILE NAME 00G-0004.DWG
DRAWING NO. 00G-4
SHEET NO. 4

RECORD DRAWING

09/16/91 - 18:25

FACILITY CODES

CODE	FACILITY
01	SITE PIPING
02	SITE ELECTRICAL
03	SITE ROADS & WALKWAYS
04	MISC. SITE FACILITIES
05	CONTRACTOR MOBILIZATION AREA
BO	LOW LEVEL PUMP STATION
B1	FOUR MILE RUN RELIEF PUMPING STATION
B2	FOUR MILE RUN INTERCEPTOR FLOW METER
B6	POTOMAC INTERCEPTOR METER CHAMBER
B8	PRELIMINARY TREATMENT BUILDING
B9	WEST INFLUENT CHANNEL
CO	PRIMARY CLARIFIERS
C2	PRIMARY EFFLUENT PUMP STATION
C5	VACUUM FILTER BUILDING
C6	OLD INCINERATOR BUILDING
C7	PRIMARY EFFLUENT FLUME
C8	PRIMARY EFFLUENT CHLORINE CONTACT TANK
DO	BLOWER BUILDING
D1	ACTIVATED SLUDGE AERATION TANKS
D2	SECONDARY CLARIFIERS
D3	SECONDARY SLUDGE & EFFLUENT PUMP STATION
D4	SECONDARY EFFLUENT CHLORINE CONTACT TANK
D4	SECONDARY BYPASS PUMP STATION
D5	SECONDARY EFFLUENT METER CHAMBER
D6	SECONDARY EFFLUENT TRANSFER PUMP STATION
D7	MIXED LIQUOR FLUME

CODE	FACILITY
EO	FIRST STAGE LIME REACTION TANKS
E1	SECOND STAGE LIME REACTION TANKS
E2	LIME SLUDGE THICKENERS
E3	GRAVITY FILTER
E4	CARBON FILTER
E4	CARBON REGENERATION BUILDING
E5	BACKWASH EFFLUENT TANK
E6	CHLORINE BUILDING & CONTACT TANK
E7	AWT EFFLUENT PUMP STATION
E8	CARBON FILTER PUMP STATION
FO	GRAVITY SLUDGE THICKENERS
F1	FLOTATION SLUDGE THICKENER
F2	SLUDGE STORAGE TANKS
F5	LIME BUILDING
F7	SOLIDS PROCESSING BUILDING
FB	LIME SOLIDS PROCESSING BUILDING
FM	SLUDGE ELUTRIATION TANKS
FN	SOLID WASTE TRANSFER STATION
FO	TRUCK SCALE & SCALE HOUSE
G1	OPERATIONS CONTROL BUILDING
G4	MAINTENANCE & STORAGE BUILDING

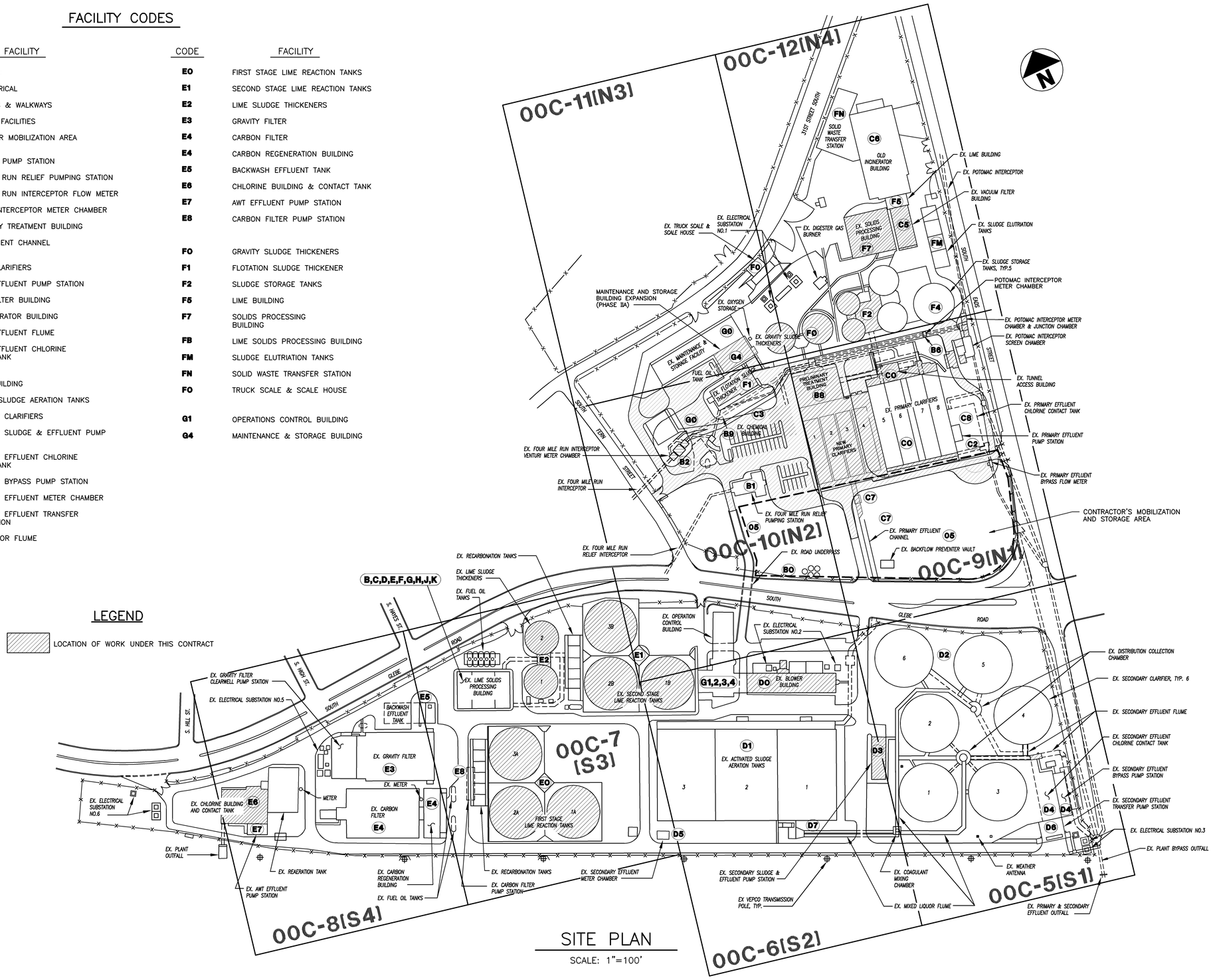

LEGEND

LOCATION OF WORK UNDER THIS CONTRACT

SITE PLAN

SCALE: 1"=100'

09/16/91 – 18:14

NO.	DATE	DRWN	CHK'D	DESCRIPTION
1	9/97	FXP	ASG	RECORD DRAWING

REVISIONS

DESIGNED BY: —
DRAWN BY: PLR
CHECKED BY/DATE: TDH 9/91
APPRV'D BY/DATE: TDH 9/91

COMMONWEALTH OF VIRGINIA — THOMAS D. HALL No. 12502 — PROFESSIONAL ENGINEER

CAMP DRESSER & McKEE

THIS DRAWING HAS BEEN REVISED BY HAZEN AND SAWYER, P.C. TO REFLECT MODIFICATIONS MADE DURING CONSTRUCTION

CDM — environmental engineers, scientists, planners, & management consultants

ARLINGTON COUNTY, VIRGINIA
WATER POLLUTION CONTROL PLANT
UPGRADE AND EXPANSION- PHASE IIB

NEW/MODIFIED FACILITIES LOCATION PLAN
GENERAL NEW WORK

SCALE NOTE

SCALE BAR SHOWN BELOW IS ONE INCH LONG ON A FULL SIZE DRAWING. WHEN SCALING DRAWINGS, MEASURE BAR TO DETERMINE IF SCALES SHOWN WILL REQUIRE ADJUSTING.

ONE INCH

CONTRACT NO. 90-02-WPC
YEAR 1991
LOCATION CODE 00
SPECIALTY CODE G
PROJECT NO. 5002-33
FILE NAME 00G-0005.DWG
DRAWING NO. 00G-5
SHEET NO. 5

RECORD DRAWING

POTOMAC INTERCEPTOR JUNCTION CHAMBER (SEE NOTE 2)

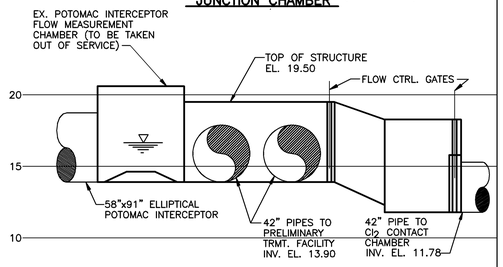

NEW POTOMAC INTERCEPTOR METERING CHAMBER

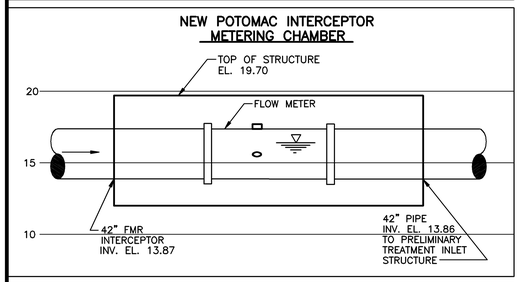

FOUR MILE RUN INTERCEPTOR FLOW METER CHAMBER

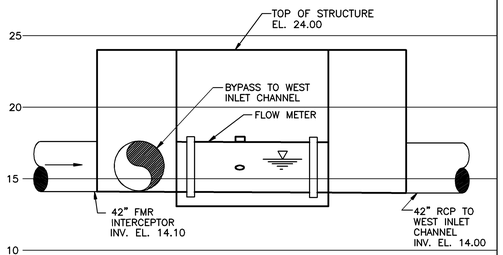

EXISTING FMRRPS

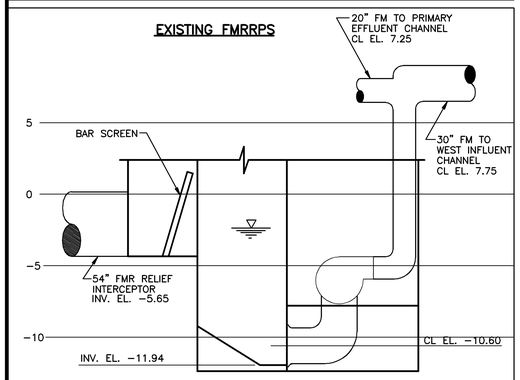

LOW LEVEL PUMP STATION

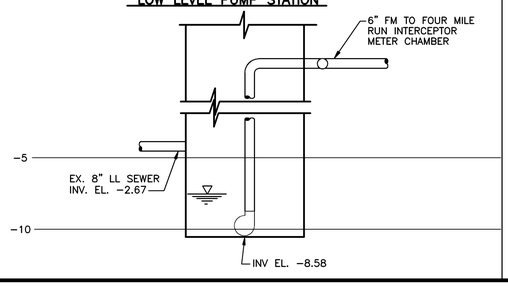

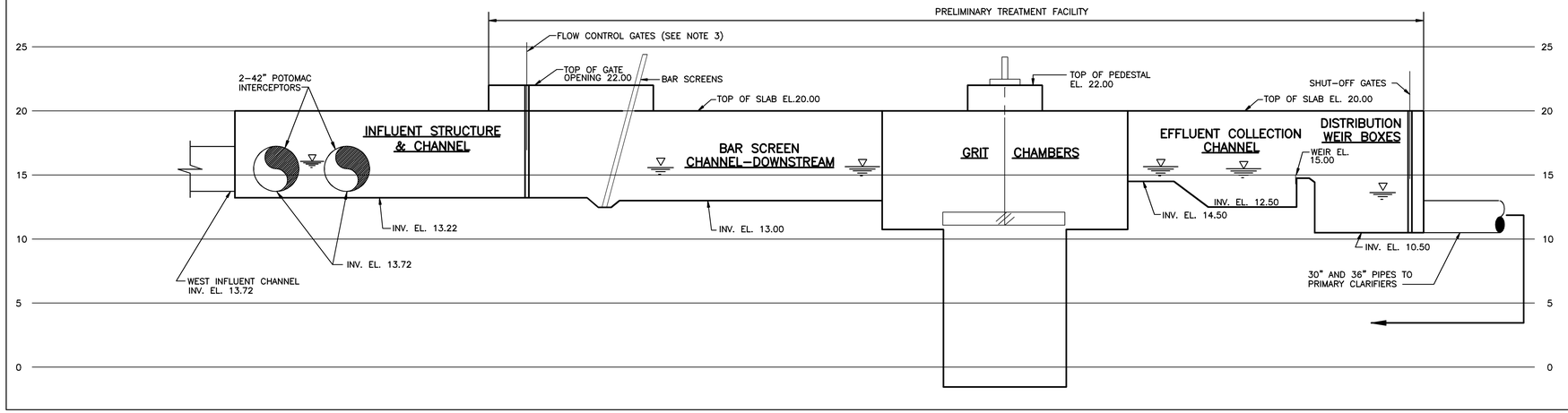

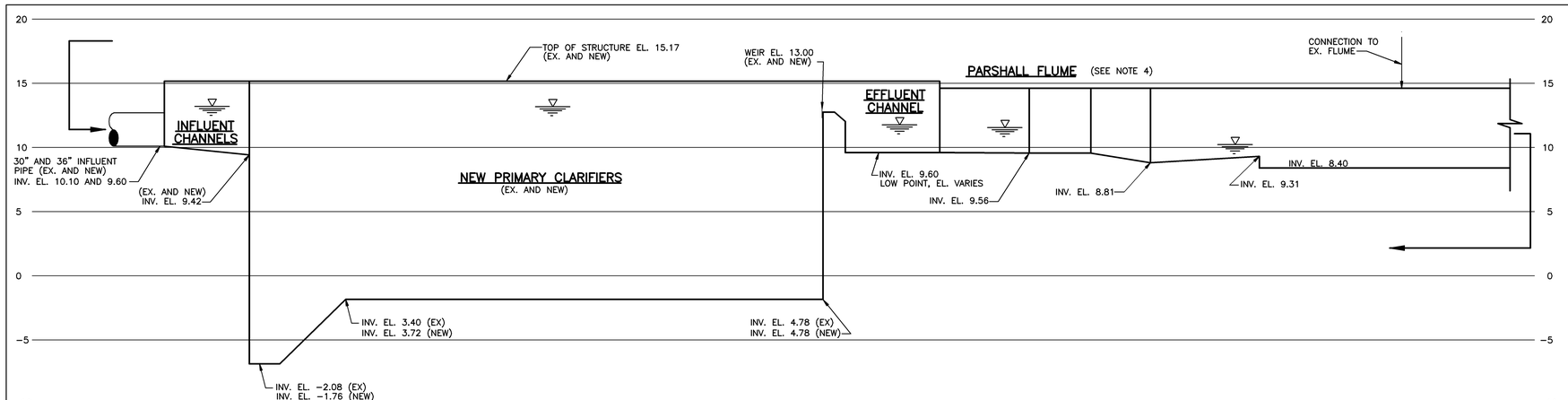

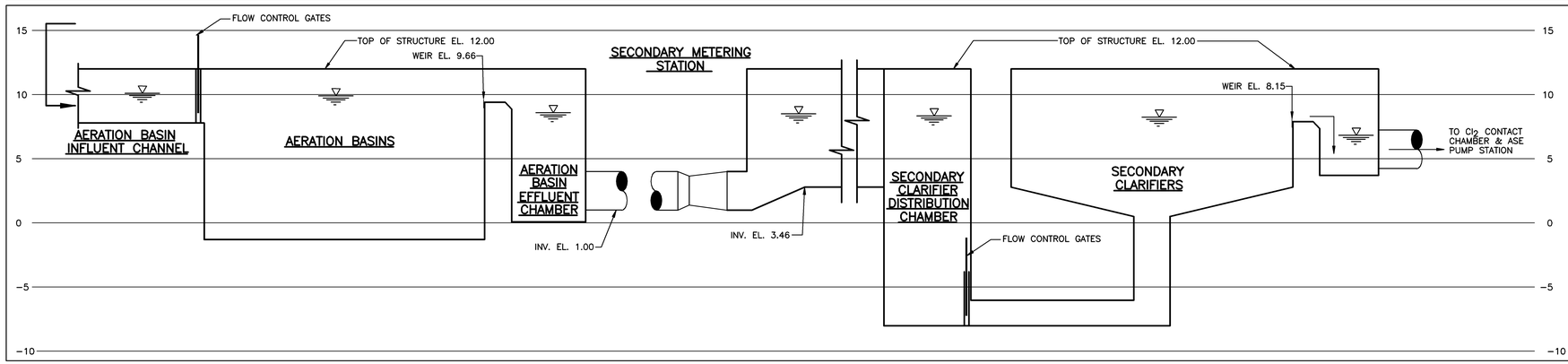

HYDRAULIC PROFILE (SEE NOTE 5)

NTS

WATER SURFACE ELEVATION TABLE

FLOW CONDITION/ WATER SURFACE EL.	POTOMAC INTERCEPTOR JUNCTION CHAMBER	NEW POTOMAC INTERCEPTOR METERING CHAMBER	FOUR MILE RUN INTERCEPTOR METERING CHAMBER	FOUR MILE RUN RELIEF PUMP STATION	NEW LOW LEVEL PUMP STATION	PRELIMINARY TREATMENT INLET STRUCTURE	BAR SCREEN CHANNEL-DOWNSTREAM	GRIT CHAMBER INFLUENT	GRIT CHAMBER EFFLUENT	PRELIMINARY TREATMENT EFFLUENT COLLECTION CHANNEL	DISTRIBUTION WEIR BOX TO PRIMARY CLARIFIER	NEW PRIMARY CLARIFIER INFLUENT CHANNEL	NEW PRIMARY CLARIFIER	NEW PRIMARY CLARIFIER EFFLUENT CHANNEL	PARSHALL FLUME UPSTREAM	PARSHALL FLUME DOWNSTREAM	AERATION BASIN INFLUENT CHANNEL	AERATION BASIN	AERATION BASIN EFFLUENT CHAMBER	SECONDARY METERING STATION-DOWNSTREAM	SECONDARY CLARIFIER DISTRIBUTION CHAMBER	SECONDARY CLARIFIER
AVG. DAILY Q=40 MGD (SEE NOTE 5)	16.22	16.16	16.36	−4.50	−7.54	16.06	15.89	15.75	15.64	15.48	13.51	13.20	13.22	11.76	11.55	10.22	10.11	9.90	8.59	8.50	8.34	8.24
PEAK HOURLY Q=88 MGD	17.60	17.42	18.00	−3.75	−7.54	17.03	16.63	16.25	16.08	15.79	14.67	13.42	13.37	12.83	12.16	11.31	10.53	10.22	10.10	9.20	8.85	8.28
MAX-NONSURCHARGED Q=127 MGD	17.55(1)	17.25	17.95	−3.20	−3.54	--	--	--	--	--	--	--	--	--	--	--	--	--	--	--	--	--

NOTES:

1. BYPASS OF 30 MGD IS OCCURRING.
2. LOW POINT IN SYSTEM.
3. FLOW CONTROL GATES REGULATED AUTOMATICALLY TO RESTRICT THE FLOW INTO THE PRELIMINARY TREATMENT FACILITY TO 97 MGD (88 MGD PLUS RECYCLE)
4. FLOW MEASUREMENT FLUME FOR SPLITTING FLOW BETWEEN EXISTING AND FUTURE ACTIVATED SLUDGE FACILITIES.
5. WATER LEVELS SHOWN IN PROFILE ARE FOR Q=40 MGD. SEE WATER SURFACE ELEVATION TABLE FOR OTHER FLOW CONDITIONS.
6. 100-YEAR FLOOD LEVEL FOUR MILE RUN = 11.50.

RECORD DRAWING

09/16/91 - 18:08

NO.	DATE	DRWN	CHK'D	DESCRIPTION
1	9/97	FXP	ASG	RECORD DRAWING

REVISIONS

DESIGNED BY: KCW
DRAWN BY: BRW
CHECKED BY/DATE: TDH 9/91
APPRV'D BY/DATE: TDH 9/91

COMMONWEALTH OF VIRGINIA — THOMAS D. HALL No. 12502 — PROFESSIONAL ENGINEER

CAMP DRESSER & McKEE

environmental engineers, scientists, planners, & management consultants

CDM

THIS DRAWING HAS BEEN REVISED BY HAZEN AND SAWYER, P.C. TO REFLECT MODIFICATIONS MADE DURING CONSTRUCTION

ARLINGTON COUNTY, VIRGINIA
WATER POLLUTION CONTROL PLANT
UPGRADE AND EXPANSION- PHASE IIB

PRIMARY & SECONDARY FACILITIES
HYDRAULIC PROFILE

SCALE NOTE

SCALE BAR SHOWN BELOW IS ONE INCH LONG ON A FULL SIZE DRAWING. WHEN SCALING DRAWINGS, MEASURE BAR TO DETERMINE IF SCALES SHOWN WILL REQUIRE ADJUSTING.

ONE INCH

CONTRACT NO. 90-02-WPC
YEAR 1991
LOCATION CODE 00
SPECIALTY CODE G
PROJECT NO. 5002-33
FILE NAME 00G-0006.DWG
DRAWING NO. 00G-6
SHEET NO. 6

EXISTING POTOMAC INTERCEPTOR
Q AVG: 17.2 MGD
Q PEAK: 37.8 MGD
Q FULL: 48.0 MGD
58"x91" ELLIPT. RCP
EXISTING FLOW MEASUREMENT CHAMBER
* FLOW ELEMENT: PALMER BOWLUS FLUME
* SENSOR: ULTRASONIC
CHANNEL
EXISTING POTOMAC JUNCTION CHAMBER
CHANNEL
EXISTING BYPASS SCREEN CHAMBERS
* NO. SCREENS: 2 @ 3'-6"
* SCREEN WIDTH: 1 @ 8'-0"
* OPENINGS: 1 1/2"(MANUAL) 1/2"(MECHANICAL)
* TYPE CLEANING: MANUAL (2) MECHANICAL (1)
RCP
EXISTING BYPASS JUNCTION CHAMBER
36" ø RCP
EXISTING PRIMARY EFF. PUMP STA.
* TYPE PUMPS: VERT. TURBINE
* NO. PUMPS: 3
* NO. STRAINERS: 2
EXISTING CHLORINE CONTACT TANK
1" HOSE
SODIUM HYPOCHLORITE FROM PRELIMINARY TREATMENT BLDG
TO PRIMARY EFFLUENT DIST. SYSTEM
SECONDARY CLARIFIER EFFLUENT BYPASS
CHANNEL
EXISTING FLOW MEASUREMENT CHAMBER
* FLOW ELEMENT: PARSHALL FLUME
* SENSOR: ULTRASONIC
48" ø RCP
45° ø RCP
EXISTING JUNCTION CHAMBER
72" ø RCP
36" ø RCP
FOUR MILE RUN
6"ø DIP
SECONDARY SCUM SLURRY FROM SEC. SERVICES
FLOW METER
* FLOW ELEMENT: DEPTH/VELOCITY
* SENSOR: ULTRASONIC
* NUMBER: 2
* SIZE: 42" DIA.
EXISTING FOUR MILE RUN INTERCEPTOR
Q AVG: 11.6 MGD
Q PEAK: 25.0 MGD
Q FULL: 25.0 MGD
42" ø RCP
EXISTING FLOW MEASUREMENT CHAMBER
* FLOW ELEMENT: OPEN/CLOSED CHANNEL, DEPTH/VELOCITY
* SENSOR: ULTRASONIC
42"ø RCP
CHANNEL
42" ø RCP
GRAVITY THICKENER OVERFLOW RECYCLE
INCINERATOR SCRUBBER DRAIN WATER RECYCLE
FLOTATION THICKENER OVERFLOW RECYCLE
6"ø DIP DRAIN
AWT SLUDGE RECYCLE
EXISTING FOUR MILE RUN RELIEF INTERCEPTOR
Q AVG: 11.2 MGD
Q PEAK: 24.6 MGD
Q FULL: 54.0 MGD
54" RCP
EXISTING FOUR MILE RUN RELIEF PUMP STATION
GRAVITY FILTER & CARBON FILTER BACKWASH WATER RECYCLE
WASTEWATER PUMPS
* TYPE: SUBMERSIBLE CENTRIFUGAL
* NO. PUMPS: 2
* CAPACITY: 0.5 MGD
* SPEED: CONSTANT
BAR SCREEN CHANNELS
* NO. SCREENS: 2
* SCREEN WIDTH: 3'-0"
* OPENINGS: 3"
* TYPE CLEANING: MECHANICAL
WASTEWATER PUMPS
* TYPE: CENTRIFUGAL
* NO. PUMPS: 4
* CAPACITY: 13.4 MGD.(2) 12.5 MGD.(2)
* TOTAL CAP.: 40 MGD.
* SPEED: 880/585 RPM(2), 585 RPM(2)
6" DIP
20"ø DIP
42"ø DIP
30"ø DIP
EXISTING
30"ø DIP
24"ø DIP
EXISTING LOW LEVEL SEWER
Q AVG: 0.1 MGD
Q PEAK: 0.5 MGD
Q FULL: 1.5 MGD
8" ø VCP
LOW LEVEL PUMP STATION
SEE PHASE IIC FOR NEW FMRRPS
1
EXISTING SLUDGE STORAGE TANKS
FROM GRAVITY AND FLOTATION SLUDGE THICKENERS
8" ø DIP
ALL PIPES 8" ø DIP
A) EXISTING SLUDGE TRANSFER PUMPS
* TYPE: RECESSED IMPELLER CENTRIFUGAL
* NO. PUMPS: 2
* CAPACITY: 0-450 GPM
* SPEED: VARIABLE (VAR. FREQ.)
8" ø DIP
8" ø DIP
TO SOLIDS PROCESSING BUILDING
8" ø DIP
8" ø DIP
TO AUXILIARY STORAGE TANKS
B) SLUDGE TRANSFER PUMP
* TYPE: PISTON (3 CYL.)
* NO. PUMPS: 1
* CAPACITY: 400 GPM
* SPEED: CONSTANT
SCUM CONCENTRATOR
OVERFLOW TO POTOMAC INTERCEPTOR
FROM PRIMARY SCUM PUMP STATION
4"ø CPVC
6"ø CPVC
RECYCLE FROM SCUM CONC. OVERFLOW
2"ø CPVC
DRAIN
CONCENTRATED SCUM PUMPS (RELOCATED)
* TYPE: PROGRESSING CAVITY
* NO. PUMPS: 2
* CAPACITY: 2 GPM
* SPEED: CONSTANT 1
FUTURE LIME STABILIZING SYSTEM
LIME BIN
LIME
LIME FEEDER (1)
SCREW CONVEYOR/MIXERS
EXISTING SECONDARY SERVICE PUMP STATION
FROM CHLORINATION BUILDING
FROM TANK TRUCK
COUNTY WATER
TO PRELIMINARY TREATMENT BUILDING
SODIUM HYPOCHLORITE STORAGE TANK
* TYPE: FRP
* NO. TANKS: 2
* CAPACITY :2,350 GAL EA.
CONTAINMENT AREA
2"ø
HYPOCHLORITE PUMPS
* TYPE: DIAPHRAM
* NO. PUMPS: 2
* CAPACITY : 1050 GPH
TO TEMP. FEED SYSTEM
TO RAS
TO SECONDARY BYPASS
EXISTING CHLORINATION BUILDING
FROM EXISTING HYPOCHLORITE STORAGE TANKS
2"ø
2"ø
TO EX. SECONDARY SERVICE PUMP STATION AND PRELIMINARY TREATMENT BUILDING
HYPOCHLORITE PUMPS
* TYPE: DIAPHRAM
* NO. PUMPS: 2
* CAPACITY : 1050 GPH
PRELIMINARY TREATMENT INFLUENT CHAMBER
CHANNELS
FLOW MEASUREMENT CHAMBER
8"ø DIP
FROM TANK DRAIN PUMPS
10"ø DIP
16"ø DIP
PRELIMINARY TREATMENT FACILITY
SCREENINGS COMPACTORS TYP. 2
DRAIN
CHANNELS TYP.
GRIT SLURRY
SCREW CONVEYORS TYP. 2
6"ø DIP DRAIN
BAR SCREENS CHANNELS
* NO. SCREENS: 3
* SCREEN WIDTH: 8'-0"
* OPENINGS: 1/2"
* TYPE CLEANING: CLIMBER TYPE MECH. RAKE
* NO. SCREW CONVEYORS: 2
* NO. SCREEN COMPACTORS: 2
* TYPE COMPACTOR: PISTON
PRIMARY GRIT SEPARATOR
* TYPE: VORTEX GRIT
* SIZE: 18' DIA.
* CAPACITY: 30 MGD
* TOTAL CAPACITY (3 UNITS): 90 MGD
DISTRIBUTION WEIR BOX TYP.
EXISTING PRIMARY CLARIFIERS
10"ø SP
PRIMARY CLARIFIERS
EXISTING DIVERSION CHAMBER
HOT WATER
PRIMARY SCUM PUMP STATION
MIXER
GRINDER TYP.
SCUM GRINDER
* TYPE: COUNTER ROT. SHAFT
* NO: 2
SCUM TRANSFER PUMPS
* TYPE: PROGRESSING CAVITY
* NO. PUMPS: 2
* CAPACITY EA.: 100 GPM
* SPEED: CONSTANT
4"ø CPVC
TO SCUM CONCENTRATOR
SCUM COLLECTORS
* TYPE: SLOTTED PIPE
* SIZE: 14"ø
* NO.: 2 PER CLARIFIER
* TOTAL NO: 16
* OPERATOR: MOTOR
FLOW MEASUREMENT CHAMBER
* FLOW ELEMENT: PARSHALL FLUME
* SENSOR: ULTRASONIC
EXIST. CHANNEL TO ACTIVATED SLUDGE AERATION TANKS
FUTURE FLOW ELEMENT
TO FUTURE ACTIVATED SLUDGE AERATION TANKS
TO PRELIMINARY TREATMENT INFLUENT
B) PRIMARY SLUDGE TANK/DRAIN AUXILIARY PUMP
* TYPE: PISTON (3 CYL.)
* NO. PUMPS: 1
* CAPACITY: 400 GPM
* SPEED: CONSTANT
A) TANK DRAIN PUMPS
* TYPE: SOLIDS HANDLING CENTRIFUGAL
* NO. PUMPS: 2
* CAPACITY EA.: 600 GPM
* SPEED: CONSTANT
8" ø DIP
SLUDGE FLOW METER
* TYPE: MAGNETIC
* SIZE: 8"
PRIMARY SLUDGE PUMPS
* TYPE: SCREW CENTRIFUGAL
* NO. PUMPS: 8
* CAPACITY EA.: 400 GPM
* SPEED: VARIABLE 1
6"ø CPVC
RECYCLE FROM GRIT CYCLONES AND CLASSIFIERS
8"ø DIP
4"ø DIP TYP.
6"øDIP
6"ø DIP
2"ø CPVC
CHUTES
GRIT SLURRY PUMPS
* TYPE: RECESSED IMPELLER CENTRIFUGAL
* NO. PUMPS: 4
* CAPACITY EA.: 250 GPM
* SPEED: CONSTANT
SECONDARY GRIT SEPARATION
* TYPE: CYCLONE
* SIZE: 10"ø INLET HEAD
* CAPACITY: 250 GPM
DRAIN
GRIT DEWATERING
* TYPE: SCREW CLASSIFIER
* SIZE: 12"
* CAPACITY: 15 GPM
TRANSPORTABLE BINS
CONTAINMENT AREA
3"ø
FROM TANK TRUCK
NO.3
NO.2
NO.1
2 1/2"ø
SUMP
FROM CHLORINATION BUILDING
FROM TANK TRUCK
COUNTY WATER
AWT PEW
LIQUID POLYMER DILUTION/TRANSFER PUMPS
* NO. PUMPS: 2
* CAPACITY EA.: 15 GPM
* SPEED: CONSTANT
LIQUID POLYMER TANKS
* TYPE: FRP OR PE
* NO. TANKS: 3
* CAPACITY: 3,500 GAL. EA.
LIQUID POLYMER RECIRCULATION PUMPS
* TYPE: PROGRESSING CAVITY
* NO. PUMPS: 2
* CAPACITY EA.: 15 GPM
* SPEED: CONSTANT
2"ø PVC
2"ø PVC
CONTAINMENT AREA
SODIUM HYPOCHLORITE STORAGE TANK
* TYPE: FRP
* NO. TANKS: 1
* CAPACITY :3,760 GAL.
2"ø
1"ø
SUMP
HYPOCHLORITE PUMPS
* TYPE: DIAPHRAM
* NO. PUMPS: 2
* CAPACITY : 1050 GPH
RAW BYPASS
PRIMARY EFFLUENT
PRIMARY SLUDGE PIPE
PRELIMINARY TREATMENT
10"ø DIP(CONVERT TO AWT SLUDGE)
EXISTING GRAVITY SLUDGE THICKENERS
OVERFLOW
THICKENED SLUDGE
DRAINING
8"ø DIP SLUDGE
14"ø DIP
8"ø DIP
6"ø DIP
8"ø DIP
SEC. SCUM TO SOLIDS PROCESSING BUILDING
PRI. EFF. RECYCLE FROM PRI. EFF. DIST. SYSTEM
8"ø DIP
20"ø DIP (CONV. TO OVERFL.)
16"ø DIP
WAS FROM SEC. SERVICES PS.
10"ø DIP
WAS AND SEC. SCUM TO FLOTATION THICKENER (ALTERNATE)
RECYCLE FROM FLOTATION THICKENER OVERFLOW (ALTERNATE)
EXISTING THICKENERS 65' DIA.
THICKENED SLUDGE PUMPS
* TYPE: PISTON (3 CYL.)
* NO. PUMPS: 4
* CAPACITY EA.: 350 GPM 1
* SPEED: CONSTANT
TO SLUDGE STORAGE TANKS
RECYCLE TO FMR INTERCEPTOR
RECYCLE TO POTOMAC INTERCEPTOR VIA SCRUBBER DRAIN (ALTERNATE)
EXISTING FLOTATION SLUDGE THICKENERS
WAS AND SEC. SCUM FROM SECONDARY SERVICES PUMP STATION (ALTERNATE)
10"ø DIP
COMPRESSED AIR
EXIST. COUNTY WATER
PRIMARY EFFLUENT WATER
EXIST. POLYMER STORAGE TANK
EXIST. POLYMER STORAGE TANK
EX. POLYMER FEED PUMPS
EXIST. AERATION PUMPS
* TYPE: CENTRIFUGAL
* NO. PUMPS: 2
* CAPACITY EA.: 410 GPM
* SPEED: CONSTANT
EXIST. THICKENED SLUDGE PUMPS
* TYPE: CENTRIFUGAL
* NO. PUMPS: 2
* CAPACITY EA.: 50-150 GPM
* SPEED: CONSTANT
6"ø DIP
1
RECORD DRAWING

NO.	DATE	DRWN	CHK'D	DESCRIPTION
1	9/97	FXP	ASG	RECORD DRAWING

REVISIONS

DESIGNED BY: —
DRAWN BY: GGM
CHECKED BY/DATE: TDH 9/91
APPRV'D BY/DATE: TDH 9/91

COMMONWEALTH OF VIRGINIA
THOMAS D. HALL
No. 12502
PROFESSIONAL ENGINEER

CAMP DRESSER & McKEE
environmental engineers, scientists, planners, & management consultants
CDM

PER DRAWING HAS BEEN REVISED BY HAZEN AND SAWYER, P.C. TO REFLECT MODIFICATIONS MADE DURING CONSTRUCTION

ARLINGTON COUNTY, VIRGINIA
WATER POLLUTION CONTROL PLANT
UPGRADE AND EXPANSION- PHASE IIB

BASIC PRELIMINARY & PRIMARY PROCESS SCHEMATIC AFTER MODIFICATIONS

SCALE NOTE
SCALE BAR SHOWN BELOW IS ONE INCH LONG ON A FULL SIZE DRAWING. WHEN SCALING DRAWINGS, MEASURE BAR TO DETERMINE IF SCALES SHOWN WILL REQUIRE ADJUSTING.
ONE INCH

CONTRACT NO. 90-02-WPC
YEAR 1991
LOCATION CODE 00
SPECIALTY CODE G
PROJECT NO. 5002-33
FILE NAME 00G-0007.DWG
DRAWING NO. 00G-7
SHEET NO. 7

RECORD DRAWING

09/16/91 — 17:52

MATCHLINE SEE 00C-2

MATCHLINE SEE 00C-5

MATCHLINE SEE 00C-4

C DETAIL
00C-20 PIPING MODIFICATIONS

APPROXIMATE REMOVAL LIMIT

SCALE: 1"=20'

EX PLANT SERVICE BLDG

EX SLUDGE STORAGE TANK NO. 1

EX STORAGE BLDG NO. 5

EX EAST TUNNEL ACCESS BLDG NO. 6

EX PRIMARY CLARIFIERS NO. 7

NO. 8

EX CHLORINE CONTACT CHAMBER

EX PRIMARY EFFLUENT PUMP STATION

EX POTOMAC INTERCEPTOR SCREEN CHAMBER

EX POTOMAC INTERCEPTOR JUNCTION CHAMBER

EX POTOMAC INTERCEPTOR METER CHAMBER

EX POTOMAC INTERCEPTOR FLOW MONITOR WELL

EX COW BACKFLOW PREVENTER VAULT

EX COW METER CHAMBER

EX BYPASS FLOW METER CHAMBER

EX BYPASS GATE

EX CHLORINE CONTROL PANEL

EX ACCESS MH

EX VALVE

EX HOIST

EX HEATER PIPE SLEEVE

EX RAW WASTEWATER CHANNEL

EX RAW WASTEWATER CHANNEL POTOMAC INTERCEPTOR WEST BRANCH

EX SLUDGE STORAGE TANK TUNNEL BELOW

EX OIL TANK

EX UNDERDRAIN SYSTEM MH

EX PRIMARY EFFLUENT CHANNEL

EX RC PRI EFF CHANNEL

EX HATCH

EX VAULT

EX CSW

EX TUNNEL BELOW

EX SPEED BUMP

T.O.P. EL. 7.75

7'-8"

2'-0"

PILASTER

BLANKED OFF
SEE A.B. BK. 1, PG 154

28'-0"

N10563.11103
E10038.70752
SURVEY CONTROL
MONUMENT 1 EL 15.87

ADD # 1

1

NOTE:
NUMBERS IN HEXAGONAL BOXES ON THE 00C DRAWINGS CORRESPOND TO SITE WORK NOTES LISTED IN SECTION 01015 OF THE SPECIFICATIONS.

VDOT DRAINAGE EASEMENT

VDOT ROW

SOUTH GLEBE ROAD

S EADS STREET

EX 54" RW-RC

EX 18" SD

EX 15" SD

EX 12" COW

EX 16" WAS

EX 6" DG

EX 12" PEW AWT

EX 6" PEW SEC

EX 6" SC-SR

EX 12" SD

EX 6" SC

EX 1 1/2" COW

EX 42" SD

EX 48" OUTFALL

EX 27" SD

EX 12" SD-RC

EX 27" SD-RC

EX 15" SD-RC

EX 20" RW-RC

EX 12" COW-DI

EX 4" COW

EX 16" WAS-DI

EX 12" SD

EX 6" DG-DI

EX 6" PEW

EX 6" SC-FRP

EX 12" PEW-DI

EX 4" PEW

EX 4" CS-SR

EX 12" PEW AWT

EX 6" PEW AWT-DI

EX 6" PEW SEC-DI

EX 8" SD

EX 3" PEW

EX 4" SC-H

EX 2" PEW

EX 4" CS

EX 6" PEW-DI

EX 12" PEW PRI-DI

EX 14" PEW PRI-DI

EX 3" SD

EX 6" DR-DI

EX 6" DR-DI ABANDONED

EX 10" GTO-DI

EX 20" WAS-DI

EX 8" SL-DI

EX 8" DR-DI

EX 24" DR

EX 42" PW-RC

EX 12" DR-SC

EX 8" PEW

EX 8" PEW AWT-DI

EX 12" SD-RC

EX 6" SC-SR

EX 4" CS

EX 6" VT

EX E CONTROL PANEL

EX E BOX

EX 3" PEW SEC-DI

EX 12" PEW AWT

EX 8" PEW AWT-DI

EX 15" SD-RC

EX 27" SD-RC

EX 42" OUTFALL

EX 12" COW

EX 18" SD

VDOT ROW

VDOT DRAINAGE EASEMENT

EX 2" CA

EX 3" SD

EX 6" SC-FRP

EX 4" CS-SR

EX 12" SD-RC

EX 6" SC-SR

EX 4" CS

EX 6" VT

EX E CONTROL PANEL

EX E BOX

EX 3" PEW SEC-DI

MATCHLINE SEE 00C-7

MATCHLINE SEE 00C-6

MATCHLINE SEE 00C-3

MATCHLINE SEE 00C-1

MODIFICATIONS BY OTHERS (NIC)

EX OPERATIONS CONTROL BUILDING

EX OIL STORAGE TANK IN UNDERGROUND VAULT

EX CONSTRUCTION BUILDING

EX FOUR MILE RUN RELIEF PUMP STATION

EX. FLOW METER CHAMBER

EX FLOTATION THICKENERS

EX GRIT CHAMBERS

EX GRIT AND CHLORINE BLDG

EX MAINTENANCE BLDG.

EX. UNDERPASS DRAINAGE PUMP STATION

SURVEY CTRL STATION "A"

VDOT PERMANENT DRAINAGE EASEMENT

EX. VDOT STORM WATER INLET

EX. BURIED CONC. DRAINAGE SWALE

EX FOUR MILE RUN INTERCEPTOR METER CHAMBER

EX 54" RW-RC FOUR MILE RUN RELIEF INTERCEPTOR

EX 6" HOT WATER LOOP PIPES

1 LEFT-IN CONCRETE PLUG

1ST/2ND STAGE REMOVAL LIMIT

FERN STREET

SOUTH GLEBE ROAD

UNDERPASS

EX. EASEMENT

EX. GATE

EX VDOT ROW

EX. CONSTRUCTION BUILDING

EX. FUEL TANK

EX. 42" RCP (ABAND.)

EX. 10" WAS

EX. 12" PEW PRI

EX. 6" SS

EX. 14"x12" PEW PRI REDUCER

EX. 12" PEW PRI-DI

EX. 1" COW

EX. 6" SS

EX. 2" V-DI

EX. 3" AWT PEW-DI

EX. 12" PEW PRI-DI

EX. 6" GS (ABAND.)

EX. 6" GS-DI (ABAND.)

EX. 1 1/2" COW

EX. 12" SD (ABAND.)

EX. 12" SD-RC

EX. 18" SD

EX. 15" SD

EX. 12" SD

EX. 8" SD

EX. 6" SS

EX. 4" SS

EX. 3" SS

EX. 12" COW

EX. 8" COW

EX. 8" COW-DI

EX. 6" COW-DI

EX. 1 1/2" COW

EX. 12" RW (ABAND.)

EX. 54" RW-RC

EX. 20" RW

EX. 12" RW

EX. 8" RW

EX. 6" RW

EX. 4" RW

EX. 12" SD-RC

EX. 8" SD-RC

EX. 6" SD-RC

EX. 4" CS-SD

EX. 18" SD

EX. 15" SD

EX. 12" SD

EX. 8" SD

EX. 6" SS

EX. 4" SS

EX. 3" SS

EX. 8" U

EX. 6" U-VCP

EX. 4" DR-DI

EX. 3" DR-DI

EX. 2" DR-DI

EX. 12" SD-RC

EX. 8" SD-RC

EX. 6" SD-RC

EX. 4" CS-SD

EX. 30" RW-RC

EX. 54" RW-RC

AREA N3 SITE PLAN

SCALE: 1"=20'

09/16/91 - 20:04

RECORD DRAWING

NO.	DATE	DRWN	CHK'D	DESCRIPTION
1	9/97	FXP	ASG	RECORD DRAWING

REVISIONS

DESIGNED BY: --
DRAWN BY: BRW,CLP,PLR
CHECKED BY/DATE: TDH 9/91
APPRV'D BY/DATE: TDH 9/91

COMMONWEALTH OF VIRGINIA
THOMAS D. HALL
No. 12502
PROFESSIONAL ENGINEER

CAMP DRESSER & McKEE

THIS DRAWING HAS BEEN REVISED BY HAZEN AND SAWYER, P.C. TO REFLECT MODIFICATIONS MADE DURING CONSTRUCTION

CDM
environmental engineers, scientists, planners, & management consultants

ARLINGTON COUNTY, VIRGINIA
WATER POLLUTION CONTROL PLANT
UPGRADE AND EXPANSION- PHASE IIB

AREA N3 SITE PLAN
GENERAL REMOVALS

SCALE NOTE
SCALE BAR SHOWN BELOW IS ONE INCH LONG ON A FULL SIZE DRAWING. WHEN SCALING DRAWINGS, MEASURE BAR TO DETERMINE IF SCALES SHOWN WILL REQUIRE ADJUSTING.
ONE INCH

CONTRACT NO. 90-02-WPC
YEAR 1991
LOCATION CODE 00
SPECIALTY CODE C
PROJECT NO. 5002-33
FILE NAME 00C-0003.DWG
DRAWING NO. 00C-3
SHEET NO. 10

MATCHLINE SEE 00C-3

MATCHLINE SEE 00C-1

EX GRAVITY SLUDGE THICKENER NO. 1

EX GRAVITY SLUDGE THICKENER NO. 2

EX SLUDGE STORAGE TANK NO. 1

EX SLUDGE STORAGE TANK NO. 2

EX SLUDGE STORAGE TANK TUNNEL (BELOW)

EX SLUDGE STORAGE BUILDING

EX DIGESTER NO. 1

EX DIGESTER NO. 2

EX DIGESTER NO. 3

EX SLUDGE PROCESSING BUILDING

EX SLUDGE FILTER BUILDING

EX LIME BUILDING

EX OLD INCINERATOR BUILDING (NOT IN USE)

EX ELUTRIATION TANKS

EX TRANSFER STATION

EX ELECTRICAL SUBSTATION NO. 1

EX ELECTRICAL DIST. CENTER NO. 1

EX WASTE GAS BURNER STATION

EX SCALE HOUSE

EX TRUCK SCALES

EX U/G TANKS

EX 31ST STREET

S EADS STREET

EX POTOMAC INTERCEPTOR

ELEC. DUCT BANK (NIC)

MODIFICATIONS BY OTHERS (NIC)

EX 3" PVC GW MONITOR WELL

EX COW METER

AREA N4 SITE PLAN

SCALE:1"=20'

09/16/91 - 20:42

RECORD DRAWING

NO.	DATE	DRWN	CHK'D	DESCRIPTION
1	9/97	FXP	ASG	RECORD DRAWING

REVISIONS

DESIGNED BY: --

DRAWN BY: BRW,CLP,PLR

CHECKED BY/DATE: TDH 9/91

APPRV'D BY/DATE: TDH 9/91

COMMONWEALTH OF VIRGINIA — THOMAS D. HALL No. 12502 — PROFESSIONAL ENGINEER

CAMP DRESSER & McKEE

RED DRAWING HAS BEEN REVISED BY HAZEN AND SAWYER, P.C. TO REFLECT MODIFICATIONS MADE DURING CONSTRUCTION

CDM

environmental engineers, scientists, planners, & management consultants

ARLINGTON COUNTY, VIRGINIA
WATER POLLUTION CONTROL PLANT
UPGRADE AND EXPANSION- PHASE IIB

AREA N4 SITE PLAN
GENERAL REMOVALS

SCALE NOTE

SCALE BAR SHOWN BELOW IS ONE INCH LONG ON A FULL SIZE DRAWING. WHEN SCALING DRAWINGS, MEASURE BAR TO DETERMINE IF SCALES SHOWN WILL REQUIRE ADJUSTING.

ONE INCH

CONTRACT NO.	90-02-WPC
YEAR	1991
LOCATION CODE	00
SPECIALTY CODE	C
PROJECT NO.	5002-33
FILE NAME	00C-0004.DWG
DRAWING NO.	00C-4
SHEET NO.	11

MATCHLINE SEE 00C-6

SEE RFC-017

1 1/2" NaOCl-HOSE IN 6" PIPE SLEEVE-PVC/V

CTRL WIRING TO BE INSTALLED IN EX. SPARE ELEC. CONDUIT

F.O. # 19, RELOCATION OF 6" PVC SERVICE

SECONDARY SERVICE PUMP STA. AREA PLAN SEE DWG. 00C-19

INSTALL 2" NaOCl-HOSE IN EX UNUSED 6" PEW SEC-DI PIPE

1 1/2" NaOCl-HOSE IN 6" PIPE SLEEVE-PVC/V

SEE RFC-017

WARNING!

EX 250 KV VIRGINIA POWER MAIN TRANSMISSION LINE LOW OVERHEAD

A DETAIL 00C-1 BRICK PULLBOX

SEE WDC-011

A DETAIL 00C-21 EX CS VALVE VAULT

EX. SECONDARY CLARIFIERS

NO.1 NO.2 NO.3 NO.4 NO.5 NO.6

EX. ACTIVATED SLUDGE PUMP STATION

EX. SECONDARY EFFLUENT PUMP STATION

EX. ELECTRICAL SUBSTATION NO. 3

EX. SECONDARY EFFLUENT

EX. SEC. EFF. BYPASS FLUME

EX. DISTRIBUTION/ COLLECTION CHAMBER

EX. MIXED LIQUOR FLUME

EX. EFFLUENT FLUME

MIXED LIQUOR FLUME

PARSHALL FLUME

JUNCTION BOX

FOUR MILE RUN

SOUTH GLEBE RD.

S. EADS STREET

PIPELINE

AREA S1 SITE PLAN

SCALE: 1"=20'

MATCHLINE SEE 00C-1 & 00C-9

RECORD DRAWING

09/16/91 - 20:52

NO.	DATE	DRWN	CHK'D	DESCRIPTION
1	9/97	FXP	ASG	RECORD DRAWING

REVISIONS

DESIGNED BY: TBM,DAO
DRAWN BY: BRW,CLP,PLR
CHECKED BY/DATE: TDH 9/91
APPRV'D BY/DATE: TDH 9/91

COMMONWEALTH OF VIRGINIA — THOMAS D. HALL No. 12502 — PROFESSIONAL ENGINEER

CAMP DRESSER & McKEE

environmental engineers, scientists, planners, & management consultants

CDM

THIS DRAWING HAS BEEN REVISED BY HAZEN AND SAWYER, P.C. TO REFLECT MODIFICATIONS MADE DURING CONSTRUCTION

ARLINGTON COUNTY, VIRGINIA
WATER POLLUTION CONTROL PLANT
UPGRADE AND EXPANSION- PHASE IIB

AREA S1 SITE PLAN
GENERAL REMOVALS AND STRUCTURES & PIPING

SCALE NOTE

SCALE BAR SHOWN BELOW IS ONE INCH LONG ON A FULL SIZE DRAWING. WHEN SCALING DRAWINGS, MEASURE BAR TO DETERMINE IF SCALES SHOWN WILL REQUIRE ADJUSTING.

ONE INCH

CONTRACT NO. 90-02-WPC
YEAR 1991
LOCATION CODE 00
SPECIALTY CODE C
PROJECT NO. 5002-33
FILE NAME 00C-0005.DWG
DRAWING NO. 00C-5
SHEET NO. 12

MATCHLINE SEE 00C-7

WARNING!
EX 34.5 KV VIRGINIA POWER MAIN FEEDER

WARNING!
EX 250 KV VIRGINIA POWER MAIN TRANSMISSION LINE LOW OVERHEAD

PULL BOX #6

B DETAIL 00C-19 PRECAST CONC. NaOCl HOSE PULL BOX

PULL BOX #7

PULL BOX #8

F.O. #19 RELOCATED

DETAIL B 00C-19 PRECAST CONC NaOCl HOSE PULL BOX

CTRL. WIRING IN 2" CONDUIT-PVC/V INSTALL IN SAME TRENCH AS NaOCl SLEEVE

2" NaOCl-HOSE IN 6" PIPE SLEEVE-PVC/BS

EX. ACTIVATED SLUDGE AERATION TANKS (D1)

EX. MIXED LIQUOR FLUMES

EX. SECONDARY SERVICE PUMP STATION (D3)

SECONDARY SERVICE PUMP STA. AREA PLAN SEE DWG. 00C-19

INSTALL CTRL WIRING IN EX. SPARE ELEC. CONDUIT. CLEAN OUT & SWAB EX CONDUIT

2 NaOCl-H IN EX. 6" PEW SEC-DI PIPE

MATCHLINE SEE 00C-5

AREA S2 SITE PLAN

SCALE: 1"=20'

MATCHLINE SEE 00C-2 & 00C-10

EX. LIME REACTION TANKS (SECOND STAGE) (E1)

EX. OPERATIONS CONTROL BUILDING (G1,2,3,4)

WARNING!
EX 34.5 KV VIRGINIA POWER MAIN FEEDER & TRANSFORMERS

EX BLOWER BUILDING (D0)

FOUL AIR PLENUM

90° ELBOW STA 0+28160

FOUL AIR CHASE, SEE DWG DOM-1 28'±

STA 0+00130

RELOCATED EX 54" RC 90° BEND

CONTRACTOR UNDERCUT BOTH SIDES OF CASING AND FOUND NO PILE CAPS WITHIN LIMITS OF EXCAVATION

PROTECT OR REMOVE & REPLACE EX. CONC ENCASED SANITARY SEWER PIPE AS APPROPRIATE

REMOVE EX 54" RC 90° BEND W/PLUG & RELOCATE BEND

REMOVE & REINSTALL EX. DRAIN PIPE AS NECESSARY

54" FA-RC/BS

? INTX 0+89110

8' DIA RC FOUL AIR ACCESS MANHOLE NO. 1

30'±

EX. UNUSED 54" PEW PRI-RC

EX. BITUMINOUS PAVED PARKING AREA

EX. CONC. PILE, TYP. 3

SOUTH GLEBE ROAD

WARNING!
EX 34.5 KV VIRGINIA POWER MAIN FEEDER & TRANSFORMERS

RECORD DRAWING

09/16/91 - 21:01

NO.	DATE	DRWN	CHK'D	DESCRIPTION
1	9/97	FXP	ASG	RECORD DRAWING

REVISIONS

DESIGNED BY: TBM,DAO
DRAWN BY: BRW,CLP,PLR
CHECKED BY/DATE: TDH 9/91
APPRV'D BY/DATE: TDH 9/91

COMMONWEALTH OF VIRGINIA — THOMAS D. HALL No. 12502 — PROFESSIONAL ENGINEER

CAMP DRESSER & McKEE

THIS DRAWING HAS BEEN REVISED BY HAZEN AND SAWYER, P.C. TO REFLECT MODIFICATIONS MADE DURING CONSTRUCTION

environmental engineers, scientists, planners, & management consultants CDM

ARLINGTON COUNTY, VIRGINIA
WATER POLLUTION CONTROL PLANT
UPGRADE AND EXPANSION- PHASE IIB

GENERAL REMOVALS AND STRUCTURES & PIPING

SCALE NOTE

SCALE BAR SHOWN BELOW IS ONE INCH LONG ON A FULL SIZE DRAWING. WHEN SCALING DRAWINGS, MEASURE BAR TO DETERMINE IF SCALES SHOWN WILL REQUIRE ADJUSTING.

ONE INCH

CONTRACT NO.	
90-02-WPC	
YEAR	1991
LOCATION CODE	SPECIALTY CODE
00	C
PROJECT NO.	
5002-33	
FILE NAME	
00C-0006.DWG	
DRAWING NO.	
00C-6	
SHEET NO.	13

MATCHLINE SEE 00C-8

WARNING!
EX 250 KV VIRGINIA POWER MAIN TRANSMISSION LINE LOW OVERHEAD

WARNING!
EX 34.5 KV VIRGINIA POWER MAIN FEEDER

EX. CARBON FILTER PUMP STATION

EX. RECARBONATION TANKS

EX LIME REACTION TANKS (FIRST STAGE)

EX LIME SOLIDS PROCESSING BUILDING
FB,C,D,E,F,G,H,J,K

SOUTH GLEBE ROAD

EX LIME SLUDGE THICKENER 1

EX LIME SLUDGE THICKENER 2

B DETAIL 00C-19 PRECAST CONC NaOCl HOSE PULL BOX

PULL BOX #4

2" NaOCl HOSE IN 6" PIPE SLEEVE-PVC/BS

HYPOCHLORITE TRANSFER PUMP CONTROL WIRING IN 2" CONDUIT-PVC/BS INSTALL IN SAME TRENCH AS NaCl SLEEVE 12" ABOVE

B DETAIL 00C-19 PRECAST CONC NaOCl HOSE PULL BOX

PULL BOX #5

36'-0"

EX. CONC DUCT BANK (PAINTED RED)

EX. SECONDARY EFFLUENT METER CHAMBER

EX PAVED ROAD

EX ACTIVATED SLUDGE AERATION TANKS

EX RECARBONATION TANKS

EX LIME REACTION TANKS (SECOND STAGE)

WARNING!
EX 34.5 KV VIRGINIA POWER MAIN FEEDER

AREA S2 SITE PLAN

SCALE: 1"=20'

MATCHLINE SEE 00C-6

MATCHLINE SEE 00C-2,10

RECORD DRAWING

NO.	DATE	DRWN	CHK'D	DESCRIPTION
1	9/97	FXP	ASG	RECORD DRAWING

REVISIONS

DESIGNED BY: —
DRAWN BY: PLR
CHECKED BY/DATE: TDH 9/91
APPRV'D BY/DATE: TDH 9/91

COMMONWEALTH OF VIRGINIA
THOMAS D. HALL
No. 12502
PROFESSIONAL ENGINEER

CAMP DRESSER & McKEE

THIS DRAWING HAS BEEN REVISED BY HAZEN AND SAWYER, P.C. TO REFLECT MODIFICATIONS MADE DURING CONSTRUCTION

environmental engineers, scientists, planners, & management consultants

CDM

ARLINGTON COUNTY, VIRGINIA
WATER POLLUTION CONTROL PLANT
UPGRADE AND EXPANSION- PHASE IIB

AREA S3 SITE PLAN
GENERAL REMOVALS AND STRUCTURES & PIPING

SCALE NOTE

SCALE BAR SHOWN BELOW IS ONE INCH LONG ON A FULL SIZE DRAWING. WHEN SCALING DRAWINGS, MEASURE BAR TO DETERMINE IF SCALES SHOWN WILL REQUIRE ADJUSTING.

ONE INCH

CONTRACT NO. 90-02-WPC
YEAR 1991
LOCATION CODE 00
SPECIALTY CODE C
PROJECT NO. 5002-33
FILE NAME 00C-0007.DWG
DRAWING NO. 00C-7
SHEET NO. 14

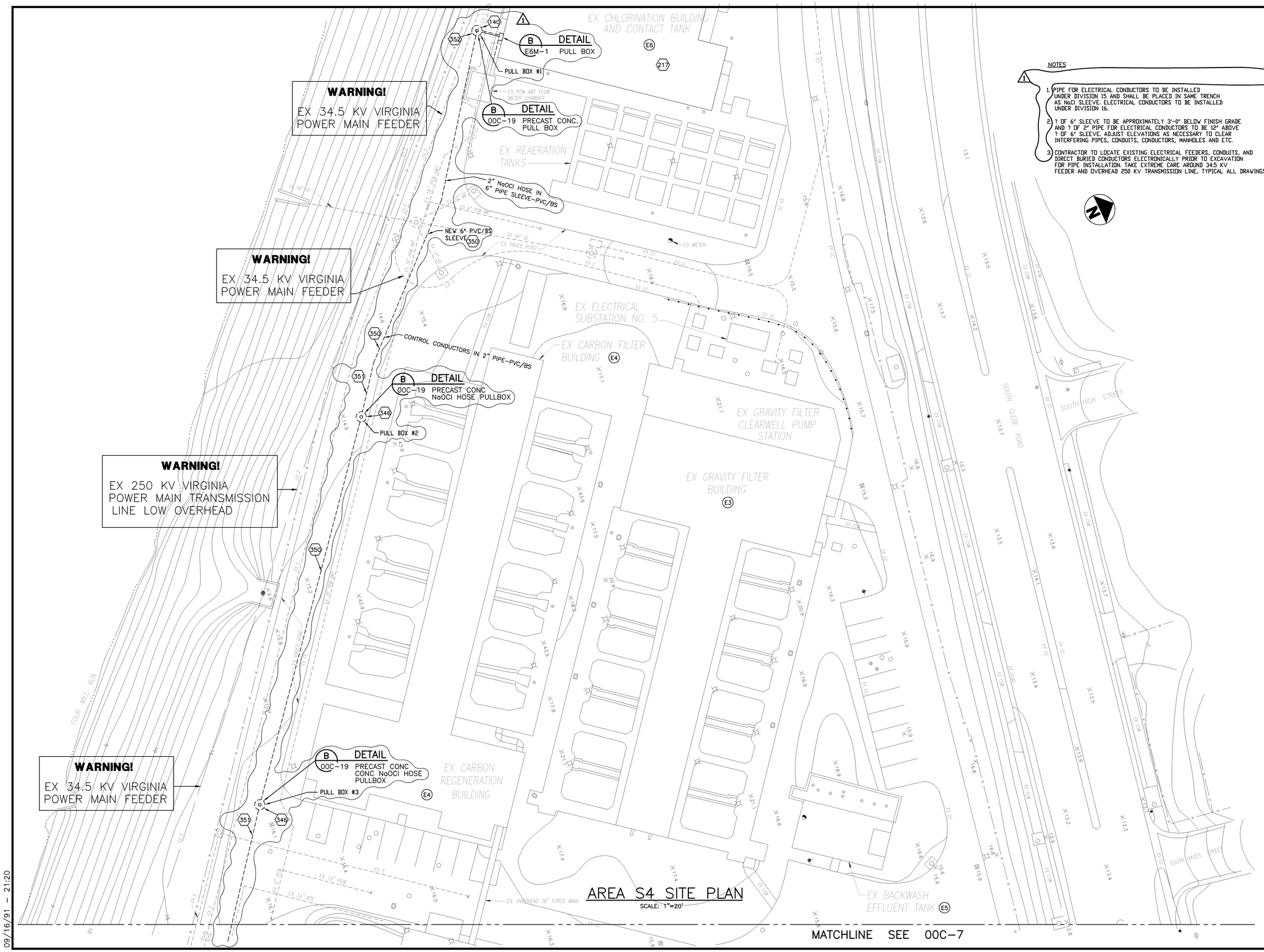

NOTES

1. PIPE FOR ELECTRICAL CONDUCTORS TO BE INSTALLED UNDER DIVISION 15 AND SHALL BE PLACED IN SAME TRENCH AS NaOCl SLEEVE. ELECTRICAL CONDUCTORS TO BE INSTALLED UNDER DIVISION 16.
2. ? OF 6' SLEEVE TO BE APPROXIMATELY 3'-0' BELOW FINISH GRADE AND ? OF 2' PIPE FOR ELECTRICAL CONDUCTORS TO BE 12' ABOVE ? OF 6' SLEEVE. ADJUST ELEVATIONS AS NECESSARY TO CLEAR INTERFERING PIPES, CONDUITS, CONDUCTORS, MANHOLES AND ETC.
3. CONTRACTOR TO LOCATE EXISTING ELECTRICAL FEEDERS, CONDUITS, AND DIRECT BURIED CONDUCTORS ELECTRONICALLY PRIOR TO EXCAVATION FOR PIPE INSTALLATION. TAKE EXTREME CARE ARROUND 34.5 KV FEEDER AND OVERHEAD 250 KV TRANSMISSION LINE, TYPICAL ALL DRAWINGS.

NO.	DATE	DRWN	CHK'D	DESCRIPTION
1	9/97	FXP	ASG	RECORD DRAWING

REVISIONS

DESIGNED BY: TBM,DAO
DRAWN BY: PLR
CHECKED BY/DATE: TDH 9/91
APPRV'D BY/DATE: TDH 9/91

COMMONWEALTH OF VIRGINIA
THOMAS D. HALL
No. 12502
PROFESSIONAL ENGINEER

CAMP DRESSER & McKEE

THIS DRAWING HAS BEEN REVISED BY HAZEN AND SAWYER, P.C. TO REFLECT MODIFICATIONS MADE DURING CONSTRUCTION

CDM

environmental engineers, scientists, planners, & management consultants

ARLINGTON COUNTY, VIRGINIA
WATER POLLUTION CONTROL PLANT
UPGRADE AND EXPANSION- PHASE IIB

AREA S4 SITE PLAN
GENERAL REMOVALS AND STRUCTURES & PIPING

SCALE NOTE

SCALE BAR SHOWN BELOW IS ONE INCH LONG ON A FULL SIZE DRAWING. WHEN SCALING DRAWINGS, MEASURE BAR TO DETERMINE IF SCALES SHOWN WILL REQUIRE ADJUSTING.

ONE INCH

CONTRACT NO.	
90-02-WPC	
YEAR	1991
LOCATION CODE	SPECIALTY CODE
00	C
PROJECT NO.	
5002-33	
FILE NAME	
00C-0008.DWG	
DRAWING NO.	
00C-8	
SHEET NO.	15

RECORD DRAWING

09/16/91 - 21:20

MATCHLINE SEE 00C-10

MATCHLINE SEE 00C-5

MATCHLINE SEE 00C-12

C DETAIL 00C-20 PIPING MODIFICATIONS

DETAIL A 00C-19 PULL BOX BRICK NaOCI HOSE

RELOCATE 20" RW LINE ABOVE 54" FA LINE. USE FOUR 45° MJ BENDS ON 20" LINE TO RAISE LINE TO ? EL ±13.0'

CLAR. #137

CLAR. #67

CLAR. #77

F.D. #23

CR-147, DELETED MANHOLE

WDC-57 (TYP.)

WDC-57

WDC-38

TEMP NaOCI HOSE IN EX 6" PEW SEC-DI PIPE

TEMP 1 1/2" NaOCI HOSE IN TEMP 6" SLEEVE PIPE PVC/BS

6" PVC SLEEVE W/ 1 1/2" NaOCI

N10563.11103
E10038.70752
SURVEY CONTROL MONUMENT
EL 15.87

PRIMARY CLARIFIERS

NO. 1

NO. 2

NO. 3

NO. 4

NO. 5

NO. 6

NO. 7

NO. 8

EX PRIMARY CLARIFIERS

PRELIMINARY TREATMENT BUILDING

EX EAST TUNNEL ACCESS BLDG

EX SLUDGE STORAGE TANK NO. 1

EX CHLORINE CONTACT CHAMBER

EX PRIMARY EFFLUENT PUMP STATION

EX BYPASS FLOW METER CHAMBER

EX BYPASS SCREEN CHAMBER

EX POTOMAC INTERCEPTOR JUNCTION CHAMBER

EX POTOMAC INTERCEPTOR METER CHAMBER

POTOMAC INTERCEPTOR METER CHAMBER

SOUTH TUNNEL ACCESS BUILDING

PRIMARY CLARIFIER TUNNEL BELOW

TUNNEL BELOW

EX SLUDGE STORAGE TANK TUNNEL BELOW

EX GROUNDWATER DRAINAGE MH

FOUL AIR ACCESS MH NO. 3

WEST INFLUENT CHANNEL

EX RAW WASTEWATER CHANNEL

EX COW BACKFLOW PREVENTER VAULT

EX PIPE TUNNEL BELOW

EX COW METER VAULT

EX HATCH

EX RC PRI EFF CHANNEL

EX PRI EFF CHANNEL

EX CC

EX CSW

EX CURB

EX OIL TANK

EX VALVE

EX ACCESS MH

EX E BOX

EX T

EX VAULT

EX TOC

EX GRADE

EX CONC

EX 24" DR

EX 20" WAS-DI

EX 8" SL-DI

EX 10" GTO-DI

EX 3" PVC CW MONITOR WELL

EX 8" PEW AWT-DI

EX 6" PEW SEC

EX 6" SC-PVC

EX 6" OR-DI

EX 14" PEW PRI-DI

EX 12" SD-RC

EX 15" SD-RC

EX 27" SD-RC

EX 42" SD

EX 42" OUTFALL

EX 48" OUTFALL

EX 54" SD

EX 54" RW-RC

EX 18" SD

EX 15" SD

EX 12" COW

EX 1 1/2" COW

EX 4" COW

EX 6" COW

EX 12" PEW AWT

EX 6" PEW SEC

EX 4" PEW SEC

EX 6" SC-PVC

EX 4" SS-SR

EX 6" DS LARAND

EX 6" SC-RW

EX 6" PEW-DI (ABAND)

EX 12" PEW-DI

EX 6" PEW-DI

EX 3" PEW

EX 8" U-VCP

EX 6" VT

EX 8" SD

EX 6" PEW SEC-DI

EX 3" PEW SEC-DI

EX 8" PEW AWT-DI

EX 6" DR-DI

EX 3" PVC

EX 6" SC-RW

EX 4" SC-RW

EX 4" PEW-DI

EX 6" PEW-DI

EX 8" SL-DI

EX 20" WAS-DI

EX 24" DR

EX 12" SD-RC

EX 15" SD-RC

EX 27" SD-RC

EX 42" SD

EX 42" OUTFALL

EX 48" OUTFALL

EX 54" SD

EX 54" RW-RC

EX 18" SD

EX 15" SD

EX 12" COW

EX 1 1/2" COW

EX 4" COW

EX 6" COW

EX 12" PEW AWT

EX 6" PEW SEC

EX 4" PEW SEC

EX 6" SC-PVC

EX 4" SS-SR

EX 6" DS LARAND

EX 6" SC-RW

EX 6" PEW-DI (ABAND)

EX 12" PEW-DI

EX 6" PEW-DI

EX 3" PEW

EX 8" U-VCP

EX 6" VT

EX 8" SD

EX 6" PEW SEC-DI

EX 3" PEW SEC-DI

EX 8" PEW AWT-DI

EX 6" DR-DI

EX 3" PVC

EX 6" SC-RW

EX 4" SC-RW

EX 4" PEW-DI

EX 6" PEW-DI

EX 8" SL-DI

EX 20" WAS-DI

EX 24" DR

EX 12" SD-RC

EX 15" SD-RC

EX 27" SD-RC

VDOT DRAINAGE EASEMENT

VDOT DRAINAGE STRUCTURE & PIPING

VDOT ROW

SOUTH GLEBE ROAD

S. EADS STREET

54 FA-RC/BS

4 FA-PVC/V

2 HOT PEW AWT-CPVC/V

2 HOT PEW AWT-CPVC

15 SD-RC/BS

8 U-DI/MJ

6 PEW SEC-DI/MJ

2 NaOCI-H IN 6" PVC SLEEVE

6 SC-PVC/BS

16 WAS-DI/MJ

6 PEW AWT-DI/MJ

12 PEW AWT-DI/MJ

2 NaOCI-H W/ 1 1/2" NaOCI

6 PVC SLEEVE W/ 1 1/2" NaOCI

36 RW-DI/BS DWGS COM-3 & COM-8

36 RW-DI/BS

42 RW-RC/BS

42" RW-RC/BS POTOMAC INTERCEPTOR

12 PEW PRI-DI/MJ

16 WAS-DI/MJ

TEMPORARY 12 GTO-DI

12 PEW-DI/MJ

8 VT-DI/MJ

6" PEW-SEC, ? EL 4.99' BLIND FLANGE FOR FUTURE CONN.

3" PEW-SEC, ? EL 4.99' BLIND FLANGE FOR FUTURE CONN

80' DEFLECT JOINTS TO OFFSET PIPE

11.0'

8'-2" TYP

32'-0" EXISTING FUTURE EQ. EQ.

CC&G LIMIT

12" D.I.P., COVER BOTH ENDS W/VOID AND EXTEND 2'x4' WOOD MARKER UP TO WITHIN 6" OF GRADE

SCALE NOTE

SCALE BAR SHOWN BELOW IS ONE INCH LONG ON A FULL SIZE DRAWING. WHEN SCALING DRAWINGS, MEASURE BAR TO DETERMINE IF SCALES SHOWN WILL REQUIRE ADJUSTING.

ONE INCH

RECORD DRAWING

09/16/91 - 21:30

NO.	DATE	DRWN	CHK'D	DESCRIPTION
1	9/97	FXP	ASG	RECORD DRAWING

REVISIONS

DESIGNED BY: —

DRAWN BY: BRW,CLP,PLR

CHECKED BY/DATE: TDH 9/91

APPRV'D BY/DATE: TDH 9/91

COMMONWEALTH OF VIRGINIA THOMAS D. HALL No. 12502 PROFESSIONAL ENGINEER

CAMP DRESSER & McKEE

RED DRAWING HAS BEEN REVISED BY HAZEN AND SAWYER, P.C. TO REFLECT MODIFICATIONS MADE DURING CONSTRUCTION

environmental engineers, scientists, planners, & management consultants

CDM

ARLINGTON COUNTY, VIRGINIA
WATER POLLUTION CONTROL PLANT
UPGRADE AND EXPANSION- PHASE IIB

AREA N1 SITE PLAN
STRUCTURES & PIPING

CONTRACT NO.	90-02-WPC
YEAR	1991
LOCATION CODE	00
SPECIALTY CODE	C
PROJECT NO.	5002-33
FILE NAME	00C-0009.DWG
DRAWING NO.	00C-9
SHEET NO.	16

MATCHLINE SEE 00C-7

MATCHLINE SEE 00C-6

MATCHLINE SEE 00C-11

NOTE:

1. ADD BURIED GATE VALVE WITH VALVE BOX AND NUT OPERATOR AT THE FOLLOWING LOCATIONS:
   a. IN 8" CDW-DI/MJ (ITEM 196) IMMEDIATELY EAST OF THE JUNCTION WITH 2 1/2" CDW-CU/S NEAR MANHOLE (ITEM 362)
   b. IN 8" CDW-DI/MJ IMMEDIATELY SOUTH OF NEW TEE (ITEM 207) NEAR CORNER OF FLOTATION THICKENER BUILDING.
   c. IN 6" CDW-DI/MJ IMMEDIATELY EAST OF 8"x6" REDUCER ON WEST SIDE OF PRELIMINARY TREATMENT BUILDING.
2. DELETE POST INDICATOR VALVE ON 2 1/2" CDW-CU/S BRANCH TO FUTURE FOUR MILE RUN RELIEF PUMP STATION NEAR MANHOLE (ITEM 362). CHANGE 2 1/2" CDW-CU/S BRANCH AND VALVE TO 4" CDW-CU/S AND VALVE. INSTALL NUT-OPERATED VALVE AND VALVE BOX ON THIS 4" BRANCH IN PLACE OF ORIGINAL POST INDICATOR VALVE.
3. DELETE ITEM 333 DESIGNATION ON MANHOLE NEAR MATCH LINE FOR SHEET 00C-11.

WARNING!
EX 34.5 KV VIRGINIA POWER MAIN FEEDER

FUTURE RELOCATED FERN ST. (NIC)

FUTURE FOUR MILE RUN RELIEF INTERCEPTOR DIVERSION CHAMBER (NIC)

FUTURE 54 RW-RC/TG FOUR MILE RUN RELIEF INTERCEPTOR IN TUNNEL (NIC)

FUTURE 72" TUNNEL LINER OR JACKED CASING (NIC)

FUTURE FOUR MILE RUN RELIEF PUMP STATION (NIC)

MODIFICATIONS BY OTHERS (NIC)

EX OPERATIONS CONTROL BUILDING

EX OIL STORAGE TANK IN UNDERGROUND VAULT

EX CONSTRUCTION OFFICE

EX FOUR MILE RUN INTERCEPTOR METER CHAMBER

EX FOUR MILE RUN INTERCEPTOR 42 RW-RC

EX 54" RW-RC FOUR MILE RUN RELIEF INTERCEPTOR

EX FLOW METER CHAMBER

EX FOUR MILE RUN PUMP STATION

EX FUEL TANK

EX FLOTATION THICKENERS

EX MAINT. BLDG.

MAINT. BLDG. EXPANSION (NIC)

FUTURE EXPANSION LIMITS

EX UNDERPASS DRAINAGE PUMP STATION

EX CONCRETE BASIN

EX VDOT ROW

VDOT PERMANENT DRAINAGE EASEMENT

SOUTH GLEBE ROAD

UNDERPASS

N10368.19545
E9517.12232
SURVEY CONTROL MONUMENT 1
EL. 11.8

6AWT-DI

6 RW-DI/MJ AIR RELEASE VALVE

6 RW-DI/MJ LOW LEVEL PUMP STATION FORCE MAIN

4" VALVE

4" COW-CU/S

6" AWT SL-DI

2 COW-PVC/BS

PLUG

CLAR. #111

42 RW-RC/BS

42 RW-DI/RJ

6-RW-DI/MJ

LOW LEVEL PUMP STATION FORCE MAIN

CR #148 (TYP. 4)

12" D.I.P.

6" AWT SL-DI

6 COW-DI/MJ

24 FA-RC/BS

30 FA-RC/BS

8 SS-PVC/BS

8 COW-DI/MJ

12 FTO-DI

FOR CONT. SEE "H" DWGS

VALVE TO W.I.C.

INSULATION CLAR.# 6

36 FA-RC/BS

PLUG

8 VT-DI/MJ

24 RW-DI/MJ

30 RW-DI/MJ

WEST INFLUENT CHANNEL

RFC-016
SEE "SECTION 1" ON DWG 00C-21 FOR DRAIN DETAIL

3" PEW AWT-DI/MJ

2 COW-PVC/BS

12 AWT SL-DI

2 PY-H W/6" PVC SLEEVE

36 FA-RC/BS

6 COW-DI/MJ

6 HWS&HWR-ST/W

SEPTAGE DUMPING STATION

FOUL AIR ACCESS MANHOLE NO. 3

42 FA-RC/BS

36 RW-DI/MJ

RFC-014
NOTE:
USE PVC/V FOR BURIED FA PIPE AT LOW LEVEL PUMP STATION. PIPE WITHIN WETWELL SHALL ALSO BE PVC/V.

CLAR.# 56

4 FA-PVC/BS

LOW LEVEL PUMP STATION & INLET MH, SEE "B0" DWGS

2 SPD-PVC/V

FOUL AIR BLOWER, SEE "H" DWGS

54 FA-RC/BS

POUR THRUST BLOCK AGAINST MH

FOUL AIR PIPE ACCESS MANHOLE NO. 2 W/DRAIN SUMP

4 FA-PVC/V

DETAIL A — 00C-20 FM CROSSING

DETAIL A — 00M-5 FRPxRCP CONNECTION

DETAIL A — 00C-21 SEPATAGE DUMP STATION

DETAIL A — 00M-5 FRPxRCP CONNECTION

AREA N2 SITE PLAN

SCALE: 1"=20'

RECORD DRAWING

NO.	DATE	DRWN	CHK'D	DESCRIPTION
1	9/97	FXP	ASG	RECORD DRAWING

REVISIONS

DESIGNED BY: DAO
DRAWN BY: BRW/CLP/PLR
CHECKED BY/DATE: TDH 9/91
APPRV'D BY/DATE: TDH 9/91

COMMONWEALTH OF VIRGINIA — THOMAS D. HALL No. 12302 — PROFESSIONAL ENGINEER

CAMP DRESSER & McKEE

THIS DRAWING HAS BEEN REVISED BY HAZEN AND SAWYER, P.C. TO REFLECT MODIFICATIONS MADE DURING CONSTRUCTION

CDM

conservation engineers, scientists, economists, environmental engineers, construction managers

ARLINGTON COUNTY, VIRGINIA
WATER POLLUTION CONTROL PLANT
UPGRADE AND EXPANSION- PHASE IIB

AREA N2 SITE PLAN
STRUCTURES & PIPING

SCALE NOTE
SCALE BAR SHOWN BELOW IS ONE INCH LONG ON A FULL SIZE DRAWING. WHEN SCALING DRAWINGS, MEASURE BAR TO DETERMINE IF SCALES SHOWN WILL REQUIRE ADJUSTING.
ONE INCH

CONTRACT NO. 90-02-WPC
YEAR 1991
LOCATION CODE 00
SPECIALTY CODE C
PROJECT NO. 5002-33
FILE NAME 00C-0010.DWG
DRAWING NO. 00C-10
SHEET NO. 17

05/16/91 - 15:31

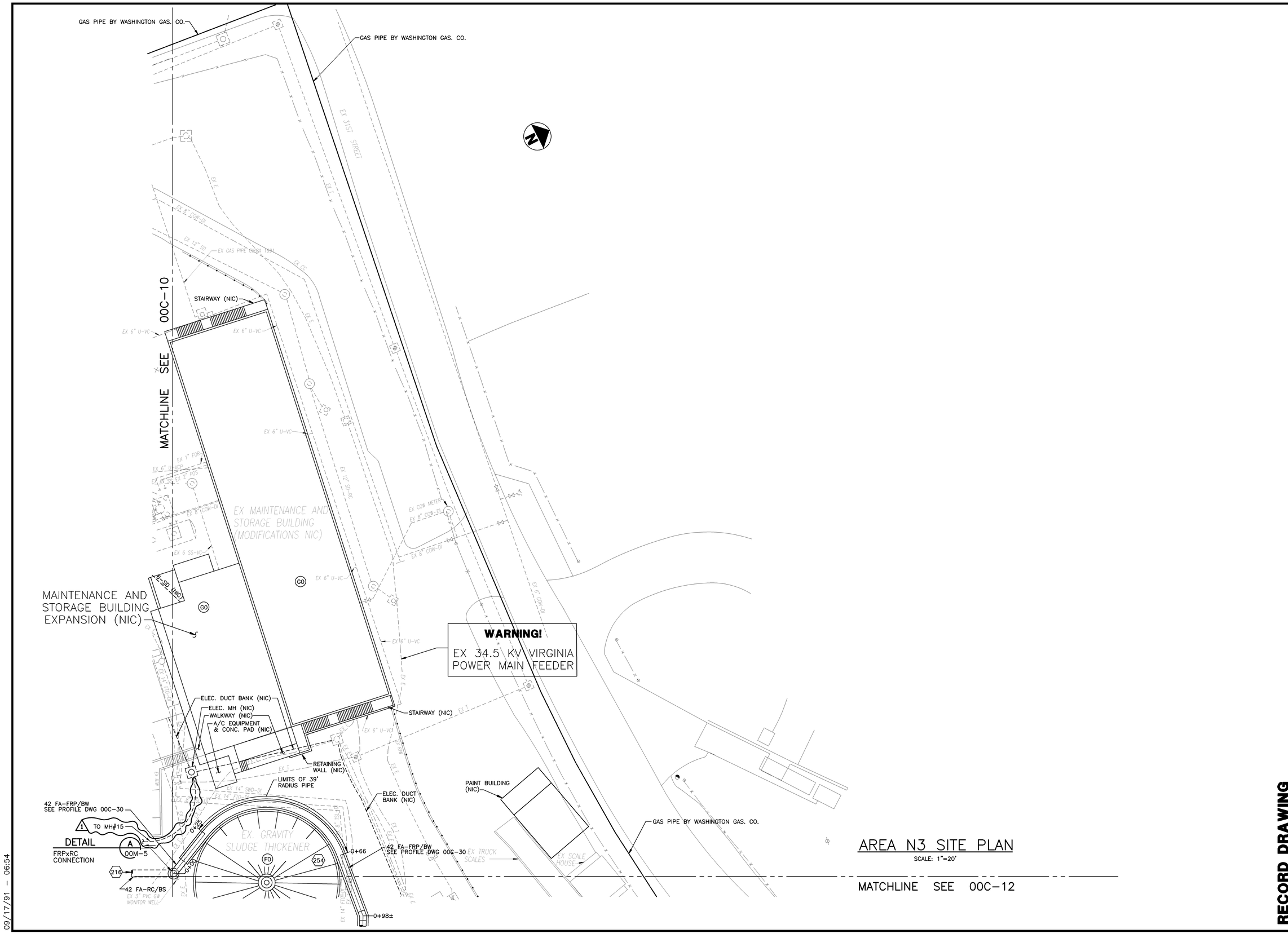

09/17/91 - 06:54

RECORD DRAWING

NO.	DATE	DRWN	CHK'D	DESCRIPTION
1	9/97	FXP	ASG	RECORD DRAWING

REVISIONS

DESIGNED BY: --
DRAWN BY: BRW,CLP,PLR
CHECKED BY/DATE: TDH 9/91
APPRV'D BY/DATE: TDH 9/91

COMMONWEALTH OF VIRGINIA
THOMAS D. HALL
No. 12502
PROFESSIONAL ENGINEER

CAMP DRESSER & McKEE

THIS DRAWING HAS BEEN REVISED BY HAZEN AND SAWYER, P.C. TO REFLECT MODIFICATIONS MADE DURING CONSTRUCTION

environmental engineers, scientists, planners, & management consultants
CDM

ARLINGTON COUNTY, VIRGINIA
WATER POLLUTION CONTROL PLANT
UPGRADE AND EXPANSION- PHASE IIB

AREA N3 SITE PLAN
STRUCTURES & PIPING

SCALE NOTE
SCALE BAR SHOWN BELOW IS ONE INCH LONG ON A FULL SIZE DRAWING. WHEN SCALING DRAWINGS, MEASURE BAR TO DETERMINE IF SCALES SHOWN WILL REQUIRE ADJUSTING.
ONE INCH

CONTRACT NO. 90-02-WPC
YEAR 1991
LOCATION CODE 00
SPECIALTY CODE C
PROJECT NO. 5002-33
FILE NAME 00C-0011.DWG
DRAWING NO. 00C-11
SHEET NO. 18

MATCHLINE SEE 00C-11

MATCHLINE SEE 00C-9

NOTES:

1. CONTRACTOR SHALL EXCAVATE CAREFULLY OVER EXISTING PIPES AND SELECT LOCATION FOR FOOTING ALONG DUCT IN APPROXIMATE AREA SHOWN WHICH MINIMIZES INTERFERENCE WITH EXISTING PIPES.

WARNING!
EX 34.5 KV VIRGINIA POWER MAIN FEEDER

ELEC. DUCT BANK (NIC)
42 FA-FRP/BW ? EL 33.00
0+98
30 FA-FRP/BW ? EL 39.00
1+12
30 FA-FRP/BW ? EL 33.00
1+36
SEE PROFILE DWG 00C-30
FOUL AIR BLOWER, TYP 4 SEE "H" DWGS
FUTURE GAS PIPE BY WASHINGTON GAS CO.
EX GRAVITY SLUDGE THICKENER NO. 1
EX GRAVITY SLUDGE THICKENER NO. 2
EX 3" PVC GW MONITOR WELL
EX WASTE GAS BURNER STATION
EX ELECTRICAL SUBSTATION NO. 1
EX SCALE HOUSE
EX TRUCK SCALES
EX ELECTRICAL DIST CENTER NO. 1
EX 1ST STREET
EX TRANSFER STATION
EX SLUDGE STORAGE TANK NO. 1
EX SLUDGE STORAGE TANK NO. 2
ODOR CONTROL BLOWER, TYP 2 SEE "H" DWGS
8 FA-FRP/BS ? EL 43.43
EX SLUDGE STORAGE TANK TUNNEL (BELOW)
SLUDGE STORAGE BUILDING
10 FA-FRP/PE ? EL 43.43
PIPE SUPPORT TYPE A DWG 00M-5. SEE NOTE 1
PIPE SUPPORT TYPE B DWG 00M-5
EX SLUDGE PROCESSING BUILDING
MODIFICATIONS BY OTHERS (NIC)
EX DIGESTER NO. 1
EX DIGESTER NO. 2
EX DIGESTER NO. 3
EX SLUDGE FILTER BUILDING
EX LIME BUILDING
EX OLD INCINERATOR BUILDING (NOT IN USE)
EX ELUTRIATION TANKS
EX COW METER
EX 4" BACKFLOW PREVENTER
EX POTOMAC INTERCEPTOR
S EADS STREET

AREA N4 SITE PLAN

SCALE: 1"=20'

09/17/91 - 06:59

RECORD DRAWING

NO.	DATE	DRWN	CHK'D	DESCRIPTION
1	9/97	FXP	ASG	RECORD DRAWING

REVISIONS

DESIGNED BY: —
DRAWN BY: BRW,CLP,PLR
CHECKED BY/DATE: TDH 9/91
APPRV'D BY/DATE: TDH 9/91

COMMONWEALTH OF VIRGINIA
THOMAS D. HALL
No. 12502
PROFESSIONAL ENGINEER

CAMP DRESSER & McKEE

THIS DRAWING HAS BEEN REVISED BY HAZEN AND SAWYER, P.C. TO REFLECT MODIFICATIONS MADE DURING CONSTRUCTION

CDM
environmental engineers, scientists, planners, & management consultants

ARLINGTON COUNTY, VIRGINIA
WATER POLLUTION CONTROL PLANT
UPGRADE AND EXPANSION- PHASE IIB

AREA N4 SITE PLAN
STRUCTURES & PIPING

SCALE NOTE

SCALE BAR SHOWN BELOW IS ONE INCH LONG ON A FULL SIZE DRAWING. WHEN SCALING DRAWINGS, MEASURE BAR TO DETERMINE IF SCALES SHOWN WILL REQUIRE ADJUSTING.

ONE INCH

CONTRACT NO. 90-02-WPC
YEAR 1991
LOCATION CODE 00
SPECIALTY CODE C
PROJECT NO. 5002-33
FILE NAME 00C-0012.DWG
DRAWING NO. 00C-12
SHEET NO. 19

MATCHLINE SEE 00C-16

MATCHLINE SEE 00C-18

AREA N1 SITE PLAN

SCALE: 1"=20'

NOTES: 1. REFERENCE DWG. NO. 00C-1 TO IDENTITY ITEMS THAT ARE BEING REMOVED.

2. REFERENCE DWG. NO'S. 00C-22 & 00C-23 FOR STORM DRAINAGE PLAN & PROFILES.

RETAINING WALL HEIGHT VARIES

NO. 1 PRIMARY CLARIFIERS

NO. 2

NO. 3

NO. 4

NO. 5

NO. 6

NO. 7

NO. 8

PRELIMINARY TREATMENT BUILDING

EX EAST TUNNEL ACCESS BLDG

EX PRIMARY CLARIFIERS (C0)

EX PRIMARY EFFLUENT PUMP STATION

EX CHLORINE CONTACT CHAMBER

EX SLUDGE STORAGE TANK NO. 1

EX BYPASS SCREEN CHAMBER

EX POTOMAC INTERCEPTOR JUNCTION CHAMBER

EX POTOMAC INTERCEPTOR METER CHAMBER

PRIMARY EFFLUENT CHANNEL & FLOW METER CHAMBER SEE DWG NO. C7M-1

SOUTH TUNNEL ACCESS BUILDING

PRIMARY CLARIFIER TUNNEL BELOW

CONC. RETAINING WALL TOP EL 23.0

CONC. WALL

TOP EL

CONC. FES INV. OUT= 14.72

INV IN= 14.96

5' WIDE CONC. WALKWAY W/ NON-SLIP FINISH (MAX 8:1 SLOPE)

N10563.11103
E10038.70752
SURVEY CONTROL MONUMENT 1
EL 15.87

SLOPE PAVEMENT UP TO TOP OF SLAB EL. 19.70 ALL AROUND CHAMBER

CC&G LIMIT

CC&G

GRASS AREA

SDMH

TIS

CLAR. #55 23'

CLAR. #62

CLAR. #84

CLAR. #61

CLAR.# 223

? INTX 0+42.65, RD "F"=3+19.80, RD "A"

? INTX 1+07.92, RD "A"=1+80.00

? INTX 0+01.22, RD "A"=2+05.00, RD "G"

BEGINNING OF ROAD CONSTRUCTION

ROAD "F" N15°33'02"E

ROAD "A" N74°26'58"W

ROAD "G" N29°37'30"W

ROAD "D"

SOUTH GLEBE ROAD

SOUTH EADS STREET

LIMITS OF CONSTRUCTION

VDOT DRAINAGE EASEMENT

VDOT ROW

EX COW BACKFLOW PREVENTER VAULT

EX COW METER VAULT

EX HATCH

EX GRASS AREA

EX GROUNDWATER DRAINAGE MH

EX CONC. ENTRANCE

EX EDGE OF CONC. ENTRANCE=EDGE OF PAVING

EX EDGE OF CONCRETE ENTRANCE =0+07.78'

EX ACCESS MH

EX VALVE

EX TMH

EX E BOX

EX ABOVE GRADE STRUCTURE

EX CURB INLET

EX 10" GTO-DI

EX 20" WAS-DI

EX 8" SL-DI

EX 6" SC-FRP

EX 12" SC

EX 14" PEW PRI-DI

EX 6" PEW-DI

EX 4" PEW

EX 3" PEW

EX 8" U-VCP

EX 12" SDH

EX 15" SD

EX 18" SD

EX 27" SD

EX 42" SD

EX 42" OUTFALL

EX 54" SD

EX 6.5X4.5 SD

EX 15" CS-SR

EX 16" WAS-DI

EX 12" COW

EX CSW

EX E

EX F

EX CC

EX RC PRI EFF CHANNEL

EX 48" OUTFALL

PARSHALL FLUME

RAD=30.00'
ARC=46.76'
TAN=29.63'
Δ =89°17'53"
CHD=42.17'

RAD=25.00'
ARC=19.56'
TAN=10.31'
Δ =44°49'28"
CHD=19.06'

RAD=34.00'
ARC=80.01'
TAN=81.73'
Δ =134°49'28"
CHD=62.78'

RAD=43.00'
ARC=101.18'
TAN=103.36'
Δ =134°49'28"
CHD=79.40'

RAD=42.00'
ARC=33.93'
TAN=17.95'
Δ =46°17'32"
CHD=33.02'

RAD=42.00'
ARC=33.12'
TAN=17.47'
Δ =45°10'31"
CHD=32.26'

09/19/91 - 18:52

RECORD DRAWING

NO.	DATE	DRWN	CHK'D	DESCRIPTION
1	9/97	FXP	ASG	RECORD DRAWING

REVISIONS

DESIGNED BY: TDH
DRAWN BY: BRW,CLP,PLR
CHECKED BY/DATE: TDH 9/91
APPRV'D BY/DATE: TDH 9/91

COMMONWEALTH OF VIRGINIA — THOMAS D. HALL No. 12302 — PROFESSIONAL ENGINEER

CAMP DRESSER & McKEE

THIS DRAWING HAS BEEN REVISED BY HAZEN AND SAWYER, P.C. TO REFLECT MODIFICATIONS MADE DURING CONSTRUCTION

CDM environmental engineers, scientists, planners, & management consultants

ARLINGTON COUNTY, VIRGINIA
WATER POLLUTION CONTROL PLANT
UPGRADE AND EXPANSION- PHASE IIB

AREA N1 SITE PLAN
GRADING, PAVING, DRAINAGE & LANDSCAPING

SCALE NOTE

SCALE BAR SHOWN BELOW IS ONE INCH LONG ON A FULL SIZE DRAWING. WHEN SCALING DRAWINGS, MEASURE BAR TO DETERMINE IF SCALES SHOWN WILL REQUIRE ADJUSTING.

ONE INCH

CONTRACT NO.	90-02-WPC
YEAR	1991
LOCATION CODE	00
SPECIALTY CODE	C
PROJECT NO.	5002-33
FILE NAME	00C-0015.DWG
DRAWING NO.	00C-15
SHEET NO.	20

MODIFICATIONS BY OTHERS (NIC)

EX OPERATIONS CONTROL BUILDING

EX OIL STORAGE TANK IN UNDERGROUND VAULT

ROAD

SOUTH GLEBE UNDERPASS

FERN STREET

FUTURE FOUR MILE RUN RELIEF INTERCEPTOR DIVERSION CHAMBER

FUTURE 54 RW-RC/BS FOUR MILE RUN RELIEF INTERCEPTOR IN TUNNEL (NIC)

BITUMINOUS CONC. FORMED ENTRANCE

LIMITS OF PAVING

LIMITS OF CONSTRUCTION

FUTURE FOUR MILE RUN RELIEF PUMP STATION (NIC)

GRASS AREA

EX FOUR MILE RUN RELIEF PUMP STATION

EX FLOTATION THICKENERS

FUTURE EXPANSION LIMITS

CONC SLAB

ACCESS MH

EX GRATED DRAINAGE INLET

EX CONSTRUCTION OFFICE

EX BITUMINOUS PARKING AREA

EX 54" RW-RC FOUR MILE RUN RELIEF INTERCEPTOR

EX FOUR MILE RUN INTERCEPTOR METER CHAMBER

EX FLOW METER CHAMBER HATCH

EX GRASS AREA

EX BUILDING

EX GAS PIPE CIRCA 1991

EX 3" AWT PEW-DI

EX 6" U-VCP

EX 6" SSP

EX 6" CONC

EX 8" SD

EX 8" U

EX 15" SD

EX 18" SD

EX 12" SD

EX 12" SD (ABAND)

EX 12" CONC

EX 12" RW (ABAND)

EX 12" RW

EX 10" CONC

EX 8" CONC

EX 6" CONC

EX 3" SPR/DI

EX 6" U

EX 6" SSP

EX 6" U-VCP

EX 6" SSP

EX 6" CONC

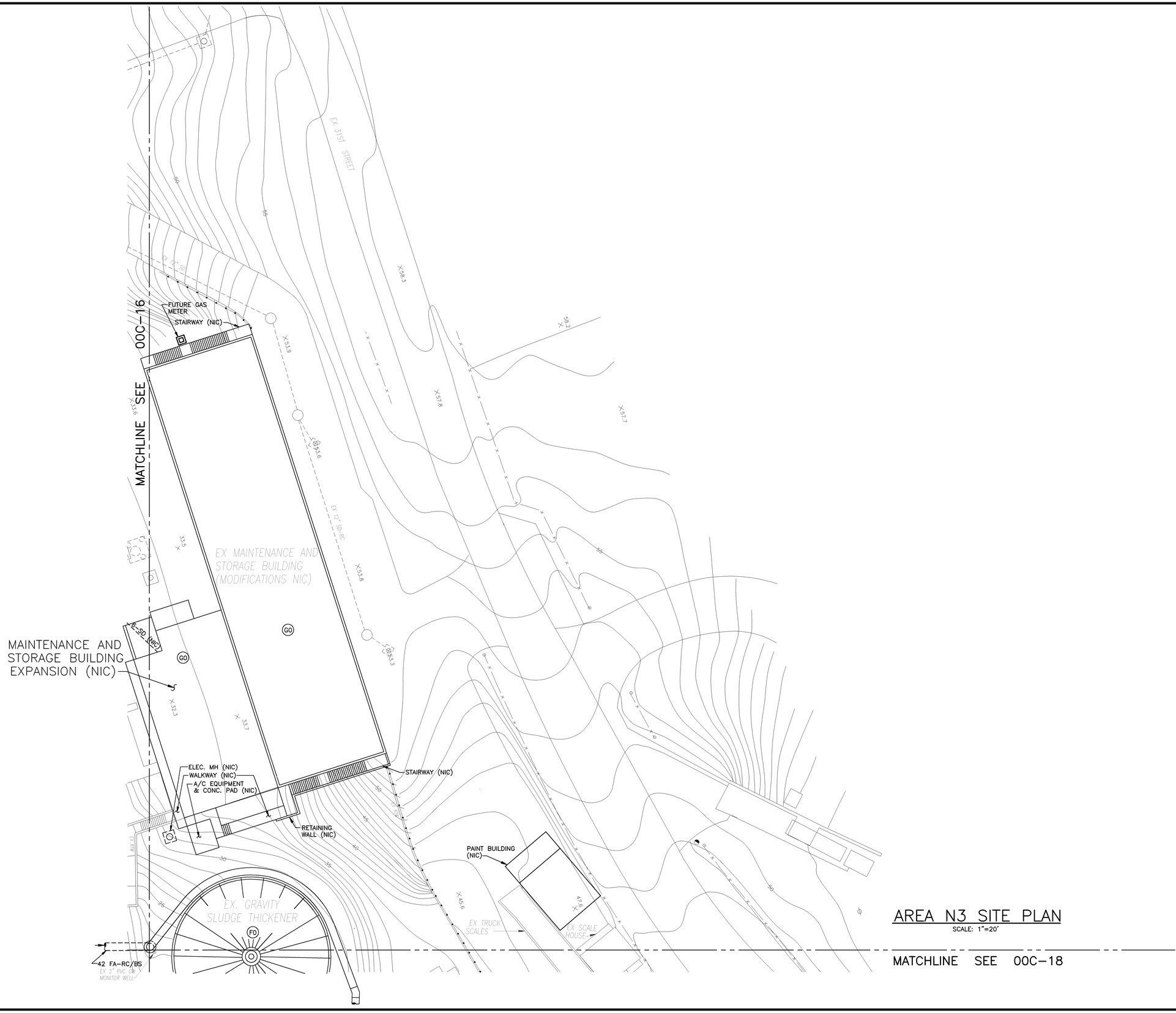

AREA N3 SITE PLAN

SCALE: 1"=20'

09/17/91 - 09:15

RECORD DRAWING

CAMP DRESSER & McKEE

environmental engineers, scientists, planners, & management consultants

CDM

THIS DRAWING HAS BEEN REVISED BY HAZEN AND SAWYER, P.C. TO REFLECT MODIFICATIONS MADE DURING CONSTRUCTION

COMMONWEALTH OF VIRGINIA
THOMAS D. HALL
No. 12502
PROFESSIONAL ENGINEER

DESIGNED BY: --
DRAWN BY: BRW,CLP,PLR
CHECKED BY/DATE: TDH 9/91
APPRV'D BY/DATE: TDH 9/91

NO.	DATE	DRWN	CHK'D	DESCRIPTION
1	9/97	FXP	ASG	RECORD DRAWING

REVISIONS

ARLINGTON COUNTY, VIRGINIA
WATER POLLUTION CONTROL PLANT
UPGRADE AND EXPANSION- PHASE IIB

AREA N3 SITE PLAN
GRADING, PAVING, DRAINAGE, AND LANDSCAPING

SCALE NOTE

SCALE BAR SHOWN BELOW IS ONE INCH LONG ON A FULL SIZE DRAWING. WHEN SCALING DRAWINGS, MEASURE BAR TO DETERMINE IF SCALES SHOWN WILL REQUIRE ADJUSTING.

ONE INCH

CONTRACT NO. 90-02-WPC
YEAR 1991
LOCATION CODE 00
SPECIALTY CODE C
PROJECT NO. 5002-33
FILE NAME 00C-0017.DWG
DRAWING NO. 00C-17
SHEET NO. 22

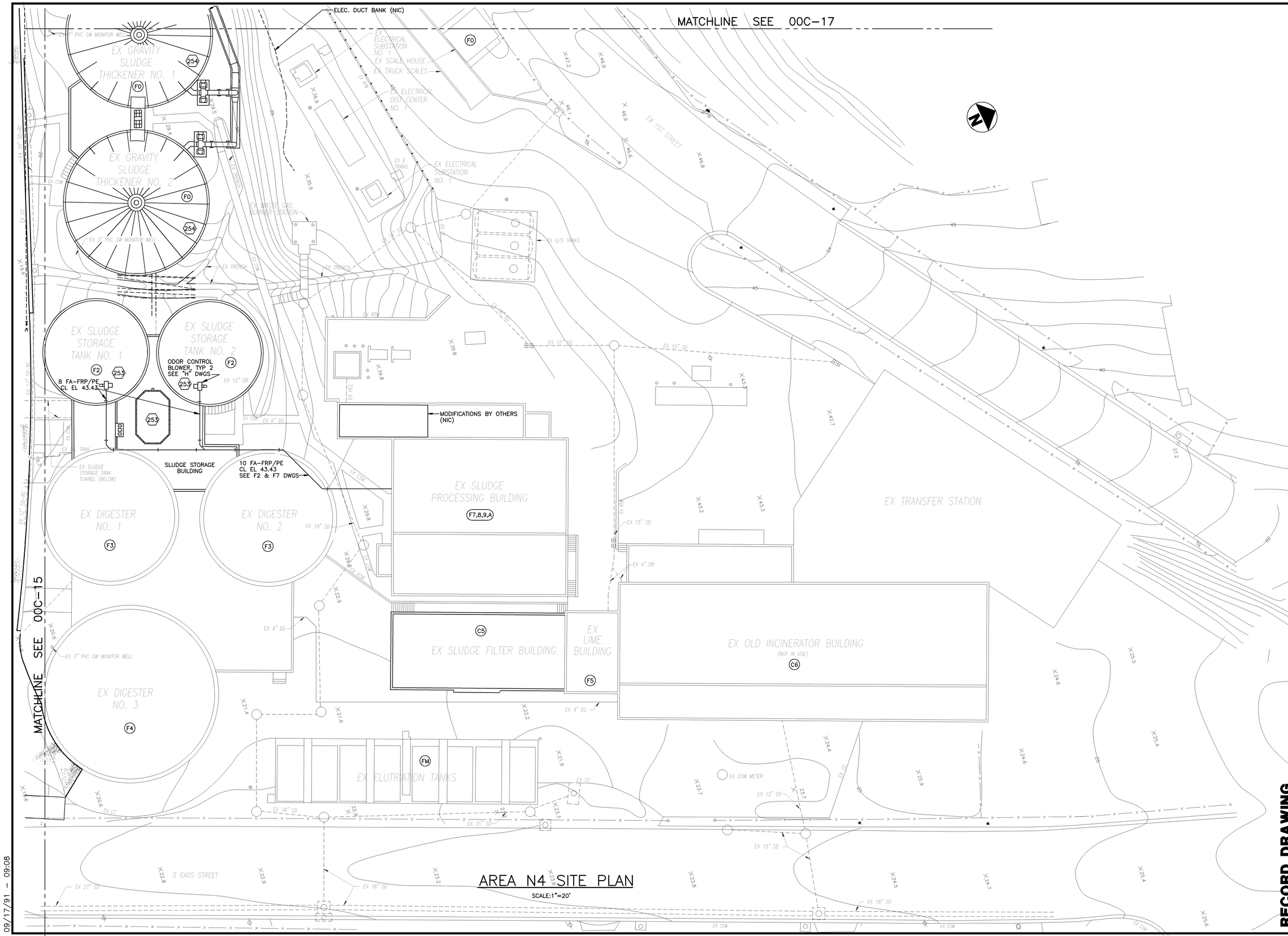

AREA N4 SITE PLAN

SCALE:1"=20'

09/17/91 - 09:08

RECORD DRAWING

NO.	DATE	DRWN	CHK'D	DESCRIPTION
1	9/97	FXP	ASG	RECORD DRAWING

REVISIONS

DESIGNED BY: --

DRAWN BY: BRW,CLP,PLR

CHECKED BY/DATE: TDH 9/91

APPRV'D BY/DATE: TDH 9/91

COMMONWEALTH OF VIRGINIA
THOMAS D. HALL
No. 12502
PROFESSIONAL ENGINEER

CAMP DRESSER & McKEE

THIS DRAWING HAS BEEN REVISED BY HAZEN AND SAWYER, P.C. TO REFLECT MODIFICATIONS MADE DURING CONSTRUCTION

CDM
environmental engineers, scientists, planners, & management consultants

ARLINGTON COUNTY, VIRGINIA
WATER POLLUTION CONTROL PLANT
UPGRADE AND EXPANSION- PHASE IIB

GRADING, PAVING, DRAINAGE, & LANDSCAPING

SCALE NOTE

SCALE BAR SHOWN BELOW IS ONE INCH LONG ON A FULL SIZE DRAWING. WHEN SCALING DRAWINGS, MEASURE BAR TO DETERMINE IF SCALES SHOWN WILL REQUIRE ADJUSTING.

ONE INCH

CONTRACT NO. 90-02-WPC

YEAR 1991

LOCATION CODE	SPECIALTY CODE
00	C

PROJECT NO. 5002-33

FILE NAME 00C-0018.DWG

DRAWING NO. 00C-18

SHEET NO. 23

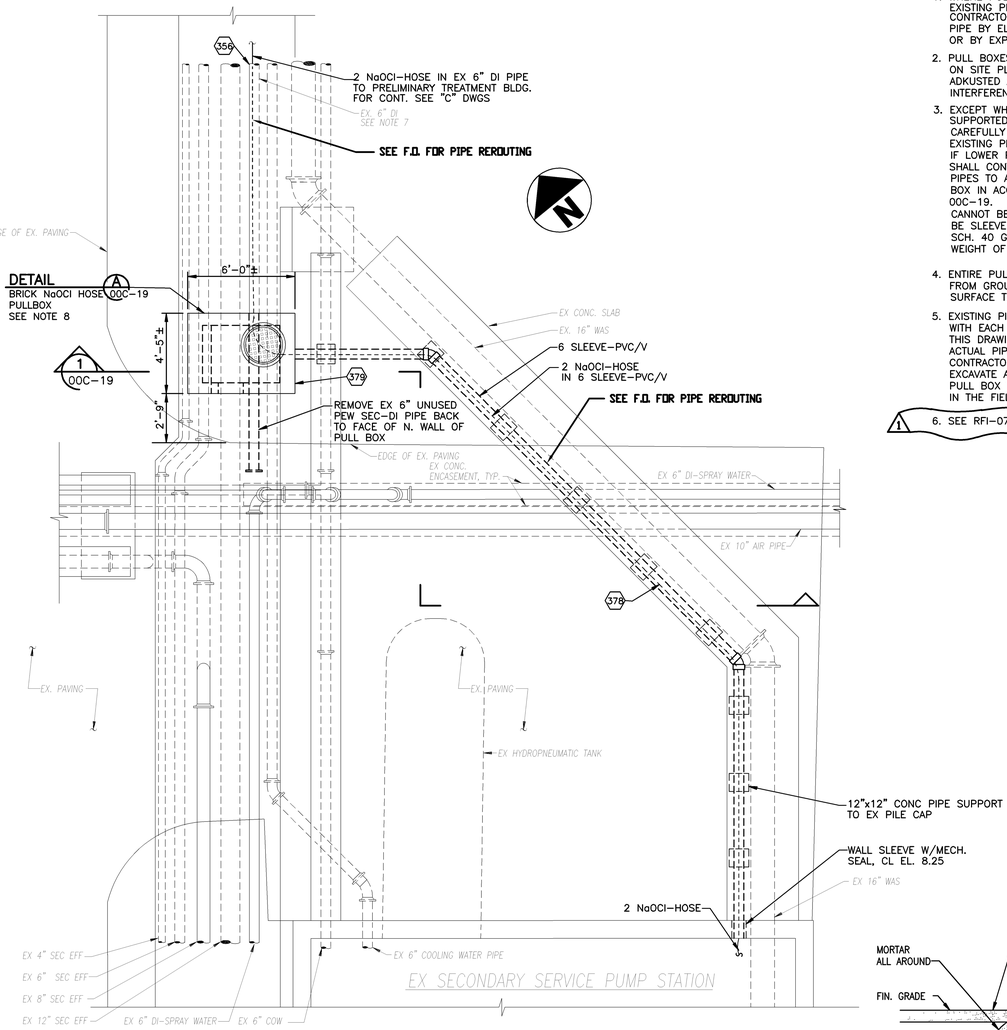

SECONDARY SERVICE PUMP STATION AREA PLAN

SCALE: 1/4"=1'-0"

NOTES

1. WHERE PULL BOXES ARE TO USE EXISTING PIPES AS SLEEVES, CONTRACTOR TO LOCATE EXISTING PIPE BY ELECTRONIC METHODS OR BY EXPLORATORY EXCAVATION.
2. PULL BOXES SHALL BE LOCATED AS INDICATED ON SITE PLAN PULL BOX LOCATION SHALL BE ADKUSTED AS NECESSARY TO MINIMIZE INTERFERENCE WITH OTHER PIPING.
3. EXCEPT WHERE EXISTING PIPE IS PILE CAP SUPPORTED, CONTRACTOR SHALL EXCAVATE CAREFULLY TO A MINIMUM OF 2 FEET BELOW EXISTING PIPE TO BE USED AS HOSE SLEEVE. IF LOWER PIPES ARE UNCOVERED, CONTRACTOR SHALL CONTINUE TO EXCAVATE UNDER LOWER PIPES TO ALLOW FOR CONSTRUCTING PULL BOX IN ACCORDANCE WITH DETAIL "A" ON SHEET 00C-19. ALL PIPES, CONDUITS, ETC., WHICH CANNOT BE AVOIDED BY LOCATING PULL BOX SHALL BE SLEEVED THROUGH PULL BOX WITH SPLIT SCH. 40 GS SLEEVE. SLEEVES ARE TO SUPPORT WEIGHT OF BOX TO PRECLUDE CRUSHING PIPES.
4. ENTIRE PULL BOX STRUCTURE TO BE WATERTIGHT FROM GROUND AND SURFACE WATER. ENTIRE EXTERIOR SURFACE TO BE DAMPPROOFED.
5. EXISTING PIPING CONDITIONS WILL VARY WITH EACH PULL BOX INSTALLATION. THIS DRAWING DOES NOT ILLUSTRATE ACTUAL PIPING LOCATIONS. THE CONTRACTOR SHALL EXCAVATE AND INSTALL EACH PULL BOX TO SUIT THE CONDITIONS IN THE FIELD.

1 6. SEE RFI-078, (REFERENCES NaOCL COUPLINGS).

NOTES (CONT'D)

6. ALL PULL BOXES SHALL BE DESIGNED TO ACCOMMODATE AN H20 TRUCK LOAD.
7. EXISTING 6" DI PIPE WAS PREVIOUSLY CUT, PLUGGED, AND LEFT UNUSED. SOUTH PIPE WAS DIVERTED TO BECOME SECONDARY CLARIFIER SPRAYWATER PIPE. LOCATE UNUSED PIPE AND REMOVE UP TO INSIDE FACE OF NORTH WALL OF BRICK PULLBOX.
8. BRICK PULLBOX TO BE SIMILAR TO DETAIL "A" ON SHEET 00C-19 BUT OF APPROXIMATE PLAN DIMENSIONS SHOWN. FINAL DIMENSIONS TO SUIT PIPE AND PILE CAP LOCATIONS. REINFORCE CONCRETE BASE MAY NOT BE REQUIRED.

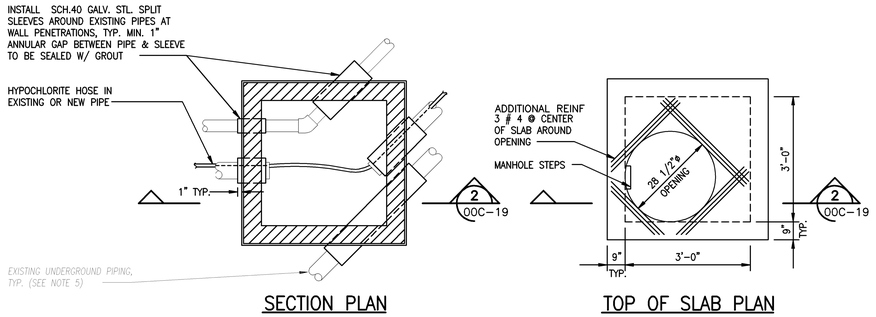

SECTION PLAN — TOP OF SLAB PLAN

BRICK NaOCl HOSE PULL BOX

DETAIL A — NTS — 00C-19

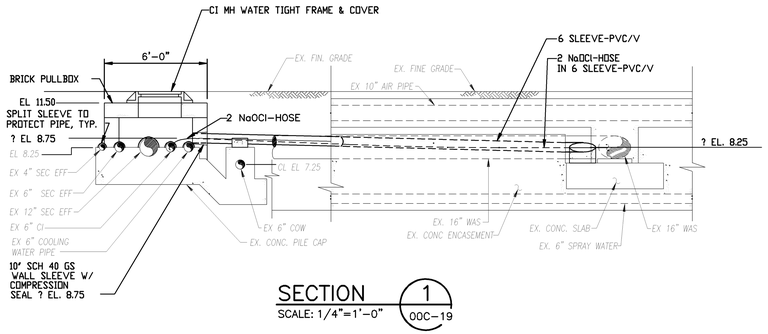

SECTION 1 — SCALE: 1/4"=1'-0" — 00C-19

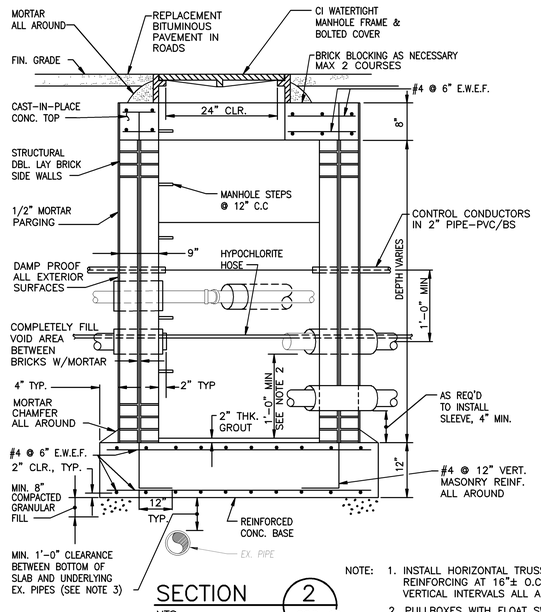

SECTION 2 — NTS — 00C-19

NOTE:
1. INSTALL HORIZONTAL TRUSS-TYPE REINFORCING AT 16"± O.C. VERTICAL INTERVALS ALL AROUND.
2. PULLBOXES WITH FLOAT SWITCH LEVEL ALARMS SHALL BE 2'-0" DEEPER THAN SHOWN.

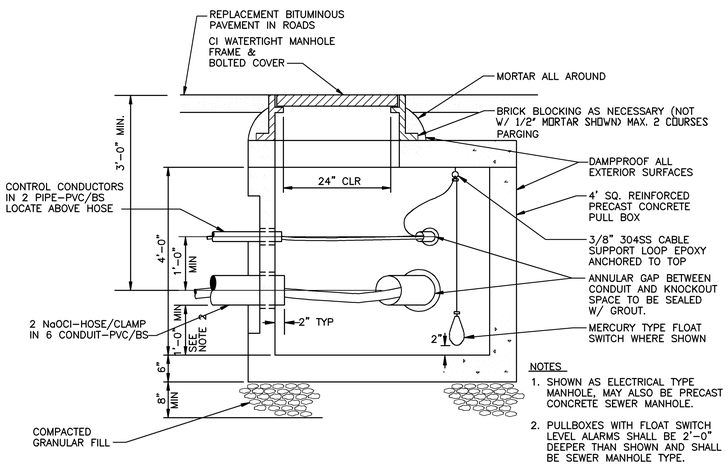

NOTES
1. SHOWN AS ELECTRICAL TYPE MANHOLE, MAY ALSO BE PRECAST CONCRETE SEWER MANHOLE.
2. PULLBOXES WITH FLOAT SWITCH LEVEL ALARMS SHALL BE 2'-0" DEEPER THAN SHOWN AND SHALL BE SEWER MANHOLE TYPE.

PRECAST CONCRETE NaOCl HOSE PULL BOX

DETAIL B — NTS — 00C-6,7,8

RECORD DRAWING

09/17/91 - 08:59

NO.	DATE	DRWN	CHK'D	DESCRIPTION
1	9/97	FXP	ASG	RECORD DRAWING

REVISIONS

DESIGNED BY: —
DRAWN BY: PLR/CTC
CHECKED BY/DATE: TDH 9/91
APPRV'D BY/DATE: TDH 9/91

COMMONWEALTH OF VIRGINIA — THOMAS D. HALL No. 12502 — PROFESSIONAL ENGINEER

CAMP DRESSER & McKEE

RED DRAWING HAS BEEN REVISED BY HAZEN AND SAWYER, P.C. TO REFLECT MODIFICATIONS MADE DURING CONSTRUCTION

CDM environmental engineers, scientists, planners, & management consultants

ARLINGTON COUNTY, VIRGINIA
WATER POLLUTION CONTROL PLANT
UPGRADE AND EXPANSION- PHASE IIB

SITE PIPING - DETAILS

SCALE NOTE
SCALE BAR SHOWN BELOW IS ONE INCH LONG ON A FULL SIZE DRAWING. WHEN SCALING DRAWINGS, MEASURE BAR TO DETERMINE IF SCALES SHOWN WILL REQUIRE ADJUSTING.
ONE INCH

CONTRACT NO. 90-02-WPC
YEAR 1991
LOCATION CODE 00
SPECIALTY CODE C
PROJECT NO. 5002-33
FILE NAME 00C-0019.DWG
DRAWING NO. 00C-19
SHEET NO. 24

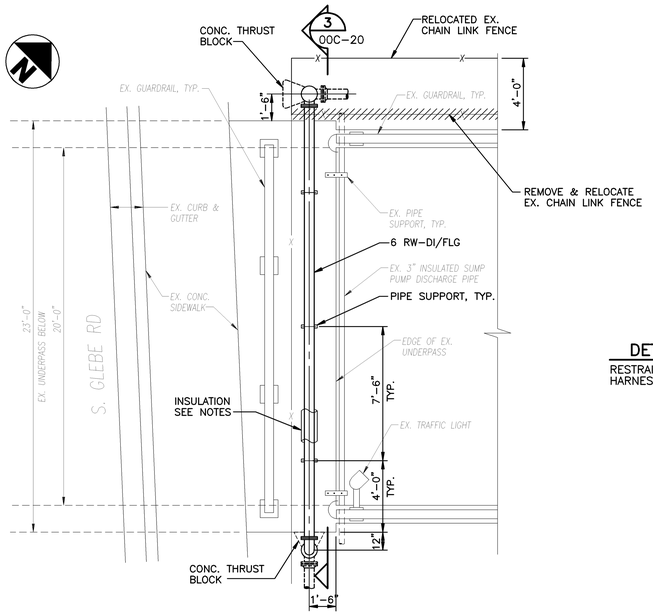

LOW LEVEL PUMP STATION
FORCE MAIN CROSSING AT UNDERPASS

DETAIL A
SCALE: 1/4"=1'-0"
00C-10

NOTES
1. INSULATE PIPE, FITTINGS AND VALVES WITH 2" INSULATION WITH ALUMINUM JACKET AS SPECIFIED. EXTEND INSULATION AND JACKET TO 3'-0" BELOW GRADE.
2. PROVIDE CLOSURE PIECES TO PROTECT EXPOSED ENDS OF INSULATION.
3. PROVIDE REMOVEABLE CAP AT AIR RELEASE VALVE COVER.
4. CAULK AT ALL PROTRUSIONS INTO JACKET (VALVE STEMS, PIPE SUPPORTS, ETC.)

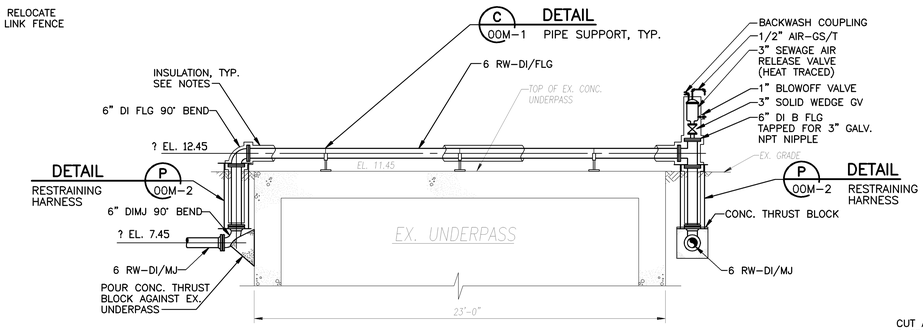

NOTE:
EX. FENCE & GUARDRAIL NOT SHOWN.

SECTION 3
SCALE: 1/4" = 1'-0"
00C-20

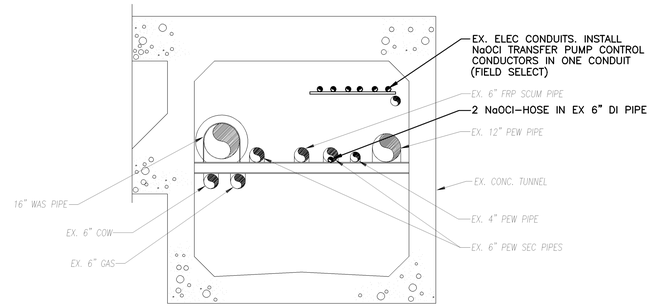

SECTION 4
SCALE: 3/8"=1'-0"
00C-20

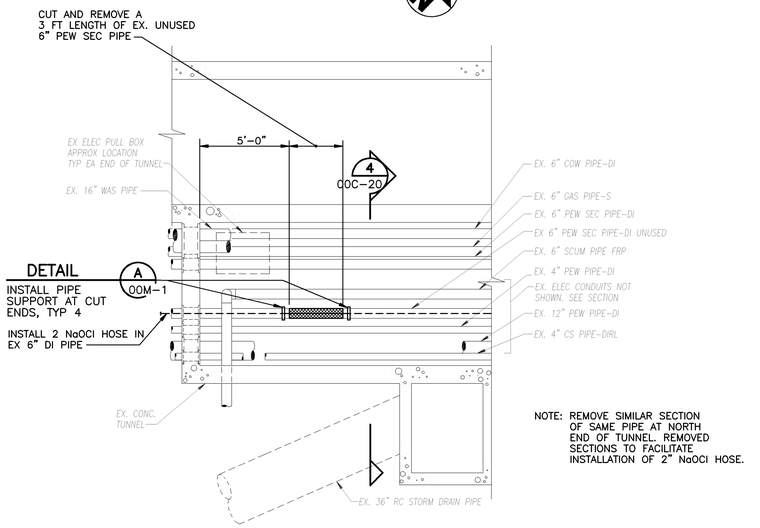

NOTE: REMOVE SIMILAR SECTION OF SAME PIPE AT NORTH END OF TUNNEL. REMOVED SECTIONS TO FACILITATE INSTALLATION OF 2" NaOCl HOSE.

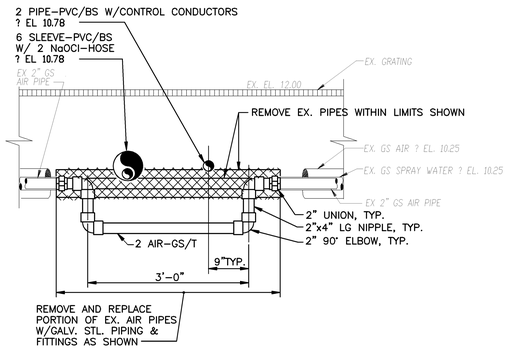

SECTION 5
SCALE: 3/4"=1'-0"
00C-20

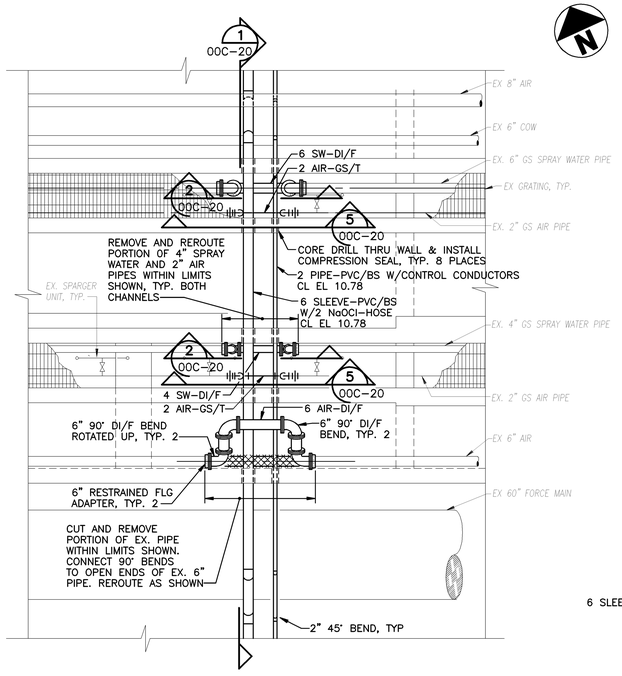

MIXED LIQUOR FLUME CROSSING PLAN

DETAIL B
SCALE: 1/4"=1'-0"
00C-6

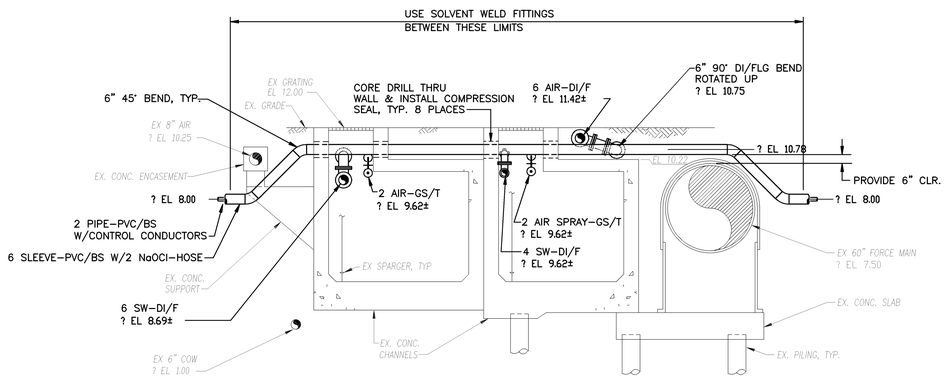

SECTION 1
SCALE: 1/4"=1'-0"
00C-20

107 PIPING MODIFICATIONS

DETAIL C
SCALE: 1/4"=1'-0"
00C-9

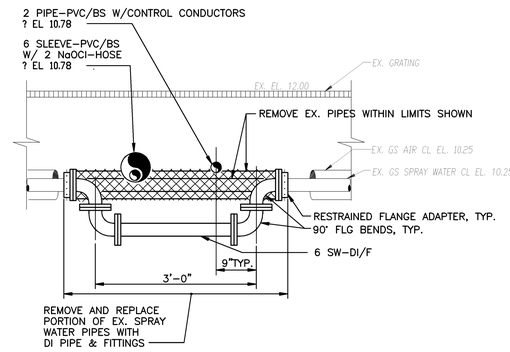

SECTION 2
SCALE: 3/4"=1'-0"
00C-20

09/17/91 - 08:51

NO.	DATE	DRWN	CHK'D	DESCRIPTION
1	9/97	FKP	ASG	RECORD DRAWING

REVISIONS

DESIGNED BY: —
DRAWN BY: PLR/CTC
CHECKED BY/DATE: TDH 9/91
APPRV'D BY/DATE: TDH 9/91

COMMONWEALTH OF VIRGINIA
THOMAS D. HALL
No. 12502
PROFESSIONAL ENGINEER

CAMP DRESSER & McKEE
environmental engineers, scientists, planners, & management consultants
CDM

THIS DRAWING HAS BEEN REVISED BY HAZEN AND SAWYER, P.C. TO REFLECT MODIFICATIONS MADE DURING CONSTRUCTION

ARLINGTON COUNTY, VIRGINIA
WATER POLLUTION CONTROL PLANT
UPGRADE AND EXPANSION- PHASE IIB

SITE PIPING DETAILS

RECORD DRAWING

SCALE NOTE
SCALE BAR SHOWN BELOW IS ONE INCH LONG ON A FULL SIZE DRAWING. WHEN SCALING DRAWINGS, MEASURE BAR TO DETERMINE IF SCALES SHOWN WILL REQUIRE ADJUSTING.
ONE INCH

CONTRACT NO. 90-02-WPC
YEAR 1991
LOCATION CODE 00
SPECIALTY CODE C
PROJECT NO. 5002-33
FILE NAME 00C-0020.DWG
DRAWING NO. 00C-20
SHEET NO. 25

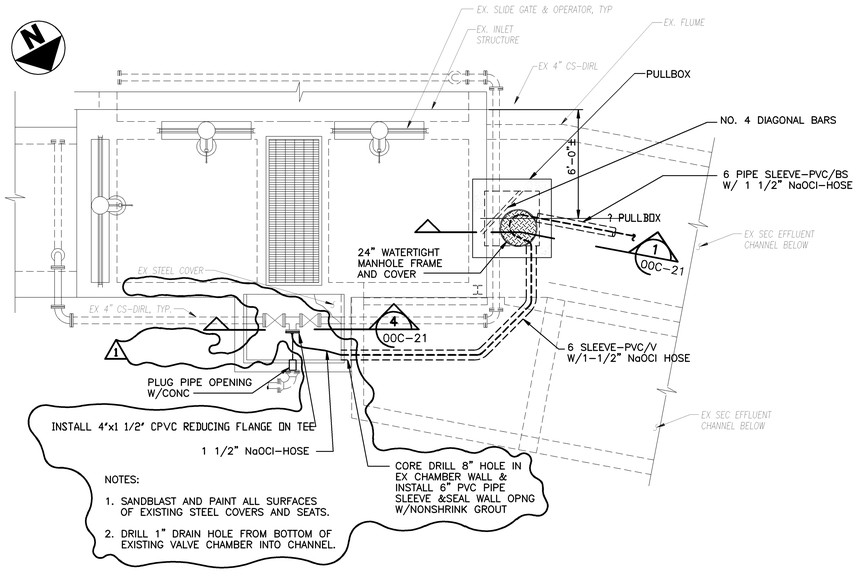

PULL BOX – TOP PLAN

DETAIL A
SCALE: 1/4"=1'-0"
00C-5

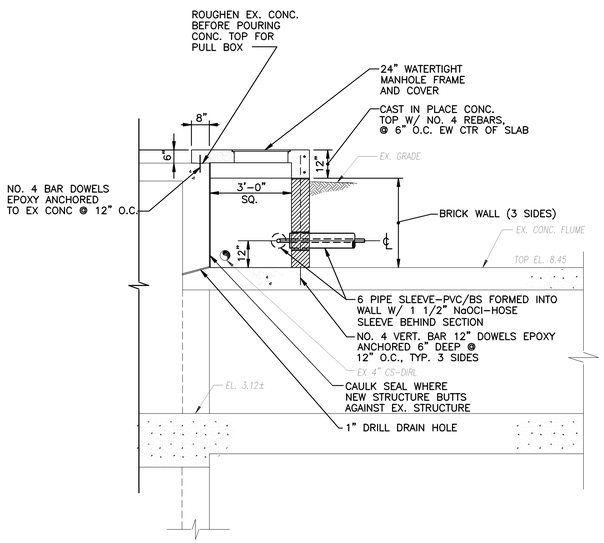

SECTION 1
SCALE: 3/8"=1'-0"
00C-21

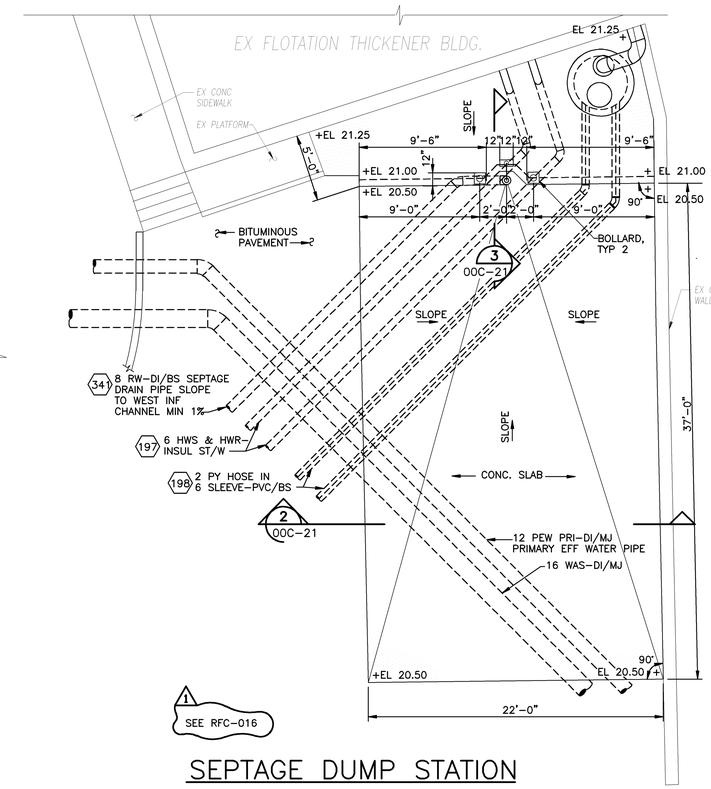

SEPTAGE DUMP STATION

DETAIL A
SCALE: ?"=1'-0"
00C-10

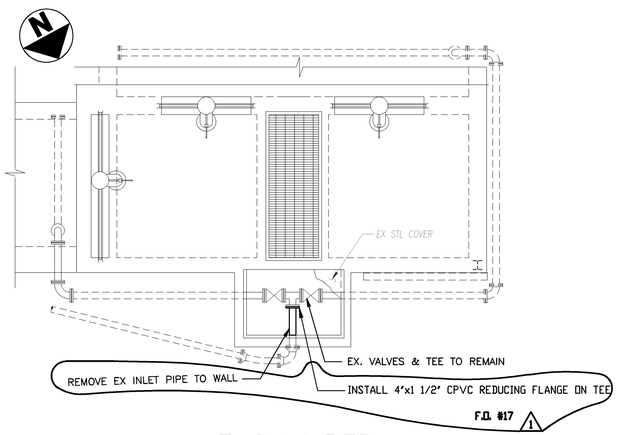

VALVE CHAMBER REMOVAL PLAN

SCALE: 1/4"=1'-0"

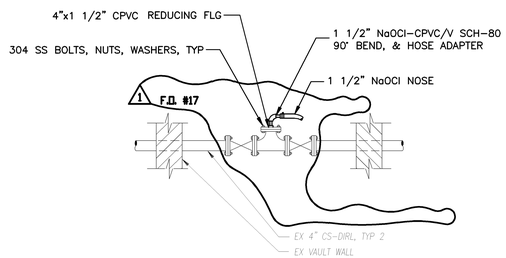

NaOCl HOSE CONNECTION

SECTION 4
SCALE: NTS
00C-21

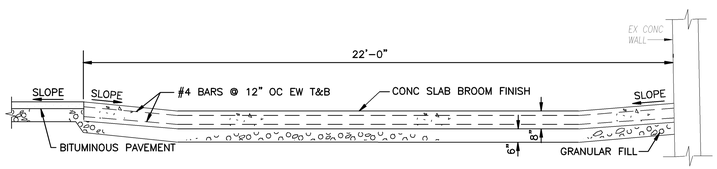

SECTION 2
SCALE: 3/8"=1'-0"
00C-21

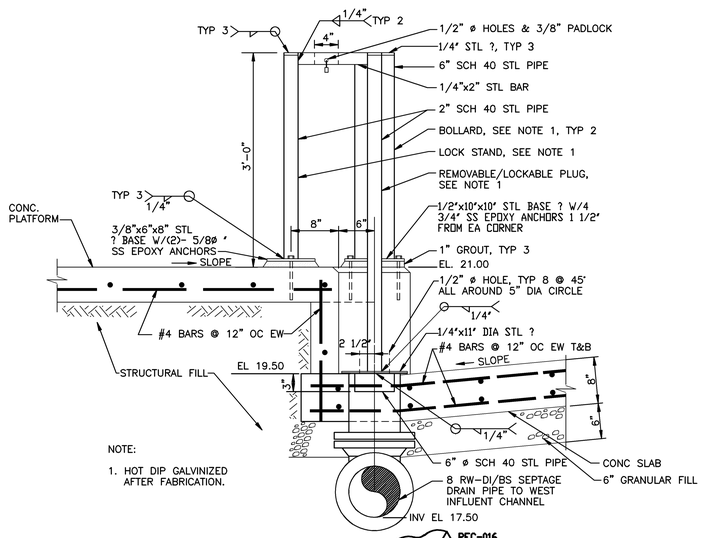

SECTION 3 4
SCALE: 1"=1'-0"
00C-21
RFC-016

NO.	DATE	DRWN	CHK'D	DESCRIPTION
1	9/97	FXP	ASG	RECORD DRAWING

REVISIONS

DESIGNED BY: TBM
DRAWN BY: CLP/CTC/AMP
CHECKED BY/DATE: TDH 9/91
APPRV'D BY/DATE: TDH 9/91

CAMP DRESSER & McKEE

THIS DRAWING HAS BEEN REVISED BY HAZEN AND SAWYER, P.C. TO REFLECT MODIFICATIONS MADE DURING CONSTRUCTION

environmental engineers, scientists, planners, & management consultants

CDM

ARLINGTON COUNTY, VIRGINIA
WATER POLLUTION CONTROL PLANT
UPGRADE AND EXPANSION- PHASE IIB

SITE PIPING DETAILS

SCALE NOTE

SCALE BAR SHOWN BELOW IS ONE INCH LONG ON A FULL SIZE DRAWING. WHEN SCALING DRAWINGS, MEASURE BAR TO DETERMINE IF SCALES SHOWN WILL REQUIRE ADJUSTING.

ONE INCH

CONTRACT NO. 90-02-WPC
YEAR 1991
LOCATION CODE 00
SPECIALTY CODE C
PROJECT NO. 5002-33
FILE NAME 00C-0021.DWG
DRAWING NO. 00C-21
SHEET NO. 26

RECORD DRAWING

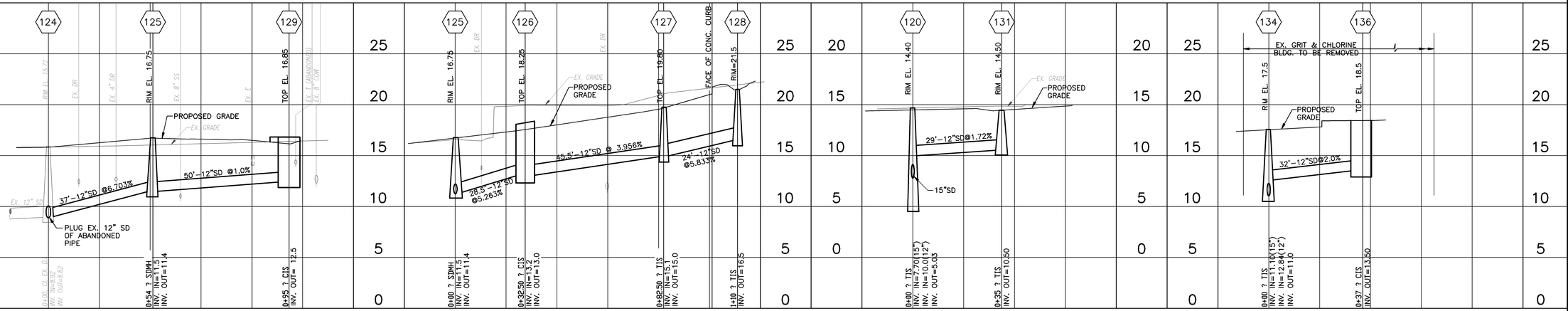

336 337 STORM DRAIN PROFILES

333 334 335 STORM DRAIN PROFILES

284 STORM DRAIN PROFILE

290 STORM DRAIN PROFILE

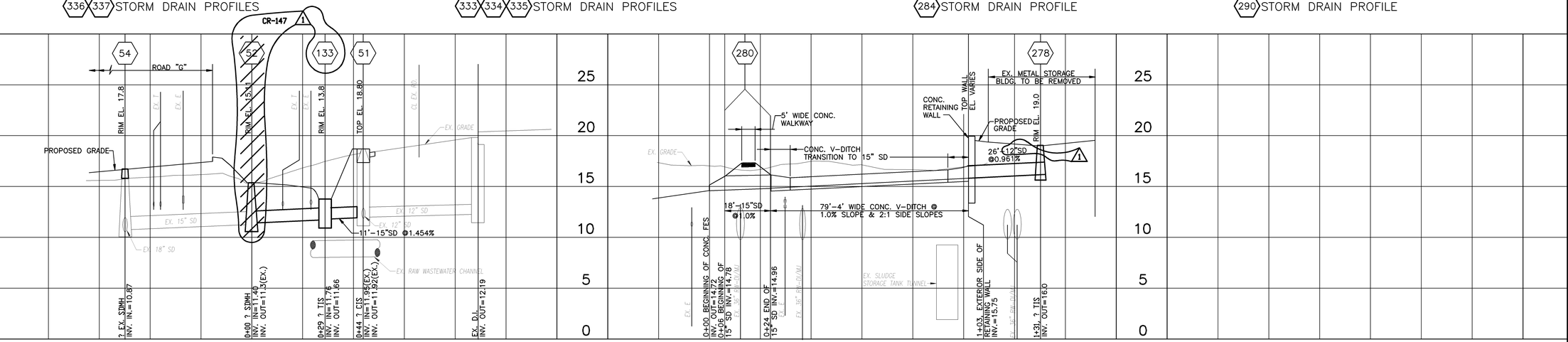

288 289 STORM DRAIN PROFILES

290 281 STORM DRAIN PROFILES

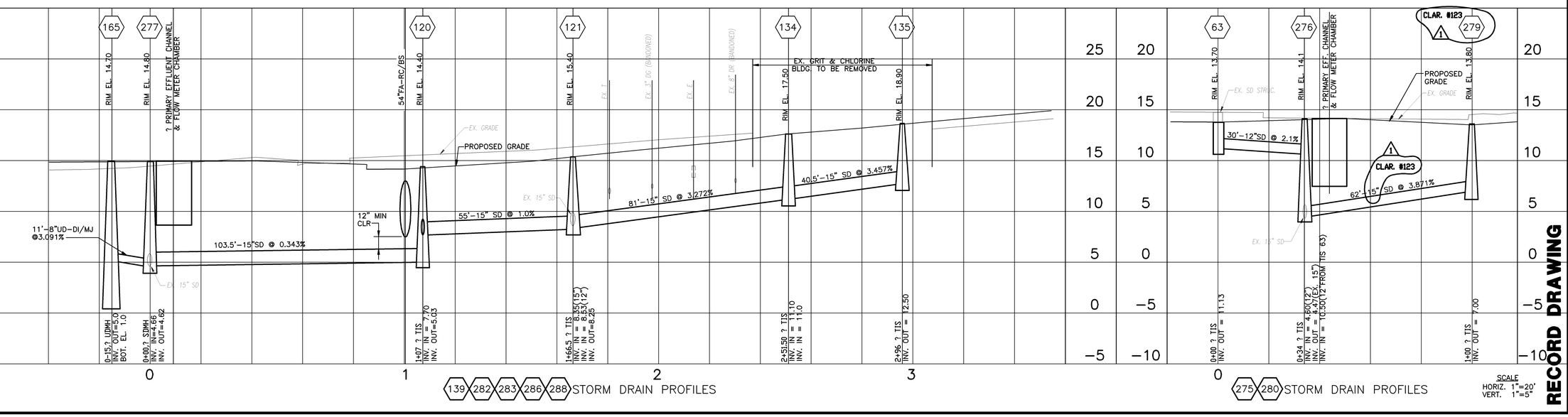

139 282 283 286 288 STORM DRAIN PROFILES

275 280 STORM DRAIN PROFILES

SCALE
HORIZ. 1"=20'
VERT. 1"=5"

09/17/91 – 13:15

NO.	DATE	DRWN	CHK'D	DESCRIPTION
1	9/97	FXP	ASG	RECORD DRAWING

REVISIONS

DESIGNED BY: TBM
DRAWN BY: BRW
CHECKED BY/DATE: TDH 9/91
APPRVD BY/DATE: TDH 9/91

COMMONWEALTH OF VIRGINIA
THOMAS D. HALL
No. 12502
PROFESSIONAL ENGINEER

CAMP DRESSER & McKEE
environmental engineers, scientists, planners, & management consultants
CDM

RED DRAWING HAS BEEN REVISED BY HAZEN AND SAWYER, P.C. TO REFLECT MODIFICATIONS MADE DURING CONSTRUCTION

ARLINGTON COUNTY, VIRGINIA
WATER POLLUTION CONTROL PLANT
UPGRADE AND EXPANSION- PHASE IIB

STORM DRAINAGE FACILITIES

SCALE NOTE
SCALE BAR SHOWN BELOW IS ONE INCH LONG ON A FULL SIZE DRAWING. WHEN SCALING DRAWINGS, MEASURE BAR TO DETERMINE IF SCALES SHOWN WILL REQUIRE ADJUSTING.
ONE INCH

CONTRACT NO. 90-02-WPC
YEAR 1991
LOCATION CODE 00
SPECIALTY CODE C
PROJECT NO. 5002-33
FILE NAME 00C-0022.DWG
DRAWING NO. 00C-22
SHEET NO. 27

RECORD DRAWING

327 329 STORM DRAIN PROFILES

159 160 162 STORM DRAIN PROFILES

SCALE:
HORZ. 1"=20'
VERT. 1"=5'

09/17/91 – 11:39

NO.	DATE	DRWN	CHK'D	DESCRIPTION
1	9/97	FXP	ASG	RECORD DRAWING

REVISIONS

DESIGNED BY: DHG
DRAWN BY: CLP/PLR/BRW
CHECKED BY/DATE: TDH 9/91
APPRV'D BY/DATE: TDH 9/91

COMMONWEALTH OF VIRGINIA
THOMAS D. HALL
No. 12502
PROFESSIONAL ENGINEER

CAMP DRESSER & McKEE

THIS DRAWING HAS BEEN REVISED BY ELKIN AND SAWYER, P.C. TO REFLECT MODIFICATIONS MADE DURING CONSTRUCTION

environmental engineers, scientists, planners, & management consultants

CDM

ARLINGTON COUNTY, VIRGINIA
WATER POLLUTION CONTROL PLANT
UPGRADE AND EXPANSION- PHASE IIB

STORM DRAINAGE PROFILES

SCALE NOTE

SCALE BAR SHOWN BELOW IS ONE INCH LONG ON A FULL SIZE DRAWING. WHEN SCALING DRAWINGS, MEASURE BAR TO DETERMINE IF SCALES SHOWN WILL REQUIRE ADJUSTING.

ONE INCH

RECORD DRAWING

CONTRACT NO. 90-02-WPC
YEAR 1991
LOCATION CODE 00
SPECIALTY CODE C
PROJECT NO. 5002-33
FILE NAME 00C-0023.DWG
DRAWING NO. 00C-23
SHEET NO. 28

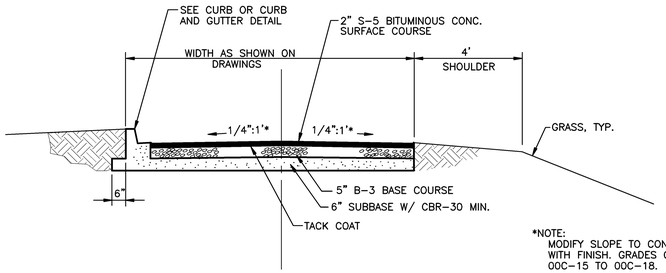

*NOTE:
MODIFY SLOPE TO CONFORM WITH FINISH. GRADES ON SHEETS 00C-15 TO 00C-18.

CROWN ROAD CROSS SECTION

DETAIL A
SCALE: NONE

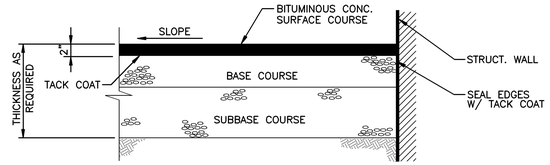

BITUMINOUS PAVEMENT ADJACENT TO STRUCTURES

DETAIL B
SCALE: NONE

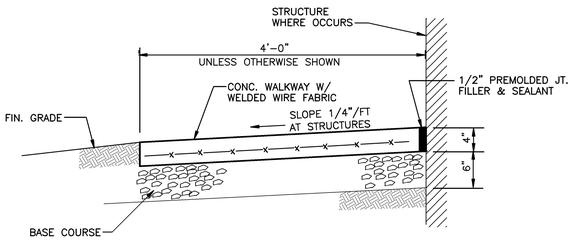

CONCRETE WALKWAY

DETAIL C
SCALE: 1"= 1'-0"

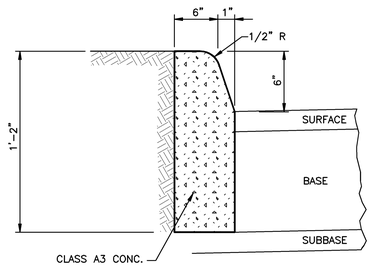

CURB DETAIL

NTS

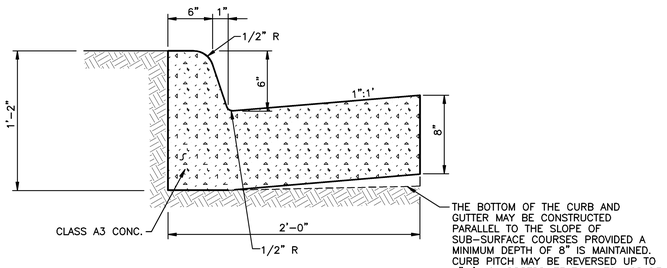

CURB & GUTTER DETAIL

NTS

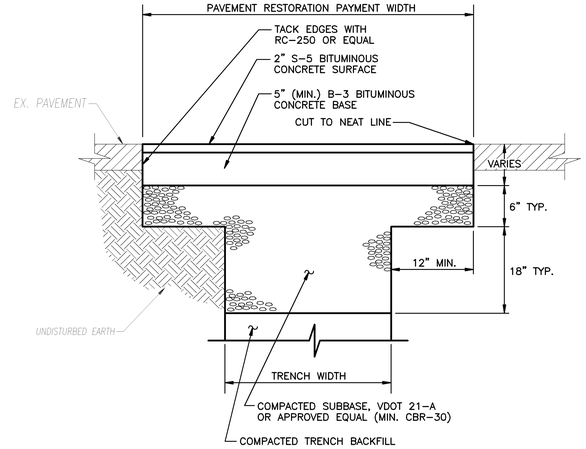

STANDARD PAVEMENT PATCHING FOR UTILITY CUTS

NTS

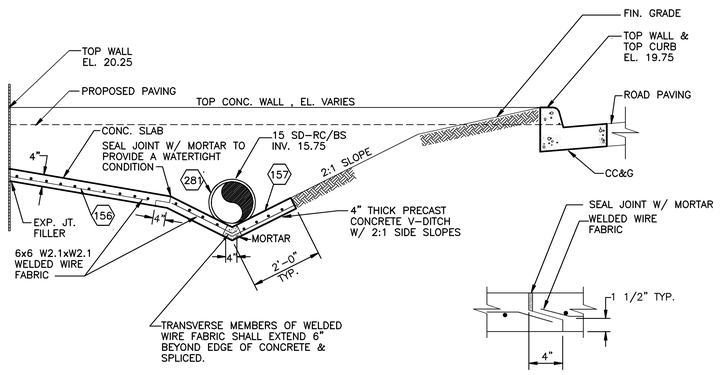

V-DITCH JOINT DETAIL

SECTION 1
SCALE: 1/2"=1'-0"
00C-15

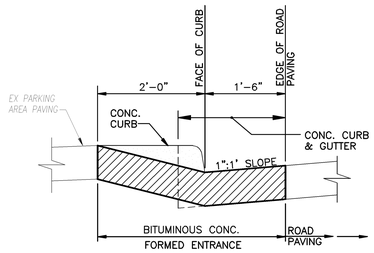

SECTION
SCALE: 3/4"=1'-0"
00C-16

03/15/91 - 16:28

NO.	DATE	DRWN	CHK'D	DESCRIPTION
1	9/97	FXP	ASG	RECORD DRAWING

REVISIONS

DESIGNED BY: EEW
DRAWN BY: CTC/AMP
CHECKED BY/DATE: TDH 9/91
APPRV'D BY/DATE: TDH 9/91

COMMONWEALTH OF VIRGINIA
THOMAS D. HALL
No. 12502
PROFESSIONAL ENGINEER

CAMP DRESSER & McKEE

THIS DRAWING HAS BEEN REVISED BY HAZEN AND SAWYER, P.C. TO REFLECT MODIFICATIONS MADE DURING CONSTRUCTION

CDM
environmental engineers, scientists, planners, & management consultants

ARLINGTON COUNTY, VIRGINIA
WATER POLLUTION CONTROL PLANT
UPGRADE AND EXPANSION- PHASE IIB

PAVING AND DRAINAGE DETAILS

SCALE NOTE
SCALE BAR SHOWN BELOW IS ONE INCH LONG ON A FULL SIZE DRAWING. WHEN SCALING DRAWINGS, MEASURE BAR TO DETERMINE IF SCALES SHOWN WILL REQUIRE ADJUSTING.
ONE INCH

CONTRACT NO. 90-02-WPC
YEAR 1991
LOCATION CODE 1
SPECIALTY CODE C
PROJECT NO. 5002-33
FILE NAME 00C-0024.DWG
DRAWING NO. 00C-24
SHEET NO. 29

RECORD DRAWING

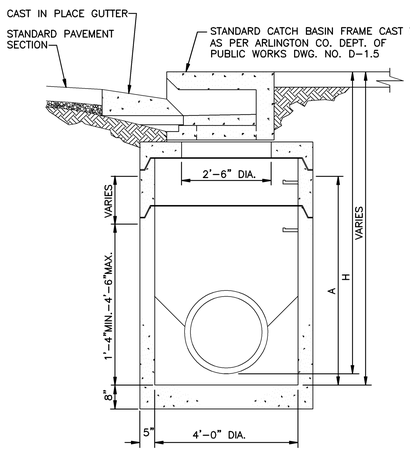

SECTION

CONC. PIPE SIZE	MINIMUM HEIGHT OF A	MINIMUM HEIGHT OF H	MAXIMUM DEFLECTION OF PIPE
UP TO 15"	1'-4"	3'-11"	120°
18"	1'-7"	4'-2"	115°
21"	1'-11"	4'-6"	105°
24"	2'-3"	4'-9"	90°

1. FOR CATCH BASIN ON SLOPES, THE EXTENDED THROAT SHALL BE TO THE UPHILL SIDE ON A MINIMUM SLOPE OF 2%.
2. DIMENSIONS SHOWN ARE MINIMUM. ACTUAL DIMENSIONS MAY VARY WITH MANUFACTURER.
3. STEP FOR HANDHOLD TO BE PROVIDED IN BACK OF THROAT DIRECTLY OVER ACCESS OPENING.
4. THIS PRECAST CATCH BASIN IS FOR USE ON SLOPES ONLY. WHEN A PRECAST BASIN IS TO BE USED IN SAGS, THE THROAT SHALL BE EXTENDED EQUALLY TO THE LEFT AND RIGHT WITH THE SUMP LOCATED IN THE MIDDLE.

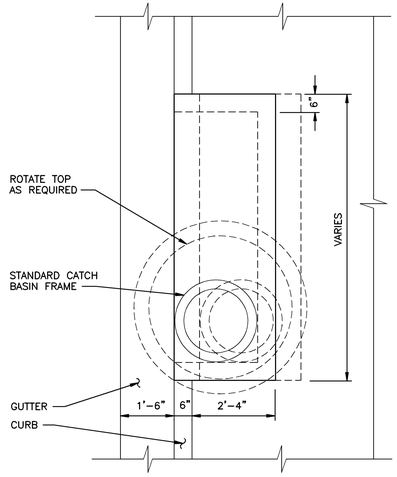

TOP PLAN

PRECAST CONCRETE CURB INLET STRUCTURE (CIS)

SCALE: 1/2"=1'-0"

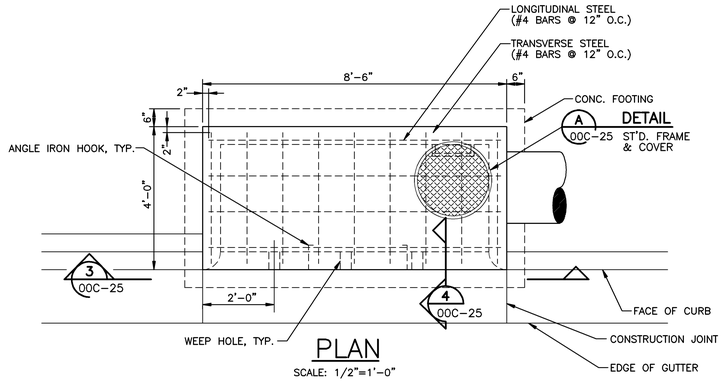

PLAN

SCALE: 1/2"=1'-0"

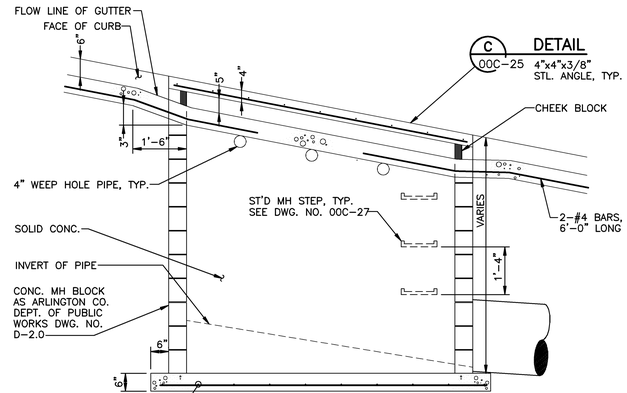

SECTION 3 00C-25

SCALE: 1/2"=1'-0"

STANDARD CURB INLET STRUCTURE (CIS)

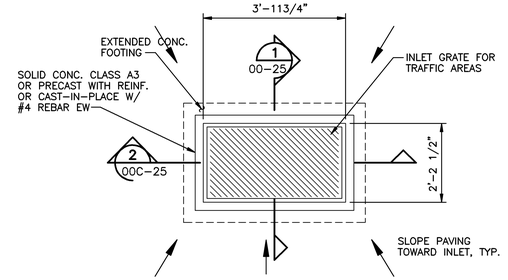

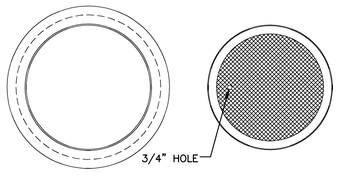

DETAIL A 00C-25

SCALE: 1"=1'-0"

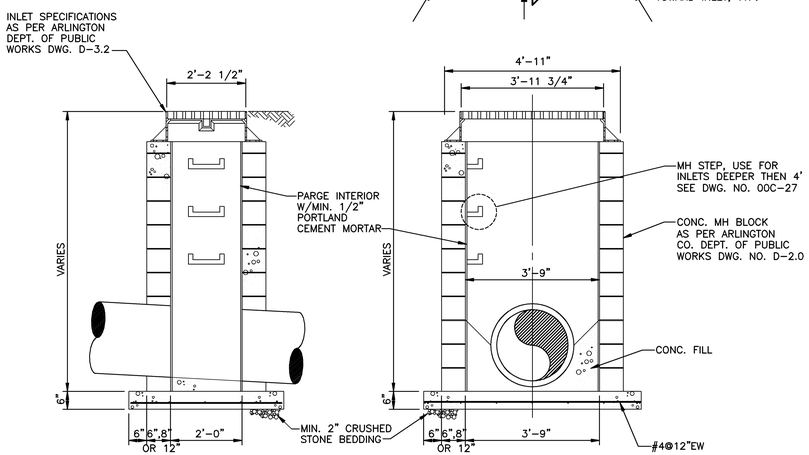

SECTION 1 00C-25

SCALE: 1/2"=1'-0"

SECTION 2 00C-25

SCALE: 1/2"=1'-0"

STANDARD TOP INLET STRUCTURE (TIS)

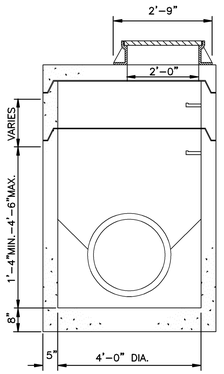

SECTION

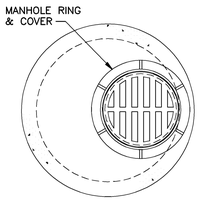

TOP PLAN

STANDARD PRECAST TOP INLET STRUCTURE (TIS)

SCALE: 1/2"=1'-0"

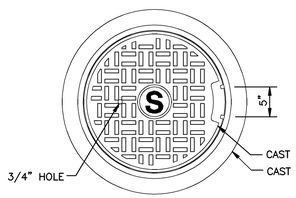

PLAN

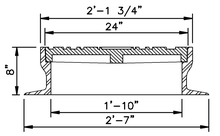

STORM DRAIN MANHOLE FRAME & COVER SECTION

DETAIL B 00C-25

SCALE: 1"=1'-0"

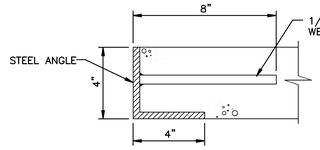

SECTION 4 00C-25

SCALE: 3"=1'-0"

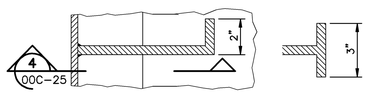

PLAN

ALT.

DETAIL C 00C-25

SCALE: 3"=1'-0"

09/17/91 - 11:33

NO.	DATE	DRWN	CHK'D	DESCRIPTION
1	9/97	FXP	ASG	RECORD DRAWING

REVISIONS

DESIGNED BY: EEW
DRAWN BY: CTC
CHECKED BY/DATE: TDH 9/91
APPRV'D BY/DATE: TDH 9/91

COMMONWEALTH OF VIRGINIA — THOMAS D. HALL No. 12502 — PROFESSIONAL ENGINEER

CAMP DRESSER & McKEE

THIS DRAWING HAS BEEN REVISED BY HAZEN AND SAWYER, P.C. TO REFLECT MODIFICATIONS MADE DURING CONSTRUCTION

CDM

environmental engineers, scientists, planners, & management consultants

ARLINGTON COUNTY, VIRGINIA
WATER POLLUTION CONTROL PLANT
UPGRADE AND EXPANSION- PHASE IIB

STORM DRAINAGE STRUCTURE DETAILS

SCALE NOTE

SCALE BAR SHOWN BELOW IS ONE INCH LONG ON A FULL SIZE DRAWING. WHEN SCALING DRAWINGS, MEASURE BAR TO DETERMINE IF SCALES SHOWN WILL REQUIRE ADJUSTING.

ONE INCH

CONTRACT NO.	90-02-WPC
YEAR	1991
LOCATION CODE	2
SPECIALTY CODE	C
PROJECT NO.	5002-33
FILE NAME	00C-0025.DWG
DRAWING NO.	00C-25
SHEET NO.	30

RECORD DRAWING

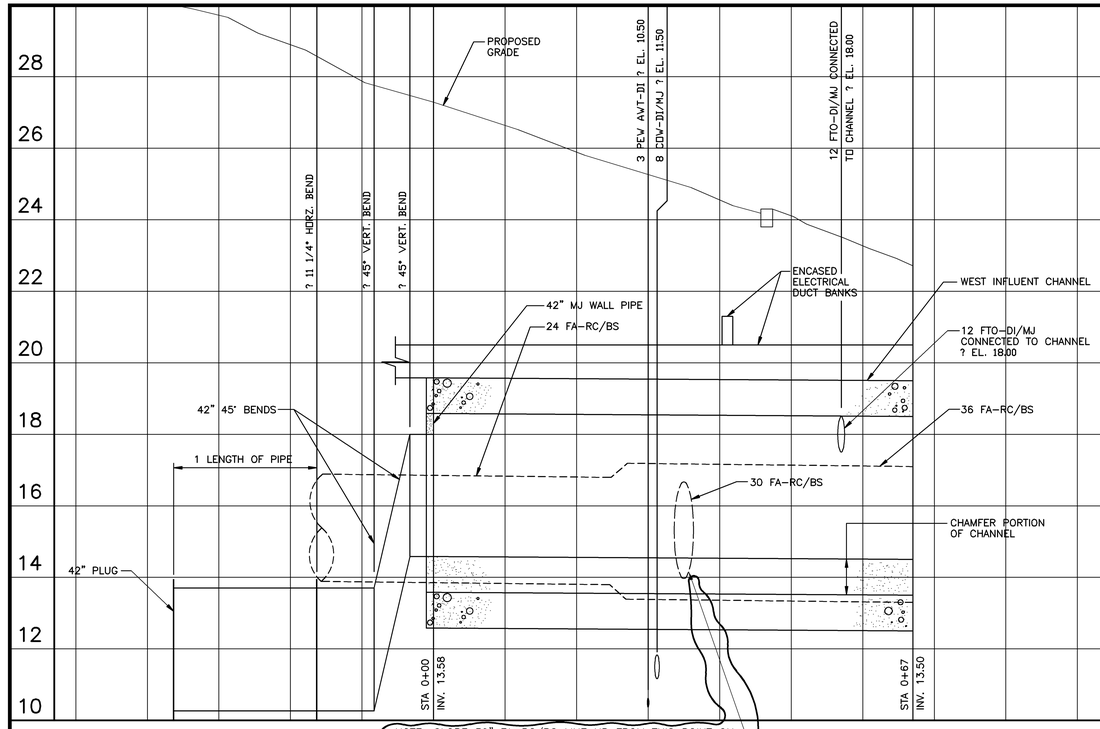

NOTE: SLOPE 30" FA-RC/BS LINE UP FROM THIS POINT ON A POSITIVE SLOPE TOWARDS THE FLOTATION THICKENER BUILDING SUCH THAT A 12" MINIMUM CLEARANCE IS MAINTAINED WITH THE EXISTING PIPING WEST OF THE FLOTATION THICKENER BUILDING, AND A MINIMUM COVER OF 24 INCHES IS MAINTAINED. INVERT ELEVATION OF 30" FA-RC/BS PIPE IMMEDIATELY WEST OF FLOATATION THICKENER BLDG. IS DEPENDANT UPON ACTUAL LOCATIONS OF EXISTING PROCESS PIPING AND UTILITIES.

CLAR. #73 (1)

WEST INFLUENT CHANNEL NORTH BRANCH PROFILE

SCALE: HOR. 1"=10' VERT 1"=2'

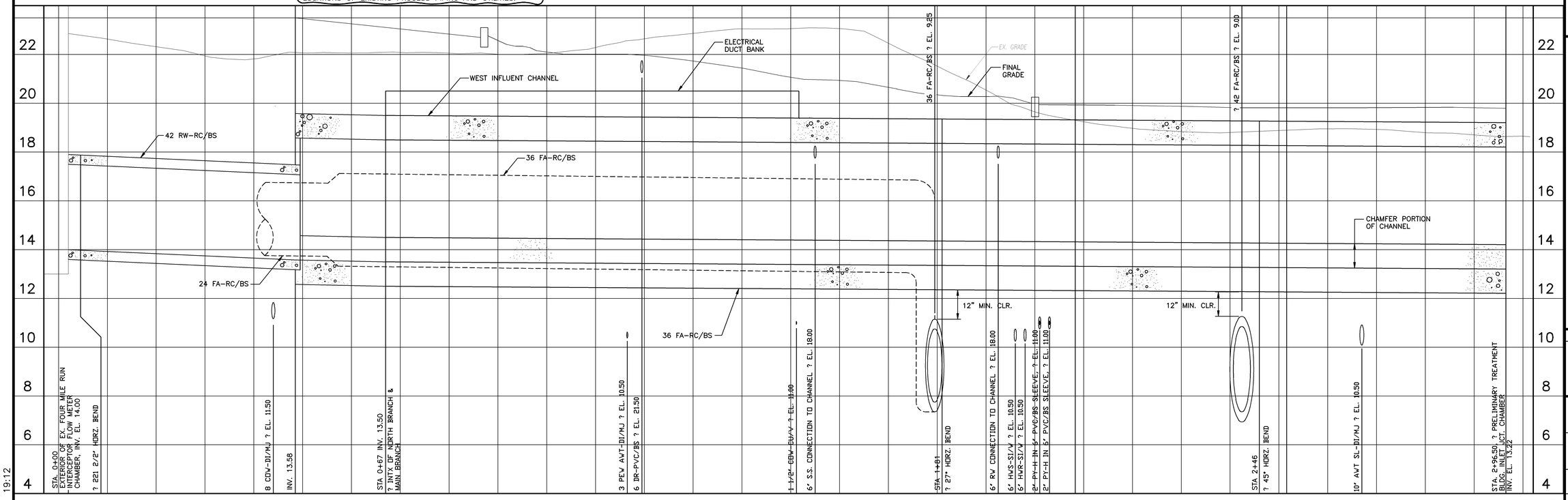

42" RW AND WEST INFLUENT CHANNEL MAIN BRANCH PROFILE

SCALE: HOR. 1"=10' VERT 1"=2'

RECORD DRAWING

08/27/91 - 19:12

NO.	DATE	DRWN	CHK'D	DESCRIPTION
1	9/97	FXP	ASG	RECORD DRAWING

REVISIONS

DESIGNED BY: TBM
DRAWN BY: CTC
CHECKED BY/DATE: TDH 9/91
APPRV'D BY/DATE: TDH 9/91

COMMONWEALTH OF VIRGINIA
THOMAS D. HALL
No. 12502
PROFESSIONAL ENGINEER

CAMP DRESSER & McKEE

THIS DRAWING HAS BEEN REVISED BY HAZEN AND SAWYER, P.C. TO REFLECT MODIFICATIONS MADE DURING CONSTRUCTION

environmental engineers, scientists, planners, & management consultants

CDM

ARLINGTON COUNTY, VIRGINIA
WATER POLLUTION CONTROL PLANT
UPGRADE AND EXPANSION- PHASE IIB

WEST INFLUENT CHANNEL PROFILE

SCALE NOTE

SCALE BAR SHOWN BELOW IS ONE INCH LONG ON A FULL SIZE DRAWING. WHEN SCALING DRAWINGS, MEASURE BAR TO DETERMINE IF SCALES SHOWN WILL REQUIRE ADJUSTING.

ONE INCH

CONTRACT NO. 90-02-WPC
YEAR 1991
LOCATION CODE 00
SPECIALTY CODE C
PROJECT NO. 5002-33
FILE NAME 00C-0026.DWG
DRAWING NO. 00C-26
SHEET NO. 31

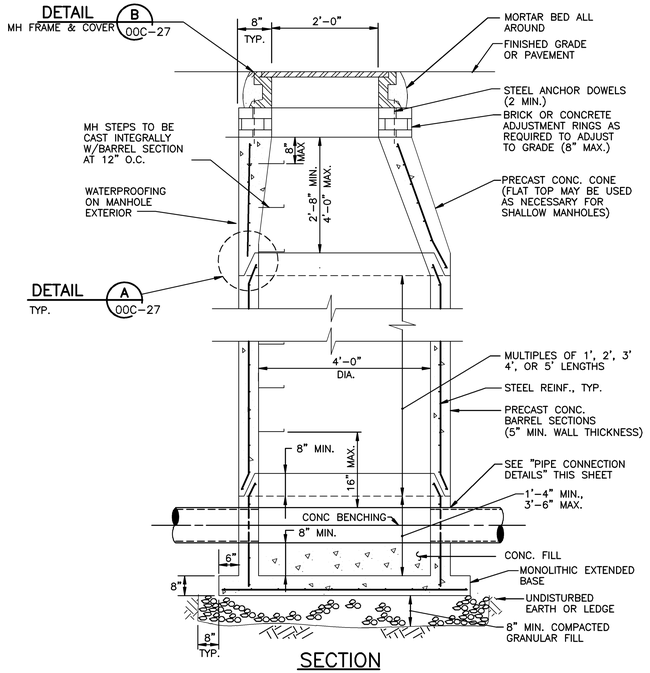

SECTION

STANDARD PRECAST CONCRETE MANHOLE FOR PIPES 24" DIA. AND SMALLER

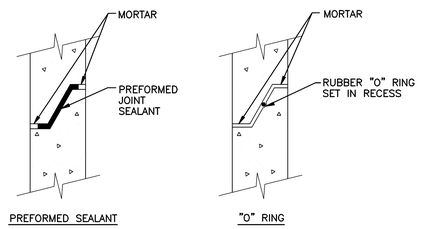

MANHOLE BARREL JOINT

DETAIL A 00C-27
NTS

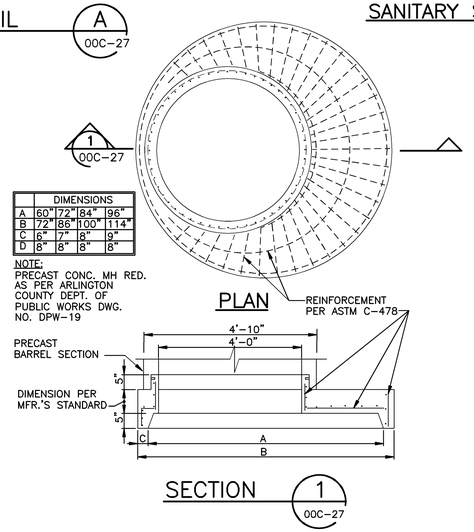

SECTION 1 00C-27

PRECAST CONCRETE MANHOLE REDUCER
SCALE: 1/2"=1'-0"

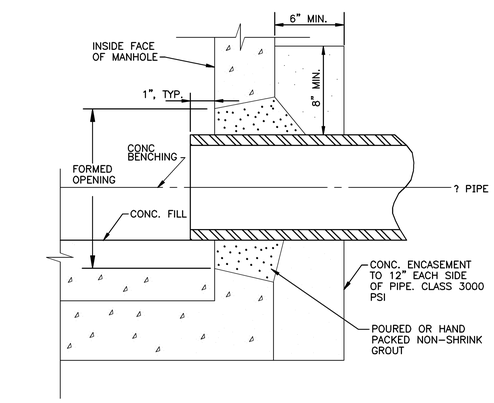

TYPE 1

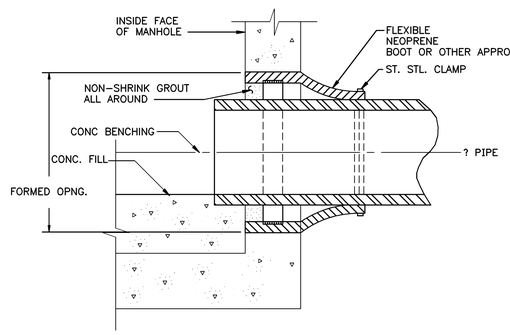

TYPE 2

PIPE CONNECTION DETAILS

NTS

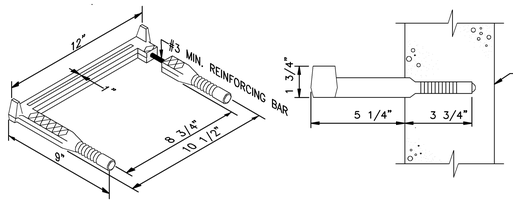

STANDARD MANHOLE STEPS

NTS

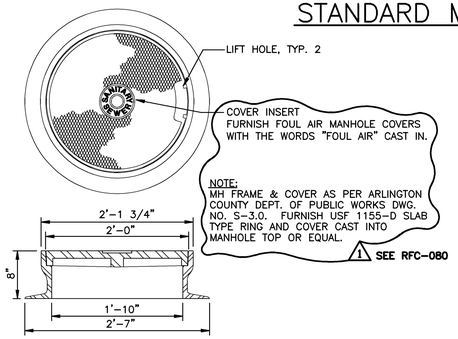

SANITARY SEWER MANHOLE FRAME AND COVER

DETAIL B 00C-27
SCALE: 1"=1'-0"

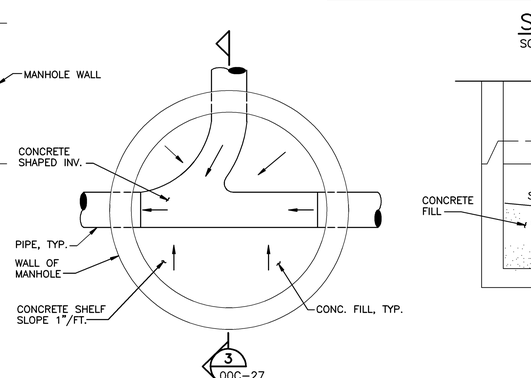

3 00C-27
PLAN

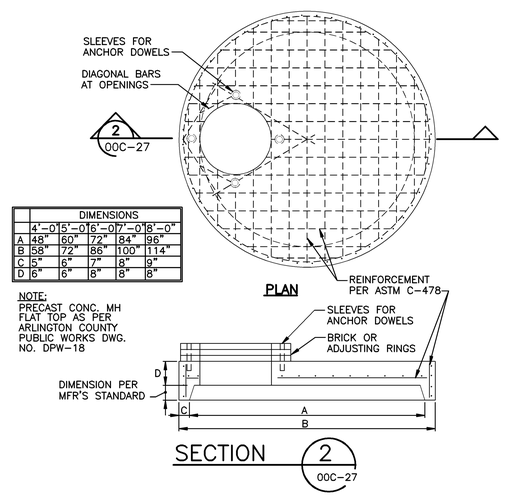

SECTION 2 00C-27

PRECAST CONCRETE MANHOLE FLAT TOP
SCALE: 1/2"=1'-0"

PRECAST MANHOLE FOR PIPES LARGER THAN 24" DIA.

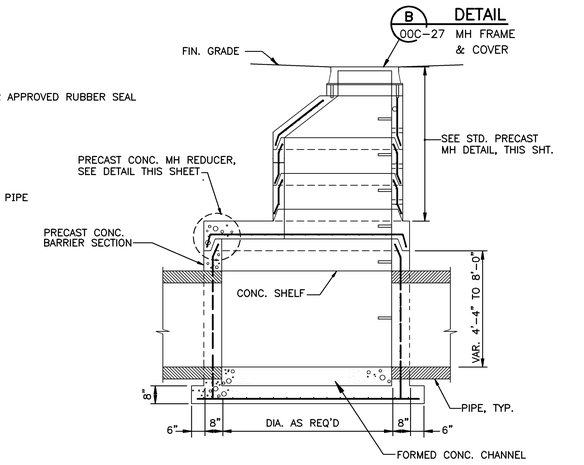

SECTION 2 00C-27
SCALE: NTS

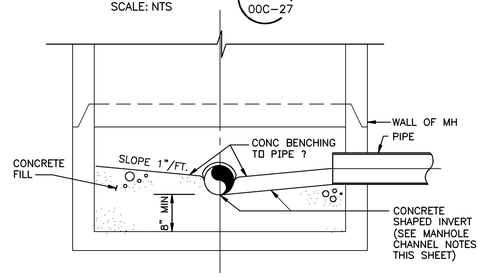

SECTION 3 00C-27

MANHOLE CHANNEL NOTES

1. CHANNELS SHALL BE FORMED OF 8" MIN. THICK CONCRETE FILL.
2. CHANNEL WIDTH SHALL MATCH INSIDE DIAMETER OF INCOMING AND OUTGOING PIPES. FORM CHANNEL FOR SMOOTH CONTOUR BETWEEN EACH PIPE.
3. CONCRETE FILL CHANNELS SHALL BE FORMED AS SHOWN & SHALL HAVE 2500 PSI @ 28 DAYS.

TYPICAL MANHOLE CHANNEL

NTS

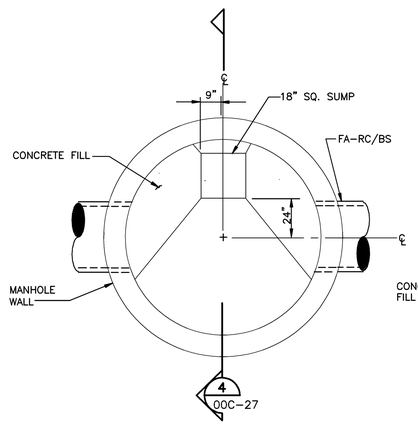

SECTIONAL PLAN

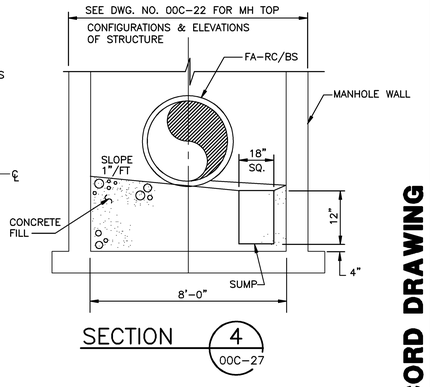

SECTION 4 00C-27

1 SEE RFC-080

FOUL AIR MANHOLE DETAIL

NTS

08/27/91 - 19:46

NO.	DATE	DRWN	CHK'D	DESCRIPTION
1	9/97	FXP	ASG	RECORD DRAWING

REVISIONS

DESIGNED BY: KRK
DRAWN BY: PLR/CTC/GPB
CHECKED BY/DATE: TDH 9/91
APPRV'D BY/DATE: TDH 9/91

COMMONWEALTH OF VIRGINIA — THOMAS D. HALL — No. 12502 — PROFESSIONAL ENGINEER

CAMP DRESSER & McKEE

RED DRAWING HAS BEEN REVISED BY HAZEN AND SAWYER, P.C. TO REFLECT MODIFICATIONS MADE DURING CONSTRUCTION

environmental engineers, scientists, planners, & management consultants

CDM

ARLINGTON COUNTY, VIRGINIA
WATER POLLUTION CONTROL PLANT
UPGRADE AND EXPANSION- PHASE IIB

MISCELLANEOUS DETAILS

SCALE NOTE

SCALE BAR SHOWN BELOW IS ONE INCH LONG ON A FULL SIZE DRAWING. WHEN SCALING DRAWINGS, MEASURE BAR TO DETERMINE IF SCALES SHOWN WILL REQUIRE ADJUSTING.

ONE INCH

CONTRACT NO. 90-02-WPC
YEAR 1991
LOCATION CODE 00
SPECIALTY CODE C
PROJECT NO. 5002-33
FILE NAME 00C-0027.DWG
DRAWING NO. 00C-27
SHEET NO. 32

RECORD DRAWING

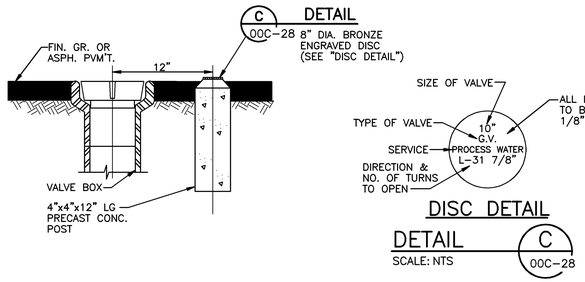

VALVE BOX (PAVED AREAS)

DETAIL A
SCALE: NONE

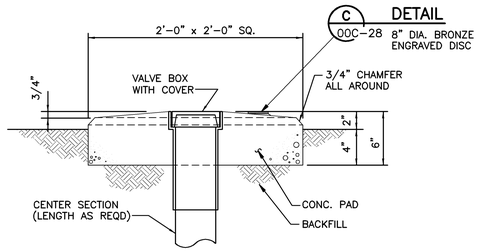

VALVE BOX (GRASS AREAS)

DETAIL B
SCALE: NONE

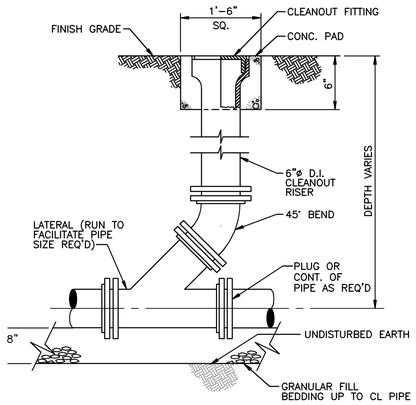

CLEANOUT

DETAIL D
SCALE: NONE

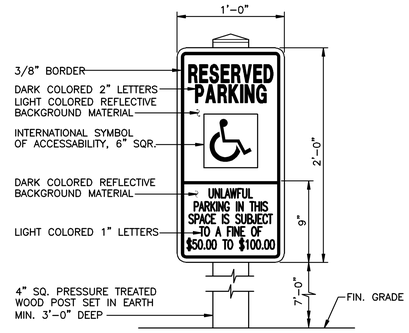

HANDICAPPED PARKING SIGN

SCALE: NONE

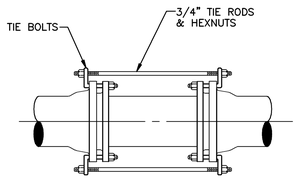

TIE BOLT TYPE

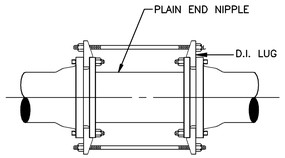

DI LUG TYPE

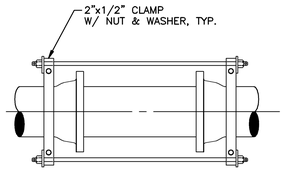

SOCKET CLAMP TYPE

PIPE SIZE	NO. OF TIE RODS
6"	2
8"	2
12"	4
14"	5
16"	6

NOTE: PAINT ALL EXPOSED STEEL W/BITUMASTIC

RESTRAINED JOINT DETAIL

NTS

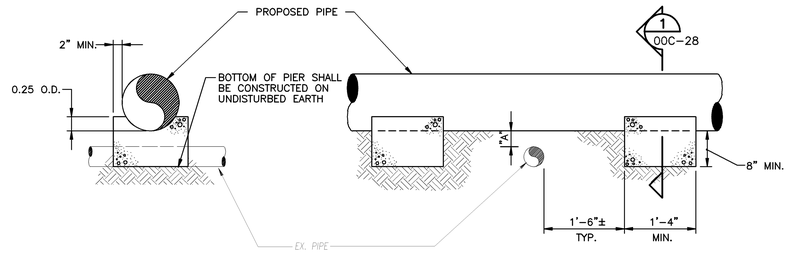

SECTION 1
SCALE: NONE
00C-28

CONCRETE PIERS

NTS

NOTE: PIERS TO BE CONSTRUCTED FOR PROPOSED PIPE WHENEVER DIMENSION "A" IS 12" OR LESS

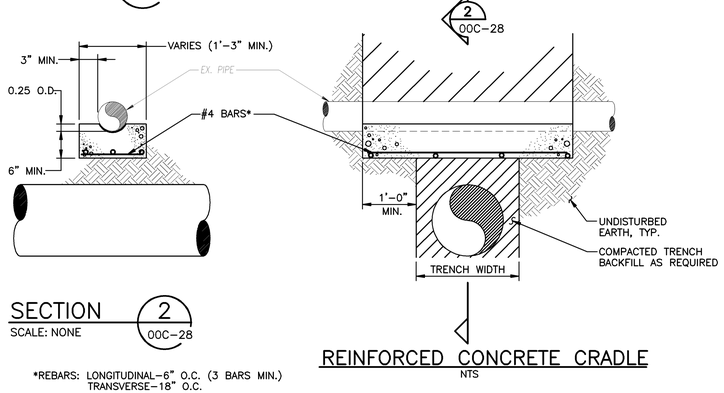

SECTION 2
SCALE: NONE
00C-28

*REBARS: LONGITUDINAL-6" O.C. (3 BARS MIN.)
TRANSVERSE-18" O.C.

REINFORCED CONCRETE CRADLE

NTS

NOTE: 3000 PSI CONCRETE TO BE USED FOR CRADLES AND PIERS

CONCRETE PIER AND REINFORCED CONCRETE CRADLE DETAILS FOR UTILITY CROSSINGS

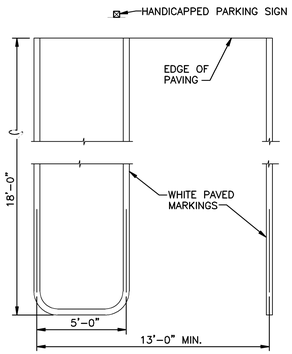

HANDICAPPED PARKING SPACE

NOTES:
1. SIGN SHALL BE LOCATED SUCH THAT IT WILL NOT BE OBSCURED BY VEHICLE PARKED IN THE SPACE.
2. RAMP FOR HANDICAPPED MUST BE LOCATED AT SOME POINT ADJACENT TO THE 5' AISLE.

DETAIL F
SCALE: NONE

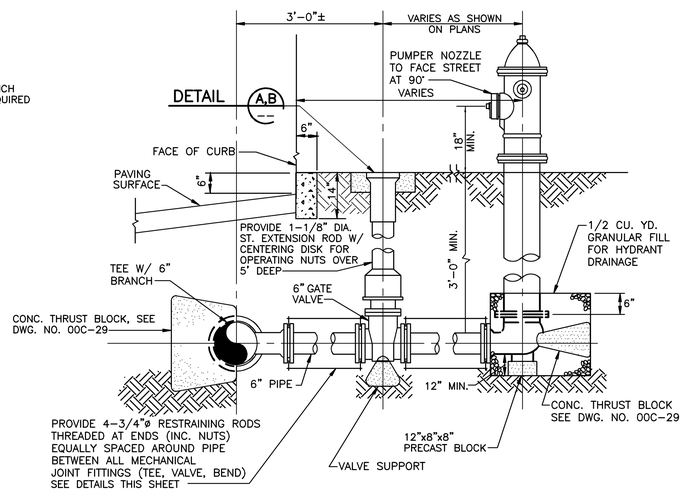

FIRE HYDRANT

DETAIL E
SCALE: NONE

09/04/91 - 13:57

RECORD DRAWING

NO.	DATE	DRWN	CHK'D	DESCRIPTION
1	9/97	FXP	ASG	RECORD DRAWING

REVISIONS

DESIGNED BY: KRK
DRAWN BY: CTC, GPB
CHECKED BY/DATE: --
APPRV'D BY/DATE: --

CAMP DRESSER & McKEE
THIS DRAWING HAS BEEN REVISED BY HAZEN AND SAWYER, P.C. TO REFLECT MODIFICATIONS MADE DURING CONSTRUCTION
environmental engineers, scientists, planners, & management consultants
CDM

ARLINGTON COUNTY, VIRGINIA
WATER POLLUTION CONTROL PLANT
UPGRADE AND EXPANSION- PHASE IIB

MISCELLANEOUS DETAILS

SCALE NOTE
SCALE BAR SHOWN BELOW IS ONE INCH LONG ON A FULL SIZE DRAWING. WHEN SCALING DRAWINGS, MEASURE BAR TO DETERMINE IF SCALES SHOWN WILL REQUIRE ADJUSTING.
ONE INCH

CONTRACT NO. 90-02-WPC
YEAR 1991
LOCATION CODE 00
SPECIALTY CODE C
PROJECT NO. 5002-33
FILE NAME 00C-0028.DWG
DRAWING NO. 00C-28
SHEET NO. 33

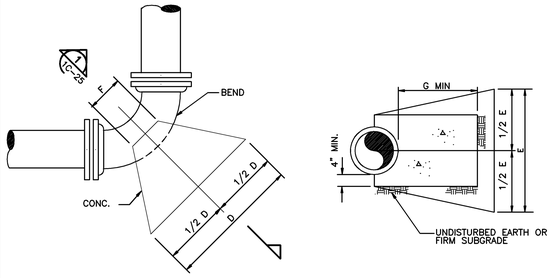

PLAN

SECTION 1 / 1C-20

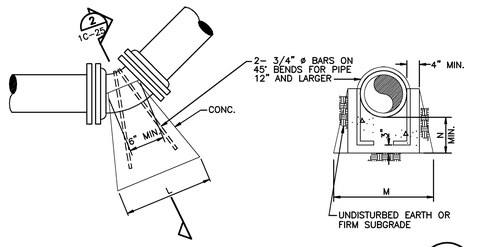

PLAN

SECTION 2 / 1C-20

THRUST BLOCKS FOR HORIZONTAL BENDS

NTS

TABLE OF DIMENSIONS					
PIPE SIZE (INCHES)	BEND	DIMENSIONS			
		D	E	F	G (MIN.)
3	90°	1'-0"	1'-0"	6"	1'-0"
3	45°	9"	1'-0"	6"	6"
4	90°	1'-4"	1'-0"	6"	1'-0"
4	45°	9"	1'-0"	6"	6"
6	90°	1'-9"	1'-2"	6"	1'-6"
6	45°	1'-0"	1'-2"	6"	8"
8	90°	2'-6"	1'-4"	8"	1'-6"
8	45°	1'-6"	1'-4"	8"	9"
10	90°	3'-0"	2'-0"	10"	1'-6"
10	45°	2'-0"	1'-6"	8"	10"
24	90°	7'-3"	4'-0"	2'-0"	2'-0"
24	45°	5'-0"	3'-0"	1'-0"	1'-9"
24	22 1/2	3'-0"	3'-0"	1'-0"	1'-6"

THRUST BLOCKS FOR LOWER VERTICAL BENDS

NTS

TABLE OF DIMENSIONS				
PIPE SIZE (INCHES)	BEND	DIMENSIONS		
		L	M	N
4	45°	1'-0"	1'-0"	8"
4	22 1/2	8"	1'-0"	8"
4	11 1/4	6"	1'-0"	8"
6	45°	1'-2"	1'-2"	8"
6	22 1/2	10"	1'-2"	8"
6	11 1/4	6"	1'-2"	8"
8	45°	1'-9"	1'-4"	8"
8	22 1/2	11"	1'-4"	8"
8	11 1/4	8"	1'-4"	8"
10	45°	2'-5"	1'-6"	1'-0"
10	22 1/2	1'-3"	1'-6"	9"
10	11 1/4	8"	1'-6"	8"

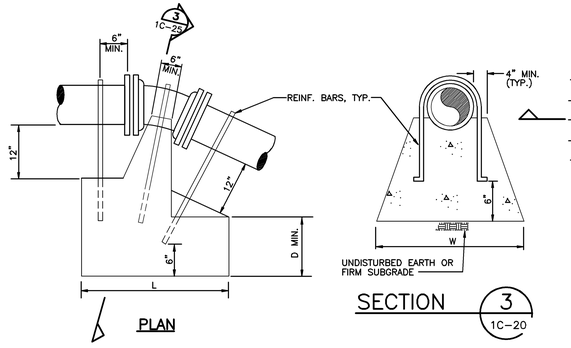

PLAN

SECTION 3 / 1C-20

THRUST BLOCKS FOR UPPER VERTICAL BENDS

NTS

TABLE OF DIMENSIONS					
PIPE SIZE (INCHES)	BEND	DIMENSIONS			REINF. BARS
		L	W	D	
4	45°	2'-6"	2'-6"	2'-6"	3 #7
4	22 1/2	2'-0"	2'-0"	1'-6"	3 #7
4	11 1/4	1'-6"	1'-6"	1'-6"	3 #7
6	45°	3'-0"	3'-0"	2'-0"	3 #7
6	22 1/2	2'-6"	2'-6"	2'-6"	3 #7
6	11 1/4	2'-0"	2'-0"	1'-6"	3 #7
8	45°	3'-6"	3'-6"	2'-6"	3 #8
8	22 1/2	2'-9"	2'-9"	2'-3"	3 #8
8	11 1/4	2'-0"	2'-0"	2'-0"	3 #8
10	45°	4'-0"	4'-0"	2'-9"	4 #8
10	22 1/2	3'-6"	3'-6"	2'-3"	3 #8
10	11 1/4	2'-3"	2'-3"	2'-0"	3 #8

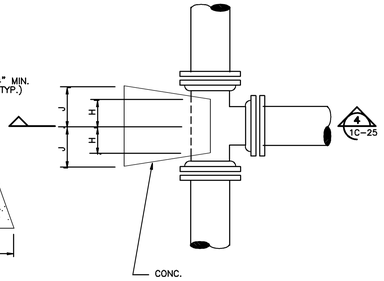

PLAN

SECTION 4 / 1C-20

THRUST BLOCKS FOR TEES

NTS

TABLE OF DIMENSIONS				
PIPE SIZE (INCHES)	DIMENSIONS			
	H	J	K	L (MIN.)
3"	4"	6"	6"	6"
4"	4"	6"	8"	6"
6"	6"	8"	10"	8"
8"	6"	9"	1'-3"	9"
10"	6"	1'-1"	1'-4"	10"
12"	6"	1'-3"	1'-9"	1'-0"
18"	1'-0"	2'-0"	3'-0"	1'-6"

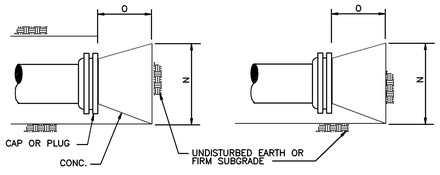

PLAN ELEVATION

THRUST BLOCKS FOR CAPS OR PLUGS

NTS

TABLE OF DIMENSIONS			
PIPE SIZE (INCHES)	DIMENSIONS		
	M	N	O
4	1'-0"	1'-0"	8"
6	1'-6"	1'-6"	8"
8	2'-6"	1'-6"	1'-0"
10	2'-8"	2'-2"	1'-0"
12	3'-6"	2'-6"	1'-2"
18	6'-0"	4'-0"	1'-6"

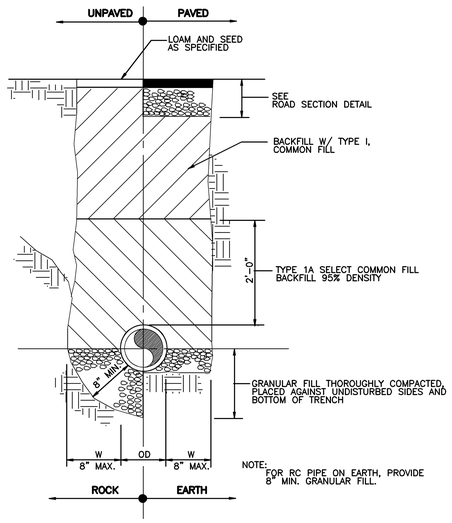

CROSS SECTION

TRENCH DETAIL

SCALE: NTS

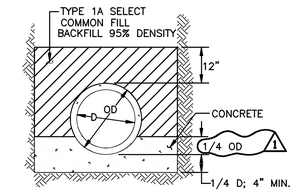

CONCRETE CRADLE

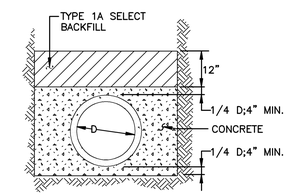

CONCRETE ENCASEMENT

DETAIL C

SCALE: NONE

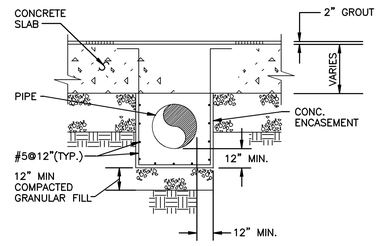

ENCASEMENT UNDER STRUCTURE

DETAIL C

SCALE: 1/4" = 1'-0"

REVISIONS				
NO.	DATE	DRWN	CHK'D	DESCRIPTION
1	9/97	FXP	ASG	RECORD DRAWING

DESIGNED BY: TDH
DRAWN BY: PLR
CHECKED BY/DATE: TDH 9/91
APPRV'D BY/DATE: TDH 9/91

COMMONWEALTH OF VIRGINIA
THOMAS D. HALL
No. 12502
PROFESSIONAL ENGINEER

CAMP DRESSER & McKEE
environmental engineers, scientists, planners, & management consultants
CDM

THIS DRAWING HAS BEEN REVISED BY HAZEN AND SAWYER, P.C. TO REFLECT MODIFICATIONS MADE DURING CONSTRUCTION

ARLINGTON COUNTY, VIRGINIA
WATER POLLUTION CONTROL PLANT
UPGRADE AND EXPANSION- PHASE IIB

MISCELLANEOUS DETAILS

SCALE NOTE

SCALE BAR SHOWN BELOW IS ONE INCH LONG ON A FULL SIZE DRAWING. WHEN SCALING DRAWINGS, MEASURE BAR TO DETERMINE IF SCALES SHOWN WILL REQUIRE ADJUSTING.

ONE INCH

CONTRACT NO. 90-02-WPC
YEAR 1991
LOCATION CODE 00
SPECIALTY CODE C
PROJECT NO. 5002-33
FILE NAME 00C-0029.DWG
DRAWING NO. 00C-29
SHEET NO. 34

RECORD DRAWING

01/08/91 - 10:41

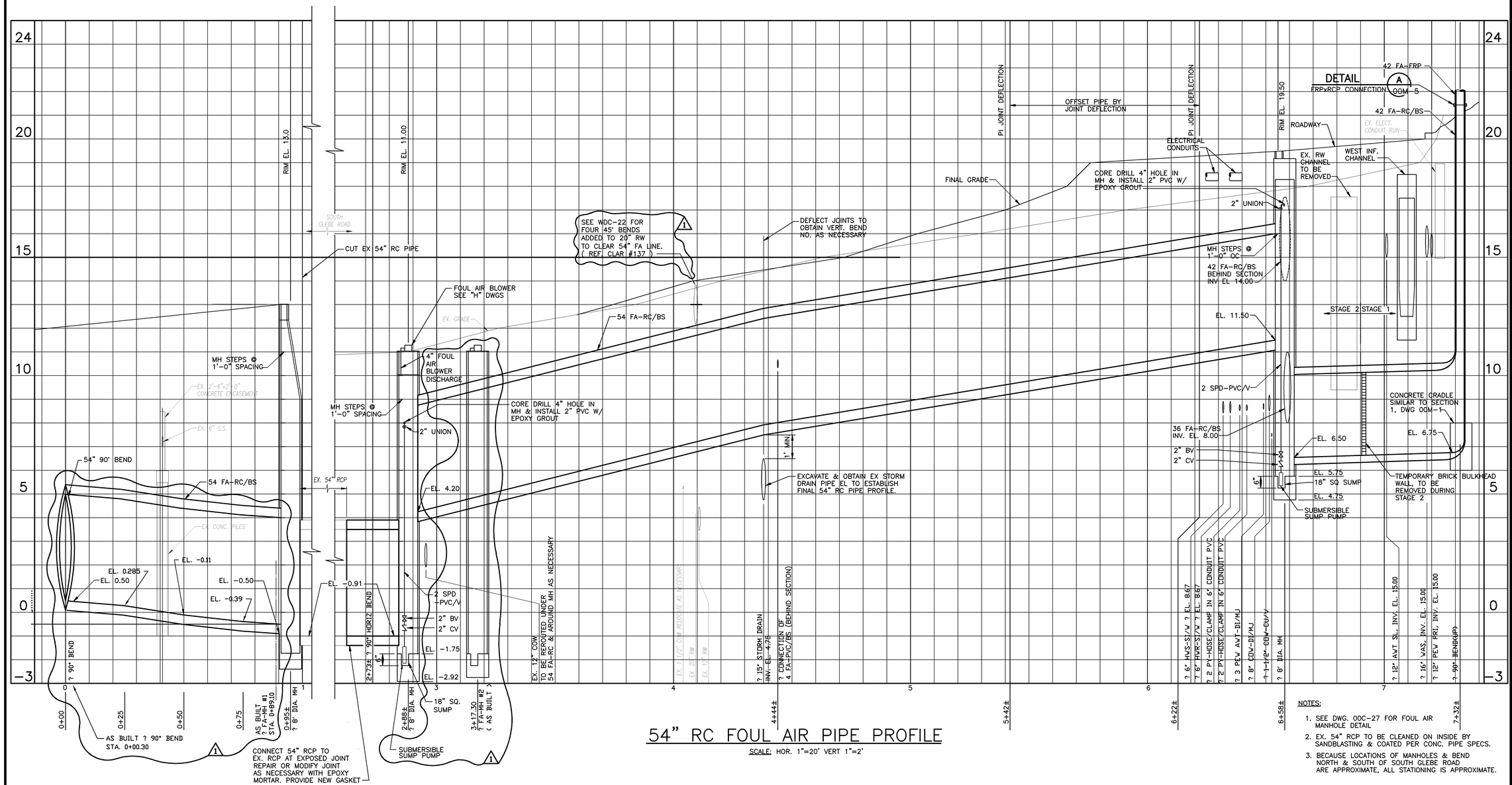

54" RC FOUL AIR PIPE PROFILE

SCALE: HOR. 1"=20' VERT 1"=2'

NOTES:

1. SEE DWG. 00C-27 FOR FOUL AIR MANHOLE DETAIL
2. EX. 54" RCP TO BE CLEANED ON INSIDE BY SANDBLASTING & COATED PER CONC. PIPE SPECS.
3. BECAUSE LOCATIONS OF MANHOLES & BEND NORTH & SOUTH OF SOUTH GLEBE ROAD ARE APPROXIMATE, ALL STATIONING IS APPROXIMATE.

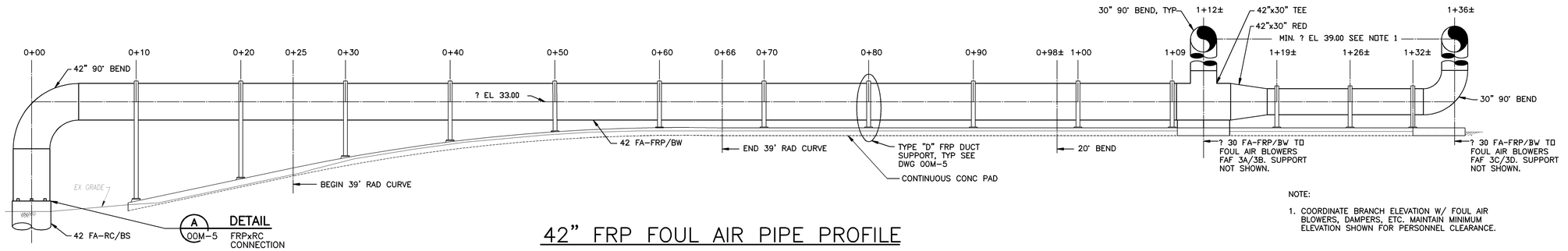

42" FRP FOUL AIR PIPE PROFILE

SCALE: 3/16""=1'-0"

NOTE:

1. COORDINATE BRANCH ELEVATION W/ FOUL AIR BLOWERS, DAMPERS, ETC. MAINTAIN MINIMUM ELEVATION SHOWN FOR PERSONNEL CLEARANCE.

NO.	DATE	DRWN	CHK'D	DESCRIPTION
1	9/97	FXP	ASG	RECORD DRAWING

REVISIONS

DESIGNED BY: TBM
DRAWN BY: CTC, PLR
CHECKED BY/DATE: TDH 9/91
APPRV'D BY/DATE: THDH 9/91

COMMONWEALTH OF VIRGINIA — THOMAS D. HALL No. 12502 — PROFESSIONAL ENGINEER

CAMP DRESSER & McKEE

THIS DRAWING HAS BEEN REVISED BY HAZEN AND SAWYER, P.C. TO REFLECT MODIFICATIONS MADE DURING CONSTRUCTION

CDM environmental engineers, scientists, planners, & management consultants

ARLINGTON COUNTY, VIRGINIA
WATER POLLUTION CONTROL PLANT
UPGRADE AND EXPANSION- PHASE IIB

FOUL AIR PIPE PROFILES

SCALE NOTE

SCALE BAR SHOWN BELOW IS ONE INCH LONG ON A FULL SIZE DRAWING. WHEN SCALING DRAWINGS, MEASURE BAR TO DETERMINE IF SCALES SHOWN WILL REQUIRE ADJUSTING.

ONE INCH

CONTRACT NO. 90-02-WPC
YEAR 1991
LOCATION CODE 00
SPECIALTY CODE C
PROJECT NO. 5002-33
FILE NAME 00C-0030.DWG
DRAWING NO. 00C-30
SHEET NO. 35

RECORD DRAWING

09/05/91 - 14:05

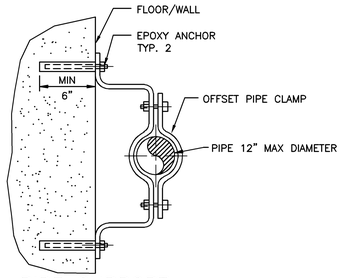

PIPE SUPPORT

DETAIL A – NTS

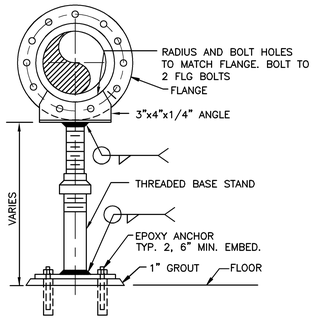

PIPE SUPPORT

DETAIL B – NTS

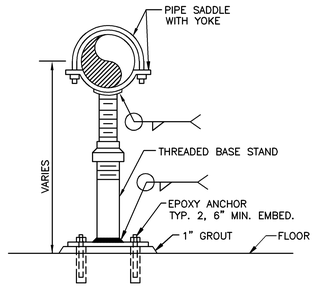

PIPE SUPPORT

DETAIL C – NTS

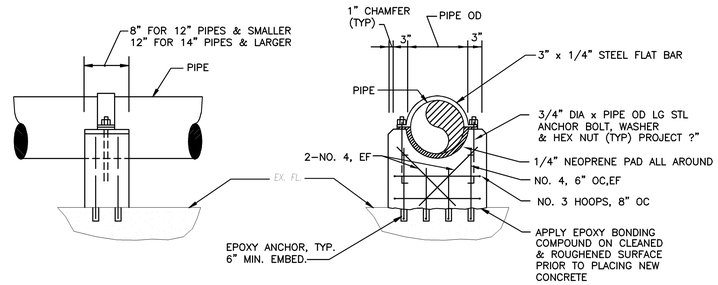

CONCRETE PIPE SUPPORT

DETAIL D – NTS

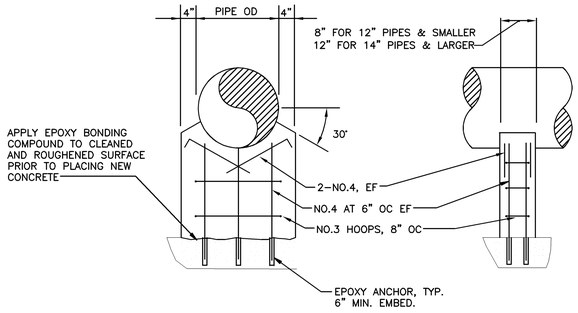

CONCRETE PIPE SUPPORT

DETAIL E – NTS

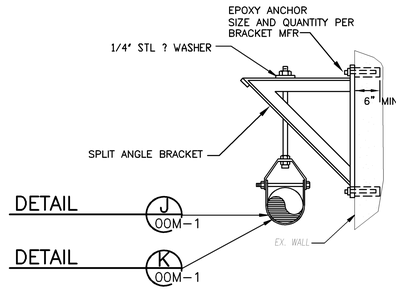

PIPE SUPPORT

DETAIL F – NTS

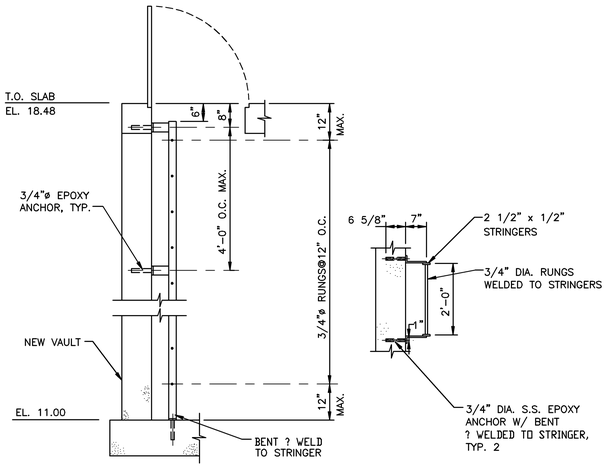

NOTE: ALL ALUMINUM CONSTRUCTION

VAULT LADDER

DETAIL G – SCALE: NTS

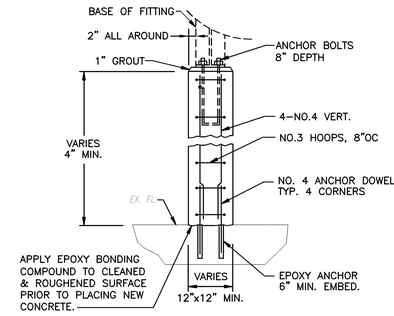

CONCRETE BASE SUPPORT

DETAIL H – NTS

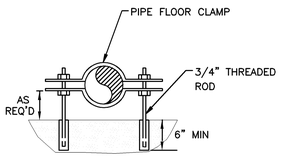

PIPE SUPPORT

DETAIL I – NTS

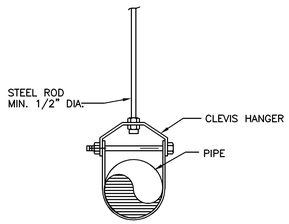

PIPE SUPPORT

DETAIL J – NTS

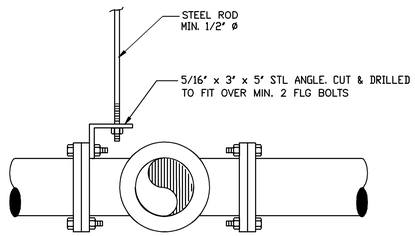

PIPE SUPPORT

DETAIL K – NTS

NOTES:

1. ANCHORS IN MASONRY WALLS SHALL BE THROUGH–BOLTS WITH 3" x 3" x 1/4" GS PLATE WASHERS ON OPPOSITE SIDE OF WALL OR EPOXY ANCHORS WITH SCREENS, MINIMUM 4" EMBEDMENT.
2. ANCHORS IN CONCRETE FLOORS AND WALLS SHALL BE EPOXY ANCHORS, MINIMUM 6" EMBEDMENT.
3. PIPE SUPPORTS AND BOLTS, NUTS & WASHERS SHALL BE GALV. STEEL UNLESS STAINLESS STEEL IS NOTED.

NO.	DATE	DRWN	CHK'D	DESCRIPTION
1	9/91	FXP	ASG	RECORD DRAWING

REVISIONS

DESIGNED BY: TDH
DRAWN BY: CTC/GPB
CHECKED BY/DATE: TDH 9/91
APPRV'D BY/DATE: TDH 9/91

COMMONWEALTH OF VIRGINIA — THOMAS D. HALL No. 12502 — PROFESSIONAL ENGINEER

CAMP DRESSER & McKEE

THIS DRAWING HAS BEEN REVISED BY HAZEN AND SAWYER, P.C. TO REFLECT MODIFICATIONS MADE DURING CONSTRUCTION

CDM environmental engineers, scientists, planners, & management consultants

ARLINGTON COUNTY, VIRGINIA
WATER POLLUTION CONTROL PLANT
UPGRADE AND EXPANSION- PHASE IIB

MECHANICAL DETAILS

SCALE NOTE

SCALE BAR SHOWN BELOW IS ONE INCH LONG ON A FULL SIZE DRAWING. WHEN SCALING DRAWINGS, MEASURE BAR TO DETERMINE IF SCALES SHOWN WILL REQUIRE ADJUSTING.

ONE INCH

CONTRACT NO. 90–02–WPC
YEAR 1991
LOCATION CODE 00
SPECIALTY CODE M
PROJECT NO. 5002–33
FILE NAME 00M–0001.DWG
DRAWING NO. 00M–1
SHEET NO. 36

RECORD DRAWING

09/16/91 – 17:23

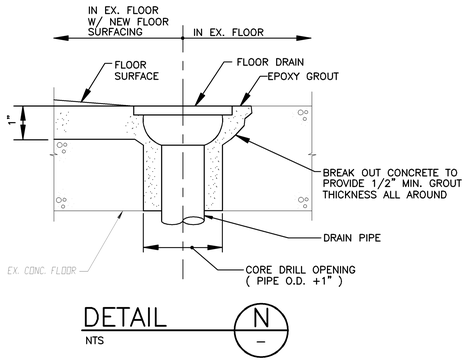

DETAIL N
NTS

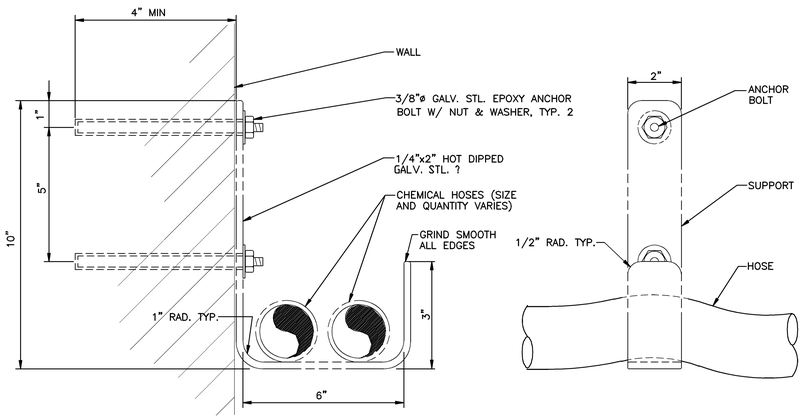

NOTE:
INSTALL HOSE SUPPORTS @ 5' O.C.
MAX. ON ALL EXPOSED HOSE.

SIDE VIEW

FRONT VIEW

CHEMICAL HOSE SUPPORT

DETAIL O
NTS

HARNESS ASSEMBLY TABLE OF SIZES *				
PIPE DIA.	NO. RODS	ROD D	LUG W	LUG H
2	2	1/2"	2 1/4"	4 3/4"
4	2	5/8"	2 1/4"	4 3/4"
6	2	3/4"	2 1/4"	4 3/4"
8	2	3/4"	2 1/4"	4 3/4"
10	2	7/8"	2 1/4"	4 3/4"
12	3	1"	2 1/4'	4 3/4"
14	3	1"	2 1/4"	4 3/4"
16	4	1"	2 1/4"	4 3/4"
18	4	1 1/8"	2 1/2"	5 3/4"
20	4	1 1/8"	3"	5 3/4"
24	6	1 1/4"	3"	5 3/4"
30	6	1 1/4"	3"	5 3/4"
36	6	1 1/4"	3"	5 3/4"

* BASED ON 200 PSI MAX PRESSURE, REDUCE ROD SIZE AND NO. FOR LOWER PRESSURES WHERE SPECIFIED. MINIMUM ROD SIZE 1/2" MINIMUM 2 RODS

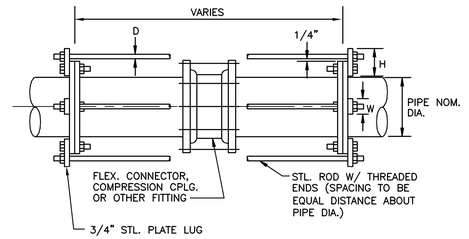

HARNESS ASSEMBLY

DETAIL P
NTS

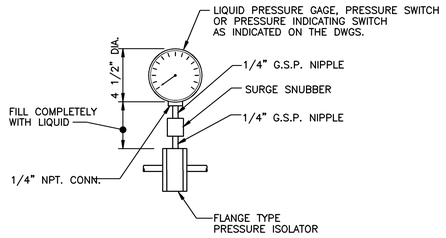

NOTE: ALL PRESSURE GAGES SHALL HAVE ISOLATOR & SNUBBER

PRESSURE DEVICE WITH ISOLATOR

DETAIL Q
NTS

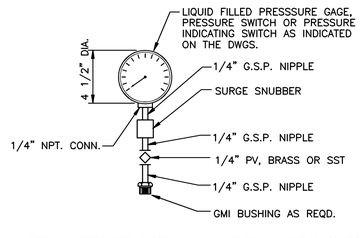

NOTE: ALL PRESSURE GAGES SHALL HAVE PLUG VALVE & SNUBBER.

PRESSURE DEVICE WITHOUT ISOLATOR

DETAIL R
NTS

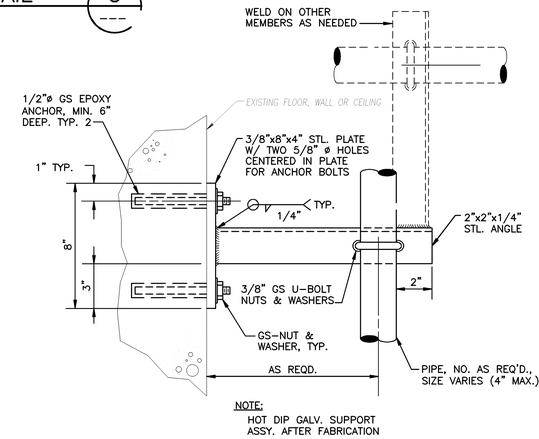

NOTE:
HOT DIP GALV. SUPPORT
ASSY. AFTER FABRICATION

WALL/CEILING SUPPORT

DETAIL S
NTS

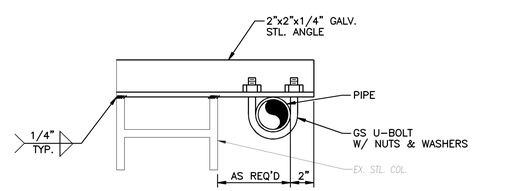

PIPE SUPPORT

DETAIL T
NTS F2M-3

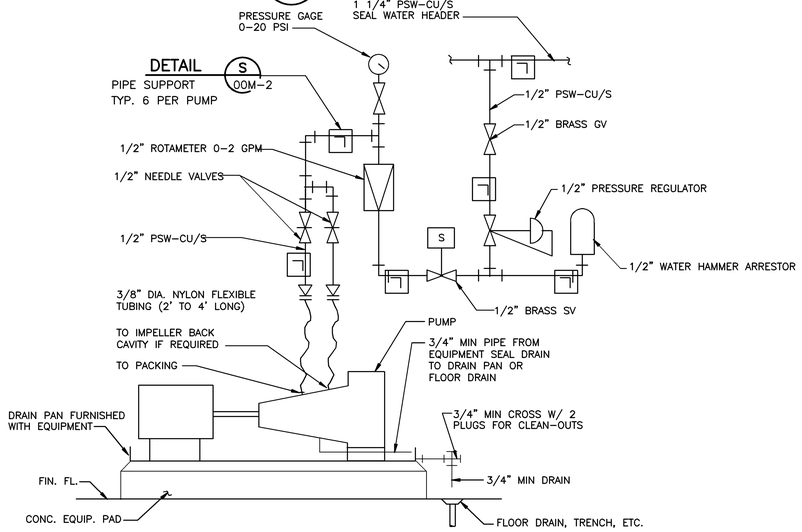

PUMP SEAL WATER SYSTEM

DETAIL U
NTS

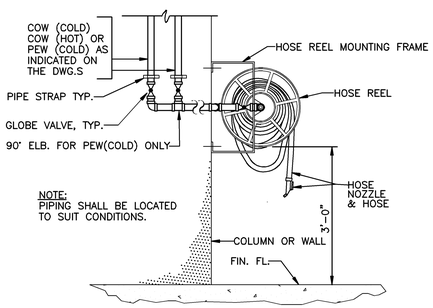

HOSE REEL ELEVATION VIEW

DETAIL V
NTS

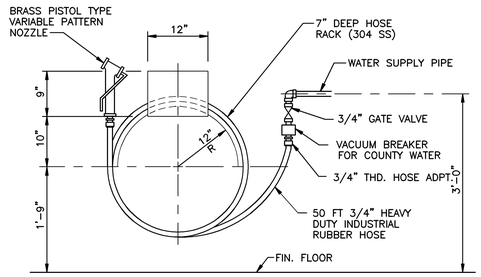

WASH HOSE STATION

DETAIL W
NTS

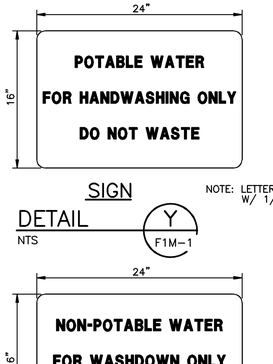

SIGN

NOTE: LETTERS 3" HIGH W/ 1/2" STEMS

DETAIL Y
NTS F1M-1

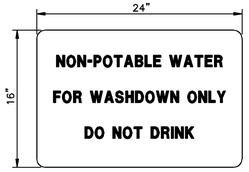

SIGN

NOTE: LETTERS 3" HIGH W/ 1/2" STEMS

DETAIL Z
NTS F1M-1

09/16/91 - 17:15

RECORD DRAWING

NO.	DATE	DRWN	CHK'D	DESCRIPTION
1	9/97	FXP	ASG	RECORD DRAWING

REVISIONS

DESIGNED BY: TDH
DRAWN BY: CTC
CHECKED BY/DATE: TDH 9/91
APPRV'D BY/DATE: TDH 9/91

COMMONWEALTH OF VIRGINIA
THOMAS D. HALL
No. 12502
PROFESSIONAL ENGINEER

CAMP DRESSER & McKEE

THIS DRAWING HAS BEEN REVISED BY HAZEN AND SAWYER, P.C. TO REFLECT MODIFICATIONS MADE DURING CONSTRUCTION

environmental engineers, scientists, planners, & management consultants

CDM

ARLINGTON COUNTY, VIRGINIA
WATER POLLUTION CONTROL PLANT
UPGRADE AND EXPANSION- PHASE IIB

MECHANICAL DETAILS

SCALE NOTE

SCALE BAR SHOWN BELOW IS ONE INCH LONG ON A FULL SIZE DRAWING. WHEN SCALING DRAWINGS, MEASURE BAR TO DETERMINE IF SCALES SHOWN WILL REQUIRE ADJUSTING.

ONE INCH

CONTRACT NO.	
90-02-WPC	
YEAR 1991	
LOCATION CODE	SPECIALTY CODE
00	M

PROJECT NO. 5002-33

FILE NAME 00M-0002.DWG

DRAWING NO. 00M-2

SHEET NO. 37

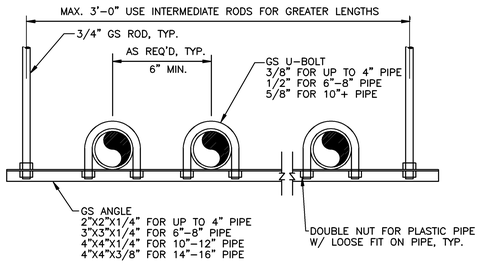

NOTE: ANCHOR RODS IN CONCRETE WITH EPOXY ANCHORS, 6" MINIMUM EMBEDMENT.

PIPE SUPPORT

DETAIL J NTS

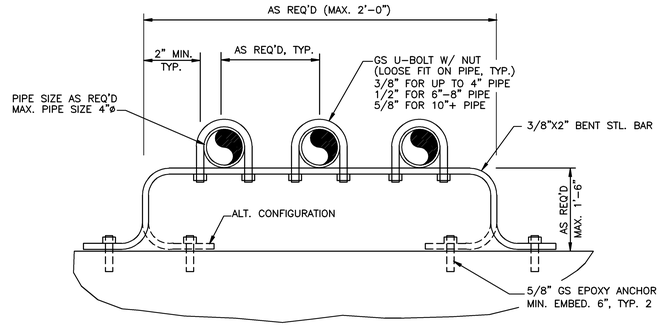

PIPE SUPPORT

DETAIL K NTS

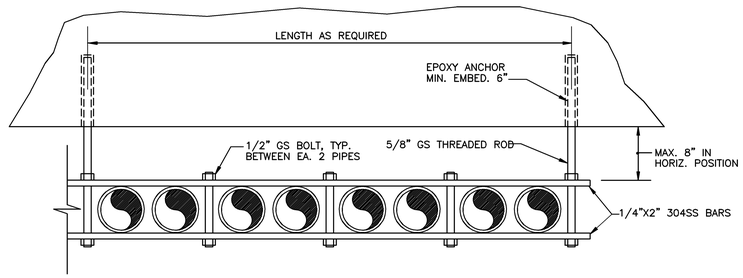

PIPE SUPPORT

DETAIL L NTS

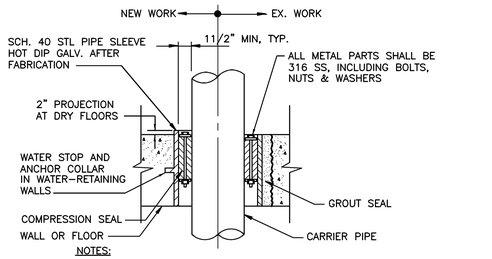

NOTES:

1. OPENINGS IN EXISTING CONCRETE WALLS FOR PIPES 4" AND SMALLER SHALL BE CORE BIT DRILLED AND SLEEVE OMITTED. ANY EXPOSED REINFORCING BARS SHALL BE EPOXY COATED.
2. USE OTHER MATERIALS AND DIMENSIONS WHERE SPECIFIED.
3. SEE C.O. #1 AND RFC #079.

WALL OR FLOOR SLEEVE WITH COMPRESSION SEAL

DETAIL M NTS

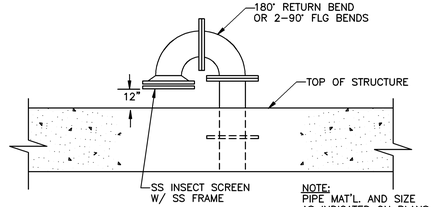

VENT

DETAIL Q NTS

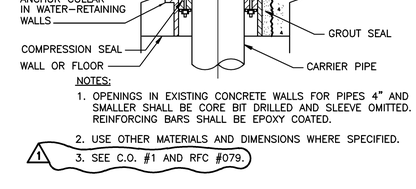

SECTION

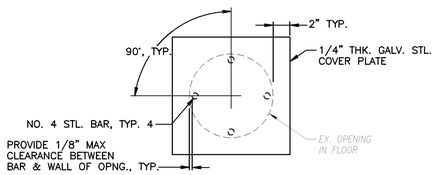

PLAN

FLOOR COVER PLATE

DETAIL R NTS

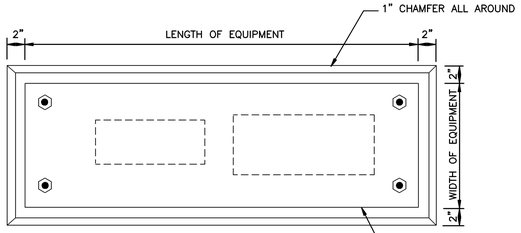

PLAN

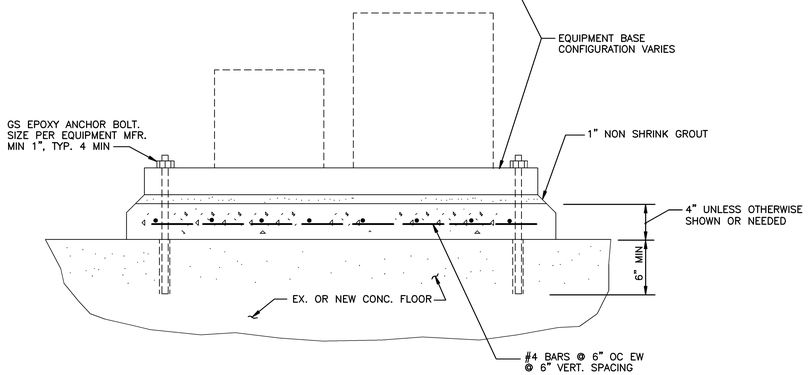

SECTION

CONCRETE EQUIPMENT PAD

DETAIL A 00M-3

NOTES:

1. SEE F.O. #11

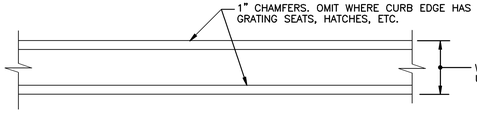

PLAN

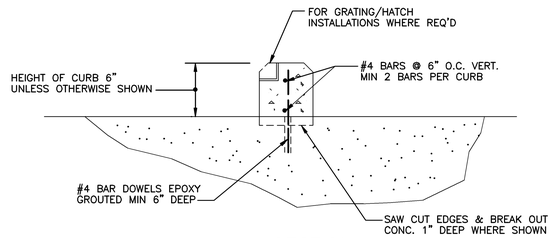

SECTION

CONCRETE CURB

DETAIL B NTS 00M-3

09/16/91 - 17:07

NO.	DATE	DRWN	CHK'D	DESCRIPTION
1	9/97	FXP	ASG	RECORD DRAWING

REVISIONS

DESIGNED BY: TDH
DRAWN BY: DHG/GPB
CHECKED BY/DATE: TDH 9/91
APPRV'D BY/DATE: TDH 9/91

COMMONWEALTH OF VIRGINIA
THOMAS D. HALL
No. 12502
PROFESSIONAL ENGINEER

CAMP DRESSER & McKEE

THIS DRAWING HAS BEEN REVISED BY HAZEN AND SAWYER, P.C. TO REFLECT MODIFICATIONS MADE DURING CONSTRUCTION

CDM
environmental engineers, scientists, planners, & management consultants

ARLINGTON COUNTY, VIRGINIA
WATER POLLUTION CONTROL PLANT
UPGRADE AND EXPANSION- PHASE IIIB

MECHANICAL DETAILS

SCALE NOTE

SCALE BAR SHOWN BELOW IS ONE INCH LONG ON A FULL SIZE DRAWING. WHEN SCALING DRAWINGS, MEASURE BAR TO DETERMINE IF SCALES SHOWN WILL REQUIRE ADJUSTING.

ONE INCH

CONTRACT NO. 90-02-WPC
YEAR 1991
LOCATION CODE 00
SPECIALTY CODE M
PROJECT NO. 5002-33
FILE NAME 00M-0003.DWG
DRAWING NO. 00M-3
SHEET NO. 38

RECORD DRAWING

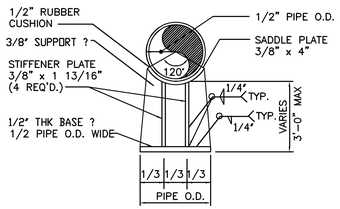

PIPE SUPPORT

DETAIL D — NTS

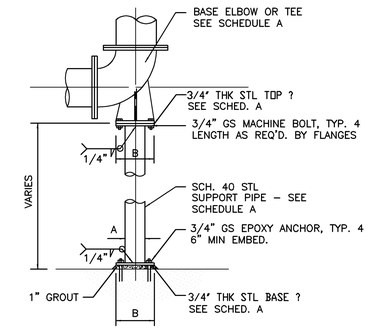

SCHEDULE A		
BASE ELBOW (TEE) (Dim. in inches)		
PIPE SIZE	A (nom)	B
3"	1 1/2"	5
4	2	6
5–6	2 1/2"	7
8–10	4	9
12–16	6	11
18–24	8	13 1/2"
30	10	16
36	12	19

BASE ELBOW (TEE) STEEL SUPPORT

DETAIL E — NTS

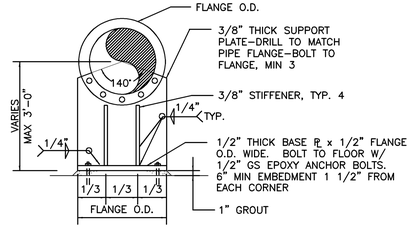

PIPE SUPPORT

DETAIL F — NTS

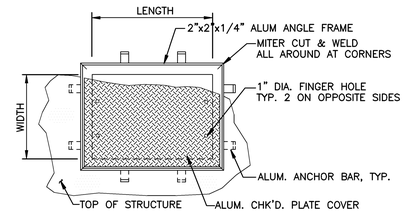

PLAN

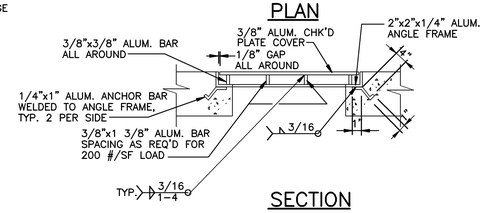

SECTION

ACCESS HATCH WITH REMOVABLE COVER

DETAIL G — NTS

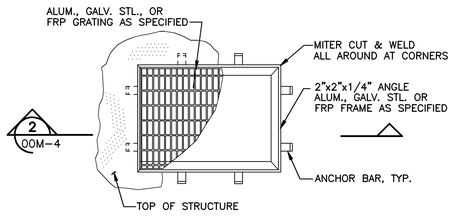

PLAN

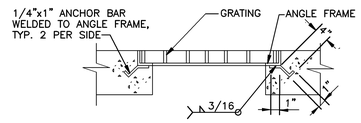

SECTION 2 — SCALE: NTS — 00M–4

GRATING AND FRAME

DETAIL H — NTS

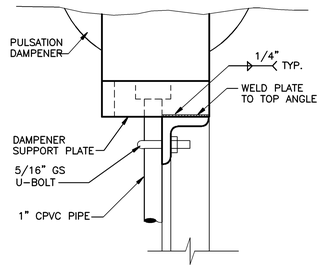

SECTION 5 — SCALE: NTS — 00M–4

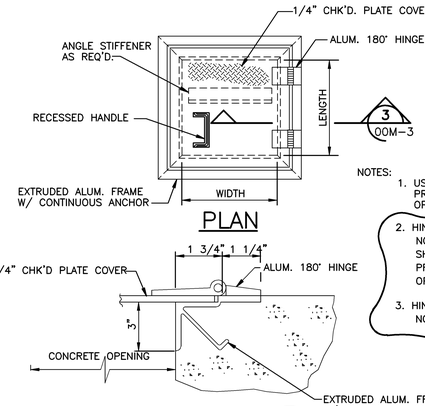

PLAN

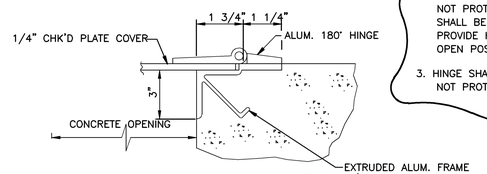

SECTION 3 — SCALE: NTS — 00M–4

ACCESS HATCH W/ HINGED COVER

DETAIL K — NTS

NOTES:
1. USE DOUBLE DOOR WHERE SHOWN PROVIDE LATCHES TO HOLD HATCH OPEN VERTICALLY.
2. HINGE SHALL BE FLUSH OR RECESSED – NOT PROTRUDING AS SHOWN. HINGES SHALL BE 90° – NOT 180° AS SHOWN. PROVIDE HOLD – OPEN LATCH FOR 90° OPEN POSITION (NOT SHOWN).
3. HINGE SHALL BE FLUSH OR RECESSED – NOT PROTRUDING AS SHOWN. HINGES
1

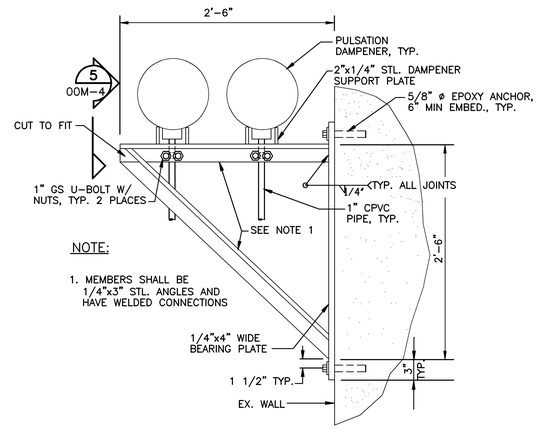

PULSATION DAMPENER SUPPORT

DETAIL J — NTS — E6M–1

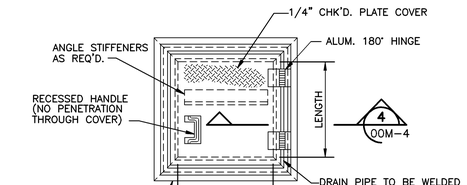

PLAN

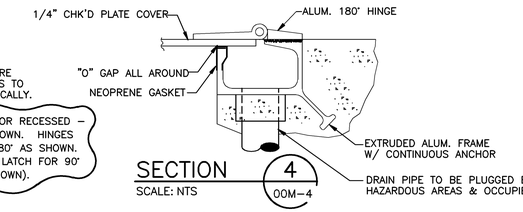

NOTES:
1. USE DOUBLE DOOR WHERE SHOWN. PROVIDE LATCHES TO HOLD HATCH OPEN VERTICALLY.
2. HINGE SHALL BE FLUSH OR RECESSED – NOT PROTRUDING AS SHOWN. HINGES SHALL BE 90° – NOT 180° AS SHOWN. PROVIDE HOLD – OPEN LATCH FOR 90° OPEN POSITION (NOT SHOWN).
1

SECTION 4 — SCALE: NTS — 00M–4

ACCESS HATCH W/ HINGED COVER AND DRAIN

DETAIL L — NTS

09/16/91 – 17:01

RECORD DRAWING

NO.	DATE	DRWN	CHK'D	DESCRIPTION
1	9/97	FXP	ASG	RECORD DRAWING

REVISIONS

DESIGNED BY: TDH
DRAWN BY: GPB
CHECKED BY/DATE: TDH 9/91
APPRV'D BY/DATE: TDH 9/91

COMMONWEALTH OF VIRGINIA — THOMAS D. HALL No. 12502 — PROFESSIONAL ENGINEER

CAMP DRESSER & McKEE
environmental engineers, scientists, planners, & management consultants

THIS DRAWING HAS BEEN REVISED BY HAZEN AND SAWYER, P.C. TO REFLECT MODIFICATIONS MADE DURING CONSTRUCTION

CDM

ARLINGTON COUNTY, VIRGINIA
WATER POLLUTION CONTROL PLANT
UPGRADE AND EXPANSION- PHASE IIIB

MECHANICAL DETAILS

SCALE NOTE

SCALE BAR SHOWN BELOW IS ONE INCH LONG ON A FULL SIZE DRAWING. WHEN SCALING DRAWINGS, MEASURE BAR TO DETERMINE IF SCALES SHOWN WILL REQUIRE ADJUSTING.

ONE INCH

CONTRACT NO.	90–02–WPC
YEAR	1991
LOCATION CODE	00
SPECIALTY CODE	M
PROJECT NO.	5002–33
FILE NAME	00M–0004.DWG
DRAWING NO.	00M–4
SHEET NO.	39

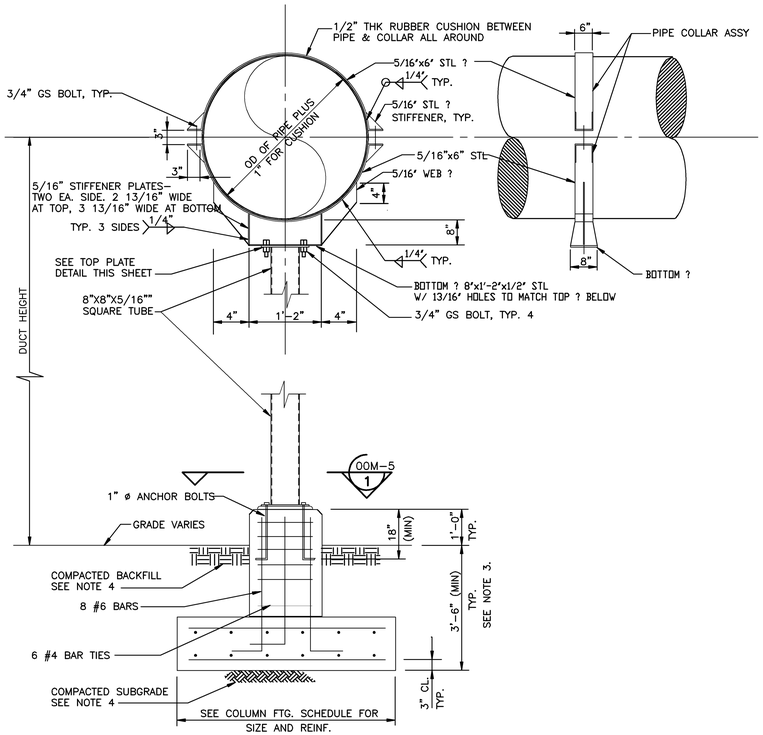

TYPE A FRP DUCT SUPPORT DETAIL

SCALE: 1/2"= 1'-0"

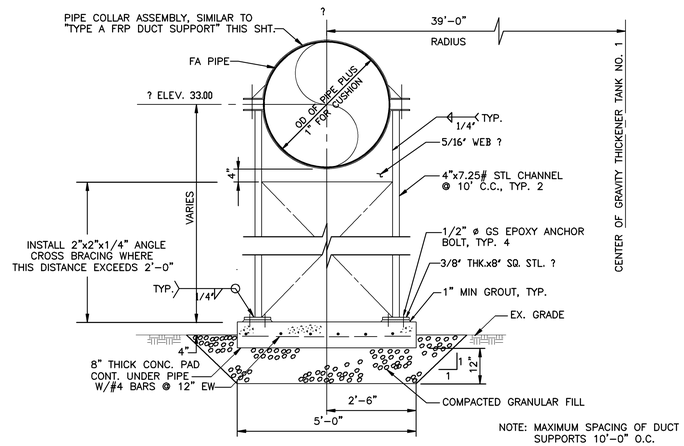

TYPE D FRP DUCT SUPPORT DETAIL

SCALE: 1/2" = 1'-0"

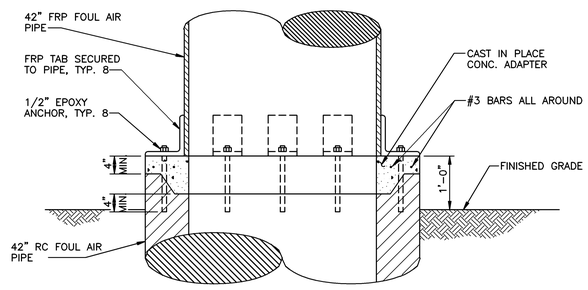

FRPxRCP CONNECTION

DETAIL A — SCALE: 3/4"=1'-0" — 00C-10,11,22

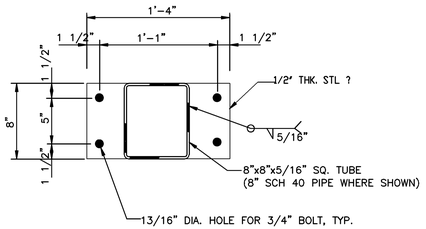

TOP PLATE DETAIL (BOTTOM VIEW)

SCALE: 1 1/2"= 1'-0"

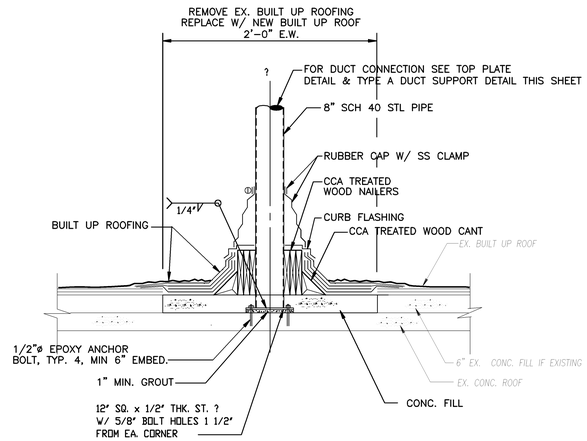

TYPE C FRP DUCT SUPPORT DETAIL

SCALE: 1/2" = 1'-0"

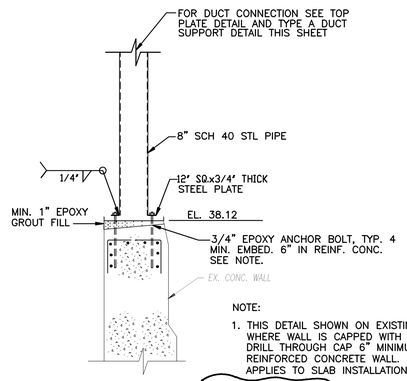

TYPE B FRP DUCT SUPPORT DETAIL

SCALE: 1/2" = 1'-0"

COLUMN FOOTING SCHEDULE			
DUCT HEIGHT	FOOTING SIZE	FOOTING DEPTH	FOOTING REINF. (EW EF)
8'-0" TO 14'-0"	6'-0" x 6'-0"	1'-3"	7-#6
5'-0" TO 8'-0"	4'-0" x 4'-0"	1'-3"	6-#5
< 5'-0"	3'-0" x 3'-0"	1'-0"	4-#4

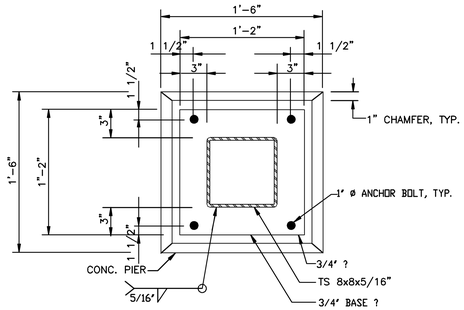

BASE DETAIL

SECTION 1 — SCALE: 1 1/2"-1'-0" — 00M-5

NOTES:

1. USE ASTM A125 GS BOLTS FOR CONNECTIONS.
2. SEE GENERAL NOTES ON STRUCTURAL DRAWINGS FOR CONCRETE, FORMWORK, REINFORCING, AND COORDINATION NOTES.
3. CONTRACTOR SHALL EXCAVATE TO LOCATE EXISTING PIPING. CONCRETE FOOTING AND DUCT SUPPORT SHALL BE LOCATED SO AS TO AVOID EXISTING PIPING. IF EXISTING PIPING CANNOT BE AVOIDED, CONTRACTOR SHALL SUBMIT FOR APPROVAL PLANS FOR FOOTING CONSTRUCTION WHICH PROTECTS THE INTEGRITY OF EXISTING PIPING.
4. SUBGRADE AND BACKFILL SHALL BE COMPACTED TO 100% STANDARD PROCTOR MAXIMUM DRY DESIGNED.

NO.	DATE	DRWN	CHK'D	DESCRIPTION
1	9/97	FXP	ASG	RECORD DRAWING

REVISIONS

DESIGNED BY: TBM
DRAWN BY: GPB
CHECKED BY/DATE: TDH 9/91
APPRV'D BY/DATE: TDH 9/91

COMMONWEALTH OF VIRGINIA — THOMAS D. HALL No. 12592 — PROFESSIONAL ENGINEER

CAMP DRESSER & McKEE — environmental engineers, scientists, planners, & management consultants

THIS DRAWING HAS BEEN REVISED BY HAZEN AND SAWYER, P.C. TO REFLECT MODIFICATIONS MADE DURING CONSTRUCTION

CDM

ARLINGTON COUNTY, VIRGINIA
WATER POLLUTION CONTROL PLANT
UPGRADE AND EXPANSION- PHASE IIB

DUCT SUPPORT SECTIONS AND DETAILS

SCALE NOTE

SCALE BAR SHOWN BELOW IS ONE INCH LONG ON A FULL SIZE DRAWING. WHEN SCALING DRAWINGS, MEASURE BAR TO DETERMINE IF SCALES SHOWN WILL REQUIRE ADJUSTING.

—ONE INCH—

CONTRACT NO. 90-02-WPC
YEAR 1991
LOCATION CODE 00
SPECIALTY CODE M
PROJECT NO. 5002-33
FILE NAME 00M-0005.DWG
DRAWING NO. 00M-5
SHEET NO. 40

1 RECORD DRAWING

09/16/91 - 16:54

GENERAL NOTES

DESIGN CRITERIA

CODES:

- BOCA NATIONAL BUILDING CODE/1990
- SANITARY STRUCTURES: ACI 350R "CONCRETE SANITARY ENGINEERING STRUCTURES"
- OTHER STRUCTURES: ACI 318 "BUILDING CODE REQUIREMENTS FOR REINFORCED CONCRETE"
- AISC MANUAL OF STEEL CONSTRUCTION, EIGHTH EDITION

DESIGN LIVE LOADS:

- ROOFS 30 PSF
- BUILDINGS:

OFFICE AREA	50 PSF
STAIRWAYS	100 PSF
STORAGE AREAS	250 PSF

- PROCESS RELATED STRUCTURES:

OFFICE AREAS	150 PSF
STAIRWAYS	150 PSF
PROCESS SLABS	200 PSF
STORAGE AREAS	300 PSF

SUPERIMPOSED DEAD LOADS:

- ROOFS AS NOTED
- FLOORS AS NOTED

WIND LOADS:

- BASIC WIND SPEED 70 MPH
- DESIGN PRESSURES: PER BOCA SECTION 1112 REQUIREMENTS

EARTHQUAKE N.A.

CONCRETE 28-DAY STRENGTH:

- COLUMNS, BEAMS, SLABS, WALLS, FOOTINGS 4000 PSI
- WORKING SLAB 2500 PSI
- MASONRY FILLED CELL GROUT 2500 PSI
- PRESTRESSED ELEMENTS 5000 PSI

REINFORCING STEEL:

- ALL BARS ASTM A615, GRADE 60 60,000 PSI
- WELDED WIRE FABRIC ASTM A185 --

CONCRETE MASONRY UNITS:

- SEE REINFORCED CONCRETE MASONRY NOTES.

STRUCTURAL STEEL:

- ALL STRUCTURAL AND MISC. STEEL UNLESS NOTED: A36
- SHOP AND FIELD WELD: E70XX ELECTRODES

FOUNDATIONS:

- ALLOWABLE BEARING PRESSURE FOR SPREAD FOOTINGS OVER SUBSURFACE PREPARED AS PER SPECIFICATIONS: 3000 PSF

GENERAL CONDITIONS

ALL STRUCTURAL DRAWINGS SHALL BE USED IN CONJUNCTION WITH THE ARCHITECTURAL, MECHANICAL, CIVIL, ELECTRICAL, AND SHOP DRAWINGS AND SPECIFICATIONS.

THE CONTRACTOR SHALL REVIEW AND VERIFY DIMENSIONS SHOWN IN ALL PLANS AND REVIEW ALL FIELD CONDITIONS THAT MAY AFFECT THE INSTALLATION OF THE FACILITY. SHOULD DISCREPANCIES APPEAR, THE CONTRACTOR SHALL NOTIFY THE ENGINEER IN WRITING TO OBTAIN ENGINEER'S CLARIFICATION BEFORE COMMENCING WITH THE WORK.

FOR ALL ITEMS EMBEDDED IN OR PASSED THROUGH CONCRETE, THE CONTRACTOR SHALL INITIALLY REFER TO ARCHITECTURAL, MECHANICAL, HEATING AND VENTILATION DRAWINGS FOR TYPE, SIZE, LOCATION, AND SPECIAL INSTALLATION REQUIREMENTS FOR THESE ITEMS.

THE CONTRACTOR SHALL TAKE ANY AND ALL NECESSARY MEASURES TO PROTECT EXISTING STRUCTURES FROM DAMAGE WHEN WORKING IN AND AROUND EXISTING STRUCTURES PERFORMING WORK SUCH AS DEMOLITION, FOUNDATION EXCAVATION, AND OTHERS.

GENERAL CONDITIONS - CONTINUED

SIZE AND LOCATION OF EQUIPMENT PADS AND ANCHOR BOLTS SHALL BE PER EQUIPMENT MANUFACTURERS REQUIREMENTS.

ANY EQUIPMENT THAT MAY INDUCE VIBRATION TO THE STRUCTURE SHALL BE ADEQUATELY ISOLATED FROM THE STRUCTURES.

ALL DETAILS AND SECTIONS SHOWN ON THE DRAWINGS ARE INTENDED TO BE TYPICAL AND SHALL BE CONSTRUED TO APPLY TO ANY SIMILAR SITUATION ELSEWHERE ON THE PROJECT, EXCEPT WHERE A DIFFERENT DETAIL IS SHOWN.

STANDARD DETAILS (SHOWN ON OOS-2, OOS-3, & OOS-4) APPLY TO ALL SIMILAR SITUATIONS ON THE PROJECT, EXCEPT WHERE A DIFFERENT DETAIL IS SHOWN.

CONCRETE

ALL MATERIALS AND METHODS OF CONSTRUCTION SHALL BE IN ACCORDANCE WITH ACI 318 REQUIREMENTS.

ALL CONCRETE SHALL BE AIR-ENTRAINED WITH 4000 PSI COMPRESSIVE STRENGTH AT 28 DAYS UNLESS NOTED OTHERWISE.

WATER REDUCING AGENT SHALL BE IN ACCORDANCE WITH ASTM C494. ALL CONCRETE SURFACES EXPOSED TO AIR, UNLESS OTHERWISE NOTED IN SPECIFICATIONS, SHALL BE TREATED WITH AN APPROPRIATE CURING COMPOUND AS SOON AS CEMENT FINISHING IS COMPLETED OR FORMS ARE REMOVED.

ALL EXPOSED CORNERS OF CONCRETE SHALL HAVE A MINIMUM CHAMFER OF 3/4" UNLESS OTHERWISE NOTED.

THE CONTRACTOR SHALL OBTAIN ENGINEER'S APPROVAL FOR THE LOCATION OF CONSTRUCTION JOINTS THAT ARE NOT SHOWN ON THE DRAWINGS.

REINFORCING STEEL

REINFORCEMENT SHALL CONFORM TO ASTM A615, GRADE 60 REQUIREMENTS. ALL ACCESSORIES SHALL BE IN CONFORMANCE WITH ACI 315 REQUIREMENTS. REINFORCING STEEL SHALL HAVE THE FOLLOWING CLEAR COVER UNLESS OTHERWISE NOTED:

- CONCRETE CAST AGAINST WORKING SLAB 2"
- CONCRETE CAST AGAINST EARTH 3"
- FORMED SURFACES IN CONTACT WITH SOIL, WATER OR EXPOSED TO WEATHER 2"
- FORMED SURFACES NOT EXPOSED TO WEATHER OR IN CONTACT WITH SOIL:
  - SLABS, WALLS, AND JOISTS 3/4"
  - BEAMS AND COLUMNS 1-1/2"

LAP SPLICES SHALL BE AS SHOWN ON THE DRAWINGS. FOR LAP SPLICES NOT SHOWN ON THE DRAWINGS, THE CONTRACTOR SHALL OBTAIN ENGINEERS APPROVAL.

THE CONTRACTOR SHALL PREPARE PLACING DRAWINGS AND SCHEDULES IN CONFORMANCE WITH ACI 315 REQUIREMENTS.

STRUCTURAL STEEL

DESIGN, FABRICATION, ERECTION MATERIALS AND WORKMANSHIP SHALL BE IN ACCORDANCE WITH THE LATEST AISC SPECIFICATIONS AND THE DESIGN DRAWINGS.

ALL STRUCTURAL STEEL: ASTM A36.

ALL PIPE: ASTM A53 GRADE B.

THE FABRICATOR SHALL DESIGN AND DETAIL ALL PARTS OF CONNECTIONS NOT FULLY DETAILED ON THE DESIGN DRAWINGS. THE NUMBER OF BOLTS AND OTHER SIMILAR ELEMENTS SHOWN ON THE DRAWINGS ARE PICTORIAL ONLY.

SHOP AND ERECTION DRAWINGS SHALL BE SUBMITTED TO THE ENGINEER FOR REVIEW.

WELDED CONNECTIONS SHALL BE IN ACCORDANCE WITH THE LATEST AWS STRUCTURAL WELDING CODE REQUIREMENTS. ELECTRODES SHALL BE E-70XX.

BOLTED CONNECTIONS:

- MAIN CONNECTIONS: 3/4"ø ASTM BOLTS. HOLES: 13/16"ø CONNECTIONS SHALL BE "BEARING" TYPE WITH THREADS EXCLUDED FROM THE SHEAR PLANE.
- SECONDARY CONNECTIONS: 3/4"ø (UNLESS NOTED) ASTM A307 GRADE A BOLTS.
- ALL CONNECTIONS SHALL HAVE A MINIMUM OF TWO BOLTS.

GUSSET PLATES SHALL BE A MINIMUM OF 3/8" THICK.

ALL COLUMNS SHALL HAVE MILLED ENDS FOR FULL BEARING AT BASE PLATES.

REINFORCED CONCRETE MASONRY UNIT CONSTRUCTION

DESIGN CRITERIA:

- DESIGN COMPRESSIVE STRENGTH OF MASONRY AT 28 DAYS f'm = 1350 PSI
- ALLOWABLE STEEL STRESS fs = 24,000 PSI

CONTINUOUS INSPECTION IS REQUIRED FOR ALL MASONRY WORK ALL MATERIALS AND METHODS OF CONSTRUCTION SHALL BE IN ACCORDANCE WITH DRAWINGS AND SPECIFICATIONS AND:

- THE NATIONAL CONCRETE MASONRY ASSOCIATION "SPECIFICATIONS FOR DESIGN AND CONSTRUCTION OF LOAD BEARING STRUCTURES."
- ACI 530 "BUILDING CODE REQUIREMENTS FOR REINFORCED MASONRY STRUCTURES."

MATERIALS:

- BLOCK: CONFORM TO ASTM C90 - GRADE N, TYPE I TWO-CELL, 8"x8"x16" (COMPRESSIVE STRENGTH, GROSS AREA 1000 PSI)
- MORTAR: CONFORM TO ASTM C270, TYPE M . MINIMUM COMPRESSIVE STRENGTH AT 28 DAYS - 2500 PSI UTILIZE TYPE I CEMENT AND TYPE S LIME. MASONRY CEMENT WILL NOT BE CONSIDERED.
- GROUT: CONFORM TO C476, COARSE GROUT. MINIMUM COMPRESSIVE STRENGTH AT 28 DAYS - 2500 PSI
- STEEL: DUR-O-WAL OR EQUAL JOINT REINFORCEMENT AT EVERY OTHER COURSE (16" O.C.) BOND BEAM AND FILLED CELL REINFORCEMENT AS PER DRAWINGS (ASTM A615, GRADE 60).

CONSTRUCTION:

- ALL FILLED CELLS AND COLUMNS SHALL BE POURED AT LEAST TWO HOURS PRIOR TO POURING LINTEL BLOCK OR TIE BEAMS.
- MAX. CONSTRUCTION HEIGHT OF MASONRY WALLS WITHOUT FILLED CELL OR COLUMN POURS IS TO BE 4'-0". THE CONCRETE FOR FILLED CELLS SHALL BE RODDED OR PUDDLED DURING PLACEMENT TO INSURE COMPLETE FILLING TO THE BLOCK CORE.
- SEE STANDARD DETAILS AND ARCHITECTURAL DRAWINGS FOR LINTEL REQUIREMENTS OVER OPENINGS.
- PROVIDE CLEAN OUT AND INSPECTION BLOCK OUTS IN CELLS CONTAINING REINF.

FLOTATION CONSIDERATION

STRUCTURES WERE DESIGNED TO BE NON-BUOYANT AFTER THEY ARE PLACED INTO OPERATION. THEREFORE, THE STRUCTURES MAY BE BUOYANT DURING CONSTRUCTION. GENERAL CONTRACTOR SHALL PROTECT ALL STRUCTURES FROM FLOTATION DURING CONSTRUCTION, REGARDLESS OF GROUND WATER LEVELS, UNTIL STRUCTURES ARE PLACED IN OPERATION.

ABBREVIATIONS:

ALUM	ALUMINUM	MAT'L	MATERIAL
BLDG	BUILDING	MAX	MAXIMUM
BOT	BOTTOM	MIN	MINIMUM
CJ	CONTROL JOINT	MISC	MISCELLANEOUS
CMU	CONCRETE MASONRY UNIT	NF	NEAR FACE
CONC	CONCRETE	NTS	NOT TO SCALE
CONST JT	CONSTRUCTION JOINT	OC	ON CENTER
CONT	CONTINUOUS	PLF	POUNDS PER LINEAR FOOT
DIA	DIAMETER	PROJ	PROJECTION
DWG	DRAWING	PSF	POUNDS PER SQUARE FOOT
EF	EACH FACE	PSI	POUNDS PER SQUARE INCH
EJ	EXPANSION JOINT	SPECS	SPECIFICATIONS
EL	ELEVATION	SS	STAINLESS STEEL
EW	EACH WAY	STD	STANDARD
FF	FAR FACE	REINF	REINFORCEMENT
FTG	FOOTING	T&B	TOP AND BOTTOM
HORIZ	HORIZONTAL	TYP	TYPICAL
HP	HIGH POINT	UN	UNLESS NOTED
ID	INSIDE DIAMETER	VERT	VERTICAL
LP	LOW POINT	WWF	WELDED WIRE FABRIC

DESIGNED BY:
DRAWN BY:
CHECKED BY/DATE:
APPRV'D BY/DATE:

REVISIONS

NO.	DATE	DRWN	CHK'D	DESCRIPTION
1	9/97	FXP	ASG	RECORD DRAWING

CAMP DRESSER & McKEE

THIS DRAWING HAS BEEN REVISED BY HAZEN AND SAWYER, P.C. TO REFLECT MODIFICATIONS MADE DURING CONSTRUCTION

environmental engineers, scientists, planners, & management consultants CDM

ARLINGTON COUNTY, VIRGINIA
WATER POLLUTION CONTROL PLANT
UPGRADE AND EXPANSION- PHASE IB

STRUCTURAL-GENERAL NOTES

RECORD DRAWING

SCALE NOTE

SCALE BAR SHOWN BELOW IS ONE INCH LONG ON A FULL SIZE DRAWING. WHEN SCALING DRAWINGS, MEASURE BAR TO DETERMINE IF SCALES SHOWN WILL REQUIRE ADJUSTING.

ONE INCH

CONTRACT NO.

YEAR

LOCATION CODE	SPECIALTY CODE
00	S

PROJECT NO. 5002-33

FILE NAME 00S-1.DWG

DRAWING NO. 00S-1

SHEET NO. 41

STI structural technologies inc.
CONSULTING ENGINEERS
Wekiva Business Center
Suite 120, 1428 East Semoran Blvd., Apopka, Florida 32703
(407) 889-9660

DRAWN BY : RAH
CHECKED BY : REH
APPROVED BY : BE
DATE : OCT, 1990
JOB NO: 90-111

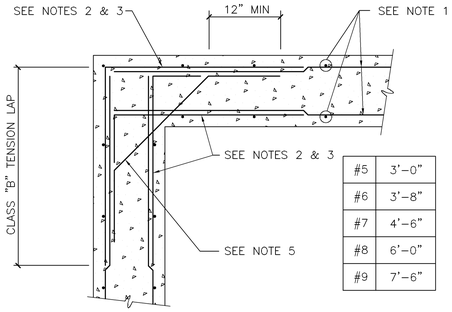

#5	3'-0"
#6	3'-8"
#7	4'-6"
#8	6'-0"
#9	7'-6"

DETAIL NTS A
WALL CORNER REINFORCING

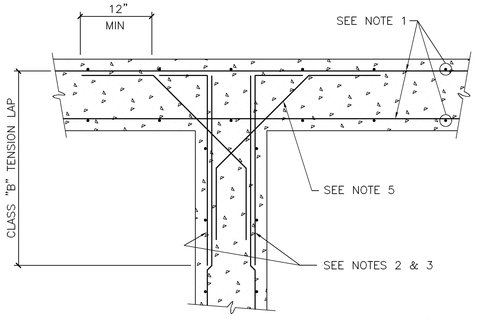

DETAIL NTS B
WALL INTERSECTION REINFORCING

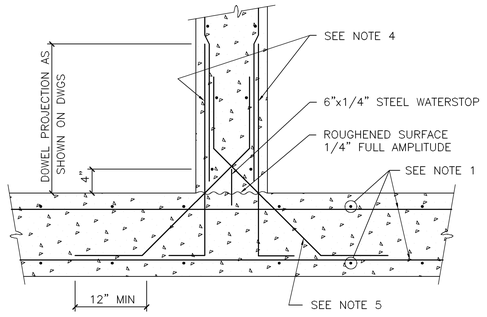

DETAIL NTS C
WALL BASE CONSTRUCTION JOINT

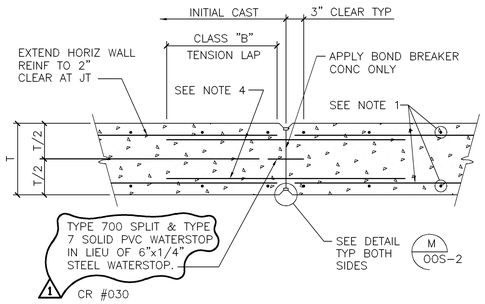

DETAIL NTS D
WALL CONTROL JOINT

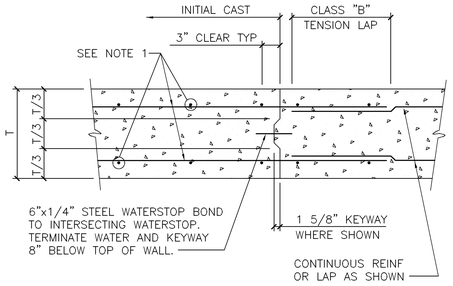

DETAIL NTS E
WALL CONSTRUCTION JOINT

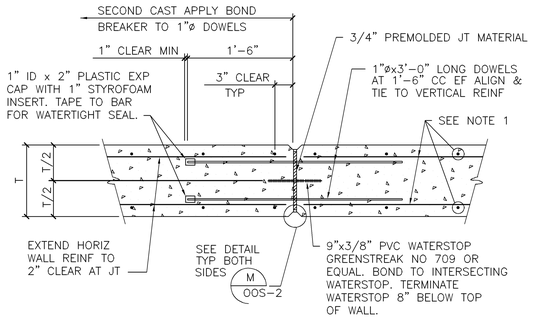

DETAIL NTS F
WALL AND SLAB EXPANSION JOINT
1
CLAR. # 36

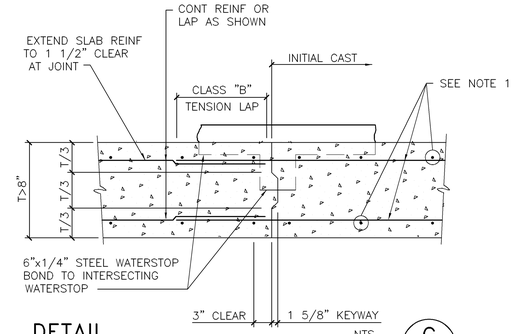

DETAIL NTS G
BASE/ELEVATED SLAB CONSTRUCTION JOINT

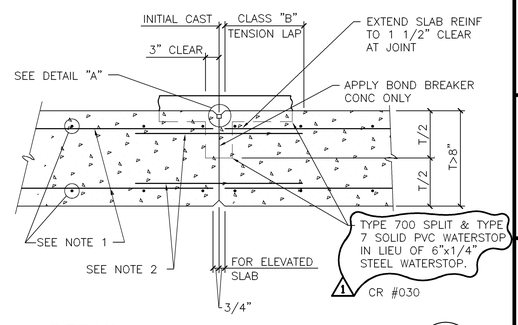

DETAIL NTS H
BASE/ELEVATED SLAB CONTROL JOINT

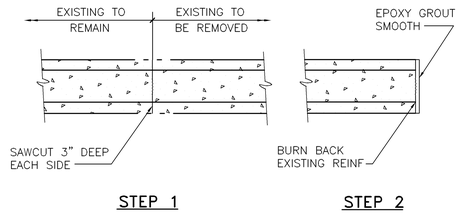

DETAIL NTS J
NEW OPENING IN EXISTING WALL

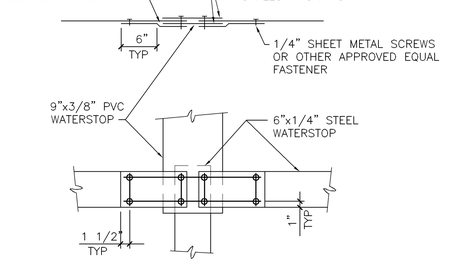

DETAIL NTS K
WATERSTOP SPLICE STEEL TO PVC

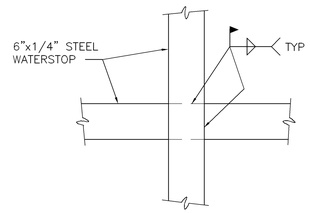

DETAIL NTS L
WATERSTOP SPLICE STEEL TO STEEL

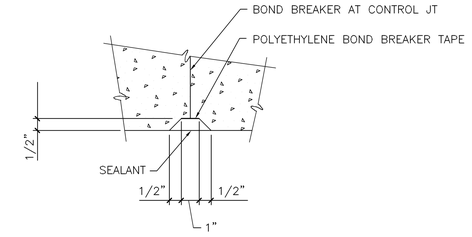

DETAIL NTS M
JOINT SEALANT

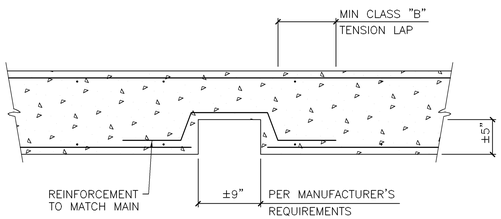

DETAIL NTS N
REINFORCING AT GATE AND SCREEN BLOCK OUT

NOTES:

1. BASIC SLAB/WALL/BEAM REINF AS SHOWN ON DESIGN DWGS
2. SIZE & SPACING OF BAR TO MATCH WALL/BEAM REINF AS SHOWN ON DESIGN DWGS
3. FOR ADD BARS AT CORNERS AND INTERSECTIONS SEE DESIGN DWGS
4. FOR DOWEL SIZE & SPACING SEE DESIGN DWGS
5. DIAGONALS WHERE SPECIFIED ON DESIGN DWGS
6. ALL HOOKS SHOWN ARE STANDARD

NOTE:
STANDARD DETAILS SHOWN ON OOS-2, OOS-3, AND OOS-4 APPLY TO ALL SIMILAR SITUATIONS ON THE PROJECT, EXCEPT WHERE A DIFFERENT DETAIL IS SHOWN.

STI structural technologies inc.
CONSULTING ENGINEERS
Wekiva Business Center
Suite 120, 1428 East Semoran Blvd., Apopka, Florida 32703
(407) 889-9660

DRAWN BY : RAH
CHECKED BY : REH
APPROVED BY : BE
DATE : OCT, 1990
JOB NO: 90-111

DESIGNED BY:
DRAWN BY:
CHECKED BY/DATE:
APPRV'D BY/DATE:

REVISIONS

NO.	DATE	DRWN	CHK'D	DESCRIPTION
1	9/97	FXP	ASG	RECORD DRAWING

CAMP DRESSER & McKEE
environmental engineers, scientists, planners, & management consultants
CDM

THIS DRAWING HAS BEEN REVISED BY HAZEN AND SAWYER, P.C. TO REFLECT MODIFICATIONS MADE DURING CONSTRUCTION

ARLINGTON COUNTY, VIRGINIA
WATER POLLUTION CONTROL PLANT
UPGRADE AND EXPANSION- PHASE IB

STRUCTURAL-STANDARD DETAILS

RECORD DRAWING

SCALE NOTE
SCALE BAR SHOWN BELOW IS ONE INCH LONG ON A FULL SIZE DRAWING. WHEN SCALING DRAWINGS, MEASURE BAR TO DETERMINE IF SCALES SHOWN WILL REQUIRE ADJUSTING.
ONE INCH

CONTRACT NO.
YEAR
LOCATION CODE 00
SPECIALTY CODE S
PROJECT NO. 5002-33
FILE NAME OOS-2.DWG
DRAWING NO. OOS-2
SHEET NO. 42

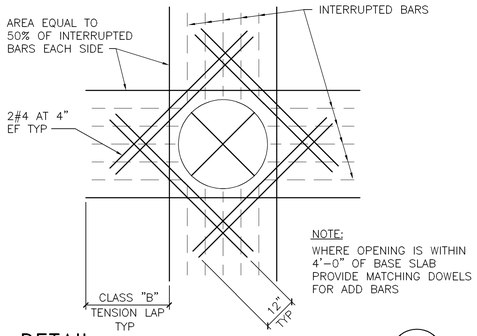

DETAIL NTS A

REINFORCING AT CIRCULAR OPENINGS GREATER THAN 12"

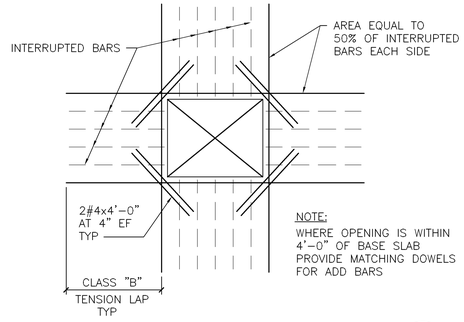

DETAIL NTS B

REINFORCING AT RECTANGULAR OPENING GREATER THAN 12"

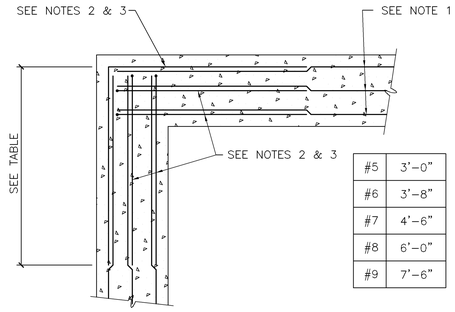

#5	3'-0"
#6	3'-8"
#7	4'-6"
#8	6'-0"
#9	7'-6"

DETAIL NTS C

BEAM/GRADE BEAM CORNER REINFORCING

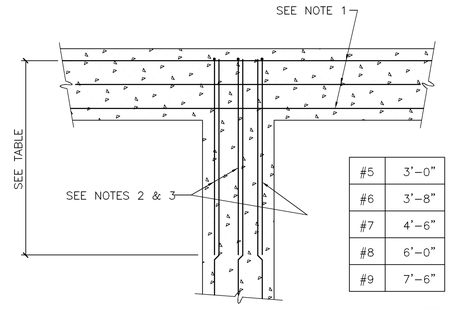

#5	3'-0"
#6	3'-8"
#7	4'-6"
#8	6'-0"
#9	7'-6"

DETAIL NTS D

BEAM/GRADE BEAM INTERSECTION REINFORCING

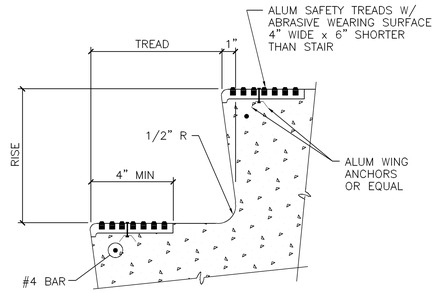

DETAIL NTS E

EMBEDDED SAFETY TREAD

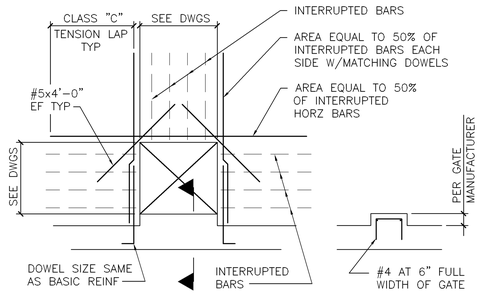

DETAIL NTS F

SLIDE GATE FACE MOUNTED

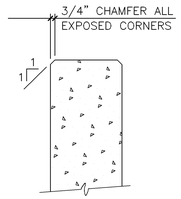

DETAIL NTS G

CHAMFER

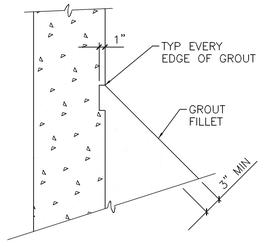

DETAIL NTS H

GROUT FILLET

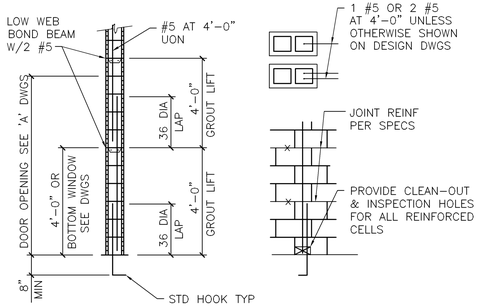

DETAIL NTS J

TYPICAL FILLED CELL

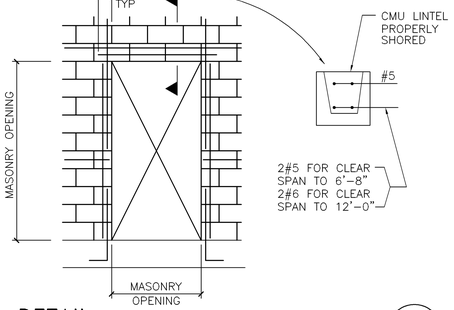

DETAIL NTS K

LINTEL WITHOUT STUCCO FINISH

NOTES:

1. BASIC SLAB/WALL/BEAM REINF AS SHOWN ON DESIGN DWGS
2. SIZE & SPACING OF BAR TO MATCH WALL/BEAM REINF AS SHOWN ON DESIGN DWGS
3. FOR ADD BARS AT CORNERS AND INTERSECTIONS SEE DESIGN DWGS
4. FOR DOWEL SIZE & SPACING SEE DESIGN DWGS
5. DIAGONALS WHERE SPECIFIED ON DESIGN DWGS
6. ALL HOOKS SHOWN ARE STANDARD

NOTE:
STANDARD DETAILS SHOWN ON OOS-2, OOS-3, AND OOS-4 APPLY TO ALL SIMILAR SITUATIONS ON THE PROJECT, EXCEPT WHERE A DIFFERENT DETAIL IS SHOWN.

RECORD DRAWING

STI structural technologies inc.
CONSULTING ENGINEERS
Wekiva Business Center
Suite 120, 1428 East Semoran Blvd., Apopka, Florida 32703
(407) 889-9660

DRAWN BY : RAH
CHECKED BY : REH
APPROVED BY : BE
DATE : OCT, 1990
JOB NO: 90-111

REVISIONS

NO.	DATE	DRWN	CHK'D	DESCRIPTION
1	9/97	FXP	ASG	RECORD DRAWING

DESIGNED BY:
DRAWN BY:
CHECKED BY/DATE:
APPRV'D BY/DATE:

CAMP DRESSER & McKEE

THIS DRAWING HAS BEEN REVISED BY HAZEN AND SAWYER, P.C. TO REFLECT MODIFICATIONS MADE DURING CONSTRUCTION

environmental engineers, scientists, planners, & management consultants

CDM

ARLINGTON COUNTY, VIRGINIA
WATER POLLUTION CONTROL PLANT
UPGRADE AND EXPANSION- PHASE II

STRUCTURAL-STANDARD DETAILS

SCALE NOTE
SCALE BAR SHOWN BELOW IS ONE INCH LONG ON A FULL SIZE DRAWING. WHEN SCALING DRAWINGS, MEASURE BAR TO DETERMINE IF SCALES SHOWN WILL REQUIRE ADJUSTING.
←ONE INCH→

CONTRACT NO.
YEAR
LOCATION CODE: 00
SPECIALTY CODE: S
PROJECT NO. 5002-33
FILE NAME 00S-3.DWG
DRAWING NO. 00S-3
SHEET NO. 43

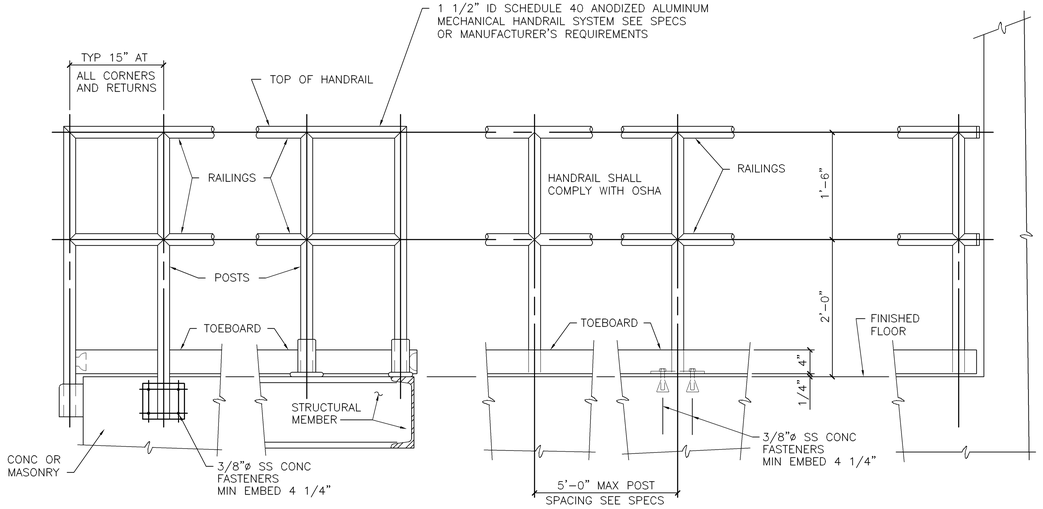

DETAIL — NTS — A

TYPICAL HANDRAIL AND GUARDRAIL APPLICATIONS

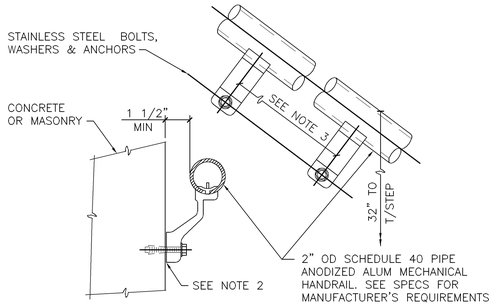

DETAIL — NTS — B

WALL MOUNTED HANDRAIL

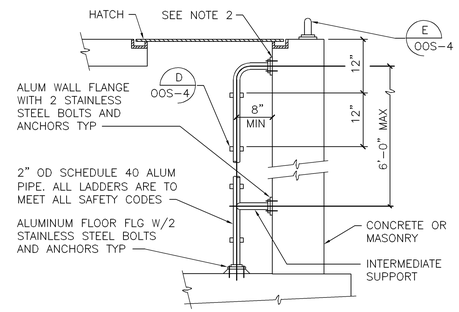

DETAIL — NTS — C

ALUMINUM LADDER

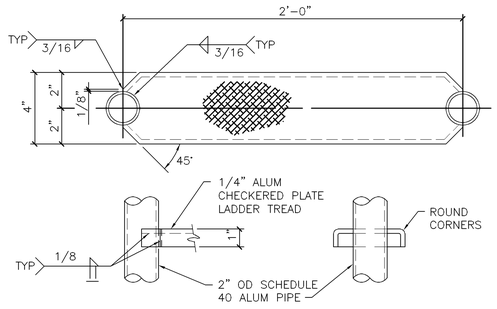

DETAIL — NTS — D

ALUMINUM LADDER TREAD

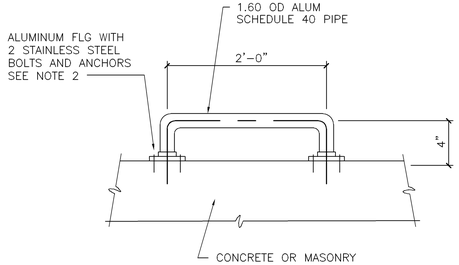

DETAIL — NTS — E

GRAB BAR

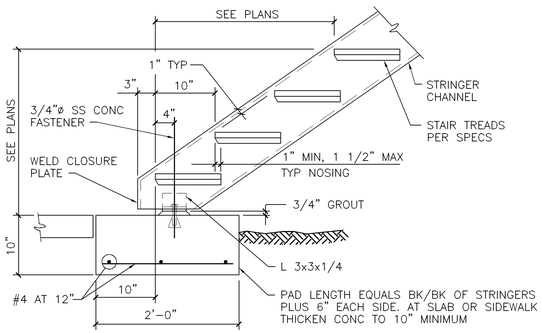

DETAIL — NTS — F

STAIR STRINGER TO CONCRETE PLATFORM

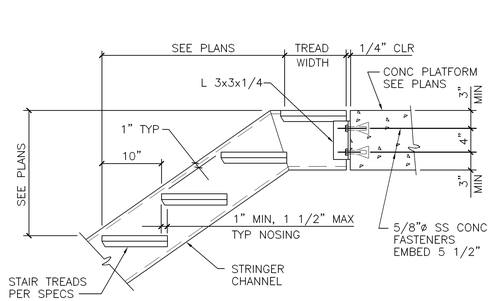

DETAIL — NTS — G

STAIR STRINGER TO CONCRETE PLATFORM TOP

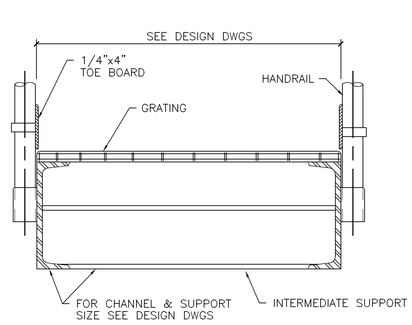

DETAIL — NTS — H

TYPICAL PLATFORM SECTION

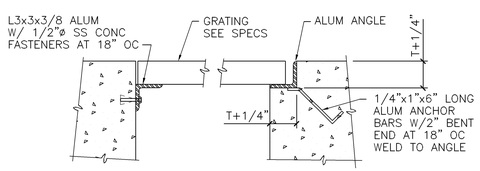

MAXIMUM SPAN	DEPTH	BEARING BAR	
		THICKNESS	SPACING
3'-0"	1 1/4"	3/16"	1 3/16"
4'-0"	1 1/2"	3/16"	1 3/16"
5'-0"	2"	3/16"	1 3/16"
6'-0"	2 1/4"	3/16"	1 3/16"

DETAIL — NTS — J

GRATING AND GRATING SUPPORT

NOMINAL BEAM DEPTH, INCHES	ROWS OF BOLTS	LENGTH OF ANGLE
16-21	4	11 1/2"
12-15	3	8 1/2"
8-10	2	5 1/2"

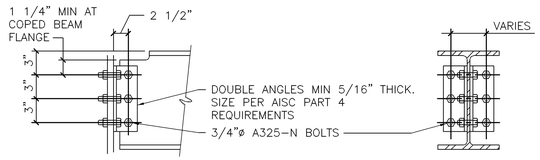

DETAIL — NTS — K

TYPICAL FRAMING CONNECTION

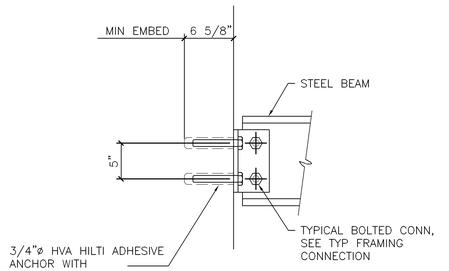

BEAM DEPTH	8, 10, 12	14, 16, 18
NO. OF ANCHORS	4	6

DETAIL — NTS — L

STEEL BEAM TO CONCRETE

NOTES

1. ALUMINUM EMBEDDED IN CONCRETE MUST BE PAINTED WITH ONE SHOP COAT OF HEAVY BITUMASTIC.
2. ALUMINUM SHAPES IN CONTACT WITH CONCRETE MUST BE SEPARATED BY A 1/32" NEOPRENE GASKET OR ANY CASE WHERE TWO DIFFERENT METALS ARE TO BE IN CONTACT. A NEOPRENE GASKET MUST BE PROVIDED.
3. HANDRAILS, GUARDRAILS, POSTS, BRACKETS AND MOUNTINGS SHALL MEET THE SOUTH FLORIDA BUILDING CODE (S.F.B.C.) AND OCCUPATIONAL SAFETY AND HEALTH ADMINISTRATION (OSHA) LOADING REQUIREMENTS.
4. TOP OF ALL GUARDRAILS SHOULD BE 42" HIGH ABOVE THE FINISH FLOOR OR WALKWAY, THE INTERMEDIATE RAILS SHALL BE EQUALLY SPACED BETWEEN THE TOP RAIL AND THE TOEBOARD.
5. ALL WALKWAYS SHALL USE GRATING UNLESS CHECKERED PLATE IS SHOWN ELSEWHERE ON THE DRAWINGS.
6. FOR TYPE I & TYPE II HANDRAIL SEE "A" DWGS.

NOTE:
STANDARD DETAILS SHOWN ON OOS-2, OOS-3, AND OOS-4 APPLY TO ALL SIMILAR SITUATIONS ON THE PROJECT, EXCEPT WHERE A DIFFERENT DETAIL IS SHOWN.

structural technologies inc.
CONSULTING ENGINEERS
Wekiva Business Center
Suite 120, 1428 East Semoran Blvd., Apopka, Florida 32703
(407) 889-9560

DRAWN BY : RAH
CHECKED BY : REH
APPROVED BY : BE
DATE : OCT, 1990
JOB NO: 90-111

REVISIONS

NO.	DATE	DRWN	CHK'D	DESCRIPTION
1	9/97	FXP	ASG	RECORD DRAWING

DESIGNED BY:
DRAWN BY:
CHECKED BY/DATE:
APPRV'D BY/DATE:

CAMP DRESSER & McKEE
environmental engineers, scientists, planners, & management consultants
CDM

THIS DRAWING HAS BEEN REVISED BY HAZEN AND SAWYER, P.C. TO REFLECT MODIFICATIONS MADE DURING CONSTRUCTION

RECORD DRAWING

ARLINGTON COUNTY, VIRGINIA
WATER POLLUTION CONTROL PLANT
UPGRADE AND EXPANSION- PHASE IB

STRUCTURAL-STANDARD DETAILS

SCALE NOTE
SCALE BAR SHOWN BELOW IS ONE INCH LONG ON A FULL SIZE DRAWING. WHEN SCALING DRAWINGS, MEASURE BAR TO DETERMINE IF SCALES SHOWN WILL REQUIRE ADJUSTING.
ONE INCH

CONTRACT NO.
YEAR
LOCATION CODE: 00
SPECIALTY CODE: S
PROJECT NO. 5002-33
FILE NAME 00S-4.DWG
DRAWING NO. 00S-4
SHEET NO. 44

SYMBOLS

RTD	REMOTE TEMPERATURE DETECTOR
FR	FREEZE PROTECTION THERMOSTAT
F	FIRE PROTECTION THERMOSTAT
T	THERMOSTAT
H	HUMIDISTAT
	SMOKE DETECTOR
	AIR FLOW SENSOR
VD	VOLUME DAMPER
FD	FIRE DAMPER
SD	SMOKE ACTUATED FIRE DAMPER
FC	FLEXIBLE CONNECTION
	ELBOW WITH TURNING VANES
EAG	EXHAUST AIR GRILLE
ER	EXHAUST REGISTER
RG	RETURN GRILLE
SR	SUPPLY REGISTER
	SUPPLY DUCT
	RETURN
	EXHAUST DUCT
DG	DOOR GRILLE
TG	TRANSFER GRILLE
RG	TRANSFER DUCT
SD	SPLITTER DAMPER
	SHOE–TAP
	EXTRACTOR
	DAMPER–EXTRACTOR DUCT CONNECTION
	CEILING DIFFUSER – TYPE VARIES
	ROOF MOUNTED EXHAUST FAN
	WALL MOUNTED EXHAUST FAN
VAV	VARIABLE AIR VOLUME REGULATOR W/ OUTLETS
	ROUND FLEXIBLE INSULATED DUCT
	SHEET METAL DUCT
	ELECTRIC UNIT HEATER
	ELECTRIC DUCT HEATER
	ENERGY RECOVERY UNIT
	VVT BOX WITH TRANSITION

ABBREVIATIONS

A	AIR
ACCU	AIR COOLED CONDENSING UNIT
AHU	AIR HANDLING UNIT
AD	ACCESS DOOR
ALUM	ALUMINUM
AR	ACID RESISTANT
ASME	AMERICAN SOCIETY OF MECHANICAL ENGINEERS
AABC	ASSOCIATED AIR BALANCE COUNCIL
AFF	ABOVE FINISHED FLOOR
ASHRAE	AMERICAN SOCIETY OF HEATING, REFRIGERATING AND AIR–CONDITIONING ENGINEERS
BDD	BACKDRAFT DAMPER
BEL	BELOW
BLDG	BUILDING
BS	BIRDSCREEN
BTU	BRITISH THERMAL UNITS
CFM	CUBIC FEET PER MINUTE
CLG	CEILING
CD	CEILING DIFFUSER
CONC	CONCRETE
COND	CONDENSATE
CONN	CONNECTION
CW	CHILLED WATER
CWS	CHILLED WATER SUPPLY
CWR	CHILLED WATER RETURN
DB	DRY BULB
DISC	DISCHARGE
DG	DOOR GRILLE
DN	DOWN
DPR	DAMPER
DS	DISCONNECT SWITCH
DIA	DIAMETER
EA	EACH
EAG	EXHAUST AIR GRILLE
EDH	ELECTRIC DUCT HEATER
EUH	ELECTRIC UNIT HEATER
EER	ENERGY EFFICIENCY RATIO
EF	EXHAUST FAN
ER	EXHAUST REGISTER
EVAP	EVAPORATION
FA	FOUL AIR
FC	FLEXIBLE CONNECTION
FD	FIRE DAMPER
FIN	FINISH
FLA	FULL LOAD AMPS
FL	FLOOR
FRP	FIBERGLASS REINFORCED PLASTIC
FT	FEET
GA	GAUGE
GALV	GALVANIZED
GPH	GALLONS PER HOUR
GPM	GALLONS PER MINUTE
GFC	GAS FIRED CHILLER
HP	HORSEPOWER
HR	HOUR
HG	HOT GAS
HW	HOT WATER

ABBREVIATIONS (CONTINUED)

KW	KILOWATT
LD	LINEAR DIFFUSER
LVR	LOUVER
LIQ	LIQUID
MCC	MOTOR CONTROL CENTER
MFR	MANUFACTURER
MTD	MOUNTED
MTG	MOUNTING
NOM	NOMINAL
NTS	NOT TO SCALE
O/A	OUTSIDE AIR
OBD	OPPOSED BLADE DAMPER
PCD	PERFORATED CEILING DIFFUSER
PBD	PARALLEL BLADE DAMPER
PCF	POUNDS PER CUBIC FOOT
PPM	PARTS PER MILLION
PAC	PACKAGED AIR CONDITIONING UNIT
PSI	POUNDS PER SQUARE INCH
PVC	POLYVINYL CHLORIDE
R/A	RETURN AIR
RG	RETURN GRILLE
REF	REFRIGERANT
RPM	REVOLUTIONS PER MINUTE
RM	ROOM
SEER	SEASONAL ENERGY EFFICIENCY RATIO
SHT	SHEET
SM	SHEET METAL
FT^2	SQUARE FEET
ST	STEAM
SP	STATIC PRESSURE
SS	STAINLESS STEEL
STD	STANDARD
SUCT	SUCTION
S/A	SUPPLY AIR
SR	SUPPLY REGISTER
SW	SWITCH
SMACNA	SHEET METAL AND AIR CONDITIONING CONTRACTORS NATIONAL ASSOCIATION
TDH	TOTAL DISCHARGE HEAD
TEMP	TEMPERATURE
TG	TRANSFER GRILLE
TSP	TOTAL STATIC PRESSURE
TV	TURNING VANES
TYP	TYPICAL
UH	UNIT HEATER
UL	UNDERWRITERS LABORATORY
VAP	VAPOR
W/	WITH
WB	WET BULB
WT	WEIGHT
WTR	WATER
WG	WATER GAUGE

NOTES

NO.	DATE	DRWN	CHK'D	REVISIONS DESCRIPTION
1	9/97	FXP	ASG	RECORD DRAWING

DESIGNED BY: WRH
DRAWN BY: RMM,SFP
CHECKED BY/DATE: WRH/9–91
APPR'D BY/DATE: WRH/9–91

CAMP DRESSER & McKEE

THIS DRAWING HAS BEEN REVISED BY HAZEN AND SAWYER, P.C. TO REFLECT MODIFICATIONS MADE DURING CONSTRUCTION

CDM environmental engineers, scientists, planners, & management consultants

ARLINGTON COUNTY, VIRGINIA
WATER POLLUTION CONTROL PLANT
UPGRADE AND EXPANSION- PHASE IIB

HVAC
NOTES & SYMBOLS

RECORD DRAWING

SCALE NOTE
SCALE BAR SHOWN BELOW IS ONE INCH LONG ON A FULL SIZE DRAWING. WHEN SCALING DRAWINGS, MEASURE BAR TO DETERMINE IF SCALES SHOWN WILL REQUIRE ADJUSTING.
← ONE INCH →

CONTRACT NO. 000000000
YEAR 1991
LOCATION CODE 00
SPECIALTY CODE H
PROJECT NO. 5002–33
FILE NAME 00H1.DWG
DRAWING NO. 00H–1
SHEET NO. 45

C.E. BAILEY & ASSOCIATES, INC.
CONSULTING ENGINEERS
ORLANDO, CLEARWATER & FORT LAUDERDALE, FLORIDA

DUCTWORK LEGEND

SYMBOL	DESCRIPTION
———	SHEETMETAL COOLING SUPPLY AND RETURN DUCTWORK; INSULATE WITH 2" THICK, 1.5 PCF FLEXIBLE FIBERGLASS INSULATION, PER SMACNA.
———	SHEETMETAL VENTILATION DUCTWORK; INSULATE EXTERIOR AND INTERIOR ABOVE FINISHED AREAS WITH 2" THICK, 1.5 PCF FLEX. FIBERGLASS INSULATION, PER SMACNA.
———	SHEETMETAL EXHAUST DUCTWORK, PROVIDE ALUMINUM DUCTWORK FOR TOILET EXHAUST WITH SHOWERS OR WHERE INDICATED ON THE PLANS, PER SMACNA.
———	FIBERGLASS REINFORCED PLASTIC (FRP) FOUL AIR DUCTWORK, NOTED ON THE PLANS; INS. DUCTWORK INSIDE BUILDING WITH 1" THICK, 1.5 PCF FLEX. FIBERGLASS INSULATION, PER SMACNA. 1 ADD. #2

PACKAGED AIR CONDITIONING UNIT SCHEDULE

ITEM NO.	NO. REQ'D	AREA SERVED	SHEET NO.	COIL DATA: ENTERING AIR DB	ENTERING AIR WB	LEAVING AIR DB	LEAVING AIR WB	TOTAL MBH	SENSIBLE MBH	FAN DATA: CFM	OSA CFM	ESP	HP	DRIVE	COMPRESSOR NO.	COMPRESSOR TYPE	FILTERS TYPE	FILTERS SIZE NO.	E.E.R.	ELECTRICAL VOLT	PHASE	RLA	ADDISON MODEL NO.	REMARKS
PAC-1	1	PRELIMINARY TREATMENT BREAK ROOM	B8H-3	80	67	–	–	46.5	33.1	1400	300	.4	3/4	BELT	1	H	TA	2–15x30x2	9.4	480	3	9.3	PC044M	SEE NOTE 1 BELOW
PAC-2	1	PRELIMINARY TREATMENT CONTROL ROOM	B8H-3	80	67	–	–	65.2	50.6	2300	300	.4	1	BELT	1	H	TA	2–15x30x2	8.5	480	3	12.2	PC064M	SEE NOTE 2 BELOW

NOTE:
1. PROVIDE THE FOLLOWING OPTIONS: 15 KW SINGLE STAGE FACTORY ELECTRIC HEATER, HEATER AIRFLOW SAFETY SWITCH, FILTER BOX, FARR 2" 30/30 FILTERS, FACTORY CORROSION PROTECTION PACKAGE (SEACOAST), ANTI-CYCLE TIMER, SURE TRIP PHASE MONITOR, CONDENSER COIL GUARD, AND HOT WATER GENERATOR OPTION.
2. PROVIDE ALL OPTIONS AS NOTE 1 ABOVE EXCEPT HOT WATER GENERATOR; FACTORY ELECTRIC HEATER SHALL BE SINGLE STAGE 30 KW.

AIR DISTRIBUTION DEVICE SCHEDULE

SYMBOL	DESCRIPTION	MODEL	FRAME TYPE	MATERIAL	FINISH	REMARKS
PCD	PERFORATED SUPPLY AIR DIFFUSER	METAL AIRE 7000 PCS	LAY-IN OR PLASTER	ALUM.	OFF-WHITE ENAMEL	–
RG	PERFORATED RETURN AIR GRILLE	METAL AIRE 7000 PCR	LAY-IN OR PLASTER	ALUM.	OFF-WHITE ENAMEL	–
EAG	45° DEFLECTION, CURVED VANES, EXHAUST AIR GRILLE	METAL AIRE RH-E	LAY-IN OR PLASTER	ALUM.	OFF-WHITE ENAMEL	–
EAV	EXHAUST AIR VENT	ARROW 265	CHANNEL	ALUM.	DURANODIC ANODIZED	18x16 INSECT SCREEN
BDL	AUTO. BALANCED BACK DRAFT DAMPER	ARROW 655	CHANNEL	ALUM.	DURANODIC ANODIZED	18x16 INSECT SCREEN
INTAKE HOOD	OUTSIDE AIR INTAKE HOOD	GREENHECK GRS	–	ALUM.	ANODIZED	ALUM ROOF CURB
CD	OPPOSED BLADE CONTROL DAMPER	RUSKIN MD-35	CHANNEL	STEEL	MILL	LOCKING QUADRANT
SAD	PERFORATED SUPPLY AIR DIFFUSER	METAL AIRE 7000 PCS	PLASTER	ALUM.	OFF-WHITE ENAMEL	–
OAL	OUTSIDE AIR LOVER	ARROW 265	CHANNEL	ALUM.	DURANODIC ANODIZED	18x16 INSECT SCREEN

DRAWING NOTES

A	=	ALL ALUMINUM CONSTRUCTION
BDD	=	BACKDRAFT DAMPER
BS	=	BIRD SCREEN
C	=	CONTINUOUS
D	=	FAN DRAIN
DS	=	FACTORY WIRED INTEGRAL DISCONNECT SWITCH
EC	=	EPOXY COATED
FC	=	FACTORY ALUMINUM ROOF CURB
MSG	=	MOTOR SIDE GUARD
ID	=	INLET DAMPER
IFDC	=	INLET FLEXIBLE DUCT CONNECTION
NSA	=	NON-SPARKING TYPE A CONSTRUCTION
OFDC	=	OUTLET FLEXIBLE DUCT CONNECTION
T	=	LINE VOLTAGE THERMOSTAT
TEFC	=	TOTALLY ENCLOSED FAN COOLED MOTOR
2SP	=	2 SPEED, 2 WINDING MOTOR
V	=	SPRING VIBRATION ISOLATORS
VCP	=	VENTILATION CONTROL PANEL
VSC	=	WALL MOUNTED VARIABLE SPEED CONTROL
VSC*	=	MOTOR MOUNTED VARIABLE SPEED CONTROL
WC	=	WEATHER COVER
WS	=	WALL SWITCH

1 ADD. #2

HOT WATER UNIT HEATER SCHEDULE

ITEM NO.	NO. REQ'D	AREA SERVED	SHEET NO.	NORMAL MBH	ACTUAL MBH	EAT °F	LAT °F	GPM	EWT °F	LWT °F	MAX. COIL WATER VEL.–FPS	MAX. WPD FT.	ACT. WPD FT.	TRANE MODEL NO.	REMARKS
HWUH-4	1	FLOTATION THICKENER BUILDING UPPER LEVEL	F1H-2	75	74.8	40	88	7.53	180	160	3.0	5.0	2.66	UHSA 100-W2	EM, HC, CS
HWUH-4	1	FLOTATION THICKENER BUILDING UPPER LEVEL	F1H-2	75	74.8	40	88	7.53	180	160	3.0	5.0	2.66	UHSA 100-W2	EM, HC, CS
HWUH-6	1	FLOTATION THICKENER BUILDING UPPER LEVEL	F1H-2	75	74.8	40	88	7.53	180	160	3.0	5.0	2.66	UHSA 100-W2	EM, HC, CS
HWUH-7	1	FLOTATION THICKENER BUILDING UPPER LEVEL	F1H-2	75	74.8	40	88	7.53	180	160	3.0	5.0	2.66	UHSA 100-W2	EM, HC, CS
HWUH-1	1	SLUDGE STORAGE TANK BUILDING	F2H-1	25	27.9	40	90	2.8	180	160	3.0	5.0	4.28	UHSA 38-W2	EM, HC, CS
HWUH-1	1	PRELIMINARY TREATMENT BUILDING FIRST FLOOR	B8H-2	50	50.7	40	87	5.1	180	160	3.0	5.0	1.06	UHSA 70-W2	EM, HC, CS
HWUH-2	1	PRELIMINARY TREATMENT BUILDING FIRST FLOOR	B8H-2	50	50.7	40	87	5.1	180	160	3.0	5.0	1.06	UHSA 70-W2	EM, HC, CS
HWUH-1	1	EAST TUNNEL ACCESS BUILDING BASEMENT	C0H-1	25	27.9	40	90	2.8	180	160	3.0	5.0	4.28	UHSA 38-W2	EM, HC, CS
HWUH-1	1	EAST TUNNEL ACCESS BUILDING BASEMENT	C0H-1	25	27.9	40	90	2.8	180	160	3.0	5.0	4.28	UHSA 38-W2	EM, HC, CS
HWUH-9	1	WEST SLUDGE PUMP GALLERY	C0H-2	50	50.7	40	87	5.1'	180	160	3.0	5.0	1.06	UHSA 70.W2	EM, HC, CS
HWUH-10	1	WEST SLUDGE PUMP GALLERY	C0H-2	50	50.7	40	87	5.1	180	160	3.0	5.0	1.06	UHSA 70.W2	EM, HC, CS
HWUH-5	1	SOUTH TUNNEL ACCESS BUILDING – BASEMENT	C0H-3	25	27.9	40	90	2.8	180	160	3.0	5.0	4.28	UHSA 38-W2	EM, HC, CS

ELECTRIC UNIT HEATER SCHEDULE

ITEM NO.	NO. REQ'D.	AREA SERVED	SHEET	KW	MBH	STAGE	CONTROL VOLTAGE	ELECTRICAL VOLT	PHASE	AMPS	MOTOR AMPS	INDEECO MODEL NO.	REMARKS
EUH-1	1	SECONDARY SERVICE PUMP STATION	D3H-1	20.0	68.2	1	120V	460	3	25.0	2.0	TRIAD 234–U11L–0200U	PROVIDE INTEGRAL THERMOSTAT, PILOT PILOT LIGHT, AND SELECTOR SWITCH.

EXHAUST FAN SCHEDULE

ITEM NO.	NO. REQ'D	AREA SERVED	SHEET NO.	CFM	S.P.	TYPE SET	TYPE WHEEL	TYPE DRIVE	H.P.	VOLT PHASE	FAN RPM	MAX SONE VALUE	COOK MODEL NO.	REMARKS	CONTROL
EF-1	1	EXISTING PRIMARY CLARIFIER EAST SLUDGE PUMP GALLERY	C0H-1	1800	0.125"	SLAB	BI	BELT	1/3	115 1	1715	15.8	ACE–B 120C4B	BDD,DS,FC,EC,BS	C
EF-2	1	EXISTING PRIMARY CLARIFIER EAST TUNNEL ACCESS BLDG.	C0H-1	1200	0.125"	ROOF	BI	BELT	1/6	115 1	1200	8.8	ACE–B 120C2B	BDD,BS,DS,FC,EC	C
EF-3	1	NEW PRIMARY CLARIFIER SOUTH TUNNEL ACCESS BLDG.	C0H-3	6100	0.25	ROOF	BI	BELT	3/4	480 3	545	11.7	ACE–B 270C6B	BDD,BS,DS,FC,EC	C
EF-4	1	PRELIMINARY TREATMENT JANITORS CLOSET	B8H-4	50	0.5"	ROOF	BI	DIRECT	96W	115 1	1550	5.0	ACE–D 70C15D	BDD,BS,DS,FC	WS
EF-5	1	PRELIMINARY TREATMENT BREAK ROOM	B8H-4	400	0.5"	ROOF	BI	DIRECT	148W	115 1	1550	8.7	ACE–D 90C15D	BDD,DS,FC,VSC,BS	VSC
EF-6	1	PRELIMINARY TREATMENT MEN & WOMENS TOILET	B8H-4	210	0.675"	ROOF	BI	DIRECT	148W	115 1	1550	7.5	ACE–D 90C15D	BDD,DS,FC,VSC,BS	3–WAY WS
EF-7	1	PRELIMINARY TREATMENT STORAGE ROOMS	B8H-4	600	0.675"	ROOF	BI	BELT	1/6	115 1	1615	10.1	ACE–B 100C2B	BDD,DS,FC	3–WAY WS
EF-8	1	PRELIMINARY TREATMENT MCC ROOM	B8H-4	1200	0.125"	WALL	PROP	DIRECT	1/6	115 1	1050	7.9	SWD 14S10D	DS,EC,VSC*,T	T
EF-9	1	SECONDARY SLUDGE EFFLUENT PUMP STATION	D3H-1	2200	0.25	WALL	BI	BELT	1/2	480 3	1525	19.6	ACE–W 135W5B	DS,EC	C
EF-10	1	SLUDGE STORAGE BUILDING	F2H-4	5800	0.125"	ROOF	BI	BELT	1	480 3	647	13.3	ACE–B 245C7B	BDD,BS,EC,DS	VCP
EF-11	1	POTOMAC INTERCEPTOR	B6H-1	497	.875"	VERTICAL	AIRFOIL	DIRECT	1/6	115 1	1550	–	CVD 8CV15D	BS,OFDC,DS,EC	C

SEE RFC #012 1

SUPPLY FAN SCHEDULE

ITEM NO.	NO. REQ'D	AREA SERVED	SHEET NO.	CFM	S.P.	TYPE SET	TYPE WHEEL	TYPE DRIVE	H.P.	VOLT PHASE	FAN RPM	FILTER	COOK MODEL NO.	REMARKS	CONTROL
SF-1	0	NOT USED													
SF-2	1	PRELIMINARY TREATMENT BLDG. POLYMER STORAGE	B8H-4	7500	2.0"	ROOF	AIRFOIL	BELT	5	480 3	1616	N/A	180CA10	IC,2SP,TEFC,EC BS,DS,FC,D,OFDC,WC	VCP
SF-3	1	PRELIMINARY TREATMENT BLDG. BASEMENT & TUNNELS	B8H-4	11,500	2.0"	ROOF	AIRFOIL	BELT	7.5	480 3	916	N/A	270CA10	IC,2SP,TEFC,EC BS,DS,FC,D,OFDC,WC	VCP
SF-4A,B	2	PRELIMINARY TREATMENT BLDG. 2ND FLOOR SCREEN ROOM	B8H-4	9000	0.5"	ROOF	PROP	BELT	3	480 3	420	2" AL.	48SF10B	TEFC,DS,FC,A,EC,2SP	VCP
SF-5	1	SLUDGE STORAGE BLDG.	F2H-2	3400	0.75"	INLINE	AIRFOIL	BELT	2	480 3	2250	2" AL.	14CV–S	TEFC,DS,FC,A,EC, IFDC,MG,OFDC	VCP
SF-6	1	PRELIMINARY TREATMENT BLDG. CONTROL PANEL ROOM	B8H-4	2520	0.25"	ROOF	PROP	BELT	1/2	480 3	715	2" AL.	24SF5B	TEFC,DS,FC,A	VCP

RFC-012 1 FANS FAF-1A AND FAF-1B ARE ALSO TAGGED AS DCF-1 ON DWG B8H-4

FOUL AIR FAN SCHEDULE

ITEM NO.	NO. REQ'D	AREA SERVED	SHEET NO.	CFM	S.P.	TYPE WHEEL	TYPE DRIVE	DISCH. ARR.	H.P.	VOLT PHASE	FAN RPM	COOK MODEL NO.	REMARKS	CONTROL
FAF-1A,B	2	PRELIMINARY TREATMENT BLDG.	B8H-4	9000	7"	AIRFOIL	BELT	HORIZ	15	480 3	1893	245CA10	D,IFDC,OFDC,NSA,V DS,EC,FC,A,TEFC,WC	VCP
FAF-2A,B	2	BIO FLOTATION BLDG.	F1H-3	2650	6.5"	AIRFOIL	BELT	HORIZ	5	480 3	3605	135CA10	D,IFDC,OFDC,NSA,V DS,EC,FC,A,TEFC,WC	VCP
FAF-3A,B FAF-3C,D	4	GRAVITY THICKENERS	F0H-1	5000	7"	AIRFOIL	BELT	VERT	10	480 3	2272	195CA10	D,IFDC,OFDC,NSA,V DS,EC,FC,A,TEFC,WC	VCP
FAF-4A,B	2	SLUDGE STORAGE TANKS	F2H-4	700	5"	FLAT	BELT	VERT	1	480 3	3037	AEROVENT PB10B	D,IFDC,OFDC,NSA,V DS,EC,FC,A,TEFC,WC	VCP
FAF-5A,B	0	NOT USED						F.O. #8 1						
FAF-6	1	PRIMARY SCUM PUMP STATION	C0H-3	50	4"	FLAT	BELT	HORIZ	1/3	115 1	3664	AEROVENT PB10B	D,IFDC,OFDC,NSA,V DS,EC,FC,A,TEFC,WC	VCP
FAF-7	1	LOW LEVEL PUMP STATION	B0H-1	50	3.5"	FLAT	BELT	HORIZ	1/3	115 1	3270	AEROVENT PB10B	D,IFDC,OFDC,NSA,V DS,EC,FC,A,TEFC,WC	VCP

HOT WATER COIL SCHEDULE

ITEM NO.	NO. REQ'D	AREA SERVED	SHEET NO.	SIZE WxH-IN.	MBH	AIRFLOW CFM	MAX. FACE VEL.–FPM	ACT. FACE VEL.–FPM	MAX. APD IN. W.G.	EAT °F	LAT °F	GPM	EWT °F	LWT °F	MAX. COIL WATER VEL.–FPS	MAX. WPD FT	ACT. WPD FT	COIL ROWS	FINS PER FT	TRANE MODEL NO.	REMARKS
HWC-1	1	FLOTATION THICKENER BUILDING	F1H-1	96x30	432.0	8000	600	341	0.25	10	60	43.2	180	160	3.0	5.0	4.46	4	80	DELTA–FLO DL	FS, SD
HWC-2	1	SLUDGE STORAGE TANKS	F2H-2	36x24	183.6	3400	600	544	0.25	10	60	18.4	180	160	3.0	5.0	–	*	*	DELTA–FLO DL	FS, SD
HWC-3	1	PAC–1	B8H-4	30x16	70.0	1400	600	420	0.25	10	60	7.0	180	160	3.0	5.0	–	*	*	DELTA–FLO DL	FS, SD
HWC-4	1	PAC–2	B8H-4	36x16	143.7	2300	600	575	0.25	10	60	14.4	180	160	3.0	5.0	–	*	*	DELTA–FLO DL	FS, SD
HWC-5	1	SF–2 – PRELIMINARY TREATMENT BUILDING POLYMER STORAGE	B8H-4	54x30	405.0	7500	700	667	0.5	10	60	40.5	180	160	3.0	5.0	–	*	*	DELTA–FLO DL	FS, SD
HWC-6	1	SF–3 – PRELIMINARY TREATMENT BUILDING BASEMENT AND TUNNELS	B8H-4	60x42	621.0	11,500	700	657	0.5	10	60	62.1	180	160	3.0	5.0	–	*	*	DELTA–FLO DL	FS, SD
HWC-7	2	SF–4 – PRELIMINARY TREATMENT BUILDING SCREEN ROOM	B8H-4	60x60	291.6	9000	400	360	0.25	10	60	29.2	180	160	3.0	5.0	–	*	*	DELTA–FLO DL	FS, SD
HWC-8	1	PRELIMINARY TREATMENT BLDG. CONTROL PANEL ROOM	B8H-3	34x18	136.1	2520	600	592	0.25	10	60	15.8	180	160	3.0	5.0	–	*	*	DELTA–FLO DL	FS, SD

NOTES: SD = SMOKE DETECTOR, FS = FREEZESTAT.

1 ADD. #2

RECORD DRAWING

NO.	DATE	DRWN CHK'D	DESCRIPTION
1	9/97	FXP ASG	RECORD DRAWING

REVISIONS

DESIGNED BY: WRH
DRAWN BY: RMM,SFP
CHECKED BY/DATE: WRH/9-91
APPR'D BY/DATE: WRH/9-91

CAMP DRESSER & McKEE

THIS DRAWING HAS BEEN REVISED BY HAZEN AND SAWYER, P.C. TO REFLECT MODIFICATIONS MADE DURING CONSTRUCTION

CDM environmental engineers, scientists, planners, & management consultants

ARLINGTON COUNTY, VIRGINIA
WATER POLLUTION CONTROL PLANT
UPGRADE AND EXPANSION- PHASE IIB

HVAC SCHEDULES

SCALE NOTE
SCALE BAR SHOWN BELOW IS ONE INCH LONG ON A FULL SIZE DRAWING. WHEN SCALING DRAWINGS, MEASURE BAR TO DETERMINE IF SCALES SHOWN WILL REQUIRE ADJUSTING.
⟵ ONE INCH ⟶

CONTRACT NO. 000000000
YEAR 1991
LOCATION CODE 00
SPECIALTY CODE H
PROJECT NO. 5002-33
FILE NAME 00H2.DWG
DRAWING NO. 00H-2
SHEET NO. 46

C.E. BAILEY & ASSOCIATES, INC.
CONSULTING ENGINEERS
ORLANDO, CLEARWATER & FORT LAUDERDALE, FLORIDA

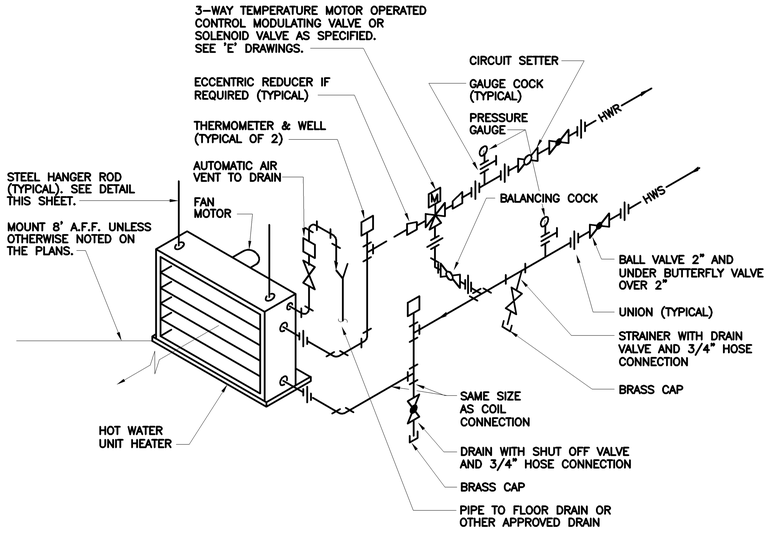

HOT WATER UNIT HEATER
PIPING DIAGRAM
N.T.S.

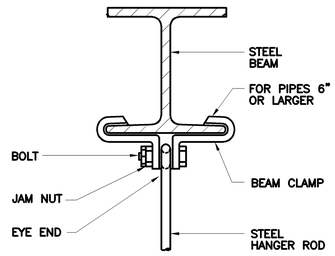

STEEL HUNG

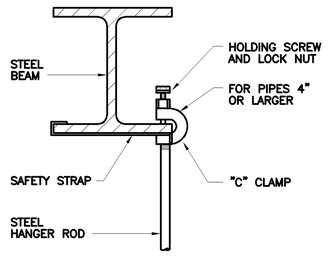

STEEL HUNG

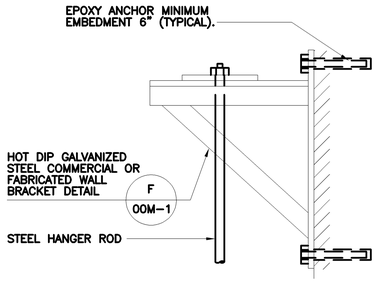

WALL HUNG

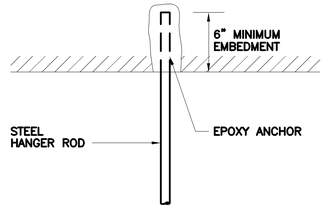

SLAB HUNG

TYPICAL HANGER ROD CONNECTION DETAILS
N.T.S.

NOTE: ALL COMPONENTS TO BE SIZED WITH LIBERAL FACTOR OF SAFETY. MINIMUM ANCHOR BOLT AND HANGER ROD SIZE 1/2"ø.

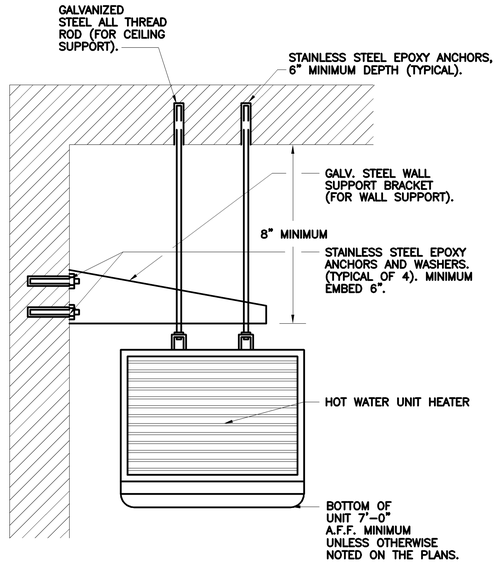

HOT WATER UNIT HEATER DETAIL
N.T.S.

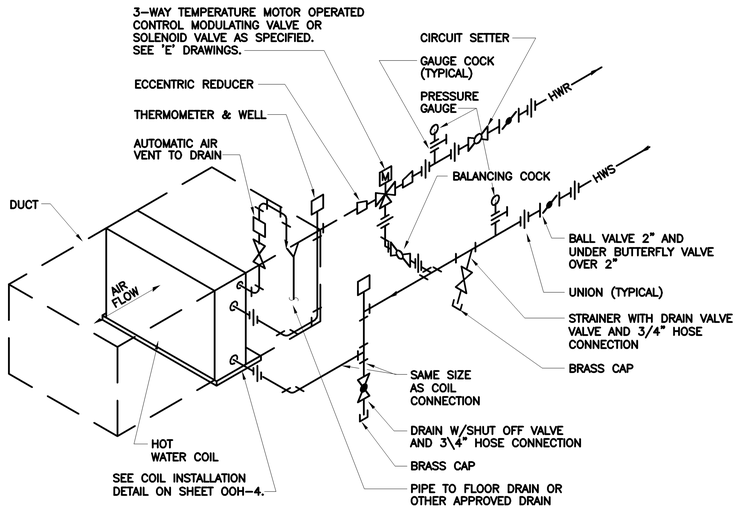

HOT WATER COIL
PIPING DIAGRAM
N.T.S.

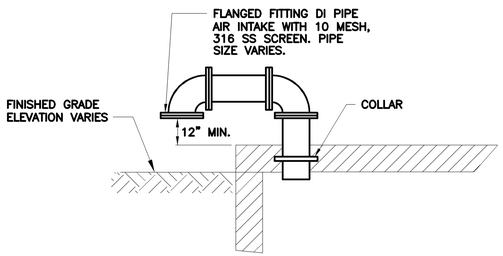

AIR INTAKE DETAIL
N.T.S.

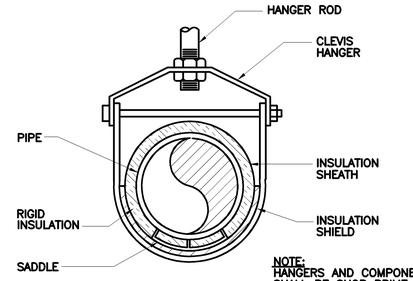

NOTE: HANGERS AND COMPONENTS SHALL BE SHOP PRIME PAINTED.

INSULATED HOT PIPE

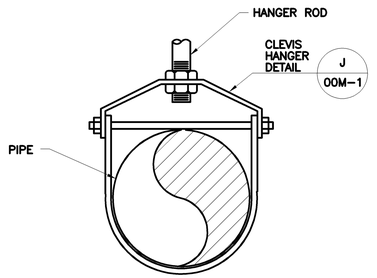

NON-INSULATED PIPE

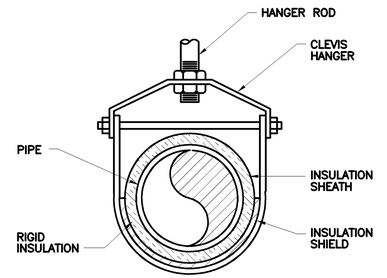

INSULATED COLD PIPE

PIPE SUPPORT DETAILS
N.T.S.

NOTE: FOR OTHER NON-INSULATED PIPE SUPPORTS, SEE 'M' DRAWINGS.

NO.	DATE	DRWN	CHK'D	DESCRIPTION
				REVISIONS
1	9/97	FXP	ASG	RECORD DRAWING

DESIGNED BY: WRH
DRAWN BY: RMM,SFP
CHECKED BY/DATE: WRH/9-91
APPRV'D BY/DATE: WRH/9-91

CAMP DRESSER & McKEE
THIS DRAWING HAS BEEN REVISED BY HAZEN AND SAWYER, P.C. TO REFLECT MODIFICATIONS MADE DURING CONSTRUCTION
CDM
environmental engineers, scientists, planners, & management consultants

ARLINGTON COUNTY, VIRGINIA
WATER POLLUTION CONTROL PLANT
UPGRADE AND EXPANSION- PHASE IIB

HVAC DETAILS

SCALE NOTE
SCALE BAR SHOWN BELOW IS ONE INCH LONG ON A FULL SIZE DRAWING. WHEN SCALING DRAWINGS, MEASURE BAR TO DETERMINE IF SCALES SHOWN WILL REQUIRE ADJUSTING.
ONE INCH

RECORD DRAWING

CONTRACT NO. 000000000
YEAR 1991
LOCATION CODE 00
SPECIALTY CODE H
PROJECT NO. 5002-33
FILE NAME 00H3.DWG
DRAWING NO. 00H-3
SHEET NO. 47

C.E. BAILEY & ASSOCIATES, INC.
CONSULTING ENGINEERS
ORLANDO, CLEARWATER & FORT LAUDERDALE, FLORIDA

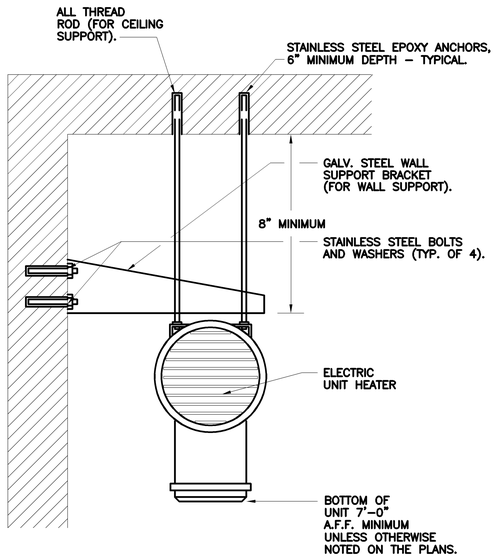

ELECTRIC UNIT HEATER DETAIL

N.T.S.

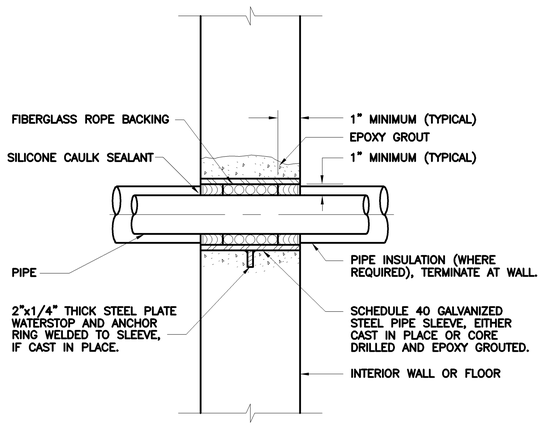

PIPE SLEEVE THRU WALL OR FLOOR DETAIL

N.T.S.

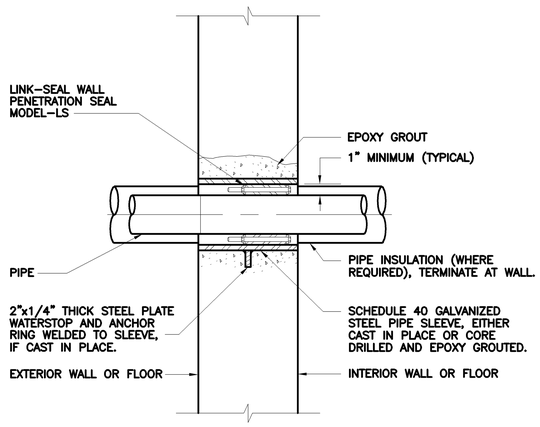

PIPE PENETRATION THRU WALL OR FLOOR DETAIL

N.T.S.

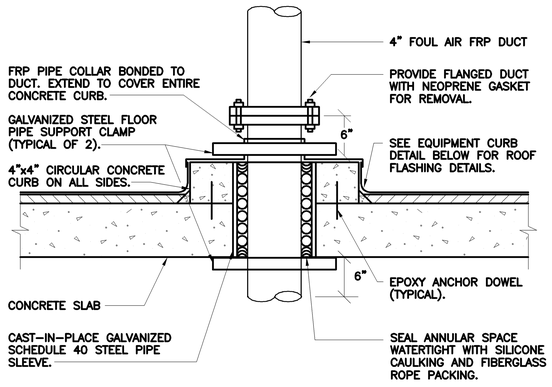

TYPICAL FOUL AIR ROOF DUCT PENETRATION DETAIL

N.T.S.

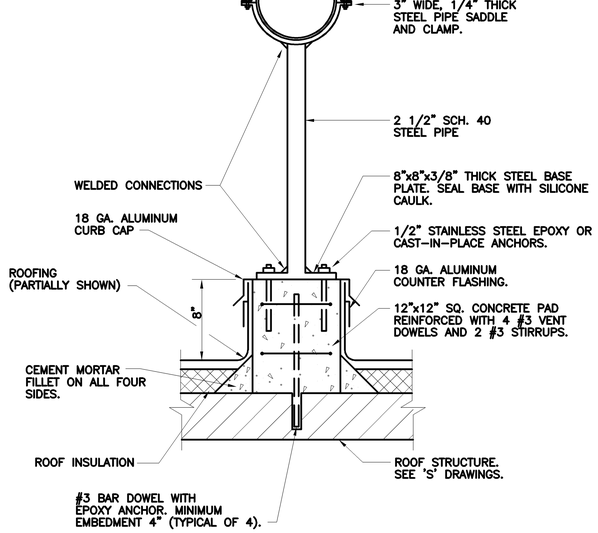

NOTE: HOT DIP GALV. PIPE SUPPORT AFTER FABRICATION.

ROOFTOP PIPE SUPPORT DETAIL

N.T.S.

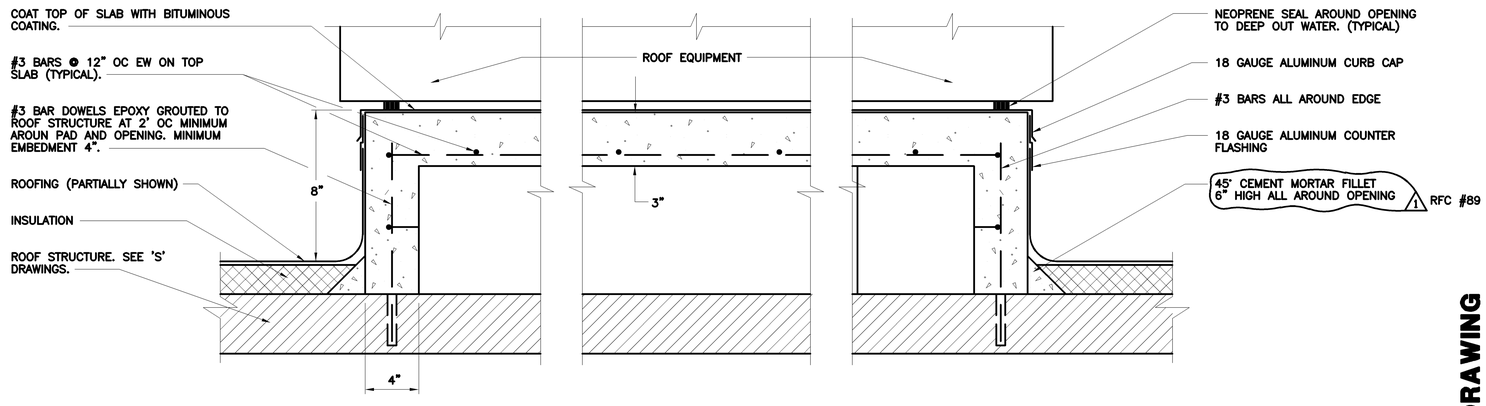

ROOF EQUIPMENT CONCRETE PAD/CURB DETAIL

N.T.S.

NO.	DATE	DRWN	CHK'D	DESCRIPTION
				REVISIONS
1	9/97	FXP	ASG	RECORD DRAWING

DESIGNED BY: WRH
DRAWN BY: SFP
CHECKED BY/DATE: WRH/9-91
APPR'D BY/DATE: WRH/9-91

CAMP DRESSER & McKEE

THIS DRAWING HAS BEEN REVISED BY HAZEN AND SAWYER, P.C. TO REFLECT MODIFICATIONS MADE DURING CONSTRUCTION

CDM

environmental engineers, scientists, planners, & management consultants

ARLINGTON COUNTY, VIRGINIA
WATER POLLUTION CONTROL PLANT
UPGRADE AND EXPANSION- PHASE IIB

HVAC DETAILS

RECORD DRAWING

SCALE NOTE

SCALE BAR SHOWN BELOW IS ONE INCH LONG ON A FULL SIZE DRAWING. WHEN SCALING DRAWINGS, MEASURE BAR TO DETERMINE IF SCALES SHOWN WILL REQUIRE ADJUSTING.

ONE INCH

CONTRACT NO. 000000000
YEAR 1991
LOCATION CODE 00
SPECIALTY CODE H
PROJECT NO. 5002-33
FILE NAME 00H4.DWG
DRAWING NO. 00H-4
SHEET NO. 48

C.E. BAILEY & ASSOCIATES, INC.
CONSULTING ENGINEERS
ORLANDO, CLEARWATER & FORT LAUDERDALE, FLORIDA

SYMBOLS

	FLOOR DRAIN
	FLOOR CLEANOUT
	WALL CLEANOUT
	YARD CLEANOUT
	HOSE BIBB
	KITCHEN SINK
	COLD WATER
	HOT WATER
	SANITARY
	VENT
SD	STORM DRAIN
	ROOF DRAIN
	GATE VALVE
	CHECK VALVE
	PRESSURE & TEMPERATURE RELIEF VALVE
VTR	VENT THROUGH ROOF
	SHOCK ARRESTOR
	GATE VALVE IN YARD BOX
C	CONDENSATE
	END CAP
F	FIRE PROTECTION

ABBREVIATIONS

A	AIR
ACCU	AIR COOLED CONDENSING UNIT
AHU	AIR HANDLING UNIT
ALUM	ALUMINUM
AR	ACID RESISTANT
ASME	AMERICAN SOCIETY OF MECHANICAL ENGINEERS
BEL	BELOW
BLDG	BUILDING
BTU	BRITISH THERMAL UNIT
CI	CAST IRON
CLG	CEILING
CO	CLEANOUT
CONC	CONCRETE
COND	CONDENSATE
CONN	CONNECTION
CP	CHROME PLATED
CU YD	CUBIC YARD
CW	COLD WATER
CU	COPPER
CV	CIRCUIT VENT
DISCH	DISCHARGE
DN	DOWN
DR	DRAIN
DIA	DIAMETER
EA	EACH
ECO	EXTERIOR CLEANOUT
EL	ELEVATION
ES	EMERGENCY SHOWER
EW	EYE WASH
EWC	ELECTRIC WATER COOLER
EWH	ELECTRIC WATER HEATER
EVAP	EVAPORATION
FC	FLEXIBLE CONNECTION
FIN	FINISH
FL	FLOOR
FD	FLOOR DRAIN
FCO	FLOOR CLEANOUT
FT	FEET
FU	FIXTURE UNIT
GA	GAUGE
GALV	GALVANIZED
GPH	GALLONS PER HOUR
GPM	GALLONS PER MINUTE
GFC	GAS FIRED CHILLER
HD	HEAD
HP	HORSEPOWER
HR	HOUR
HW	HOT WATER
HWR	HOT WATER RECIRCULATION
HG	HOT GAS

ABBREVIATIONS (CONTINUED)

IE	INVERT ELEVATION
KW	KILOWATT
LIQ	LIQUID
LV	LOOP VENT
MFR	MANUFACTURER
MH	MANHOLE
MTD	MOUNTED
MTG	MOUNTING
NOM	NOMINAL
NTS	NOT TO SCALE
P/T	PRESSURE/TEMPERATURE RELIEF
PIV	POST INDICATOR VALVE
PPM	PARTS PER MILLION
PSI	POUNDS PER SQUARE INCH
PVC	POLY VINYL CHLORIDE
PW	POTABLE WATER
POC	POINT OF CONNECTION
RD	ROOF DRAIN
REF	REFRIGERANT
RM	ROOM
RPM	REVOLUTIONS PER MINUTE
RV	RELIEF VENT
SHT	SHEET
SPKLR	SPRINKLER
SS	STAINLESS STEEL
STD	STANDARD
SUCT	SUCTION
FT^2	SQUARE FEET
ST	STEAM
SV	STACK VENT
TDH	TOTAL DISCHARGE HEAD
TEMP	TEMPERATURE
TSP	TRAP SEAL PRIMER
TYP	TYPICAL
UL	UNDERWRITERS LABORATORY
V	VENT
VAP	VAPOR
VB	VALVE BOX
VC	VITREOUS CHINA
VS	VENT STACK
VTR	VENT THROUGH ROOF
W/	WITH
WT	WEIGHT
WTR	WATER
WG	WATER GAUGE
WS	WASTE STACK

NOTES

NOTES

1. DO NOT SCALE PLUMBING PLANS. CONSULT ARCHITECTURAL AND STRUCTURAL DRAWINGS FOR DIMENSIONS.
2. CONFIRM SIZE, LOCATION, ELEVATION AND CONNECTION POINT OF ALL SERVICES BEFORE INSTALLING ANY PIPE.
3. ALL GRAVITY DRAIN PIPES SHALL SLOPE 1/8" PER FOOT MINIMUM UNLESS OTHERWISE NOTED.
4. VENT THRU ROOF PENETRATIONS SHALL BE IN ACCORDANCE WITH THE ARCHITECTURAL DRAWINGS AND THE ROOF MANUFACTURERS REQUIREMENTS.
5. ROUTE ALL PIPES TO AVOID CONFLICTS WITH OTHER PIPES AND DUCTS.

NO.	DATE	DRWN	CHK'D	REVISIONS DESCRIPTION
1	9/97	FXP	ASG	RECORD DRAWING

DESIGNED BY: WRH
DRAWN BY: RMM,SFP
CHECKED BY/DATE: WRH/9-91
APPR'D BY/DATE: WRH/9-91

CAMP DRESSER & McKEE

THIS DRAWING HAS BEEN REVISED BY HAZEN AND SAWYER, P.C. TO REFLECT MODIFICATIONS MADE DURING CONSTRUCTION

CDM environmental engineers, scientists, planners, & management consultants

ARLINGTON COUNTY, VIRGINIA
WATER POLLUTION CONTROL PLANT
UPGRADE AND EXPANSION- PHASE IIB

PLUMBING
NOTES & SYMBOLS

RECORD DRAWING

SCALE NOTE

SCALE BAR SHOWN BELOW IS ONE INCH LONG ON A FULL SIZE DRAWING. WHEN SCALING DRAWINGS, MEASURE BAR TO DETERMINE IF SCALES SHOWN WILL REQUIRE ADJUSTING.

← ONE INCH →

CONTRACT NO. 000000000
YEAR 1991
LOCATION CODE 00
SPECIALTY CODE P
PROJECT NO. 5002-33
FILE NAME 00P1.DWG
DRAWING NO. 00P-1
SHEET NO. 49

C.E. BAILEY & ASSOCIATES, INC.
CONSULTING ENGINEERS
ORLANDO, CLEARWATER & FORT LAUDERDALE, FLORIDA

PLUMBING EQUIPMENT SCHEDULE

ITEM NO.	ITEM	DESCRIPTION
FD-1	FLOOR DRAIN	ZURN ZN-415 COATED CAST IRON FLOOR DRAIN WITH NICKEL BRONZE ROUND STRAINER, DEEP SEAL TRAP, SEDIMENT BUCKET
RD	ROOF DRAIN	ZURN Z-100ERC COATED CAST IRON ROOF DRAIN WITH POLYETHYLENE DOME, RECEIVER SUMP, UNDERDECK CLAMP AND EXTENSIONS AS REQUIRED
FCO	FLOOR CLEANOUT	ZURN ZN-1400 SERIES COATED CAST IRON CLEANOUT, ROUND NICKEL-BRONZE ADJUSTABLE TOP, GASKETED COVER, BRONZE PLUG, TOP TO MATCH FLOOR FINISH
WCO	WALL CLEANOUT	ZURN Z-1460-8 BRONZE PLUG AND STAINLESS STEEL ACCESS PLATE. PROVIDE LINE TEE FOR INSTALLATION OF WALL CLEANOUT
TP	TRAP PRIMER	ZURN Z-1022 TRAP PRIMER. PROVIDE FOR EACH FLOOR DRAIN SHOWN WITH PRIMER CONNECTION.
WH	WALL HYDRANT	ZURN Z-1310 FREEZE PROOF WALL HYDRANT WITH 3/4" HOSE CONNECTION AND INTEGRAL VACUUM BREAKER
HB	HOSE BIBB	CHICAGO 593 CHROME PLATED HOSE BIBB WITH INTEGRAL VACUUM BREAKER-3/4" HOSE CONNECTION
ECO	EXTERIOR CLEANOUT	PROVIDE CLEANOUT AS DETAILED IN FCO ABOVE, ENCASE IN CONCRETE PAD AT FINISHED GRADE, SEE DETAIL.
FD-2	FLOOR DRAIN	ZURN ZN-415 COATED CAST IRON FLOOR DRAIN WITH NICKEL BRONZE ROUND STRAINER, TRAP PRIMER CONNECTION
		1 SEE RFC #015, REF: MEN'S AND WOMEN'S F.D.

PLUMBING FIXTURE SCHEDULE

ITEM NO.	ITEM	DESCRIPTION (AMERICAN STANDARD OR AS NOTED)
WC	WATER CLOSET FLUSH TANK	MODEL 2109.500 FLOOR MOUNTED VITREOUS CHINA TANK-TYPE TOILET, HEAVY DUTY PLASTIC SEAT; BENEKE OR EQUAL
UW	WALL MOUNTED URINAL	MODEL 6560.015 VITREOUS CHINA WALL MOUNTED URINAL; PROVIDE WALL BACKING PLATE BY ZURN, SLOAN ROYAL 186 FLUSH VALVE WITH WALL SUPPORT AND SCREWDRIVER STOP.
LW	LAVATORY	MODEL 476.028 VITREOUS CHINA LAVATORY, 20"x17"; DELTA 523 HDF FAUCET WITH .5 GPM FLOW CONTROL, 1 1/4" P-TRAP CHROME PLATED BRASS, 3/8" CHROME PLATED BRASS ANGLE STOPS
MB	MOP BASIN	STERN-WILLIAMS MODEL SB-900 TERRAZO MOP BASIN, STAINLESS STEEL CAPS, T-10-VB FAUCET, T-35 HOSE, T-40 MOP HANGER, BP SPLASH PANELS
EWC	ELECTRIC WATER COOLER	ELKAY EWCA-8-F-S COOLER, GLASS FILTER, ALL STAINLESS STEEL FINISH
EW	EYE WASH & EMER. SHOWER	HAWS 7060 BT CHROME PLATED STAINLESS STEEL EYE/FACEWASH, 1 1/2 CHROME TRAP, MAWS MODEL 8169 FLUSH MOUNTED EMERGENCY SHOWER
KS	KITCHEN SINK	ELKAY DLR-3322 SINK-10 STAINLESS STEEL SINK, LK-4103 FAUCET WITH SPRATER, LK-35 STRAINER, CHROME P-TRAP

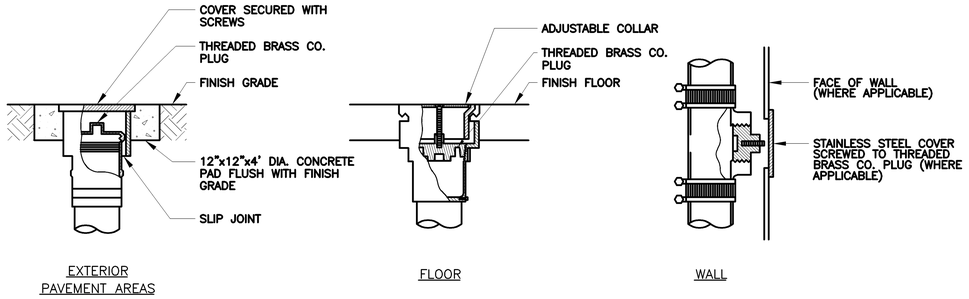

TYPICAL CLEAN-OUT DETAIL
N.T.S.

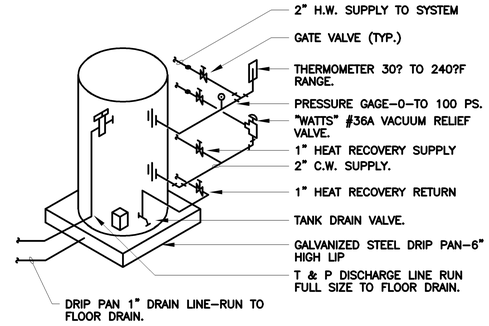

W.H. PIPING SCHEMATIC
N.T.S.

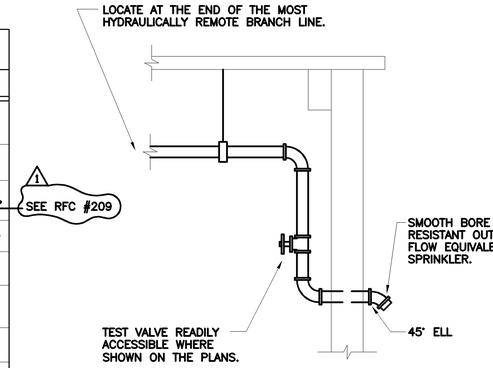

SPRINKLER TEST PIPE DETAIL
N.T.S.

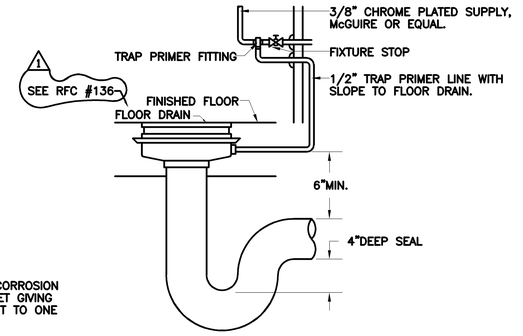

NOTE
THIS DETAIL APPLICABLE FOR RESEALING OF ALL TOILET ROOM FLOOR DRAINS OR WHERE SHOWN ON THE DRAWINGS. FLOOR DRAINS SHALL BE RESEALED BY MEANS OF A TRAP PRIMER VALVE INSTALLED IN THE C.W. SUPPLY LINE OF THE NEAREST SINK OR FIXTURE AND SLOPED TO TO THE FLOOR DRAIN. VALVE MUST BE ACCESSIBLE FOR INSPECTION AND REPAIR. PROVIDE ESCUTCHEON AS SHOWN. 1

TRAP PRIMER RESEAL DIAGRAM
N.T.S.

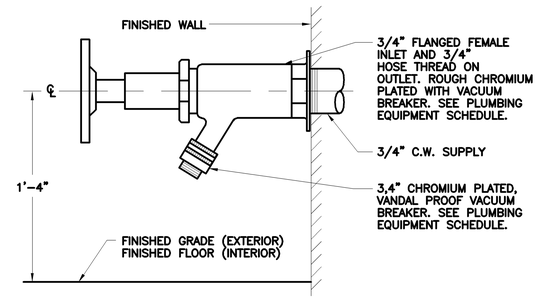

1 SEE RFC #018

HOSE BIBB & WALL HYDRANT DETAIL
N.T.S.

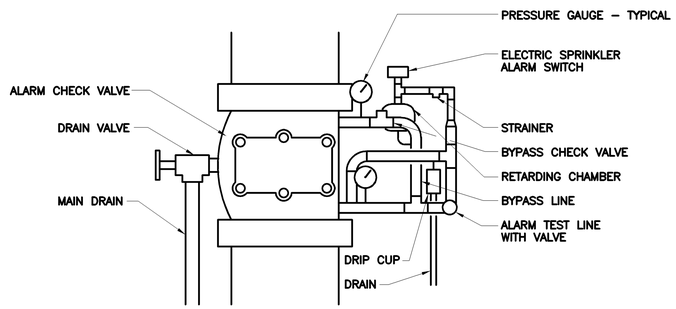

SPRINKLER SYSTEM RISER DETAIL
N.T.S.

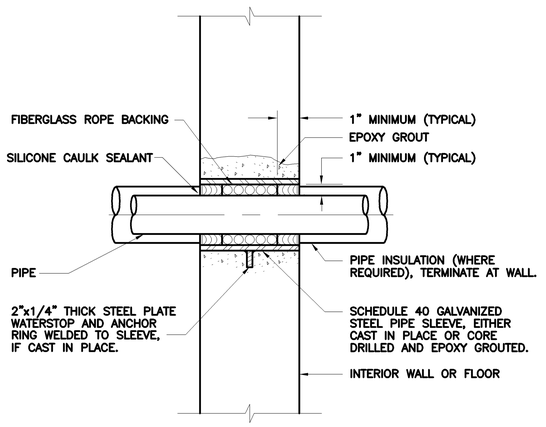

PIPE SLEEVE THRU WALL OR FLOOR DETAIL
N.T.S.

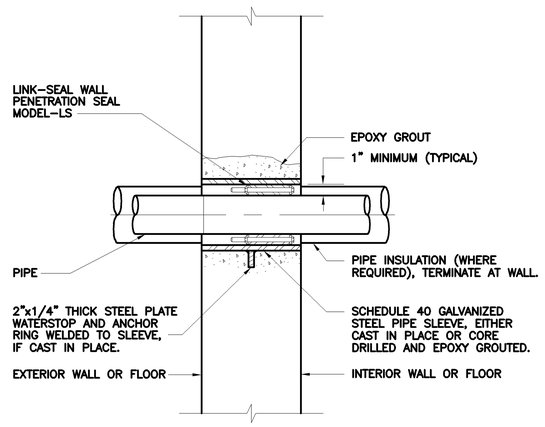

PIPE PENETRATION THRU WALL OR FLOOR DETAIL
N.T.S.

NO.	DATE	DRWN	CHK'D	REVISIONS
1	9/97	FXP	ASG	RECORD DRAWING

DESIGNED BY: WRH
DRAWN BY: RMM,SFP
CHECKED BY/DATE: WRH/9-91
APPR'D BY/DATE: WRH/9-91

CAMP DRESSER & McKEE

THIS DRAWING HAS BEEN REVISED BY HAZEN AND SAWYER, P.C. TO REFLECT MODIFICATIONS MADE DURING CONSTRUCTION

CDM
environmental engineers, scientists, planners, & management consultants

ARLINGTON COUNTY, VIRGINIA
WATER POLLUTION CONTROL PLANT
UPGRADE AND EXPANSION- PHASE IIB

PLUMBING DETAILS

SCALE NOTE
SCALE BAR SHOWN BELOW IS ONE INCH LONG ON A FULL SIZE DRAWING. WHEN SCALING DRAWINGS, MEASURE BAR TO DETERMINE IF SCALES SHOWN WILL REQUIRE ADJUSTING.
ONE INCH

CONTRACT NO. 000000000
YEAR 1991
LOCATION CODE 00
SPECIALTY CODE P
PROJECT NO. 5002-33
FILE NAME 00P2.DWG
DRAWING NO. 00P-2
SHEET NO. 50

RECORD DRAWING

C.E. BAILEY & ASSOCIATES, INC.
CONSULTING ENGINEERS
ORLANDO, CLEARWATER & FORT LAUDERDALE, FLORIDA

PLAN SYMBOLS

	HOME RUN TO PANELBOARD. NO. OF ARROWS INDICATE NO. OF CIRCUITS, HASH MARKS INDICATE NO. OF #12 AWG. CONDUCTORS. NO HASH MARKS INDICATE 2 #12 CONDUCTORS.
	CONDUIT CONCEALED IN WALL, IN SLAB ABOVE, OR ABOVE CEILING
	CONDUIT CONCEALED IN OR BELOW FLOOR OR UNDERGROUND.
	CONDUIT RUN EXPOSED. RUN PARALLEL OR PERPENDICULAR TO STRUCTURE OR WALL.
	FLEXIBLE CONDUIT WITH EQUIPMENT CONNECTION.
	CONCRETE ENCASED DUCT BANK.
	EXISTING CONCRETE ENCASED DUCT BANK.
A	CEILING MOUNTED LIGHTING FIXTURE, LETTER INDICATES TYPE (TYP.)
	WALL MOUNTED LIGHTING FIXTURE.
	FLUORESCENT LIGHTING FIXTURE, CEILING MOUNTED.
	CONDUIT TURNING UPWARD
	CONDUIT TURNING DOWNWARD
	EXTERIOR LUMINARE AND MOUNTING STANDARD.
	EMERGENCY BATTERY PACK LIGHTING FIXTURE.
	EMERGENCY EGRESS LIGHTING FIXTURE WITH BATTERY PACK (MASTER).
	EMERGENCY EGRESS LIGHTING FIXTURE WITHOUT BATTERY PACK (SLAVE).
	CEILING OR WALL MOUNTED EXIT LIGHT FIXTURE WITH BATTERY PACK. PROVIDE ARROWS AS REQUIRED.
	EXIT LIGHT FIXTURES WITHOUT BATTERY PACK.
	FLUORESCENT LIGHTING FIXTURE, WALL MOUNTED.
J	JUNCTION BOX PER N.E.C., FLUSH MOUNTED UNLESS INDICATED OTHERWISE.
	FLUSH OR SURFACE MOUNTED LIGHTING PANELBOARD.
	FLUSH OR SURFACE MOUNTED POWER PANELBOARD.
	DRY TYPE TRANSFORMER. NO. INDICATES KVA RATING.
	25A, 208V, 3Ø SINGLE RECEPTACLE.
	20A, 125V, 3W DUPLEX RECEPTACLE IN FLUSH OUTLET BOX, 18" ABOVE FINISHED FLOOR.
	20A, 125V, 3W DUPLEX RECEPTACLE IN FLUSH OUTLET BOX, 48" ABOVE FINISHED FLOOR OR 2" ABOVE COUNTER AS REQUIRED.
	WIREMOLD SURFACE METAL RACEWAY SYSTEM WITH 20A, 125V, 3W RECEPTACLES.
	20A, 125V, 3W DUPLEX RECEPTACLE IN FLUSH, FLOOR MOUNTED OUTLET BOX.
	20A, 125V, 3W DUPLEX RECEPTACLE, SURFACE MOUNTED.
	50A, 250V, 1Ø, 3W SINGLE RECEPTACLE IN FLUSH OUTLET BOX, 18" ABOVE FINISHED FLOOR.
	20A, 250V, 1Ø, 3W SINGLE RECEPTACLE IN FLUSH OUTLET BOX, 18" ABOVE FINISHED FLOOR.
	30A, 250V 1Ø, 3W SINGLE RECEPTACLE IN FLUSH OUTLET BOX, 18" ABOVE FINISHED FLOOR.
S	SINGLE POLE SWITCH IN FLUSH OUTLET BOX, 48" ABOVE FINISHED FLOOR, UNLESS OTHERWISE NOTED (TYPICAL).
S_D	SINGLE POLE SWITCH, SURFACE MOUNTED.
S_3	THREE-WAY SWITCH IN FLUSH OUTLET BOX.
S_4	FOUR-WAY SWITCH IN FLUSH OUTLET BOX.
D	2000 W INCANDESCENT DIMMING SWITCH IN FLUSH OUTLET BOX, 48" ABOVE FINISHED FLOOR.
	NON-FUSIBLE DISCONNECT SWITCH, 30A,3P UNLESS OTHERWISE INDICATED.
	NON-FUSIBLE DISCONNECT SWITCH, 30A,3P UNLESS OTHERWISE INDICATED, WITH REMOTE CONTROL STATION AS REQUIRED BY ELEMENTARY DIAGRAMS OR SPECS
10	ELECTRIC A.C. MOTOR, NO. INDICATES HORSEPOWER.
1	ELECTRIC D.C. MOTOR, NO. INDICATES HORSEPOWER.
M	MOTORIZED VALVE
	MAGNETIC MOTOR STARTER
VFD	VARIABLE FREQUENCY DRIVE
R	ELECTRIC CORD REEL
	DOOR SWITCH
B	ALARM BELL
C	FLUSH MOUNTED CLOCK OUTLET, 12" BELOW CEILING.
T	THERMOSTAT
	VARIABLE AIR VOLUME BOX (VAV)

PLAN SYMBOLS (CONTINUED)

	FLUSH OUTLET BOX AND TELEPHONE COVER PLATE 18" ABOVE FINISHED FLOOR.
	FLUSH FLOOR MOUNTED OUTLET BOX AND TELEPHONE COVER PLATE.
	FLUSH OUTLET BOX AND COVER PLATE SUITABLE FOR COMPUTER DEVICE CONNECTION.
	FLUSH MOUNTED BACKBOX FOR INTERCOM STATION.
	FLUSH FLOOR MOUNTED OUTLET BOX FOR REMOTE INTERCOM UNIT.
	FLUSH OUTLET BOX AND COVER PLATE FOR MICROPHONE CONNECTION.
	WALL MOUNTED OUTLET BOX FOR INTERCOM HANDSET AND HOOKSWITCH.
S	FLUSH CEILING MOUNTED PAGING SYSTEM SPEAKER.
S	WALL MOUNTED PAGING SYSTEM SPEAKER.
V	VOLUME CONTROL SWITCH IN FLUSH OUTLET BOX 60" ABOVE FINISHED FLOOR.
SC	CEILING MOUNTED SMOKE DETECTOR.
SD	DUCT MOUNTED SMOKE DETECTOR.
T C	COOLING THERMOSTAT
T H	HEATING THERMOSTAT
H	FIRE ALARM HORN IN FLUSH OUTLET BOX, 12" BELOW CEILING.
FS	FLOW SWITCH
TS	TAMPER SWITCH
LS	LIMIT SWITCH
TS	TORQUE SWITCH
PS	PRESSURE SWITCH
ZS	ZERO SPEED SWITCH
SV	SOLENOID VALVE
LLS	LIQUID LEVEL SWITCH
VS	VIBRATION SWITCH
FIT	FLOW INDICATING TRANSMITTER
LIT	LEVEL INDICATING TRANSMITTER
PT	PROGRAM TIMER

SINGLE LINE DIAGRAM SYMBOLS

V	VOLTMETER
A	AMMETER
VS	THREE PHASE VOLT SWITCH
AS	THREE PHASE AMP SWITCH
GFI	GROUND FAULT INTERRUPTER
W	WATT HOUR METER
	FUSE
	CAPACITOR
	DRAW-OUT CIRCUIT BREAKER
	MOLDED CASE CIRCUIT BREAKER
	TYPICAL SELECTOR SWITCH CONTROL. SEE ELEMENTARY DIAGRAMS FOR EXACT TYPE.
10	ELECTRIC A.C. MOTOR, NO. INDICATES HORSEPOWER.
1	ELECTRIC D.C. MOTOR, NO. INDICATES HORSEPOWER.
	SERVICE OR EQUIPMENT GROUND.
	NON-FUSIBLE DISCONNECT SWITCH, 30A,3P UNLESS OTHERWISE INDICATED.
	NON-FUSIBLE DISCONNECT SWITCH, 30A,3P UNLESS OTHERWISE INDICATED, WITH REMOTE CONTROL STATION AS REQUIRED BY ELEMENTARY DIAGRAMS OR SPECS
	LIGHTING PANELBOARD
	POWER PANELBOARD

SINGLE LINE DIAGRAM SYMBOLS (CONTINUED)

K	KIRK KEY INTERLOCK
	CURRENT TRANSFORMERS
	POTENTIAL TRANSFORMERS
	MANUAL OR AUTOMATIC TRANSFER SWITCH
LIGHTNING	ARRESTER & SURGE CAPACITOR

CONTROL DIAGRAM SYMBOLS

	NORMALLY OPEN CONTACT
	NORMALLY CLOSED CONTACT
	LIMIT SWITCH, NORMALLY OPEN
	LIMIT SWITCH, NORMALLY CLOSED
	PRESSURE SWITCH, NORMALLY OPEN
	PRESSURE SWITCH, NORMALLY CLOSED
	FLOAT SWITCH, NORMALLY OPEN
	FLOAT SWITCH, NORMALLY CLOSED
	FLOW SWITCH, NORMALLY OPEN
	FLOW SWITCH, NORMALLY CLOSED
	TEMPERATURE SWITCH, NORMALLY OPEN
	TEMPERATURE SWITCH, NORMALLY CLOSED
	NORMALLY OPEN, TIMED TO CLOSE CONTACT
	NORMALLY CLOSED, TIMED TO OPEN CONTACT
	NORMALLY CLOSED, TIMED TO CLOSE CONTACT
	NORMALLY OPEN, TIMED TO OPEN CONTACT
LS	LIMIT SWITCH
FS	FLOAT SWITCH
PS	PRESSURE SWITCH
ZS	ZERO SPEED SWITCH
SV	SOLENOID VALVE
LLS	LIQUID LEVEL SWITCH
VS	VIBRATION SWITCH
AR	ALARM RELAY
AT	ALARM TIMER
CR	CONTROL RELAY
M	MOTOR STARTER
TR	TIMING RELAY
A	ALARM INDICATING LIGHT
R	RUN INDICATING LIGHT
	MOMENTARY CONTACT PUSHBUTTON
	MOMENTARY BREAK PUSHBUTTON OR RESET
K	KEYED SWITCH
	MAINTAINED CONTACT ON-OFF SWITCH
	START/STOP (S/S) CONTROL SWITCH MAINTAINED CONTACT
	THREE POSITION MAINTAINED CONTACT SELECTOR SWITCH
	FUSE
	MOLDED CASE CIRCUIT BREAKER
	CONTROL POWER TRANSFORMER
	REMOTE TERMINAL BLOCK POINT

ABBREVIATIONS

A	AMPERES
ACCU	AIR COOLED CONDENSING UNIT
AHU	AIR HANDLING UNIT
ATS	AUTOMATIC TRANSFER SWITCH
BKR	BREAKER
BLDG	BUILDING
CAB	CABINET
CIR	CIRCUIT
CONT	CONTROL
CU	COPPER
CWP	COLD WATER PIPE
CP	CONTROL PANEL
DCU	DISTRIBUTED CONTROL UNIT
DIA	DIAMETER
DPDT	DOUBLE POLE DOUBLE THROW
DPST	DOUBLE POLE SINGLE THROW
ELEC	ELECTRICAL
ELR	EMERGENCY LOCK-OUT RELAY
EM	EMERGENCY
ENCL	ENCLOSURE
EP	EXPLOSION PROOF
ESB	ENERGY SAVING BALLAST
ETM	ELAPSED TIME METER
EUH	ELECTRIC UNIT HEATER
EVA	ELECTRIC VALVE ACTUATOR
EWC	ELECTRIC WATER COOLER
EWH	ELECTRIC WATER HEATER
EXH	EXHAUST
EXIST	EXISTING
FAAP	FIRE ALARM ANNUNCIATOR PANEL
FACP	FIRE ALARM CONTROL PANEL
FDR	FEEDER
GEN	GENERATOR
GND	GROUND
GRS	GALVANIZED RIGID STEEL
HOA	HAND-OFF-AUTOMATIC
HOR	HAND-OFF-REMOTE
HORC	HAND-OFF-REMOTE-COMPUTER
HP	HORSEPOWER
HPS	HIGH PRESSURE SODIUM
INSTR	INSTRUMENTATION
ISO	ISOLATION
KVA	KILOVOLT-AMPERES
KW	KILOWATT
LDR	LOAD DUMP RELAY
LTG	LIGHTING
MAX	MAXIMUM
MCC	MOTOR CONTROL CENTER
MFR	MANUFACTURER
MH	METAL HALIDE
MIN	MINIMUM
MTD	MOUNTED
MTS	MANUAL TRANSFER SWITCH
MV	MERCURY VAPOR
NEC	NATIONAL ELECTRICAL CODE
NEUT	NEUTRAL
NTS	NOT TO SCALE
OC	ON CENTER
OH	OVERHEAD
P	POLE
PC	PHOTOELECTRIC CONTROL
PNL	PANEL
P/I	PAGING/INTERCOM
RECPT	RECEPTACLE
RS	RAPID START
RTD	REMOTE THERMAL DETECTOR
STR	STARTER
SW	SWITCH
SWGR	SWITCHGEAR
TC	TIME CLOCK
TR	TRANSFORMER
TYP	TYPICAL
UG	UNDERGROUND
UPS	UNINTERRUPTABLE POWER SUPPLY
V	VOLT
VFD	VARIABLE FREQUENCY DRIVE
W	WIRE
WP	WEATHERPROOF

RECORD DRAWING

C.E. BAILEY & ASSOCIATES, INC.
CONSULTING ENGINEERS
ORLANDO, CLEARWATER & FORT LAUDERDALE, FLORIDA

NO.	DATE	DRWN	CHK'D	REVISIONS DESCRIPTION
1	9/97	FXP	ASG	RECORD DRAWING

DESIGNED BY: SEB
DRAWN BY: TRH
CHECKED BY/DATE: CEB/9-91
APPR'D BY/DATE: CEB/9-91

CAMP DRESSER & McKEE

THIS DRAWING HAS BEEN REVISED BY HAZEN AND SAWYER, P.C. TO REFLECT MODIFICATIONS MADE DURING CONSTRUCTION

CDM
environmental engineers, scientists, planners, & management consultants

ARLINGTON COUNTY, VIRGINIA
WATER POLLUTION CONTROL PLANT
UPGRADE AND EXPANSION- PHASE B

ELECTRICAL
SYMBOLS & ABBREVIATIONS

SCALE NOTE
SCALE BAR SHOWN BELOW IS ONE INCH LONG ON A FULL SIZE DRAWING. WHEN SCALING DRAWINGS, MEASURE BAR TO DETERMINE IF SCALES SHOWN WILL REQUIRE ADJUSTING.
ONE INCH

CONTRACT NO.

YEAR	1991
LOCATION CODE	SPECIALTY CODE
00	E

PROJECT NO. 5002-33
FILE NAME 00E-0001.DWG
DRAWING NO. 00E-1
SHEET NO. 51

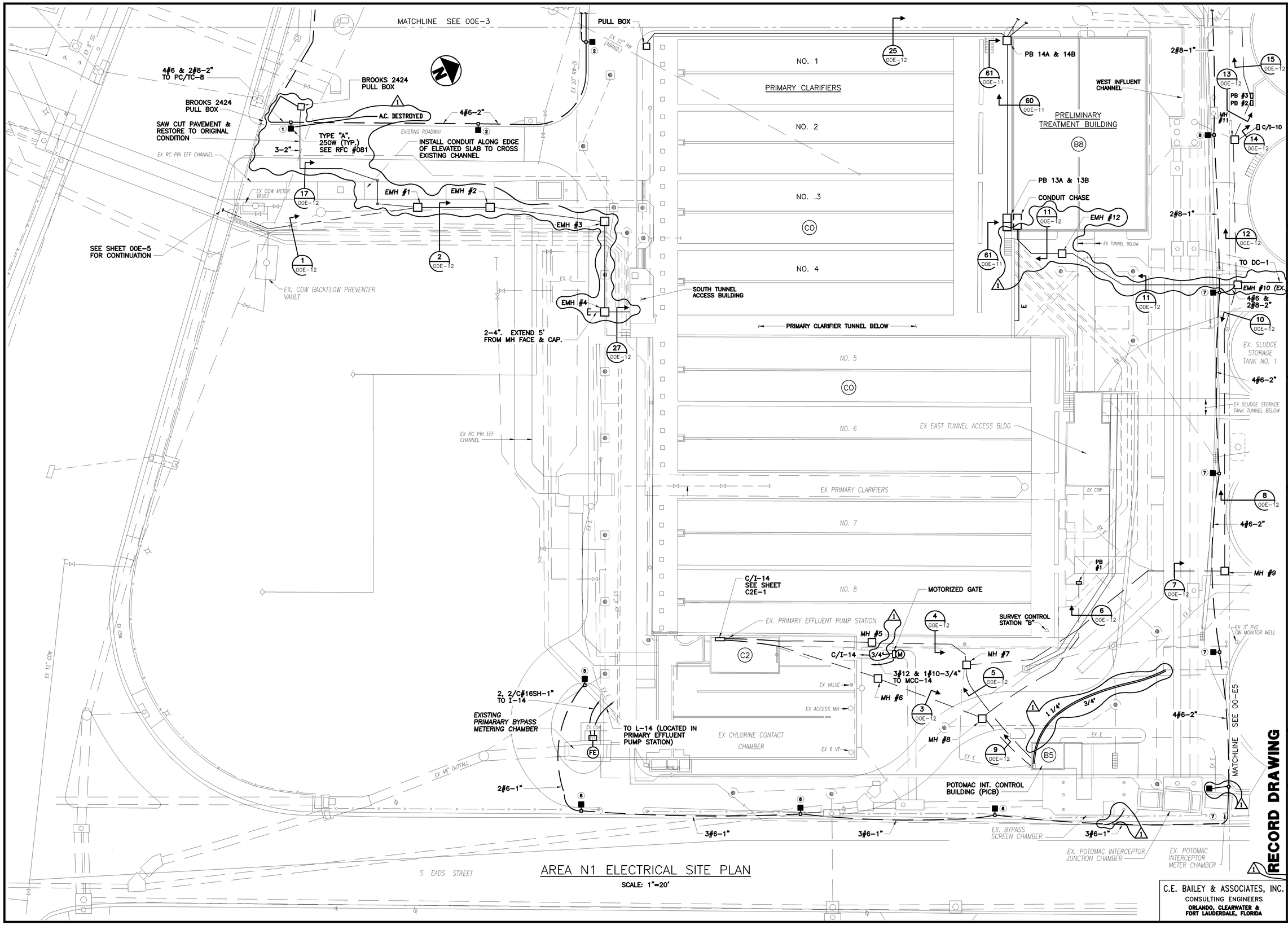

AREA N1 ELECTRICAL SITE PLAN

SCALE: 1"=20'

RECORD DRAWING

NO.	DATE	DRWN	CHK'D	DESCRIPTION
				REVISIONS
1	9/97	FXP	ASG	RECORD DRAWING

DESIGNED BY: CEB
DRAWN BY: TRH
CHECKED BY/DATE: SEB/9-91
APPR'D BY/DATE: CEB/9-91

CAMP DRESSER & McKEE

THIS DRAWING HAS BEEN REVISED BY BLAZEK AND SAWYER, P.C. AS BUILT ADDITIONS WERE MADE DURING CONSTRUCTION

CDM

environmental engineers, scientists, planners, & management consultants

ARLINGTON COUNTY, VIRGINIA
WATER POLLUTION CONTROL PLANT
UPGRADE AND EXPANSION- PHASE B

ELECTRICAL
AREA N1 SITE PLAN

SCALE NOTE

SCALE BAR SHOWN BELOW IS ONE INCH LONG ON A FULL SIZE DRAWING. WHEN SCALING DRAWINGS, MEASURE BAR TO DETERMINE IF SCALES SHOWN WILL REQUIRE ADJUSTING.

ONE INCH

CONTRACT NO.

YEAR 1991

LOCATION CODE	SPECIALTY CODE
00	E

PROJECT NO. 5002-33

FILE NAME 00E-0002.DWG

DRAWING NO. 00E-2

SHEET NO. 52

C.E. BAILEY & ASSOCIATES, INC.
CONSULTING ENGINEERS
ORLANDO, CLEARWATER & FORT LAUDERDALE, FLORIDA

EX OPERATIONS CONTROL BUILDING

EX OIL STORAGE TANK IN UNDERGROUND VAULT

EX E

EX T

EX RTW

UNDERPASS

SOUTH GLEBE ROAD

SURVEY CTRL STATION "A"

EX UNDERPASS DRAINAGE PUMP STATION

MH #16

6 RW–DI/MJ AIR RELEASE VALVE

EX RTW

EXISTING J–BOX FOR DATA HIGHWAY

MH #17

EX EASEMENT

FOUR MILE RUN RELIEF INTERCEPTOR DIVERSION CHAMBER

MH #18

EX. GATE

20 00E–12

EX 54" RW–RC FOUR MILE RUN RELIEF INTERCEPTOR

EX CONSTRUCTION OFFICE

FERN STREET

GAS PIPE BY WASHINGTON GAS CO.

GAS PIPE BY WASHINGTON GAS CO.

MH #19 EXISTING MANHOLE (TYP.)

EX. 10.5 KV VA POWER FEEDER

EX E

FUTURE DUCT BANK

FUTURE

FOUR MILE RUN RELIEF PUMP STATION (NIC) B1

FUTURE LTG. FIXTURE (TYP. OF 2)

TYPE "A", 250W (TYP.) SEE RFC # 081

2#6–1"

EX T

MH #20

MH #21

EX FOUR MILE RUN INTERCEPTOR METER CHAMBER

CC

LOW LEVEL PUMP STATION FORCE MAIN

24 FA–RC/BS

2#6–1"

MATCHLINE SEE 00E–4

EXISTING FOUR MILE RUN RELIEF PUMP STATION

EX FLOW METER CHAMBER

EX DR

3#6–1"

EXISTING MCC–8A,8B

EX FUEL TANK

3#6–1"

2–4" WITH EXISTING 4 MILE RUN TEMPORARY FEEDERS AND CONDUIT (SEE SPECS)

EXISTING GRIT BLDG.

2–1 1/2" W/2A, 2B TEMP. FEEDERS, CEILING MTD.

MH #15

3#6 & 1#6 GND.–1 1/4" TO NEW 50A,3P BREAKER IN EXISTING MCC–8A (TEMPORARY FEEDER)

LIGHTING CIRCUIT NUMBER IDENTIFICATION (TYP. ALL SITE PLANS)

VDOT PERMANENT DRAINAGE EASEMENT

LOW LEVEL PUMP STATION C.P., LCP–12

SEE RFC # 081

4 FA–FRP/V

LOW LEVEL PUMP STATION & INLET MH

FOUL AIR BLOWER C.P., LCP–35

SUMP PUMP C.P., LCP–40

FOUL AIR BLOWER

FOUL AIR PIPE ACCESS MANHOLE & DRAIN SUMP

2#8–1"

4#6–2"

54 FA–RC/BS

MATCHLINE SEE 00E–2

PULL BOX

25 00E–12

FOUL AIR PIPE TO BLOWER BLDG

MH #15A

EX. MCC–2A, 2B ROOF MTD.

LOCATE UNDER WEST INFLUENT CHANNEL

PRIMARY SCUM PUMP STATION

FOUL AIR BLOWER & SUMP PUMP

54 FA–RC/BS

PB #14A & 14B

MANUAL MTR. STR. LCP–38

22 00E–12

21 00E–12

EX FLOTATION THICKENERS F1

EXISTING EXPANSION JOINTS

MH #22

23 00E–12

26 00E–12

MH #23

MH #24

24 00E–12

2#8–1"

SEPTAGE DUMPING STATION

TO FTB

3–4" ELEC. DUCTBANK

RECORD DRAWING

AREA N2 ELECTRICAL SITE PLAN

SCALE: 1"=20'

C.E. BAILEY & ASSOCIATES, INC.
CONSULTING ENGINEERS
ORLANDO, CLEARWATER & FORT LAUDERDALE, FLORIDA

NO.	DATE	DRWN	CHK'D	REVISIONS
1	9/97	FXP	ASG	RECORD DRAWING

DESIGNED BY: CEB
DRAWN BY: TRH
CHECKED BY/DATE: SEB/9–91
APPR'D BY/DATE: CEB/9–91

CAMP DRESSER & McKEE

THIS DRAWING HAS BEEN REVISED BY BLAZEN AND SAWTER, P.C. TO REFLECT MODIFICATIONS MADE DURING CONSTRUCTION

CDM environmental engineers, scientists, planners, & management consultants

ARLINGTON COUNTY, VIRGINIA
WATER POLLUTION CONTROL PLANT
UPGRADE AND EXPANSION– PHASE B

ELECTRICAL
AREA N2 SITE PLAN

SCALE NOTE

SCALE BAR SHOWN BELOW IS ONE INCH LONG ON A FULL SIZE DRAWING. WHEN SCALING DRAWINGS, MEASURE BAR TO DETERMINE IF SCALES SHOWN WILL REQUIRE ADJUSTING.

ONE INCH

CONTRACT NO.

YEAR 1991

LOCATION CODE	SPECIALTY CODE
00	E

PROJECT NO. 5002–33

FILE NAME 00E–0003.DWG

DRAWING NO. 00E–3

SHEET NO. 53

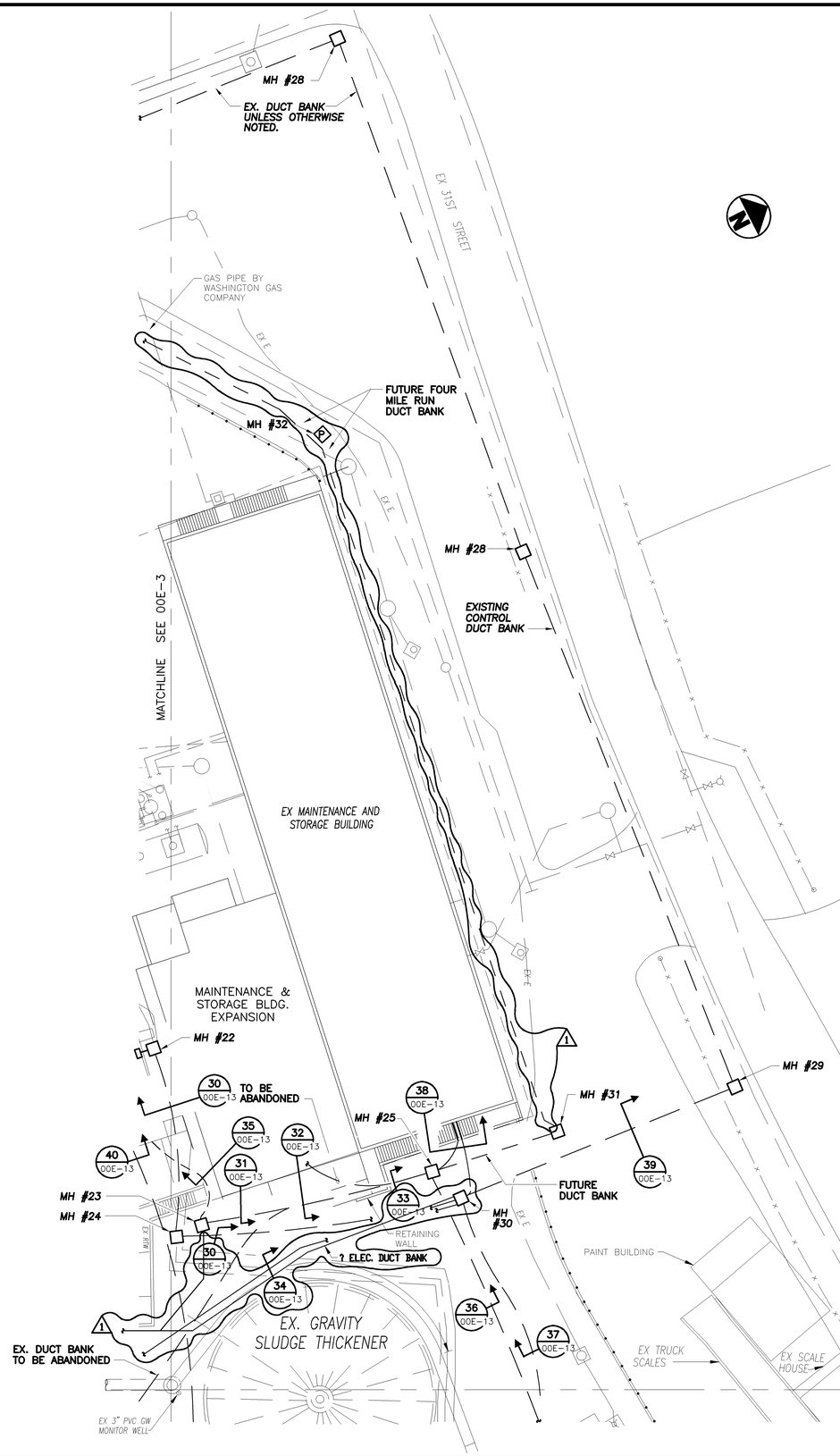

1. DO NOT SCALE THE ELECTRICAL DRAWINGS. REFER TO THE MECHANICAL, STRUCTURAL DRAWINGS, AND APPROVED MANUFACTURER'S SHOP DRAWINGS FOR EXACT LOCATION OF ALL EQUIPMENT.
2. ALL WORK SHALL COMPLY WITH N.E.C. AND LOCAL CODES.
3. CONFIRM LOCATION OF ALL INSTRUMENTATION EQUIPMENT IN FIELD PER MANUFACTURER'S SHOP DRAWINGS.
4. ALL CONDUITS SHALL HAVE A BOND WIRE SIZED PER TABLE 250-94 OF THE N.E.C.
5. ALL EMERCENCY LIGHTS SHALL BE CONNECTED TO LINE SIDE OF THE NEAREST LIGHT SWITCH.

AREA N3 ELECTRICAL SITE PLAN

SCALE: 1"=20'

MATCHLINE SEE 00E-5

NO.	DATE	DRWN	CHK'D	DESCRIPTION
				REVISIONS
1	9/97	FXP	ASG	RECORD DRAWING

DESIGNED BY: CEB
DRAWN BY: JSG
CHECKED BY/DATE: SEB/9-91
APPR'D BY/DATE: CEB/9-91

CAMP DRESSER & McKEE

THIS DRAWING HAS BEEN REVISED BY HAZEN AND SAWYER, P.C. TO REFLECT MODIFICATIONS MADE DURING CONSTRUCTION

CDM environmental engineers, scientists, planners, & management consultants

ARLINGTON COUNTY, VIRGINIA
WATER POLLUTION CONTROL PLANT
UPGRADE AND EXPANSION- PHASE B

ELECTRICAL
AREA N3 SITE PLAN

SCALE NOTE

SCALE BAR SHOWN BELOW IS ONE INCH LONG ON A FULL SIZE DRAWING. WHEN SCALING DRAWINGS, MEASURE BAR TO DETERMINE IF SCALES SHOWN WILL REQUIRE ADJUSTING.

ONE INCH

RECORD DRAWING

CONTRACT NO.

YEAR 1991

LOCATION CODE	SPECIALTY CODE
00	E

PROJECT NO. 5002-33

FILE NAME 00E-0004.DWG

DRAWING NO. 00E-4

SHEET NO. 54

C.E. BAILEY & ASSOCIATES, INC.
CONSULTING ENGINEERS
ORLANDO, CLEARWATER & FORT LAUDERDALE, FLORIDA

MATCHLINE SEE 00E-4

EX GRAVITY SLUDGE

EX GRAVITY SLUDGE THICKENER NO. 2

EX SLUDGE STORAGE TANK NO. 1

EX SLUDGE STORAGE TANK NO. 2

EX SLUDGE STORAGE TANK TUNNEL (BELOW)

SLUDGE STORAGE BUILDING

EX DIGESTER NO. 1

EX DIGESTER NO. 2

EX DIGESTER NO. 3

EX SLUDGE PROCESSING BUILDING

EX SLUDGE FILTER BUILDING

EX LIME BUILDING

EX ELUTRIATION TANKS

EX OLD INCINERATOR BUILDING
(NOT IN USE)

EX TRANSFER STATION

EX ELECTRICAL SUBSTATION NO. 1B

EX SCALE HOUSE

EX TRUCK SCALES

EX ELECTRICAL DIST CENTER NO. 1

EX ELECTRICAL SUBSTATION NO. 1A

EX WASTE GAS BURNER STATION

EX U/G TANKS

EXISTING TELEPHONE CIRCUIT

EX 1ST STREET

S EADS STREET

EX POTOMAC INTERCEPTOR

FOUL AIR BLOWER, TYP 4

ODOR CONTROL BLOWER, TYP 2

EX 3" PVC GW MONITOR WELL

EX TRENCH

EX CSW

EX E

EX E TRANS

PB #3
PB #2

C/I-10

MH #9
MH #11
MH #33
MH #34
MH #35
MH #36
MH #37
MH #38
MH #39
MH #40

15 OOE-12
13 OOE-12
14 OOE-12
36 OOE-13
37 OOE-13
57 OOE-11
54 OOE-11
56 OOE-11
55 OOE-11
51 OOE-11
52 OOE-11
48 OOE-11
49 OOE-11
50 OOE-11
12 OOE-12
10 OOE-12
8 OOE-12

MATCHLINE SEE 00E-2

AREA N4 ELECTRICAL SITE PLAN

SCALE: 1"=20'

NO.	DATE	DRWN	CHK'D	REVISIONS DESCRIPTION
1	9/97	FXP	ASG	RECORD DRAWING

DESIGNED BY: CEB
DRAWN BY: JSG
CHECKED BY/DATE: SEB
APPRV'D BY/DATE: CEB

CAMP DRESSER & McKEE

THIS DRAWING HAS BEEN REVISED BY BLAZON AND SLATTER, P.C. TO REFLECT MODIFICATIONS MADE DURING CONSTRUCTION

CDM
environmental engineers, scientists, planners, & management consultants

ARLINGTON COUNTY, VIRGINIA
WATER POLLUTION CONTROL PLANT
UPGRADE AND EXPANSION- PHASE B

ELECTRICAL
AREA N4 SITE PLAN

SCALE NOTE
SCALE BAR SHOWN BELOW IS ONE INCH LONG ON A FULL SIZE DRAWING. WHEN SCALING DRAWINGS, MEASURE BAR TO DETERMINE IF SCALES SHOWN WILL REQUIRE ADJUSTING.
ONE INCH

CONTRACT NO.

YEAR 1991

LOCATION CODE	SPECIALTY CODE
00	E

PROJECT NO. 5002-33

FILE NAME 00E-0005.DWG

DRAWING NO. 00E-5

SHEET NO. 55

RECORD DRAWING

C.E. BAILEY & ASSOCIATES, INC.
CONSULTING ENGINEERS
ORLANDO, CLEARWATER & FORT LAUDERDALE, FLORIDA

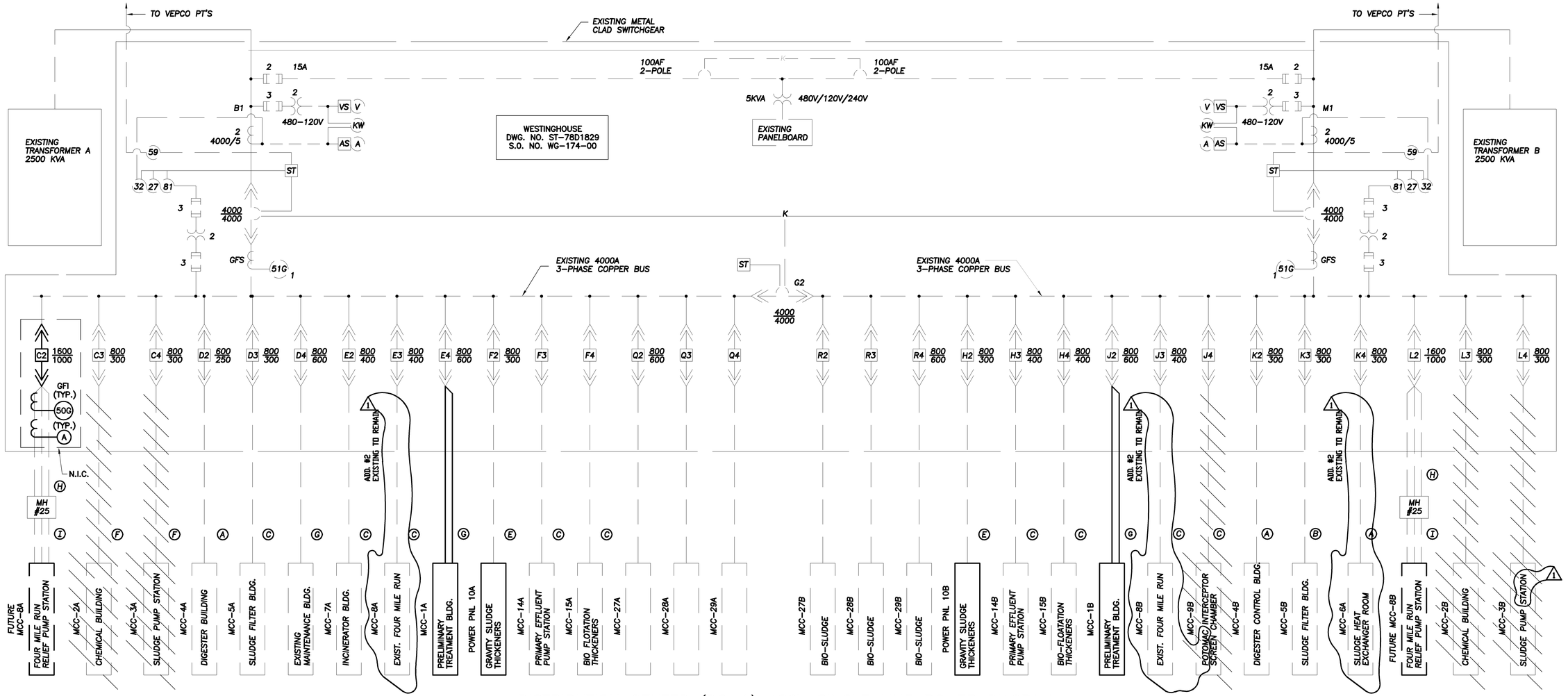

DISTRIBUTION CENTER (DC-1) 480V SINGLE LINE POWER DIAGRAM

	B1 MAIN BREAKER SECTION A	C1	D1	E1	F1	Q1	G1 TRANSITION	R1	H1	J1	K1	L1	M1 MAIN BREAKER SECTION B
	B2 MAIN BREAKER	C2 FUTURE MCC-8A BKR. FOUR MILE RUN RELIEF PUMP STA.	D2 MCC-4A	E2 MCC-7A INCINERATOR BUILDING	F2 PP10A	Q2 MCC-27A	G2 TIE BREAKER	R2 MCC-27B BIO-SLUDGE	H2 PP-10B GRAVITY SLUDGE THICKENER	J2 MCC-1B PRELIMINARY TREATMENT BLDG.	K2 MCC-4B DIGESTER CONTROL BUILDING	L2 FUTURE MCC-8B BKR. FOUR MILE RUN RELIEF PUMP STA.	M1 MAIN BREAKER
INCOMING SERVICE SECTION A	B3	C3 ⓐ MCC-2A	D3 MCC-5A	E3 ⓐ MCC-8A	F3 MCC-14A	Q3 MCC-28A		R3 MCC-28B BIO-SLUDGE	H3 MCC-14B PRIMARY EFFLUENT PUMP STA.	J3 ⓐ MCC-8B EXIST. FOUR MILE RUN	K3 MCC-5B SLUDGE FILTER BUILDING	L3 MCC-2B GRIT/CHEM. BUILDING ⓐ	INCOMING SERVICE SECTION B
		C4 ⓐ MCC-3A	D4 EXISTING MAINTENANCE BLDGS.	E4 MCC-1A PRELIMINARY TREATMENT BLDG.	F4 MCC-15A	Q4 MCC-29A	G3 LIGHTING PANEL	R4 MCC-29 BIO-SLUDGE	H4 MCC-15B FLOTATION THICKENER	J4 ⓐ MCC-9 POTOMAC INTERCEPTOR	K4 MCC-6	L5 MCC-3B PRIMARY PUMP STA. ⓐ	M1

Ⓐ 3#4/0
Ⓑ 3-350 MCM
Ⓒ 3-500 MCM
Ⓓ 3-4" EMPTY
Ⓔ 3#4/0
Ⓕ 3-#1/0
Ⓖ 2-4" W/3-350 MCM
Ⓗ 3-4" EMPTY - EXISTING
Ⓘ FUTURE DUCTBANK

NOTES

ⓐ DENOTES MCC BREAKERS TO BE ABANDONED UNDER THIS CONTRACT. BREAKERS TO BECOME SPARES.

ⓑ WIRE TO BE REMOVED FROM END TO END & CONDUIT REFURBISHED PER SPECS. COORDINATE WITH TEMPORARY POWER REQUIREMENTS.

ⓒ EXISTING WIRE TO BE REUSED ON A TEMPORARY BASIS. SEE SPECS FOR DETAILS. WIRE TO BE REMOVED AND CONDUIT REFURBISHED AS PER ⓑ.

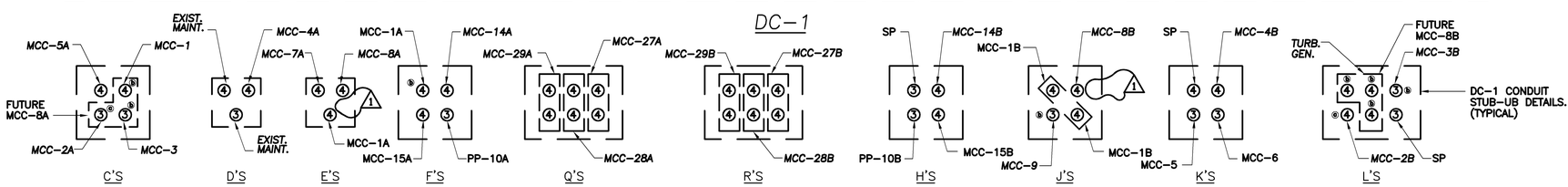

RECORD DRAWING

NO.	DATE	DRWN	CHK'D	DESCRIPTION
1	9/97	FXP	ASG	RECORD DRAWING

REVISIONS

DESIGNED BY: SEB
DRAWN BY: TRH
CHECKED BY/DATE: CEB/9-91
APPR'D BY/DATE: CEB/9-91

CAMP DRESSER & McKEE

THIS DRAWING HAS BEEN REVISED BY THAZEN AND SAWTER, P.C. TO REFLECT MODIFICATIONS MADE DURING CONSTRUCTION

environmental engineers, scientists, planners, & management consultants

CDM

ARLINGTON COUNTY, VIRGINIA
WATER POLLUTION CONTROL PLANT
UPGRADE AND EXPANSION- PHASE B

ELECTRICAL
SINGLE LINE POWER DIAGRAM

SCALE NOTE

SCALE BAR SHOWN BELOW IS ONE INCH LONG ON A FULL SIZE DRAWING. WHEN SCALING DRAWINGS, MEASURE BAR TO DETERMINE IF SCALES SHOWN WILL REQUIRE ADJUSTING.

ONE INCH

CONTRACT NO.

YEAR	1991
LOCATION CODE	SPECIALTY CODE
00	E

PROJECT NO. 5002-33

FILE NAME 00E-0006.DWG

DRAWING NO. 00E-6

SHEET NO. 56

C.E. BAILEY & ASSOCIATES, INC.
CONSULTING ENGINEERS
ORLANDO, CLEARWATER & FORT LAUDERDALE, FLORIDA

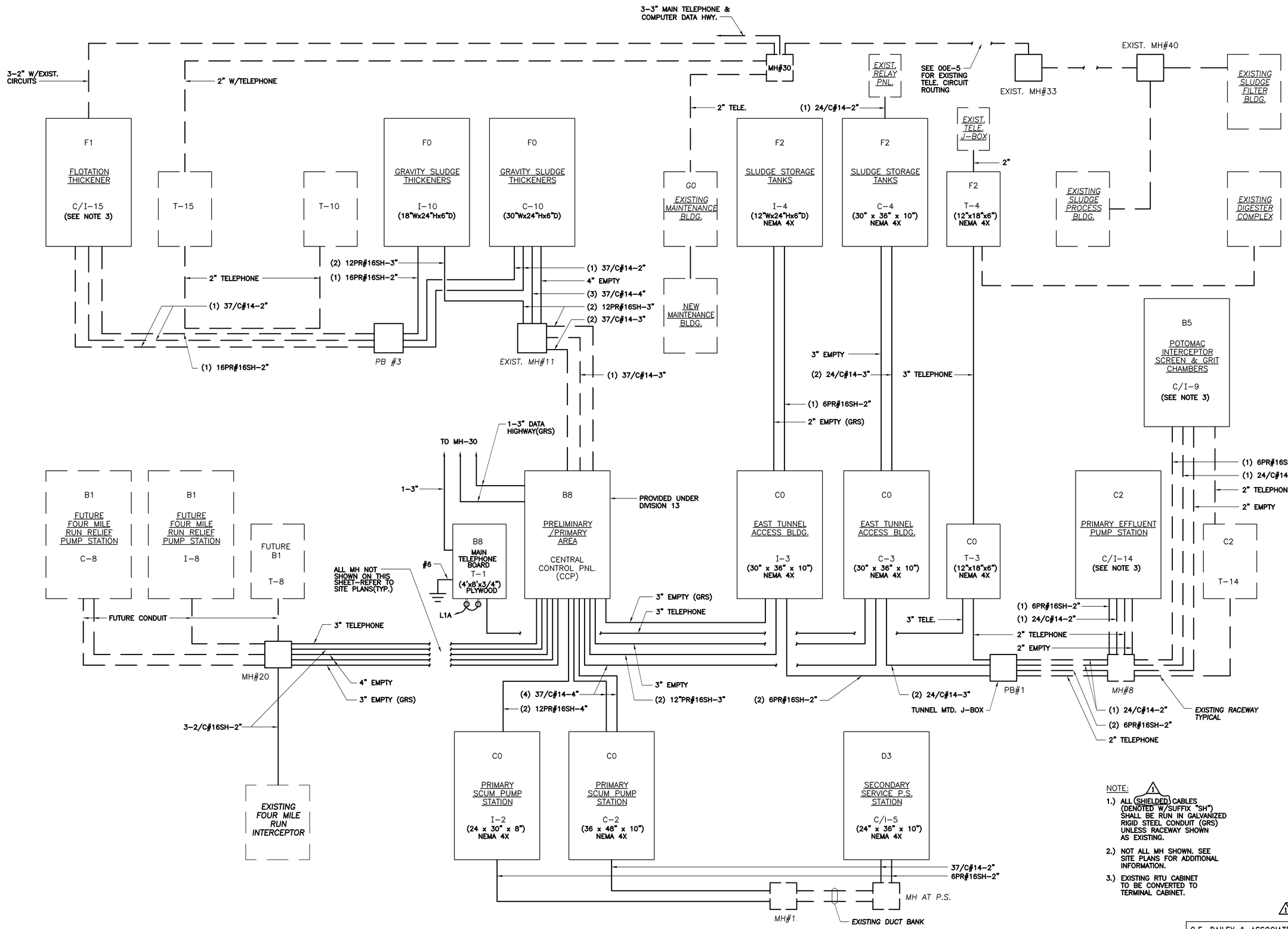

CONTROL & INSTRUMENTATION CONDUIT & WIRE RISER DIAGRAM

NOTE:

1.) ALL (SHIELDED) CABLES (DENOTED W/SUFFIX "SH") SHALL BE RUN IN GALVANIZED RIGID STEEL CONDUIT (GRS) UNLESS RACEWAY SHOWN AS EXISTING.

2.) NOT ALL MH SHOWN. SEE SITE PLANS FOR ADDITIONAL INFORMATION.

3.) EXISTING RTU CABINET TO BE CONVERTED TO TERMINAL CABINET.

NO.	DATE	DRWN	CHK'D	DESCRIPTION
				REVISIONS
1	9/97	FXP	ASG	RECORD DRAWING

DESIGNED BY: SEB
DRAWN BY: TRH
CHECKED BY/DATE: CEB/9-91
APPR'D BY/DATE: CEB/9-91

CAMP DRESSER & McKEE

THIS DRAWING HAS BEEN REVISED BY BLAZON AND SAWYER, P.C. TO REFLECT MODIFICATIONS MADE DURING CONSTRUCTION

CDM environmental engineers, scientists, planners, & management consultants

ARLINGTON COUNTY, VIRGINIA
WATER POLLUTION CONTROL PLANT
UPGRADE AND EXPANSION- PHASE B

ELECTRICAL
CONDUIT & WIRE RISER DIAGRAM

SCALE NOTE

SCALE BAR SHOWN BELOW IS ONE INCH LONG ON A FULL SIZE DRAWING. WHEN SCALING DRAWINGS, MEASURE BAR TO DETERMINE IF SCALES SHOWN WILL REQUIRE ADJUSTING.

ONE INCH

CONTRACT NO.

YEAR 1991

LOCATION CODE	SPECIALTY CODE
00	E

PROJECT NO. 5002-33

FILE NAME 00E-0007.DWG

DRAWING NO. 00E-7

SHEET NO. 57

RECORD DRAWING

C.E. BAILEY & ASSOCIATES, INC.
CONSULTING ENGINEERS
ORLANDO, CLEARWATER & FORT LAUDERDALE, FLORIDA

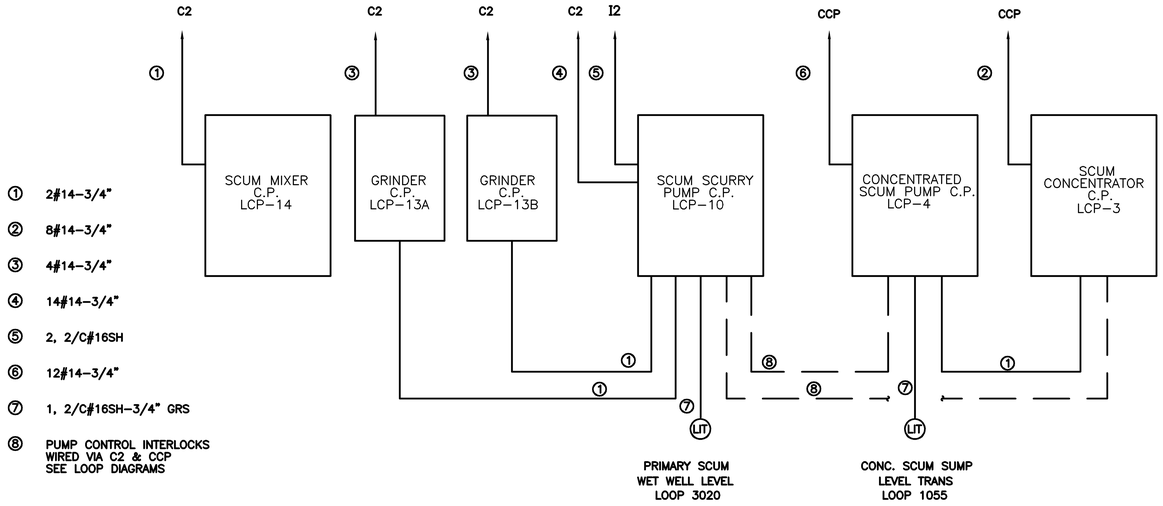

SCUM PROCESS
CONTROL & INSTRUMENTATION RISER

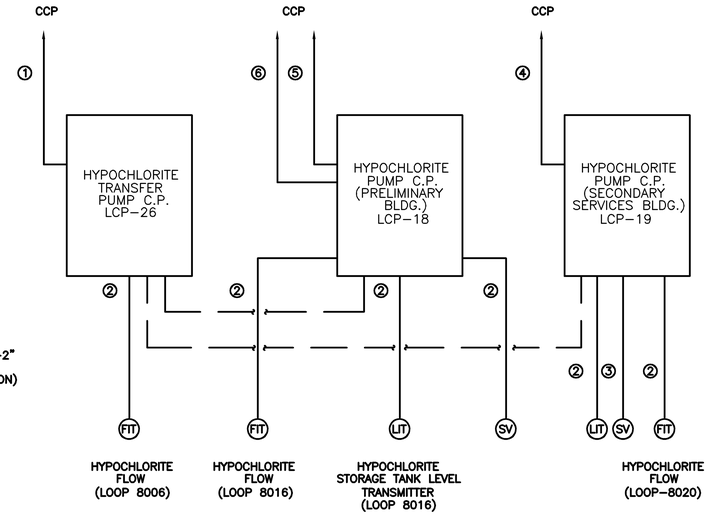

SODIUM HYPOCHLORITE SYSTEM
CONTROL & INSTRUMENTATION RISER

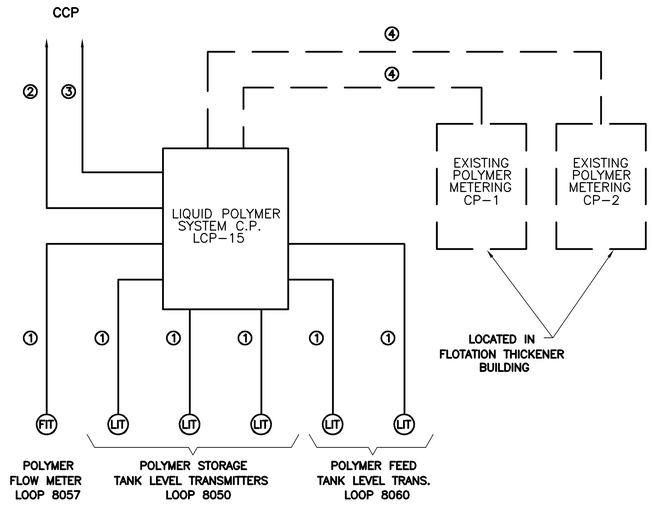

POLYMER SYSTEM
CONTROL & INSTRUMENTATION RISER

NO.	DATE	DRWN	CHK'D	DESCRIPTION
				REVISIONS
1	11/98	FXP	ASG	RECORD DRAWING

DESIGNED BY: SEB
DRAWN BY: JSG
CHECKED BY/DATE: CEB/9-91
APPR'D BY/DATE: CEB/9-91

CAMP DRESSER & McKEE

THIS DRAWING HAS BEEN REVISED BY HAZEN AND SAWYER, P.C. TO REFLECT MODIFICATIONS MADE DURING CONSTRUCTION

CDM
environmental engineers, scientists, planners, & management consultants

ARLINGTON COUNTY, VIRGINIA
WATER POLLUTION CONTROL PLANT
UPGRADE AND EXPANSION- PHASE B

CONTROL & INSTRUMENTATION PROCESS
WIRING RISER DIAGRAMS

SCALE NOTE
SCALE BAR SHOWN BELOW IS ONE INCH LONG ON A FULL SIZE DRAWING. WHEN SCALING DRAWINGS, MEASURE BAR TO DETERMINE IF SCALES SHOWN WILL REQUIRE ADJUSTING.
ONE INCH

CONTRACT NO.

YEAR 1991

LOCATION CODE	SPECIALTY CODE
00	E

PROJECT NO. 5002-33

FILE NAME 00E-0008.DWG

DRAWING NO. 00E-8

SHEET NO. 58

RECORD DRAWING

C.E. BAILEY & ASSOCIATES, INC.
CONSULTING ENGINEERS
ORLANDO, CLEARWATER & FORT LAUDERDALE, FLORIDA

LIGHTING FIXTURE SCHEDULE

MARK	WATT	DESCRIPTION	MFR (OR APPROVED EQUAL)
A	250	SEE POLE MTD. FIXTURE DETAIL "A", THIS SHEET.	
B	100	SEE POLE MTD. FIXTURE DETAIL "B", THIS SHEET.	
C	160	8'–0" LONG, VAPORTIGHT, GASKETED FIXTURE WITH 4–40W R.S. FLUORESCENT LAMPS. NON–CORROSIVE, NON–METALLIC HOUSING, HIGH IMPACT ACRYLIC LENS, FULLY ENCLOSED WIRING, 120V ESB, SUITABLE FOR DAMP LOCATIONS.	DAYBRITE "VAPORLUME"
D	80	SIMILAR TO FIXTURE "C", EXCEPT 4'–0" LONG WITH 2–40W R.S. LAMPS.	DAYBRITE "VAPORLUME"
E	120	2'x4' STATIC FLUORESCENT TROFFER W/3–40 WATT R.S. LAMPS. FRAME: REGRESSED ALUMINUM FLOATING DOOR. BAKED WHITE ENAMEL REFLECTOR, ACRYLIC PRISMATIC LENS, 120V ESB.	KEENE "MODULA SERIES 2"
F	80	SIMILAR TO FIXTURE "E", EXCEPT 2'x2' WITH 2–40W U–LAMPS.	KEENE "MODULA SERIES 2"
G	150	HIGH PRESSURE SODIUM HID LUMINAIRE, DIE CAST ALUMINUM HOUSING, ALUMINUM REFLECTOR WITH GLASS REFRACTOR AND ALUMINUM COVER, 120V WITH 100 WATT AUXILIARY QUARTZ LIGHTING SYSTEM WHERE NOTED BY AN *.	HOLOPHANE "ENDURALUME V" DAYBRITE "LC LUMINAIRE"
H	150	HIGH PRESSURE SODIUM HID LUMINAIRE, SUITABLE FOR CLASS I HAZARDOUS DUTY, CORROSION RESISTANT, ALUMINUM HOUSING WITH STAINLESS STEEL MOUNTING HARDWARE. ALUMINUM REFLECTOR WITH GLASS LENS. 120V WITH 100W QUARTZ AUXILIARY LIGHTING SYSTEM.	HOLOPHANE "PETROLUX II"
J	70	HIGH PRESSURE SODIUM HID LUMINAIRE, SUITABLE FOR CLASS I HAZARDOUS DUTY, CORROSION RESISTANT, ALUMINUM HOUSING WITH STAINLESS STEEL MOUNTING HARDWARE. ALUMINUM REFLECTOR WITH GLASS LENS. 120V WITH 100W QUARTZ AUXILIARY LIGHTING SYSTEM.	HOLOPHANE "PETROLUX II"
K	100	INCANDESCENT WALL BRACKETED FIXTURE. CORROSION RESISTANT CAST–ALUMINUM HOUSING, GASKETED AND WEATHERTIGHT, CLEAR GLASS DIFFUSER WITH GUARD. 100 WATT INCANDESCENT LAMP, 120V.	McPHILBEN "43–44 VTC"
L	50	WALL MOUNTED HID LIGHT FIXTURE WITH 50W HPS LAMP, WEATHERPROOF AND GASKETED DIE–CAST ALUMINUM HOUSING, DARK BRONZE FINISH, PRISMATIC POLYCARBONATE REFRACTOR, 120V ESB.	HUBBELL "NRG–121" DAYBRITE "FIREFLIES"
M	150/100	WALL BRACKETED INCANDESCENT, SUITABLE FOR CLASS I HAZARDOUS DUTY. CORROSION RESISTANT, ALUMINUM HOUSING WITH IMPACT RESISTANT GLOBE & GUARD. 3/4" HUBS.	HUBBELL "HLE–X" (CEILING) & "HLE–B" (WALL)
N	100	POLE MTD. METAL HALIDE FIXTURE, HEAT & IMPACT RESISTANT, CLASS I HAZARDOUS DUTY, FACTORY SEALED, 100 WATT, 120V. SEE POLE MTD. FIXTURE DETAIL "C", THIS SHEET.	HUBBELL HLHZ SERIES OR EQUAL
O	70	WALL MOUNTED HID LIGHTING FIXTURE W/50 WATT H.P.S. LAMP, WEATHER–PROOF & GASKETED, DIE–CAST ALUMINUM HOUSING, DARK BRONZE FINISH, ALUMINUM REFLECTOR WITH CLEAR POLYCARBONATE LENS, 120V HPF BALLAST.	KEENE: "SILHOUETTE" SAW SERIES
P	25	EMERGENCY ROTATING LIGHT, FOR OUTDOOR MOUNTING W/CAST ZINC BASE J–BOX & 25W FLASHING RED LIGHT. PROVIDE EDWARDS HORN #5540–N5 W/349 BACK BOX WHERE SHOWN ON THE DRAWINGS.	EDWARDS ADAPTABEACON SERIES 52 OR EQUAL
	—	VIBRATING ALARM HORN, 120V, GRILLE TYPE FOR SURFACE MOUNTING, WEATHERPROOF.	EDWARDS NO. 876N5
*		EXIT SIGN W/CAST ALUM. HOUSING & ALUM. STENCIL FACE, BLACK BAKED ENAMEL FINISH, SEALED NICKEL CADMIUM BATTERY, SELF CONTAINED AUTO–CHARGING, WALL OR CEILING MOUNTED AS REQUIRED. 120V–AC, 12V–DC. CEILING MTD. UNITS SHALL BE DUAL FACE.	CHLORIDE DBC SERIES RW–EPE SERIES FOR CLASS I HAZARDOUS DUTY
H *		EMERGENCY LIGHTING UNIT, SUITABLE FOR CLASS I HAZARDOUS DUTY, SELF CONTAINED AUTO–CHARGING. ALUMINUM CORROSION RESISTANT HOUSING WITH 2 HEADS, EACH WITH 1–9 WATT HIT LAMP. 120V–AC, 12V–DC.	CHLORIDE IXN OR EQUAL DUALITE
*		EMERGENCY LIGHTING UNIT SELF CONTAINED AUTO–CHARGING BATTERY BACK–UP W/TEST S.W. & PILOT LIGHT, SEALED LEAD CALCIUM BATTERY, (2) HEADS W/18W HID LAMP PER HEAD. 120V–AC, 12V–DC. 36W OUTPUT.	CHLORIDE TMFRE36DE2 OR EQUAL DUALITE

* CONNECT EXIT SIGNS & BATTERY LIGHTS TO LINE SIDE OF AREA LIGHT SWITCH.

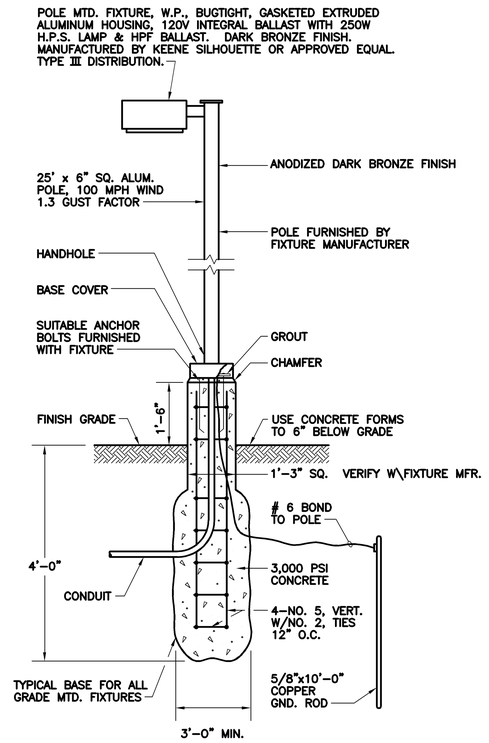

POLE MOUNTED FIXTURE DETAIL "A"

N.T.S.

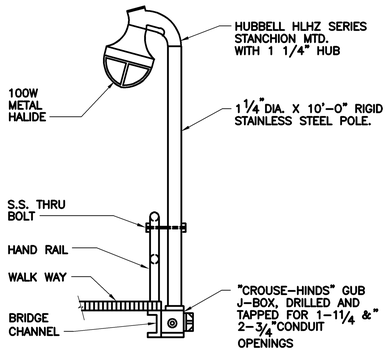

FIXTURE TYPE "C" DETAIL

N.T.S.

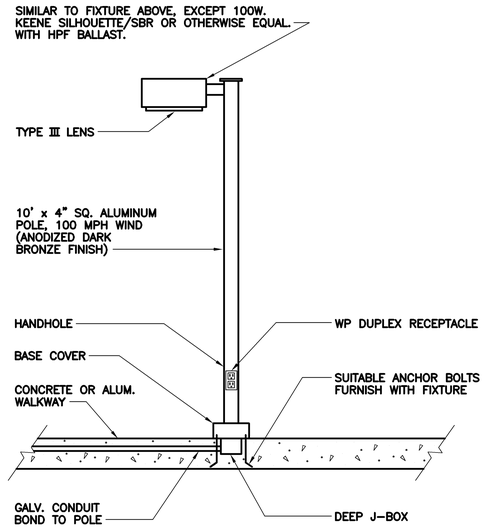

POLE MOUNTED FIXTURE DETAIL "B"

N.T.S.

NO.	DATE	DRWN	CHK'D	REVISIONS DESCRIPTION
1	9/97	FXP	ASG	RECORD DRAWING

DESIGNED BY: SEB
DRAWN BY: TRH
CHECKED BY/DATE: CEB/9–91
APPR'D BY/DATE: CEB/9–91

CAMP DRESSER & McKEE

THIS DRAWING HAS BEEN REVISED BY HAZEN AND SAWYER, P.C. TO REFLECT MODIFICATIONS MADE DURING CONSTRUCTION

CDM
environmental engineers, scientists, planners, & management consultants

ARLINGTON COUNTY, VIRGINIA
WATER POLLUTION CONTROL PLANT
UPGRADE AND EXPANSION– PHASE B

ELECTRICAL
LIGHTING FIXTURE SCHEDULE

SCALE NOTE

SCALE BAR SHOWN BELOW IS ONE INCH LONG ON A FULL SIZE DRAWING. WHEN SCALING DRAWINGS, MEASURE BAR TO DETERMINE IF SCALES SHOWN WILL REQUIRE ADJUSTING.

ONE INCH

RECORD DRAWING

CONTRACT NO.

YEAR 1991

LOCATION CODE	SPECIALTY CODE
00	E

PROJECT NO. 5002–33

FILE NAME 00E–0009.DWG

DRAWING NO. 00E–9

SHEET NO. 59

C.E. BAILEY & ASSOCIATES, INC.
CONSULTING ENGINEERS
ORLANDO, CLEARWATER & FORT LAUDERDALE, FLORIDA

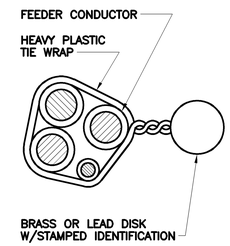

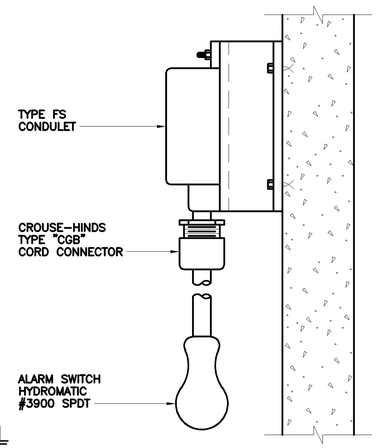

U.G. CABLE TAG DETAIL

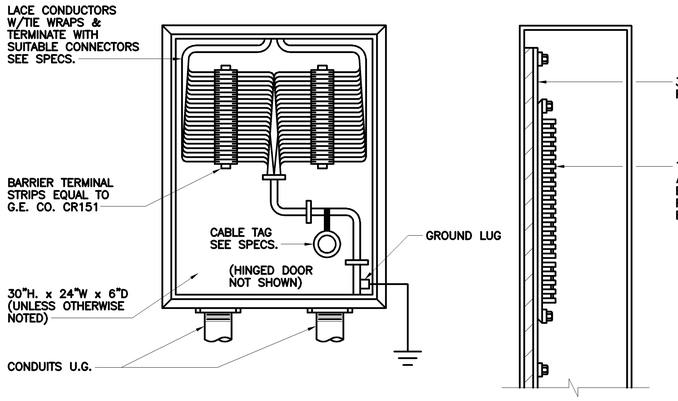

TYPICAL TERMINAL CABINET

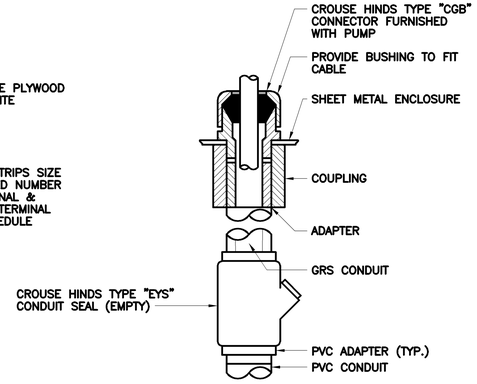

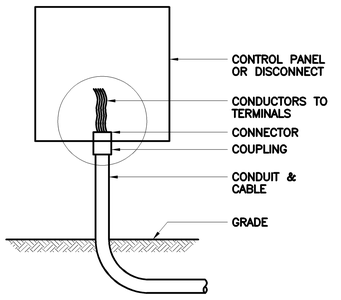

WATER TIGHT CONNECTION DETAIL

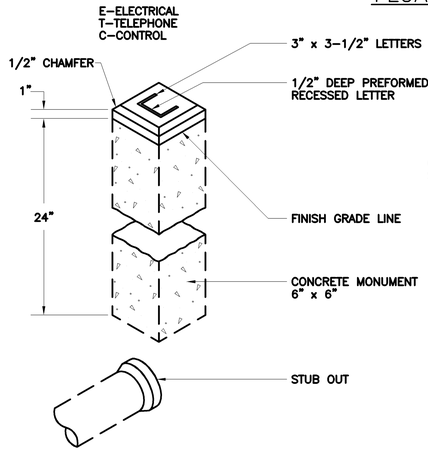

FLOAT SWITCH SUPPORT DETAIL

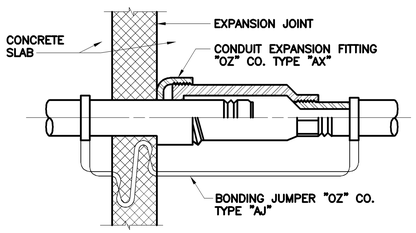

EXPANSION FITTING DETAIL

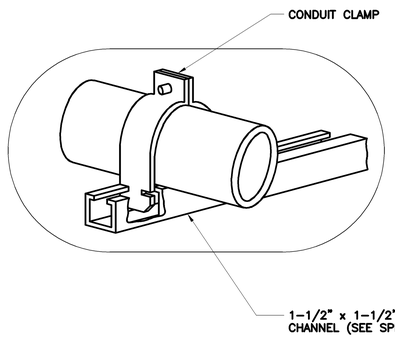

CONDUIT PIPE STRAP MOUNTING DETAILS

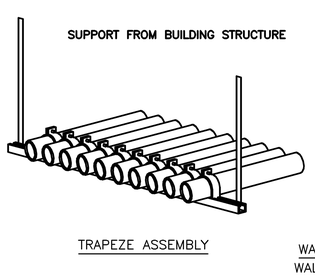

TRAPEZE ASSEMBLY

WALKWAY AND WALL MOUNTED

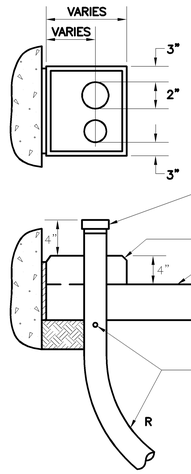

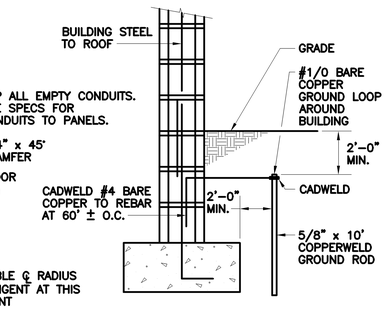

TYPICAL CONDUIT THRU SLAB

BUILDING STRUCTURE BONDING

CONDUIT STUB MONUMENT DETAILS

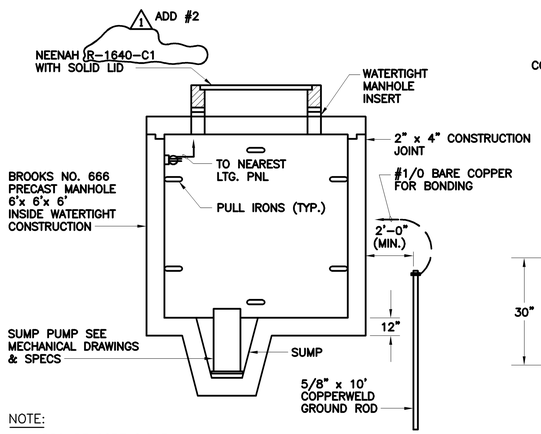

NOTE:
PROVIDE COPE CABLE RACK (SEE SPECS)

MANHOLE DETAIL

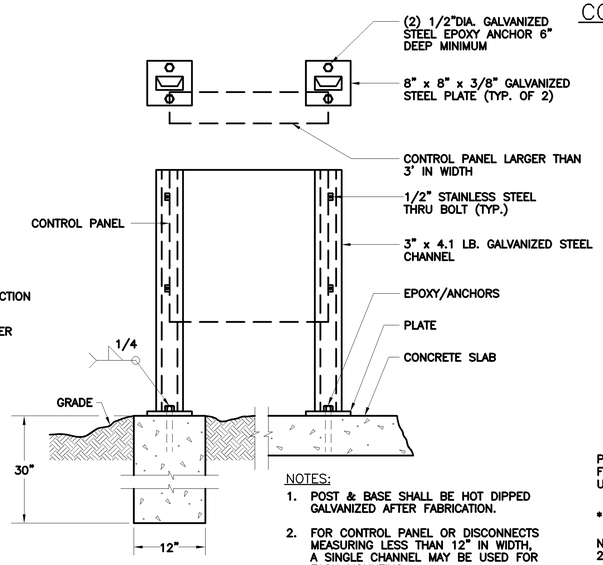

NOTES:
1. POST & BASE SHALL BE HOT DIPPED GALVANIZED AFTER FABRICATION.
2. FOR CONTROL PANEL OR DISCONNECTS MEASURING LESS THAN 12" IN WIDTH, A SINGLE CHANNEL MAY BE USED FOR EACH MOUNTING.

TYPICAL DISCONNECT AND CONTROL PANEL MOUNTING DETAIL

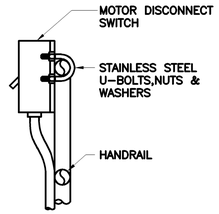

HANDRAIL MOUNTED DISCONNECT

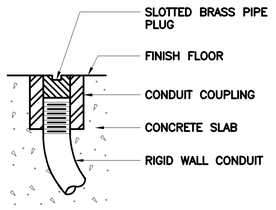

DETAIL OF CONDUIT TERMINATION STUB OUT

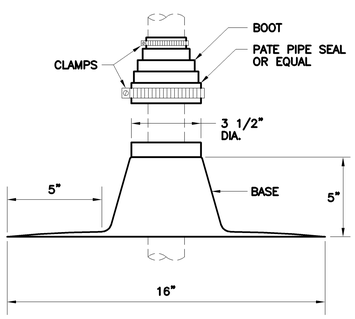

CONDUIT ROOF PENETRATION DETAIL

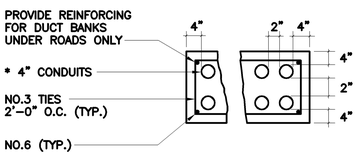

TYPICAL DUCT BANK

NOTE:
* ALL SHIELDED INSTR. CABLES SHALL BE INSTALLED IN GALVANIZED RIGID STEEL CONDUIT. PROVIDE ONE GALVANIZED CONDUIT IN EACH INSTR. DUCT BANK WITH SPARES FOR FUTURE.

NO.	DATE	DRWN	CHK'D	REVISIONS DESCRIPTION
1	9/97	FXP	ASG	RECORD DRAWING

DESIGNED BY: PAL
DRAWN BY: JSC
CHECKED BY/DATE: SEB/9-91
APPR'D BY/DATE: CEB/9-91

CAMP DRESSER & McKEE
THIS DRAWING HAS BEEN REVISED BY HAZEN AND SAWYER, P.C. TO REFLECT MODIFICATIONS MADE DURING CONSTRUCTION
CDM
environmental engineers, scientists, planners, & management consultants

ARLINGTON COUNTY, VIRGINIA
WATER POLLUTION CONTROL PLANT
UPGRADE AND EXPANSION- PHASE IIB

ELECTRICAL DETAILS

SCALE NOTE
SCALE BAR SHOWN BELOW IS ONE INCH LONG ON A FULL SIZE DRAWING. WHEN SCALING DRAWINGS, MEASURE BAR TO DETERMINE IF SCALES SHOWN WILL REQUIRE ADJUSTING.
ONE INCH

CONTRACT NO.

YEAR	1991
LOCATION CODE	SPECIALTY CODE
00	E

PROJECT NO. 5002-33
FILE NAME 00E-0010.DWG
DRAWING NO. 00E-10
SHEET NO. 60

1 RECORD DRAWING

C.E. BAILEY & ASSOCIATES, INC.
CONSULTING ENGINEERS
ORLANDO, CLEARWATER & FORT LAUDERDALE, FLORIDA

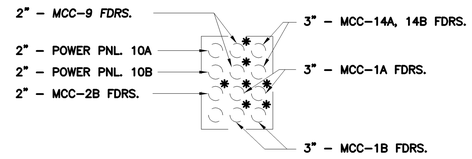

SECTION 48 00E–5

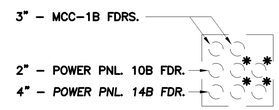

SECTION 49 00E–5

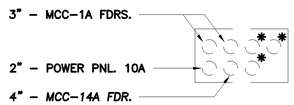

SECTION 50 00E–5

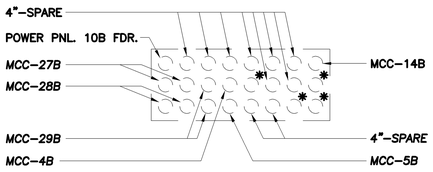

SECTION 51 00E–5

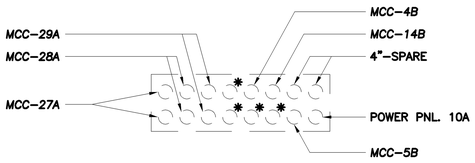

SECTION 52 00E–5

NOT USED

SECTION 53 00E–5

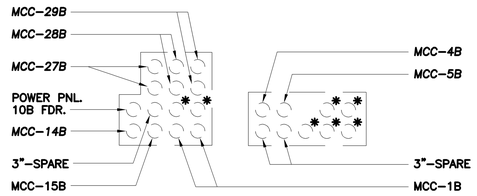

SECTION 54 00E–5

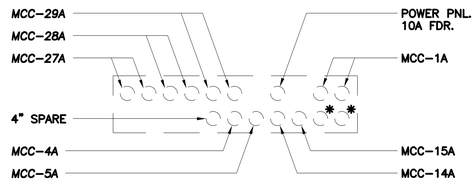

SECTION 55 00E–5

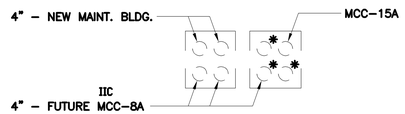

SECTION 56 00E–5

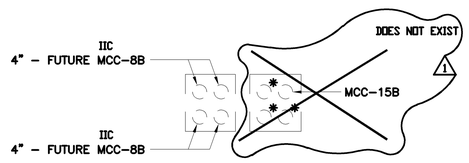

SECTION 57 00E–5

NOT USED

SECTION 58 00E–5

NOT USED

SECTION 59 00E–5

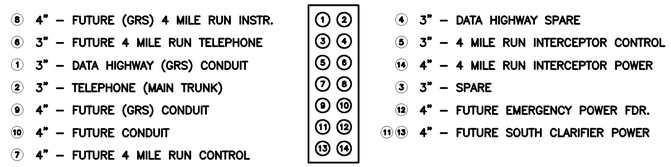

SECTION 60 00E–2

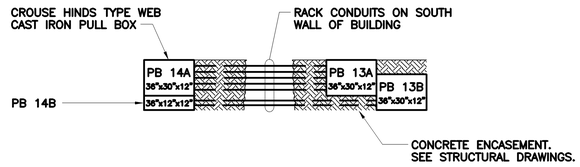

SECTION 61 00E–2

NOTES:

1.) ALL TEMPORARY FEEDERS SHALL BE REMOVED AND CONDUITS REFURBISHED AND LEFT AS SPARES WHEN NO LONGER REQUIRED.

2.) EXISTING CABLE TO BE REMOVED FROM END TO END DENOTED BY AN *. CONDUIT TO BE REUSED SHALL BE SWABBED AND CLEANED FOR REUSE PER SPECIFICATIONS. CONFIRM WITH ENGINEER IN FIELD. NEW DUCT BANKS ARE SHOWN DARK.

3.) CONTRACTOR SHALL CONFIRM CIRCUIT LOCATIONS IN MANHOLE AND CONDUIT SIZES.

RECORD DRAWING

1

C.E. BAILEY & ASSOCIATES, INC.
CONSULTING ENGINEERS
ORLANDO, CLEARWATER & FORT LAUDERDALE, FLORIDA

NO.	DATE	DRWN	CHK'D	DESCRIPTION
1	9/97	FXP	ASG	RECORD DRAWING

REVISIONS

DESIGNED BY: SEB
DRAWN BY: TRH
CHECKED BY/DATE: CEB/9–91
APPR'D BY/DATE: CEB/9–91

CAMP DRESSER & McKEE

THIS DRAWING HAS BEEN REVISED BY HAZEN AND SAWYER, P.C. TO REFLECT MODIFICATIONS MADE DURING CONSTRUCTION

environmental engineers, scientists, planners, & management consultants CDM

ARLINGTON COUNTY, VIRGINIA
WATER POLLUTION CONTROL PLANT
UPGRADE AND EXPANSION– PHASE IIB

ELECTRICAL
DUCT BANK SECTIONS I

SCALE NOTE

SCALE BAR SHOWN BELOW IS ONE INCH LONG ON A FULL SIZE DRAWING. WHEN SCALING DRAWINGS, MEASURE BAR TO DETERMINE IF SCALES SHOWN WILL REQUIRE ADJUSTING.

← ONE INCH →

CONTRACT NO.

YEAR 1991

LOCATION CODE	SPECIALTY CODE
00	E

PROJECT NO. 5002–33

FILE NAME 00E–0011.DWG

DRAWING NO. 00E–11

SHEET NO. 61

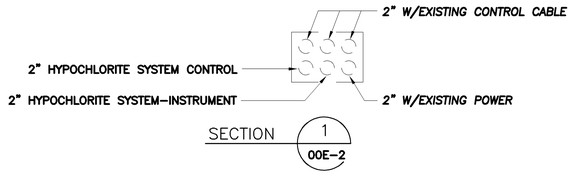

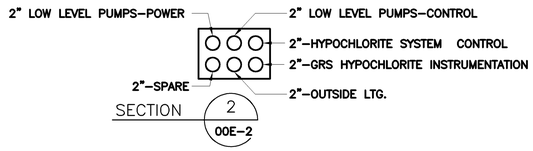

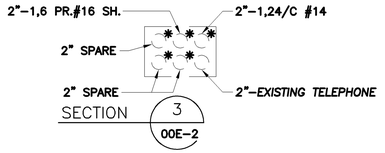

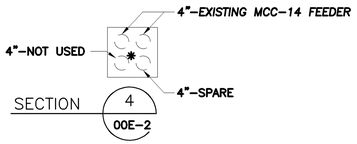

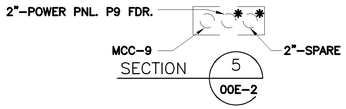

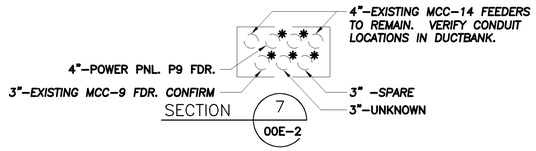

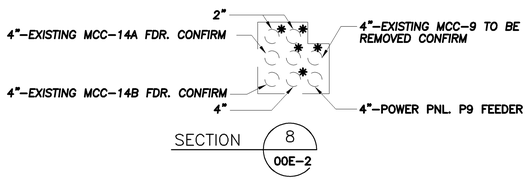

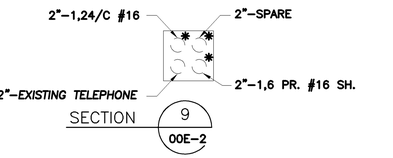

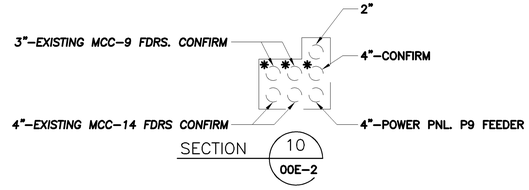

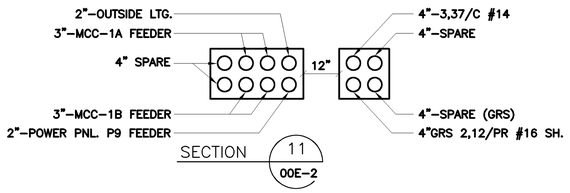

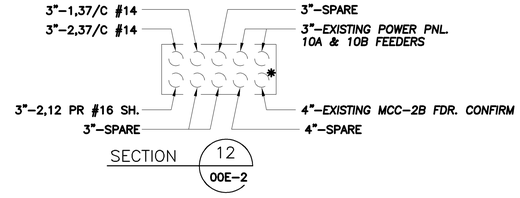

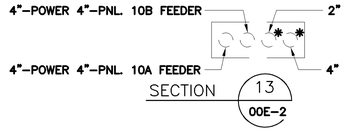

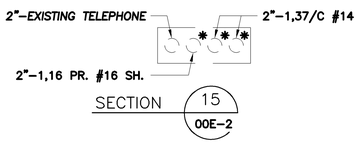

NOT USED

SECTION 16 00E–2

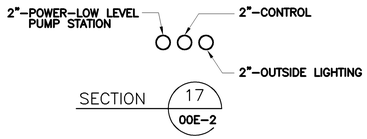

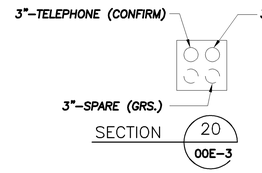

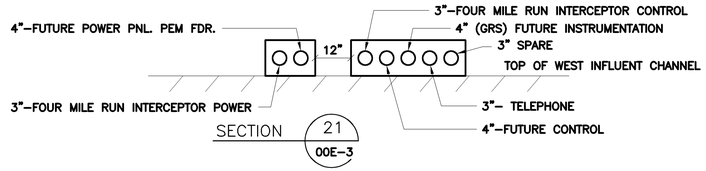

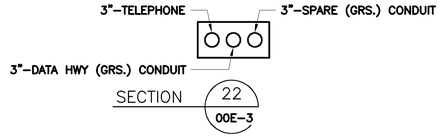

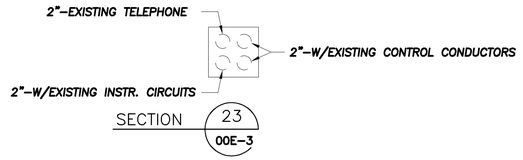

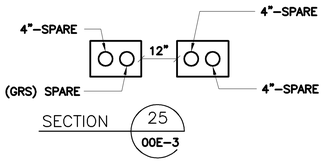

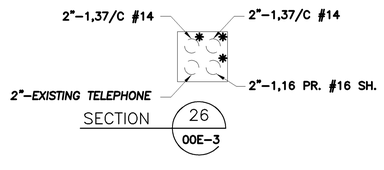

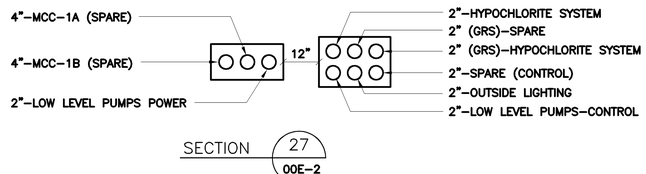

NOTES:

1.) ALL TEMPORARY FEEDERS SHALL BE REMOVED AND CONDUITS REFURBISHED AND LEFT AS SPARES WHEN NO LONGER REQUIRED.

2.) EXISTING CABLE TO BE REMOVED FROM END TO END DENOTED BY AN *. CONDUIT TO BE REUSED SHALL BE SWABBED AND CLEANED FOR REUSE PER SPECIFICATIONS. CONFIRM WITH ENGINEER IN FIELD. NEW DUCT BANKS ARE SHOWN DARK.

3.) CONTRACTOR SHALL CONFIRM CIRCUIT LOCATIONS IN MANHOLE AND CONDUIT SIZES.

RECORD DRAWING

C.E. BAILEY & ASSOCIATES, INC.
CONSULTING ENGINEERS
ORLANDO, CLEARWATER & FORT LAUDERDALE, FLORIDA

NO.	DATE	DRWN	CHK'D	DESCRIPTION
1	9/97	FXP	ASG	RECORD DRAWING

REVISIONS

DESIGNED BY: SEB
DRAWN BY: JSC
CHECKED BY/DATE: CEB/9–91
APPRV'D BY/DATE: CEB/9–91

CAMP DRESSER & McKEE

THIS DRAWING HAS BEEN REVISED BY BLAZIER AND SAWYER, P.C. TO REFLECT AS-BUILT CONDITIONS MADE DURING CONSTRUCTION

environmental engineers, scientists, planners, & management consultants

CDM

ARLINGTON COUNTY, VIRGINIA
WATER POLLUTION CONTROL PLANT
UPGRADE AND EXPANSION– PHASE IIB

ELECTRICAL
DUCT BANK SECTIONS II

SCALE NOTE

SCALE BAR SHOWN BELOW IS ONE INCH LONG ON A FULL SIZE DRAWING. WHEN SCALING DRAWINGS, MEASURE BAR TO DETERMINE IF SCALES SHOWN WILL REQUIRE ADJUSTING.

← ONE INCH →

CONTRACT NO.

YEAR 1991

LOCATION CODE	SPECIALTY CODE

PROJECT NO. 5002–33

FILE NAME 00E–0012.DWG

DRAWING NO. 00E–12

SHEET NO. 62

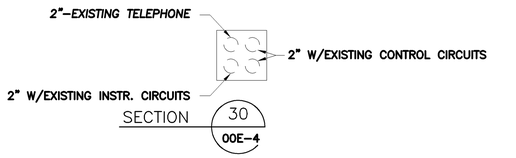

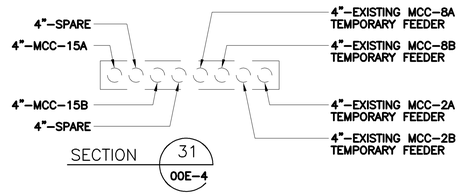

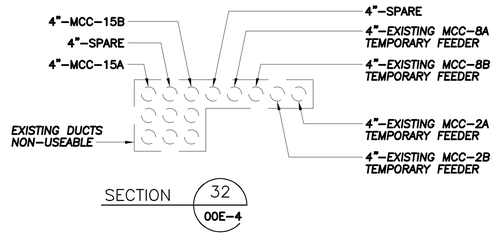

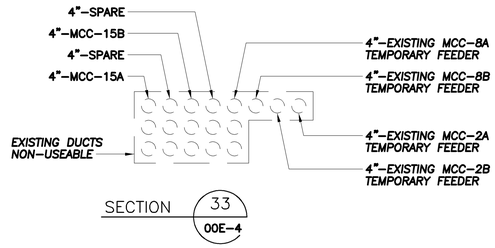

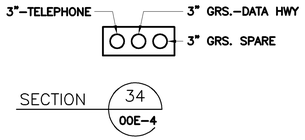

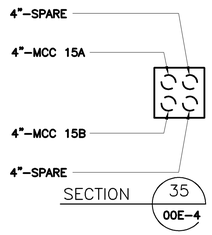

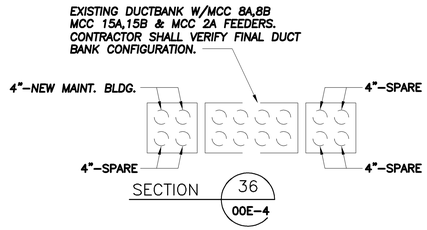

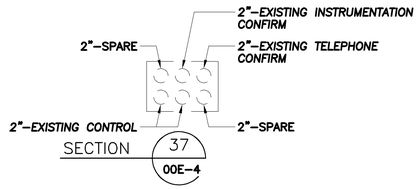

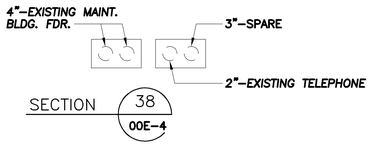

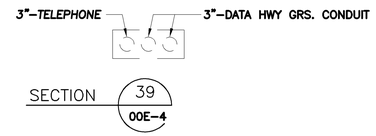

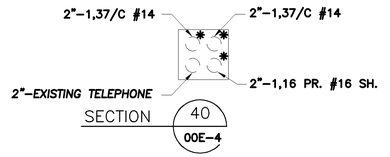

NOTES:

1.) ALL TEMPORARY FEEDERS SHALL BE REMOVED AND CONDUITS REFURBISHED AND LEFT AS SPARES WHEN NO LONGER REQUIRED.

2.) EXISTING CABLE TO BE REMOVED FROM END TO END DENOTED BY AN *. CONDUIT TO BE REUSED SHALL BE SWABBED AND CLEANED FOR REUSE PER SPECIFICATIONS. CONFIRM WITH ENGINEER IN FIELD. NEW DUCT BANKS ARE SHOWN DARK.

3.) CONTRACTOR SHALL CONFIRM CIRCUIT LOCATIONS IN MANHOLE AND CONDUIT SIZES.

NO.	DATE	DRWN	CHK'D	DESCRIPTION
				REVISIONS
1	9/97	FXP	ASG	RECORD DRAWING

DESIGNED BY: SEB
DRAWN BY: JSC
CHECKED BY/DATE: CEB/9-91
APPRV'D BY/DATE: CEB/9-91

CAMP DRESSER & McKEE

THIS DRAWING HAS BEEN REVISED BY HAZEN AND SAWYER, P.C. TO REFLECT MODIFICATIONS MADE DURING CONSTRUCTION

CDM
environmental engineers, scientists, planners, & management consultants

ARLINGTON COUNTY, VIRGINIA
WATER POLLUTION CONTROL PLANT
UPGRADE AND EXPANSION- PHASE III

ELECTRICAL
DUCT BANK SECTIONS III

SCALE NOTE
SCALE BAR SHOWN BELOW IS ONE INCH LONG ON A FULL SIZE DRAWING. WHEN SCALING DRAWINGS, MEASURE BAR TO DETERMINE IF SCALES SHOWN WILL REQUIRE ADJUSTING.
ONE INCH

CONTRACT NO.

YEAR 1991

LOCATION CODE	SPECIALTY CODE
00	E

PROJECT NO. 5002–33
FILE NAME 00E–0013.DWG
DRAWING NO. 00E–13
SHEET NO. 63

RECORD DRAWING

C.E. BAILEY & ASSOCIATES, INC.
CONSULTING ENGINEERS
ORLANDO, CLEARWATER & FORT LAUDERDALE, FLORIDA

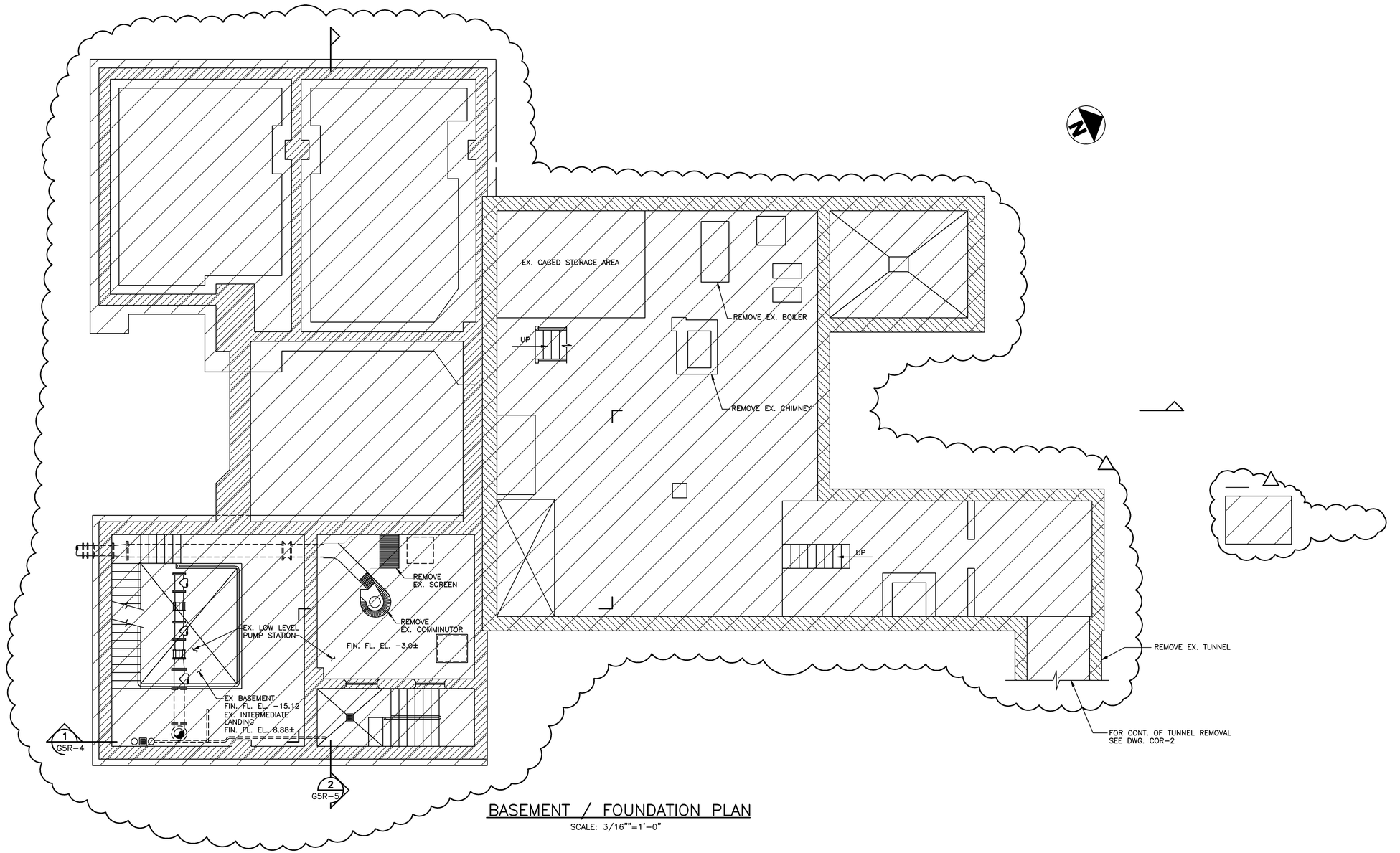

BASEMENT / FOUNDATION PLAN

SCALE: 3/16""=1'-0"

NOTES

1. EXCEPT WHERE INDICATED, REMOVE ENTIRE BUILDING AND CONTENTS INCLUDING ROOF, WALLS, FOUNDATIONS, CURBING STAIRS, WALKWAYS, FUEL TANKS AND GAS PUMP. REMOVE ALL EQUIPMENT, PIPING, ELECTRICAL WORK AND APPURTENANCES
2. FOR LOW LEVEL PORTION OF EXISTING STRUCTURE TO REMAIN, SEE DRAWING NO. G5R-4 AND G5R-5.
3. REMOVE ALL EXTERIOR CONNECTING PIPES & ELECTRICAL CONDUITS & DUCTBANKS (NOT SHOWN). SEE "C" DRAWINGS.
4. SEE ALSO NOTES ON DRAWING G5R-4.

RECORD DRAWING

NO.	DATE	DRWN	CHK'D	DESCRIPTION
1	11/98	FXP	ASG	RECORD DRAWING

REVISIONS

DESIGNED BY: DAO
DRAWN BY: BRW/CTC/GPB
CHECKED BY/DATE: TDH 9/91
APPRV'D BY/DATE: TDH 9/91

COMMONWEALTH OF VIRGINIA
THOMAS D. HALL
No. 12502
PROFESSIONAL ENGINEER

CAMP DRESSER & McKEE
HAZEN AND SAWYER, P.C.
environmental engineers, scientists, planners, & management consultants
CDM

ARLINGTON COUNTY, VIRGINIA
WATER POLLUTION CONTROL PLANT
UPGRADE AND EXPANSION- PHASE IIB

PLANT SERVICE BUILDING
REMOVAL
BASEMENT PLAN

SCALE NOTE

SCALE BAR SHOWN BELOW IS ONE INCH LONG ON A FULL SIZE DRAWING. WHEN SCALING DRAWINGS, MEASURE BAR TO DETERMINE IF SCALES SHOWN WILL REQUIRE ADJUSTING.

ONE INCH

CONTRACT NO. 90-02-WPC
YEAR 1991
LOCATION CODE G5
SPECIALTY CODE R
PROJECT NO. 5002-33
FILE NAME G5R-0001.DWG
DRAWING NO. G5R-1
SHEET NO. 86

09/18/91 - 08:26

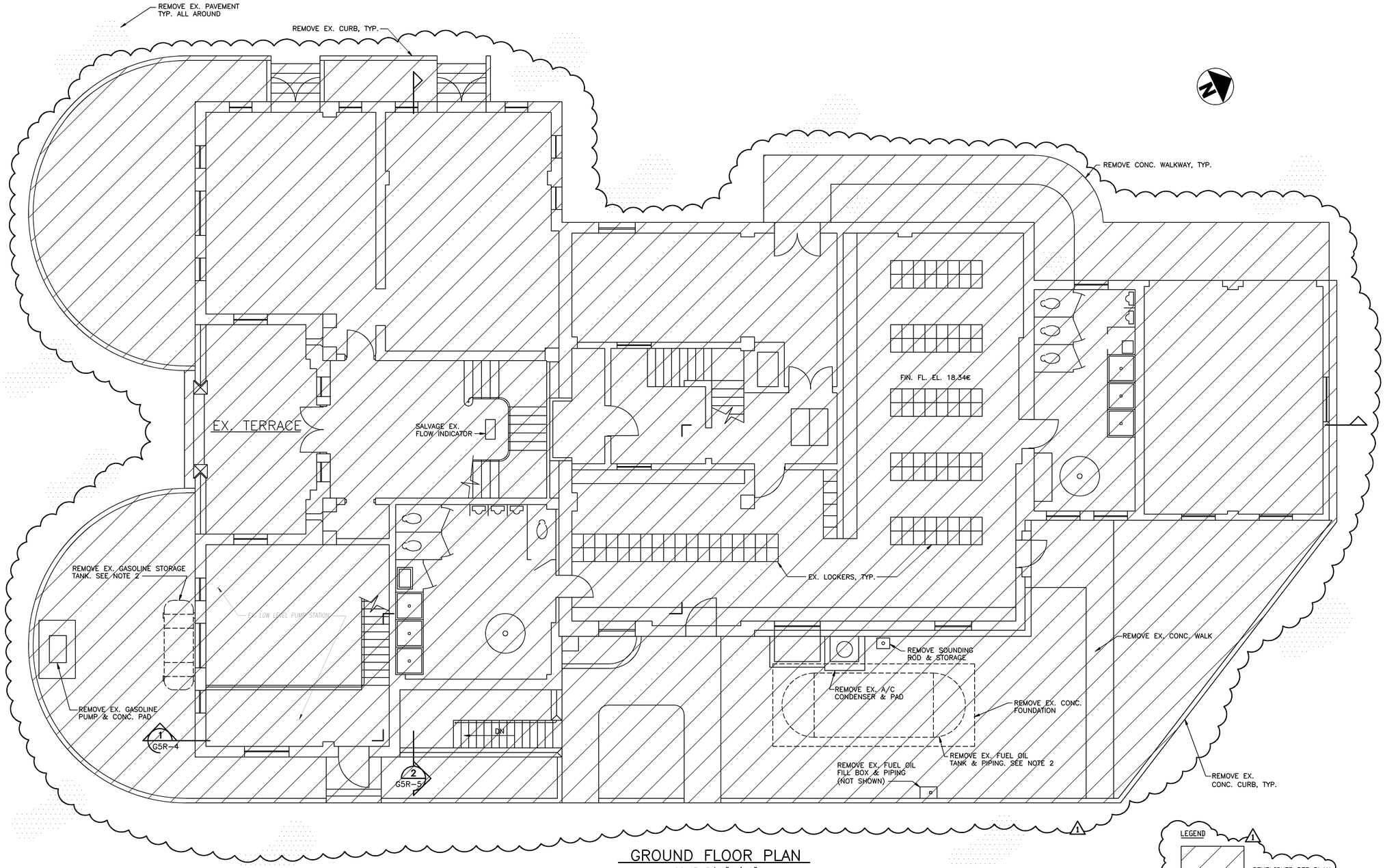

GROUND FLOOR PLAN

SCALE: 3/16"=1'-0"

LEGEND

1 DEMOLISHED PER PLAN

NOTES

1. SEE NOTES ON DWG. G5R-1 AND 4.
2. REMOVE REMAINING FUEL FROM TANK BEFORE REMOVING TANK. COMPLY WITH APPLICABLE LOCAL, STATE, AND FEDERAL REGULATIONS ON FUEL TANK REMOVALS.
3. REMOVE ALL UNDERGROUND PIPES, ELECTRICAL CONDUITS, AND ELECTRICAL BANKS CONNECTED TO BUILDING. FOR LOCATION SEE "C" DRAWINGS.

09/18/91 - 08:22

RECORD DRAWING

NO.	DATE	DRWN	CHK'D	DESCRIPTION
				REVISIONS
1	11/98	FXP	ASG	RECORD DRAWING

DESIGNED BY: DAO
DRAWN BY: BRW
CHECKED BY/DATE: TDH 9/91
APPRV'D BY/DATE: TDH 9/91

COMMONWEALTH OF VIRGINIA
THOMAS D. HALL
No. 12502
PROFESSIONAL ENGINEER

CAMP DRESSER & McKEE
environmental engineers, scientists, planners, & management consultants
CDM

THIS DRAWING HAS BEEN REVISED BY HAZEN AND SAWYER, P.C. TO REFLECT MODIFICATIONS MADE DURING CONSTRUCTION

ARLINGTON COUNTY, VIRGINIA
WATER POLLUTION CONTROL PLANT
UPGRADE AND EXPANSION- PHASE IIB

PLANT SERVICE BUILDING
REMOVAL
GROUND FLOOR PLAN

SCALE NOTE

SCALE BAR SHOWN BELOW IS ONE INCH LONG ON A FULL SIZE DRAWING. WHEN SCALING DRAWINGS, MEASURE BAR TO DETERMINE IF SCALES SHOWN WILL REQUIRE ADJUSTING.

ONE INCH

CONTRACT NO.	90-02-WPC
YEAR	1991
LOCATION CODE	G5
SPECIALTY CODE	R
PROJECT NO.	5002-33
FILE NAME	G5R-0002.DWG
DRAWING NO.	G5R-2
SHEET NO.	87

NOTES:

1. SEE NOTES ON DRAWING G5R-1 AND 4.

UPPER FLOOR PLAN

SCALE: 3/16"=1'-0"

NO.	DATE	DRWN	CHK'D	DESCRIPTION
1	11/98	PXP	ASG	RECORD DRAWING

REVISIONS

DESIGNED BY: DAO
DRAWN BY: BRW
CHECKED BY/DATE: TDH 9/91
APPRV'D BY/DATE: TDH 9/91

COMMONWEALTH OF VIRGINIA
THOMAS D. HALL
No. 12502
PROFESSIONAL ENGINEER

CAMP DRESSER & McKEE

THIS DRAWING HAS BEEN REVISED BY HAZEN AND SAWYER, P.C. TO REFLECT MODIFICATIONS MADE DURING CONSTRUCTION

CDM
environmental engineers, scientists, planners, & management consultants

ARLINGTON COUNTY, VIRGINIA
WATER POLLUTION CONTROL PLANT
UPGRADE AND EXPANSION- PHASE IIIB

PLANT SERVICE BUILDING
REMOVAL
UPPER FLOOR PLAN

SCALE NOTE

SCALE BAR SHOWN BELOW IS ONE INCH LONG ON A FULL SIZE DRAWING. WHEN SCALING DRAWINGS, MEASURE BAR TO DETERMINE IF SCALES SHOWN WILL REQUIRE ADJUSTING.

ONE INCH

CONTRACT NO.	
90-02-WPC	
YEAR 1991	
LOCATION CODE	SPECIALTY CODE
G5	R
PROJECT NO. 5002-33	
FILE NAME G5R-0003.DWG	
DRAWING NO. G5R-3	
SHEET NO. 88	

RECORD DRAWING

09/18/91 - 08:18

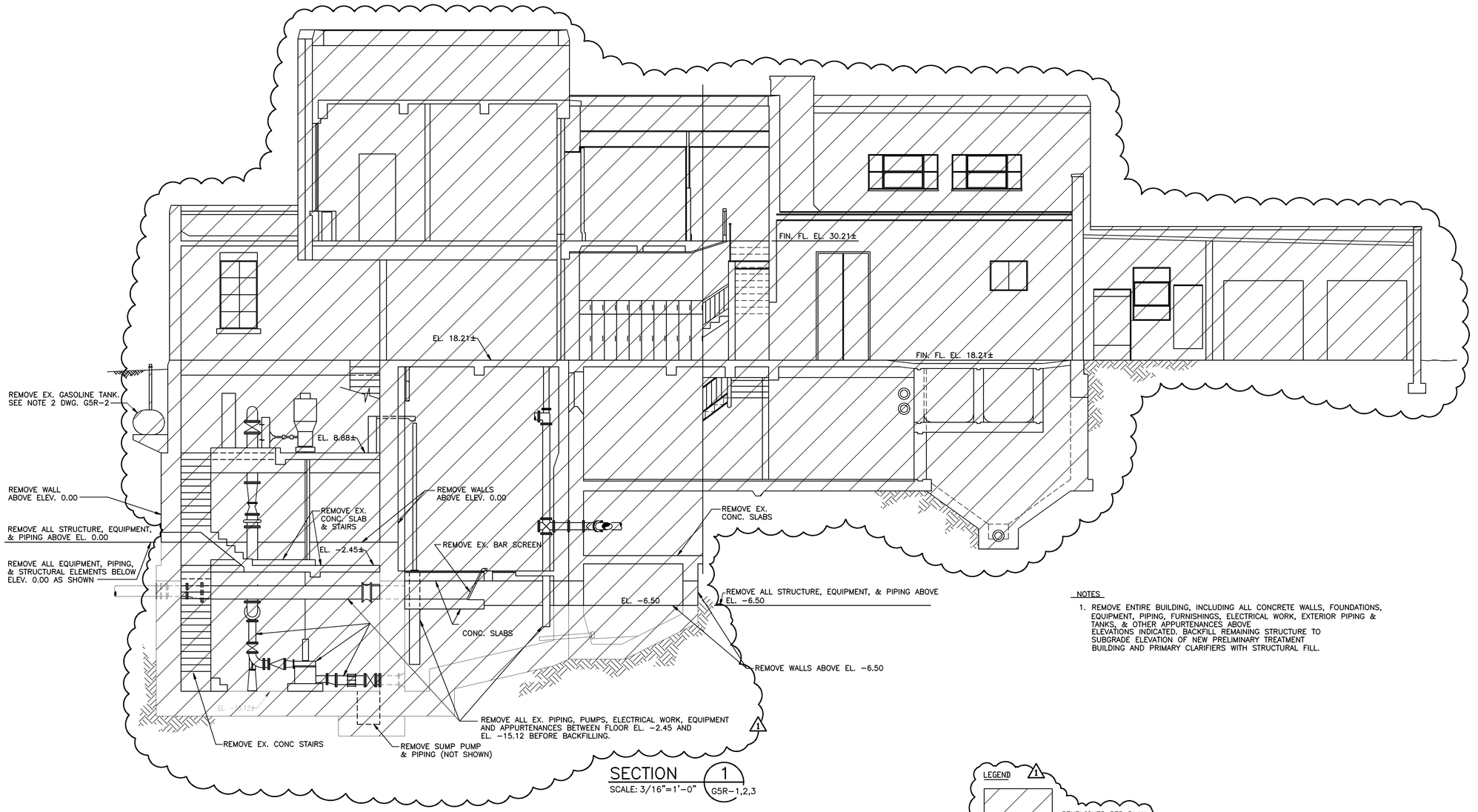

SECTION 1
SCALE: 3/16"=1'-0" G5R-1,2,3

NOTES

1. REMOVE ENTIRE BUILDING, INCLUDING ALL CONCRETE WALLS, FOUNDATIONS, EQUIPMENT, PIPING, FURNISHINGS, ELECTRICAL WORK, EXTERIOR PIPING & TANKS, & OTHER APPURTENANCES ABOVE ELEVATIONS INDICATED. BACKFILL REMAINING STRUCTURE TO SUBGRADE ELEVATION OF NEW PRELIMINARY TREATMENT BUILDING AND PRIMARY CLARIFIERS WITH STRUCTURAL FILL.

LEGEND

1 DEMOLISHED PER PLAN

RECORD DRAWING

NO.	DATE	DRWN	CHK'D	DESCRIPTION
1	11/98	FXP	ASG	RECORD DRAWING

REVISIONS

DESIGNED BY: DAO
DRAWN BY: CTC
CHECKED BY/DATE: TDH 9/91
APPRV'D BY/DATE: TDH 9/91

COMMONWEALTH OF VIRGINIA
THOMAS D. HALL
No. 12502
PROFESSIONAL ENGINEER

CAMP DRESSER & McKEE
environmental engineers, scientists, planners, & management consultants
CDM

THIS DRAWING HAS BEEN REVISED BY HAZEN AND SAWYER, P.C. TO REFLECT MODIFICATIONS MADE DURING CONSTRUCTION

ARLINGTON COUNTY, VIRGINIA
WATER POLLUTION CONTROL PLANT
UPGRADE AND EXPANSION- PHASE IIB

PLANT SERVICE BUILDING
REMOVAL
SECTION

SCALE NOTE

SCALE BAR SHOWN BELOW IS ONE INCH LONG ON A FULL SIZE DRAWING. WHEN SCALING DRAWINGS, MEASURE BAR TO DETERMINE IF SCALES SHOWN WILL REQUIRE ADJUSTING.

ONE INCH

CONTRACT NO. 90-02-WPC
YEAR 1991
LOCATION CODE G5
SPECIALTY CODE R
PROJECT NO. 5002-33
FILE NAME G5R-0004.DWG
DRAWING NO. G5R-4
SHEET NO. 89

09/18/91 - 08:14

SECTION 2
SCALE: 3/16"=1'-0" G5R-1,2,3

NOTES

1. SEE NOTES ON DRAWING G5R-1 AND 4.

09/17/91 - 20:22

RECORD DRAWING

NO.	DATE	DRWN	CHK'D	DESCRIPTION
1	11/98	FXP	ASG	RECORD DRAWING

REVISIONS

DESIGNED BY: DAO
DRAWN BY: BRW
CHECKED BY/DATE: TDH 9/91
APPRV'D BY/DATE: TDH 9/91

COMMONWEALTH OF VIRGINIA
THOMAS D. HALL
No. 12502
PROFESSIONAL ENGINEER

CAMP DRESSER & McKEE

THIS DRAWING HAS BEEN REVISED BY HAZEN AND SAWYER, P.C. TO REFLECT MODIFICATIONS MADE DURING CONSTRUCTION

environmental engineers, scientists, planners, & management consultants **CDM**

ARLINGTON COUNTY, VIRGINIA
WATER POLLUTION CONTROL PLANT
UPGRADE AND EXPANSION- PHASE IIIB

PLANT SERVICE BUILDING
REMOVAL
SECTION

SCALE NOTE

SCALE BAR SHOWN BELOW IS ONE INCH LONG ON A FULL SIZE DRAWING. WHEN SCALING DRAWINGS, MEASURE BAR TO DETERMINE IF SCALES SHOWN WILL REQUIRE ADJUSTING.

ONE INCH

CONTRACT NO. 90-02-WPC
YEAR 1991
LOCATION CODE G5
SPECIALTY CODE R
PROJECT NO. 5002-33
FILE NAME G5R-0005.DWG
DRAWING NO. G5R-5
SHEET NO. 90

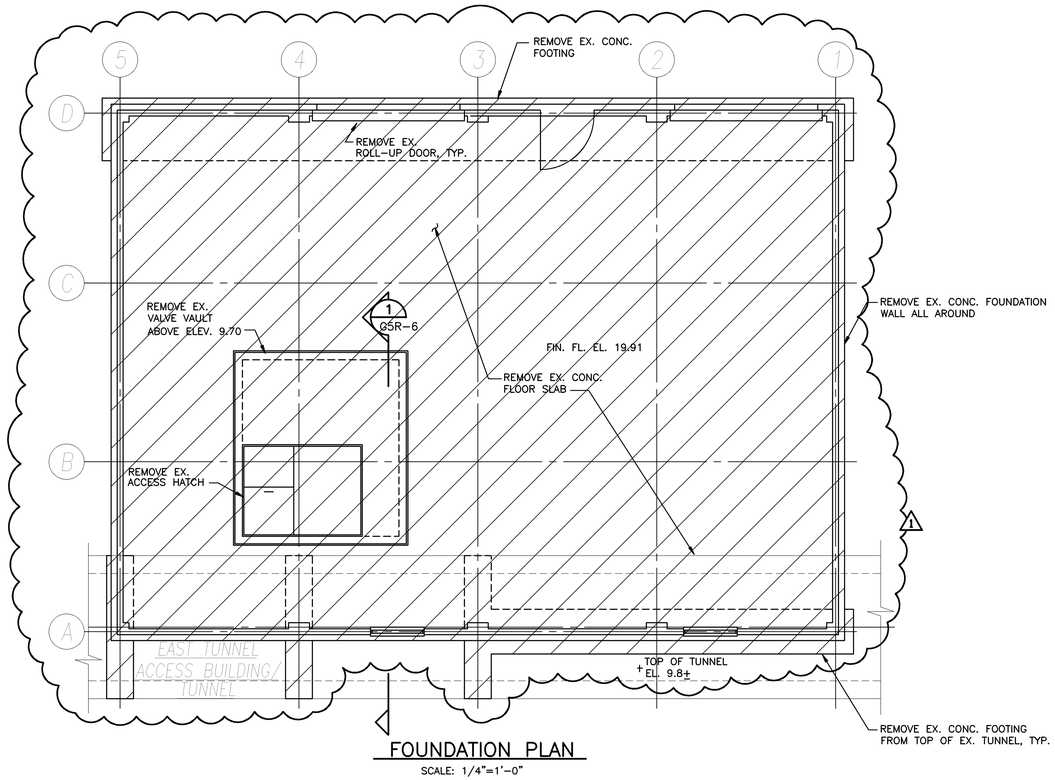

FOUNDATION PLAN

SCALE: 1/4"=1'-0"

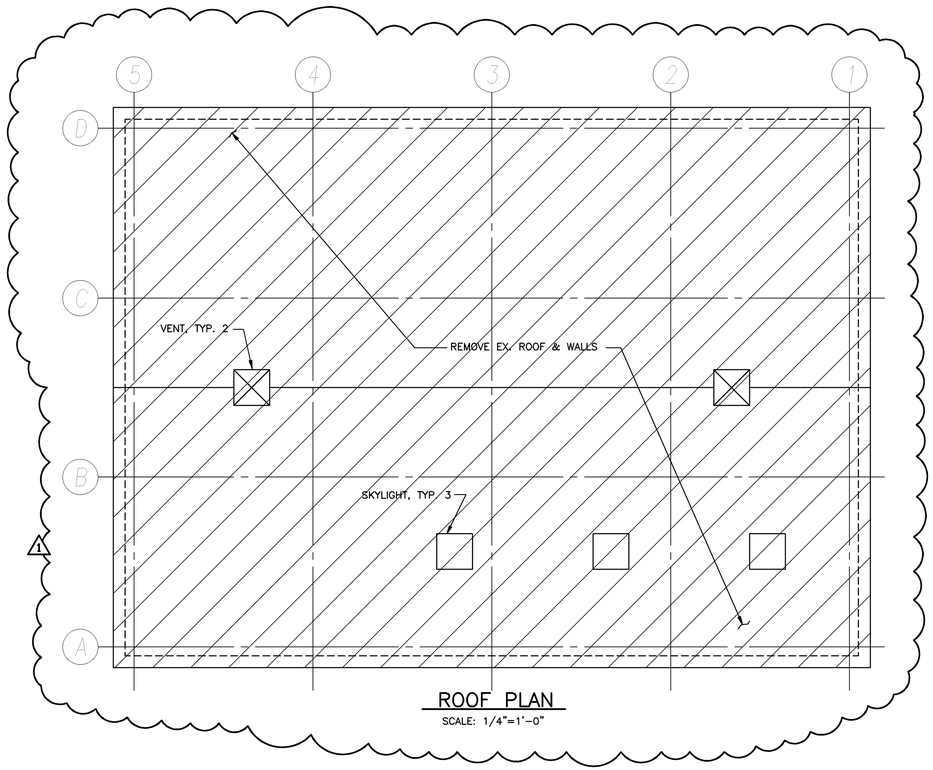

ROOF PLAN

SCALE: 1/4"=1'-0"

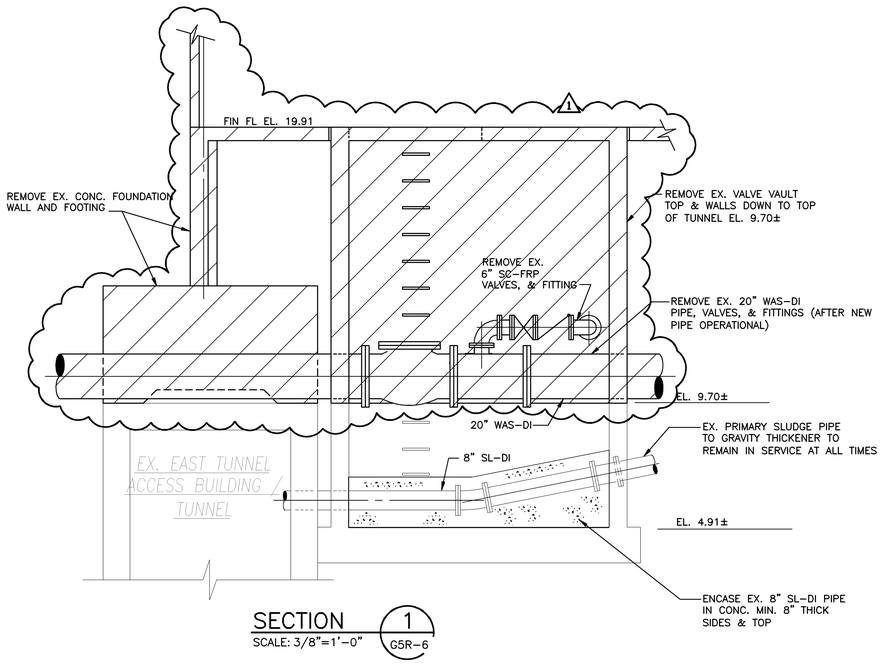

SECTION 1 G5R-6

SCALE: 3/8"=1'-0"

NOTES

1. REMOVE METAL FRAME STORAGE BUILDING AND APPURTENANCES.
2. REMOVE CONCRETE SLAB AND FOUNDATION WALLS & FOOTINGS.
3. REMOVE ALL PIPING IN VAULT AND BENEATH STORAGE BUILDING EXCEPT 8" SL-DI PIPE. SEE DWG. 00C-1 FOR CONTINUATION OF PIPE REMOVALS.
4. REMOVE VALVE VAULT WALLS DOWN TO ELEVATION OF TOP OF TUNNEL.
5. PUMP WATER OUT OF VAULT & ENCASE EX. 8" SL-DI IN CONCRETE WITH FIRM BEDDING ON CONCRETE BOTTOM.
6. BACKFILL VAULT & EXCAVATION WITH STRUCTURAL FILL.

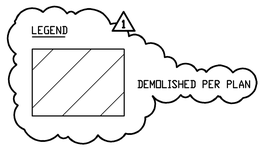

09/17/91 - 20:04

RECORD DRAWING

NO.	DATE	DRWN	CHK'D	DESCRIPTION
1	11/98	FXP	ASG	RECORD DRAWING

REVISIONS

DESIGNED BY: DAO
DRAWN BY: CLP
CHECKED BY/DATE: TDH 9/91
APPRV'D BY/DATE: TDH 9/91

COMMONWEALTH OF VIRGINIA
THOMAS D. HALL
No. 12502
PROFESSIONAL ENGINEER

CAMP DRESSER & McKEE

THIS DRAWING HAS BEEN REVISED BY HAZEN AND SAWYER, P.C. TO REFLECT MODIFICATIONS MADE DURING CONSTRUCTION

CDM

environmental engineers, scientists, planners, & management consultants

ARLINGTON COUNTY, VIRGINIA
WATER POLLUTION CONTROL PLANT
UPGRADE AND EXPANSION- PHASE IIB

STORAGE BUILDING REMOVAL PLANS AND SECTION

SCALE NOTE

SCALE BAR SHOWN BELOW IS ONE INCH LONG ON A FULL SIZE DRAWING. WHEN SCALING DRAWINGS, MEASURE BAR TO DETERMINE IF SCALES SHOWN WILL REQUIRE ADJUSTING.

ONE INCH

CONTRACT NO. 90-02-WPC
YEAR 1991
LOCATION CODE G5
SPECIALTY CODE R
PROJECT NO. 5002-33
FILE NAME G5R-0006.DWG
DRAWING NO. G5R-6
SHEET NO. 91

REMOVE EX. 8" GV W/ VALVE BOX & EXTENSION STEM

REMOVE EX. MANHOLE FRAME & COVER

1 B4R-1

MATCH LINE

MATCH LINE

REMOVE EX. MH FRAME & COVER

REMOVE EX. SLIDE GATE & OPERATOR

REMOVE EX. 8" DIA. CI PIPE

30 RW-DI/BS CLASS 50 PIPE TO WEST INFL. TO WEST INFLUENT CHANNEL SEE NOTE 2.

SECTION 1 B4R-1
SCALE: ?"=1'-0"

REMOVE EX. GATE STRUCTURE

REMOVE EX. BITUMINOUS PAVING

REMOVE EX. MANHOLE FRAME & COVER

REMOVE STOP LOGS AND CHECKERED STEEL COVER PLATE, TYP.

REMOVE EX. UNUSED RC PIPE OR CHANNEL

REMOVE EX. CHLORINE PIPE

REMOVE STEEL COVER PLATE, TYP.

REMOVE EX. HANDRAIL

REMOVE EX. COARSE BAR RACK

REMOVE EX. CHAIN

REMOVE EX. GRATINGS & COVER PLATES, TYP.

REMOVE EX. CONC. PAVEMENT

REMOVE EX. COVER PLATE

REMOVE ENTIRE EX. CHANNELS

REMOVE EX. BITUMINOUS PAVING

REMOVE EX. 30" FM TO LIMITS SHOWN SEE NOTE 2

EX. 30" CI FORCE MAIN TO REMAIN

REMOVE EX. ?" COPPER TUBING PROBE, TYP.

REMOVE EX. MECHANICALLY CLEANED SCREENS

REMOVE EX. SCREW CONVEYOR

REMOVE EX. CONC. PAVEMENT

REMOVE EX. CURB, TYP.

EX. 30" CI FM

REMOVE EX. HOPPER

REMOVE EX. CONCRETE

REMOVE EX. CONC. PAD AND RAILS

EX. 12" SD-RC/E TO REMAIN

REMOVE EX. SLIDE GATES & OPERATORS, TYP.

REMOVE EX. HANDRAIL, TYP.

REMOVE EX. 3" CHLORINE PIPES

REMOVE EX. SCREEN BAR

REMOVE EX. STOP LOGS

REMOVE EX. 6" DRAIN PIPE

INV. EL. 13.24

EL. 19.75

EL. 19.50

EL. 19.75

SECTION 2 B4R-1
SCALE: ?"=1'-0"

REMOVE ENTIRE EX. STRUCTURE & FOOTINGS, TYP.

NOTES:
1. SEE SHEET B4R-2 FOR REMOVAL NOTES
2. CONNECT NEW 30" RW-DI/BS PIPE TO EX. 30" RW-CI PIPE WITH SUITABLE DOUBLE SIZE COMPRESSION COUPLING IF MEASURED SIZE OF EXISTING PIPE IS NOT WITHIN TOLERANCE OF NEW PIPE BELL.
3. CONSTRUCT NEW FM EXTENSION PRIOR TO PRECEEDING WITH 2ND STAGE REMOVAL.

REMOVE EX. PAVED GUTTER

1 B4R-2

REMOVE EX. 2" PEW, TYP.

REMOVE EX. 6" PEW, TYP.

REMOVE EX. ACCESS BRIDGE, TYP.

REMOVE EX. CONC. WALKWAY, TYP.

INTERIM REMOVAL LIMIT. SEE SPEC. SECTION 01010

REMOVE EX. SCRAPER, SUPPORTS & DRIVE UNIT, TYP.

REMOVE EX. HATCH, TYP.

REMOVE EX. SLIDE GATES, TYP.

REMOVE EX. PLATFORM, STAIRS, & HANDRAIL, TYP.

5 B4R-2

REMOVE EX. SLIDE GATE & OPTR., TYP.

2 B4R-2

REMOVE EX. GRIT ELEVATOR TYP.

REMOVE ENTIRE CONC. STRUCTURE

REMOVE EX. 6" DRAIN PIPE

REMOVE EX. GATE, TYP.

REMOVE EX. ELEVATOR & DRIVE UNIT, TYP.

B4R-2

REMOVE EX. 8" CI DRAIN

4 B4R-2

3 B4R-2

REMOVE EX. CONC. PAD, RAILS AND HOPPER

SEE SHEETS C3R-1 & C3R-2 FOR GRIT AND CHLORINE BLDG REMOVALS

REMOVE EX. GRIT CONVEYOR

REMOVE EX. 6" PEW

CL OF EX. GRIT CONVEYOR

REMOVE EX. CONCRETE WALKWAY, TYP.

1ST STAGE REMOVAL TO THIS LIMIT. SEE NOTE 3

2ND STAGE REMOVAL FROM HERE, SEE NOTE 3.

PLAN
SCALE: 3/16"=1'-0"

REMOVE EX. STOP LOGS

EL. 20.5

EL. 19.42

LEGEND

1 DEMOLISHED PER PLAN

NO.	DATE	DRWN	CHK'D	DESCRIPTION
1	11/98	PXP	ASG	RECORD DRAWING

REVISIONS

DESIGNED BY: TDH
DRAWN BY: PLR/CTC
CHECKED BY/DATE: TDH 9/91
APPRV'D BY/DATE: TDH 9/91

COMMONWEALTH OF VIRGINIA
THOMAS D. HALL
No. 12502
PROFESSIONAL ENGINEER

CAMP DRESSER & McKEE
environmental engineers, scientists, planners, & management consultants

THIS DRAWING HAS BEEN REVISED BY HAZEN AND SAWYER, P.C. TO REFLECT MODIFICATIONS MADE DURING CONSTRUCTION

CDM

ARLINGTON COUNTY, VIRGINIA
WATER POLLUTION CONTROL PLANT
UPGRADE AND EXPANSION- PHASE IIB

FOUR MILE RUN INTERCEPTOR
SCREENS, CHANNELS & GRIT CHAMBERS
GENERAL REMOVAL PLAN

SCALE NOTE

SCALE BAR SHOWN BELOW IS ONE INCH LONG ON A FULL SIZE DRAWING. WHEN SCALING DRAWINGS, MEASURE BAR TO DETERMINE IF SCALES SHOWN WILL REQUIRE ADJUSTING.

ONE INCH

CONTRACT NO. 90-02-WPC
YEAR 1991
LOCATION CODE B4
SPECIALTY CODE R
PROJECT NO. 5002-33
FILE NAME B4R-0001.DWG
DRAWING NO. B4R-1
SHEET NO. 92

RECORD DRAWING

09/18/91 - 08:53

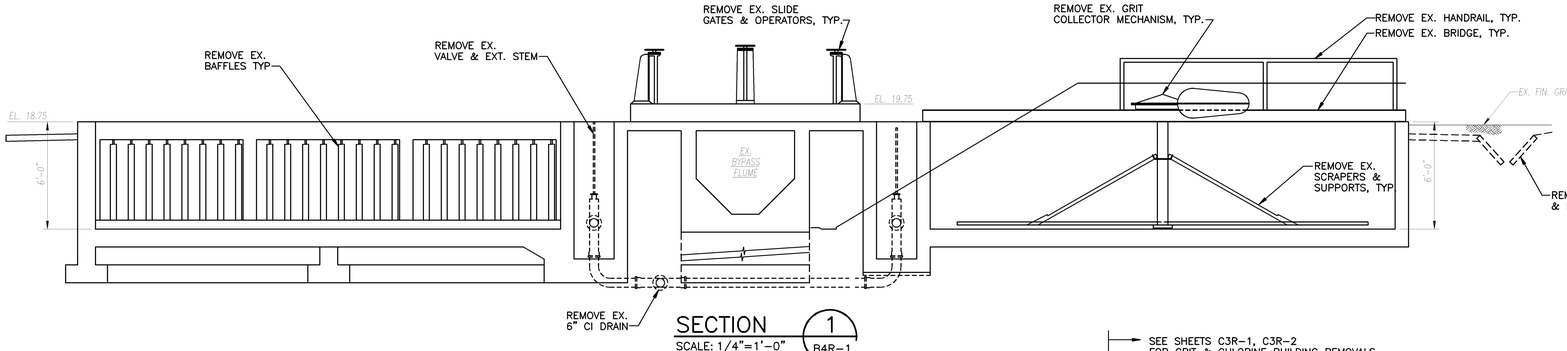

SECTION 1
SCALE: 1/4"=1'-0"
B4R-1

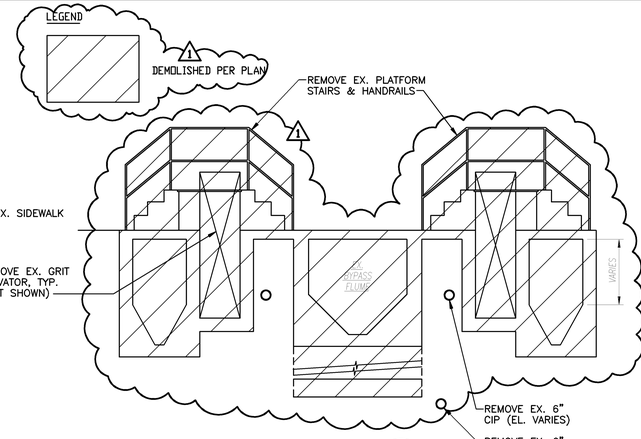

SECTION 3
SCALE: 1/4"=1'-0"
B4R-1

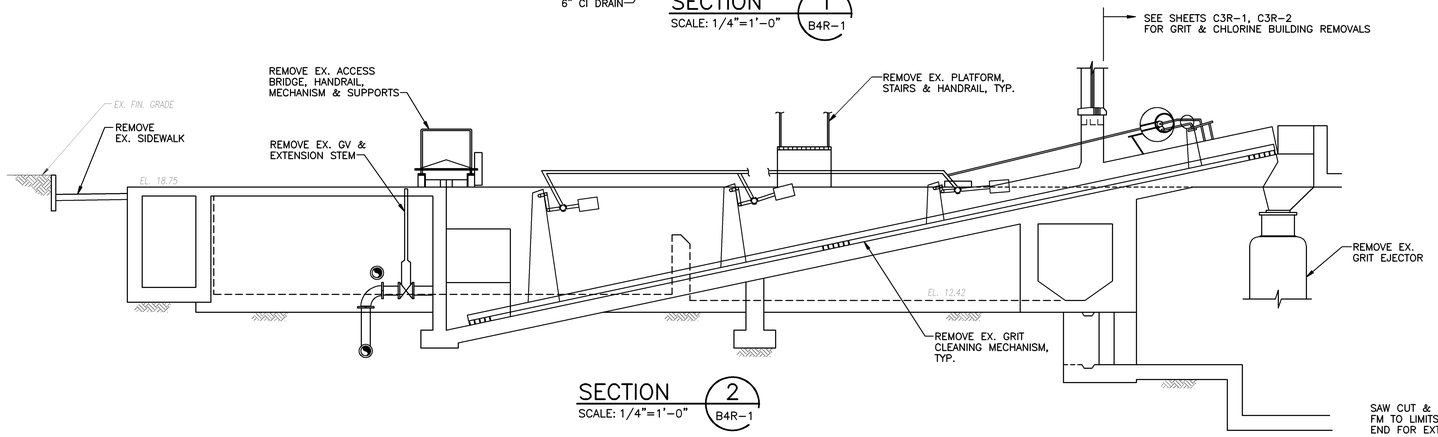

SECTION 2
SCALE: 1/4"=1'-0"
B4R-1

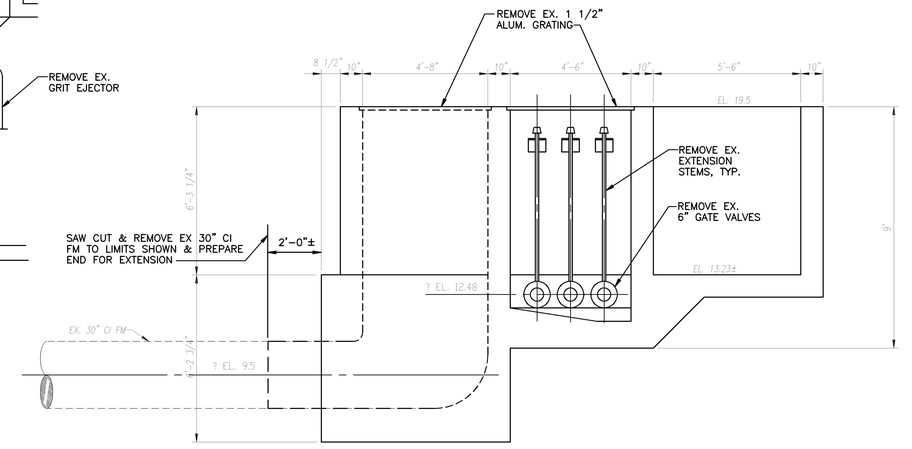

SECTION 4
SCALE: 3/8"=1'-0"
B4R-2

NOTES:

1. REMOVE ALL STRUCTURAL ELEMENTS, INCLUDING CONCRETE, GRATINGS, HANDRAIL, AND PAVING WHETHER OR NOT SPECIFICALLY IDENTIFIED.
2. REMOVE ALL MECHANICAL ELEMENTS, INCLUDING PIPING, VALVES, GATES, AND PROCESS EQUIPMENT, ETC., WHETHER OR NOT SPECIFICALLY IDENTIFIED.
3. REFER TO DRAWING NOS C3R-1 AND C3R-2 FOR GRIT AND CHLORINE BUILDING REMOVAL.
4. REMOVALS SHALL BE SEQUENCED IN ACCORDANCE WITH SECTION 01010.
5. SEE DRAWING NO. B4M-1 FOR TEMPORARY FOUR MILE RUN RELIEF PUMPING STATION FORCE MAIN.

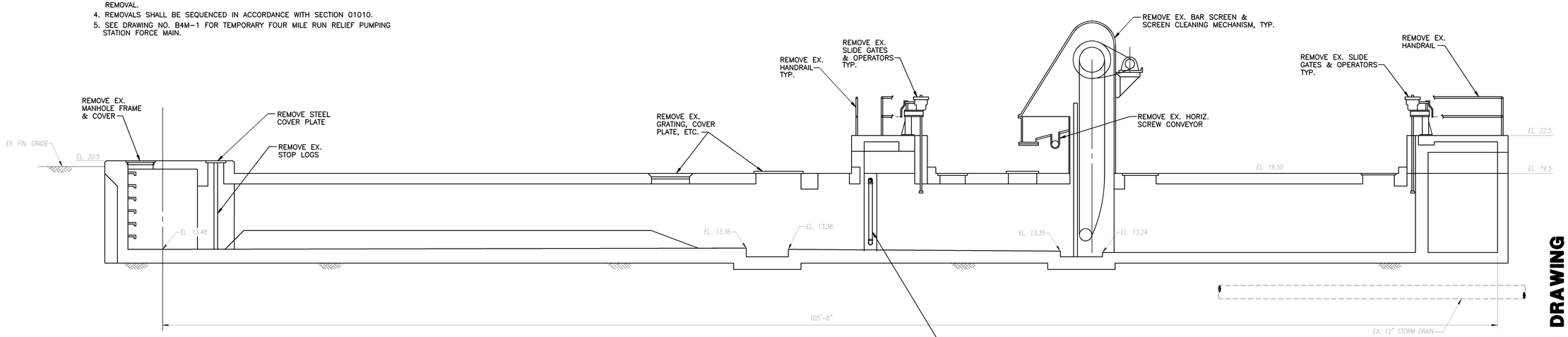

SECTION 5
SCALE: 1/4"=1'-0"
B4R-1

RECORD DRAWING

NO.	DATE	DRWN	CHK'D	DESCRIPTION
1	11/98	FXP	ASG	RECORD DRAWING

REVISIONS

DESIGNED BY: —
DRAWN BY: PLR/CTC
CHECKED BY/DATE: TDH 9/91
APPRV'D BY/DATE: TDH 9/91

COMMONWEALTH OF VIRGINIA
THOMAS D. HALL
No. 12502
PROFESSIONAL ENGINEER

CAMP DRESSER & McKEE

THIS DRAWING HAS BEEN REVISED BY HAZEN AND SAWYER, P.C. TO REFLECT MODIFICATIONS MADE DURING CONSTRUCTION

CDM
environmental engineers, scientists, planners, & management consultants

ARLINGTON COUNTY, VIRGINIA
WATER POLLUTION CONTROL PLANT
UPGRADE AND EXPANSION- PHASE IIB

FOUR MILE RUN INTERCEPTOR
SCREENS, CHANNELS & GRIT CHAMBERS
GENERAL REMOVALS

SCALE NOTE
SCALE BAR SHOWN BELOW IS ONE INCH LONG ON A FULL SIZE DRAWING. WHEN SCALING DRAWINGS, MEASURE BAR TO DETERMINE IF SCALES SHOWN WILL REQUIRE ADJUSTING.
ONE INCH

CONTRACT NO. 90-02-WPC
YEAR 1991
LOCATION CODE B4
SPECIALTY CODE R
PROJECT NO. 5002-33
FILE NAME B4R-0002.DWG
DRAWING NO. B4R-2
SHEET NO. 93

06/20/90 - 15:24

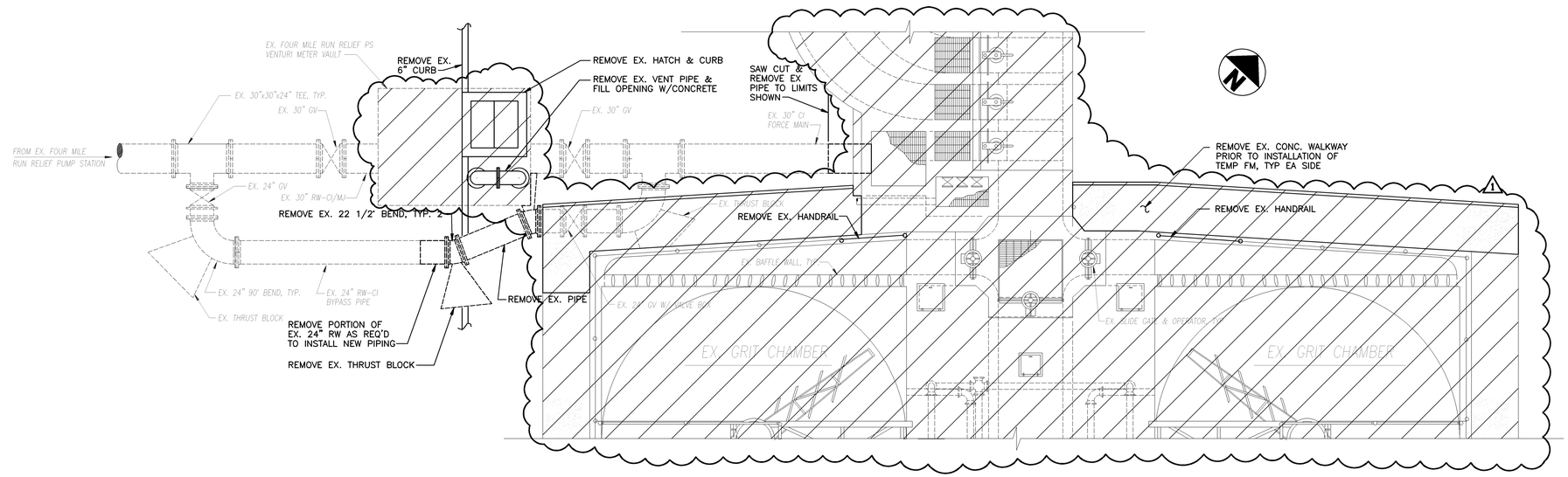

REMOVAL PLAN AT ELEVATION 18.75

SCALE: 1/4"=1'-0"

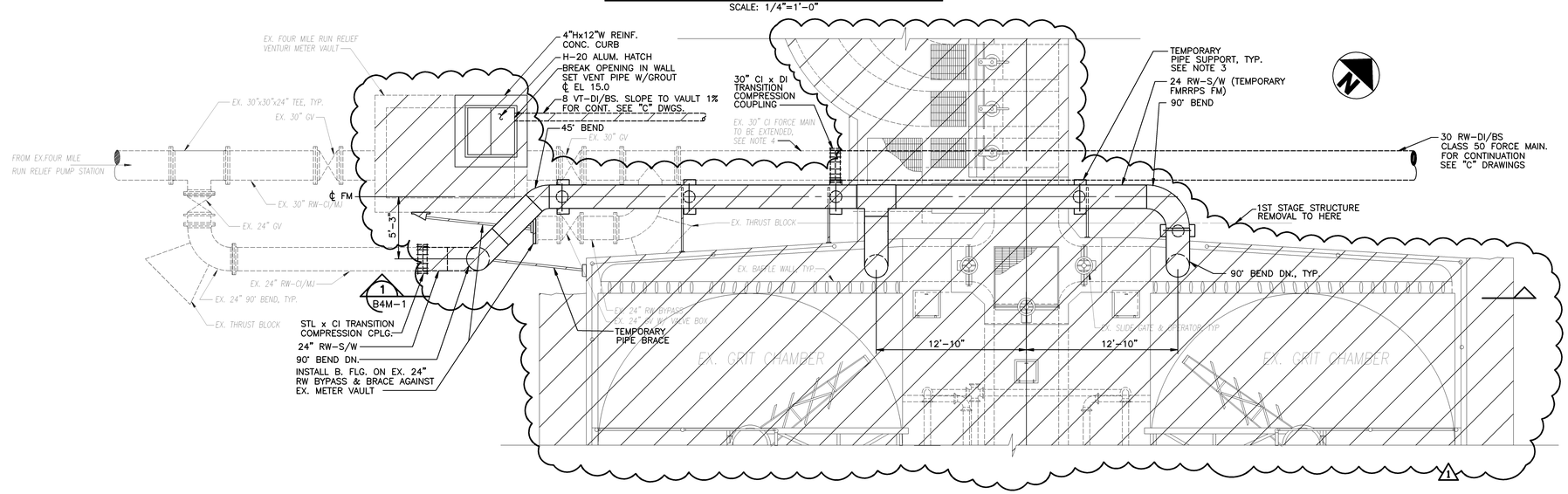

NEW WORK PLAN AT ELEVATION 18.75

SCALE: 1/4"=1'-0"

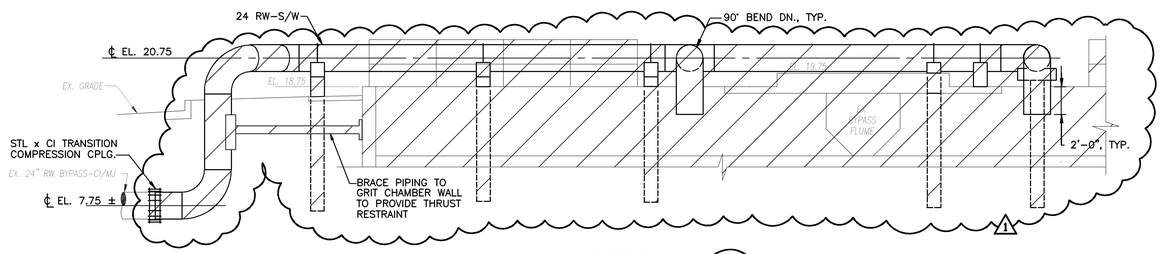

SECTION 1 / B4M-1

SCALE: 1/4"=1'-0"

NOTES:

1. LOCATIONS OF BURIED PIPING ARE APPROXIMATE. CONTRACTOR SHALL DIG TEST PITS AS NECESSARY TO DETERMINE ACTUAL LOCATIONS OF EXISTING PIPE. MAKE ADJUSTMENTS TO THE LAYOUT AND CONSTRUCTION OF TEMPORARY FORCE MAIN AS REQUIRED TO SUIT ACTUAL CONDITIONS AT NO ADDITIONAL COST.
2. TEMPORARY FORCE MAIN SHALL BE STEEL PIPE WITH WELDED JOINTS, MINIMUM 1/2" WALL THICKNESS. BENDS MAY BE TRIPLE MITER CUT AND WELDED AT CONTRACTOR'S OPTION.
3. FORCE MAIN SHALL BE RIGIDLY SUPPORTED AGAINST ALL DEAD END HYDRAULIC LOADS. SUPPORT SHALL BE ON 10" MINIMUM DIAMETER WOOD OR STEEL POSTS EMBEDDED IN EARTH TO 3'-0" MINIMUM BELOW CHANNEL BOTTOM AND BRACED TO GRIT CHAMBER STRUCTURE WITH STEEL BRACES. DESIGN BY CONTRACTOR.
4. REMOVE TEMPORARY FORCE MAIN AND RESTORE THE 24-INCH BYPASS AFTER THE EXTENDED 30-INCH FORCE MAIN IS IN OPERATION. SEE DRAWING NO. 00C-10.
5. CONTRACTOR SHALL DESIGN TEMPORARY PIPE SUPPORTS OF SUITABLE MATERIALS.
6. SEE SPECIFICATION SECTION 01515 FOR WORK SEQUENCING.
7. SEE "C" DRAWINGS FOR EXTENSION OF EXISTING 30" FORCE MAIN.

LEGEND

1 — DEMOLISHED PER PLAN

09/13/91 - 15:23

REVISIONS

NO.	DATE	DRWN	CHK'D	DESCRIPTION
1	11/98	FXP	ASG	RECORD DRAWING

DESIGNED BY: DJS
DRAWN BY: GPB
CHECKED BY/DATE: TDH 9/91
APPRV'D BY/DATE: TDH 9/91

COMMONWEALTH OF VIRGINIA — THOMAS D. HALL No. 12502 — PROFESSIONAL ENGINEER

CAMP DRESSER & McKEE

THIS DRAWING HAS BEEN REVISED BY HAZEN AND SAWYER, P.C. TO REFLECT MODIFICATIONS MADE DURING CONSTRUCTION

environmental engineers, scientists, planners, & management consultants

CDM

ARLINGTON COUNTY, VIRGINIA
WATER POLLUTION CONTROL PLANT
UPGRADE AND EXPANSION- PHASE IIB

FOUR MILE RUN INTERCEPTOR
SCREENS, CHANNELS & GRIT CHAMBERS
FOUR MILE RUN RELIEF FORCE MAINS

SCALE NOTE

SCALE BAR SHOWN BELOW IS ONE INCH LONG ON A FULL SIZE DRAWING. WHEN SCALING DRAWINGS, MEASURE BAR TO DETERMINE IF SCALES SHOWN WILL REQUIRE ADJUSTING.

ONE INCH

CONTRACT NO. 90-02-WPC
YEAR 1991
LOCATION CODE B4
SPECIALTY CODE M
PROJECT NO. 5002-33
FILE NAME B4M-0001.DWG
DRAWING NO. B4M-1
SHEET NO. 94

RECORD DRAWING

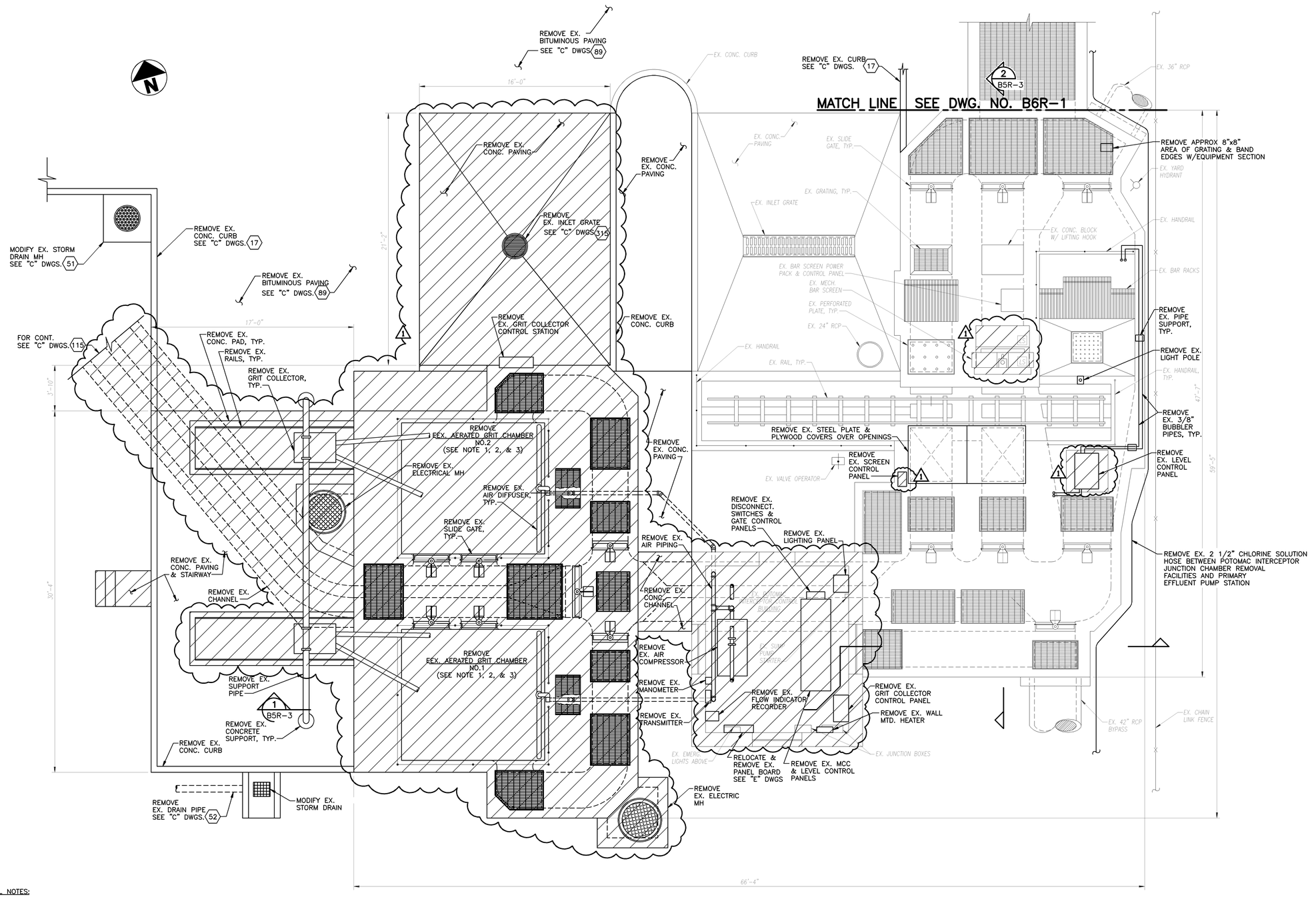

REMOVAL NOTES:

1. REMOVE ALL STRUCTURAL ELEMENTS, INCLUDING CONCRETE, GRATING, HANDRAIL, ETC.
2. REMOVE MECHANICAL ELEMENTS, INCLUDING PIPING, VALVES, GATES, EQUIPMENT, ETC.
3. BACKFILL WITH COMPACTED COMMON FILL, TYPE 1A, AS SPECIFIED.
4. SEE "C" DRAWINGS FOR ADDITIONAL REMOVALS & CODES ⟨ ⟩.

PLAN AT ELEVATION 19.50

SCALE: 1/4"=1'-0"

LEGEND: 1 — DEMOLISHED PER PLAN

09/18/91 – 08:33

NO.	DATE	DRWN	CHK'D	DESCRIPTION
1	11/98	PXP	ASG	RECORD DRAWING

REVISIONS

DESIGNED BY: DJS
DRAWN BY: BRW/CTC
CHECKED BY/DATE: TDH 9/91
APPRV'D BY/DATE: TDH 9/91

COMMONWEALTH OF VIRGINIA — THOMAS D. HALL — No. 12502 — PROFESSIONAL ENGINEER

CAMP DRESSER & McKEE

THIS DRAWING HAS BEEN REVISED BY HAZEN AND SAWYER, P.C. TO REFLECT MODIFICATIONS MADE DURING CONSTRUCTION

CDM — environmental engineers, scientists, planners, & management consultants

ARLINGTON COUNTY, VIRGINIA
WATER POLLUTION CONTROL PLANT
UPGRADE AND EXPANSION- PHASE IIB

POTOMAC INTERCEPTOR SCREEN & GRIT CHAMBERS
GENERAL REMOVAL
PLAN

SCALE NOTE

SCALE BAR SHOWN BELOW IS ONE INCH LONG ON A FULL SIZE DRAWING. WHEN SCALING DRAWINGS, MEASURE BAR TO DETERMINE IF SCALES SHOWN WILL REQUIRE ADJUSTING.

ONE INCH

CONTRACT NO.	
90-02-WPC	
YEAR	1991
LOCATION CODE	SPECIALTY CODE
B5	R
PROJECT NO.	
5002-33	
FILE NAME	
B5R-0001.DWG	
DRAWING NO.	
B5R-1	
SHEET NO.	95

RECORD DRAWING

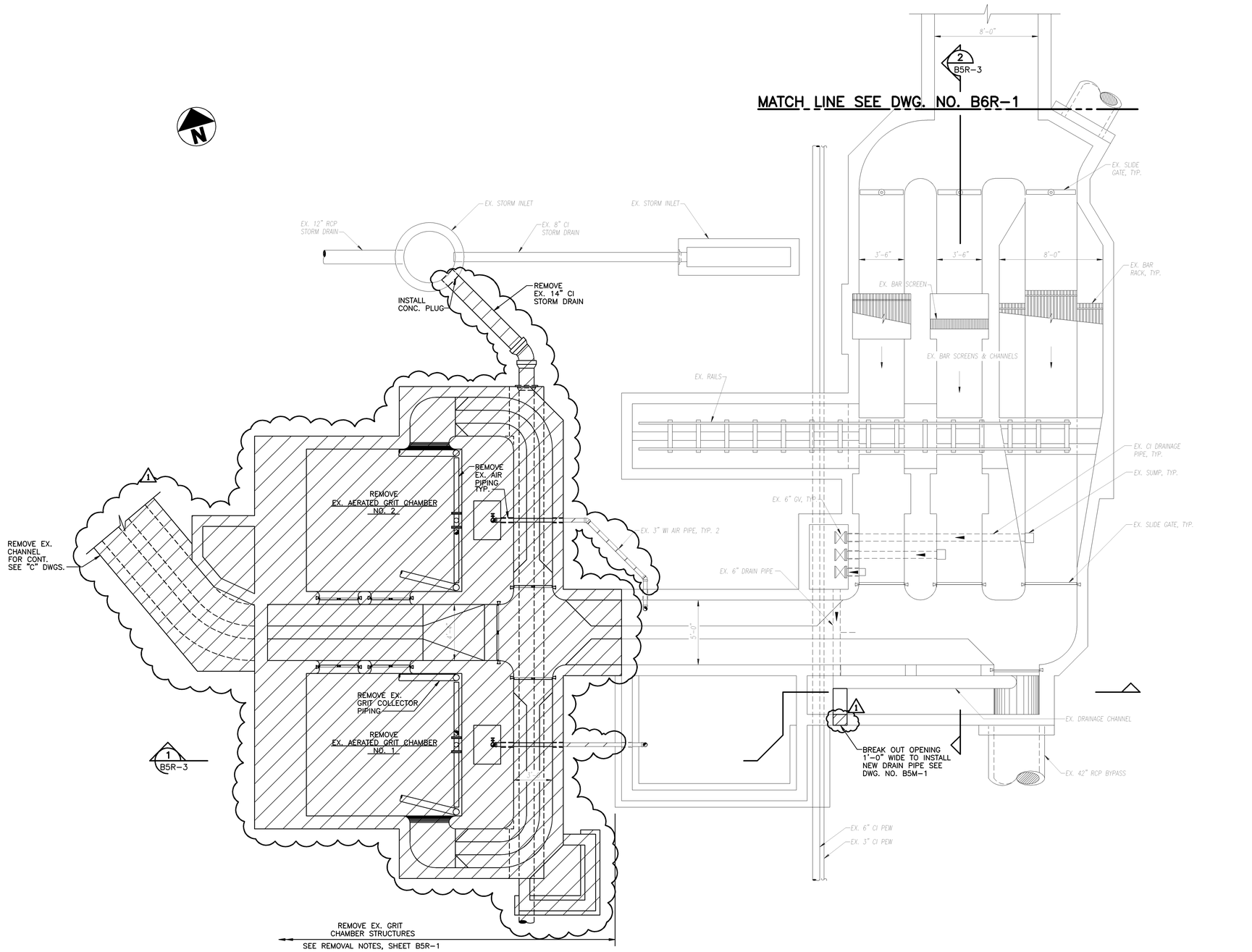

SECTIONAL PLAN

SCALE: 1/4"=1'-0"

LEGEND 1 — DEMOLISHED PER PLAN

RECORD DRAWING

NO.	DATE	DRWN	CHK'D	DESCRIPTION
1	11/98	FXP	ASG	RECORD DRAWING

REVISIONS

DESIGNED BY: DJS
DRAWN BY: BRW/CTC
CHECKED BY/DATE: TDH 9/91
APPRV'D BY/DATE: TDH 9/91

COMMONWEALTH OF VIRGINIA — THOMAS D. HALL No. 12502 — PROFESSIONAL ENGINEER

CAMP DRESSER & McKEE

THIS DRAWING HAS BEEN REVISED BY HAZEN AND SAWYER, P.C. TO REFLECT MODIFICATIONS MADE DURING CONSTRUCTION

CDM — environmental engineers, scientists, planners, & management consultants

ARLINGTON COUNTY, VIRGINIA
WATER POLLUTION CONTROL PLANT
UPGRADE AND EXPANSION- PHASE IIB

POTOMAC INTERCEPTOR SCREEN & GRIT CHAMBERS
GENERAL REMOVAL
SECTIONAL PLAN

SCALE NOTE

SCALE BAR SHOWN BELOW IS ONE INCH LONG ON A FULL SIZE DRAWING. WHEN SCALING DRAWINGS, MEASURE BAR TO DETERMINE IF SCALES SHOWN WILL REQUIRE ADJUSTING.

ONE INCH

CONTRACT NO. 90-02-WPC
YEAR 1991
LOCATION CODE B5
SPECIALTY CODE R
PROJECT NO. 5002-33
FILE NAME B5R-0002.DWG
DRAWING NO. B5R-2
SHEET NO. 96

09/16/91 - 08:28

SECTION 1
SCALE: 1/4"=1'-0"
B5R-1

SECTION 2
SCALE: 1/4"=1'-0"
B5R-1,2

LEGEND
1
DEMOLISHED PER PLAN

09/28/90 - 4:00

RECORD DRAWING

NO.	DATE	DRWN	CHK'D	DESCRIPTION
1	11/98	FXP	ASG	RECORD DRAWING

REVISIONS

DESIGNED BY: TDH
DRAWN BY: BRW/CTC
CHECKED BY/DATE: TDH 9/91
APPRV'D BY/DATE: TDH 9/91

COMMONWEALTH OF VIRGINIA
THOMAS D. HALL
No. 12502
PROFESSIONAL ENGINEER

CAMP DRESSER & McKEE

THIS DRAWING HAS BEEN REVISED BY HAZEN AND SAWYER, P.C. TO REFLECT MODIFICATIONS MADE DURING CONSTRUCTION

CDM
environmental engineers, scientists, planners, & management consultants

ARLINGTON COUNTY, VIRGINIA
WATER POLLUTION CONTROL PLANT
UPGRADE AND EXPANSION- PHASE IIB

POTOMAC INTERCEPTOR SCREEN & GRIT CHAMBERS
GENERAL REMOVAL
SECTIONS

SCALE NOTE
SCALE BAR SHOWN BELOW IS ONE INCH LONG ON A FULL SIZE DRAWING. WHEN SCALING DRAWINGS, MEASURE BAR TO DETERMINE IF SCALES SHOWN WILL REQUIRE ADJUSTING.
ONE INCH

CONTRACT NO. 90-02-WPC
YEAR 1991
LOCATION CODE B5
SPECIALTY CODE R
PROJECT NO. 5002-33
FILE NAME B5R-0003.DWG
DRAWING NO. B5R-3
SHEET NO. 97

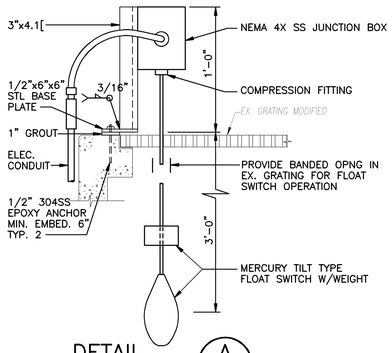

DETAIL A B5M-1
SCALE: NTS

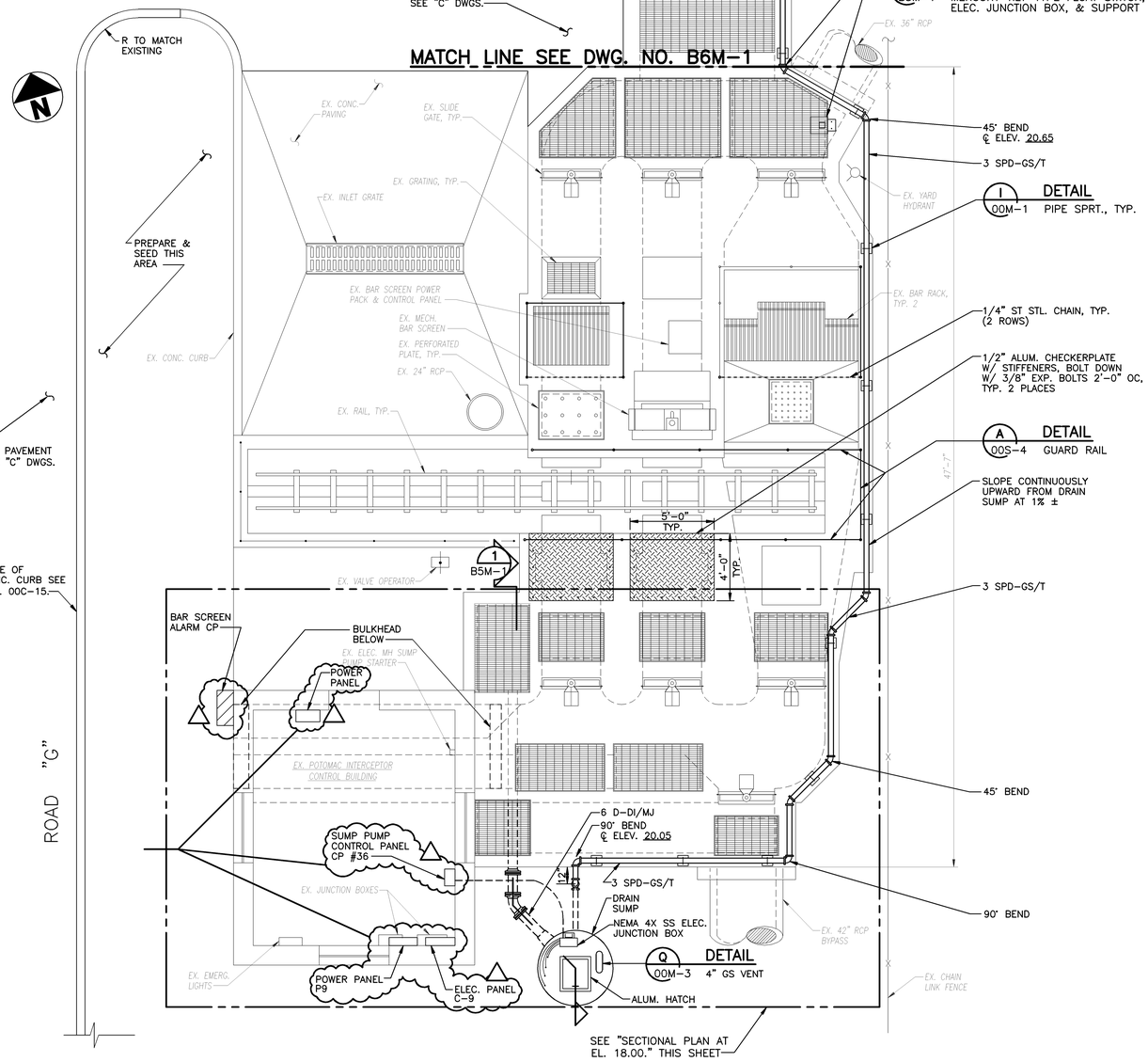

PLAN AT ELEVATION 19.50
SCALE: 1/4"=1'-0"

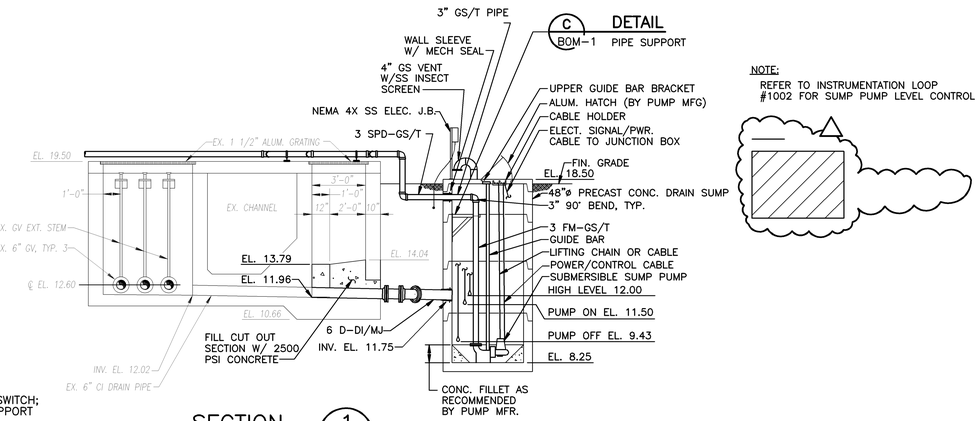

SECTION 1
SCALE: 1/4"=1'-0" B5M-1

NOTE:
REFER TO INSTRUMENTATION LOOP #1002 FOR SUMP PUMP LEVEL CONTROL

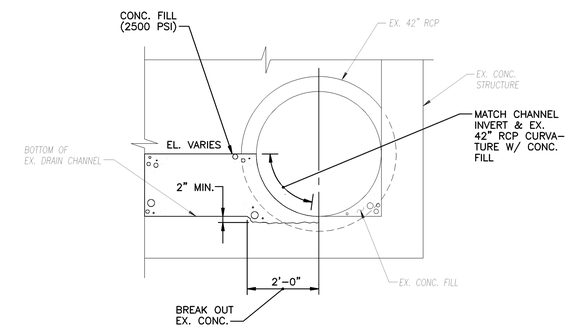

SECTION 2
SCALE: 1/2"=1'-0"

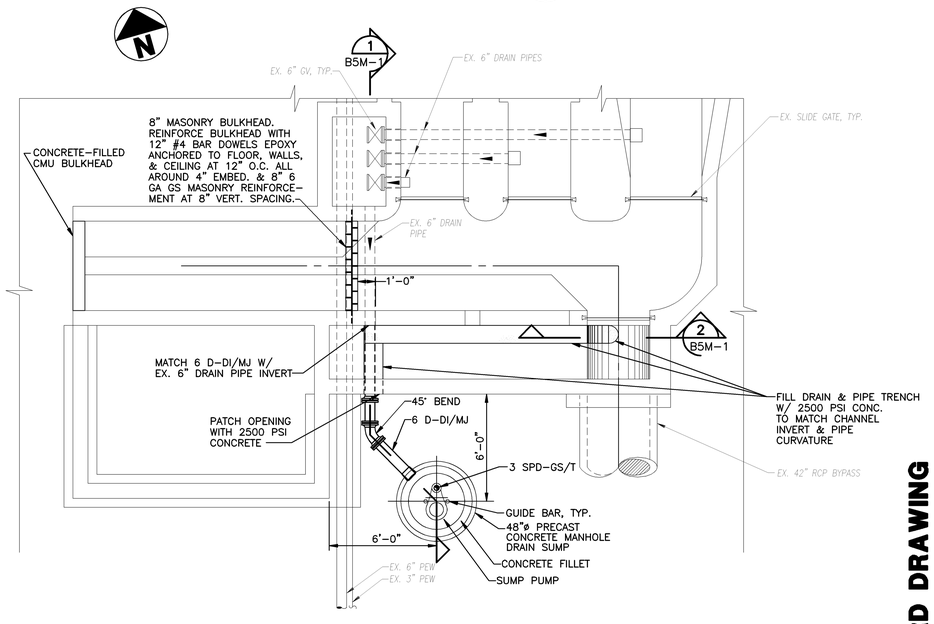

SECTIONAL PLAN AT ELEVATION 18.00
SCALE: 1/4"=1'-0"

NO.	DATE	DRWN	CHK'D	DESCRIPTION
1	11/98	PXP	ASG	RECORD DRAWING

REVISIONS

DESIGNED BY: DJS
DRAWN BY: BRW/CTC
CHECKED BY/DATE: TDH 9/91
APPRV'D BY/DATE: TDH 9/91

COMMONWEALTH OF VIRGINIA
THOMAS D. HALL
No. 12502
PROFESSIONAL ENGINEER

CAMP DRESSER & McKEE
HAZEN AND SAWYER, P.C.
CDM
environmental engineers, scientists, planners, & management consultants

ARLINGTON COUNTY, VIRGINIA
WATER POLLUTION CONTROL PLANT
UPGRADE AND EXPANSION- PHASE IIB

POTOMAC INTERCEPTOR SCREENS & GRIT CHAMBERS
PLANS AND SECTIONS

SCALE NOTE
SCALE BAR SHOWN BELOW IS ONE INCH LONG ON A FULL SIZE DRAWING. WHEN SCALING DRAWINGS, MEASURE BAR TO DETERMINE IF SCALES SHOWN WILL REQUIRE ADJUSTING.
ONE INCH

CONTRACT NO. 90-02-WPC
YEAR 1991
LOCATION CODE B5
SPECIALTY CODE M
PROJECT NO. 5002-33
FILE NAME B5M-0001
DRAWING NO. B5M-1
SHEET NO. 98

RECORD DRAWING

09/17/91 - 20:27

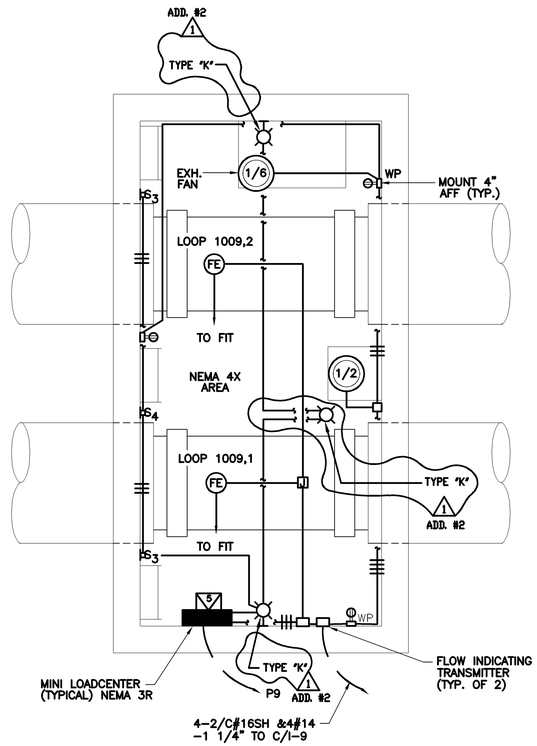

POTOMAC INTERCEPTOR
METER CHAMBER
SCALE:3/8=1'-0"

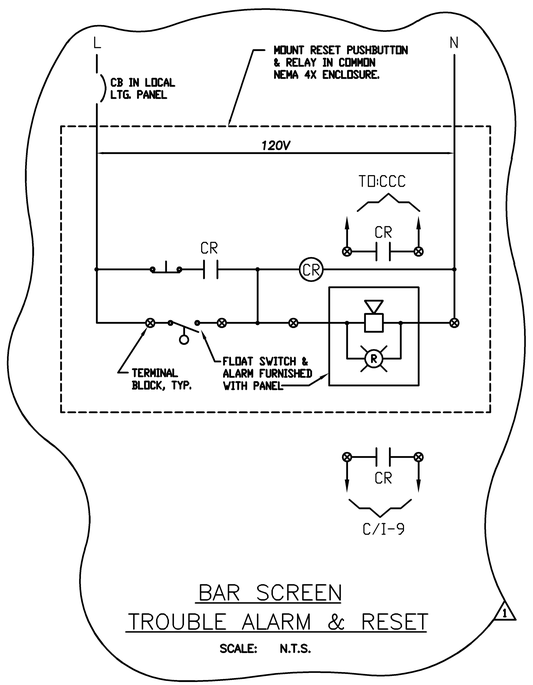

BAR SCREEN
TROUBLE ALARM & RESET
SCALE: N.T.S.

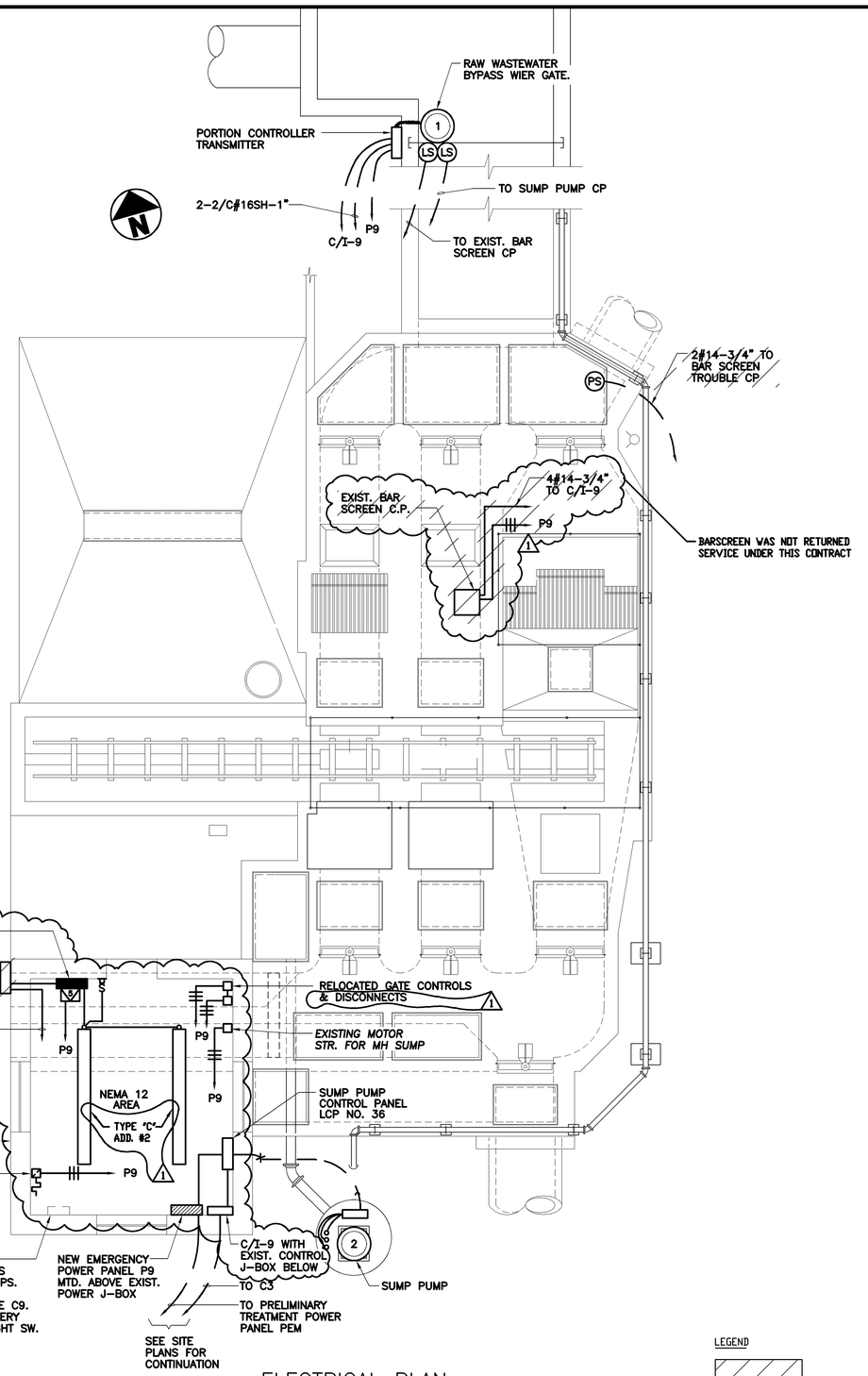

ELECTRICAL PLAN
SCALE: 1/4"=1'-0"

LEGEND

DEMOLISHED PER PLAN

RECORD DRAWING

1

C.E. BAILEY & ASSOCIATES, INC.
CONSULTING ENGINEERS
ORLANDO, CLEARWATER & FORT LAUDERDALE, FLORIDA

NO.	DATE	DRWN	CHK'D	DESCRIPTION
				REVISIONS
1	12/98	FXP	ASG	RECORD DRAWING

DESIGNED BY: SEB
DRAWN BY: JSG
CHECKED BY/DATE: CEB/9-91
APPR'D BY/DATE: CEB/9-91

CAMP DRESSER & McKEE

THIS DRAWING HAS BEEN REVISED BY HAZEN AND SAWYER, P.C. TO REFLECT MODIFICATIONS MADE DURING CONSTRUCTION

environmental engineers, scientists, planners, & management consultants

CDM

ARLINGTON COUNTY, VIRGINIA
WATER POLLUTION CONTROL PLANT
UPGRADE AND EXPANSION- PHASE IB

POTOMAC INTERCEPTOR SCREEN & GRIT CHAMBERS
ELECTRICAL
PLAN

SCALE NOTE

SCALE BAR SHOWN BELOW IS ONE INCH LONG ON A FULL SIZE DRAWING. WHEN SCALING DRAWINGS, MEASURE BAR TO DETERMINE IF SCALES SHOWN WILL REQUIRE ADJUSTING.

ONE INCH

CONTRACT NO.
000000000
YEAR 1990
LOCATION CODE B5
SPECIALTY CODE E
PROJECT NO.
5002-33
FILE NAME
B5E-0001.DWG
DRAWING NO.
B5E-1
SHEET NO. 100

PANEL: P9	BUS: 100A W/60A M.B.	VOLTAGE: 480V, 3ø, 3W		
MOUNTING:	POLES:			
LOCATION:	REMARKS: NEMA 12			
CIR. NO.	DESCRIPTION	TRIP	POLES	REMARKS
1,3,5	EXISTING GATE OPERATOR	15	3	—
2,4,6	EXISTING GATE OPERATOR	15	3	—
7,9,11	SUMP PUMP C.P. (LCP–36)	15	3	1
8,10,12	MANHOLE SUMP PUMP STARTER	15	3	1
13,15,17	BAR SCREEN C.P.	15	3	2
14,16,18	BYPASS WIER GATE	15	3	—
19,21,23	EXISTING UNIT HEATER	15	3	5
20,22,24	MINI POWER ZONE	15	3	5
25,27,29	MINI POWER ZONE	15	3	5
26,28,30	SPARE	15	3	
31,33,35	SPARE	15	3	
32,34,36	SPARE	30	3	
37–48	SPACE	—	—	

TOTAL: 19 KVA

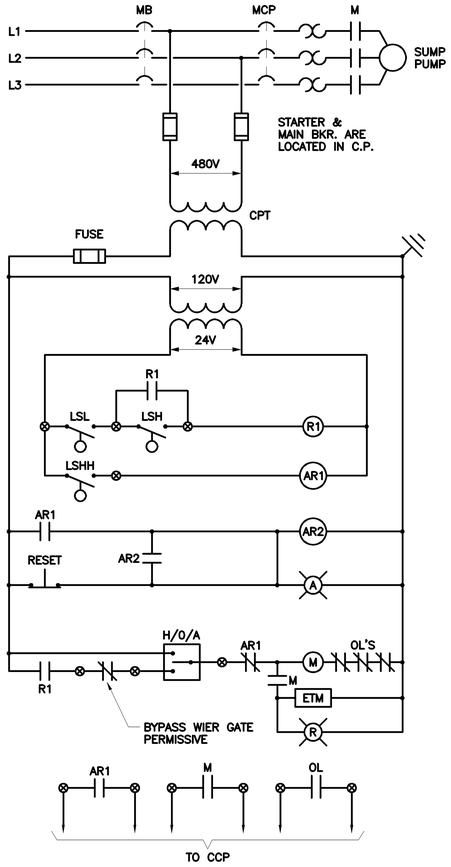

SUMP PUMP C.P.
LCP–36

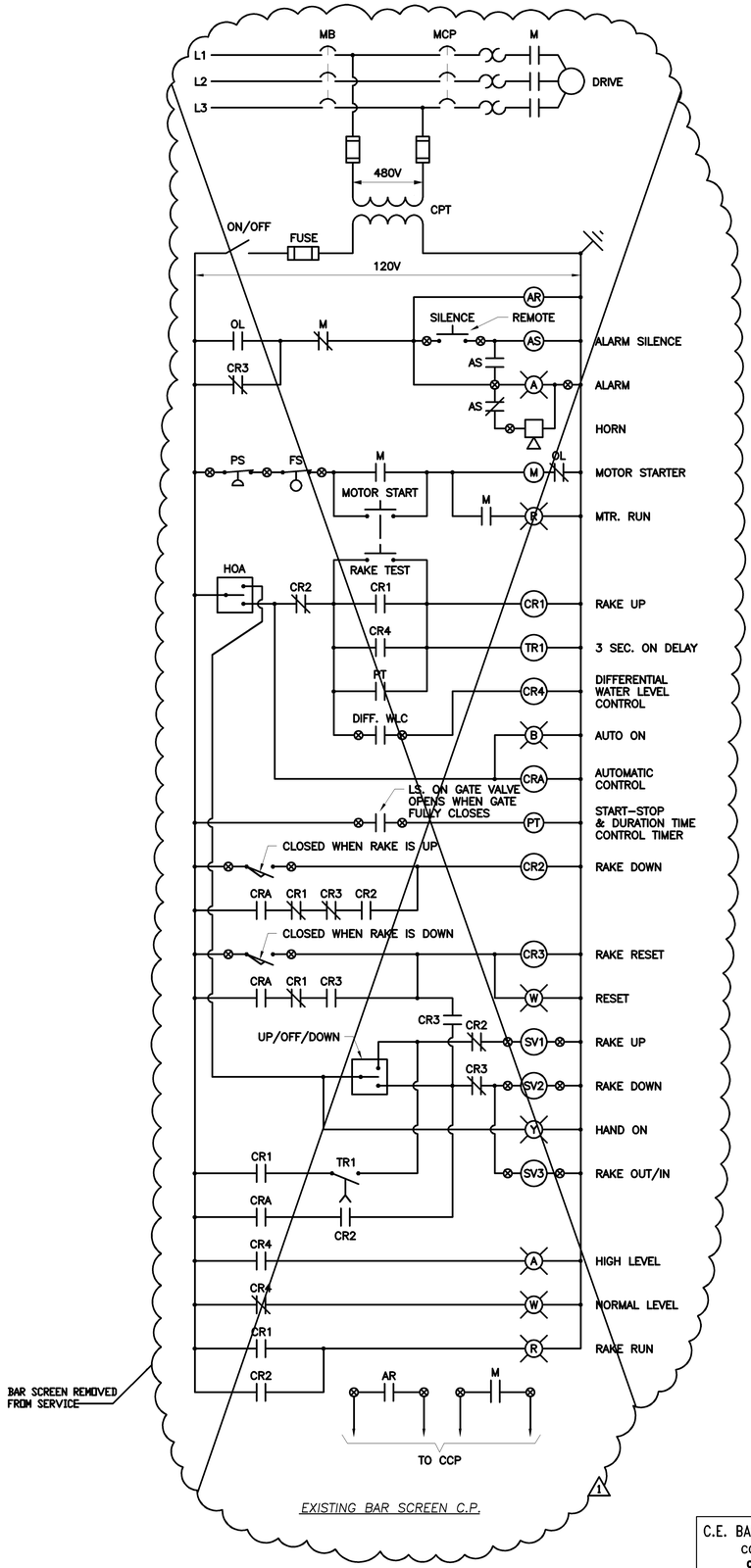

EXISTING BAR SCREEN C.P.

NO.	DESCRIPTION	DATE	DRWN	CHK'D
1	RECORD DRAWING	9/97	FXP	ASG

REVISIONS

DESIGNED BY: SEB
DRAWN BY: TRH
CHECKED BY/DATE: CEB/9–91
APPR'D BY/DATE: CEB/9–91

CAMP DRESSER & McKEE

THIS DRAWING HAS BEEN REVISED BY BLAZEN AND SAWYER, P.C. TO REFLECT MODIFICATIONS MADE DURING CONSTRUCTION

CDM
environmental engineers, scientists, planners, & management consultants

ARLINGTON COUNTY, VIRGINIA
WATER POLLUTION CONTROL PLANT
UPGRADE AND EXPANSION- PHASE IIB

POTOMAC INTERCEPTOR SCREENS & GRIT CHAMBERS
ELECTRICAL
ELEMENTARY CONTROL DIAGRAMS & SCHEDULE

SCALE NOTE
SCALE BAR SHOWN BELOW IS ONE INCH LONG ON A FULL SIZE DRAWING. WHEN SCALING DRAWINGS, MEASURE BAR TO DETERMINE IF SCALES SHOWN WILL REQUIRE ADJUSTING.
ONE INCH

RECORD DRAWING

CONTRACT NO.
YEAR 1991
LOCATION CODE B5
SPECIALTY CODE E
PROJECT NO. 5002–33
FILE NAME B5E–0002.DWG
DRAWING NO. B5E–2
SHEET NO. 101

C.E. BAILEY & ASSOCIATES, INC.
CONSULTING ENGINEERS
ORLANDO, CLEARWATER & FORT LAUDERDALE, FLORIDA

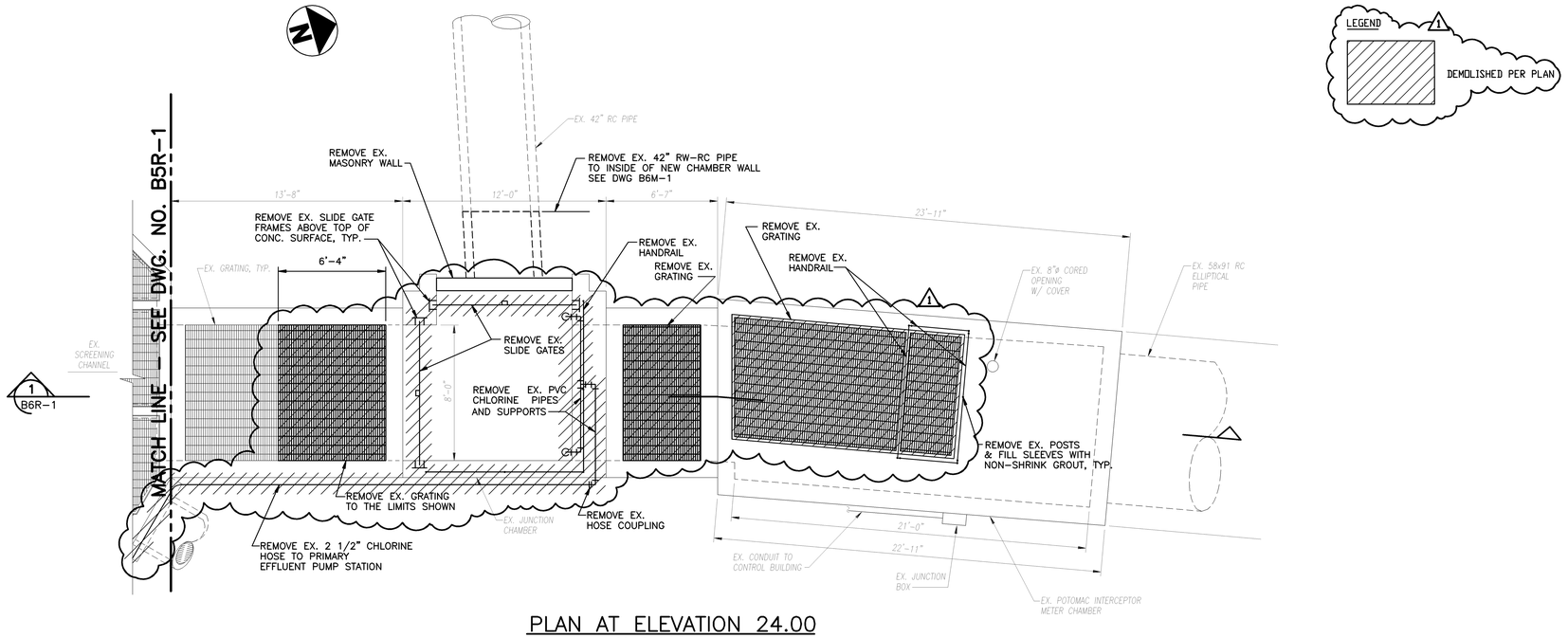

PLAN AT ELEVATION 24.00

SCALE: 1/4"=1'-0"

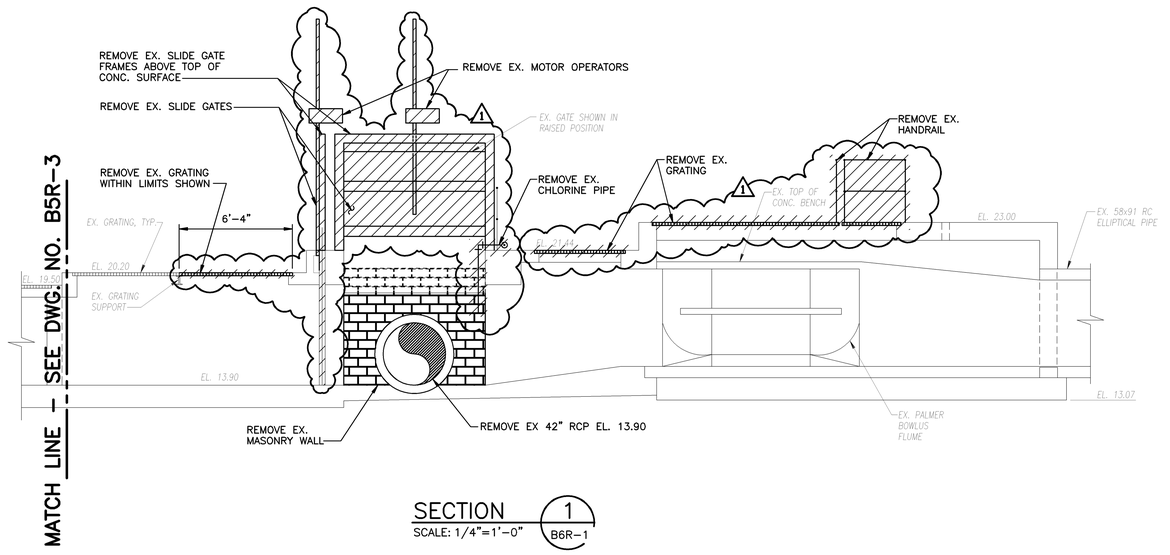

SECTION 1 / B6R-1

SCALE: 1/4"=1'-0"

09/18/91 - 09:58

REVISIONS					
NO.	DATE	DRWN	CHK'D	DESCRIPTION	
1	11/98	FXP	ASG	RECORD DRAWING	

DESIGNED BY: DJS
DRAWN BY: CTC
CHECKED BY/DATE: --
APPRV'D BY/DATE: --

CAMP DRESSER & McKEE

THIS DRAWING HAS BEEN REVISED BY HAZEN AND SAWYER, P.C. TO REFLECT MODIFICATIONS MADE DURING CONSTRUCTION

environmental engineers, scientists, planners, & management consultants

CDM

ARLINGTON COUNTY, VIRGINIA
WATER POLLUTION CONTROL PLANT
UPGRADE AND EXPANSION- PHASE IIB

POTOMAC INTERCEPTOR METERING CHAMBER AND JUNCTION CHAMBERS
GENERAL REMOVAL
PLAN AND SECTION

RECORD DRAWING

SCALE NOTE

SCALE BAR SHOWN BELOW IS ONE INCH LONG ON A FULL SIZE DRAWING. WHEN SCALING DRAWINGS, MEASURE BAR TO DETERMINE IF SCALES SHOWN WILL REQUIRE ADJUSTING.

ONE INCH

CONTRACT NO.	90-02-WPC
YEAR	1991
LOCATION CODE	B6
SPECIALTY CODE	R
PROJECT NO.	5002-33
FILE NAME	B6R-0001.DWG
DRAWING NO.	B6R-1
SHEET NO.	102

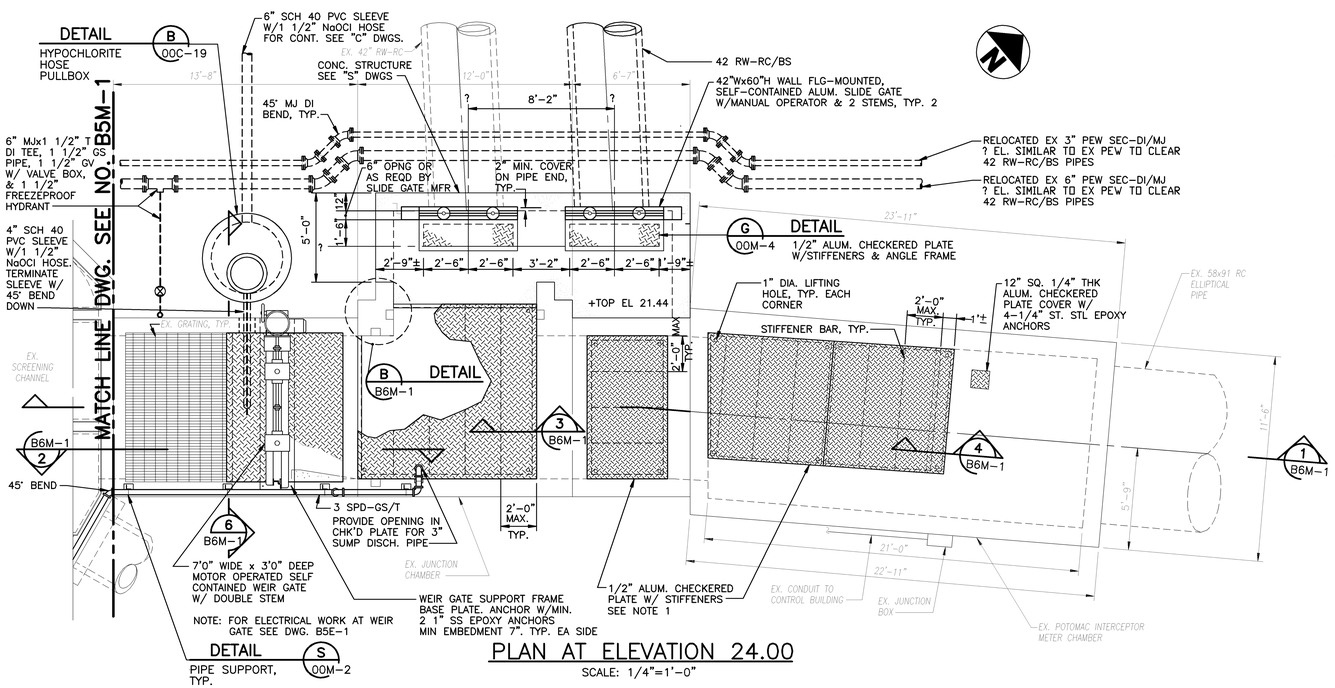

PLAN AT ELEVATION 24.00

SCALE: 1/4"=1'–0"

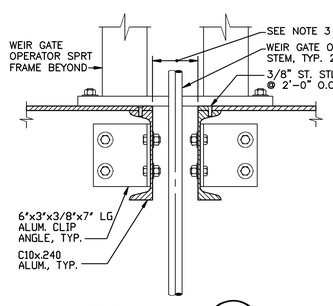

DETAIL A B6M–1

SCALE: 1 1/2"=1'–0"

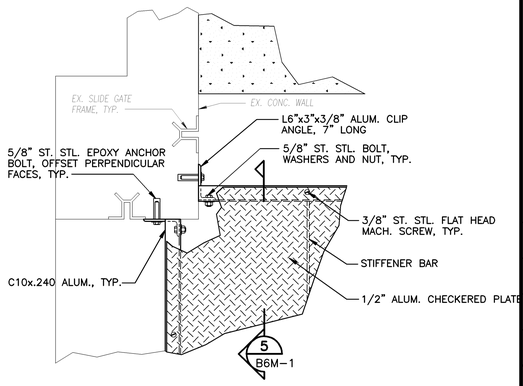

DETAIL B B6M–1

SCALE: 1"=1'–0"

NOTES:

1. ALUMINUM CHECKERED PLATE TO BE PROVIDED WITH WELDED ALUMINUM STIFFENERS OF SIZE AND SPACING TO PROVIDE A LOAD CAPACITY OF 100 PSF WITHOUT EXCEEDING ALLOWABLE STRESSES. MAXIMUM STIFFENER SPACING 2'–0". MINIMUM THICKNESS 1/2". TRIM ENDS TO DEPTH OF EXISTING ANGLE SEATS.
2. SANDBLAST AND PAINT ALL EXISTING ANGLE GRATING SEATS.
3. COORDINATE SIZE AND LOCATION OF THIS OPENING WITH WEIR GATE REQUIREMENTS.

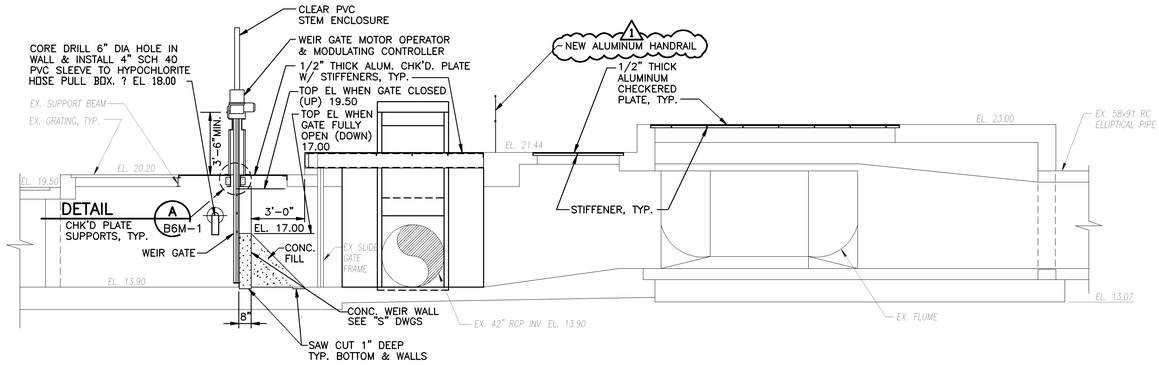

SECTION 1 B6M–1

SCALE: 1/4"=1'–0"

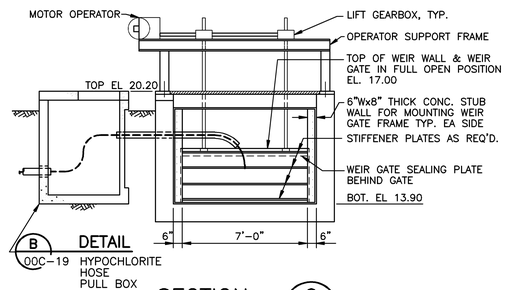

SECTION 6 B6M–1

SCALE: 1/4"=1'–0"

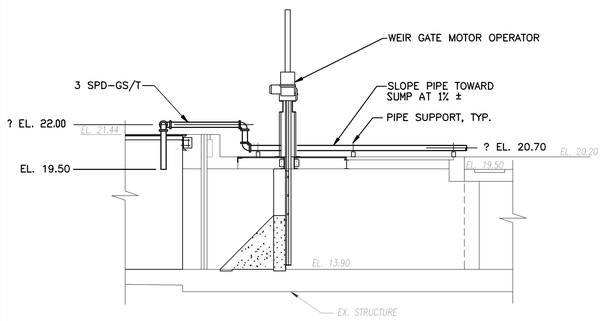

SECTION 2 B6M–1

SCALE: 1/4"=1'–0"

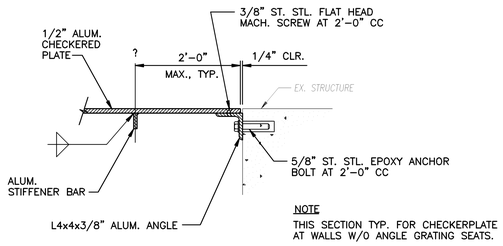

SECTION 3 B6M–1

SCALE: 1 1/2"=1'–0"

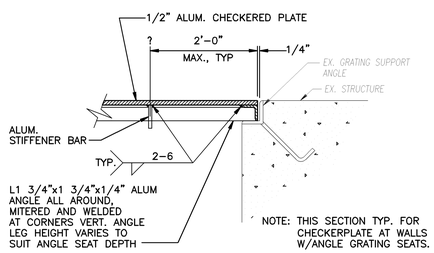

SECTION 4 B6M–1

SCALE: 1 1/2"=1'–0"

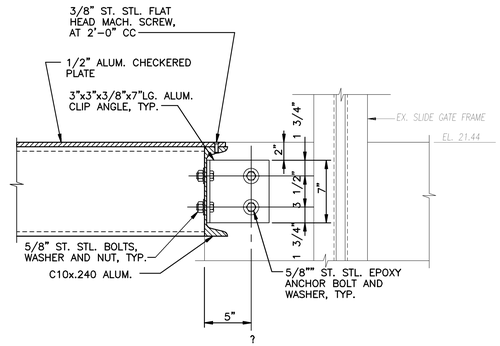

SECTION 5 B6M–1

SCALE: 1 1/2"=1'–0"

09/18/91 – 10:10

RECORD DRAWING

NO.	DATE	DRWN	CHK'D	REVISIONS
1	11/98	PXP	ASG	RECORD DRAWING

DESIGNED BY: DJS
DRAWN BY: CTC
CHECKED BY/DATE: TDH 9/91
APPRV'D BY/DATE: TDH 9/91

COMMONWEALTH OF VIRGINIA — THOMAS D. HALL No. 12502 — PROFESSIONAL ENGINEER

CAMP DRESSER & McKEE
environmental engineers, scientists, planners, & management consultants
THIS DRAWING HAS BEEN REVISED BY HAZEN AND SAWYER, P.C. TO REFLECT MODIFICATIONS MADE DURING CONSTRUCTION
CDM

ARLINGTON COUNTY, VIRGINIA
WATER POLLUTION CONTROL PLANT
UPGRADE AND EXPANSION– PHASE IB

POTOMAC INTERCEPTOR METERING CHAMBER AND JUNCTION CHAMBER
PLANS SECTIONS AND DETAILS

SCALE NOTE
SCALE BAR SHOWN BELOW IS ONE INCH LONG ON A FULL SIZE DRAWING. WHEN SCALING DRAWINGS, MEASURE BAR TO DETERMINE IF SCALES SHOWN WILL REQUIRE ADJUSTING.
ONE INCH

CONTRACT NO. 90–02–WPC
YEAR 1991
LOCATION CODE B6
SPECIALTY CODE M
PROJECT NO. 5002–33
FILE NAME B6M–0001.DWG
DRAWING NO. B6M–1
SHEET NO. 103

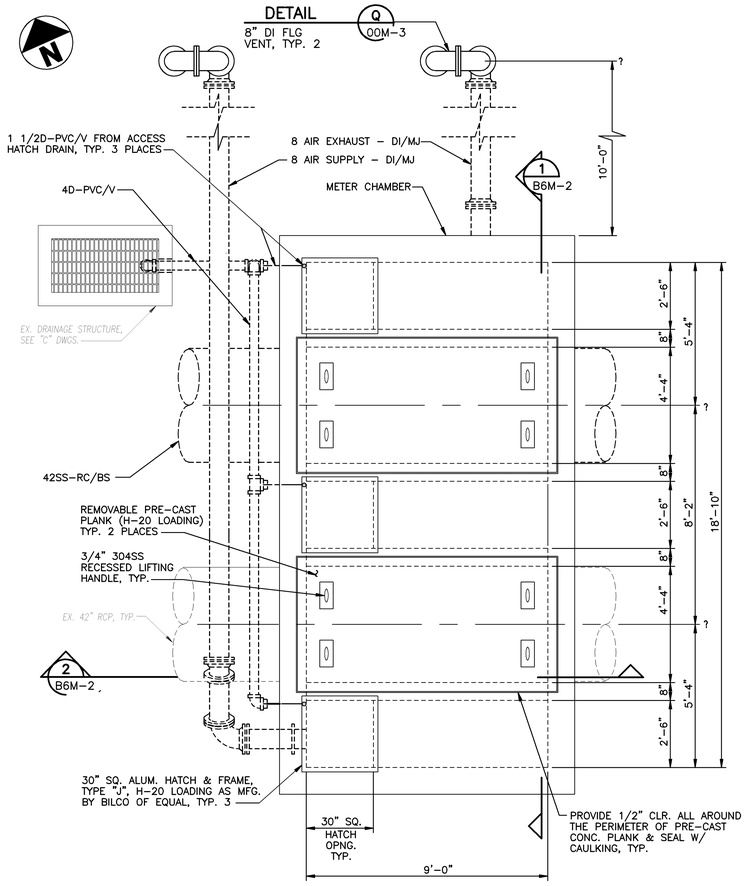

TOP PLAN
SCALE: 3/8"=1'-0"

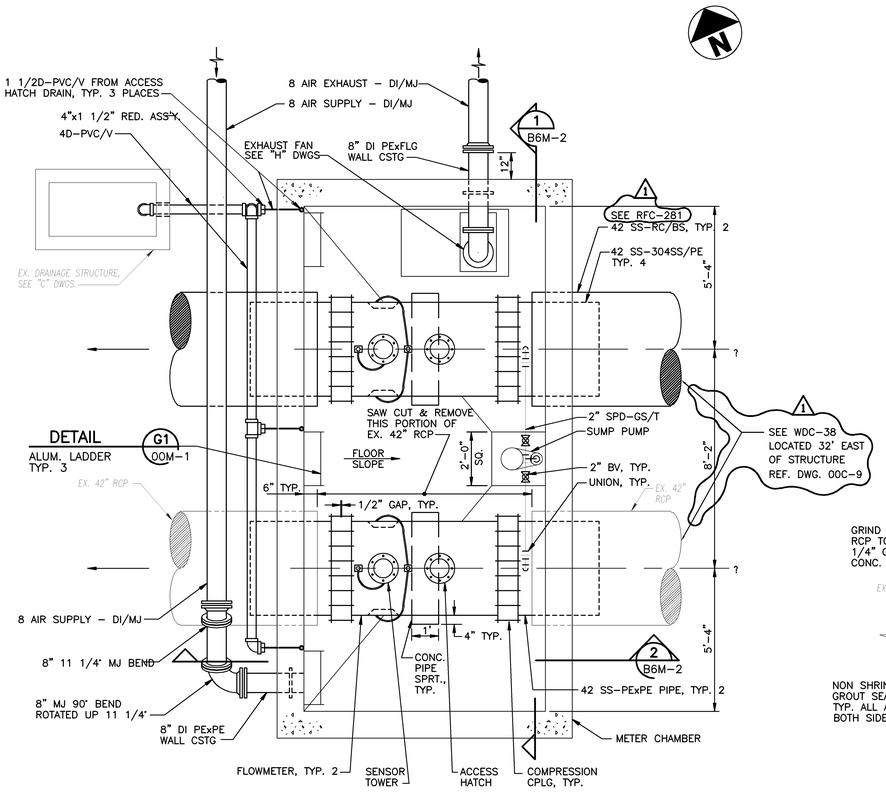

SECTIONAL PLAN
SCALE: 3/8"=1'-0"

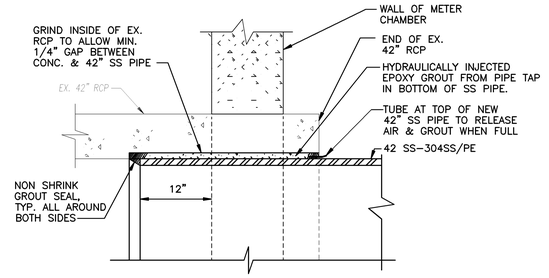

DETAIL A
SCALE: NTS
B6M-2

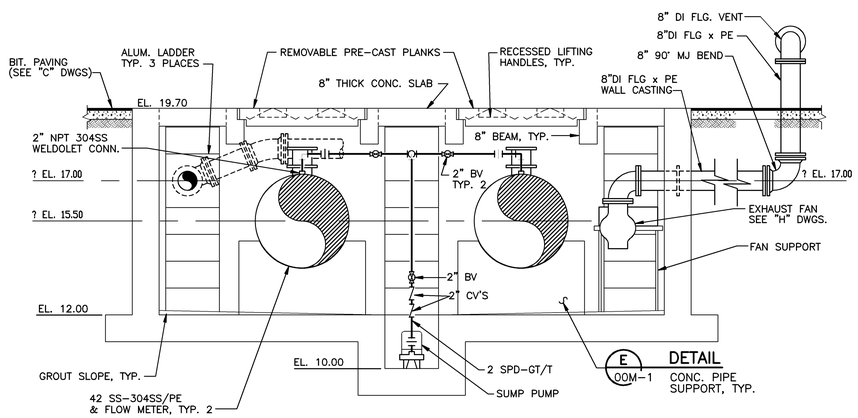

SECTION 1
SCALE: 3/8"=1'-0"
B6M-2

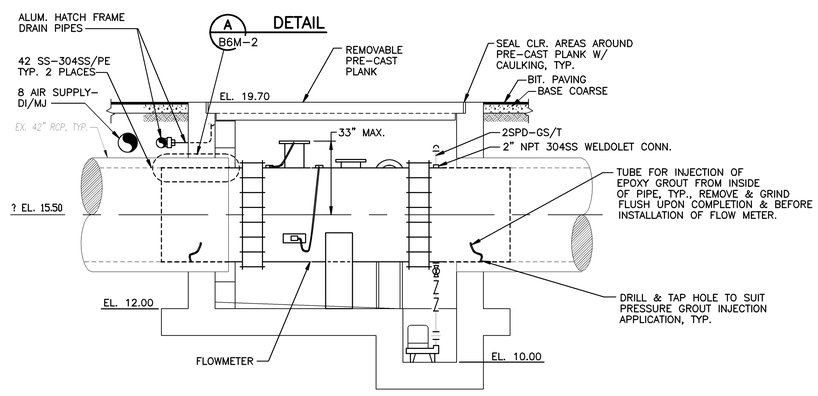

SECTION 2
SCALE: 3/8"=1'-0"
B6M-2

01/22/92 - 11:15

RECORD DRAWING

NO.	DATE	DRWN	CHK'D	DESCRIPTION
1	9/97	FXP	ASG	RECORD DRAWING

REVISIONS

DESIGNED BY: KCW
DRAWN BY: EGT
CHECKED BY/DATE: TDH 9/91
APPRV'D BY/DATE: TDH 9/91

COMMONWEALTH OF VIRGINIA
THOMAS D. HALL
No. 12502
PROFESSIONAL ENGINEER

CAMP DRESSER & McKEE
environmental engineers, scientists, planners, & management consultants
CDM

THIS DRAWING HAS BEEN REVISED BY HAZEN AND SAWYER, P.C. TO REFLECT MODIFICATIONS MADE DURING CONSTRUCTION

ARLINGTON COUNTY, VIRGINIA
WATER POLLUTION CONTROL PLANT
UPGRADE AND EXPANSION- PHASE IIB

POTOMAC INTERCEPTOR METER CHAMBER
PLANS, SECTIONS AND DETAILS

SCALE NOTE
SCALE BAR SHOWN BELOW IS ONE INCH LONG ON A FULL SIZE DRAWING. WHEN SCALING DRAWINGS, MEASURE BAR TO DETERMINE IF SCALES SHOWN WILL REQUIRE ADJUSTING.
ONE INCH

CONTRACT NO. 90-02-WPC
YEAR 1991
LOCATION CODE B6
SPECIALTY CODE M
PROJECT NO. 5002-33
FILE NAME B6M-0002.DWG
DRAWING NO. B6M-2
SHEET NO. 104

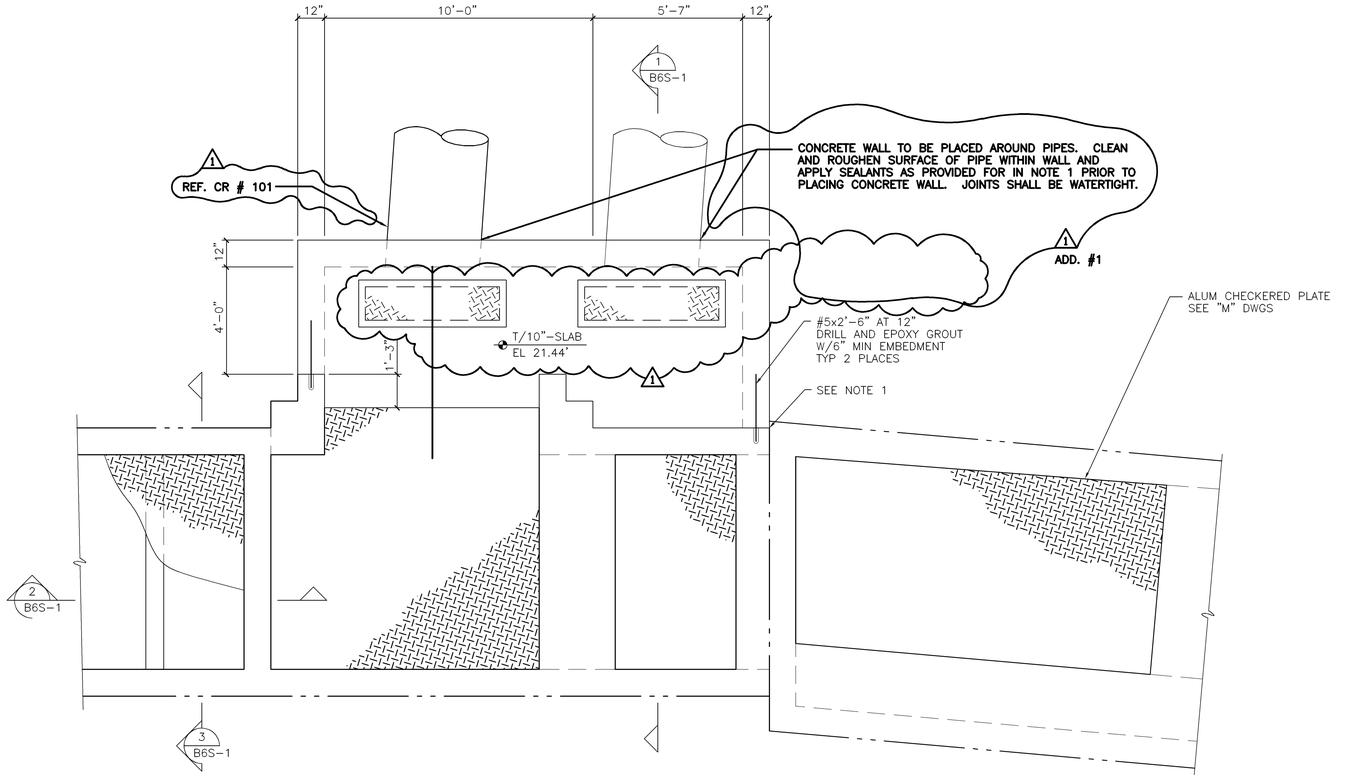

TOP PLAN
3/8"=1'-0"

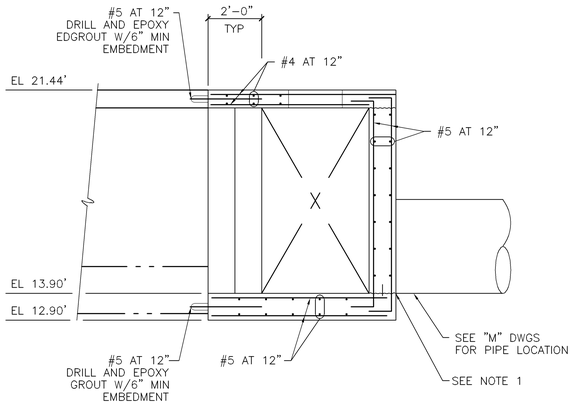

SECTION 1
3/8"=1'-0" B6S-1

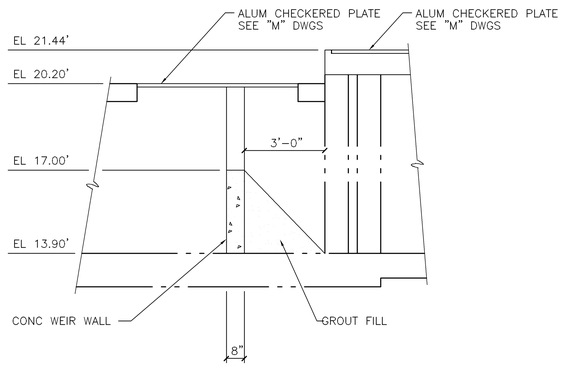

SECTION 2
3/8"=1'-0" B6S-1

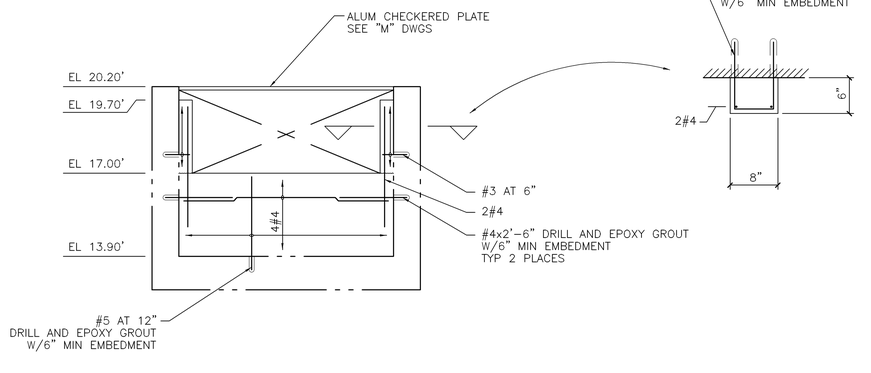

SECTION 3
3/8"=1'-0" B6S-1

NOTES:

1. PROVIDE SWELL SEAL AND INJECTO (BY DE NEEF AMERICA, INC. OR APPROVED EQUAL) ALONG SIDE WALL AND BASE SLAB INTERFACE WITH EXISTING STRUCTURE AND AROUND EXTERIOR PERIMETER OF PIPE INTERFACE WITH WALLS.

ADD. #2 1

2. PREPARE SURFACES IN EXPANDED POTOMAC INTERCEPTOR JUNCTION CHAMBER AND APPLY TWO COATS OF SIKAGARD 62 TO INTERIOR WALLS.

NOTE:
STANDARD DETAILS SHOWN ON OOS-2, OOS-3, AND OOS-4 APPLY TO ALL SIMILAR SITUATIONS ON THE PROJECT, EXCEPT WHERE A DIFFERENT DETAIL IS SHOWN.

1

STI structural technologies inc.
CONSULTING ENGINEERS
Wekiva Business Center
Suite 120, 1428 East Semoran Blvd., Apopka, Florida 32703
(407) 889-9660

DRAWN BY : CL
CHECKED BY : KM
APPROVED BY : BE
DATE : OCT 1990
JOB NO: 90-111

RECORD DRAWING

NO.	DATE	DRWN	CHK'D	DESCRIPTION
1	11/98	FXP	ASG	RECORD DRAWING

REVISIONS

DESIGNED BY:
DRAWN BY:
CHECKED BY/DATE:
APPRV'D BY/DATE:

CAMP DRESSER & McKEE
environmental engineers, scientists, planners, & management consultants
CDM

THIS DRAWING HAS BEEN REVISED BY HAZEN AND SAWYER, P.C. TO REFLECT MODIFICATIONS MADE DURING CONSTRUCTION

ARLINGTON COUNTY, VIRGINIA
WATER POLLUTION CONTROL PLANT
UPGRADE AND EXPANSION- PHASE IB

POTOMAC INTERCEPTOR JUNCTION CHAMBER
PLANS AND SECTIONS

SCALE NOTE
SCALE BAR SHOWN BELOW IS ONE INCH LONG ON A FULL SIZE DRAWING. WHEN SCALING DRAWINGS, MEASURE BAR TO DETERMINE IF SCALES SHOWN WILL REQUIRE ADJUSTING.
ONE INCH

CONTRACT NO.
YEAR

LOCATION CODE	SPECIALTY CODE
B6	S

PROJECT NO.
5002-33
FILE NAME
B6S-1.DWG
DRAWING NO.
B6S-1
SHEET NO. 105

FILE: D:\ARLING\B6S-1.DWG , SCALE: 3/8"=1'-0" , LATEST REVISIONS MADE ON: 10/15/91 AT 09:40

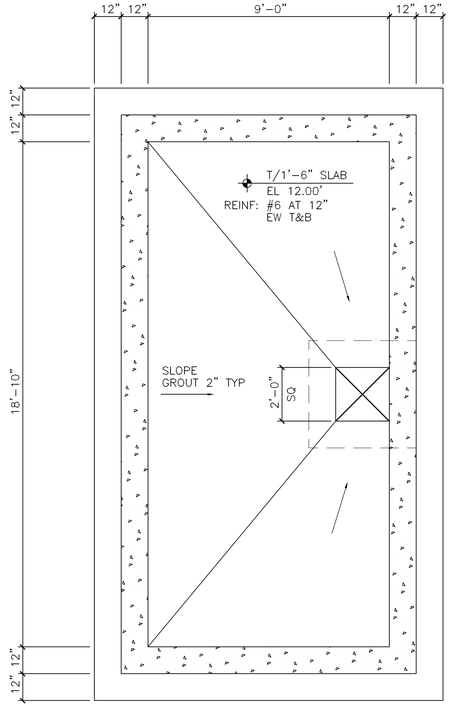

SLAB PLAN
3/8"=1'-0"

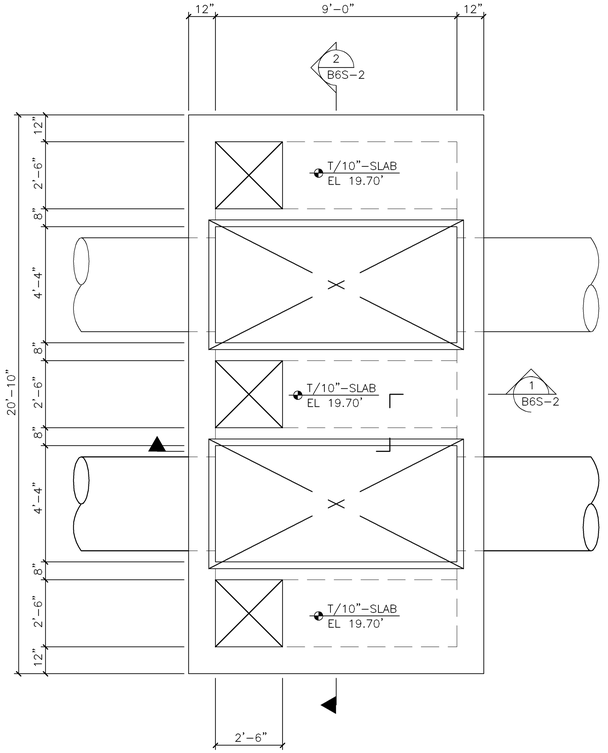

TOP PLAN
3/8"=1'-0"

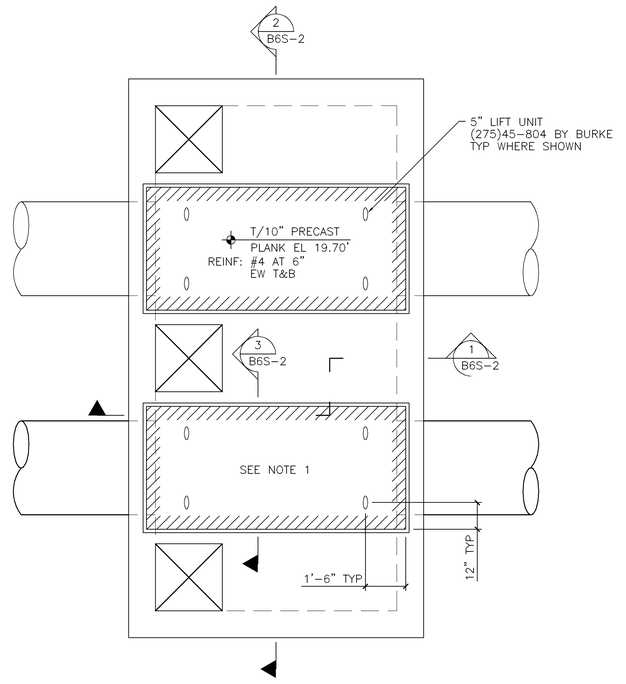

TOP PLAN W/PRECAST PLANKS
3/8"=1'-0"

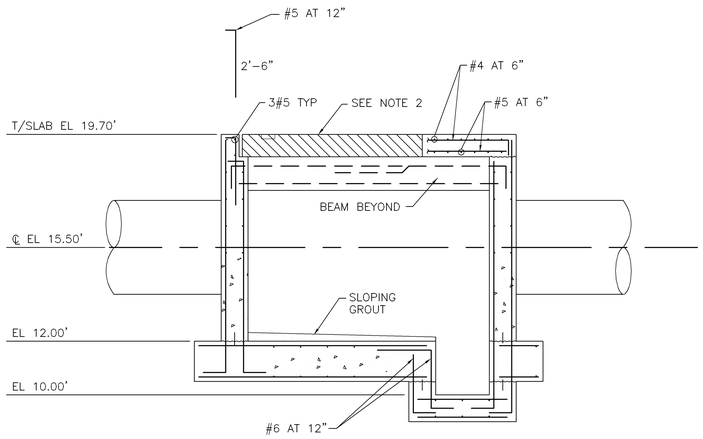

SECTION 1
3/8"=1'-0"
B6S-2

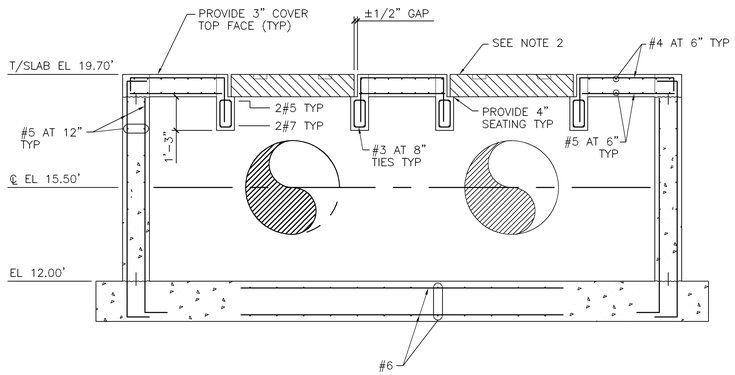

SECTION 2
3/8"=1'-0"
B6S-2

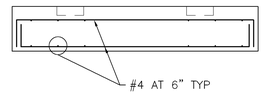

SECTION 3
3/4"=1'-0"
B6S-2

NOTES:

1. APPLY SEALANT, SIKAFLEX-1A, W/BACKING ROD AROUND PRECAST PLANK.
2. APPLY SURFACE HARDNER, COLORCRON BY MASTER BUILDERS OR APPROVED EQUAL, ON ALL EXPOSED TOPS OF CONCRETE SLABS.

NOTE:
STANDARD DETAILS SHOWN ON OOS-2, OOS-3, AND OOS-4 APPLY TO ALL SIMILAR SITUATIONS ON THE PROJECT, EXCEPT WHERE A DIFFERENT DETAIL IS SHOWN.

structural technologies inc.
CONSULTING ENGINEERS
Wekiva Business Center
Suite 120, 1428 East Semoran Blvd., Apopka, Florida 32703
(407) 889-9660

DRAWN BY : CL
CHECKED BY : KM
APPROVED BY : BE
DATE : OCT 1990
JOB NO: 90-111

DESIGNED BY:
DRAWN BY:
CHECKED BY/DATE:
APPRV'D BY/DATE:

REVISIONS

NO.	DATE	DRWN	CHK'D	DESCRIPTION
1	9/97	FXP	ASG	RECORD DRAWING

CAMP DRESSER & McKEE
environmental engineers, scientists, planners, & management consultants
CDM

THIS DRAWING HAS BEEN REVISED BY HAZEN AND SAWYER, P.C. TO REFLECT MODIFICATIONS MADE DURING CONSTRUCTION

RECORD DRAWING

ARLINGTON COUNTY, VIRGINIA
WATER POLLUTION CONTROL PLANT
UPGRADE AND EXPANSION- PHASE IB

POTOMAC INTERCEPTOR METER CHAMBER
PLANS AND SECTIONS

SCALE NOTE
SCALE BAR SHOWN BELOW IS ONE INCH LONG ON A FULL SIZE DRAWING. WHEN SCALING DRAWINGS, MEASURE BAR TO DETERMINE IF SCALES SHOWN WILL REQUIRE ADJUSTING.
ONE INCH

CONTRACT NO.
YEAR
LOCATION CODE: B6
SPECIALTY CODE: S
PROJECT NO. 5002-33
FILE NAME B6S-2.DWG
DRAWING NO. B6S-2
SHEET NO. 106

FILE: D:\ARLING\B6S-2.DWG , SCALE: 3/8"=1'-0" , LATEST REVISIONS MADE ON: 10/15/91 AT 09:05

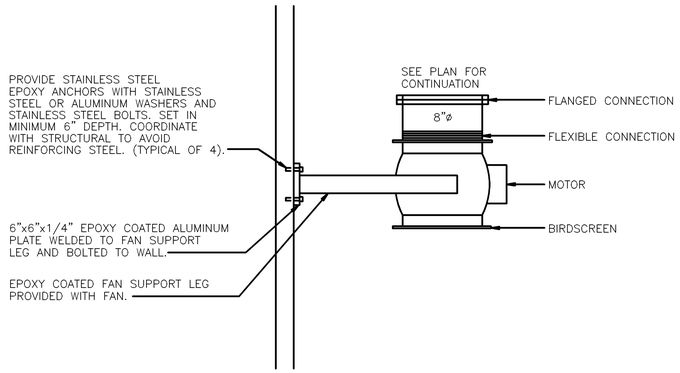

EF-11 IN-LINE FAN DETAIL

N.T.S.

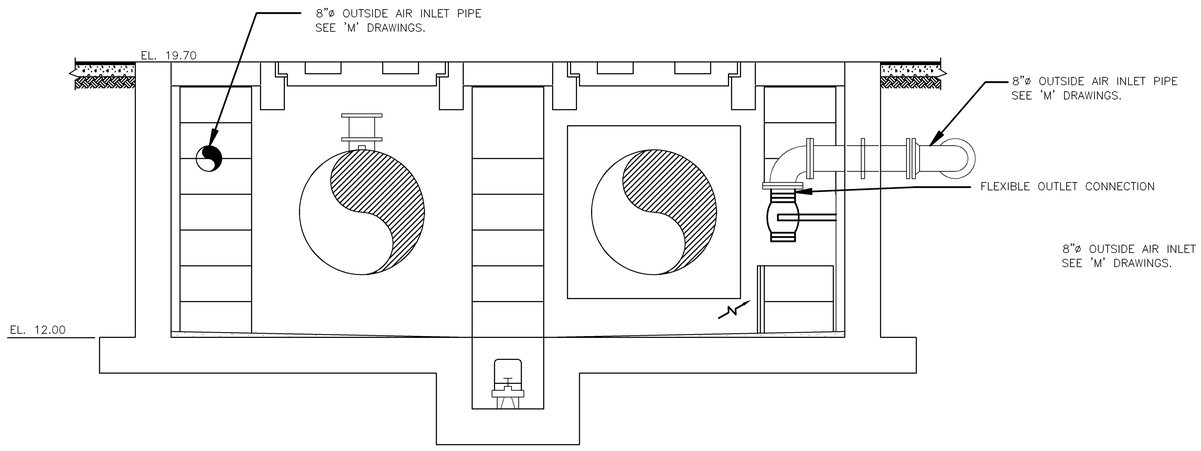

SECTION

SCALE: 1/2"=1'-0"

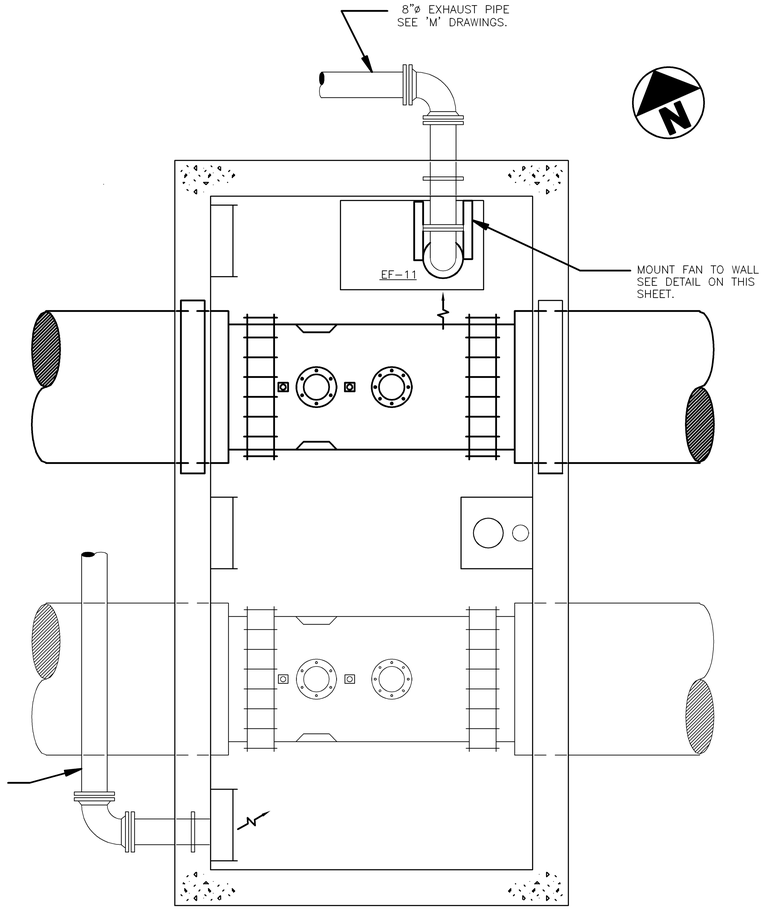

PLAN

SCALE: 1/2"=1'-0"

NO.	DATE	DRWN	CHK'D	DESCRIPTION
				REVISIONS
1	9/97	FXP	ASG	RECORD DRAWING

DESIGNED BY: WRH
DRAWN BY: RMM,SFP
CHECKED BY/DATE: WRH/9-91
APPRV'D BY/DATE: WRH/9-91

CAMP DRESSER & McKEE

THIS DRAWING HAS BEEN REVISED BY HAZEN AND SAWYER, P.C. TO REFLECT MODIFICATIONS MADE DURING CONSTRUCTION

environmental engineers, scientists, planners, & management consultants CDM

ARLINGTON COUNTY, VIRGINIA
WATER POLLUTION CONTROL PLANT
UPGRADE AND EXPANSION- PHASE IIB

POTOMAC INTERCEPTOR
HVAC
PLAN & SECTIONS

RECORD DRAWING

SCALE NOTE

SCALE BAR SHOWN BELOW IS ONE INCH LONG ON A FULL SIZE DRAWING. WHEN SCALING DRAWINGS, MEASURE BAR TO DETERMINE IF SCALES SHOWN WILL REQUIRE ADJUSTING.

ONE INCH

CONTRACT NO. 000000000
YEAR 1991
LOCATION CODE B6
SPECIALTY CODE H
PROJECT NO. 5002-33
FILE NAME B6H1.DWG
DRAWING NO. B6H-1
SHEET NO. 107

C.E. BAILEY & ASSOCIATES, INC.
CONSULTING ENGINEERS
ORLANDO, CLEARWATER & FORT LAUDERDALE, FLORIDA

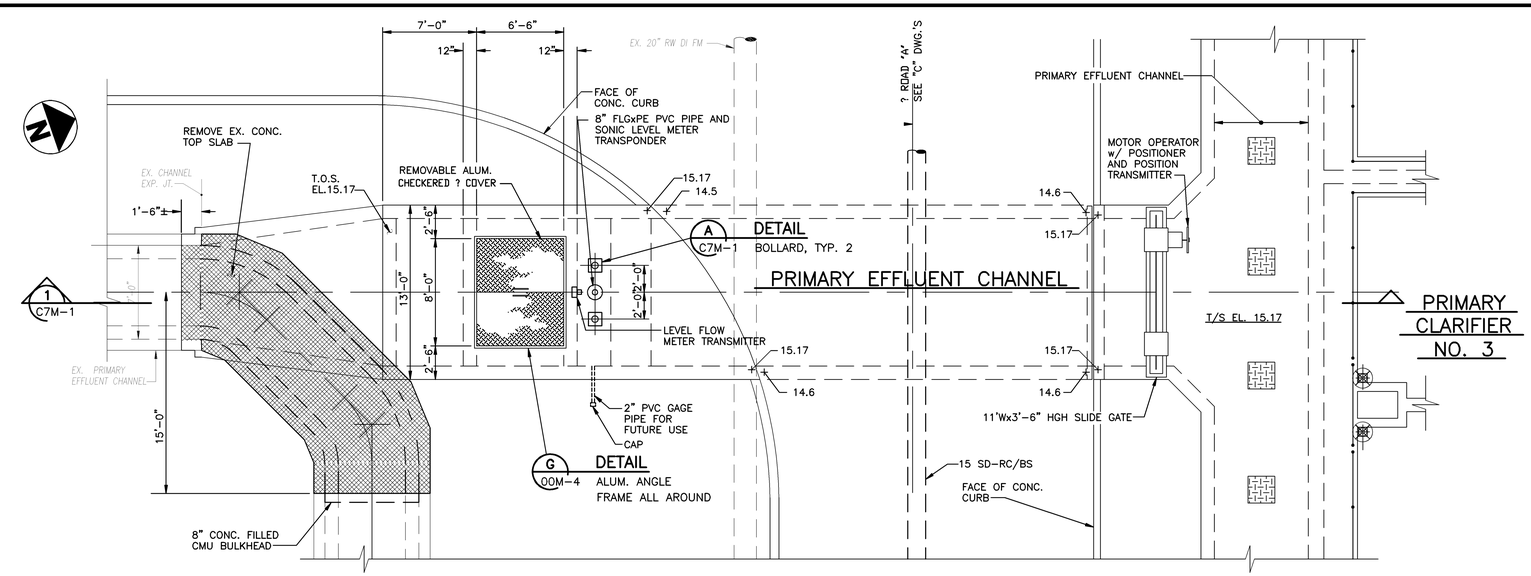

TOP PLAN
SCALE: 3/16"=1'-0"

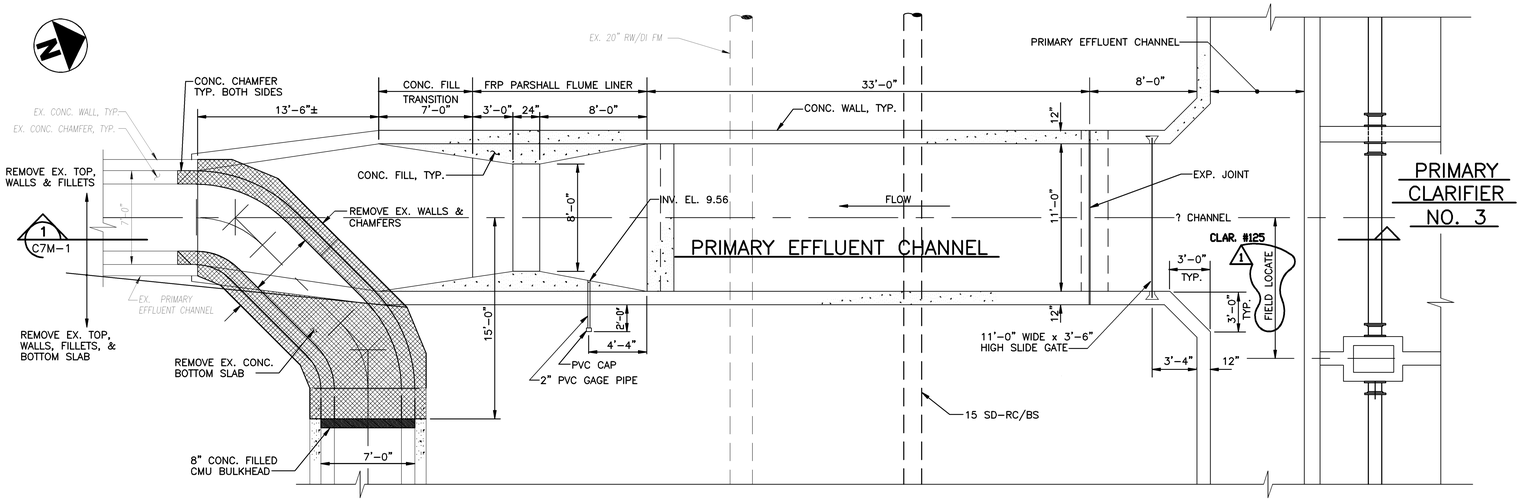

SECTIONAL PLAN
SCALE: 3/16"=1'-0"

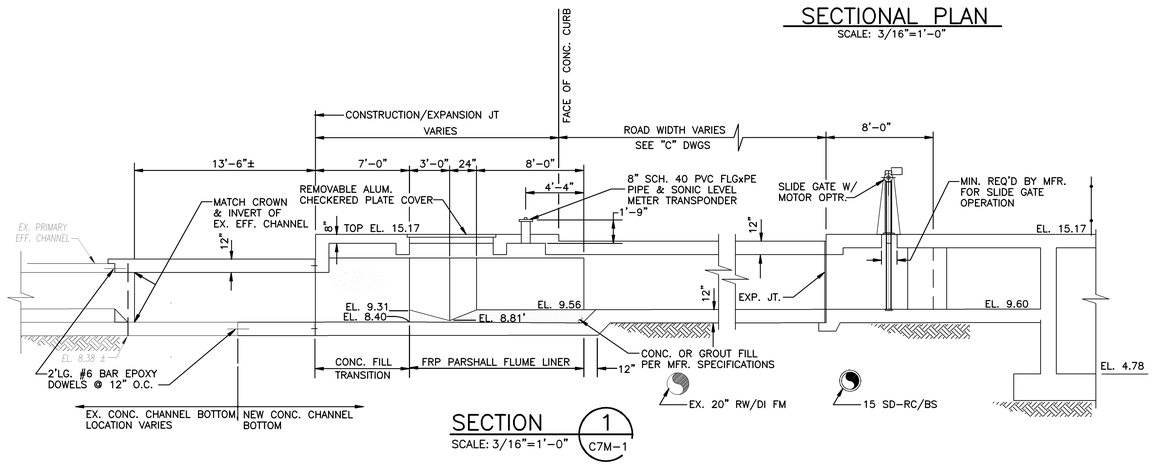

SECTION 1 / C7M-1
SCALE: 3/16"=1'-0"

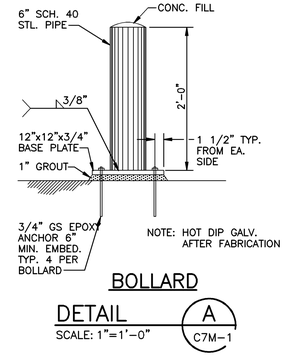

BOLLARD DETAIL A / C7M-1
SCALE: 1"=1'-0"

09/17/91 - 07:38

NO.	DATE	DRWN	CHK'D	DESCRIPTION
1	9/97	FXP	ASG	RECORD DRAWING

REVISIONS

DESIGNED BY: TDH
DRAWN BY: DHG/BRW
CHECKED BY/DATE: TDH 9/91
APPRV'D BY/DATE: TDH 9/91

COMMONWEALTH OF VIRGINIA
THOMAS D. HALL
No. 12502
PROFESSIONAL ENGINEER

CAMP DRESSER & McKEE
environmental engineers, scientists, planners, & management consultants
CDM

THIS DRAWING HAS BEEN REVISED BY HAZEN AND SAWYER, P.C. TO REFLECT MODIFICATIONS MADE DURING CONSTRUCTION

ARLINGTON COUNTY, VIRGINIA
WATER POLLUTION CONTROL PLANT
UPGRADE AND EXPANSION- PHASE IIB

PRIMARY EFFLUENT CHANNEL AND FLOW METER CHAMBER PLANS AND SECTIONS

SCALE NOTE
SCALE BAR SHOWN BELOW IS ONE INCH LONG ON A FULL SIZE DRAWING. WHEN SCALING DRAWINGS, MEASURE BAR TO DETERMINE IF SCALES SHOWN WILL REQUIRE ADJUSTING.
ONE INCH

CONTRACT NO. 90-02-WPC
YEAR 1991
LOCATION CODE C7
SPECIALTY CODE M
PROJECT NO. 5002-33
FILE NAME C7M-0001.DWG
DRAWING NO. C7M-1
SHEET NO. 108

RECORD DRAWING

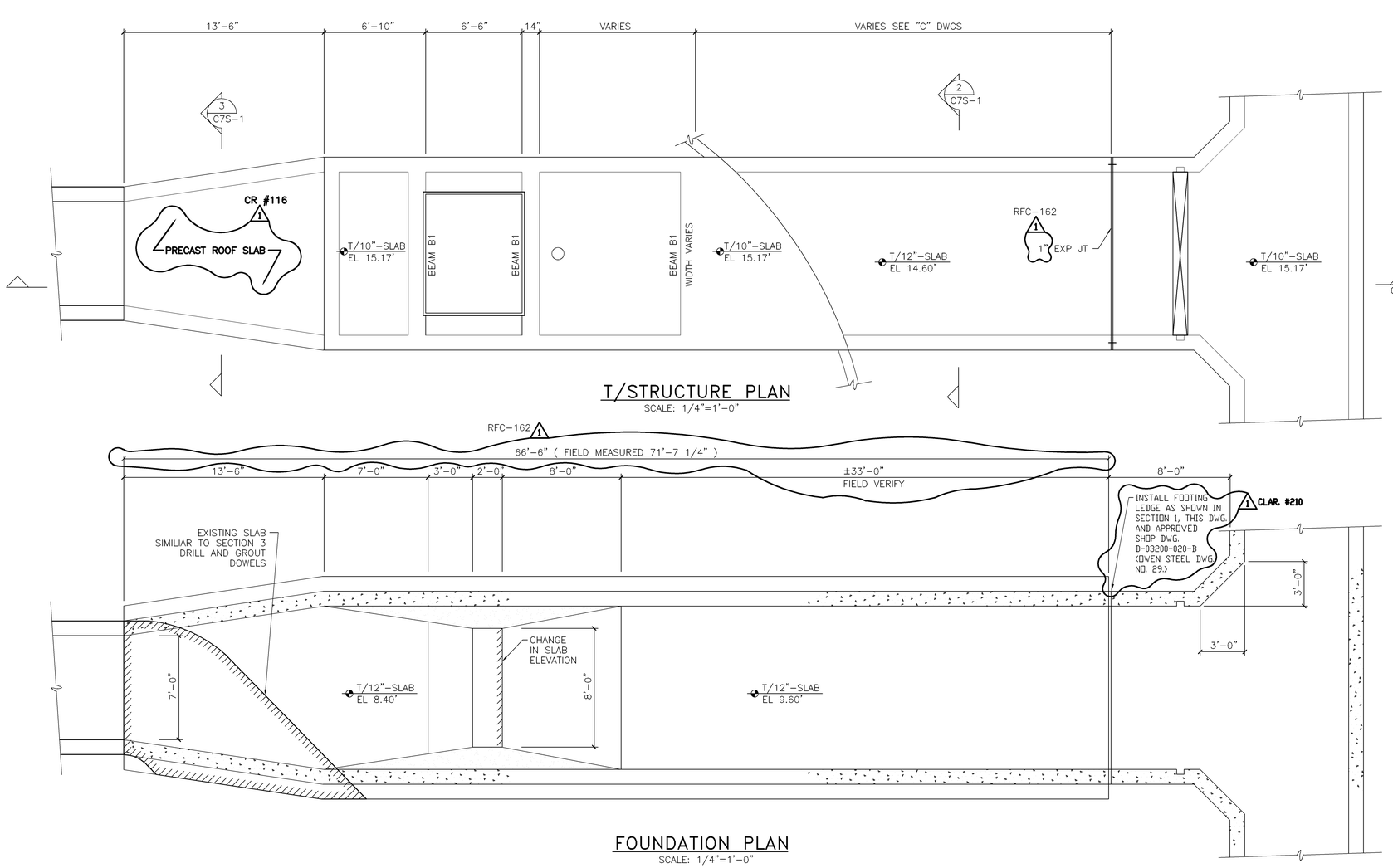

T/STRUCTURE PLAN
SCALE: 1/4"=1'-0"

FOUNDATION PLAN
SCALE: 1/4"=1'-0"

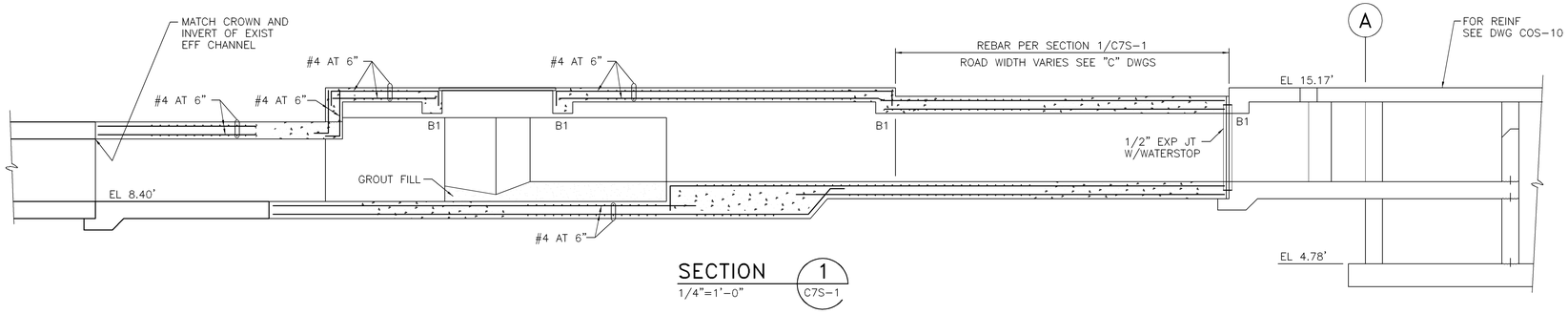

SECTION 1
1/4"=1'-0" C7S-1

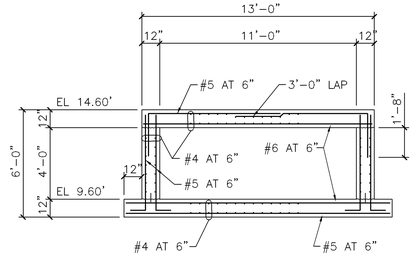

SECTION 2
1/4"=1'-0" C7S-1

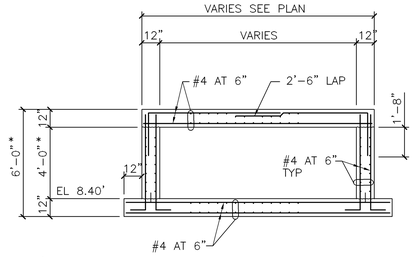

*MATCH CROWN AND INVERT OF EXIST EFF CHANNEL

SECTION 3
1/4"=1'-0" C7S-1

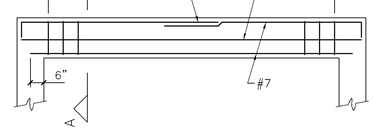

BEAM B1-REINF
SCALE: 3/8"=1'-0"

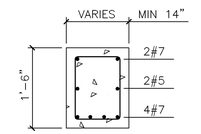

SECTION AA
SCALE: 3/4"=1'-0"

NOTE:
STANDARD DETAILS SHOWN ON OOS-2, OOS-3, AND OOS-4 APPLY TO ALL SIMILAR SITUATIONS ON THE PROJECT, EXCEPT WHERE A DIFFERENT DETAIL IS SHOWN.

RECORD DRAWING

REVISIONS				
NO.	DATE	DRWN	CHK'D	DESCRIPTION
1	9/97	FXP	ASG	RECORD DRAWING

DESIGNED BY:
DRAWN BY:
CHECKED BY/DATE:
APPRV'D BY/DATE:

CAMP DRESSER & McKEE
environmental engineers, scientists, planners, & management consultants
CDM

THIS DRAWING HAS BEEN REVISED BY HAZEN AND SAWYER, P.C. TO REFLECT MODIFICATIONS MADE DURING CONSTRUCTION

ARLINGTON COUNTY, VIRGINIA
WATER POLLUTION CONTROL PLANT
UPGRADE AND EXPANSION- PHASE IIB

PRIMARY EFFLUENT CHANNEL AND FLOW METER CHAMBER PLANS AND SECTIONS

SCALE NOTE
SCALE BAR SHOWN BELOW IS ONE INCH LONG ON A FULL SIZE DRAWING. WHEN SCALING DRAWINGS, MEASURE BAR TO DETERMINE IF SCALES SHOWN WILL REQUIRE ADJUSTING.
ONE INCH

CONTRACT NO.
YEAR
LOCATION CODE: C7
SPECIALTY CODE: S
PROJECT NO. 5002-33
FILE NAME C7S-1.DWG
DRAWING NO. C7S-1
SHEET NO. 109

structural technologies inc.
CONSULTING ENGINEERS
Wekiva Business Center
Suite 120, 1428 East Semoran Blvd., Apopka, Florida 32703
(407) 889-9660

DRAWN BY : TAV
CHECKED BY : REH
APPROVED BY : BE
DATE : OCT,1990
JOB NO: 90-111

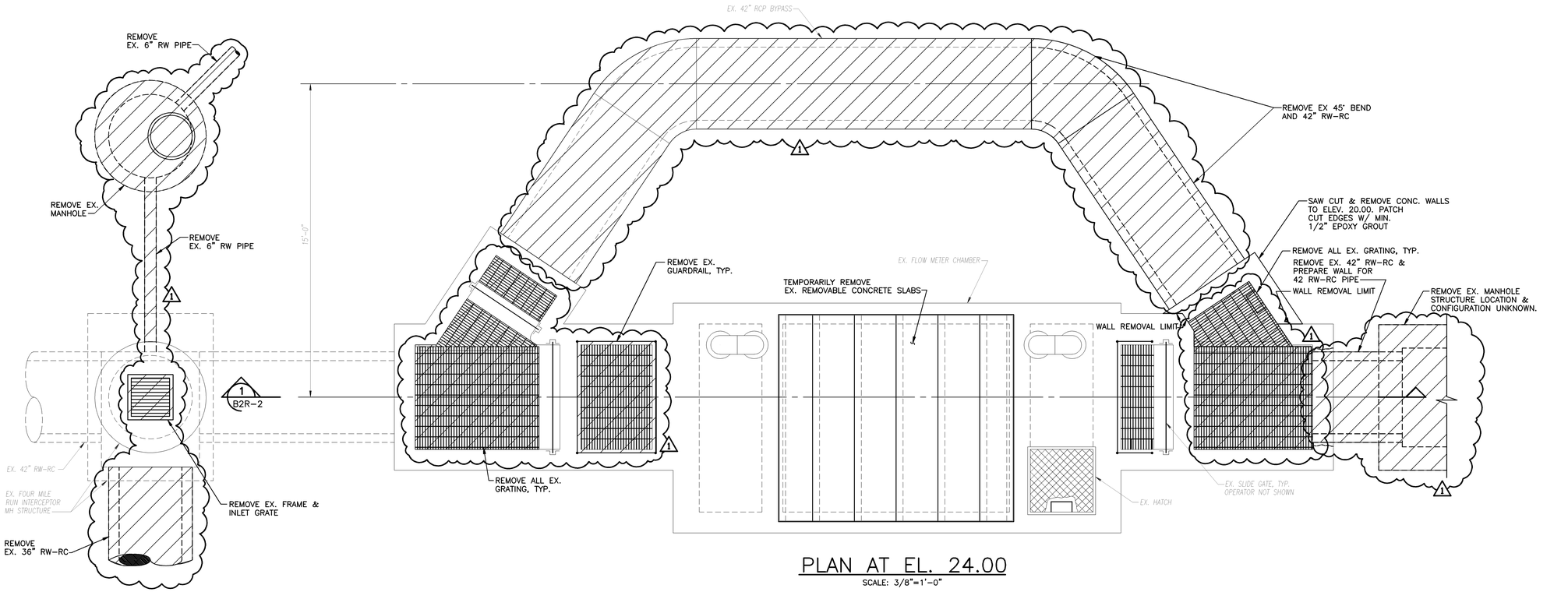

PLAN AT EL. 24.00

SCALE: 3/8"=1'-0"

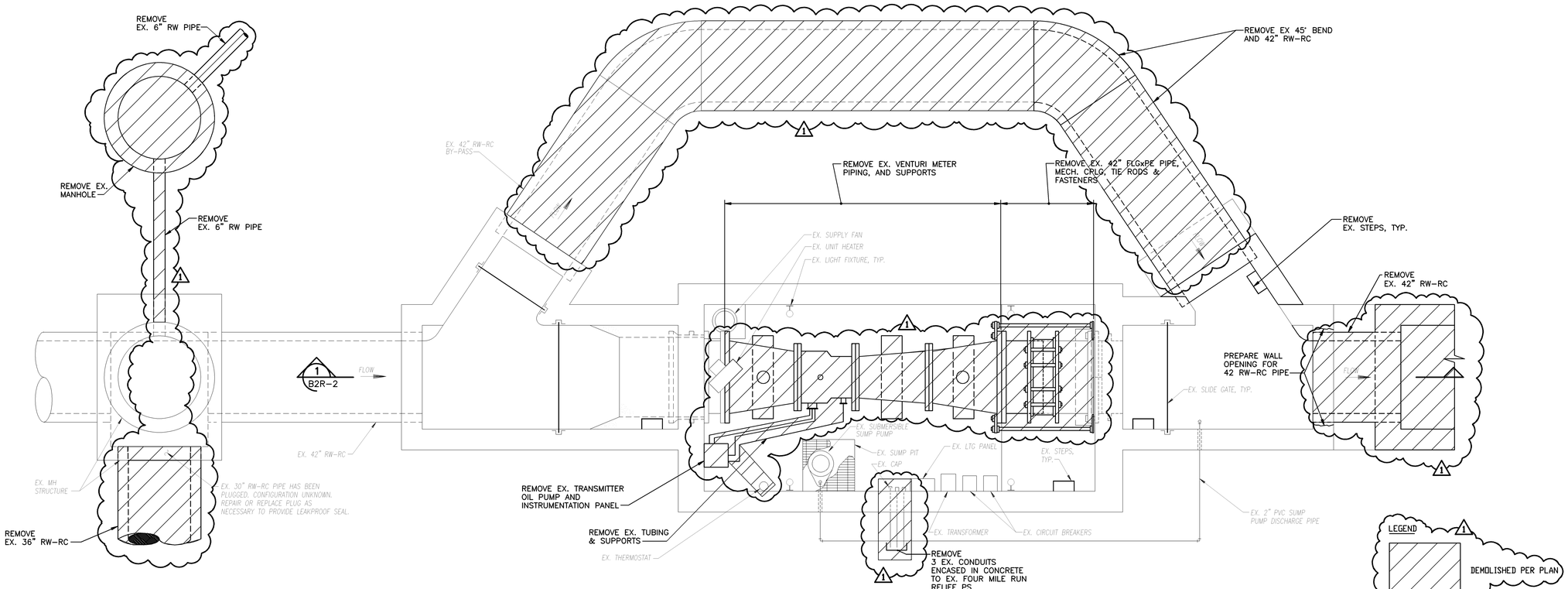

PLAN AT EL. 22.00

SCALE: 3/8"=1'-0"

09/18/91 – 15:44

RECORD DRAWING

NO.	DATE	DRWN	CHK'D	DESCRIPTION
1	11/98	PXP	ASG	RECORD DRAWING

REVISIONS

DESIGNED BY: DJS
DRAWN BY: CTC
CHECKED BY/DATE: TDH 9/91
APPRV'D BY/DATE: TDH 9/91

COMMONWEALTH OF VIRGINIA — THOMAS D. HALL No. 12502 — PROFESSIONAL ENGINEER

CAMP DRESSER & McKEE

THIS DRAWING HAS BEEN REVISED BY HAZEN AND SAWYER, P.C. TO REFLECT MODIFICATIONS MADE DURING CONSTRUCTION

environmental engineers, scientists, planners, & management consultants

CDM

ARLINGTON COUNTY, VIRGINIA
WATER POLLUTION CONTROL PLANT
UPGRADE AND EXPANSION- PHASE IIB

FOUR MILE RUN INTERCEPTOR FLOW METER CHAMBER
REMOVAL-PLANS

SCALE NOTE

SCALE BAR SHOWN BELOW IS ONE INCH LONG ON A FULL SIZE DRAWING. WHEN SCALING DRAWINGS, MEASURE BAR TO DETERMINE IF SCALES SHOWN WILL REQUIRE ADJUSTING.

ONE INCH

CONTRACT NO. 90-02-WPC
YEAR 1991
LOCATION CODE B2
SPECIALTY CODE R
PROJECT NO. 5002-33
FILE NAME B2R-0001.DWG
DRAWING NO. B2R-1
SHEET NO. 111

SECTION 1 / B2R-1
SCALE: 3/8"=1'-0"

LEGEND
1
DEMOLISHED PER PLAN

DESIGNED BY: DJS
DRAWN BY: CTC
CHECKED BY/DATE: TDH 9/91
APPRV'D BY/DATE: TDH 9/91

NO.	DATE	DRWN	CHK'D	DESCRIPTION
1	11/98	FXP	ASG	RECORD DRAWING

REVISIONS

CAMP DRESSER & McKEE

THIS DRAWING HAS BEEN REVISED BY HAZEN AND SAWYER, P.C. TO REFLECT MODIFICATIONS MADE DURING CONSTRUCTION

environmental engineers, scientists, planners, & management consultants

CDM

ARLINGTON COUNTY, VIRGINIA
WATER POLLUTION CONTROL PLANT
UPGRADE AND EXPANSION- PHASE IB

FOUR MILE RUN INTERCEPTOR FLOW METER CHAMBER
REMOVAL-SECTION

SCALE NOTE

SCALE BAR SHOWN BELOW IS ONE INCH LONG ON A FULL SIZE DRAWING. WHEN SCALING DRAWINGS, MEASURE BAR TO DETERMINE IF SCALES SHOWN WILL REQUIRE ADJUSTING.

ONE INCH

CONTRACT NO. 90-02-WPC
YEAR 1991
LOCATION CODE B2
SPECIALTY CODE R
PROJECT NO. 5002-33
FILE NAME B2R-0002.DWG
DRAWING NO. B2R-2
SHEET NO. 112

RECORD DRAWING

09/18/91 - 15:17

NOTES:

1. FLOW CANNOT BE STOPPED OR DIVERTED FOR INSTALLATION OF PIPE & BAFFLE. WORK MUST BE PERFORMED IN SEWAGE. TAKE NECESSARY PRECAUTIONS.

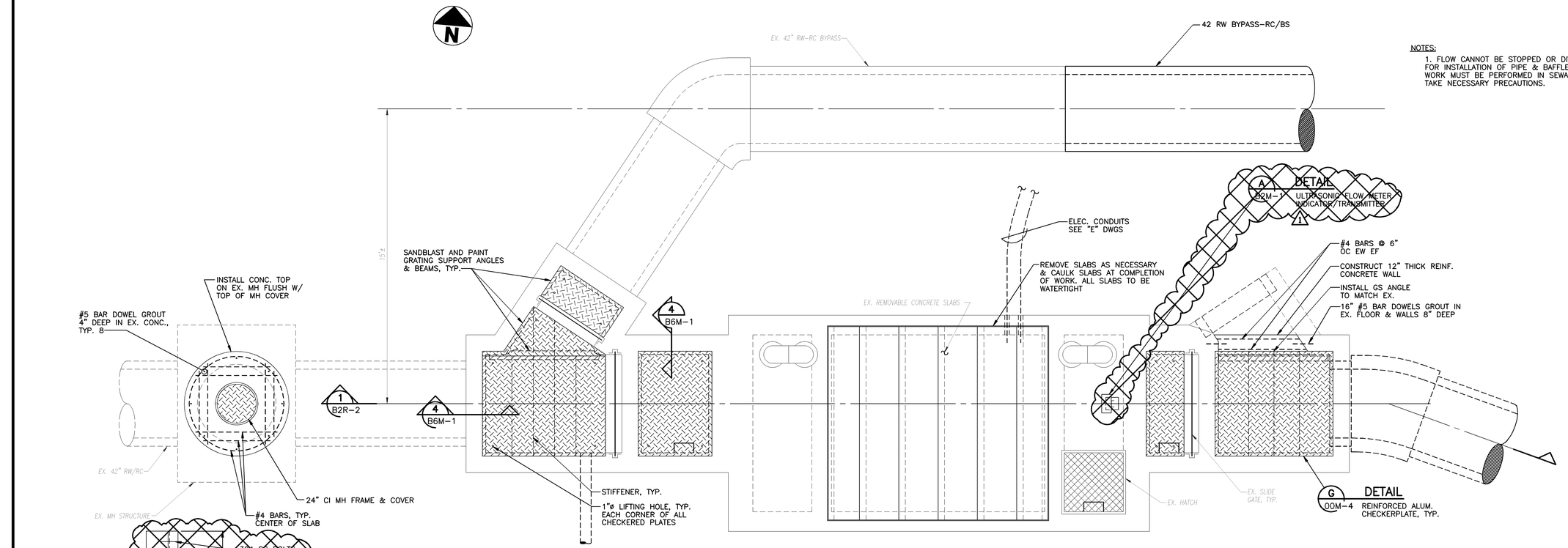

PLAN AT EL. 24.00

SCALE: 3/8"=1'-0"

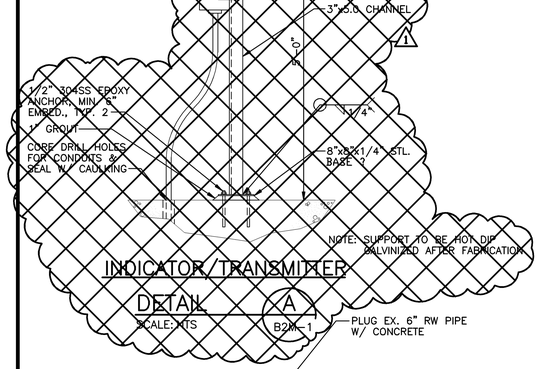

INDICATOR/TRANSMITTER DETAIL A B2M-1 SCALE: NTS

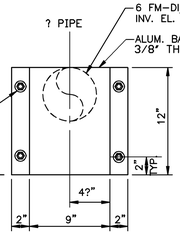

SECTION 1 B2M-1 SCALE: 1 1/2"=1'-0"

PLAN AT EL. 22.00

SCALE: 3/8"=1'-0"

NO.	DATE	DRWN	CHK'D	DESCRIPTION
1	11/98	FXP	ASG	RECORD DRAWING

REVISIONS

DESIGNED BY: DJS
DRAWN BY: CTC
CHECKED BY/DATE: TDH 9/91
APPRV'D BY/DATE: TDH 9/91

COMMONWEALTH OF VIRGINIA — THOMAS D. HALL No. 12502 — PROFESSIONAL ENGINEER

CAMP DRESSER & McKEE — environmental engineers, scientists, planners, & management consultants

THIS DRAWING HAS BEEN REVISED BY HAZEN AND SAWYER, P.C. TO REFLECT MODIFICATIONS MADE DURING CONSTRUCTION

CDM

ARLINGTON COUNTY, VIRGINIA
WATER POLLUTION CONTROL PLANT
UPGRADE AND EXPANSION- PHASE IIB

FOUR MILE RUN INTERCEPTOR FLOW METER PLANS

SCALE NOTE

SCALE BAR SHOWN BELOW IS ONE INCH LONG ON A FULL SIZE DRAWING. WHEN SCALING DRAWINGS, MEASURE BAR TO DETERMINE IF SCALES SHOWN WILL REQUIRE ADJUSTING.

ONE INCH

CONTRACT NO. 90-02-WPC
YEAR 1991
LOCATION CODE B2
SPECIALTY CODE M
PROJECT NO. 5002-33
FILE NAME B2M-0001
DRAWING NO. B2M-1
SHEET NO. 113

RECORD DRAWING

09/18/91 - 15:17

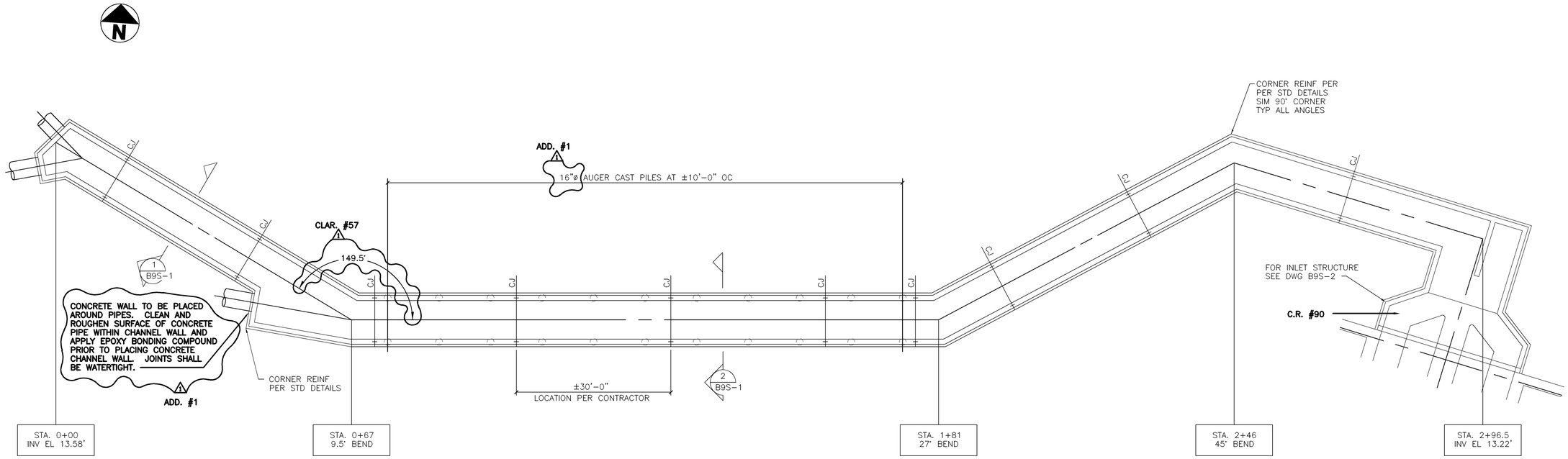

WEST INFLUENT CHANNEL SLAB PLAN

1"=10'

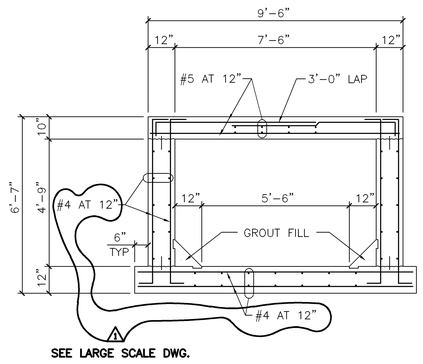

SECTION 1

3/8"=1'-0" — B9S-1

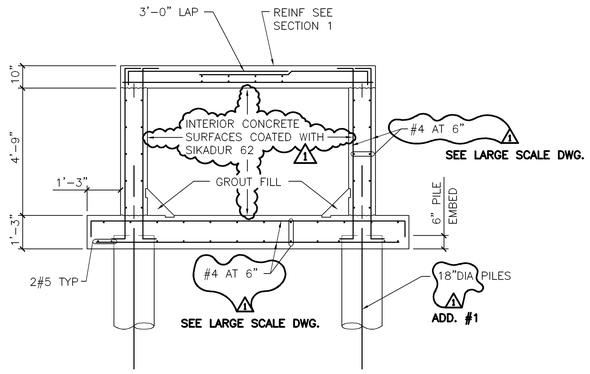

SECTION 2

3/8"=1'-0" — B9S-1

NOTE:
STANDARD DETAILS SHOWN ON OOS-2, OOS-3, AND OOS-4 APPLY TO ALL SIMILAR SITUATIONS ON THE PROJECT, EXCEPT WHERE A DIFFERENT DETAIL IS SHOWN.

STI structural technologies inc.
CONSULTING ENGINEERS
Wekiva Business Center
Suite 120, 1428 East Semoran Blvd., Apopka, Florida 32703
(407) 889-9660

DRAWN BY : RAH
CHECKED BY : REH
APPROVED BY : BE
DATE : OCT 1990
JOB NO: 90-111

REVISIONS

NO.	DATE	DRWN	CHK'D	DESCRIPTION
1	11/98	FXP	ASG	RECORD DRAWING

DESIGNED BY:
DRAWN BY:
CHECKED BY/DATE:
APPRV'D BY/DATE:

CAMP DRESSER & McKEE
environmental engineers, scientists, planners, & management consultants
CDM

THIS DRAWING HAS BEEN REVISED BY HAZEN AND SAWYER, P.C. TO REFLECT MODIFICATIONS MADE DURING CONSTRUCTION

RECORD DRAWING

ARLINGTON COUNTY, VIRGINIA
WATER POLLUTION CONTROL PLANT
UPGRADE AND EXPANSION- PHASE IIB

WEST INFLUENT CHANNEL-STRUCTURAL-PLAN, SECTIONS, AND DETAILS

SCALE NOTE
SCALE BAR SHOWN BELOW IS ONE INCH LONG ON A FULL SIZE DRAWING. WHEN SCALING DRAWINGS, MEASURE BAR TO DETERMINE IF SCALES SHOWN WILL REQUIRE ADJUSTING.
ONE INCH

CONTRACT NO.
YEAR

LOCATION CODE	SPECIALTY CODE
B9	S

PROJECT NO. 5002-33
FILE NAME B9S-1.DWG
DRAWING NO. B9S-1
SHEET NO. 114

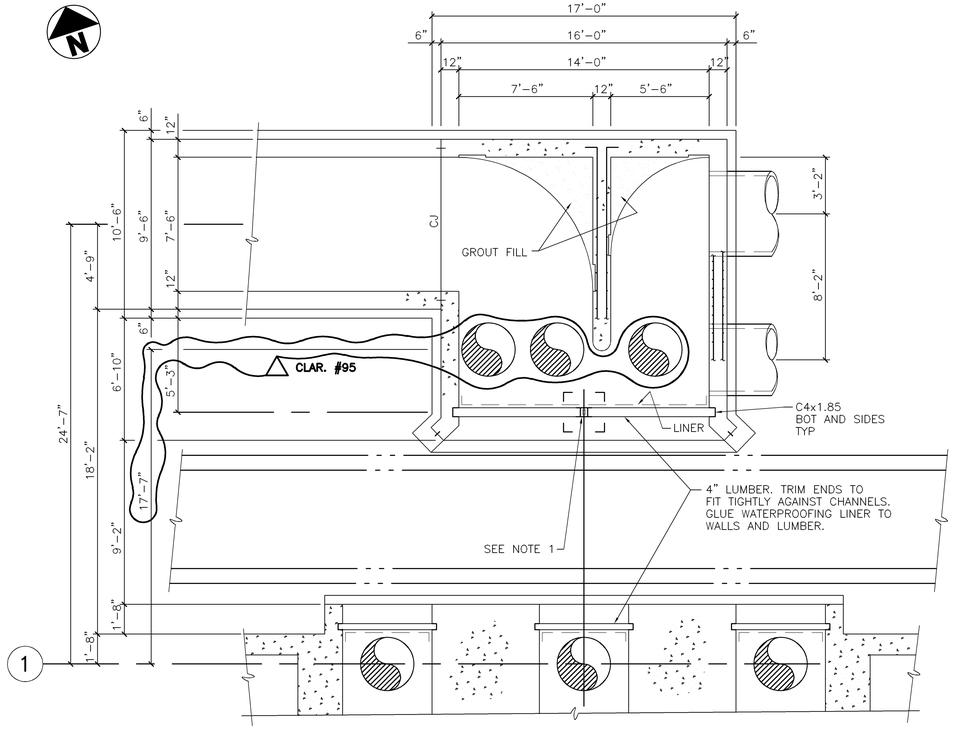

1

STEP 1 FOUNDATION PLAN

1/4"=1'-0"

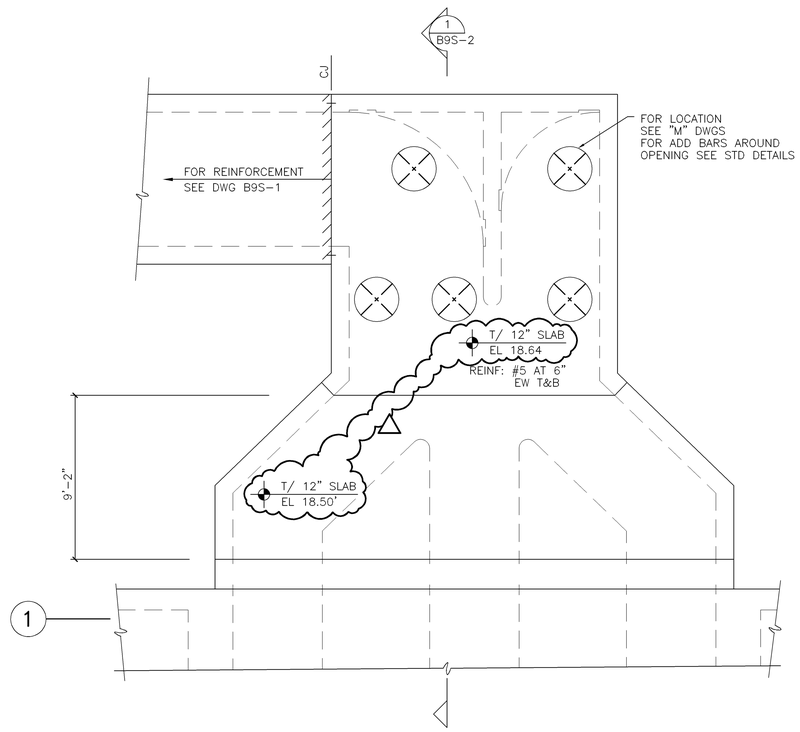

1

STEP 2 TOP PLAN

1/4"=1'-0"

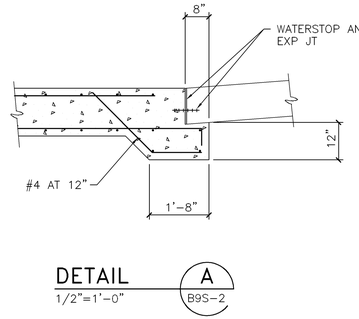

DETAIL A

1/2"=1'-0" — B9S-2

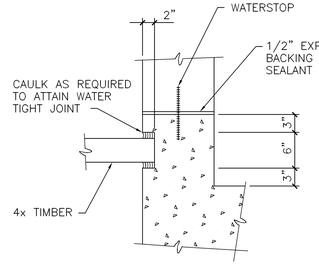

DETAIL B

1"=1'-0" — B9S-2

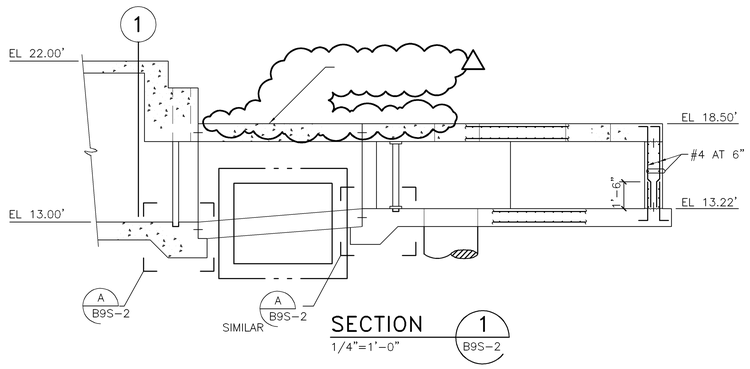

SECTION 1

1/4"=1'-0" — B9S-2

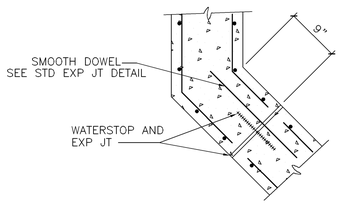

DETAIL C

1"=1'-0" — B9S-2

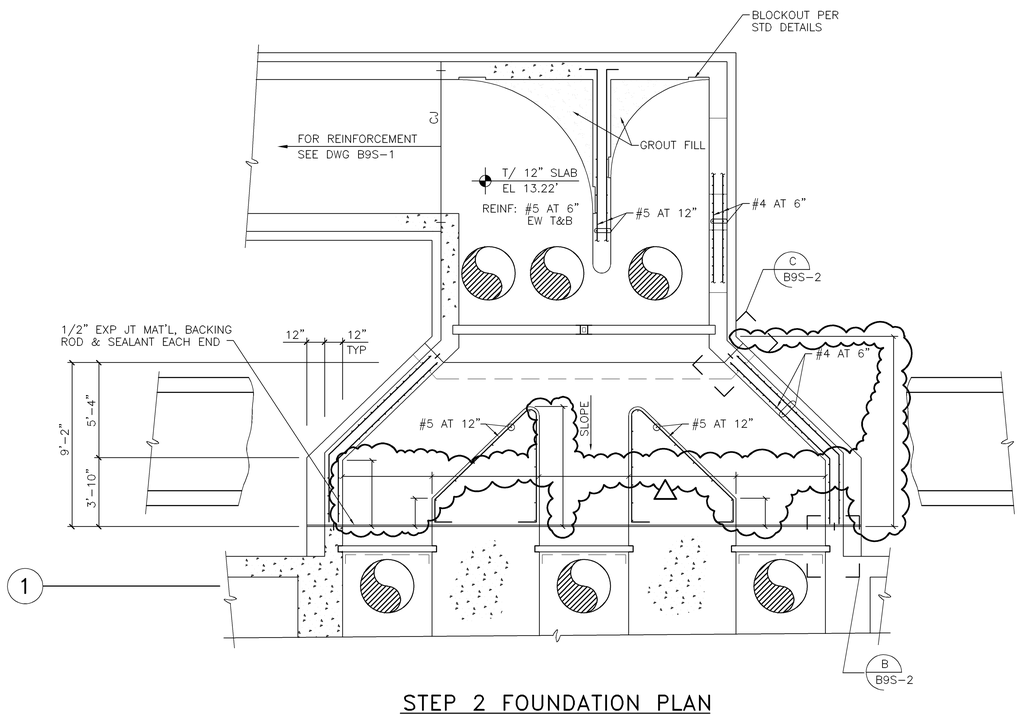

1

STEP 2 FOUNDATION PLAN

1/4"=1'-0"

NOTES

1 – TEMPORARY STOP LOG SUPPORT. TS 4x4x3/16 WITH 2–4" STEEL CHANNELS WELDED ON EACH SIDE. ATTACH TS 4x4 TO TOP AND BOTTOM SLABS WITH BASE PLATE AND BOLTS.

NOTE:
STANDARD DETAILS SHOWN ON 00S–2, 00S–3, AND 00S–4 APPLY TO ALL SIMILAR SITUATIONS ON THE PROJECT, EXCEPT WHERE A DIFFERENT DETAIL IS SHOWN.

structural technologies inc.
CONSULTING ENGINEERS
Wekiva Business Center
Suite 120, 1428 East Semoran Blvd., Apopka, Florida 32703
(407) 889-9660

DRAWN BY : RAH
CHECKED BY : REH
APPROVED BY : BE
DATE : OCT 1990
JOB NO: 90–111

NO.	DATE	DRWN	CHK'D	DESCRIPTION
1	11/98	FXP	ASG	RECORD DRAWING

REVISIONS

DESIGNED BY:
DRAWN BY:
CHECKED BY/DATE:
APPRV'D BY/DATE:

CAMP DRESSER & McKEE
HAZEN AND SAWYER, P.C.
environmental engineers, scientists, planners, & management consultants
CDM

ARLINGTON COUNTY, VIRGINIA
WATER POLLUTION CONTROL PLANT
UPGRADE AND EXPANSION- PHASE IIB

WEST INFLUENT CHANNEL-STRUCTURAL-ENLARGED PLANS AND SECTIONS

RECORD DRAWING

SCALE NOTE
SCALE BAR SHOWN BELOW IS ONE INCH LONG ON A FULL SIZE DRAWING. WHEN SCALING DRAWINGS, MEASURE BAR TO DETERMINE IF SCALES SHOWN WILL REQUIRE ADJUSTING.
ONE INCH

CONTRACT NO.
YEAR
LOCATION CODE: B9
SPECIALTY CODE: S
PROJECT NO. 5002–33
FILE NAME B9S–2.DWG
DRAWING NO. B9S–2
SHEET NO. 115

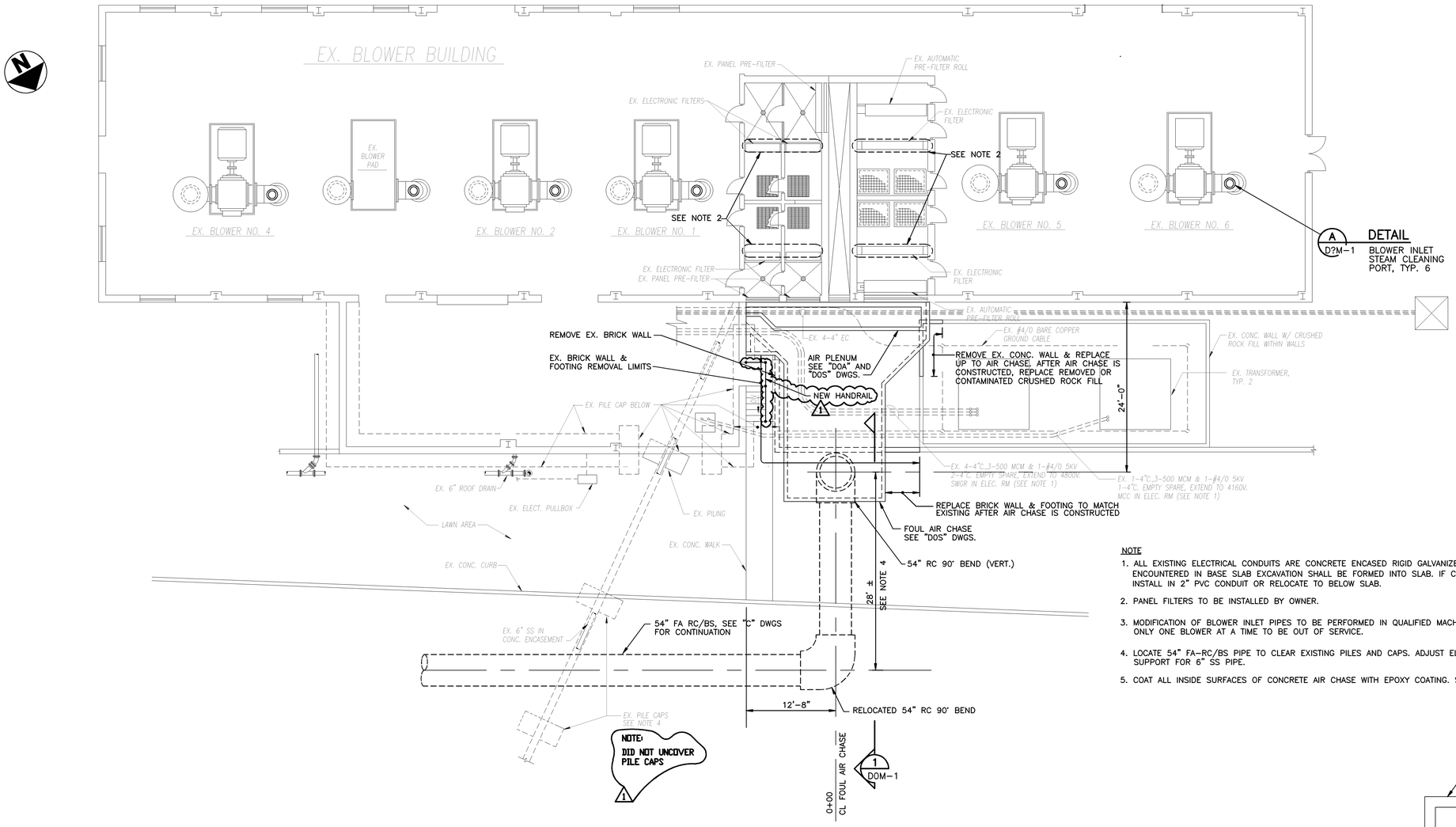

MAIN FLOOR PLAN

SCALE: 1/8"=1'-0"

NOTE

1. ALL EXISTING ELECTRICAL CONDUITS ARE CONCRETE ENCASED RIGID GALVANIZED STEEL. ALL EXISTING ELECTRICAL CONDUITS ENCOUNTERED IN BASE SLAB EXCAVATION SHALL BE FORMED INTO SLAB. IF COPPER GROUND CONDUCTORS ARE ENCOUNTERED, INSTALL IN 2" PVC CONDUIT OR RELOCATE TO BELOW SLAB.
2. PANEL FILTERS TO BE INSTALLED BY OWNER.
3. MODIFICATION OF BLOWER INLET PIPES TO BE PERFORMED IN QUALIFIED MACHINE SHOP. REINSTALL WITH NEW FLANGE GASKETS. ONLY ONE BLOWER AT A TIME TO BE OUT OF SERVICE.
4. LOCATE 54" FA-RC/BS PIPE TO CLEAR EXISTING PILES AND CAPS. ADJUST ELEVATION TO CLEAR UNDER CONCRETE SUPPORT FOR 6" SS PIPE.
5. COAT ALL INSIDE SURFACES OF CONCRETE AIR CHASE WITH EPOXY COATING. SAME AS FOR REINFORCED CONCRETE PIPES.

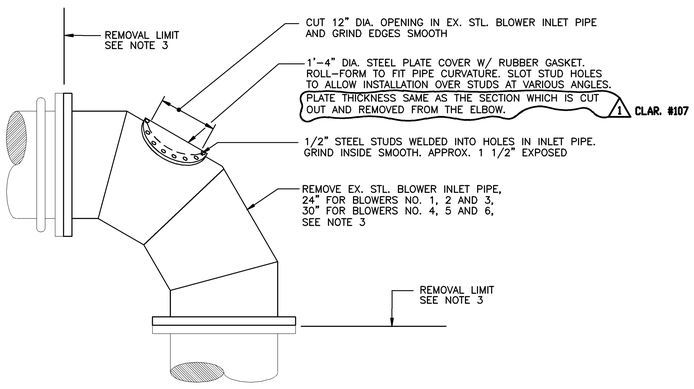

DETAIL A

SCALE: NONE

D?M-1

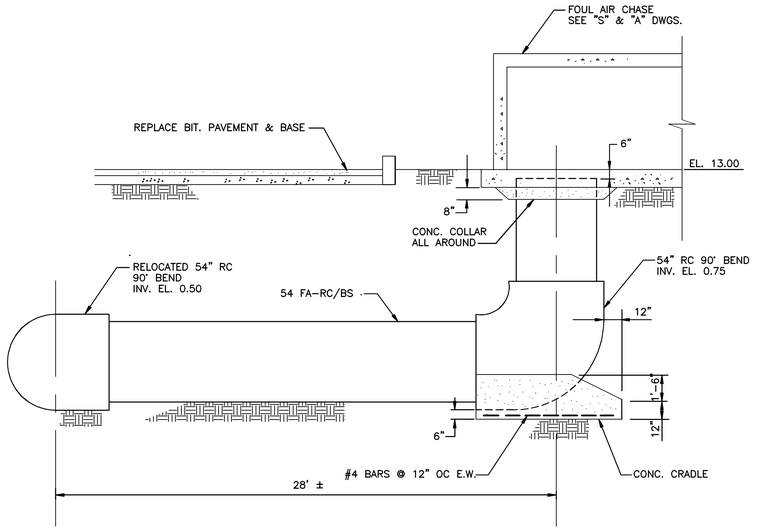

SECTION 1

SCALE: 1/4"= 1'-0"

DOM-1

RECORD DRAWING

08/20/91 - 14:10

NO.	DATE	DRWN	CHK'D	DESCRIPTION
1	11/98	FXP	ASG	RECORD DRAWING

REVISIONS

DESIGNED BY: TBM
DRAWN BY: EGT, GPB
CHECKED BY/DATE: TDH 9/91
APPRV'D BY/DATE: TDH 9/91

COMMONWEALTH OF VIRGINIA
THOMAS D. HALL
No. 12502
PROFESSIONAL ENGINEER

CAMP DRESSER & McKEE
environmental engineers, scientists, planners, & management consultants
CDM

THIS DRAWING HAS BEEN REVISED BY HAZEN AND SAWYER, P.C. TO REFLECT MODIFICATIONS MADE DURING CONSTRUCTION

ARLINGTON COUNTY, VIRGINIA
WATER POLLUTION CONTROL PLANT
UPGRADE AND EXPANSION- PHASE IIB

BLOWER BUILDING
MAIN FLOOR PLAN

SCALE NOTE

SCALE BAR SHOWN BELOW IS ONE INCH LONG ON A FULL SIZE DRAWING. WHEN SCALING DRAWINGS, MEASURE BAR TO DETERMINE IF SCALES SHOWN WILL REQUIRE ADJUSTING.

ONE INCH

CONTRACT NO. 90-02-WPC
YEAR 1991
LOCATION CODE DO
SPECIALTY CODE M
PROJECT NO. 5002-33
FILE NAME DOM-0001.DWG
DRAWING NO. DOM-1
SHEET NO. 118

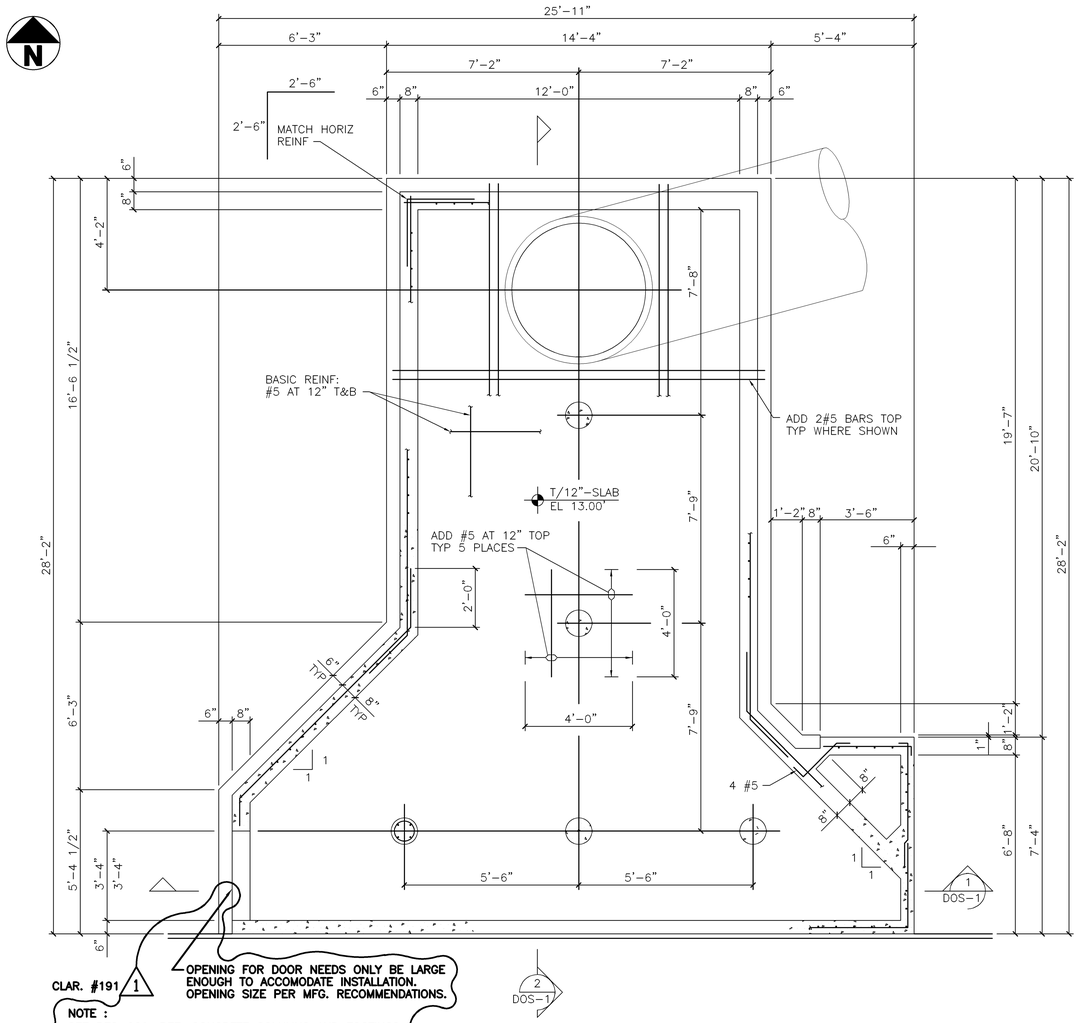

FOUNDATION PLAN

3/8"=1'-0"

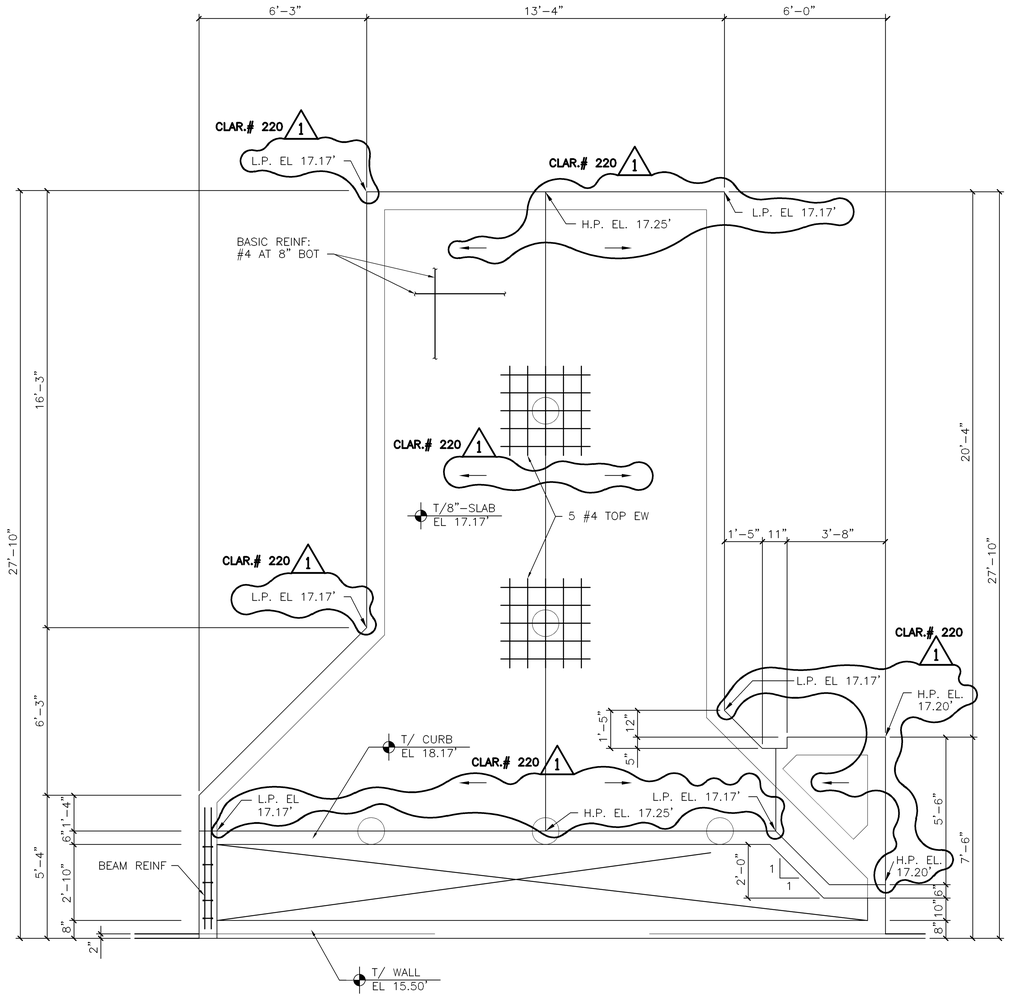

PLAN AT TOP STRUCTURE

3/8"=1'-0"

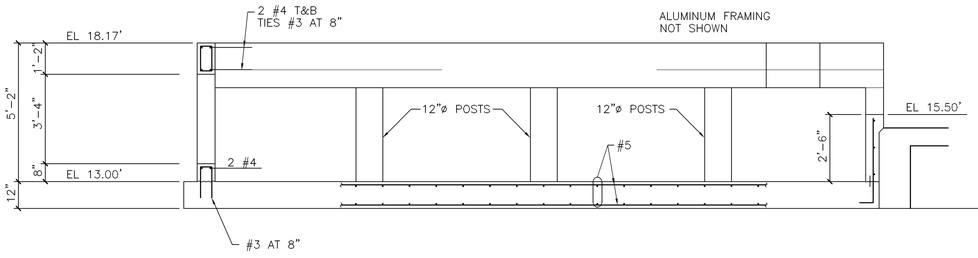

SECTION 1

3/8"=1'-0" DOS-1

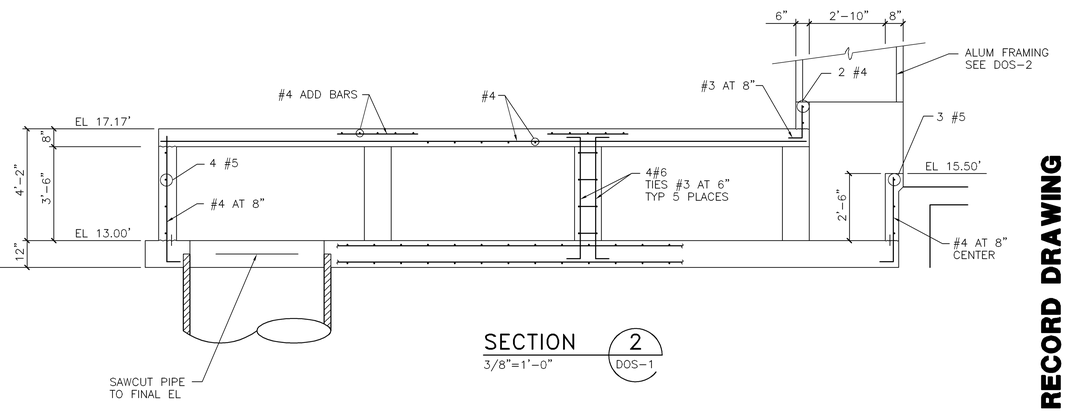

SECTION 2

3/8"=1'-0" DOS-1

NOTE:
STANDARD DETAILS SHOWN ON OOS-2, OOS-3, AND OOS-4 APPLY TO ALL SIMILAR SITUATIONS ON THE PROJECT, EXCEPT WHERE A DIFFERENT DETAIL IS SHOWN.

STI structural technologies inc.
CONSULTING ENGINEERS
Wekiva Business Center
Suite 120, 1428 East Semoran Blvd., Apopka, Florida 32703
(407) 889-9660

DRAWN BY : RAH
CHECKED BY : REH
APPROVED BY : BE
DATE : OCT 1990
JOB NO: 90-111

RECORD DRAWING

NO.	DATE	DRWN	CHK'D	DESCRIPTION
1	9/97	FXP	ASG	RECORD DRAWING

REVISIONS

DESIGNED BY:
DRAWN BY:
CHECKED BY/DATE:
APPRV'D BY/DATE:

CAMP DRESSER & McKEE

THIS DRAWING HAS BEEN REVISED BY HAZEN AND SAWYER, P.C. TO REFLECT MODIFICATIONS MADE DURING CONSTRUCTION

environmental engineers, scientists, planners, & management consultants CDM

ARLINGTON COUNTY, VIRGINIA
WATER POLLUTION CONTROL PLANT
UPGRADE AND EXPANSION- PHASE IB

BLOWER BUILDING-STRUCTURAL-
AIR CHASE-PLANS AND SECTIONS 1 OF 2

SCALE NOTE

SCALE BAR SHOWN BELOW IS ONE INCH LONG ON A FULL SIZE DRAWING. WHEN SCALING DRAWINGS, MEASURE BAR TO DETERMINE IF SCALES SHOWN WILL REQUIRE ADJUSTING.

ONE INCH

CONTRACT NO.

YEAR

LOCATION CODE	SPECIALTY CODE
DO	S

PROJECT NO. 5002-33

FILE NAME DOS-1.DWG

DRAWING NO. DOS-1

SHEET NO. 119

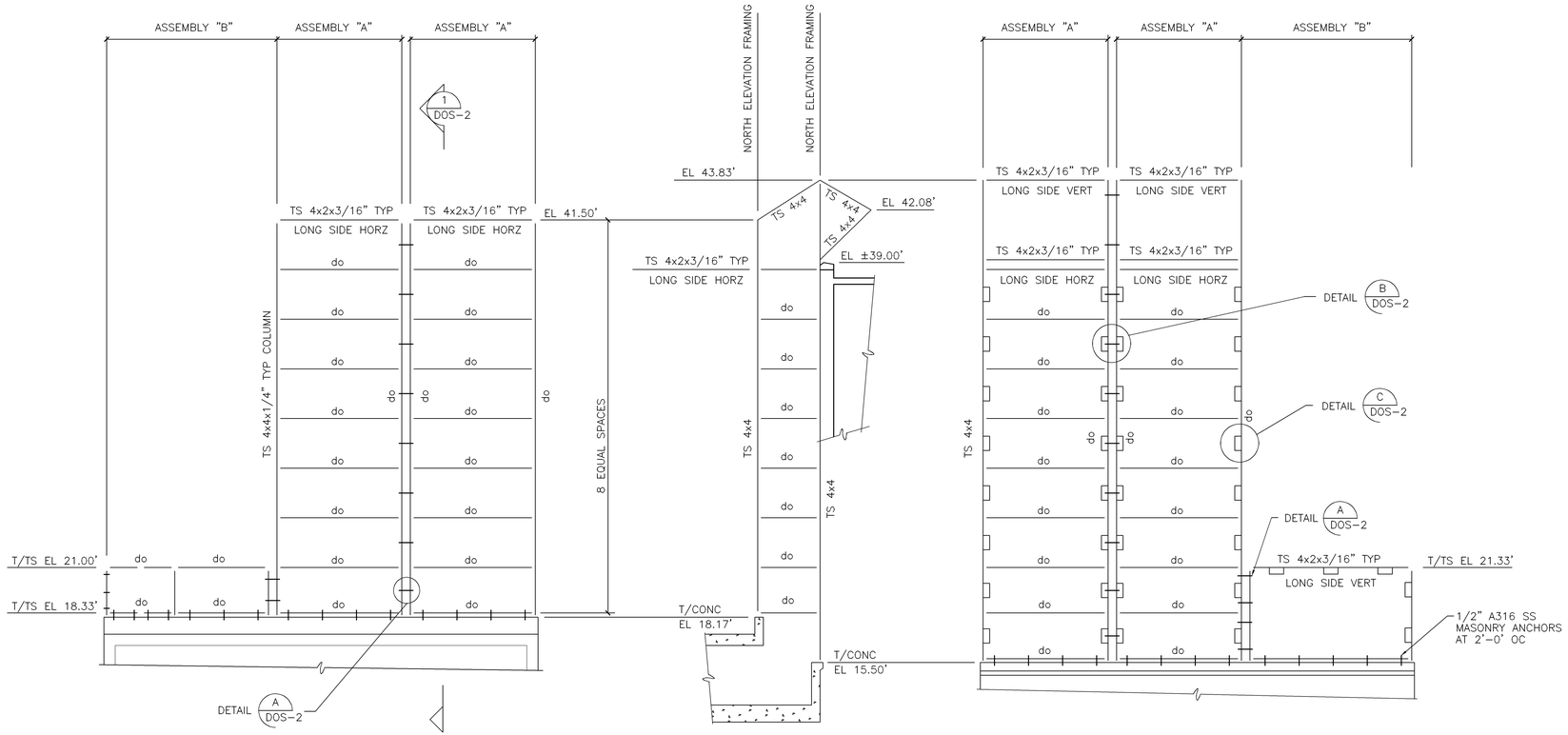

1 NORTH ELEVATION FRAMING
SCALE: 1/4"=1'-0"

SECTION 1 DOS-2
1/4"=1'-0"

1 SOUTH FRAMING ELEVATION
SCALE: 1/4"=1'-0"

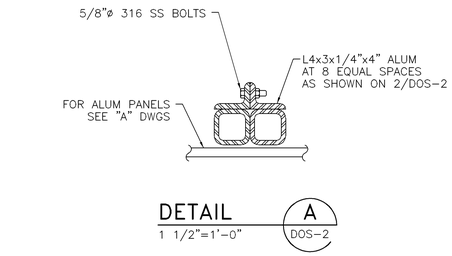

DETAIL A DOS-2
1 1/2"=1'-0"

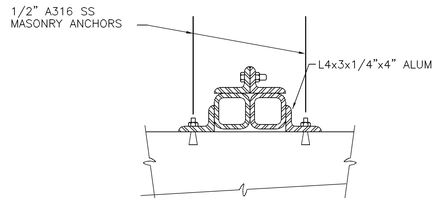

DETAIL B DOS-2
1 1/2"=1'-0"

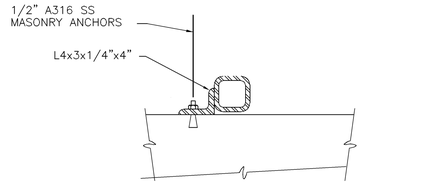

DETAIL C DOS-2
1 1/2"=1'-0"

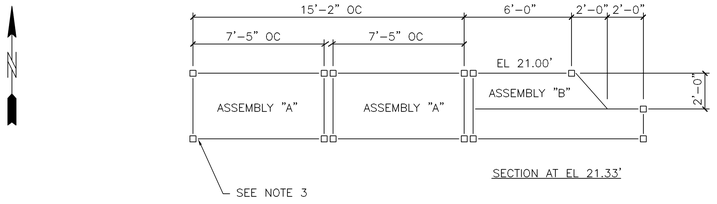

SECTION AT EL 21.33'

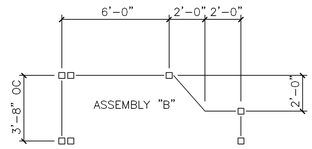

SECTION AT EL 18.25'

TYP ASSEMBLY SECTIONS
SCALE: 1/4"=1'-0"

NOTES:

1. ALL FRAMING MEMBERS ARE ALUMINUM 6061-T6
2. ALL DIMENSIONS TO BE FIELD VERIFIED.
3. ALL WELDED CONNECTIONS, WELDS TO BE GROUND ON SIDES RECEIVING SIDING

NOTE:
STANDARD DETAILS SHOWN ON OOS-2, OOS-3, AND OOS-4 APPLY TO ALL SIMILAR SITUATIONS ON THE PROJECT, EXCEPT WHERE A DIFFERENT DETAIL IS SHOWN.

STI structural technologies inc.
CONSULTING ENGINEERS
Wekiva Business Center
Suite 120, 1428 East Semoran Blvd., Apopka, Florida 32703
(407) 889-9660

DRAWN BY : KM
CHECKED BY : BE
APPROVED BY : BE
DATE : OCT 1990
JOB NO: 90-111

REVISIONS

NO.	DATE	DRWN	CHK'D	DESCRIPTION
1	9/97	FXP	ASG	RECORD DRAWING

DESIGNED BY:
DRAWN BY:
CHECKED BY/DATE:
APPRV'D BY/DATE:

CAMP DRESSER & McKEE

THIS DRAWING HAS BEEN REVISED BY HAZEN AND SAWYER, P.C. TO REFLECT MODIFICATIONS MADE DURING CONSTRUCTION

environmental engineers, scientists, planners, & management consultants CDM

RECORD DRAWING

ARLINGTON COUNTY, VIRGINIA
WATER POLLUTION CONTROL PLANT
UPGRADE AND EXPANSION- PHASE IB

BLOWER BUILDING-STRUCTURAL-
AIR PLENUM-ELEVATIONS, SECTIONS AND DETAILS

SCALE NOTE
SCALE BAR SHOWN BELOW IS ONE INCH LONG ON A FULL SIZE DRAWING. WHEN SCALING DRAWINGS, MEASURE BAR TO DETERMINE IF SCALES SHOWN WILL REQUIRE ADJUSTING.
ONE INCH

CONTRACT NO.
YEAR
LOCATION CODE: DO
SPECIALTY CODE: S
PROJECT NO. 5002-33
FILE NAME DOS-2.DWG
DRAWING NO. DOS-2
SHEET NO. 120

FILE: DOS-2.DWG , SCALE: 1/4"=1'-0" , LATEST REVISIONS MADE ON: 10/14/91 AT 16:25

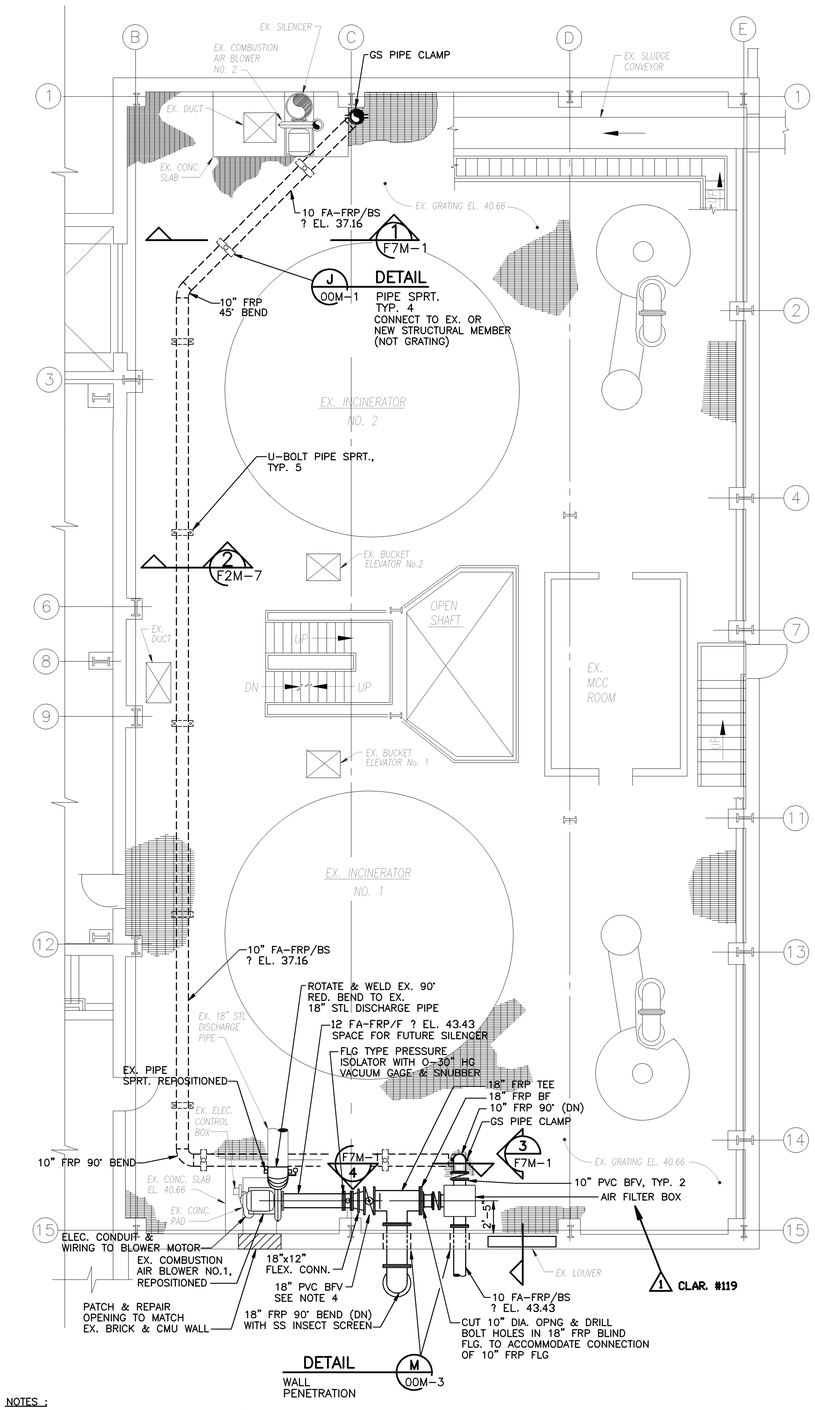

NOTES :

1. FRP PIPE SHALL BE SUPPORTED PER MFR'S REQUIREMENTS, BUT SUPPORT SPACING SHALL NOT BE GREATER THAN THAT SHOWN.
2. USE GS EPOXY ANCHORS TO REANCHOR COMBUSTION AIR FAN NO. 1.
3. INSTALL ADDITIONAL FRP FITTINGS AS NECESSARY TO AVOID INTERFERENCE WITH EXISTING PIPE AND EQUIPMENT.
4. THIS BFV SHALL HAVE A GEAR AND HANDWHEEL OPERATOR FOR INFINITE CONTROL RANGE OF VALVE OPENING. VALVE TO BE USED AS CONTROL VALVE FOR AIRFLOW TO COMBUSTION AIR BLOWER NO. 1.

PLAN AT EL. 49.00

SCALE: 3/16"=1'-0"

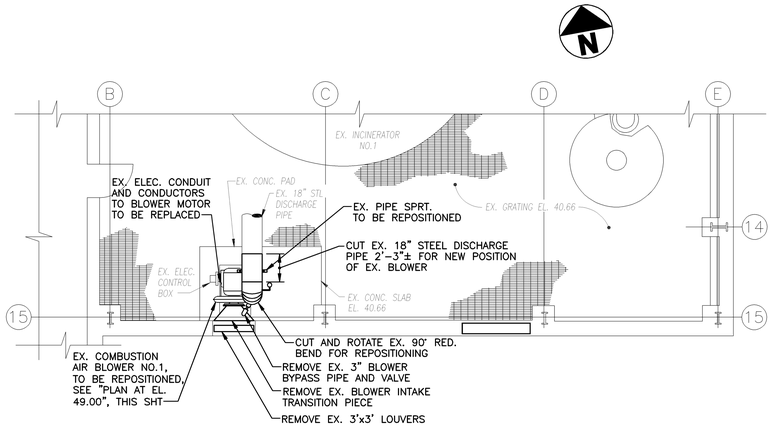

REMOVAL PLAN AT EL. 49.00

SCALE: 3/16"=1'-0"

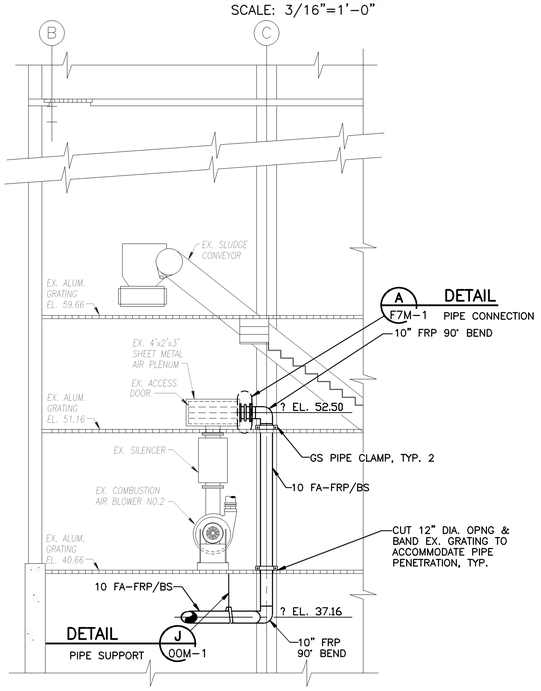

SECTION 1

SCALE: 3/16"=1'-0" — F7M-1

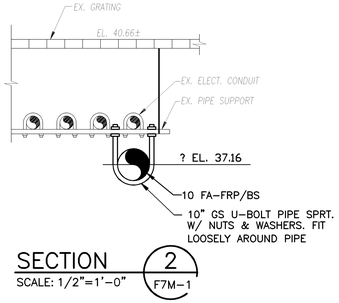

SECTION 2

SCALE: 1/2"=1'-0" — F7M-1

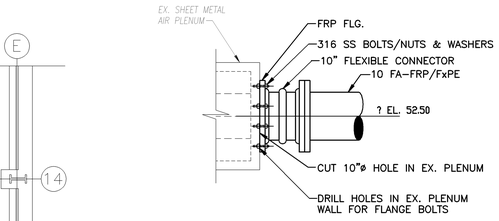

PIPE CONNECTION DETAIL

SCALE: 3/4"=1'-0" — A F7M-1

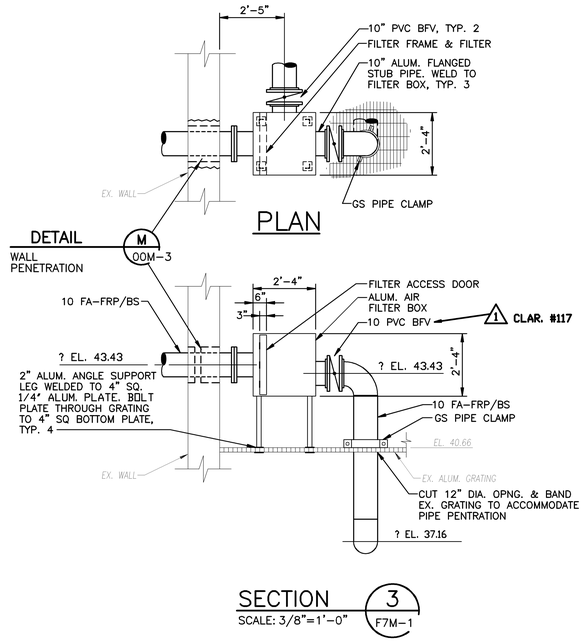

SECTION 3

SCALE: 3/8"=1'-0" — F7M-1

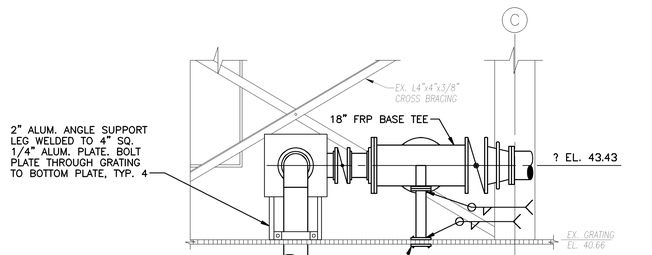

BASE TEE SUPPORT SECTION

SCALE: 3/8"=1'-0" — F7M-1

09/18/91 – 13:53

RECORD DRAWING

NO.	DATE	DRWN	CHK'D	DESCRIPTION
1	12/98	PXP	ASG	RECORD DRAWING

REVISIONS

DESIGNED BY: TBM
DRAWN BY: GPB/CTC
CHECKED BY/DATE: TDH 9/91
APPRV'D BY/DATE: TDH 9/91

COMMONWEALTH OF VIRGINIA — THOMAS D. HALL No. 12502 — PROFESSIONAL ENGINEER

CAMP DRESSER & McKEE

RES. DRAWING HAS BEEN REVISED BY HAZEN AND SAWYER, P.C. TO REFLECT MODIFICATIONS MADE DURING CONSTRUCTION

CDM — environmental engineers, scientists, planners, & management consultants

ARLINGTON COUNTY, VIRGINIA
WATER POLLUTION CONTROL PLANT
UPGRADE AND EXPANSION- PHASE IIB

SOLIDS PROCESSING BUILDING
PLANS, SECTIONS AND DETAIL

SCALE NOTE

SCALE BAR SHOWN BELOW IS ONE INCH LONG ON A FULL SIZE DRAWING. WHEN SCALING DRAWINGS, MEASURE BAR TO DETERMINE IF SCALES SHOWN WILL REQUIRE ADJUSTING.

ONE INCH

CONTRACT NO.	90-02-WPC
YEAR	1991
LOCATION CODE	F7
SPECIALTY CODE	M
PROJECT NO.	5002-33
FILE NAME	F7M-0001.DWG
DRAWING NO.	F7M-1
SHEET NO.	121

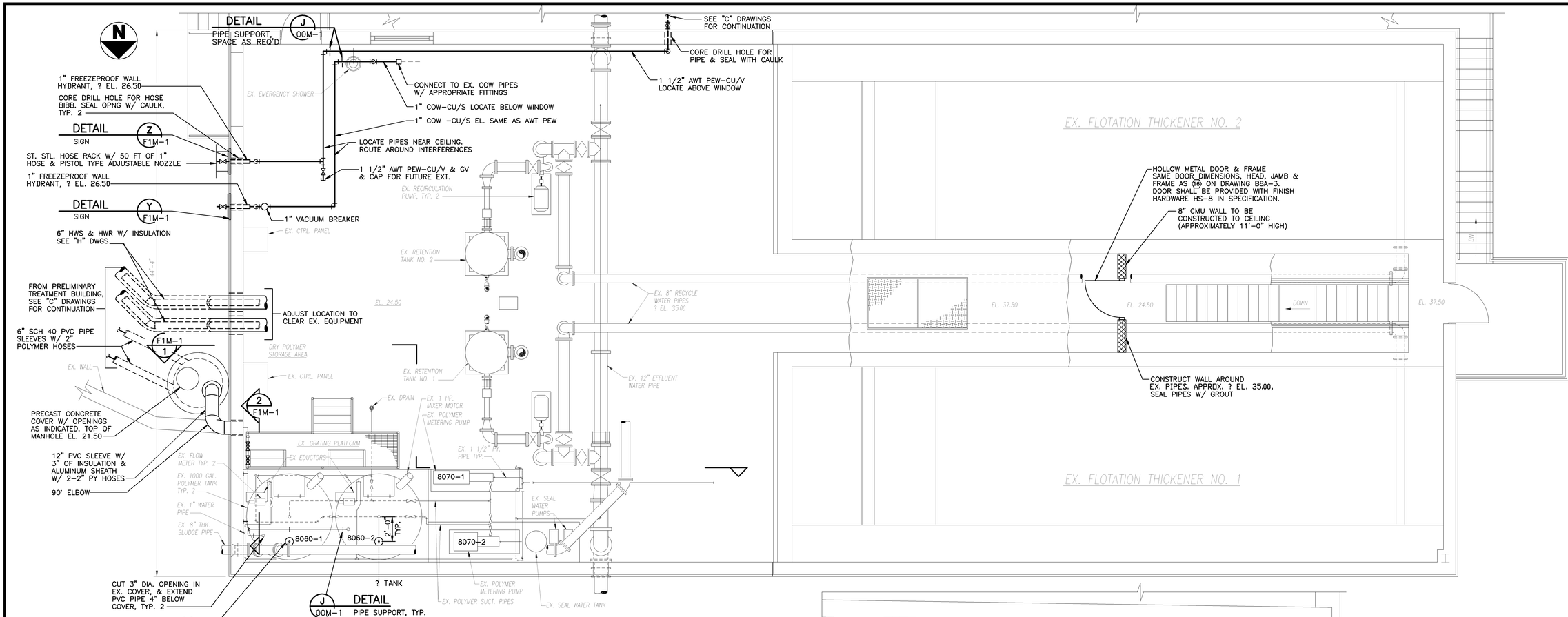

PLAN
SCALE 1/4"=1'-0"

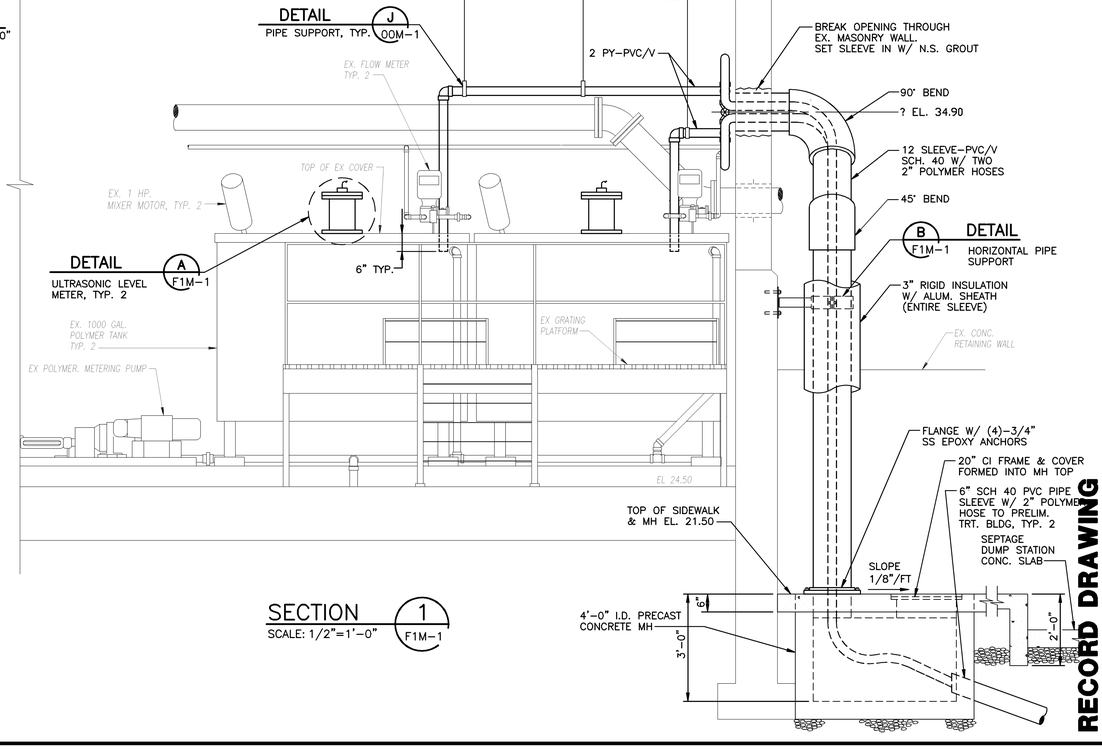

SECTION 1 F1M-1
SCALE: 1/2"=1'-0"

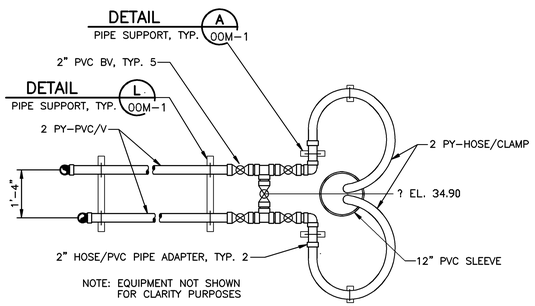

SECTION 2 F1M-1
SCALE: 1/2"=1'-0"

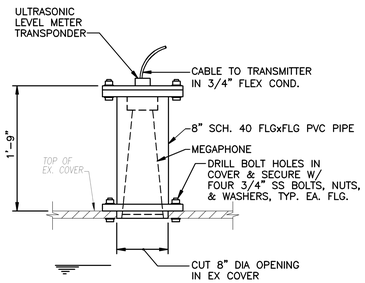

ULTRASONIC LEVEL METER

DETAIL A F1M-1
SCALE: 1"=1'-0"

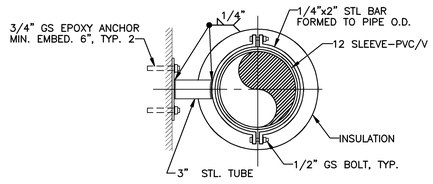

HORIZONTAL PIPE SUPPORT

DETAIL B F1M-1
SCALE: NTS

RECORD DRAWING

NO.	DATE	DRWN	CHK'D	DESCRIPTION
1	9/97	FXP	ASG	RECORD DRAWING

REVISIONS

DESIGNED BY: AMR
DRAWN BY: BRW/CTC/PLR
CHECKED BY/DATE: TDH 9/91
APPRV'D BY/DATE: TDH 9/91

COMMONWEALTH OF VIRGINIA
THOMAS D. HALL
No. 12502
PROFESSIONAL ENGINEER

CAMP DRESSER & McKEE
environmental engineers, scientists, planners, & management consultants

RED DRAWING HAS BEEN REVISED BY HAZEN AND SAWYER, P.C. TO REFLECT MODIFICATIONS MADE DURING CONSTRUCTION

CDM

ARLINGTON COUNTY, VIRGINIA
WATER POLLUTION CONTROL PLANT
UPGRADE AND EXPANSION- PHASE IIB

FLOTATION THICKENER
PLAN, SECTIONS, AND DETAILS

SCALE NOTE
SCALE BAR SHOWN BELOW IS ONE INCH LONG ON A FULL SIZE DRAWING. WHEN SCALING DRAWINGS, MEASURE BAR TO DETERMINE IF SCALES SHOWN WILL REQUIRE ADJUSTING.
ONE INCH

CONTRACT NO. 90-02-WPC
YEAR 1991
LOCATION CODE F1
SPECIALTY CODE M
PROJECT NO. 5002-33
FILE NAME F1M-0001.DWG
DRAWING NO. F1M-1
SHEET NO. 122

08/21/91 - 15:36

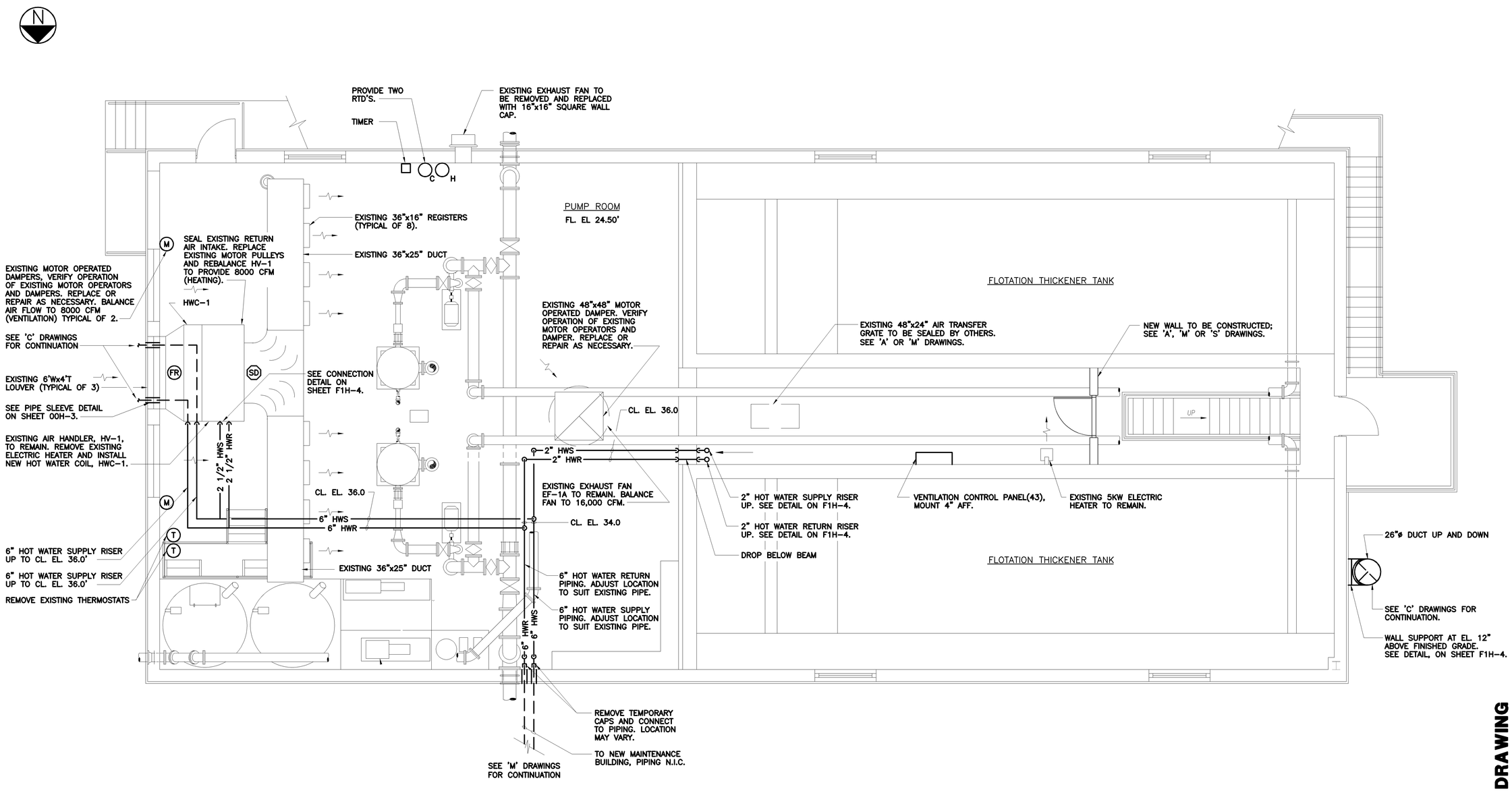

PLAN
SCALE: 1/4"=1'-0"

NO.	DATE	DRWN	CHK'D	DESCRIPTION
				REVISIONS
1	9/97	FXP	ASG	RECORD DRAWING

DESIGNED BY: WRH
DRAWN BY: RMM,SFP
CHECKED BY/DATE: WRH/9-91
APPRV'D BY/DATE: WRH/9-91

CAMP DRESSER & McKEE

THIS DRAWING HAS BEEN REVISED BY HAZEN AND SAWYER, P.C. TO REFLECT MODIFICATIONS MADE DURING CONSTRUCTION

environmental engineers, scientists, planners, & management consultants CDM

ARLINGTON COUNTY, VIRGINIA
WATER POLLUTION CONTROL PLANT
UPGRADE AND EXPANSION- PHASE IIB

FLOTATION THICKENER
HVAC
LOWER LEVEL PLAN

SCALE NOTE

SCALE BAR SHOWN BELOW IS ONE INCH LONG ON A FULL SIZE DRAWING. WHEN SCALING DRAWINGS, MEASURE BAR TO DETERMINE IF SCALES SHOWN WILL REQUIRE ADJUSTING.

ONE INCH

RECORD DRAWING

CONTRACT NO. 000000000
YEAR 1991
LOCATION CODE F1
SPECIALTY CODE H
PROJECT NO. 5002-33
FILE NAME F1H1.DWG
DRAWING NO. F1H-1
SHEET NO. 123

C.E. BAILEY & ASSOCIATES, INC.
CONSULTING ENGINEERS
ORLANDO, CLEARWATER & FORT LAUDERDALE, FLORIDA

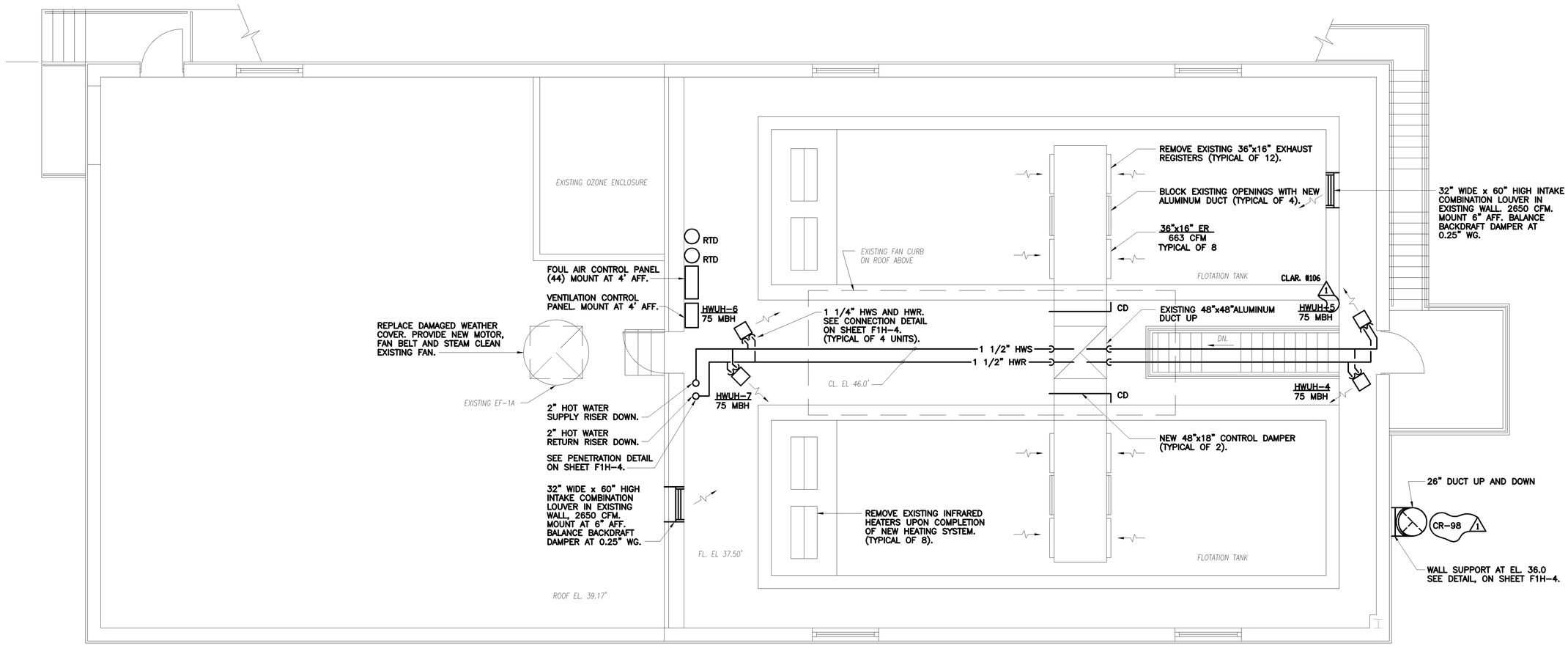

PLAN
SCALE: 1/4"=1'-0"

NO.	DATE	DRWN	CHK'D	DESCRIPTION
1	9/97	FXP	ASG	RECORD DRAWING

REVISIONS

DESIGNED BY: WRH
DRAWN BY: RMM,SFP
CHECKED BY/DATE: WRH/9-91
APPRV'D BY/DATE: WRH/9-91

CAMP DRESSER & McKEE

THIS DRAWING HAS BEEN REVISED BY HAZEN AND SAWYER, P.C. TO REFLECT MODIFICATIONS MADE DURING CONSTRUCTION

environmental engineers, scientists, planners, & management consultants CDM

ARLINGTON COUNTY, VIRGINIA
WATER POLLUTION CONTROL PLANT
UPGRADE AND EXPANSION- PHASE IIB

FLOTATION THICKENER
HVAC
UPPER LEVEL PLAN

SCALE NOTE

SCALE BAR SHOWN BELOW IS ONE INCH LONG ON A FULL SIZE DRAWING. WHEN SCALING DRAWINGS, MEASURE BAR TO DETERMINE IF SCALES SHOWN WILL REQUIRE ADJUSTING.

ONE INCH

RECORD DRAWING

CONTRACT NO. 000000000
YEAR 1991
LOCATION CODE F1
SPECIALTY CODE H
PROJECT NO. 5002-33
FILE NAME F1H2.DWG
DRAWING NO. F1H-2
SHEET NO. 124

C.E. BAILEY & ASSOCIATES, INC.
CONSULTING ENGINEERS
ORLANDO, CLEARWATER & FORT LAUDERDALE, FLORIDA

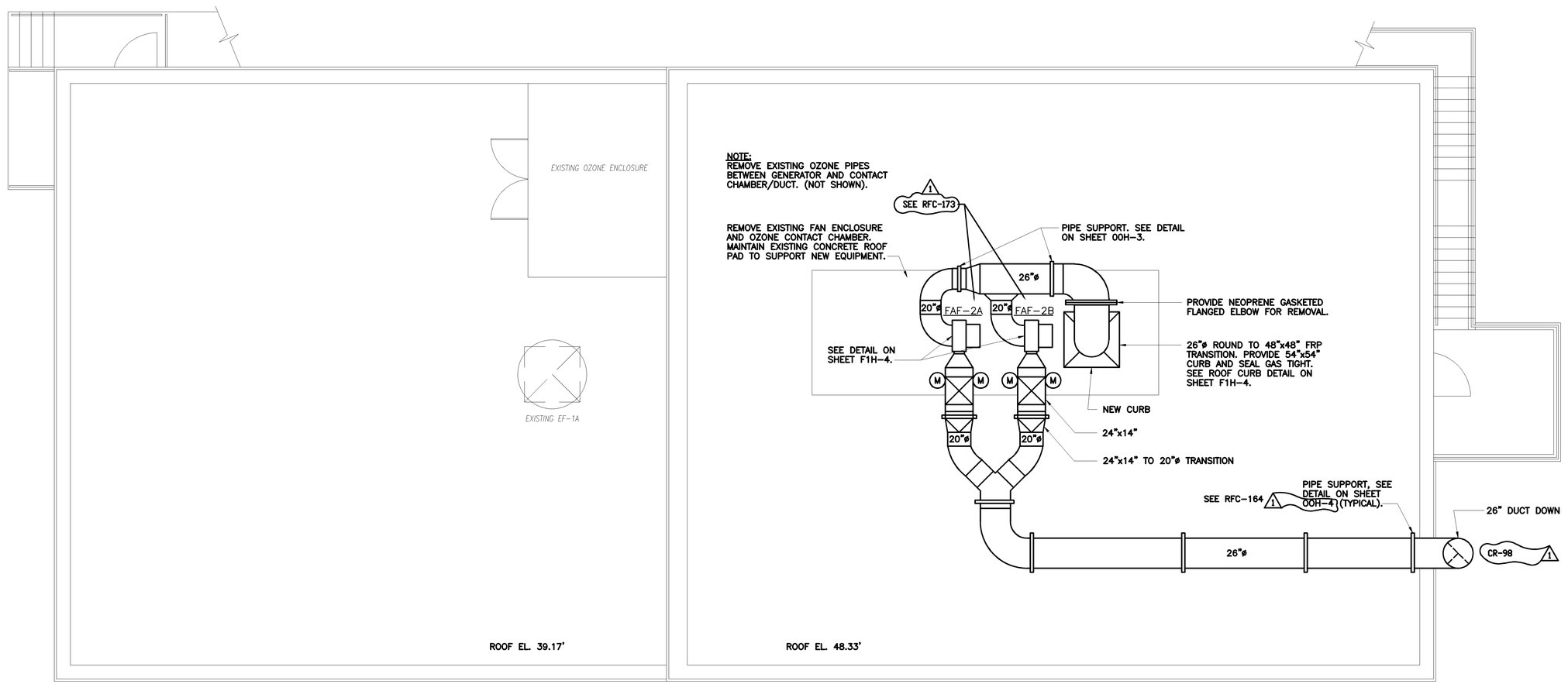

PLAN
SCALE: 1/4"=1'-0"

RECORD DRAWING

C.E. BAILEY & ASSOCIATES, INC.
CONSULTING ENGINEERS
ORLANDO, CLEARWATER & FORT LAUDERDALE, FLORIDA

DESIGNED BY: WRH
DRAWN BY: RMM,SFP
CHECKED BY/DATE: WRH/9-91
APPRV'D BY/DATE: WRH/9-91

NO.	DATE	DRWN	CHK'D	DESCRIPTION
1	9/97	FXP	ASG	RECORD DRAWING

REVISIONS

CAMP DRESSER & McKEE

THIS DRAWING HAS BEEN REVISED BY HAZEN AND SAWYER, P.C. TO REFLECT MODIFICATIONS MADE DURING CONSTRUCTION

environmental engineers, scientists, planners, & management consultants CDM

ARLINGTON COUNTY, VIRGINIA
WATER POLLUTION CONTROL PLANT
UPGRADE AND EXPANSION- PHASE IIB

FLOTATION THICKENER
HVAC
ROOF PLAN

SCALE NOTE
SCALE BAR SHOWN BELOW IS ONE INCH LONG ON A FULL SIZE DRAWING. WHEN SCALING DRAWINGS, MEASURE BAR TO DETERMINE IF SCALES SHOWN WILL REQUIRE ADJUSTING.
ONE INCH

CONTRACT NO. 000000000
YEAR 1991
LOCATION CODE F1
SPECIALTY CODE H
PROJECT NO. 5002-33
FILE NAME F1H3.DWG
DRAWING NO. F1H-3
SHEET NO. 125

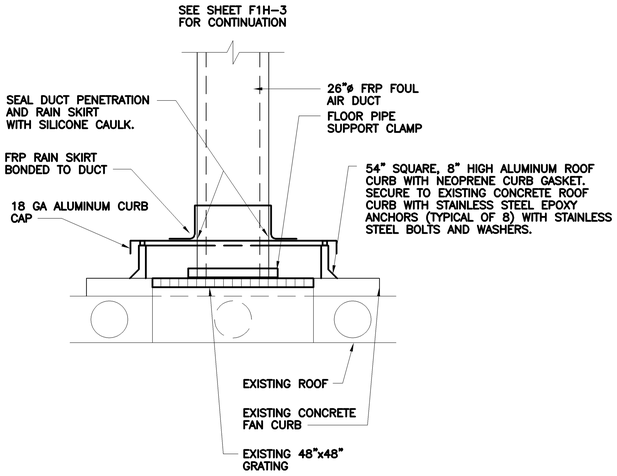

ROOFTOP DUCT PENETRATION DETAIL

N.T.S.

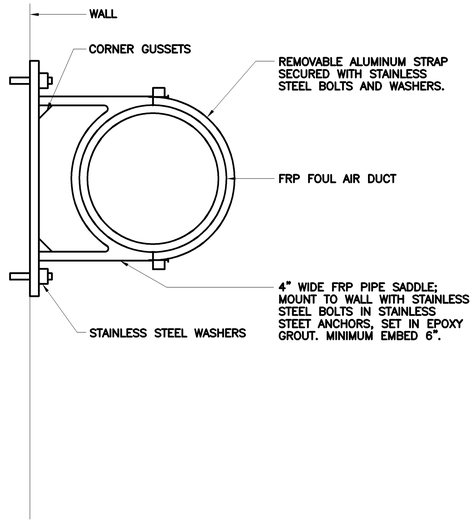

FOUL AIR PIPE WALL SUPPORT DETAIL

N.T.S.

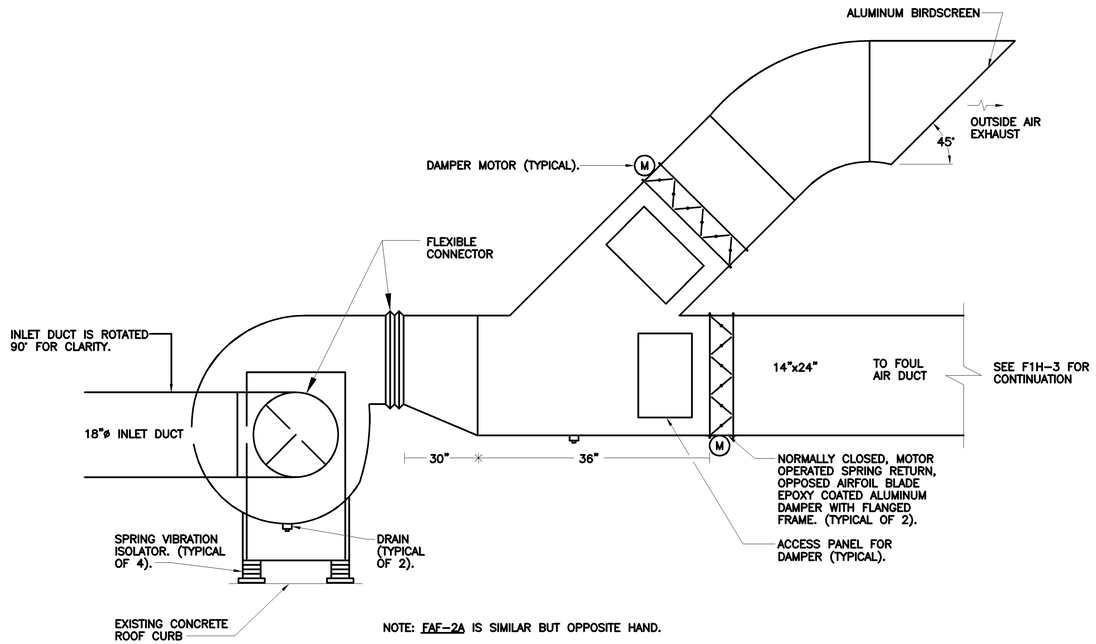

NOTE: FAF-2A IS SIMILAR BUT OPPOSITE HAND.

FAF-2B DETAIL

N.T.S.

NO.	DATE	DRWN	CHK'D	DESCRIPTION
				REVISIONS
				RECORD DRAWING
1	9/97	FXP	ASG	

DESIGNED BY: WRH
DRAWN BY: SFP
CHECKED BY/DATE: WRH/9-91
APPRV'D BY/DATE: WRH/9-91

CAMP DRESSER & McKEE

THIS DRAWING HAS BEEN REVISED BY HAZEN AND SAWYER, P.C. TO REFLECT MODIFICATIONS MADE DURING CONSTRUCTION

CDM
environmental engineers, scientists, planners, & management consultants

ARLINGTON COUNTY, VIRGINIA
WATER POLLUTION CONTROL PLANT
UPGRADE AND EXPANSION- PHASE IIB

FLOATATION THICKENER
HVAC
DETAILS

RECORD DRAWING

SCALE NOTE

SCALE BAR SHOWN BELOW IS ONE INCH LONG ON A FULL SIZE DRAWING. WHEN SCALING DRAWINGS, MEASURE BAR TO DETERMINE IF SCALES SHOWN WILL REQUIRE ADJUSTING.

← ONE INCH →

CONTRACT NO.
000000000

YEAR 1991

LOCATION CODE	SPECIALTY CODE
F1	H

PROJECT NO.
5002-33

FILE NAME
F1H4.DWG

DRAWING NO.
F1H-4

SHEET NO. 126

C.E. BAILEY & ASSOCIATES, INC.
CONSULTING ENGINEERS
ORLANDO, CLEARWATER &
FORT LAUDERDALE, FLORIDA

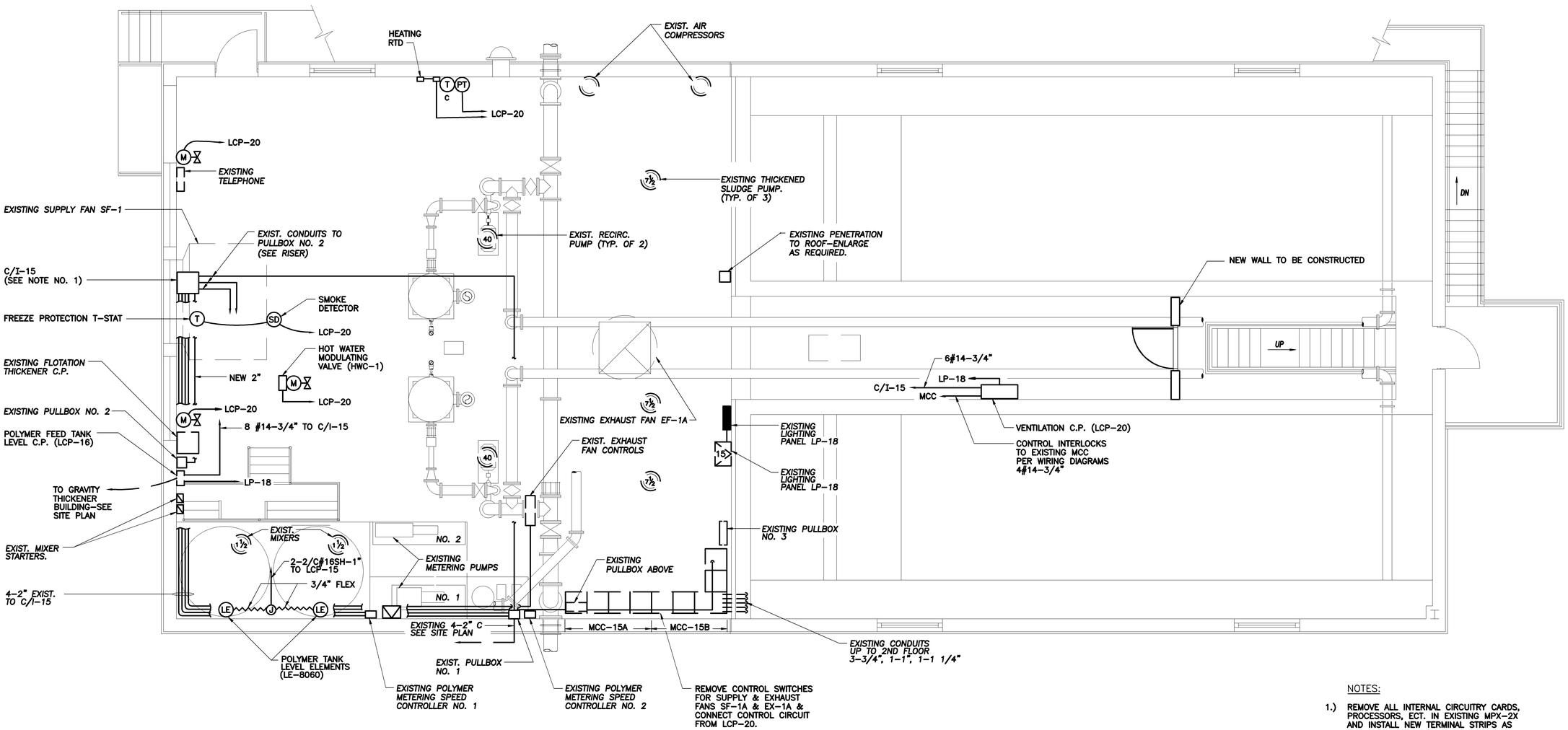

ELECTRICAL PLAN

SCALE:1/4"=1'-0"

NOTES:

1.) REMOVE ALL INTERNAL CIRCUITRY CARDS, PROCESSORS, ECT. IN EXISTING MPX-2X AND INSTALL NEW TERMINAL STRIPS AS REQUIRED. RELABEL AS CI-15.

2.) INSTALL 4-20A, 1P BREAKERS IN LP-18.

RECORD DRAWING

NO.	DATE	DRWN	CHK'D	DESCRIPTION
1	9/97	FXP	ASG	RECORD DRAWING

REVISIONS

DESIGNED BY: SEB
DRAWN BY: JSG
CHECKED BY/DATE: CEB/9-91
APPRV'D BY/DATE: CEB/9-91

CAMP DRESSER & McKEE

THIS DRAWING HAS BEEN REVISED BY HAZEN AND SAWYER, P.C. TO REFLECT MODIFICATIONS MADE DURING CONSTRUCTION

CDM
environmental engineers, scientists, planners, & management consultants

ARLINGTON COUNTY, VIRGINIA
WATER POLLUTION CONTROL PLANT
UPGRADE AND EXPANSION- PHASE B

FLOTATION THICKENER
ELECTRICAL
1ST FLOOR PLAN

SCALE NOTE

SCALE BAR SHOWN BELOW IS ONE INCH LONG ON A FULL SIZE DRAWING. WHEN SCALING DRAWINGS, MEASURE BAR TO DETERMINE IF SCALES SHOWN WILL REQUIRE ADJUSTING.

ONE INCH

CONTRACT NO.

YEAR 1991

LOCATION CODE	SPECIALTY CODE
F1	E

PROJECT NO. 5002-33

FILE NAME F1E-0001.DWG

DRAWING NO. F1E-1

SHEET NO. 127

C.E. BAILEY & ASSOCIATES, INC.
CONSULTING ENGINEERS
ORLANDO, CLEARWATER & FORT LAUDERDALE, FLORIDA

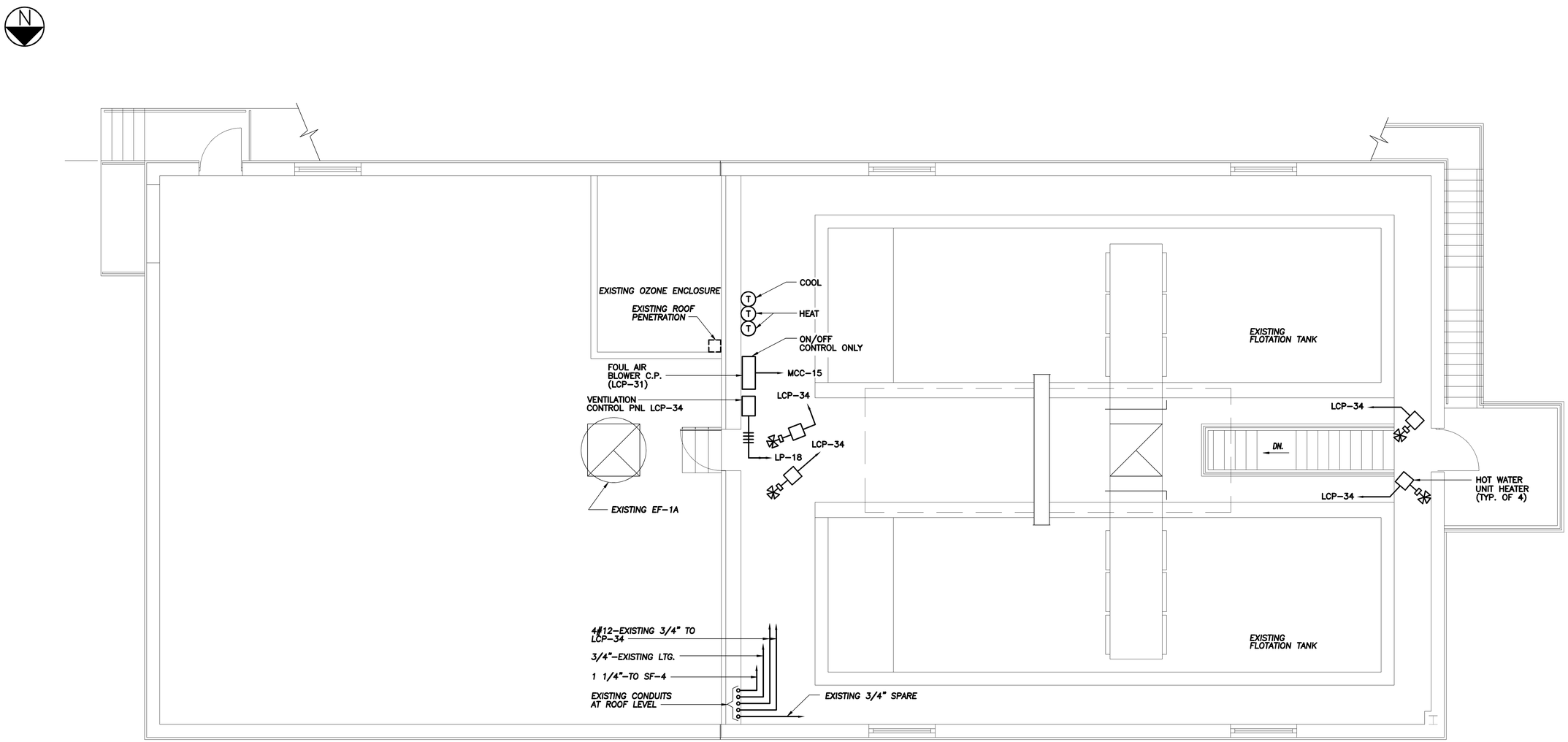

PLAN
SCALE:1/4"=1'-0"

NO.	DATE	DRWN	CHK'D	DESCRIPTION
1	9/97	FXP	ASG	RECORD DRAWING

REVISIONS

DESIGNED BY: SEB
DRAWN BY: JSG
CHECKED BY/DATE: CEB/9-91
APPRV'D BY/DATE: CEB/9-91

CAMP DRESSER & McKEE

THIS DRAWING HAS BEEN REVISED BY HAZEN AND SAWYER, P.C. TO REFLECT MODIFICATIONS MADE DURING CONSTRUCTION

environmental engineers, scientists, planners, & management consultants. CDM

ARLINGTON COUNTY, VIRGINIA
WATER POLLUTION CONTROL PLANT
UPGRADE AND EXPANSION- PHASE B

FLOTATION THICKENER
ELECTRICAL
2ND FLOOR PLAN

SCALE NOTE

SCALE BAR SHOWN BELOW IS ONE INCH LONG ON A FULL SIZE DRAWING. WHEN SCALING DRAWINGS, MEASURE BAR TO DETERMINE IF SCALES SHOWN WILL REQUIRE ADJUSTING.

ONE INCH

CONTRACT NO.

YEAR 1991

LOCATION CODE	SPECIALTY CODE
F1	E

PROJECT NO. 5002-33

FILE NAME F1E-0002.DWG

DRAWING NO. F1E-2

SHEET NO. 128

RECORD DRAWING

C.E. BAILEY & ASSOCIATES, INC.
CONSULTING ENGINEERS
ORLANDO, CLEARWATER & FORT LAUDERDALE, FLORIDA

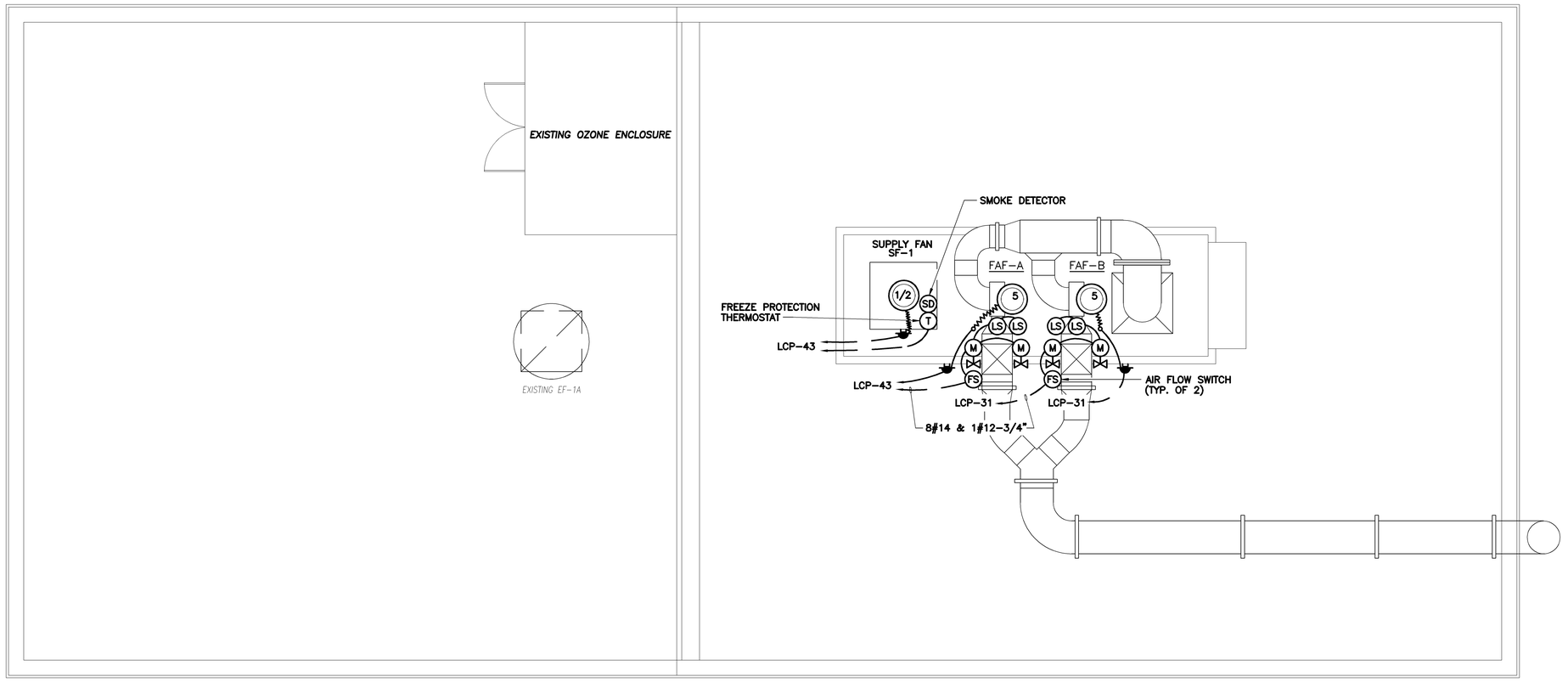

PLAN

SCALE: 1/4"=1'

RECORD DRAWING

C.E. BAILEY & ASSOCIATES, INC.
CONSULTING ENGINEERS
ORLANDO, CLEARWATER &
FORT LAUDERDALE, FLORIDA

NO.	DATE	DRWN	CHK'D	DESCRIPTION
1	9/97	FXP	ASG	RECORD DRAWING

REVISIONS

DESIGNED BY: SEB
DRAWN BY: TRH
CHECKED BY/DATE: CEB/9-91
APPRV'D BY/DATE: CEB/9-91

CAMP DRESSER & McKEE

THIS DRAWING HAS BEEN REVISED BY HAZEN AND SAWYER, P.C. TO REFLECT MODIFICATIONS MADE DURING CONSTRUCTION

environmental engineers, scientists, planners, & management consultants. CDM

ARLINGTON COUNTY, VIRGINIA
WATER POLLUTION CONTROL PLANT
UPGRADE AND EXPANSION- PHASE B

FLOTATION THICKENER
ELECTRICAL
ROOF PLAN

SCALE NOTE

SCALE BAR SHOWN BELOW IS ONE INCH LONG ON A FULL SIZE DRAWING. WHEN SCALING DRAWINGS, MEASURE BAR TO DETERMINE IF SCALES SHOWN WILL REQUIRE ADJUSTING.

ONE INCH

CONTRACT NO.

YEAR 1991

LOCATION CODE	SPECIALTY CODE
F1	E

PROJECT NO. 5002-33

FILE NAME F1E-0003.DWG

DRAWING NO. F1E-3

SHEET NO. 129

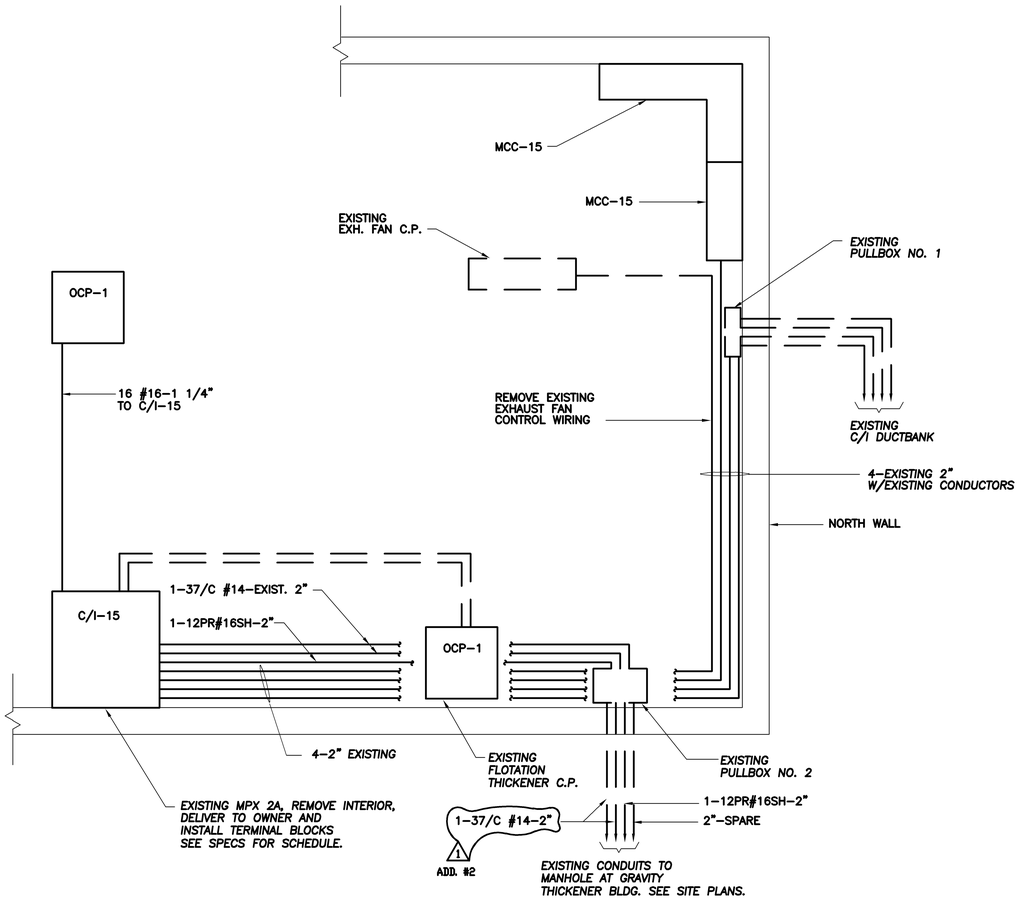

CONTROL AND INSTRUMENTATION RISER

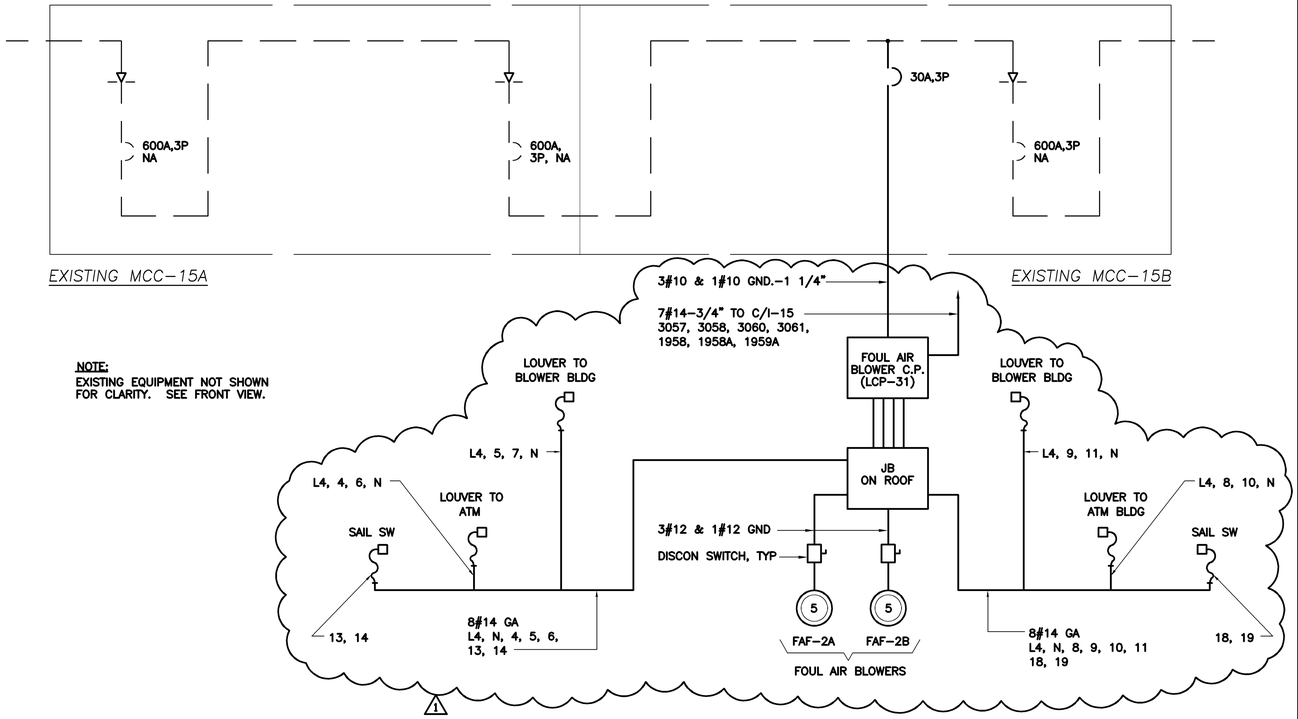

EXISTING MCC SINGLE LINE DIAGRAM

N.T.S.

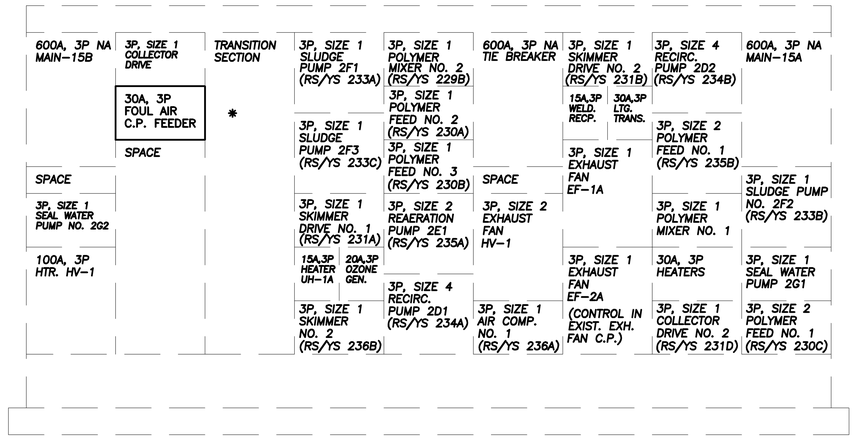

* REVISE BUS STABS TO PROVIDE FOR THE FOLLOWING:

EXISTING MCC–15B FRONT VIEW

N.T.S.

REVISIONS				
NO.	DATE	DRWN	CHK'D	DESCRIPTION
1	12/98	FXP	ASG	RECORD DRAWING

DESIGNED BY: SEB
DRAWN BY: JSG
CHECKED BY/DATE: CEB/9–91
APPR'D BY/DATE: CEB/9–91

CAMP DRESSER & McKEE

THIS DRAWING HAS BEEN REVISED BY HAZEN AND SAWYER, P.C. TO REFLECT MODIFICATIONS MADE DURING CONSTRUCTION

CDM

environmental engineers, scientists, planners, & management consultants

ARLINGTON COUNTY, VIRGINIA
WATER POLLUTION CONTROL PLANT
UPGRADE AND EXPANSION– PHASE IIB

FLOTATION THICKENER ELECTRICAL RISER DIAGRAMS

SCALE NOTE

SCALE BAR SHOWN BELOW IS ONE INCH LONG ON A FULL SIZE DRAWING. WHEN SCALING DRAWINGS, MEASURE BAR TO DETERMINE IF SCALES SHOWN WILL REQUIRE ADJUSTING.

ONE INCH

RECORD DRAWING

CONTRACT NO.

YEAR 1991

LOCATION CODE	SPECIALTY CODE
F1	E

PROJECT NO. 5002–33

FILE NAME F1E–0004.DWG

DRAWING NO. F1E–4

SHEET NO. 130

C.E. BAILEY & ASSOCIATES, INC.
CONSULTING ENGINEERS
ORLANDO, CLEARWATER & FORT LAUDERDALE, FLORIDA

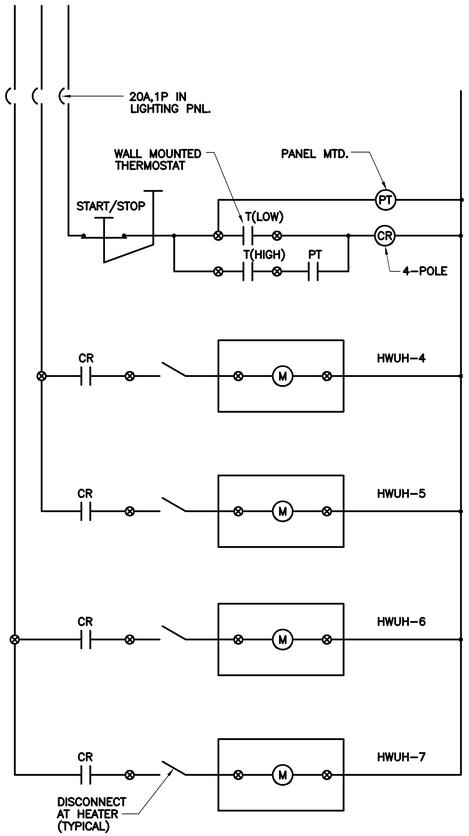

VENTILATION C.P.
LCP-34

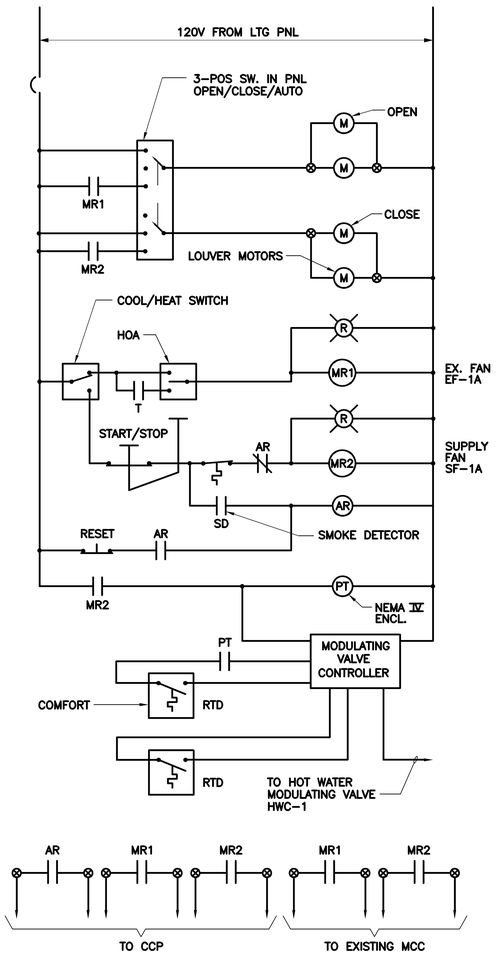

VENTILATION C.P.
LCP-20

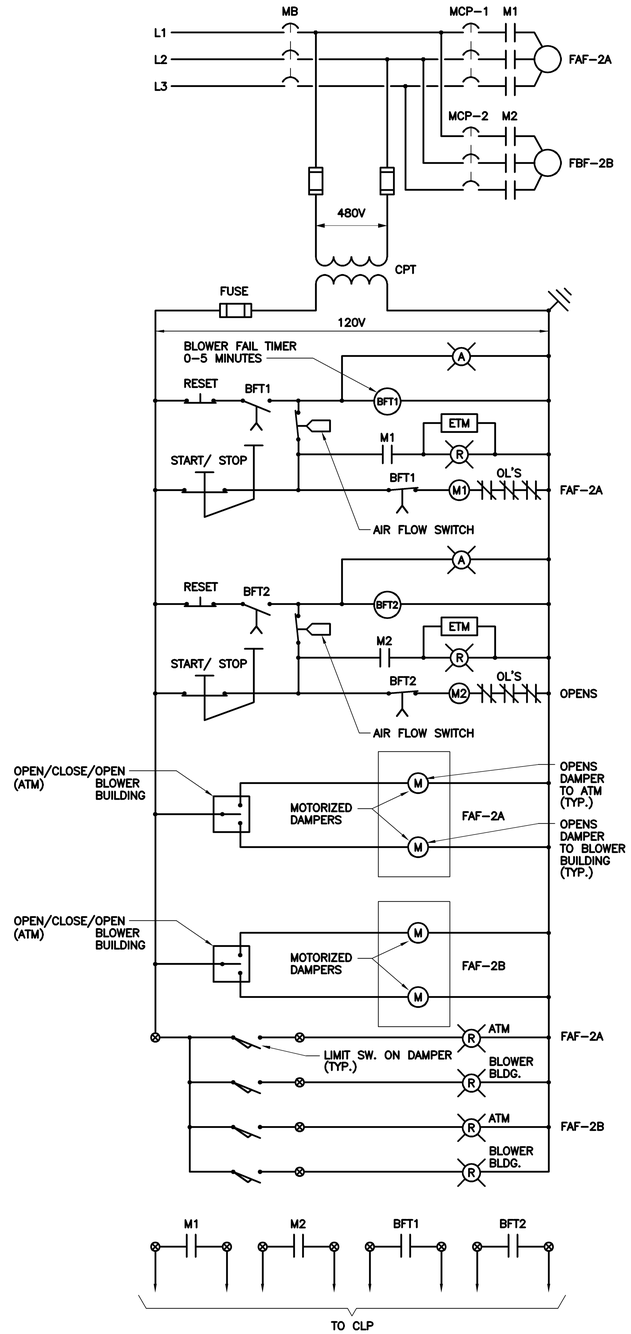

FOUL AIR BLOWER C.P.
LCP-31

NO.	DATE	DRWN	CHK'D	REVISIONS DESCRIPTION
1	12/98	FXP	ASG	RECORD DRAWING

DESIGNED BY: SEB
DRAWN BY: JSG
CHECKED BY/DATE: CEB/9-91
APPR'D BY/DATE: CEB/9-91

CAMP DRESSER & McKEE

THIS DRAWING HAS BEEN REVISED BY HAZEN AND SAWYER, P.C. TO REFLECT MODIFICATIONS MADE DURING CONSTRUCTION

CDM
environmental engineers, scientists, planners, & management consultants

ARLINGTON COUNTY, VIRGINIA
WATER POLLUTION CONTROL PLANT
UPGRADE AND EXPANSION- PHASE B

FLOTATION THICKENER
ELECTRICAL
CONTROL DIAGRAMS

SCALE NOTE
SCALE BAR SHOWN BELOW IS ONE INCH LONG ON A FULL SIZE DRAWING. WHEN SCALING DRAWINGS, MEASURE BAR TO DETERMINE IF SCALES SHOWN WILL REQUIRE ADJUSTING.
ONE INCH

CONTRACT NO.

YEAR 1991

LOCATION CODE	SPECIALTY CODE
F1	E

PROJECT NO. 5002-33
FILE NAME F1E-0005.DWG
DRAWING NO. F1E-5
SHEET NO. 131

RECORD DRAWING

C.E. BAILEY & ASSOCIATES, INC.
CONSULTING ENGINEERS
ORLANDO, CLEARWATER & FORT LAUDERDALE, FLORIDA

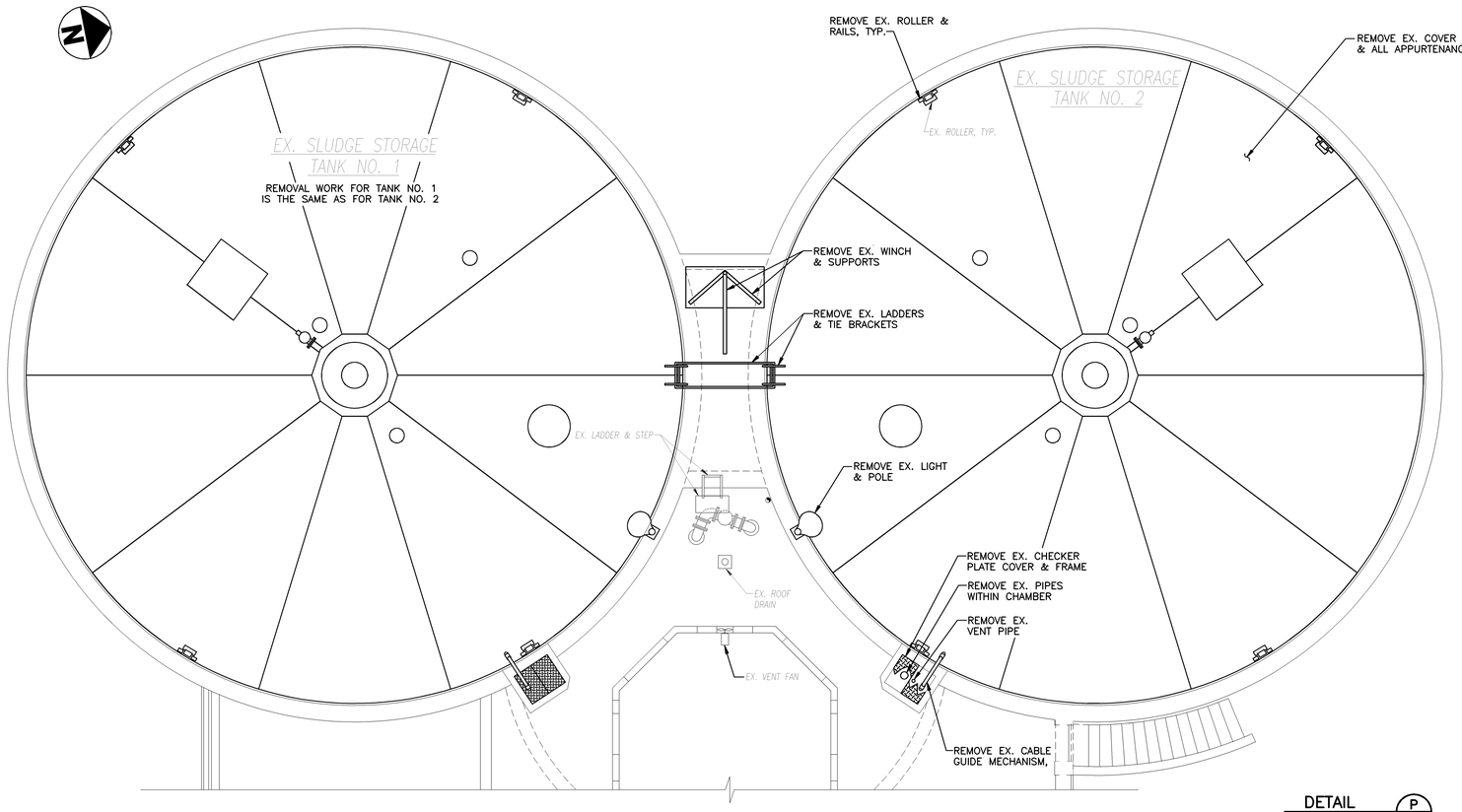

ROOF PLAN

SCALE: 3/16"=1'-0"

NOTES:
1. CUT OFF ANCHOR BOLTS FOR REMOVED ITEMS 1" MIN. BELOW CONCRETE SURFACE AND FILL HOLE WITH EPOXY MORTAR.

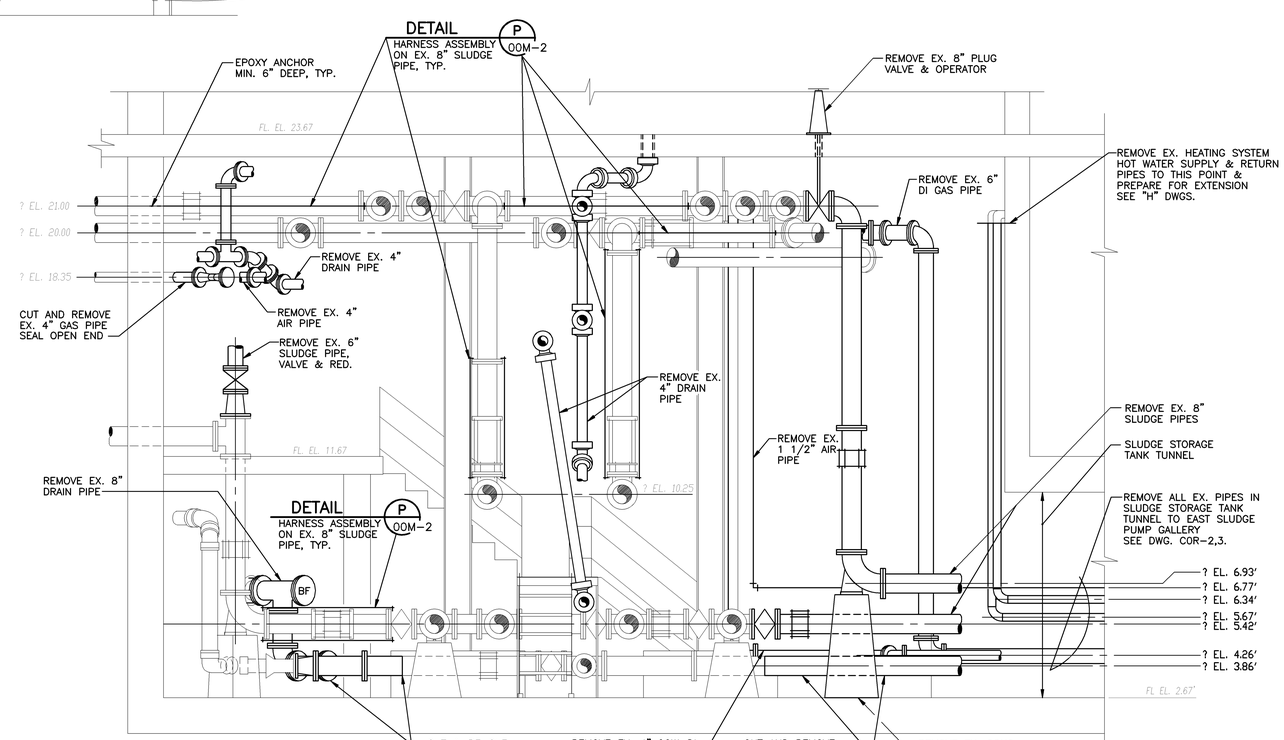

SECTION 2

SCALE: 3/8"=1'-0"

F2R-2,3

NO.	DATE	DRWN	CHK'D	DESCRIPTION
1	9/97	FXP	ASG	RECORD DRAWING

REVISIONS

DESIGNED BY: AMR/TDH
DRAWN BY: BRW/CTC/PLR
CHECKED BY/DATE: TDH 9/91
APPRV'D BY/DATE: TDH 9/91

COMMONWEALTH OF VIRGINIA
THOMAS D. HALL
No. 12502
PROFESSIONAL ENGINEER

CAMP DRESSER & McKEE

THIS DRAWING HAS BEEN REVISED BY HAZEN AND SAWYER, P.C. TO REFLECT MODIFICATIONS MADE DURING CONSTRUCTION

environmental engineers, scientists, planners, & management consultants

CDM

ARLINGTON COUNTY, VIRGINIA
WATER POLLUTION CONTROL PLANT
UPGRADE AND EXPANSION- PHASE IIB

SLUDGE STORAGE TANKS
REMOVAL
PLANS AND SECTIONS

SCALE NOTE

SCALE BAR SHOWN BELOW IS ONE INCH LONG ON A FULL SIZE DRAWING. WHEN SCALING DRAWINGS, MEASURE BAR TO DETERMINE IF SCALES SHOWN WILL REQUIRE ADJUSTING.

ONE INCH

CONTRACT NO. 90-02-WPC
YEAR 1991
LOCATION CODE F2
SPECIALTY CODE R
PROJECT NO. 5002-33
FILE NAME F2R-0001.DWG
DRAWING NO. F2R-1
SHEET NO. 132

RECORD DRAWING

09/18/91 - 10:37

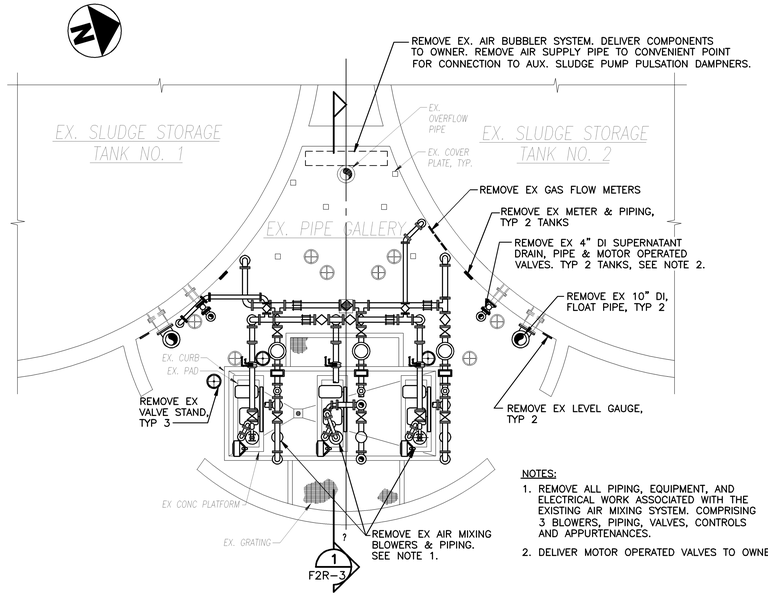

PLAN AT ELEVATION 25.00

SCALE: 3/16""=1'-0"

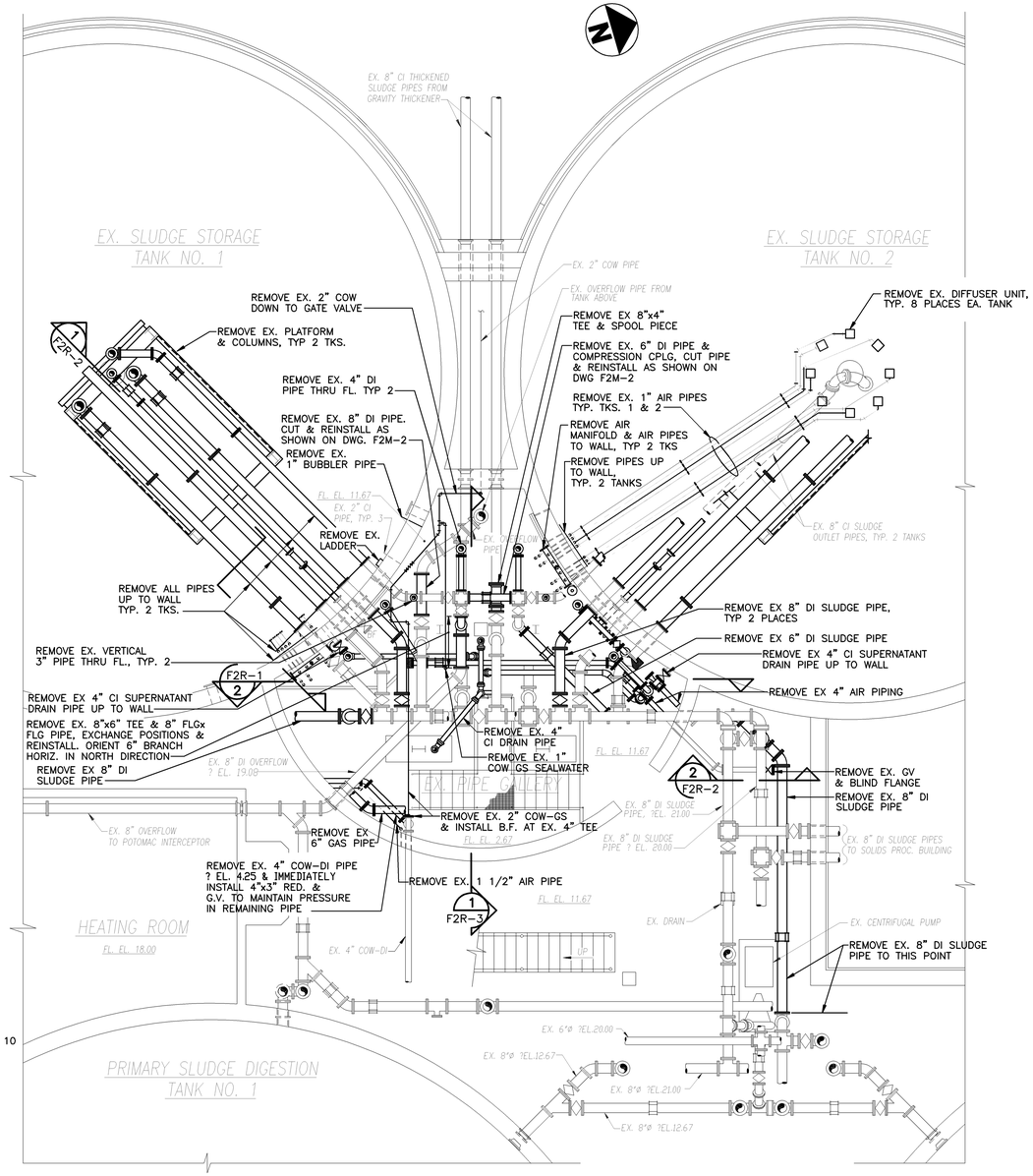

PLAN AT ELEVATION 22.0

SCALE: 3/16"=1'-0"

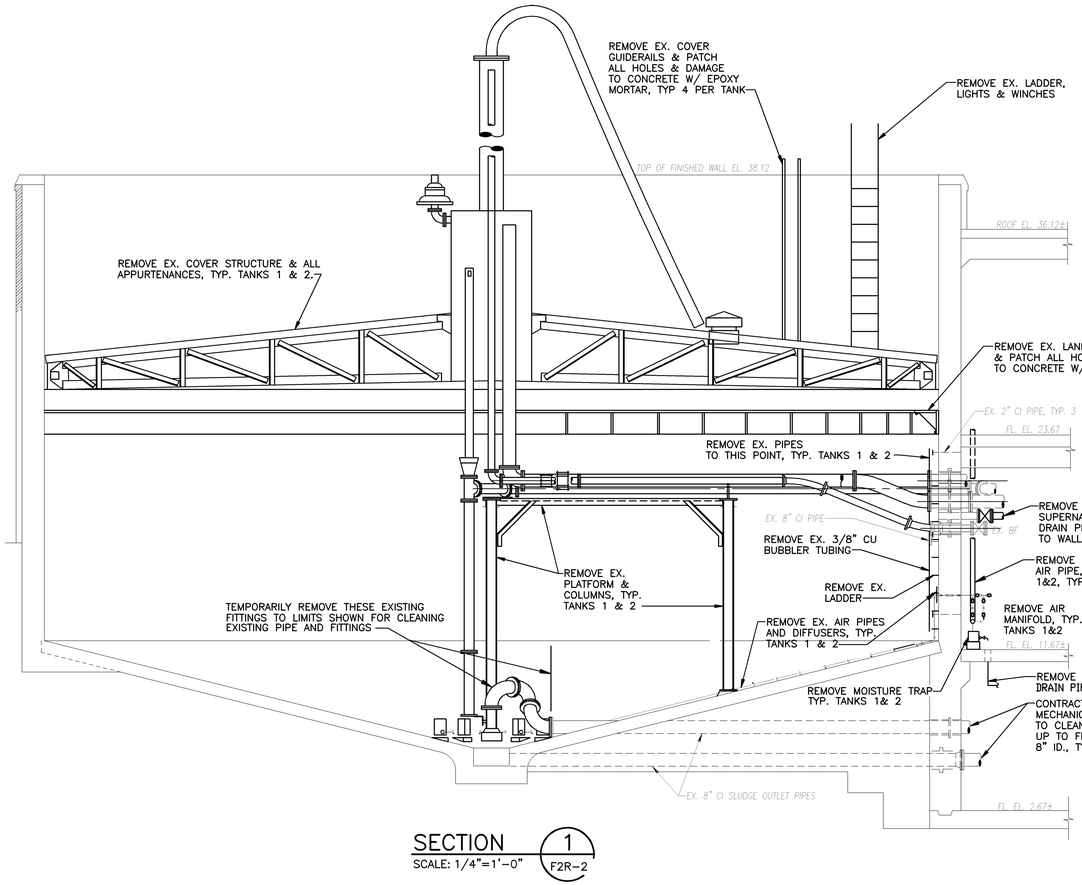

SECTION 1 / F2R-2

SCALE: 1/4"=1'-0"

NOTES:

1. CONTRACTOR TO CLEAN WALLS, BOTTOM OF TANK WITH HIGH PRESSURE WATER CLEANER AND REMOVE ALL CLEANING WATER AND DEBRIS.
2. ALL EXISTING SLUDGE PIPES REMAINING SHALL BE MECHANICALLY REAMED AND CLEANED TO ORIGINAL DIAMETER.

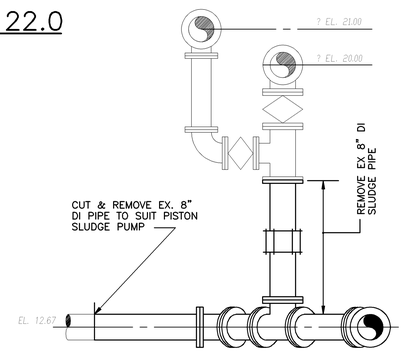

SECTION 2 / F2R-2

SCALE: 1/2"=1'-0"

09/18/91 – 10:21

RECORD DRAWING

NO.	DATE	DRWN	CHK'D	DESCRIPTION
1	9/97	FXP	ASG	RECORD DRAWING

REVISIONS

DESIGNED BY: AMR/TDH
DRAWN BY: BRW/CTC/PLR
CHECKED BY/DATE: TDH 9/91
APPRV'D BY/DATE: TDH 9/91

COMMONWEALTH OF VIRGINIA — THOMAS D. HALL No. 12502 — PROFESSIONAL ENGINEER

CAMP DRESSER & McKEE

THIS DRAWING HAS BEEN REVISED BY HAZEN AND SAWYER, P.C. TO REFLECT MODIFICATIONS MADE DURING CONSTRUCTION

CDM environmental engineers, scientists, planners, & management consultants

ARLINGTON COUNTY, VIRGINIA
WATER POLLUTION CONTROL PLANT
UPGRADE AND EXPANSION- PHASE IIB

SLUDGE STORAGE TANKS
REMOVAL
PLANS & SECTIONS

SCALE NOTE

SCALE BAR SHOWN BELOW IS ONE INCH LONG ON A FULL SIZE DRAWING. WHEN SCALING DRAWINGS, MEASURE BAR TO DETERMINE IF SCALES SHOWN WILL REQUIRE ADJUSTING.

ONE INCH

CONTRACT NO.	90-02-WPC
YEAR	1991
LOCATION CODE	F2
SPECIALTY CODE	R
PROJECT NO.	5002-33
FILE NAME	F2R-0002.DWG
DRAWING NO.	F2R-2
SHEET NO.	133

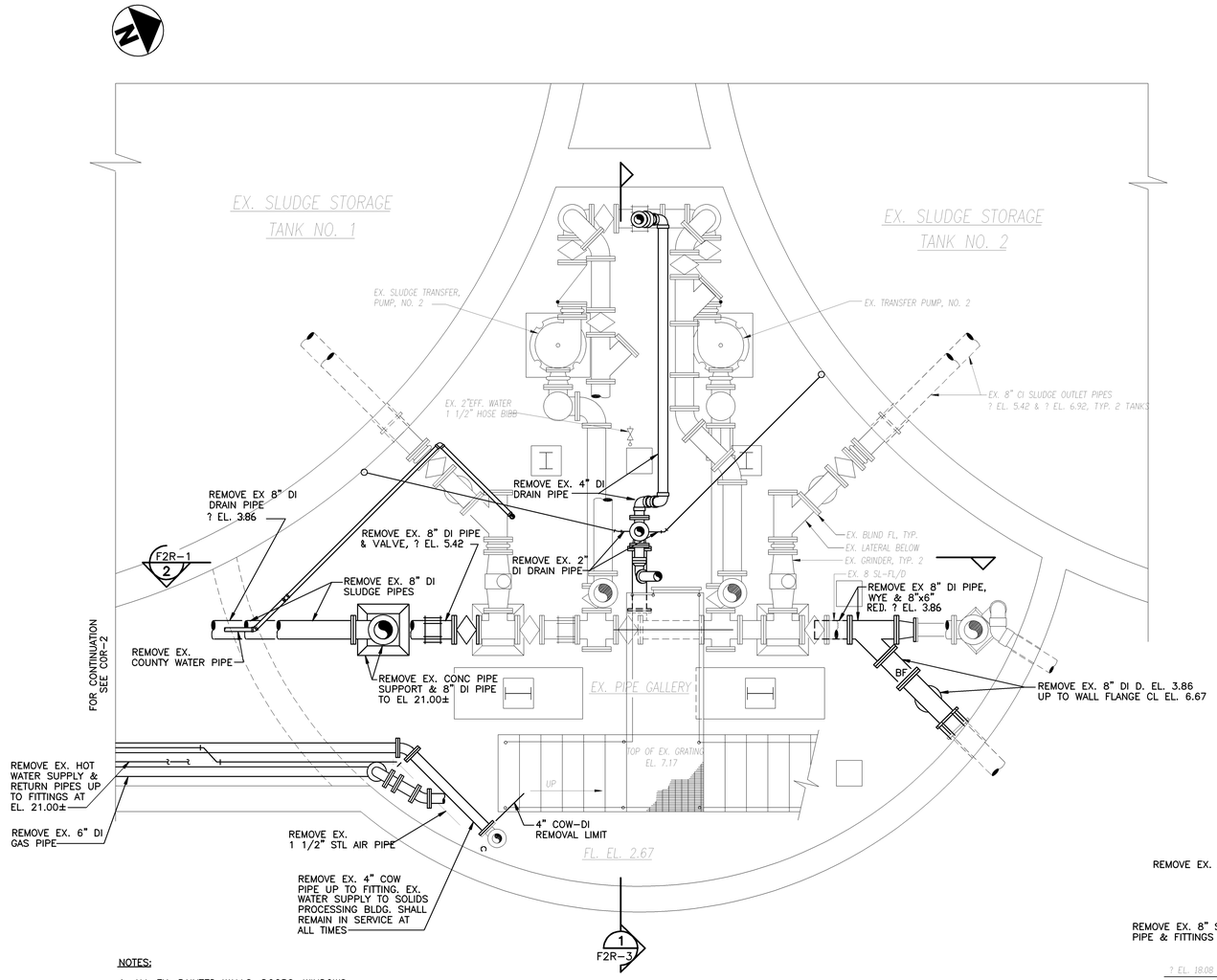

NOTES:

1. ALL EX. PAINTED WALLS, DOORS, WINDOWS, AND OTHER BUILDING ELEMENTS AND ALL REMAINING PIPES, VALVES, EQUIPMENT, STEEL COLUMNS, WALKWAYS, STAIRS, PIPE SUPPORTS, PUMPS, CONDUITS AND OTHER ITEMS WITHIN PIPE GALLERY AT ALL LEVELS SHALL BE PREPARED AND PAINTED IN ACCORDANCE WITH SECTIONS 09865 & 09900.

PLAN AT ELEVATION 10.0

SCALE: 3/8"=1'-0"

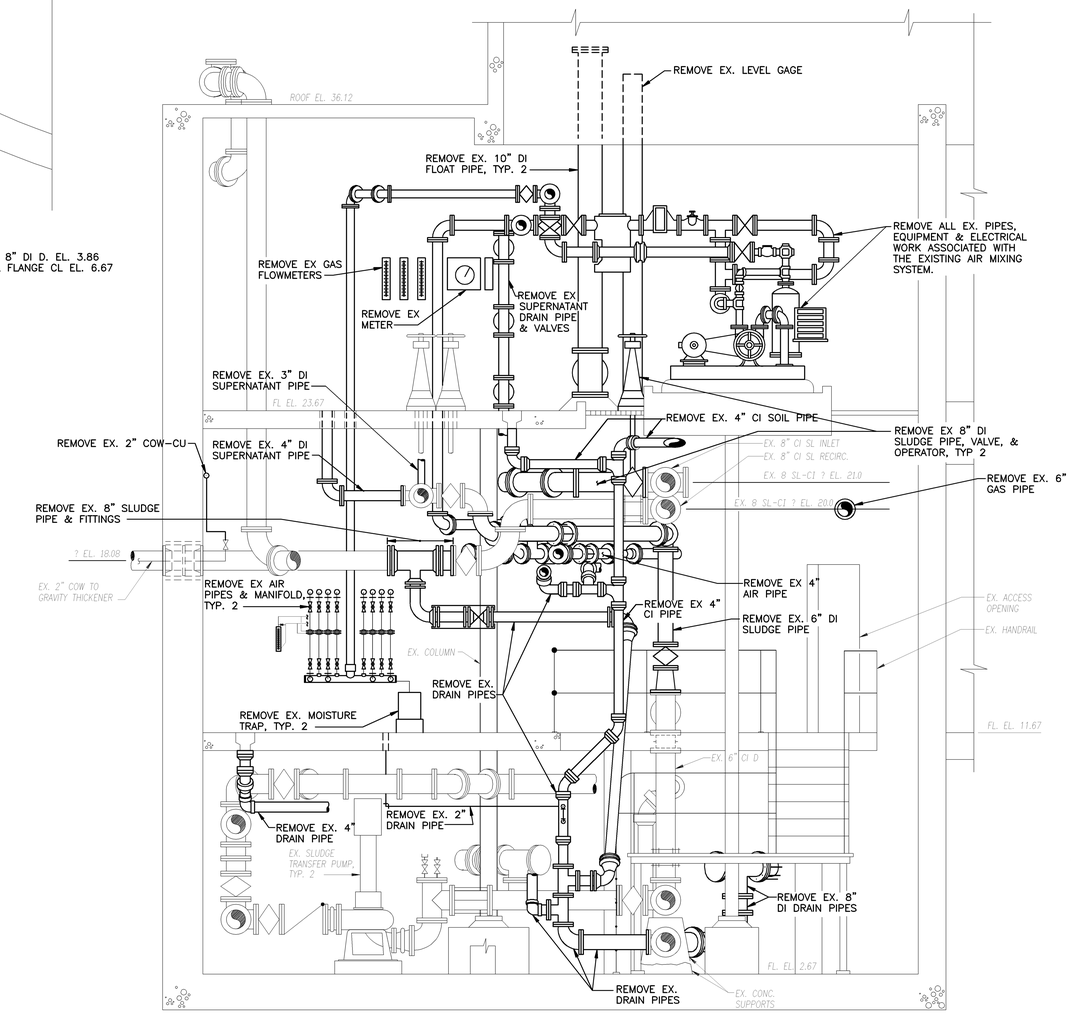

SECTION 1 F2R-2,3

SCALE: 3/8"=1'-0"

NO.	DATE	DRWN	CHK'D	DESCRIPTION
1	9/97	FXP	ASG	RECORD DRAWING

REVISIONS

DESIGNED BY: AMR
DRAWN BY: BRW/CTC/GPB
CHECKED BY/DATE: TDH 9/91
APPRV'D BY/DATE: TDH 9/91

COMMONWEALTH OF VIRGINIA
THOMAS D. HALL
No. 12502
PROFESSIONAL ENGINEER

CAMP DRESSER & McKEE

THIS DRAWING HAS BEEN REVISED BY HAZEN AND SAWYER, P.C. TO REFLECT MODIFICATIONS MADE DURING CONSTRUCTION

environmental engineers, scientists, planners, & management consultants

CDM

ARLINGTON COUNTY, VIRGINIA
WATER POLLUTION CONTROL PLANT
UPGRADE AND EXPANSION- PHASE IIB

SLUDGE STORAGE TANKS
REMOVAL
PLAN & SECTION

SCALE NOTE

SCALE BAR SHOWN BELOW IS ONE INCH LONG ON A FULL SIZE DRAWING. WHEN SCALING DRAWINGS, MEASURE BAR TO DETERMINE IF SCALES SHOWN WILL REQUIRE ADJUSTING.

← ONE INCH →

CONTRACT NO. 90-02-WPC
YEAR 1991
LOCATION CODE F2
SPECIALTY CODE R
PROJECT NO. 5002-33
FILE NAME F2R-0003.DWG
DRAWING NO. F2R-3
SHEET NO. 134

RECORD DRAWING

09/18/91 - 10:07

ROOF PLAN

SCALE: 3/16"=1'-0"

NO.	DATE	DRWN	CHK'D	DESCRIPTION
1	9/97	FXP	ASG	RECORD DRAWING

REVISIONS

DESIGNED BY: TDH,AMR
DRAWN BY: BRW/PLR/CTC
CHECKED BY/DATE: TDH 9/91
APPRV'D BY/DATE: TDH 9/91

COMMONWEALTH OF VIRGINIA
THOMAS D. HALL
No. 12502
PROFESSIONAL ENGINEER

CAMP DRESSER & McKEE

THIS DRAWING HAS BEEN REVISED BY HALEEN AND SAWTEK, P.C. TO REFLECT MODIFICATIONS MADE DURING CONSTRUCTION

CDM
environmental engineers, scientists, planners, & management consultants

ARLINGTON COUNTY, VIRGINIA
WATER POLLUTION CONTROL PLANT
UPGRADE AND EXPANSION- PHASE IIB

SLUDGE STORAGE TANKS
TOP PLAN

SCALE NOTE

SCALE BAR SHOWN BELOW IS ONE INCH LONG ON A FULL SIZE DRAWING. WHEN SCALING DRAWINGS, MEASURE BAR TO DETERMINE IF SCALES SHOWN WILL REQUIRE ADJUSTING.

ONE INCH

CONTRACT NO. 90-02-WPC
YEAR 1991
LOCATION CODE F2
SPECIALTY CODE M
PROJECT NO. 5002-33
FILE NAME F2M-0001.DWG
DRAWING NO. F2M-1
SHEET NO. 135

RECORD DRAWING

01/22/92 - 11:46

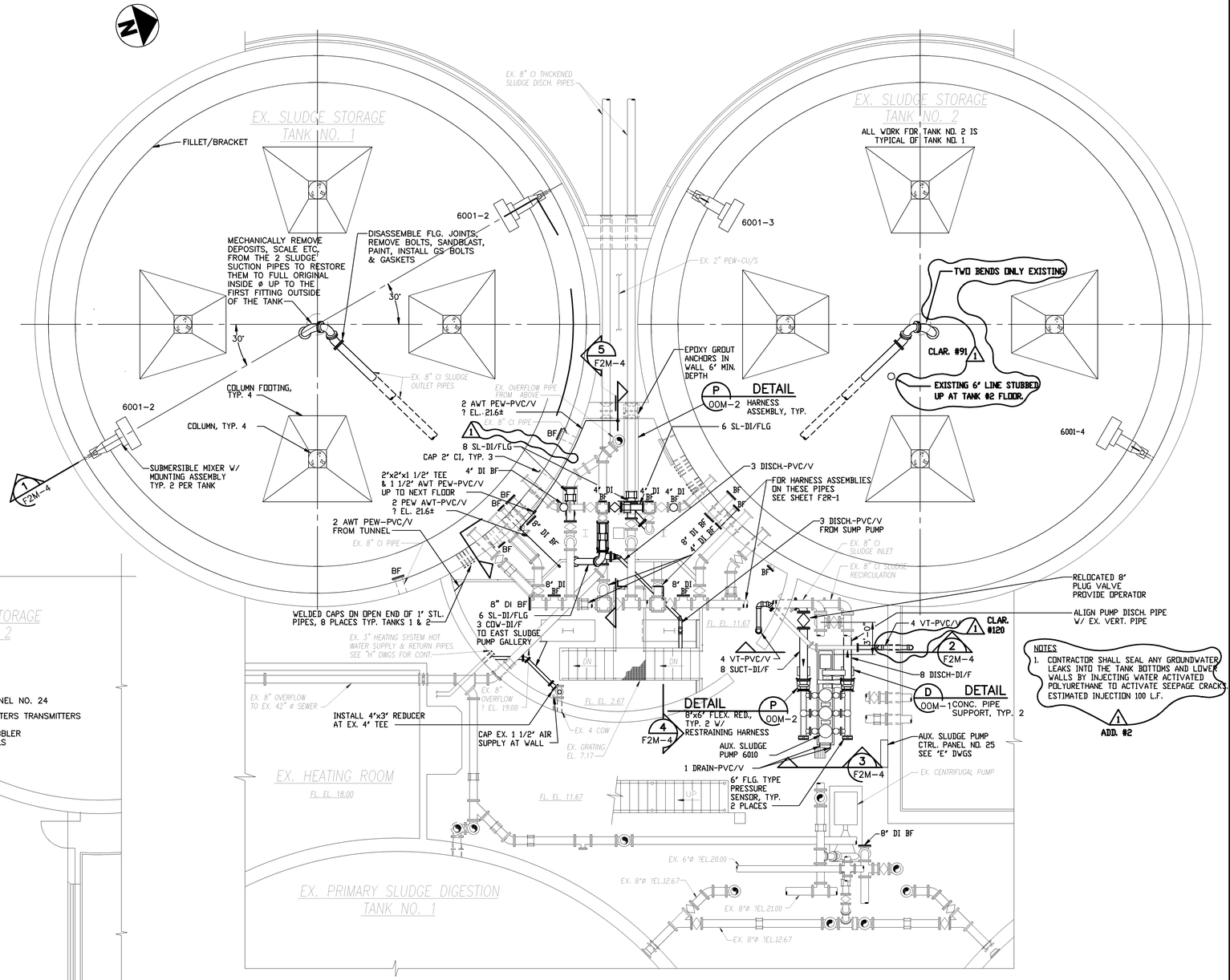

PLAN AT ELEVATION 22.0

SCALE: 3/16"=1'-0"

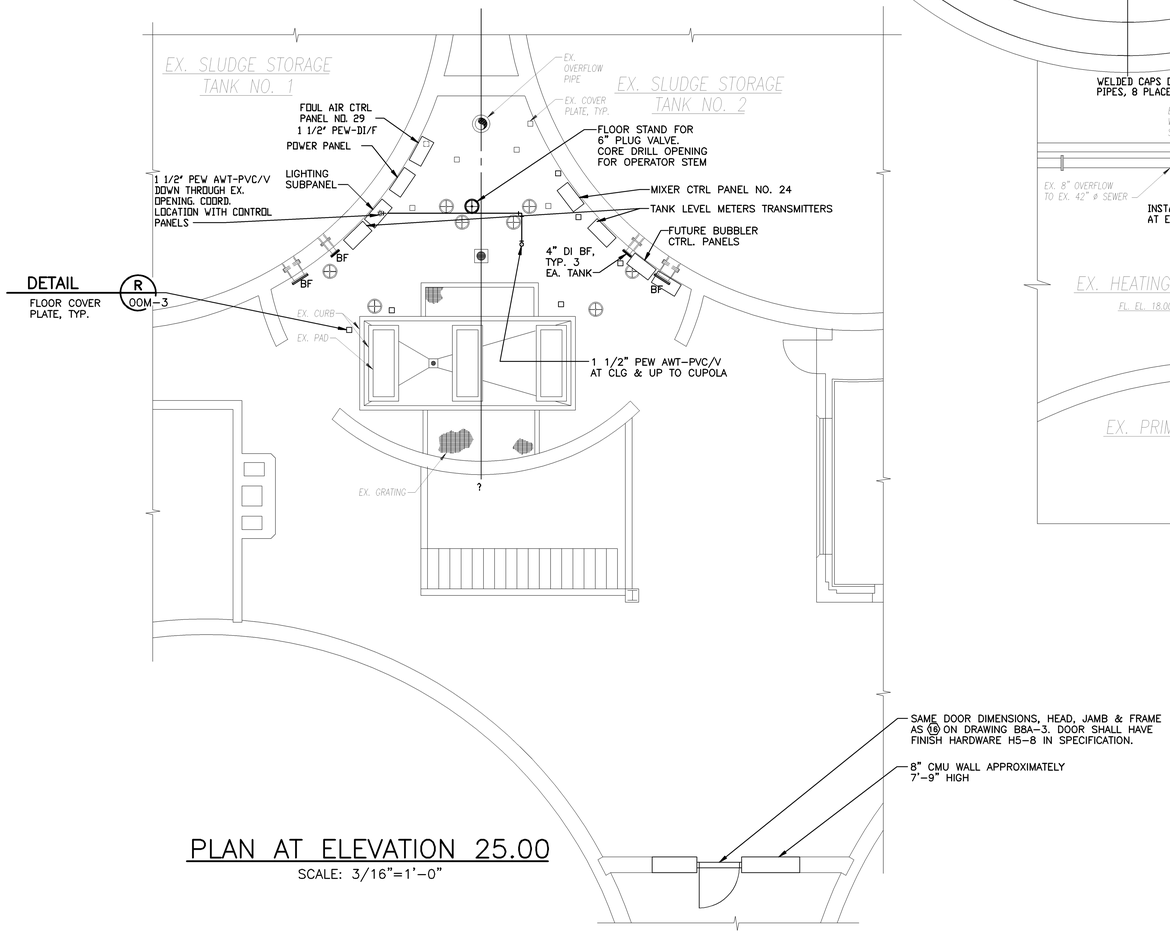

PLAN AT ELEVATION 25.00

SCALE: 3/16"=1'-0"

NOTES

1. CONTRACTOR SHALL SEAL ANY GROUNDWATER LEAKS INTO THE TANK BOTTOMS AND LOWER WALLS BY INJECTING WATER ACTIVATED POLYURETHANE TO ACTIVATE SEEPAGE CRACKS. ESTIMATED INJECTION 100 L.F.

1 ADD. #2

NO.	DATE	DRWN	CHK'D	DESCRIPTION
1	9/97	FXP	ASG	RECORD DRAWING

REVISIONS

DESIGNED BY: TDH,AMR
DRAWN BY: BRW/PLR
CHECKED BY/DATE: TDH 9/91
APPRV'D BY/DATE: TDH 9/91

COMMONWEALTH OF VIRGINIA — THOMAS D. HALL No. 12502 — PROFESSIONAL ENGINEER

CAMP DRESSER & McKEE

PER DRAWING HAS BEEN REVISED BY HAZEN AND SAWYER, P.C. TO REFLECT MODIFICATIONS MADE DURING CONSTRUCTION

environmental engineers, scientists, planners, & management consultants

CDM

ARLINGTON COUNTY, VIRGINIA
WATER POLLUTION CONTROL PLANT
UPGRADE AND EXPANSION- PHASE IIB

SLUDGE STORAGE TANKS
UPPER LEVEL PLAN

SCALE NOTE

SCALE BAR SHOWN BELOW IS ONE INCH LONG ON A FULL SIZE DRAWING. WHEN SCALING DRAWINGS, MEASURE BAR TO DETERMINE IF SCALES SHOWN WILL REQUIRE ADJUSTING.

ONE INCH

CONTRACT NO. 90-02-WPC
YEAR 1991
LOCATION CODE F2
SPECIALTY CODE M
PROJECT NO. 5002-33
FILE NAME F2M-0002.DWG
DRAWING NO. F2M-2
SHEET NO. 136

RECORD DRAWING

09/18/91 - 11:23

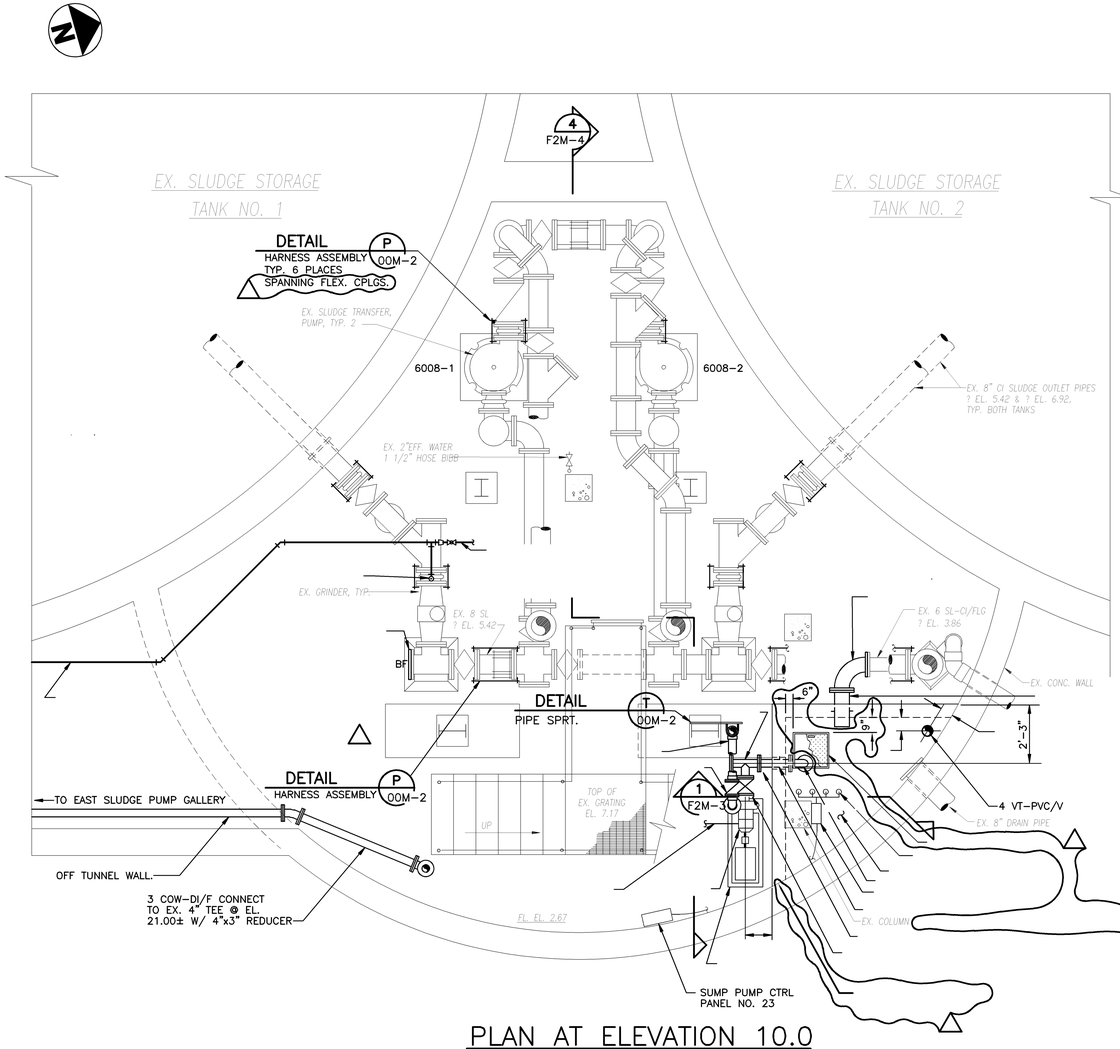

PLAN AT ELEVATION 10.0

SCALE: 3/8"=1'-0"

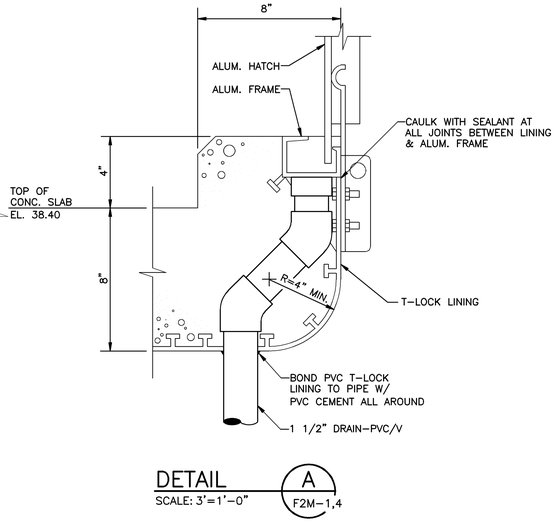

DETAIL A F2M-1,4
SCALE: 3'=1'-0"

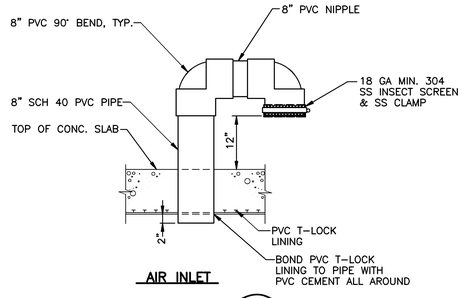

AIR INLET

DETAIL B F2M-1,4
SCALE: 3/4"=1'-0"

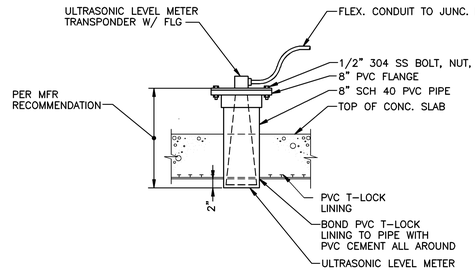

DETAIL C F2M-4
SCALE: 3/4"=1'-0"

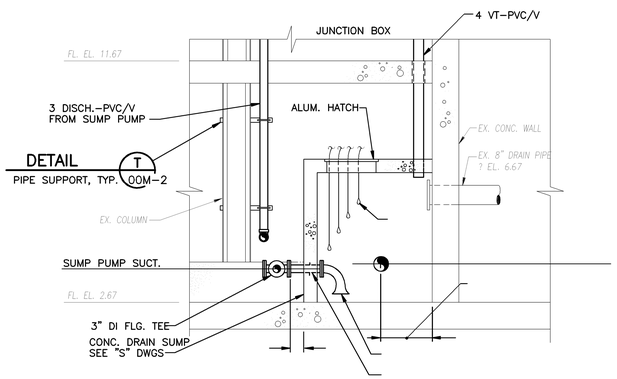

SECTION 1 F2M-3
SCALE: 3/8"=1'-0"

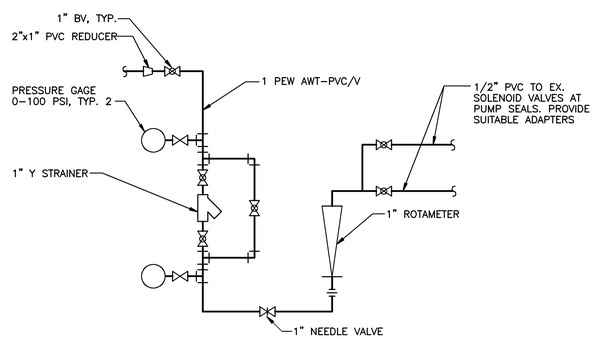

SEAL WATER SCHEMATIC

NTS

NO.	DATE	DRWN	CHK'D	DESCRIPTION
1	9/97	FXP	ASG	RECORD DRAWING

REVISIONS

DESIGNED BY: AMR
DRAWN BY: BRW/CTC
CHECKED BY/DATE: TDH 9/91
APPRV'D BY/DATE: TDH 9/91

COMMONWEALTH OF VIRGINIA THOMAS D. HALL No. 12502 PROFESSIONAL ENGINEER

CAMP DRESSER & McKEE
HAZEN AND SAWYER, P.C.
environmental engineers, scientists, planners, & management consultants
CDM

ARLINGTON COUNTY, VIRGINIA
WATER POLLUTION CONTROL PLANT
UPGRADE AND EXPANSION- PHASE IIB

SLUDGE STORAGE TANKS
LOWER LEVEL PLAN, SECTION & DETAILS

SCALE NOTE

SCALE BAR SHOWN BELOW IS ONE INCH LONG ON A FULL SIZE DRAWING. WHEN SCALING DRAWINGS, MEASURE BAR TO DETERMINE IF SCALES SHOWN WILL REQUIRE ADJUSTING.

ONE INCH

CONTRACT NO. 90-02-WPC
YEAR 1991
LOCATION CODE F2
SPECIALTY CODE M
PROJECT NO. 5002-33
FILE NAME F2M-0003
DRAWING NO. F2M-3
SHEET NO. 137

RECORD DRAWING

09/18/91 - 10:59

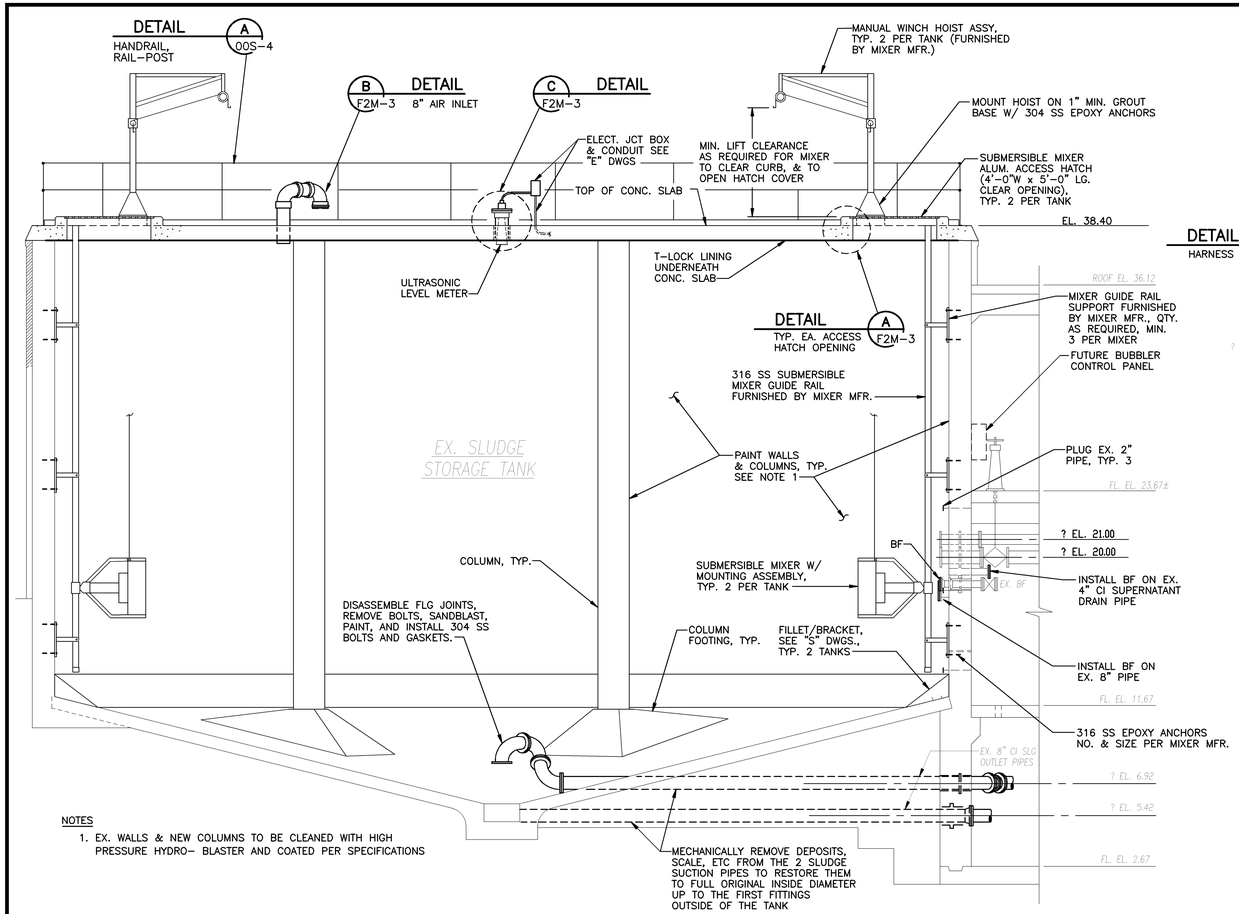

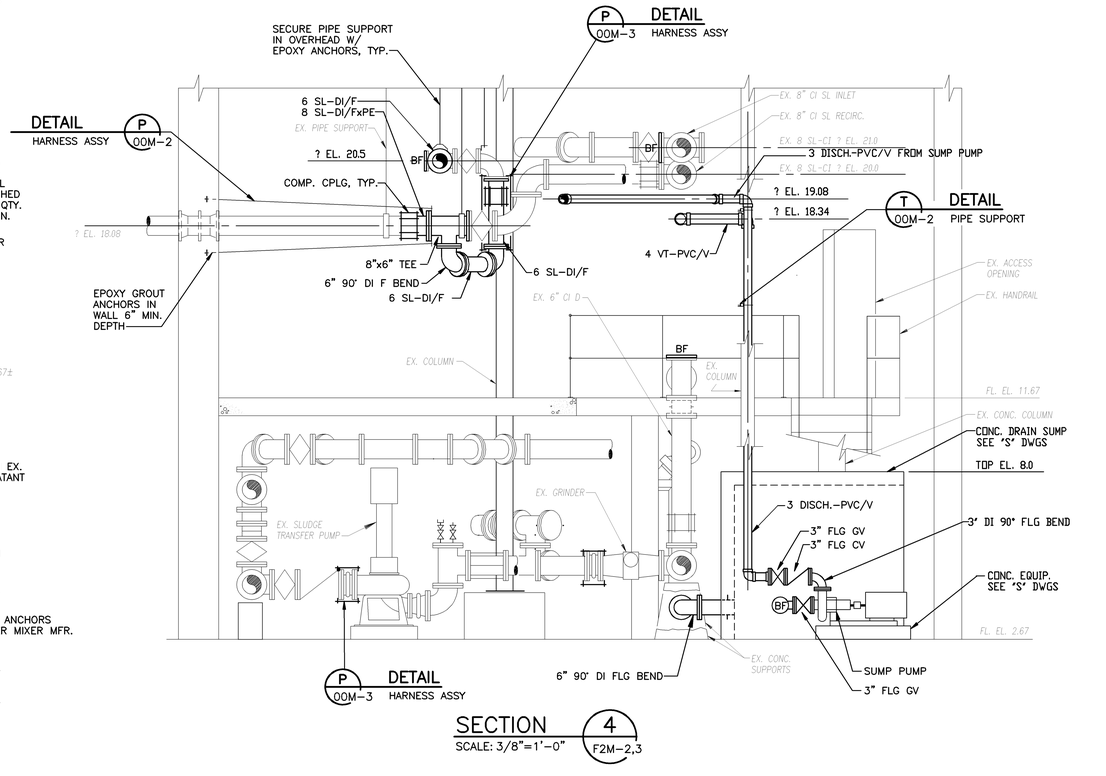

SECTION 4 F2M-2,3
SCALE: 3/8"=1'-0"

SECTION 1 F2M-1,2
SCALE: 1/4"=1'-0"

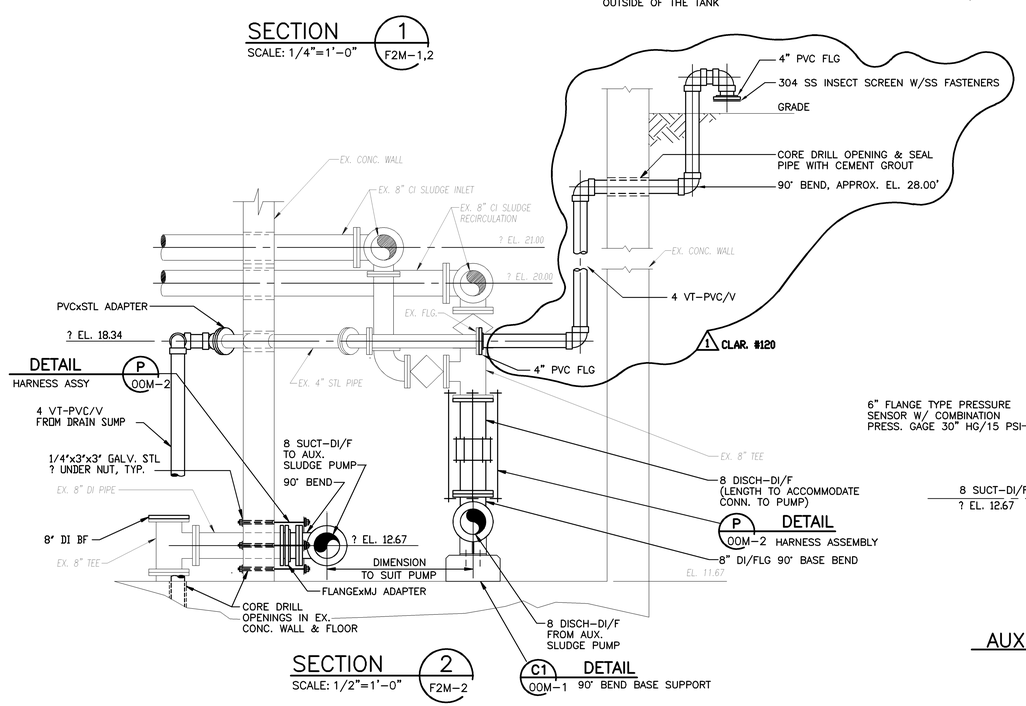

SECTION 2 F2M-2
SCALE: 1/2"=1'-0"

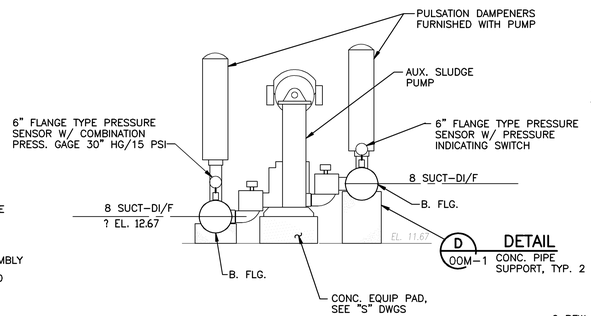

AUXILIARY SLUDGE PUMP & PAD

SECTION 3 F2M-2
SCALE: 1/2"=1'-0"

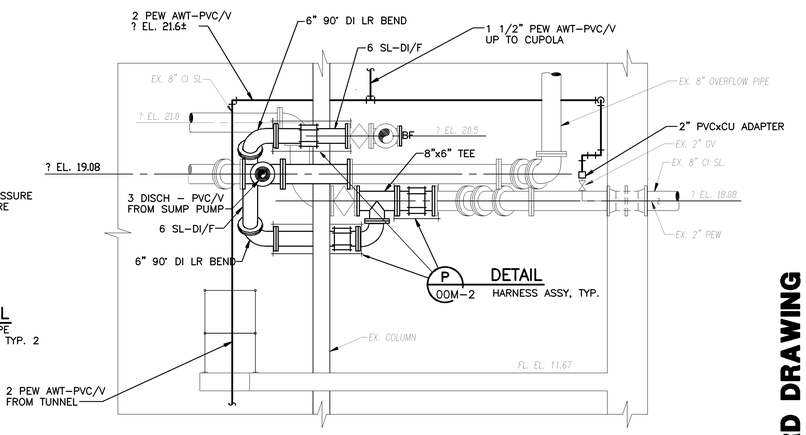

SECTION 5 F2M-2
SCALE: 3/8"=1'-0"

NO.	DATE	DRWN	CHK'D	DESCRIPTION
1	9/97	FXP	ASG	RECORD DRAWING

REVISIONS

DESIGNED BY: TDH,AMR
DRAWN BY: BRW/PLR/CTC
CHECKED BY/DATE: TDH 9/91
APPRV'D BY/DATE: TDH 9/91

COMMONWEALTH OF VIRGINIA THOMAS D. HALL No. 12502 PROFESSIONAL ENGINEER

CAMP DRESSER & McKEE

THIS DRAWING HAS BEEN REVISED BY HAZEN AND SAWYER, P.C. TO REFLECT MODIFICATIONS MADE DURING CONSTRUCTION

CDM environmental engineers, scientists, planners, & management consultants

ARLINGTON COUNTY, VIRGINIA
WATER POLLUTION CONTROL PLANT
UPGRADE AND EXPANSION- PHASE IIB

SLUDGE STORAGE TANKS
SECTIONS

SCALE NOTE
SCALE BAR SHOWN BELOW IS ONE INCH LONG ON A FULL SIZE DRAWING. WHEN SCALING DRAWINGS, MEASURE BAR TO DETERMINE IF SCALES SHOWN WILL REQUIRE ADJUSTING.
ONE INCH

CONTRACT NO. 90-02-WPC
YEAR 1991
LOCATION CODE F2
SPECIALTY CODE M
PROJECT NO. 5002-33
FILE NAME F2M-0004.DWG
DRAWING NO. F2M-4
SHEET NO. 138

RECORD DRAWING

DATE: 01/24/92 - 10:02

ISSUED FOR REVIEW ONLY AND NOT FOR CONSTRUCTION OR BIDDING PURPOSES

01/24/92 - 10:02

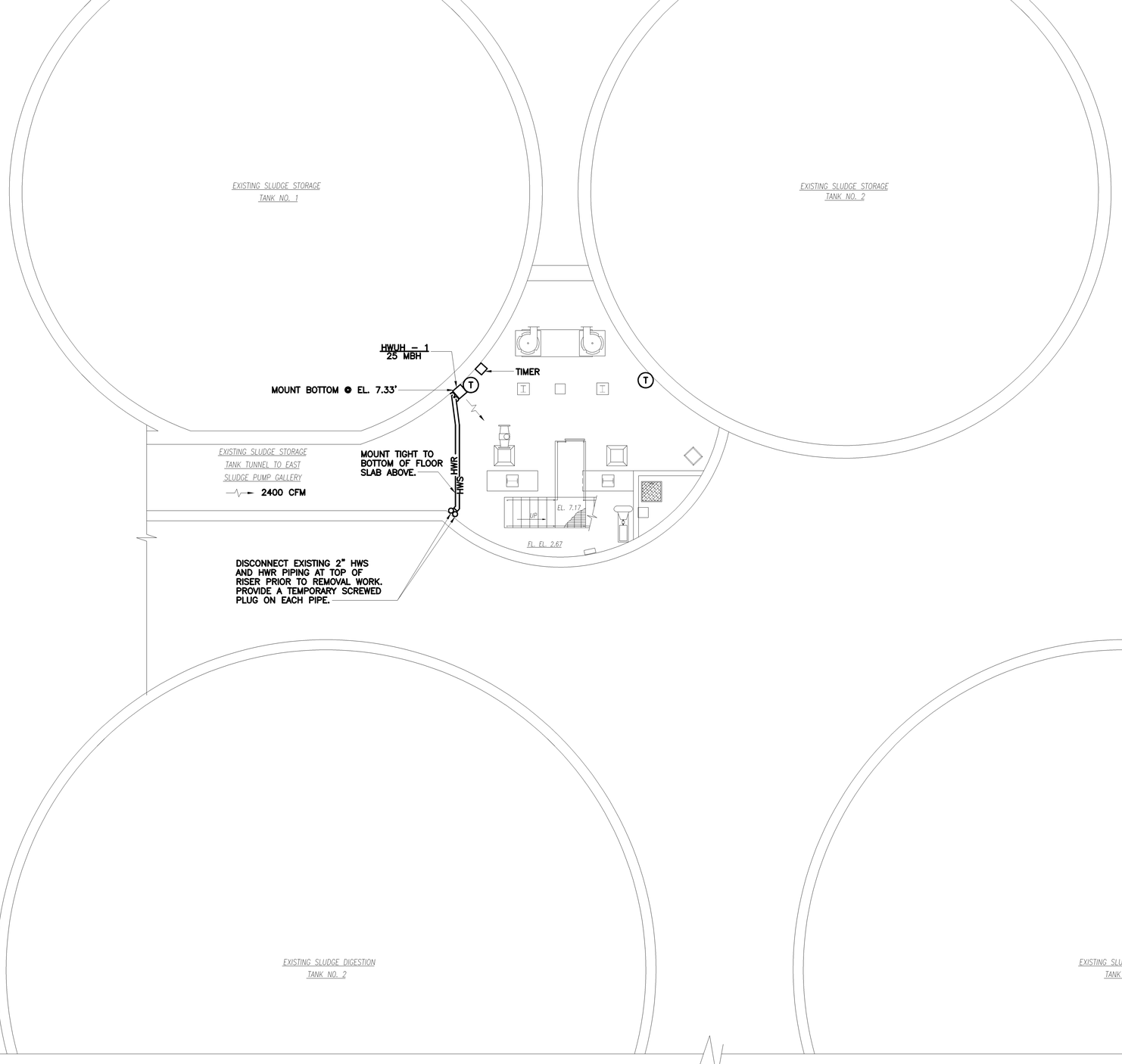

PLAN AT ELEVATION 10.0

SCALE: 3/16"=1'-0"

NO.	DATE	DRWN	CHK'D	DESCRIPTION
1	9/97	FXP	ASG	RECORD DRAWING

REVISIONS

DESIGNED BY: WRH
DRAWN BY: RMM,SFP
CHECKED BY/DATE: WRH/9-91
APPRV'D BY/DATE: WRH/9-91

CAMP DRESSER & McKEE

THIS DRAWING HAS BEEN REVISED BY HAZEN AND SAWYER, P.C. TO REFLECT MODIFICATIONS MADE DURING CONSTRUCTION

environmental engineers, scientists, planners, & management consultants

CDM

ARLINGTON COUNTY, VIRGINIA
WATER POLLUTION CONTROL PLANT
UPGRADE AND EXPANSION- PHASE IIB

SLUDGE STORAGE TANKS
HVAC
SUBLEVEL PLAN

RECORD DRAWING

SCALE NOTE

SCALE BAR SHOWN BELOW IS ONE INCH LONG ON A FULL SIZE DRAWING. WHEN SCALING DRAWINGS, MEASURE BAR TO DETERMINE IF SCALES SHOWN WILL REQUIRE ADJUSTING.

← ONE INCH →

CONTRACT NO.
000000000

YEAR 1991

LOCATION CODE	SPECIALTY CODE
F2	H

PROJECT NO.
5002-33

FILE NAME
F2H1.DWG

DRAWING NO.
F2H-1

SHEET NO. 139

C.E. BAILEY & ASSOCIATES, INC.
CONSULTING ENGINEERS
ORLANDO, CLEARWATER & FORT LAUDERDALE, FLORIDA

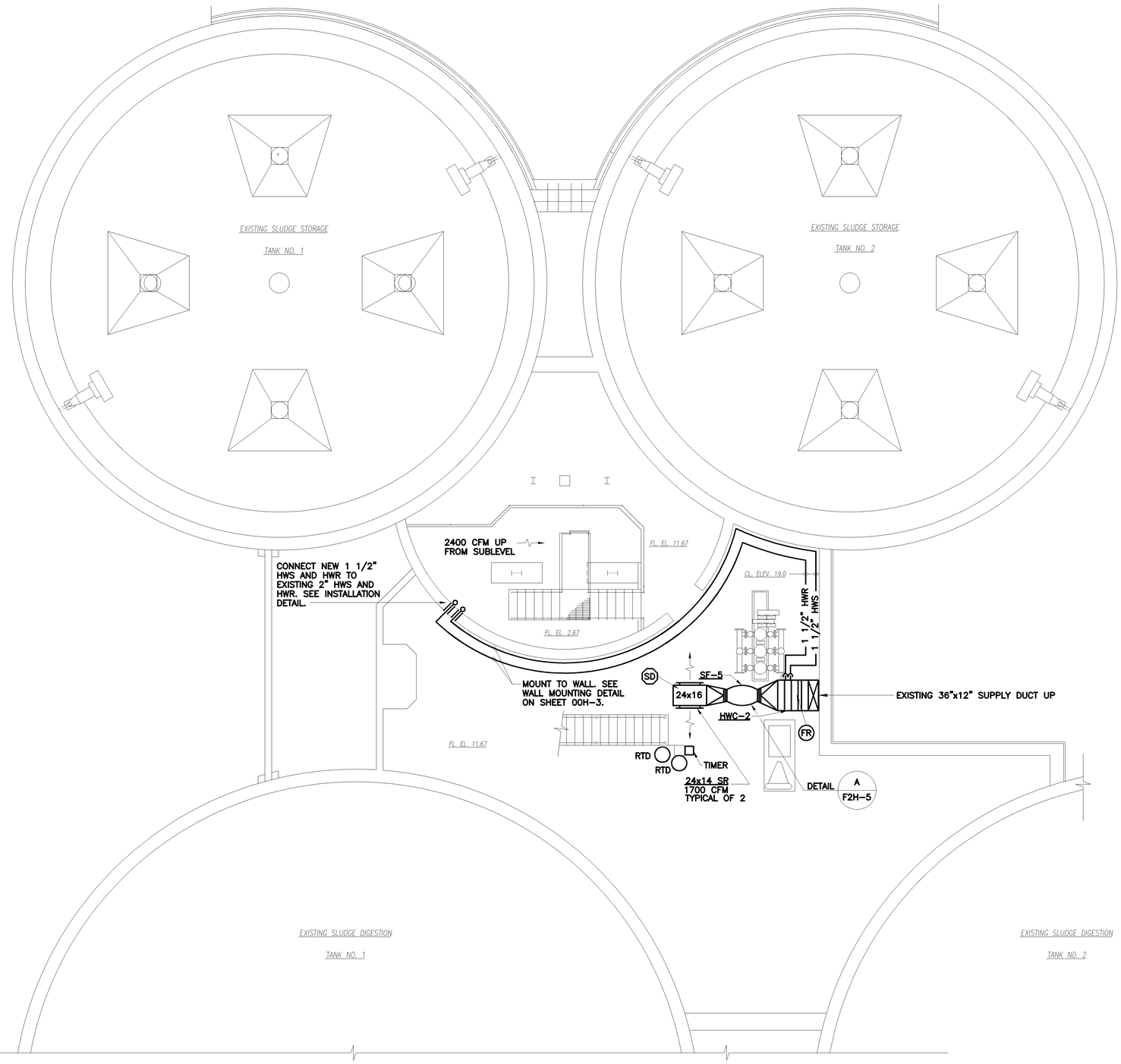

PLAN AT ELEVATION 22.0

SCALE: 3/16"=1'-0"

DESIGNED BY: WRH
DRAWN BY: RMM,SFP
CHECKED BY/DATE: WRH/9-91
APPRV'D BY/DATE: WRH/9-91

NO.	DATE	DRWN	CHK'D	DESCRIPTION
1	9/97	FXP	ASG	RECORD DRAWING

REVISIONS

CAMP DRESSER & McKEE

THIS DRAWING HAS BEEN REVISED BY HAZEN AND SAWYER, P.C. TO REFLECT MODIFICATIONS MADE DURING CONSTRUCTION

environmental engineers, scientists, planners, & management consultants CDM

ARLINGTON COUNTY, VIRGINIA
WATER POLLUTION CONTROL PLANT
UPGRADE AND EXPANSION- PHASE IIB

SLUDGE STORAGE TANKS
HVAC
LOWER LEVEL PLAN

RECORD DRAWING

SCALE NOTE

SCALE BAR SHOWN BELOW IS ONE INCH LONG ON A FULL SIZE DRAWING. WHEN SCALING DRAWINGS, MEASURE BAR TO DETERMINE IF SCALES SHOWN WILL REQUIRE ADJUSTING.

ONE INCH

CONTRACT NO. 000000000
YEAR 1991

LOCATION CODE	SPECIALTY CODE
F2	H

PROJECT NO. 5002-33
FILE NAME F2H2.DWG
DRAWING NO. F2H-2
SHEET NO. 140

C.E. BAILEY & ASSOCIATES, INC.
CONSULTING ENGINEERS
ORLANDO, CLEARWATER & FORT LAUDERDALE, FLORIDA

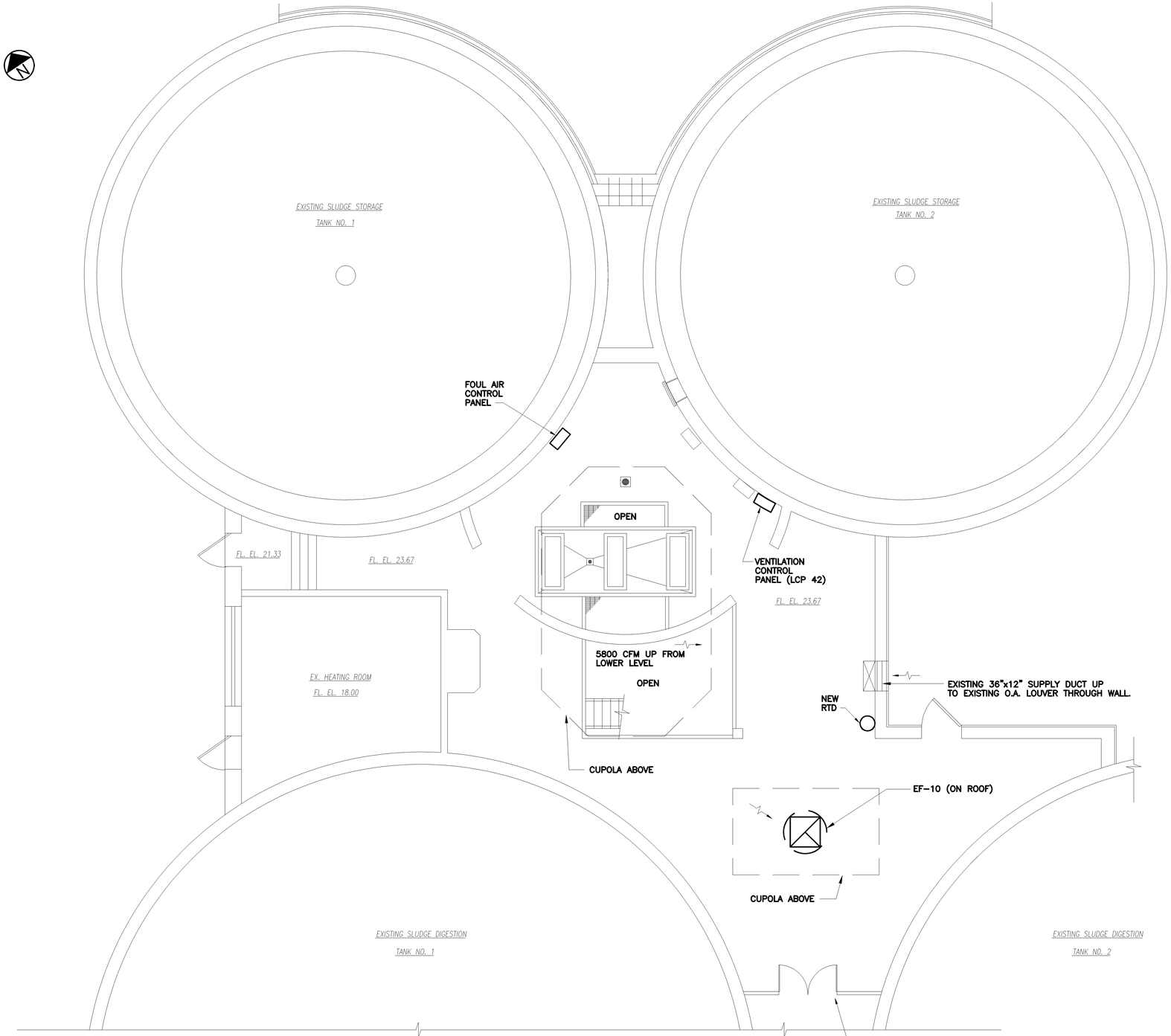

PLAN AT ELEVATION 23.67

SCALE: 3/16"=1'-0"

NO.	DATE	DRWN	CHK'D	REVISIONS DESCRIPTION
1	9/97	FXP	ASG	RECORD DRAWING

DESIGNED BY: WRH
DRAWN BY: RMM,SFP
CHECKED BY/DATE: WRH/9-91
APPRV'D BY/DATE: WRH/9-91

CAMP DRESSER & McKEE

THIS DRAWING HAS BEEN REVISED BY HAZEN AND SAWYER, P.C. TO REFLECT MODIFICATIONS MADE DURING CONSTRUCTION

environmental engineers, scientists, planners, & management consultants CDM

ARLINGTON COUNTY, VIRGINIA
WATER POLLUTION CONTROL PLANT
UPGRADE AND EXPANSION- PHASE IIIB

SLUDGE STORAGE TANKS
HVAC
UPPER LEVEL PLAN

RECORD DRAWING

SCALE NOTE

SCALE BAR SHOWN BELOW IS ONE INCH LONG ON A FULL SIZE DRAWING. WHEN SCALING DRAWINGS, MEASURE BAR TO DETERMINE IF SCALES SHOWN WILL REQUIRE ADJUSTING.

ONE INCH

CONTRACT NO. 000000000
YEAR 1991
LOCATION CODE F2
SPECIALTY CODE H
PROJECT NO. 5002-33
FILE NAME F2H3.DWG
DRAWING NO. F2H-3
SHEET NO. 141

C.E. BAILEY & ASSOCIATES, INC.
CONSULTING ENGINEERS
ORLANDO, CLEARWATER & FORT LAUDERDALE, FLORIDA

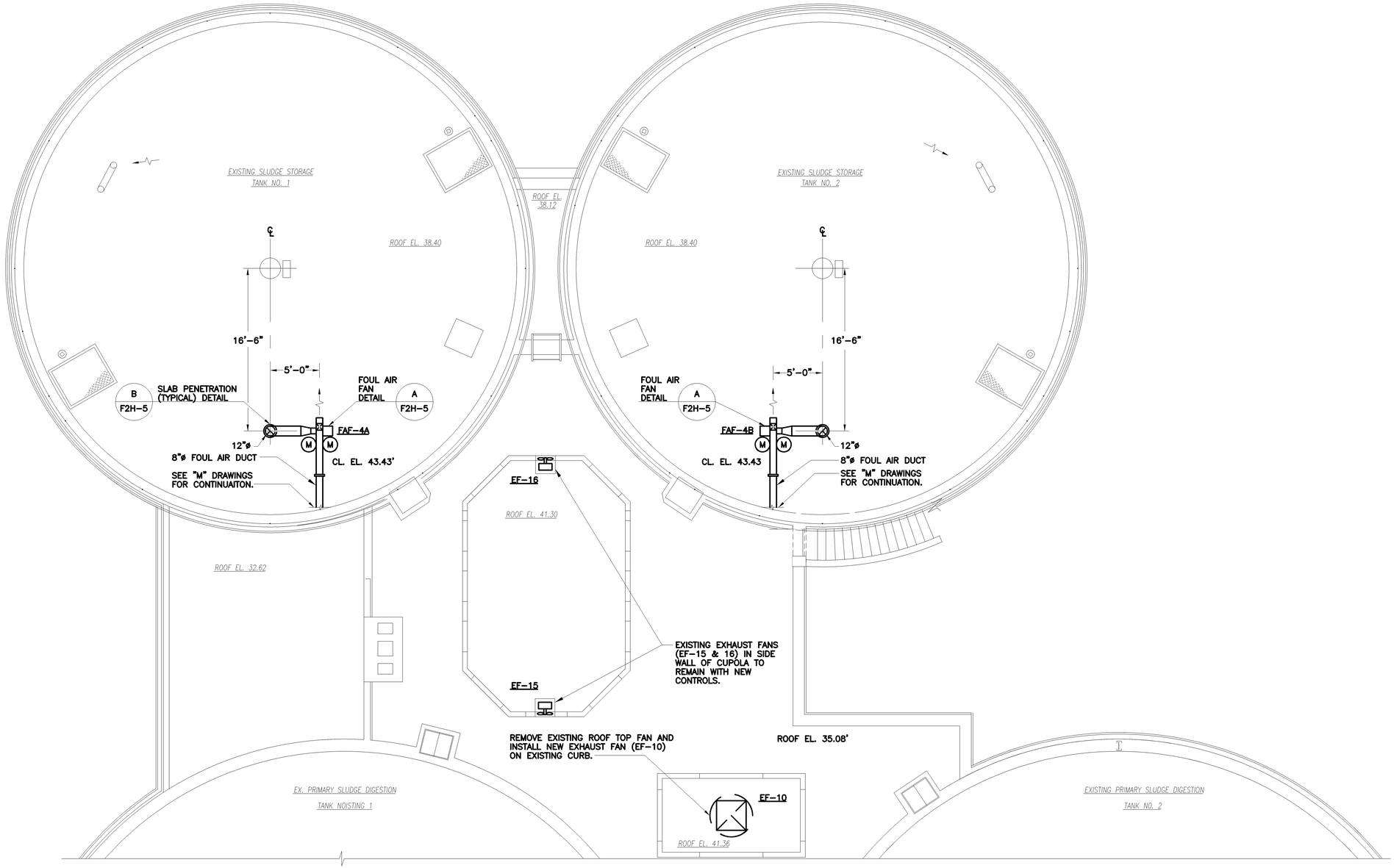

ROOF PLAN

SCALE: 3/16"=1'–0"

RECORD DRAWING

NO.	DATE	DRWN	CHK'D	DESCRIPTION
				REVISIONS
1	9/97	FXP	ASG	RECORD DRAWING

DESIGNED BY: WRH
DRAWN BY: RMM,SFP
CHECKED BY/DATE: WRH/9–91
APPRV'D BY/DATE: WRH/9–91

CAMP DRESSER & McKEE

THIS DRAWING HAS BEEN REVISED BY HAZEN AND SAWYER, P.C. TO REFLECT MODIFICATIONS MADE DURING CONSTRUCTION

environmental engineers, scientists, planners, & management consultants CDM

ARLINGTON COUNTY, VIRGINIA
WATER POLLUTION CONTROL PLANT
UPGRADE AND EXPANSION- PHASE IIB

SLUDGE STORAGE TANKS
HVAC
TOP PLAN

SCALE NOTE

SCALE BAR SHOWN BELOW IS ONE INCH LONG ON A FULL SIZE DRAWING. WHEN SCALING DRAWINGS, MEASURE BAR TO DETERMINE IF SCALES SHOWN WILL REQUIRE ADJUSTING.

ONE INCH

CONTRACT NO. 000000000
YEAR 1991
LOCATION CODE F2
SPECIALTY CODE H
PROJECT NO. 5002–33
FILE NAME F2H4.DWG
DRAWING NO. F2H–4
SHEET NO. 142

C.E. BAILEY & ASSOCIATES, INC.
CONSULTING ENGINEERS
ORLANDO, CLEARWATER & FORT LAUDERDALE, FLORIDA

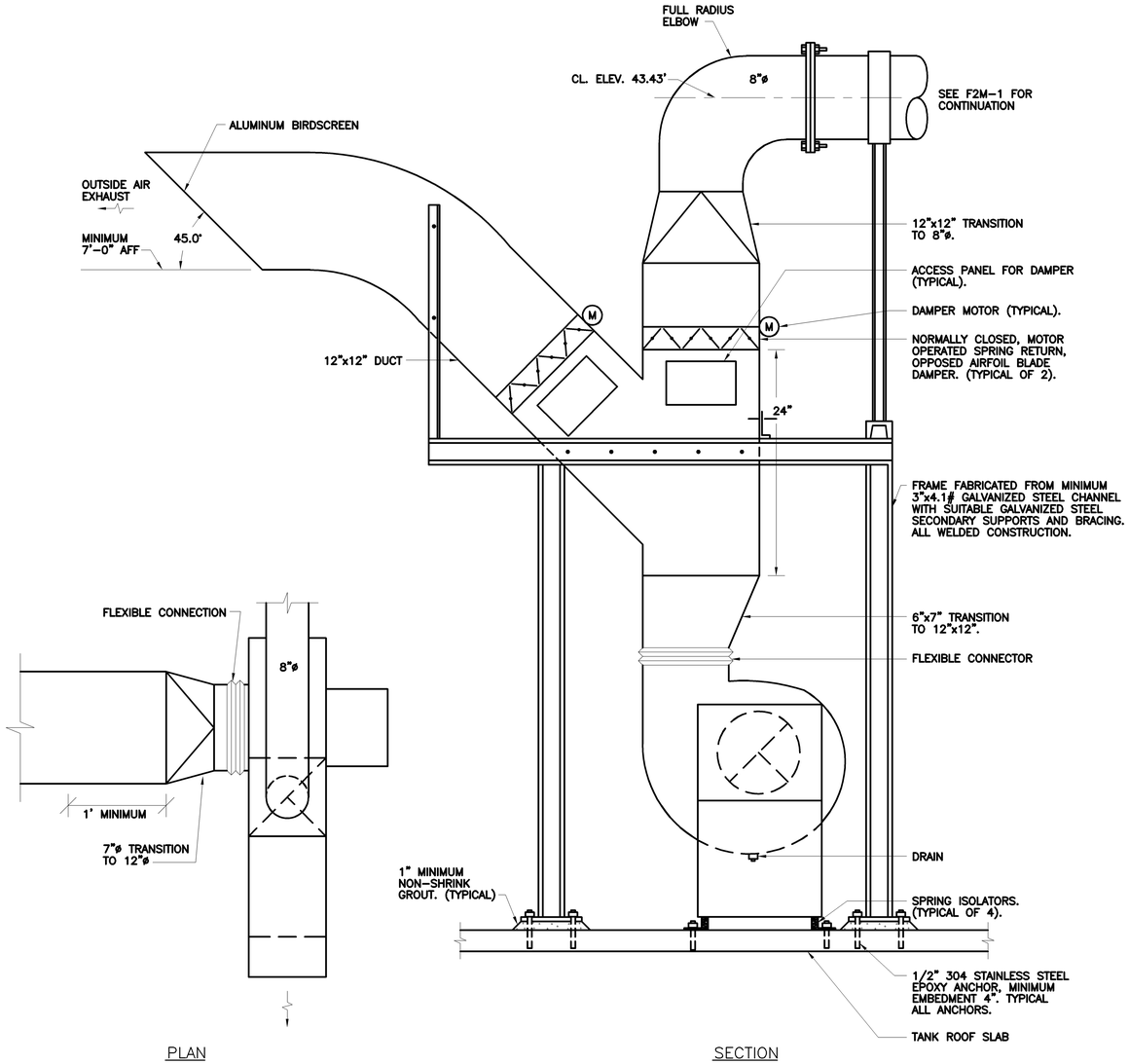

FAF-4 FAN DETAIL (A / F2H-4)
N.T.S.

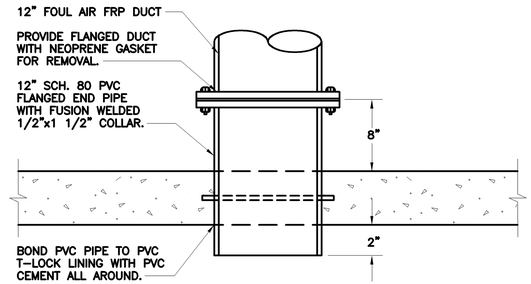

INLET PIPE PENETRATION DETAIL (B / F2H-4)
N.T.S.

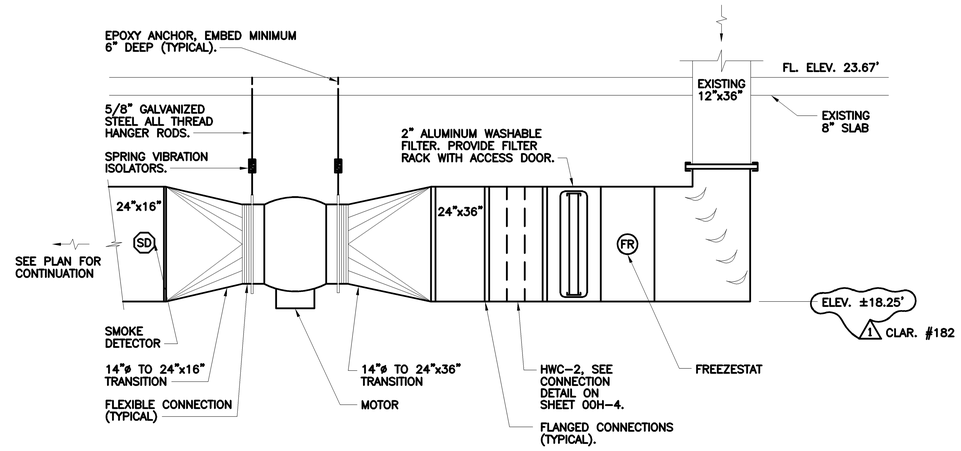

SF-5 IN-LINE FAN DETAIL (A / F2H-2)
N.T.S.

NO.	DATE	DRWN	CHK'D	DESCRIPTION
				REVISIONS
1	9/97	FXP	ASG	RECORD DRAWING

DESIGNED BY: WRH
DRAWN BY: SFP
CHECKED BY/DATE: WRH/9-91
APPR'D BY/DATE: WRH/9-91

CAMP DRESSER & McKEE

THIS DRAWING HAS BEEN REVISED BY HAZEN AND SAWYER, P.C. TO REFLECT MODIFICATIONS MADE DURING CONSTRUCTION

environmental engineers, scientists, planners, & management consultants CDM

ARLINGTON COUNTY, VIRGINIA
WATER POLLUTION CONTROL PLANT
UPGRADE AND EXPANSION- PHASE IIB

SLUDGE STORAGE TANKS
HVAC DETAILS

RECORD DRAWING

SCALE NOTE
SCALE BAR SHOWN BELOW IS ONE INCH LONG ON A FULL SIZE DRAWING. WHEN SCALING DRAWINGS, MEASURE BAR TO DETERMINE IF SCALES SHOWN WILL REQUIRE ADJUSTING.
← ONE INCH →

CONTRACT NO. 000000000
YEAR 1991
LOCATION CODE F2
SPECIALTY CODE H
PROJECT NO. 5002-33
FILE NAME F2H5.DWG
DRAWING NO. F2H-5
SHEET NO. 143

C.E. BAILEY & ASSOCIATES, INC.
CONSULTING ENGINEERS
ORLANDO, CLEARWATER & FORT LAUDERDALE, FLORIDA

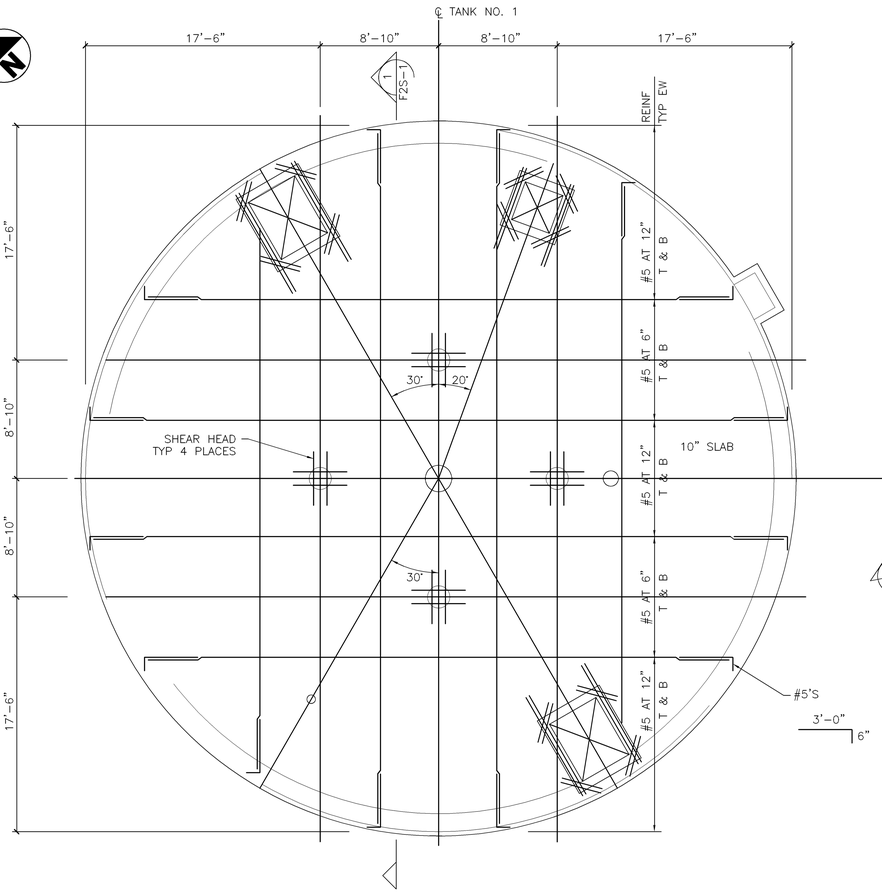

TOP SLAB PLAN

3/16"=1'-0"

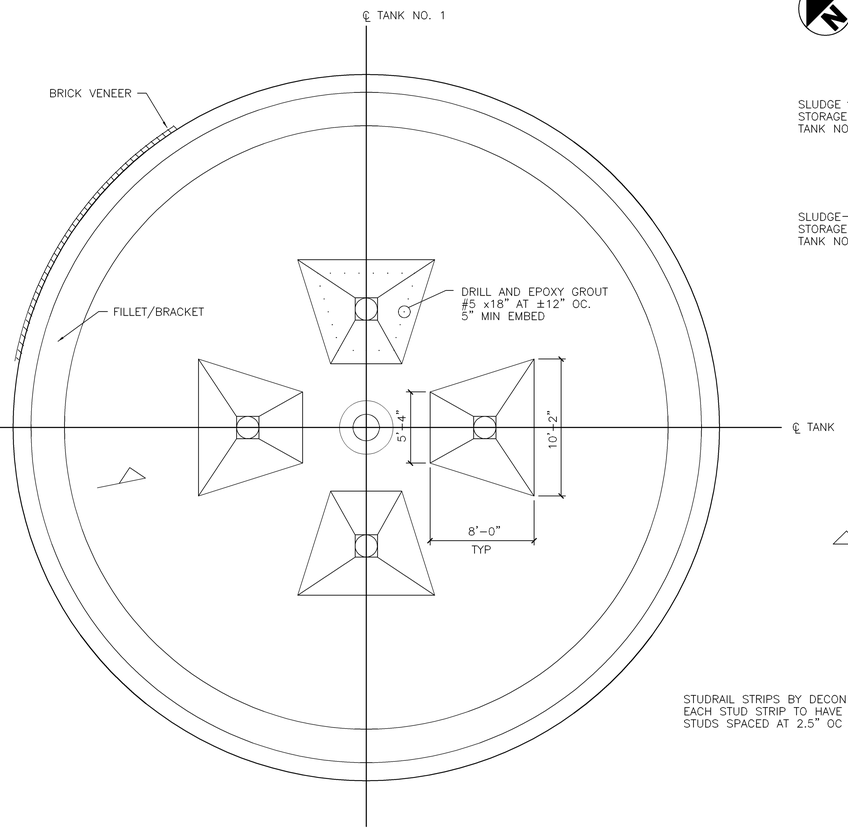

BASE SLAB PLAN

3/16"=1'-0"

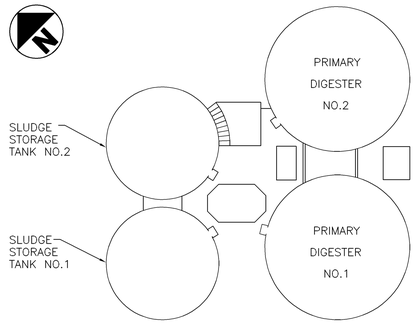

KEY PLAN

NTS

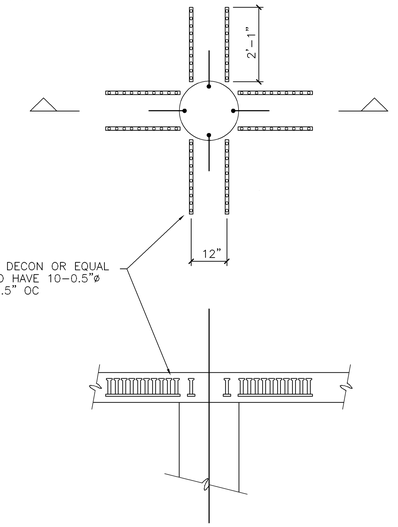

TYP SHEAR HEAD

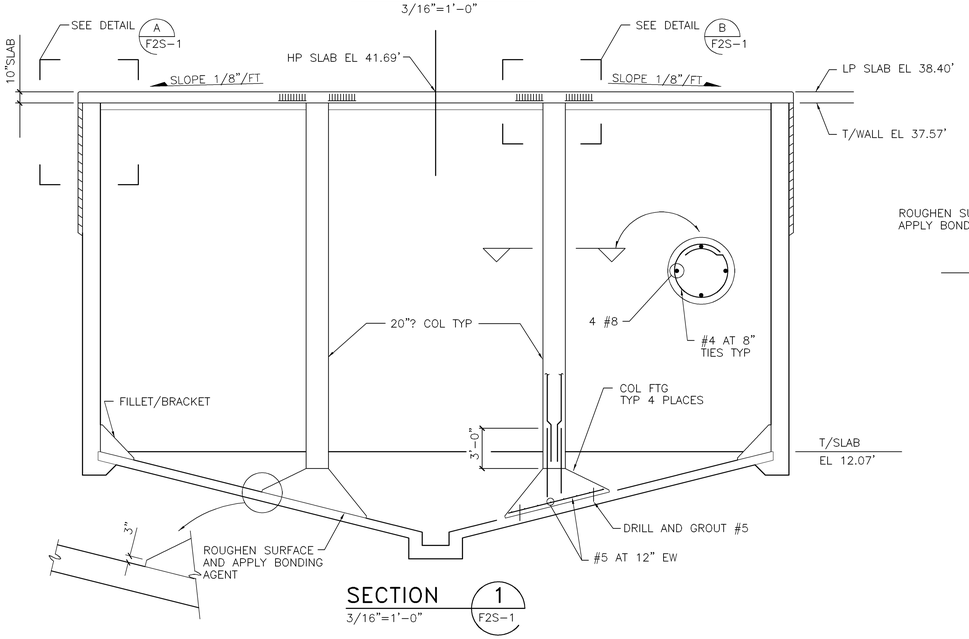

SECTION 1

3/16"=1'-0" F2S-1

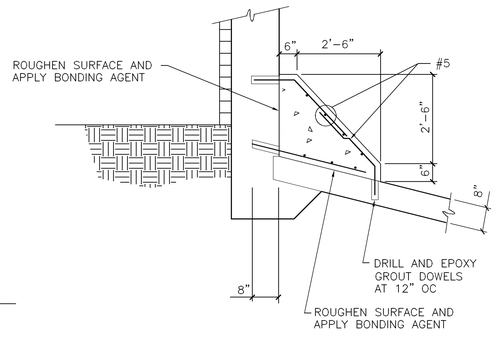

SECTION 2

1/2"=1'-0" F2S-1

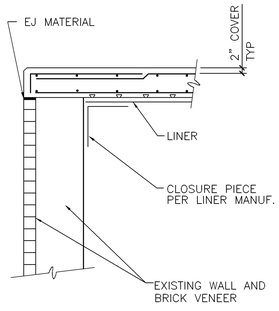

DETAIL A

1/2"=1'-0" F2S-1

DETAIL B

1/2"=1'-0" F2S-1

NOTE:
STANDARD DETAILS SHOWN ON OOS-2, OOS-3, AND OOS-4 APPLY TO ALL SIMILAR SITUATIONS ON THE PROJECT, EXCEPT WHERE A DIFFERENT DETAIL IS SHOWN.

RECORD DRAWING

NO.	DATE	DRWN	CHK'D	DESCRIPTION
1	11/98	FXP	ASG	RECORD DRAWING

REVISIONS

DESIGNED BY:
DRAWN BY:
CHECKED BY/DATE:
APPRV'D BY/DATE:

CAMP DRESSER & McKEE

THIS DRAWING HAS BEEN REVISED BY HAZEN AND SAWYER, P.C. TO REFLECT MODIFICATIONS MADE DURING CONSTRUCTION

environmental engineers, scientists, planners, management consultants CDM

ARLINGTON COUNTY, VIRGINIA
WATER POLLUTION CONTROL PLANT
UPGRADE AND EXPANSION- PHASE IB

SLUDGE STORAGE TANKS-STRUCTURAL-PLANS AND SECTIONS

SCALE NOTE
SCALE BAR SHOWN BELOW IS ONE INCH LONG ON A FULL SIZE DRAWING. WHEN SCALING DRAWINGS, MEASURE BAR TO DETERMINE IF SCALES SHOWN WILL REQUIRE ADJUSTING.
ONE INCH

CONTRACT NO.

YEAR

LOCATION CODE	SPECIALTY CODE
F2	S

PROJECT NO. 5002-33
FILE NAME F2S-1.DWG
DRAWING NO. F2S-1
SHEET NO. 144

structural technologies inc.
CONSULTING ENGINEERS
Wekiva Business Center
Suite 120, 1428 East Semoran Blvd., Apopka, Florida 32703
(407) 889-9660

DRAWN BY : RAH
CHECKED BY : REH
APPROVED BY : BE
DATE : OCT 1990
JOB NO: 90-111

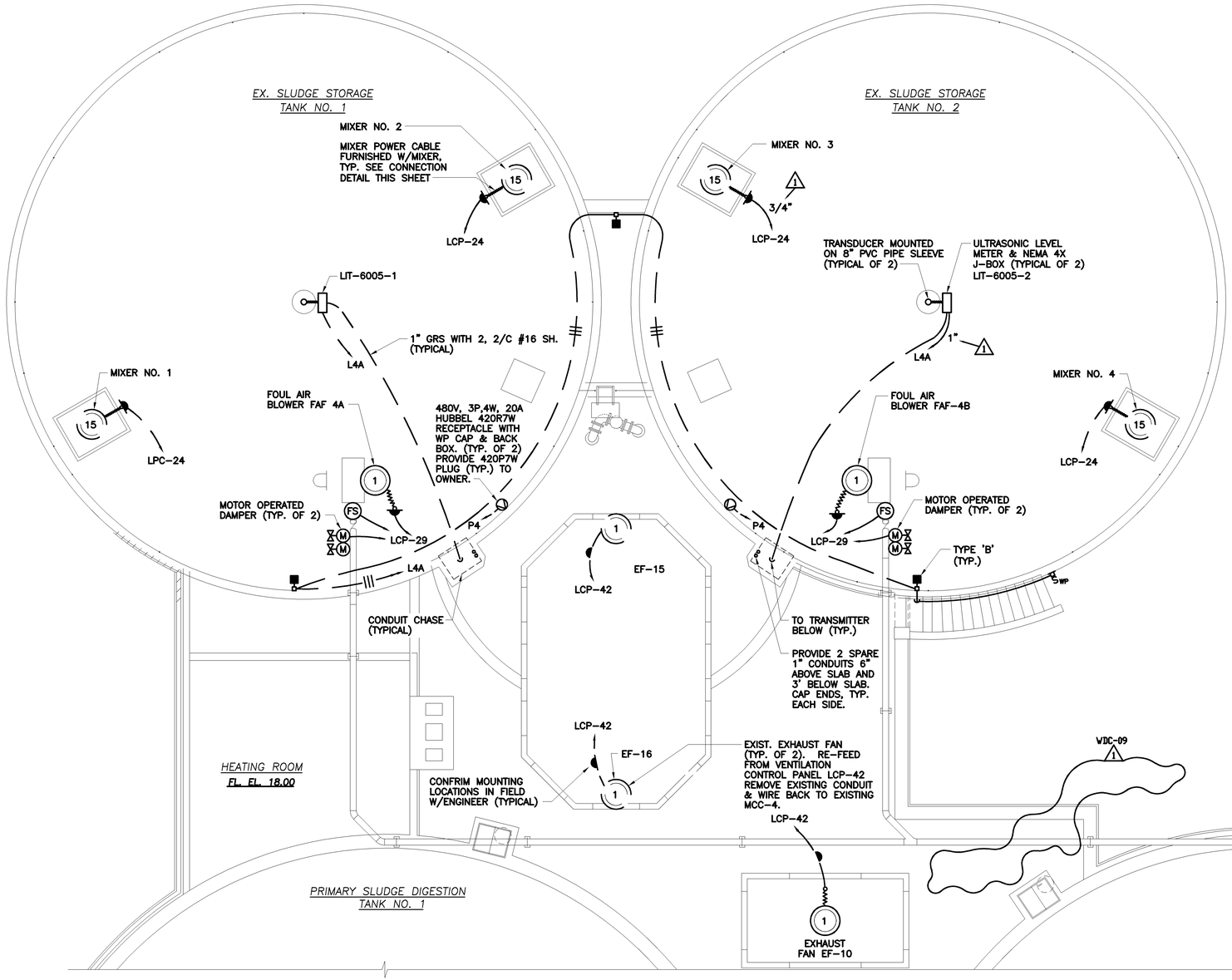

ROOF PLAN

SCALE: 3/16"=1'-0"

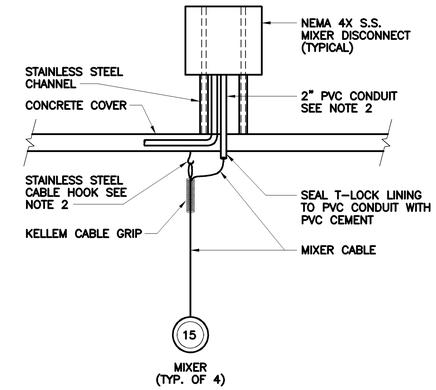

MIXER CONNECTION DETAIL

NOTES:

1. ALL CONDUITS IN TOP SLAB TO ENTER BUILDING THROUGH CONDUIT CHASES. CONDUITS ARE EXPOSED IN CHASE.
2. LOCATE CABLE, HOOK AND PVC CONDUIT WITHIN 6" OF NON-HINGED EDGE OF HATCH SO CABLE MAY BE CONNECTED AND DISCONNECTED FROM HATCH OPENING.
3. PROVIDE EYS FITTING AND SEAL WITH CHICO CEMENT FOR EACH SLUDGE STORAGE TANK COVER PENETRATION.

NO.	DATE	DRWN	CHK'D	REVISIONS
1	9/97	FXP	ASG	RECORD DRAWING

DESIGNED BY: SEB
DRAWN BY: JSG
CHECKED BY/DATE: CEB/9-91
APPR'D BY/DATE: CEB/9-91

CAMP DRESSER & McKEE

THIS DRAWING HAS BEEN REVISED BY HAZEN AND SAWYER, P.C. TO REFLECT MODIFICATIONS MADE DURING CONSTRUCTION

environmental engineers, scientists, planners, & management consultants CDM

ARLINGTON COUNTY, VIRGINIA
WATER POLLUTION CONTROL PLANT
UPGRADE AND EXPANSION- PHASE B

SLUDGE STORAGE TANKS
ELECTRICAL
ROOF PLAN

RECORD DRAWING

SCALE NOTE

SCALE BAR SHOWN BELOW IS ONE INCH LONG ON A FULL SIZE DRAWING. WHEN SCALING DRAWINGS, MEASURE BAR TO DETERMINE IF SCALES SHOWN WILL REQUIRE ADJUSTING.

ONE INCH

CONTRACT NO.

YEAR 1991

LOCATION CODE	SPECIALTY CODE
F2	E

PROJECT NO. 5002-33

FILE NAME F2E-0001.DWG

DRAWING NO. F2E-1

SHEET NO. 145

C.E. BAILEY & ASSOCIATES, INC.
CONSULTING ENGINEERS
ORLANDO, CLEARWATER & FORT LAUDERDALE, FLORIDA

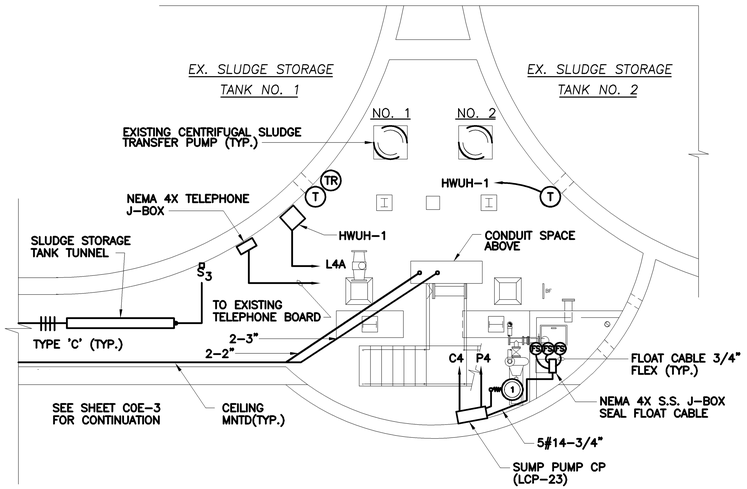

ELECTRICAL PLAN AT EL. 10.00

SCALE: 3/16"=1'-0"

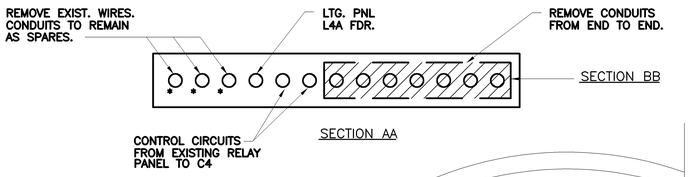

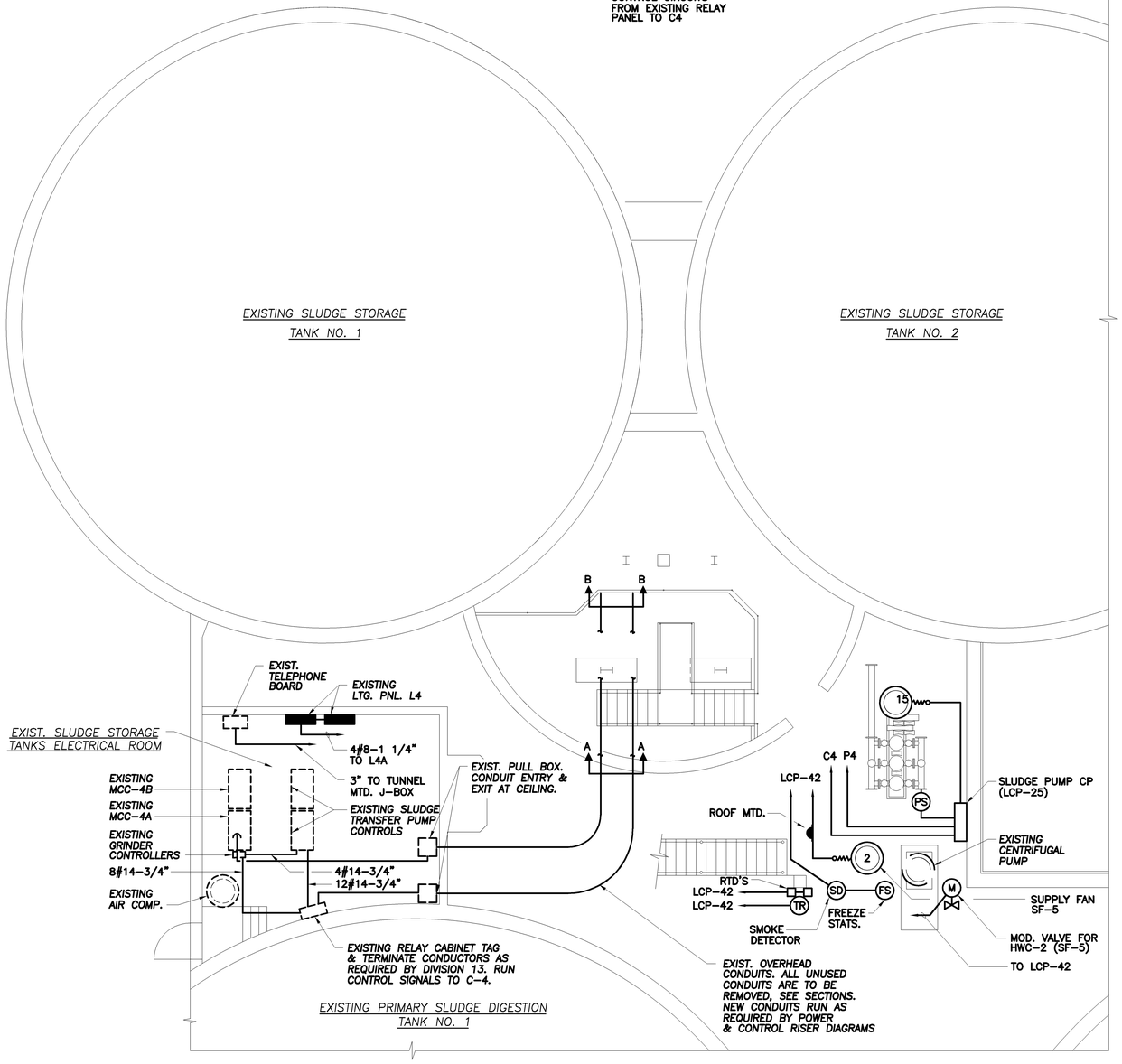

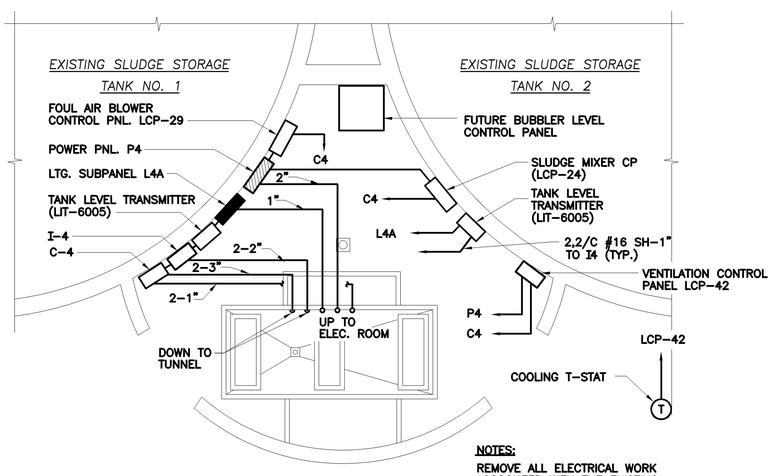

NOTES:

REMOVE ALL ELECTRICAL WORK ASSOCIATED WITH THE EXISTING AIR MIXING SYSTEM.

ELECTRICAL PLAN AT ELEVATION 23.67

SCALE: 3/16"=1'-0"

NOTES:

1.) PROVIDE CONTROL MODIFICATION TO SHUTDOWN THE EXISTING SLUDGE TRANSFER PUMP ON LOW STORAGE TANK LEVEL.

2.) INTERLOCK EXISTING GRINDERS AND SLUDGE TRANSFER PUMP SUCH THAT A GRINDER STARTS ANY TIME A SLUDGE TRANSFER PUMP IS CALLED TO RUN.

ELECTRICAL PLAN AT EL. 11.67

SCALE: 3/16"=1'-0"

NO.	DATE	DRWN	CHK'D	DESCRIPTION
1	9/97	FXP	ASG	RECORD DRAWING

REVISIONS

DESIGNED BY: SEB
DRAWN BY: JSG
CHECKED BY/DATE: CEB/9-91
APPRV'D BY/DATE: CEB/9-91

CAMP DRESSER & McKEE

THIS DRAWING HAS BEEN REVISED BY HAZEN AND SAWYER, P.C. TO REFLECT MODIFICATIONS MADE DURING CONSTRUCTION

environmental engineers, scientists, planners, & management consultants CDM

ARLINGTON COUNTY, VIRGINIA
WATER POLLUTION CONTROL PLANT
UPGRADE AND EXPANSION- PHASE B

SLUDGE STORAGE TANKS
ELECTRICAL
INTERMEDIATE ELEVATIONS PLAN

SCALE NOTE

SCALE BAR SHOWN BELOW IS ONE INCH LONG ON A FULL SIZE DRAWING. WHEN SCALING DRAWINGS, MEASURE BAR TO DETERMINE IF SCALES SHOWN WILL REQUIRE ADJUSTING.

ONE INCH

CONTRACT NO. 000000000
YEAR 1991
LOCATION CODE F2
SPECIALTY CODE E
PROJECT NO. 5002-33
FILE NAME F2E-0002.DWG
DRAWING NO. F2E-2
SHEET NO. 146

RECORD DRAWING

C.E. BAILEY & ASSOCIATES, INC.
CONSULTING ENGINEERS
ORLANDO, CLEARWATER & FORT LAUDERDALE, FLORIDA

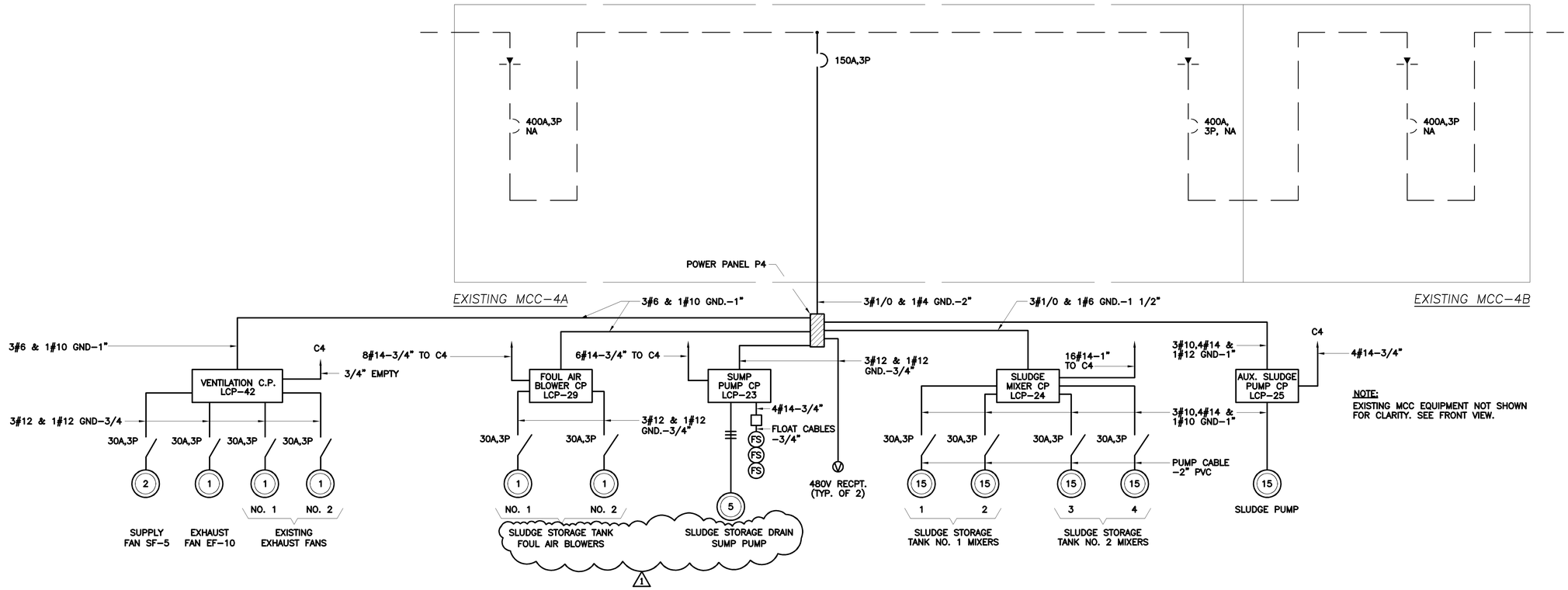

POWER PANEL P4
SINGLE LINE DIAGRAM

PANEL: L4A	BUS: 100A W/40A MB	VOLTAGE: 120/208V,3Ø,4W		
MOUNTING: SURFACE	POLES: 30			
LOCATION: SLUDGE STORAGE BLDG.–ELEVATION 23.67				
CIR. NO.	DESCRIPTION	TRIP	POLES	REMARKS
1,2	LEVEL TRANSMITTER	20	1	
3,4	TANK LIGHTING	20	1	
5,6	SPARE	20	1	
7,8	MISC. RECEPTACLES	20	1	
9,10	MISC. LIGHTING	20	1	
11–15	SPARES	20	1	
16–30	SPACE	20	1	

PANEL: P4	BUS: 225A W/150A MB	VOLTAGE: 480V,3ø,3W		
MOUNTING: SURFACE	POLES: 30			
LOCATION: SLUDGE STORAGE BLDG. ELEVATION 23.67				
CIR. NO.	DESCRIPTION	TRIP	POLES	REMARKS
1,3,5	VENTILATION CONTROL PANEL LCP–42	50	3	
2,4,6	FOUL AIR BLOWER CP. LCP–29	50	3	
7,9,11	SUMP PUMP CP. LCP–23	20	3	
8,10,12	SLUDGE MIXER CP. LCP–24	125	3	
13,15,17	AUX. SLUDGE PUMP CP. LCP–25	30	3	
14,16,18	RECEPTACLE	20	3	
19,21,23	RECEPTACLE	20	3	
20,22,24	SPARE	20	3	
25,27,29	SPARE	30	3	
26,28,30	SPACE	——	3	

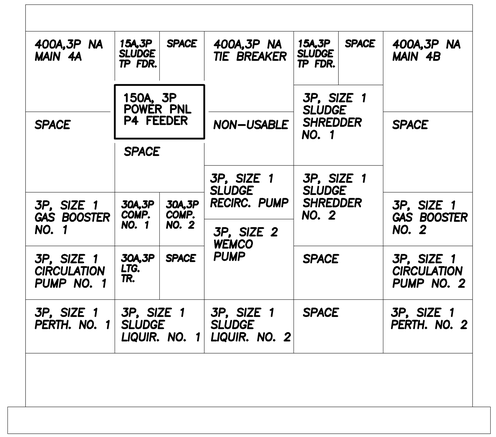

EXISTING MCC–4A
N.T.S.

EXISTING MCC–4B
N.T.S.

NOTE:

CONTRACTOR SHALL INSTALL NEW BREAKER AS SHOWN. BREAKER SHALL BE 65,000 A.I.C. MINIMUM AND MATCH EXISTING MANUFACTURER.

RECORD DRAWING

C.E. BAILEY & ASSOCIATES, INC.
CONSULTING ENGINEERS
ORLANDO, CLEARWATER & FORT LAUDERDALE, FLORIDA

NO.	DATE	DRWN	CHK'D	DESCRIPTION
1	12/98	FXP	ASG	RECORD DRAWING

REVISIONS

DESIGNED BY: SEB
DRAWN BY: JSG
CHECKED BY/DATE: CEB/9–91
APPR'D BY/DATE: CEB/9–91

CAMP DRESSER & McKEE

THIS DRAWING HAS BEEN REVISED BY HAZEN AND SAWYER, P.C. TO REFLECT MODIFICATIONS MADE DURING CONSTRUCTION

CDM
environmental engineers, scientists, planners, & management consultants

ARLINGTON COUNTY, VIRGINIA
WATER POLLUTION CONTROL PLANT
UPGRADE AND EXPANSION- PHASE IB

SLUDGE STORAGE TANKS
ELECTRICAL
RISER DIAGRAMS

SCALE NOTE

SCALE BAR SHOWN BELOW IS ONE INCH LONG ON A FULL SIZE DRAWING. WHEN SCALING DRAWINGS, MEASURE BAR TO DETERMINE IF SCALES SHOWN WILL REQUIRE ADJUSTING.

ONE INCH

CONTRACT NO. 000000000
YEAR 1991
LOCATION CODE F2
SPECIALTY CODE E
PROJECT NO. 5002–33
FILE NAME F2E–0003.DWG
DRAWING NO. F2E–3
SHEET NO. 147

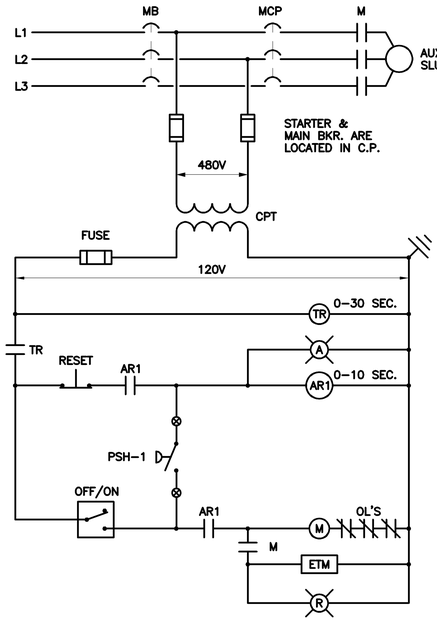

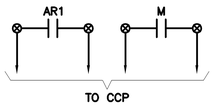

AUXILIARY SLUDGE PUMP C.P.
LCP-25

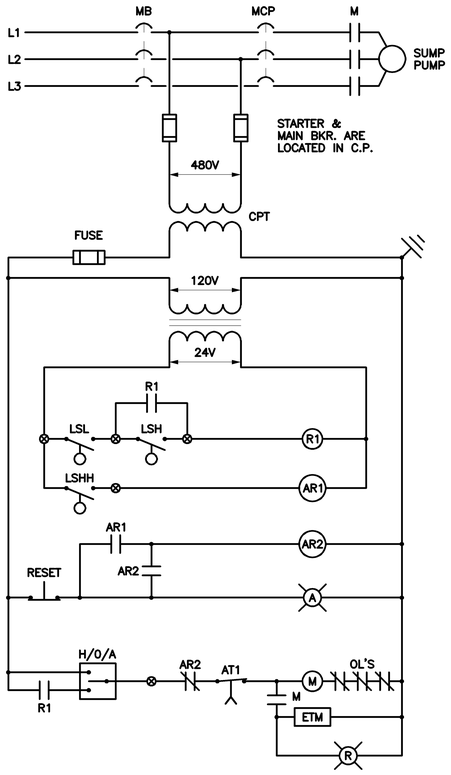

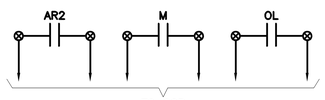

SUMP PUMP C.P.
LCP-23

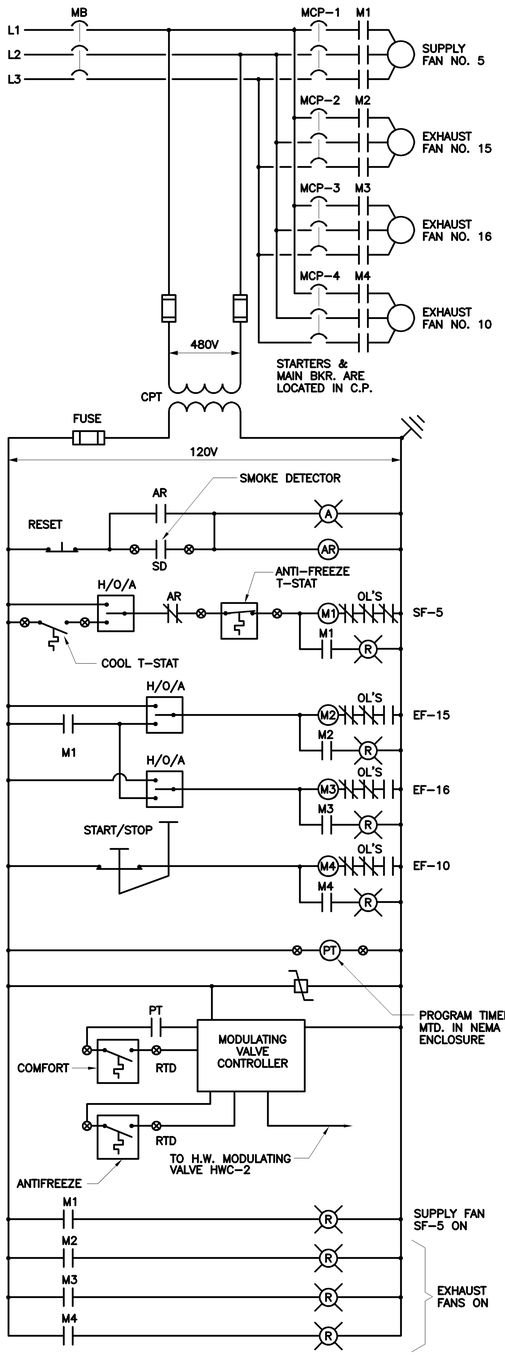

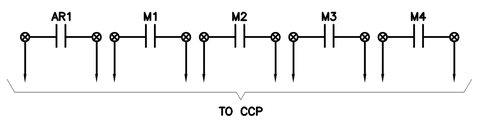

VENTILATION CONTROL PANEL
LCP-42

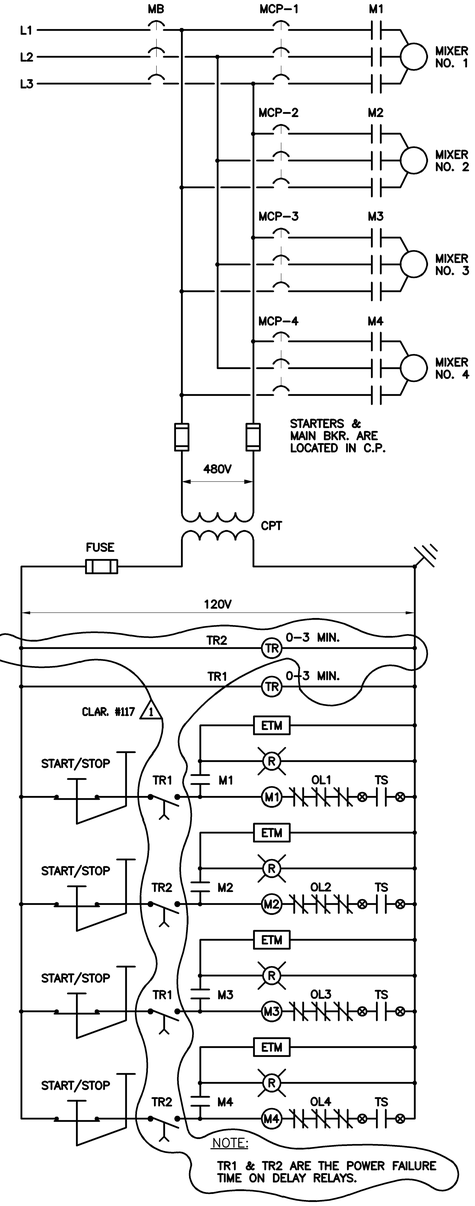

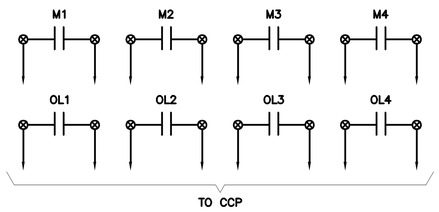

SLUDGE MIXER
LCP-24

NOTE:

LCP TO BE FURNISHED BY MIXER SUPPLIER. ALL SHALL INCLUDE ALL NECESSARY MOTOR SAFETY DEVICES SUCH AS WATER IN OIL, MOTOR TEMP., ETC..

NO.	DATE	DRWN	CHK'D	REVISIONS
				DESCRIPTION
1	9/97	FXP	ASG	RECORD DRAWING

DESIGNED BY: SEB
DRAWN BY: TRH
CHECKED BY/DATE: CEB/9-91
APPR'D BY/DATE: CEB/9-91

CAMP DRESSER & McKEE

THIS DRAWING HAS BEEN REVISED BY HAZEN AND SAWYER, P.C. TO REFLECT MODIFICATIONS MADE DURING CONSTRUCTION

CDM
environmental engineers, scientists, planners, & management consultants

ARLINGTON COUNTY, VIRGINIA
WATER POLLUTION CONTROL PLANT
UPGRADE AND EXPANSION- PHASE IB

SLUDGE STORAGE TANKS
ELECTRICAL
CONTROL DIAGRAMS

SCALE NOTE

SCALE BAR SHOWN BELOW IS ONE INCH LONG ON A FULL SIZE DRAWING. WHEN SCALING DRAWINGS, MEASURE BAR TO DETERMINE IF SCALES SHOWN WILL REQUIRE ADJUSTING.

ONE INCH

CONTRACT NO.

YEAR 1991

LOCATION CODE	SPECIALTY CODE
F2	E

PROJECT NO. 5002-33

FILE NAME F2E-0004.DWG

DRAWING NO. F2E-4

SHEET NO. 148

RECORD DRAWING

C.E. BAILEY & ASSOCIATES, INC.
CONSULTING ENGINEERS
ORLANDO, CLEARWATER & FORT LAUDERDALE, FLORIDA

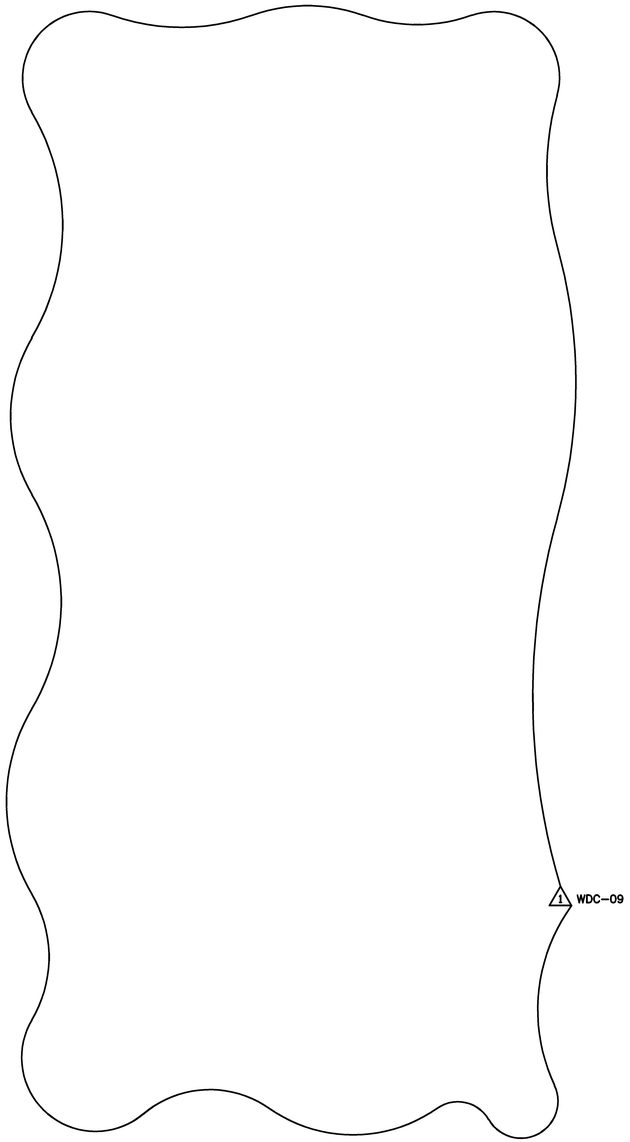

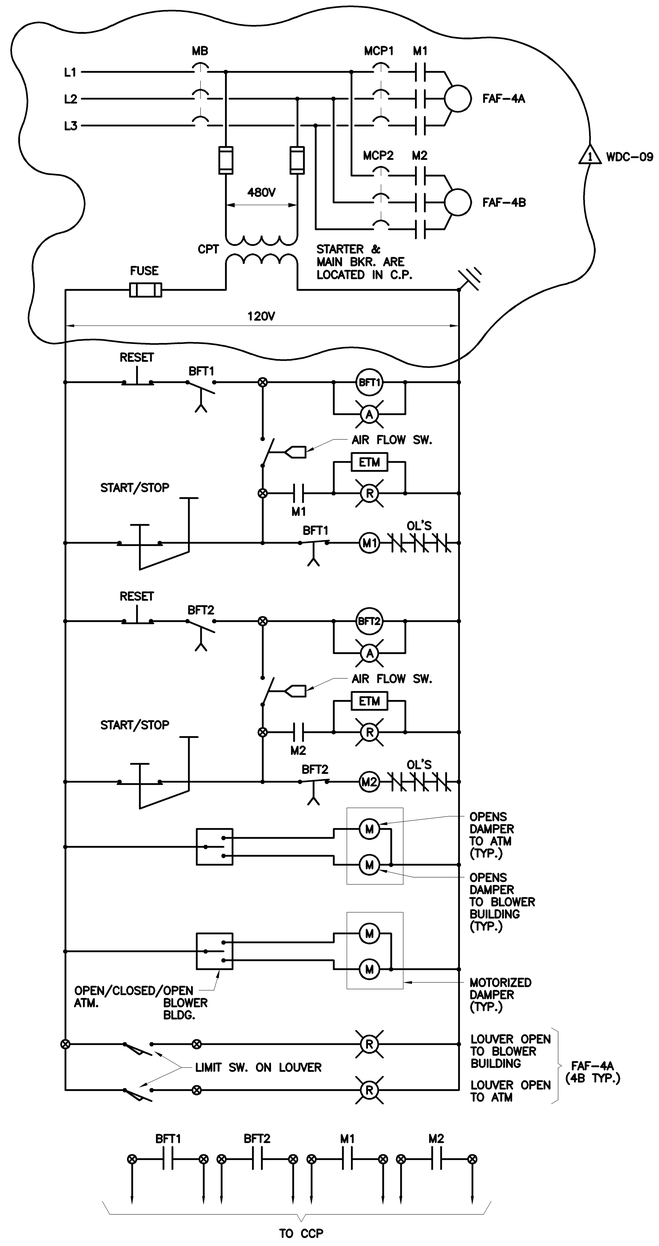

FOUL AIR BLOWER C.P.
LCP-29

DESIGNED BY:	
SEB	
DRAWN BY:	
TRH	
CHECKED BY/DATE:	
CEB/9-91	
APPR'D BY/DATE:	
CEB/9-91	

NO.	DATE	DRWN	CHK'D	DESCRIPTION
1	9/97	FXP	ASG	RECORD DRAWING

REVISIONS

CAMP DRESSER & McKEE

THIS DRAWING HAS BEEN REVISED BY HAZEN AND SAWYER, P.C. TO REFLECT MODIFICATIONS MADE DURING CONSTRUCTION

CDM
environmental engineers, scientists, planners, & management consultants

ARLINGTON COUNTY, VIRGINIA
WATER POLLUTION CONTROL PLANT
UPGRADE AND EXPANSION- PHASE IIB

SLUDGE STORAGE TANKS
ELECTRICAL
CONTROL DIAGRAMS

SCALE NOTE

SCALE BAR SHOWN BELOW IS ONE INCH LONG ON A FULL SIZE DRAWING. WHEN SCALING DRAWINGS, MEASURE BAR TO DETERMINE IF SCALES SHOWN WILL REQUIRE ADJUSTING.

ONE INCH

CONTRACT NO.

YEAR 1991

LOCATION CODE	SPECIALTY CODE
F2	E

PROJECT NO.
5002-33

FILE NAME
F2E-0005.DWG

DRAWING NO.
F2E-5

SHEET NO. 149

RECORD DRAWING

C.E. BAILEY & ASSOCIATES, INC.
CONSULTING ENGINEERS
ORLANDO, CLEARWATER & FORT LAUDERDALE, FLORIDA

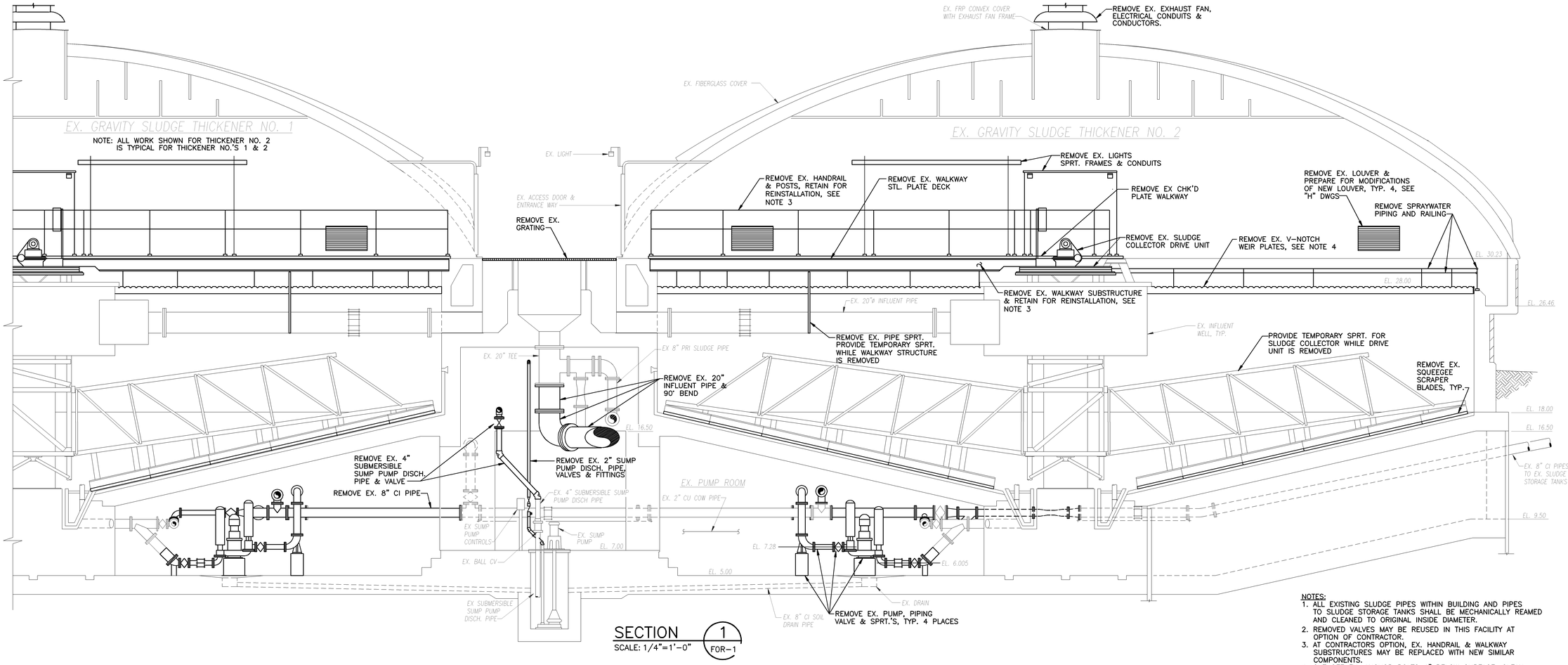

SECTION 1/FOR-1
SCALE: 1/4"=1'-0"

NOTES:
1. ALL EXISTING SLUDGE PIPES WITHIN BUILDING AND PIPES TO SLUDGE STORAGE TANKS SHALL BE MECHANICALLY REAMED AND CLEANED TO ORIGINAL INSIDE DIAMETER.
2. REMOVED VALVES MAY BE REUSED IN THIS FACILITY AT OPTION OF CONTRACTOR.
3. AT CONTRACTORS OPTION, EX. HANDRAIL & WALKWAY SUBSTRUCTURES MAY BE REPLACED WITH NEW SIMILAR COMPONENTS.
4. CUT OFF EX. ANCHOR BOLTS 1" BELOW SURFACE, CLEAN HOLE AND SEAL HOLE W/EPOXY GROUT.
5. SEE "M" DWGS. FOR RELOCATION OF PIPES, FITTINGS, VALVES ETC.

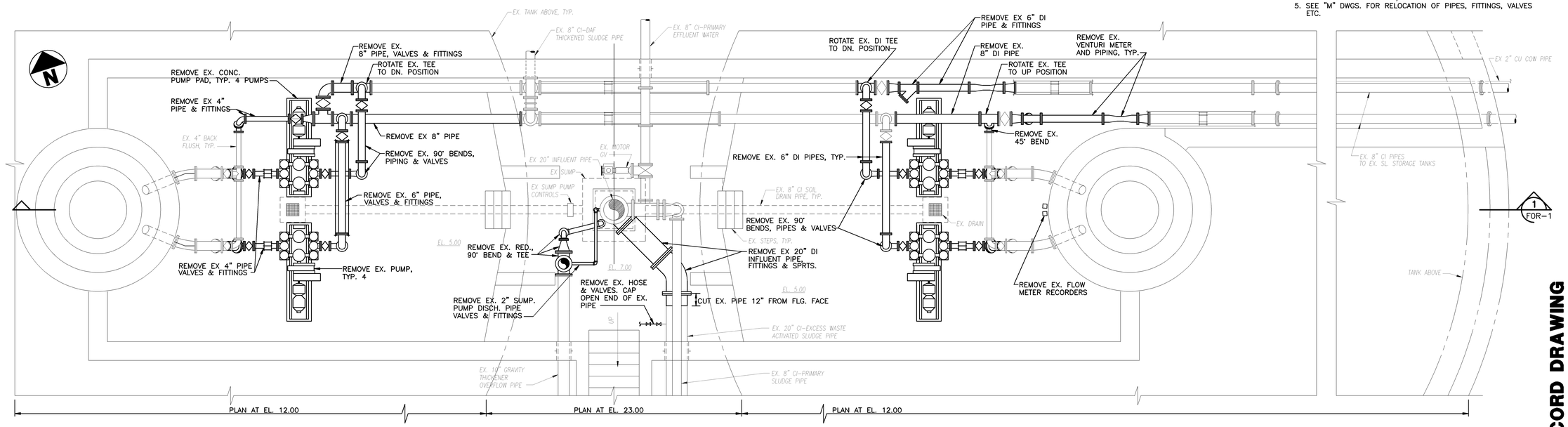

PUMP ROOM PLAN AT EL. 12.00 & EL. 23.00

SCALE: 1/4"=1'-0"

09/16/91 - 18:26

RECORD DRAWING

NO.	DATE	DRWN	CHK'D	DESCRIPTION
1	9/97	FKP	ASG	RECORD DRAWING

REVISIONS

DESIGNED BY: AMR
DRAWN BY: BRW/CTC/GPB
CHECKED BY/DATE: TDH 9/91
APPRV'D BY/DATE: TDH 9/91

COMMONWEALTH OF VIRGINIA
THOMAS D. HALL
No. 12502
PROFESSIONAL ENGINEER

CAMP DRESSER & McKEE
environmental engineers, scientists, planners, & management consultants
CDM

THIS DRAWING HAS BEEN REVISED BY HAZEN AND SAWYER, P.C. TO REFLECT MODIFICATIONS MADE DURING CONSTRUCTION

ARLINGTON COUNTY, VIRGINIA
WATER POLLUTION CONTROL PLANT
UPGRADE AND EXPANSION- PHASE IIB

GRAVITY THICKENERS
REMOVAL
BASEMENT PLAN & SECTION

SCALE NOTE

SCALE BAR SHOWN BELOW IS ONE INCH LONG ON A FULL SIZE DRAWING. WHEN SCALING DRAWINGS, MEASURE BAR TO DETERMINE IF SCALES SHOWN WILL REQUIRE ADJUSTING.

ONE INCH

CONTRACT NO.	
90-02-WPC	
YEAR	1991
LOCATION CODE	SPECIALTY CODE
FO	R
PROJECT NO.	
5002-33	
FILE NAME	
FOR-0001.DWG	
DRAWING NO.	
FOR-1	
SHEET NO.	150

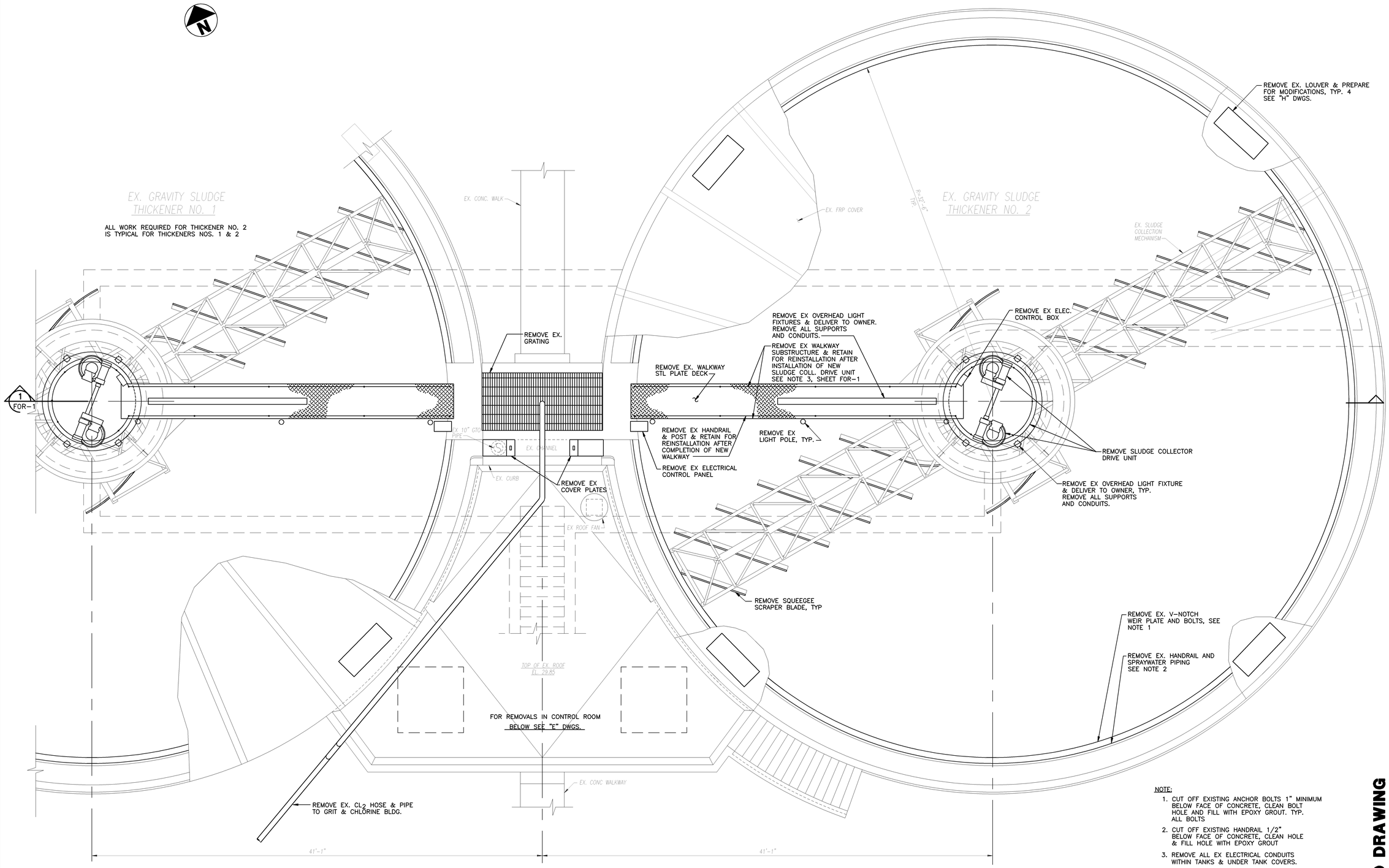

TOP PLAN
SCALE: 1/4"=1'-0"

NOTE:

1. CUT OFF EXISTING ANCHOR BOLTS 1" MINIMUM BELOW FACE OF CONCRETE, CLEAN BOLT HOLE AND FILL WITH EPOXY GROUT. TYP. ALL BOLTS
2. CUT OFF EXISTING HANDRAIL 1/2" BELOW FACE OF CONCRETE, CLEAN HOLE & FILL HOLE WITH EPOXY GROUT
3. REMOVE ALL EX ELECTRICAL CONDUITS WITHIN TANKS & UNDER TANK COVERS.

RECORD DRAWING

NO.	DATE	DRWN	CHK'D	DESCRIPTION
1	9/97	FKP	ASG	RECORD DRAWING

REVISIONS

DESIGNED BY: AMR
DRAWN BY: BRW/CTC/GPB
CHECKED BY/DATE: TDH 9/91
APPRV'D BY/DATE: TDH 9/91

COMMONWEALTH OF VIRGINIA
THOMAS D. HALL
No. 12502
PROFESSIONAL ENGINEER

CAMP DRESSER & McKEE

THIS DRAWING HAS BEEN REVISED BY HAZEN AND SAWYER, P.C. TO REFLECT MODIFICATIONS MADE DURING CONSTRUCTION

CDM
environmental engineers, scientists, planners, & management consultants

ARLINGTON COUNTY, VIRGINIA
WATER POLLUTION CONTROL PLANT
UPGRADE AND EXPANSION- PHASE IIB

GRAVITY THICKENERS
REMOVAL
TOP PLAN

SCALE NOTE

SCALE BAR SHOWN BELOW IS ONE INCH LONG ON A FULL SIZE DRAWING. WHEN SCALING DRAWINGS, MEASURE BAR TO DETERMINE IF SCALES SHOWN WILL REQUIRE ADJUSTING.

ONE INCH

CONTRACT NO.	
90-02-WPC	
YEAR	1991
LOCATION CODE	SPECIALTY CODE
FO	R
PROJECT NO.	
5002-33	
FILE NAME	
FOR-02.DWG	
DRAWING NO.	
FOR-2	
SHEET NO.	151

09/16/91 - 19:44

EX. GRAVITY SLUDGE THICKENER NO. 1

NOTE: ALL WORK REQUIRED IS TYPICAL OF BOTH THICKENERS 1 AND 2.

EX. GRAVITY SLUDGE THICKENER NO. 2

FRP COVER 1/2" THICK TO COVER REMOVED FAN PEDESTAL. FASTEN WITH 304 SS BOLTS OR SCREWS @ 12" OC MAX.

EX. FIBERGLASS COVER

EX. ACCESS DOOR & ENTRANCE WAY

PREPARE & PAINT EX. WALKWAY SUBSTRUCTURE, TYP.

WELD 1/4" THK G.S. CHK'D PLATE WALKWAY DECK TO EX. SUBSTRUCTURE, TYP. (SEE NOTE 1)

REINSTALL EX. SUBSTRUCTURE AFTER INSTALLATION OF SLUDGE COLLECTOR DRIVE UNIT SEE NOTE 3, SHEET F?R-1

PREPARE, PAINT & REINSTALL EX. HANDRAIL WELD TO DECK

EX. LOUVER. SEE "H" DWGS FOR MODIFICATION, TYP. 3

ALUM. COVER PLATE, TYP.

SLUDGE COLLECTOR DRIVE UNIT

STRAIGHT WEIR PLATE, TYP. LEVEL TO ±0.005 FT

EX. SLIDE GATES

EX. WEIR PLATES

EL. 30.23

EL. 28.00

EX. CONC. WEIR WALL

EL. 26.46

3 FOM-3

EX. 20" TEE

20"x10" RED. FLG. FILLER

10" FLG. 90° LR. BEND

EX. 20" INFLUENT PIPE

PREPARE & PAINT EX INFLUENT PIPE & INFLUENT BOX

PREPARE & PAINT EX INFLUENT WELL, CENTER CAGE, CENTER COLUMN, & SUPPORTS, TYP.

PREPARE & PAINT EX BLADES, RAKE ARMS, & SUPPORT MECHANISMS, TYP.

EX. 8" PRIMARY SLUDGE

EX GRADE

? EL. 18.25

4 SPD-PVC/V

10 GTI-DI/F

10" GV

EL. 16.50

EL. 18.00

EL. 16.50

EX. 8" PRIMARY EFF. WATER

EX GROUT

EX. SUMP PUMP CONTROLS

2 DISCH-PVC/V

RELOCATED VALVES

4 SPD-PVC/V

4" DI TEE

DETAIL C OOM-1 PIPE SUPPORT, TYP.

1/2" GV, TYP. 8

EX. 8" CI PIPES TO SLUDGE STORAGE TANKS

EL. 9.50

EX. SHEET PILING, TYP.

RELOCATED 6' 90° BEND

RELOCATED 8'x6' TEE

8 SL. DISCH-DI/F

6" 45° DI FLG BEND, TYP.

EX. 2" CU PEW PIPE

BF

RELOCATED EX. 6" PLUG VALVE

RELOCATED EX. 6" DI FLG BEND

RELOCATED 6" DI FLG 90° BEND

? EL. 6.052

EX 10" SL PIPE TYP

ROTATE EX. TEE TO UP POSITION

PREPARE & PAINT EX CENTER SCRAPER & SUPPORTS

SQUEEGEE SCRAPER BLADE, TYP.

8" CPL'G, TYP.

RELOCATED 6" PLUG VALVE

4 PEW PRI-DI/F

EX. 8" DRAIN PIPE

EL. 5.00

EX. SUMP PUMP EL. 7.00

EX. 8" CI PIPES TO SLUDGE STORAGE TANKS, C EL. 10.00

2" UNION

8"x6" DI FLG RED., TYP.

1 1/2" DRAIN-PVC/V, TYP.

EX. DRAIN

TRIPLEX PISTON TYPE THICKENED SL. PUMP

RELOCATED 6" DI FLG 90° BEND

6" PLUG VALVE

DETAIL H OOM-1 CONC. PIPE SUPPORT, TYP.

6" PLUG VALVE

TRIPLEX PISTON TYPE THICKENED SL. PUMP

D DETAIL OOM-1 CONC. PIPE SUPPORT, TYP.

A DETAIL OOM-3 CONC. EQUIP. PAD, TYP.

NOTES:

1. CHECKERED PLATE TO HAVE SAME WIDTH AS EX. DECK. WELD TO MAIN SUBSTRUCTURE MEMBERS W/ 1" FILLET WELDS @ 12" O.C. ALONG ALL EDGES.
2. ALL SURFACES OF EX. & NEW METALS WITHIN TANK & UNDER DOME SHALL BE PREPARED & PAINTED.
3. ALL CONCRETE SURFACES EXCLUDING FLOOR & ALL NEW & EX. PIPES, EQUIP., AND OTHER METAL SURFACES IN LOWER LEVEL BELOW CEILING AT EL. 23.00 SHALL BE PREPARED & PAINTED.
4. EX. 10" OVERFLOW PIPE TO BE CONVERTED TO AWT SLUDGE INLET PIPE.
5. EX. 20" WASTE ACT. SLUDGE PIPE TO BE CONVERTED TO OVERFLOW PIPE.

SECTION 1 FOM-1

SCALE: 1/4"=1'-0"

DETAIL P OOM-2 HARNESS ASSEMBLY, TYP.

K DETAIL OOM-2 PIPE HANGERS, TYP.

REF. F.D. #28 1

4 PEW PRI-DI/F

RELOCATED 8" PLUG VALVE

RELOCATED 8" TEE

ROTATE EX. TEE(UP) TO DN. POSITION

EX. TANK ABOVE, TYP.

EX. 8" CI DAF THICKENED SLUDGE

EX. 8" CI PRIMARY EFFLUENT WATER

8"x4" TAPPING SLEEVE

ROTATE EX. TEE(UP) TO DN. POSITION

F.D. #28 NEW VALVES 1

8 TS-DI/F

8"x12" DI/F OFFSET, TYP. 2

EX. 8" DI PIPES TO SLUDGE STORAGE TANKS

EX. 2" PEW-CU/S

8 TS-DI/F DISCH. PIPE

4" GV, TYP. 2

REUSE EX. PIPE HANGER, TYP. 6

EX. FLG. TEE

8 TS-DI/F

RELOCATED 4" BEND

RELOCATED 8" 90° BEND

BF

RELOCATED 6' 90° BEND

6" DI FLG 90° BASE BEND, TYP. 2

6 TS-DI/F

1 1/2" DRAIN-PVC/V (DISCH. TO EX. DRAIN)

EX. 4" BACK FLUSH, TYP.

? PUMP

REF. F.D. #24 1

RELOCATED 6' PLUG VALVE

6 TS-DI/F PUMP DISCH.

6" BF, TYP. EA. PUMP

EX. 20" INFLUENT PIPE

EX. MOTOR OPERATED GATE VALVE

10" FLG. FILLER

10" FLG. 90° LR BEND

FLANGE TYPE PRESSURE SENSOR W/ COMBINATION 30" Hg/25 PSI PRESSURE GAGE, TYP. FOR SUCTION SIDE, EA. PUMP

5002-1

5002-2

5002-3

5002-4

DETAIL J OOM-1 PIPE SUPPORT

DETAIL P OOM-2 10" DI PIPE & HARNESS ASSEMBLY

9'-10"

6"x4" RED

6" PUMP SUCTION MANIFOLDS

EX. DRAIN, TYP.

EX. DRAIN PIPE, TYP.

6 TS-DI/F PUMP DISCH. ROTATION CONTACT CLOSURE TRANSMITTER, TYP. 4

RELOCATED EX. 6" DI FLG. 90° BEND

EX. 10" GTO

1 FOM-3

10"x6" FLG. TEE 10 GTO-DI/F

EL. 7.00

EL. 5.00

DETAIL H OOM-1 CONC. PIPE SUPPORT

REUSE EX. PIPE TRAPEZE HANGER SUPPORT

6" DI FLG 90° BASE BEND

TRIPLEX PISTON TYPE THICKENED SLUDGE PUMP AND PAD, TYP. 4

FLANGE TYPE PRESSURE SENSOR W/ 0-100 PSI PRESSURE INDICATING SWITCH, TYP. FOR DISCH. SIDE, EA. PUMP

PUMP DISCH. MANIFOLD, TYP.

6" PLUG VALVE, TYP. 2 EA. PUMP

6" FLEX. CPLG., TYP. 2 EA. PUMP

PULSATION DAMPENER, TYP 2 EA. PUMP

P DETAIL OOM-2 HARNESS ASSEMBLY, TYP.

6"x1 1/2" DI REDUCING FLG, 1 1/2" SS PIPE W/ 90° ELB. & 2" NIPPLE DOWN, & 1 1/2" SS BALL VALVE FOR SAMPLING, TYP. 4 PUMPS

6" DI/F 90° BASE BEND

1/2" CA-CU/S, CONNECT TO EX. COMPRESSED AIR SYSTEM

EX. PIPE SUPPORT

EX. 10" CI AWT SLUDGE SEE NOTE 4

EX. 8" PRIMARY SLUDGE

EX. 20" CI GRAVITY THICKENER OVERFLOW SEE NOTE 5

2 FOM-3

EX. TANK ABOVE

1 FOM-1

PLAN AT EL. 12.00

PLAN AT EL. 23.00

PLAN AT EL. 12.00

PUMP ROOM PLAN AT EL. 12.00 & EL. 23.00

SCALE: 1/4"=1'-0"

RECORD DRAWING

09/16/91 - 18:58

NO.	DATE	DRWN	CHK'D	DESCRIPTION
1	9/97	FXP	ASG	RECORD DRAWING

REVISIONS

DESIGNED BY: AMR
DRAWN BY: BRW/CTC/GPB
CHECKED BY/DATE: TDH 9/91
APPRV'D BY/DATE: TDH 9/91

COMMONWEALTH OF VIRGINIA
THOMAS D. HALL
No. 12502
PROFESSIONAL ENGINEER

CAMP DRESSER & McKEE

THIS DRAWING HAS BEEN REVISED BY HAZEN AND SAWYER, P.C. TO REFLECT MODIFICATIONS MADE DURING CONSTRUCTION

CDM

environmental engineers, scientists, planners, & management consultants

ARLINGTON COUNTY, VIRGINIA
WATER POLLUTION CONTROL PLANT
UPGRADE AND EXPANSION- PHASE IIB

GRAVITY THICKENERS
BASEMENT
PLAN & SECTION

SCALE NOTE

SCALE BAR SHOWN BELOW IS ONE INCH LONG ON A FULL SIZE DRAWING. WHEN SCALING DRAWINGS, MEASURE BAR TO DETERMINE IF SCALES SHOWN WILL REQUIRE ADJUSTING.

ONE INCH

CONTRACT NO. 90-02-WPC

YEAR 1991

LOCATION CODE	SPECIALTY CODE
FO	M

PROJECT NO. 5002-33

FILE NAME FOM-0001.DWG

DRAWING NO. FOM-1

SHEET NO. 152

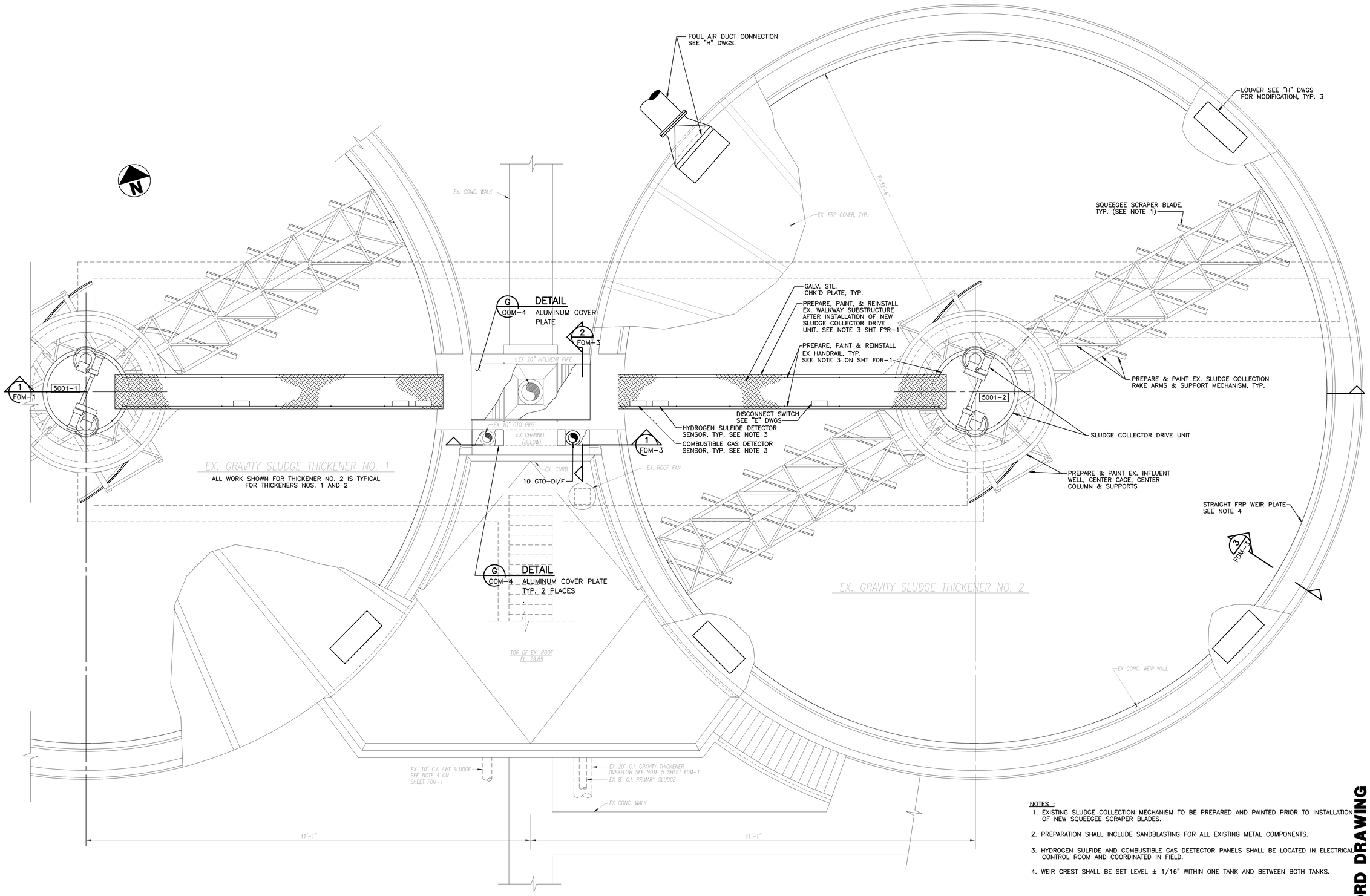

PLAN
SCALE: 1/4"=1'-0"

NOTES :

1. EXISTING SLUDGE COLLECTION MECHANISM TO BE PREPARED AND PAINTED PRIOR TO INSTALLATION OF NEW SQUEEGEE SCRAPER BLADES.
2. PREPARATION SHALL INCLUDE SANDBLASTING FOR ALL EXISTING METAL COMPONENTS.
3. HYDROGEN SULFIDE AND COMBUSTIBLE GAS DEETECTOR PANELS SHALL BE LOCATED IN ELECTRICAL CONTROL ROOM AND COORDINATED IN FIELD.
4. WEIR CREST SHALL BE SET LEVEL ± 1/16" WITHIN ONE TANK AND BETWEEN BOTH TANKS.

RECORD DRAWING

NO.	DATE	DRWN	CHK'D	DESCRIPTION
1	9/97	FXP	ASG	RECORD DRAWING

REVISIONS

DESIGNED BY: AMR
DRAWN BY: BRW/CTC/GPB
CHECKED BY/DATE: TDH 9/91
APPRV'D BY/DATE: TDH 9/91

COMMONWEALTH OF VIRGINIA
THOMAS D. HALL
No. 12502
PROFESSIONAL ENGINEER

CAMP DRESSER & McKEE

PER DRAWING HAS BEEN REVISED BY HAZEN AND SAWYER, P.C. TO REFLECT MODIFICATIONS MADE DURING CONSTRUCTION

CDM
environmental engineers, scientists, planners, & management consultants

ARLINGTON COUNTY, VIRGINIA
WATER POLLUTION CONTROL PLANT
UPGRADE AND EXPANSION- PHASE IIB

GRAVITY THICKENERS
TOP PLAN

SCALE NOTE
SCALE BAR SHOWN BELOW IS ONE INCH LONG ON A FULL SIZE DRAWING. WHEN SCALING DRAWINGS, MEASURE BAR TO DETERMINE IF SCALES SHOWN WILL REQUIRE ADJUSTING.
ONE INCH

CONTRACT NO. 90-02-WPC
YEAR 1991
LOCATION CODE FO
SPECIALTY CODE M
PROJECT NO. 5002-33
FILE NAME FOM-0002.DWG
DRAWING NO. FOM-2
SHEET NO. 153

08/14/91 - 13:50

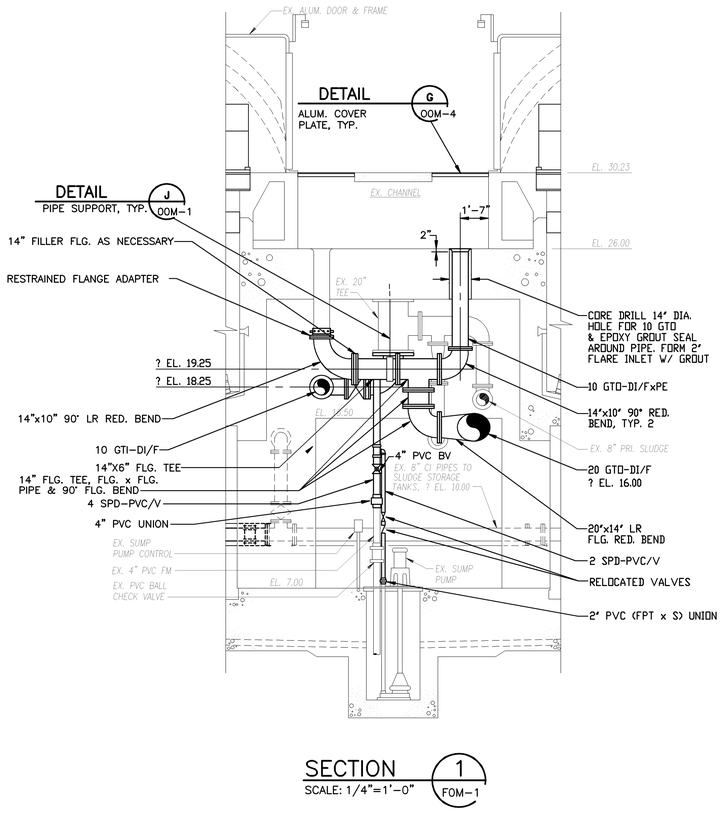

SECTION 1
SCALE: 1/4"=1'-0" FOM-1

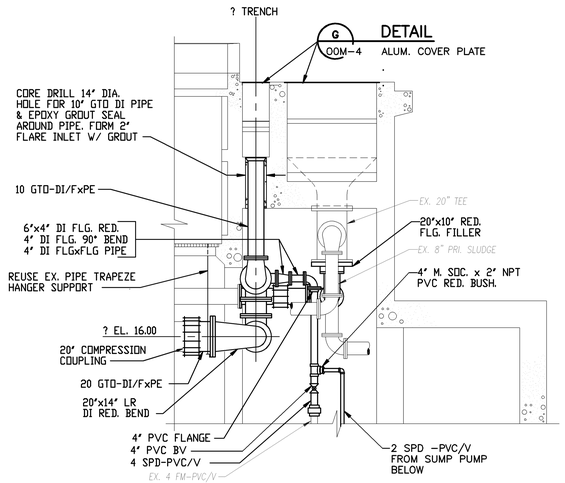

SECTION 2
SCALE: 1/4"=1'-0" FOM-1

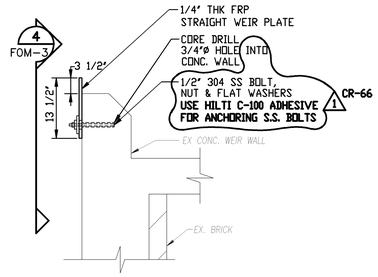

SECTION 3
SCALE: 3/4"=1'-0" FOM-1, 2

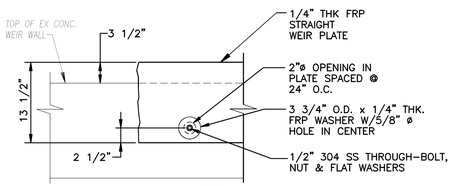

SECTION 4
SCALE: 1"=1'-0" FOM-3

NO.	DATE	DRWN	CHK'D	DESCRIPTION
1	9/97	FXP	ASG	RECORD DRAWING

REVISIONS

DESIGNED BY: AMR
DRAWN BY: BRW/CTC
CHECKED BY/DATE: TDH 9/91
APPRV'D BY/DATE: TDH 9/91

COMMONWEALTH OF VIRGINIA THOMAS D. HALL No. 12502 PROFESSIONAL ENGINEER

CAMP DRESSER & McKEE

THIS DRAWING HAS BEEN REVISED BY HAZEN AND SAWYER, P.C. TO REFLECT MODIFICATIONS MADE DURING CONSTRUCTION

CDM environmental engineers, scientists, planners, & management consultants

RECORD DRAWING

ARLINGTON COUNTY, VIRGINIA
WATER POLLUTION CONTROL PLANT
UPGRADE AND EXPANSION- PHASE IIIB

GRAVITY THICKENERS
SECTIONS & DETAIL

SCALE NOTE

SCALE BAR SHOWN BELOW IS ONE INCH LONG ON A FULL SIZE DRAWING. WHEN SCALING DRAWINGS, MEASURE BAR TO DETERMINE IF SCALES SHOWN WILL REQUIRE ADJUSTING.

ONE INCH

CONTRACT NO. 90-02-WPC
YEAR 1991
LOCATION CODE FO
SPECIALTY CODE M
PROJECT NO. 5002-33
FILE NAME FOM-0003.DWG
DRAWING NO. FOM-3
SHEET NO. 154

09/16/91 - 18:33

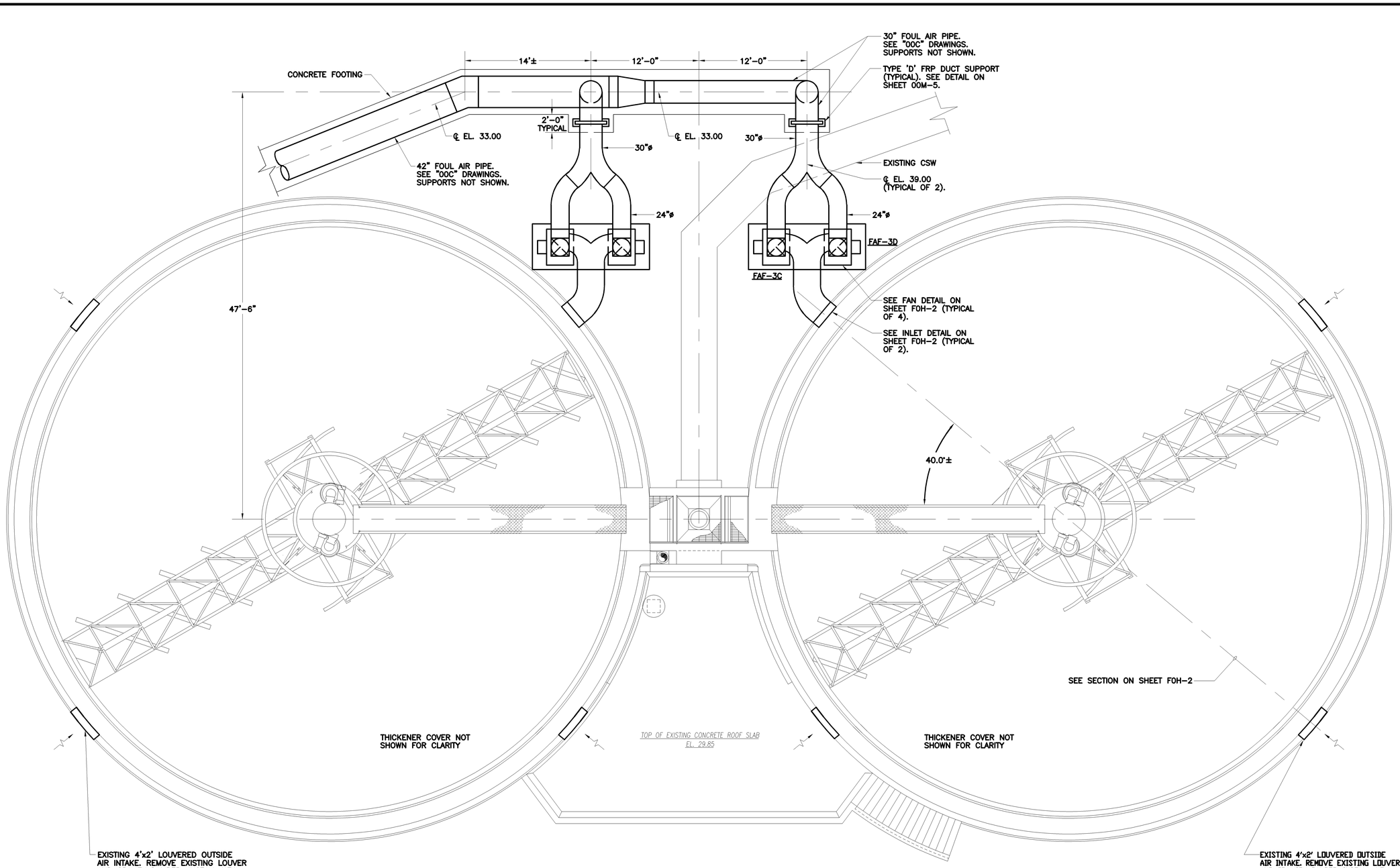

PLAN

SCALE : 3/16"=1'-0"

RECORD DRAWING

C.E. BAILEY & ASSOCIATES, INC.
CONSULTING ENGINEERS
ORLANDO, CLEARWATER & FORT LAUDERDALE, FLORIDA

NO.	DATE	DRWN	CHK'D	REVISIONS
1	9/97	FXP	ASG	RECORD DRAWING

DESIGNED BY: WRH
DRAWN BY: RMM,SFP
CHECKED BY/DATE: WRH/9-91
APPRV'D BY/DATE: WRH/9-91

CAMP DRESSER & McKEE

THIS DRAWING HAS BEEN REVISED BY HAZEN AND SAWYER, P.C. TO REFLECT MODIFICATIONS MADE DURING CONSTRUCTION

environmental engineers, scientists, planners, & management consultants CDM

ARLINGTON COUNTY, VIRGINIA
WATER POLLUTION CONTROL PLANT
UPGRADE AND EXPANSION- PHASE IIB

GRAVITY THICKENERS
HVAC
TOP PLAN

SCALE NOTE

SCALE BAR SHOWN BELOW IS ONE INCH LONG ON A FULL SIZE DRAWING. WHEN SCALING DRAWINGS, MEASURE BAR TO DETERMINE IF SCALES SHOWN WILL REQUIRE ADJUSTING.

ONE INCH

CONTRACT NO. 000000000
YEAR 1991
LOCATION CODE FO
SPECIALTY CODE H
PROJECT NO. 5002-33
FILE NAME FOH1.DWG
DRAWING NO. FOH-1
SHEET NO. 155

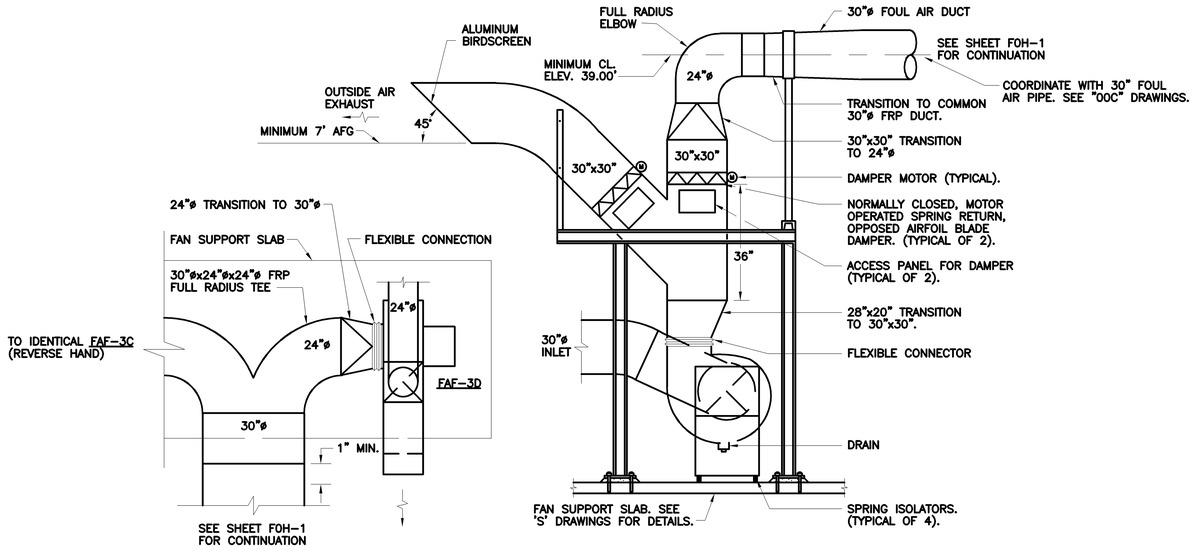

FAF-3C FAN DETAIL

N.T.S.

FAF-3A, FAF-3B AND FAF-3C ARE SIMILAR.

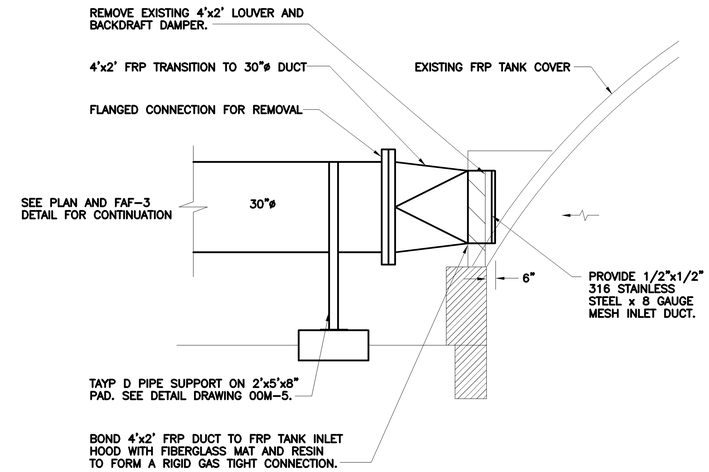

INLET CONNECTION DETAIL

N.T.S.

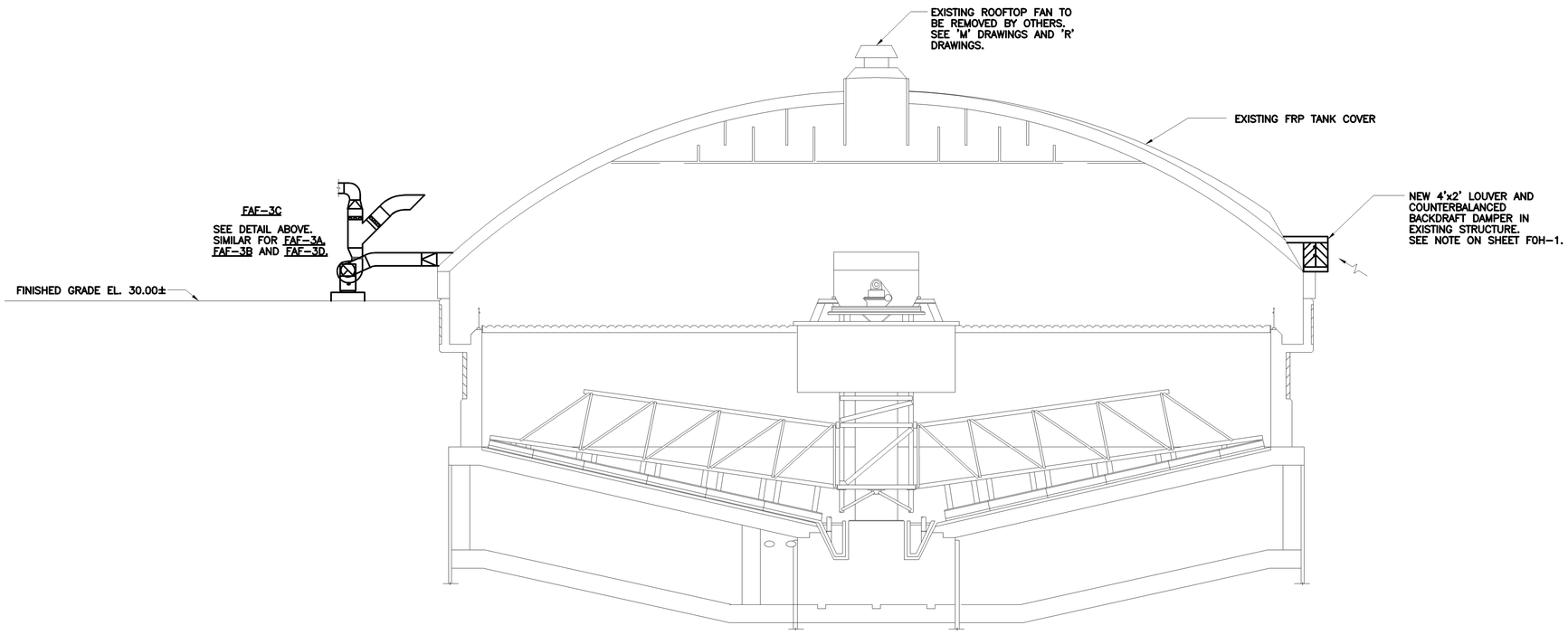

SECTION

SCALE : 3/16"=1'-0"

NO.	DATE	DRWN	CHK'D	DESCRIPTION
				REVISIONS
				RECORD DRAWING
1	9/97	FXP	ASG	

DESIGNED BY: WRH
DRAWN BY: RMM,SFP
CHECKED BY/DATE: WRH/9-91
APPRV'D BY/DATE: WRH/9-91

CAMP DRESSER & McKEE

THIS DRAWING HAS BEEN REVISED BY HAZEN AND SAWYER, P.C. TO REFLECT MODIFICATIONS MADE DURING CONSTRUCTION

environmental engineers, scientists, planners, & management consultants CDM

ARLINGTON COUNTY, VIRGINIA
WATER POLLUTION CONTROL PLANT
UPGRADE AND EXPANSION- PHASE IIB

GRAVITY THICKENERS
HVAC
SECTION

RECORD DRAWING

SCALE NOTE

SCALE BAR SHOWN BELOW IS ONE INCH LONG ON A FULL SIZE DRAWING. WHEN SCALING DRAWINGS, MEASURE BAR TO DETERMINE IF SCALES SHOWN WILL REQUIRE ADJUSTING.

ONE INCH

CONTRACT NO. 000000000
YEAR 1991
LOCATION CODE FO
SPECIALTY CODE H
PROJECT NO. 5002-33
FILE NAME FOH2.DWG
DRAWING NO. FOH-2
SHEET NO. 156

C.E. BAILEY & ASSOCIATES, INC.
CONSULTING ENGINEERS
ORLANDO, CLEARWATER & FORT LAUDERDALE, FLORIDA

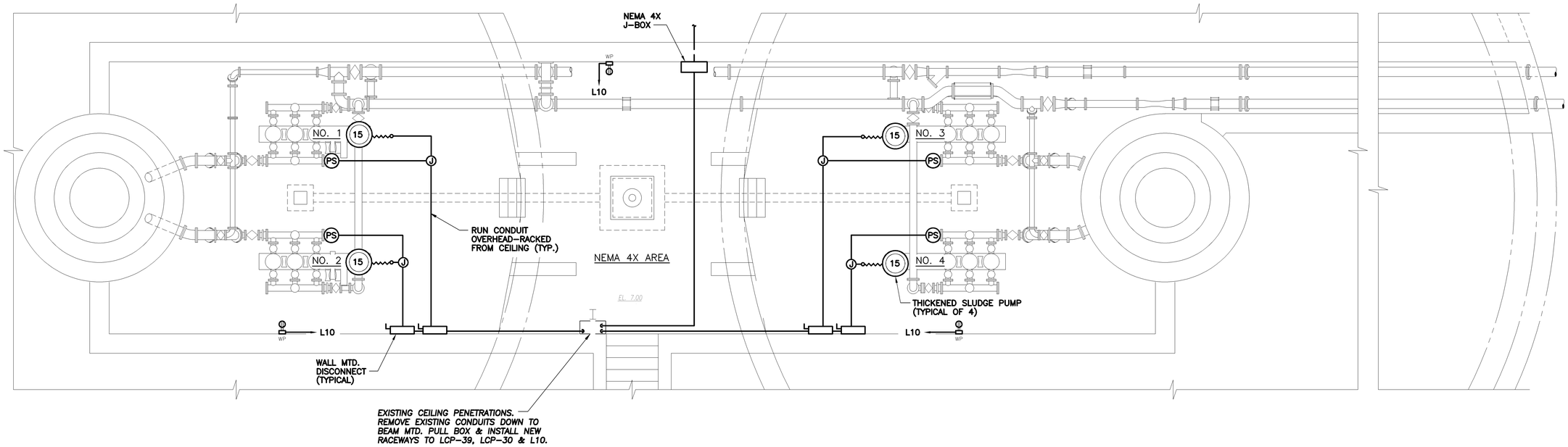

PUMP ROOM AT EL. 5.00

SCALE: 1/4"=1'-0"

NOTES:

1.) THE CONTRACTOR IS REQUIRED TO RELOCATE/ RECONNECT EXISTING ELECTRICAL SYSTEMS TO ACCOMMODATE DEMOLITION AND REINSTALL-ATION OF PROCESS EQUIPMENT & PIPING.

2.) MOUNT WEATHERPROOF RECEPTACLES 4" ABOVE FINISHED FLOOR.

RECORD DRAWING

C.E. BAILEY & ASSOCIATES, INC.
CONSULTING ENGINEERS
ORLANDO, CLEARWATER & FORT LAUDERDALE, FLORIDA

DESIGNED BY: SEB
DRAWN BY: JSG
CHECKED BY/DATE: CEB/1991
APPR'D BY/DATE: CEB/1991

NO.	DATE	DRWN	CHK'D	DESCRIPTION
1	9/97	FXP	ASG	RECORD DRAWING

REVISIONS

CAMP DRESSER & McKEE

THIS DRAWING HAS BEEN REVISED BY HAZEN AND SAWYER, P.C. TO REFLECT MODIFICATIONS MADE DURING CONSTRUCTION

CDM
environmental engineers, scientists, planners, & management consultants

ARLINGTON COUNTY, VIRGINIA
WATER POLLUTION CONTROL PLANT
UPGRADE AND EXPANSION- PHASE B

GRAVITY SLUDGE THICKENERS
ELECTRICAL
BASEMENT PLAN

SCALE NOTE
SCALE BAR SHOWN BELOW IS ONE INCH LONG ON A FULL SIZE DRAWING. WHEN SCALING DRAWINGS, MEASURE BAR TO DETERMINE IF SCALES SHOWN WILL REQUIRE ADJUSTING.
ONE INCH

CONTRACT NO.

YEAR 1991

LOCATION CODE	SPECIALTY CODE
FO	E

PROJECT NO. 5002-33

FILE NAME FOE-0001.DWG

DRAWING NO. FOE-1

SHEET NO. 157

MOTORIZED DAMPER (TYP.)

FOUL AIR BLOWERS (TYP. OF 4)

TO LCP-30 VIA BASEMENT MNTD PULLBOX (TYP.)

NEMA 7 AREA

NEMA 7 AREA

BORE AND JACK NEW CONDUITS UNDER EXISTING SIDEWALK

TYPE 'B' (TYP. OF 3)

NEW NEMA 4X J-BOX MNTD BELOW ON BASEMENT WALL. CONTRACTOR SHALL CORE DRILL WALL & FILL W/GROUT AFTER CONDUIT PENETRATIONS ARE MADE.

ROUTE & LIGHTING CONDUITS OVER EXISTING DOOR & PENETRATE ELECTRICAL ROOM CEILING WHERE SHOWN.

TYPE 'N' (TYP.)

DRIVE MOTOR TERMINALS (TYP.)

TORQUE SWITCH (TYP.)

30A,3P NEMA 7 DISCONNECT (TYP. OF 2)

TORK 2101A PHOTOCELL IN NEMA 4X ENCL. W/HOA IN COVER.

BASEMENT CONDUIT GRATING PENETRATION LOCATION

EXIST. MCC-10A TO BE REMOVED

EXISTING LTG. PNL. L10

3/4" (TYP.)

3#10-3/4" TO L10A

CEILING & ROOF PENETRATION SEAL CONDUIT PENETRATIONS (TYP.)

L10A
LCP-30
LCP-22

EXPLOSION PROOF CONDUIT SEAL (TYP.)

REPLACE EXISTING GRS CONDUIT AND GALVANIZED J-BOX WITH NEW PVC COATED (40 MIL. MIN. THICKNESS) GALVANIZED RIGID STEEL CONDUITS AND EXPLOSION PROOF J-BOX (TYPICAL OF 2)

SLUDGE COLLECTOR C.P. (LCP-22)

C10 PP10B

FOUL AIR BLOWER C.P. (LCP-30)

C10 PP10A

THICKENED SLUDGE PUMP C.P. (LCP-39)

C10 PP10B

EXISTING RELAY PNL. (RP-10) TO BE REMOVED

1" W/ SENSOR CABLES (TYP.)

WELDING RECEPTACLE TO BE REMOVED

EXISTING MCC-10B TO BE REMOVED

EXIST. OZONATION EQUIPMENT TO BE REMOVED

FOUL AIR BLOWER POWER & CONTROL CONDUIT ROUTING, SUPPORT CONDUITS FROM CEILING.

EXIST. OZONATION EQUIPMENT TO BE REMOVED

EXISTING SLUDGE THICKENER DRIVE C.P. TO BE REMOVED

EXIST. POWER J-BOX

EXISTING TELE. BOARD

EXIST. CONTROL J-BOX PB-3.

1-2"
2-2"

PP10A
PP10B

L10

I-10 C-10

LCP-22 1-4" 2-4"

EXIST. 2" TO FLOATATION THICKENER BLDG. SEE SHEET 00E-5 FOR CONTINUATION.

TYPE "P"

EXIST. MANHOLE #11

EXIST. DUCT BANK SEE 00E-5 FOR CONTINUATION

EDWARDS HORN (#5540-N5) WITH 349 BACK BOX & FLASHING RED LIGHT

PP10B FEEDER IN EXISTING 4"

PP10A FEEDER IN EXISTING 4"

ELECTRICAL PLAN

SCALE:1/4'=1'-0"

NOTES:

RECORD DRAWING

NO.	DATE	DRWN	CHK'D	DESCRIPTION
1	12/98	FXP	ASG	RECORD DRAWING

REVISIONS

DESIGNED BY: SEB
DRAWN BY: TRH
CHECKED BY/DATE: CEB/9-91
APPR'D BY/DATE: CEB/9-91

CAMP DRESSER & McKEE
HAZEN AND SAWYER, P.C.
CDM
environmental engineers, scientists, planners, & management consultants

ARLINGTON COUNTY, VIRGINIA
WATER POLLUTION CONTROL PLANT
UPGRADE AND EXPANSION- PHASE B

GRAVITY SLUDGE THICKENERS
ELECTRICAL
UPPER LEVEL PLAN

SCALE NOTE

SCALE BAR SHOWN BELOW IS ONE INCH LONG ON A FULL SIZE DRAWING. WHEN SCALING DRAWINGS, MEASURE BAR TO DETERMINE IF SCALES SHOWN WILL REQUIRE ADJUSTING.

ONE INCH

CONTRACT NO.

YEAR 1991

LOCATION CODE	SPECIALTY CODE
FO	E

PROJECT NO. 5002-33

FILE NAME FOE-0002.DWG

DRAWING NO. FOE-2

SHEET NO. 158

C.E. BAILEY & ASSOCIATES, INC.
CONSULTING ENGINEERS
ORLANDO, CLEARWATER & FORT LAUDERDALE, FLORIDA

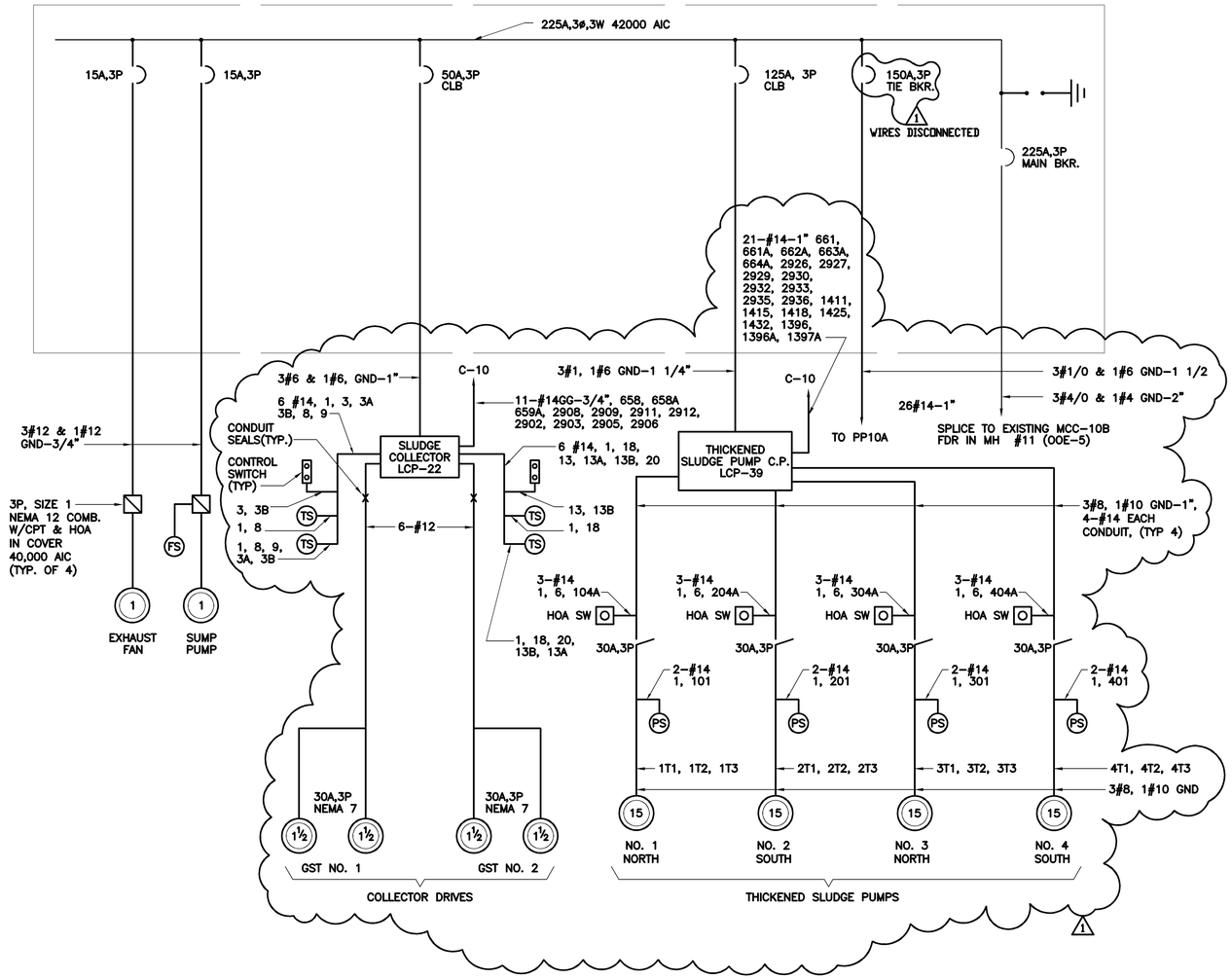

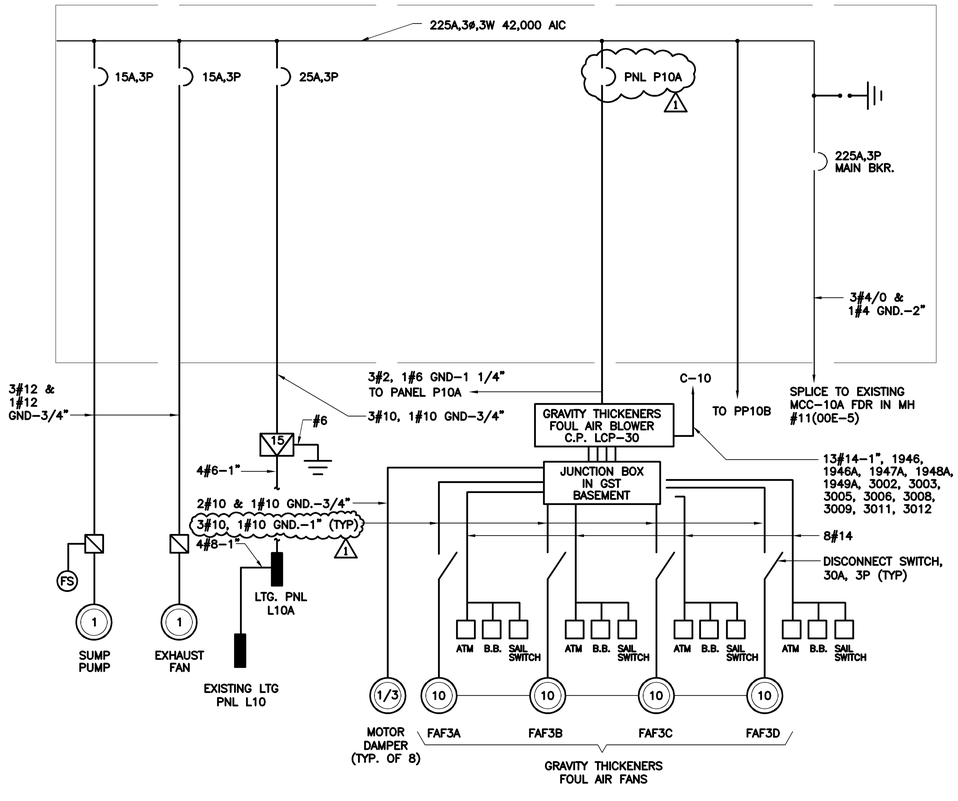

PANEL: L10A	BUS: 100A, 60A MB	VOLTAGE: 120/208V,3ø,4W		
MOUNTING: SURFACE	POLES: 30			
LOCATION: THICKENER BLDG.	REMARKS: NEMA 12 ENCL.			
CIR. NO.	DESCRIPTION	TRIP	POLES	REMARKS
1,2	BASEMENT LTG	20	1	
3,4	UPPER LEVEL LTG	20	1	
5,6	DOME LTG.	20	1	
7,8	BASEMENT RECEPT.	20	1	
9,10	UPPER LEVEL RECEPT.	20	1	
11,12	DOME RECEPT	20	1	
13	H S & COMB. TRANSMITTER	20	1	
14,16,18	FEEDER LTG PNL L10	40	3	
15,17	SPARE	20	2	
19–24	SPARE	20	1	
25–30	SPACE	20	1	

PANEL: PP10A	BUS: 225A,3P MB	VOLTAGE: 480V,3ø,3W		
MOUNTING: SURFACE	POLES: 30 W/150A TIE MLO'S			
LOCATION: THICKENER BLDG.	REMARKS: NEMA 12 ENCL.			
CIR. NO.	DESCRIPTION	TRIP	POLES	REMARKS
1,3,5	FOUL AIR BLOWER CP–LCP–30	100	3	CLB
2,4,6	LTG PNL L10	25	3	
7,9,11	SUMP PUMP FDR	15	3	
8,10,12	EXHAUST FAN	15	3	
13,15,17	SPARE	15	3	
14,16,18	SPARE	15	3	
19,21,23	SPARE	30	3	
24–30	SPACE			

PANEL: PP10B	BUS: 225A,3P MB	VOLTAGE: 480V,3ø,3W		
MOUNTING: SURFACE	POLES: 30			
LOCATION: THICKENER BLDG.	REMARKS: NEMA 12			
CIR. NO.	DESCRIPTION	TRIP	POLES	REMARKS
1,3,5	TIE BREAKER	150	3	
2,4,6	THICKENED SLUDGE CP LCP–39	100	3	CLB
7,9,11	SLUDGE COLLECTOR CP LCP–22	50	3	CLB
8,10,12	EXHAUST FAN	15	3	
13,15,17	SUMP PUMP	15	3	
14,16,18	SPARE	15	3	
19,21,23	SPARE	20	3	
24–30	SPACE			

RECORD DRAWING

NO.	DATE	DRWN	CHK'D	REVISIONS DESCRIPTION
1	12/98	FXP	ASG	RECORD DRAWING

DESIGNED BY: SEB
DRAWN BY: JSG
CHECKED BY/DATE: CEB 9–91
APPR'D BY/DATE: CEB 9–91

CAMP DRESSER & McKEE

THIS DRAWING HAS BEEN REVISED BY HAZEN AND SAWYER, P.C. TO REFLECT MODIFICATIONS MADE DURING CONSTRUCTION

environmental engineers, scientists, planners, & management consultants

CDM

ARLINGTON COUNTY, VIRGINIA
WATER POLLUTION CONTROL PLANT
UPGRADE AND EXPANSION- PHASE IB

GRAVITY SLUDGE THICKENERS
ELECTRICAL
RISER DIAGRAMS

SCALE NOTE
SCALE BAR SHOWN BELOW IS ONE INCH LONG ON A FULL SIZE DRAWING. WHEN SCALING DRAWINGS, MEASURE BAR TO DETERMINE IF SCALES SHOWN WILL REQUIRE ADJUSTING.
ONE INCH

CONTRACT NO.
YEAR 1991
LOCATION CODE FO
SPECIALTY CODE E
PROJECT NO. 5002–33
FILE NAME FOE–0003.DWG
DRAWING NO. FOE–3
SHEET NO. 159

C.E. BAILEY & ASSOCIATES, INC.
CONSULTING ENGINEERS
ORLANDO, CLEARWATER & FORT LAUDERDALE, FLORIDA

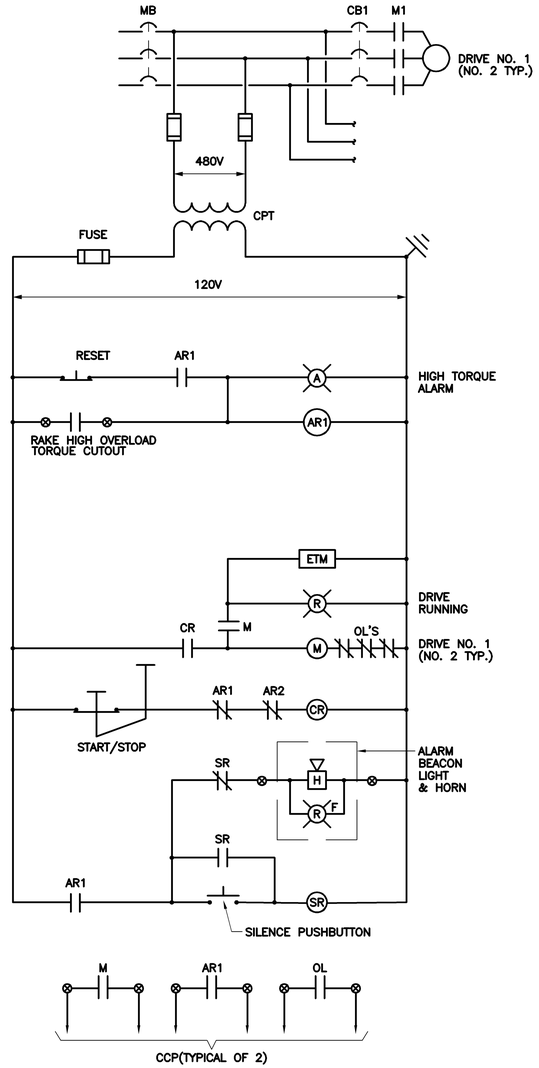

SLUDGE COLLECTOR C.P.
LCP–22

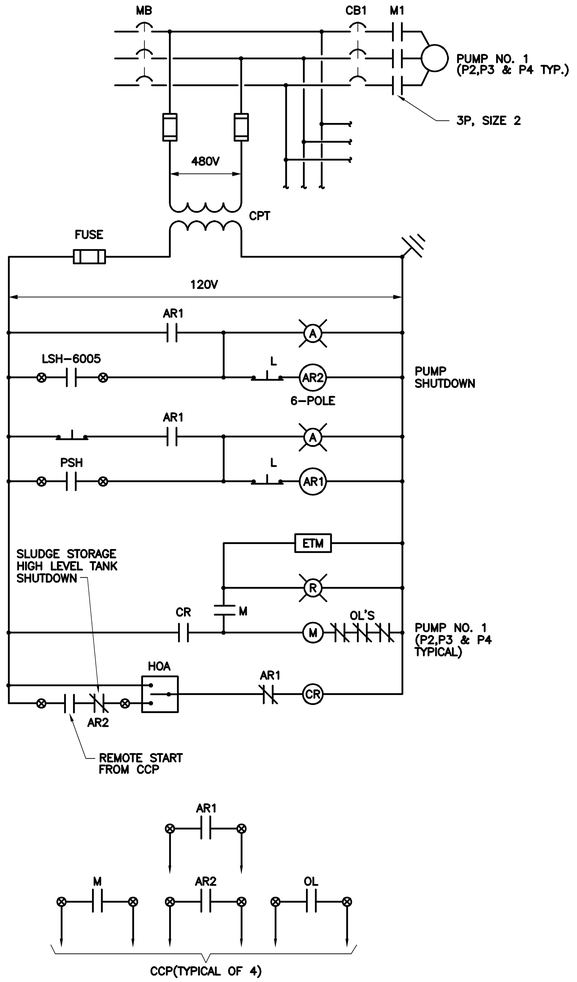

GRAVITY THICKENED SLUDGE PUMP C.P.
LCP–39

NO.	DATE	DRWN	CHK'D	DESCRIPTION
				REVISIONS
1	9/97	FXP	ASG	RECORD DRAWING

DESIGNED BY: SEB
DRAWN BY: TRH
CHECKED BY/DATE: CEB/9–91
APPR'D BY/DATE: CEB/9–91

CAMP DRESSER & McKEE

THIS DRAWING HAS BEEN REVISED BY HAZEN AND SAWYER, P.C. TO REFLECT MODIFICATIONS MADE DURING CONSTRUCTION

CDM
environmental engineers, scientists, planners, & management consultants

ARLINGTON COUNTY, VIRGINIA
WATER POLLUTION CONTROL PLANT
UPGRADE AND EXPANSION- PHASE B

GRAVITY SLUDGE THICKENERS
ELECTRICAL
CONTROL DIAGRAMS

SCALE NOTE
SCALE BAR SHOWN BELOW IS ONE INCH LONG ON A FULL SIZE DRAWING. WHEN SCALING DRAWINGS, MEASURE BAR TO DETERMINE IF SCALES SHOWN WILL REQUIRE ADJUSTING.
ONE INCH

CONTRACT NO.

YEAR 1991

LOCATION CODE	SPECIALTY CODE
FO	E

PROJECT NO. 5002–33
FILE NAME FOE–0004.DWG
DRAWING NO. FOE–4
SHEET NO. 160

RECORD DRAWING

C.E. BAILEY & ASSOCIATES, INC.
CONSULTING ENGINEERS
ORLANDO, CLEARWATER & FORT LAUDERDALE, FLORIDA

FOUL AIR BLOWER C.P.
LCP-30

NO.	DATE	DRWN	CHK'D	DESCRIPTION
				REVISIONS
1	12/98	FXP	ASG	RECORD DRAWING

DESIGNED BY: SEB
DRAWN BY: TRH
CHECKED BY/DATE: CEB/9-91
APPR'D BY/DATE: CEB/9-91

CAMP DRESSER & McKEE

THIS DRAWING HAS BEEN REVISED BY HAZEN AND SAWYER, P.C. TO REFLECT MODIFICATIONS MADE DURING CONSTRUCTION

environmental engineers, scientists, planners, & management consultants

CDM

ARLINGTON COUNTY, VIRGINIA
WATER POLLUTION CONTROL PLANT
UPGRADE AND EXPANSION- PHASE B

GRAVITY SLUDGE THICKENERS
ELECTRICAL
CONTROL DIAGRAMS

RECORD DRAWING

SCALE NOTE
SCALE BAR SHOWN BELOW IS ONE INCH LONG ON A FULL SIZE DRAWING. WHEN SCALING DRAWINGS, MEASURE BAR TO DETERMINE IF SCALES SHOWN WILL REQUIRE ADJUSTING.
ONE INCH

CONTRACT NO.

YEAR	1991
LOCATION CODE	SPECIALTY CODE
FO	E

PROJECT NO. 5002-33
FILE NAME FOE-0005.DWG
DRAWING NO. FOE-5
SHEET NO. 161

C.E. BAILEY & ASSOCIATES, INC.
CONSULTING ENGINEERS
ORLANDO, CLEARWATER & FORT LAUDERDALE, FLORIDA

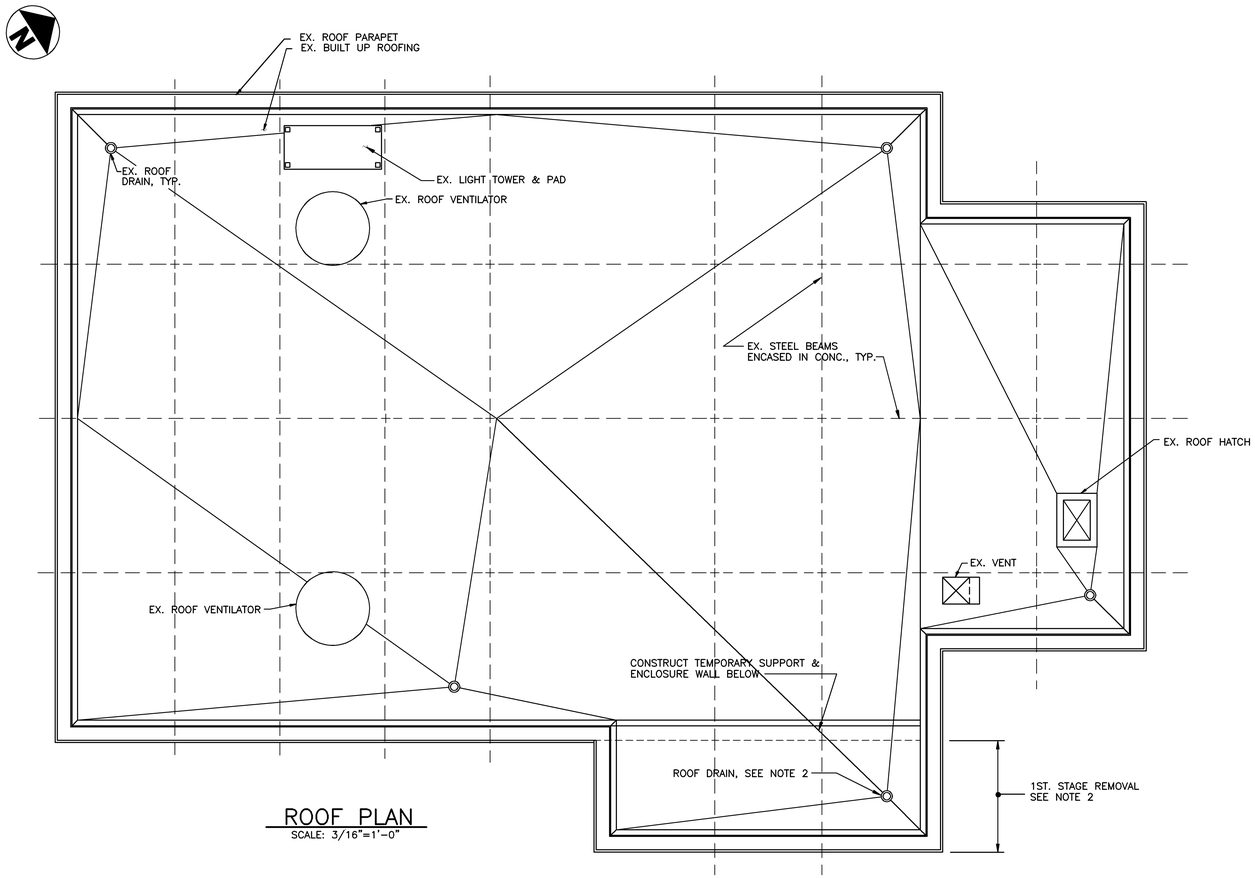

ROOF PLAN
SCALE: 3/16"=1'-0"

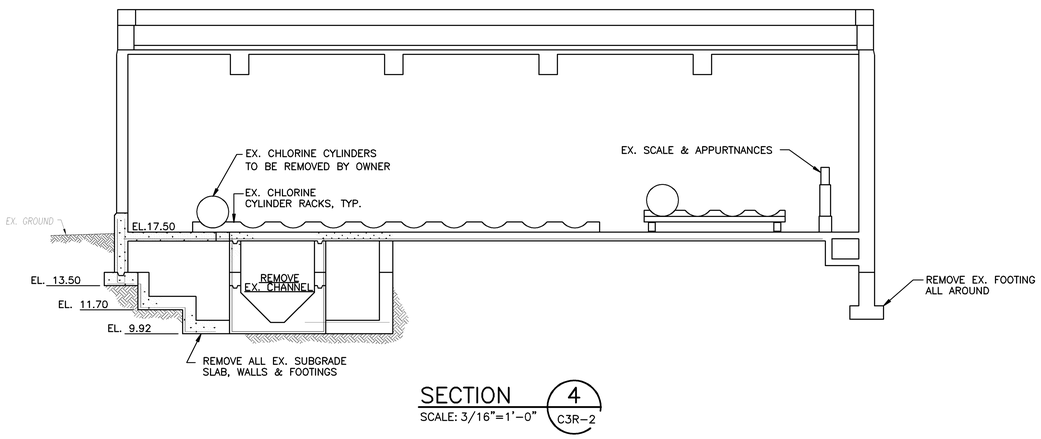

SECTION 4
SCALE: 3/16"=1'-0" C3R-2

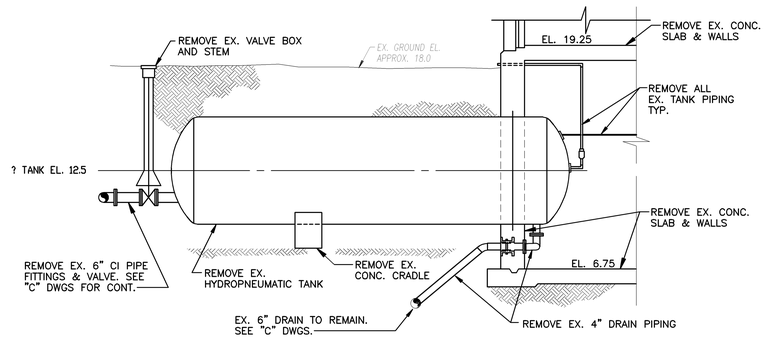

HYDROPNEUMATIC TANK REMOVAL

SECTION 1
SCALE: 1/4"=1'-0" C3R-2

NOTES:

1. ENTIRE CHEMICAL BUILDING TO BE REMOVED, INCLUDING ALL FOOTINGS, FOUNDATIONS AND SLABS. SEE SPECIFICATION SECTION 01010 FOR REMOVAL SEQUENCE.
2. WHEN 1ST STAGE REMOVAL IS PERFORMED, PROVIDE SUITABLE MEANS FOR DRAINING PART OF ROOF WHICH DRAINED TO REMOVED ROOF DRAIN. SUBMIT PROPOSED METHOD FOR APPROVAL.

NO.	DATE	DRWN	CHK'D	DESCRIPTION
1	9/97	FXP	ASG	RECORD DRAWING

REVISIONS

DESIGNED BY: TDH
DRAWN BY: BRW/CTC
CHECKED BY/DATE: TDH 9/91
APPRV'D BY/DATE: TDH 9/91

COMMONWEALTH OF VIRGINIA
THOMAS D. HALL
No. 12502
PROFESSIONAL ENGINEER

CAMP DRESSER & McKEE

THIS DRAWING HAS BEEN REVISED BY HAZEN AND SAWYER, P.C. TO REFLECT MODIFICATIONS MADE DURING CONSTRUCTION

CDM

environmental engineers, scientists, planners, & management consultants

ARLINGTON COUNTY, VIRGINIA
WATER POLLUTION CONTROL PLANT
UPGRADE AND EXPANSION- PHASE IIB

CHEMICAL BUILDING
ROOF REMOVAL PLAN AND SECTIONS

SCALE NOTE
SCALE BAR SHOWN BELOW IS ONE INCH LONG ON A FULL SIZE DRAWING. WHEN SCALING DRAWINGS, MEASURE BAR TO DETERMINE IF SCALES SHOWN WILL REQUIRE ADJUSTING.
ONE INCH

CONTRACT NO. 90-02-WPC
YEAR 1991
LOCATION CODE C3
SPECIALTY CODE R
PROJECT NO. 5002-33
FILE NAME C3R-0001.DWG
DRAWING NO. C3R-1
SHEET NO. 162

RECORD DRAWING

09/18/91 - 11:37

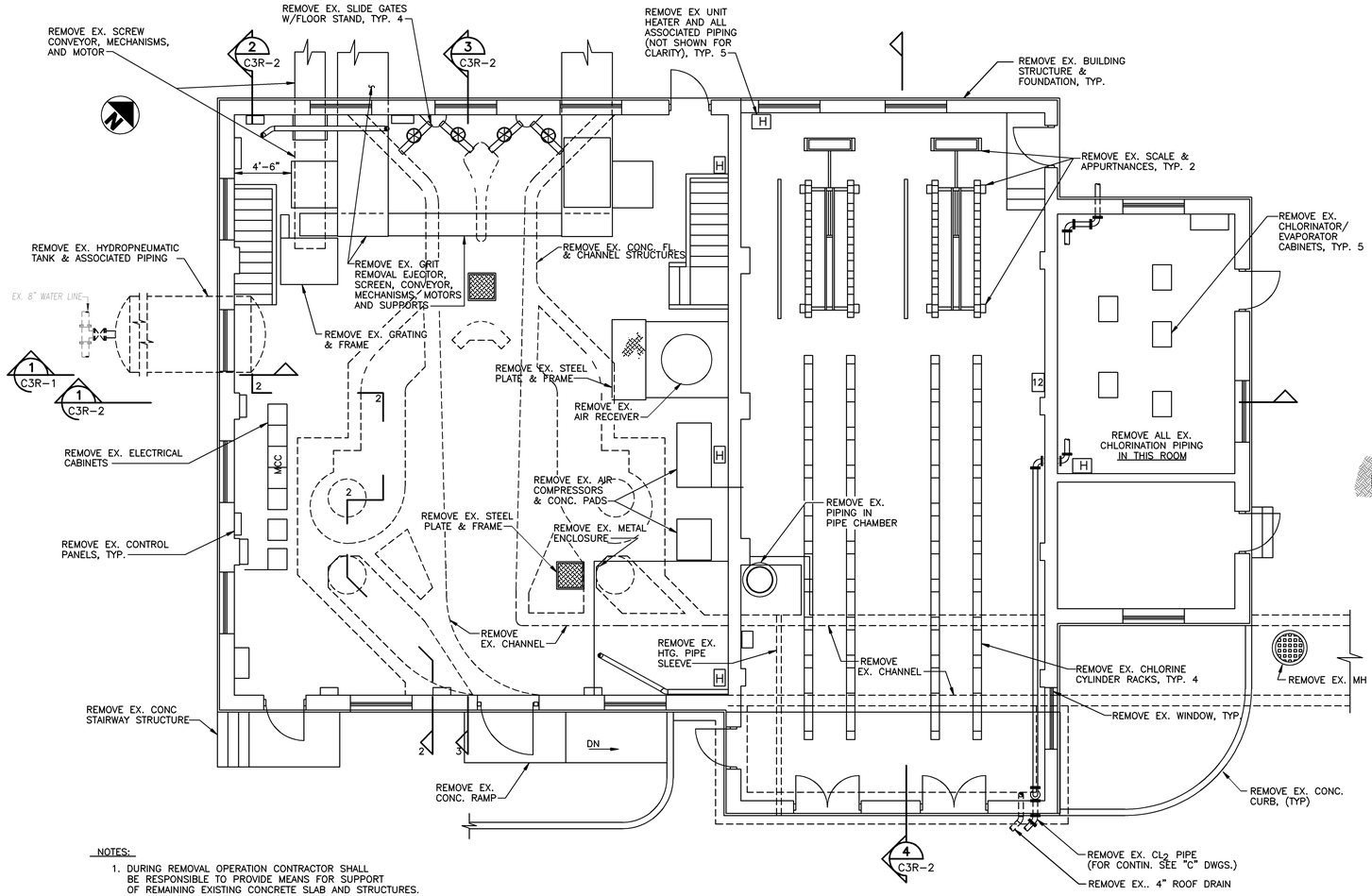

NOTES:

1. DURING REMOVAL OPERATION CONTRACTOR SHALL BE RESPONSIBLE TO PROVIDE MEANS FOR SUPPORT OF REMAINING EXISTING CONCRETE SLAB AND STRUCTURES.

PLAN AT EL. 26.00

SCALE: 3/16"=1'-0"

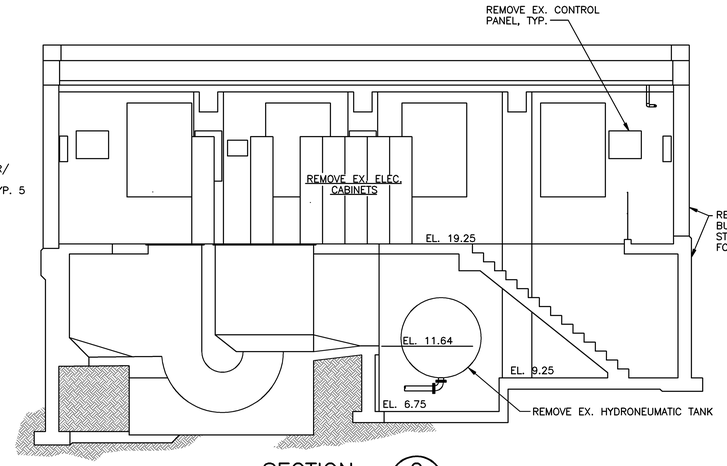

SECTION 2 / C3R-2

SCALE: 3/16"=1'-0"

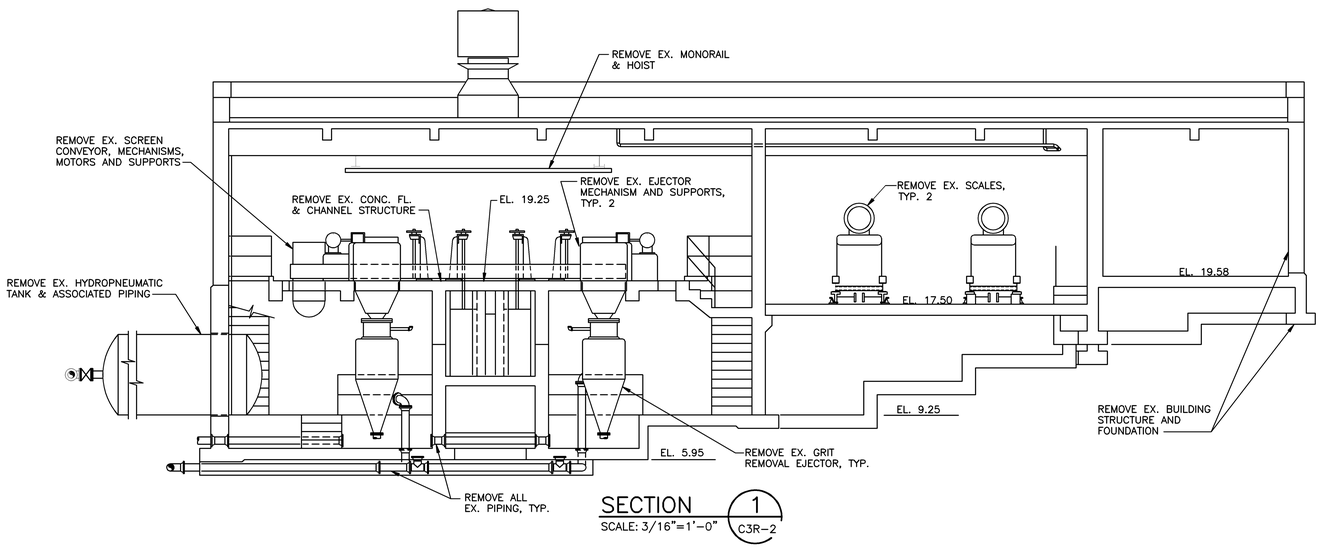

SECTION 1 / C3R-2

SCALE: 3/16"=1'-0"

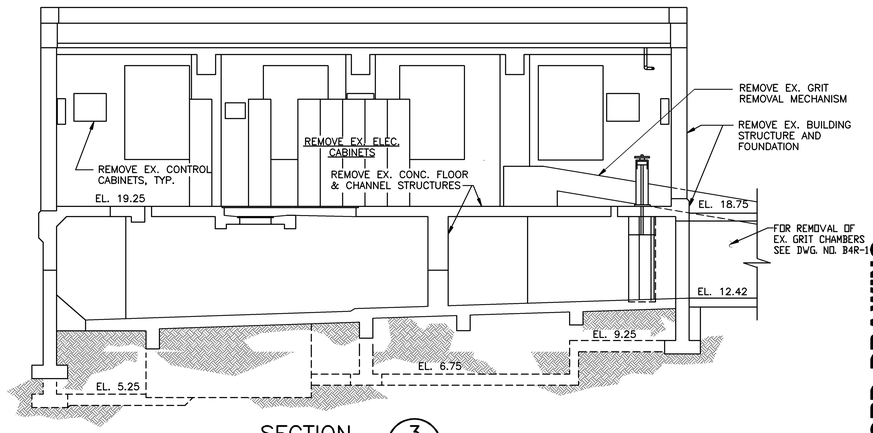

SECTION 3 / C3R-2

SCALE: 3/16"=1'-0"

09/18/91 – 11:31

NO.	DATE	DRWN	CHK'D	DESCRIPTION
1	9/97	FXP	ASG	RECORD DRAWING

REVISIONS

DESIGNED BY: PON
DRAWN BY: CLP/CTC
CHECKED BY/DATE: TDH 9/91
APPRV'D BY/DATE: TDH 9/91

COMMONWEALTH OF VIRGINIA — THOMAS D. HALL No. 12502 — PROFESSIONAL ENGINEER

CAMP DRESSER & McKEE

THIS DRAWING HAS BEEN REVISED BY HAZEN AND SAWYER, P.C. TO REFLECT MODIFICATIONS MADE DURING CONSTRUCTION

CDM

environmental engineers, scientists, planners, & management consultants

ARLINGTON COUNTY, VIRGINIA
WATER POLLUTION CONTROL PLANT
UPGRADE AND EXPANSION- PHASE IIB

REMOVAL PLAN & SECTIONS

SCALE NOTE

SCALE BAR SHOWN BELOW IS ONE INCH LONG ON A FULL SIZE DRAWING. WHEN SCALING DRAWINGS, MEASURE BAR TO DETERMINE IF SCALES SHOWN WILL REQUIRE ADJUSTING.

ONE INCH

CONTRACT NO. 90-02-WPC
YEAR 1991
LOCATION CODE C3
SPECIALTY CODE R
PROJECT NO. 5002-33
FILE NAME C3R-0002.DWG
DRAWING NO. C3R-2
SHEET NO. 163

RECORD DRAWING

IDENTIFICATION CODES

1. 1" 304 ST STL FLUSHING WATER PIPE, NPTxPE w/1"x2" REDUCER.
2. 4" DI GRIT SLURRY PUMP SUCTION PIPE, FLGxPE.
3. 3" DI GRIT HOPPER DRAIN PIPE, FLGxPE
4. 2" PVC PUMP DRAIN PIPE, SLOPE 4% MIN.
5. 6" PVC DRAIN PIPE, SLOPE 1% MIN.
6. PRESSURE INDICATING SWITCH WITH FLANGE TYPE ISOLATOR, DETAIL Q/00M-2, RANGE 0-100 PSI, FOR HIGH PRESSURE SHUT DOWN.
7. 2" SOLENOID VALVE, NC, w/2" GV AND UNION ON EACH SIDE.
8. PRESSURE GAUGE WITH FLANGE TYPE ISOLATOR, RANGE -30" HG-25 PSI, DETAIL Q/00M-2.
9. 1 1/2" DR-PVC/V PUMP DRAIN PIPE TO FLOOR DRAIN.
10. LIMIT SWITCH ON CHECK VALVE ARM FOR FLOW INDICATION.
11. MERCURY TYPE FLOAT SWITCHES FOR SUMP PUMP CONTROL.
12. MOTOR CONTROL SWITCH
13. DISCONNECT SWITCHES FOR PUMPS, SEE 'E' DRAWINGS.
14. 4" DR-CPVC-V w/BV ON VERTICAL 5'-0" AFF.
15. 2" HOSE IN 6" SCH 40 PVC/BS SLEEVE. ? EL AT WALL 8.67. EXTEND ? 6" INTO ROOM.
16. 2" BV w/CHAIN OPERATOR, TYP. 2.
17. 1'-0"x2'-6"x3" DEEP DRAIN PAN FABRICATED FROM 1/4" THICK PVC PLATE w/2" DR-PVC/V TO SUMP, MOUNT w/3 PIPE SUPPORTS, PAN BOTTOM EL 7.50, DETAIL S/00M-2.
18. ADAPTER FROM 2" PVC TO 2" HOSE
19. PIPE SUPPORT, AS REQUIRED, DETAIL J/00M-3
20. PIPE SUPPORT, AS REQUIRED, DETAIL J/00M-1
21. PIPE SUPPORT, AS REQUIRED, DETAIL D/00M-1 LEAVE TRENCH OPEN BENEATH
22. SUMP PUMP CONTROL PANEL (LCP 16).
23. MANUAL MOTOR STARTER FOR AIR COMPRESSOR
24. PUMP SEAL WATER SYSTEM CONTROL PANEL (LCP 21).
25. SEAL WATER RESERVOIR w/FLOAT VALVE, DETAIL A/B8M-13.
26. SEAL WATER PUMPS, DETAIL A/B8M-13.
27. SEAL WATER HYDROPNEUMATIC TANK, DETAIL A/B8M-13.
28. AIR COMPRESSOR AND STORAGE TANK.
29. 1/2" CA-CU/S w/COMPRESSED AIR HOSE, FEMALE QUICK CONNECTOR, 4'-0" AFF.
30. 1 CA-CU/S
31. 3/4" CA-CU/S, TYP EACH BRANCH.

IDENTIFICATION CODES, CONTINUED

32. 1 CA-CU/S, UP THROUGH 4" PVC SLEEVE TO CHEMICAL STORAGE ROOM ABOVE.
33. 8 SL-DI/F TO GRAVITY THICKENERS.
34. 8 DR-DI/F DRAIN PUMP DISCHARGE PIPE TO PRELIMINARY TREATMENT BUILDING INFLUENT.
35. AUXILIARY CLARIFIER DRAIN/PRIMARY SLUDGE PUMP.
36. 8 DR-DI/F PRIMARY CLARIFIER 1-4 DRAIN PIPE.
37. GRIT PUMP CONTROL PANEL (LCP NO. 8).
38. 3 CDW-DI/F COUNTY WATER PIPE.
39. 4 PEW AWT-DI/F
40. 6 PEW AWT-DI/F
41. 6" REDUCED PRESSURE BACKFLOW PREVENTER.
42. 6" GATE VALVE, DOUBLE DISK.
43. 4" CHECK VALVE, SWING.
44. 4 FW-S/W SPRINKLER WATER PIPE, SEE 'P' DRAWINGS.
45. 2 PY-PVC/V UP THROUGH 4" SCH 40 PVC SLEEVE THROUGH FLOOR AND SUMP ABOVE.
46. 6" PVC FLOOR DRAIN, TYP 8.
47. 2" PVC FLOOR DRAIN, TYP 4.
48. 6" SCH 40 GS SLEEVE w/COLLAR AND COMPRESSION SEAL FOR 2 CDW-PVC/V (BS DN EXTERIOR)
49. 1 CDW-PVC/V w/2"x1" REDUCER AND 1" PVC BV w/WALL SUPPORTS, DETAIL S/00M-2.
50. 2 DR-PVC/V FOR AIR TANK w/BV, w/WALL/FLOOR SUPPORTS, DETAIL S/00M-2, TO FLOOR DRAIN.
51. 1 1/2" NaOCl-CPVC/V HYPOCHLORITE FEED PIPE TO BYPASS SCREEN CHAMBER.
52. 1 NaOCl-CPVC/V HYPOCHLORITE FEED PIPE TO PRIMARY SLUDGE PIPE.
53. 2 NaOCl-CPVC/V HYPOCHLORITE TRANSFER PIPE FROM CHLORINE BUILDING.
54. 1 1/2" NaOCl-CPVC/V HYPOCHLORITE FEED PIPE TO PRIMARY EFFLUENT.
55. 1 AWT PEW-CU/S TO SEAL WATER RESERVOIR AND 1" GV.
56. PIPE SUPPORT, AS REQUIRED, DETAIL K/00M-1.
57. 1 1/4" PSW-CU/S PUMP SEAL WATER PIPE.
58. 1/2" PSW-CU/S PUMP SEAL WATER PIPE.
59. 6" CDW WALL PIPE, DI-FLGxMJ w/COLLAR.
60. 3" PEW AWT WALL PIPE, DI-FLGxMJ w/COLLAR.
61. GS SLEEVE w/COLLAR AND COMPRESSION SEAL BETWEEN SLEEVE AND PIPE. SEE '00H' DRAWINGS.
62. 8" SCH 40 GS SLEEVE w/COLLAR AND COMPRESSION SEAL.

IDENTIFICATION CODES, CONTINUED

63. 6" RISER TO 6" AFF FOR COMPRESSOR RECEIVER AND AFTERCOOLER DRAIN PIPE.
64. 4"x1" GS TEE, 1" GV AND 1 PEW AWT-CU/S PIPE TO AIR COMPRESSOR AFTERCOOLER.
65. GRIT SLURRY PUMP
66. 8" RESTRAINED FLANGE ADAPTER.
67. 8" FLG 11 1/4" DI BEND, TYP.
68. 6" PVC OPEN DRAIN PIPE AT BOTTOM AND END OF TUNNEL TRENCH DRAIN.
69. 36" FLGxPE DI WALL PIPE w/COLLAR, w/BF.
70. 36" BELLxBELL DI 90? BEND.
71. 36" BELLxBELL DI 45? BEND.
72. 36" DI/BS PIPE CLASS 52 COORDINATE PIPE LOCATION W/ SHEETING SHOWN ON B8S-1 & B8M-6
73. 2 HOT AWT PEW-CU/S w/INSULATION.
74. SUBMERSIBLE SUMP PUMPS.
75. 4 SPD-DI/F FROM WEST SLUDGE PUMP GALLERY SUMP PUMPS.
76. SPARE SLEEVE w/GS CAP ON EACH END.
77. 12" GS SLEEVE w/1/2" MIN WALL THICKNESS BETWEEN GRIT PUMP ROOM AND PIPE CHAMBER, TYP 10.
78. 2 CDW-PVC/V THROUGH SLEEVE.
79. 4 GS-DI/F THROUGH SLEEVE.
80. 6 SC-CPVC/V SECONDARY SCUM SLURRY PIPE THROUGH SLEEVE.
81. 4 SC-CPVC/V PRIMARY SCUM SLURRY PIPE THROUGH SLEEVE.
82. ROUTE 1" RISER AROUND DRAIN VALVE, TYP, 2 PLACES.
83. 3" FLG GATE VALVE w/CHAIN OPERATOR, ? EL. 6.42.
84. 3 AWT PEW-304 SS/W w/3"x2" TEE, ? EL. 6.42.
85. AWT PEW FLUSHING WATER HEADER, 304 SS/W, SIZE VARIES 2"-1". ? EL. 6.42
86. 3 AWT PEW HEADER-GS/T (DI/F MAY BE USED AT CONTRACTORS OPTION).
87. 3" DI PLUG VALVE AND FLG PVC PIPE DRAIN.
88. 6" DI PLUG VALVE w/CHAIN OPERATOR, TYP 9 CHANNEL DRAIN PIPES.
89. 8 DR-PVC/V DRAIN PIPE HEADER, SLOPE AT 1% MIN.
90. 1 AWT PEW-GS/T FLUSHING WATER PIPE w/1" CHAIN OPERATED GATE VALVE, 6" DI REDUCING FLANGE, UNION AND TEE CONNECTION TO 3" AWT PEW PIPE HEADER, TYP. 9 CHANNEL DRAIN PIPES.
91. 6 DR-DI/MJ IN CONC ENCASEMENT FROM FLOOR DRAIN IN PIPE CHAMBER.
92. 8" PLUG VALVE w/CHAIN OPERATOR
93. GUARD RAIL, DETAIL A/00S-4, w/o TOEBOARD, TYP.
94. PIPE HARNESS ASSEMBLY, DETAIL P/00M-2, TYP.
95. 3" DI FLG TEE DN 3 CDW-DI/FLG PIPE w3"x1 1/2" NPT REDUCING FLANGE ON BRANCH w/1 1/2" CDW-CU/S BRANCH PIPE w/1 1/2" GV.
96. 1 1/2" CDW-CU/S COUNTY WATER PIPE TO WEST SLUDGE PUMP GALLERY AND SCUM PUMP STATION.
97. SEAL WATER SYSTEM FOR GRIT PUMP, DETAIL U/00M-2, MOUNT ON GRIT HOPPER WALL.
98. 1/2" PSW-CU/S PUMP SEAL WATER PIPE, TYP 4.
99. SEAL WATER SYSTEM. DETAIL U/00M-2

PLAN AT EL. 7.0
SCALE: 1/4"=1'-0"

DETAIL A B8M-13 SEAL WATER SYSTEM

DETAIL A B8M-9 PUMP DISCHARGE PIPE INTERCONNECTION

LEGEND: 1 RFC-019 — REPRESENTS HOSE RACKS, (THIS DWG. ONLY)

NO.	DATE	DRWN	CHK'D	DESCRIPTION
1	9/97	FXP	ASG	RECORD DRAWING ADD. #2

REVISIONS

DESIGNED BY: KCW
DRAWN BY: CLP
CHECKED BY/DATE: TDH 9/91
APPRV'D BY/DATE: TDH 9/91

COMMONWEALTH OF VIRGINIA — THOMAS D. HALL No. 12502 — PROFESSIONAL ENGINEER

CAMP DRESSER & McKEE

THIS DRAWING HAS BEEN REVISED BY HAZZEN AND SAWTER, P.C. TO REFLECT MODIFICATIONS MADE DURING CONSTRUCTION

environmental engineers, scientists, planners, & management consultants

CDM

ARLINGTON COUNTY, VIRGINIA
WATER POLLUTION CONTROL PLANT
UPGRADE AND EXPANSION- PHASE IIB

PRELIMINARY TREATMENT BUILDING
BASEMENT PLAN

RECORD DRAWING

SCALE NOTE
SCALE BAR SHOWN BELOW IS ONE INCH LONG ON A FULL SIZE DRAWING. WHEN SCALING DRAWINGS, MEASURE BAR TO DETERMINE IF SCALES SHOWN WILL REQUIRE ADJUSTING.
ONE INCH

CONTRACT NO. 90-02-WPC
YEAR 1991
LOCATION CODE B8 | SPECIALTY CODE M
PROJECT NO. 5002-33
FILE NAME B8M-0001.DWG
DRAWING NO. B8M-1
SHEET NO. 178

10/18/91 - 08:51

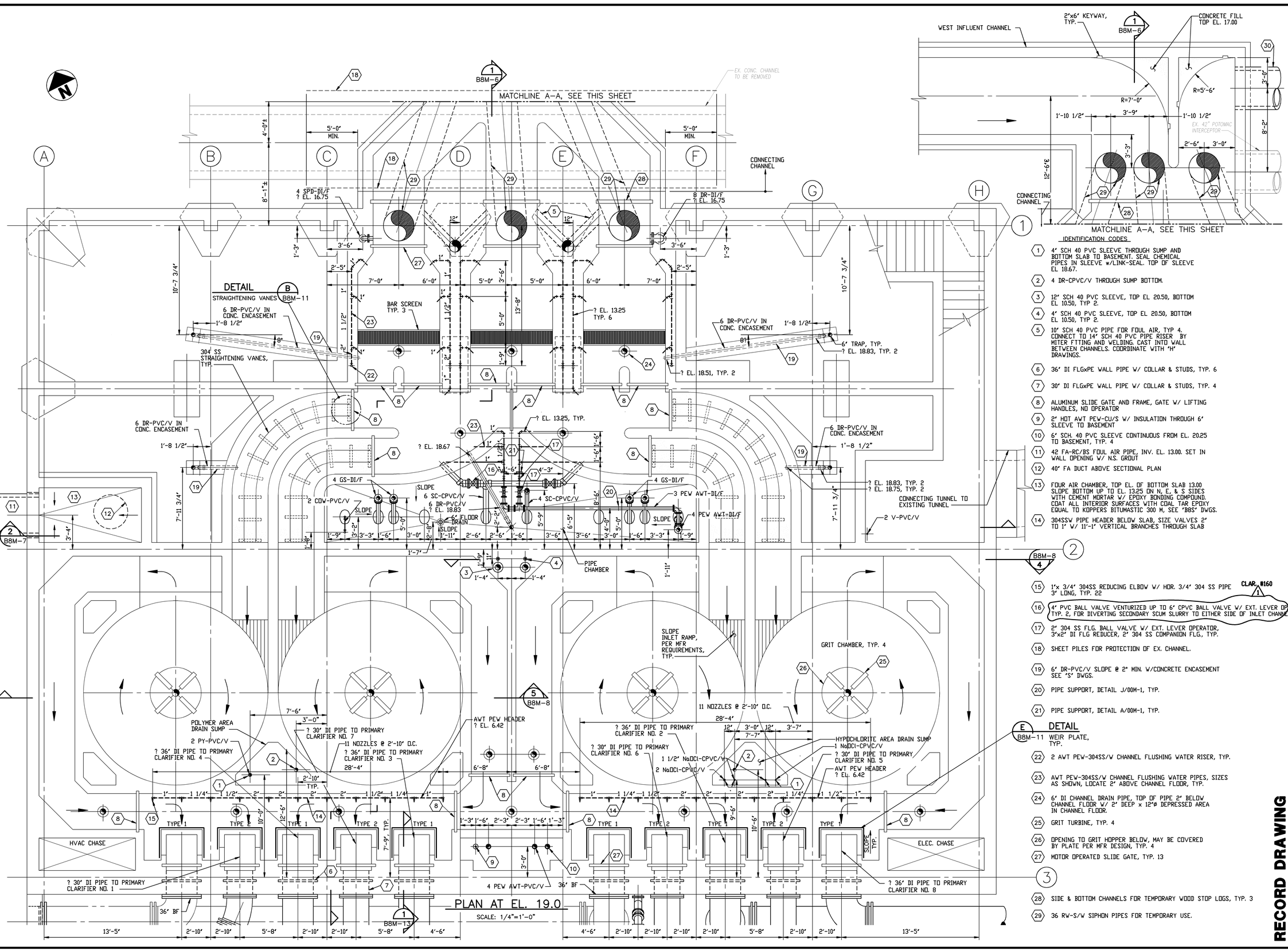

IDENTIFICATION CODES

1. 4' SCH 40 PVC SLEEVE THROUGH SUMP AND BOTTOM SLAB TO BASEMENT. SEAL CHEMICAL PIPES IN SLEEVE W/LINK-SEAL. TOP OF SLEEVE EL 18.67.
2. 4 DR-CPVC/V THROUGH SUMP BOTTOM.
3. 12' SCH 40 PVC SLEEVE, TOP EL 20.50, BOTTOM EL 10.50, TYP 2.
4. 4' SCH 40 PVC SLEEVE, TOP EL 20.50, BOTTOM EL 10.50, TYP 2.
5. 10' SCH. 40 PVC PIPE FOR FOUL AIR, TYP 4. CONNECT TO 14" SCH 40 PVC PIPE RISER BY MITER FTTING AND WELDING. CAST INTO WALL BETWEEN CHANNELS. COORDINATE WITH 'H' DRAWINGS.
6. 36' DI FLGxPE WALL PIPE W/ COLLAR & STUDS, TYP. 6
7. 30' DI FLGxPE WALL PIPE W/ COLLAR & STUDS, TYP. 4
8. ALUMINUM SLIDE GATE AND FRAME, GATE W/ LIFTING HANDLES, NO OPERATOR
9. 2' HOT AWT PEW-CU/S W/ INSULATION THROUGH 6' SLEEVE TO BASEMENT
10. 6' SCH. 40 PVC SLEEVE CONTINUOUS FROM EL. 20.25 TO BASEMENT, TYP. 4
11. 42 FA-RC/BS FOUL AIR PIPE, INV. EL. 13.00. SET IN WALL OPENING W/ N.S. GROUT
12. 40' FA DUCT ABOVE SECTIONAL PLAN
13. FOUR AIR CHAMBER, TOP EL. OF BOTTOM SLAB 13.00. SLOPE BOTTOM UP TO EL. 13.25 ON N, E, & S SIDES WITH CEMENT MORTAR W/ EPOXY BONDING COMPOUND. COAT ALL INTERIOR SURFACES WITH COAL TAR EPOXY EQUAL TO KOPPERS BITUMASTIC 300 M, SEE 'B8S' DWGS.
14. 304SSW PIPE HEADER BELOW SLAB, SIZE VALVES 2" TO 1' W/ 11'-1" VERTICAL BRANCHES THROUGH SLAB
15. 1'x 3/4" 304SS REDUCING ELBOW W/ HDR. 3/4" 304 SS PIPE 3' LONG, TYP. 22 — CLAR. #160
16. 4" PVC BALL VALVE VENTURIZED UP TO 6" CPVC BALL VALVE W/ EXT. LEVER OPERATOR TYP. 2, FOR DIVERTING SECONDARY SCUM SLURRY TO EITHER SIDE OF INLET CHANNELS.
17. 2' 304 SS FLG. BALL VALVE W/ EXT. LEVER OPERATOR, 3"x2" DI FLG REDUCER, 2' 304 SS COMPANION FLG., TYP.
18. SHEET PILES FOR PROTECTION OF EX. CHANNEL.
19. 6' DR-PVC/V SLOPE @ 2" MIN. W/CONCRETE ENCASEMENT SEE 'S' DWGS.
20. PIPE SUPPORT, DETAIL J/00M-1, TYP.
21. PIPE SUPPORT, DETAIL A/00M-1, TYP.
22. 2 AWT PEW-304SS/W CHANNEL FLUSHING WATER RISER, TYP.
23. AWT PEW-304SS/W CHANNEL FLUSHING WATER PIPES, SIZES AS SHOWN, LOCATE 2' ABOVE CHANNEL FLOOR, TYP.
24. 6' DI CHANNEL DRAIN PIPE, TOP OF PIPE 2' BELOW CHANNEL FLOOR W/ 2' DEEP x 12"ø DEPRESSED AREA IN CHANNEL FLOOR.
25. GRIT TURBINE, TYP. 4
26. OPENING TO GRIT HOPPER BELOW, MAY BE COVERED BY PLATE PER MFR DESIGN, TYP. 4
27. MOTOR OPERATED SLIDE GATE, TYP. 13
28. SIDE & BOTTOM CHANNELS FOR TEMPORARY WOOD STOP LOGS, TYP. 3
29. 36 RW-S/W SIPHON PIPES FOR TEMPORARY USE.

E DETAIL B8M-11 WEIR PLATE, TYP.

NO.	DATE	DRWN	CHK'D	DESCRIPTION
1	9/97	FXP	ASG	RECORD DRAWING

REVISIONS

DESIGNED BY: KCW
DRAWN BY: CLP
CHECKED BY/DATE: TDH 9/91
APPRV'D BY/DATE: TDH 9/91

COMMONWEALTH OF VIRGINIA — THOMAS D. HALL No. 12502 — PROFESSIONAL ENGINEER

CAMP DRESSER & McKEE

THIS DRAWING HAS BEEN REVISED BY BLAZEN AND SAWTER, P.C. TO REFLECT MODIFICATIONS MADE DURING CONSTRUCTION

environmental engineers, scientists, planners, & management consultants

CDM

ARLINGTON COUNTY, VIRGINIA
WATER POLLUTION CONTROL PLANT
UPGRADE AND EXPANSION- PHASE IIB

PRELIMINARY TREATMENT BUILDING
PLAN BELOW FIRST FLOOR

SCALE NOTE

SCALE BAR SHOWN BELOW IS ONE INCH LONG ON A FULL SIZE DRAWING. WHEN SCALING DRAWINGS, MEASURE BAR TO DETERMINE IF SCALES SHOWN WILL REQUIRE ADJUSTING.

1 ONE INCH

CONTRACT NO. 90-02-WPC
YEAR 1991
LOCATION CODE B8
SPECIALTY CODE M
PROJECT NO. 5002-33
FILE NAME B8M-0002.DWG
DRAWING NO. B8M-2
SHEET NO. 179

RECORD DRAWING

09/06/90 - 15:35

IDENTIFICATION CODES

1. 12" SCH 40 PVC SLEEVES THROUGH CONCRETE TO BASEMENT. TOP EL 20.50. PROVIDE REMOVABLE CAP ON UNUSED SLEEVE.
2. PIPE SUPPORT, AS REQ'D, SEE DETAIL J/00M-1, TYP.
3. 1 CDW-PVC/V, OFFSET AT EL 28.00 AND UP TO FLOOR ABOVE.
4. FRONT OF UNIT (SOUTH), TYP.
5. 4" SCH 40 PVC SLEEVE THROUGH GRATING SUMP, AND BOTTOM SLAB TO BASEMENT. TOP OF SLEEVE EL. 20.33.
6. CALIBRATION CHAMBER.
7. 4 OVERFLOW-PVC/V, 4 DR-PVC/V WITH 4" BV, TYP.
8. GRIT TURBINE DRIVE CONTROL PANEL (LCP 7).
9. 2 1/2" BV WITH CHAIN OPERATOR, TYP 3.
10. 2 1/2" FLANGE TYPE PRESSURE ISOLATOR WITH PRESSURE INDICATING SWITCH.
11. 1 CA-CU/S UP FROM 4" SCH 40 PVC SLEEVE. 1 SPARE 4" SCH 40 PVC SLEEVE
12. 1 1/2 PEW AWT-PVC/V
13. 1 1/2" DILUTION WATER-PVC/V
14. 1 CA-CU/S (BELOW 12)
15. PIPE SUPPORT, AS REQ'D, SEE DETAIL S/00M-2, TYP.
16. COMPRESSED AIR HOSE FEMALE QUICK CONNECTOR ON 1 CA-CU/S BRANCH.
17. 1 CA-CU/S UP TO LEVEL ABOVE.
18. 3/4" CDW HOSE BIBB WITH VACUUM BREAKER, ? EL 25.00
19. 3/4" CDW HOSE, 100'-0" LONG WITH PISTOL NOZZLE AND HOSE RACK.
20. 1 1/2" PEW AWT HOSE, 100'-0" LONG WITH 3/8" STRAIGHT NOZZLE AND HOSE RACK.
21. 6"x4" FLANGE REDUCER WITH 4"x1 1/2" REDUCING FLANGE WITH 1 1/2" PEW AWT-GS/T BRANCHES TO 2-1 1/2" GV AND 1 1/2" HOSE ADAPTERS, ? EL 25.00.
22. 2 CDW-PVC/V DOWN THROUGH 3" SCH 40 PVC SLEEVE. CONNECT TO HOSE BIBB, 1 1/2" AND 1" PIPES.
23. 1 1/2" CDW-PVC/V TO CHEMICAL STORAGE ROOM.
24. PIPE SUPPORT, DETAIL U/00M-3
25. 3" BV AND MALE QUICK CONNECTOR WITH CAP.
26. 4" SCH 40 PVC BUILDING SANITARY DRAIN TO WEST INFLUENT CHANNEL.
27. 10" SCH 40 PVC PIPE FOR FOUL AIR, TYP 4. CONNECT TO 14" SCH 40 PVC PIPE RISER BY MITER FITTING AND WELDING CAST INTO WALL BETWEEN CHANNELS. COORDINATE WITH "M" DRAWINGS.
28. SPRINKLER WATER PIPE, SEE "P" DRAWINGS.
29. 6" SCH 40 PVC SLEEVE CONTINUOS FROM EL. 20.25 TO BASEMENT, TYP. 4. PROVIDE REMOVABLE CAP ON UNUSED SLEEVES.
30. 2 HOT PEW AWT-CU/S WITH INSULATION DOWN THROUGH SLEEVE TO LOWER LEVEL.
31. 2 HOT PEW AWT-CU/S WITH INSULATION UP TO MECHANICAL ROOM.
32. 2 PEW AWT-PVC/V UP THROUGH SLEEVE TO MECHANICAL ROOM.
33. 2 PEW AWT-PVC/V CONNECT TO 34 .
34. 4 PEW AWT-PVC/V DOWN THROUGH SLEEVE TO LOWER LEVEL.
35. 4" SCH 40 PVC SLEEVE W/ REMOVABLE CAP 4' AFF
36. 4" SCH 40 PVC SLEEVE W/ 1" PEW AWT SPRAY WATER PIPE W/NOZZLE-SS/W. SEAL PIPE IN SLEEVE W/ COMP. SEAL. USE 1" CPVC FLANGED TRUE UNION BALL VALVES TO BE HEYWARD "SAFE BLOCK" OR EQUAL. 1 CLAR. #153
37. 6" SCH 40 PVC SLEEVE W/TEMP. PLUG
38. 2" SS FLG BALL VALVES W/ CHAIN OPERATORS & INSULATION
39. FABRICATED STEEL BOLLARD, DETAIL F/BBA1
40. BUBBLER LEVEL CONTROL PANEL
41. MERCURY TYPE HIGH SUMP LEVEL ALARM FLOAT SWITCH. SUPPORT W/ MODIFIED PIPE SUPPORT DETAIL J/00M-2
42. 12" SCH 40 PVC FLGxPE SLEEVE TO CHANNEL BELOW W/ BF
43. 12" SCH 40 PVC FLGxPE SLEEVE TO CHANNEL BELOW W/ SONIC LEVEL METER TRANSPONDER W/ CABLE TO TRANSMITTER IN PRELIM. PROCESS CONT. RM.
44. 12" SCH 40 PVC FLGxPE SLEEVE TO CHANNEL BELOW W/ DRILLED FOR CABLE BUSHING W/ MERCURY TYPE HIGH LEVEL FLOAT SWITCH BELOW.
45. PIPE SUPPORT FABRICATED FROM 304SS 1 1/2"x 1/4" ANGLES W/ 1/4"x6"x6" ? EACH END BOLTED TO SUMP WALLS W/2 1/2" SS CPDXY ANCHORS EACH. VERTICAL ANGLES W/ 1/4" SS U-BOLTS TO SUPPORT PIPES.
46. PIPE SUPPORT DETAIL S/00M-2 EXCEPT ALL 304 SS. TYP. ALL PIPE SUPPORTS IN NaOCl CONTAINMENT AREA.
47. 1" AWT PEW FREEZE PROOF WALL HYDRANT ? EL. 21.0
48. SCH. 40 PVC SLEEVE SIZE: PIPE SIZE +2" SET IN GROUT. SEAL PIPE IN SLEEVE W/ COMPRESSION SEAL.
49. 2 SCT-SS/W W/ INSULATION & HEAT TRACING
50. 2 V-PVC/V FLOOR DRAIN VENT PIPE IN 4" SCH 40 PVC SLEEVE. SEAL PIPE IN SLEEVE W/ CAULK
51. 1" CDW-CU/S TO EMERG. SHOWER/EYEWASH
52. FLOW SWITCH TO ACTIVATE ALARM WHEN SHOWER/EYEWASH USED.
53. FLANGE TYPE PRESSURE ISOLATOR & 0-100 PSI PRESS. INDICATING SWITCH, TYP. 2, MOUNT ABOVE FLG.
54. FLANGE TYPE PRESSURE ISOLATOR & COMB. PRESSURE GAGE, 30" Hg/20 PSI, TYP. 2, MOUNT ABOVE FLG.
55. 3" SCH 40 PVC SLEEVE W/ LEVER TYPE EXTENSION OPERATOR FOR BALL VALVE BELOW. PROVIDE SEALED ESCUTCHEON BETW. OPERATOR STEM AND SLEEVE. TERM. SLEEVE 6" AFF.
56. REMOVABLE GUARDRAIL ON BAR SCREEN BASE BY SCREEN MFR.
57. GRIT SLURRY WATER AND FLOOR DRAIN WEIR BOX, DETAIL
58. EMERGENCY PULLCORD SCREEN SHUTOFF SWITCHES. ATTACH CORD TO TOP OF GUARDRAILS (NOT SHOWN), TYP. 2 SWITCHES PER SCREEN BY SCREEN MFR.
59. 8" DR-PVC WEIR BOX DRAIN PIPE ? EL. 20.30
60. PIPE SUPPORT, VARIATION OF DETAIL S/00M-2, TYP. 6
61. BASE FRAME FOR SCREEN TO COMPLETELY SURROUND OPENING, TYP.
62. 4" ROOF STORM DRAIN THROUGH 6" SCH 40 PVC WALL SLEEVE. DISCHARGE ROOF DRAIN TO 12"Wx4"DP. 20 GA. GALV. STEEL SIDEWALK TRENCH W/COVER.
63. 6" STL PIPE BOLLARD, TYP. SEE "A" DWGS FOR DETAILS
64. FOUL AIR DUCT INTO CHANNEL BELOW. SEE "H" DWGS, TYP. 4
65. 6" SCH 40 PVC SLEEVE, TYP. 8, CAULK BETWEEN PIPE AND SLEEVE, FORM SLEEVE IN WALL
66. 4" SCH 40 PVC SLEEEVE, TYP. CAULK BETWEEN PIPE AND SLEEVE. FORM SLEEVE IN WALL
67. FOUL AIR DUCT. SEE "H" DWGS.
68. 24" CI MANHOLE FRAME & COVER OVER 2'-0" RD. OPENING IN CHANNEL TOP W/ PARGED BRICK BARREL TO BRING TOP TO FINAL GRADE PER "C" DWGS, TYP. 5
69. 8" SCH 40 FLGxPE PVC SLEEVE W/ ULTRASONIC LEVEL METER ELEMENT, LENGTH OF SLEEVE 1'-8", TYP.
70. 12" DISCH. HOSE FOR DEWATERED SCREENINGS
71. 12" DISCH HOSE FOR UNDEWATERED SCREENIGS
72. 12" DISCH HOSE FOR GRIT & SCUM
73. 12" FOUL AIR INLET HOSE
74. LOCATION OF TRANSPORTABLE BIN (BY OWNER), TYP. 4
75. 6'x6' CONC. CURB W/ HATCH FRAME DETAIL B/00M-3
76. 24" MANWAY W/ 1/2" THICK GASKETED FRP COVER W/ 1/2" 304 SS BOLTS
77. COMBUSTIBLE GAS DETECTOR & H_2S DETECTOR
78. ALUM. HATCH DETAIL K/00M-4
79. ALUM. HATCH DETAIL L/00M-4 W/PLUGGED DRAIN
80. 2" TANK OVERFLOW PIPE W/ 2" DRAIN PIPE & 2" PVC BALL VALVE

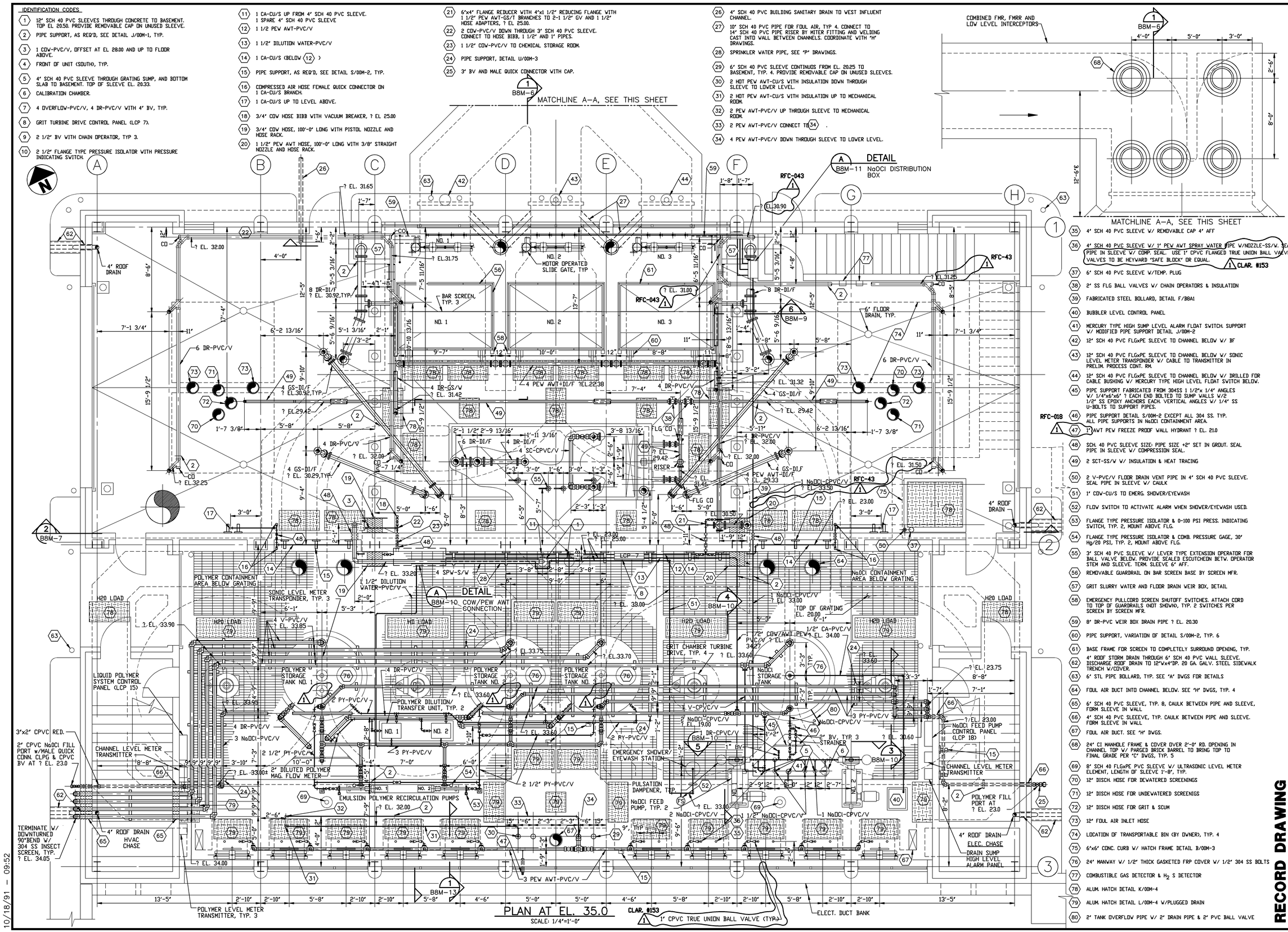

NO.	DATE	DRWN	CHK'D	DESCRIPTION
1	9/97	FXP	ASG	RECORD DRAWING

REVISIONS

DESIGNED BY: KCW
DRAWN BY: CLP/CTC
CHECKED BY/DATE: TDH 9/91
APPRV'D BY/DATE: TDH 9/91

COMMONWEALTH OF VIRGINIA — THOMAS D. HALL No. 12502 — PROFESSIONAL ENGINEER

CAMP DRESSER & McKEE

THIS DRAWING HAS BEEN REVISED BY HAZEN AND SAWYER, P.C. TO REFLECT MODIFICATIONS MADE DURING CONSTRUCTION

environmental engineers, scientists, planners, & management consultants

CDM

ARLINGTON COUNTY, VIRGINIA
WATER POLLUTION CONTROL PLANT
UPGRADE AND EXPANSION- PHASE IIB

PRELIMINARY TREATMENT BUILDING
FIRST FLOOR PLAN

SCALE NOTE

SCALE BAR SHOWN BELOW IS ONE INCH LONG ON A FULL SIZE DRAWING. WHEN SCALING DRAWINGS, MEASURE BAR TO DETERMINE IF SCALES SHOWN WILL REQUIRE ADJUSTING.

ONE INCH

CONTRACT NO. 90-02-WPC

YEAR 1991

LOCATION CODE	SPECIALTY CODE
B8	M

PROJECT NO. 5002-33

FILE NAME B8M-0003.DWG

DRAWING NO. B8M-3

SHEET NO. 180

RECORD DRAWING

10/18/91 - 09:52

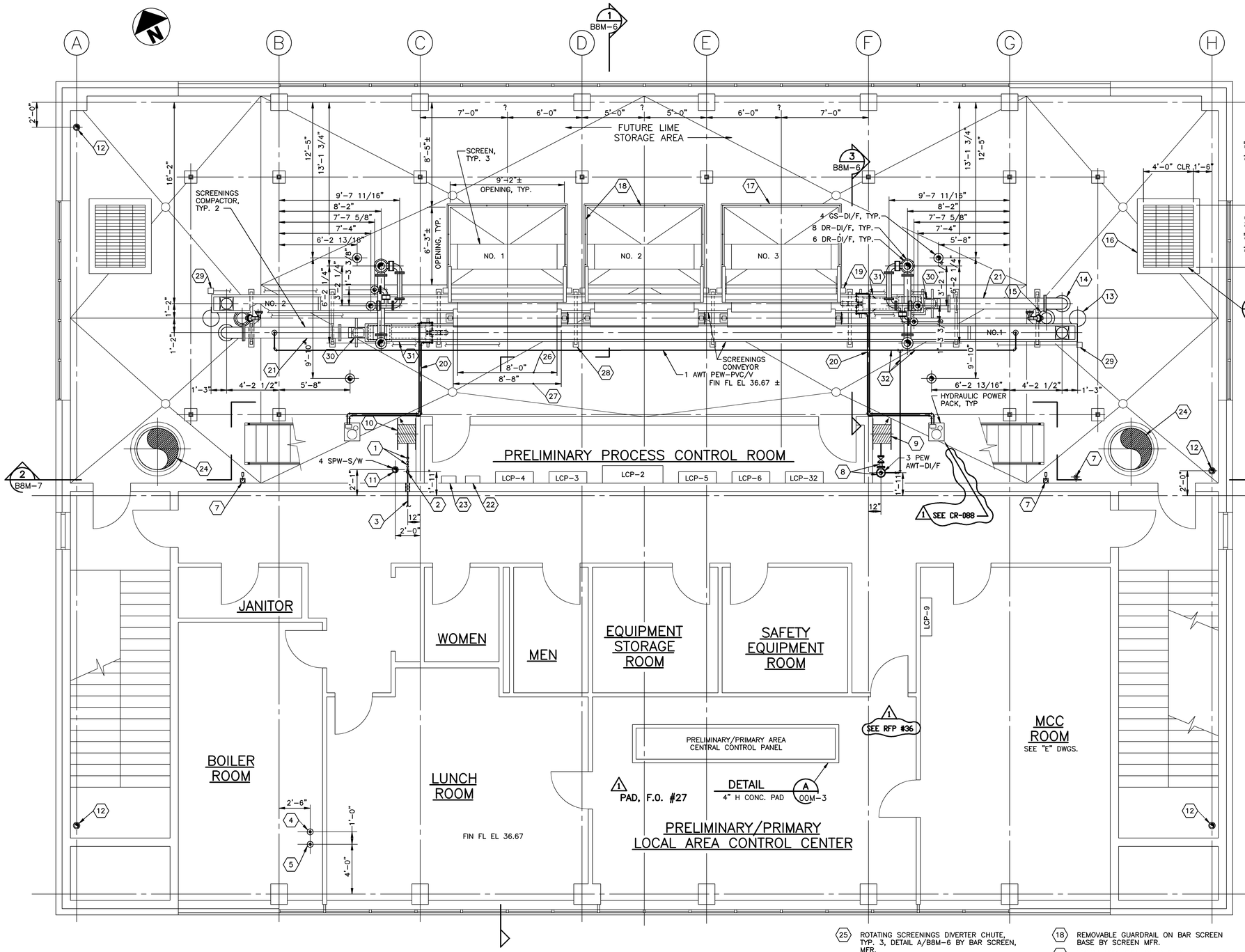

PLAN AT EL. 36.67

SCALE: 1/4"=1'-0"

LOCAL CONTROL PANELS

PANEL NO.	PANEL NAME
LCP 2	BAR SCREEN/SCREENINGS CONVEYOR CONTROL PANEL
LCP 3	SCUM CONCENTRATOR CONTROL PANEL
LCP 4	CONCENTRATED SCUM PUMP CONTROL PANEL
LCP 5	GRIT CLASSIFIER CONTROL PANEL
LCP 6	SCREENINGS COMPACTOR CONTROL PANEL
LCP 9	PRIMARY CLARIFIER SLUDGE/SCUM COLLECTOR CONTROL PANEL
LCP 32	FOUL AIR BLOWER CONTROL PANEL

IDENTIFICATION CODES

1. 3/4" HOSE BIBB AND VACUUM BREAKER FOR COW, 3'-0" AFF.
2. 2" COW-PVC/V UP FROM 3" SCH 40 PVC SLEEVE.
3. 2" COW-CU/S WITH THREADED ADAPTER TO PVC. FOR CONTINUATION SEE "P" DRAWINGS.
4. 6" SCH 40 PVC SLEEVE THROUGH FLOOR WITH 2 PEW AWT-PVC/V TO HOT WATER TANK. FOR CONTINUATION SEE "H" DRAWINGS.
5. 6" SCH 40 PVC SLEEVE THROUGH FLOOR WITH INSULATED 2 HOT PEW AWT-CU/S FROM HOT WATER TANK. FOR CONTINUATION SEE "H" DRAWINGS.
6. 2 V-PVC/V VENT PIPE IN 4" SCH. 40 PVC SLEEVE
7. 1 CA-CU/S AIR PIPE THROUGH 2" SCH. 40 PVC SLEEVE AND FEMALE QUICK CONNECTOR 3' AFF
8. 3 AWT PEW-DI/F UP FROM 8" SCH 40 PVC SLEEVE W/3" DI FLG TEE W/ BF ON VERT. LEG & 3"x2" DI FLG REDUCER, 2" GV, 2"x1 1/2" RED. FLG., & HOSE CONN. ON HORIZONTAL LEG.
9. HOSE REEL W/ 75' OF 1 1/2" HOSE & ADJUSTABLE PISTOL NOZZLE. MOUNT REEL 4 FT. AFF. (3 / 1 SEE RFC-019)
10. HOSE REEL W/ 75' OF 3/4" HOSE & ADJUSTABLE PISTOL NOZZLE. MOUNT REEL 4 FT. AFF.
11. 4 SPW-S/W SPRINKLER WATER PIPE UP THROUGH 6" SCH 40 PVC SLEEVE. SEE "P" DWGS.
12. 4" ROOF STORM DRAIN RISER DOWN THROUGH 6" SCH. 40 PVC SLEEVE. SEE "P" DWGS
13. 10"x12" DI FLG REDUCER W/ COLLAR W/ B.F. ON EACH END (FOR FUTURE USE), TYP. 2
14. 10"x12" DI FLG REDUCER W/ COLLAR W/ 10" SS SCREENINGS COMPACTOR. PIPE CONNECTED ON TOP & 12" HOSE CONNECTED ON BOTTOM, TYP. 2
15. 10"x12" DI FLG REDUCER W/COLLAR & FABRICATED STL. 10"x8"x2" BRANCH WYE.
16. 6"x6" CONC. CURB W/ GS ANGLE GRATING SEAT, DETAIL B/OOM-3
17. BASE FRAME FOR SCREEN TO COMPLETELY SURROUND OPENING, TYP.
18. REMOVABLE GUARDRAIL ON BAR SCREEN BASE BY SCREEN MFR.
19. EMERGENCY PULL CORD SCREEN SHUT-OFF SWITCH. ATTACH CORD TO TOP OF GUARDRAIL (NOT SHOWN), TYP. 2 SWITCHES PER SCREEN BY SCREEN MFR.
20. HYDRAULIC OIL PIPES & ELEC. CONDUITS & CONTROL CONDUCTORS AS REQUIRED BY SCREENINGS PRESS MFR., MOUNT HIGH TO PLATFORM FRAME.
21. SCREENINGS COMPACTOR SS DISCHARGE PIPE
22. CONCENTRATED SCUM SONIC LEVEL METER INDICATOR/TRANSMITTER
23. INFLUENT CHANNEL SONIC LEVEL METER INDICATOR/TRANSMITTER
24. FOUL AIR DUCT. SEE "H" DWGS.
25. ROTATING SCREENINGS DIVERTER CHUTE, TYP. 3, DETAIL A/B8M-6 BY BAR SCREEN, MFR.
26. WIDTH OF BAR SCREEN CHUTE 8'-0", TYP. 3
27. CLEAR WIDTH OF ROTATING SCREENINGS DIVERTER CHUTE 8'-8", TYP. 3
28. GS SCREW CONVEYOR SUPPORT, TYP.
29. CONVEYOR PULL CORD SHUT OFF SWITCH W/ SS CABLE ALONG CONVEYOR
30. CONVEYOR DRIVE UNIT
31. SCREENINGS COMPACTOR BELOW CONVEYOR
32. 1 1/2" PEW AWT-PVC/V W/1" BRANCH TO EACH GRIT CLASSIFIER. SUPPORT BELOW PLATFORM

NO.	DATE	DRWN	CHK'D	DESCRIPTION
1	9/97	FXP	ASG	RECORD DRAWING

REVISIONS

DESIGNED BY: KCW
DRAWN BY: CLP
CHECKED BY/DATE: TDH 9/91
APPRV'D BY/DATE: TDH 9/91

COMMONWEALTH OF VIRGINIA — THOMAS D. HALL No. 12502 — PROFESSIONAL ENGINEER

CAMP DRESSER & McKEE

THIS DRAWING HAS BEEN REVISED BY TRAZEN AND SAWYER, P.C. TO REFLECT MODIFICATIONS MADE DURING CONSTRUCTION

CDM

environmental engineers, scientists, planners, & management consultants

ARLINGTON COUNTY, VIRGINIA
WATER POLLUTION CONTROL PLANT
UPGRADE AND EXPANSION- PHASE IIB

PRELIMINARY TREATMENT BUILDING
SECOND FLOOR PLAN

SCALE NOTE

SCALE BAR SHOWN BELOW IS ONE INCH LONG ON A FULL SIZE DRAWING. WHEN SCALING DRAWINGS, MEASURE BAR TO DETERMINE IF SCALES SHOWN WILL REQUIRE ADJUSTING.

ONE INCH

RECORD DRAWING

CONTRACT NO. 90-02-WPC
YEAR 1991
LOCATION CODE B8
SPECIALTY CODE M
PROJECT NO. 5002-33
FILE NAME B8M-0004.DWG
DRAWING NO. B8M-4
SHEET NO. 181

03/27/90 - 15:53

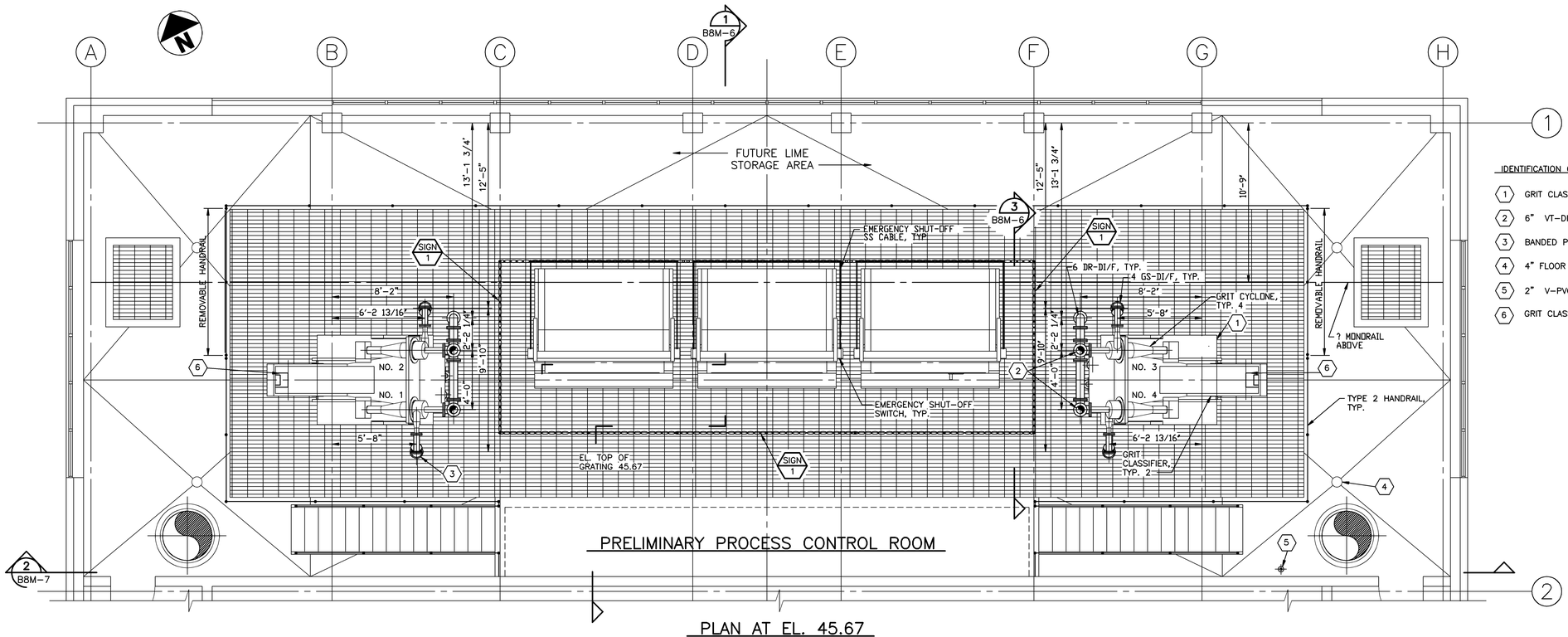

PRELIMINARY PROCESS CONTROL ROOM

PLAN AT EL. 45.67

SCALE: 1/4"=1'-0"

IDENTIFICATION CODES

1. GRIT CLASSIFIER BASE FRAME BY MANUFACTURER.
2. 6" VT-DI/F THROUGH ROOF, TYP 4.
3. BANDED PIPE OPENING IN GRATING.
4. 4" FLOOR DRAIN, TYP.
5. 2" V-PVC/V IN 4 SCH 40 PVC SLEEVE
6. GRIT CLASSIFIER DRIVE UNIT

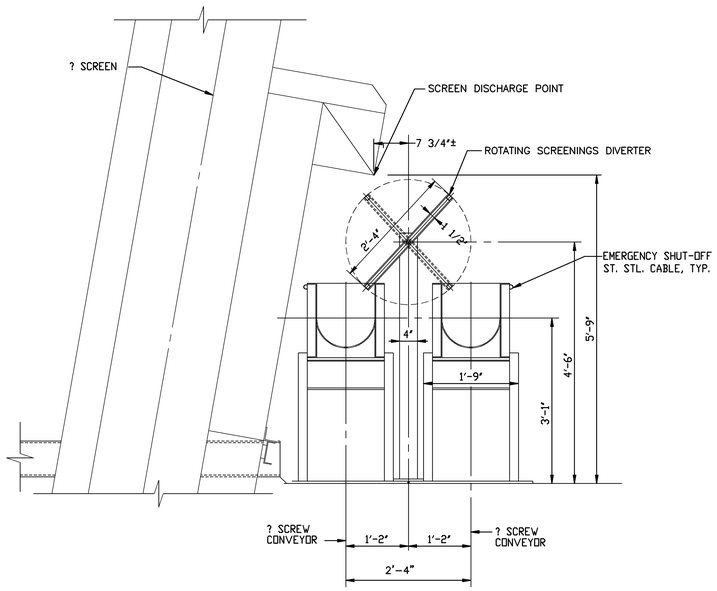

ROTATING SCREENINGS DIVERTER CHUTE

DETAIL A B8M-6

SCALE: 3/4"=1'-0"

NO.	DATE	DRWN	CHK'D	DESCRIPTION
1	9/97	FXP	ASG	RECORD DRAWING

REVISIONS

DESIGNED BY: KCW
DRAWN BY: CLP
CHECKED BY/DATE: TDH 9/91
APPRV'D BY/DATE: TDH 9/91

COMMONWEALTH OF VIRGINIA
THOMAS D. HALL
No. 12502
PROFESSIONAL ENGINEER

CAMP DRESSER & McKEE

THIS DRAWING HAS BEEN REVISED BY HAZEN AND SAWYER, P.C. TO REFLECT MODIFICATIONS MADE DURING CONSTRUCTION

environmental engineers, scientists, planners, & management consultants

CDM

ARLINGTON COUNTY, VIRGINIA
WATER POLLUTION CONTROL PLANT
UPGRADE AND EXPANSION- PHASE IIB

PRELIMINARY TREATMENT BUILDING
SECOND FLOOR PLAN ABOVE GRATING

SCALE NOTE

SCALE BAR SHOWN BELOW IS ONE INCH LONG ON A FULL SIZE DRAWING. WHEN SCALING DRAWINGS, MEASURE BAR TO DETERMINE IF SCALES SHOWN WILL REQUIRE ADJUSTING.

ONE INCH

CONTRACT NO. 90-02-WPC
YEAR 1991
LOCATION CODE B8
SPECIALTY CODE M
PROJECT NO. 5002-33
FILE NAME B8M-0005.DWG
DRAWING NO. B8M-5
SHEET NO. 182

RECORD DRAWING

03/27/90 - 15:53

IDENTIFICATION CODES

1. 18" FA DUCT, SEE 'H' DRAWINGS.
2. 1 1/2" DILUTION WATER-PVC/V
3. 1 1/2" PEW AWT-PVC-V
4. 1" CA-CU/S
5. FLASHING, TYP.
6. 6" WIDE x 6" HIGH CONCRETE CURB, TYP.
7. GUARDRAIL WITH TOE BOARD
8. 3" COW-DI/F
9. 6" PEW AWT-DI/F
10. SPRINKLER WATER PIPE, SEE 'P' DRAWINGS.
11. REINF. CONC. EQUIP. SUPPORT, SEE 'S' DWGS, TYP. 4
12. SLOTS IN WALLS & FLOOR FOR TEMPORARY WOOD WATERTIGHT WALL (WOOD NOT SHOWN).
13. 30" DI FLGxPE WALL PIPE W/ COLLAR, TYP. 4 BUT LENGTH VARIES. FLG TO HAVE STUD BOLTS WHERE TIGHT TO WALL.
14. 36" DI FLGxFLG PIPE
15. 36" DI FLGxRESTRAINED BELL 90° BEND
16. 8" SL-DI/F FLGxFLG PIPE FORMED INTO BEAM
17. 2" HOT AWT PEW-CU/S W/ INSULATION
18. 1" CA-CU/S
19. 1 1/4" PSW-CU/S
20. 304SS-W AVT PEW PIPE HEADER, SIZE VARIES 2'-1". SEE PLAN SUPPORT W/ PIPE SUPPORTS DETAIL S/00M-2. ? EL. 6.42
21. 6" DR-DI/F. CHANGE TO 6 DR-PVC/V ON VERTICAL. INSTALL DI BF ON 6" TEE.
22. 4" PVC FLG BALL VALVE ON SUMP DRAIN PIPE MOUNT 5' AFF, TYP. 2 PLACES
23. ALUMINUM HATCH W/ GASKET, TYP.
24. 10" FA-SCH 40 PVC. WELD TO 14" FA-SCH 40 PVC VERT. PIPE. FORM INTO CONC. AS SHOWN
25. 8" DR-PVC GRIT SLURRY WATER DRAIN PIPE, ? EL. 20.30
26. 14" FA DUCT. SEE 'H' DWGS. CONNECT TO SCH 40 PVC PIPE AT FLG.
27. 18" FA DUCT. SEE 'H' DWGS.
28. 14" FA-SCH 40 PVC. WELD PLATE OVER BOTTOM & WELD TO TWO BRANCH 10" FA-SCH 40 PVC PIPES. PROVIDE FLG ON TOP. FORM INTO CONC. AS SHOWN
29. 8" DR-PVC/V DRAIN HEADER, 1% MIN. SLOPE
30. 6" DR-PVC/V PIPE CHAMBER DRAIN PIPE, 1% MIN SLOPE
31. PIPE SUPPORT, DETAIL J/00M-1, TYP.
32. PIPE SUPPORT, DETAIL S/00M-2, TYP.
33. 6" SCH. 40 PVC SLEEVE, TYP.
34. PIPE SUPPORT VARIATION OF DETAIL S/00M-2, TYP.
35. POCKET FOR BAR SCREEN RAKE, SIZE PER MFR. RECOMMENDATIONS, TYP.
36. SUPPORT POCKET FOR BAR SCREEN FRAME, SIZE PER MFR. RECOMMENDATIONS, TYP.
37. 4"x2" FLG. FLEX. REDUCER W/ RESTRAINING HARNESS PER DETAIL P/00M-2 & 2" FLG SS BALL VALBE, 2" 304SS COMPAN. FLG, TYP. 6 PLACES
38. 2" PEW AWT-304SS/W W/ NPT THREADED CONN. TO COMPANION FLG.
39. TURBINE DESIGN AND LOCATION PER MFR.
40. GS PLATE OVER GRIT HOPPER TO BE DESIGNED AND FURNISHED BY TURBINE MFR.
41. ROTATING SCREENINGS DIVERTER CHUTE
42. 4"x3" DI FLG 90° RED. BEND & 3" AWT PEW-DI/F PIPING TO FLOOR ABOVE.
43. 12" SCH 40 FLGxPE PVC SLEEVE, TYP. 3 W/ ULTRASONIC LEVEL ELEMENT, FLOAT SWITCH, & BLIND FLG. RESPECTIVELY.
44. 1 1/2" PEW AWT-PVC/V HEADER W/1 1/2" BV & 1" BRANCH W/BV TO EACH GRIT CLASSIFER.

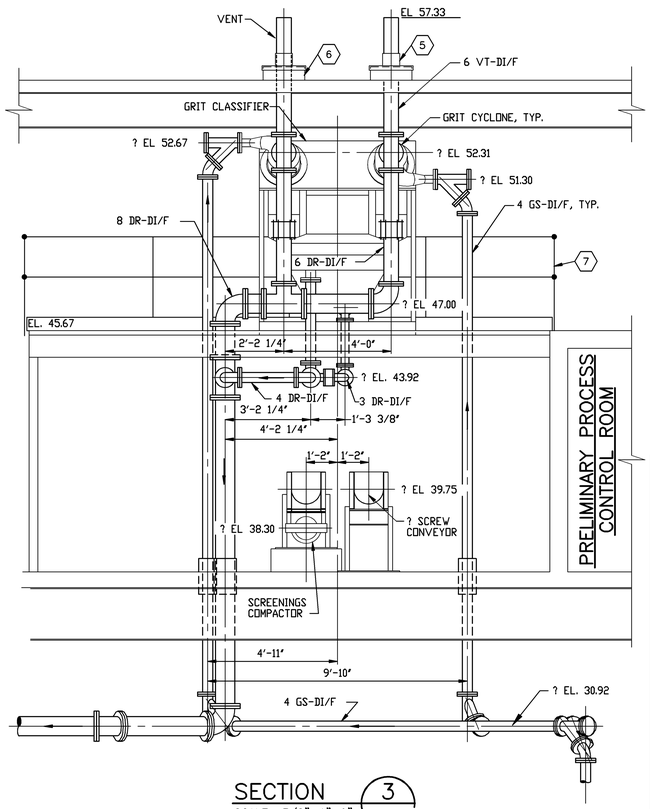

SECTION 3 / B8M-4
SCALE: 3/8"=1"-0"

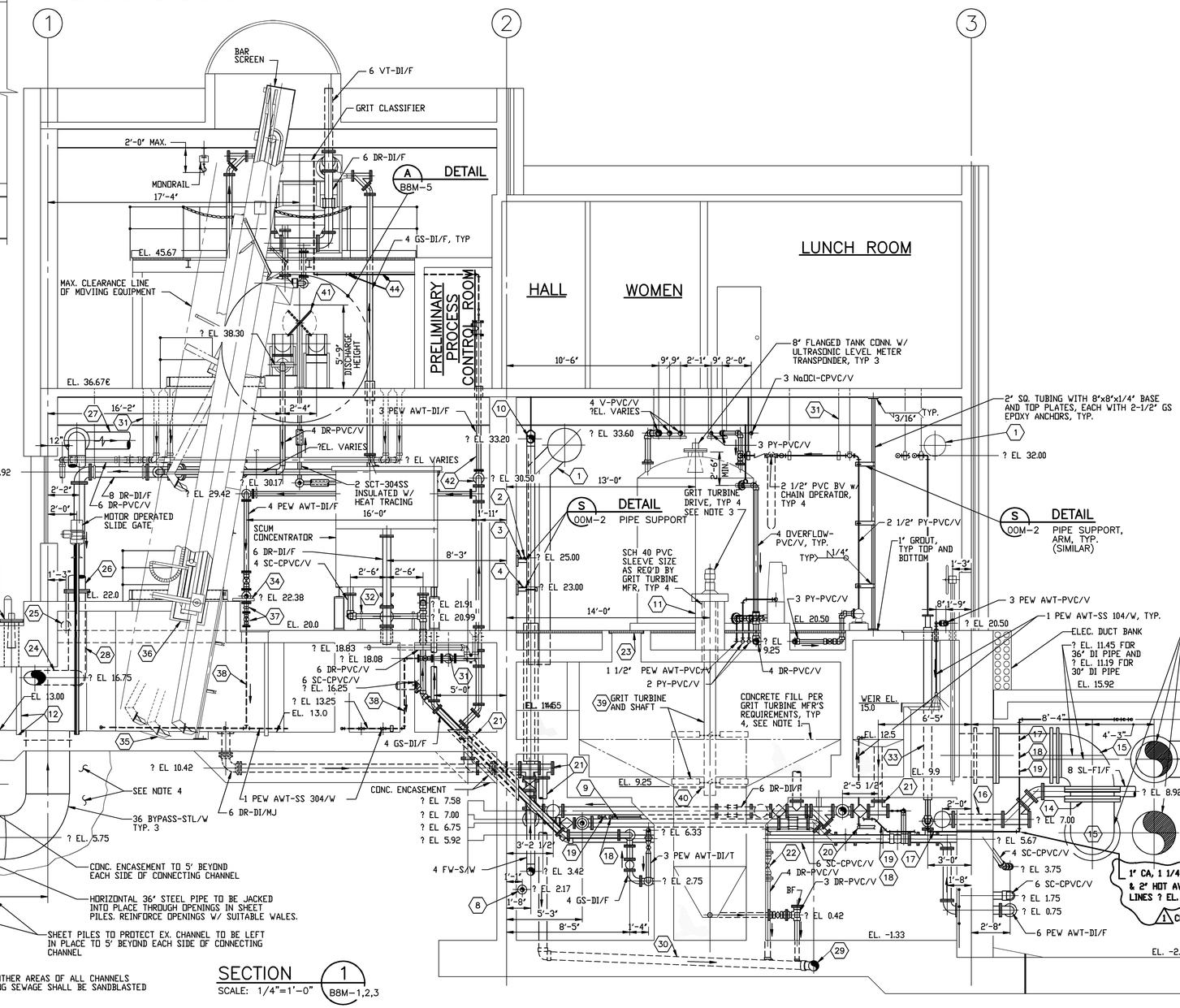

SECTION 1 / B8M-1,2,3
SCALE: 1/4"=1'-0"

NOTES
1. SURFACE OF CONCRETE FILL SHALL BE FINISHED TO EXTRA SMOOTH STEEL TROWEL FINISH.
2. 36" BYPASS PIPES SHALL BE FILLED WITH CONCRETE AFTER CONNECTING CHANNEL IS PLACED IN SATISFACTORY OPERATION. EXPOSED SURFACE SHALL BE SMOOTH AND FLUSH WITH BOTTOM OF CHANNEL.
3. BASE OF TURBINE DRIVE UNIT SHALL BE SEALED GAS TIGHT TO SUPPORT PAD.
4. ALL AREAS EXCAVATED OR DISTURBED FOR INSTALLATION OF 36" STL. BYPASS PIPES SHALL BE BACKFILLED WITH STRUCTURAL FILL
5. WALLS, CEILING, & ALL OTHER AREAS OF ALL CHANNELS AND CHAMBERS CONTAINING SEWAGE SHALL BE SANDBLASTED AND COATED

10/18/91 - 11:08

NO.	DATE	DRWN	CHK'D	DESCRIPTION
				RECORD DRAWING
1	9/97	FXP	ASG	REVISIONS

DESIGNED BY: KCW
DRAWN BY: CLP
CHECKED BY/DATE: TDH 9/91
APPRV'D BY/DATE: TDH 9/91

COMMONWEALTH OF VIRGINIA — THOMAS D. HALL No. 12502 — PROFESSIONAL ENGINEER

CAMP DRESSER & McKEE
environmental engineers, scientists, planners, & management consultants
CDM

THIS DRAWING HAS BEEN REVISED BY HAZEN AND SAWYER, P.C. TO REFLECT MODIFICATIONS MADE DURING CONSTRUCTION

ARLINGTON COUNTY, VIRGINIA
WATER POLLUTION CONTROL PLANT
UPGRADE AND EXPANSION- PHASE IIB

PRELIMINARY TREATMENT BUILDING SECTIONS

SCALE NOTE
SCALE BAR SHOWN BELOW IS ONE INCH LONG ON A FULL SIZE DRAWING. WHEN SCALING DRAWINGS, MEASURE BAR TO DETERMINE IF SCALES SHOWN WILL REQUIRE ADJUSTING.
ONE INCH

CONTRACT NO. 90-02-WPC
YEAR 1991
LOCATION CODE B8
SPECIALTY CODE M
PROJECT NO. 5002-33
FILE NAME B8M-0006.DWG
DRAWING NO. B8M-6
SHEET NO. 183

RECORD DRAWING

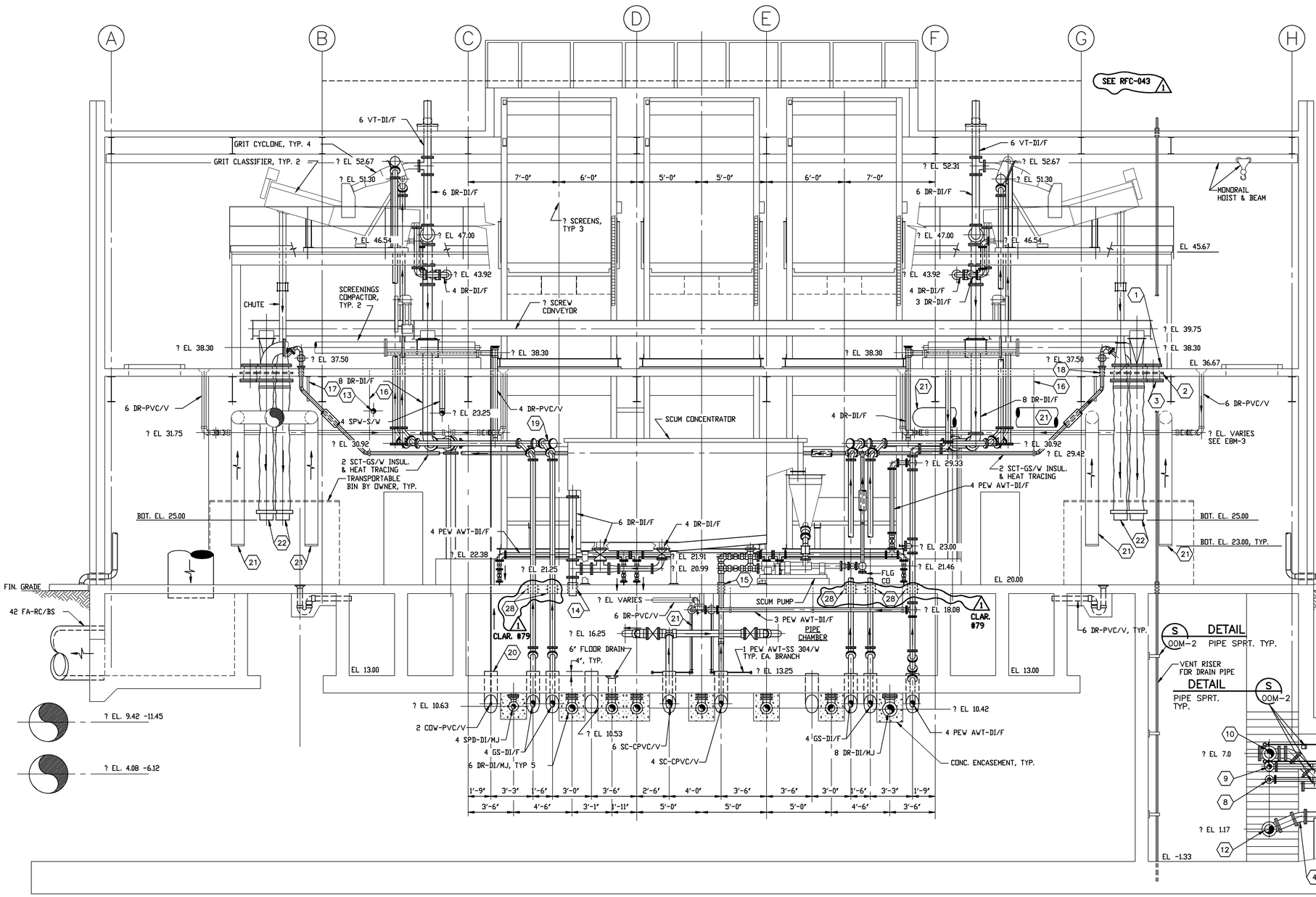

SECTION 2
SCALE: ?"=1'-0" B8M-1,2,3,4

IDENTIFICATION CODES

1. 10' BLIND FLANGE, TYP EACH SIDE OF BUILDING.
2. 10"x12" FLANGE REDUCER WITH COLLAR, TYP 4 EACH SIDE OF BUILDING.
3. 12' BLIND FLANGE, TYP EACH SIDE OF BUILDING.
4. 8" 22 1/2° DUCTILE IRON FLANGED ELBOW.
5. 8 DR-DI/F, ? EL TO MATCH EXISTING 8 DR-DI/F AT JUNCTION WITH EXISTING TUNNEL.
6. 8" RESTRAINED FLANGE ADAPTER ON EXISTING 8 DR-DI
7. CONCRETE PIPE SUPPORT, TYP SEE DETAIL D/00M-1. THESE TWO SUPPORTS SHALL BE ANCHORED TO RESTRAIN UP TO 2500LBS. OF THRUST.
8. 3 CDW-DI/F
9. 4 PEW AWT-DI/F
10. 8 SL-DI/F PRI. SLUDGE TO GRAVITY THICKENER
11. EXISTING 8 DR-DI, ? EL VARIES, TO BE DETERMINED AT POINT OF CONNECTION.
12. 8 DR-DI/F CLARIFIERS NOS. 5-8 DRAIN PIPE TO DRAIN PUMP AND AUX. DRAIN PUMP.
13. SANITARY DRAIN, SEE 'P' DRAWINGS.
14. 8" SCH 40 PVC SLEEVE. CAULK BETWEEN PIPE AND SLEEVE
15. 6" SCH 40 PVC SLEEVE. CAULK BETWEEN PIPE AND SLEEVE
16. PIPE SUPPORT, DETAIL J/00M-1, TYP.
17. PIPE SUPPORT, DETAIL S/00M-2, TYP.
18. 8" SCH. 40 GS SLEEVE. INSULATE THR. SLEEVE. PIPE CLAMP SUPPORT ON TOP OF SLEEVE, TYP.
19. 4" DI FLG 45° BEND, WYE, & BF, TYP.
20. PROVIDE TIGHT ESCHUTCHEON BETWEEN PIPE AND SLEEVE, TYP. ALL SLEEVES IN PIPE CHAMBER
21. FOUL AIR DUCT W/ 304 SS BIRD SCREEN OVER END. SEE 'H' DWGS.
22. 12"ø ID REINFORCED RUBBER HOSE CHUTE W/ 304 SS FLG CONNECTION TO FLG REDUCER ABOVE. PROVIDE HEAVY 304 SS COLLAR AT LOUVER END WITH LUGS IN FOUR QUADRANTS FOR CONNECTION OF EXTERNAL CHAINS FOR POSITIONING CHUTE IN BINS. PROVIDE 2 DETACHABLE 1/4" GS CHAINS FOR EACH CHUTE 10 FT LONG W ADJUSTABLE CLAMPS FOR CONNECTING CHAINS TO BINS.
27. CONCRETE PIPE SUPPORT, DETAIL E/00M-1, TYP.
28. CONSTRUCT PENETRATION IN ACCORDANCE WITH WALL OR FLOOR SLEEVE WITH COMPRESSION SEAL DETAIL ON DRAWING COM-3, SHEET 38. THE USE OF AN OVERSIZED SLEEVE IS NOT INDICATED. APPROVED MECHANICAL COMPRESSION COUPLINGS OR OTHER APPROVED METHOD SHOULD BE EMPLOYED TO JOIN PLAIN ENDS OF PIPE LENGTHS TOGETHER.

1 CLAR. #79

NO.	DATE	DRWN	CHK'D	DESCRIPTION
1	9/97	FXP	ASG	RECORD DRAWING

REVISIONS

DESIGNED BY: KCW
DRAWN BY: CLP
CHECKED BY/DATE: TDH 9/91
APPRV'D BY/DATE: TDH 9/91

COMMONWEALTH OF VIRGINIA
THOMAS D. HALL
No. 12502
PROFESSIONAL ENGINEER

CAMP DRESSER & McKEE

THIS DRAWING HAS BEEN REVISED BY HAZEN AND SAWYER, P.C. TO REFLECT MODIFICATIONS MADE DURING CONSTRUCTION

CDM
environmental engineers, scientists, planners, & management consultants

ARLINGTON COUNTY, VIRGINIA
WATER POLLUTION CONTROL PLANT
UPGRADE AND EXPANSION- PHASE IIB

PRELIMINARY TREATMENT BUILDING SECTIONS

SCALE NOTE

SCALE BAR SHOWN BELOW IS ONE INCH LONG ON A FULL SIZE DRAWING. WHEN SCALING DRAWINGS, MEASURE BAR TO DETERMINE IF SCALES SHOWN WILL REQUIRE ADJUSTING.

ONE INCH

CONTRACT NO.	90-02-WPC
YEAR	1991
LOCATION CODE	B8
SPECIALTY CODE	M
PROJECT NO.	5002-33
FILE NAME	B8M-0007.DWG
DRAWING NO.	B8M-7
SHEET NO.	184

RECORD DRAWING

10/18/91 - 16:33

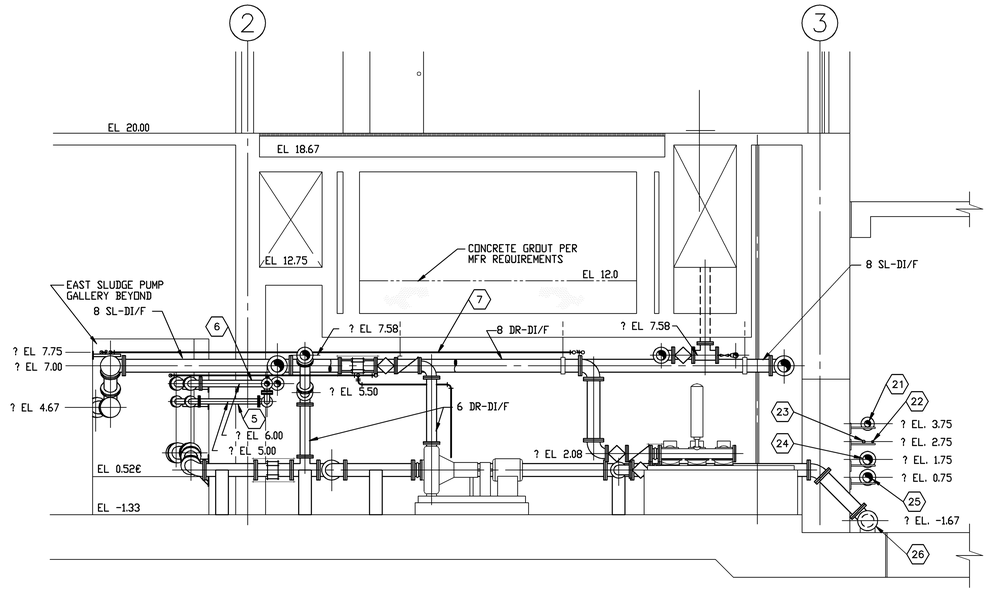

SECTION 3 — SCALE: 1/4"=1'-0" — B8M-1

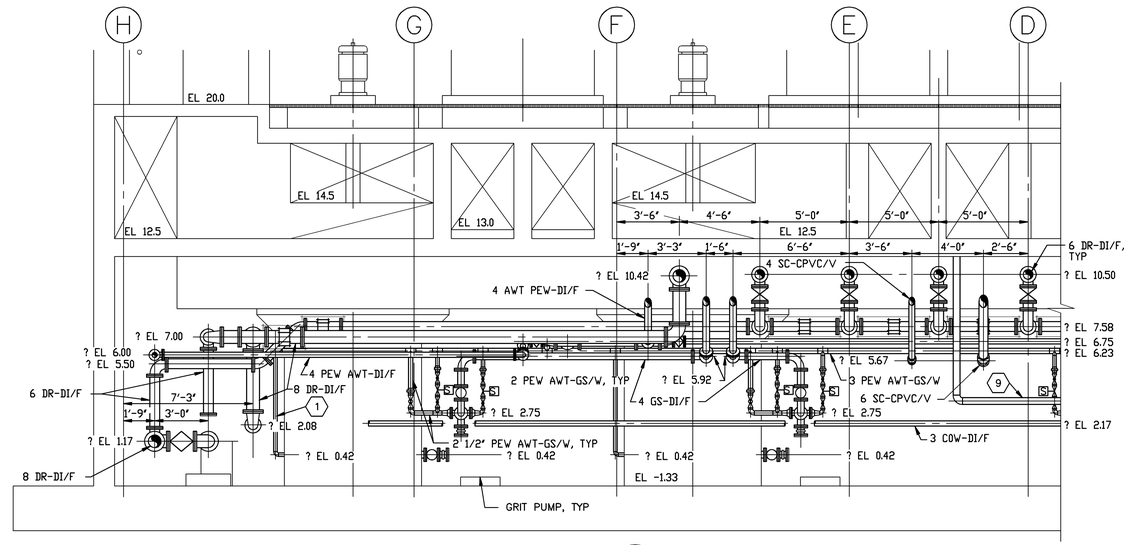

SECTION 4 — SCALE: 1/4"=1'-0" — B8M-1,2,3

IDENTIFICATION CODES

1. 2" PEW AWT-GS/T, TYP 4.
2. 1" PEW AWT/AIR-SCH 40 SS/T, TYP 4.
3. 2"x1" RS REDUCER, TYP 4.
4. 3/4" AIR-GS/T WITH 3/4" SS BV, TYP 4.
5. 3" CDW-DI/F
6. 4" PEW AWT-DI/F
7. 1" AND 1 1/2" NaOCl-CPVC/V
8. 6" REDUCED PRESSURE BACKFLOW PREVENTER AND 2 GATE VLAVES
9. FIRE SPRINKLER PIPES, SEE "P" DRAWINGS.
10. 2" CDW-PVC/V WITH 2" PVC BV
11. 2" CDW-PVC/BS, FOR CONTINUATION SEE "C" DRAWINGS.
12. 1" CDW-PVC/V TO SEAL WATER TANK
13. 3"x2" PVC REDUCING FLANGE AND 2" PVC BV.
14. PIPE SUPPORT, AS REQ'D. DETAIL S/00M-2
15. PIPE SUPPORT, AS REQ'D. DETAIL J/00M-1
16. 6" DI 90° BASE BEND & CONC. PIPE SUPPORT, DETAIL H/00M-1
17. CONC. EQUIP. PAD, DETAIL H/00M-3
18. AIR COMPRESSOR & STORAGE TANK
19. 1" PEW AWT-CU/S W/ 1" BV, 1" WATER HAMMER ARRESTOR, & 1" Y-STRAINER W/ 1" BLOW-OFF VALVE & 1" CU/S PIPE TO DRAIN, SOLENOID VALVE TO BE FURNISHED BY COMPRESSORE MFR.
20. AIR COMPRESSOR CONTROL (BY COMP. MFR)
21. 4" SCS-CPVC/V PRIMARY SCUM SLURRY PIPE
22. 1 1/2" NaOCl-CPVC/V HYPO. PIPE TO PRIMARY EFFLUENT
23. 2 NaOCl-CPVC/V HYPO. TRANSFER PIPE FROM SEC. SVCS, P.S.
24. 6" SEC SC-PVC/V SEC. SCUM PIPE FROM SEC. SVCS. P.S.
25. 6" PEW AWT-DI/F
26. 8" DR-DI/F
27. SEAL WATER HYDROPNEUMATIC TANK
28. 1" CA-CU/S AIR PIPE
29. 1 1/4" PSW-CU/S SEAL WATER PIPE
16. 2" DR-PVC/V DRAIN PIPE

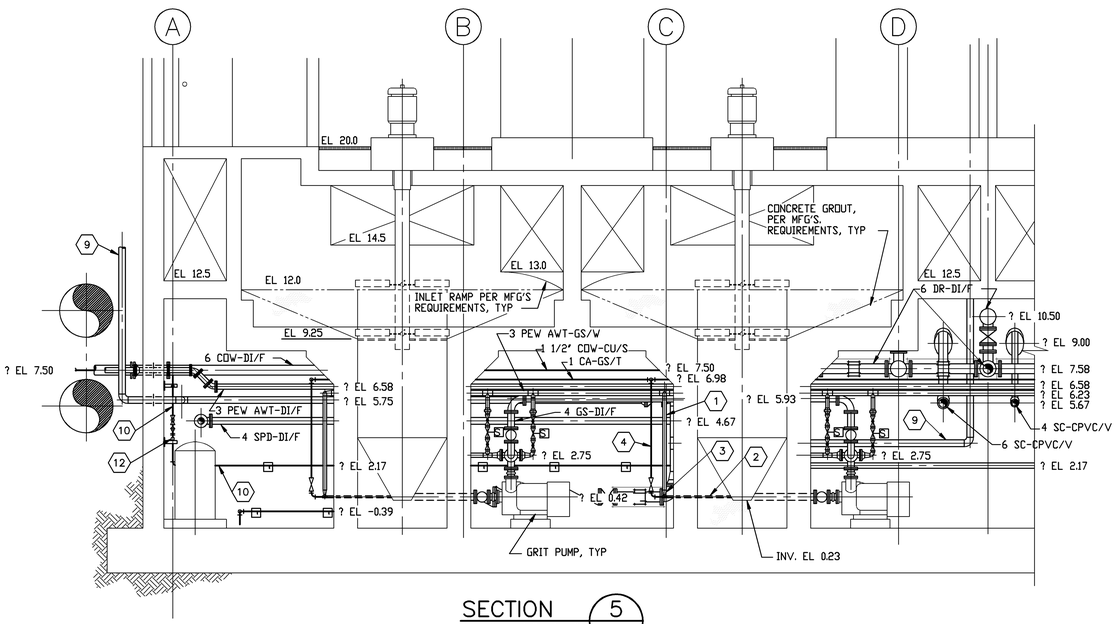

SECTION 5 — SCALE: 1/4"=1'-0" — B8M-1,2,3

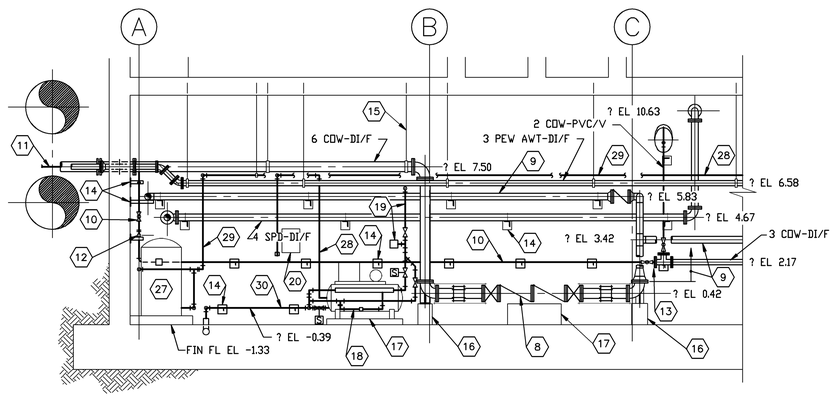

SECTION 6 — SCALE: 1/4"=1'-0" — B8M-1,2,3

REVISIONS

NO.	DATE	DRWN	CHK'D	DESCRIPTION
1	9/97	FXP	ASG	RECORD DRAWING

DESIGNED BY: KCW
DRAWN BY: CLP
CHECKED BY/DATE: TDH 9/91
APPRV'D BY/DATE: TDH 9/91

COMMONWEALTH OF VIRGINIA — THOMAS D. HALL No. 12502 — PROFESSIONAL ENGINEER

CAMP DRESSER & McKEE

THIS DRAWING HAS BEEN REVISED BY HAZEN AND SAWYER, P.C. TO REFLECT MODIFICATIONS MADE DURING CONSTRUCTION

CDM — environmental engineers, scientists, planners, & management consultants

ARLINGTON COUNTY, VIRGINIA
WATER POLLUTION CONTROL PLANT
UPGRADE AND EXPANSION- PHASE IIB

PRELIMINARY TREATMENT BUILDING SECTIONS

SCALE NOTE

SCALE BAR SHOWN BELOW IS ONE INCH LONG ON A FULL SIZE DRAWING. WHEN SCALING DRAWINGS, MEASURE BAR TO DETERMINE IF SCALES SHOWN WILL REQUIRE ADJUSTING.

ONE INCH

CONTRACT NO. 90-02-WPC
YEAR 1991
LOCATION CODE B8
SPECIALTY CODE M
PROJECT NO. 5002-33
FILE NAME B8M-0008.DWG
DRAWING NO. B8M-8
SHEET NO. 185

RECORD DRAWING

10/18/91 - 09:04

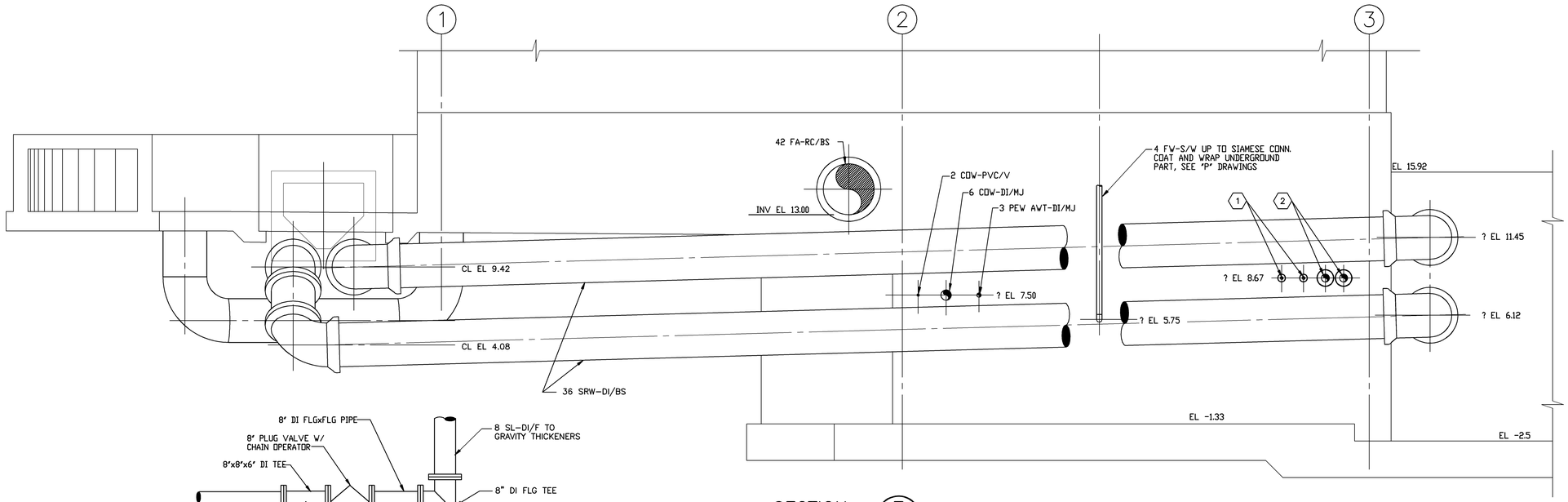

SECTION 7 (B8M-1)
SCALE: 1/4"=1'-0"

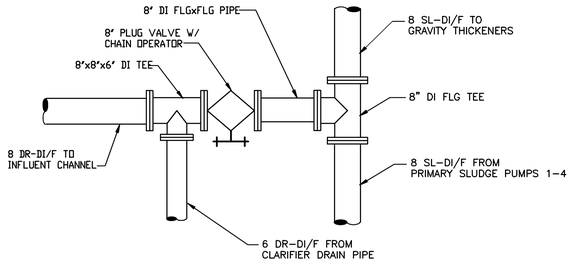

PUMP DISCHARGE PIPE INTERCONNECTION PLAN

DETAIL A (B8M-1)
SCALE: 1/2"= 1'-0"

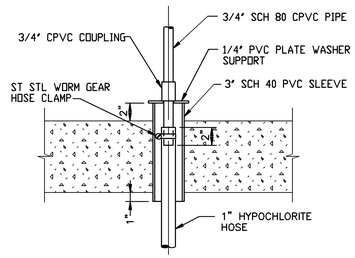

DETAIL A (B8M-9)
SCALE: 1 1/2"=1'-0"

IDENTIFICATION CODES

1. 6" SCH 40 PVC SLEEVES WITH 2 PY-HOSE.
2. 6" HWS AND HWR-STL/W WITH INSULATION IN A 14" SCH 20 STEEL SLEEVE.
3. PIPE SUPPORT, SEE DETAIL A/00M-1.
4. PIPE SUPPORT, SEE DETAIL J/00M-3.
5. 3" SCH 40 PVC SLEEVE WITH 3/4" SCH 80 CPVC PIPE ADAPTED TO 1" HOSE WITHIN SLEEVE, TYP 12, SEE DETAIL A/B8M-9.
6. PIPE SUPPORT FOR 3/4" SCH 80 CPVC PIPES, TYP. LENGTH VARIES ACCORDING TO NUMBER OF PIPES SUPPORTED. SEE DETAIL L/00M-3.
7. 1" HYPOCHLORITE HOSE, TERMINATE 4" ABOVE CHANNEL BOTTOM, TYP 12.
8. 3 PEW AWT-DI/F
9. 1 CA-CU/S
10. 1 1/4" PSW-CU/S

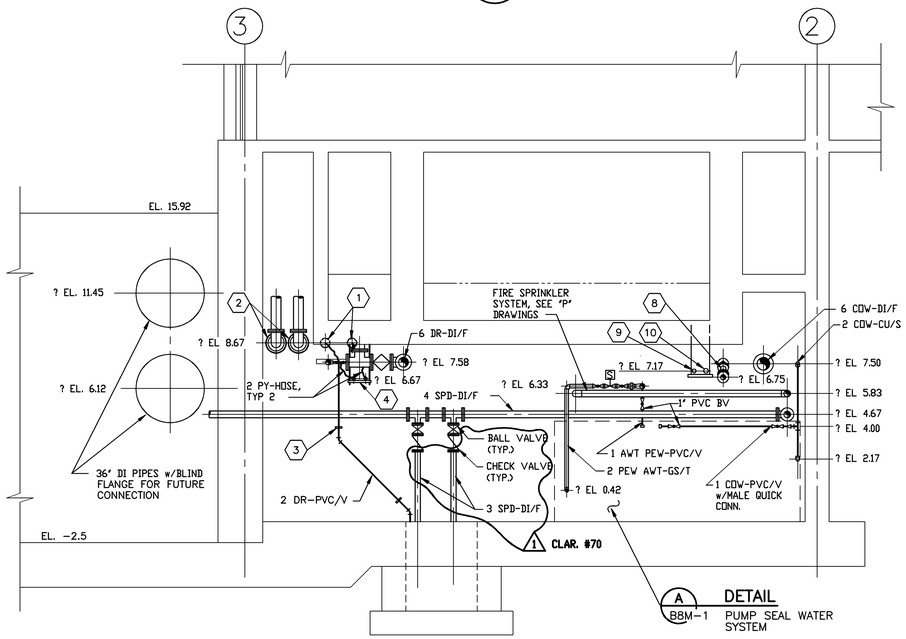

A DETAIL B8M-1 — PUMP SEAL WATER SYSTEM

SECTION 8 (B8M-1)
SCALE: 1/4"=1'-0"

1 NOTE: SEE RFC-083

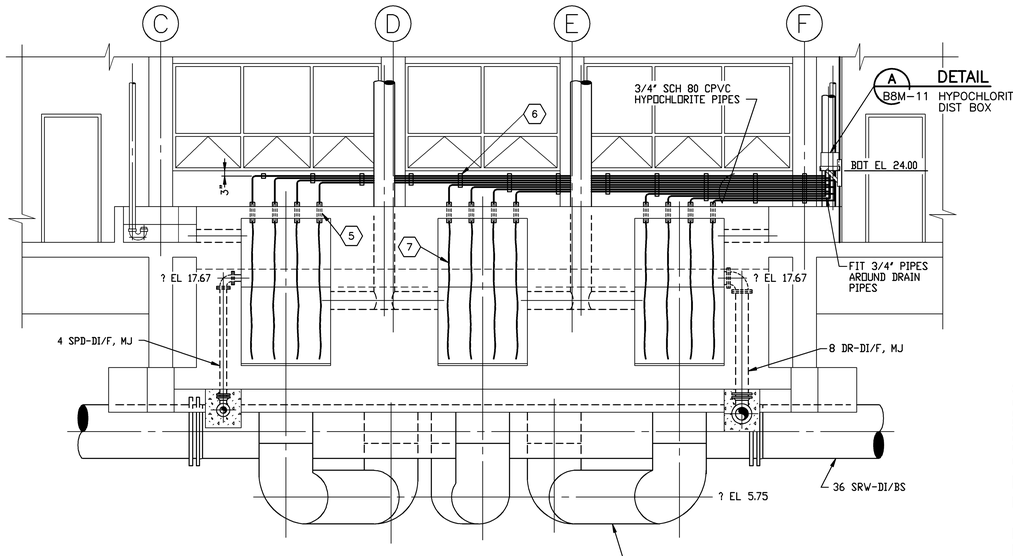

SECTION 6 (B8M-1,2,3)
SCALE: 1/4"=1'-0"

10/18/91 - 09:42

NO.	DATE	DRWN	CHK'D	DESCRIPTION
1	9/97	FXP	ASG	RECORD DRAWING

REVISIONS

DESIGNED BY: KCW
DRAWN BY: CLP
CHECKED BY/DATE: TDH 9/91
APPRV'D BY/DATE: TDH 9/91

COMMONWEALTH OF VIRGINIA — THOMAS D. HALL No. 12502 — PROFESSIONAL ENGINEER

CAMP DRESSER & McKEE

RED DRAWING HAS BEEN REVISED BY HAZEN AND SAWYER, P.C. TO REFLECT MODIFICATIONS MADE DURING CONSTRUCTION

CDM — environmental engineers, scientists, planners, & management consultants

ARLINGTON COUNTY, VIRGINIA
WATER POLLUTION CONTROL PLANT
UPGRADE AND EXPANSION- PHASE IIB

PRELIMINARY TREATMENT BUILDING SECTIONS

SCALE NOTE

SCALE BAR SHOWN BELOW IS ONE INCH LONG ON A FULL SIZE DRAWING. WHEN SCALING DRAWINGS, MEASURE BAR TO DETERMINE IF SCALES SHOWN WILL REQUIRE ADJUSTING.

ONE INCH

CONTRACT NO. 90-02-WPC
YEAR 1991
LOCATION CODE B8
SPECIALTY CODE M
PROJECT NO. 5002-33
FILE NAME B8M-0009.DWG
DRAWING NO. B8M-9
SHEET NO. 186

RECORD DRAWING

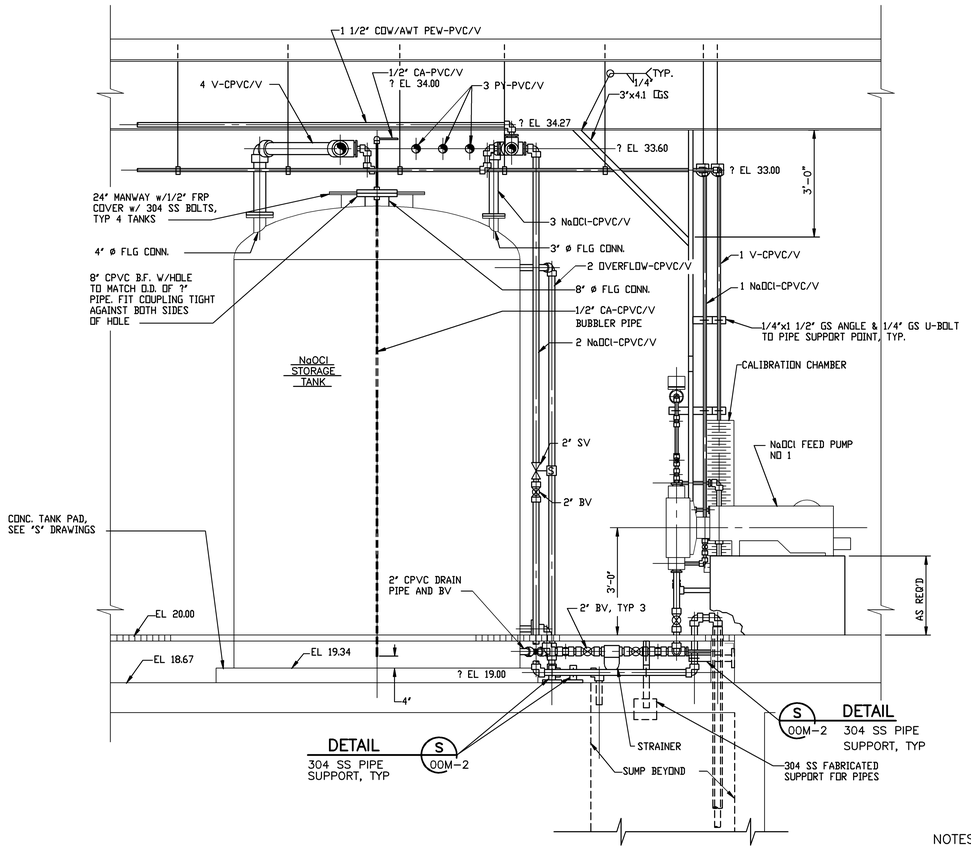

SECTION 4
SCALE: 1/2"=1'-0" B8M-3

NOTES:

1. PIPE SUPPORT FRAME TO COMPRISE 3"x4⊏ GS WITH 1 1/2"x1/4" GS ANGLE MEMBERS TO EACH PIPE SUPPORT POINT. FIELD CUT AND WELD TO SUIT FINAL PIPE LOCATIONS. MINIMUM SUPPORT POINTS TO BE AS SHOWN.
2. ALL PIPES SHALL BE SUPPORTED WITHIN 12" OF ALL PIPE SUPPORTED DEVICES AND AT MAXIMUM SPACING OF 3'-0".

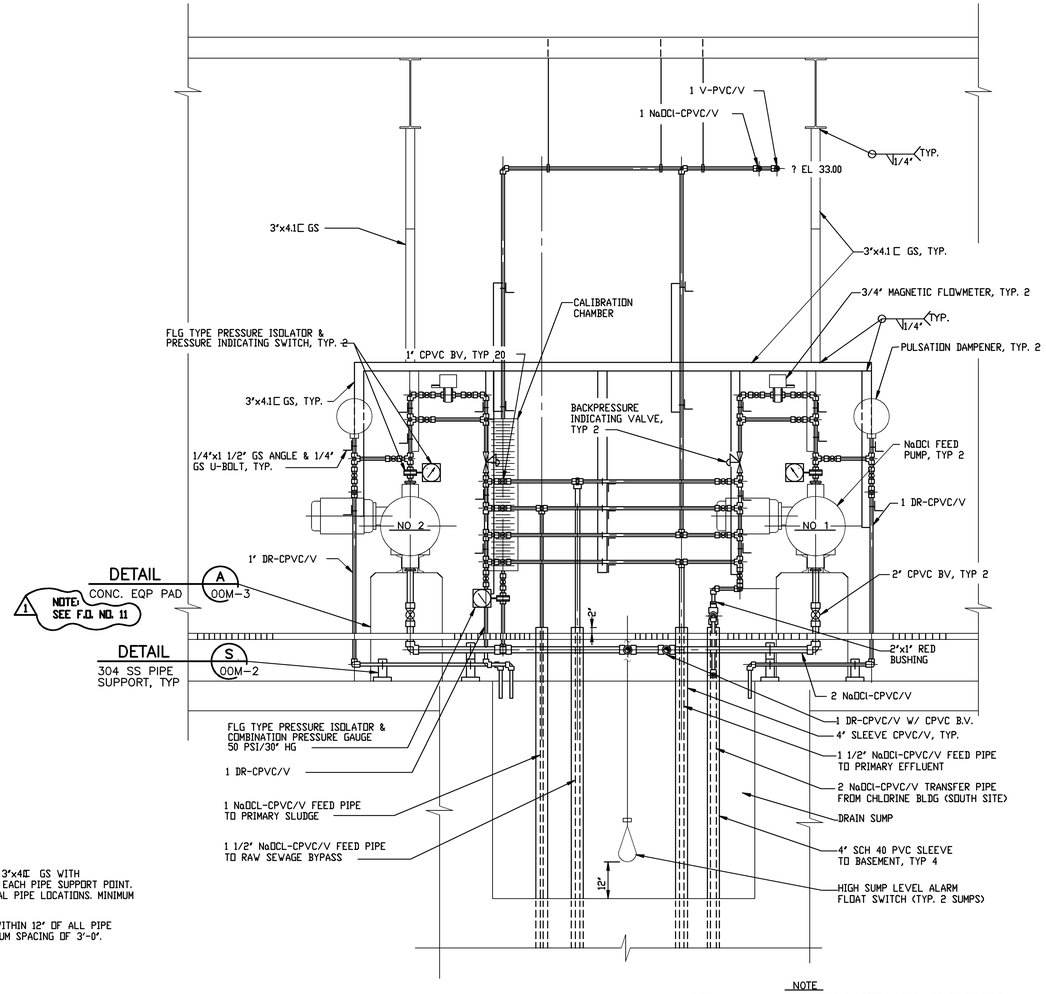

SECTION 5
SCALE: 1/2"=1'-0" B8M-3

NOTE
ALL PIPE SUPPORTS BELOW GRATING TO BE OF 304 SS. DETAIL S/00M-2 EXCEPT WHERE OTHERWISE SHOWN.

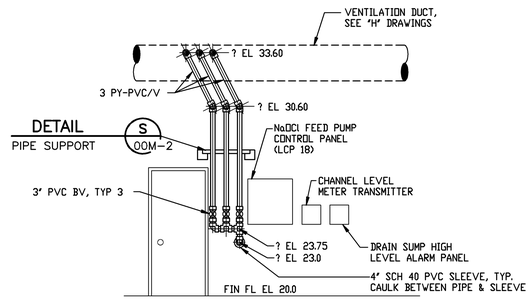

SECTION 3
SCALE: 1/4"=1'-0" B8M-3

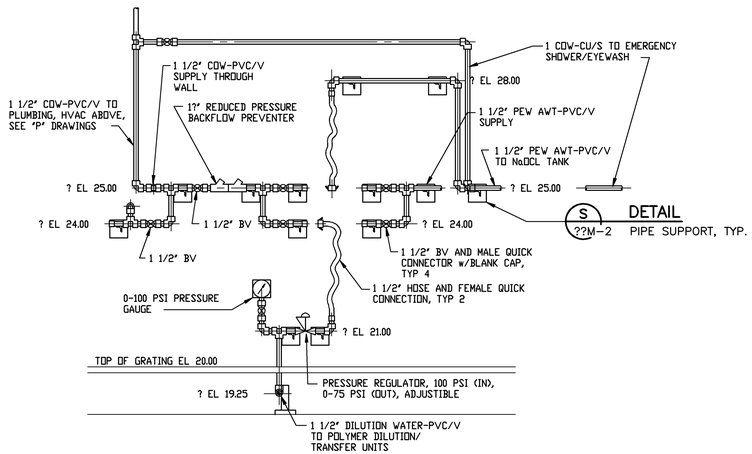

DETAIL A
SCALE: 1/2"=1'-0" B8M-3

10/18/91 – 11:52

NO.	DATE	DRWN	CHK'D	DESCRIPTION
1	9/97	FXP	ASG	RECORD DRAWING

REVISIONS

DESIGNED BY: KCW
DRAWN BY: CLP/GPB
CHECKED BY/DATE: TDH 9/91
APPRV'D BY/DATE: TDH 9/91

COMMONWEALTH OF VIRGINIA
THOMAS D. HALL
No. 12502
PROFESSIONAL ENGINEER

CAMP DRESSER & McKEE
environmental engineers, scientists, planners, & management consultants
CDM

THIS DRAWING HAS BEEN REVISED BY HAZEN AND SAWYER, P.C. TO REFLECT MODIFICATIONS MADE DURING CONSTRUCTION

ARLINGTON COUNTY, VIRGINIA
WATER POLLUTION CONTROL PLANT
UPGRADE AND EXPANSION- PHASE IIB

SECTIONS

SCALE NOTE
SCALE BAR SHOWN BELOW IS ONE INCH LONG ON A FULL SIZE DRAWING. WHEN SCALING DRAWINGS, MEASURE BAR TO DETERMINE IF SCALES SHOWN WILL REQUIRE ADJUSTING.
ONE INCH

CONTRACT NO.	90-02-WPC
YEAR	1991
LOCATION CODE	B8
SPECIALTY CODE	M
PROJECT NO.	5002-33
FILE NAME	B8M-0010.DWG
DRAWING NO.	B8M-10
SHEET NO.	187

RECORD DRAWING

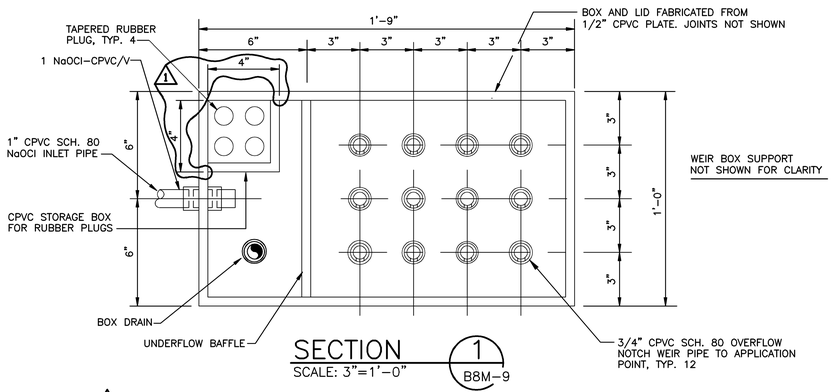

SECTION 1 B8M-9
SCALE: 3"=1'-0"

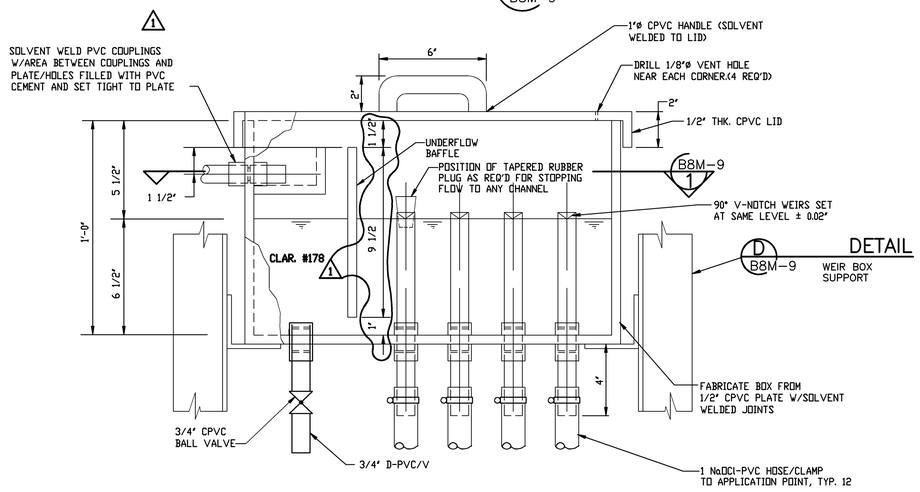

NaOCl DISTRIBUTION BOX

DETAIL A B8M-3
SCALE: 3"=1'-0"

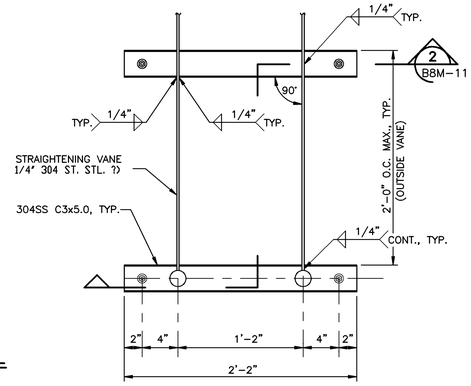

PLAN
STRAIGHTENING VANES

DETAIL B B8M-2
SCALE: 1 1/2"=1'-0"

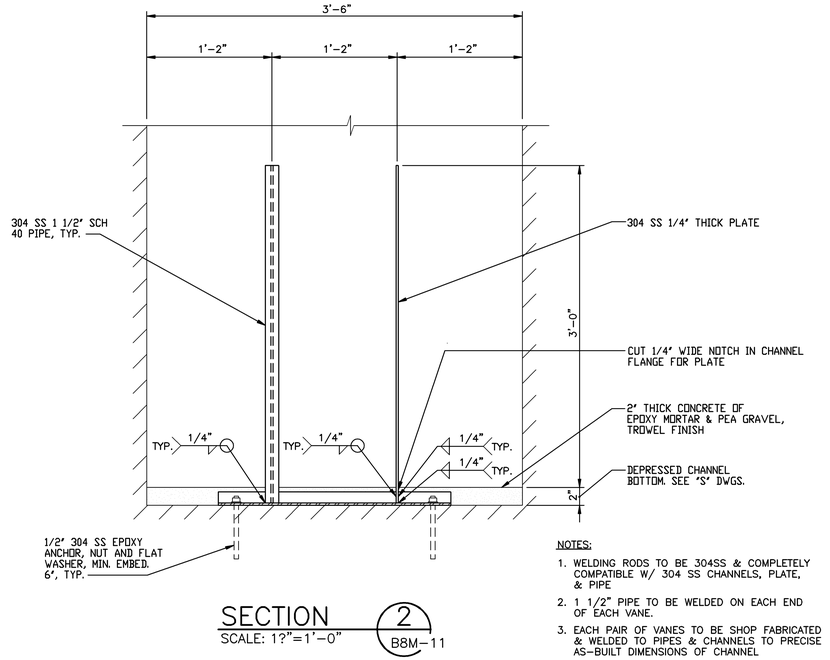

SECTION 2 B8M-11
SCALE: 1?"=1'-0"

NOTES:

1. WELDING RODS TO BE 304SS & COMPLETELY COMPATIBLE W/ 304 SS CHANNELS, PLATE, & PIPE
2. 1 1/2" PIPE TO BE WELDED ON EACH END OF EACH VANE.
3. EACH PAIR OF VANES TO BE SHOP FABRICATED & WELDED TO PIPES & CHANNELS TO PRECISE AS-BUILT DIMENSIONS OF CHANNEL
4. VANES TO BE COATED WITH COAL TAR EPOXY AFTER INSTALLATION.

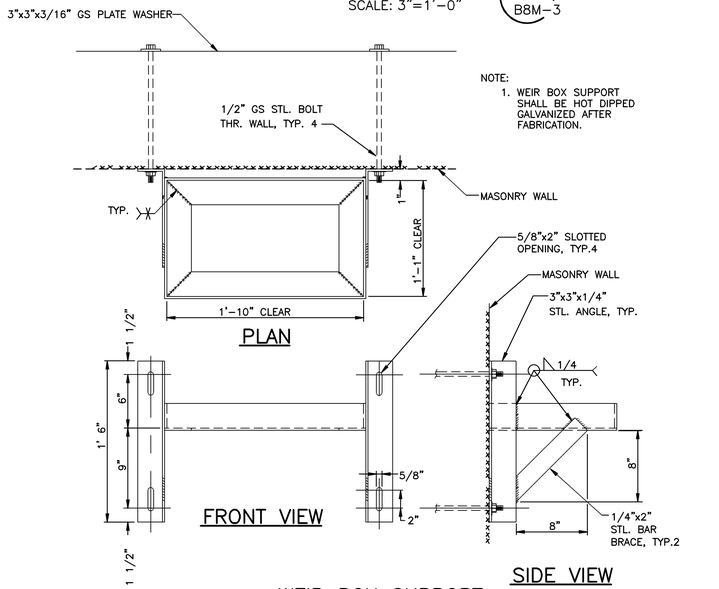

WEIR BOX SUPPORT

DETAIL D B8M-9
SCALE: 1 1/2"=1'-0"

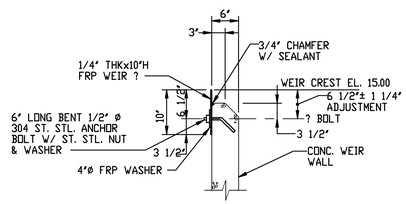

SECTION 3 B8M-9
SCALE: 3/4"=1'-0"

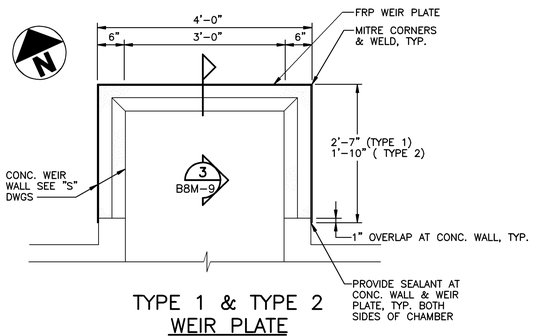

TYPE 1 & TYPE 2
WEIR PLATE

DETAIL E B8M-2
SCALE: 3/4"=1'-0"

F B8M-9 DETAIL
MOUNTING HOLE, TYP. 4

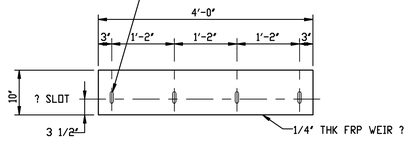

TYPE 1 & TYPE 2
WEIR PLATE FRONT ELEVATION
(ONE REQ'D EACH CHAMBER)

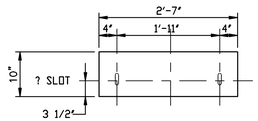

TYPE 1
WEIR PLATE SIDE ELEVATION
(TWO REQ'D, EACH CHAMBER)

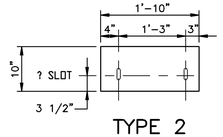

TYPE 2
WEIR PLATE SIDE ELEVATION
(TWO REQ'D, EACH CHAMBER)

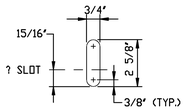

MOUNTING HOLE

DETAIL F B8M-9
SCALE: 3"=1'-0"

NO.	DATE	DRWN	CHK'D	DESCRIPTION
1	9/97	FXP	ASG	RECORD DRAWING

REVISIONS

DESIGNED BY: DHG
DRAWN BY: CTC
CHECKED BY/DATE: TDH 9/91
APPRV'D BY/DATE: TDH 9/91

COMMONWEALTH OF VIRGINIA
THOMAS D. HALL
No. 12502
PROFESSIONAL ENGINEER

CAMP DRESSER & McKEE
environmental engineers, scientists, planners, & management consultants
CDM

PER DRAWING HAS BEEN REVISED BY HAZEN AND SAWYER, P.C. TO REFLECT MODIFICATIONS MADE DURING CONSTRUCTION

ARLINGTON COUNTY, VIRGINIA
WATER POLLUTION CONTROL PLANT
UPGRADE AND EXPANSION- PHASE IIIB

SECTIONS & DETAILS

SCALE NOTE
SCALE BAR SHOWN BELOW IS ONE INCH LONG ON A FULL SIZE DRAWING. WHEN SCALING DRAWINGS, MEASURE BAR TO DETERMINE IF SCALES SHOWN WILL REQUIRE ADJUSTING.
ONE INCH

CONTRACT NO. 90-02-WPC
YEAR 1991
LOCATION CODE B8
SPECIALTY CODE M
PROJECT NO. 5002-33
FILE NAME B8M-0011.DWG
DRAWING NO. B8M-11
SHEET NO. 188

RECORD DRAWING

10/18/91 - 10:15

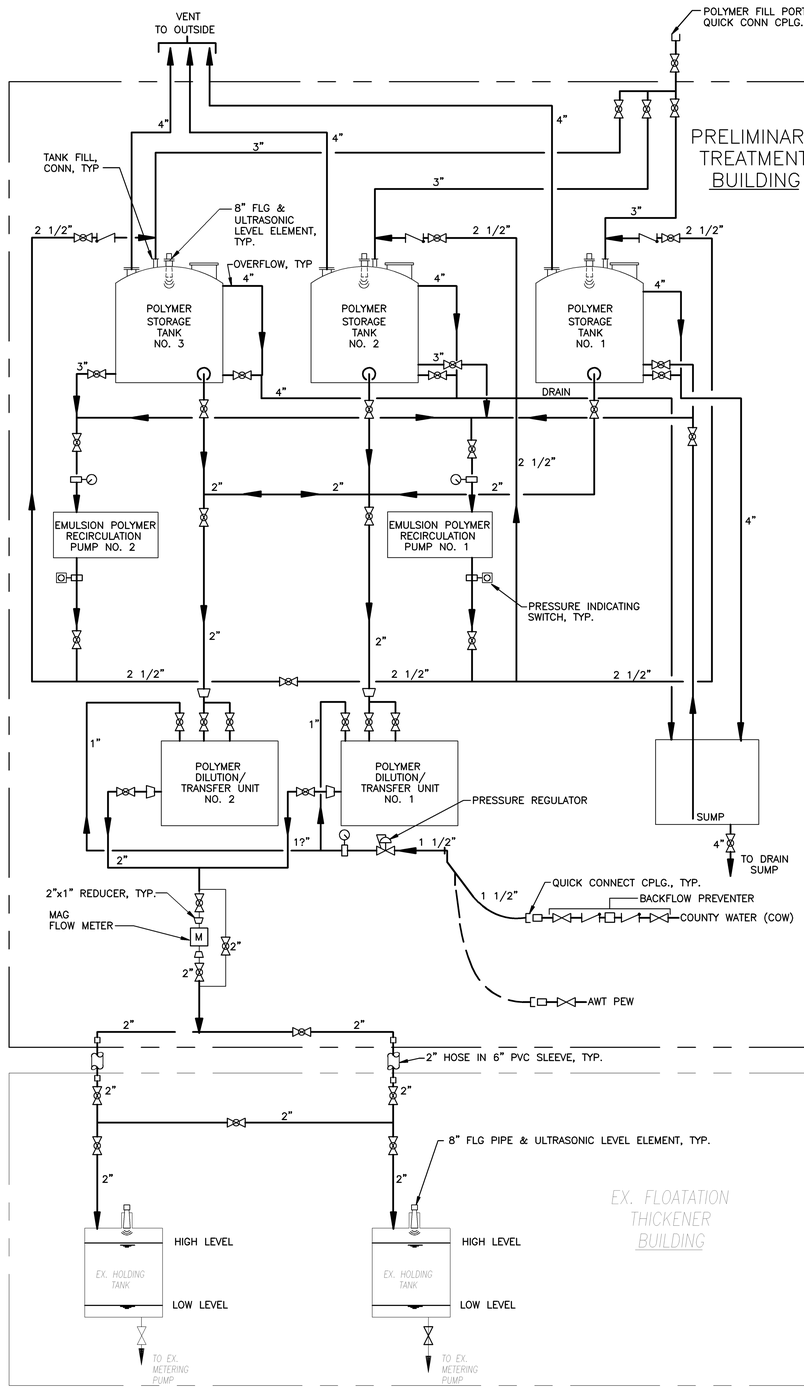

POLYMER SYSTEM SCHEMATIC

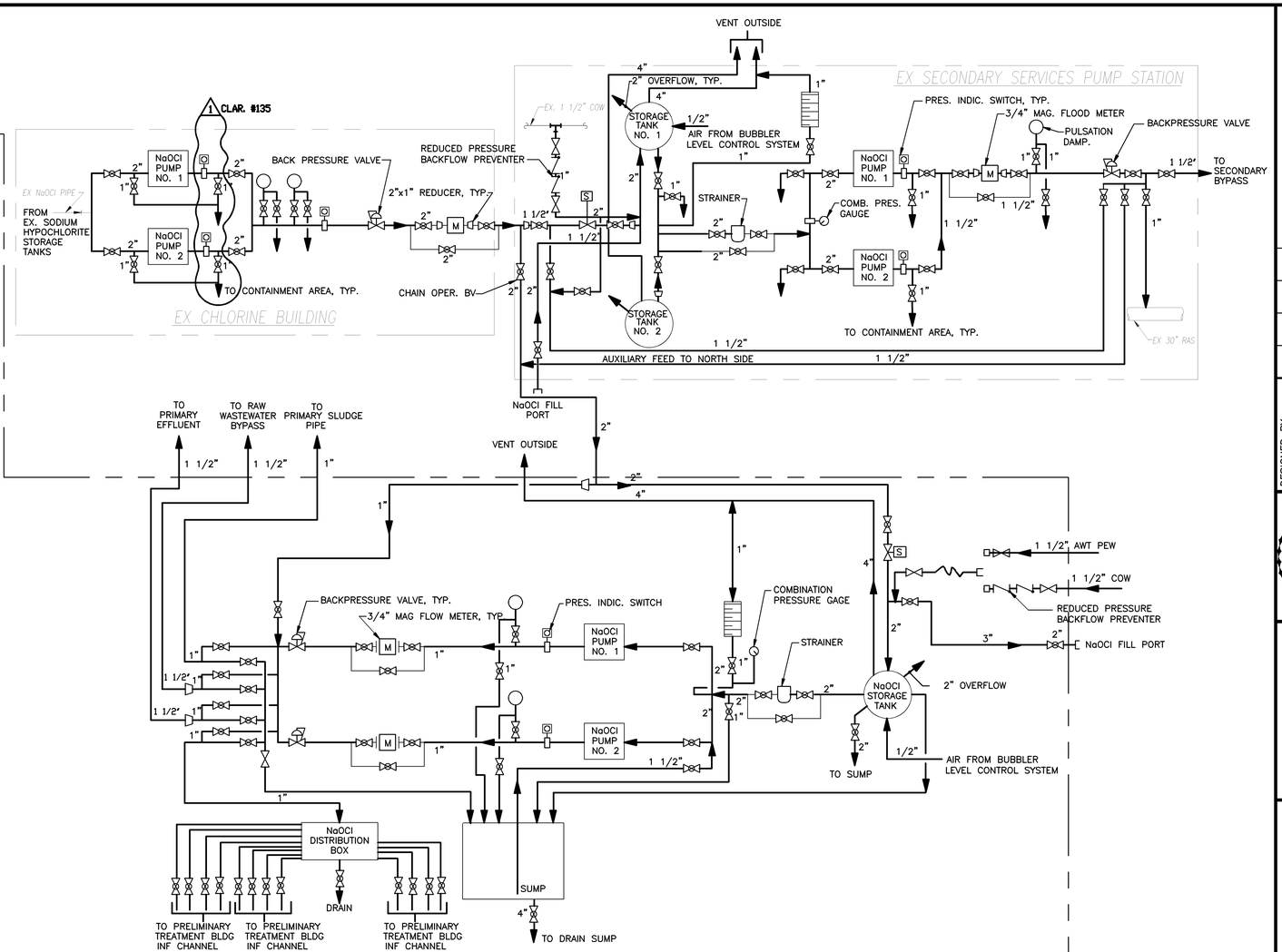

SODIUM HYPOCHLORITE (NaOCl) SYSTEM SCHEMATIC

NOTE:
1. ALL PRESSURE SWITCHES FOR HYPO SYSTEM ARE TO BE SET AT 90 PSI.

CLAR. #143

LEGEND

- SOLENOID VALVE
- CHECK VALVE
- REDUCER
- GATE VALVE
- BALL VALVE
- REDUCED PRESSURE BACKFLOW PREVENTER WITH ISOLATION GATE VALVES
- PRESSURE GAUGE WITH FLANGE ISOLATOR
- PRESSURE INDICATING SWITCH WITH FLANGE ISOLATOR
- PRESSURE REGULATING VALVE
- BACK PRESSURE VALVE
- MAGNETIC FLOW METER
- CALIBRATION CHAMBER
- PULSATION DAMPENER WITH DRAIN
- STRAINER
- QUICK CONNECT COUPLING
- PIPE OR HOSE

09/17/91 – 11:28

NO.	DATE	DRWN	CHK'D	DESCRIPTION
1	9/97	FXP	ASG	RECORD DRAWING

REVISIONS

DESIGNED BY: AMR
DRAWN BY: BRW/GPB
CHECKED BY/DATE: TDH 9/91
APPRV'D BY/DATE: TDH 9/91

COMMONWEALTH OF VIRGINIA — THOMAS D. HALL No. 12502 — PROFESSIONAL ENGINEER

CAMP DRESSER & McKEE

RED DRAWING HAS BEEN REVISED BY HAZEN AND SAWYER, P.C. TO REFLECT MODIFICATIONS MADE DURING CONSTRUCTION

CDM

environmental engineers, scientists, planners, & management consultants

ARLINGTON COUNTY, VIRGINIA
WATER POLLUTION CONTROL PLANT
UPGRADE AND EXPANSION- PHASE IIB

PRELIMINARY TREATMENT BUILDING
POLYMER & SODIUM HYPOCHLORITE
PROCESS SCHEMATICS

SCALE NOTE

SCALE BAR SHOWN BELOW IS ONE INCH LONG ON A FULL SIZE DRAWING. WHEN SCALING DRAWINGS, MEASURE BAR TO DETERMINE IF SCALES SHOWN WILL REQUIRE ADJUSTING.

ONE INCH

CONTRACT NO. 90-02-WPC
YEAR 1991
LOCATION CODE B8
SPECIALTY CODE M
PROJECT NO. 5002-33
FILE NAME B8M-0012.DWG
DRAWING NO. B8M-12
SHEET NO. 189

RECORD DRAWING

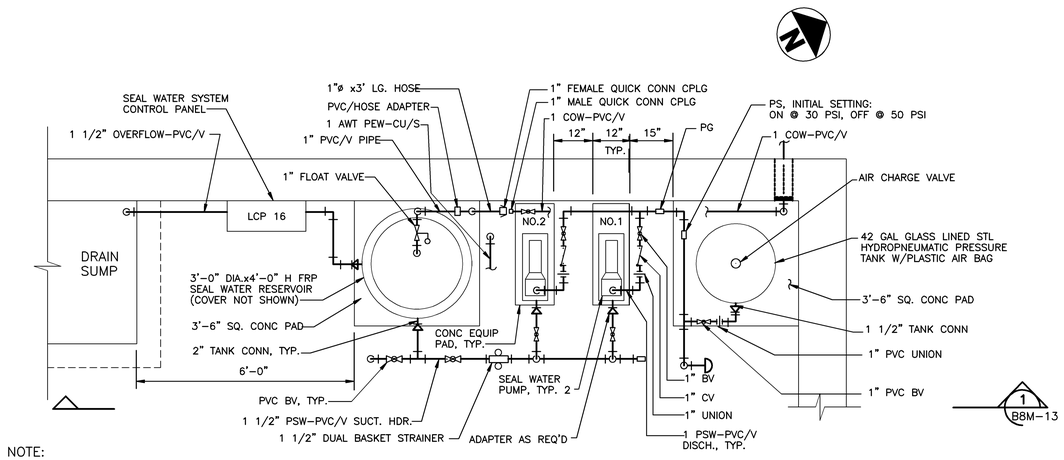

NOTE:

1. PROVIDE SUPPORTS AND HANGERS FOR ALL PIPES AS STIPULATED IN CONTRACT PROJECT SPECIFICATIONS. REFER TO DETAILS ON DRAWINGS 00M–1, 2, 3 AND 4 OF THE CONTRACT DRAWINGS.

SEAL WATER SYSTEM PLAN

DETAIL A
SCALE: 1/2"= 1'–0" B8M–1

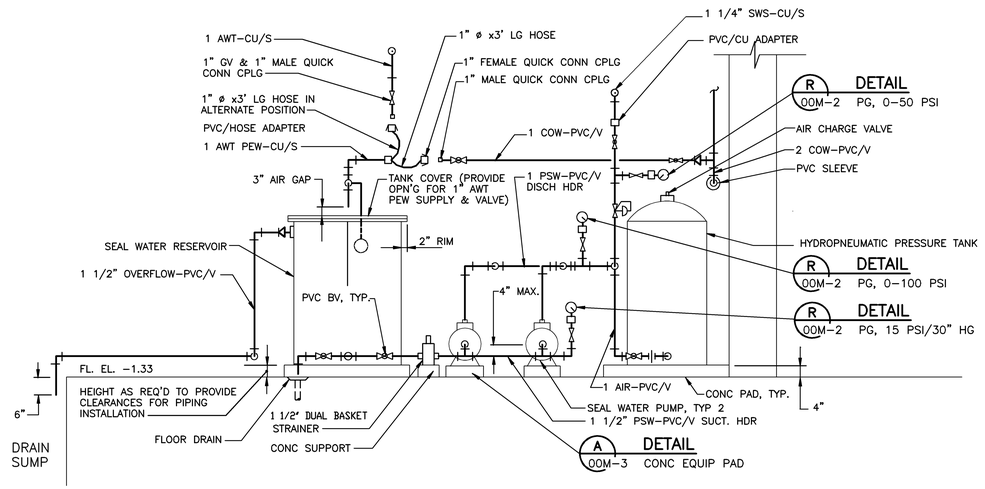

SECTION 1
SCALE: 1/2"= 1'–0" B8M–13

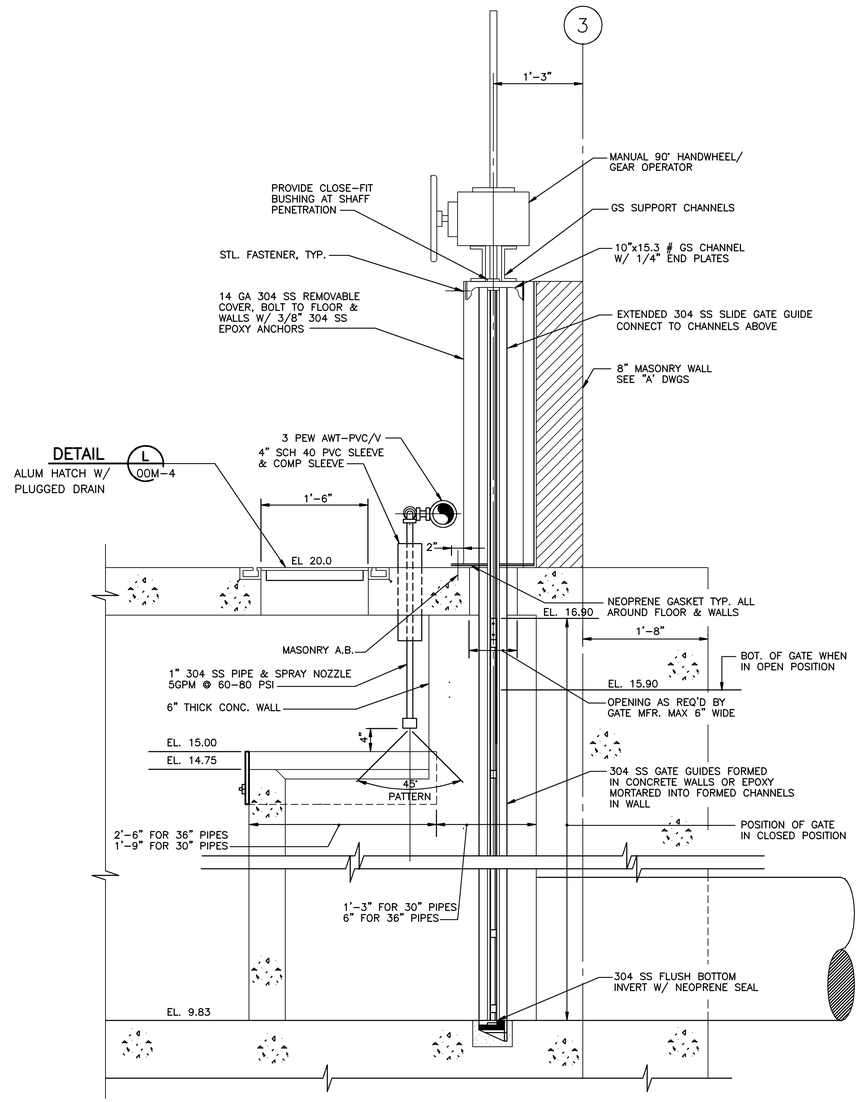

SECTION 1
SCALE: 1"= 1'–0" B8M–2,3

NO.	DATE	DRWN	CHK'D	DESCRIPTION
1	9/97	FKP	ASG	RECORD DRAWING

REVISIONS

DESIGNED BY: DHG
DRAWN BY: GPB
CHECKED BY/DATE: TDH 9/91
APPRV'D BY/DATE: TDH 9/91

COMMONWEALTH OF VIRGINIA THOMAS D. HALL No. 12502 PROFESSIONAL ENGINEER

CAMP DRESSER & McKEE

PER DRAWING HAS BEEN REVISED BY HAZEN AND SAWYER, P.C. TO REFLECT MODIFICATIONS MADE DURING CONSTRUCTION

CDM environmental engineers, scientists, planners, & management consultants

ARLINGTON COUNTY, VIRGINIA
WATER POLLUTION CONTROL PLANT
UPGRADE AND EXPANSION– PHASE IIB

PRELIMINARY TREATMENT BUILDING
SECTIONS AND DETAILS

SCALE NOTE

SCALE BAR SHOWN BELOW IS ONE INCH LONG ON A FULL SIZE DRAWING. WHEN SCALING DRAWINGS, MEASURE BAR TO DETERMINE IF SCALES SHOWN WILL REQUIRE ADJUSTING.

ONE INCH

CONTRACT NO. 90–02–WPC
YEAR 1991
LOCATION CODE B8
SPECIALTY CODE M
PROJECT NO. 5002–33
FILE NAME B8M–0013.DWG
DRAWING NO. B8M–13
SHEET NO. 190

RECORD DRAWING

09/18/91 – 09:52

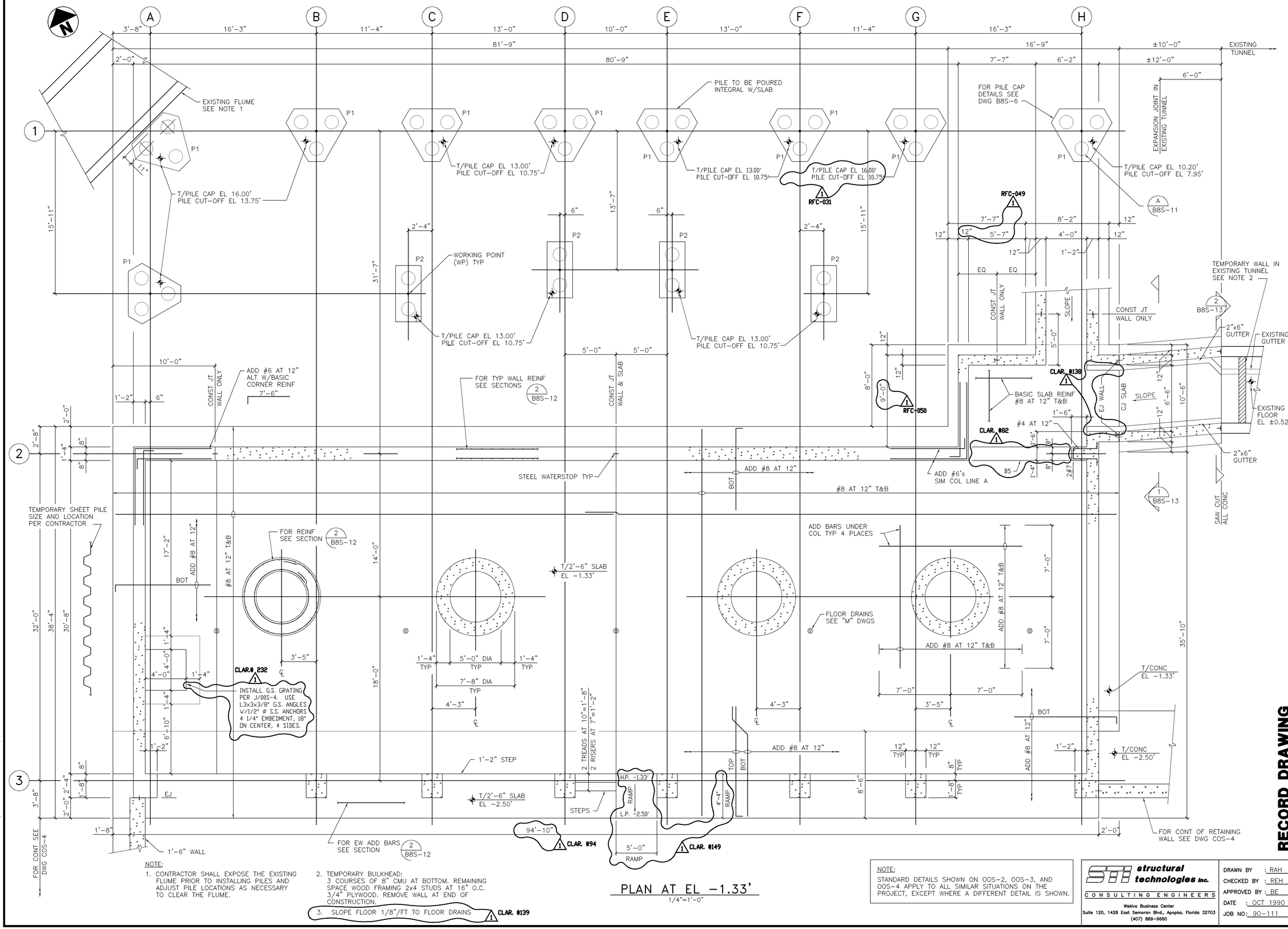

NOTE:

1. CONTRACTOR SHALL EXPOSE THE EXISTING FLUME PRIOR TO INSTALLING PILES AND ADJUST PILE LOCATIONS AS NECESSARY TO CLEAR THE FLUME.
2. TEMPORARY BULKHEAD: 3 COURSES OF 8" CMU AT BOTTOM. REMAINING SPACE WOOD FRAMING 2x4 STUDS AT 16" O.C. 3/4" PLYWOOD. REMOVE WALL AT END OF CONSTRUCTION.
3. SLOPE FLOOR 1/8"/FT TO FLOOR DRAINS

NOTE:

STANDARD DETAILS SHOWN ON OOS-2, OOS-3, AND OOS-4 APPLY TO ALL SIMILAR SITUATIONS ON THE PROJECT, EXCEPT WHERE A DIFFERENT DETAIL IS SHOWN.

RECORD DRAWING

NO.	DATE	DRWN	CHK'D	DESCRIPTION
1	9/97	FXP	ASG	RECORD DRAWING

DESIGNED BY:
DRAWN BY:
CHECKED BY/DATE:
APPRV'D BY/DATE:

CAMP DRESSER & McKEE

THIS DRAWING HAS BEEN REVISED BY HAZEN AND SAWYER, P.C. TO REFLECT MODIFICATIONS MADE DURING CONSTRUCTION

environmental engineers, scientists, planners & management consultants

ARLINGTON COUNTY, VIRGINIA
WATER POLLUTION CONTROL PLANT
UPGRADE AND EXPANSION- PHASE IB

PLELIMINARY TREATMENT BUILDING-STRUCTURAL-
PLAN AT ELEVATION -1.33'

SCALE NOTE

SCALE BAR SHOWN BELOW IS ONE INCH LONG ON A FULL SIZE DRAWING. WHEN SCALING DRAWINGS, MEASURE BAR TO DETERMINE IF SCALES SHOWN WILL REQUIRE ADJUSTING.

ONE INCH

CONTRACT NO.	90-02-WPC
YEAR	1991
LOCATION CODE	B8
SPECIALTY CODE	S
PROJECT NO.	5002-33
FILE NAME	B8S-01.DWG
DRAWING NO.	B8S-1
SHEET NO.	191

STI structural technologies inc.
CONSULTING ENGINEERS
Wekiva Business Center
Suite 120, 1428 East Semoran Blvd., Apopka, Florida 32703
(407) 889-9660

DRAWN BY : RAH
CHECKED BY : REH
APPROVED BY : BE
DATE : OCT 1990
JOB NO: 90-111

FILE: D:\ARLING\B8S-1.DWG , SCALE: 1/4"=1'-0" , LATEST REVISIONS MADE ON: 10/15/91 AT 09:20

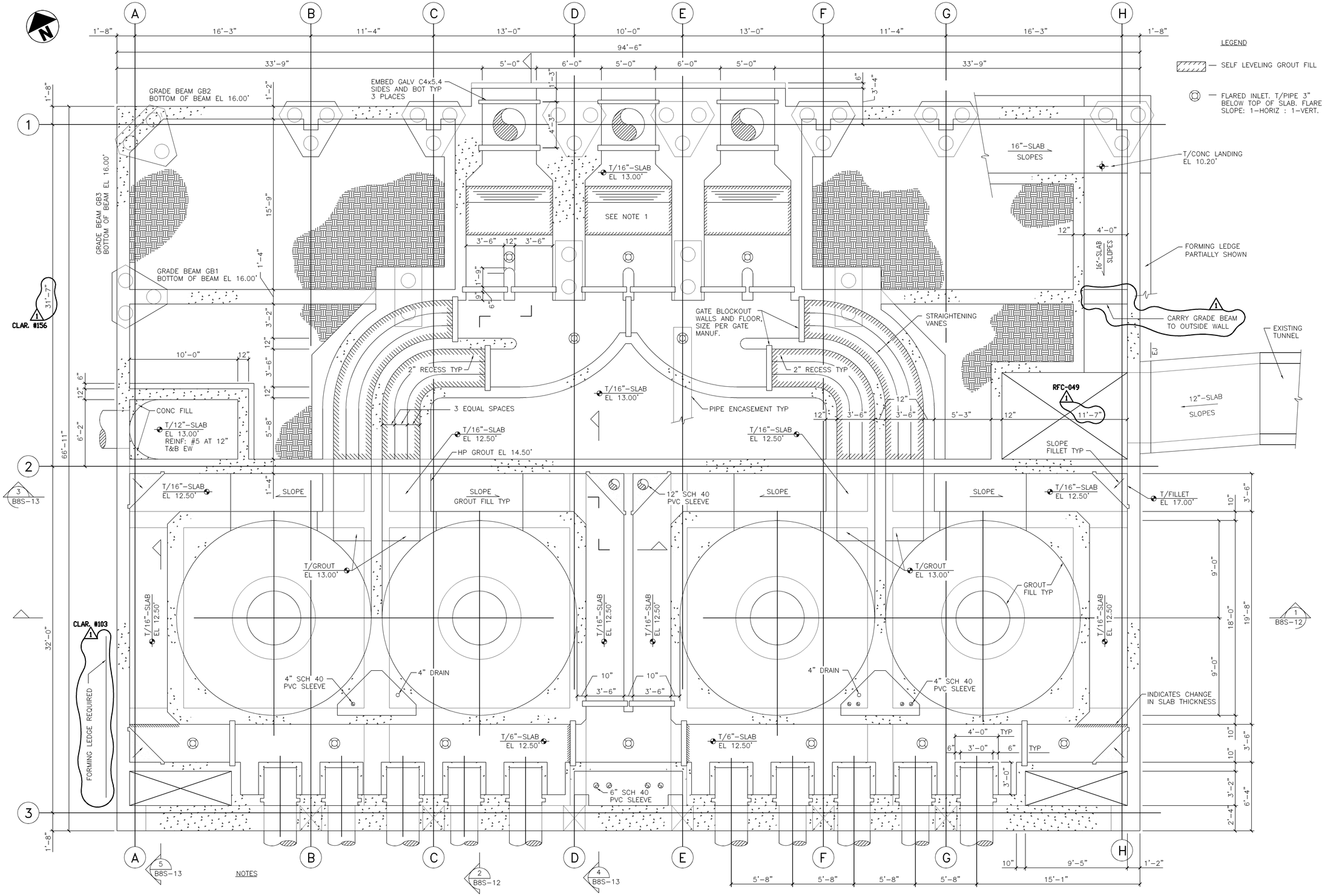

NOTES

1. ±6" RECESS PER MANUFACTURER'S REQUIREMENTS.
2. PREPARE SURFACES AND APPLY TWO COATS OF SIKAGARD 62 TO INTERIOR WALLS AND CEILINGS OF ALL CHANNELS, GRIT CHAMBERS, BAR SCREEN CHAMBERS, AND OUTLET CHAMBERS.

ADD. #2

PLAN AT EL 13.00'

1/4"=1'-0"

NOTE:
STANDARD DETAILS SHOWN ON OOS-2, OOS-3, AND OOS-4 APPLY TO ALL SIMILAR SITUATIONS ON THE PROJECT, EXCEPT WHERE A DIFFERENT DETAIL IS SHOWN.

REVISIONS

NO.	DATE	DRWN	CHK'D	DESCRIPTION
1	9/97	FXP	ASG	RECORD DRAWING

DESIGNED BY:
DRAWN BY:
CHECKED BY/DATE:
APPRV'D BY/DATE:

CAMP DRESSER & McKEE

THIS DRAWING HAS BEEN REVISED BY HAZEN AND SAWYER, P.C. TO REFLECT MODIFICATIONS MADE DURING CONSTRUCTION

environmental engineers, scientists, planners, & management consultants CDM

ARLINGTON COUNTY, VIRGINIA
WATER POLLUTION CONTROL PLANT
UPGRADE AND EXPANSION- PHASE IB

PRELIMINARY TREATMENT BUILDING-STRUCTURAL-
PLAN AT ELEVATION 13.00'

RECORD DRAWING

SCALE NOTE
SCALE BAR SHOWN BELOW IS ONE INCH LONG ON A FULL SIZE DRAWING. WHEN SCALING DRAWINGS, MEASURE BAR TO DETERMINE IF SCALES SHOWN WILL REQUIRE ADJUSTING.
←ONE INCH→

CONTRACT NO.
90-02-WPC
YEAR 1991
LOCATION CODE: B8
SPECIALTY CODE: S
PROJECT NO.
5002-33
FILE NAME
B8S-02.DWG
DRAWING NO.
B8S-2
SHEET NO. 192

STI structural technologies inc.
CONSULTING ENGINEERS
Weldva Business Center
Suite 120, 1428 East Semoran Blvd., Apopka, Florida 32703
(407) 889-9660

DRAWN BY : BE
CHECKED BY : REH
APPROVED BY : BE
DATE : OCT 1990
JOB NO: 90-111

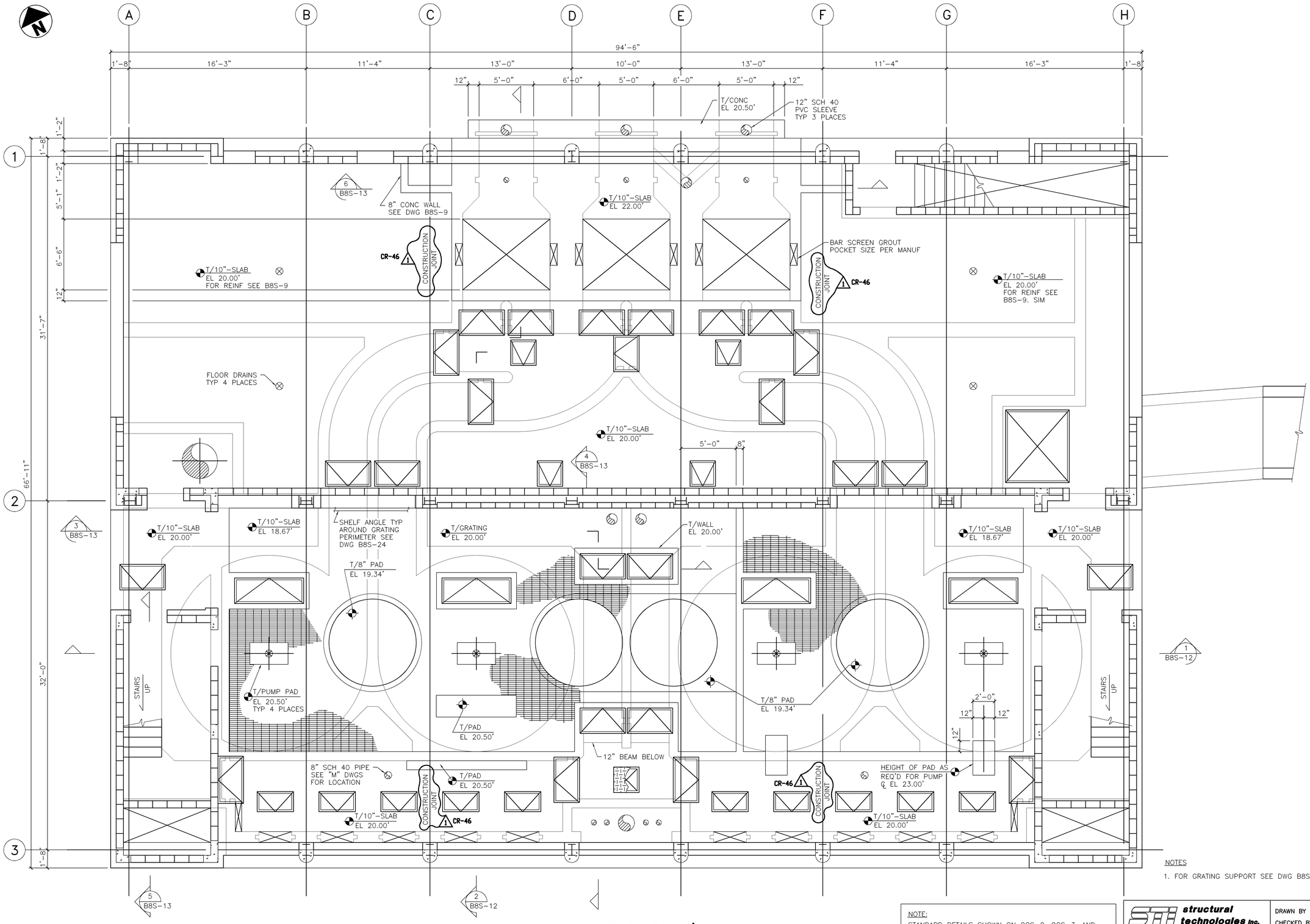

PLAN AT EL 22.00'

1/4"=1'-0"

NOTES

1. FOR GRATING SUPPORT SEE DWG B8S-24

NOTE:
STANDARD DETAILS SHOWN ON OOS-2, OOS-3, AND OOS-4 APPLY TO ALL SIMILAR SITUATIONS ON THE PROJECT, EXCEPT WHERE A DIFFERENT DETAIL IS SHOWN.

NO.	DATE	DRWN	CHK'D	DESCRIPTION
1	9/97	FXP	ASG	RECORD DRAWING

REVISIONS

DESIGNED BY:
DRAWN BY:
CHECKED BY/DATE:
APPRV'D BY/DATE:

CAMP DRESSER & McKEE

THIS DRAWING HAS BEEN REVISED BY HAZEN AND SAWYER, P.C. TO REFLECT MODIFICATIONS MADE DURING CONSTRUCTION

CDM
environmental engineers, scientists, planners, & management consultants

ARLINGTON COUNTY, VIRGINIA
WATER POLLUTION CONTROL PLANT
UPGRADE AND EXPANSION- PHASE IB

PRELIMINARY TREATMENT BUILDING-STRUCTURAL-
PLAN AT ELEVATION 22.00'

RECORD DRAWING

SCALE NOTE
SCALE BAR SHOWN BELOW IS ONE INCH LONG ON A FULL SIZE DRAWING. WHEN SCALING DRAWINGS, MEASURE BAR TO DETERMINE IF SCALES SHOWN WILL REQUIRE ADJUSTING.
ONE INCH

CONTRACT NO.
90-02-WPC
YEAR 1991

LOCATION CODE	SPECIALTY CODE
B8	S

PROJECT NO.
5002-33
FILE NAME
B8S-03.DWG
DRAWING NO.
B8S-3
SHEET NO. 193

STI structural technologies inc.
CONSULTING ENGINEERS
Wekiva Business Center
Suite 120, 1428 East Semoran Blvd., Apopka, Florida 32703
(407) 889-9660

DRAWN BY : BE
CHECKED BY : REH
APPROVED BY : BE
DATE : OCT 1990
JOB NO: 90-111

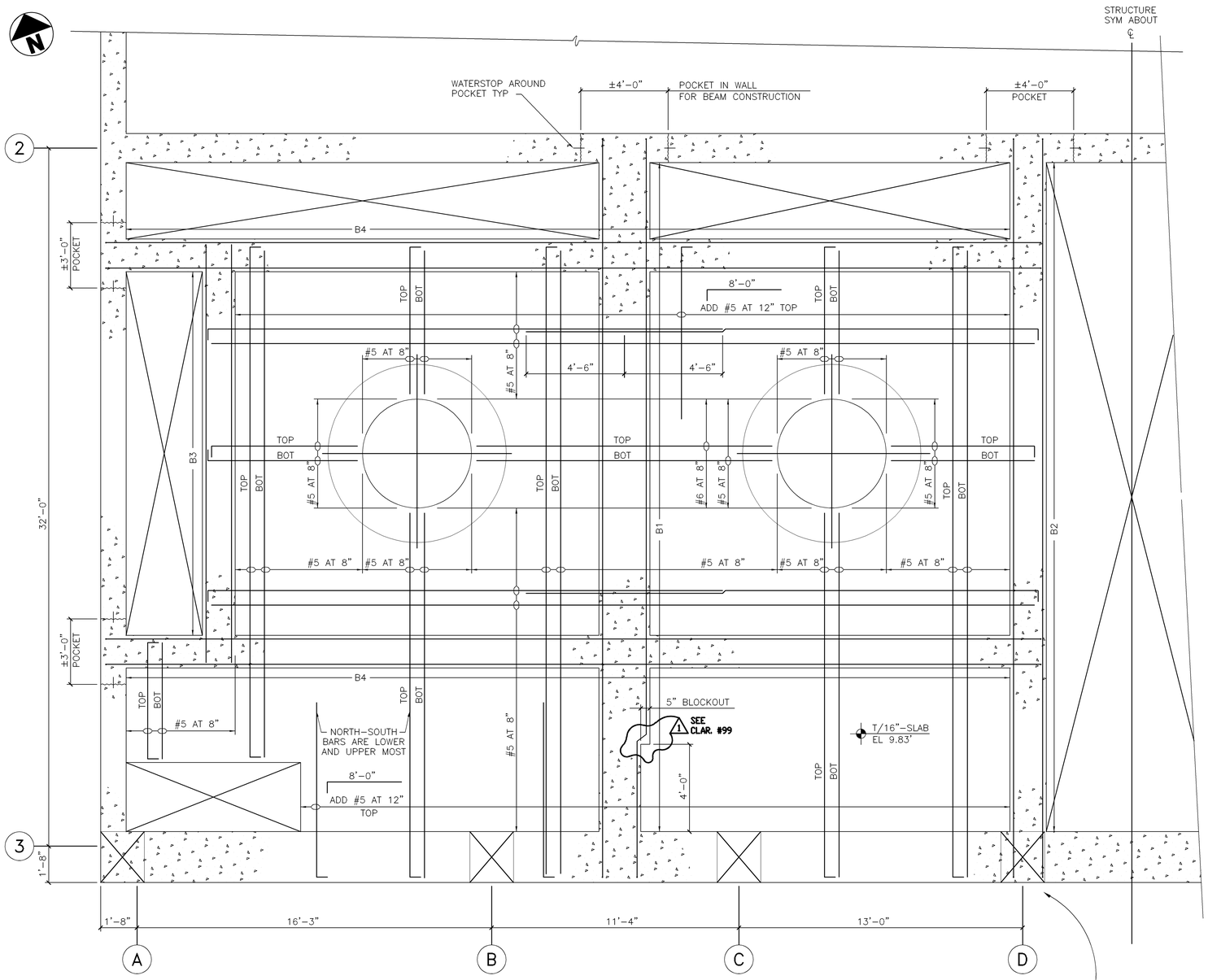

ENLARGED PLAN AT EL 9.83'
3/8"=1'-0"

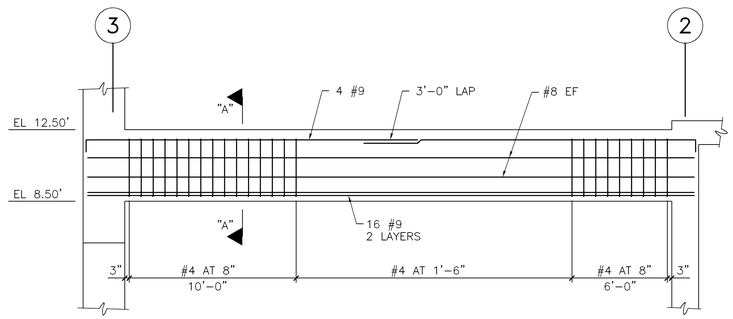

BEAM – B1
1/4"=1'-0"

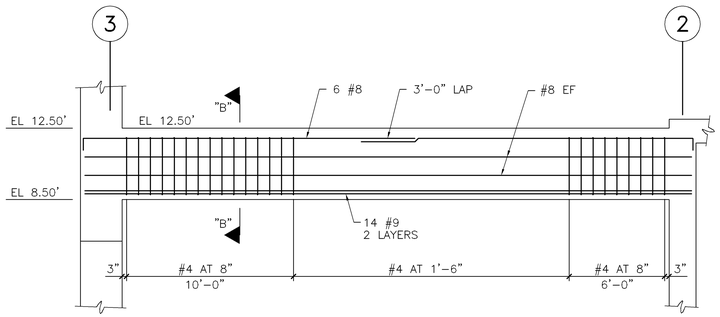

BEAM – B2
1/4"=1'-0"

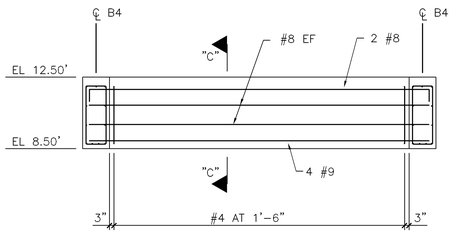

BEAM – B3
1/4"=1'-0"

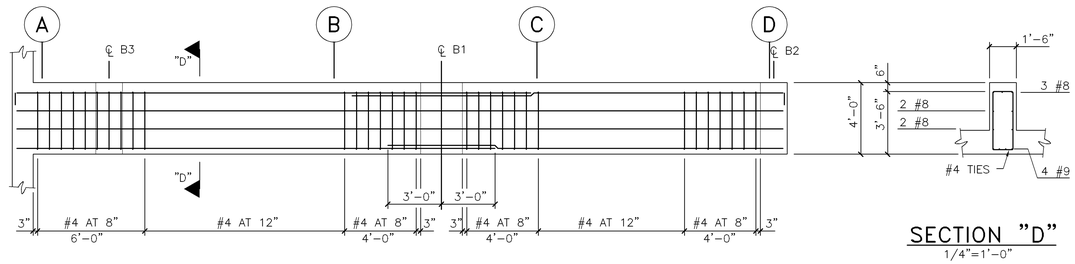

BEAM – B4
1/4"=1'-0"

SECTION "D"
1/4"=1'-0"

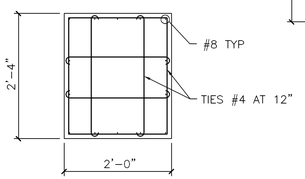

TYPICAL COLUMN REINF

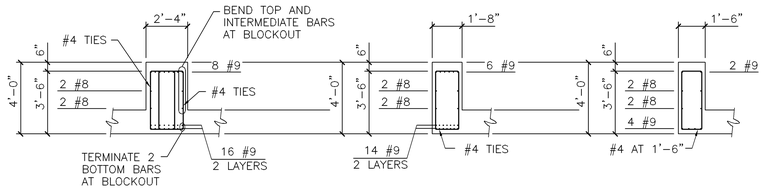

SECTION "A"
1/4"=1'-0"

SECTION "B"
1/4"=1'-0"

SECTION "C"
1/4"=1'-0"

NOTE:
STANDARD DETAILS SHOWN ON OOS-2, OOS-3, AND OOS-4 APPLY TO ALL SIMILAR SITUATIONS ON THE PROJECT, EXCEPT WHERE A DIFFERENT DETAIL IS SHOWN.

STI structural technologies inc.
CONSULTING ENGINEERS
Wekiva Business Center
Suite 120, 1428 East Semoran Blvd., Apopka, Florida 32703
(407) 889-9660

DRAWN BY : BE
CHECKED BY : REH
APPROVED BY : BE
DATE : OCT 1990
JOB NO: 90-111

NO.	DATE	DRWN	CHK'D	DESCRIPTION
1	9/97	FXP	ASG	RECORD DRAWING

REVISIONS

DESIGNED BY:
DRAWN BY:
CHECKED BY/DATE:
APPRV'D BY/DATE:

CAMP DRESSER & McKEE

THIS DRAWING HAS BEEN REVISED BY HAZEN AND SAWYER, P.C. TO REFLECT MODIFICATIONS MADE DURING CONSTRUCTION

environmental engineers, scientists, planners, & management consultants CDM

ARLINGTON COUNTY, VIRGINIA
WATER POLLUTION CONTROL PLANT
UPGRADE AND EXPANSION- PHASE IIB

PRELIMINARY TREATMENT BUILDING-STRUCTURAL-
ENLARGED PLAN AT EL 9.83'

RECORD DRAWING

SCALE NOTE
SCALE BAR SHOWN BELOW IS ONE INCH LONG ON A FULL SIZE DRAWING. WHEN SCALING DRAWINGS, MEASURE BAR TO DETERMINE IF SCALES SHOWN WILL REQUIRE ADJUSTING.
ONE INCH

CONTRACT NO.
90-02-WPC
YEAR 1991
LOCATION CODE B8
SPECIALTY CODE S
PROJECT NO.
5002-33
FILE NAME
B8S-04.DWG
DRAWING NO.
B8S-4
SHEET NO. 194

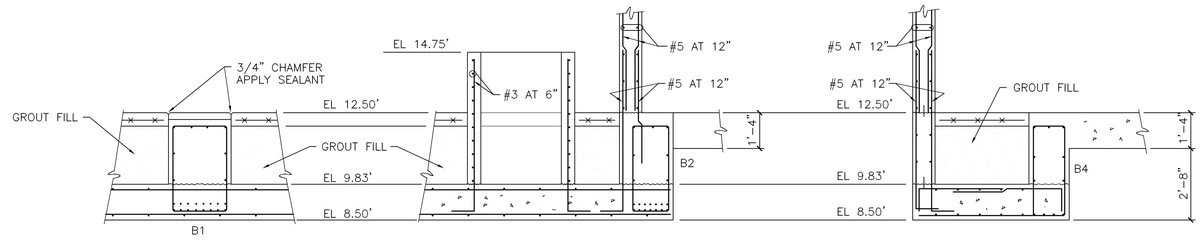

SECTION 1 — 3/8"=1'-0" — B8S-5

SECTION 2 — 3/8"=1'-0" — B8S-5

SECTION 3 — 3/8"=1'-0" — B8S-5

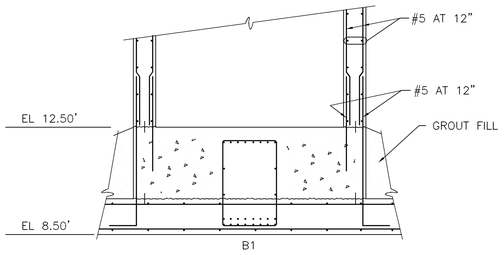

SECTION 4 — 3/8"=1'-0" — B8S-5

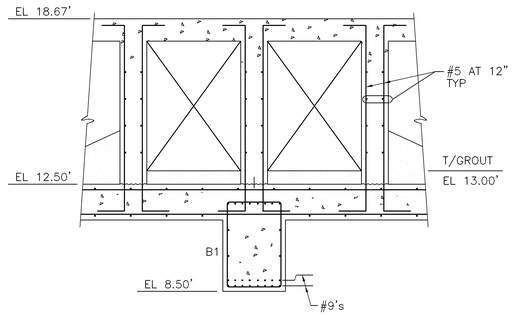

SECTION 5 — 3/8"=1'-0" — B8S-5

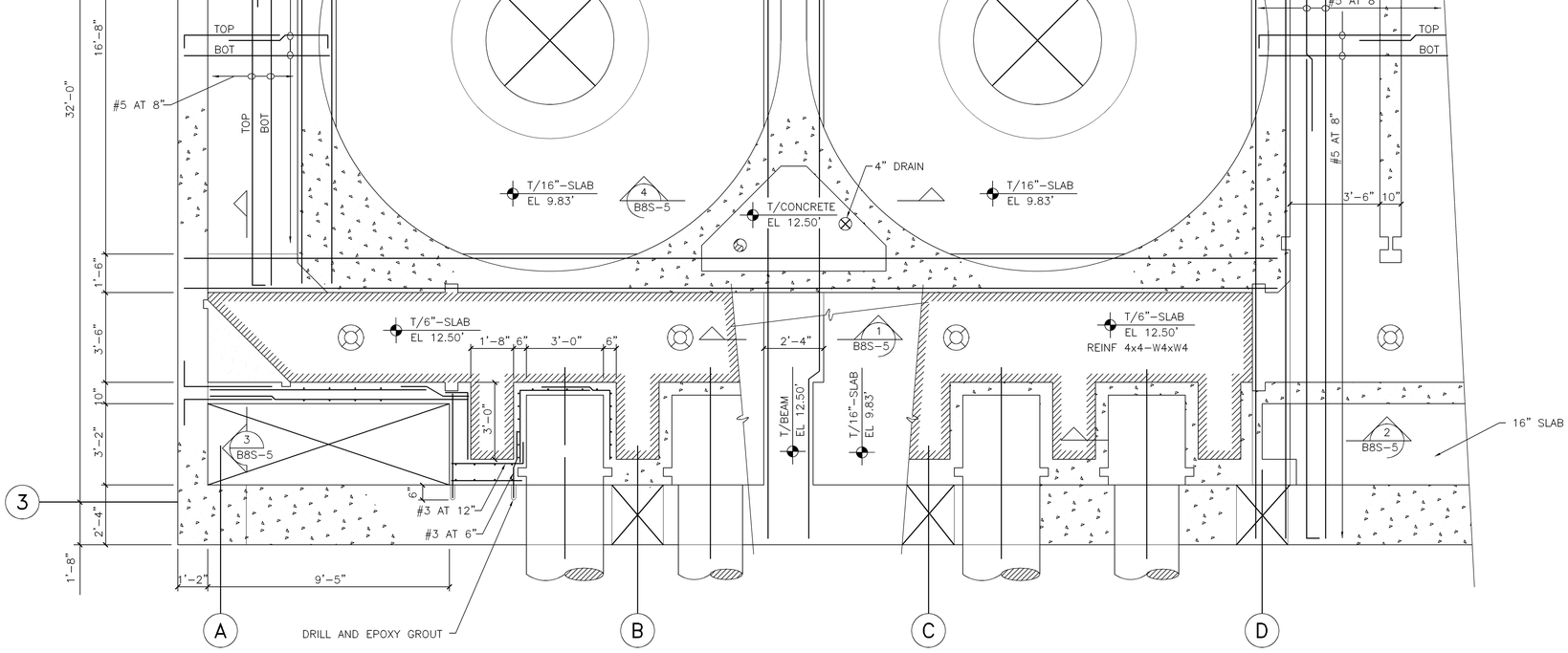

ENLARGED PLAN AT EL 12.50'
3/8"=1'-0"

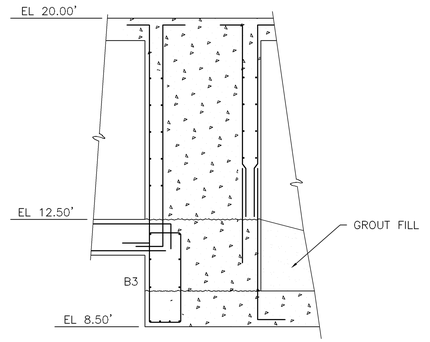

SECTION 6 — 3/8"=1'-0" — B8S-5

NOTE:
STANDARD DETAILS SHOWN ON DDS-2, DDS-3, AND DDS-4 APPLY TO ALL SIMILAR SITUATIONS ON THE PROJECT, EXCEPT WHERE A DIFFERENT DETAIL IS SHOWN.

RECORD DRAWING

NO.	DATE	DRWN	CHK'D	DESCRIPTION
1	9/97	FXP	ASG	RECORD DRAWING

REVISIONS

DESIGNED BY:
DRAWN BY:
CHECKED BY/DATE:
APPRV'D BY/DATE:

CAMP DRESSER & McKEE

THIS DRAWING HAS BEEN REVISED BY HAZEN AND SAWYER, P.C. TO REFLECT MODIFICATIONS MADE DURING CONSTRUCTION

environmental engineers, scientists, planners, & management consultants CDM

ARLINGTON COUNTY, VIRGINIA
WATER POLLUTION CONTROL PLANT
UPGRADE AND EXPANSION- PHASE IB

PRELIMINARY TREATMENT BUILDING-STRUCTURAL-
ENLARGED PLAN AT EL 12.50'

SCALE NOTE
SCALE BAR SHOWN BELOW IS ONE INCH LONG ON A FULL SIZE DRAWING. WHEN SCALING DRAWINGS, MEASURE BAR TO DETERMINE IF SCALES SHOWN WILL REQUIRE ADJUSTING.
ONE INCH

CONTRACT NO. 90-02-WPC
YEAR 1991

LOCATION CODE	SPECIALTY CODE
B8	S

PROJECT NO. 5002-33
FILE NAME B8S-05.DWG
DRAWING NO. B8S-5
SHEET NO. 195

STI structural technologies inc.
CONSULTING ENGINEERS
Wekiva Business Center
Suite 120, 1428 East Semoran Blvd., Apopka, Florida 32703
(407) 889-9660

DRAWN BY : KM
CHECKED BY : REH
APPROVED BY : BE
DATE : OCT 1990
JOB NO: 90-111

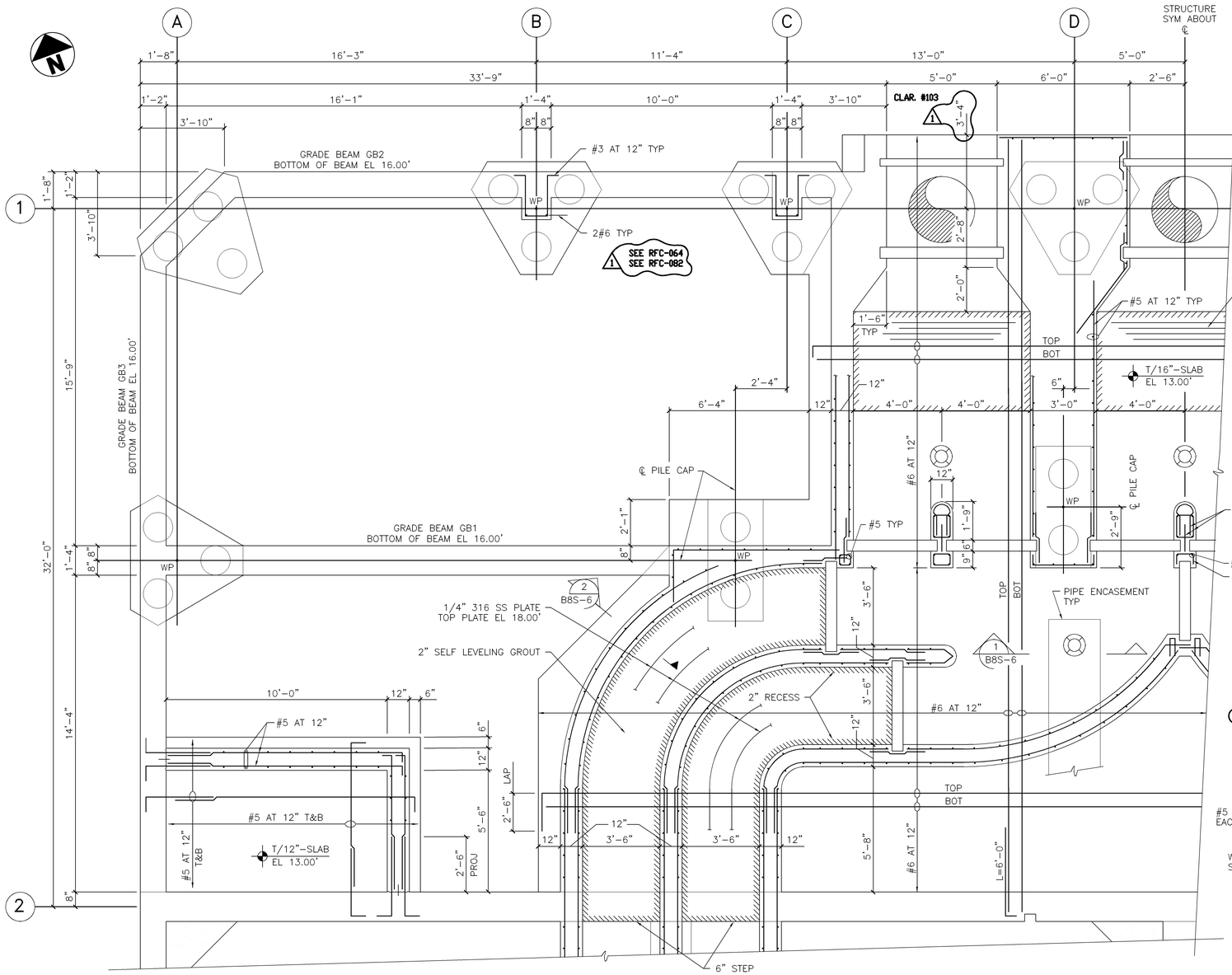

ENLARGED PLAN AT EL 13.00'
SCALE: 3/8"=1'-0"

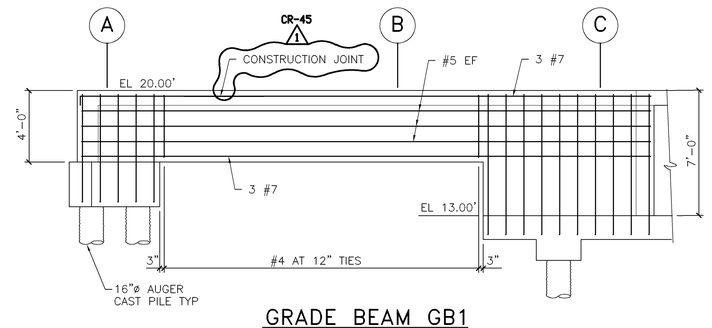

GRADE BEAM GB1
1/4"=1'-0"

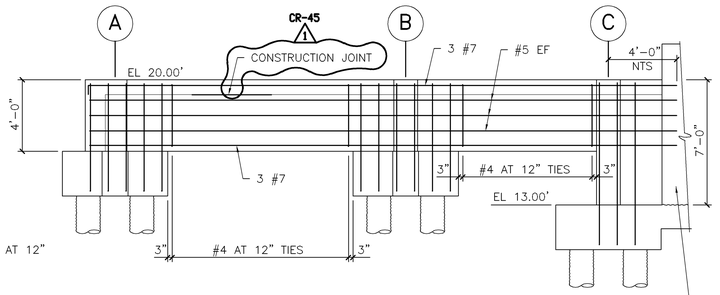

GRADE BEAM GB2
1/4"=1'-0"

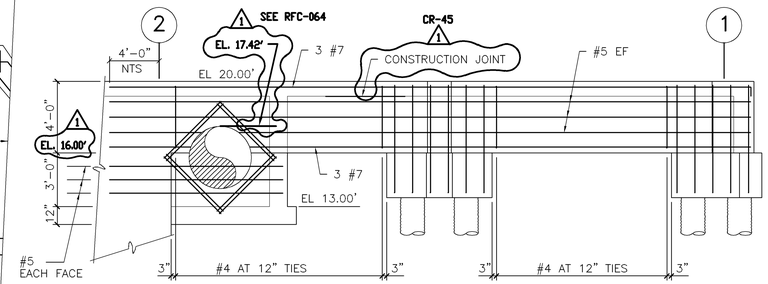

WALL REINFORCING NOT SHOWN FOR CLARITY

GRADE BEAM GB3
1/4"=1'-0"

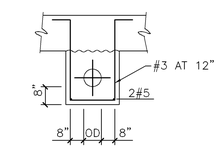

TYPICAL PIPE ENCASEMENT

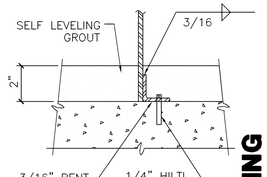

SECTION 1 B8S-6
3/8"=1'-0"

SECTION 2 B8S-6
3"=1'-0"

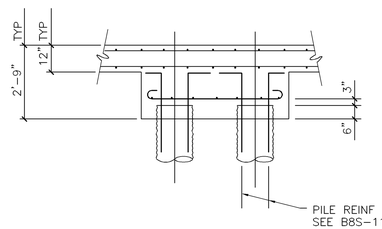

TYP PILE CAP SECTION
3/8"=1'-0"

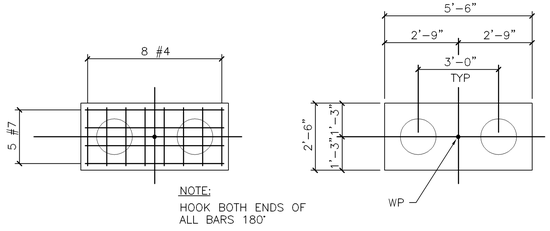

TWO-PILE CAP
3/8"=1'-0"

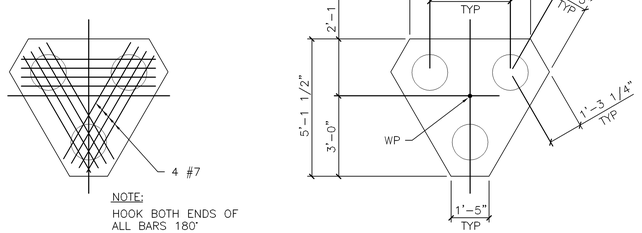

THREE-PILE CAP
3/8"=1'-0"

NOTE:
STANDARD DETAILS SHOWN ON DDS-2, DDS-3, AND DDS-4 APPLY TO ALL SIMILAR SITUATIONS ON THE PROJECT, EXCEPT WHERE A DIFFERENT DETAIL IS SHOWN.

RECORD DRAWING

NO.	DATE	DRWN	CHK'D	DESCRIPTION
1	9/97	FXP	ASG	RECORD DRAWING

REVISIONS

DESIGNED BY:
DRAWN BY:
CHECKED BY/DATE:
APPRV'D BY/DATE:

CAMP DRESSER & McKEE
engineers, scientists, economists, planners, & management consultants

THIS DRAWING HAS BEEN REVISED BY HAZEN AND SAWYER, P.C. TO REFLECT MODIFICATIONS MADE DURING CONSTRUCTION

CDM

ARLINGTON COUNTY, VIRGINIA
WATER POLLUTION CONTROL PLANT
UPGRADE AND EXPANSION- PHASE IB

PRELIMINARY TREATMENT BUILDING-STRUCTURAL-
ENLARGED PLAN AT EL 13.00' 1 OF 2

SCALE NOTE
SCALE BAR SHOWN BELOW IS ONE INCH LONG ON A FULL SIZE DRAWING. WHEN SCALING DRAWINGS, MEASURE BAR TO DETERMINE IF SCALES SHOWN WILL REQUIRE ADJUSTING.
ONE INCH

CONTRACT NO.	90-02-WPC
YEAR	1991
LOCATION CODE	B8
SPECIALTY CODE	S
PROJECT NO.	5002-33
FILE NAME	B8S-06.DWG
DRAWING NO.	B8S-6
SHEET NO.	196

STI structural technologies inc.
CONSULTING ENGINEERS
Wekiva Business Center
Suite 120, 1428 East Semoran Blvd., Apopka, Florida 32703
(407) 889-9660

DRAWN BY : KM
CHECKED BY : REH
APPROVED BY : BE
DATE : OCT 1990
JOB NO: 90-111

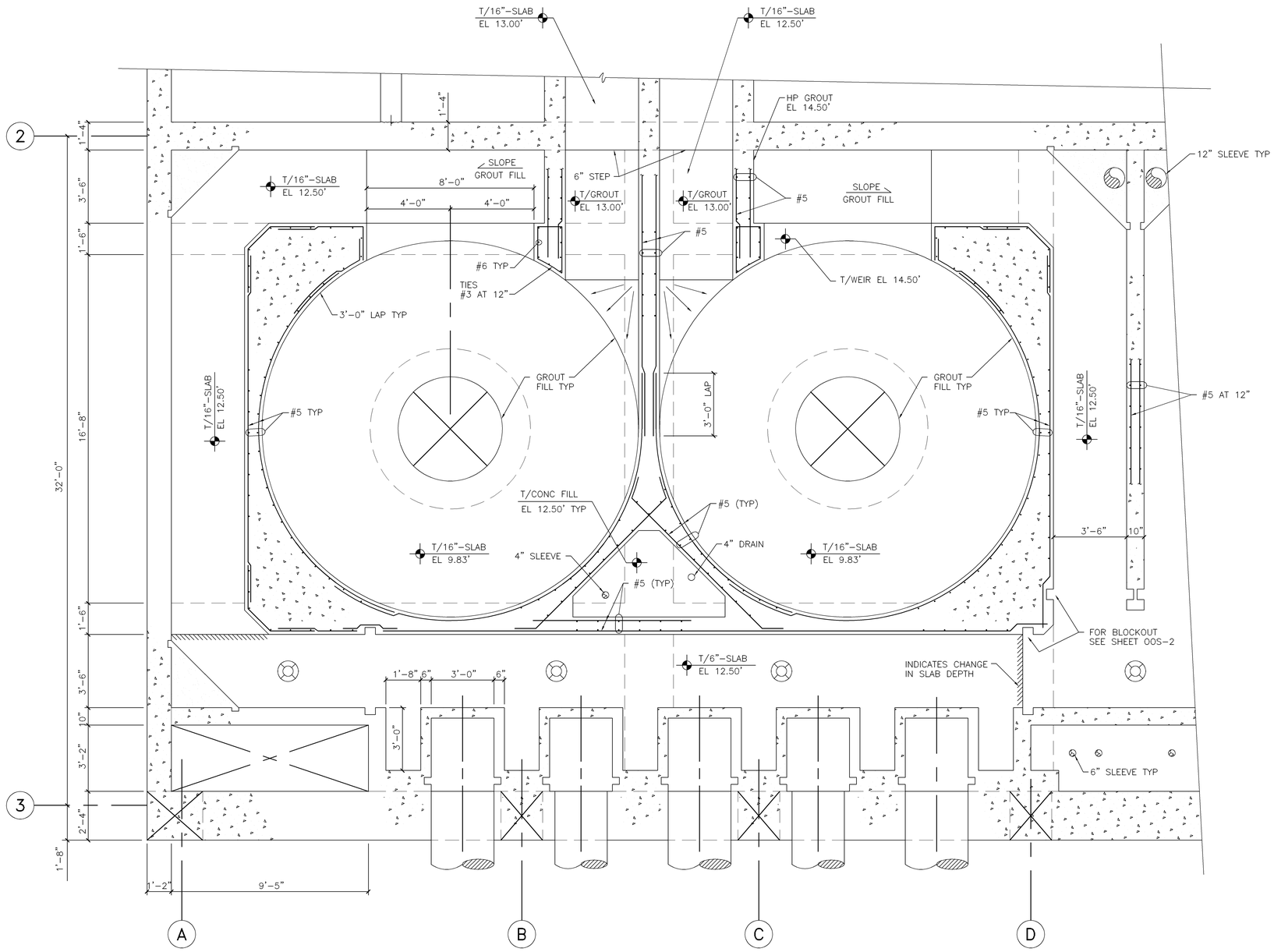

ENLARGED PLAN AT EL 13.00'

3/8"=1'–0"

NOTE:

STANDARD DETAILS SHOWN ON 00S-2, 00S-3, AND 00S-4 APPLY TO ALL SIMILAR SITUATIONS ON THE PROJECT, EXCEPT WHERE A DIFFERENT DETAIL IS SHOWN.

RECORD DRAWING

NO.	DATE	DRWN	CHK'D	DESCRIPTION
1	9/97	FXP	ASG	RECORD DRAWING

REVISIONS

DESIGNED BY:
DRAWN BY:
CHECKED BY/DATE:
APPRV'D BY/DATE:

CAMP DRESSER & McKEE

THIS DRAWING HAS BEEN REVISED BY HAZEN AND SAWYER, P.C. TO REFLECT MODIFICATIONS MADE DURING CONSTRUCTION

environmental engineers, scientists, planners, & management consultants CDM

ARLINGTON COUNTY, VIRGINIA
WATER POLLUTION CONTROL PLANT
UPGRADE AND EXPANSION- PHASE IB

PRELIMINARY TREATMENT BUILDING-STRUCTURAL-
ENLARGED PLAN AT EL 13.00' 2 OF 2

SCALE NOTE

SCALE BAR SHOWN BELOW IS ONE INCH LONG ON A FULL SIZE DRAWING. WHEN SCALING DRAWINGS, MEASURE BAR TO DETERMINE IF SCALES SHOWN WILL REQUIRE ADJUSTING.

ONE INCH

CONTRACT NO. 90–02–WPC
YEAR 1991
LOCATION CODE B8
SPECIALTY CODE S
PROJECT NO. 5002–33
FILE NAME B8S–07.DWG
DRAWING NO. B8S–7
SHEET NO. 197

structural technologies inc.
CONSULTING ENGINEERS
Wekiva Business Center
Suite 120, 1428 East Semoran Blvd., Apopka, Florida 32703
(407) 889–9660

DRAWN BY : KM
CHECKED BY : REH
APPROVED BY : BE
DATE : OCT 1990
JOB NO: 90–111

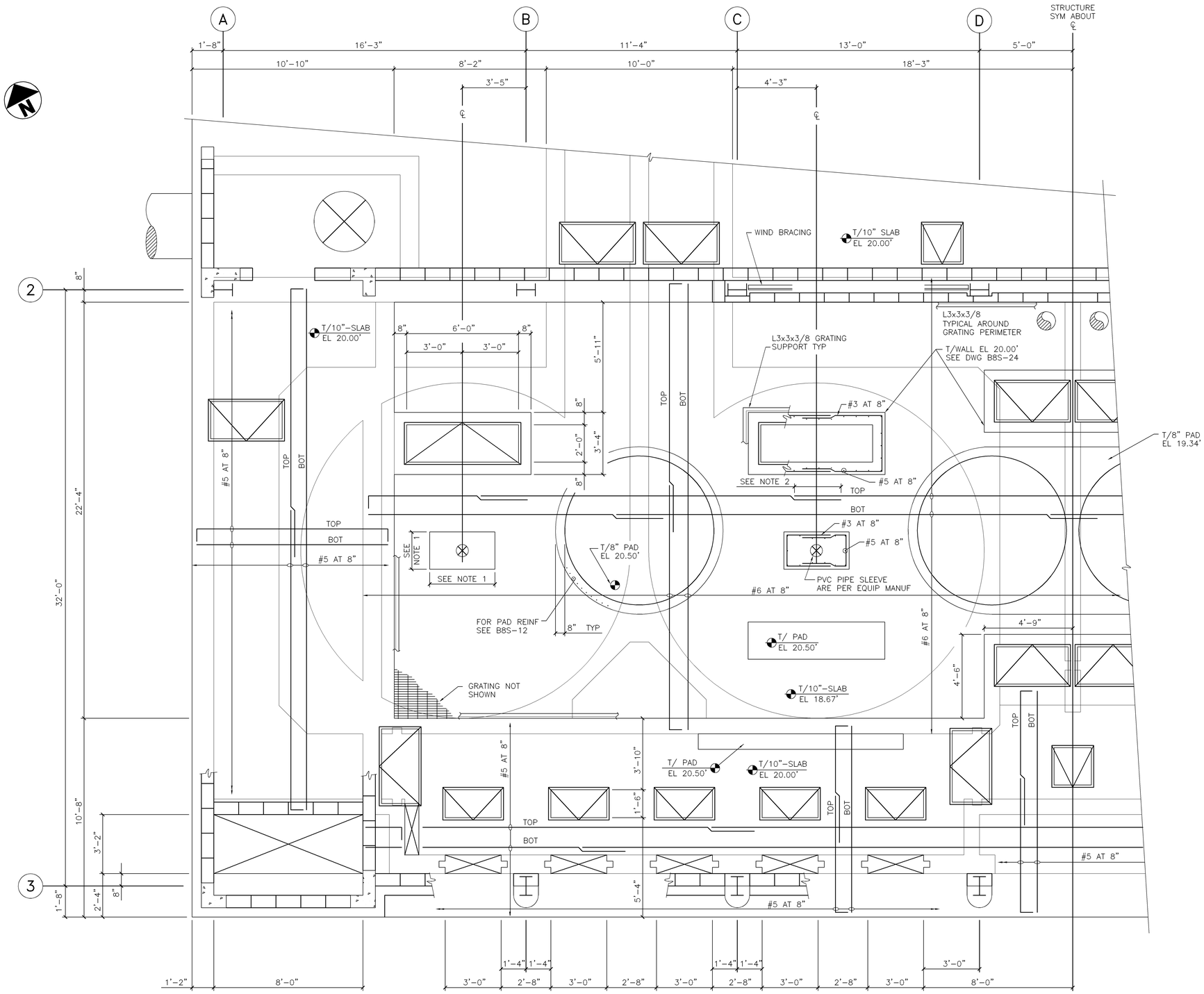

ENLARGED PLAN AT EL. 20.00'

3/8"=1'-0"

NOTES:

1. DIMENSION PER EQUIPMENT MANUFACTURER
2. SLAB REINF LAPS: #5 BARS 2'-6"
   #6 BARS 3'-0"

NOTE:

STANDARD DETAILS SHOWN ON DDS-2, DDS-3, AND DDS-4 APPLY TO ALL SIMILAR SITUATIONS ON THE PROJECT, EXCEPT WHERE A DIFFERENT DETAIL IS SHOWN.

RECORD DRAWING

NO.	DATE	DRWN	CHK'D	DESCRIPTION
1	9/97	FXP	ASG	RECORD DRAWING

REVISIONS

DESIGNED BY:

DRAWN BY:

CHECKED BY/DATE:

APPRV'D BY/DATE:

CAMP DRESSER & McKEE

environmental engineers, scientists, planners, & management consultants

CDM

THIS DRAWING HAS BEEN REVISED BY HAZEN AND SAWYER, P.C. TO REFLECT MODIFICATIONS MADE DURING CONSTRUCTION

ARLINGTON COUNTY, VIRGINIA
WATER POLLUTION CONTROL PLANT
UPGRADE AND EXPANSION- PHASE IB

PRELIMINARY TREATMENT BUILDING
ENLARGED PLAN AT ELEVATION 20.00' 1 OF 2

SCALE NOTE

SCALE BAR SHOWN BELOW IS ONE INCH LONG ON A FULL SIZE DRAWING. WHEN SCALING DRAWINGS, MEASURE BAR TO DETERMINE IF SCALES SHOWN WILL REQUIRE ADJUSTING.

ONE INCH

CONTRACT NO. 90-02-WPC

YEAR 1991

LOCATION CODE	SPECIALTY CODE
B8	S

PROJECT NO. 5002-33

FILE NAME B8S-08.DWG

DRAWING NO. B8S-8

SHEET NO. 198

STI structural technologies inc.

CONSULTING ENGINEERS

Wekiva Business Center
Suite 120, 1428 East Semoran Blvd., Apopka, Florida 32703
(407) 889-9660

DRAWN BY : BE
CHECKED BY : REH
APPROVED BY : BE
DATE : SEPT 1990
JOB NO : 90-111

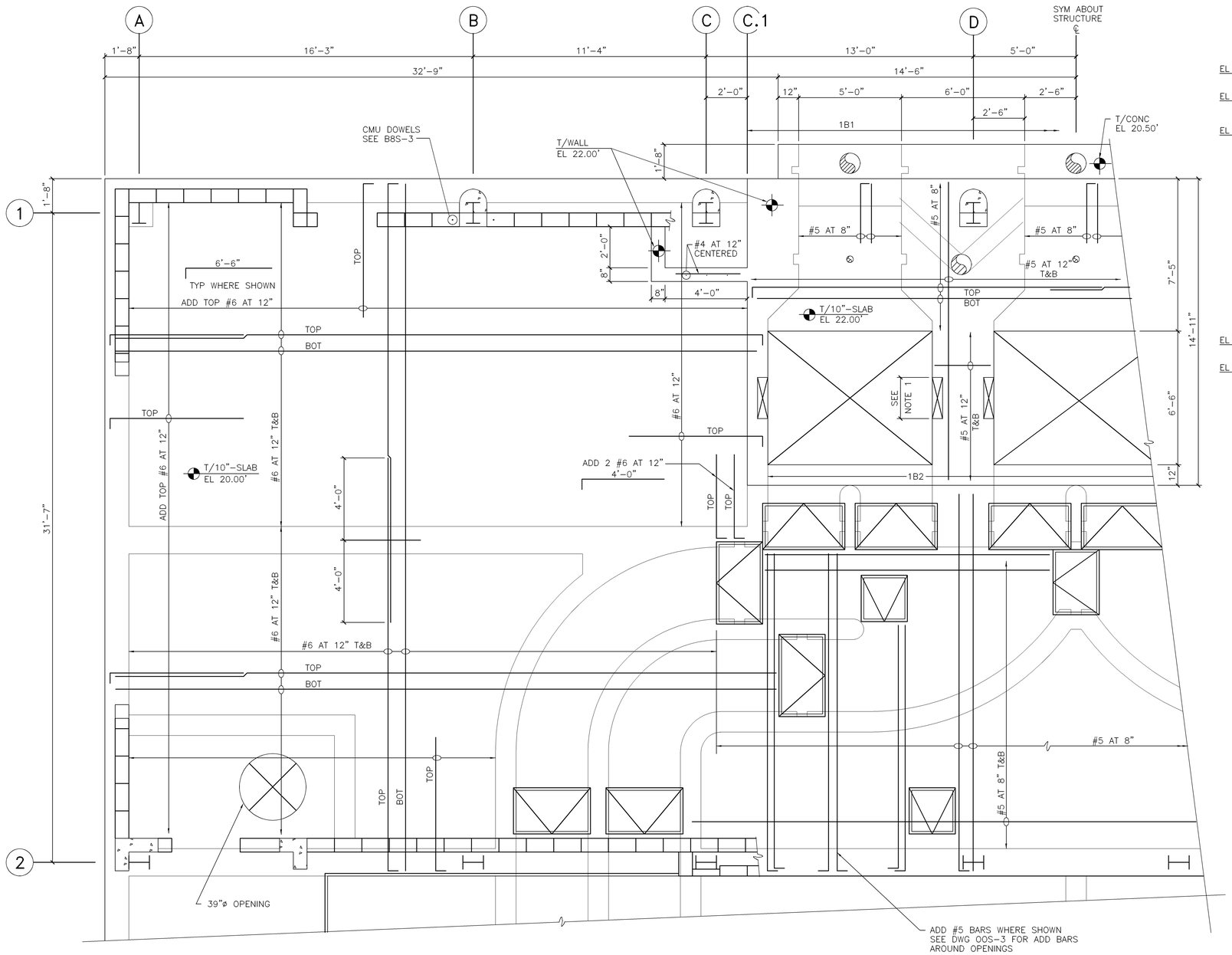

ENLARGED PLAN AT EL 20.00'

3/8"=1'-0"

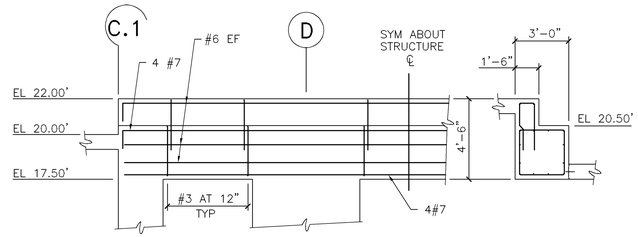

BEAM – 1B1

1/4"=1'-0"

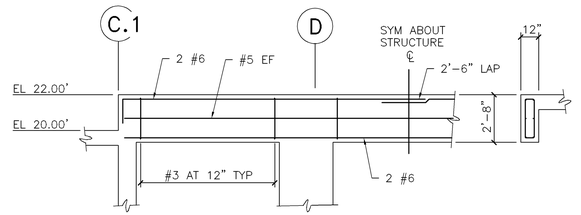

BEAM – 1B2

1/4"=1'-0"

NOTES:

1. BAR SCREEN SUPPORT POCKET PER MANUFACTURER.

NOTE:

STANDARD DETAILS SHOWN ON 00S-2, 00S-3, AND 00S-4 APPLY TO ALL SIMILAR SITUATIONS ON THE PROJECT, EXCEPT WHERE A DIFFERENT DETAIL IS SHOWN.

RECORD DRAWING

NO.	DATE	DRWN	CHK'D	DESCRIPTION
1	9/97	FXP	ASG	RECORD DRAWING

REVISIONS

DESIGNED BY:

DRAWN BY:

CHECKED BY/DATE:

APPRV'D BY/DATE:

CAMP DRESSER & McKEE

THIS DRAWING HAS BEEN REVISED BY HAZEN AND SAWYER, P.C. TO REFLECT MODIFICATIONS MADE DURING CONSTRUCTION

environmental engineers, scientists, planners, & management consultants CDM

ARLINGTON COUNTY, VIRGINIA
WATER POLLUTION CONTROL PLANT
UPGRADE AND EXPANSION- PHASE IB

PRELIMINARY TREATMENT BUILDING-STRUCTURAL-
ENLARGED PLAN AT EL 20.00' 2 OF 2

SCALE NOTE

SCALE BAR SHOWN BELOW IS ONE INCH LONG ON A FULL SIZE DRAWING. WHEN SCALING DRAWINGS, MEASURE BAR TO DETERMINE IF SCALES SHOWN WILL REQUIRE ADJUSTING.

ONE INCH

CONTRACT NO.
90-02-WPC

YEAR 1991

LOCATION CODE	SPECIALTY CODE
B8	S

PROJECT NO.
5002-33

FILE NAME
B8S-09.DWG

DRAWING NO.
B8S-9

SHEET NO. 199

structural technologies inc.
CONSULTING ENGINEERS
Wekiva Business Center
Suite 120, 1428 East Semoran Blvd., Apopka, Florida 32703
(407) 889-9660

DRAWN BY : BE
CHECKED BY : REH
APPROVED BY : BE
DATE : OCT 1990
JOB NO: 90-111

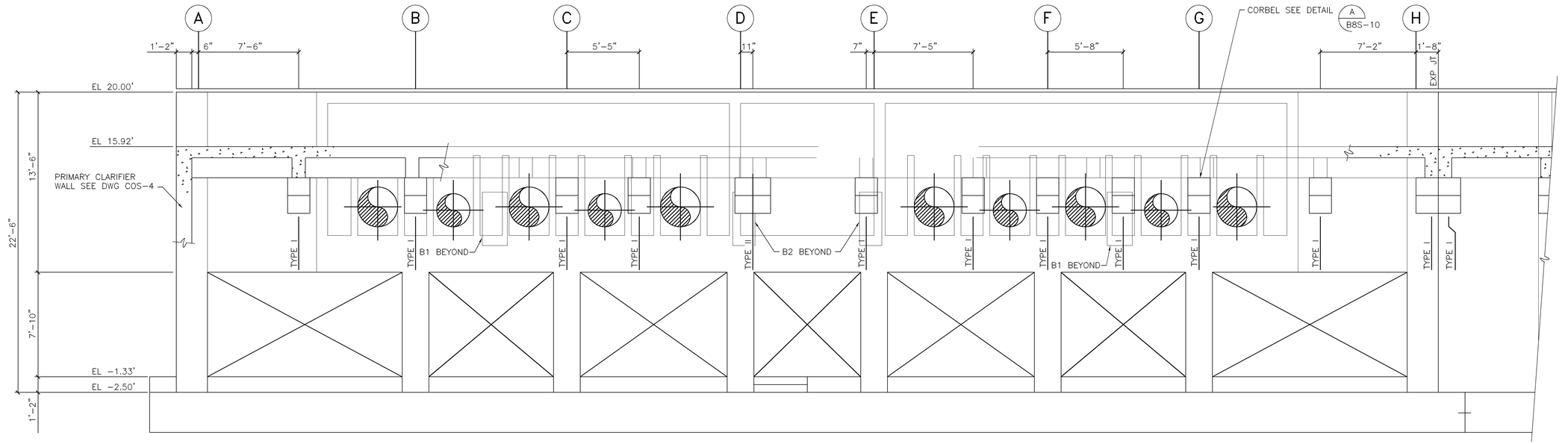

SOUTH ELEVATION
1/4"=1'-0"

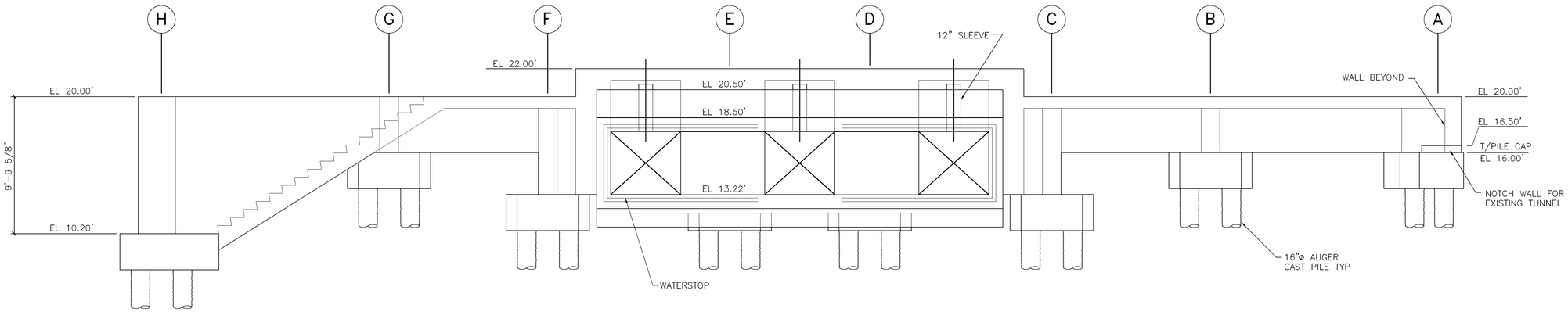

NORTH ELEVATION
1/4"=1'-0"

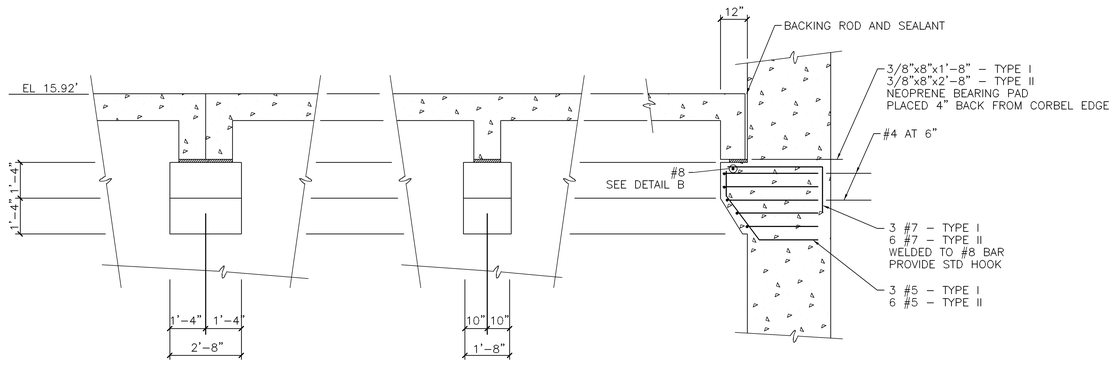

DETAIL A
3/8"=1'-0" B8S-10

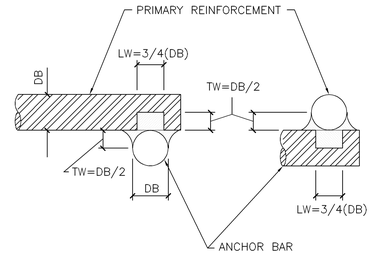

DETAIL B
NTS B8S-10

NOTE:
STANDARD DETAILS SHOWN ON DDS-2, DDS-3, AND DDS-4 APPLY TO ALL SIMILAR SITUATIONS ON THE PROJECT, EXCEPT WHERE A DIFFERENT DETAIL IS SHOWN.

RECORD DRAWING

CAMP DRESSER & McKEE
environmental engineers, scientists, planners, & management consultants
THIS DRAWING HAS BEEN REVISED BY HAZEN AND SAWYER, P.C. TO REFLECT MODIFICATIONS MADE DURING CONSTRUCTION

NO.	DATE	DRWN	CHK'D	DESCRIPTION
1	9/97	FXP	ASG	RECORD DRAWING

REVISIONS

DESIGNED BY:
DRAWN BY:
CHECKED BY/DATE:
APPRV'D BY/DATE:

ARLINGTON COUNTY, VIRGINIA
WATER POLLUTION CONTROL PLANT
UPGRADE AND EXPANSION- PHASE IB

PRELIMINARY TREATMENT BUILDING-STRUCTURAL-
NORTH AND SOUTH ELEVATIONS

SCALE NOTE
SCALE BAR SHOWN BELOW IS ONE INCH LONG ON A FULL SIZE DRAWING. WHEN SCALING DRAWINGS, MEASURE BAR TO DETERMINE IF SCALES SHOWN WILL REQUIRE ADJUSTING.
ONE INCH

CONTRACT NO. 90-02-WDC
YEAR 1991
LOCATION CODE B8
SPECIALTY CODE S
PROJECT NO. 5002-33
FILE NAME B8S-10.DWG
DRAWING NO. B8S-10
SHEET NO. 200

structural technologies inc.
CONSULTING ENGINEERS
Wekiva Business Center
Suite 120, 1428 East Semoran Blvd., Apopka, Florida 32703
(407) 889-9660

DRAWN BY : RAH
CHECKED BY : REH
APPROVED BY : BE
DATE : OCT, 1990
JOB NO: 90-111

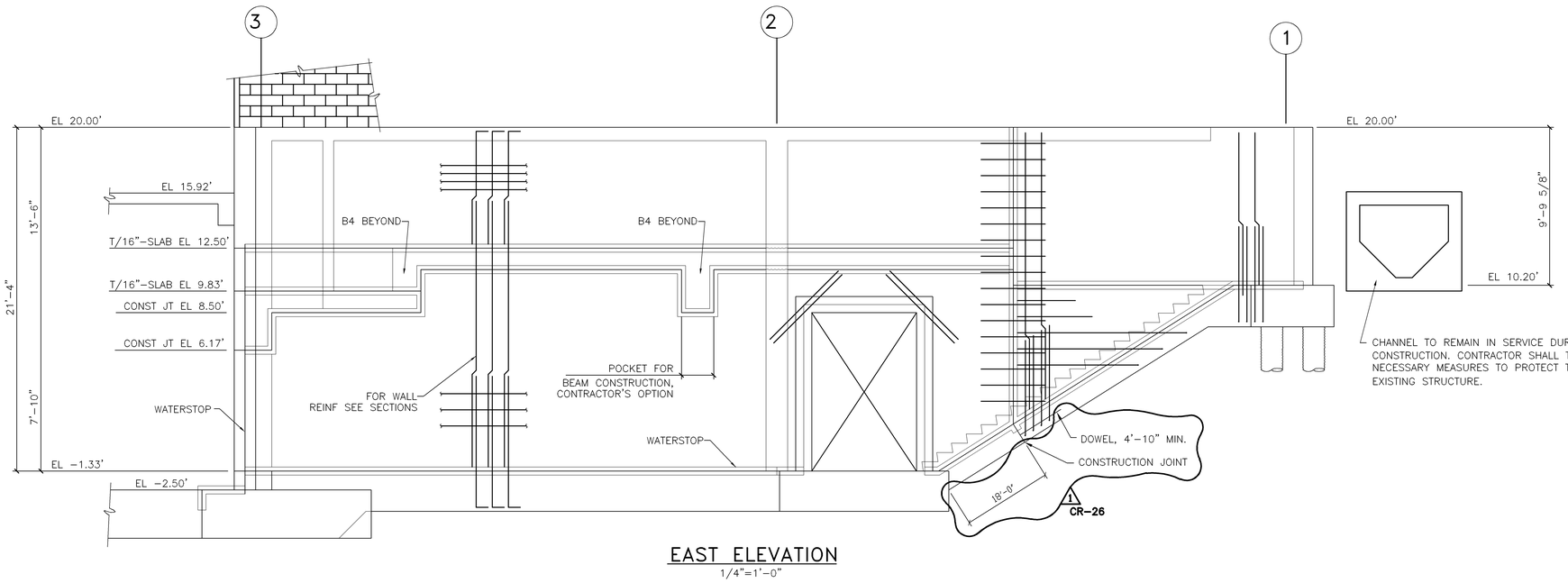

EAST ELEVATION
1/4"=1'-0"

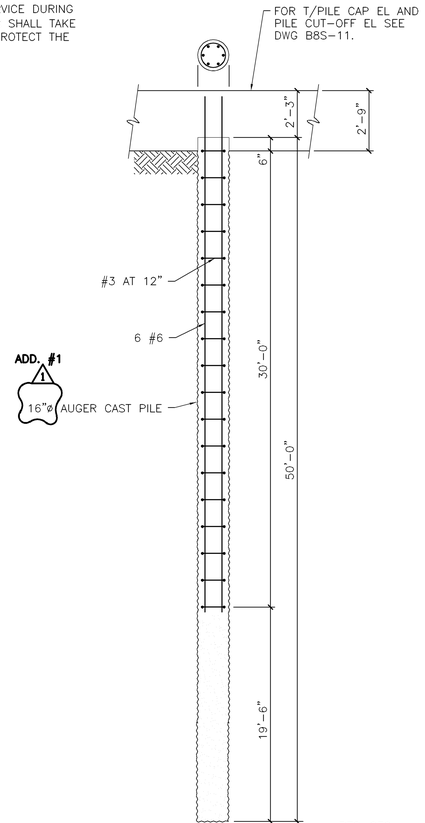

NOTE:
TYPICAL FOR THE PILES USED IN CONSTRUCTION OF THE PRELIMINARY TREATMENT BUILDING AND THE WEST INFLUENT CHANNEL.

DETAIL A
SCALE: NTS
B8S-1

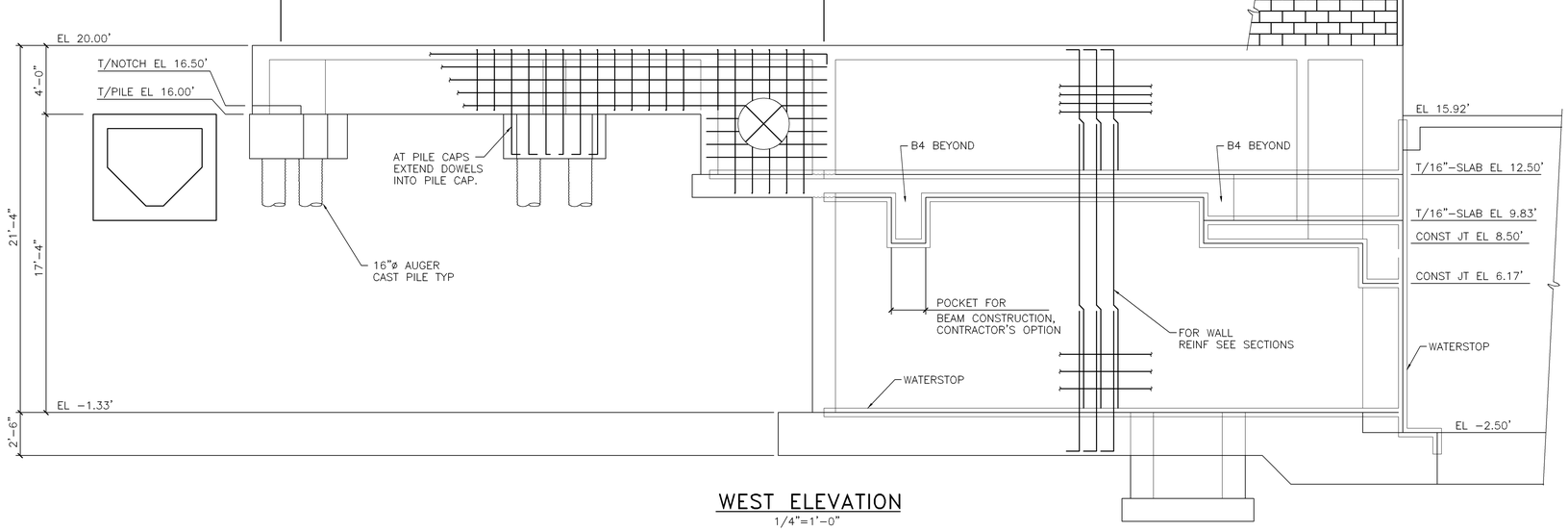

WEST ELEVATION
1/4"=1'-0"

NOTE:
STANDARD DETAILS SHOWN ON DDS-2, DDS-3, AND DDS-4, APPLY TO ALL SIMILAR SITUATIONS ON THE PROJECT, EXCEPT WHERE A DIFFERENT DETAIL IS SHOWN.

RECORD DRAWING

NO.	DATE	DRWN	CHK'D	DESCRIPTION
1	9/97	FXP	ASG	RECORD DRAWING

REVISIONS

DESIGNED BY:
DRAWN BY:
CHECKED BY/DATE:
APPRV'D BY/DATE:

CAMP DRESSER & McKEE
environmental engineers, scientists, planners, & management consultants
CDM

THIS DRAWING HAS BEEN REVISED BY HAZEN AND SAWYER, P.C. TO REFLECT MODIFICATIONS MADE DURING CONSTRUCTION

ARLINGTON COUNTY, VIRGINIA
WATER POLLUTION CONTROL PLANT
UPGRADE AND EXPANSION- PHASE IIB

EAST AND WEST ELEVATIONS

SCALE NOTE
SCALE BAR SHOWN BELOW IS ONE INCH LONG ON A FULL SIZE DRAWING. WHEN SCALING DRAWINGS, MEASURE BAR TO DETERMINE IF SCALES SHOWN WILL REQUIRE ADJUSTING.
ONE INCH

CONTRACT NO. 90-02-WPC
YEAR 1991
LOCATION CODE B8
SPECIALTY CODE S
PROJECT NO. 5002-33
FILE NAME B8S-11.DWG
DRAWING NO. B8S-11
SHEET NO. 201

structural technologies inc.
CONSULTING ENGINEERS
Wekiva Business Center
Suite 120, 1428 East Semoran Blvd., Apopka, Florida 32703
(407) 889-9660

DRAWN BY : RAH
CHECKED BY : REH
APPROVED BY : BE
DATE : OCT, 1990
JOB NO: 90-111

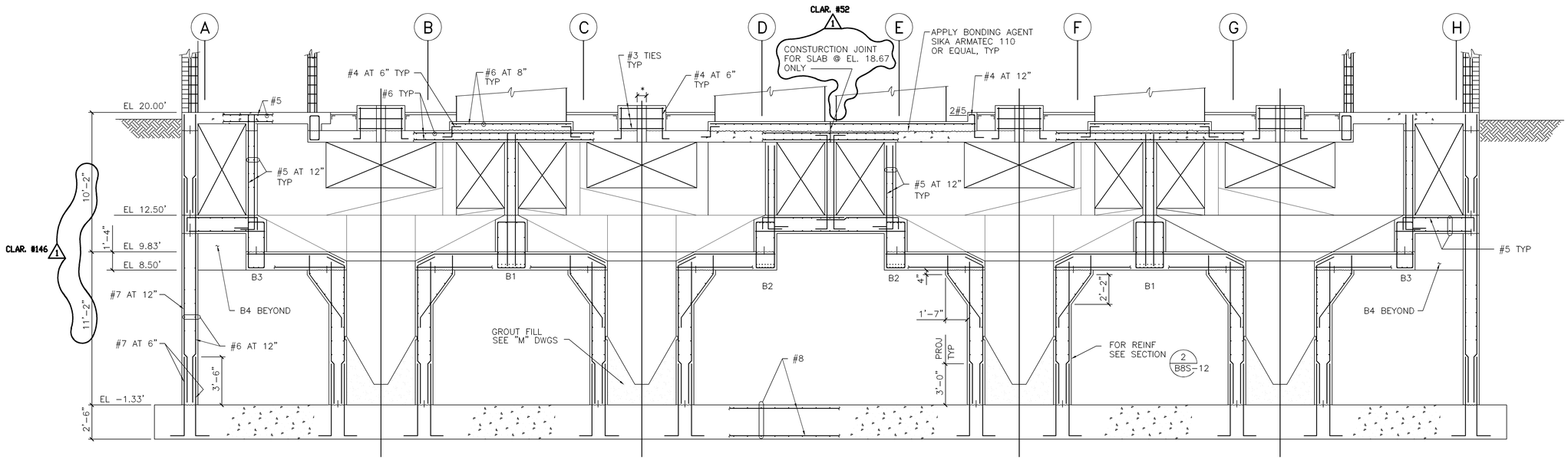

SECTION 1
1/4"=1'-0"
B8S-2

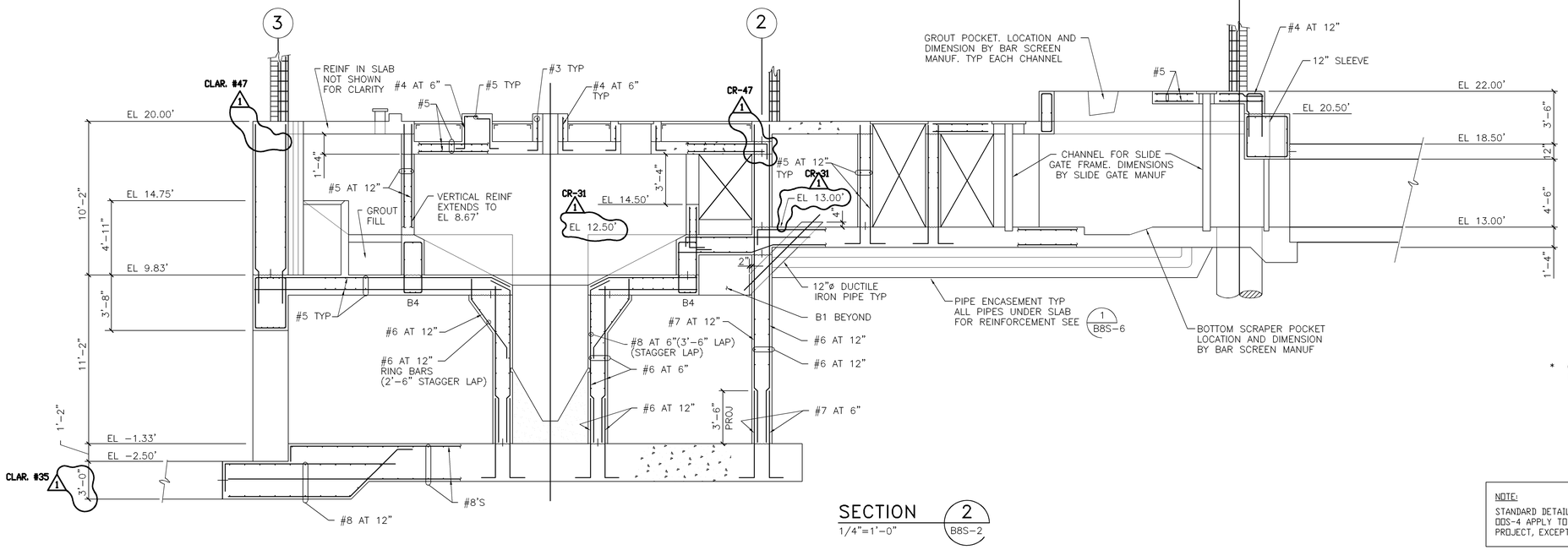

SECTION 2
1/4"=1'-0"
B8S-2

* OPENING SIZE PER EQUIPMENT MANUFACTURER'S REQUIREMENTS

NOTE:
STANDARD DETAILS SHOWN ON DDS-2, DDS-3, AND DDS-4 APPLY TO ALL SIMILAR SITUATIONS ON THE PROJECT, EXCEPT WHERE A DIFFERENT DETAIL IS SHOWN.

RECORD DRAWING

NO.	DATE	DRWN	CHK'D	DESCRIPTION
1	9/97	FXP	ASG	RECORD DRAWING

REVISIONS

DESIGNED BY:
DRAWN BY:
CHECKED BY/DATE:
APPRV'D BY/DATE:

CAMP DRESSER & McKEE

THIS DRAWING HAS BEEN REVISED BY HAZEN AND SAWYER, P.C. TO REFLECT MODIFICATIONS MADE DURING CONSTRUCTION

environmental engineers, scientists, planners, & management consultants CDM

ARLINGTON COUNTY, VIRGINIA
WATER POLLUTION CONTROL PLANT
UPGRADE AND EXPANSION- PHASE IB

PRELIMINARY TREATMENT BUILDING-STRUCTURAL-SECTIONS

SCALE NOTE
SCALE BAR SHOWN BELOW IS ONE INCH LONG ON A FULL SIZE DRAWING. WHEN SCALING DRAWINGS, MEASURE BAR TO DETERMINE IF SCALES SHOWN WILL REQUIRE ADJUSTING.
ONE INCH

CONTRACT NO. 90-02-WPC
YEAR 1991
LOCATION CODE B8
SPECIALTY CODE S
PROJECT NO. 5002-33
FILE NAME B8S-12.DWG
DRAWING NO. B8S-12
SHEET NO. 202

STI structural technologies inc.
CONSULTING ENGINEERS
Wekiva Business Center
Suite 120, 1428 East Semoran Blvd., Apopka, Florida 32703
(407) 889-8660

DRAWN BY : BE
CHECKED BY : REH
APPROVED BY : BE
DATE : OCT 1990
JOB NO: 90-111

FILE: B8S-12.DWG , SCALE: 1/4"=1'-0" , LATEST REVISIONS MADE ON: 08/15/91 AT 09:56

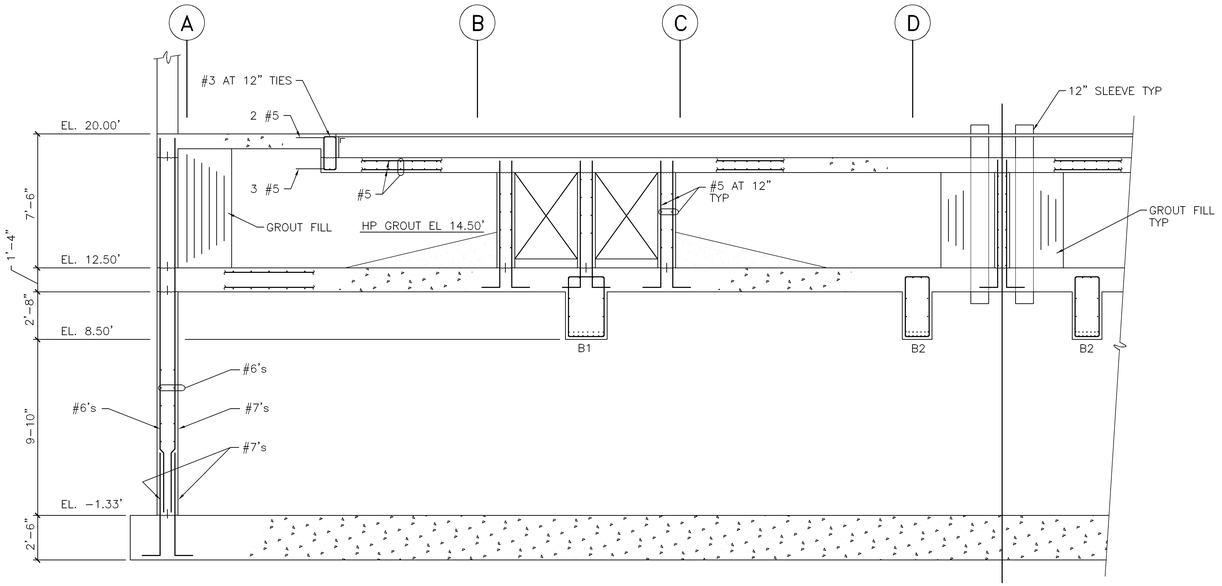

SECTION 3
1/4"=1'-0" B8S-2

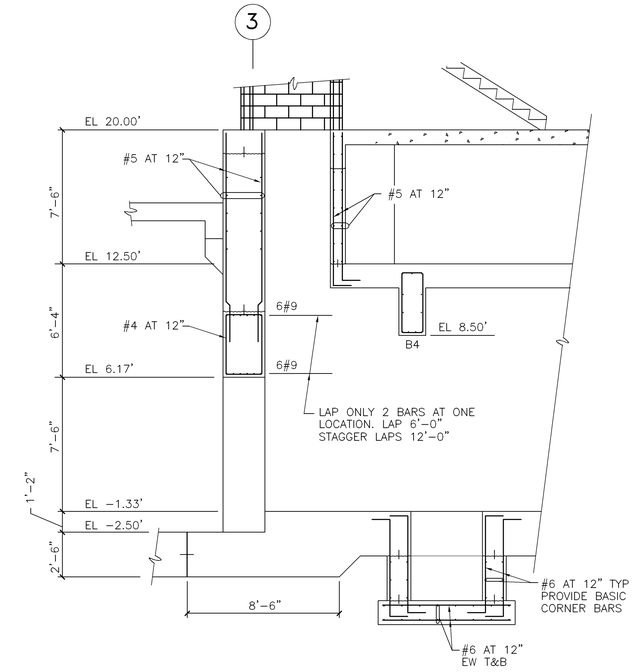

SECTION 5
1/4"=1'-0" B8S-2

SECTION 6
1/4"=1'-0" B8S-2

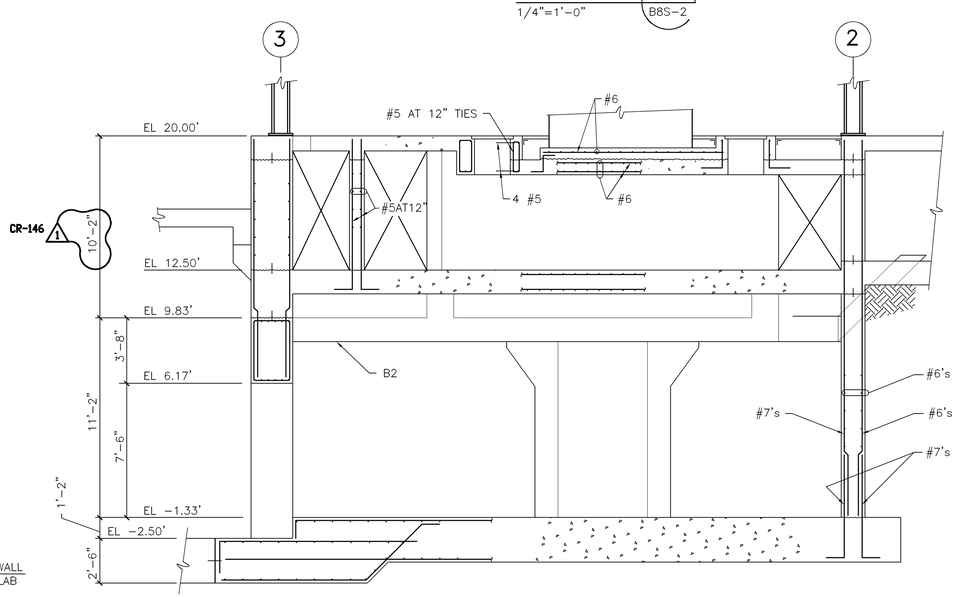

SECTION 4
1/4"=1'-0" B8S-2

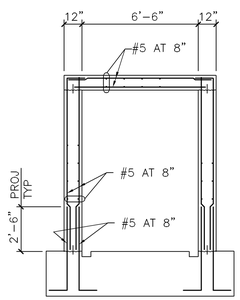

SECTION 1
1/4"=1'-0" B8S-1

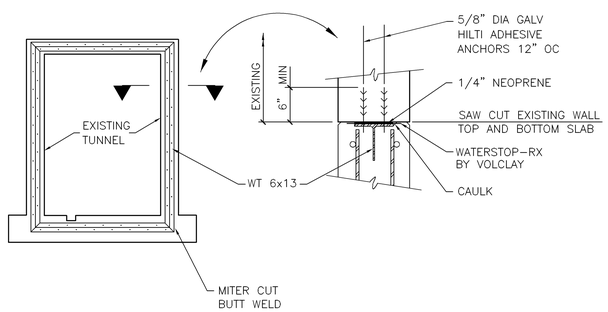

SECTION 2
1/4"=1'-0" B8S-1

NOTE:
STANDARD DETAILS SHOWN ON DOS-2, DOS-3, AND DOS-4 APPLY TO ALL SIMILAR SITUATIONS ON THE PROJECT, EXCEPT WHERE A DIFFERENT DETAIL IS SHOWN.

RECORD DRAWING

NO.	DATE	DRWN	CHK'D	DESCRIPTION
1	9/97	FXP	ASG	RECORD DRAWING

REVISIONS

DESIGNED BY:
DRAWN BY:
CHECKED BY/DATE:
APPRV'D BY/DATE:

CAMP DRESSER & McKEE
environmental engineers, scientists, planners, & management consultants

THIS DRAWING HAS BEEN REVISED BY HAZEN AND SAWYER, P.C. TO REFLECT MODIFICATIONS MADE DURING CONSTRUCTION

CDM

ARLINGTON COUNTY, VIRGINIA
WATER POLLUTION CONTROL PLANT
UPGRADE AND EXPANSION- PHASE IB

PRELIMINARY TREATMENT BUILDING-STRUCTURAL-SECTIONS

SCALE NOTE
SCALE BAR SHOWN BELOW IS ONE INCH LONG ON A FULL SIZE DRAWING. WHEN SCALING DRAWINGS, MEASURE BAR TO DETERMINE IF SCALES SHOWN WILL REQUIRE ADJUSTING.
1—ONE INCH—1

CONTRACT NO.	90-02-WPC
YEAR	1991
LOCATION CODE	B8
SPECIALTY CODE	S
PROJECT NO.	5002-33
FILE NAME	B8S-13
DRAWING NO.	B8S-13
SHEET NO.	203

STI structural technologies inc.
CONSULTING ENGINEERS
Wekiva Business Center
Suite 120, 1428 East Semoran Blvd., Apopka, Florida 32703
(407) 889-9660

DRAWN BY : BE
CHECKED BY : REH
APPROVED BY : BE
DATE : OCT 1990
JOB NO: 90-111

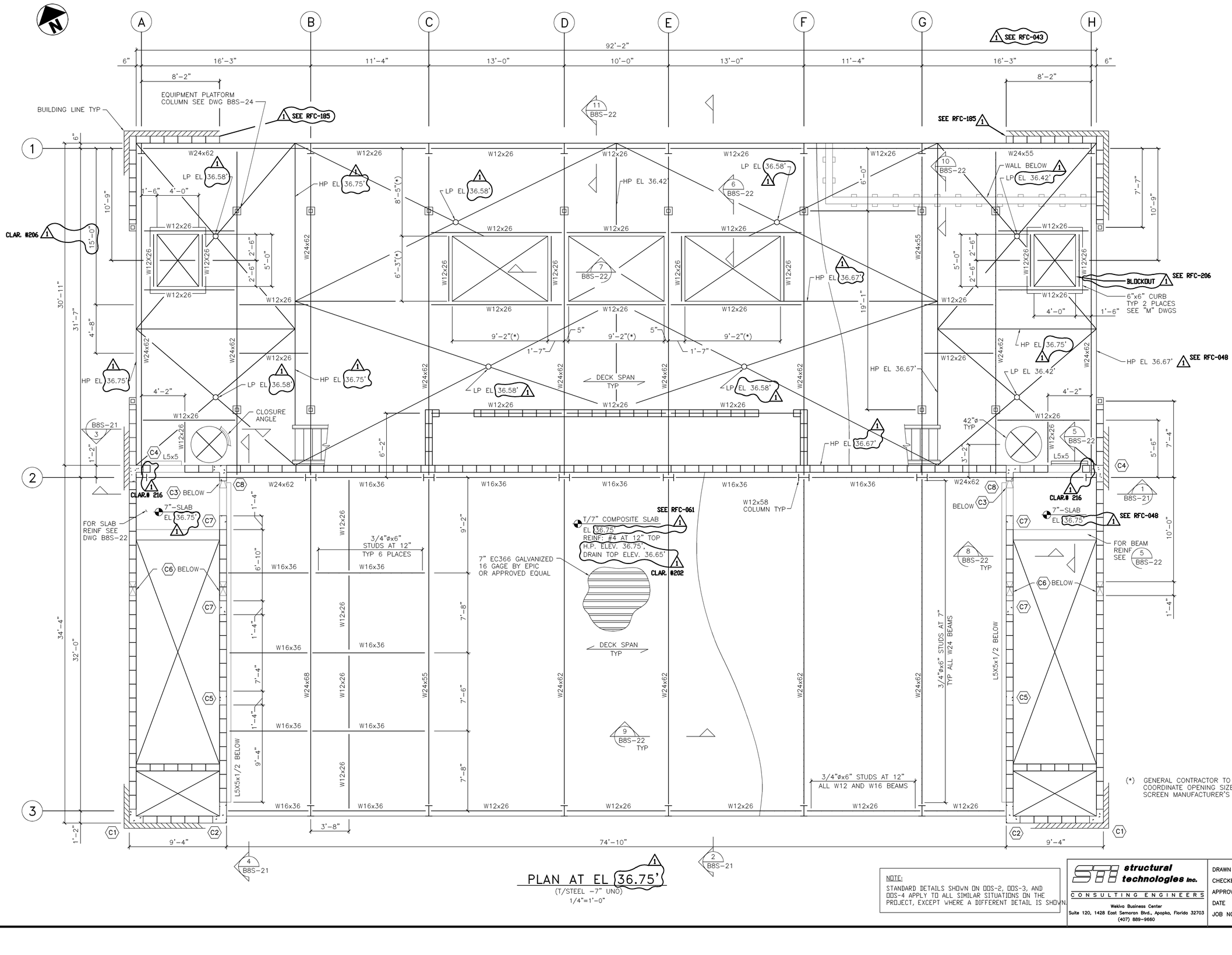

PLAN AT EL 36.75'
(T/STEEL -7" UNO)
1/4"=1'-0"

NOTE:
STANDARD DETAILS SHOWN ON DDS-2, DDS-3, AND DDS-4 APPLY TO ALL SIMILAR SITUATIONS ON THE PROJECT, EXCEPT WHERE A DIFFERENT DETAIL IS SHOWN.

NO.	DATE	DRWN	CHK'D	DESCRIPTION
1	9/97	FXP	ASG	RECORD DRAWING

REVISIONS

DESIGNED BY:
DRAWN BY:
CHECKED BY/DATE:
APPRV'D BY/DATE:

CAMP DRESSER & McKEE

THIS DRAWING HAS BEEN REVISED BY HAZEN AND SAWYER, P.C. TO REFLECT MODIFICATIONS MADE DURING CONSTRUCTION

environmental engineers, scientists, planners, & management consultants CDM

ARLINGTON COUNTY, VIRGINIA
WATER POLLUTION CONTROL PLANT
UPGRADE AND EXPANSION- PHASE IB

PRELIMINARY TREATMENT BUILDING-STRUCTURAL-
PLAN AT ELEVATION 38.67'

RECORD DRAWING

SCALE NOTE
SCALE BAR SHOWN BELOW IS ONE INCH LONG ON A FULL SIZE DRAWING. WHEN SCALING DRAWINGS, MEASURE BAR TO DETERMINE IF SCALES SHOWN WILL REQUIRE ADJUSTING.
—ONE INCH—

CONTRACT NO. 90-02-WPC
YEAR 1991
LOCATION CODE B8
SPECIALTY CODE S
PROJECT NO. 5002-33
FILE NAME B8S-16.DWG
DRAWING NO. B8S-16
SHEET NO. 204

STI structural technologies inc.
CONSULTING ENGINEERS
Wekiva Business Center
Suite 120, 1428 East Semoran Blvd., Apopka, Florida 32703
(407) 889-9660

DRAWN BY : BE
CHECKED BY : REH
APPROVED BY : BE
DATE : OCT 1990
JOB NO: 90-111

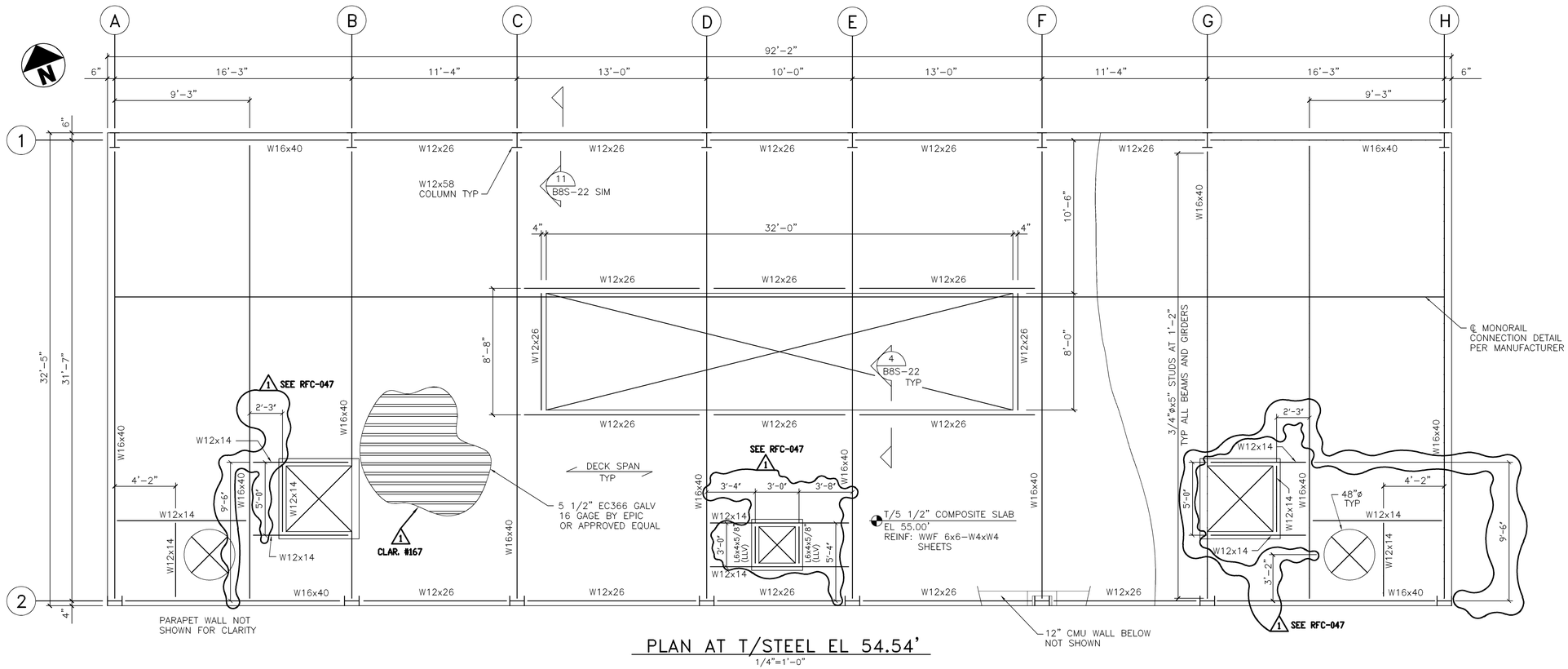

PLAN AT T/STEEL EL 54.54'

1/4"=1'-0"

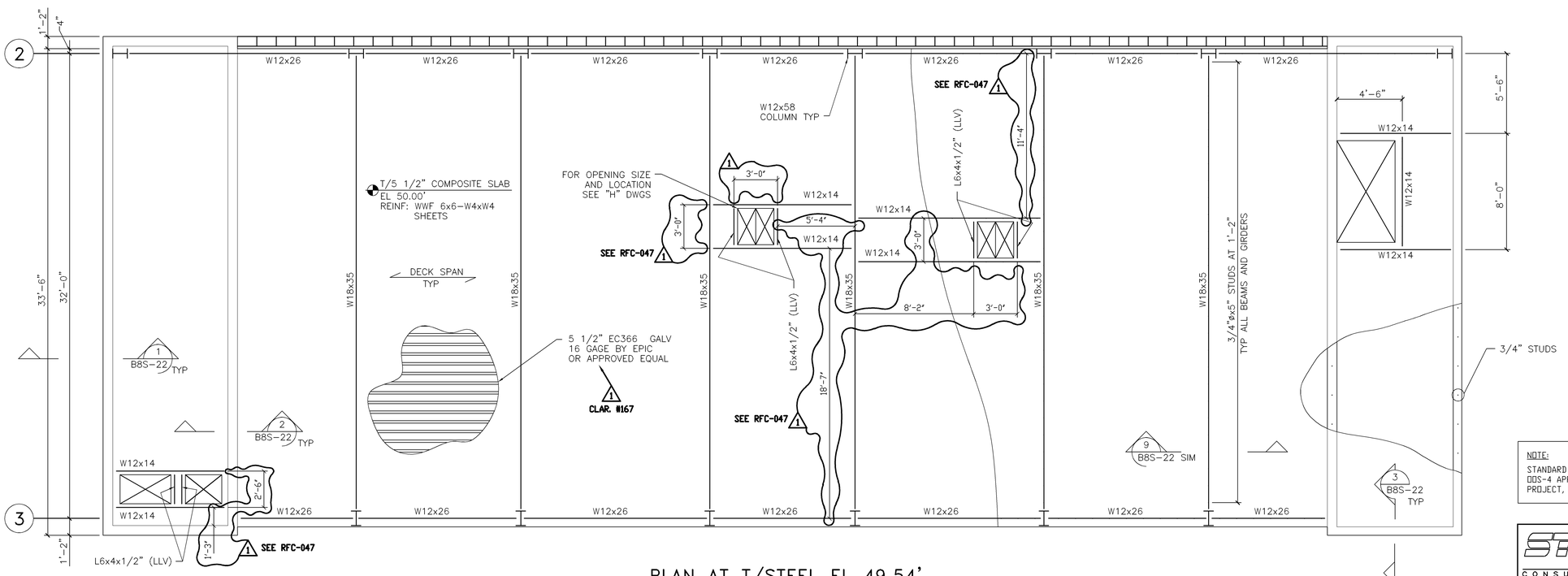

PLAN AT T/STEEL EL 49.54'

1/4"=1'-0"

NOTE:

STANDARD DETAILS SHOWN ON DDS-2, DDS-3, AND DDS-4 APPLY TO ALL SIMILAR SITUATIONS ON THE PROJECT, EXCEPT WHERE A DIFFERENT DETAIL IS SHOWN.

RECORD DRAWING

NO.	DATE	DRWN	CHK'D	DESCRIPTION
1	9/97	FXP	ASG	RECORD DRAWING

REVISIONS

DESIGNED BY:

DRAWN BY:

CHECKED BY/DATE:

APPRV'D BY/DATE:

CAMP DRESSER & McKEE

THIS DRAWING HAS BEEN REVISED BY HAZEN AND SAWYER, P.C. TO REFLECT MODIFICATIONS MADE DURING CONSTRUCTION

environmental engineers, scientists, planners, & management consultants CDM

ARLINGTON COUNTY, VIRGINIA
WATER POLLUTION CONTROL PLANT
UPGRADE AND EXPANSION- PHASE IIB

PRELIMINARY TREATMENT BUILDING-STRUCTURAL-ROOF PLANS

SCALE NOTE

SCALE BAR SHOWN BELOW IS ONE INCH LONG ON A FULL SIZE DRAWING. WHEN SCALING DRAWINGS, MEASURE BAR TO DETERMINE IF SCALES SHOWN WILL REQUIRE ADJUSTING.

ONE INCH

CONTRACT NO.	
92-02-WPC	
YEAR	1991
LOCATION CODE	SPECIALTY CODE
B8	S
PROJECT NO.	
5002-33	
FILE NAME	
B8S-17.DWG	
DRAWING NO.	
B8S-17	
SHEET NO.	205

STI structural technologies inc.

CONSULTING ENGINEERS

Wekiva Business Center
Suite 120, 1428 East Semoran Blvd., Apopka, Florida 32703
(407) 889-9660

DRAWN BY : RAH
CHECKED BY : REH
APPROVED BY : BE
DATE : OCT 1990
JOB NO: 90-111

FILE: D:\ARLING\B8S-17.DWG , SCALE: 1/4"=1'-0" , LATEST REVISIONS MADE ON: 10/15/91 AT 09:28

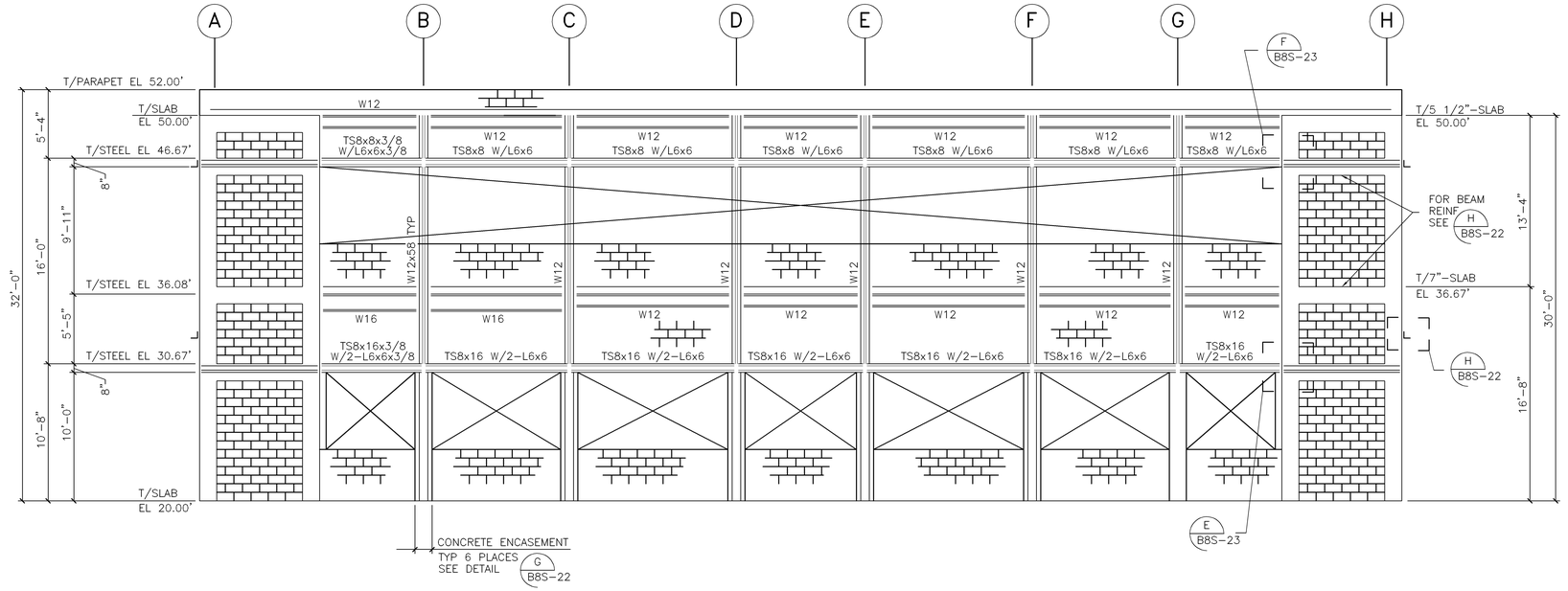

SOUTH BUILDING ELEVATION

3/16"=1'-0"

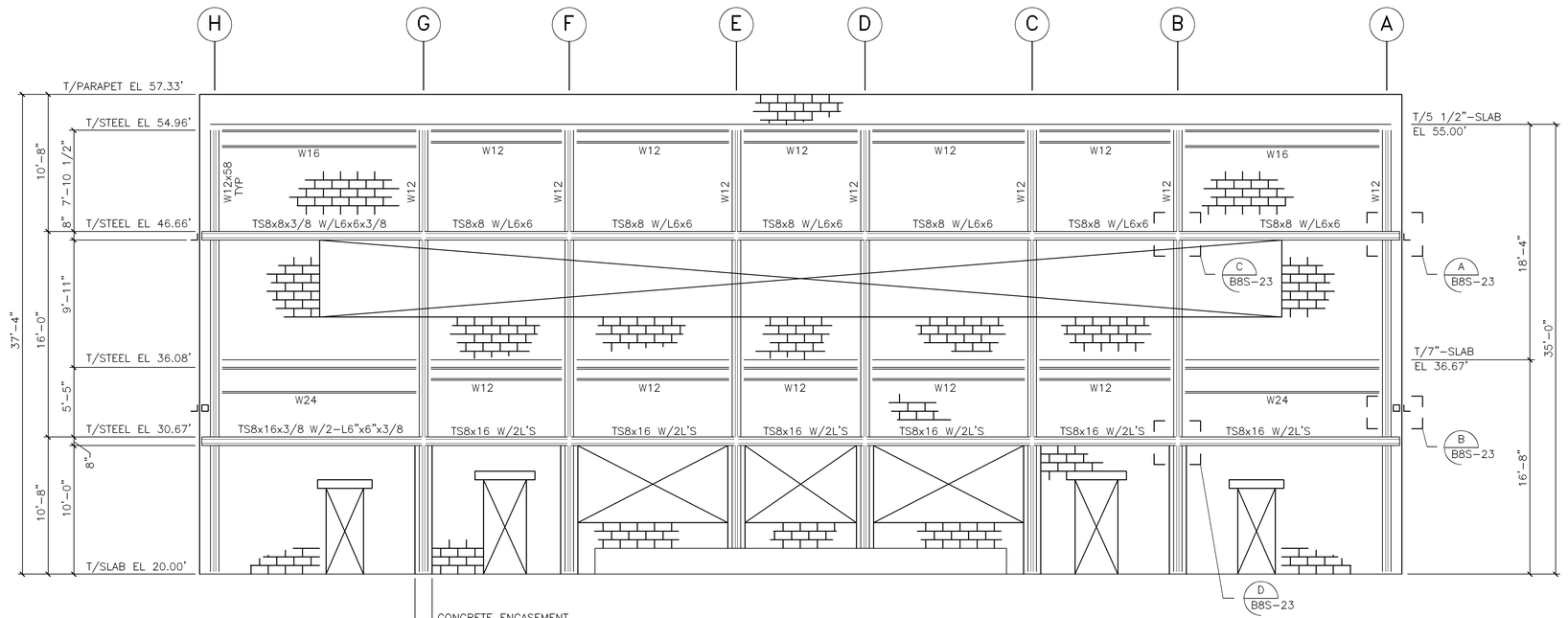

NORTH BUILDING ELEVATION

3/16"=1'-0"

NOTE:
STANDARD DETAILS SHOWN ON DDS-2, DDS-3, AND DDS-4 APPLY TO ALL SIMILAR SITUATIONS ON THE PROJECT, EXCEPT WHERE A DIFFERENT DETAIL IS SHOWN.

RECORD DRAWING

NO.	DATE	DRWN	CHK'D	DESCRIPTION
1	9/97	FXP	ASG	RECORD DRAWING

REVISIONS

DESIGNED BY:
DRAWN BY:
CHECKED BY/DATE:
APPRV'D BY/DATE:

CAMP DRESSER & McKEE
environmental engineers, scientists, planners, & management consultants
CDM

THIS DRAWING HAS BEEN REVISED BY HAZEN AND SAWYER, P.C. TO REFLECT MODIFICATIONS MADE DURING CONSTRUCTION

ARLINGTON COUNTY, VIRGINIA
WATER POLLUTION CONTROL PLANT
UPGRADE AND EXPANSION- PHASE IB

PRELIMINARY TREATMENT BUILDING-STRUCTURAL-
NORTH AND SOUTH BUILDING ELEVATIONS

SCALE NOTE
SCALE BAR SHOWN BELOW IS ONE INCH LONG ON A FULL SIZE DRAWING. WHEN SCALING DRAWINGS, MEASURE BAR TO DETERMINE IF SCALES SHOWN WILL REQUIRE ADJUSTING.
ONE INCH

CONTRACT NO. 90-02-WPC
YEAR 1991
LOCATION CODE B8
SPECIALTY CODE S
PROJECT NO. 5002-33
FILE NAME B8S-18.DWG
DRAWING NO. B8S-18
SHEET NO. 206

STI structural technologies inc.
CONSULTING ENGINEERS
Wekiva Business Center
Suite 120, 1428 East Semoran Blvd., Apopka, Florida 32703
(407) 889-9660

DRAWN BY : RAH
CHECKED BY : REH
APPROVED BY : BE
DATE : OCT 1990
JOB NO: 90-111

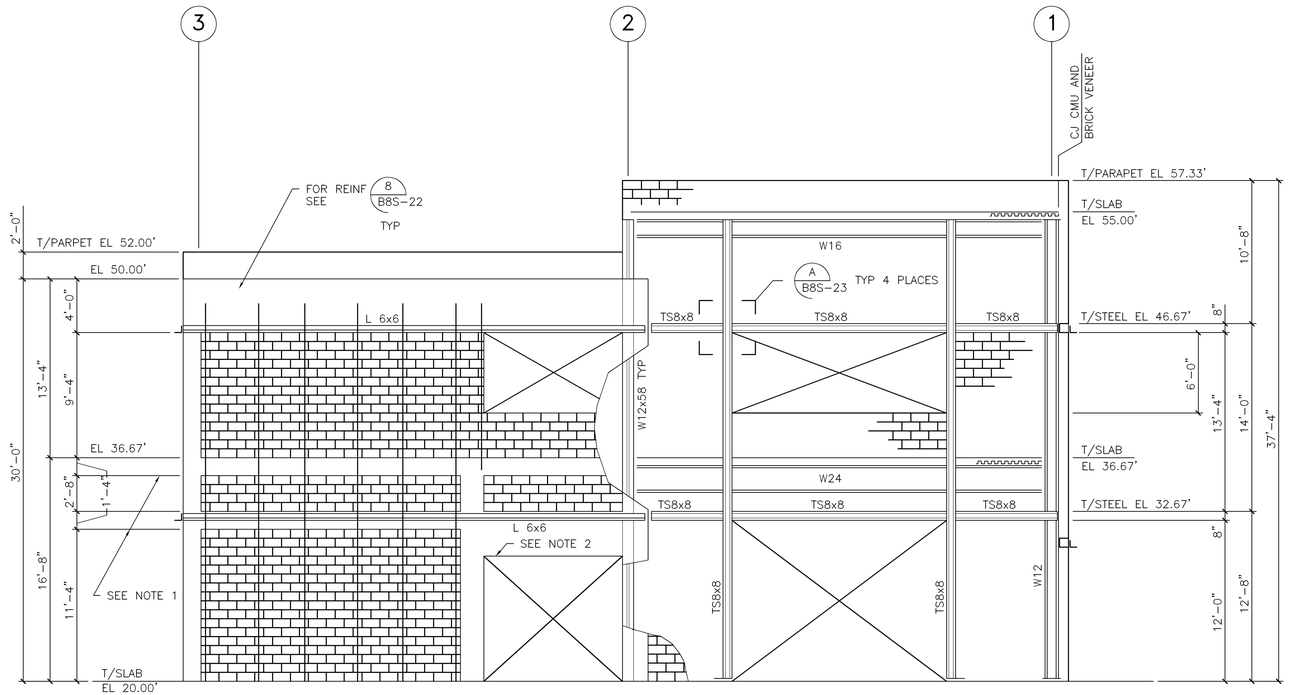

EAST BUILDING ELEVATION

3/16"=1'-0"

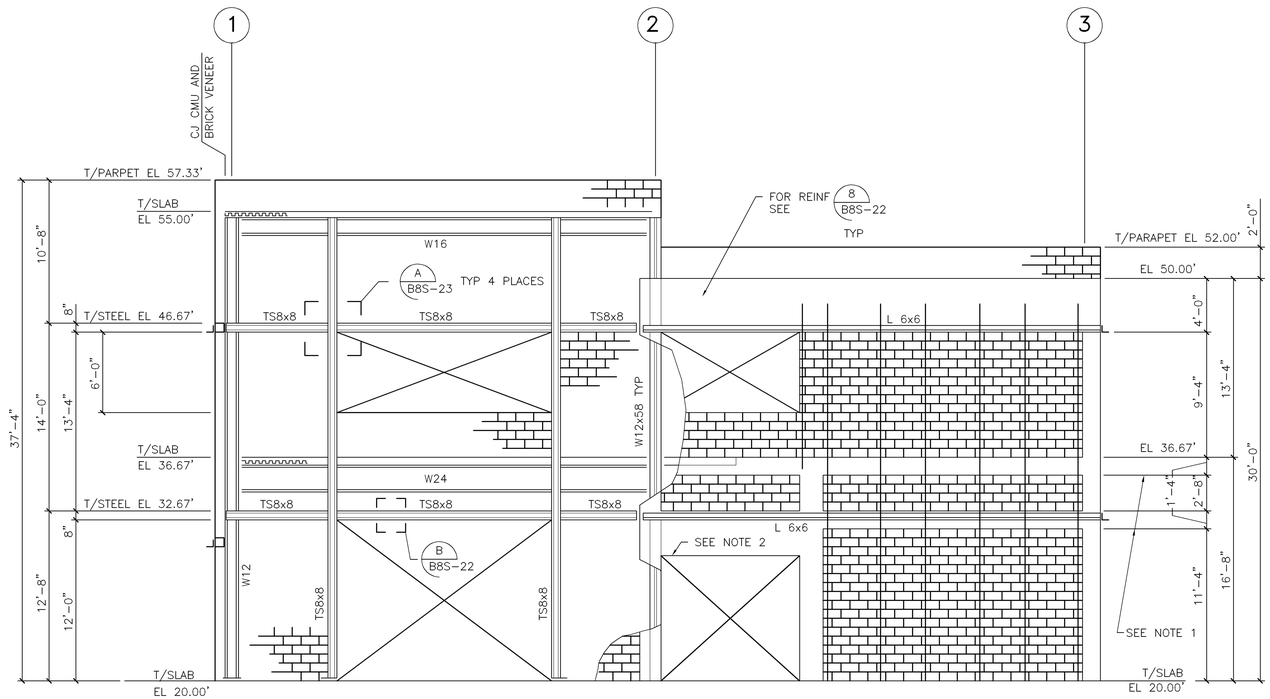

WEST BUILDING ELEVATION

3/16"=1'-0"

COLUMN SCHEDULE								
MARK	C1	C2	C3	C4	C5	C6	C7	C8
REINF	6 #6	8 #6	8#6	8 #6	4 #6	4 #6	4 #6	6 #6
TYPE	A	B	C	D	E	E	E	F
DOWELS	6 #6	8 #6	8 #6	8 #6	4 #6	4 #6	4 #6	6 #6
TIES	#3 AT 12"	#3 AT 12"	#3 AT 12"	#3 AT 12"	#3 AT 12"	#3 AT 12"	#3 AT 12"	#3 AT 12"

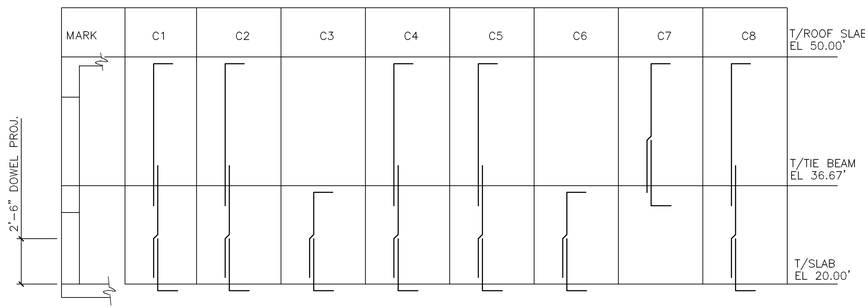

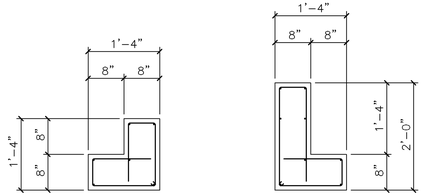

TYPE "A"

TYPE "B"

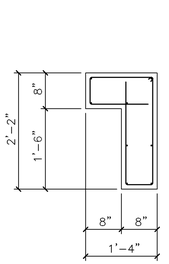

TYPE "C"

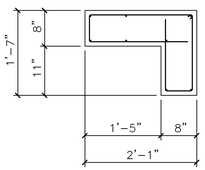

TYPE "D"

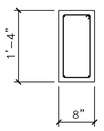

TYPE "E"

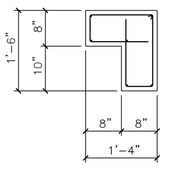

TYPE "F"

NOTES:

1. FOR BEAM REINF, SEE DETAIL H/B8S-22.
2. BEAM REINF SIM TO REINF SHOWN ON SECTION 8/B8S-22.

NOTE:
STANDARD DETAILS SHOWN ON DDS-2, DDS-3, AND DDS-4 APPLY TO ALL SIMILAR SITUATIONS ON THE PROJECT, EXCEPT WHERE A DIFFERENT DETAIL IS SHOWN.

RECORD DRAWING

REVISIONS					
NO.	DATE	DRWN	CHK'D	DESCRIPTION	
1	9/97	FXP	ASG	RECORD DRAWING	

DESIGNED BY:
DRAWN BY:
CHECKED BY/DATE:
APPRV'D BY/DATE:

CAMP DRESSER & McKEE
environmental engineers, scientists, planners, & management consultants
THIS DRAWING HAS BEEN REVISED BY BLAYLOCK AND SAWYER, P.C. TO REFLECT MODIFICATIONS MADE DURING CONSTRUCTION
CDM

ARLINGTON COUNTY, VIRGINIA
WATER POLLUTION CONTROL PLANT
UPGRADE AND EXPANSION- PHASE IB

PRELIMINARY TREATMENT BUILDING-STRUCTURAL-
EAST AND WEST BUILDING ELEVATIONS

SCALE NOTE
SCALE BAR SHOWN BELOW IS ONE INCH LONG ON A FULL SIZE DRAWING. WHEN SCALING DRAWINGS, MEASURE BAR TO DETERMINE IF SCALES SHOWN WILL REQUIRE ADJUSTING.
ONE INCH

CONTRACT NO. 90-02-WPC
YEAR 1991
LOCATION CODE B8
SPECIALTY CODE S
PROJECT NO. 5002-33
FILE NAME B8S-19.DWG
DRAWING NO. B8S-19
SHEET NO. 207

structural technologies inc.
CONSULTING ENGINEERS
Wekiva Business Center
Suite 120, 1428 East Semoran Blvd., Apopka, Florida 32703
(407) 889-9660

DRAWN BY : RAH
CHECKED BY : REH
APPROVED BY : BE
DATE : OCT 1990
JOB NO: 90-111

FILE: B8S-19.DWG , SCALE: 3/16"=1'-0" , LATEST REVISIONS MADE ON: 08/17/91 AT 09:31

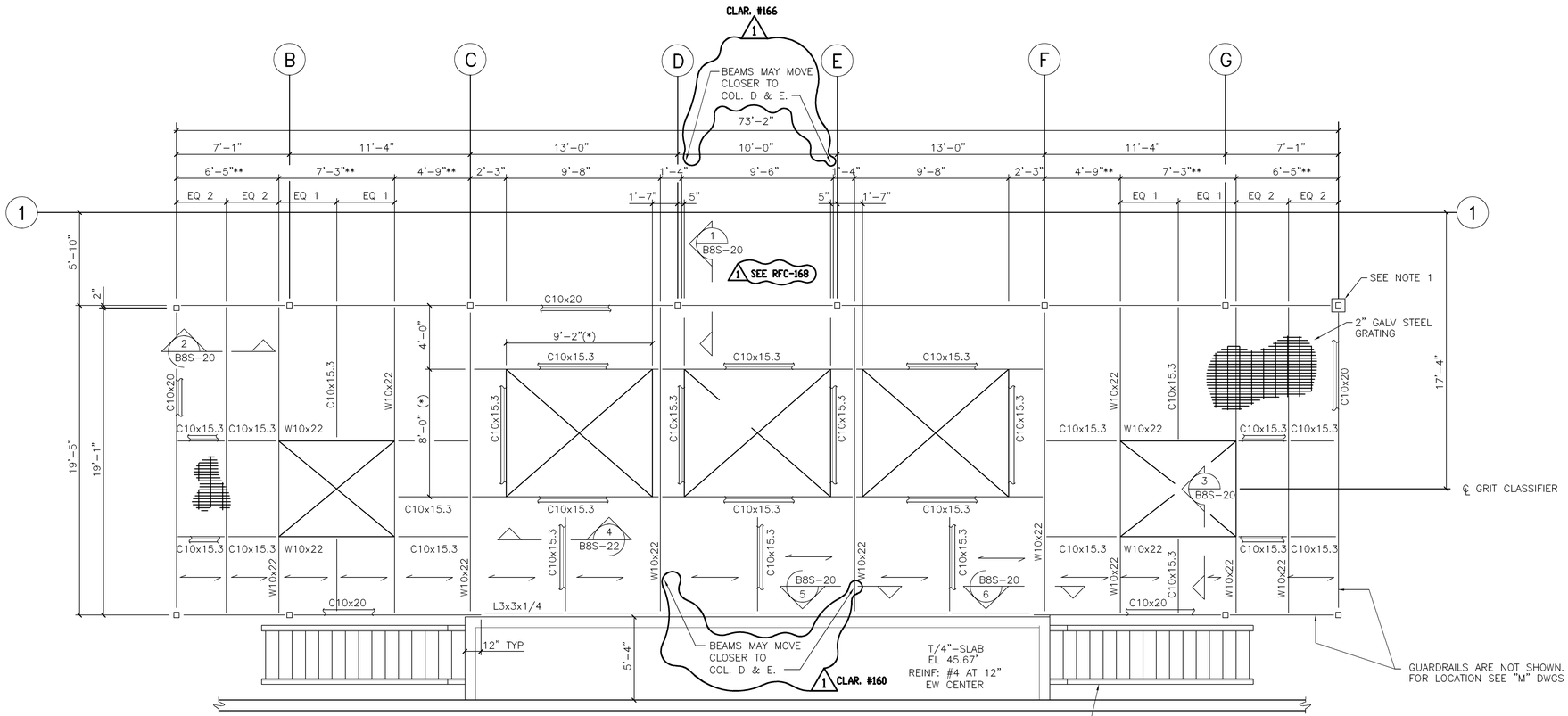

GRATING PLAN AT EL 45.67'

1/4"=1'-0"

(ALL METALS SHOWN GALV A36 STEEL)

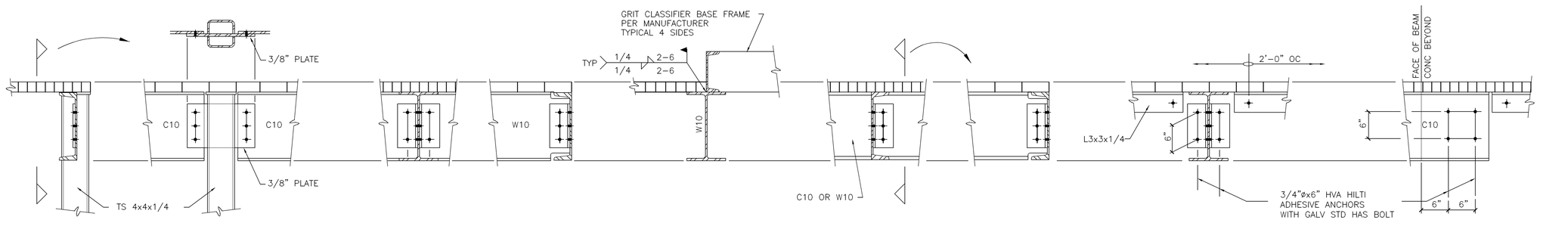

* TO SUIT EQUIPMENT REQUIREMENTS
** DIMENSION MAY CHANGE TO SUIT OPENNING SIZE

NOTES

1 – TYP TUBULAR COL BASE PLATE 7"x7x3/8" PLATE WITH 4–1/2"ø x5" GALV EXPANSION ANCHORS

NOTE:

STANDARD DETAILS SHOWN ON S2, S3, AND S4 APPLY TO ALL SIMILAR SITUATIONS ON THE PROJECT, EXCEPT WHERE A DIFFERENT DETAIL IS SHOWN.

structural technologies inc.
CONSULTING ENGINEERS
Wekiva Business Center
Suite 120, 1428 East Semoran Blvd., Apopka, Florida 32703
(407) 889-9660

DRAWN BY : RAH
CHECKED BY : REH
APPROVED BY : BE
DATE : OCT 1990
JOB NO: 90-111

DESIGNED BY:
DRAWN BY:
CHECKED BY/DATE:
APPRV'D BY/DATE:

NO.	DATE	DRWN	CHK'D	DESCRIPTION
1	9/97	FXP	ASG	RECORD DRAWING

REVISIONS

CAMP DRESSER & McKEE

THIS DRAWING HAS BEEN REVISED BY HAZEN AND SAWYER, P.C. TO REFLECT MODIFICATIONS MADE DURING CONSTRUCTION

environmental engineers, scientists, planners, & management consultants CDM

ARLINGTON COUNTY, VIRGINIA
WATER POLLUTION CONTROL PLANT
UPGRADE AND EXPANSION- PHASE IB

PRELIMINARY TREATMENT BUILDING-STRUCTURAL-EQUIPMENT PLATFORM AT EL 45.67'

RECORD DRAWING

SCALE NOTE

SCALE BAR SHOWN BELOW IS ONE INCH LONG ON A FULL SIZE DRAWING. WHEN SCALING DRAWINGS, MEASURE BAR TO DETERMINE IF SCALES SHOWN WILL REQUIRE ADJUSTING.

1 ONE INCH

CONTRACT NO. 90-02-WPC
YEAR 1991
LOCATION CODE B8
SPECIALTY CODE S
PROJECT NO. 5002-33
FILE NAME B8S-20.DWG
DRAWING NO. B8S-20
SHEET NO. 208

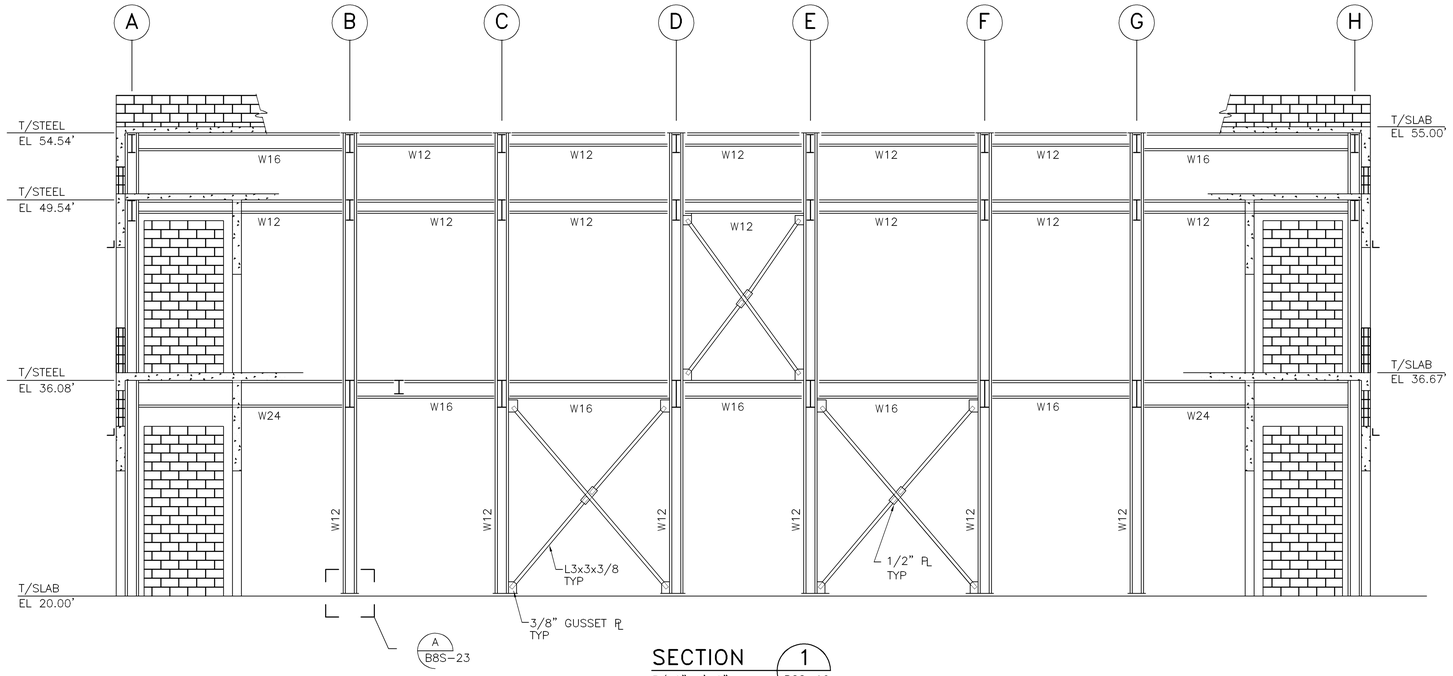

SECTION 1
3/16"=1'-0"
B8S-16

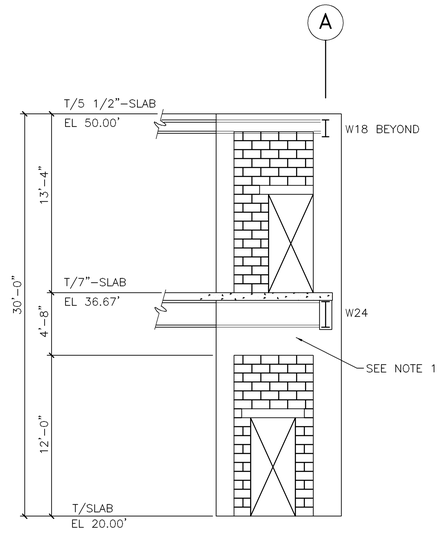

SECTION 3
3/16"=1'-0"
B8S-16

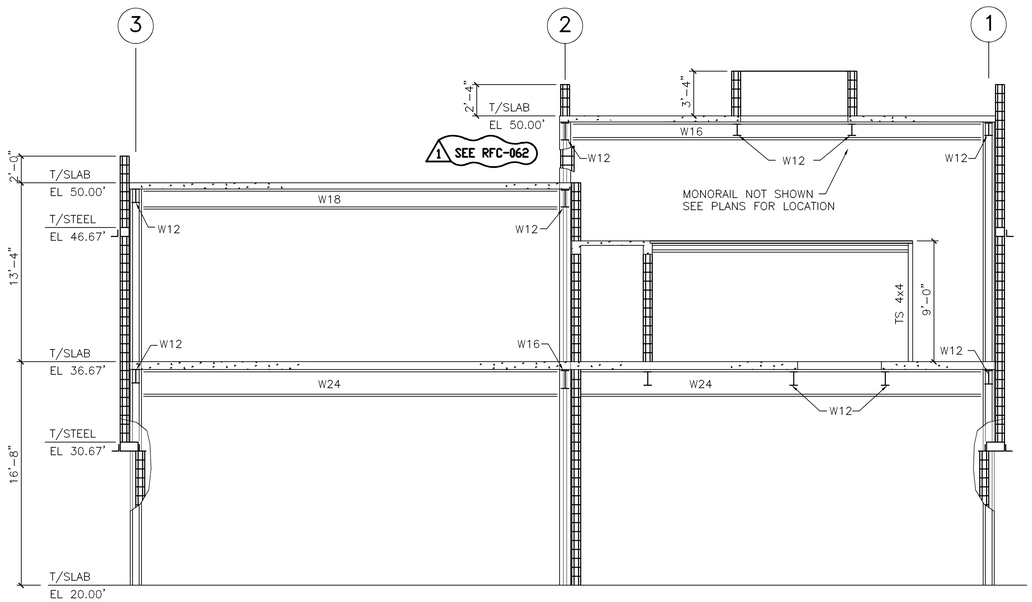

SECTION 2
3/16"=1'-0"
B8S-16

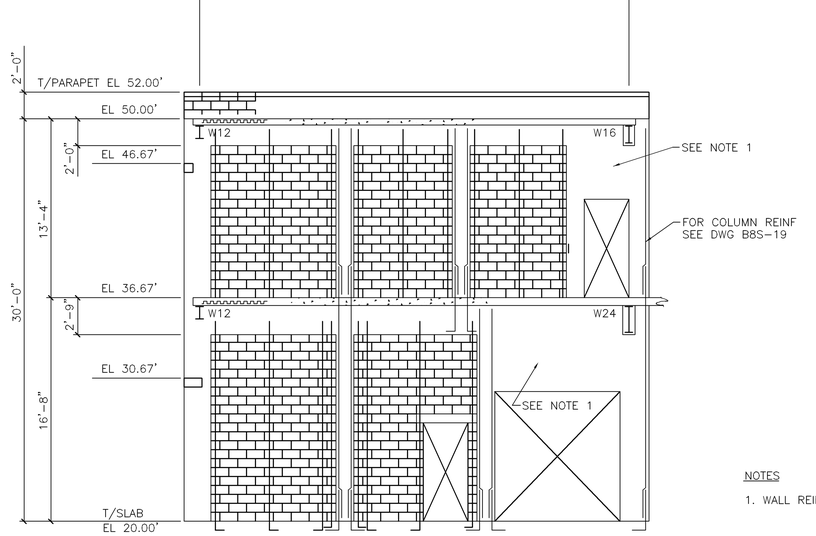

SECTION 4
3/16"=1'-0"
B8S-16

NOTES

1. WALL REINF #4 AT 12" EW, EF.

NOTE:
STANDARD DETAILS SHOWN ON DDS-2, DDS-3, AND DDS-4 APPLY TO ALL SIMILAR SITUATIONS ON THE PROJECT, EXCEPT WHERE A DIFFERENT DETAIL IS SHOWN.

RECORD DRAWING

NO.	DATE	DRWN	CHK'D	DESCRIPTION
1	9/97	FXP	ASG	RECORD DRAWING

REVISIONS

DESIGNED BY:
DRAWN BY:
CHECKED BY/DATE:
APPRV'D BY/DATE:

CAMP DRESSER & McKEE
environmental engineers, scientists, planners, & management consultants

THIS DRAWING HAS BEEN REVISED BY HAZEN AND SAWYER, P.C. TO REFLECT MODIFICATIONS MADE DURING CONSTRUCTION

CDM

ARLINGTON COUNTY, VIRGINIA
WATER POLLUTION CONTROL PLANT
UPGRADE AND EXPANSION- PHASE IB

PRELIMINARY TREATMENT BUILDING-STRUCTURAL-
FRAMING SECTIONS AND DETAILS

SCALE NOTE
SCALE BAR SHOWN BELOW IS ONE INCH LONG ON A FULL SIZE DRAWING. WHEN SCALING DRAWINGS, MEASURE BAR TO DETERMINE IF SCALES SHOWN WILL REQUIRE ADJUSTING.
ONE INCH

CONTRACT NO.	
90-02-WPC	
YEAR	1991
LOCATION CODE	SPECIALTY CODE
B8	S
PROJECT NO.	
5002-33	
FILE NAME	
B8S-21.DWG	
DRAWING NO.	
B8S-21	
SHEET NO.	209

STI structural technologies inc.
CONSULTING ENGINEERS
Wekiva Business Center
Suite 120, 1428 East Semoran Blvd., Apopka, Florida 32703
(407) 889-9660

DRAWN BY : RAH
CHECKED BY : REH
APPROVED BY : BE
DATE : OCT. 1990
JOB NO: 90-111

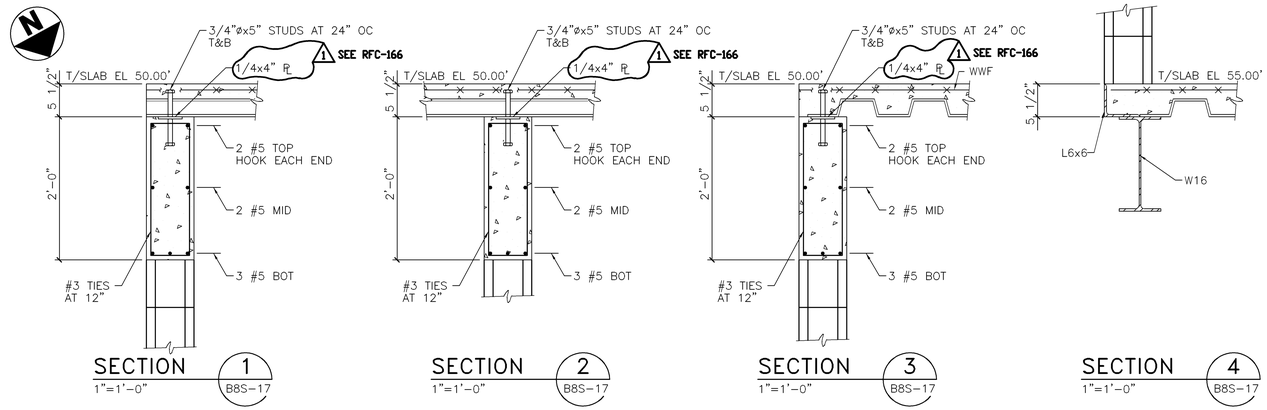

SECTION 1 — 1"=1'-0" — B8S-17

SECTION 2 — 1"=1'-0" — B8S-17

SECTION 3 — 1"=1'-0" — B8S-17

SECTION 4 — 1"=1'-0" — B8S-17

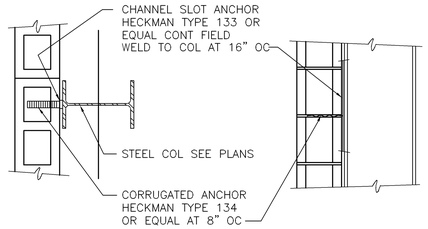

COLUMN ANCHORS

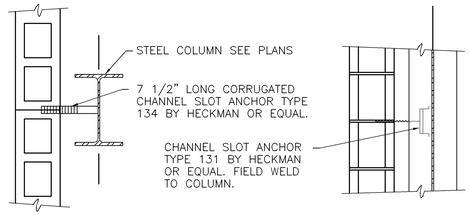

COLUMN ANCHORS

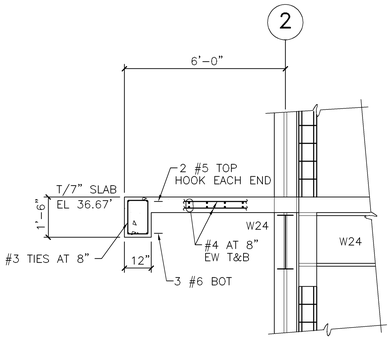

SECTION 5 — 3/8"=1'-0" — B8S-16

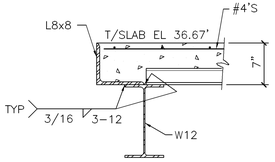

SECTION 6 — 1"=1'-0" — B8S-16

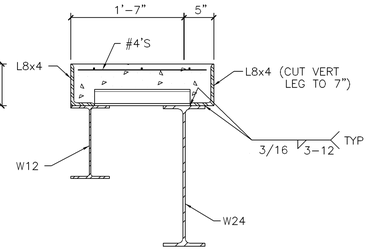

SECTION 7 — 1"=1'-0" — B8S-16

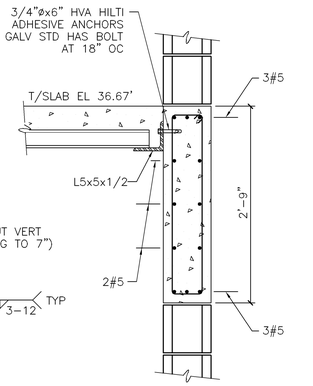

SECTION 8 — 1"=1'-0" — B8S-16

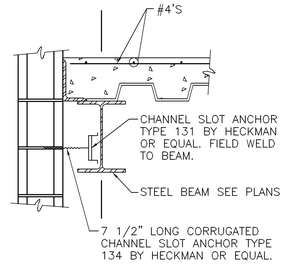

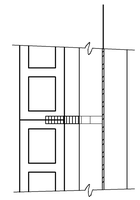

BEAM ANCHORS

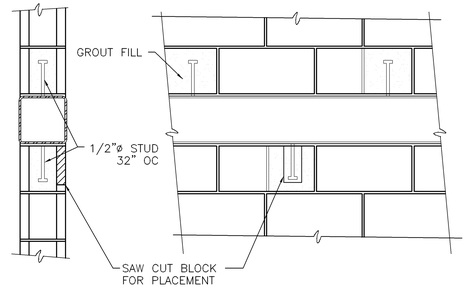

GIRT ANCHORS

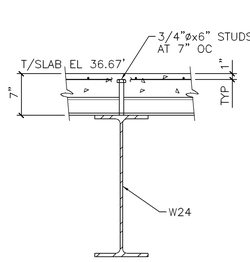

SECTION 9 — 1"=1'-0" — B8S-16

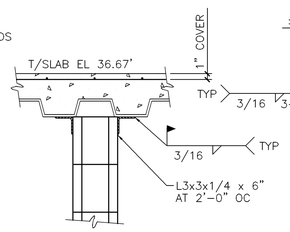

SECTION 10 — 1"=1'-0" — B8S-16

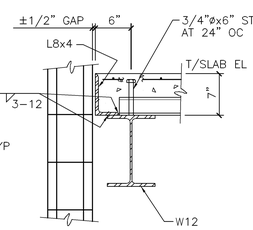

SECTION 11 — 1"=1'-0" — B8S-16

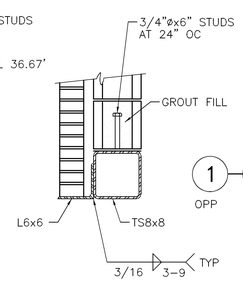

DETAIL B — 1"=1'-0" — B8S-22

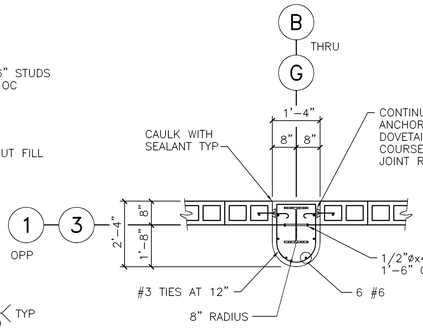

DETAIL G — 1/2"=1'-0" — B8S-18

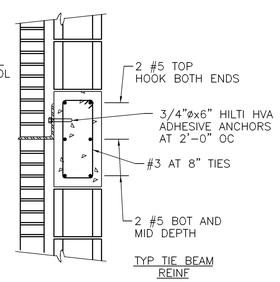

DETAIL H — 1"=1'-0" — B8S-18

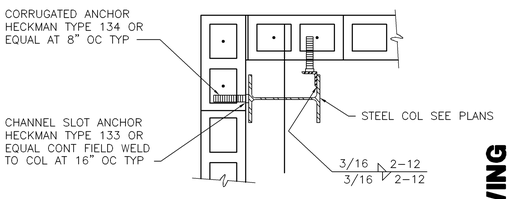

CORNER COLUMN ANCHORS

TYPICAL MASONRY ANCHORAGE DETAILS

NOTE:
STANDARD DETAILS SHOWN ON ODS-2, ODS-3, AND ODS-4 APPLY TO ALL SIMILAR SITUATIONS ON THE PROJECT, EXCEPT WHERE A DIFFERENT DETAIL IS SHOWN.

RECORD DRAWING

NO.	DATE	DRAWN	CHK'D	DESCRIPTION
1	9/97	FXP	ASG	RECORD DRAWING

REVISIONS

DESIGNED BY:
DRAWN BY:
CHECKED BY/DATE:
APPRV'D BY/DATE:

CAMP DRESSER & McKEE

THIS DRAWING HAS BEEN REVISED BY HAZEN AND SAWYER, P.C. TO REFLECT MODIFICATIONS MADE DURING CONSTRUCTION

CDM environmental engineers, scientists, planners, & management consultants

ARLINGTON COUNTY, VIRGINIA
WATER POLLUTION CONTROL PLANT
UPGRADE AND EXPANSION- PHASE IIB

PRELIMINARY TREATMENT BUILDING - STRUCTRUAL - SECTIONS AND DETAILS

SCALE NOTE
SCALE BAR SHOWN BELOW IS ONE INCH LONG ON A FULL SIZE DRAWING. WHEN SCALING DRAWINGS, MEASURE BAR TO DETERMINE IF SCALES SHOWN WILL REQUIRE ADJUSTING.
ONE INCH

CONTRACT NO. 90-02-WPC
YEAR 1991
LOCATION CODE B8
SPECIALTY CODE S
PROJECT NO. 5002-33
FILE NAME B8S-22.DWG
DRAWING NO. B8S-22
SHEET NO. 210

STI structural technologies Inc.
CONSULTING ENGINEERS
Wekiva Business Center
Suite 120, 1428 East Semoran Blvd., Apopka, Florida 32703
(407) 889-9660

DRAWN BY : TAV
CHECKED BY : REH
APPROVED BY : BE
DATE : OCT,1990
JOB NO: 90-111

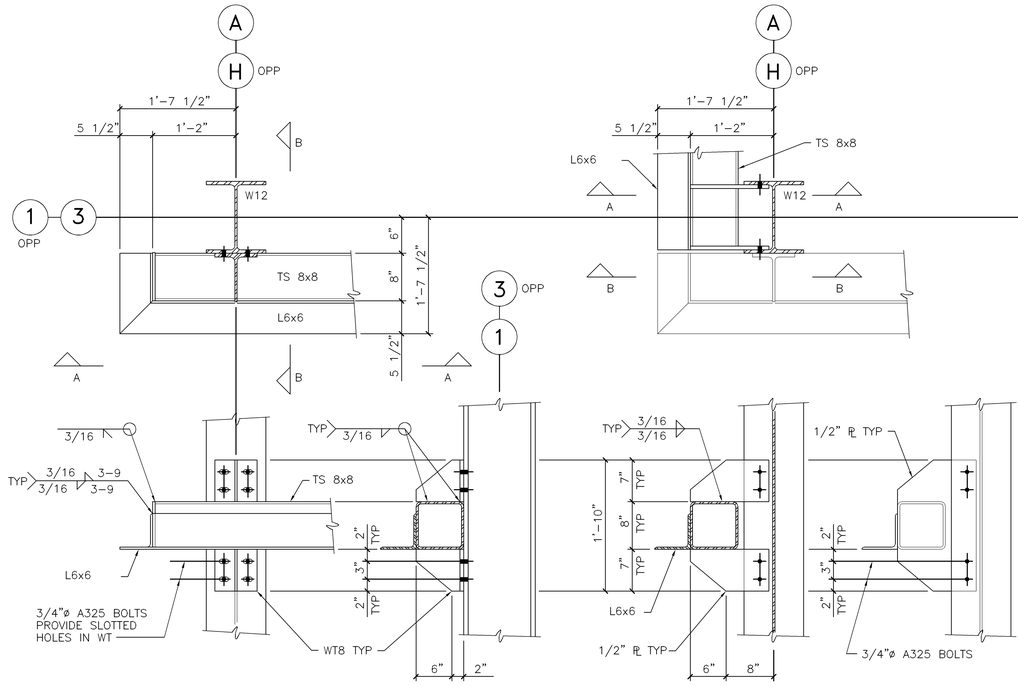

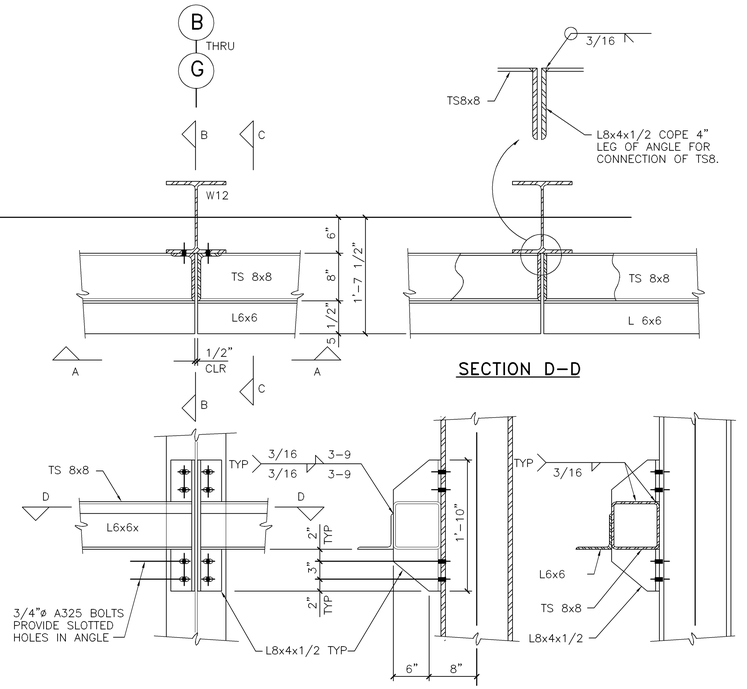

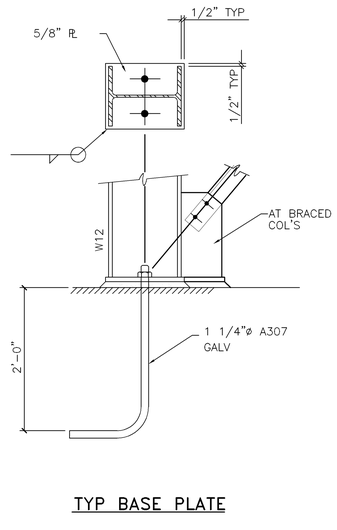

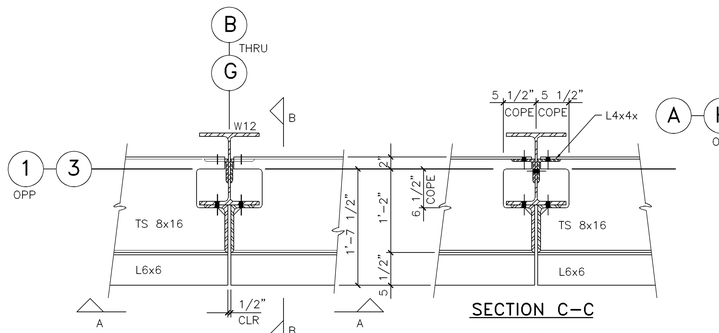

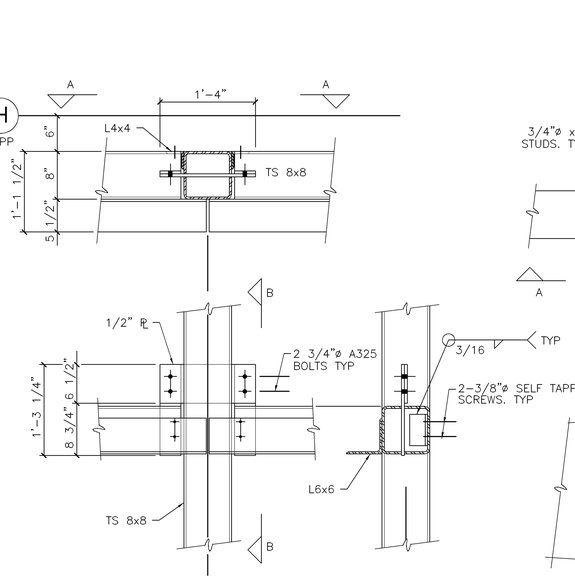

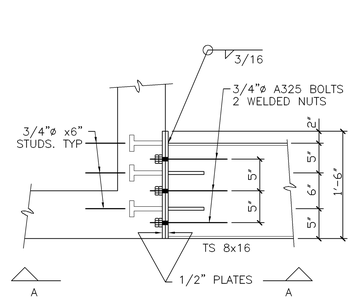

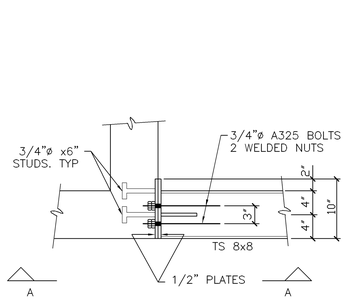

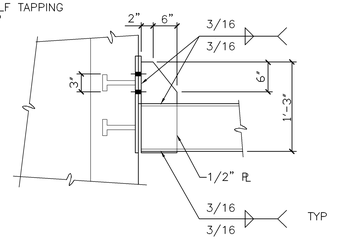

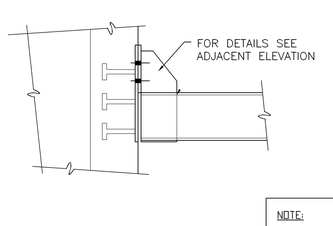

NOTE:
STANDARD DETAILS SHOWN ON 00S-2, 00S-3, AND 00S-4 APPLY TO ALL SIMILAR SITUATIONS ON THE PROJECT, EXCEPT WHERE A DIFFERENT DETAIL IS SHOWN.

RECORD DRAWING

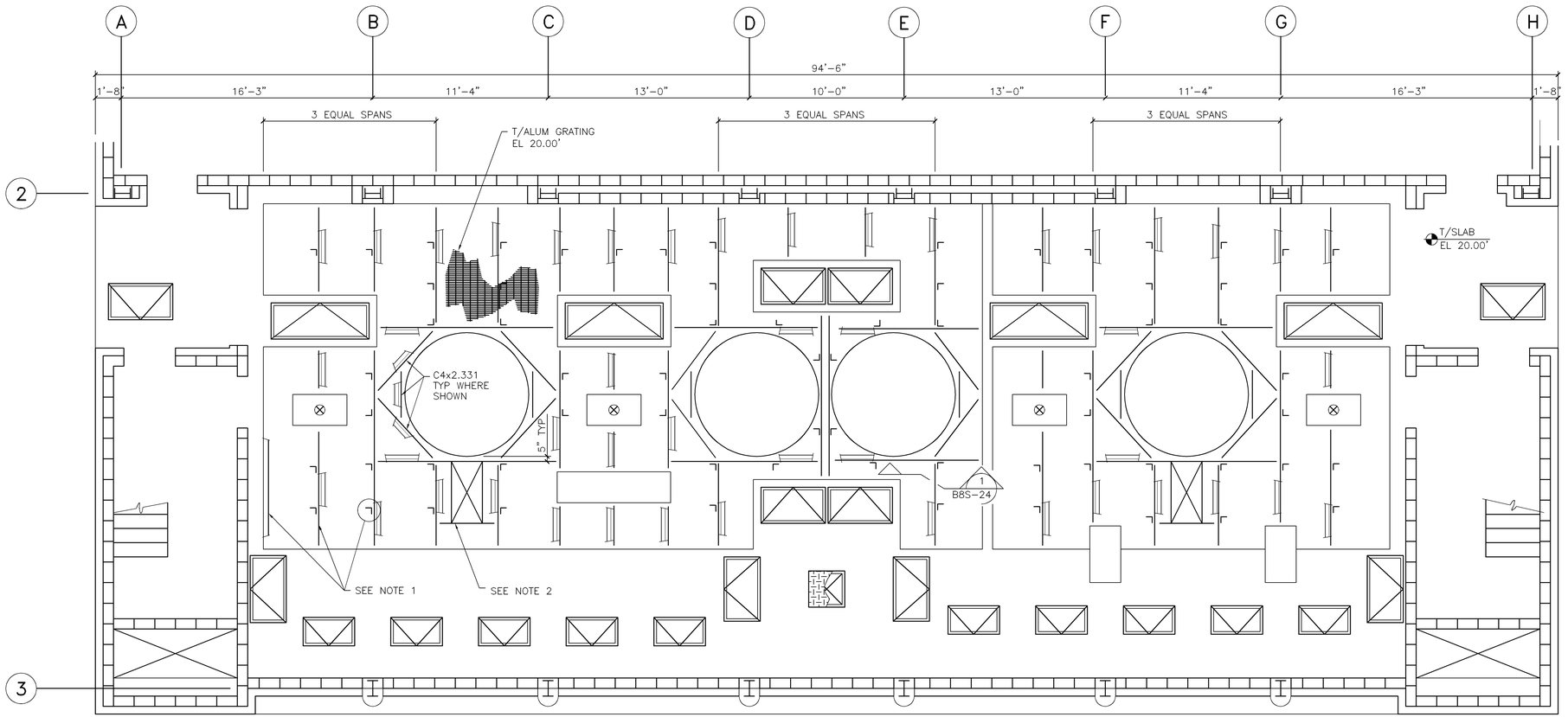

GRATING PLAN AT EL 20.00'

1/4"=1'-0"

SEE RFC-238

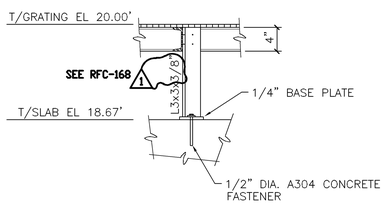

SECTION 1 / B8S-24

1"=1'-0"

CLAR. #76

NOTES:

1– ALL METAL FRAMING SHOWN IS ALUMINUM
SHELF ANGLE L3x3x3/8 1/2"DIA A304 CONCRETE FASTENERS AT 24" O.C AND AT ENDS
BEAMS : C4x2.331
POSTS : L3x3x1/4
CONNECTIONS : A304 BOLTS AND CLIP ANGLES

2– GRATING WILL BE HINGED ON ONE SIDE TO OPREATE AS A HATCH COVER. USE BILCO HATCH OR EQUAL SUBSTUTING CHECKERED PLATE WITH GRATING.

NOTE:
STANDARD DETAILS SHOWN ON OOS–1, OOS–2, AND OOS–3 APPLY TO ALL SIMILAR SITUATIONS ON THE PROJECT, EXCEPT WHERE A DIFFERENT DETAIL IS SHOWN.

structural technologies inc.
CONSULTING ENGINEERS
Wekiva Business Center
Suite 120, 1428 East Semoran Blvd., Apopka, Florida 32703
(407) 889–9660

DRAWN BY : BE
CHECKED BY : REH
APPROVED BY : BE
DATE : OCT 1990
JOB NO: 90–111

DESIGNED BY:
DRAWN BY:
CHECKED BY/DATE:
APPRV'D BY/DATE:

REVISIONS

NO.	DATE	DRWN	CHK'D	DESCRIPTION
1	9/97	FXP	ASG	RECORD DRAWING

CAMP DRESSER & McKEE

THIS DRAWING HAS BEEN REVISED BY HAZEN AND SAWYER, P.C. TO REFLECT MODIFICATIONS MADE DURING CONSTRUCTION

environmental engineers, scientists, planners, & management consultants CDM

ARLINGTON COUNTY, VIRGINIA
WATER POLLUTION CONTROL PLANT
UPGRADE AND EXPANSION– PHASE IB

PRELIMINARY TREATMENT BUILDING–STRUCTURAL–
GRATING PLAN AT ELEVATION 20.00'

RECORD DRAWING

SCALE NOTE
SCALE BAR SHOWN BELOW IS ONE INCH LONG ON A FULL SIZE DRAWING. WHEN SCALING DRAWINGS, MEASURE BAR TO DETERMINE IF SCALES SHOWN WILL REQUIRE ADJUSTING.
ONE INCH

CONTRACT NO.
90–02–WPC
YEAR 1991

LOCATION CODE	SPECIALTY CODE
B8	S

PROJECT NO.
5002–33
FILE NAME
B8S–24.DWG
DRAWING NO.
B8S–24
SHEET NO. 212

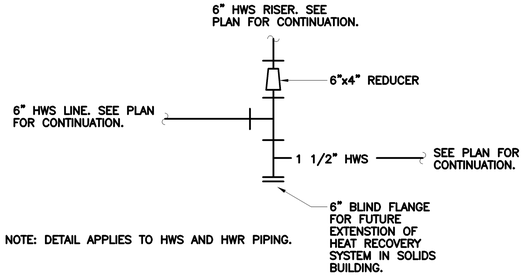

HOT WATER RISER CONNECTION DETAIL

N.T.S.

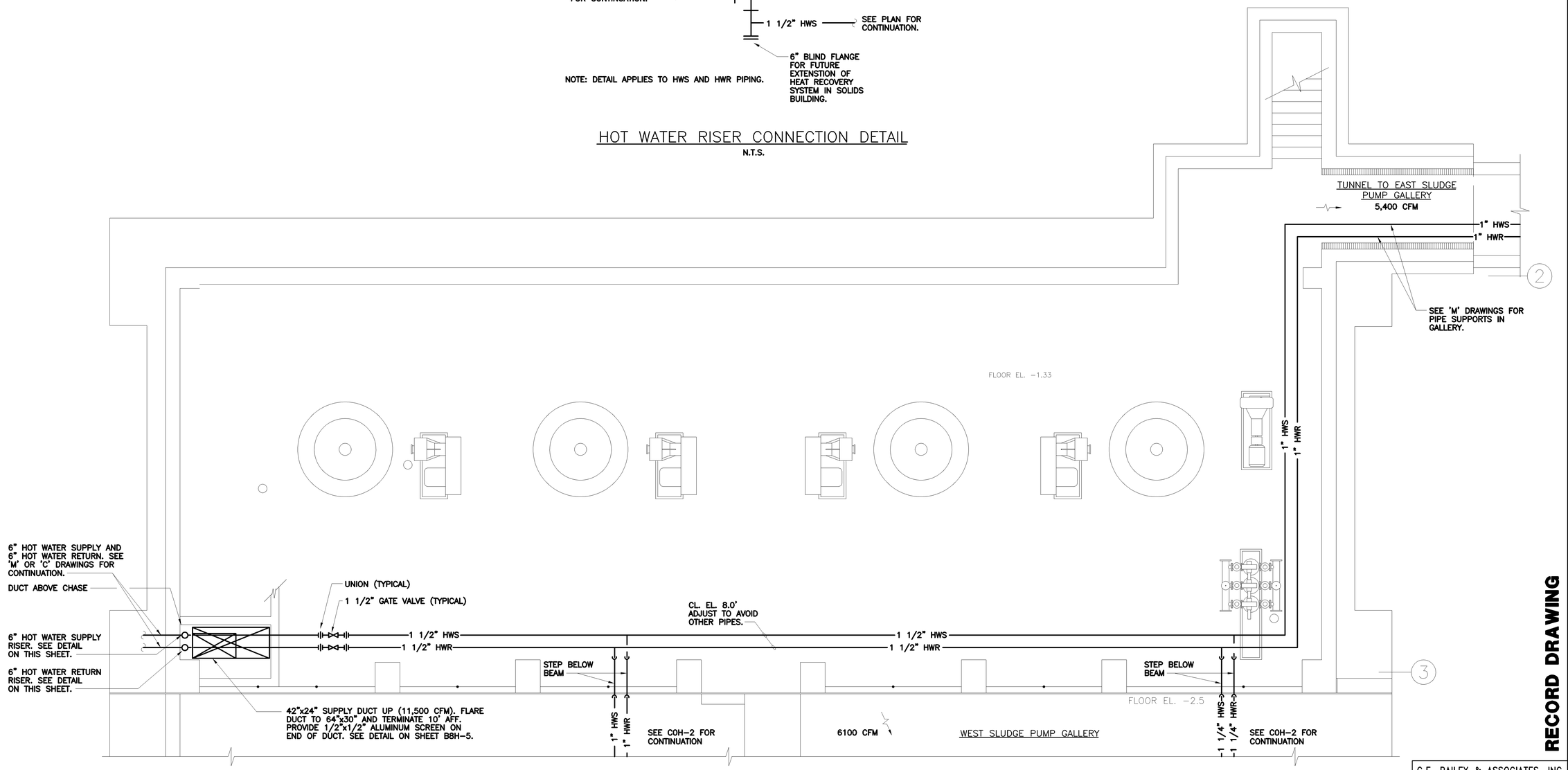

PLAN AT EL. 7.0

SCALE: 1/4"=1'-0"

NO.	DATE	DRWN	CHK'D	REVISIONS DESCRIPTION
1	9/97	FXP	ASG	RECORD DRAWING

DESIGNED BY: WRH
DRAWN BY: RMM,SFP
CHECKED BY/DATE: WRH/9-91
APPRV'D BY/DATE: WRH/9-91

CAMP DRESSER & McKEE

THIS DRAWING HAS BEEN REVISED BY HAZEN AND SAWYER, P.C. TO REFLECT MODIFICATIONS MADE DURING CONSTRUCTION

environmental engineers, scientists, planners, & management consultants CDM

ARLINGTON COUNTY, VIRGINIA
WATER POLLUTION CONTROL PLANT
UPGRADE AND EXPANSION- PHASE IIB

PRELIMINARY TREATMENT BUILDING
HVAC
BASEMENT PLAN

RECORD DRAWING

SCALE NOTE

SCALE BAR SHOWN BELOW IS ONE INCH LONG ON A FULL SIZE DRAWING. WHEN SCALING DRAWINGS, MEASURE BAR TO DETERMINE IF SCALES SHOWN WILL REQUIRE ADJUSTING.

ONE INCH

CONTRACT NO. 90-02-WPC
YEAR 1991
LOCATION CODE B8
SPECIALTY CODE H
PROJECT NO. 5002-33
FILE NAME B8H1.DWG
DRAWING NO. B8H-1
SHEET NO. 213

C.E. BAILEY & ASSOCIATES, INC.
CONSULTING ENGINEERS
ORLANDO, CLEARWATER & FORT LAUDERDALE, FLORIDA

14" SCHEDULE 40 PVC RISER PIPE TO CEILING AT EL. 23.0' AND 10" SCHEDULE 40 BRANCH PIPES INTO CHANNEL. PLUG BOTTOM OF RISER WITH FUSION WELDED 1/2" THICK BLIND FLANGE AND FUSION WELD BRANCHES TO RISER. (TYPICAL 2 PLACES).

14"ø ROUND FRP DUCT DROP INTO PVC BRANCH DUCTS. CONNECT WITH NEOPRENE GASKETED FLANGED CONNECTION AT EL. 23.0'. – 1050 CFM EACH. (TYPICAL OF 2). SEE 'M' DRAWINGS FOR ACTUAL LOCATION.

A B C D E F G H 1

45? (TYP.)

14"ø 18"ø

TRANSPORTABLE BIN (TYPICAL)

12"ø FLEXIBLE DUCT DROP INTO TRANSPORTABLE BIN. BOTTOM EL. 23.0, 775 CFM. (TYPICAL OF 2).

12"ø 12"ø

16ø

CL. EL. 33.0'

10"ø FLEXIBLE DUCT DROP TO SCUM CONCENTRATOR –400 CFM

SCUM CONCENTRATOR

CL. EL. 33.0' 10"ø CL. EL. 33.0' 6"ø

6"ø FLEXIBLE DUCT DROP TO SCUM CONCENTRATOR – 100 CFM.

18"ø

RCP-043 1 CL. EL. 32.25'

TRANSPORTABLE BIN (TYPICAL)

12"ø FLEXIBLE DUCT DROP INTO BIN. BOTTOM EL. 23.0', 773 CFM. (TYPICAL OF 2).

12"ø 12"ø

16"ø 12"ø

RCP-043 1 CL. EL. 32.25'

24"ø

40"ø FRP FOUL AIR DUCT DOWN FROM 2ND FLOOR TO UNDERFLOOR CHAMBER. 18,000 CFM. SEE 'M' DRAWINGS FOR CONTINUATION.

40" ROUND FRP FOUL AIR DUCT UP TO 2nd. FLOOR– 18,000 CFM.

2

36"ø

1" HWS AND HWR RISER UP TO SECOND FLOOR.

28"ø 1 CLAR. #43 CL. EL. 32.25'

28"ø

18"ø FRP DUCT DROP INTO CHANNEL. 2325 CFM EACH (TYPICAL OF 4).

1" HWS AND HWR RISER UP TO BETWEEN STRUCTURAL BEAMS, SEE 'S' DRAWINGS.

1" HWS AND HWR UNDER STAIR LANDING ABOVE.

1" HWS AND HWR RISER UP TO SECOND FLOOR.

1" HWS AND HWR UNDER STAIR LANDING ABOVE.

12x24 MOUNT DUCT AT CEILING

18x24

HWUH–1 50 MBH

HWUH–2 50 MBH

22"ø

18x22 SR 1875 CFM EA. (TYP. OF 4)

24x24

CL. EL. ±32.00 1 CLAR. #43 CLAR. #201

14"ø FRP DUCT DROP INTO CHANNEL BELOW. 1000 CFM (TYPICAL OF 3). SEE 'M' DRAWINGS FOR LOCATION.

CLAR. #7 1 NOTE: 1. REFERENCE CLAR. #7 FOR HVAC INSULATION.

30x24

ANGLE DOWN AT 45° TO BELOW VENTILATION DUCT.

6" HOT WATER SUPPLY RISER

HVAC CHASE

6" HOT WATER RETURN RISER

14"ø 18"ø

TRANSITION 14ø FRP FOUL AIR DUCT TO 6"x24" FRP FOUL AIR DUCT PENETRATION THROUGH SLAB. (TYPICAL 2 PLACES).

ELECTRICAL CHASE

3

24x30

24x30 SUPPLY DUCT UP (7500 CFM)

42x24 SUPPLY DUCT UP & DOWN (11,500 CFM)

PLAN AT EL. 35.0

SCALE: 1/4"=1'–0"

RECORD DRAWING

C.E. BAILEY & ASSOCIATES, INC.
CONSULTING ENGINEERS
ORLANDO, CLEARWATER & FORT LAUDERDALE, FLORIDA

DESIGNED BY: WRH
DRAWN BY: RMM,SFP
CHECKED BY/DATE: WRH/9-91
APPRV'D BY/DATE: WRH/9-91

NO.	DATE	DRWN	CHK'D	DESCRIPTION
1	9/97	FJP	ASG	RECORD DRAWING

REVISIONS

CAMP DRESSER & McKEE

THIS DRAWING HAS BEEN REVISED BY HAZEN AND SAWYER, P.C. TO REFLECT MODIFICATIONS MADE DURING CONSTRUCTION

environmental engineers, scientists, planners, & management consultants CDM

ARLINGTON COUNTY, VIRGINIA
WATER POLLUTION CONTROL PLANT
UPGRADE AND EXPANSION- PHASE IIB

PRELIMINARY TREATMENT BUILDING
HVAC
1ST. FLOOR PLAN

SCALE NOTE

SCALE BAR SHOWN BELOW IS ONE INCH LONG ON A FULL SIZE DRAWING. WHEN SCALING DRAWINGS, MEASURE BAR TO DETERMINE IF SCALES SHOWN WILL REQUIRE ADJUSTING.

← ONE INCH →

CONTRACT NO. 90–02–WPC

YEAR 1991

LOCATION CODE	SPECIALTY CODE
B8	H

PROJECT NO. 5002–33

FILE NAME B8H2.DWG

DRAWING NO. B8H–2

SHEET NO. 214

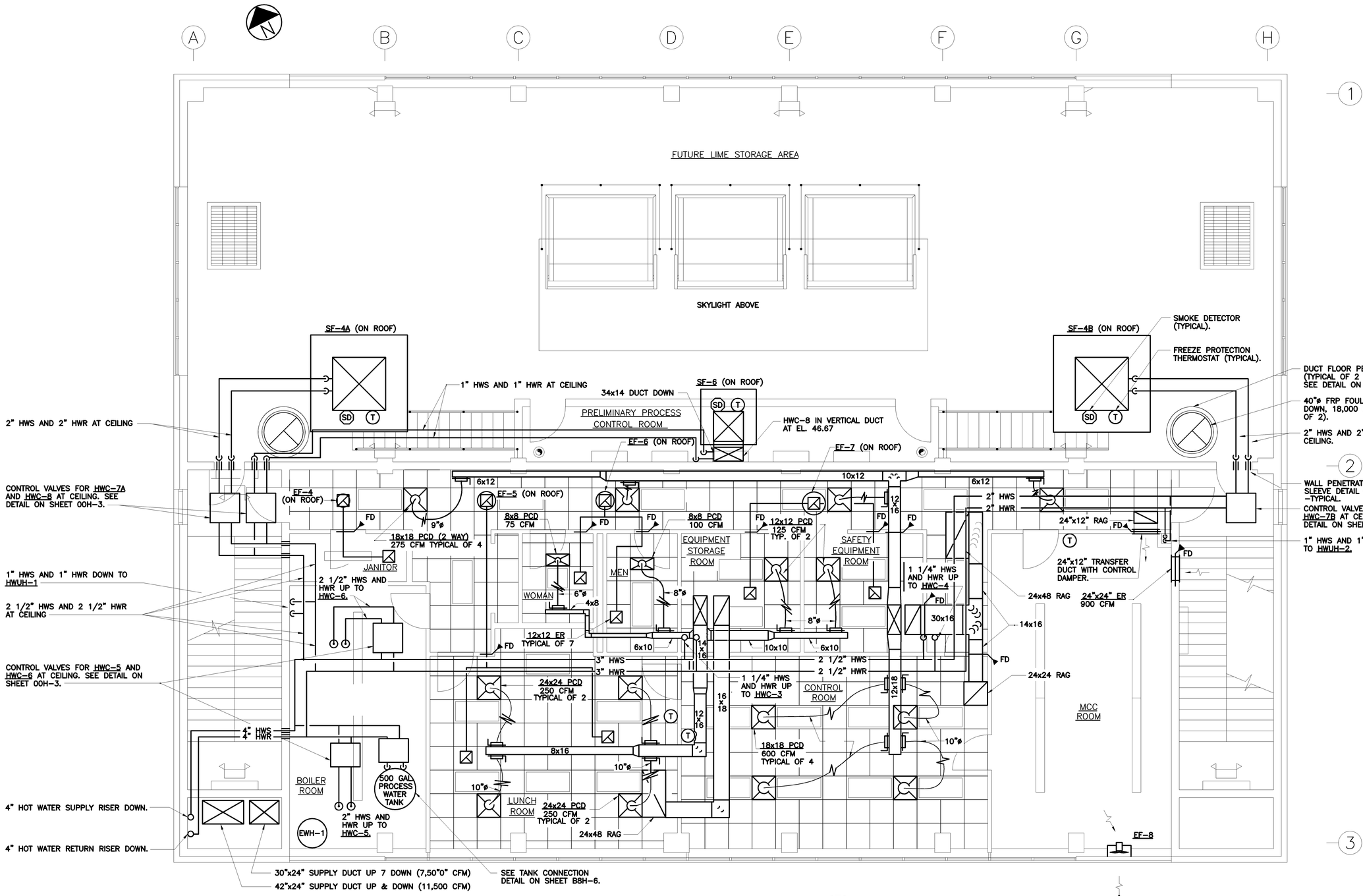

PLAN AT EL. 36.67 (1)

SCALE: 1/4"=1'-0"

CLAR. #7 (1) NOTE: 1. REFERENCE CLAR. #7 FOR HVAC INSULATION.

RECORD DRAWING

NO.	DATE	DRWN	CHK'D	DESCRIPTION
				REVISIONS
1	9/97	FXP	ASG	RECORD DRAWING

DESIGNED BY: WRH
DRAWN BY: RMM,SFP
CHECKED BY/DATE: WRH/9-91
APPRV'D BY/DATE: WRH/9-91

CAMP DRESSER & McKEE

THIS DRAWING HAS BEEN REVISED BY HAZEN AND SAWYER, P.C. TO REFLECT MODIFICATIONS MADE DURING CONSTRUCTION

environmental engineers, scientists, planners, & management consultants

CDM

ARLINGTON COUNTY, VIRGINIA
WATER POLLUTION CONTROL PLANT
UPGRADE AND EXPANSION- PHASE IIB

PRELIMINARY TREATMENT BUILDING
HVAC
2ND. FLOOR PLAN

SCALE NOTE

SCALE BAR SHOWN BELOW IS ONE INCH LONG ON A FULL SIZE DRAWING. WHEN SCALING DRAWINGS, MEASURE BAR TO DETERMINE IF SCALES SHOWN WILL REQUIRE ADJUSTING.

ONE INCH

CONTRACT NO. 90-02-WPC
YEAR 1991
LOCATION CODE B8
SPECIALTY CODE H
PROJECT NO. 5002-33
FILE NAME B8H3.DWG
DRAWING NO. B8H-3
SHEET NO. 215

C.E. BAILEY & ASSOCIATES, INC.
CONSULTING ENGINEERS
ORLANDO, CLEARWATER & FORT LAUDERDALE, FLORIDA

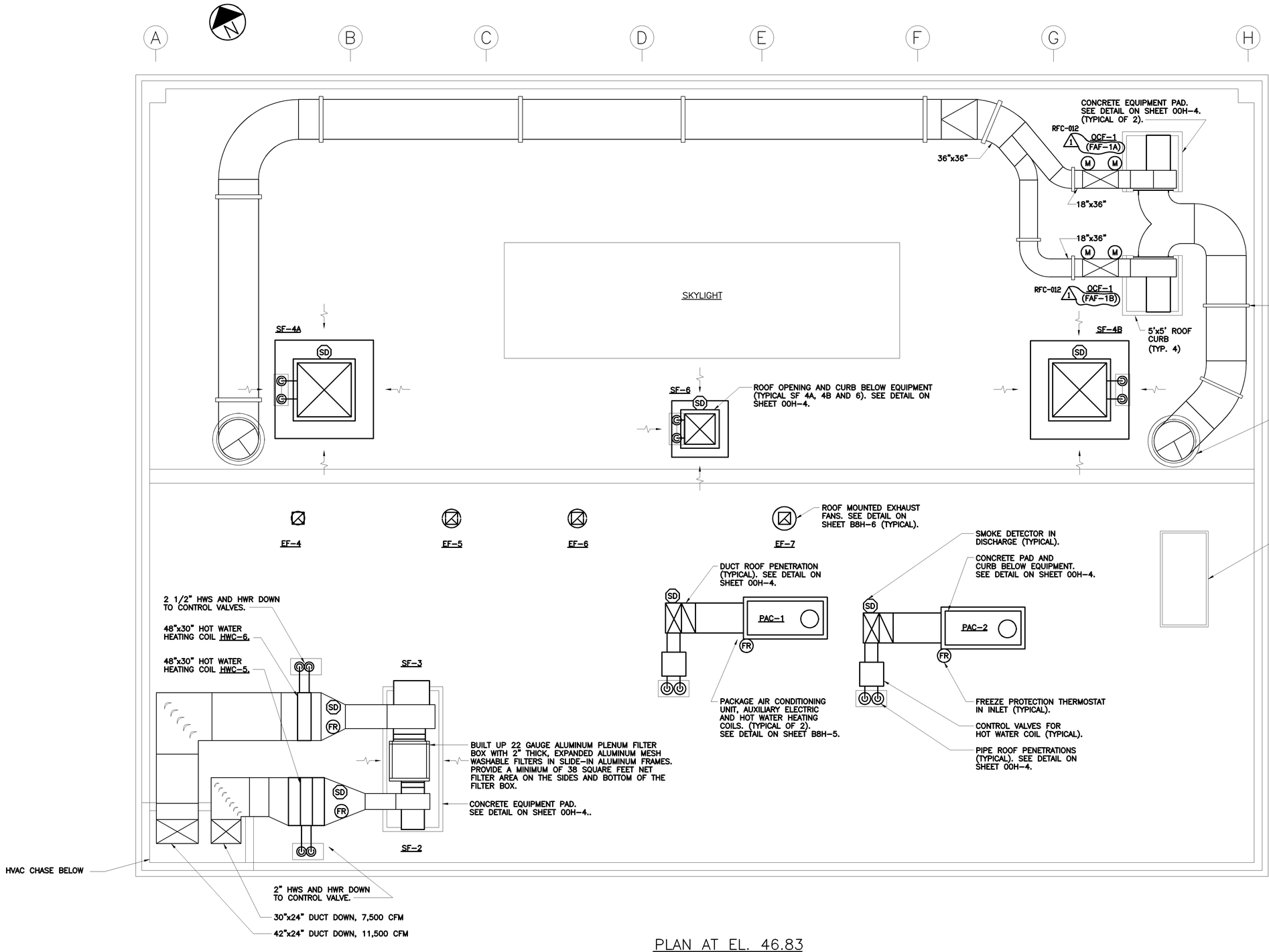

PLAN AT EL. 46.83

SCALE: 1/4"=1'-0"

CLAR. #7 — 1 NOTE: 1. REFERENCE CLAR. #7 FOR HVAC INSULATION.

REVISIONS				
NO.	DATE	DRWN	CHK'D	DESCRIPTION
1	9/97	FXP	ASG	RECORD DRAWING

DESIGNED BY: WRH
DRAWN BY: RMM,SFP
CHECKED BY/DATE: WRH/9-91
APPRV'D BY/DATE: WRH/9-91

CAMP DRESSER & McKEE
environmental engineers, scientists, planners, & management consultants
CDM

THIS DRAWING HAS BEEN REVISED BY HAZEN AND SAWYER, P.C. TO REFLECT MODIFICATIONS MADE DURING CONSTRUCTION

ARLINGTON COUNTY, VIRGINIA
WATER POLLUTION CONTROL PLANT
UPGRADE AND EXPANSION- PHASE IIB

PRELIMINARY TREATMENT BUILDING
HVAC
ROOF PLAN

RECORD DRAWING

SCALE NOTE

SCALE BAR SHOWN BELOW IS ONE INCH LONG ON A FULL SIZE DRAWING. WHEN SCALING DRAWINGS, MEASURE BAR TO DETERMINE IF SCALES SHOWN WILL REQUIRE ADJUSTING.

ONE INCH

CONTRACT NO. 90-02-WPC
YEAR 1991
LOCATION CODE B8
SPECIALTY CODE H
PROJECT NO. 5002-33
FILE NAME B8H4.DWG
DRAWING NO. B8H-4
SHEET NO. 216

C.E. BAILEY & ASSOCIATES, INC.
CONSULTING ENGINEERS
ORLANDO, CLEARWATER & FORT LAUDERDALE, FLORIDA

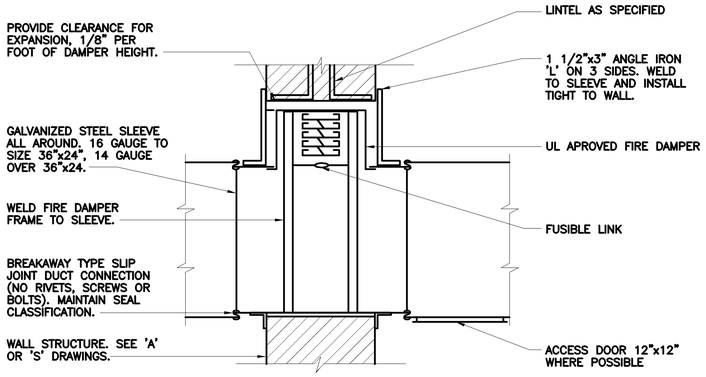

VERTICAL FIRE DAMPER MOUNTING DETAIL

N.T.S.

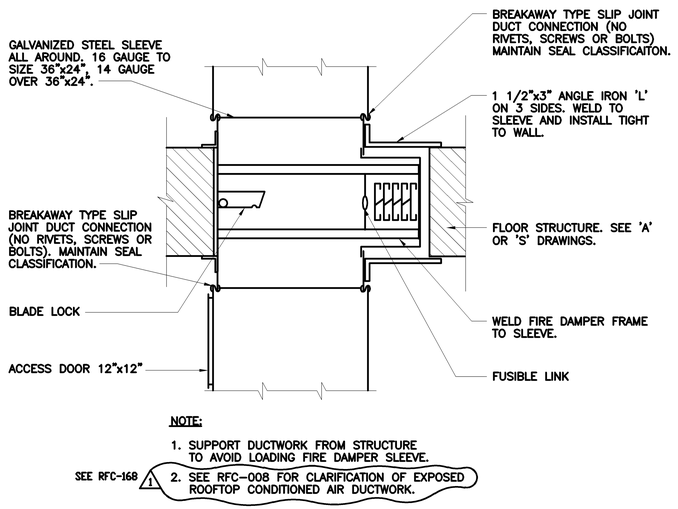

NOTE:

1. SUPPORT DUCTWORK FROM STRUCTURE TO AVOID LOADING FIRE DAMPER SLEEVE.
2. SEE RFC-008 FOR CLARIFICATION OF EXPOSED ROOFTOP CONDITIONED AIR DUCTWORK.

SEE RFC-168 (1)

HORIZONTAL FIRE DAMPER MOUNTING DETAIL

N.T.S.

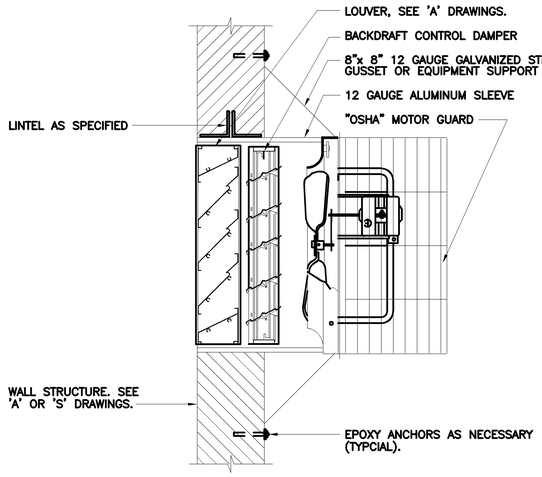

WALL FAN DETAIL

N.T.S.

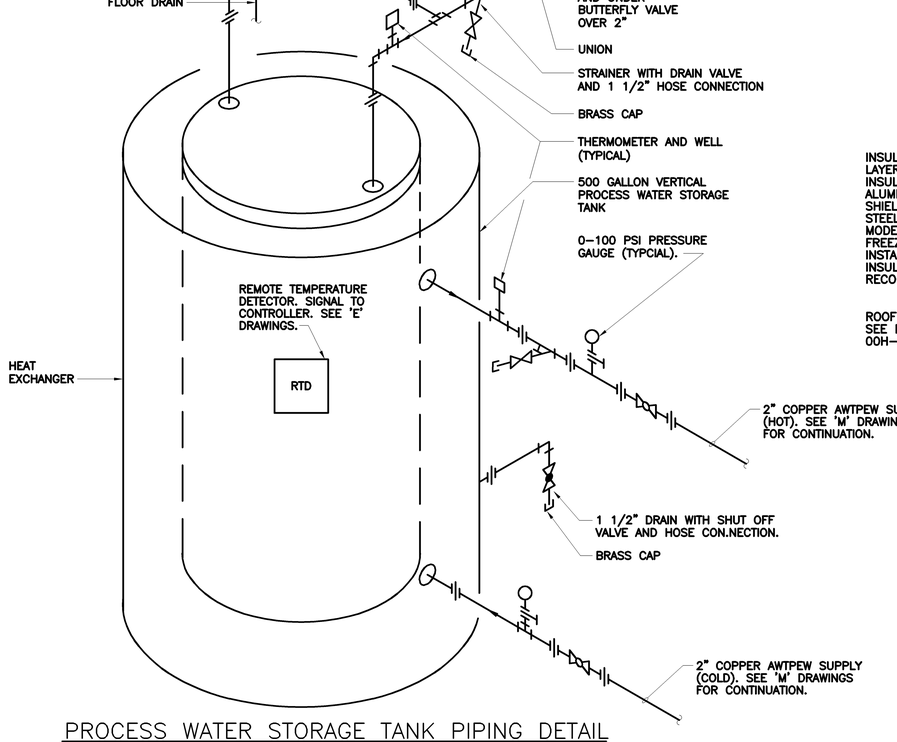

PROCESS WATER STORAGE TANK PIPING DETAIL

N.T.S.

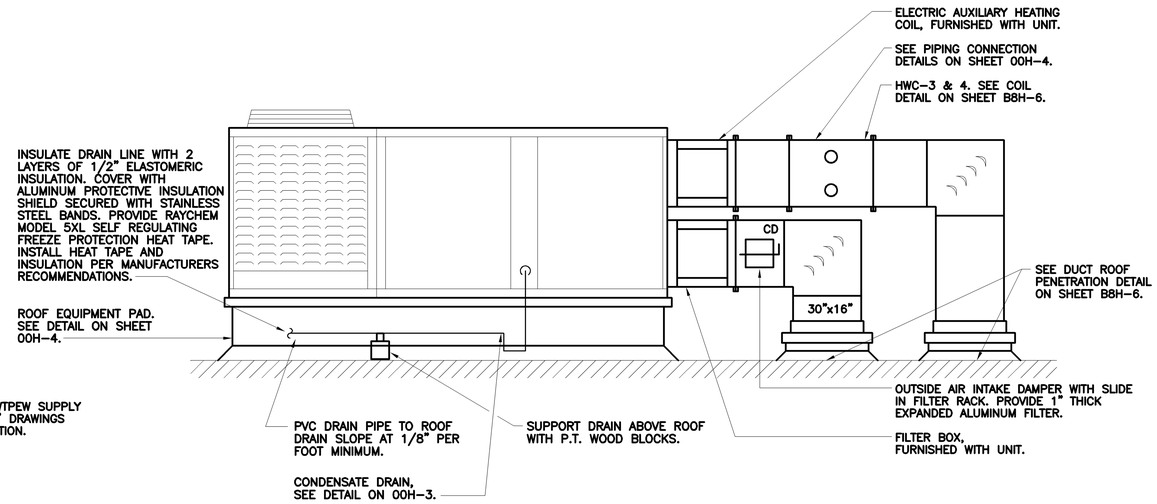

ROOFTOP PACKAGE AIR CONDITIONER DETAIL

N.T.S.

CLAR. #7 (1) NOTE:
1. REFERENCE CLAR. #7 FOR HVAC INSULATION.

NO.	DATE	DRWN	CHK'D	DESCRIPTION
				REVISIONS
1	9/97	FXP	ASG	RECORD DRAWING

DESIGNED BY: WRH
DRAWN BY: RMM,SFP
CHECKED BY/DATE: WRH/9-91
APPR'D BY/DATE: WRH/9-91

CAMP DRESSER & McKEE

THIS DRAWING HAS BEEN REVISED BY HAZEN AND SAWYER, P.C. TO REFLECT MODIFICATIONS MADE DURING CONSTRUCTION

CDM

environmental engineers, scientists, planners, & management consultants

ARLINGTON COUNTY, VIRGINIA
WATER POLLUTION CONTROL PLANT
UPGRADE AND EXPANSION- PHASE IIB

PRELIMINARY TREATMENT BUILDING
HVAC
DETAILS

RECORD DRAWING

SCALE NOTE

SCALE BAR SHOWN BELOW IS ONE INCH LONG ON A FULL SIZE DRAWING. WHEN SCALING DRAWINGS, MEASURE BAR TO DETERMINE IF SCALES SHOWN WILL REQUIRE ADJUSTING.

ONE INCH

CONTRACT NO. 90-02-WPC
YEAR 1991
LOCATION CODE B8
SPECIALTY CODE H
PROJECT NO. 5002-33
FILE NAME B8H5.DWG
DRAWING NO. B8H-5
SHEET NO. 217

C.E. BAILEY & ASSOCIATES, INC.
CONSULTING ENGINEERS
ORLANDO, CLEARWATER & FORT LAUDERDALE, FLORIDA

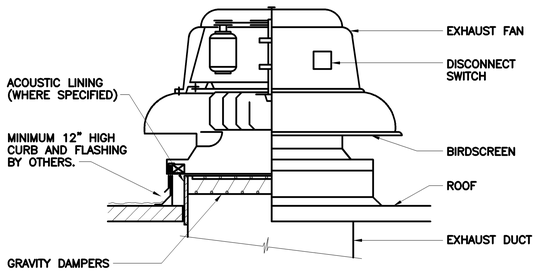

CENTRIFUGAL EXHAUST FAN DETAIL

N.T.S.

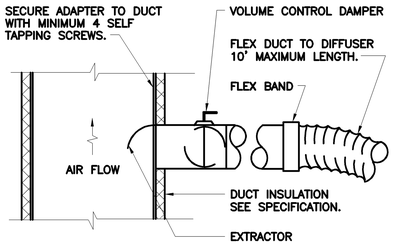

FLEX DUCT TAKE-OFF DETAIL

N.T.S.

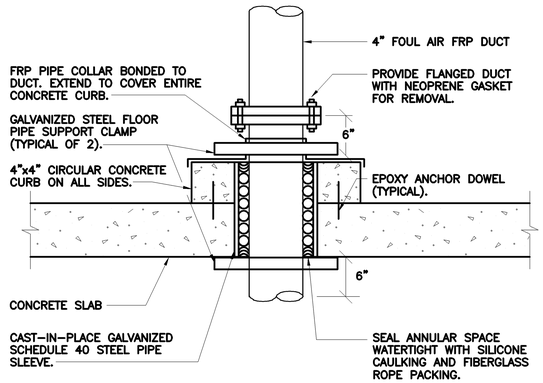

TYPICAL FOUL AIR FLOOR DUCT PENETRATION DETAIL

N.T.S.

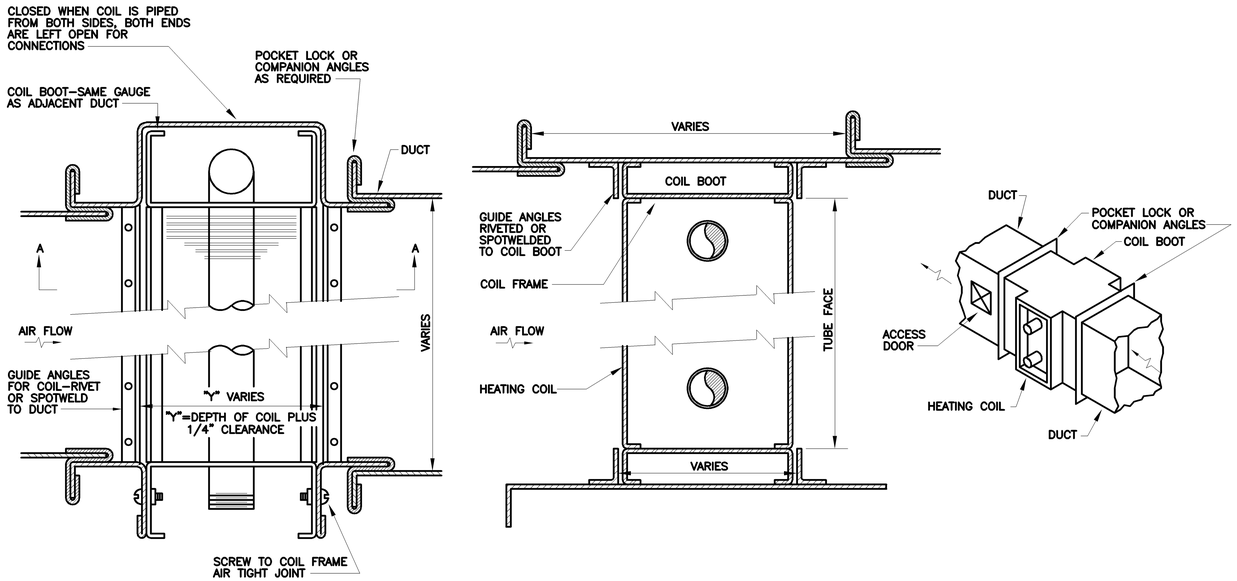

HOT WATER HEATING COIL INSTALLATION DETAIL

N.T.S.

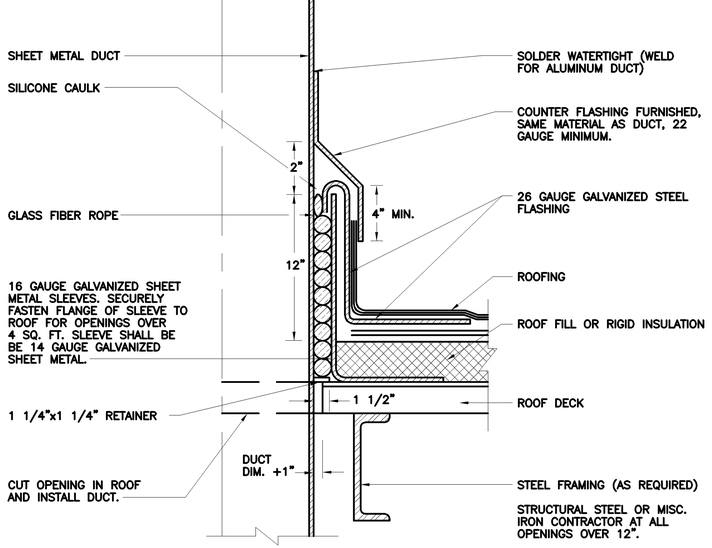

TYPICAL SHEET METAL DUCT OPENING THRU ROOF

N.T.S.

NO.	DATE	DRWN	CHK'D	DESCRIPTION
				REVISIONS
1	9/97	FXP	ASG	RECORD DRAWING

DESIGNED BY: WRH
DRAWN BY: SFP
CHECKED BY/DATE: WRH/9-91
APPR'D BY/DATE: WRH/9-91

CAMP DRESSER & McKEE

THIS DRAWING HAS BEEN REVISED BY BLAZON AND SAWYER, P.C. TO REFLECT MODIFICATIONS MADE DURING CONSTRUCTION

environmental engineers, scientists, planners, & management consultants CDM

ARLINGTON COUNTY, VIRGINIA
WATER POLLUTION CONTROL PLANT
UPGRADE AND EXPANSION- PHASE IIB

PRELIMINARY TREATMENT BUILDING
HVAC
DETAILS

SCALE NOTE

SCALE BAR SHOWN BELOW IS ONE INCH LONG ON A FULL SIZE DRAWING. WHEN SCALING DRAWINGS, MEASURE BAR TO DETERMINE IF SCALES SHOWN WILL REQUIRE ADJUSTING.

← ONE INCH →

RECORD DRAWING

CONTRACT NO. 90-02-WPC
YEAR 1991
LOCATION CODE B8
SPECIALTY CODE H
PROJECT NO. 5002-33
FILE NAME B8H6.DWG
DRAWING NO. B8H-6
SHEET NO. 218

C.E. BAILEY & ASSOCIATES, INC.
CONSULTING ENGINEERS
ORLANDO, CLEARWATER & FORT LAUDERDALE, FLORIDA

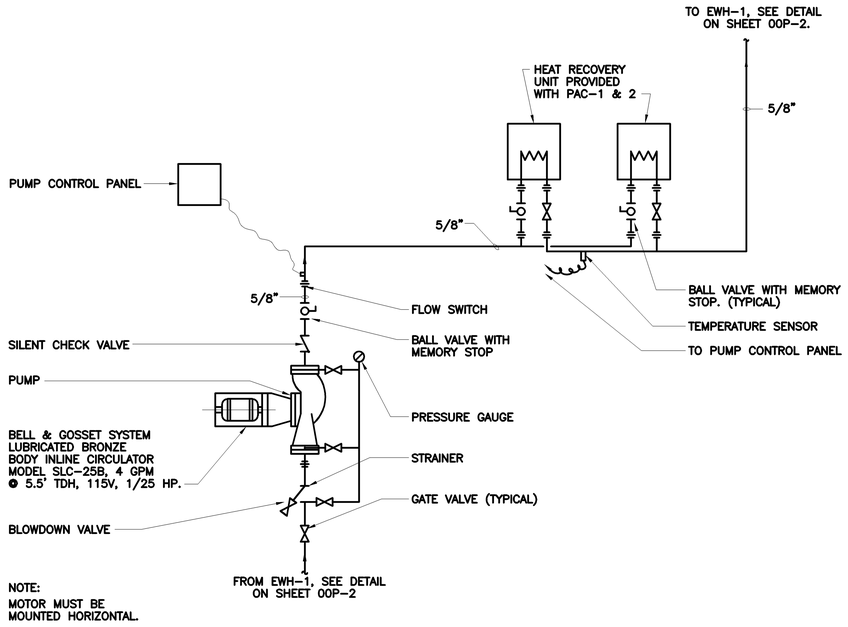

NOTE:
MOTOR MUST BE MOUNTED HORIZONTAL.

IN-LINE HEAT RECOVERY CIRCULATING PUMP DETAIL

N.T.S.

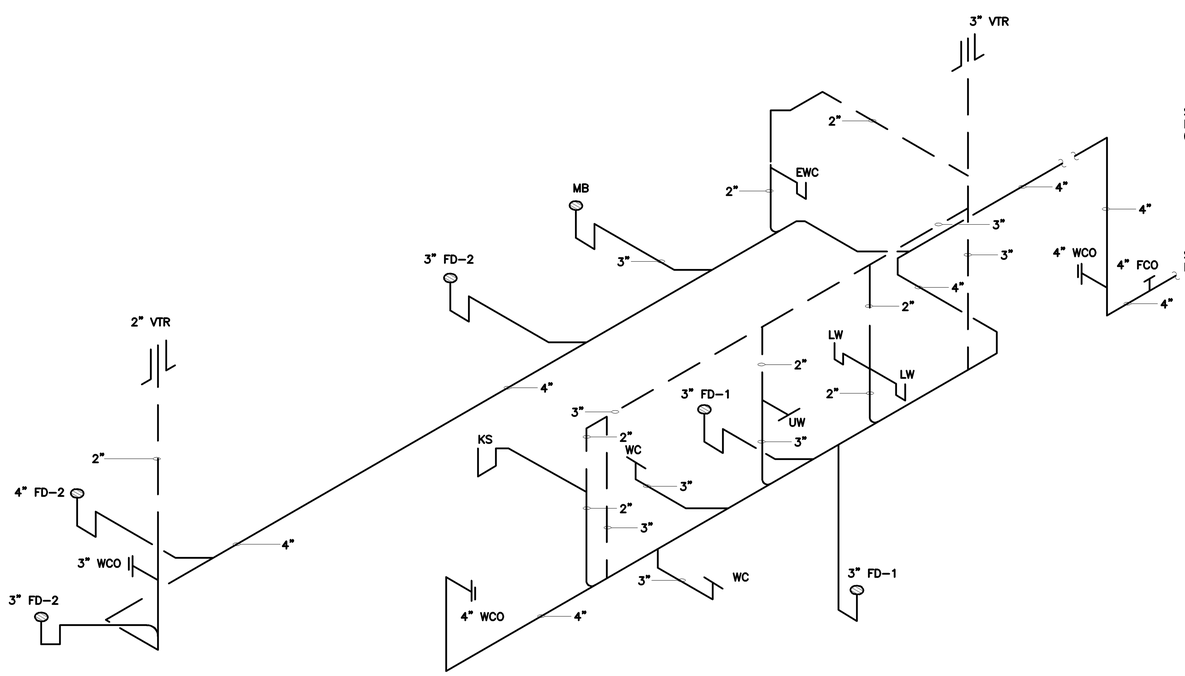

SANITARY RISER

NTS

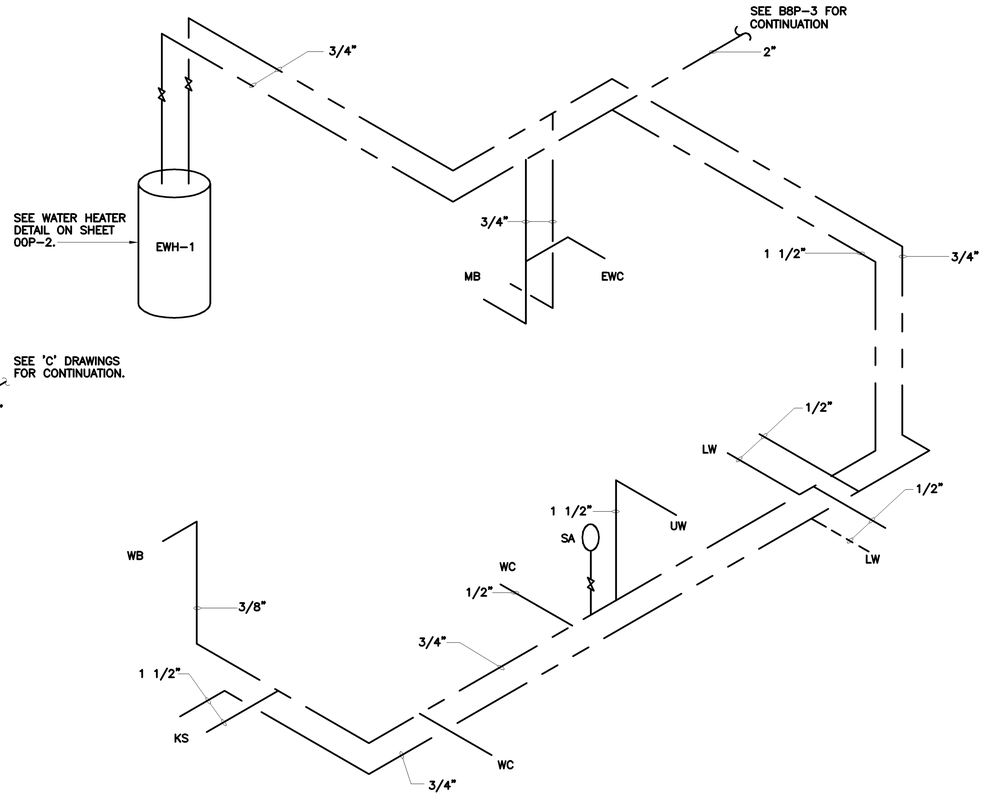

COUNTY WATER RISER

NTS

RECORD DRAWING

C.E. BAILEY & ASSOCIATES, INC.
CONSULTING ENGINEERS
ORLANDO, CLEARWATER & FORT LAUDERDALE, FLORIDA

NO.	DATE	DRWN	CHK'D	DESCRIPTION
1	11/98	FXP	ASG	RECORD DRAWING

REVISIONS

DESIGNED BY: WRH
DRAWN BY: RMM,SFP
CHECKED BY/DATE: WRH/9-91
APPRV'D BY/DATE: WRH/9-91

CAMP DRESSER & McKEE

THIS DRAWING HAS BEEN REVISED BY HAZEN AND SAWYER, P.C. TO REFLECT MODIFICATIONS MADE DURING CONSTRUCTION

environmental engineers, scientists, planners, & management consultants CDM

ARLINGTON COUNTY, VIRGINIA
WATER POLLUTION CONTROL PLANT
UPGRADE AND EXPANSION- PHASE IIB

PRELIMINARY TREATMENT BUILDING
PLUMBING
RISER DIAGRAMS

SCALE NOTE
SCALE BAR SHOWN BELOW IS ONE INCH LONG ON A FULL SIZE DRAWING. WHEN SCALING DRAWINGS, MEASURE BAR TO DETERMINE IF SCALES SHOWN WILL REQUIRE ADJUSTING.
ONE INCH

CONTRACT NO. 90-02-WPC
YEAR 1991
LOCATION CODE B8
SPECIALTY CODE P
PROJECT NO. 5002-33
FILE NAME B8P1.DWG
DRAWING NO. B8P-1
SHEET NO. 219

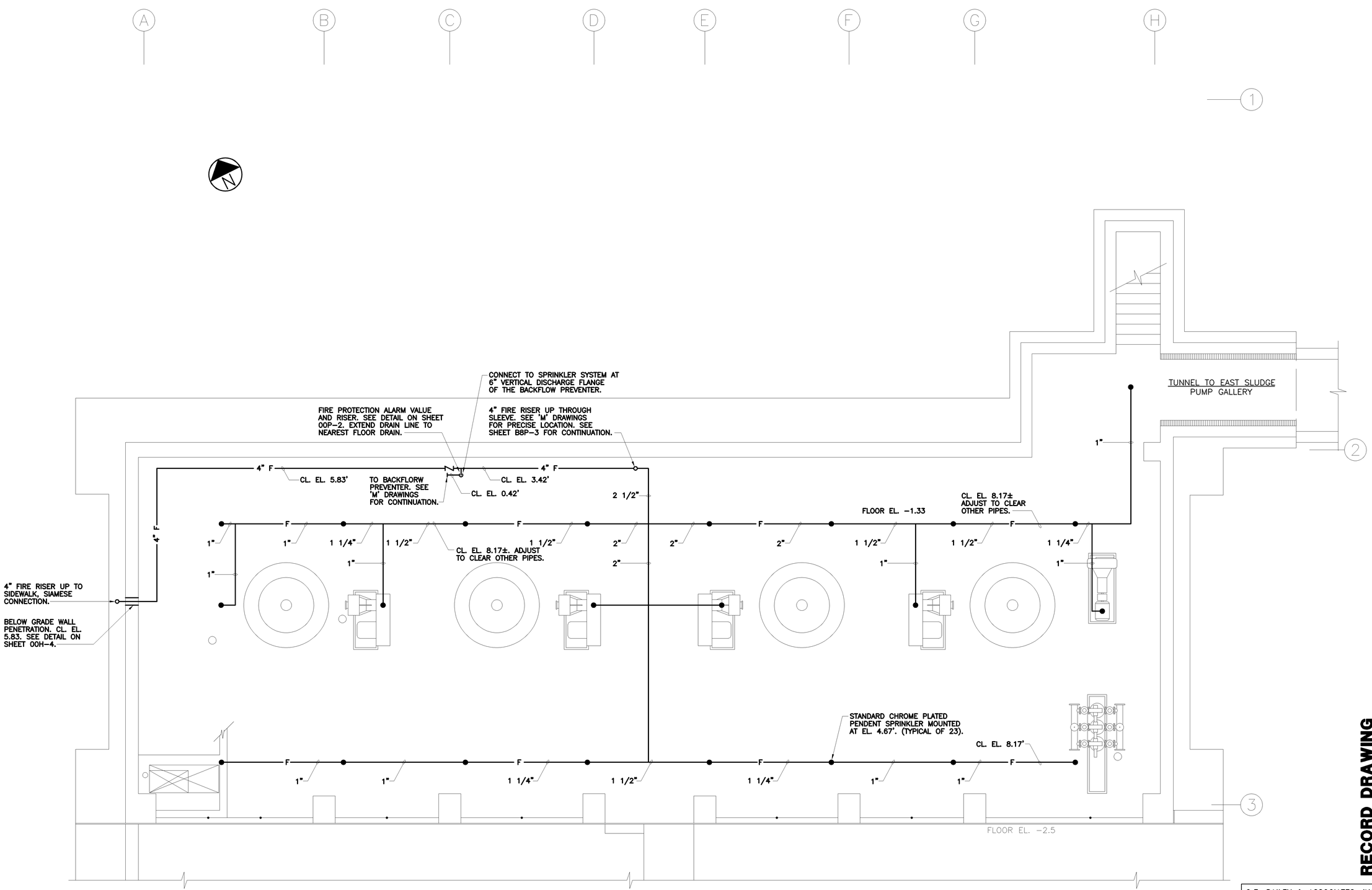

PLAN AT EL. 7.0

SCALE: 1/4"=1'-0"

RECORD DRAWING

C.E. BAILEY & ASSOCIATES, INC.
CONSULTING ENGINEERS
ORLANDO, CLEARWATER & FORT LAUDERDALE, FLORIDA

NO.	DATE	DRWN	CHK'D	DESCRIPTION
1	9/97	FXP	ASG	RECORD DRAWING

REVISIONS

DESIGNED BY: WRH
DRAWN BY: RMM,SFP
CHECKED BY/DATE: WRH/9-91
APPRV'D BY/DATE: WRH/9-91

CAMP DRESSER & McKEE

THIS DRAWING HAS BEEN REVISED BY HAZEN AND SAWYER, P.C. TO REFLECT MODIFICATIONS MADE DURING CONSTRUCTION

environmental engineers, scientists, planners, & management consultants. CDM

ARLINGTON COUNTY, VIRGINIA
WATER POLLUTION CONTROL PLANT
UPGRADE AND EXPANSION- PHASE IIB

PRELIMINARY TREATMENT BUILDING
FIRE PROTECTION
BASEMENT PLAN

SCALE NOTE

SCALE BAR SHOWN BELOW IS ONE INCH LONG ON A FULL SIZE DRAWING. WHEN SCALING DRAWINGS, MEASURE BAR TO DETERMINE IF SCALES SHOWN WILL REQUIRE ADJUSTING.

ONE INCH

CONTRACT NO. 90-02-WPC
YEAR 1991
LOCATION CODE B8
SPECIALTY CODE H
PROJECT NO. 5002-33
FILE NAME B8P2.DWG
DRAWING NO. B8P-2
SHEET NO. 220

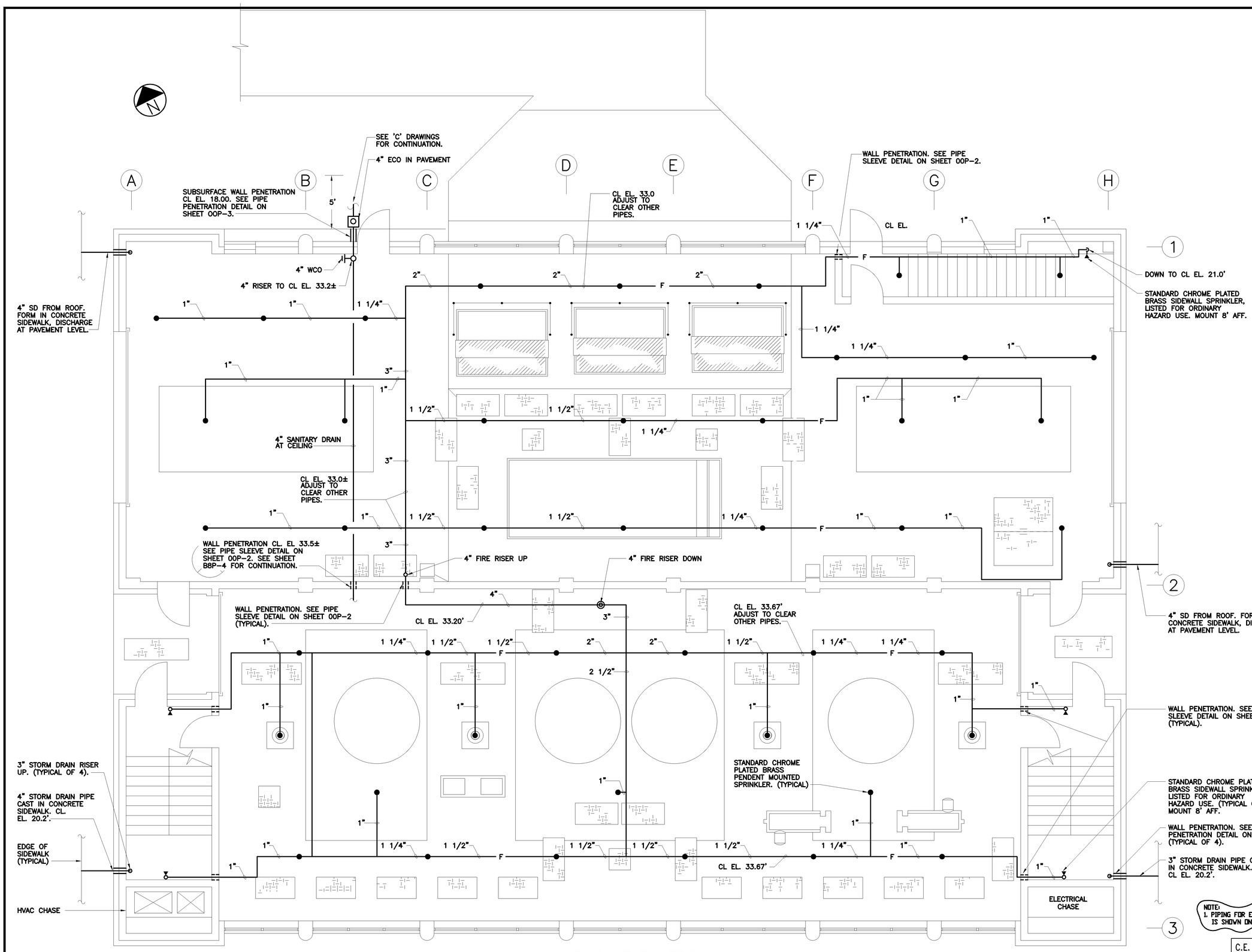

PLAN AT EL. 35.0

SCALE: 1/4"=1'-0"

REVISIONS				
NO.	DATE	DRWN	CHK'D	DESCRIPTION
1	9/97	FXP	ASG	RECORD DRAWING

DESIGNED BY: WRH
DRAWN BY: RMM,SFP
CHECKED BY/DATE: WRH/9-91
APPRV'D BY/DATE: WRH/9-91

CAMP DRESSER & McKEE

THIS DRAWING HAS BEEN REVISED BY HAZEN AND SAWYER, P.C. TO REFLECT MODIFICATIONS MADE DURING CONSTRUCTION

environmental engineers, scientists, planners, & management consultants CDM

ARLINGTON COUNTY, VIRGINIA
WATER POLLUTION CONTROL PLANT
UPGRADE AND EXPANSION- PHASE IIB

PRELIMINARY TREATMENT BUILDING
PLUMBING AND FIRE PROTECTION
1ST. FLOOR PLAN

SCALE NOTE

SCALE BAR SHOWN BELOW IS ONE INCH LONG ON A FULL SIZE DRAWING. WHEN SCALING DRAWINGS, MEASURE BAR TO DETERMINE IF SCALES SHOWN WILL REQUIRE ADJUSTING.

ONE INCH

RECORD DRAWING

CONTRACT NO. 90-02-WPC
YEAR 1991
LOCATION CODE B8
SPECIALTY CODE P
PROJECT NO. 5002-33
FILE NAME B8P3.DWG
DRAWING NO. B8P-3
SHEET NO. 221

C.E. BAILEY & ASSOCIATES, INC.
CONSULTING ENGINEERS
ORLANDO, CLEARWATER & FORT LAUDERDALE, FLORIDA

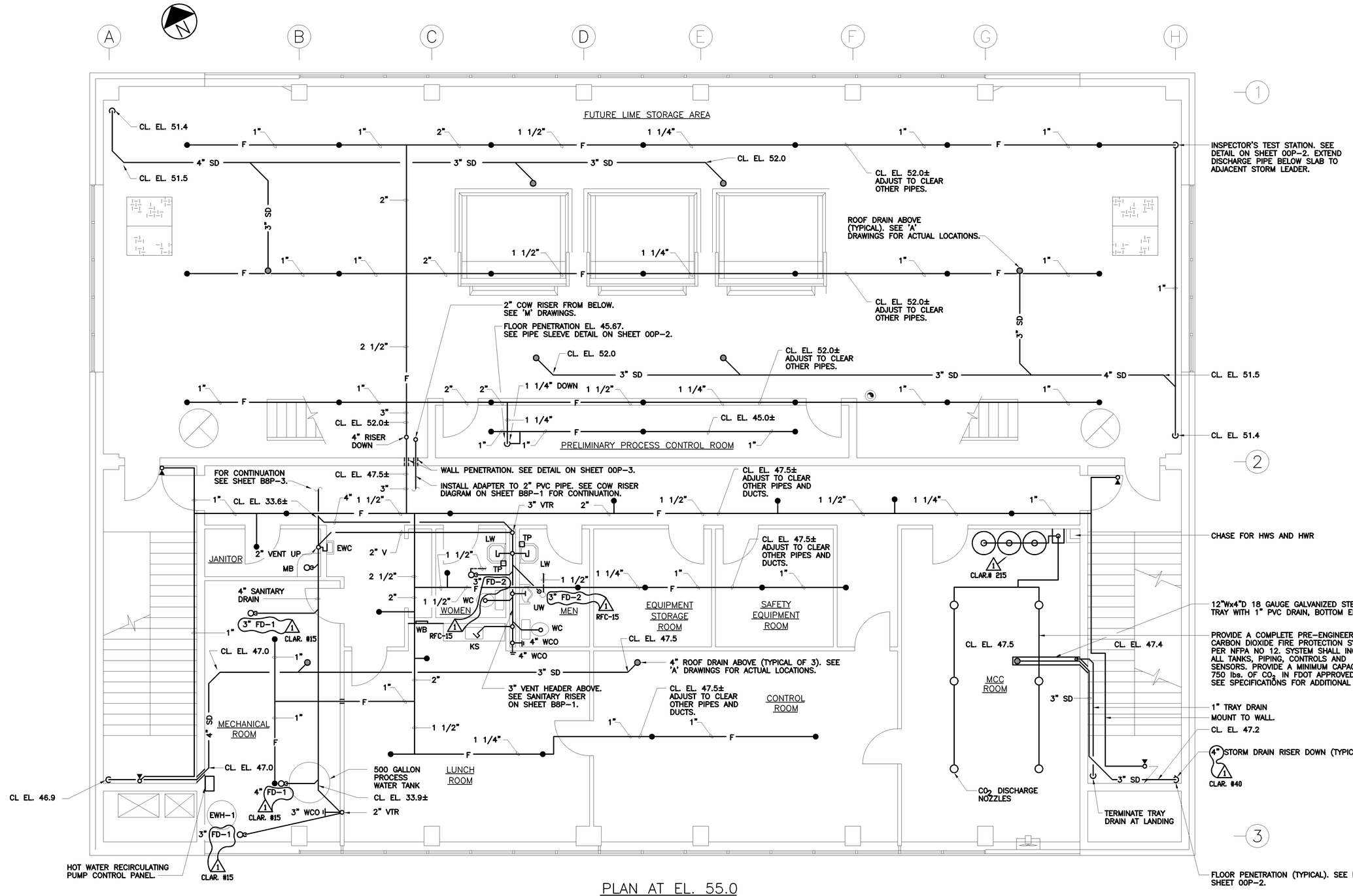

PLAN AT EL. 55.0

SCALE: 1/4"=1'-0"

RECORD DRAWING

NO.	DATE	DRWN	CHK'D	DESCRIPTION
1	9/97	FXP	ASG	RECORD DRAWING

REVISIONS

DESIGNED BY: WRH
DRAWN BY: RMM,SFP
CHECKED BY/DATE: WRH/9-91
APPRV'D BY/DATE: WRH/9-91

CAMP DRESSER & McKEE

THIS DRAWING HAS BEEN REVISED BY HAZEN AND SAWYER, P.C. TO REFLECT MODIFICATIONS MADE DURING CONSTRUCTION

CDM environmental engineers, scientists, planners, & management consultants

ARLINGTON COUNTY, VIRGINIA
WATER POLLUTION CONTROL PLANT
UPGRADE AND EXPANSION- PHASE IIB

PRELIMINARY TREATMENT BUILDING
PLUMBING
2ND. FLOOR PLAN

SCALE NOTE

SCALE BAR SHOWN BELOW IS ONE INCH LONG ON A FULL SIZE DRAWING. WHEN SCALING DRAWINGS, MEASURE BAR TO DETERMINE IF SCALES SHOWN WILL REQUIRE ADJUSTING.

ONE INCH

CONTRACT NO. 90-02-WPC
YEAR 1991
LOCATION CODE B8
SPECIALTY CODE P
PROJECT NO. 5002-33
FILE NAME B8P4.DWG
DRAWING NO. B8P-4
SHEET NO. 222

C.E. BAILEY & ASSOCIATES, INC.
CONSULTING ENGINEERS
ORLANDO, CLEARWATER & FORT LAUDERDALE, FLORIDA

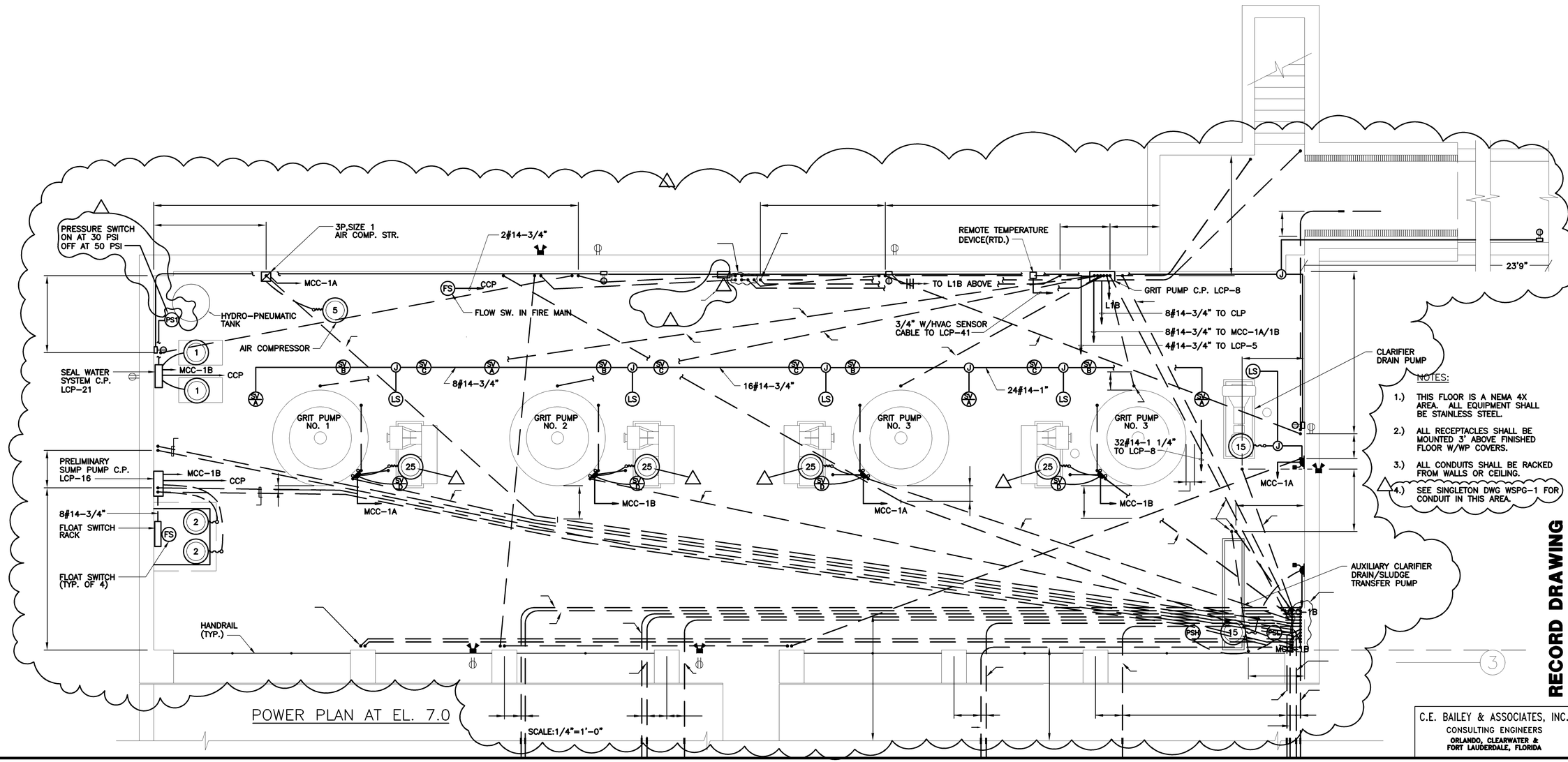

POWER PLAN AT EL. 7.0

SCALE:1/4"=1'-0"

RECORD DRAWING

C.E. BAILEY & ASSOCIATES, INC.
CONSULTING ENGINEERS
ORLANDO, CLEARWATER & FORT LAUDERDALE, FLORIDA

NO.	DATE	DRWN	CHK'D	DESCRIPTION
1	12/98	FXP	ASG	RECORD DRAWING

REVISIONS

DESIGNED BY: SEB
DRAWN BY: JSG
CHECKED BY/DATE: CEB/9-91
APPR'D BY/DATE: CEB/9-91

CAMP DRESSER & McKEE
HAZEN AND SAWYER, P.C.
CDM
environmental engineers, scientists, planners, & management consultants

ARLINGTON COUNTY, VIRGINIA
WATER POLLUTION CONTROL PLANT
UPGRADE AND EXPANSION- PHASE B

PRELIMINARY TREATMENT BUILDING
ELECTRICAL
BASEMENT POWER PLAN

SCALE NOTE
SCALE BAR SHOWN BELOW IS ONE INCH LONG ON A FULL SIZE DRAWING. WHEN SCALING DRAWINGS, MEASURE BAR TO DETERMINE IF SCALES SHOWN WILL REQUIRE ADJUSTING.
ONE INCH

CONTRACT NO.	90-02-WPC
YEAR	1991
LOCATION CODE	B8
SPECIALTY CODE	E
PROJECT NO.	5002-33
FILE NAME	B8E-0001.DWG
DRAWING NO.	B8E-1
SHEET NO.	223

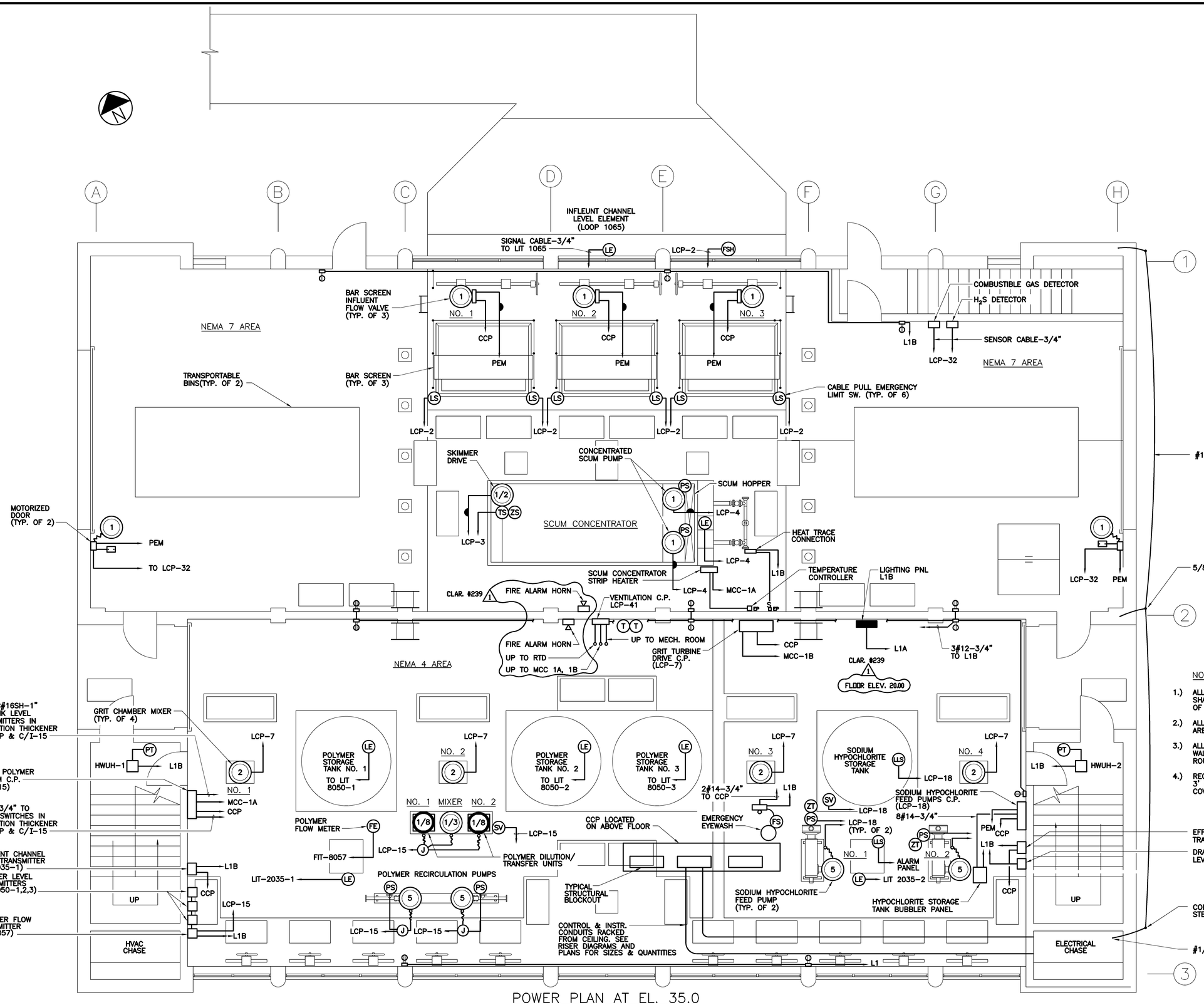

POWER PLAN AT EL. 35.0

SCALE: 1/4"=1'-0"

NOTES:

1.) ALL EQUIPMENT IN NEMA 7 AREA SHALL MEET ALL REQUIREMENTS OF A CLASS 1, DIVISION 2 AREA.

2.) ALL CONDUITS EXITING THE NEMA 7 AREA SHALL BE SEALED.

3.) ALL CONDUITS SHALL BE RACKED TO WALLS OR CEILING. COORDINATE ROUTING WITH ENGINEER IN FIELD.

4.) RECEPTACLE SHALL BE MOUNTED 3' ABOVE FINISHED FLOOR W/WP COVERS.

NO.	DATE	DRWN	CHK'D	DESCRIPTION
1	9/97	FXP	ASG	RECORD DRAWING

REVISIONS

DESIGNED BY: SEB
DRAWN BY: TRH
CHECKED BY/DATE: CEB/9-91
APPRV'D BY/DATE: CEB/9-91

CAMP DRESSER & McKEE

THIS DRAWING HAS BEEN REVISED BY HAZEN AND SAWYER, P.C. TO REFLECT MODIFICATIONS MADE DURING CONSTRUCTION

environmental engineers, scientists, planners, & management consultants. CDM

ARLINGTON COUNTY, VIRGINIA
WATER POLLUTION CONTROL PLANT
UPGRADE AND EXPANSION- PHASE B

PRELIMINARY TREATMENT BUILDING
ELECTRICAL
1st FLOOR POWER PLAN

SCALE NOTE

SCALE BAR SHOWN BELOW IS ONE INCH LONG ON A FULL SIZE DRAWING. WHEN SCALING DRAWINGS, MEASURE BAR TO DETERMINE IF SCALES SHOWN WILL REQUIRE ADJUSTING.

← ONE INCH →

RECORD DRAWING

CONTRACT NO. 90-02-WPC
YEAR 1991
LOCATION CODE B8
SPECIALTY CODE E
PROJECT NO. 5002-33
FILE NAME B8E-0002.DWG
DRAWING NO. B8E-2
SHEET NO. 224

C.E. BAILEY & ASSOCIATES, INC.
CONSULTING ENGINEERS
ORLANDO, CLEARWATER & FORT LAUDERDALE, FLORIDA

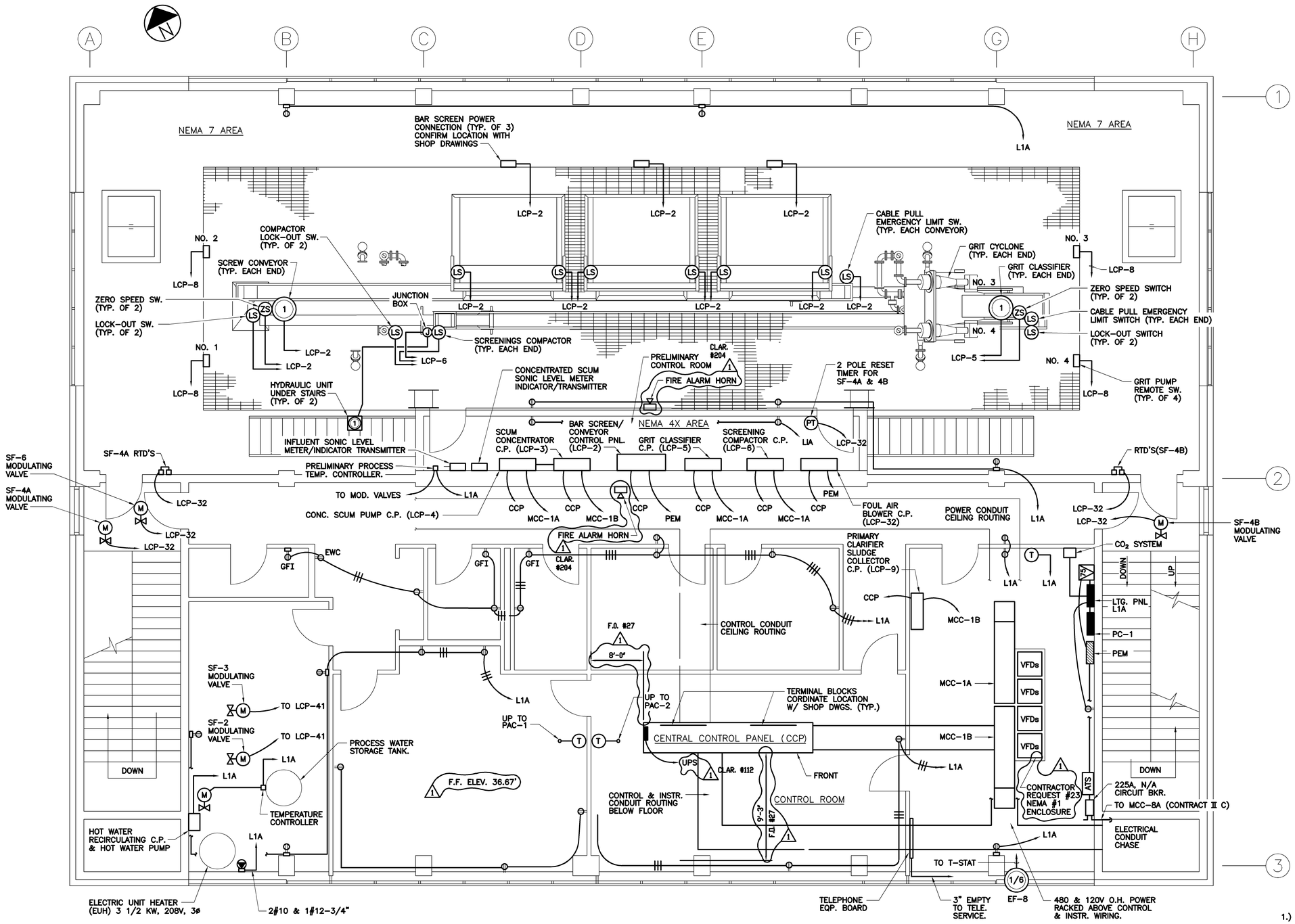

POWER PLAN AT EL. 36.67

SCALE: 1/4"=1'-0"

NOTES:

1.) ALL EQUIPMENT IN NEMA 7 AREA SHALL MEET ALL REQUIREMENTS OF A CLASS 1, DIVISION 2 AREA.

2.) ALL CONDUITS EXITING THE NEMA 7 AREA SHALL BE SEALED.

3.) ALL CONDUITS SHALL BE RACKED TO WALLS OR CEILING. COORDINATE ROUTING WITH ENGINEER IN FIELD.

RECORD DRAWING

C.E. BAILEY & ASSOCIATES, INC.
CONSULTING ENGINEERS
ORLANDO, CLEARWATER & FORT LAUDERDALE, FLORIDA

NO.	DATE	DRWN	CHK'D	DESCRIPTION
1	9/97	FXP	ASG	RECORD DRAWING

REVISIONS

DESIGNED BY: SEB
DRAWN BY: TRH
CHECKED BY/DATE: CEB/9-91
APPRV'D BY/DATE: CEB/9-91

CAMP DRESSER & McKEE
environmental engineers, scientists, planners, & management consultants
CDM

THIS DRAWING HAS BEEN REVISED BY HAZEN AND SAWYER, P.C. TO REFLECT MODIFICATIONS MADE DURING CONSTRUCTION

ARLINGTON COUNTY, VIRGINIA
WATER POLLUTION CONTROL PLANT
UPGRADE AND EXPANSION- PHASE B

ELECTRICAL
2nd FLOOR POWER PLAN

SCALE NOTE

SCALE BAR SHOWN BELOW IS ONE INCH LONG ON A FULL SIZE DRAWING. WHEN SCALING DRAWINGS, MEASURE BAR TO DETERMINE IF SCALES SHOWN WILL REQUIRE ADJUSTING.

ONE INCH

CONTRACT NO. 90-02-WPC
YEAR 1991
LOCATION CODE B8
SPECIALTY CODE E
PROJECT NO. 5002-33
FILE NAME B8E-0003.DWG
DRAWING NO. B8E-3
SHEET NO. 225

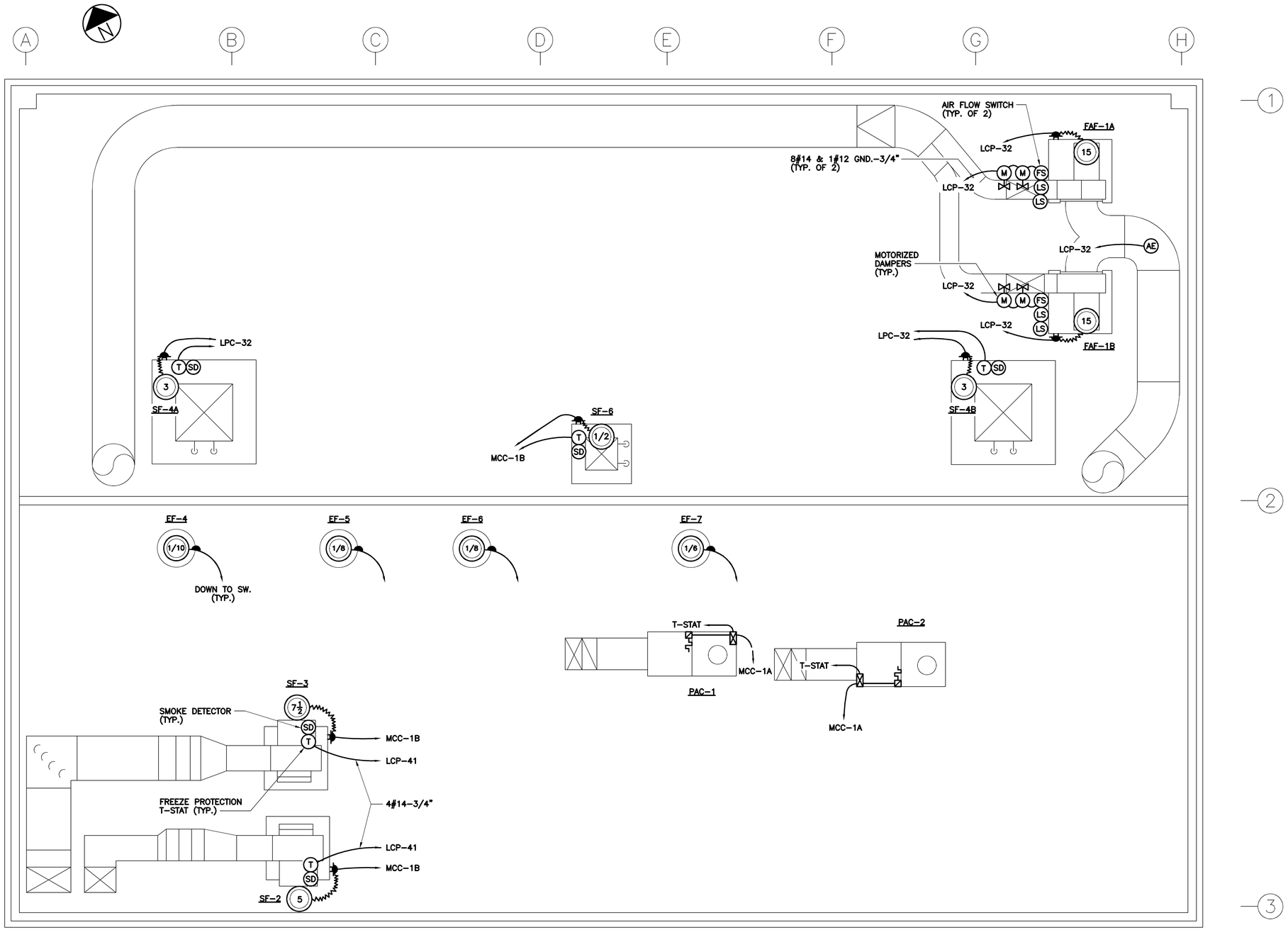

ELECTRICAL PLAN AT EL. 46.83

SCALE: 1/4"=1'-0"

NO.	DATE	DRWN	CHK'D	DESCRIPTION
1	9/97	FXP	ASG	RECORD DRAWING

REVISIONS

DESIGNED BY: SEB
DRAWN BY: TRH
CHECKED BY/DATE: CEB/9-91
APPRV'D BY/DATE: CEB/9-91

CAMP DRESSER & McKEE

THIS DRAWING HAS BEEN REVISED BY HAZEN AND SAWYER, P.C. TO REFLECT MODIFICATIONS MADE DURING CONSTRUCTION

CDM

environmental engineers, scientists, planners, & management consultants

ARLINGTON COUNTY, VIRGINIA
WATER POLLUTION CONTROL PLANT
UPGRADE AND EXPANSION- PHASE II

ELECTRICAL
ROOF PLAN

RECORD DRAWING

SCALE NOTE

SCALE BAR SHOWN BELOW IS ONE INCH LONG ON A FULL SIZE DRAWING. WHEN SCALING DRAWINGS, MEASURE BAR TO DETERMINE IF SCALES SHOWN WILL REQUIRE ADJUSTING.

ONE INCH

CONTRACT NO. 90-02-WPC
YEAR 1991
LOCATION CODE B8
SPECIALTY CODE E
PROJECT NO. 5002-33
FILE NAME B8E-0004.DWG
DRAWING NO. B8E-4
SHEET NO. 226

C.E. BAILEY & ASSOCIATES, INC.
CONSULTING ENGINEERS
ORLANDO, CLEARWATER & FORT LAUDERDALE, FLORIDA

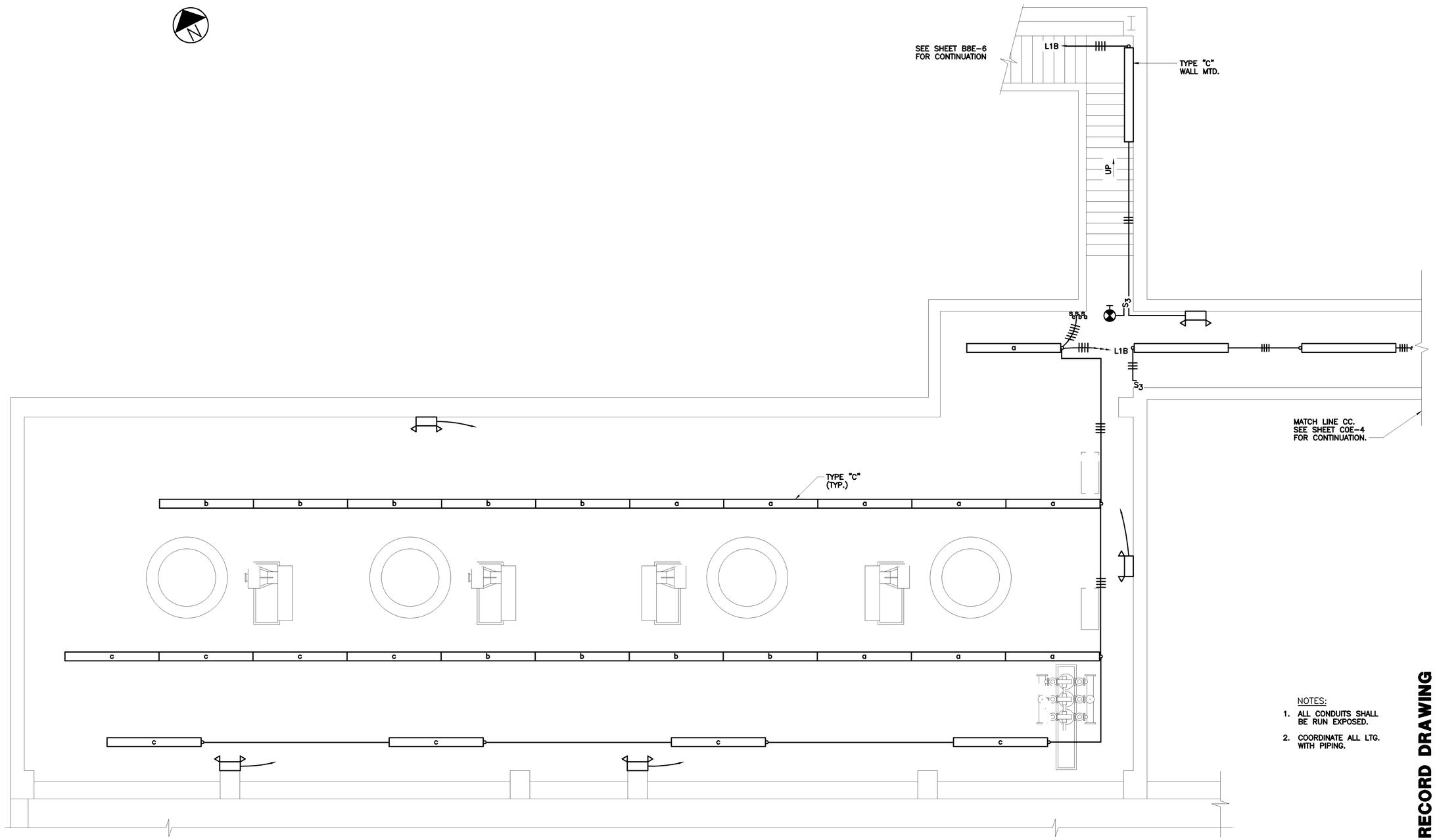

LIGHTING PLAN AT EL. -1.33

SCALE: 1/4"=1'-0"

NOTES:

1. ALL CONDUITS SHALL BE RUN EXPOSED.
2. COORDINATE ALL LTG. WITH PIPING.

RECORD DRAWING

C.E. BAILEY & ASSOCIATES, INC.
CONSULTING ENGINEERS
ORLANDO, CLEARWATER & FORT LAUDERDALE, FLORIDA

NO.	DATE	DRWN	CHK'D	DESCRIPTION
				REVISIONS
1	9/97	FXP	ASG	RECORD DRAWING

DESIGNED BY: SEB
DRAWN BY: JSG
CHECKED BY/DATE: CEB/9-91
APPR'D BY/DATE: CEB/9-91

CAMP DRESSER & McKEE

THIS DRAWING HAS BEEN REVISED BY HAZEN AND SAWYER, P.C. TO REFLECT MODIFICATIONS MADE DURING CONSTRUCTION

CDM
environmental engineers, scientists, planners, & management consultants

ARLINGTON COUNTY, VIRGINIA
WATER POLLUTION CONTROL PLANT
UPGRADE AND EXPANSION- PHASE B

PRELIMINARY TREATMENT BUILDING
ELECTRICAL
BASEMENT LIGHTING PLAN

SCALE NOTE

SCALE BAR SHOWN BELOW IS ONE INCH LONG ON A FULL SIZE DRAWING. WHEN SCALING DRAWINGS, MEASURE BAR TO DETERMINE IF SCALES SHOWN WILL REQUIRE ADJUSTING.

ONE INCH

CONTRACT NO.	
90-02-WPC	
YEAR	1991
LOCATION CODE	SPECIALTY CODE
B8	E
PROJECT NO.	
5002-33	
FILE NAME	
B8E-0005.DWG	
DRAWING NO.	
B8E-5	
SHEET NO.	227

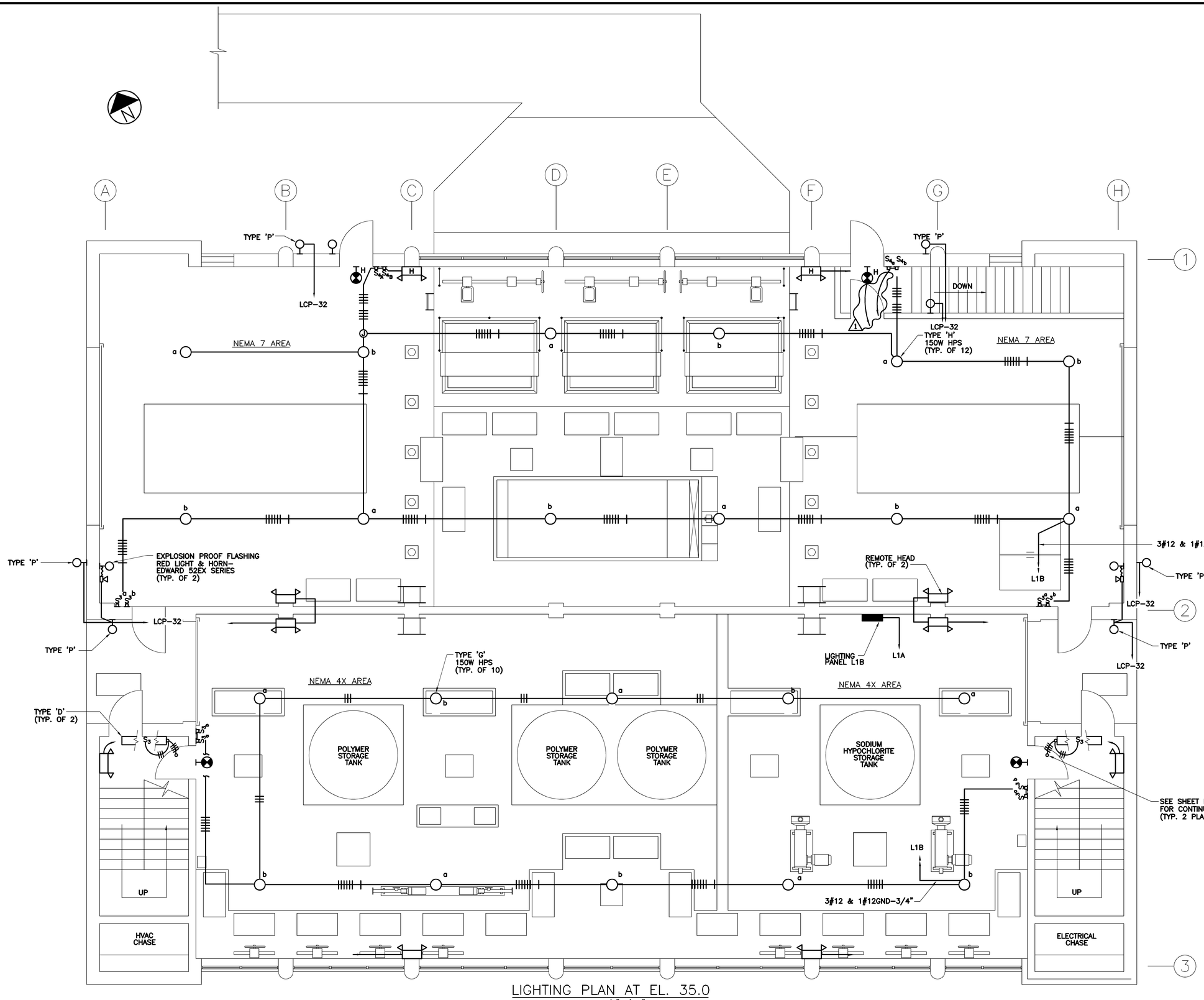

LIGHTING PLAN AT EL. 35.0

SCALE: 1/4"=1'-0"

NOTE:
1.) COORDINATE ALL LIGHTING & CONDUIT W/MECHANICAL

NO.	DATE	DRWN	CHK'D	DESCRIPTION
1	9/97	FXP	ASG	RECORD DRAWING

REVISIONS

DESIGNED BY: SEB
DRAWN BY: TRH
CHECKED BY/DATE: CEB/9-91
APPRV'D BY/DATE: CEB/9-91

CAMP DRESSER & McKEE

THIS DRAWING HAS BEEN REVISED BY HAZEN AND SAWYER, P.C. TO REFLECT MODIFICATIONS MADE DURING CONSTRUCTION

environmental engineers, scientists, planners, & management consultants. CDM

ARLINGTON COUNTY, VIRGINIA
WATER POLLUTION CONTROL PLANT
UPGRADE AND EXPANSION- PHASE B

PRELIMINARY TREATMENT BUILDING
ELECTRICAL
1ST FLOOR LIGHTING PLAN

SCALE NOTE

SCALE BAR SHOWN BELOW IS ONE INCH LONG ON A FULL SIZE DRAWING. WHEN SCALING DRAWINGS, MEASURE BAR TO DETERMINE IF SCALES SHOWN WILL REQUIRE ADJUSTING.

ONE INCH

RECORD DRAWING

CONTRACT NO.	90-02-WPC
YEAR	1991
LOCATION CODE	B8
SPECIALTY CODE	E
PROJECT NO.	5002-33
FILE NAME	B8E-0006.DWG
DRAWING NO.	B8E-6
SHEET NO.	228

C.E. BAILEY & ASSOCIATES, INC.
CONSULTING ENGINEERS
ORLANDO, CLEARWATER & FORT LAUDERDALE, FLORIDA

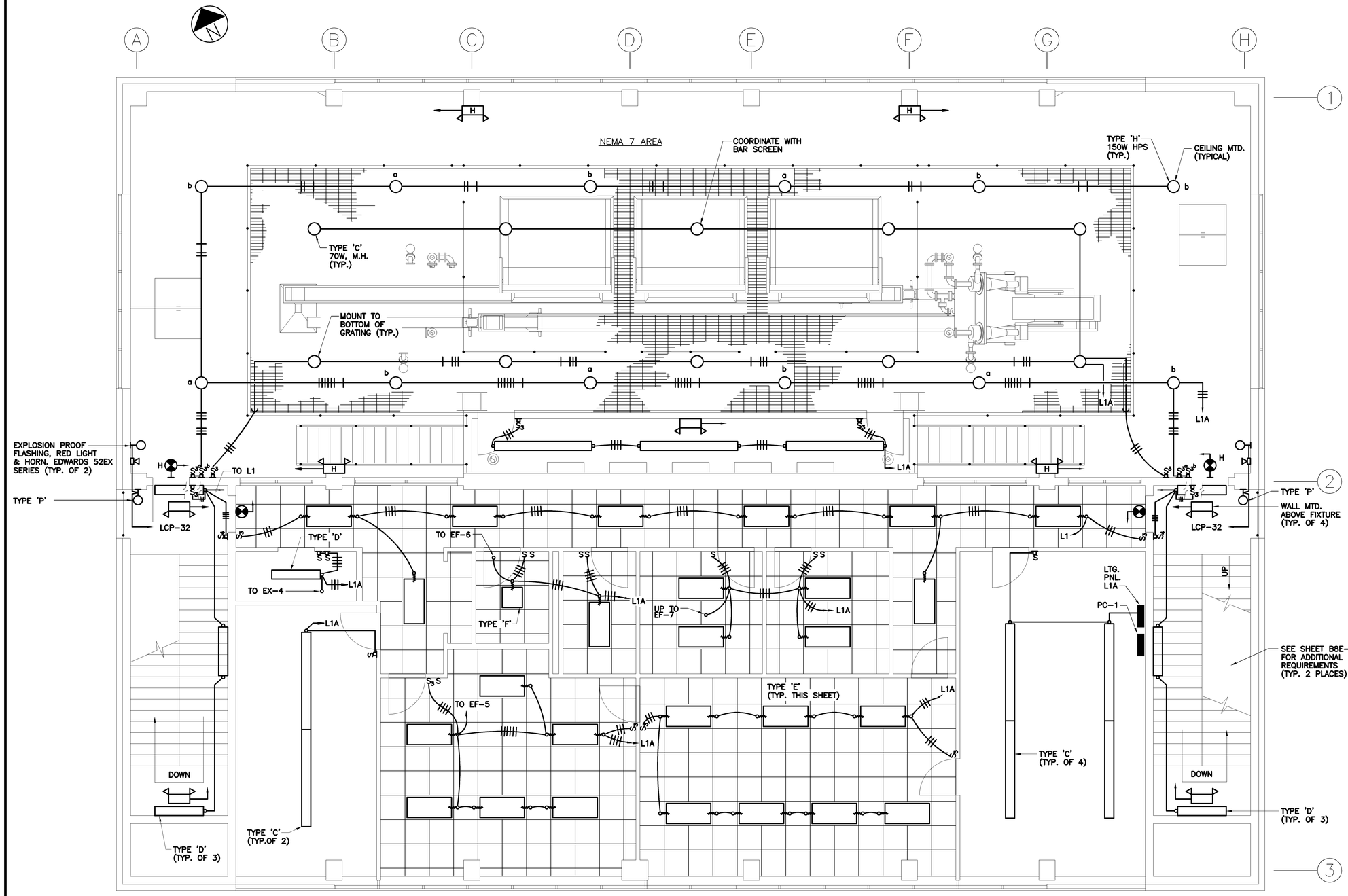

LIGHTING PLAN AT EL. 36.67

SCALE: 1/4"=1'-0"

1. COORDINATE ALL LIGHTING WITH PIPING.
2. CONDUIT SHALL BE CONCEALED IN AREAS WITH DROPPED CEILINGS. ALL OTHER CONDUIT SHALL BE RUN EXPOSED.

NO.	DATE	DRWN	CHK'D	REVISIONS
1	9/97	FXP	ASG	RECORD DRAWING

DESCRIPTION

DESIGNED BY: SEB
DRAWN BY: TRH
CHECKED BY/DATE: CEB/9-91
APPRV'D BY/DATE: CEB/9-91

CAMP DRESSER & McKEE

THIS DRAWING HAS BEEN REVISED BY HAZEN AND SAWYER, P.C. TO REFLECT MODIFICATIONS MADE DURING CONSTRUCTION

environmental engineers, scientists, planners, & management consultants CDM

ARLINGTON COUNTY, VIRGINIA
WATER POLLUTION CONTROL PLANT
UPGRADE AND EXPANSION- PHASE IIB

PRELIMINARY TREATMENT BUILDING
ELECTRICAL
2nd FLOOR LIGHTING PLAN

RECORD DRAWING

SCALE NOTE

SCALE BAR SHOWN BELOW IS ONE INCH LONG ON A FULL SIZE DRAWING. WHEN SCALING DRAWINGS, MEASURE BAR TO DETERMINE IF SCALES SHOWN WILL REQUIRE ADJUSTING.

ONE INCH

CONTRACT NO. 90-02-WPC
YEAR 1991
LOCATION CODE B8
SPECIALTY CODE E
PROJECT NO. 5002-333
FILE NAME B8E-0007.DWG
DRAWING NO. B8E-7
SHEET NO. 229

C.E. BAILEY & ASSOCIATES, INC.
CONSULTING ENGINEERS
ORLANDO, CLEARWATER & FORT LAUDERDALE, FLORIDA

480V,600A,3ø,3W BUS, 65,000 A.I.C.

400A,3P (CLB)

480V,400A,3ø,3W BUS, 14,000 A.I.C. (POWER PANEL CONSTRUCTION)

600A,3P MAIN BKR.

ADD. #2

3#6 & 1#10 GND–1"
3#12, 2#14, 1#10 GND.–3/4"
3#10 & 1#10 GND.–3/4"
(2) 2/C#16 SH.–3/4" GRS
3#10 & 1#10 GND–3/4"
3#12 & 1#12 GND–3/4"
3#1/0 & 1#6 GND.–2"
3#10,3#14 & 1#12 GND.–1"
3–350MCM & 1#1/0 GND–3"

50A,3P — ADD. #2 — LCP–8
50A,3P — ADD. #2 — LCP–8
40A,3P
40A,3P
150A,3P CLB

60A,3P WP — ADD. #2 — (25) — NO. 1
60A,3P WP — ADD. #2 — (25) — NO. 3
GRIT PUMPS

60A,3P WP — (15) LS — CLARIFIER DRAIN PUMP

POWER PNL. P2A SCUM PUMP STA. (SEE RISER)

60A,3P WP — (1/2) — SUPPLY FAN SF–6

20A,3P
20A,3P
20A,3P
20A,3P
30A,3P
30A,3P
20A,3P

LCP–9 (TYP. OF 4)

CONTRACTOR REQUEST #1 NEMA #1 ENCLOSURE

VFD — 115, 115A, 139, 139A — FS SV — 3#10, 1#10 GND, 1T1, 1T2, 1T3; 5#14, P1, P2, 8, 120, 120A — 30A,3P WP — (7½) — NO. 1
VFD — 2–115, 2–115A, 2–139, 2–139A — FS SV — 3#10, 1#10 GND, 2T1, 2T2, 2T3; 5#14, 2P1, 2P2, 2–8, 2–120, 2–120A — 30A,3P WP — DISCONNECT SWITCH & STOP CONTROL, (TYP) — (7½) — NO. 2
SLUDGE PUMPS
VFD — 5–115, 5–115A, 5–139, 5–139A — FS SV — 3#10, 1#10 GND, 5#14, 5–P1, 5–P2, 5–8, 5–120, 5–120A — 30A,3P WP — (7½) — NO. 5
VFD — 6–115, 6–115A, 6–139, 6–139A — FS SV — 3#10, 1#10 GND, 5#14, 6–P1, 6–P2, 6–8, 6–120, 6–120A — 30A,3P WP — DISCONNECT SWITCH & STOP CONTROL, (TYP) — (7½) — NO. 6
SLUDGE PUMPS

4#14–3/4"

3#10, 1#10 GND–3/4"

4#14–3/4", LPC–2A, B, C, D — LCP–2 — CCP — 12#14–3/4", 409, 409A, 410, 410A, 2617, 2618, 2629, 2630, AND THE FOLLOWING SPARES: LPC–6–1, LPC–6–2, LPC6–3, LPC6–4 — SCREENINGS COMPACTOR C.P. LCP–6 — NO. 1 NO. 2 — SCREENINGS COMPACTOR HYDRAULIC UNIT ①

8#14 3/4" — LCP–8 — CCP — 16#14–1": TO CCP, 2594, 2597, 2598, 414, 414A, 415, 415A, AND 8 TO CCP THEN DOWN TO LCP–8 IN BASEMENT, 283, 285, 287, 289, 292, 292A, 295, 295A — GRIT CLASSIFIER C.P. LCP–5 — NO. 1 NO. 2 — GRIT CLASSIFIER

CCP — 10#14–3/4" — 4#14–3/4" — SEAL WATER C.P. LCP–21 — PS1 PS2 — NO. 1 NO. 2 — SEAL WATER PUMPS

3#12, 1#12 GND–3/4"

MCC–1A

480V,400A,3ø,3W BUS, 14,000 A.I.C. (POWER PANEL CONSTRUCTION)

20A,3P
30A,3P
30A,3P
15A,3P
30A,3P
30A,3P
30A,3P
30A,3P
30A,3P

30#14–1 1/4" TO CCP; (26) TO: 958, 958A, 2788, 2789, 960, 960A, 2791, 2792, 2875, 2876, 2869, 2870, 2878, 2879, 2872, 2873, 2808, 2809, 2811, 2812, 944, 944A, 945, 945A, 2785, 2786; (4)#14 TO CCP THEN CONTROL CABLE TO GST & FLOTATION: 281A, 282, 283A, 284

6–TSP#16–1 1/4" TO CCP, ID CABLES AS: LIT–2035–1, FIT–8057, LIT–8060–1A, LIT–8060–2A, CABLES LIT–8060–1 & LIT–8060–2 LAND ON SPARE TERM BLOCKS IN CCP, THEN MULTI CABLE TO PNL I–10.

3#12–3/4", 300, 300A, GND
3#12–3/4", 297, 297A, GND
6#14–3/4", 294, 296, 322, 322A, 330, 330A
6#14–3/4", 287, 289, 318, 318A, 326, 326A

3#12, 1#12 GND–3/4" (PANEL #1, CIR. 5)

TANKS #1 #2 #3 — (LE) (LE) (LE) (FE) — FACTORY CABLE — FLOAT CABLE — FLOAT IN CONTAINMENT AREA

POLYMER LIQUID SYSTEM C.P. LCP–15 — (LS) (LS) (LE)

3#12, 1#12, GND–3/4"

2#14–3/4", 129, 129A — 3#12, 1/#12 GND–3/4", 2T1, 2T2, 2T3 — (1/8) — NO. 2
2#14–3/4", 115, 115A — 3#12, 1/#12 GND–3/4", 1T1, 1T2, 1T3 — (1/8) — NO. 1
POLYMER DILUTION/TRANSFER UNITS

(5) — NO. 2
(5) — NO. 1
POLYMER RECIRC. PUMPS

3#10 & 1#10 GND.–3/4"

2#14–3/4", LPC–4A, LPC–4B

LEVEL CONTROL INDICATOR TRANSMITTER — FACTORY CABLE — TRANSDUCER ON TOP OF SCUM TANK

CONC. SCUM PUMP C.P. LCP–4 — LCP–3 — CCP — 12#14–1"; (10) TO CCP; 2585, 2586, 2588, 2589, 2623, 2624, 323, 323A, 325, 325A, (2) TO CCP THEN CONTROL CABLE TO C–2 TO LCP–10 #LCP–10C & LCP–10D — 2#14, 5, 6 — (PS)

COMPRESSOR CONTROL PANEL — 3#12, 1#12 GND– 3/4", 1T1, 1T2, 1T3 — 2#14–3/4" — (PS) (SV) (SV) — (5) — AIR COMPRESSOR

30A,3P WP — (5) — NO. 1
30A,3P WP — DISCONNECT SWITCH & STOP CONTROL, (TYP) — 3#12, 1#12 GND– 3/4", 2T1, 2T2, 2T3 — (5) — NO. 2
CONCENTRATED SCUM PUMPS

3#12 & 1#12 GND–3/4"

3#10, 1#10 GND–3/4"

JUNCTION BOX IN ELECTRICAL CHASE — 15x15 THROUGH TO CCP — 10#14 UP TO CCP, 616, 616A, 617, 617A, 2766, 2767, 2769, 2770, 2772, 2773

3#10, 1#10 GND–3/4"

30A,3P NEMA 7 — PRIMARY CLARIFIERS NEW SUMP PUMP C.P. LCP–28 — 8#14–3/4" — FS FS FS — (3) — NO. 1
(3) — NO. 2
SUMP PUMPS

OVERHEAD CRANE

3#10, 1#10 GND–3/4" — CONC. SCUM HOPPER HEATER (15 KW) — (T)

3#10, 1#10 GND–3/4" — CONC. SCUM PIPE HTR (TYP. 3 SECTIONS) — (T)

30A, 3P WP — PAC–1 — (T)
30A, 3P WP — PAC–2 — (T)
PACKAGED AC UNIT ①

8'–9" SHOP DRAWING
5 SECTION ①

POWER PANEL	400A CLB POWER PANEL SECT.	3P, S1ZE 1 SPARE	3P, SIZE 2 GRIT PUMP NO. 1
		3P, SIZE 2 SPACE	3P, SIZE 2 GRIT PUMP NO. 3
	3P, SIZE 1 SPARE	3P, SIZE 1 SPACE	
	3P, SIZE 2 SPARE	3P, SIZE 2 CLARIFIER DRAIN PUMP NO. 1	600A, 3P MAIN NO. 1A (VM) VS
		150A,3P CLB POWER PANEL PC–1	
	SPACE		

NOTE
1. LAYOUT REVERSED IN SHOP DRAWING ①

MCC–1A FRONT VIEW

RECORD DRAWING

C.E. BAILEY & ASSOCIATES, INC.
CONSULTING ENGINEERS
ORLANDO, CLEARWATER & FORT LAUDERDALE, FLORIDA

NO.	DATE	DRWN	CHK'D	DESCRIPTION
1	12/98	FXP	ASG	RECORD DRAWING

REVISIONS

DESIGNED BY: SEB
DRAWN BY: JSG
CHECKED BY/DATE: CEB/9–91
APPR'D BY/DATE: CEB/9–91

CAMP DRESSER & McKEE

THIS DRAWING HAS BEEN REVISED BY HAZEN AND SAWYER, P.C. TO REFLECT MODIFICATIONS MADE DURING CONSTRUCTION

CDM environmental engineers, scientists, planners, & management consultants

ARLINGTON COUNTY, VIRGINIA
WATER POLLUTION CONTROL PLANT
UPGRADE AND EXPANSION– PHASE IB

PRELIMINARY TREATMENT BUILDING
ELECTRICAL
MCC–1A SINGLE LINE DIAGRAM

SCALE NOTE
SCALE BAR SHOWN BELOW IS ONE INCH LONG ON A FULL SIZE DRAWING. WHEN SCALING DRAWINGS, MEASURE BAR TO DETERMINE IF SCALES SHOWN WILL REQUIRE ADJUSTING.
ONE INCH

CONTRACT NO. 90–02–WPC
YEAR 1991
LOCATION CODE B8
SPECIALTY CODE E
PROJECT NO. 5002–33
FILE NAME B8E–0008.DWG
DRAWING NO. B8E–8
SHEET NO. 230

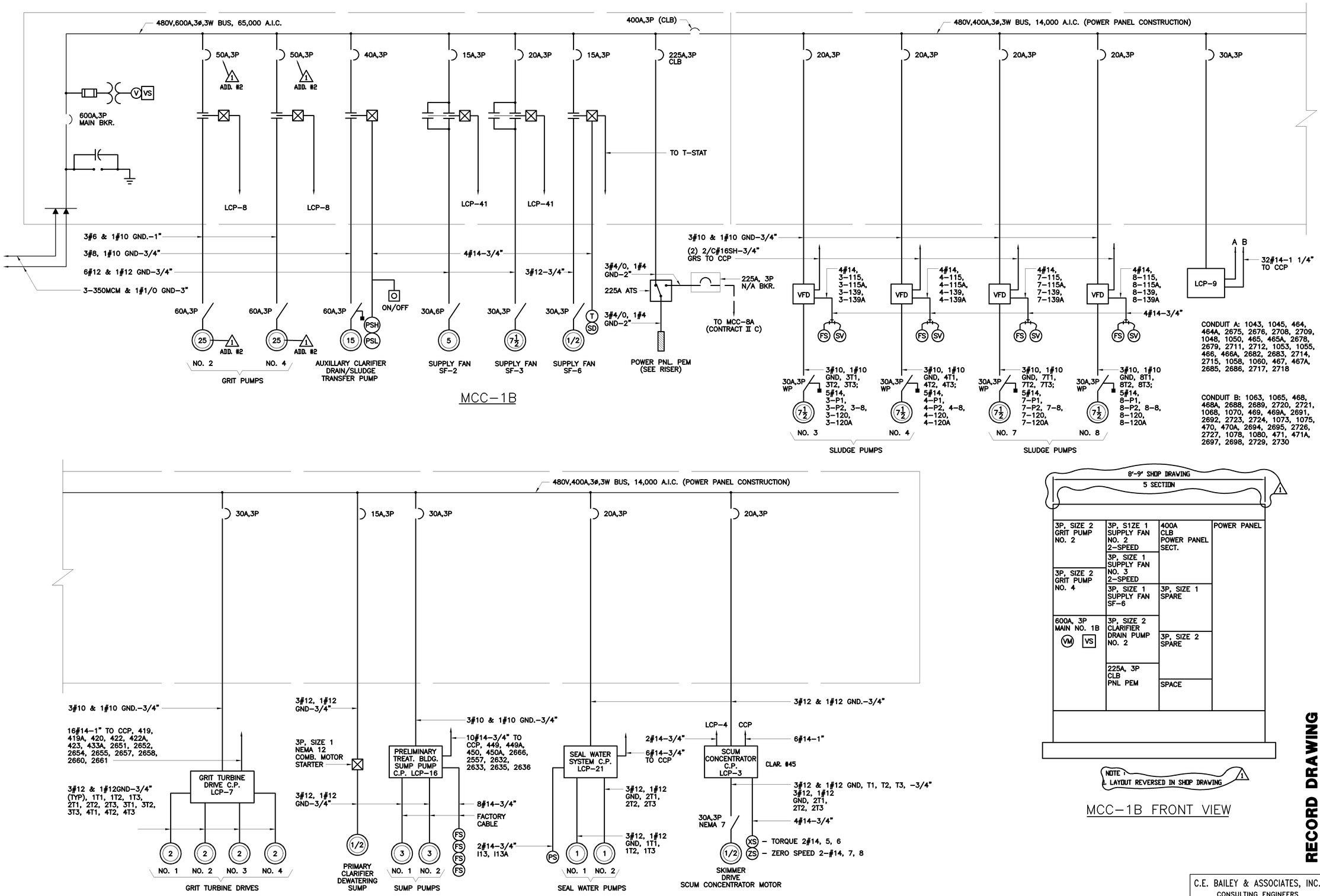

MCC-1B FRONT VIEW

RECORD DRAWING

NO.	DATE	DRWN	CHK'D	DESCRIPTION
				REVISIONS
1	9/97	FXP	ASG	RECORD DRAWING

DESIGNED BY: SEB
DRAWN BY: JSG
CHECKED BY/DATE: CEB/9-91
APPR'D BY/DATE: CEB/9-91

CAMP DRESSER & McKEE

THIS DRAWING HAS BEEN REVISED BY HAZEN AND SAWYER, P.C. TO REFLECT MODIFICATIONS MADE DURING CONSTRUCTION

CDM environmental engineers, scientists, planners, & management consultants

ARLINGTON COUNTY, VIRGINIA
WATER POLLUTION CONTROL PLANT
UPGRADE AND EXPANSION- PHASE IIB

PRELIMINARY TREATMENT BUILDING
ELECTRICAL
MCC-1B SINGLE LINE DIAGRAM

SCALE NOTE
SCALE BAR SHOWN BELOW IS ONE INCH LONG ON A FULL SIZE DRAWING. WHEN SCALING DRAWINGS, MEASURE BAR TO DETERMINE IF SCALES SHOWN WILL REQUIRE ADJUSTING.
ONE INCH

CONTRACT NO. 90-02-WPC
YEAR 1991
LOCATION CODE B8
SPECIALTY CODE E
PROJECT NO. 5002-33
FILE NAME B8E-0009.DWG
DRAWING NO. B8E-9
SHEET NO. 231

C.E. BAILEY & ASSOCIATES, INC.
CONSULTING ENGINEERS
ORLANDO, CLEARWATER & FORT LAUDERDALE, FLORIDA

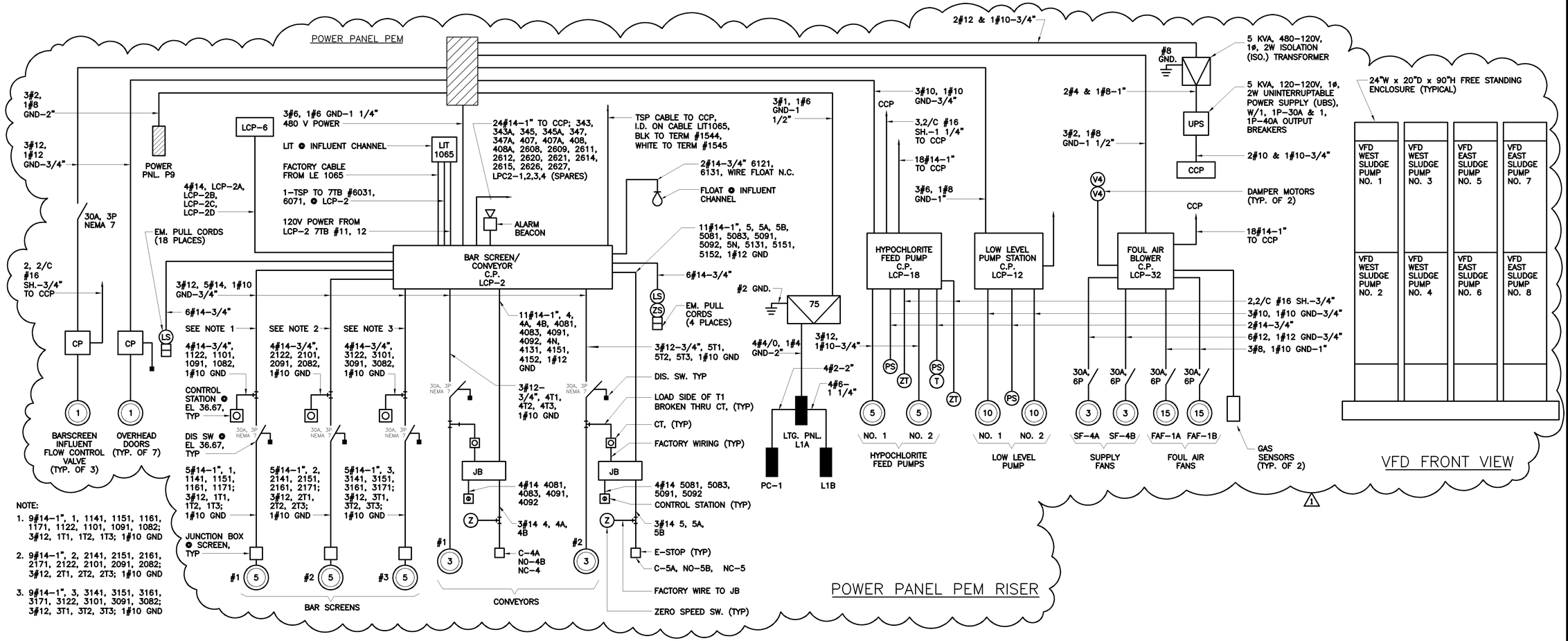

PANEL: **PC1** BUS: **100A MLO** VOLTAGE: **120V/208V,3ø,4W**
MOUNTING: **SURFACE** POLES: **30**
LOCATION: **MAIN ELECTRICAL ROOM**

CIR. NO.	DESCRIPTION	TRIP	POLES	REMARKS
1	PRIMARY CLARIFIER RECEPTACLE	20	1	.3
2	PRIMARY CLARIFIER RECEPTACLE	20	1	.3
3	PRIMARY CLARIFIER RECEPTACLE	20	1	.3
4	PRIMARY CLARIFIER RECEPTACLE	20	1	.3
5	SPARE	20	1	——
6	SPARE	20	1	——
	100A CONTACTOR	——	3	SPLIT BUS
7	PRIMARY CLARIFIER LTG	20	1	.6
8	PRIMARY CLARIFIER LTG	20	1	.6
9	PRIMARY CLARIFIER LTG	20	1	.6
10	PRIMARY CLARIFIER LTG	20	1	.6
11	PRIMARY CLARIFIER LTG	20	1	.6
12	PRIMARY CLARIFIER LTG	20	1	.6
13	PRIMARY CLARIFIER LTG	20	1	.6
14	PRIMARY CLARIFIER LTG	20	1	.6
15	PRIMARY CLARIFIER LTG	20	1	1.0
16	PRIMARY CLARIFIER LTG	20	1	1.0
17	PRIMARY CLARIFIER LTG	20	1	1.0
18	PRIMARY CLARIFIER LTG	20	1	1.0
19	PRIMARY CLARIFIER LTG	20	1	1.0
20	PRIMARY CLARIFIER LTG	20	1	1.0
21	PRIMARY CLARIFIER LTG	20	1	1.0
22	PRIMARY CLARIFIER LTG	20	1	1.0
23-30	SPARE	20	1	1.0
				18KVA

I=50A

PANEL: **L1B** BUS: **100A,100A MB** VOLTAGE: **120/208V,3ø,4W**
MOUNTING: **SURFACE** POLES: **30**
LOCATION: **1ST FL. PRELIMINARY TREATMENT BLDG.**

CIR. NO.	DESCRIPTION	TRIP	POLES	REMARKS
1	BASEMENT RECEPTACLES	20	1	.3
2	BASEMENT RECEPTACLES	20	1	.3
3	BASEMENT RECEPTACLES	20	1	.3
4	LCP-38	20	1	1.0
5	LCP-8	20	1	.5
6	LIT 8050-1	20	1	.2
7	LIT-8050-2	20	1	.2
8	LIT-8050-3	20	1	.2
9	FIT 8057	20	1	.2
10	LIT 2035-1	20	1	.2
11	LIT 2035-2	20	1	.2
12	HWUH-1	20	1	.5
13	HWUH-2	20	1	.5
14	BUBBLER PANEL	20	1	.5
15	HIGH LEVEL ALARM PNL.	20	1	.2
16	1ST FL. RECEPTACLES	20	1	.3
17	1ST FL. RECEPTACLES	20	1	.3
18	1ST FL. RECEPTACLES	20	1	.3
19	BASEMENT LTG.	20	1	.5
20	BASEMENT LTG.	20	1	.5
21	BASEMENT LTG.	20	1	1.0
22	1ST FL. LTG.	20	1	1.0
23	1ST FL. LTG.	20	1	1.0
24	1ST FL. LTG.	20	1	1.0
25	1ST FL. LTG.	20	1	1.0
26,27,28	HEAT TRACE	20	1	
29, 30	SPARE			
				12KVA

I=33.3A

PANEL: **L1A** BUS: **225A,225A MB** VOLTAGE: **120/208V 3ø,4W**
MOUNTING: **SURFACE** POLES: **60(DOUBLE PANEL)**
LOCATION: **PRE-TREATMENT BLDG. ELEC. ROOM**

CIR. NO.	DESCRIPTION	TRIP	POLES	REMARKS
2,4,6	PANEL L1B	60	3	12
1,3,5	PANEL L3	60	3	9
7,9,11	PC-1	100	3	18
8	CCP	20	1	.5
10	CCP	20	1	.5
12	CCP	20	1	.5
13	2ND FLOOR LIGHTING	20	1	.5
14	2ND FLOOR LIGHTING	20	1	.5
15	2ND FLOOR LIGHTING	20	1	.5
16	2ND FLOOR LIGHTING	20	1	.5
17	2ND FLOOR LIGHTING	20	1	1.0
18	2ND FLOOR LIGHTING	20	1	1.0
19	2ND FLOOR LIGHTING	20	1	1.0
20	2ND FLOOR LIGHTING	20	1	1.0
21	2ND FLOOR RECEPTACLE	20	1	.5
22	2ND FLOOR RECEPTACLE	20	1	.5
23	2ND FLOOR RECEPTACLE	20	1	.5
24-55	SPARES	20	1	15
57,59	E.W.H.	30A	2	3
56,58,60	SPARE	40	3	13
				75.0

CONNECTED LOAD=75 KVA X .6=45 KVA= 125 AMPS

PANEL: **PEM** BUS: **225A** VOLTAGE: **480V,3ø,3W**
MOUNTING: **SURFACE** POLES: **60(DOUBLE PANEL)**
LOCATION: **PRELIMINARY BUILDING-SECOND FLOOR ELECTRICAL PLAN**

CIR. NO.	DESCRIPTION	TRIP	POLES	REMARKS
1,3,5	75 KVA LTG TRANSFORMER	125	3	45
2,4,6	LCP-2 (BAR SCREENS & CONVEYOR)	60	3	6
7,9,11	OVERHEAD DOOR	15	3	
8,10,12	OVERHEAD DOOR	15	3	
13,15,17	OVERHEAD DOOR	15	3	
14,16,18	OVERHEAD DOOR	15	3	
19,21,23	OVERHEAD DOOR	15	3	
20,22,24	OVERHEAD DOOR	15	3	
25,27,29	OVERHEAD DOOR	15	3	
26,28,30	INFLUENT CONTROL VALVE NO. 1	15	3	
31,33,35	INFLUENT CONTROL VALVE NO. 2	15	3	
32,34,36	INFLUENT CONTROL VALVE NO. 3	15	3	
37,39,41	LCP-12 LOW LEVEL P.S.	50	3	20
38,40,42	LCP-18 HYPOCHLORITE PUMPS	30	3	10
43,45,47	LCP-32 FOUL AIR FANS	100	3	39
44,46,48	POWER PANEL P9	40	3	10
49,51,53	UPS ISOLATION TRANSFORMER	15	2	5
50,52,54	SPARE	20	3	
55,57,59	SPARE	50	3	
56,58,60	SPARE	100	3	
				135

CONNECTED LOAD=130 KVA X .6=78 KVA= 93.6 AMPS

NO.	DATE	DRWN	CHK'D	REVISIONS
1	12/98	FXP	ASG	RECORD DRAWING

DESIGNED BY: SEB
DRAWN BY: TRH
CHECKED BY/DATE: CEB/9-91
APPR'D BY/DATE: CEB/9-91

CAMP DRESSER & McKEE
THIS DRAWING HAS BEEN REVISED BY HAZEN AND SAWYER, P.C. TO REFLECT MODIFICATIONS MADE DURING CONSTRUCTION
CDM
environmental engineers, scientists, planners, & management consultants

ARLINGTON COUNTY, VIRGINIA
WATER POLLUTION CONTROL PLANT
UPGRADE AND EXPANSION- PHASE IB

PRELIMINARY TREATMENT BUILDING
ELECTRICAL
MCC FRONT VIEWS, SCHEDULE & RISER

RECORD DRAWING

SCALE NOTE
SCALE BAR SHOWN BELOW IS ONE INCH LONG ON A FULL SIZE DRAWING. WHEN SCALING DRAWINGS, MEASURE BAR TO DETERMINE IF SCALES SHOWN WILL REQUIRE ADJUSTING.
ONE INCH

CONTRACT NO. 90-02-WPC
YEAR 1991
LOCATION CODE B8
SPECIALTY CODE E
PROJECT NO. 5002-33
FILE NAME B8E-0010.DWG
DRAWING NO. B8E-10
SHEET NO. 232

C.E. BAILEY & ASSOCIATES, INC.
CONSULTING ENGINEERS
ORLANDO, CLEARWATER & FORT LAUDERDALE, FLORIDA

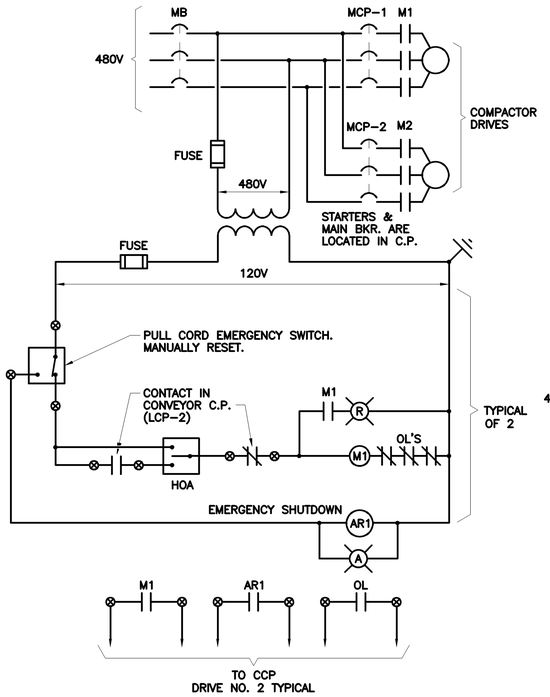

SCREENINGS COMPACTOR C.P.
LCP-6

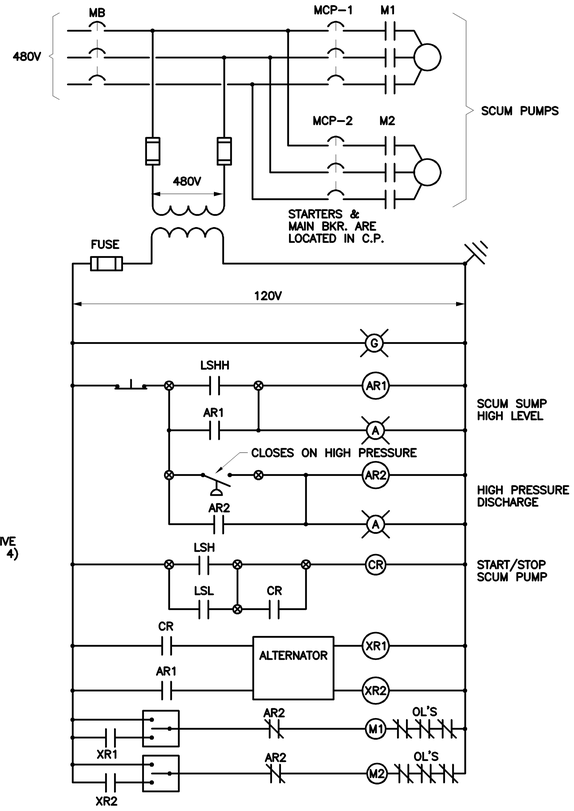

CONCENTRATED SCUM PUMP C.P.
LCP-4

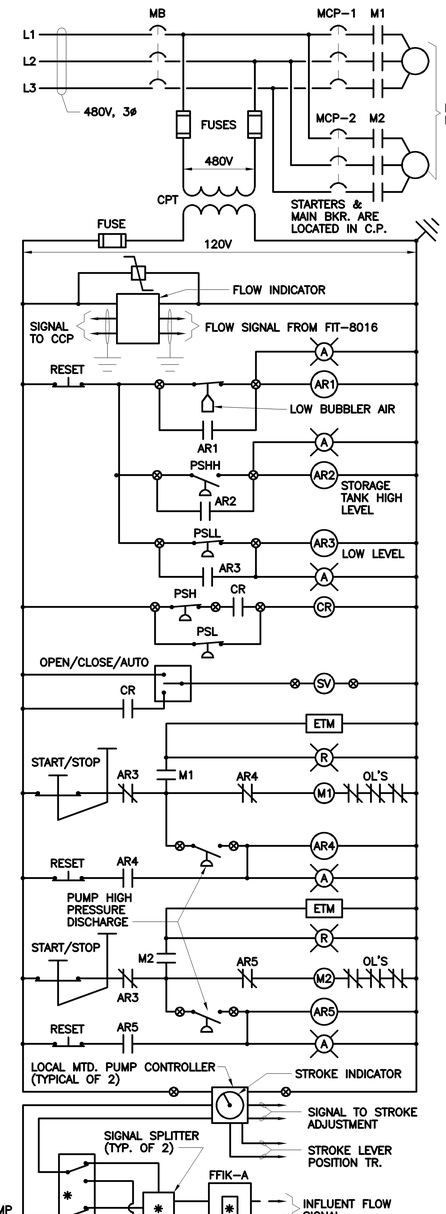

HYPOCHLOPRITE PUMP C.P. (SEE RFC # 144)
LCP-18

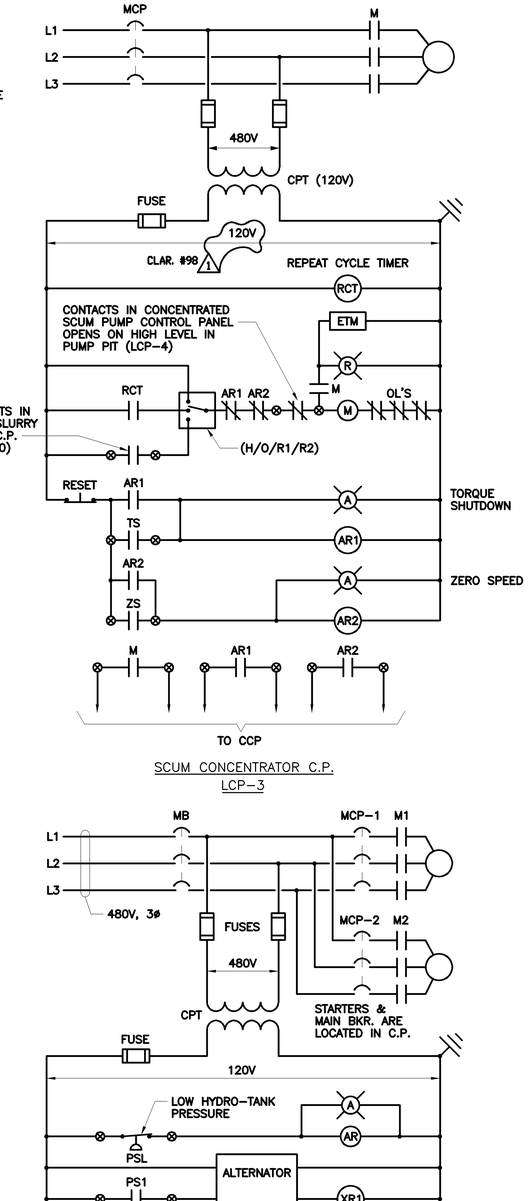

SCUM CONCENTRATOR C.P.
LCP-3

GRIT TURBINE DRIVE C.P.
LCP-7

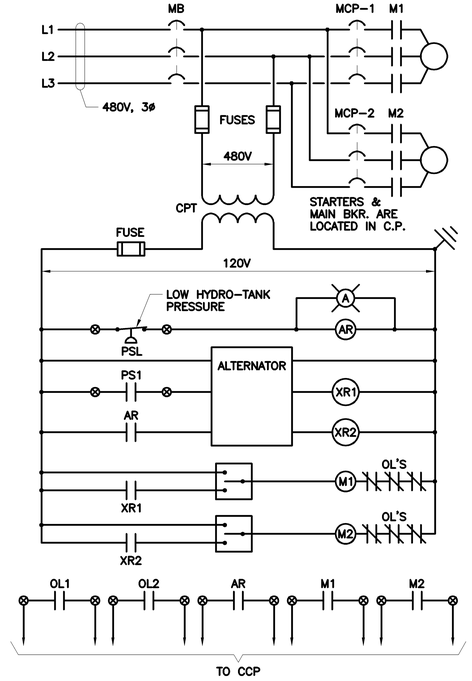

SEAL WATER SYSTEM C.P.
LCP-21

NO.	DATE	DRWN	CHK'D	REVISIONS DESCRIPTION
1	9/97	FXP	ASG	RECORD DRAWING

DESIGNED BY: SEB
DRAWN BY: JSC
CHECKED BY/DATE: SEB
APPR'V'D BY/DATE: CEB

CAMP DRESSER & McKEE

THIS DRAWING HAS BEEN REVISED BY HAZEN AND SAWYER, P.C. TO REFLECT MODIFICATIONS MADE DURING CONSTRUCTION

environmental engineers, scientists, planners, & management consultants

CDM

ARLINGTON COUNTY, VIRGINIA
WATER POLLUTION CONTROL PLANT
UPGRADE AND EXPANSION- PHASE B

PRELIMINARY TREATMENT BUILDING
ELECTRICAL
CONTROL DIAGRAMS

SCALE NOTE

SCALE BAR SHOWN BELOW IS ONE INCH LONG ON A FULL SIZE DRAWING. WHEN SCALING DRAWINGS, MEASURE BAR TO DETERMINE IF SCALES SHOWN WILL REQUIRE ADJUSTING.

ONE INCH

RECORD DRAWING

CONTRACT NO. 90-02-WPC
YEAR 1991
LOCATION CODE B8
SPECIALTY CODE E
PROJECT NO. 5002-33
FILE NAME B8E-0011.DWG
DRAWING NO. B8E-11
SHEET NO. 233

C.E. BAILEY & ASSOCIATES, INC.
CONSULTING ENGINEERS
ORLANDO, CLEARWATER & FORT LAUDERDALE, FLORIDA

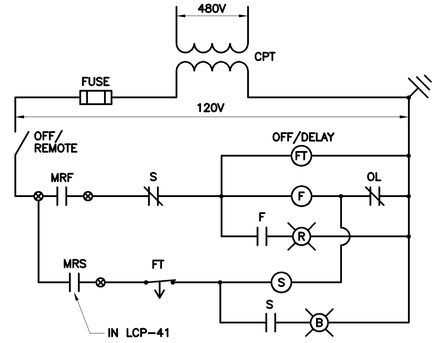

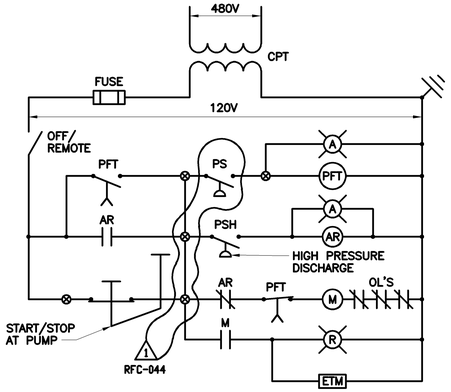

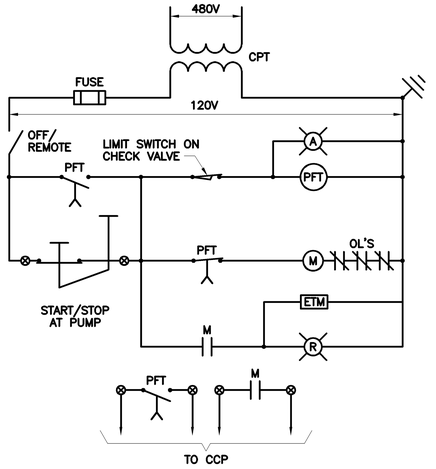

CLARIFIER DRAIN PUMP

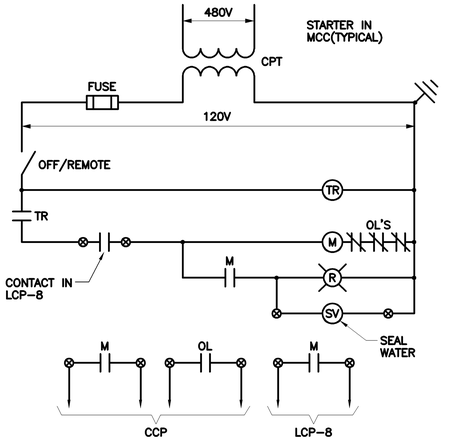

TYPICAL GRIT PUMP

(ABOVE CIRCUITRY IS TYP. FOR 4 PUMPS)

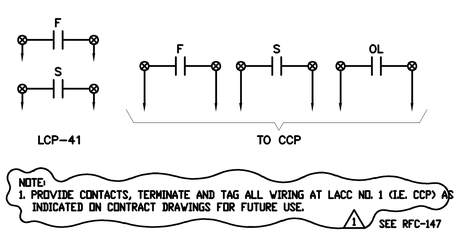

SUPPLY FANS SF-2 & SF-3

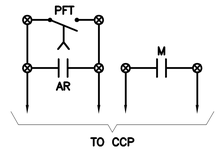

AUXILLARY CLARIFIER DRAIN
SLUDGE TRANSFER

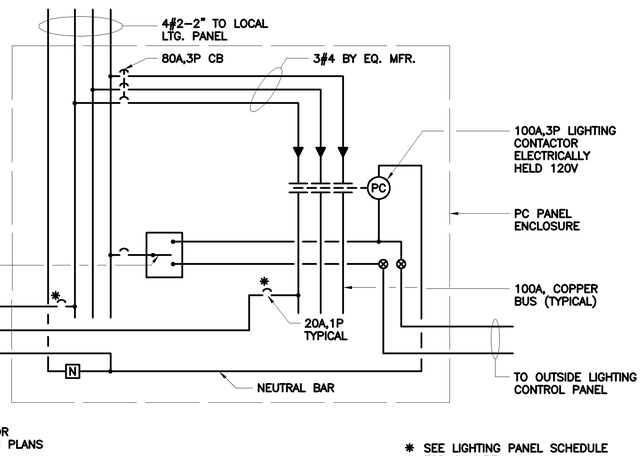

PC-1

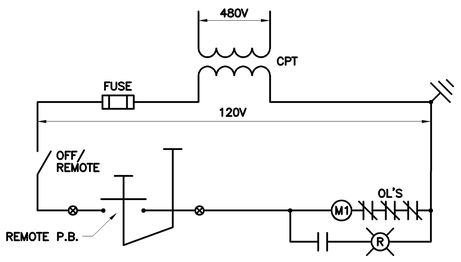

SUPPLY FAN SF-6

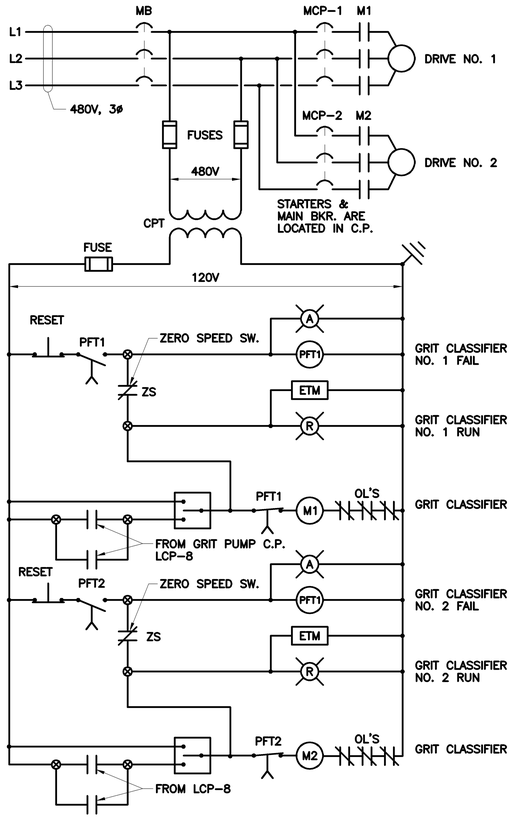

GRIT CLASSIFIER C.P.
LCP-5

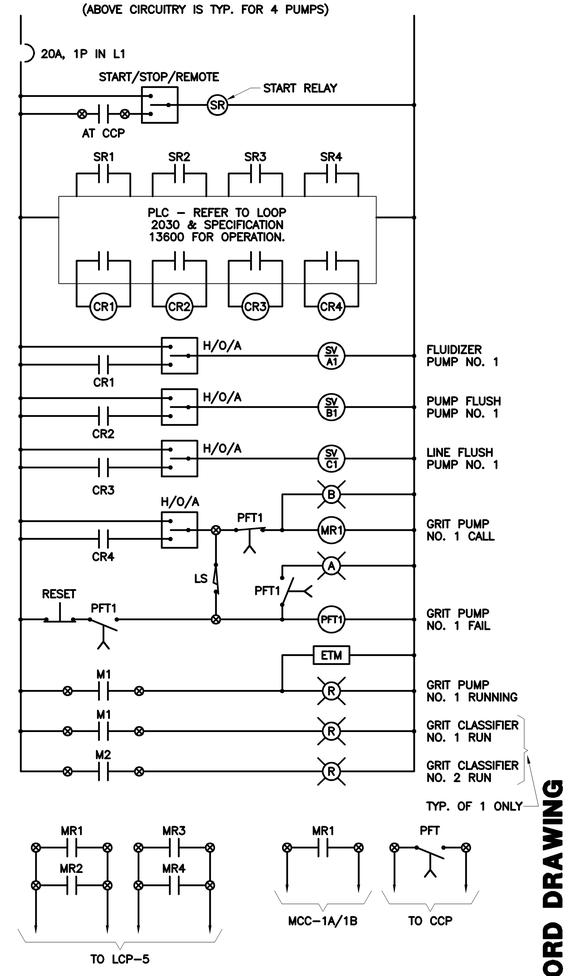

GRIT PUMP SEQUENCE C.P.
LCP-8

(ABOVE CIRCUITRY IS TYP. FOR 4 PUMPS)

RECORD DRAWING

NO.	DATE	DRWN	CHK'D	DESCRIPTION
				REVISIONS
1	9/97	FXP	ASG	RECORD DRAWING

DESIGNED BY: SEB
DRAWN BY: TRH
CHECKED BY/DATE: CEB/9-91
APPR'D BY/DATE: CEB/9-91

CAMP DRESSER & McKEE

THIS DRAWING HAS BEEN REVISED BY HAZEN AND SAWYER, P.C. TO REFLECT MODIFICATIONS MADE DURING CONSTRUCTION

CDM
environmental engineers, scientists, planners, & management consultants

ARLINGTON COUNTY, VIRGINIA
WATER POLLUTION CONTROL PLANT
UPGRADE AND EXPANSION- PHASE B

PRELIMINARY TREATMENT BUILDING
ELECTRICAL
CONTROL DIAGRAMS

SCALE NOTE

SCALE BAR SHOWN BELOW IS ONE INCH LONG ON A FULL SIZE DRAWING. WHEN SCALING DRAWINGS, MEASURE BAR TO DETERMINE IF SCALES SHOWN WILL REQUIRE ADJUSTING.

ONE INCH

CONTRACT NO. 90-02-WPC
YEAR 1991
LOCATION CODE B8
SPECIALTY CODE E
PROJECT NO. 5002-33
FILE NAME B8E-0012.DWG
DRAWING NO. B8E-12
SHEET NO. 234

C.E. BAILEY & ASSOCIATES, INC.
CONSULTING ENGINEERS
ORLANDO, CLEARWATER & FORT LAUDERDALE, FLORIDA

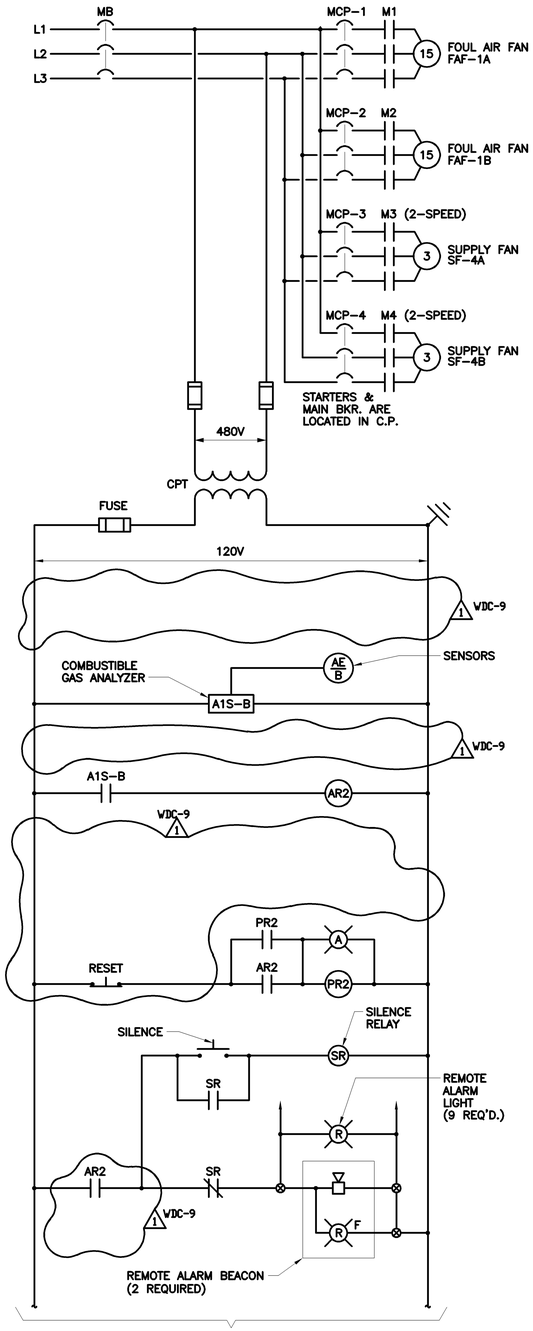

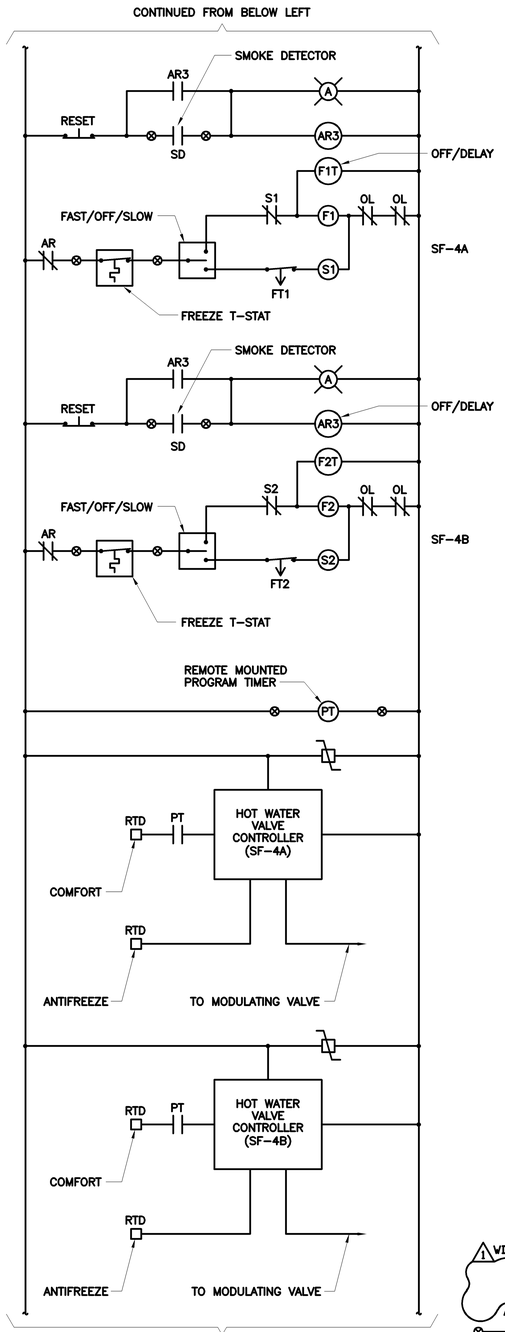

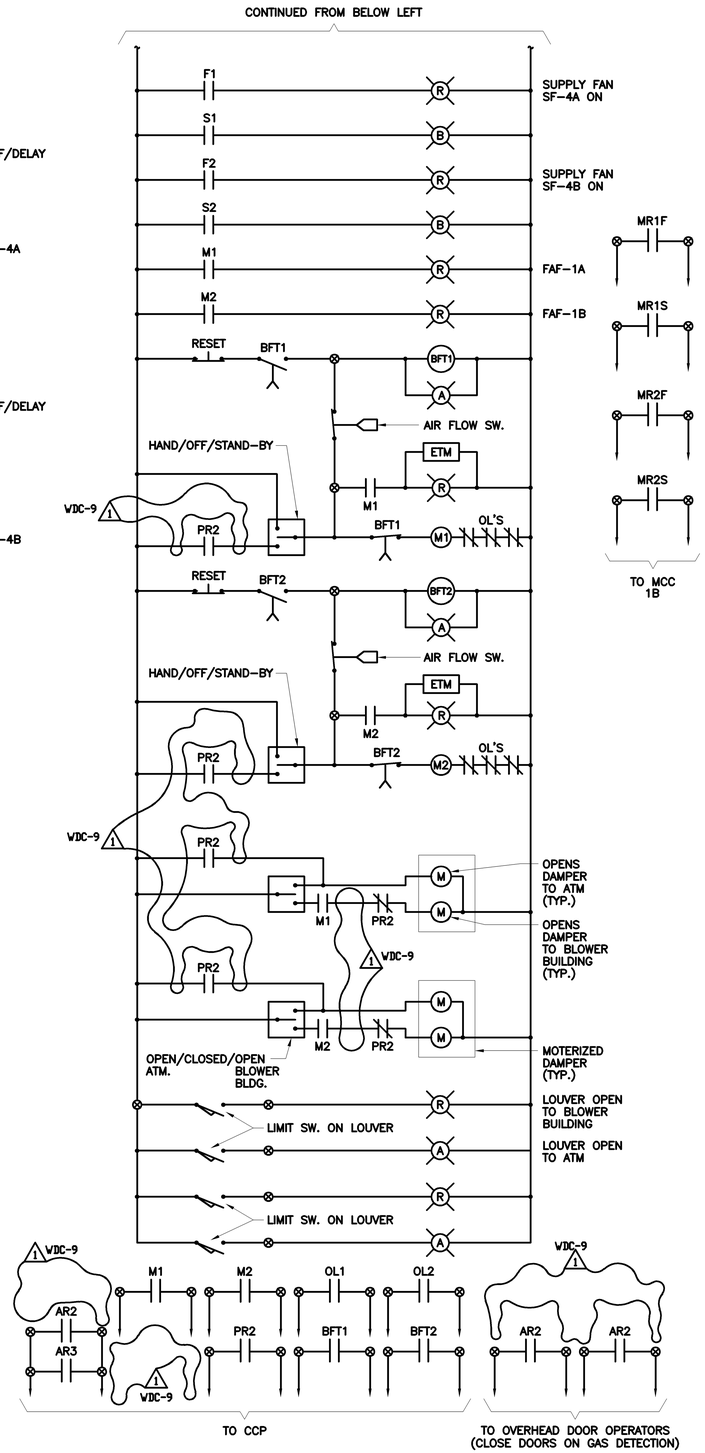

FOUL AIR BLOWER C.P.
LCP-32

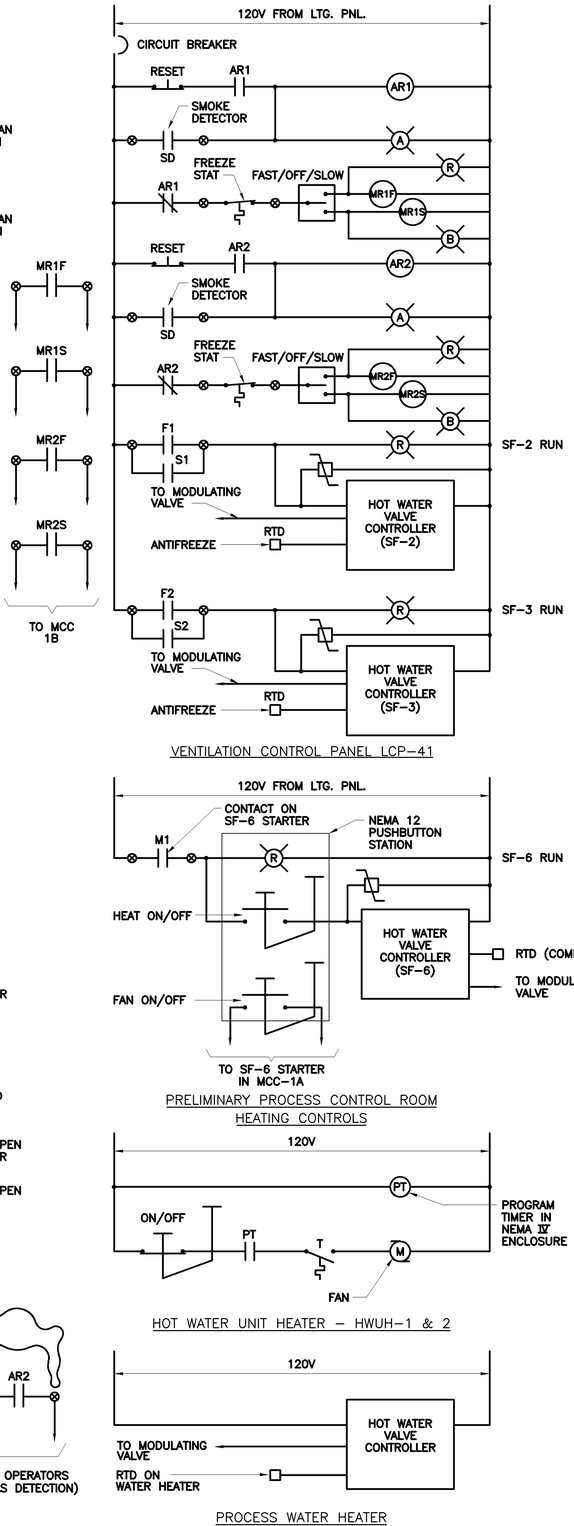

VENTILATION CONTROL PANEL LCP-41

PRELIMINARY PROCESS CONTROL ROOM HEATING CONTROLS

HOT WATER UNIT HEATER – HWUH-1 & 2

PROCESS WATER HEATER

NO.	DATE	DRWN	CHK'D	DESCRIPTION
				REVISIONS
1	9/97	FXP	ASG	RECORD DRAWING

DESIGNED BY: SEB
DRAWN BY: TRH
CHECKED BY/DATE: SEB/9-91
APPR'D BY/DATE: CEB/9-91

CAMP DRESSER & McKEE

THIS DRAWING HAS BEEN REVISED BY HAZEN AND SAWYER, P.C. TO REFLECT MODIFICATIONS MADE DURING CONSTRUCTION

CDM
environmental engineers, scientists, planners, & management consultants

ARLINGTON COUNTY, VIRGINIA
WATER POLLUTION CONTROL PLANT
UPGRADE AND EXPANSION- PHASE B

PRELIMINARY TREATMENT BUILDING
ELECTRICAL
CONTROL DIAGRAMS

RECORD DRAWING

SCALE NOTE
SCALE BAR SHOWN BELOW IS ONE INCH LONG ON A FULL SIZE DRAWING. WHEN SCALING DRAWINGS, MEASURE BAR TO DETERMINE IF SCALES SHOWN WILL REQUIRE ADJUSTING.
ONE INCH

CONTRACT NO. 90-02-WPC
YEAR 1991
LOCATION CODE B8
SPECIALTY CODE E
PROJECT NO. 5002-33
FILE NAME B8E-0013.DWG
DRAWING NO. B8E-13
SHEET NO. 235

C.E. BAILEY & ASSOCIATES, INC.
CONSULTING ENGINEERS
ORLANDO, CLEARWATER & FORT LAUDERDALE, FLORIDA

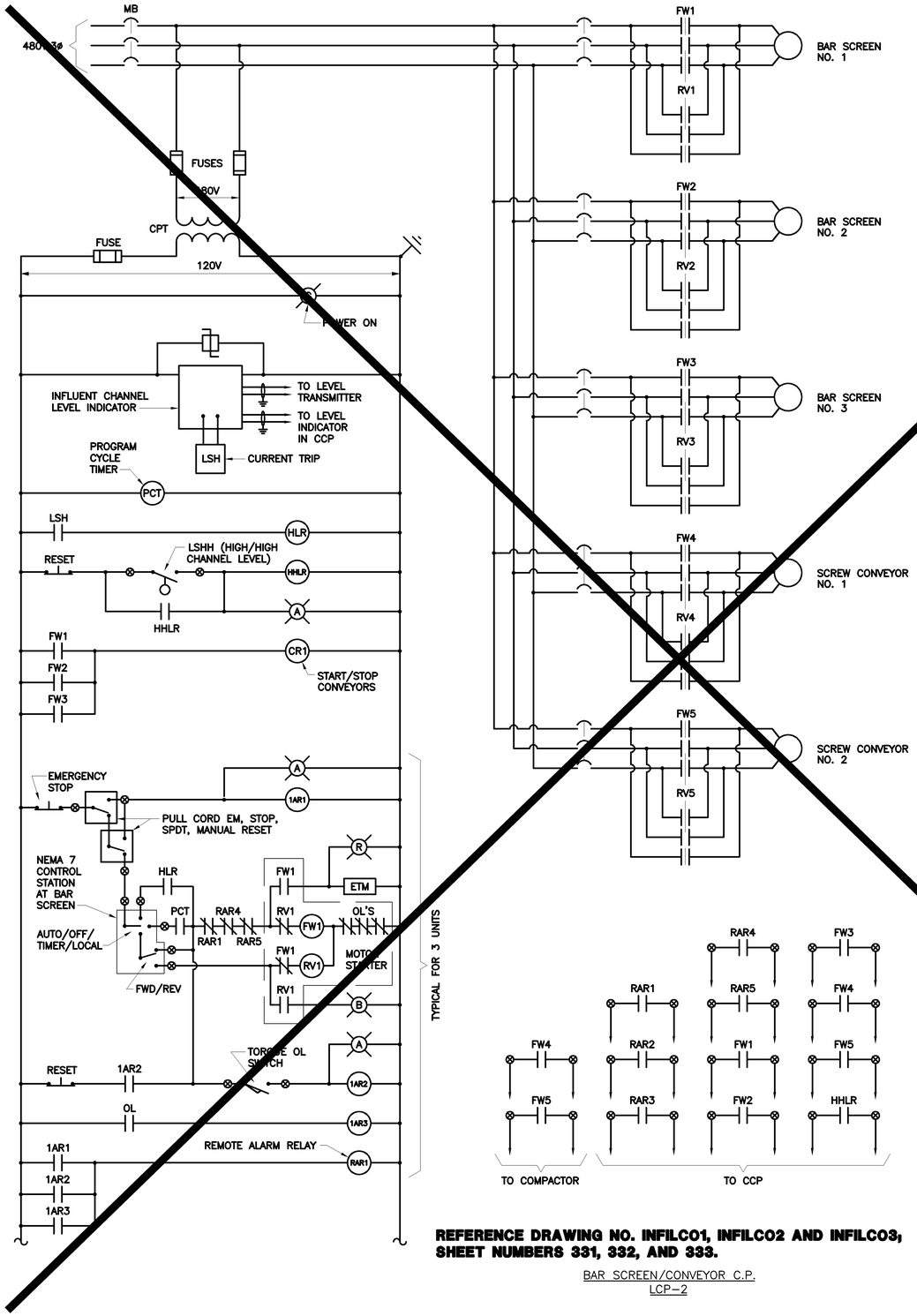

REFERENCE DRAWING NO. INFILCO1, INFILCO2 AND INFILCO3, SHEET NUMBERS 331, 332, AND 333.

BAR SCREEN/CONVEYOR C.P.
LCP-2

SUMP PUMP C.P.
LCP-16, LCP-28 & LCP-37

RECORD DRAWING

NO.	DATE	DRWN	CHK'D	DESCRIPTION
1	9/97	FXP	ASG	RECORD DRAWING

REVISIONS

DESIGNED BY: SEB
DRAWN BY: RRG
CHECKED BY/DATE: SEB/9-91
APPR'D BY/DATE: CEB/9-91

CAMP DRESSER & McKEE

THIS DRAWING HAS BEEN REVISED BY HAZEN AND SAWYER, P.C. TO REFLECT MODIFICATIONS MADE DURING CONSTRUCTION

CDM
environmental engineers, scientists, planners, & management consultants

ARLINGTON COUNTY, VIRGINIA
WATER POLLUTION CONTROL PLANT
UPGRADE AND EXPANSION- PHASE IIB

PRELIMINARY TREATMENT BUILDING
ELECTRICAL
CONTROL DIAGRAMS

SCALE NOTE
SCALE BAR SHOWN BELOW IS ONE INCH LONG ON A FULL SIZE DRAWING. WHEN SCALING DRAWINGS, MEASURE BAR TO DETERMINE IF SCALES SHOWN WILL REQUIRE ADJUSTING.
ONE INCH

CONTRACT NO. 90-02-WPC
YEAR 1991
LOCATION CODE B8
SPECIALTY CODE E
PROJECT NO. 5002-33
FILE NAME B8E-0014.DWG
DRAWING NO. B8E-14
SHEET NO. 236

C.E. BAILEY & ASSOCIATES, INC.
CONSULTING ENGINEERS
ORLANDO, CLEARWATER & FORT LAUDERDALE, FLORIDA

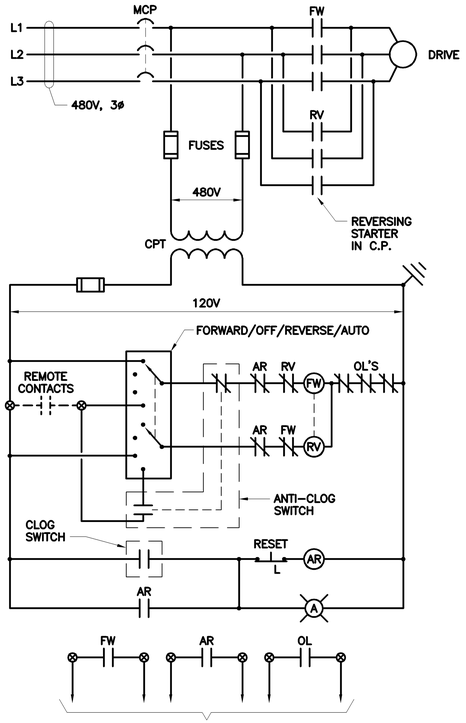

SLUDGE GRINDER C.P.
LCP-13A
(13B TYP.)

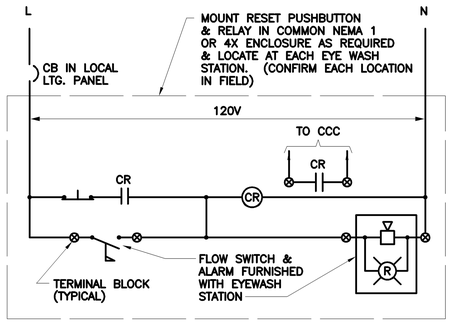

EYE WASH ALARM AND RESET

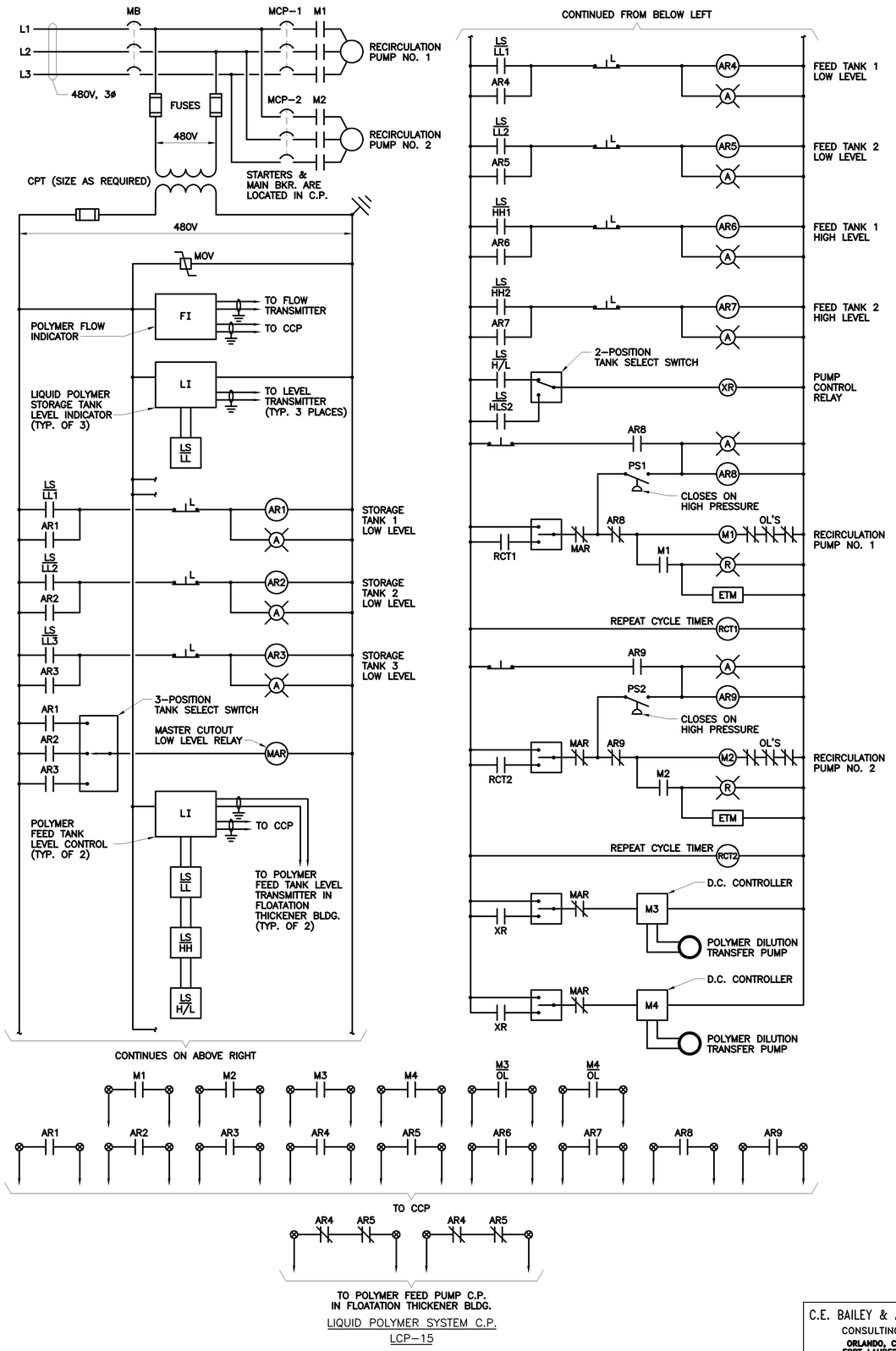

LIQUID POLYMER SYSTEM C.P.
LCP-15

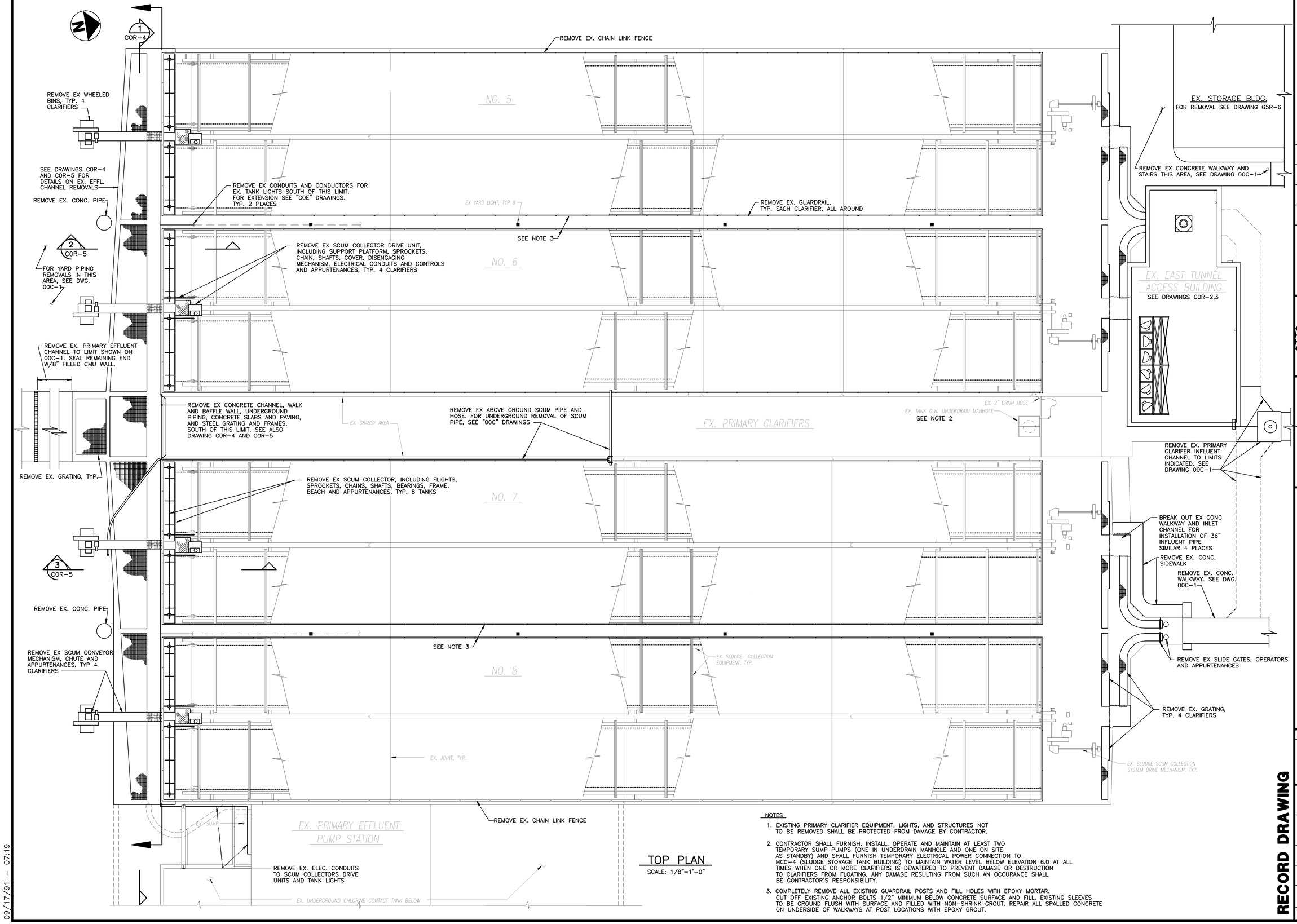

TOP PLAN
SCALE: 1/8"=1'–0"

NOTES

1. EXISTING PRIMARY CLARIFIER EQUIPMENT, LIGHTS, AND STRUCTURES NOT TO BE REMOVED SHALL BE PROTECTED FROM DAMAGE BY CONTRACTOR.
2. CONTRACTOR SHALL FURNISH, INSTALL, OPERATE AND MAINTAIN AT LEAST TWO TEMPORARY SUMP PUMPS (ONE IN UNDERDRAIN MANHOLE AND ONE ON SITE AS STANDBY) AND SHALL FURNISH TEMPORARY ELECTRICAL POWER CONNECTION TO MCC–4 (SLUDGE STORAGE TANK BUILDING) TO MAINTAIN WATER LEVEL BELOW ELEVATION 6.0 AT ALL TIMES WHEN ONE OR MORE CLARIFIERS IS DEWATERED TO PREVENT DAMAGE OR DESTRUCTION TO CLARIFIERS FROM FLOATING. ANY DAMAGE RESULTING FROM SUCH AN OCCURANCE SHALL BE CONTRACTOR'S RESPONSIBILITY.
3. COMPLETELY REMOVE ALL EXISTING GUARDRAIL POSTS AND FILL HOLES WITH EPOXY MORTAR. CUT OFF EXISTING ANCHOR BOLTS 1/2" MINIMUM BELOW CONCRETE SURFACE AND FILL. EXISTING SLEEVES TO BE GROUND FLUSH WITH SURFACE AND FILLED WITH NON–SHRINK GROUT. REPAIR ALL SPALLED CONCRETE ON UNDERSIDE OF WALKWAYS AT POST LOCATIONS WITH EPOXY GROUT.

09/17/91 – 07:19

RECORD DRAWING

NO.	DATE	DRWN	CHK'D	DESCRIPTION
1	9/97	FXP	ASG	RECORD DRAWING

REVISIONS

DESIGNED BY: DAO
DRAWN BY: TMM,CLP
CHECKED BY/DATE: TDH 9/91
APPRV'D BY/DATE: TDH 9/91

COMMONWEALTH OF VIRGINIA
THOMAS D. HALL
No. 12502
PROFESSIONAL ENGINEER

CAMP DRESSER & McKEE

RED DRAWING HAS BEEN REVISED BY HAZEN AND SAWYER, P.C. TO REFLECT MODIFICATIONS MADE DURING CONSTRUCTION

CDM
environmental engineers, scientists, planners, & management consultants

ARLINGTON COUNTY, VIRGINIA
WATER POLLUTION CONTROL PLANT
UPGRADE AND EXPANSION- PHASE IIB
EXISTING PRIMARY CLARIFIERS
REMOVAL
CLARIFIERS AND EAST TUNNEL ACCESS BUILDING
TOP PLAN

SCALE NOTE

SCALE BAR SHOWN BELOW IS ONE INCH LONG ON A FULL SIZE DRAWING. WHEN SCALING DRAWINGS, MEASURE BAR TO DETERMINE IF SCALES SHOWN WILL REQUIRE ADJUSTING.

ONE INCH

CONTRACT NO. 90–02–WPC
YEAR 1991
LOCATION CODE C0
SPECIALTY CODE R
PROJECT NO. 5002–33
FILE NAME COR–0001.DWG
DRAWING NO. COR–1
SHEET NO. 237

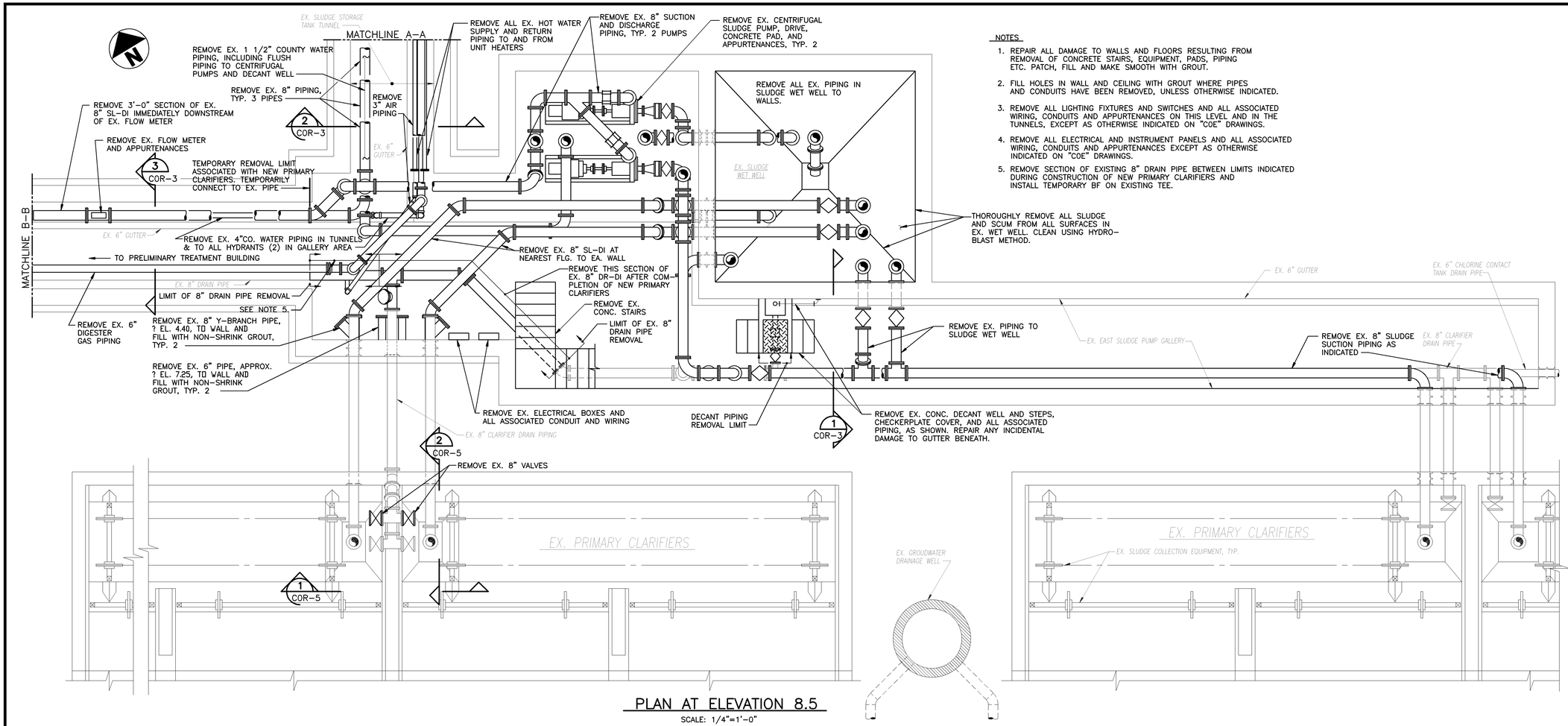

NOTES

1. REPAIR ALL DAMAGE TO WALLS AND FLOORS RESULTING FROM REMOVAL OF CONCRETE STAIRS, EQUIPMENT, PADS, PIPING ETC. PATCH, FILL AND MAKE SMOOTH WITH GROUT.
2. FILL HOLES IN WALL AND CEILING WITH GROUT WHERE PIPES AND CONDUITS HAVE BEEN REMOVED, UNLESS OTHERWISE INDICATED.
3. REMOVE ALL LIGHTING FIXTURES AND SWITCHES AND ALL ASSOCIATED WIRING, CONDUITS AND APPURTENANCES ON THIS LEVEL AND IN THE TUNNELS, EXCEPT AS OTHERWISE INDICATED ON "COE" DRAWINGS.
4. REMOVE ALL ELECTRICAL AND INSTRUMENT PANELS AND ALL ASSOCIATED WIRING, CONDUITS AND APPURTENANCES EXCEPT AS OTHERWISE INDICATED ON "COE" DRAWINGS.
5. REMOVE SECTION OF EXISTING 8" DRAIN PIPE BETWEEN LIMITS INDICATED DURING CONSTRUCTION OF NEW PRIMARY CLARIFIERS AND INSTALL TEMPORARY BF ON EXISTING TEE.

PLAN AT ELEVATION 8.5

SCALE: 1/4"=1'–0"

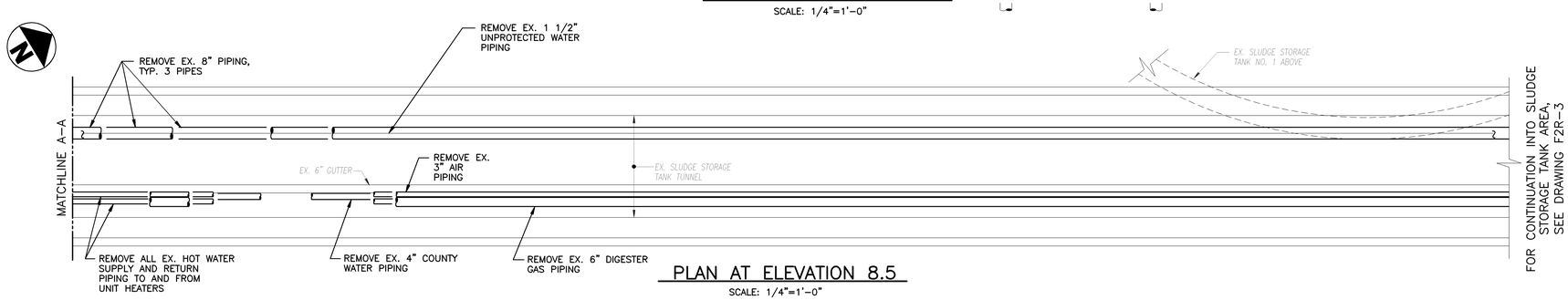

PLAN AT ELEVATION 8.5

SCALE: 1/4"=1'–0"

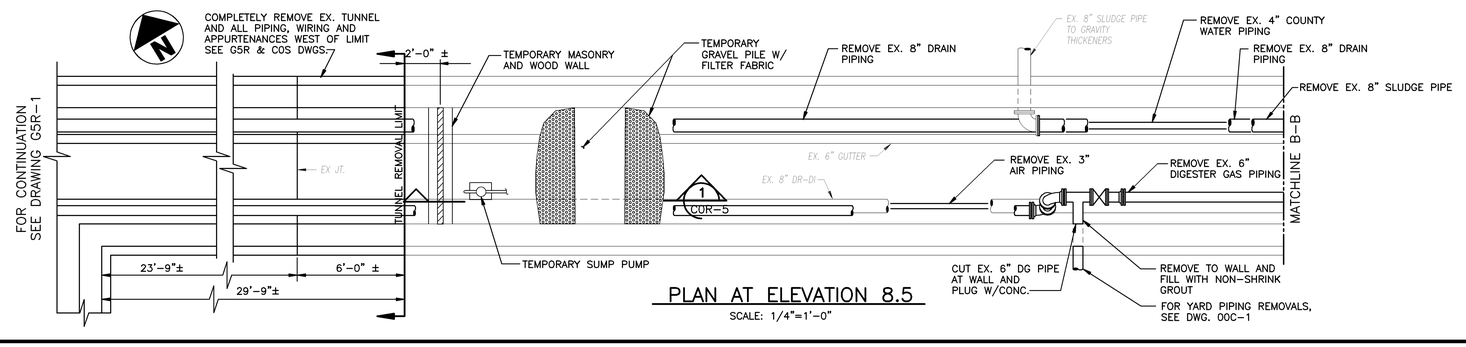

PLAN AT ELEVATION 8.5

SCALE: 1/4"=1'–0"

09/17/91 – 06:59

NO.	DATE	DRWN	CHK'D	DESCRIPTION
1	9/97	FXP	ASG	RECORD DRAWING

REVISIONS

DESIGNED BY: DAO
DRAWN BY: CLP
CHECKED BY/DATE: TDH 9/91
APPRV'D BY/DATE: TDH 9/91

COMMONWEALTH OF VIRGINIA — THOMAS D. HALL No. 12502 — PROFESSIONAL ENGINEER

CAMP DRESSER & McKEE

RED DRAWING HAS BEEN REVISED BY HAZEN AND SAWYER, P.C. TO REFLECT MODIFICATIONS MADE DURING CONSTRUCTION

CDM — environmental engineers, scientists, planners, & management consultants

ARLINGTON COUNTY, VIRGINIA
WATER POLLUTION CONTROL PLANT
UPGRADE AND EXPANSION– PHASE IIIB

EXISTING PRIMARY CLARIFIERS
REMOVAL
EAST SLUDGE PUMP GALLERY & SLUDGE STORAGE TANK TUNNEL PLANS

SCALE NOTE

SCALE BAR SHOWN BELOW IS ONE INCH LONG ON A FULL SIZE DRAWING. WHEN SCALING DRAWINGS, MEASURE BAR TO DETERMINE IF SCALES SHOWN WILL REQUIRE ADJUSTING.

ONE INCH

CONTRACT NO. 90–02–WPC
YEAR 1991
LOCATION CODE C0
SPECIALTY CODE R
PROJECT NO. 5002–33
FILE NAME COR–02.DWG
DRAWING NO. COR–2
SHEET NO. 238

RECORD DRAWING

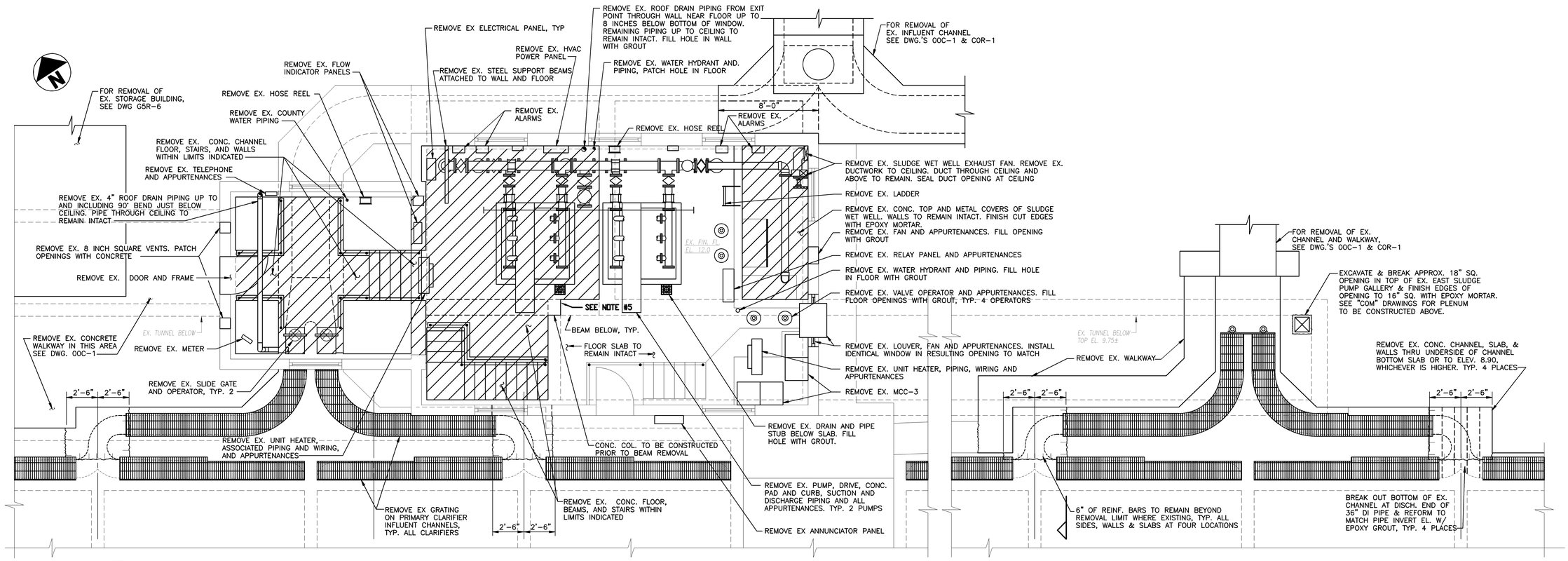

PLAN AT ELEVATION 24.0

SCALE: 1/4"=1'-0"

NOTES

1. REPAIR ALL DAMAGE TO WALLS AND FLOOR RESULTING FROM REMOVAL OF CONC STAIRS, EQUIPMENT, PADS, PIPING, ETC. PATCH, FILL AND MAKE SMOOTH WITH GROUT.
2. FILL HOLES IN WALLS, FLOOR AND CEILING WITH GROUT WHERE PIPES AND CONDUITS HAVE BEEN REMOVED, UNLESS OTHERWISE INDICATED.
3. REMOVE ALL LIGHTING FIXTURES AND SWITCHES AND ALL ASSOCIATED WIRING, CONDUITS AND APPURTENANCES, EXCEPT AS OTHERWISE INDICATED ON "C?E" DWGS.
4. REMOVE ALL ELECTRICAL AND INSTRUMENT PANELS AND ALL ASSOCIATED WIRING, CONDUITS AND APPURTENANCES, EXCEPT AS OTHERWISE INDICATED ON "C0E" DWGS.
5. CONSTRUCT COLUMN WITH SIZE MATCHING WIDTHS OF EXISTING BEAMS IT WILL SUPPORT. BUILD SIMILAR TO DETAIL 12WC ON COS-10, WITH VERTICAL #6 REBARS IN EACH CORNER AND WITH HORIZONTAL #5'S AT EVERY 8 INCHES.

CLAR.# 267

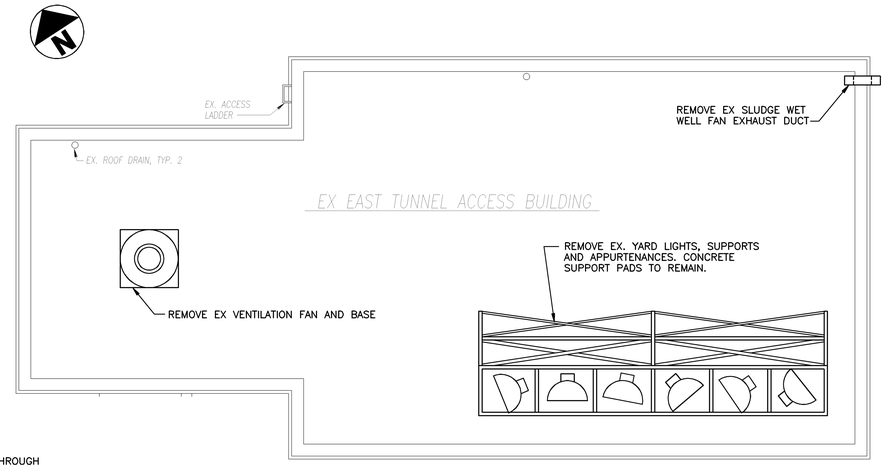

ROOF PLAN

SCALE: 1/4"=1'-0"

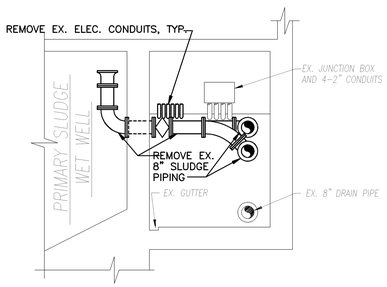

SECTION 1 / COR-2

SCALE: 1/4"=1'-0"

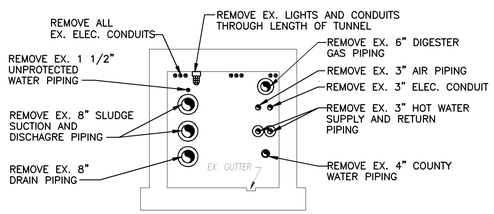

SECTION 2 / COR-2

SCALE: 1/4"=1'-0"

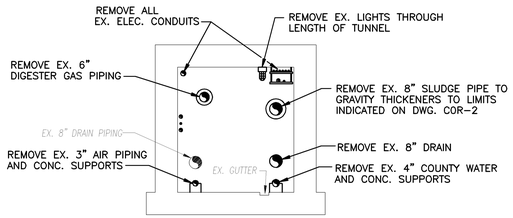

SECTION 3 / COR-2

SCALE: 1/4"=1'-0"

09/17/91 - 06:51

RECORD DRAWING

NO.	DATE	DRWN	CHK'D	DESCRIPTION
1	9/97	FXP	ASG	RECORD DRAWING

REVISIONS

DESIGNED BY: DAO
DRAWN BY: CLP
CHECKED BY/DATE: --
APPRV'D BY/DATE: --

CAMP DRESSER & McKEE

RED DRAWING HAS BEEN REVISED BY HAZEN AND SAWYER, P.C. TO REFLECT MODIFICATIONS MADE DURING CONSTRUCTION

environmental engineers, scientists, planners, & management consultants

CDM

ARLINGTON COUNTY, VIRGINIA
WATER POLLUTION CONTROL PLANT
UPGRADE AND EXPANSION- PHASE IIB

EXISTING PRIMARY CLARIFIERS REMOVAL
EAST TUNNEL ACCESS BUILDING
PLANS AND SECTIONS

SCALE NOTE

SCALE BAR SHOWN BELOW IS ONE INCH LONG ON A FULL SIZE DRAWING. WHEN SCALING DRAWINGS, MEASURE BAR TO DETERMINE IF SCALES SHOWN WILL REQUIRE ADJUSTING.

ONE INCH

CONTRACT NO. 000000000
YEAR 0000
LOCATION CODE: CO
SPECIALTY CODE: R
PROJECT NO. 5002-33
FILE NAME COR-0003.DWG
DRAWING NO. COR-3
SHEET NO. 239

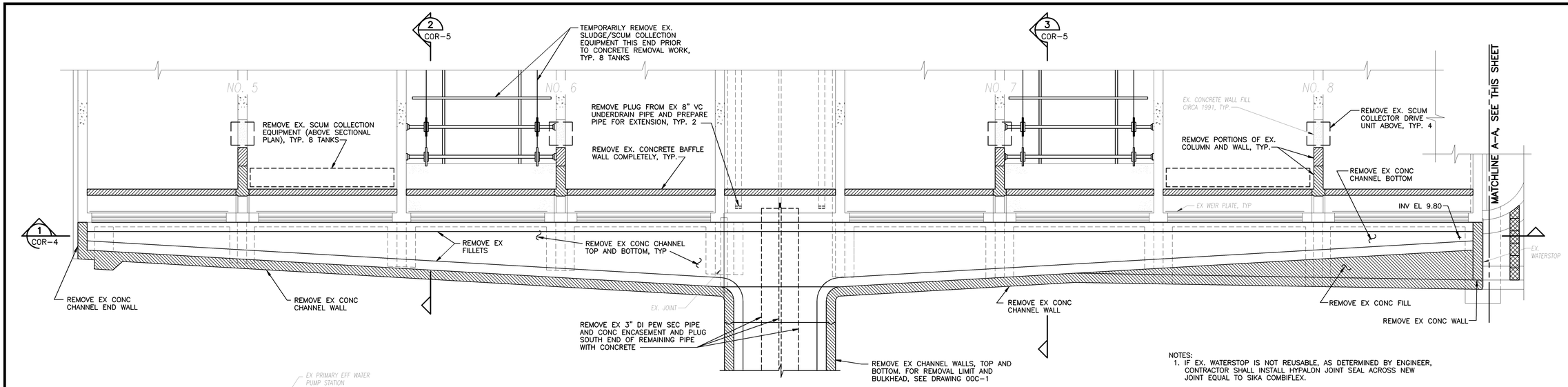

PLAN AT ELEVATION 13.50

3/16" = 1'-0"

NOTES:
1. IF EX. WATERSTOP IS NOT REUSABLE, AS DETERMINED BY ENGINEER, CONTRACTOR SHALL INSTALL HYPALON JOINT SEAL ACROSS NEW JOINT EQUAL TO SIKA COMBIFLEX.

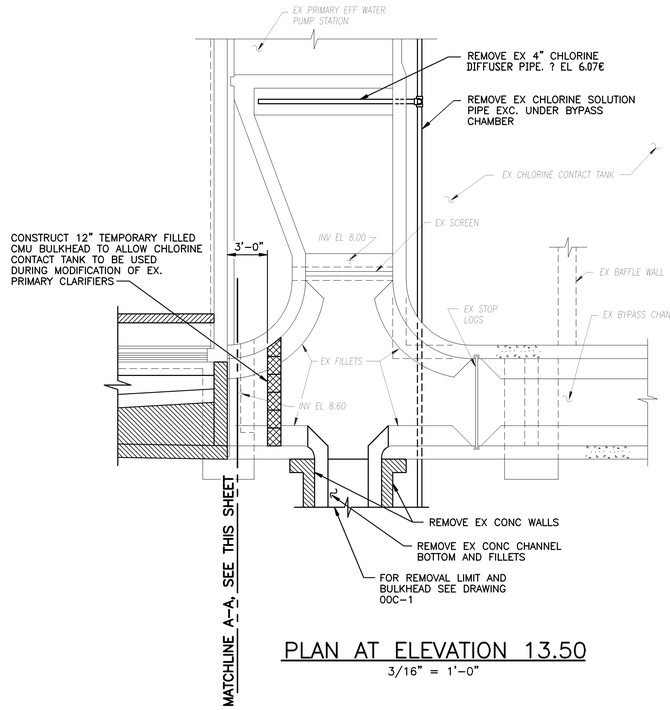

PLAN AT ELEVATION 13.50

3/16" = 1'-0"

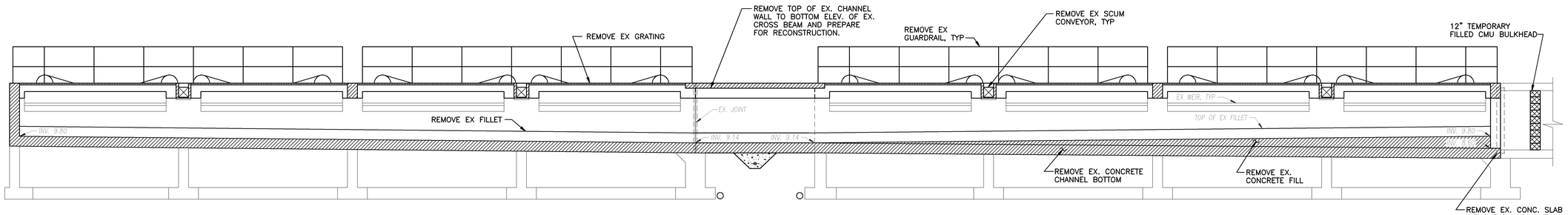

SECTION 1

SCALE: 3/16"=1'-0"

COR-1,4

NO.	DATE	DRWN	CHK'D	DESCRIPTION
1	9/97	FXP	ASG	RECORD DRAWING

REVISIONS

DESIGNED BY: DAO
DRAWN BY: BRW/CTC
CHECKED BY/DATE: TDH 9/91
APPRV'D BY/DATE: TDH 9/91

COMMONWEALTH OF VIRGINIA
THOMAS D. HALL
No. 12502
PROFESSIONAL ENGINEER

CAMP DRESSER & McKEE

THIS DRAWING HAS BEEN REVISED BY HAZEN AND SAWYER, P.C. TO REFLECT MODIFICATIONS MADE DURING CONSTRUCTION

CDM

environmental engineers, scientists, planners, & management consultants

ARLINGTON COUNTY, VIRGINIA
WATER POLLUTION CONTROL PLANT
UPGRADE AND EXPANSION- PHASE IIB

EXISTING PRIMARY CLARIFIERS-REMOVAL
SOUTH END OF CLARIFIERS
PLANS AND SECTIONS

SCALE NOTE

SCALE BAR SHOWN BELOW IS ONE INCH LONG ON A FULL SIZE DRAWING. WHEN SCALING DRAWINGS, MEASURE BAR TO DETERMINE IF SCALES SHOWN WILL REQUIRE ADJUSTING.

ONE INCH

CONTRACT NO.	
90-02-WPC	
YEAR	1991
LOCATION CODE	SPECIALTY CODE
CO	R
PROJECT NO.	
5002-33	
FILE NAME	
COR-0004.DWG	
DRAWING NO.	
COR-4	
SHEET NO.	240

RECORD DRAWING

09/17/91 - 06:45

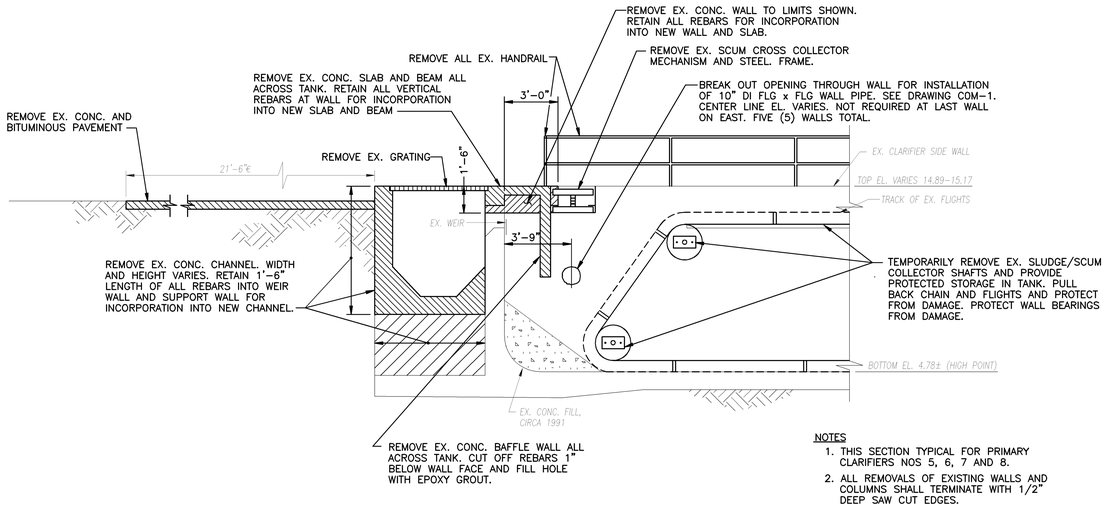

NOTES

1. THIS SECTION TYPICAL FOR PRIMARY CLARIFIERS NOS 5, 6, 7 AND 8.
2. ALL REMOVALS OF EXISTING WALLS AND COLUMNS SHALL TERMINATE WITH 1/2" DEEP SAW CUT EDGES.

SECTION 2 / COR-1,4
SCALE: 1/4"=1'-0"

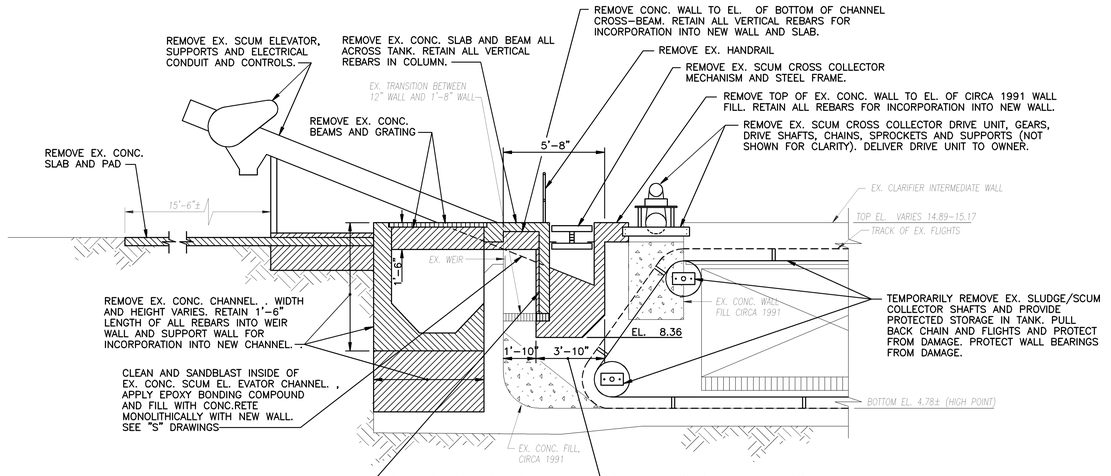

NOTES

1. THIS SECTION TYPICAL FOR PRIMARY CLARIFIERS NOS 5, 6, 7 AND 8.
2. ALL REMOVALS OF EXISTING WALLS AND COLUMNS SHALL TERMINATE WITH 1/2" DEEP SAW CUT EDGES.

SECTION 3 / COR-1,4
SCALE: 1/4"=1'-0"

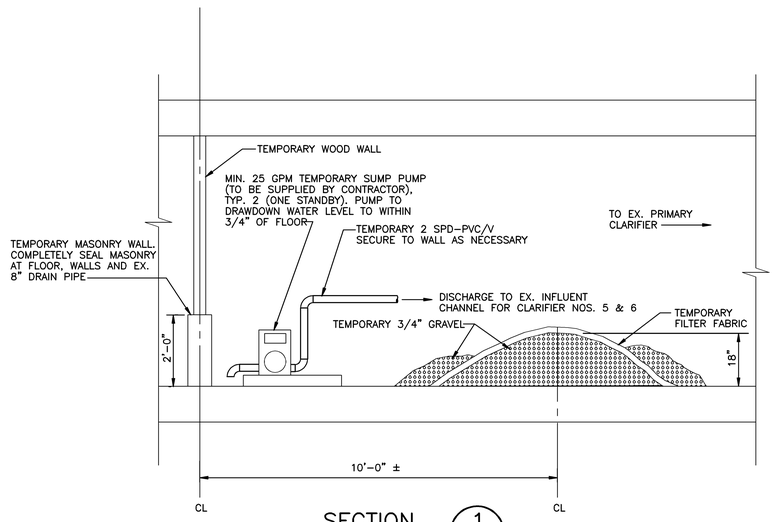

SECTION 1 / COM-2
SCALE: 1/2" = 1'-0"

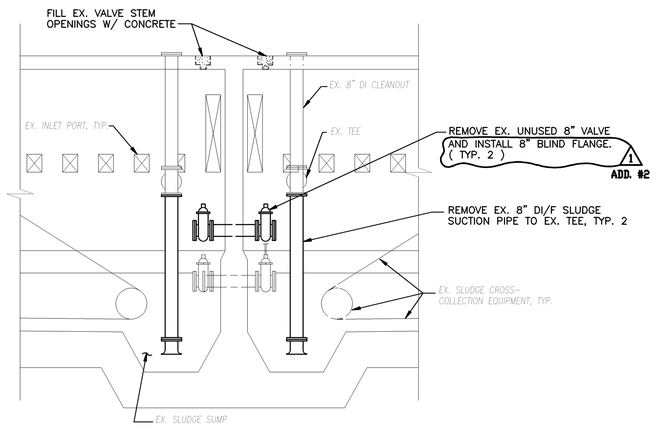

SECTION 1 / COR-2
SCALE: 1/4"=1'-0"

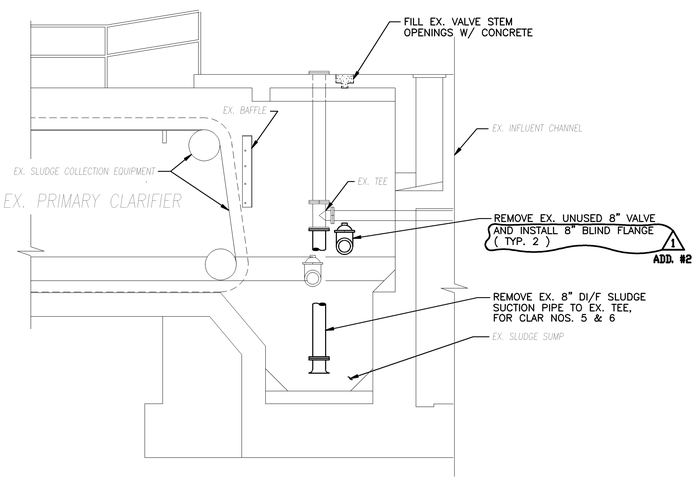

SECTION 2 / COR-2
SCALE: 1/4"=1'-0"

NO.	DATE	DRWN	CHK'D	DESCRIPTION
1	9/97	FXP	ASG	RECORD DRAWING

REVISIONS

DESIGNED BY: DAO
DRAWN BY: BRW/CTC/GPB
CHECKED BY/DATE: TDH 9/91
APPRV'D BY/DATE: TDH 9/91

COMMONWEALTH OF VIRGINIA — THOMAS D. HALL No. 12592 — PROFESSIONAL ENGINEER

CAMP DRESSER & McKEE

THIS DRAWING HAS BEEN REVISED BY HAZEN AND SAWYER, P.C. TO REFLECT MODIFICATIONS MADE DURING CONSTRUCTION

environmental engineers, scientists, planners, & management consultants

CDM

ARLINGTON COUNTY, VIRGINIA
WATER POLLUTION CONTROL PLANT
UPGRADE AND EXPANSION- PHASE IIB

EXISTING PRIMARY CLARIFIERS-REMOVAL
SOUTH END OF CLARIFIERS
SECTIONS

SCALE NOTE

SCALE BAR SHOWN BELOW IS ONE INCH LONG ON A FULL SIZE DRAWING. WHEN SCALING DRAWINGS, MEASURE BAR TO DETERMINE IF SCALES SHOWN WILL REQUIRE ADJUSTING.

ONE INCH

CONTRACT NO. 90-02-WPC
YEAR 1991
LOCATION CODE CO
SPECIALTY CODE R
PROJECT NO. 5002-33
FILE NAME COR-0005.DWG
DRAWING NO. COR-5
SHEET NO. 241

RECORD DRAWING

09/17/91 - 06:37

REINFORCED ALUM. CHECKERPLATE EQUIPMENT REMOVAL HATCH

10 SCS-DI

YARD LIGHT, TYP.

PRIMARY CLARIFIER TUNNEL BELOW

T/S EL. 15.17

NO. 5

NO. 6

NO. 7

NO. 8

PAVED AREA

INSTALL RETAINING WALL AND STAIRS. SEE COM-3 AND COS DWGS.

HOT WATER YARD HYDRANT, TYP. 2

SCUM COLLECTION CHAMBER, TYP. 4 CLARIFIERS

SANDBLAST & PAINT EX. 12" STEEL CHANNEL UNDER BEAM (2 BEAMS ONLY)

EL. 15.17

PRIMARY CLARIFIER EFFLUENT CHANNEL

C COM-14 DETAIL
SCUM COLLECTOR FLOW LIMIT SWITCHES

EX. EAST TUNNEL ACCESS BUILDING

EX. ROOF DRAIN, TYP. 2

EX. JOINT

FOR YARD PIPING MODIFICATIONS AND ADDITIONS IN THIS AREA, SEE DWGS. 00C-1,9

10" SCS-DI

YARD LIGHT, TYP.

EX. GRASSY AREA

EX. PRIMARY CLARIFIERS

EX. 2" GW DRAIN HOSE

EX. TANK UNDERDRAIN MANHOLE

INSTALL CONCRETE FILL TO LEVEL OF SURROUNDING CONCRETE SLAB. SLOPE TO DRAIN TO EX. GRASSY AREA.

G COM-4 DETAIL
ALUM. ACCESS HATCH, W/ REMOVABLE COVER, TYP. 16

2'x2' OPENING, TYP.

MOTOR OPERATOR, TYP. 8

CONCRETE SWALE. SEE "C" DWGS.

INSTALL CONCRETE FILL TO LEVEL OF SURROUNDING SLAB. 6" MIN THICKNESS

1 COM-5

14" GALV. STL. SLOTTED SCUM COLLECTOR PIPE, TYP. 8

ALUM. GUARDRAIL, TYP.

EX. YARD LIGHT, TYP. 8

2 COM-5

EX. SLUDGE COLLECTION EQUIPMENT, TYP.

SLOPE CONC. SLAB TO DRAIN TO CLARIFIERS, TYP. SEE "S" DWGS.

SLOPE

FILL INFLUENT FLOW CHANNEL WITH CONCRETE TO LEVEL OF EX. SURROUNDING CONCRETE SLAB, TYP.

SLIDE GATE W/ MOTOR OPERATOR

EX. EXPANSION JOINT, TYP.

INSTALL REINFORCED ALUM. CHECKERPLATE OVER EX. INFLUENT CHANNELS. SEE DWG. COM-3.

EX. JOINT

3 COM-5

EX. SUMP

1 COM-4

2 COM-4

TOP PLAN
SCALE: 1/8"=1'-0"

09/17/91 - 08:30

RECORD DRAWING

NO.	DATE	DRWN	CHK'D	DESCRIPTION
1	9/97	FXP	ASG	RECORD DRAWING

REVISIONS

DESIGNED BY: DAO
DRAWN BY: BRW/GPB
CHECKED BY/DATE: TDH 9/91
APPRV'D BY/DATE: TDH 9/91

COMMONWEALTH OF VIRGINIA
THOMAS D. HALL
No. 12502
PROFESSIONAL ENGINEER

CAMP DRESSER & McKEE

THIS DRAWING HAS BEEN REVISED BY HAZEN AND SAWYER, P.C. TO REFLECT MODIFICATIONS MADE DURING CONSTRUCTION

CDM
environmental engineers, scientists, planners, & management consultants

ARLINGTON COUNTY, VIRGINIA
WATER POLLUTION CONTROL PLANT
UPGRADE AND EXPANSION- PHASE IIB

EXISTING PRIMARY CLARIFIERS
CLARIFIERS AND EAST TUNNEL
ACCESS BUILDING
TOP PLAN

SCALE NOTE

SCALE BAR SHOWN BELOW IS ONE INCH LONG ON A FULL SIZE DRAWING. WHEN SCALING DRAWINGS, MEASURE BAR TO DETERMINE IF SCALES SHOWN WILL REQUIRE ADJUSTING.

ONE INCH

CONTRACT NO. 90-02-WPC
YEAR 1991
LOCATION CODE C0
SPECIALTY CODE M
PROJECT NO. 5002-33
FILE NAME COM-0001.DWG
DRAWING NO. COM-1
SHEET NO. 243

PIPING TO BE INSTALLED WITH NEW PRIMARY CLARIFIERS

PIPING TO BE INSTALLED WITH EXISTING PRIMARY CLARIFIERS

EX. SLUDGE STORAGE TANK TUNNEL

CLAR. #59

FOR PIPE CONNECTIONS AT END OF TUNNEL, SEE DWG F2M-3.

3 COW-CU/S ? EL. 6.0

D.I./ FL.

COW HYDRANT w/VACUUM BREAKER-MOUNT AT 3'-0" AFF

RESURFACE FLOOR WITH EPOXY MORTAR TOPPING. SLOPE TO DRAIN TO EX. GUTTER AS INDICATED. PROVIDE MIN. 1" THICK EPOXY GROUT LAYER OVER EX. CONC. APPLY AS RECOMMENDED BY MFR.

2 PEW AWT-DI/F ? EL. 6.0

1 1/4" CDW/CU/S ? EL. 11.0

UNIT HEATER

3"x1 1/4" ADAPTER

SLOPE

UP

STRAIGHT PIPE SECTION LENGTH AS REQ'D. BY FLOW METER MFR.

1 1/2" NaOCl-CPVC/V ? EL. 7.00€

SAWCUT CONCRETE ALONG EDGE

FILL AREA WITH CONC. TO EL. OF TUNNEL FLOOR AT DOOR (EL. 1.5€) SLOPE UP FROM DOOR TO DRAIN TO TUNNEL

+1"

CUT 7'-0" HIGH DOOR OPENING IN EX. WALL

4'-0"

+0.0

MATCHLINE B-B SEE DRAWING COM-3

MAGNETIC FLOW METER

8"x6" REDUCERS

8 SL-DI/F FROM PRIMARY CLARIFIERS 1 THRU 4 INTO TEE

? EL 11.0

LEAK AREA

DETAIL Q OOM-2

1 1/4" PSW-CU/S PUMP SEAL WATER SYSTEM, TYP 4 PUMPS

COLUMN

EX. 8 DR-DI

3 COW-CU/S ? EL. 5.0

4 PEW AWT ? EL. 6.0

1 1/4" PSW-CU/S

3/4" HWR+HWS

? EL 4.5

EX. EAST SLUDGE PUMP GALLERY

FIN. FL. EL. 1.5€

INSTALL 8" RESTRAINED FLANGE ADAPTER ON EX. 8" DR-DI. ADD. #2

1 CA-CU/S ? EL. 4.0 W/ FEMALE QUICK CONNECT. FITTING

3 PEW AWT-DI/F

3"x13 1/2" RED. FLG.

4 PEW AWT-DI/F

DETAIL A COM-3

PIPE SUPPORT FOR 36" PIPE

DETAIL D OOM-1

PIPE SUPPORT, TYP. 2

4"x13 1/2" RED. FLG.

EX. CLARIFIER DRAIN PIPE

1 1/2" PEW AWT-DI/F

UNIT HEATER

EX. EAST SLUDGE PUMP GALLERY TUNNEL

EL. 12.50

8 SL-DI/F

? EL. 10.17

? EL. 8.67

DOOR OPENING

2 NaOCl-CPVC/V ? EL. 7.25

SECTION 3 COM-2

SCALE: 1/4"=1'-0"

1 1/2" NaOCl-CPVC/V ? EL. 7.25

BREAK OPENING INTO WALL AND INSTALL PVC SLEEVE W/ NON-SHRINK GROUT. EXTEND SLEEVE MINIMUM 6" BEYOND INSIDE FACE OF WALL.

SAWCUT CONCRETE ALONG EDGE

8 SL-DI/F

? EL. 8.67

? EL. 6.96€

? EL. 7.31€

CONC. PAD, SIZE TO SUIT PUMP. EX. GUTTER BELOW TO REMAIN INTACT

SECTION 4 COM-2

SCALE: 1/4"=1'-0"

6 SLEEVE-PVC/BS W/ 1 1/2" NaOCl-HOSE/CLAMP FOR CONTINUATION, SEE DWG 00C-9.

45°

EX. 2" CONDUITS

BREAK OUT CONCRETE TO SOUND CONCRETE WHERE FOUR EX. 2" CONDUITS PENETRATE END WALL OF TUNNEL. SCABBLE AND FILL WITH EPOXY BONDING COMPOUND TO PROVIDE WATERTIGHT SEAL.

PRIMARY SLUDGE PUMP, TYP. 4 (EX. CLARIFIERS)

FLANGE TYPE PRESSURE GAUGE w/ISOLATOR, RANGE 0-25 PSI, SEE DETAIL Q/OOM-2, TYP 4 PUMPS AT DISCHARGE END

8 SL-DI/F

FLANGE TYPE PRESSURE GAUGE w/ISOLATOR, RANGE -30"Hg TO 25 PSI, SEE DETAIL Q/OOM-2, TYP 4 PUMPS AT SUCTION END

RESURFACE FLOOR w/EPOXY MORTAR TOPPING. SLOPE TO DRAIN TO GUTTER. PROVIDE MIN. 1" THK. EPOXY GROUT LAYER OVER EX. CONC.. APPLY AS RECOMMENDED BY MFR.

EX. 6 DR-DI, FROM CHLORINE CONTACT CHAMBER

EX. PRIMARY CLARIFIERS 5 & 6

ADD. #2

EX. GROUNDWATER DRAINAGE WELL

EX. SLUDGE COLLECTION EQUIPMENT, TYP.

EX. PRIMARY CLARIFIERS 7 & 8

ADD. #2

INSTALL 90° BENDS, FLG x FLG DI VERTICAL PIPES, AND FLG DI BELL MOUTHS SIMILAR TO PIPES SHOWN FOR CLARIFIERS NOS. 5 & 6. BREAK OUT FILLET CONCRETE IN SUMPS BELOW TO EXTENT NECESSARY FOR PIPE INSTALLATION AND FINISH BREAK-OUT AREA SMOOTHLY WITH SAND/CEMENT MORTAR & EPOXY BONDING COMPOUND. ADD. #2

REMOVE, DISSASSEMBLE, CLEAN INSIDE AND OUTSIDE, REPACK, PAINT, REPAIR AS NECESSARY, AND REINSTALL EXISTING GATE VALVE AND OPERATOR W/GALV. STEEL BOLTS, NUTS, & WASHERS, TYP. CLAR. 5, 6, 7, & 8. ADD. #2

NOTES

1. CLEAN THOROUGHLY ALL CONCRETE SURFACES IN EX. EAST SLUDGE PUMP GALLERY AND TUNNELS, AND IN EX. SLUDGE STORAGE TANK TUNNEL USING HYDROBLAST METHOD. CLEANING TO BE PERFORMED PRIOR TO INSTALLATION OF EQUIPMENT AND CONTROLS AND IN PREPARATION FOR JOINT REPAIR, CONCRETE MODIFICATION, AND SEALING WORK.
2. SEAL ALL LEAKS INTO THE EAST SLUDGE PUMP GALLERY AND TUNNELS BY DRILLING AND PRESSURE INJECTIONS. PROCEDURES TO BE IN ACCORDANCE WITH MANUFACTURER'S RECOMMENDATIONS. AREAS OF LEAKAGE ARE NOTED.
3. WHERE EPOXY MORTAR TOPPING IS APPLIED TO EXISTING FLOOR, BREAK OUT EXISTING FLOOR AS NECESSARY TO OBTAIN MINIMUM 1" GROUT THICKNESS WITH SMOOTH TRANSITION AT INTERFACES.

PLAN AT EL. 8.5

SCALE: 1/4"=1'-0"

3 COW-CU/S

8 SL-DI/F

1 1/2" NaOCl-CPVC/V

? EL. 9.19€

? EL. 7.0€

? EL. 6.17€

FROM PRIMARY CLARIFIERS NO. 5-8

TO GRAVITY THICKENERS

FROM PRIMARY CLARIFIERS NO. 1-4

2 PEW-AWT-DI/F

8" PV

BLIND FLANGE, TYP.

8" DI FLG TEE, TYP.

? EL. 4.67€

8 SL-DI/F

FIN. FL. EL. 1.0€

SECTION 5 COM-2

SCALE: 1/4"=1'-0"

BREAK OUT OPENING THROUGH WALL AND SEAL OPN'G AROUND PIPE WITH CONC.

36 RW-DI/BS (BURIED)

BREAK OUT TUNNEL CONC. AS NECESSARY FOR PIPE INSTALLATION AND SEAL BETWEEN PIPE AND TUNNEL WITH GROUT

1 1/2" PEW AWT-DI/F, TO HYDRANT

FIN. FL. EL. 12.0

36 RW-DI/F

? EL. 11.40

? EL. 9.19

? EL. 10.17

4 PEW AWT-DI/F

? EL. 8.64€

? EL. 7.31€

? EL. 7.13€

? EL. 5.64€

? EL. 8.67

UNIT HEATER

8 SL-DI/F

4"x13 1/2" RED. FLG.

? EL. 6.17

EX. 8 DR-DI

? EL. 3.49

TO PRELIMINARY TREATMENT BUILDING

? EL. 3.17

FIN FL. EL. 1.5€

12" PVC SCH. 40 SLEEVE AROUND EX. 8" DRAIN FORM SLEEVE AROUND EX. 8" DR AND THROUGH CONCRETE.

CONC. SUPPORT SIZE TO SUIT PUMP

CONC. PAD, TYP.

1 1/4"x13 1/2" RED. FLG.

1 1/4" SAMPLE TAP w/VALVE

NOTE

PUMPS NOT SHOWN FOR CLARITY.

SECTION 1 COM-2,3

SCALE: 1/4"=1'-0"

36 RW-DI/F

? EL. 11.40

? EL. 9.09

? EL. 9.19

? EL. 7.95

4 PEW AWT-DI/F

? EL. 3.49

? EL. 3.17

FIN. FL. 1.5€

8 DR-DI/F

NOTE

PUMPS NOT SHOWN FOR CLARITY.

SECTION 2 COM-2,3

SCALE: 1/4"=1'-0"

RECORD DRAWING

NO.	DATE	DRWN	CHK'D	DESCRIPTION
1	9/97	FXP	ASG	RECORD DRAWING

REVISIONS

DESIGNED BY: DAO
DRAWN BY: CLP/CTC
CHECKED BY/DATE: TDH 9/91
APPRV'D BY/DATE: TDH 9/91

COMMONWEALTH OF VIRGINIA — THOMAS D. HALL No. 12502 — PROFESSIONAL ENGINEER

CAMP DRESSER & McKEE

environmental engineers, scientists, planners, & management consultants

PER DRAWING HAS BEEN REVISED BY HAZEN AND SAWYER, P.C. TO REFLECT MODIFICATIONS MADE DURING CONSTRUCTION

CDM

ARLINGTON COUNTY, VIRGINIA
WATER POLLUTION CONTROL PLANT
UPGRADE AND EXPANSION- PHASE IIB

EXISTING PRIMARY CLARIFIERS
EAST SLUDGE PUMP GALLERY
PLAN AND SECTIONS

SCALE NOTE

SCALE BAR SHOWN BELOW IS ONE INCH LONG ON A FULL SIZE DRAWING. WHEN SCALING DRAWINGS, MEASURE BAR TO DETERMINE IF SCALES SHOWN WILL REQUIRE ADJUSTING.

ONE INCH

CONTRACT NO. 90-02-WPC
YEAR 1991
LOCATION CODE CO
SPECIALTY CODE M
PROJECT NO. 5002-33
FILE NAME COM-0002.DWG
DRAWING NO. COM-2
SHEET NO. 244

01/20/92 - 13:05

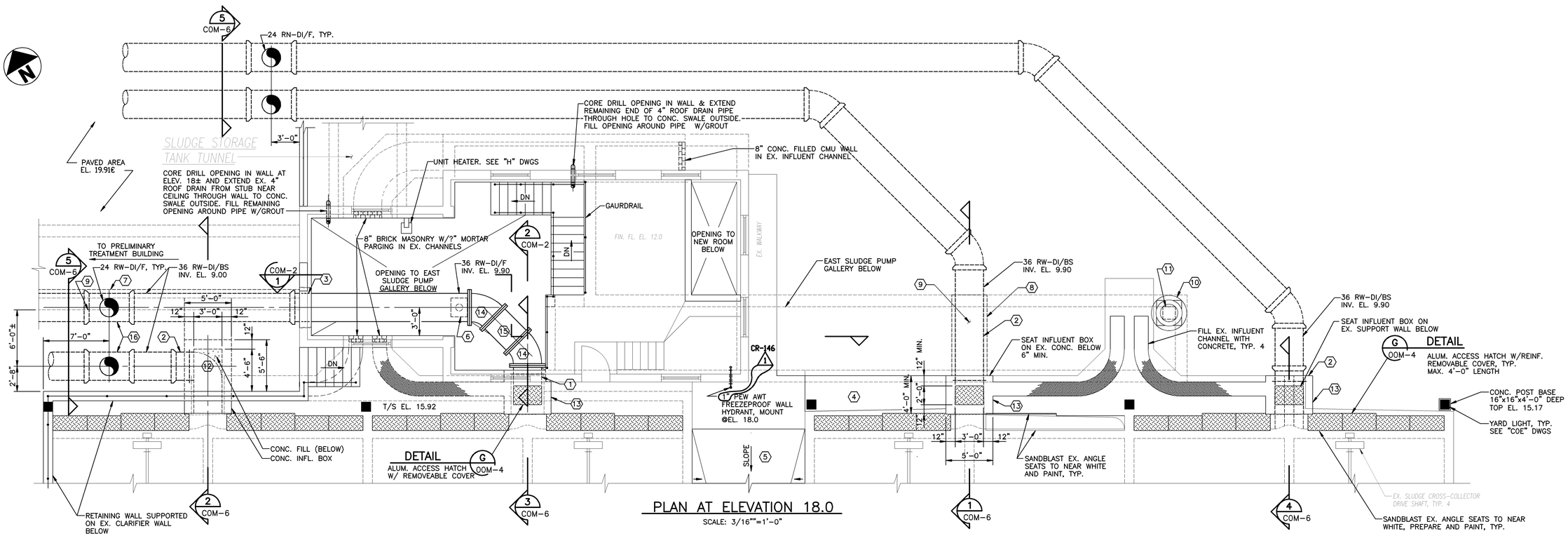

PLAN AT ELEVATION 18.0

SCALE: 3/16""=1'-0"

NOTE:
1. ALL EXTERIOR UNDERGROUND 36 RW-DI/BS PIPE SHALL BE CLASS 50. ALL INTERIOR 36 RW-DI/F PIPE SHALL BE CLASS 52.

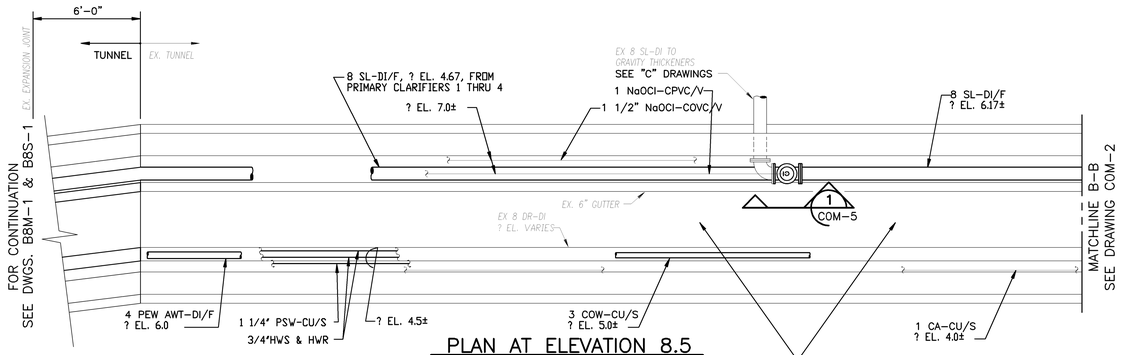

PLAN AT ELEVATION 8.5

SCALE: 1/4"=1'-0"

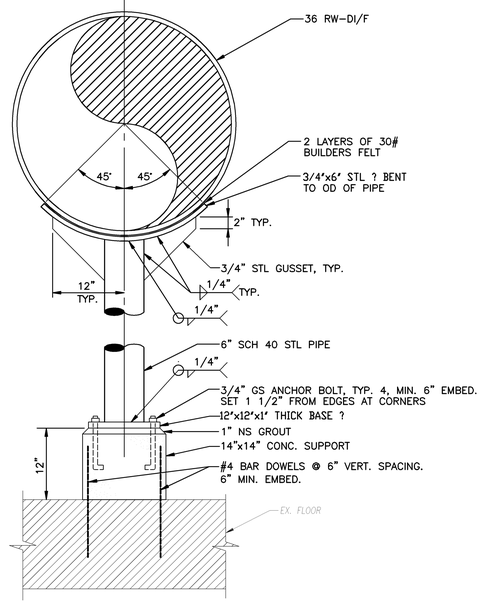

PIPE SUPPORT DETAIL A

SCALE: 1"=1'-0"

C?M-2

IDENTIFICATION CODES

1. 36" DI FLGxPE WALL PIPE W/ COLLAR
2. 36" DI BELLxPE WALL PIPE W/ COLLAR
3. BREAK OPENING IN EX. FOR PIPE. LEAVE 12" MIN. LENGTH OF REINF. BARS IN OPENING & BEND AROUND PIPE. FILL OPENING AROUND PIPE W/ CONCRETE, USING EPOXY BONDING COMPOUND
4. 4" THICK CONC. WALKWAY. TOP EL. SAME AS TOP OF CLARIFIER.
5. INSTALL CONCRETE FILL TO LEVEL OF EX. SURROUNDING CONCRETE SLABS. EXTEND SOUTH TO EDGE OF GRASS STRIP (APPROX. 12.0 FT.). SLOPE TO DRAIN TO GRASS STRIP. W/ 1% SLOPE
6. PIPE SUPPORT BELOW, SEE DETAIL A, SHEET COM-3
7. CONC. PIPE SUPPORT CRADLE ON EX. CONC. BELOW (TO EDGE OF EX. CONC.) TO 12" BELOW PIPE ?.
8. CONC. PIPE SUPPORT CRADLE ON EX. CONC. BELOW TO 12" BELOW PIPE ?.
9. BREAK OUT TOP OF EX. CONC. IF NECESSARY TO INSTALL PIPE AT SPEC. ELEV.
10. VENTILATOR FAN. SEE "H" DWGS
11. CONSTRUCT VENT INTAKE SHAFT WITH 8" CONC. FILLED CMU. 32"x32" OD REINFORCED W/ 8 VERT. #4 BARS EPOXY ANCHORED 4" DEEP INTO EX. CONC. + 6 GA GALV. STL. HOR. MASONRY REINF. BETWEEN ALT. COURSES. TERMINATE AT TOP EL. 18.00. PARGE EXTERIOR W/ 1/2" CEMENT MORTAR & WATERPROOF BELOW GRADE W/ BITUMINOUS COATING. FOR INSTL OF VENT FAN SEE "H" DWGS.
12. CONC. INFLUENT BOX FOR CLAR. NO. 5
13. CONC. INFLUENT BOX WITH 2'x3' ACCESS HATCH W/ REMOVABLE COVER. SEE DETAIL G, SHEET OOM-4, TYP. FOR CLAR. NOS. 6,7,& 8
14. 36" DI FLG 45° BEND
15. 36" RW-DI/FLGxFLG PIPE
16. 36"x24" DI/BS TEE

NO.	DATE	DRWN	CHK'D	DESCRIPTION
1	9/97	FXP	ASG	RECORD DRAWING

REVISIONS

DESIGNED BY: DAO
DRAWN BY: CLP/CTC
CHECKED BY/DATE: TDH 9/91
APPRV'D BY/DATE: TDH 9/91

COMMONWEALTH OF VIRGINIA
THOMAS D. HALL
No. 12502
PROFESSIONAL ENGINEER

CAMP DRESSER & McKEE
environmental engineers, scientists, planners, & management consultants
CDM

PER DRAWING HAS BEEN REVISED BY HAZEN AND SAWYER, P.C. TO REFLECT MODIFICATIONS MADE DURING CONSTRUCTION

ARLINGTON COUNTY, VIRGINIA
WATER POLLUTION CONTROL PLANT
UPGRADE AND EXPANSION- PHASE IIB

EXISTING PRIMARY CLARIFIERS
CLARIFIERS AND EAST TUNNEL ACCESS BUILDING
TOP PLAN

SCALE NOTE

SCALE BAR SHOWN BELOW IS ONE INCH LONG ON A FULL SIZE DRAWING. WHEN SCALING DRAWINGS, MEASURE BAR TO DETERMINE IF SCALES SHOWN WILL REQUIRE ADJUSTING.

ONE INCH

CONTRACT NO. 90-02-WPC
YEAR 1991
LOCATION CODE CO
SPECIALTY CODE M
PROJECT NO. 5002-33
FILE NAME COM-0003.DWG
DRAWING NO. COM-3
SHEET NO. 245

RECORD DRAWING

09/17/91 - 08:10

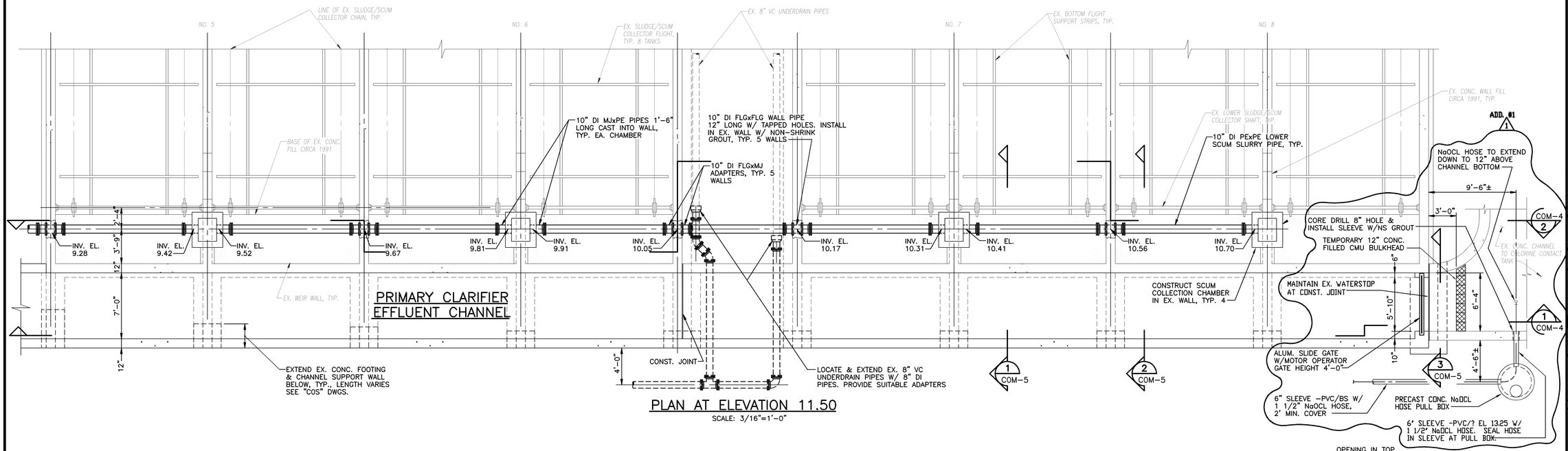

PLAN AT ELEVATION 11.50

SCALE: 3/16"=1'-0"

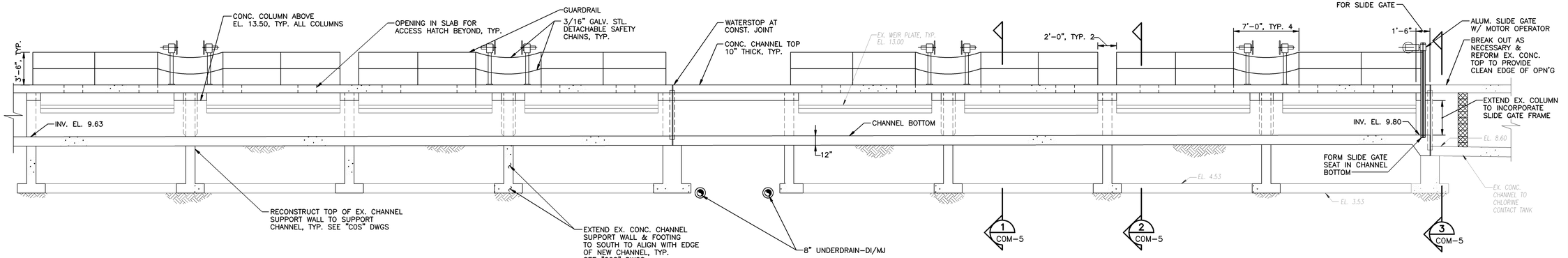

SECTION 1

SCALE: 3/16"=1'-0" — COM-1,4

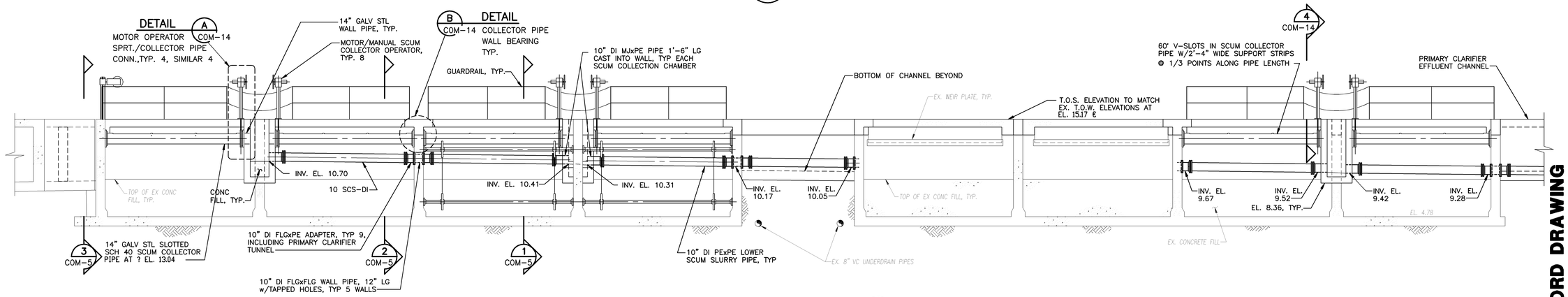

SECTION 2

SCALE: 3/16"=1'-0" — COM-1,4

09/17/91 - 08:02

RECORD DRAWING

NO.	DATE	DRWN	CHK'D	DESCRIPTION
1	9/97	FXP	ASG	RECORD DRAWING

REVISIONS

DESIGNED BY: DAO
DRAWN BY: CTC
CHECKED BY/DATE: TDH 9/91
APPRV'D BY/DATE: TDH 9/91

COMMONWEALTH OF VIRGINIA — THOMAS D. HALL No. 12502 — PROFESSIONAL ENGINEER

CAMP DRESSER & McKEE

PER DRAWING HAS BEEN REVISED BY HAZEN AND SAWYER, P.C. TO REFLECT MODIFICATIONS MADE DURING CONSTRUCTION

CDM

environmental engineers, scientists, planners, & management consultants

ARLINGTON COUNTY, VIRGINIA
WATER POLLUTION CONTROL PLANT
UPGRADE AND EXPANSION- PHASE IIB

EX. PRIMARY CLARIFIERS
SOUTH END OF CLARIFIERS
PLAN AND SECTIONS

SCALE NOTE

SCALE BAR SHOWN BELOW IS ONE INCH LONG ON A FULL SIZE DRAWING. WHEN SCALING DRAWINGS, MEASURE BAR TO DETERMINE IF SCALES SHOWN WILL REQUIRE ADJUSTING.

ONE INCH

CONTRACT NO. 90-02-WPC
YEAR 1991
LOCATION CODE C0
SPECIALTY CODE M
PROJECT NO. 5002-33
FILE NAME COM-0004
DRAWING NO. COM-4
SHEET NO. 246

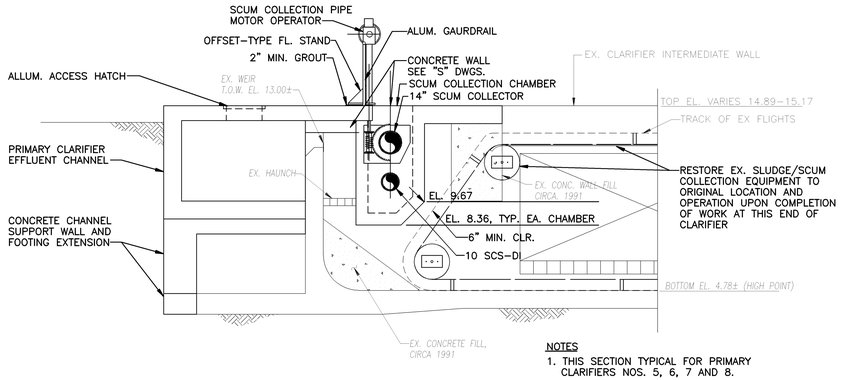

NOTES
1. THIS SECTION TYPICAL FOR PRIMARY CLARIFIERS NOS. 5, 6, 7 AND 8.

SECTION 1 / SCALE: 1/4"=1'-0" / COM-1,4

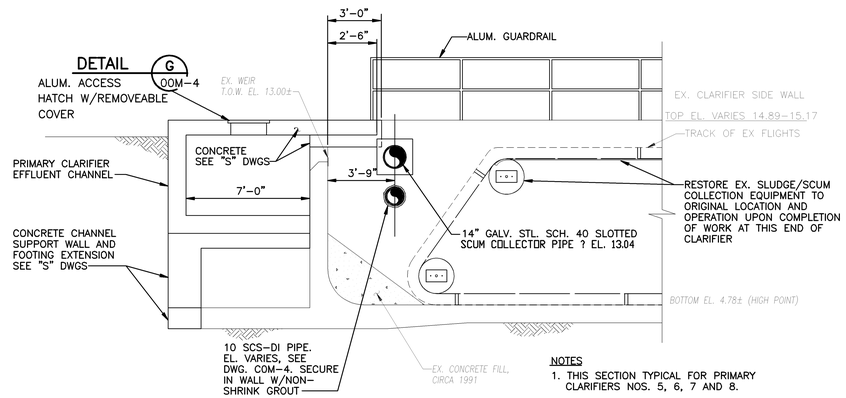

NOTES
1. THIS SECTION TYPICAL FOR PRIMARY CLARIFIERS NOS. 5, 6, 7 AND 8.

SECTION 2 / SCALE: 1/4"=1'-0" / COM-1,4

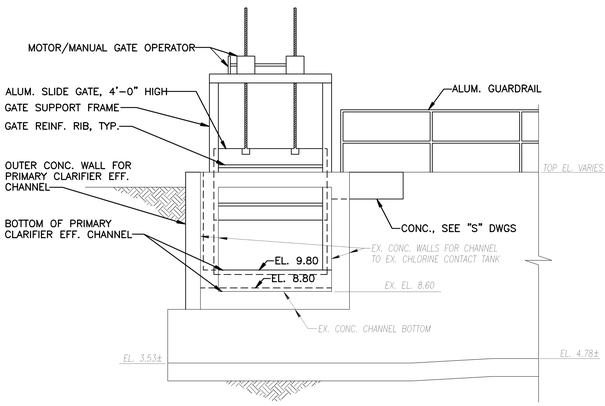

SECTION 3 / SCALE: 1/4"=1'-0" / COM-1,4

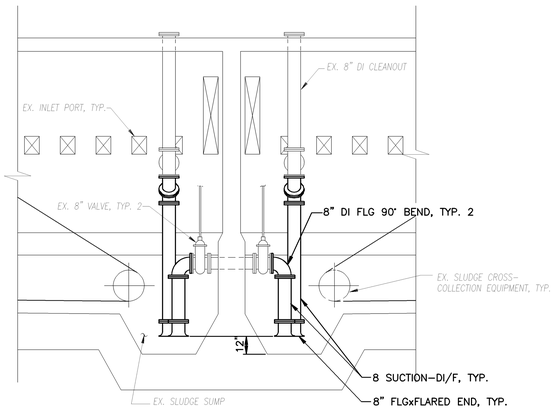

SECTION 1 / SCALE: 1/4"=1'-0" / COM-2

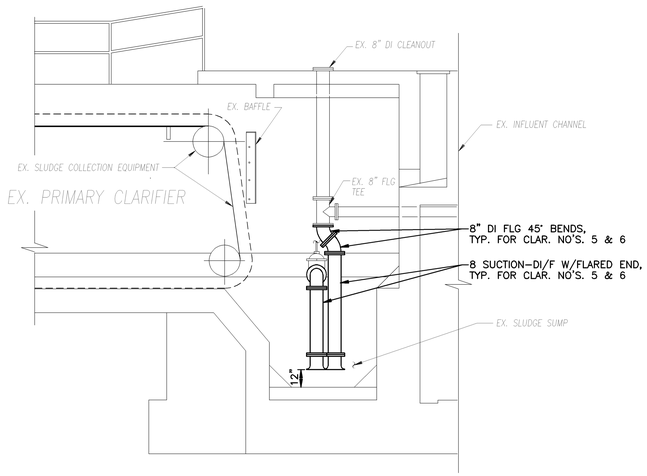

SECTION 2 / SCALE: 1/4"=1'-0" / COM-2

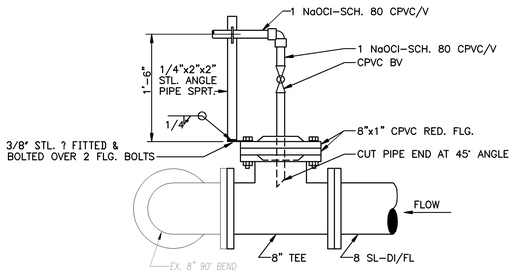

NaOCl CONNECTION TO PRIMARY SLUDGE PIPE

SECTION 1 / SCALE: 1"=1'-0" / COM-3

09/17/91 - 07:56

NO.	DATE	DRWN	CHK'D	DESCRIPTION
1	9/97	FXP	ASG	RECORD DRAWING

REVISIONS

DESIGNED BY: DAO
DRAWN BY: CTC
CHECKED BY/DATE: TDH 9/91
APPRV'D BY/DATE: TDH 9/91

COMMONWEALTH OF VIRGINIA — THOMAS D. HALL No. 12502 — PROFESSIONAL ENGINEER

CAMP DRESSER & McKEE
environmental engineers, scientists, planners, & management consultants
CDM

PER DRAWING HAS BEEN REVISED BY HAZEN AND SAWYER, P.C. TO REFLECT MODIFICATIONS MADE DURING CONSTRUCTION

ARLINGTON COUNTY, VIRGINIA
WATER POLLUTION CONTROL PLANT
UPGRADE AND EXPANSION- PHASE IIB

EXISTING PRIMARY CLARIFIERS
SECTIONS

SCALE NOTE
SCALE BAR SHOWN BELOW IS ONE INCH LONG ON A FULL SIZE DRAWING. WHEN SCALING DRAWINGS, MEASURE BAR TO DETERMINE IF SCALES SHOWN WILL REQUIRE ADJUSTING.
ONE INCH

CONTRACT NO. 90-02-WPC
YEAR 1991
LOCATION CODE C0
SPECIALTY CODE M
PROJECT NO. 5002-33
FILE NAME COM-0005.DWG
DRAWING NO. COM-5
SHEET NO. 247

RECORD DRAWING

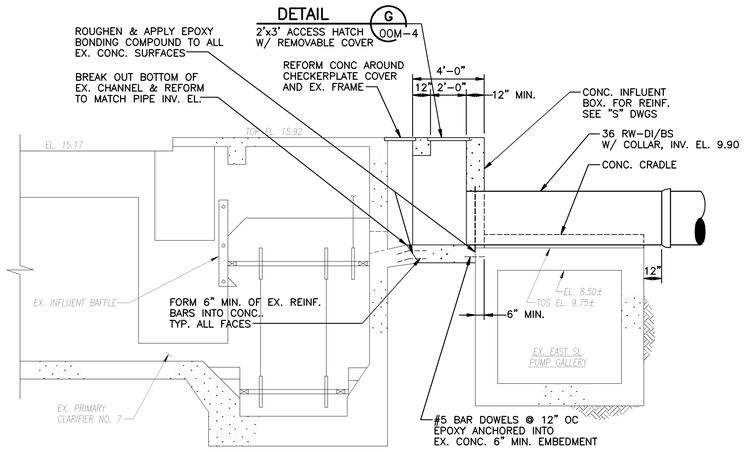

SECTION 1 COM-3
SCALE: 1/4"=1'-0"

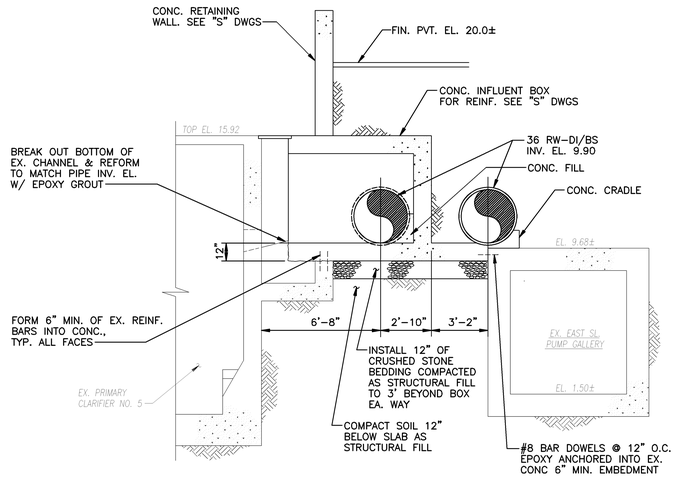

SECTION 2 COM-3
SCALE: 1/4"=1'-0"

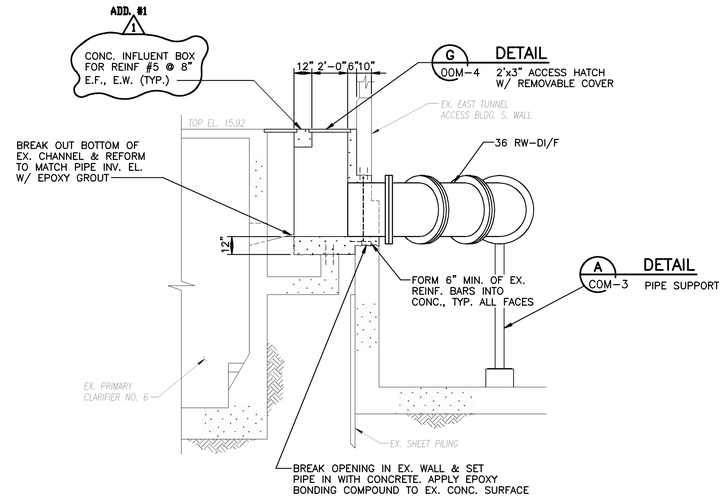

SECTION 3 COM-3
SCALE: 1/4"=1'-0"

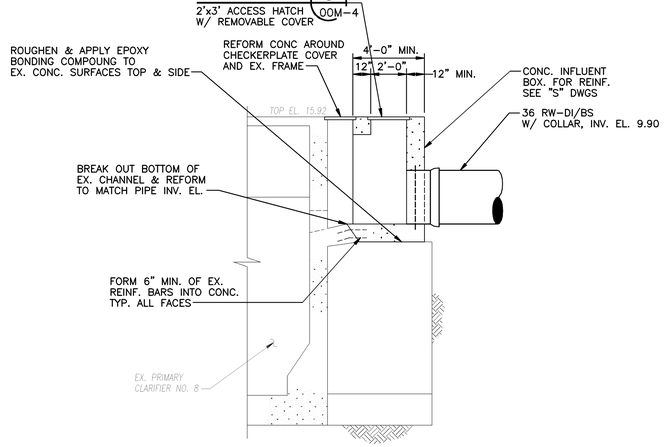

SECTION 4 COM-3
SCALE: 1/4"=1'-0"

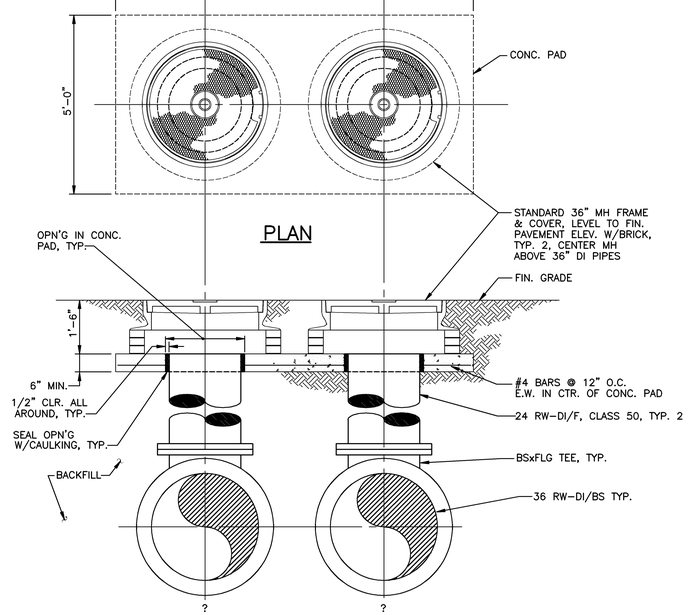

CLEANING ACCESS PORTS

SECTION 5 COM-3
SCALE: 1/2"=1'-0"

NO.	DATE	DRWN	CHK'D	DESCRIPTION
1	9/97	FXP	ASG	RECORD DRAWING

REVISIONS

DESIGNED BY: DAO
DRAWN BY: CTC
CHECKED BY/DATE: TDH 9/91
APPRV'D BY/DATE: TDH 9/91

COMMONWEALTH OF VIRGINIA
THOMAS D. HALL
No. 12502
PROFESSIONAL ENGINEER

CAMP DRESSER & McKEE

THIS DRAWING HAS BEEN REVISED BY HAZEN AND SAWYER, P.C. TO REFLECT MODIFICATIONS MADE DURING CONSTRUCTION

environmental engineers, scientists, planners, & management consultants

CDM

ARLINGTON COUNTY, VIRGINIA
WATER POLLUTION CONTROL PLANT
UPGRADE AND EXPANSION- PHASE IIB

EXISTING PRIMARY CLARIFIERS
SECTIONS

SCALE NOTE

SCALE BAR SHOWN BELOW IS ONE INCH LONG ON A FULL SIZE DRAWING. WHEN SCALING DRAWINGS, MEASURE BAR TO DETERMINE IF SCALES SHOWN WILL REQUIRE ADJUSTING.

ONE INCH

CONTRACT NO. 90-02-WPC
YEAR 1991
LOCATION CODE CO
SPECIALTY CODE M
PROJECT NO. 5002-33
FILE NAME COM-0006.DWG
DRAWING NO. COM-6
SHEET NO. 248

RECORD DRAWING

09/17/91 - 09:21

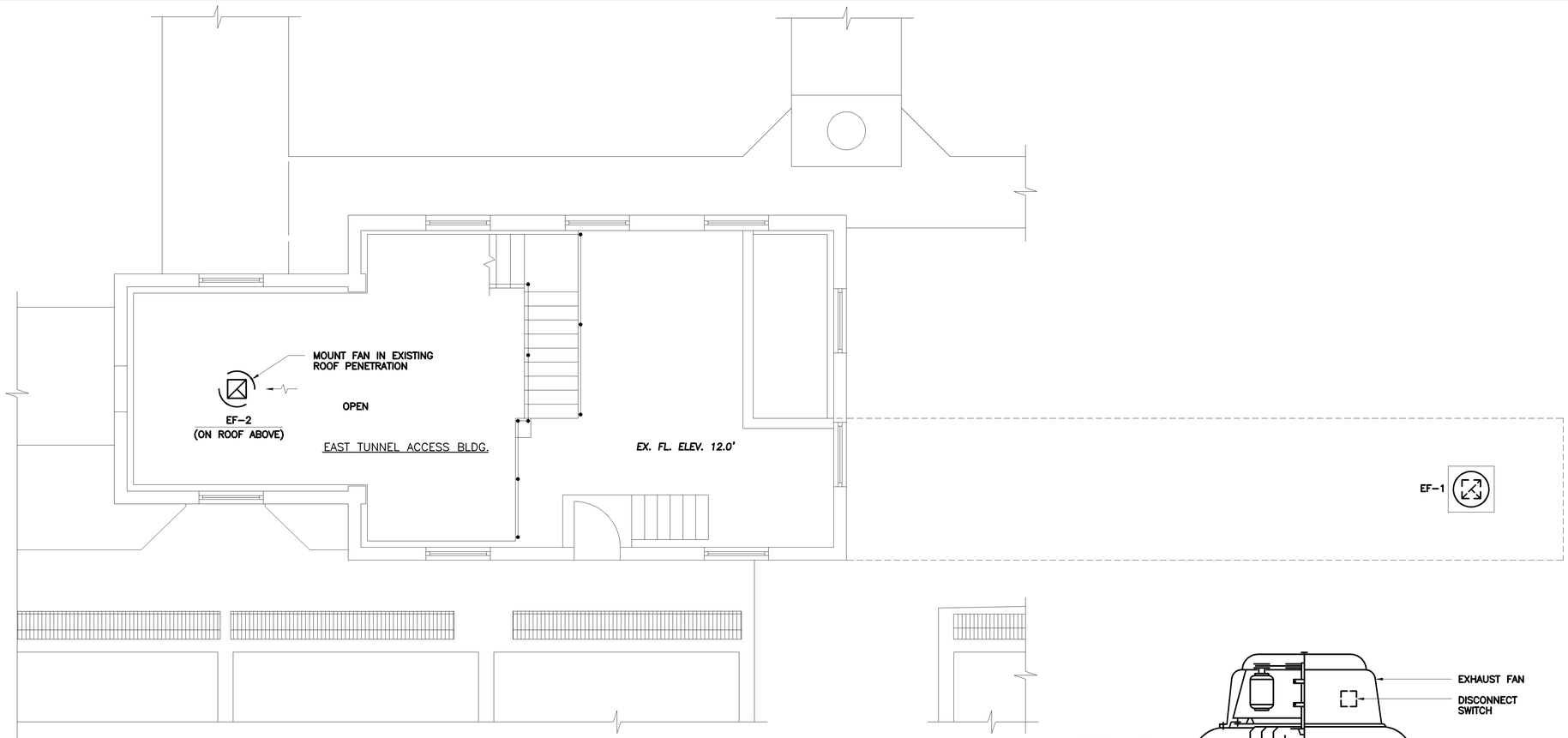

PLAN AT ELEVATION 26.0

SCALE: 1/4"=1'-0"

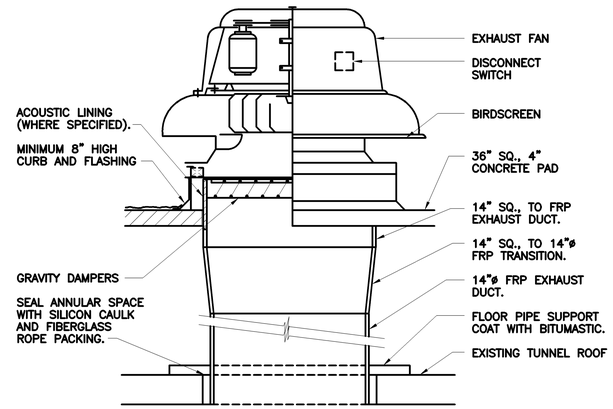

EF-1 INSTALLATION DETAIL

NTS

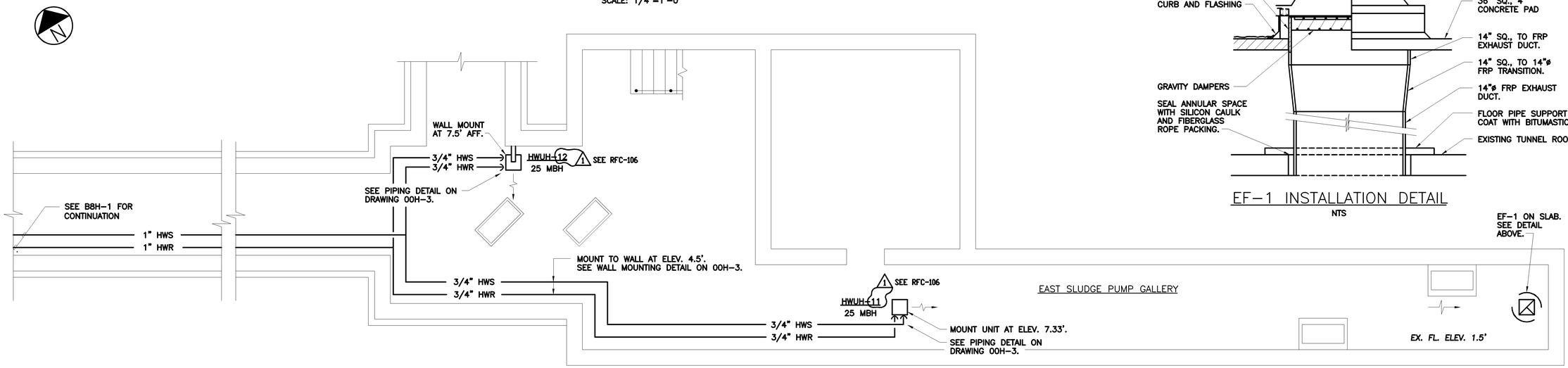

PLAN AT ELEVATION 10.0

SCALE: 1/4"=1'-0"

RECORD DRAWING

NO.	DATE	DRWN	CHK'D	REVISIONS
1	9/97	FXP	ASG	RECORD DRAWING

DESIGNED BY: WRH
DRAWN BY: RMM,SFP
CHECKED BY/DATE: WRH/9-91
APPRV'D BY/DATE: WRH/9-91

CAMP DRESSER & McKEE

THIS DRAWING HAS BEEN REVISED BY HAZEN AND SAWYER, P.C. TO REFLECT MODIFICATIONS MADE DURING CONSTRUCTION

CDM environmental engineers, scientists, planners, & management consultants

ARLINGTON COUNTY, VIRGINIA
WATER POLLUTION CONTROL PLANT
UPGRADE AND EXPANSION- PHASE IIB

EXISTING PRIMARY CLARIFIERS
HVAC
EAST TUNNEL ACC. BLDG. & EAST SLUDGE PUMP GALLERY
FLOOR PLAN

SCALE NOTE

SCALE BAR SHOWN BELOW IS ONE INCH LONG ON A FULL SIZE DRAWING. WHEN SCALING DRAWINGS, MEASURE BAR TO DETERMINE IF SCALES SHOWN WILL REQUIRE ADJUSTING.

ONE INCH

CONTRACT NO.	90-02-WPC
YEAR	1991
LOCATION CODE	CO
SPECIALTY CODE	H
PROJECT NO.	5002-33
FILE NAME	COH1.DWG
DRAWING NO.	COH-1
SHEET NO.	250

C.E. BAILEY & ASSOCIATES, INC.
CONSULTING ENGINEERS
ORLANDO, CLEARWATER & FORT LAUDERDALE, FLORIDA

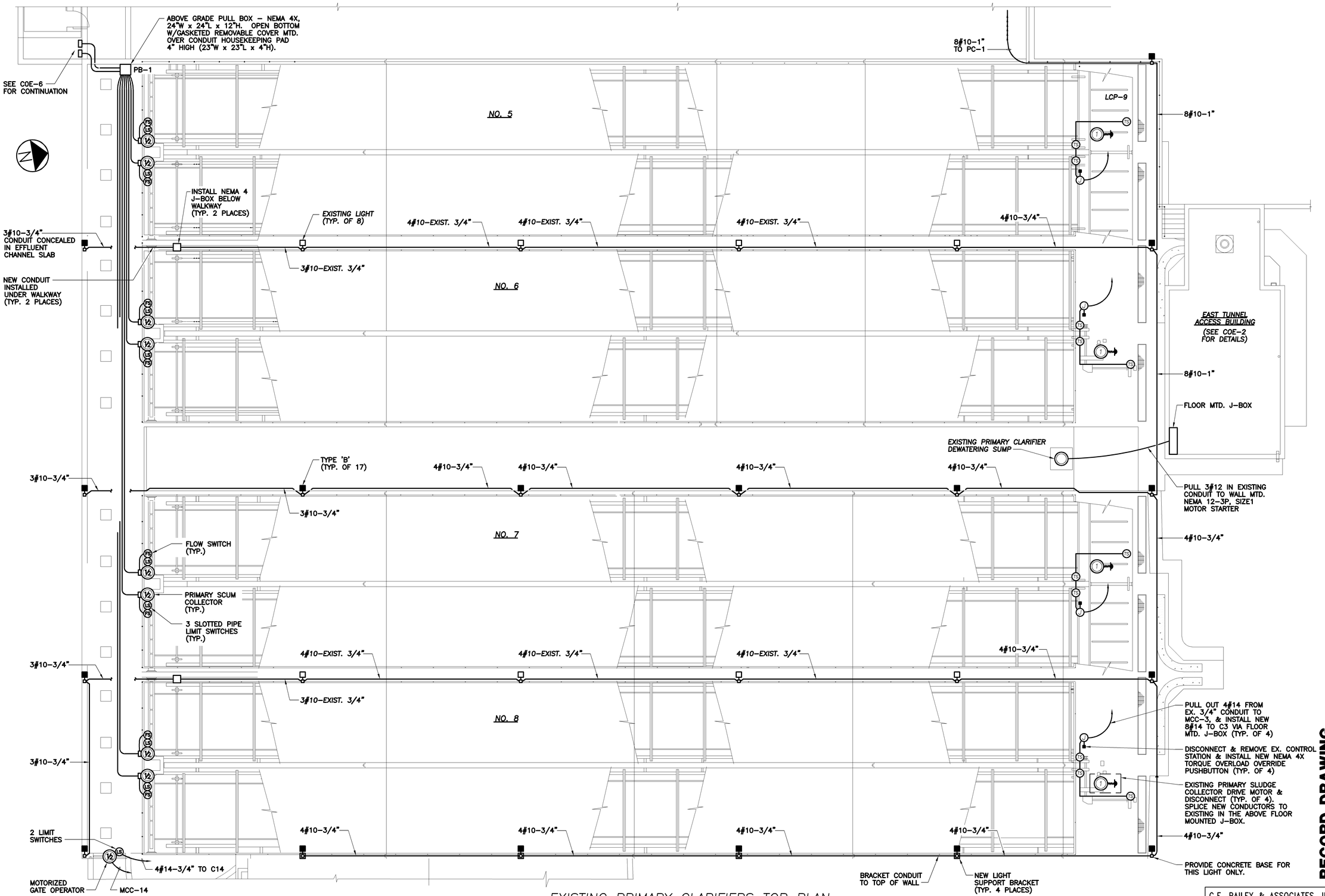

EXISTING PRIMARY CLARIFIERS TOP PLAN

SCALE: 1/8"=1'-0"

RECORD DRAWING

NO.	DATE	DRWN	CHK'D	DESCRIPTION
1	9/97	FXP	ASG	RECORD DRAWING

REVISIONS

DESIGNED BY: SEB
DRAWN BY: TRH
CHECKED BY/DATE: CEB/9-91
APPR'D BY/DATE: CEB/9-91

CAMP DRESSER & McKEE

THIS DRAWING HAS BEEN REVISED BY HAZEN AND SAWYER, P.C. TO REFLECT MODIFICATIONS MADE DURING CONSTRUCTION

CDM environmental engineers, scientists, planners, & management consultants

ARLINGTON COUNTY, VIRGINIA
WATER POLLUTION CONTROL PLANT
UPGRADE AND EXPANSION- PHASE B

EXISTING PRIMARY CLARIFIERS
ELECTRICAL
CLARIFIERS & EAST TUNNEL ACCESS BUILDING
TOP PLAN

SCALE NOTE

SCALE BAR SHOWN BELOW IS ONE INCH LONG ON A FULL SIZE DRAWING. WHEN SCALING DRAWINGS, MEASURE BAR TO DETERMINE IF SCALES SHOWN WILL REQUIRE ADJUSTING.

ONE INCH

CONTRACT NO. 90-02-WPC
YEAR 1991
LOCATION CODE: CO
SPECIALTY CODE: E
PROJECT NO. 5002-33
FILE NAME COE-01.DWG
DRAWING NO. COE-1
SHEET NO. 251

C.E. BAILEY & ASSOCIATES, INC.
CONSULTING ENGINEERS
ORLANDO, CLEARWATER & FORT LAUDERDALE, FLORIDA

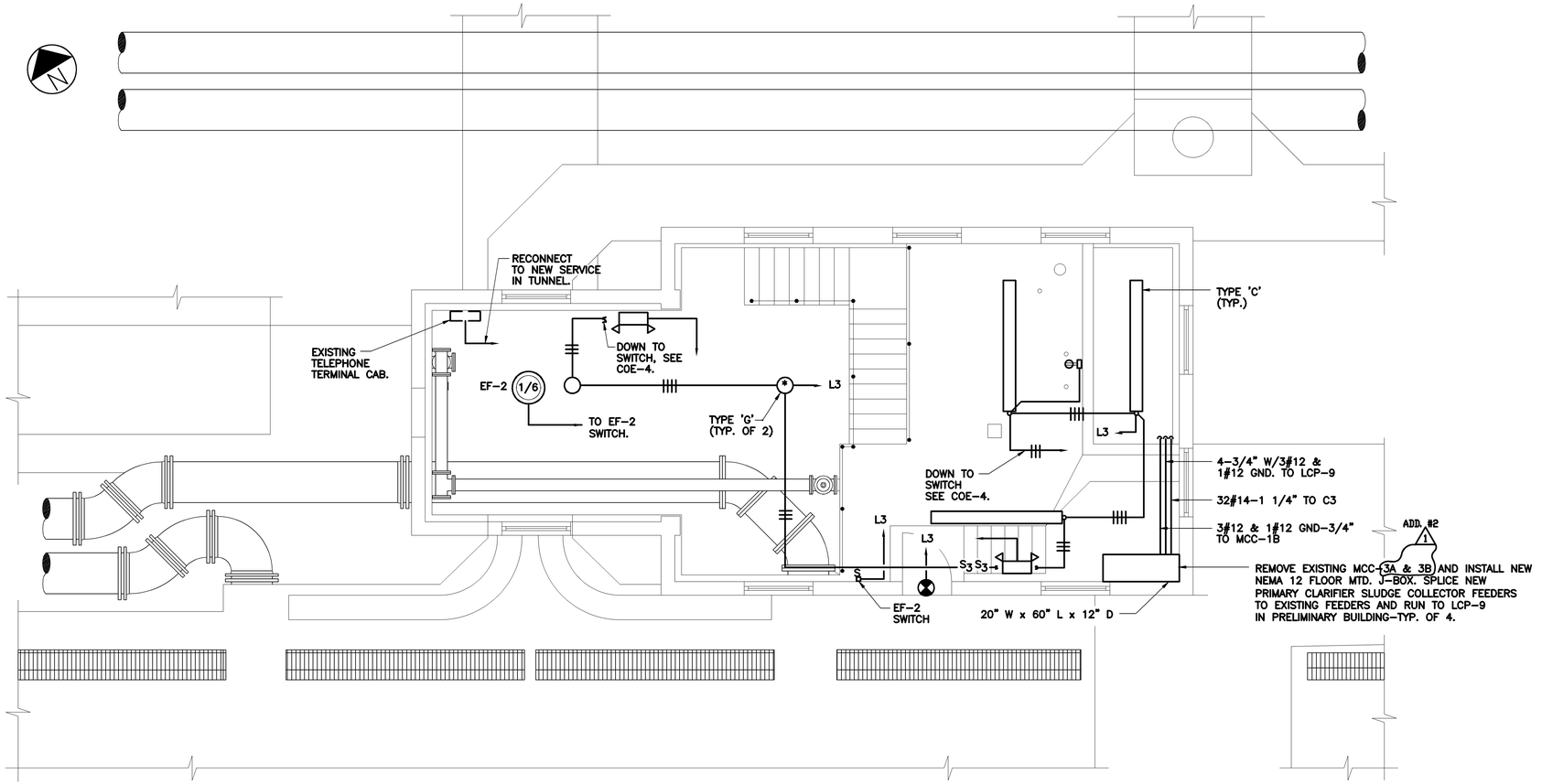

TOP PLAN
SCALE:1/4"=1'-0"

RECORD DRAWING

NO.	DATE	DRWN	CHK'D	DESCRIPTION
1	9/97	FXP	ASG	RECORD DRAWING

REVISIONS

DESIGNED BY: SEB
DRAWN BY: JSG
CHECKED BY/DATE: CEB/9-91
APPRV'D BY/DATE: CEB/9-91

CAMP DRESSER & McKEE

THIS DRAWING HAS BEEN REVISED BY HAZEN AND SAWYER, P.C. TO REFLECT MODIFICATIONS MADE DURING CONSTRUCTION

environmental engineers, scientists, planners, & management consultants **CDM**

ARLINGTON COUNTY, VIRGINIA
WATER POLLUTION CONTROL PLANT
UPGRADE AND EXPANSION- PHASE B

EXISTING PRIMARY CLARIFIERS
ELECTRICAL
EAST TUNNEL ACCESS BLDG. & EAST SLUDGE PUMP GALLERY
TOP ELECTRICAL PLAN

SCALE NOTE

SCALE BAR SHOWN BELOW IS ONE INCH LONG ON A FULL SIZE DRAWING. WHEN SCALING DRAWINGS, MEASURE BAR TO DETERMINE IF SCALES SHOWN WILL REQUIRE ADJUSTING.

ONE INCH

CONTRACT NO. 90-02-WPC
YEAR 1991
LOCATION CODE: CO
SPECIALTY CODE: E
PROJECT NO. 5002-33
FILE NAME COE-02.DWG
DRAWING NO. COE-2
SHEET NO. 252

C.E. BAILEY & ASSOCIATES, INC.
CONSULTING ENGINEERS
ORLANDO, CLEARWATER & FORT LAUDERDALE, FLORIDA

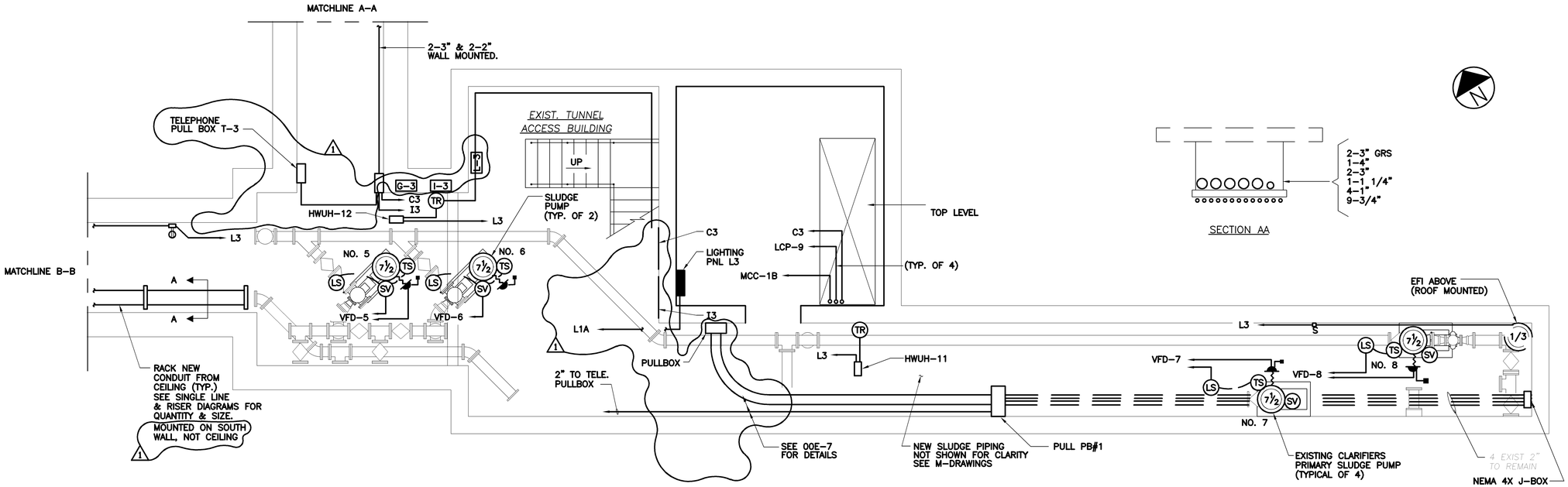

EAST SLUDGE PUMP GALLERY — POWER PLAN

SCALE: 1/4"=1'-0"

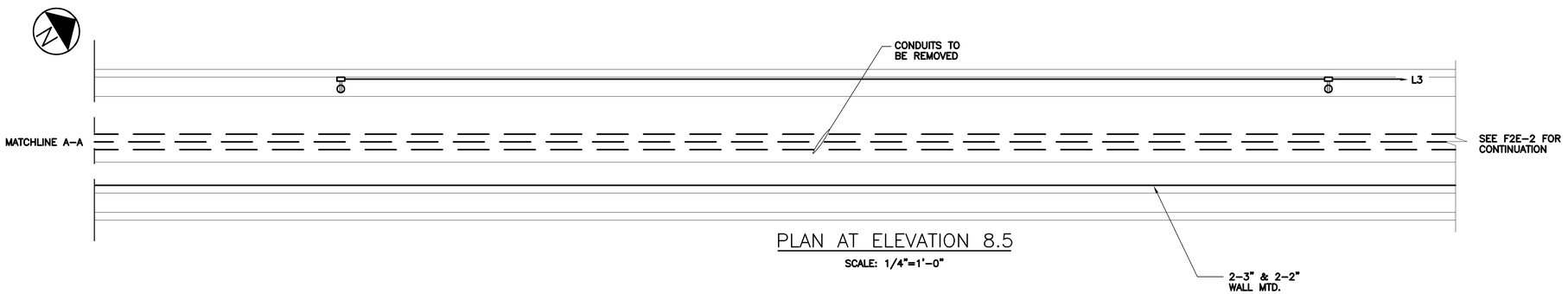

PLAN AT ELEVATION 8.5

SCALE: 1/4"=1'-0"

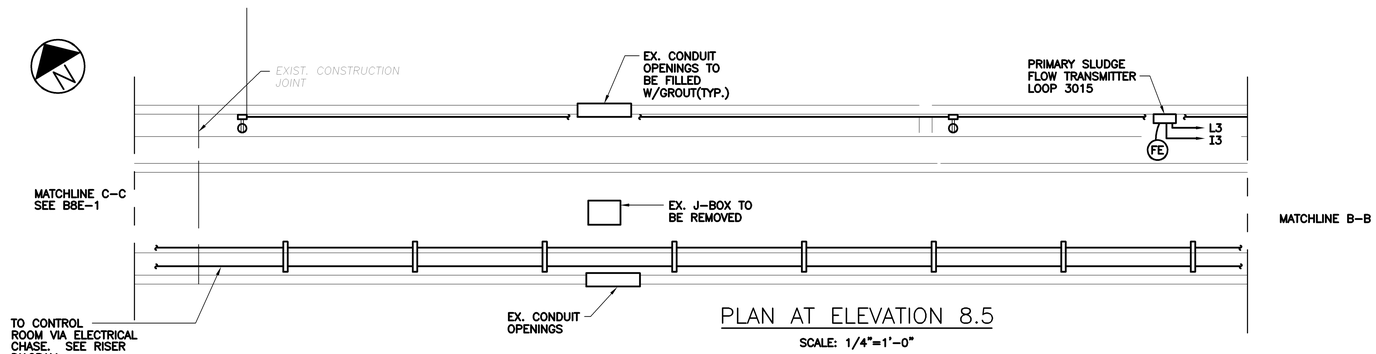

PLAN AT ELEVATION 8.5

SCALE: 1/4"=1'-0"

NOTES

1.) RECEPTACLES IN TUNNELS & BASEMENT SHALL BE MTD. 3' AFF & SHALL BE NEMA 4X.

2.) REMOVE ALL EXISTING RACEWAYS IN TUNNELS.

RECORD DRAWING

C.E. BAILEY & ASSOCIATES, INC.
CONSULTING ENGINEERS
ORLANDO, CLEARWATER & FORT LAUDERDALE, FLORIDA

NO.	DATE	DRWN	CHK'D	REVISIONS DESCRIPTION
1	9/97	FXP	ASG	RECORD DRAWING

DESIGNED BY: SEB
DRAWN BY: JSG
CHECKED BY/DATE: CEB/9-91
APPR'D BY/DATE: CEB/9-91

CAMP DRESSER & McKEE

THIS DRAWING HAS BEEN REVISED BY HAZEN AND SAWYER, P.C. TO REFLECT MODIFICATIONS MADE DURING CONSTRUCTION

CDM
environmental engineers, scientists, planners, & management consultants

ARLINGTON COUNTY, VIRGINIA
WATER POLLUTION CONTROL PLANT
UPGRADE AND EXPANSION- PHASE B

EXISTING PRIMARY CLARIFIERS ELECTRICAL
EAST TUNNEL ACCESS BLDG. & EAST SLUDGE PUMP GALLERY POWER PLAN

SCALE NOTE

SCALE BAR SHOWN BELOW IS ONE INCH LONG ON A FULL SIZE DRAWING. WHEN SCALING DRAWINGS, MEASURE BAR TO DETERMINE IF SCALES SHOWN WILL REQUIRE ADJUSTING.

ONE INCH

CONTRACT NO.	90-02-WPC
YEAR	1991
LOCATION CODE	CO
SPECIALTY CODE	E
PROJECT NO.	5002-33
FILE NAME	C0E-03.DWG
DRAWING NO.	C0E-3
SHEET NO.	253

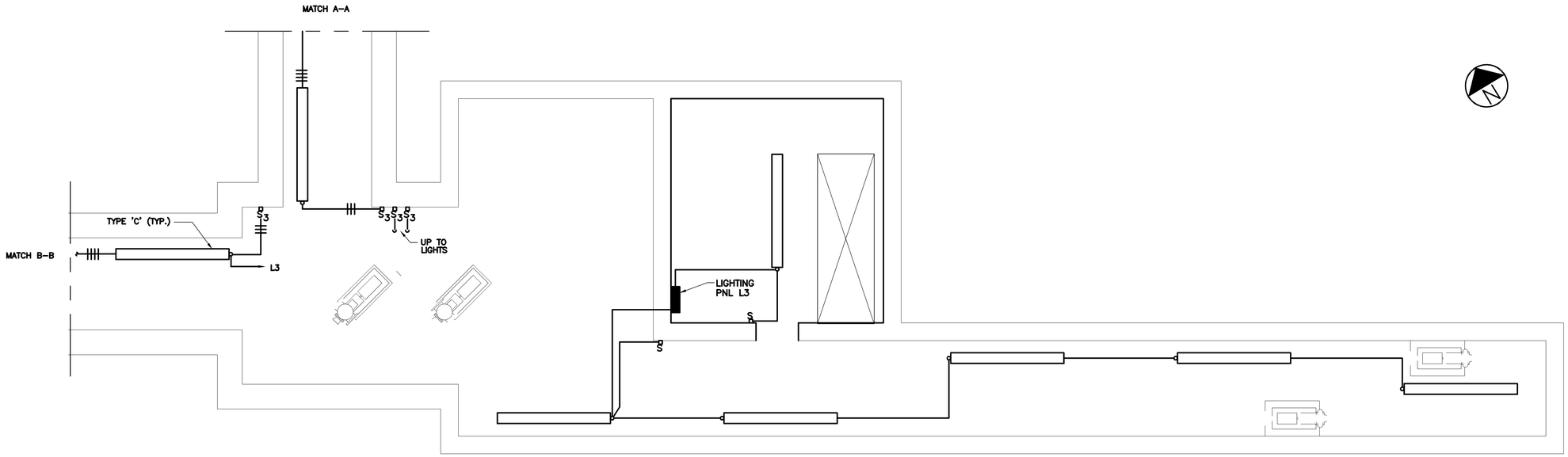

EAST SLUDGE PUMP GALLERY – LIGHTING PLAN

SCALE: 1/4"=1'–0"

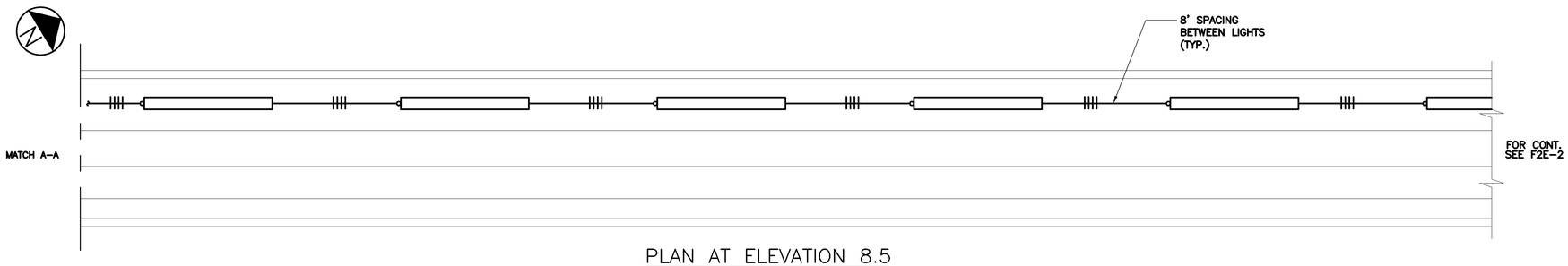

PLAN AT ELEVATION 8.5

SCALE: 1/4"=1'–0"

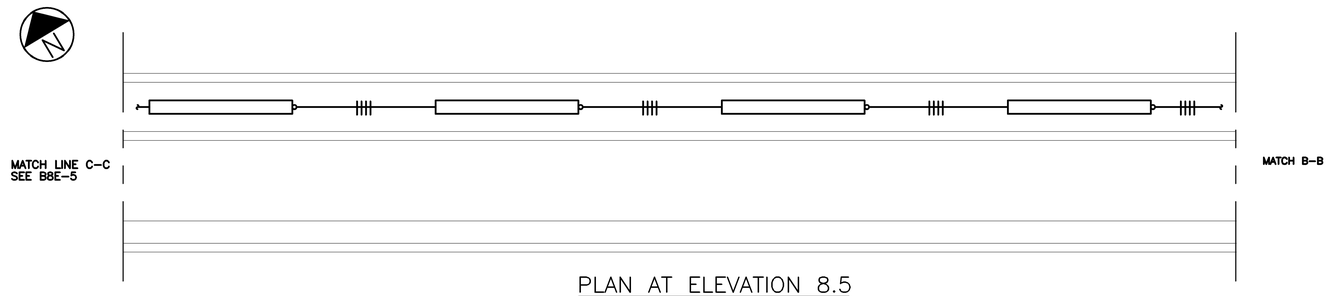

PLAN AT ELEVATION 8.5

SCALE: 1/4"=1'–0"

NO.	DATE	DRWN	CHK'D	DESCRIPTION
				REVISIONS
1	9/97	FXP	ASG	RECORD DRAWING

DESIGNED BY: SEB
DRAWN BY: JSG
CHECKED BY/DATE: SEB
APPRV'D BY/DATE: CEB

CAMP DRESSER & McKEE

THIS DRAWING HAS BEEN REVISED BY HAZEN AND SAWYER, P.C. TO REFLECT MODIFICATIONS MADE DURING CONSTRUCTION

CDM environmental engineers, scientists, planners, & management consultants

ARLINGTON COUNTY, VIRGINIA
WATER POLLUTION CONTROL PLANT
UPGRADE AND EXPANSION- PHASE B

EXISTING PRIMARY CLARIFIERS
ELECTRICAL
EAST TUNNEL ACCESS BLDG. & EAST SLUDGE PUMP GALLERY
LIGHTING PLAN

RECORD DRAWING

SCALE NOTE

SCALE BAR SHOWN BELOW IS ONE INCH LONG ON A FULL SIZE DRAWING. WHEN SCALING DRAWINGS, MEASURE BAR TO DETERMINE IF SCALES SHOWN WILL REQUIRE ADJUSTING.

ONE INCH

CONTRACT NO. 90–02–WPC
YEAR 1991
LOCATION CODE C0
SPECIALTY CODE E
PROJECT NO. 5002–33
FILE NAME C0E–04.DWG
DRAWING NO. C0E–4
SHEET NO. 254

C.E. BAILEY & ASSOCIATES, INC.
CONSULTING ENGINEERS
ORLANDO, CLEARWATER & FORT LAUDERDALE, FLORIDA

FILE: COE-11.DWG , SCALE: 3/32"=1'-0" , LATEST REVISIONS MADE ON: 12/7/98 AT 13:30

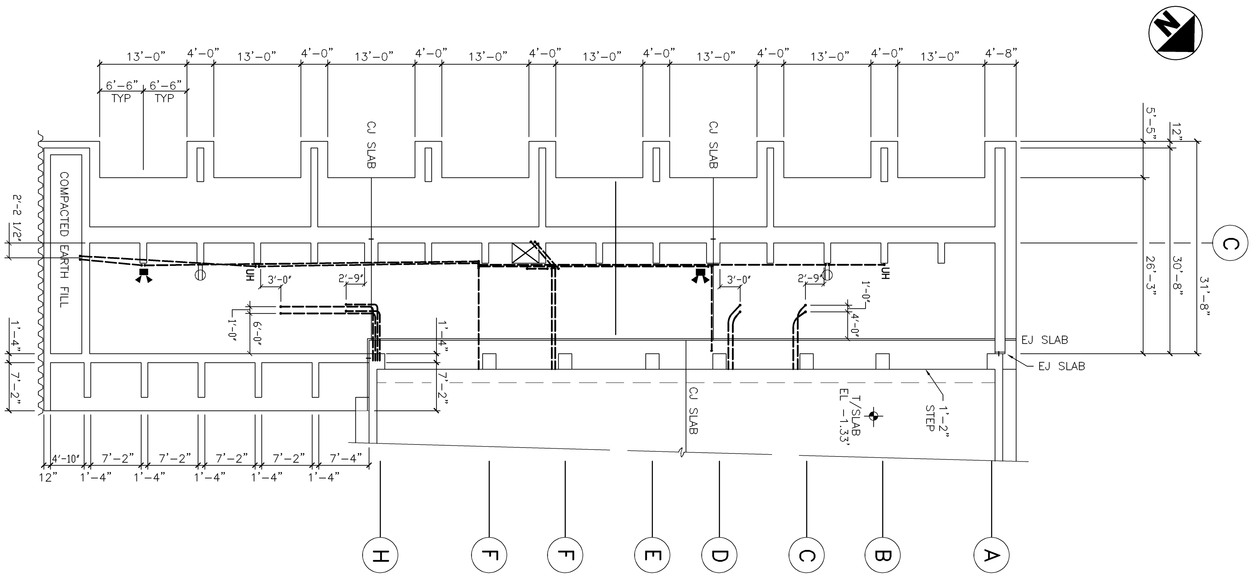

PLAN-SLAB AT EL-2.50"

3/32"=1'-0"

RECORD DRAWING

SCALE NOTE	SCALE BAR SHOWN BELOW IS ONE INCH LONG ON A FULL SIZE DRAWING. WHEN SCALING DRAWINGS, MEASURE BAR TO DETERMINE IF SCALES SHOWN WILL REQUIRE ADJUSTING.
CONTRACT NO.	90-02-WPC
YEAR	1991
LOCATION CODE	CO
SPECIALTY CODE	E
PROJECT NO.	5002-33
FILE NAME	COE-11
DRAWING NO.	COE-11
SHEET NO.	254A

ARLINGTON COUNTY, VIRGINIA
WATER POLLUTION CONTROL PLANT
UPGRADE AND EXPANSION- PHASE IIB

NEW PRIMARY CLARIFIERS-ELECTTICAL FOUNDATION PLAN

CAMP DRESSER & McKEE

THIS DRAWING HAS BEEN REVISED BY HAZEN AND SAWYER, P.C. TO REFLECT MODIFICATIONS MADE DURING CONSTRUCTION

environmental engineers, scientists, planners, & management consultants CDM

DESIGNED BY:					
DRAWN BY:					
CHECKED BY/DATE:					
APPRV'D BY/DATE:	1	12/98	FXP	ASG	RECORD DRAWING
	NO.	DATE	DRWN	CHK'D	DESCRIPTION

REVISIONS

54 FA-RC/BS

12" FILLED CMU WATERTIGHT BULKHEAD WALL, PARGE BOTH SIDES w/MORTAR TO MATCH ADJACENT CONC. WALLS

CONC. CURB

24" SQ ACCESS HATCH, TYP 16 CENTER ABOVE EFFLUENT CHANNEL

SLOPE CONCRETE SLAB TO DRAIN TO PRIMARY CLARIFIERS, TYP. ALL ALONG SLAB SEE "S" DWGS

FOR YARD MODIFICATIONS AND ADDITIONS IN THIS AREA, SEE DWGS. 00C-1.9

DETAIL G OOM-4 ACCESS HATCH W/ REMOVABLE COVER TYP

PRIMARY CLARIFIER EFFLUENT CHANNEL

ALUM. SLIDE GATE W/ MOTOR OPERATOR W/ POSITIONER & POSITION TRANSMITTER

PRIMARY EFFLUENT CHANNEL SEE "C7" DWGS FOR CONT.

T/S EL. 15.17

4" FA-PVC/V

NON-FREEZE HOT WATER YARD HYDRANT, SEE DRAWING COM-11 FOR PIPING, TYP. 2

RECESSES AND TOP OPENING FOR FUTURE SLIDE GATE, DIMENSIONS SAME AS PRIMARY EFFLUENT CHANNEL SLIDE GATE, BOLT 1/4" THK ALUM CHK PLATE OVER OPNG.

12" FILLED CMU WATER-TIGHT BULKHEAD WALL, PARGE BOTH SIDES W/MORTAR TO MATCH ADJACENT CONC. WALL

FOUL AIR BLOWER

PRIMARY SCUM WET WELL

DETAIL K OOM-4 3'x3' ACCESS HATCH W/HINGED COVER

EXHAUST FAN EF-3

8" FLGxPE SCH 40 PVC PIPE W/ULTRASONIC LEVEL ELEMENT. PIPE BOLLARD ON EAST AND WEST SIDES IN ACCORDANCE WITH DETAIL F/B8A-1 ON DRAWING B8A-7.

1 ADD. #2

SOUTH TUNNEL ACCESS BUILDING

4 COM-11

5 COM-11

EDGE OF CONC. FILL ON TANK BOTTOM, TYP.

LOWER SCUM SLURRY PIPE INV. EL.

LOWER SHAFT, SPROCKETS AND BEARINGS, TYP.

NON-METALLIC WEAR STRIPS. ANCHORED DIRECTLY TO CONCRETE FLOOR, TYP.

SLUDGE/SCUM COLLECTOR CHAIN, TYP.

LOWER CHAIN & FLIGHTS ONLY SHOWN FOR CLARITY

SLUDGE/SCUM COLLECTOR FLIGHTS AT 10'-0" O.C., TYP.

WALKWAY, TYP. 3

DETAIL B COM-13 UPPER RAIL SUPPORT BRACKET, TYP

UPPER RAIL, TYP.

UPPER SHAFT, SPROCKETS AND BEARINGS, TYP.

UPPER COLLECTION EQUIPMENT ONLY SHOWN FOR CLARITY

SLOTTED PIPE ROTATING MECHANISM W/MOTOR OPERATOR, TYP. 8

DETAIL C COM-14 SCUM COLLECTOR FLOW LIMIT SWITCHES, TYP

SCUM COLLECTION CHAMBER, TYP. 4

14" GALV STL SLOTTED SCH 40 SCUM COLLECTOR PIPE, TYP. 8

GUARDRAIL, TYP EACH PRIMARY CLARIFIER, ALL AROUND

INSTALL TEMP AIR BAG PLUG AND REMOVE WHEN EX PRIMARY CLARIFIERS ARE SUBSTANTIALLY COMPLETE

SCUM PUMP STATION BELOW CHANNEL

4'-0"x2'-0" EQUIPMENT REMOVAL HATCH

DETAIL L OOM-4 ACCESS HATCH W/ HINGED COVER AND DRAIN

PRIMARY CLARIFIER TUNNEL (BELOW)

T/S EL. 15.17

No. 1

No. 2

No. 3

No. 4

2'-0"

SINGLE-BAR HANDRAIL ON TOP OF RETAINING WALL

CONCRETE STAIRS

DETAIL G OOM-4 ACCESS HATCH W/ REINF REMOVABLE COVER, MAX. L. 4'-6", TYP.

PRELIMINARY TREATMENT BUILDING

SLUDGE/SCUM COLLECTOR DRIVE SYSTEM, INCLUDING GEAR MOTOR, SHAFTS, BEVEL GEAR, BEARINGS, SPROCKETS, DRIVE CHAIN, TORQUE SWITCHES, COVERS, ELECTRICAL CTRL'S & APPURTENANCES. TYPICAL 4 CLARIFIERS. SEE NOTES 1 & 2

T/S EL. 15.92

5 COM-9

NOTE

SLUDGE/SCUM COLLECTOR EQUIPMENT NOT SHOWN FOR CLARITY, TYPICAL FOR TANKS 6A, 6B, 8A AND 8B.

YARD LIGHT, TYP. SEE "COE" DWGS.

SLOPE CONCRETE SLAB TO DRAIN TO PRIMARY CLARIFIERS, TYP. ALL ALONG SLAB SEE "S" DWGS

FIN GR EL. 19.91±

2 COM-9

PAVED AREA

ELEC. CTRL. BOX, TYP., SEE "COE" DWGS.

TORQUE SWITCH JUNC. BOX, TYP. 3 EA., SEE "COE" DWGS.

1 COM-9

3 COM-10

EXISTING PRIMARY CLARIFIERS

NOTES

1. SLUDGE/SCUM COLLECTOR DRIVE SYSTEM COMPONENTS LAYOUT AND FUNCTION TO BE SAME AS EXISTING PRIMARY CLARIFIERS DRIVE SYSTEM.
2. FOR GROUNDWATER DRAINAGE PIPING BENEATH AND AROUND PRIMARY CLARIFIERS, SEE DWGS. COS-3 AND 00C-9. GROUNDWATER LEVEL MUST BE MAINTAINED BELOW EL. 6.00 BEFORE EMPTYING TANKS.

TOP PLAN

SCALE: 1/8"=1'-0"

09/17/91 - 09:12

RECORD DRAWING

NO.	DATE	DRWN	CHK'D	DESCRIPTION
1	9/97	FXP	ASG	RECORD DRAWING

REVISIONS

DESIGNED BY: DAO
DRAWN BY: CLP
CHECKED BY/DATE: TDH 9/91
APPRV'D BY/DATE: TDH 9/91

COMMONWEALTH OF VIRGINIA THOMAS D. HALL No. 12502 PROFESSIONAL ENGINEER

CAMP DRESSER & McKEE

RES DRAWING HAS BEEN REVISED BY HAZEN AND SAWYER, P.C. TO REFLECT MODIFICATIONS MADE DURING CONSTRUCTION

CDM environmental engineers, scientists, planners, & management consultants

ARLINGTON COUNTY, VIRGINIA
WATER POLLUTION CONTROL PLANT
UPGRADE AND EXPANSION- PHASE IIIB

NEW PRIMARY CLARIFIERS
TOP PLAN

SCALE NOTE

SCALE BAR SHOWN BELOW IS ONE INCH LONG ON A FULL SIZE DRAWING. WHEN SCALING DRAWINGS, MEASURE BAR TO DETERMINE IF SCALES SHOWN WILL REQUIRE ADJUSTING.

ONE INCH

CONTRACT NO. 90-02-WPC
YEAR 1991
LOCATION CODE CO
SPECIALTY CODE M
PROJECT NO. 5002-33
FILE NAME COM-0007.DWG
DRAWING NO. COM-7
SHEET NO. 257

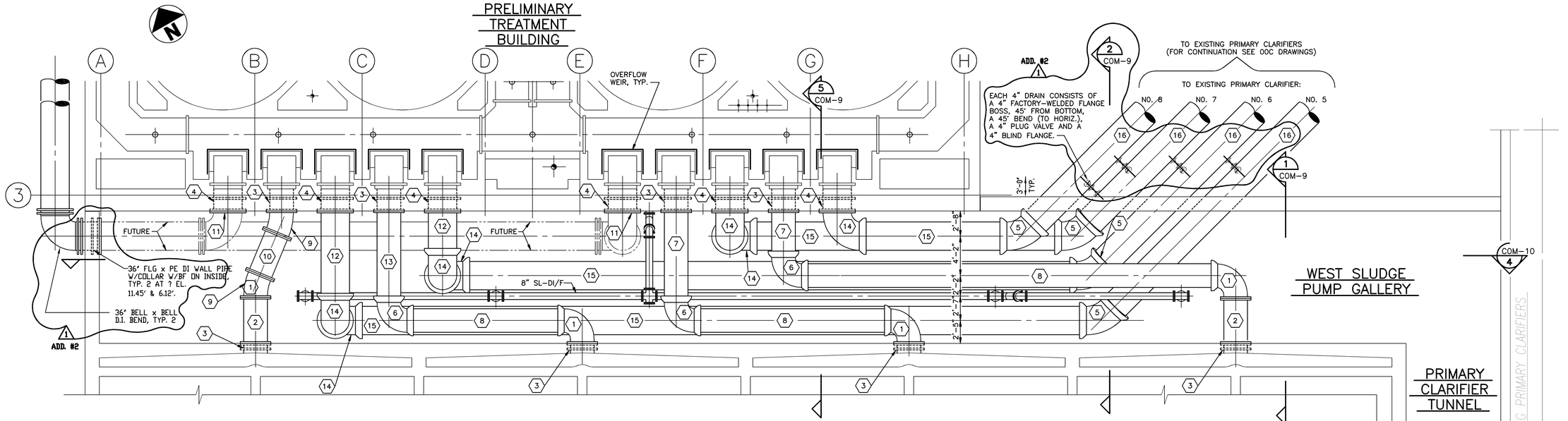

1. 30 RW-DI/FLGxRJ 90° BEND
2. 30 RW-DI/FLGxPE w/COLLAR
3. 30 RW-DI/FLGxPE w/COLLAR FLANGE TO HAVE TAPPED HOLES
4. 36 RW-DI/FLGxPE w/COLLAR FLANGE TO HAVE TAPPED HOLES
5. 36 RW-DI/RJ 45° BEND
6. 30 RW-DI/RJ 90° BEND
7. 30 RW-DI/FLGxPE PIPE
8. 30 RW-DI/RJ PIPE CLASS 50
9. 30 RW-DI/FLG 22 1/2° BEND
10. 30 RW-DI/FLGxFLG PIPE
11. 36 RW-DI BLIND FLANGE
12. 36 RW-DI/FLGxPE PIPE
13. 30 RW-DI/FLGxPE PIPE
14. 36 RW-DI/FLGxRJ 90° BEND
15. 36 RW-DI/RJ PIPE CLASS 50
16. 36 RW-DI/BS PIPE

PLAN AT ELEVATION 14.0

SCALE: 3/16"=1'-0"

NOTES

1. ALL 30" AND 36" DUCTILE IRON PIPE WITHIN THE WEST SLUDGE PUMP GALLERY SHALL BE CLASS 53 WHERE FLANGED AND CLASS 50 WHERE RESTRAINED BELL AND SPIGOT. ALL INTERIOR JOINTS SHALL BE FLANGED OR RESTRAINED. DUCTILE IRON PIPES OUTSIDE GALLERY, UNDERGROUND, SHALL BE CLASS 50 WITH BELL AND SPIGOT JOINTS, EXCEPT THE TWO 36" PIPES ON THE WEST AND NORTH SIDES OF THE PRELIMINARY TREATMENT BUILDING WHICH SHALL BE CLASS 52.
2. FOR SUPPORT OF 30" AND 36" DUCTILE IRON PIPES IN GALLERY, SEE "S" DRAWINGS.

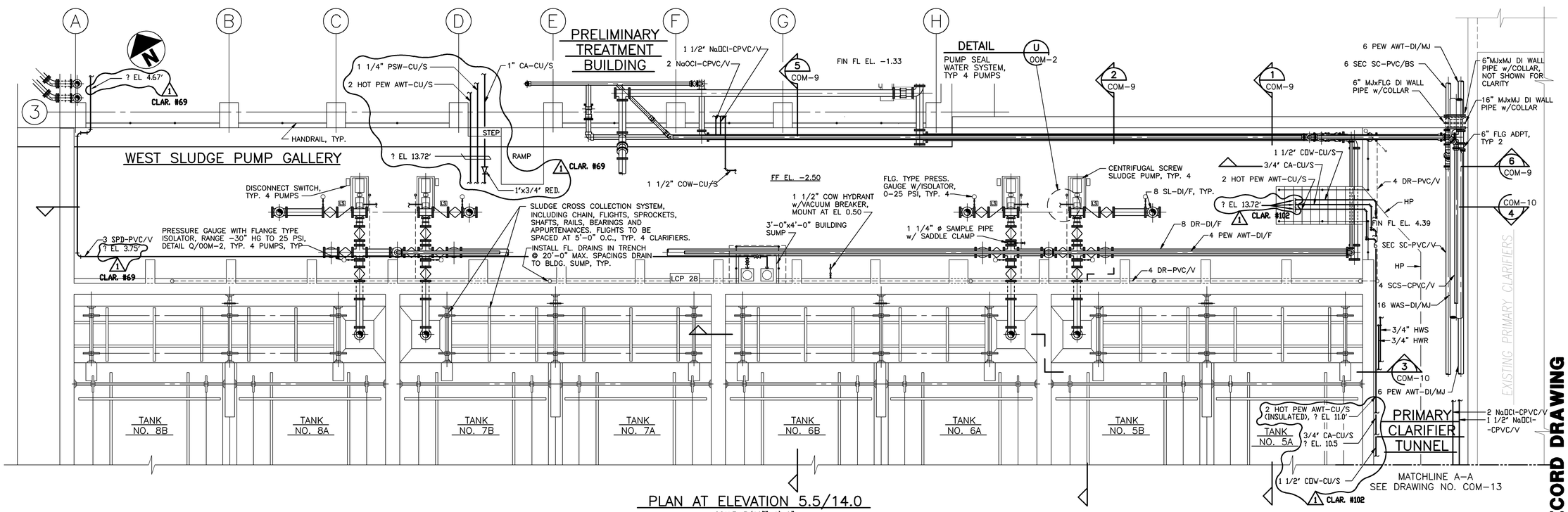

PLAN AT ELEVATION 5.5/14.0

SCALE: 3/16""=1'-0"

RECORD DRAWING

09/17/91 - 09:04

NO.	DATE	DRWN	CHK'D	DESCRIPTION
1	9/97	FXP	ASG	RECORD DRAWING

REVISIONS

DESIGNED BY: DAO
DRAWN BY: CLP
CHECKED BY/DATE: TDH 9/91
APPRV'D BY/DATE: TDH 9/91

COMMONWEALTH OF VIRGINIA — THOMAS D. HALL No. 12502 — PROFESSIONAL ENGINEER

CAMP DRESSER & McKEE

THIS DRAWING HAS BEEN REVISED BY HAZEN AND SAWYER, P.C. TO REFLECT MODIFICATIONS MADE DURING CONSTRUCTION

environmental engineers, scientists, planners, & management consultants

CDM

ARLINGTON COUNTY, VIRGINIA
WATER POLLUTION CONTROL PLANT
UPGRADE AND EXPANSION- PHASE IIB

NEW PRIMARY CLARIFIERS
WEST SLUDGE PUMP GALLERY & NORTH END OF CLARIFIERS
PLANS

SCALE NOTE

SCALE BAR SHOWN BELOW IS ONE INCH LONG ON A FULL SIZE DRAWING. WHEN SCALING DRAWINGS, MEASURE BAR TO DETERMINE IF SCALES SHOWN WILL REQUIRE ADJUSTING.

ONE INCH

CONTRACT NO. 90-02-WPC
YEAR 1991
LOCATION CODE: CO
SPECIALTY CODE: M
PROJECT NO. 5002-33
FILE NAME COM-0008.DWG
DRAWING NO. COM-8
SHEET NO. 258

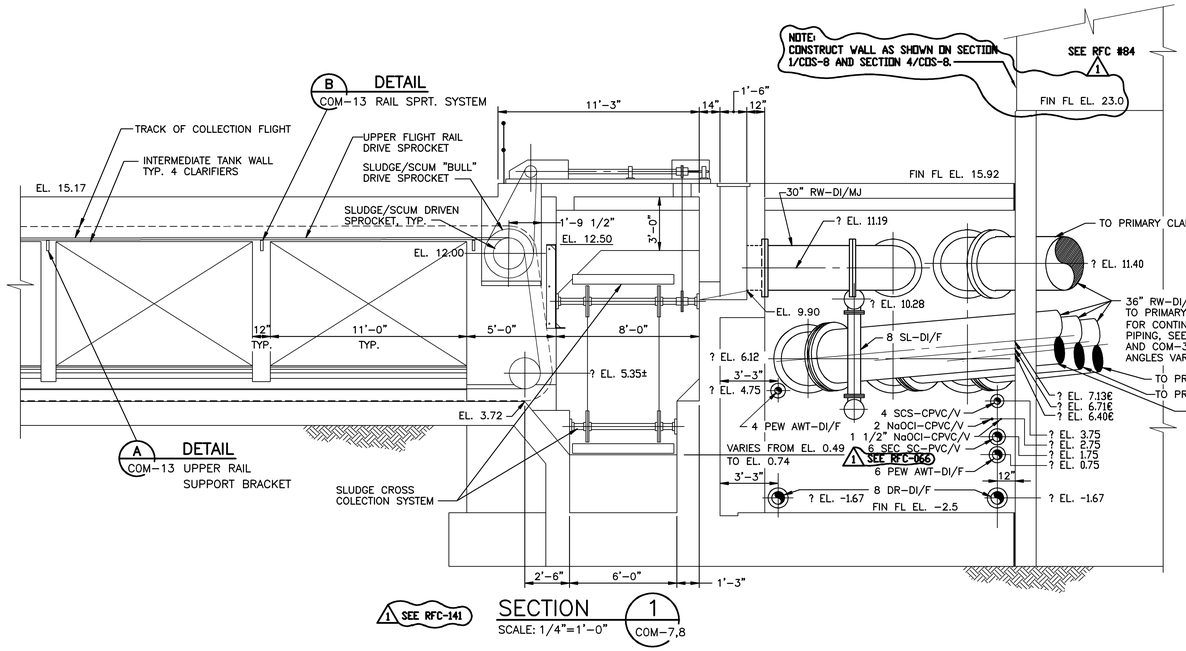

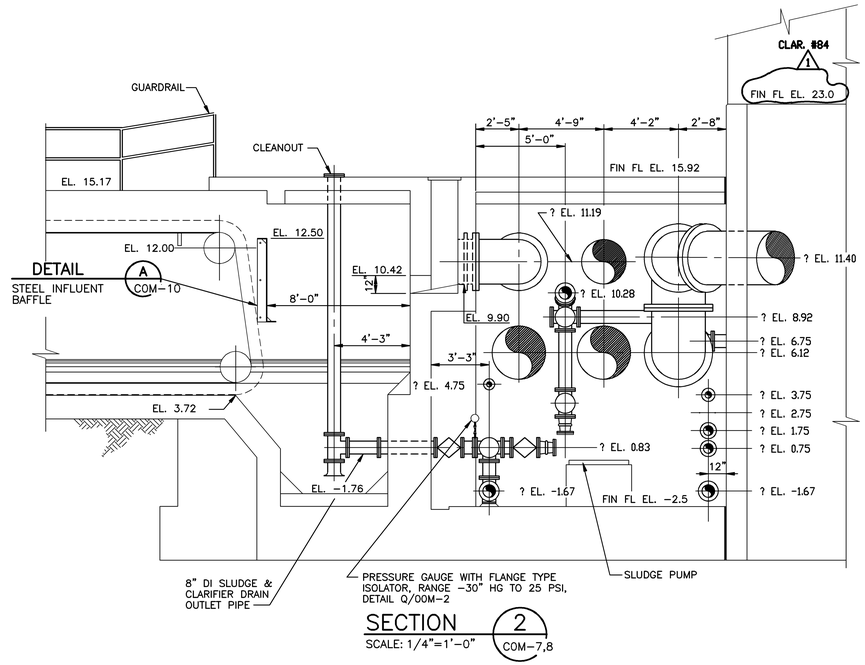

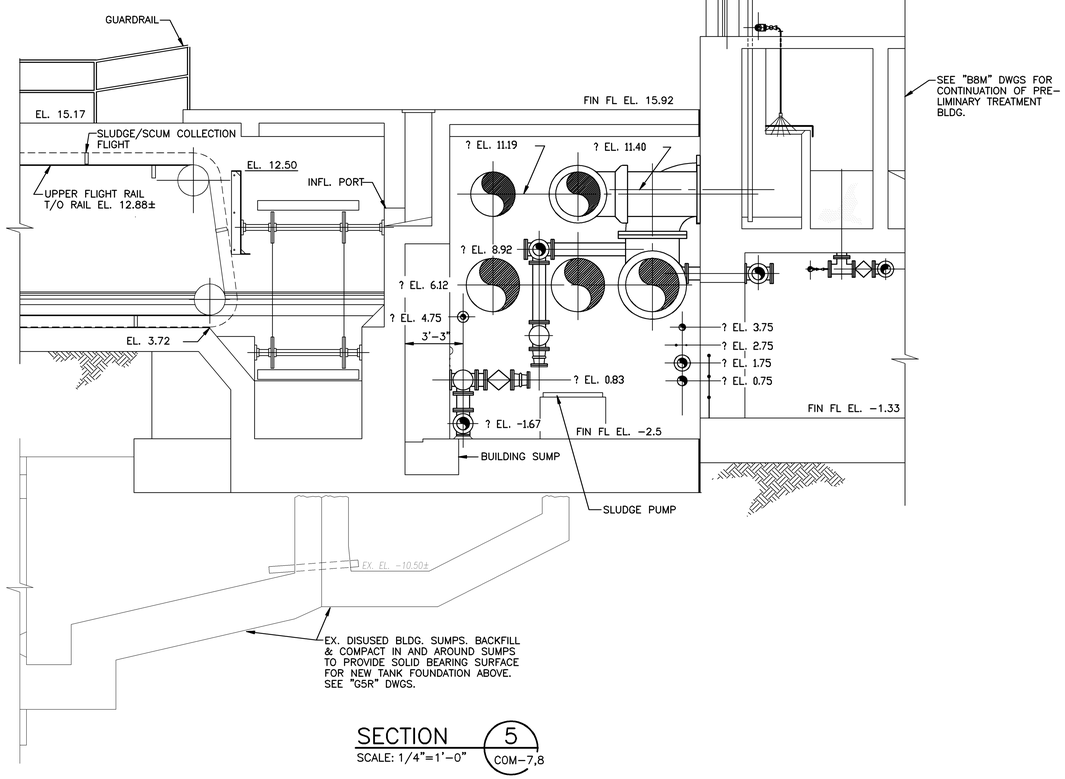

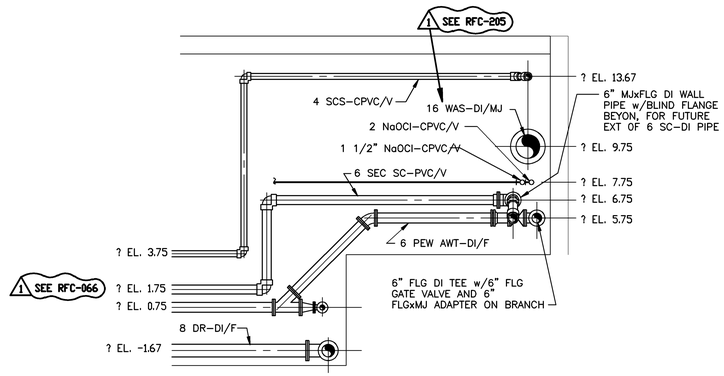

NO.	DATE	DRWN	CHK'D	DESCRIPTION
1	9/97	FXP	ASG	RECORD DRAWING

REVISIONS

DESIGNED BY: DAO
DRAWN BY: CLP
CHECKED BY/DATE: TDH 9/91
APPRV'D BY/DATE: TDH 9/91

COMMONWEALTH OF VIRGINIA
THOMAS D. HALL
No. 12502
PROFESSIONAL ENGINEER

CAMP DRESSER & McKEE

THIS DRAWING HAS BEEN REVISED BY HAZEN AND SAWYER, P.C. TO REFLECT MODIFICATIONS MADE DURING CONSTRUCTION

CDM
environmental engineers, scientists, planners, & management consultants

ARLINGTON COUNTY, VIRGINIA
WATER POLLUTION CONTROL PLANT
UPGRADE AND EXPANSION- PHASE IIB

NEW PRIMARY CLARIFIERS
WEST SLUDGE PUMP GALLERY & NORTH END OF CLARIFIERS
SECTIONS AND DETAILS

SCALE NOTE

SCALE BAR SHOWN BELOW IS ONE INCH LONG ON A FULL SIZE DRAWING. WHEN SCALING DRAWINGS, MEASURE BAR TO DETERMINE IF SCALES SHOWN WILL REQUIRE ADJUSTING.

ONE INCH

CONTRACT NO. 90-02-WPC
YEAR 1991
LOCATION CODE CO
SPECIALTY CODE M
PROJECT NO. 5002-33
FILE NAME COM-0009.DWG
DRAWING NO. COM-9
SHEET NO. 259

RECORD DRAWING

09/17/91 - 08:57

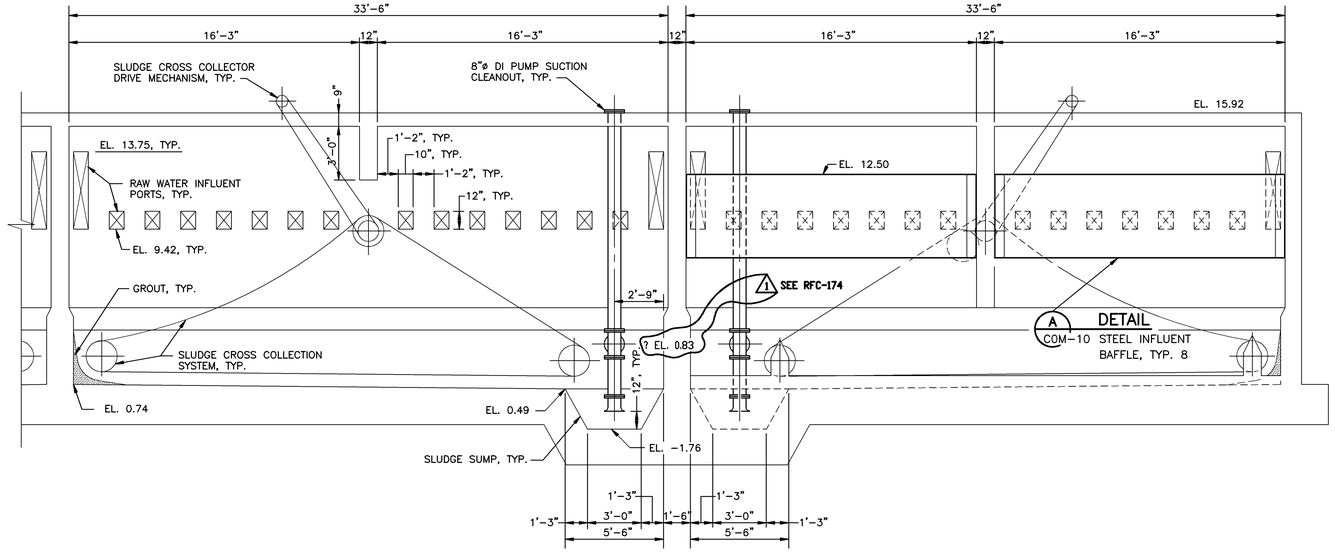

SECTION 3
SCALE: 1/4"=1'-0" COM-7, 8

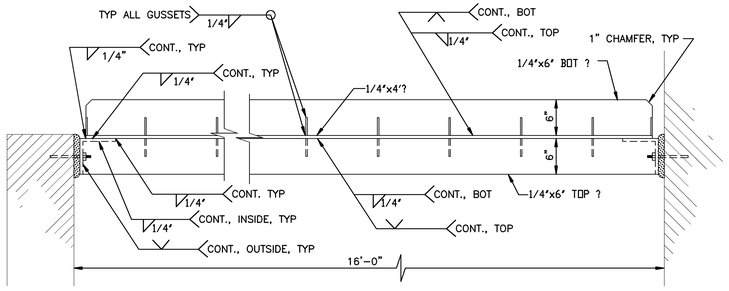

TOP PLAN

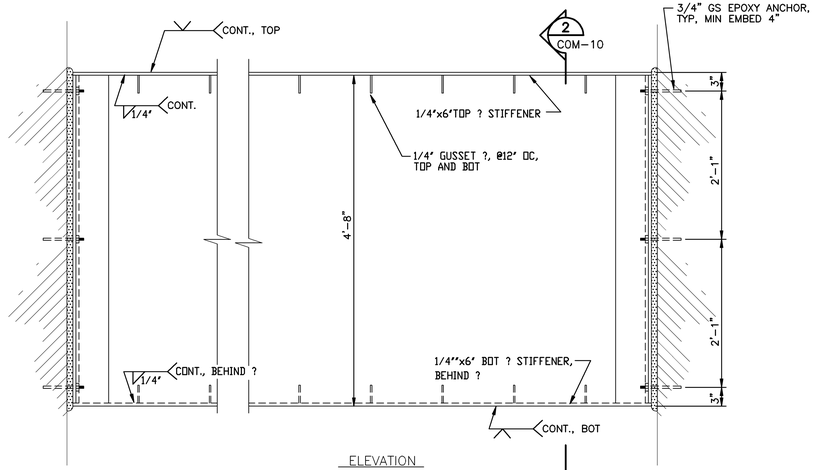

ELEVATION
STEEL INFLUENT BAFFLE

DETAIL A
SCALE: 1"=1'-0" COM-9,10

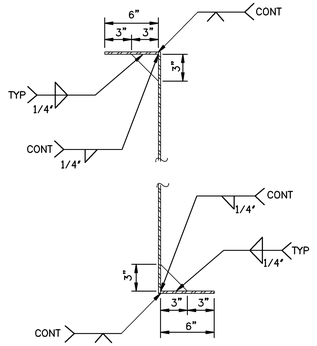

SECTION 2
SCALE: 1 1/2"=1'-0" COM-10

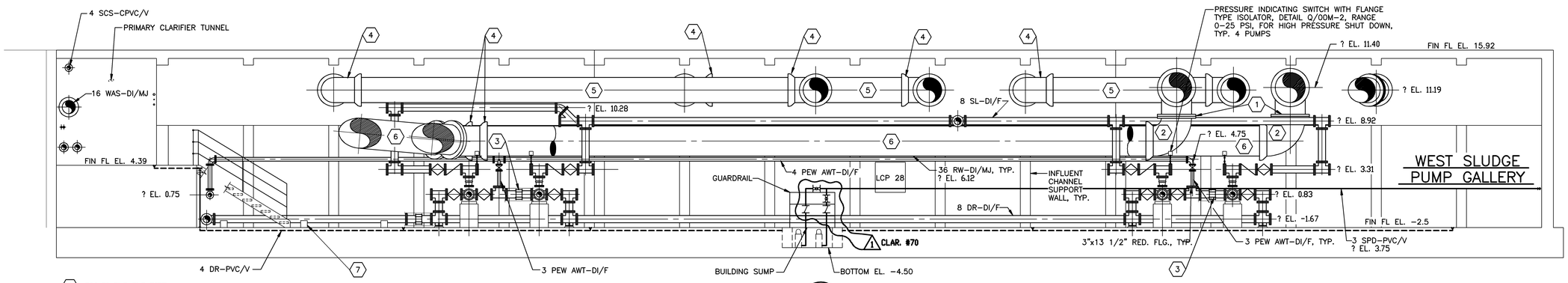

SECTION 4
SCALE: 3/16"=1'-0" COM-8

1. 36' DI FLGxFLG PIPE
2. 36' DI FLGxRESTRAINED BELL 90? BEND
3. 2-8' DI FLGxPE PIPES, COMPRESSION COUPLING, AND HARNESS ASSEMBLY, DETAIL P/00M-2
4. RESTRAINED BELL AND SPIGOT JOINT
5. 30' DI RESTRAINED BELL AND SPIGOT PIPE
6. 36' DI RESTRAINED BELL AND SPIGOT PIPE
7. CONCRETE PIPE SUPPORT, TYPICAL, DETAIL E/00M-1

09/17/91 - 08:51

RECORD DRAWING

NO.	DATE	DRWN	CHK'D	DESCRIPTION
1	9/97	FXP	ASG	RECORD DRAWING

REVISIONS

DESIGNED BY: DAO
DRAWN BY: CLP
CHECKED BY/DATE: TDH 9/91
APPRV'D BY/DATE: TDH 9/91

COMMONWEALTH OF VIRGINIA
THOMAS D. HALL
No. 12592
PROFESSIONAL ENGINEER

CAMP DRESSER & McKEE
environmental engineers, scientists, planners, & management consultants
CDM

RES DRAWING HAS BEEN REVISED BY HAZEN AND SAWYER, P.C. TO REFLECT MODIFICATIONS MADE DURING CONSTRUCTION

ARLINGTON COUNTY, VIRGINIA
WATER POLLUTION CONTROL PLANT
UPGRADE AND EXPANSION- PHASE IIB

NEW PRIMARY CLARIFIERS
WEST SLUDGE PUMP GALLERY & NORTH END OF CLARIFIERS
SECTIONS AND DETAIL

SCALE NOTE
SCALE BAR SHOWN BELOW IS ONE INCH LONG ON A FULL SIZE DRAWING. WHEN SCALING DRAWINGS, MEASURE BAR TO DETERMINE IF SCALES SHOWN WILL REQUIRE ADJUSTING.
ONE INCH

CONTRACT NO. 90-02-WPC
YEAR 1991
LOCATION CODE CO
SPECIALTY CODE M
PROJECT NO. 5002-33
FILE NAME COM-0010.DWG
DRAWING NO. COM-10
SHEET NO. 260

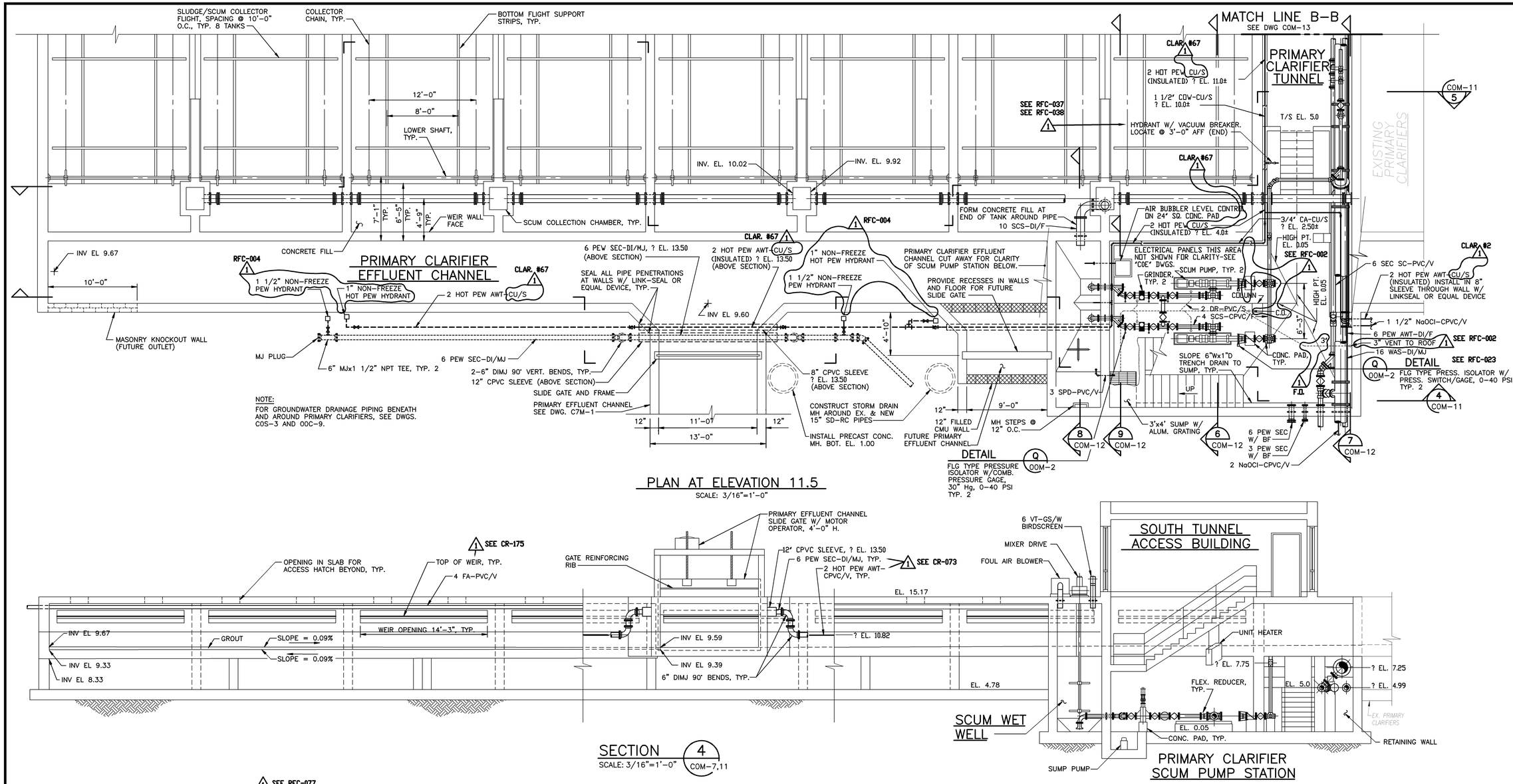

PLAN AT ELEVATION 11.5

SCALE: 3/16"=1'-0"

SECTION 4

SCALE: 3/16"=1'-0" COM-7,11

SECTION 5

SCALE: 3/16"=1'-0" COM-7,11

09/17/91 - 09:49

NO.	DATE	DRWN	CHK'D	DESCRIPTION
1	9/97	FXP	ASG	RECORD DRAWING

REVISIONS

DESIGNED BY: DAO
DRAWN BY: CLP/CTC/GPB
CHECKED BY/DATE: TDH 9/91
APPRV'D BY/DATE: TDH 9/91

COMMONWEALTH OF VIRGINIA — THOMAS D. HALL No. 12502 — PROFESSIONAL ENGINEER

CAMP DRESSER & McKEE
environmental engineers, scientists, planners, & management consultants
CDM

THIS DRAWING HAS BEEN REVISED BY HAZEN AND SAWYER, P.C. TO REFLECT MODIFICATIONS MADE DURING CONSTRUCTION

ARLINGTON COUNTY, VIRGINIA
WATER POLLUTION CONTROL PLANT
UPGRADE AND EXPANSION- PHASE IIB

NEW PRIMARY CLARIFIERS
SOUTH END OF CLARIFIERS AND SCUM PUMP STATION
PLAN AND SECTIONS

SCALE NOTE

SCALE BAR SHOWN BELOW IS ONE INCH LONG ON A FULL SIZE DRAWING. WHEN SCALING DRAWINGS, MEASURE BAR TO DETERMINE IF SCALES SHOWN WILL REQUIRE ADJUSTING.

ONE INCH

CONTRACT NO. 90-02-WPC
YEAR 1991
LOCATION CODE CO
SPECIALTY CODE M
PROJECT NO. 5002-33
FILE NAME COM-0011.DWG
DRAWING NO. COM-11
SHEET NO. 261

RECORD DRAWING

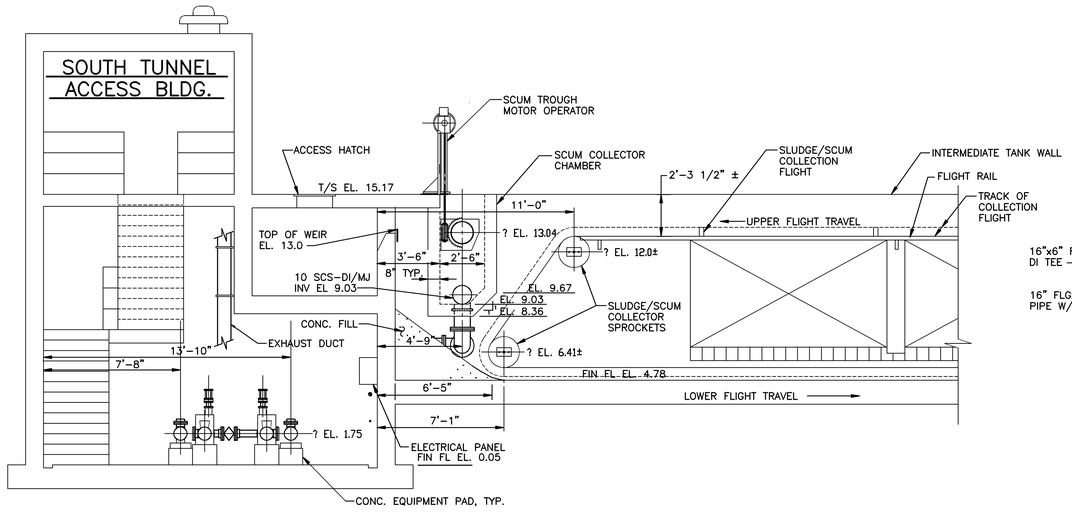

SECTION 6
SCALE: 1/4"=1'-0"
CM-11

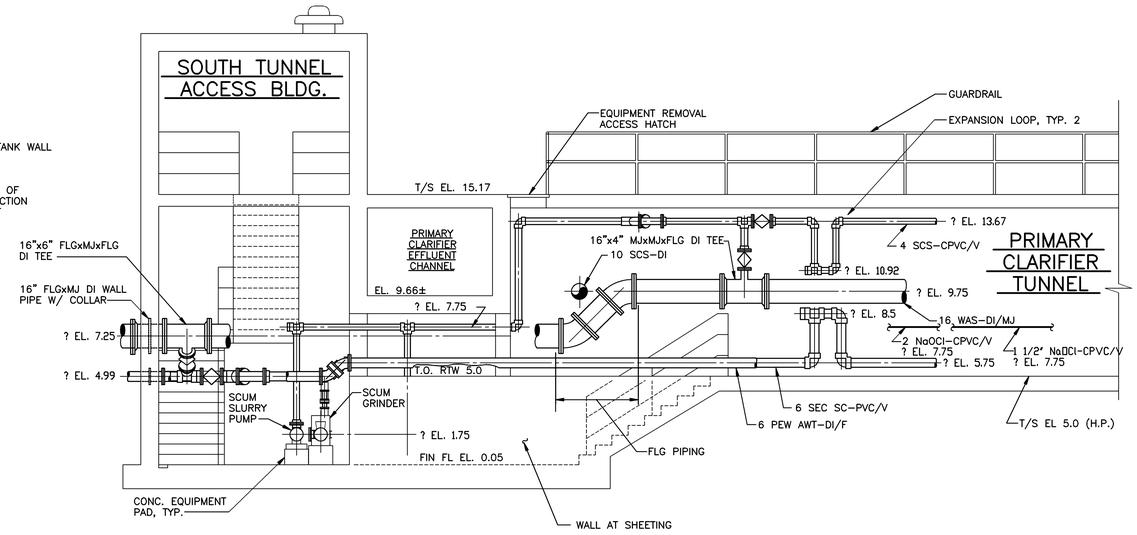

SECTION 7
SCALE: 1/4"=1'-0"
COM-11

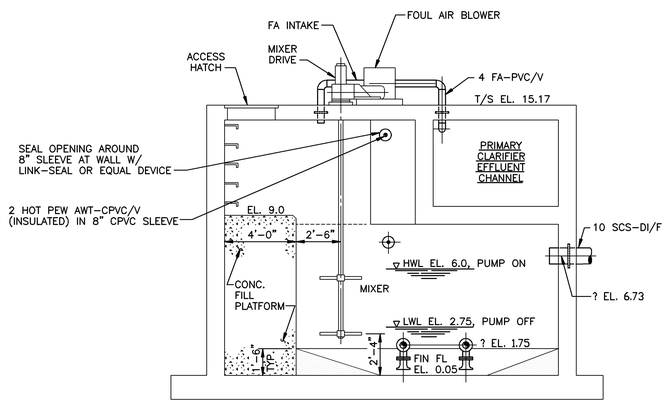

SECTION 8
SCALE: 1/4"=1'-0"
COM-11

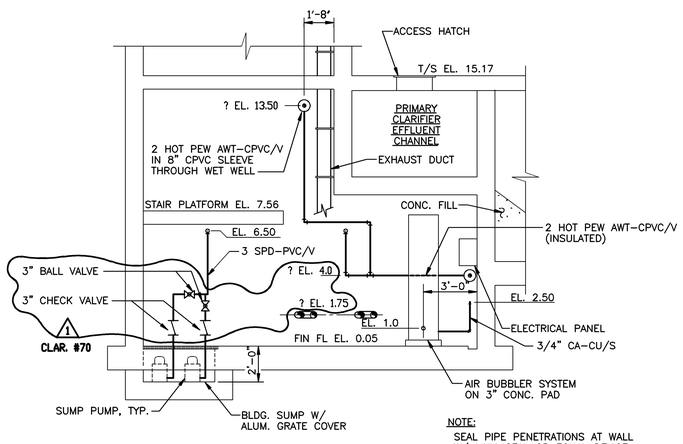

SECTION 9
SCALE: 1/4=1'-0"
COM-11

NO.	DATE	DRWN	CHK'D	DESCRIPTION
1	9/97	FXP	ASG	RECORD DRAWING

REVISIONS

DESIGNED BY: DAO
DRAWN BY: CLP/CTC
CHECKED BY/DATE: TDH 9/91
APPRV'D BY/DATE: TDH 9/91

COMMONWEALTH OF VIRGINIA
THOMAS D. HALL
No. 12592
PROFESSIONAL ENGINEER

CAMP DRESSER & McKEE

PER DRAWING HAS BEEN REVISED BY HAZEN AND SAWYER, P.C. TO REFLECT MODIFICATIONS MADE DURING CONSTRUCTION

environmental engineers, scientists, planners, & management consultants

CDM

ARLINGTON COUNTY, VIRGINIA
WATER POLLUTION CONTROL PLANT
UPGRADE AND EXPANSION- PHASE IIB

NEW PRIMARY CLARIFIERS
SOUTH END OF CLARIFIERS AND SCUM PUMP STATION
SECTIONS

SCALE NOTE

SCALE BAR SHOWN BELOW IS ONE INCH LONG ON A FULL SIZE DRAWING. WHEN SCALING DRAWINGS, MEASURE BAR TO DETERMINE IF SCALES SHOWN WILL REQUIRE ADJUSTING.

ONE INCH

CONTRACT NO. 90-02-WPC
YEAR 1991
LOCATION CODE CO
SPECIALTY CODE M
PROJECT NO. 5002-33
FILE NAME COM-0012.DWG
DRAWING NO. COM-12
SHEET NO. 262

RECORD DRAWING

09/17/91 - 09:43

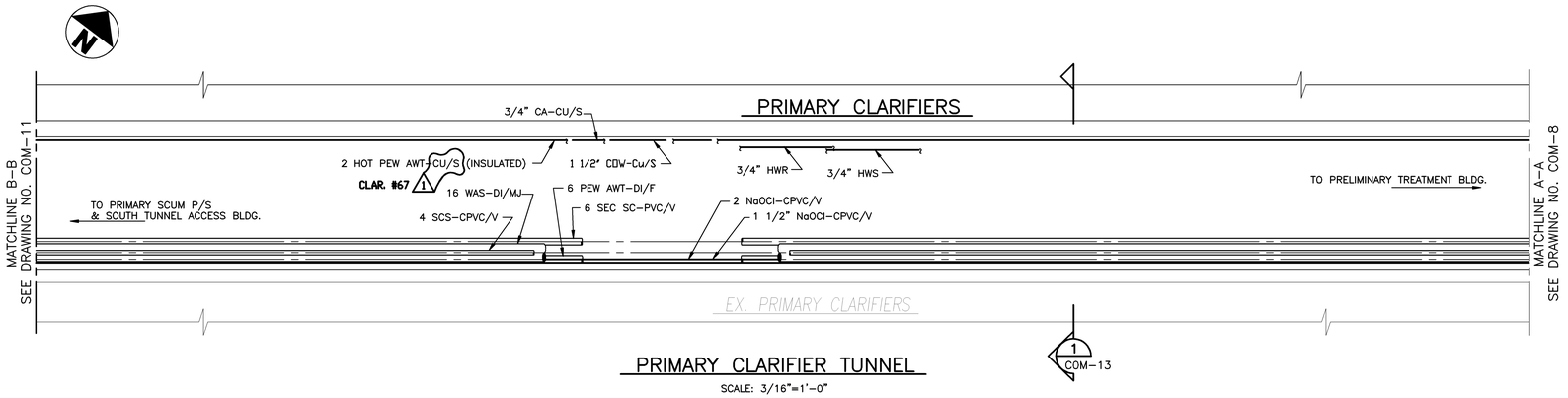

PRIMARY CLARIFIER TUNNEL

SCALE: 3/16"=1'-0"

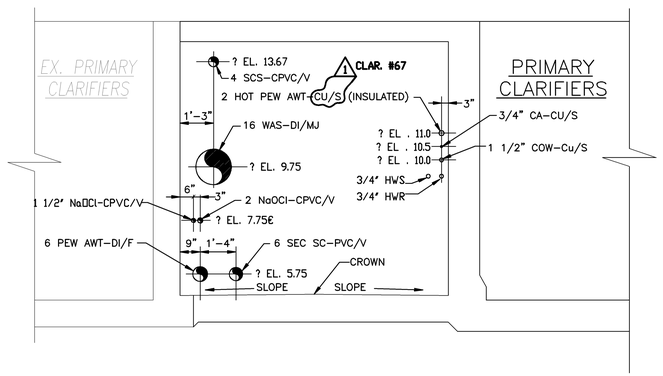

SECTION 1 / COM-13

SCALE: 3/8"=1'-0"

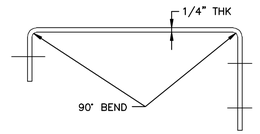

TOP

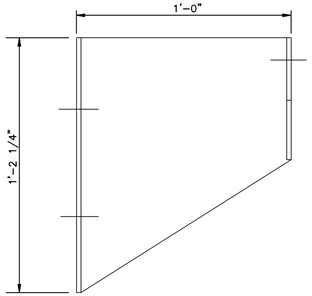

FRONT

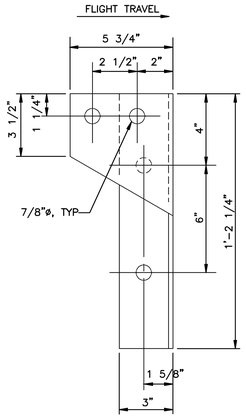

SIDE

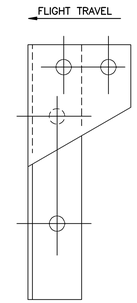

OPPOSITE

NOTES

1. BRACKETS SHALL BE HOT DIP GALVANIZED AFTER FABRICATION.
2. BRACKETS SHALL BE SPACED AT MAXIMUM 12'-0" INTERVALS.
3. BREAK ALL SHARP EDGES.
4. ALL NUTS, WASHERS, BOLTS AND ANCHORS TO BE GALVANIZED STEEL. ALL BOLTS AND ANCHORS TO BE 3/4"ø. MINIMUM ANCHOR EMBEDMENT 6".

DETAIL B / COM-7,9

SCALE: 3"=1'-0"

09/17/91 - 09:38

RECORD DRAWING

NO.	DATE	DRWN	CHK'D	DESCRIPTION
1	9/97	FXP	ASG	RECORD DRAWING

REVISIONS

DESIGNED BY: DAO
DRAWN BY: CLP
CHECKED BY/DATE: TDH 9/91
APPRV'D BY/DATE: TDH 9/91

COMMONWEALTH OF VIRGINIA
THOMAS D. HALL
No. 12592
PROFESSIONAL ENGINEER

CAMP DRESSER & McKEE

PER DRAWING HAS BEEN REVISED BY HAZEN AND SAWYER, P.C. TO REFLECT MODIFICATIONS MADE DURING CONSTRUCTION

environmental engineers, scientists, planners, & management consultants

CDM

ARLINGTON COUNTY, VIRGINIA
WATER POLLUTION CONTROL PLANT
UPGRADE AND EXPANSION- PHASE IIB

NEW PRIMARY CLARIFIERS
PRIMARY CLARIFIER TUNNEL
PLAN, SECTIONS AND DETAILS

SCALE NOTE

SCALE BAR SHOWN BELOW IS ONE INCH LONG ON A FULL SIZE DRAWING. WHEN SCALING DRAWINGS, MEASURE BAR TO DETERMINE IF SCALES SHOWN WILL REQUIRE ADJUSTING.

ONE INCH

CONTRACT NO. 90-02-WPC
YEAR 1991
LOCATION CODE CO
SPECIALTY CODE M
PROJECT NO. 5002-33
FILE NAME COM-0013.DWG
DRAWING NO. COM-13
SHEET NO. 263

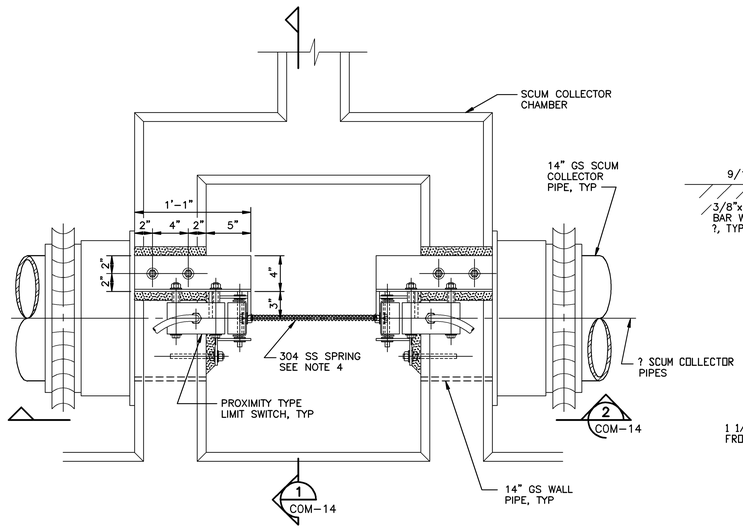

PLAN – SCUM COLLECTOR FLOW LIMIT SWITCHES

DETAIL C
SCALE: 1 1/2"=1'-0" COM-1,7

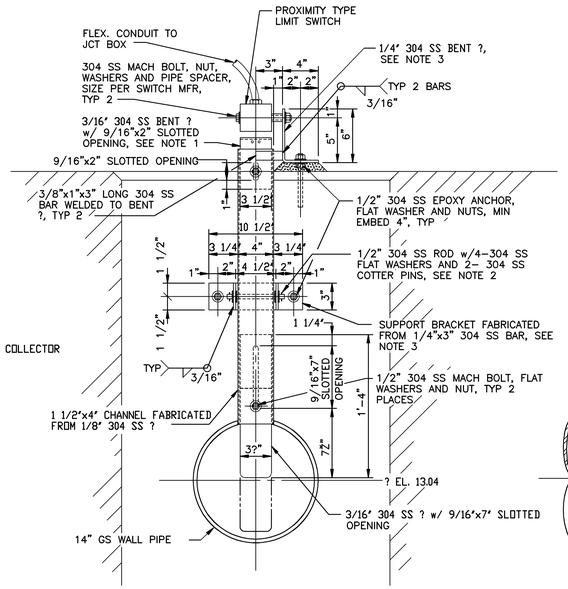

SECTION 1
SCALE: 1 1/2"=1'-0" COM-14

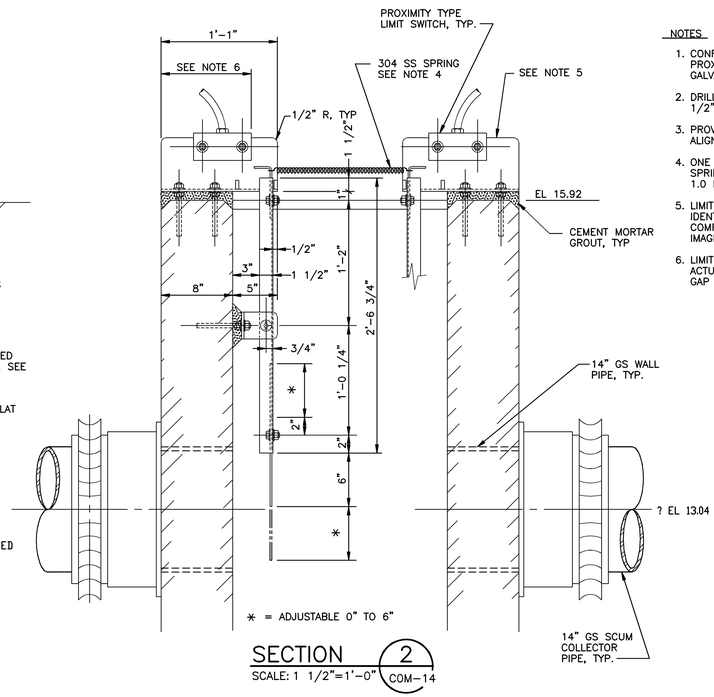

SECTION 2
SCALE: 1 1/2"=1'-0" COM-14

NOTES

1. CONFIRM WITH SWITCH MANUFACTURER THAT 304 SS WILL ACTUATE PROXIMITY SWITCH. IF NOT USE 3/16" STEEL PLATE, HOT DIP GALVANIZE AFTER FABRICATION. DRILL 1/4" HOLES FOR SPRING.
2. DRILL $^{17}/_{32}$" HOLES IN SUPPORT BRACKET AND 4" CHANNEL FOR 1/2" ROD.
3. PROVIDE 1" HOLES FOR EPOXY ANCHORS TO ALLOW FOR FINAL ALIGNMENT.
4. ONE SPRING SERVES TWO LIMIT SWITCHES. PROVIDE 3 DIFFERENT SPRINGS OF THE FOLLOWING TENSIONS FOR FIELD SELECTION: 1.0 LB., 2.0 LB. AND 3.0 LB.
5. LIMIT SWITCH SUPPORT BRACKET FOR RIGHT HAND SWITCH IS IDENTICAL TO LEFT HAND BRACKET BUT MIRROR IMAGE. ALL OTHER COMPONENTS ARE IDENTICAL. LIMIT SWITCHES MAY REQUIRE MIRROR IMAGE UNITS.
6. LIMIT SWITCH LOCATION DEPENDS ON SWITCH DESIGN. SET TO ACTUATE WHEN ACTUATOR MOVES AGAINST LEFT HAND STOP BAR. GAP TO BE PER MANUFACTURERS REQUIREMENTS.

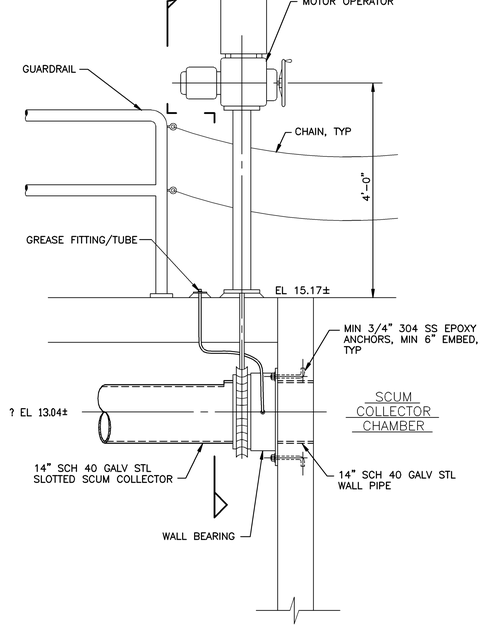

MOTOR OPERATOR SUPPORT/COLLECTION PIPE CONNECTION

DETAIL A
SCALE: 3/4"=1'-0" COM-4,11

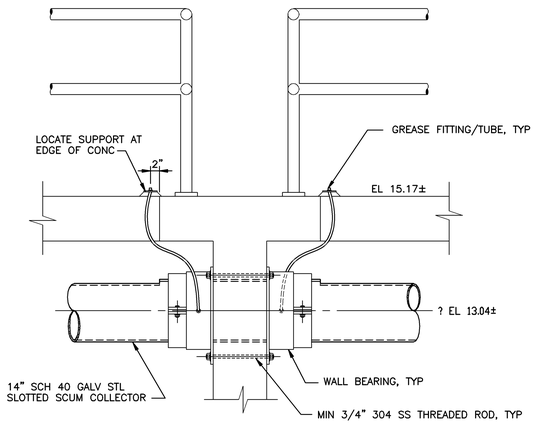

COLLECTION PIPE WALL BEARING

DETAIL B
SCALE: 3/4"=1'-0" COM-4,11

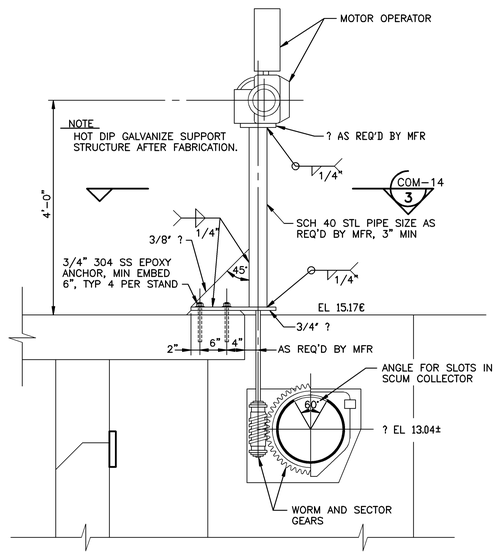

SECTION 4
SCALE: 3/4"=1'-0" COM-4,14

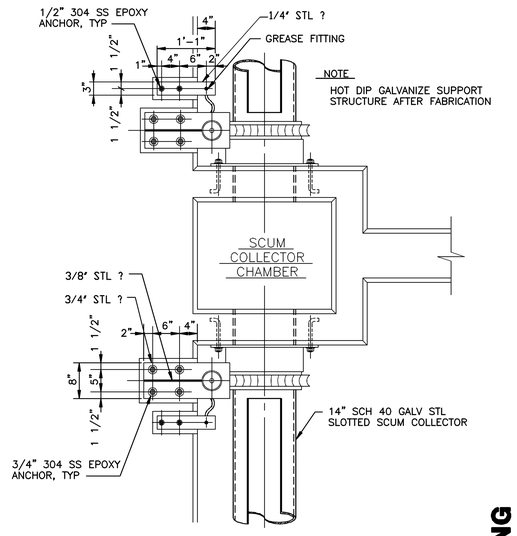

SECTION 3
SCALE: 3/4"=1'-0" COM-14

NO.	DATE	DRWN	CHK'D	DESCRIPTION
1	9/97	FXP	ASG	RECORD DRAWING

REVISIONS

DESIGNED BY: TDH
DRAWN BY: CLP
CHECKED BY/DATE: TDH 9/91
APPRV'D BY/DATE: TDH 9/91

COMMONWEALTH OF VIRGINIA THOMAS D. HALL No. 12502 PROFESSIONAL ENGINEER

CAMP DRESSER & McKEE

PER DRAWING HAS BEEN REVISED BY HAZEN AND SAWYER, P.C. TO REFLECT MODIFICATIONS MADE DURING CONSTRUCTION

environmental engineers, scientists, planners, & management consultants CDM

ARLINGTON COUNTY, VIRGINIA
WATER POLLUTION CONTROL PLANT
UPGRADE AND EXPANSION- PHASE IIB

EXISTING AND NEW PRIMARY CLARIFIERS
SECTIONS AND DETAILS

SCALE NOTE

SCALE BAR SHOWN BELOW IS ONE INCH LONG ON A FULL SIZE DRAWING. WHEN SCALING DRAWINGS, MEASURE BAR TO DETERMINE IF SCALES SHOWN WILL REQUIRE ADJUSTING.

ONE INCH

CONTRACT NO.	90-02-WPC
YEAR	1991
LOCATION CODE	CO
SPECIALTY CODE	M
PROJECT NO.	5002-33
FILE NAME	COM-0014.DWG
DRAWING NO.	COM-14
SHEET NO.	264

RECORD DRAWING

09/17/91 - 09:31

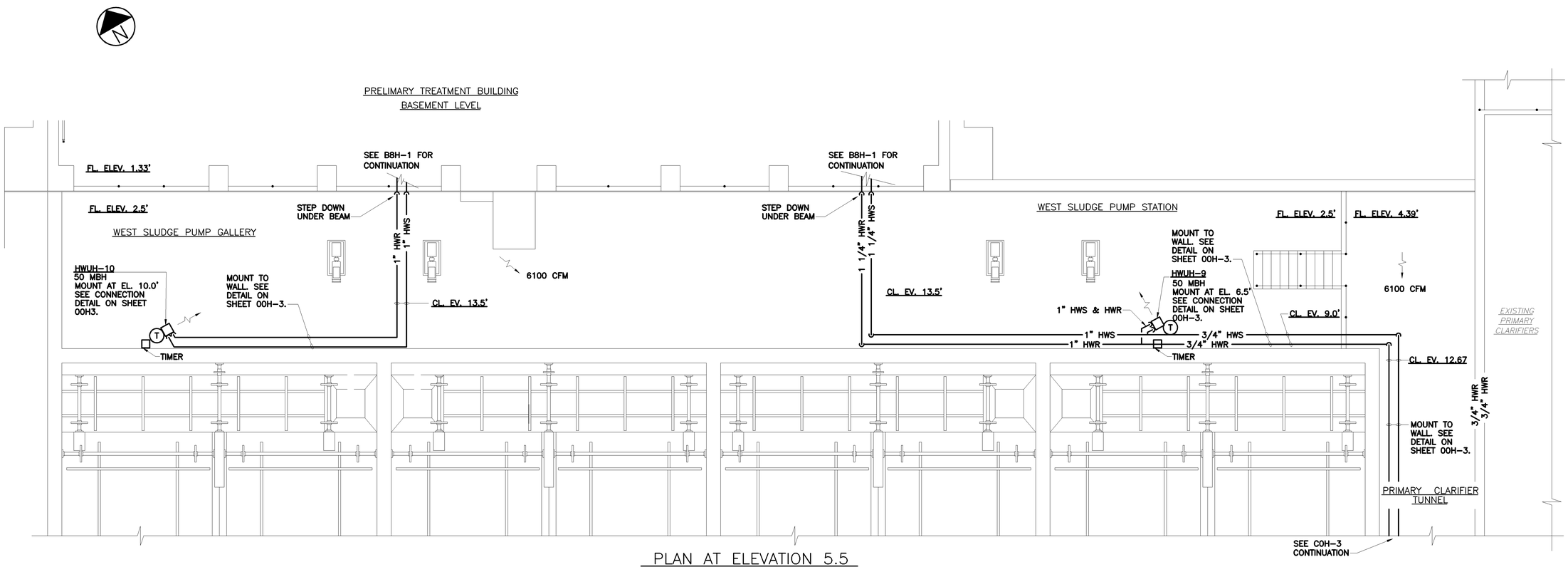

PLAN AT ELEVATION 5.5

SCALE: 3/16"=1'-0"

RECORD DRAWING

C.E. BAILEY & ASSOCIATES, INC.
CONSULTING ENGINEERS
ORLANDO, CLEARWATER & FORT LAUDERDALE, FLORIDA

NO.	DATE	DRWN	CHK'D	DESCRIPTION
1	9/97	FXP	ASG	RECORD DRAWING

REVISIONS

DESIGNED BY: WRH
DRAWN BY: RMM,SFP
CHECKED BY/DATE: WRH/9-91
APPRV'D BY/DATE: WRH/9-91

CAMP DRESSER & McKEE

THIS DRAWING HAS BEEN REVISED BY HAZEN AND SAWYER, P.C. TO REFLECT MODIFICATIONS MADE DURING CONSTRUCTION

environmental engineers, scientists, planners, & management consultants CDM

ARLINGTON COUNTY, VIRGINIA
WATER POLLUTION CONTROL PLANT
UPGRADE AND EXPANSION- PHASE IIB

NEW PRIMARY CLARIFIERS
HVAC
WEST SLUDGE PUMP GALLERY
FLOOR PLAN

SCALE NOTE

SCALE BAR SHOWN BELOW IS ONE INCH LONG ON A FULL SIZE DRAWING. WHEN SCALING DRAWINGS, MEASURE BAR TO DETERMINE IF SCALES SHOWN WILL REQUIRE ADJUSTING.

ONE INCH

CONTRACT NO. 90-02-WPC
YEAR 1991
LOCATION CODE CO
SPECIALTY CODE H
PROJECT NO. 5002-33
FILE NAME COH2.DWG
DRAWING NO. COH-2
SHEET NO. 275

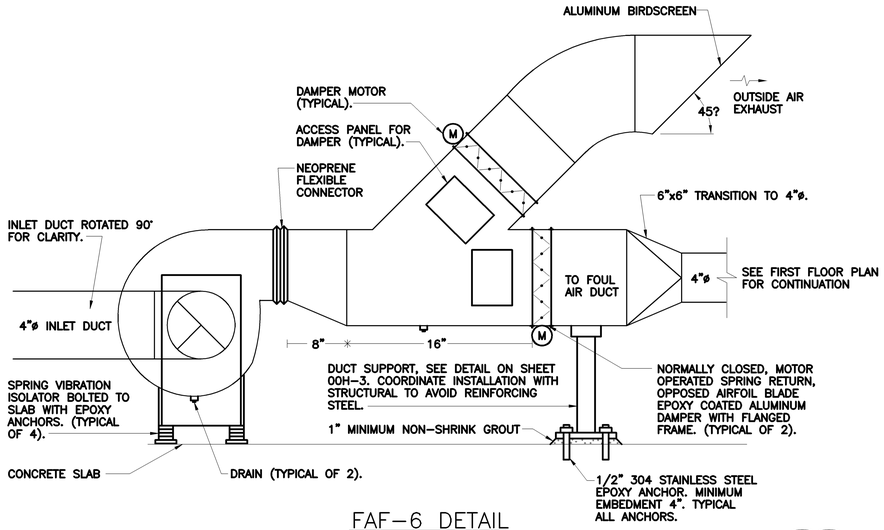

FAF-6 DETAIL
N.T.S.

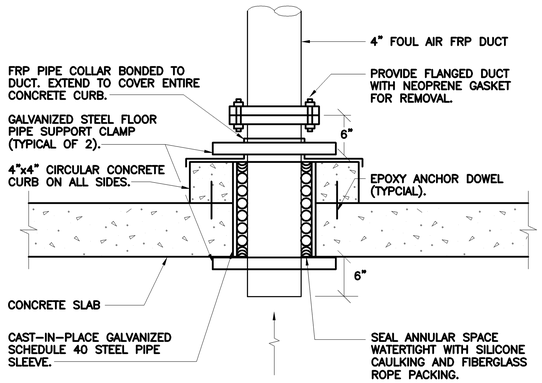

INLET PIPE PENETRATION DETAIL
N.T.S.

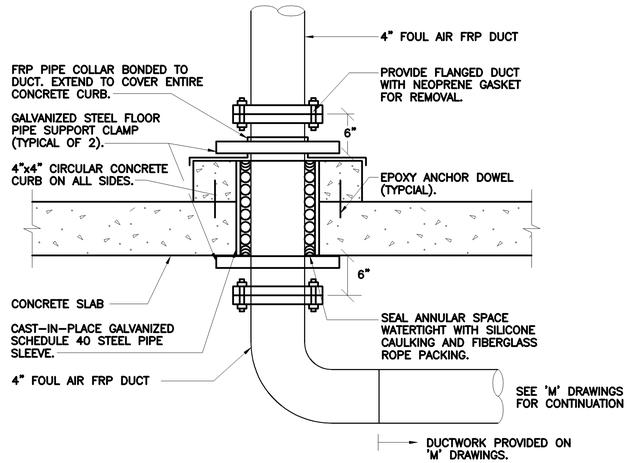

OUTLET PIPE PENETRATION DETAIL
N.T.S.

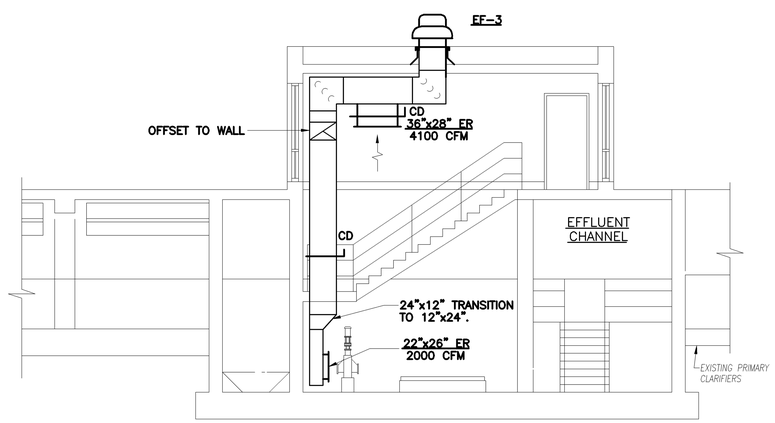

SECTION
SCALE: 3/16"=1'-0"

1 SEE RFC-011

1. SEE RFC-011 FOR 4" FA DUCT CONNECTING TO 54" FA.

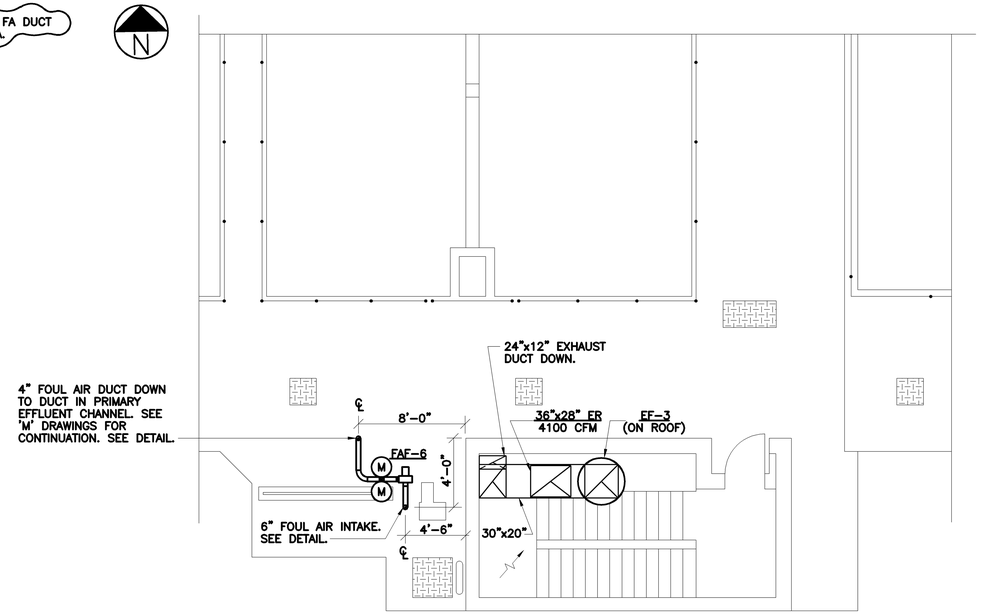

1ST. FLOOR PLAN
SCALE: 3/16"=1'-0"

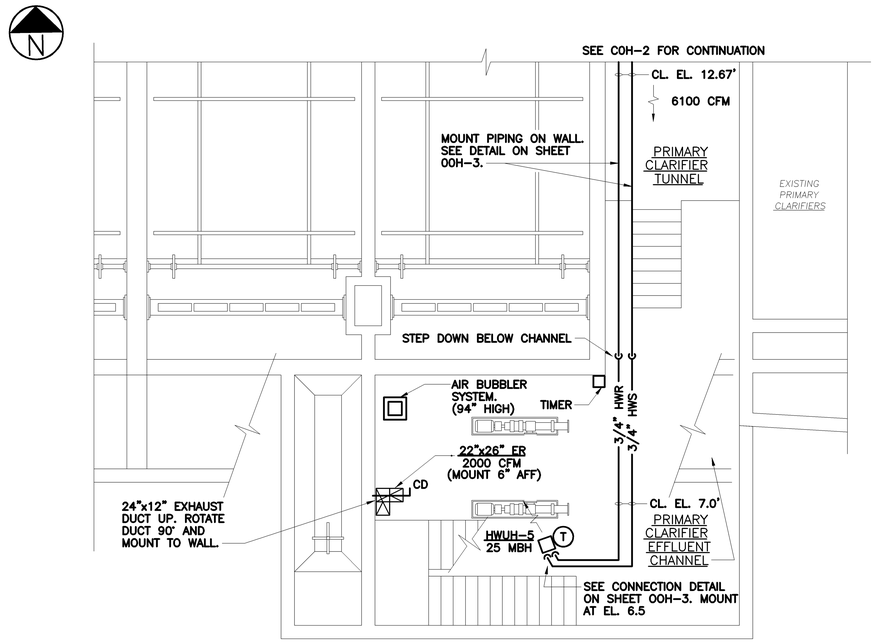

BASEMENT PLAN
SCALE: 3/16"=1'-0"

NO.	DATE	DRWN	CHK'D	DESCRIPTION
1	9/97	FXP	ASG	RECORD DRAWING

REVISIONS

DESIGNED BY: WRH
DRAWN BY: RMM,SFP
CHECKED BY/DATE: WRH/9-91
APPRV'D BY/DATE: WRH/9-91

CAMP DRESSER & McKEE

THIS DRAWING HAS BEEN REVISED BY BLAZEN AND SAWYER, P.C. AS SHOWN AND NOTED HEREON WHILE DURING CONSTRUCTION

CDM
environmental engineers, scientists, planners, & management consultants

ARLINGTON COUNTY, VIRGINIA
WATER POLLUTION CONTROL PLANT
UPGRADE AND EXPANSION- PHASE IIB

NEW PRIMARY CLARIFIERS
HVAC
SOUTH TUNNEL ACCESS BULING
PLANS & SECTION

SCALE NOTE
SCALE BAR SHOWN BELOW IS ONE INCH LONG ON A FULL SIZE DRAWING. WHEN SCALING DRAWINGS, MEASURE BAR TO DETERMINE IF SCALES SHOWN WILL REQUIRE ADJUSTING.
ONE INCH

CONTRACT NO. 90-02-WPC
YEAR 1991
LOCATION CODE: CO
SPECIALTY CODE: H
PROJECT NO. 5002-33
FILE NAME COH3.DWG
DRAWING NO. COH-3
SHEET NO. 276

RECORD DRAWING

C.E. BAILEY & ASSOCIATES, INC.
CONSULTING ENGINEERS
ORLANDO, CLEARWATER & FORT LAUDERDALE, FLORIDA

SEE SHEET 00E-3 FOR CONTINUATION

3#10-3/4" 4#10-3/4" 4#10-3/4"

NO. 1 NO. 1A NO. 1B

NO. 2 NO. 2A NO. 2B

NO. 3 NO. 3A NO. 3B

NO. 4 NO. 4A NO. 4B

LCP-9

4#10-3/4"

DUCT BANK. SEE STRUCTURAL DWGS.

4#14-3/4"

MOTORIZED GATE OPERATOR

2 LIMIT SWITCHES

EFFLUENT FLOW TRANS.

STUB-UP FOR FUTURE FLOW METER

FAF-6

SCUM MIXER

TYPE "D" WALL MTD.

TYPE "O" (TYP.)

MOUNT AUDIO-VISUAL DEVICE TO WALL EL. 12.0

EF-3

P2B

SEE COE-6 FOR CONT

TOP OF EFFLUENT CHANNEL

FLOW SWITCH (TYP.)

PRIMARY SCUM COLLECTOR (TYP.)

3 SLOTTED PIPE LIMIT SWITCHES (TYP.)

TYPE 'B' (TYP.)

PRIMARY CLARIFIER SLUDGE COLLECTOR DRIVE (TYP.)

TORQUE OVERLOAD OVERRIDE PUSHBUTTON (TYPICAL)

TO PRIMARY CLARIFIER SLUDGE COLLECTOR C.P. (LCP-9)

CONDUIT CHASE

8#10-1"

8#10-1" TO PC-1

UP

TYPICAL CEILING SUPPORTED CONDUIT RACK. SEE COE-6 FOR DETAIL.

MOUNT AUDIO-VISUAL DEVICE FROM CEILING

RUN AUDIO-VIDEO CONDUIT ON PREVIOUSLY INSTALLED CONDUIT RACK.

CONDUITS TO PRELIMINARY BLDG. SHALL BE VIA ELECTRICAL CHASE.

MOUNTED TO TUNNEL CEILING (TYP.)

TYPE "D" (TYP.)

TYPE "C" (TYP.)

C2 I2

EFFLUENT FLOW TRANSMITTER

EXISTING PRIMARY CLARIFIERS
SEE COE-1

NOTES:

1.) ALIGN WALKWAY LTG. WITH PHASE IA CLARIFIER LTG.

2.) RECEPTACLES SHALL BE MOUNTED 3' AFF IN TUNNELS.

PRIMARY CLARIFIERS TOP PLAN & TUNNEL PLAN

SCALE:1/8"=1'-0"

RECORD DRAWING

C.E. BAILEY & ASSOCIATES, INC.
CONSULTING ENGINEERS
ORLANDO, CLEARWATER & FORT LAUDERDALE, FLORIDA

NO.	DATE	DRWN	CHK'D	DESCRIPTION
REVISIONS				
1	9/97	FXP	ASG	RECORD DRAWING

DESIGNED BY: SEB
DRAWN BY: TRH
CHECKED BY/DATE: CEB/9-91
APPR'D BY/DATE: CEB/9-91

CAMP DRESSER & McKEE
HAZEN AND SAWYER, P.C.
environmental engineers, scientists, planners, & management consultants
CDM

ARLINGTON COUNTY, VIRGINIA
WATER POLLUTION CONTROL PLANT
UPGRADE AND EXPANSION- PHASE B

NEW PRIMARY CLARIFIERS
ELECTRICAL
CLARIFIERS & SOUTH TUNNEL ACCESS BUILDING
TOP PLAN

SCALE NOTE

SCALE BAR SHOWN BELOW IS ONE INCH LONG ON A FULL SIZE DRAWING. WHEN SCALING DRAWINGS, MEASURE BAR TO DETERMINE IF SCALES SHOWN WILL REQUIRE ADJUSTING.

ONE INCH

CONTRACT NO. 90-02-WPC
YEAR 1991
LOCATION CODE: CO
SPECIALTY CODE: E
PROJECT NO. 5002-33
FILE NAME COE-05.DWG
DRAWING NO. COE-5
SHEET NO. 277

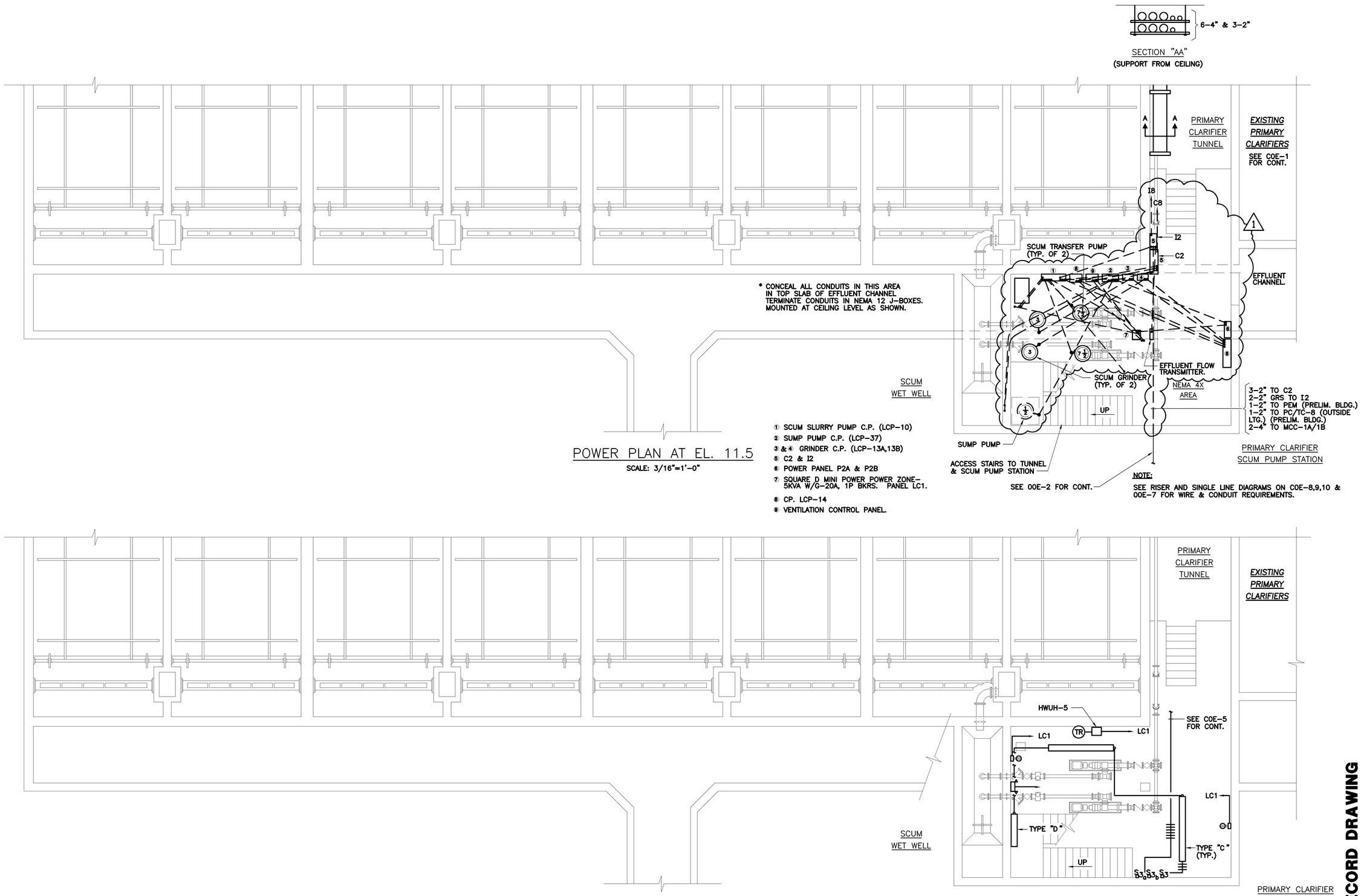

① SCUM SLURRY PUMP C.P. (LCP-10)
② SUMP PUMP C.P. (LCP-37)
③ & ④ GRINDER C.P. (LCP-13A,13B)
⑤ C2 & I2
⑥ POWER PANEL P2A & P2B
⑦ SQUARE D MINI POWER POWER ZONE-5KVA W/G-20A, 1P BKRS. PANEL LC1.
⑧ CP. LCP-14
⑨ VENTILATION CONTROL PANEL.

RECORD DRAWING

NO.	DATE	DRWN	CHK'D	DESCRIPTION
1	9/97	FXP	ASG	RECORD DRAWING

REVISIONS

DESIGNED BY: SEB
DRAWN BY: JSG
CHECKED BY/DATE: SEB/9-91
APPR'D BY/DATE: CEB/9-91

CAMP DRESSER & McKEE

THIS DRAWING HAS BEEN REVISED BY HAZEN AND SAWYER, P.C. TO REFLECT MODIFICATIONS MADE DURING CONSTRUCTION

CDM
environmental engineers, scientists, planners, & management consultants

ARLINGTON COUNTY, VIRGINIA
WATER POLLUTION CONTROL PLANT
UPGRADE AND EXPANSION- PHASE IIB

NEW PRIMARY CLARIFIERS
ELECTRICAL
SCUM PUMP STATION & PRIMARY CLARIFIER TUNNEL
POWER & LIGHTING PLANS

SCALE NOTE
SCALE BAR SHOWN BELOW IS ONE INCH LONG ON A FULL SIZE DRAWING. WHEN SCALING DRAWINGS, MEASURE BAR TO DETERMINE IF SCALES SHOWN WILL REQUIRE ADJUSTING.
ONE INCH

CONTRACT NO. 90-02-WPC
YEAR 1991
LOCATION CODE CO
SPECIALTY CODE E
PROJECT NO. 5002-33
FILE NAME COE-06.DWG
DRAWING NO. COE-6
SHEET NO. 278

C.E. BAILEY & ASSOCIATES, INC.
CONSULTING ENGINEERS
ORLANDO, CLEARWATER & FORT LAUDERDALE, FLORIDA

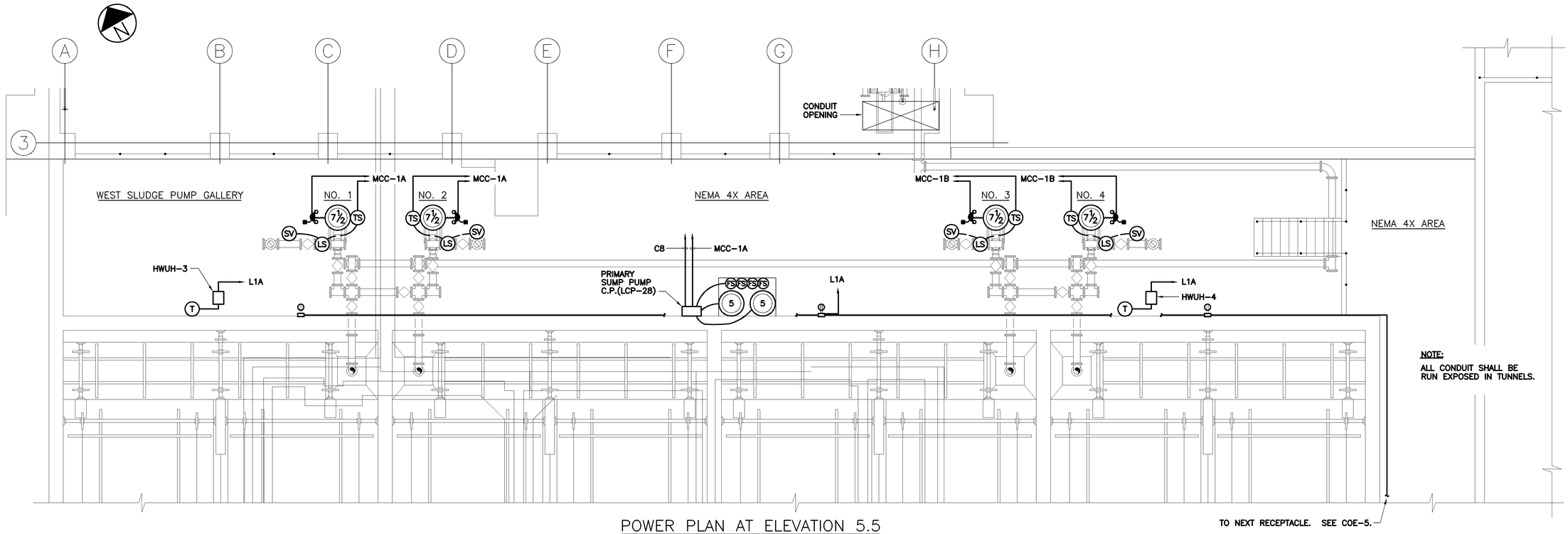

POWER PLAN AT ELEVATION 5.5

SCALE: 3/16"=1'-0"

NOTE:
ALL CONDUIT SHALL BE RUN EXPOSED IN TUNNELS.

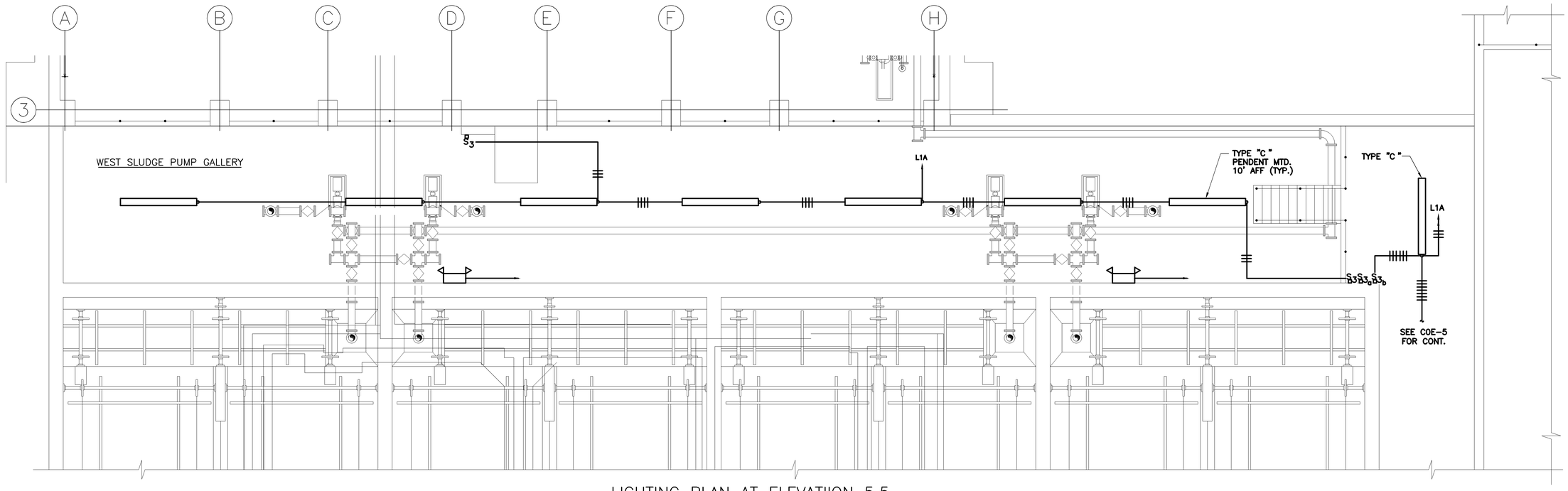

LIGHTING PLAN AT ELEVATIION 5.5

SCALE: 3/16"=1'-0"

NO.	DATE	DRWN	CHK'D	DESCRIPTION
1	9/97	FXP	ASG	RECORD DRAWING

REVISIONS

DESIGNED BY: SEB
DRAWN BY: JSG
CHECKED BY/DATE: CEB/9-91
APPR'D BY/DATE: CEB/9-91

CAMP DRESSER & McKEE

THIS DRAWING HAS BEEN REVISED BY HALZEN AND SAWYER, P.C. TO REFLECT AS CONSTRUCTIONS MADE DURING CONSTRUCTION

CDM
environmental engineers, scientists, planners, & management consultants

ARLINGTON COUNTY, VIRGINIA
WATER POLLUTION CONTROL PLANT
UPGRADE AND EXPANSION- PHASE IIB

NEW PRIMARY CLARIFIERS
ELECTRICAL
WEST SLUDGE PUMP GALLERY
POWER & LIGHTING PLANS

SCALE NOTE
SCALE BAR SHOWN BELOW IS ONE INCH LONG ON A FULL SIZE DRAWING. WHEN SCALING DRAWINGS, MEASURE BAR TO DETERMINE IF SCALES SHOWN WILL REQUIRE ADJUSTING.
ONE INCH

RECORD DRAWING

CONTRACT NO. 90-02-WPC
YEAR 1991
LOCATION CODE: CO
SPECIALTY CODE: E
PROJECT NO. 5002-33
FILE NAME COE-07.DWG
DRAWING NO. COE-7
SHEET NO. 279

C.E. BAILEY & ASSOCIATES, INC.
CONSULTING ENGINEERS
ORLANDO, CLEARWATER & FORT LAUDERDALE, FLORIDA

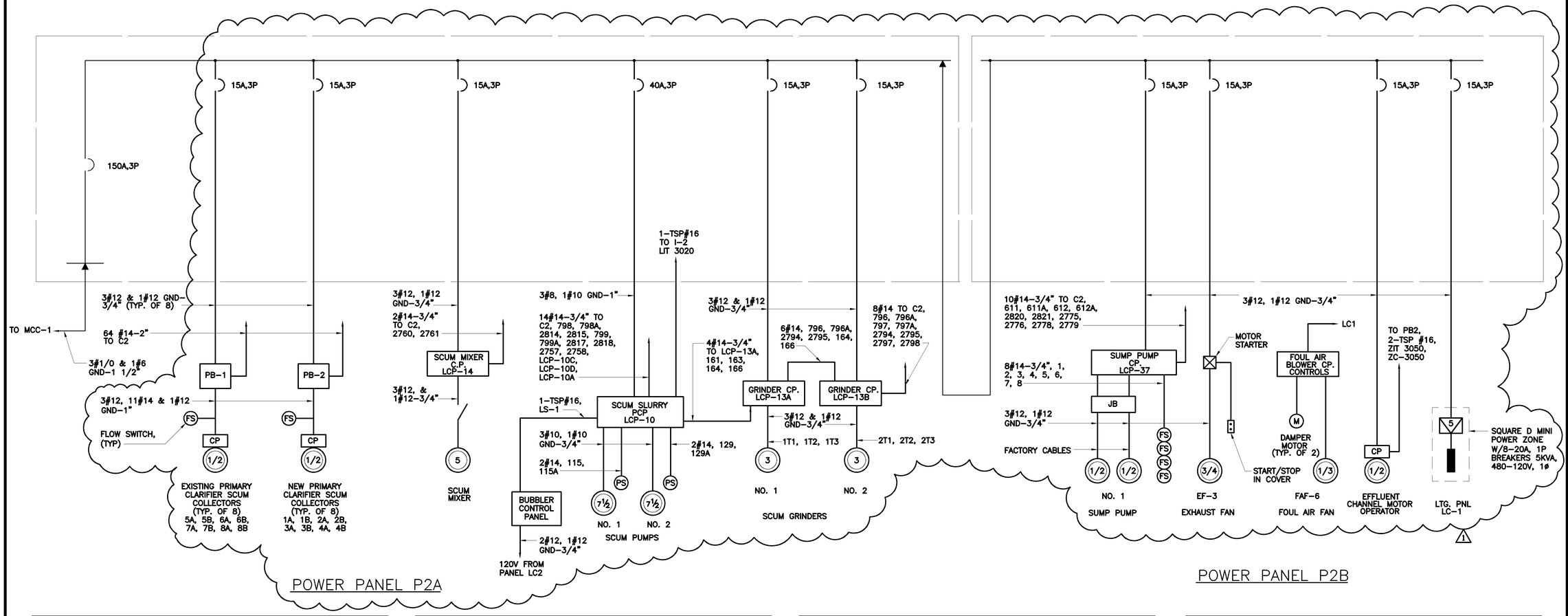

PANEL: L3	BUS: 100A MLO W/60A MB.	VOLTAGE: 120/208V,3ø,4W		
MOUNTING: SURFACE	POLES: 24			
LOCATION: EAST TUNNEL ACCESS BUILDING– NEMA 12 ENCLOSURE				
CIR. NO.	DESCRIPTION	TRIP	POLES	REMARKS
1–4	LIGHTING	20	1	
5,6	RECEPTACLES	20	1	
7	PRIMARY SLUDGE FLOW TRANS.	20	1	
8	EXHAUST FAN EF–1	20	1	
9	EXHAUST FAN EF–2	20	1	
10	EXIT & EMERGENCY LTG.	20	1	
11	HOT WATER UNIT HTR–11	20	1	
12	HOT WATER UNIT HTR–12	20	1	
13–18	SPARE	20	1	
19–24	SPACE	20	1	

PANEL: LC1 MINI POWER ZONE.	VOLTAGE: 120/208V,3ø,4W			
MOUNTING: SURFACE SIZE–5KVA W/6–20,1P BKRS.				
LOCATION: SCUM PUMP STATION W/QOB BOLT–ON BKRS–NEMA 12 ENCLOSURE				
CIR. NO.	DESCRIPTION	TRIP	POLES	REMARKS
1	LIGHTING	20	1	
2	RECEPTACLES	20	1	
3	EFFLUENT LEVEL TRANSMITTER	20	1	
4	FOUL AIR BLOWER CP.	20	1	
5	SPARE	20	1	
6	SPARE	20	1	

PANEL: P2B	BUS: 100A,MLO	VOLTAGE: 480V,3ø,3W		
MOUNTING: SURFACE	POLES: 10, 3P BREAKERS			
LOCATION: SCUM PUMP STATION–NEMA 12 ENCLOSURE				
CIR. NO.	DESCRIPTION	TRIP	POLES	REMARKS
1,3,5	SCUM PUMP CP LCP–37	15	3	
2,4,6	EXHAUST FAN EF–3	15	3	
7,9,11	SPARE	15	3	
8,10,12	EFFLUENT CHANNEL MOTOR VALVE	15	3	
13,15,17	MINI LOAD CENTER LC1	15	3	
14,16,18	SPARE	15	3	
19,21,23	SPARE	15	3	
20,22,24	SPARE	15	3	
25,27,29	SPARE	15	3	
26,28,30	SPARE	15	3	
31–66	SPACE	15	3	

PANEL: P2A	BUS: 225A W/150A MB	VOLTAGE: 480V,3ø,3W		
MOUNTING: SURFACE	POLES: 20,3P BREAKERS			
LOCATION: SCUM PUMP STATION–NEMA 12 ENCLOSURE				
CIR. NO.	DESCRIPTION	TRIP	POLES	REMARKS
1,3,5	PRIMARY SCUM COLLECTOR NO. 1A	15	3	
2,4,6	PRIMARY SCUM COLLECTOR NO. 1B	15	3	
7,9,11	PRIMARY SCUM COLLECTOR NO. 2A	15	3	
8,10,12	PRIMARY SCUM COLLECTOR NO. 2B	15	3	
13,15,17	PRIMARY SCUM COLLECTOR NO. 3A	15	3	
14,16,18	PRIMARY SCUM COLLECTOR NO. 3B	15	3	
19,21,23	PRIMARY SCUM COLLECTOR NO. 4A	15	3	
20,22,24	PRIMARY SCUM COLLECTOR NO. 4B	15	3	
25,27,29	PRIMARY SCUM COLLECTOR NO. 5A	15	3	
26,28,30	PRIMARY SCUM COLLECTOR NO. 5B	15	3	
31,33,35	PRIMARY SCUM COLLECTOR NO. 6A	15	3	
32,34,36	PRIMARY SCUM COLLECTOR NO. 6B	15	3	
37,39,41	PRIMARY SCUM COLLECTOR NO. 7A	15	3	
38,40,42	PRIMARY SCUM COLLECTOR NO. 7B	15	3	
43,45,47	PRIMARY SCUM COLLECTOR NO. 8A	15	3	
44,46,48	PRIMARY SCUM COLLECTOR NO. 8B	15	3	
49,51,53	SCUM MIXER CP. LCP–14	15	3	
50,52,54	SCUM SLURRY PUMP CP. LCP–10	40	3	
55,57,59	GRINDER CP. LCP–13A	15	3	
56,58,60	GRINDER CP. LCP–13B	15	3	

NO.	DATE	DRWN	CHK'D	REVISIONS DESCRIPTION
1	12/98	FXP	ASG	RECORD DRAWING

DESIGNED BY: SEB
DRAWN BY: JSG
CHECKED BY/DATE: CEB/9-91
APPR'D BY/DATE: CEB/9-91

CAMP DRESSER & McKEE

THIS DRAWING HAS BEEN REVISED BY BLAZEN AND SAWYER, P.C. TO REFLECT AS-BUILT CONDITIONS MADE DURING CONSTRUCTION

CDM environmental engineers, scientists, planners, & management consultants

ARLINGTON COUNTY, VIRGINIA
WATER POLLUTION CONTROL PLANT
UPGRADE AND EXPANSION- PHASE IIB

EXISTING & NEW PRIMARY CLARIFIERS
ELECTRICAL
SCUM PUMP STATION SINGLE LINE DIAGRAMS & SCHEDULES

SCALE NOTE

SCALE BAR SHOWN BELOW IS ONE INCH LONG ON A FULL SIZE DRAWING. WHEN SCALING DRAWINGS, MEASURE BAR TO DETERMINE IF SCALES SHOWN WILL REQUIRE ADJUSTING.

ONE INCH

RECORD DRAWING

CONTRACT NO. 90-02-WPC
YEAR 1991
LOCATION CODE CO
SPECIALTY CODE E
PROJECT NO. 5002-33
FILE NAME COE-08.DWG
DRAWING NO. COE-8
SHEET NO. 280

C.E. BAILEY & ASSOCIATES, INC.
CONSULTING ENGINEERS
ORLANDO, CLEARWATER & FORT LAUDERDALE, FLORIDA

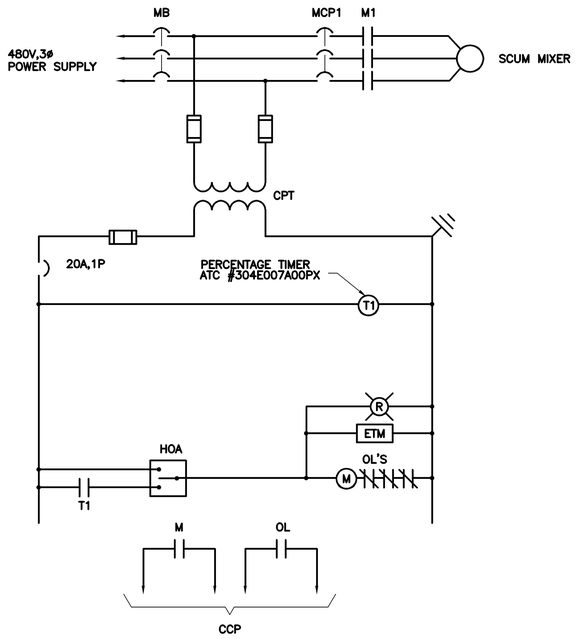

PRIMARY SCUM MIXER
CONTROL PANEL (LCP-14)

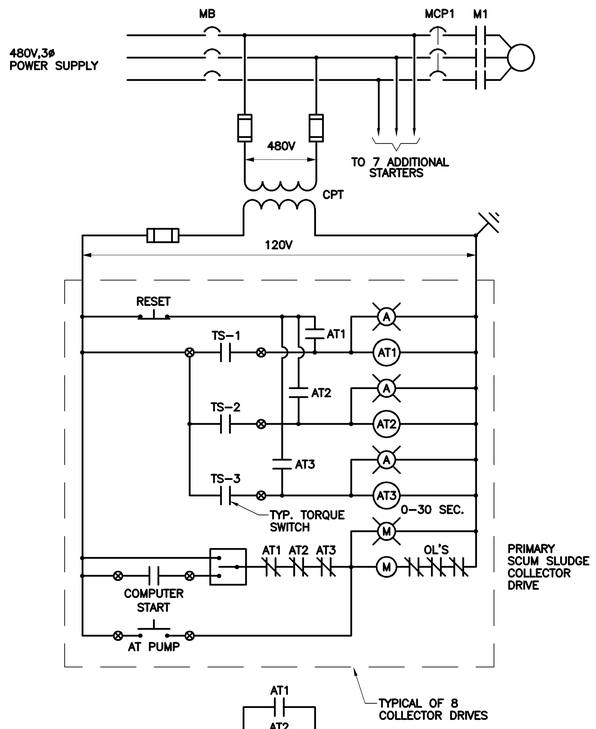

PRIMARY SCUM/SLUDGE COLLECTOR DRIVE
CONTROL PANEL (LCP-9)

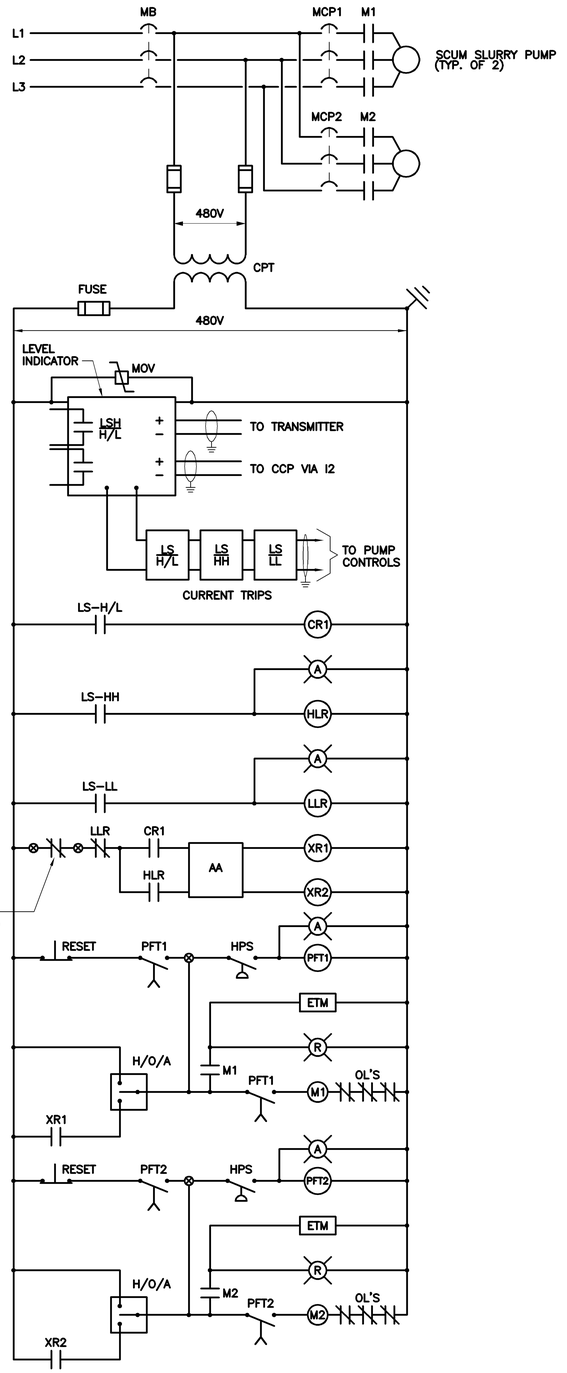

SCUM SLURRY PUMP C.P.
LCP-10

NOTE:
1. SEAL WATER INTERLOCKS SEE APPROVED SHOP DRAWINGS.
1 CLAR. #257

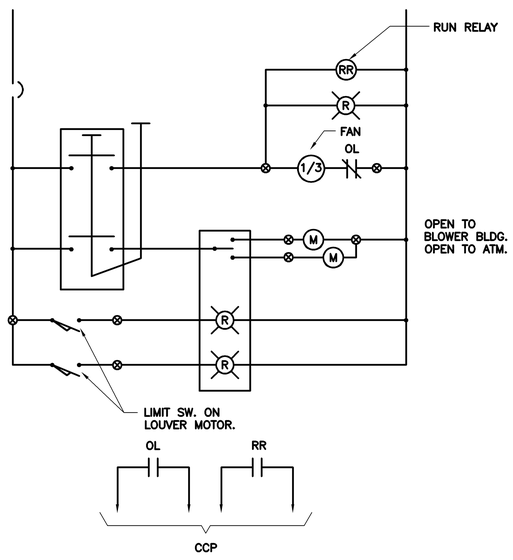

FOUL AIR FAN FAF-6

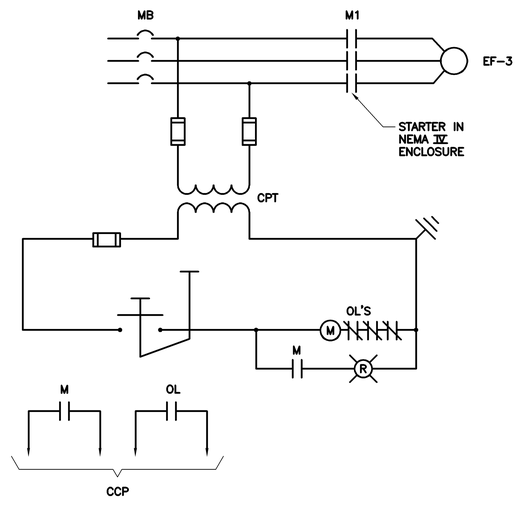

EXHAUST FAN EF-3
1 SEE RFC-147

RECORD DRAWING

NO.	DATE	DRWN	CHK'D	DESCRIPTION
1	9/97	FXP	ASG	RECORD DRAWING

REVISIONS

DESIGNED BY: SEB
DRAWN BY: JSG
CHECKED BY/DATE: CEB/9-91
APPR'D BY/DATE: CEB/9-91

CAMP DRESSER & McKEE

THIS DRAWING HAS BEEN REVISED BY HAZEN AND SAWYER, P.C. TO REFLECT MODIFICATIONS MADE DURING CONSTRUCTION

CDM
environmental engineers, scientists, planners, & management consultants

ARLINGTON COUNTY, VIRGINIA
WATER POLLUTION CONTROL PLANT
UPGRADE AND EXPANSION- PHASE B

EXISTING & NEW PRIMARY CLARIFIERS
ELECTRICAL
ELEMENTARY CONTROL DIAGRAMS & RISER DIAGRAMS

SCALE NOTE
SCALE BAR SHOWN BELOW IS ONE INCH LONG ON A FULL SIZE DRAWING. WHEN SCALING DRAWINGS, MEASURE BAR TO DETERMINE IF SCALES SHOWN WILL REQUIRE ADJUSTING.
ONE INCH

CONTRACT NO. 90-02-WPC
YEAR 1991
LOCATION CODE CO
SPECIALTY CODE E
PROJECT NO. 5002-33
FILE NAME COE-09.DWG
DRAWING NO. COE-9
SHEET NO. 281

C.E. BAILEY & ASSOCIATES, INC.
CONSULTING ENGINEERS
ORLANDO, CLEARWATER & FORT LAUDERDALE, FLORIDA

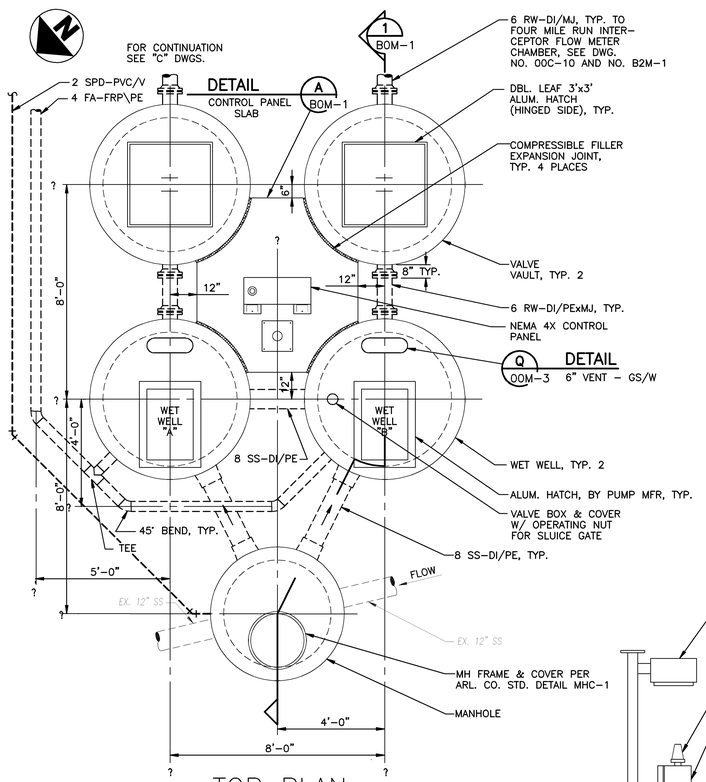

TOP PLAN

SCALE: 3/8"=1'–0"

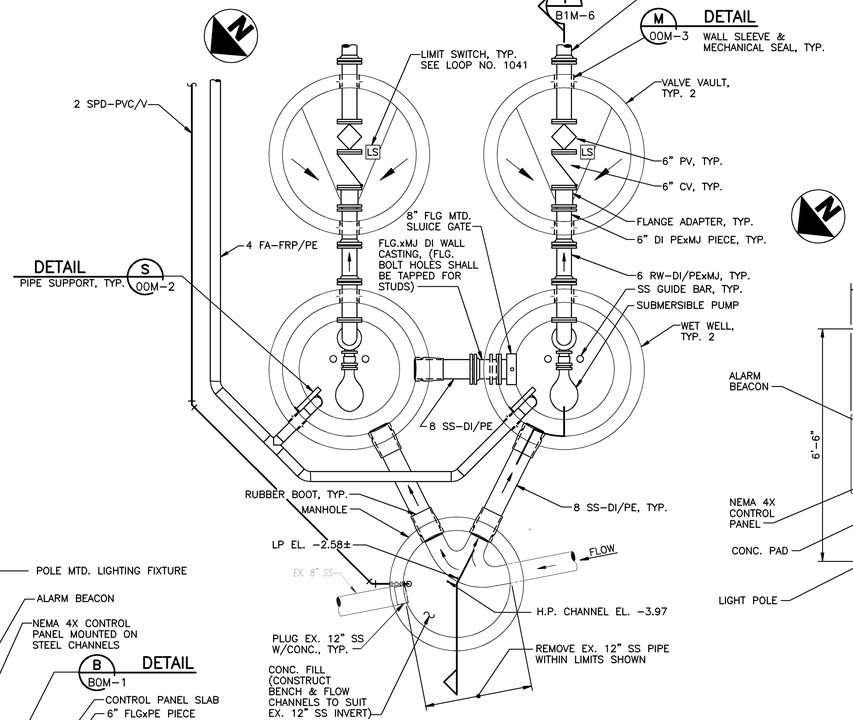

SECTIONAL PLAN

SCALE: 3/8"=1'–0"

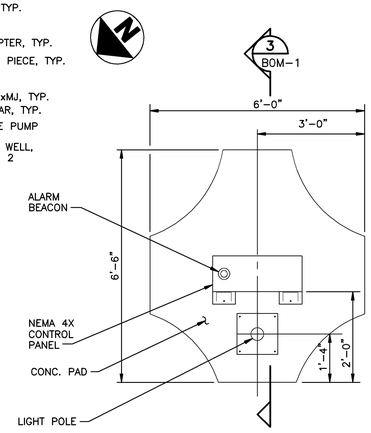

CONTROL PANEL SLAB

DETAIL A BOM–1

SCALE: 1/2"=1'–0"

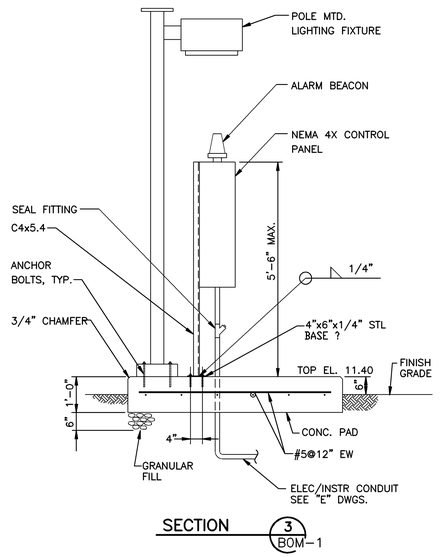

SECTION 3 BOM–1

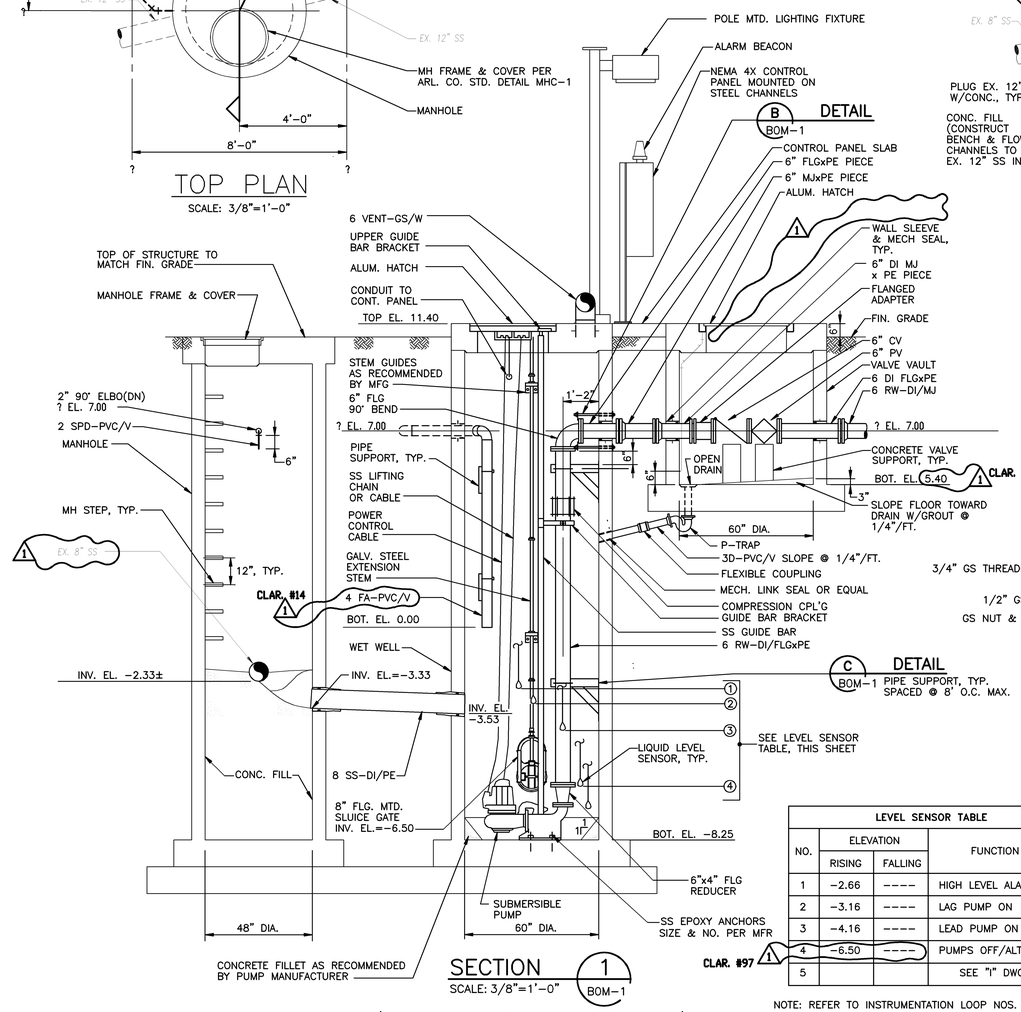

SECTION 1 BOM–1

SCALE: 3/8"=1'–0"

(SECTION SIMILAR FOR BOTH WET WELLS & VALVE VAULTS)

LEVEL SENSOR TABLE			
NO.	ELEVATION RISING	ELEVATION FALLING	FUNCTION
1	–2.66	----	HIGH LEVEL ALARM
2	–3.16	----	LAG PUMP ON
3	–4.16	----	LEAD PUMP ON
4	–6.50	----	PUMPS OFF/ALTERNATE
5			SEE "I" DWG

CLAR. #97 1

NOTE: REFER TO INSTRUMENTATION LOOP NOS. 1040, 1041

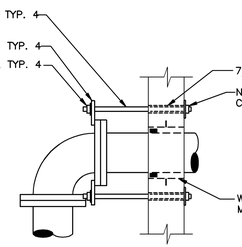

DETAIL B BOM–1

SCALE: 1"=1'–0"

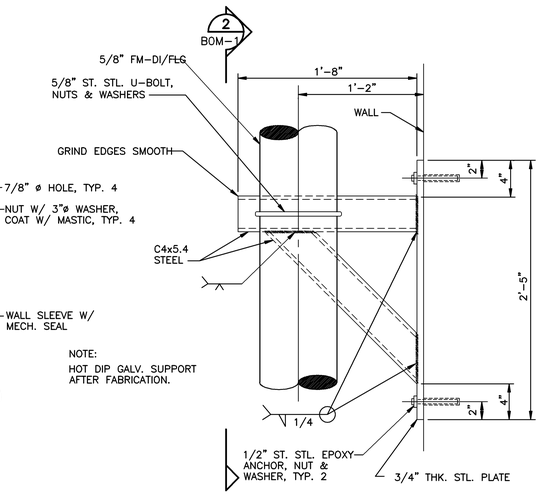

NOTE:
HOT DIP GALV. SUPPORT AFTER FABRICATION.

PIPE SUPPORT DETAIL C BOM–1

SCALE: 1 1/2"=1'–0"

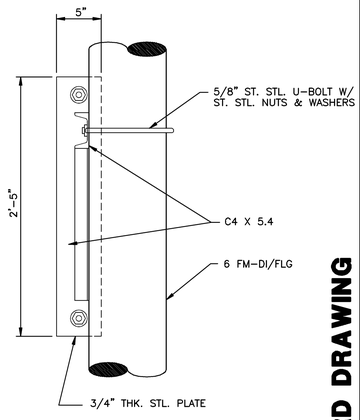

SECTION 2 BOM–1

SCALE: 1 1/2"=1'–0"

09/18/91 – 11:09

NO.	DATE	DRWN	CHK'D	DESCRIPTION
1	9/97	FXP	ASG	RECORD DRAWING

REVISIONS

DESIGNED BY: DJS
DRAWN BY: CTC/GPB
CHECKED BY/DATE: TDH 9/91
APPRV'D BY/DATE: TDH 9/91

COMMONWEALTH OF VIRGINIA THOMAS D. HALL No. 12502 PROFESSIONAL ENGINEER

CAMP DRESSER & McKEE

THIS DRAWING HAS BEEN REVISED BY HAZEN AND SAWYER, P.C. TO REFLECT MODIFICATIONS MADE DURING CONSTRUCTION

CDM environmental engineers, scientists, planners, & management consultants

ARLINGTON COUNTY, VIRGINIA
WATER POLLUTION CONTROL PLANT
UPGRADE AND EXPANSION– PHASE IIB

LOW LEVEL PUMP STATION
PLAN, SECTIONS, & DETAILS

SCALE NOTE

SCALE BAR SHOWN BELOW IS ONE INCH LONG ON A FULL SIZE DRAWING. WHEN SCALING DRAWINGS, MEASURE BAR TO DETERMINE IF SCALES SHOWN WILL REQUIRE ADJUSTING.

ONE INCH

CONTRACT NO. 90–02–WPC
YEAR 1991
LOCATION CODE B0
SPECIALTY CODE M
PROJECT NO. 5002–33
FILE NAME BOM–01.DWG
DRAWING NO. BOM–1
SHEET NO. 283

RECORD DRAWING

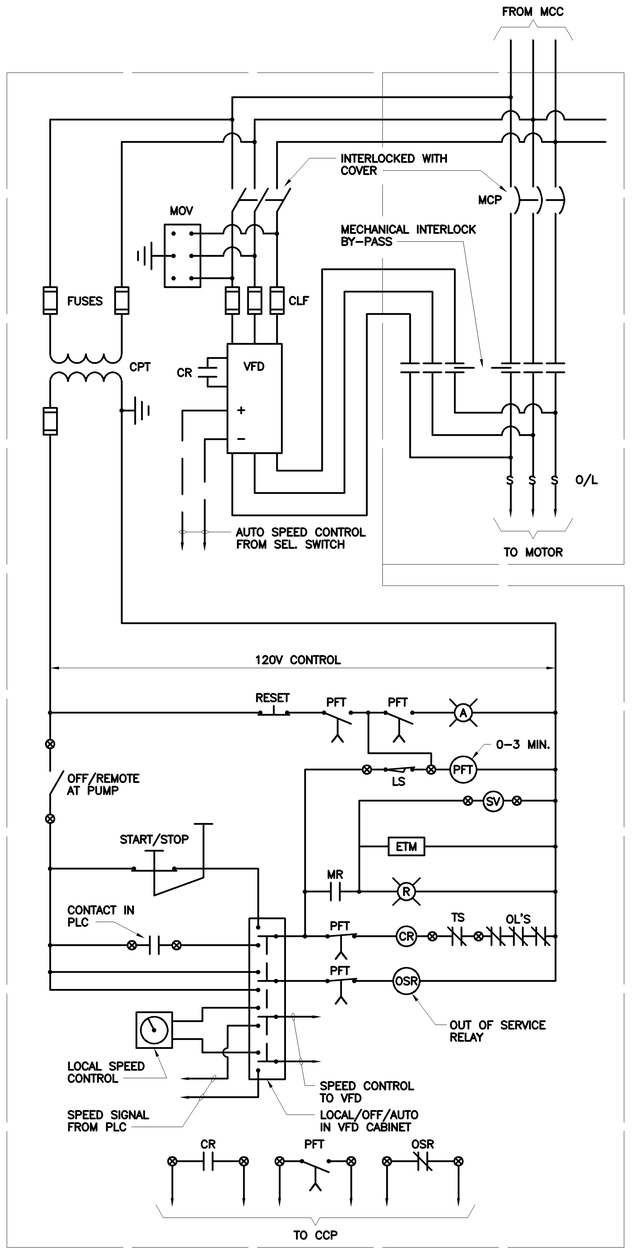

PRIMARY SLUDGE PUMPS

(CONTROL LOCATED IN VFD CABINETS – TYP. OF 8)

NO.	DATE	DRWN	CHK'D	DESCRIPTION
				REVISIONS
1	9/97	FXP	ASG	RECORD DRAWING

DESIGNED BY: CEB
DRAWN BY: JSG
CHECKED BY/DATE: SEB/9-91
APPR'D BY/DATE: CEB/9-91

CAMP DRESSER & McKEE

THIS DRAWING HAS BEEN REVISED BY HAZEN AND SAWYER, P.C. TO REFLECT MODIFICATIONS MADE DURING CONSTRUCTION

CDM
environmental engineers, scientists, planners, & management consultants

ARLINGTON COUNTY, VIRGINIA
WATER POLLUTION CONTROL PLANT
UPGRADE AND EXPANSION- PHASE II

EXISTING & NEW PRIMARY CLARIFIERS
ELECTRICAL CONTROL DIAGRAMS

SCALE NOTE

SCALE BAR SHOWN BELOW IS ONE INCH LONG ON A FULL SIZE DRAWING. WHEN SCALING DRAWINGS, MEASURE BAR TO DETERMINE IF SCALES SHOWN WILL REQUIRE ADJUSTING.

ONE INCH

CONTRACT NO. 90-02-WPC
YEAR 1990
LOCATION CODE 00
SPECIALTY CODE E
PROJECT NO. 5002-33
FILE NAME COE-10.DWG
DRAWING NO. COE-10
SHEET NO. 282

RECORD DRAWING

C.E. BAILEY & ASSOCIATES, INC.
CONSULTING ENGINEERS
ORLANDO, CLEARWATER & FORT LAUDERDALE, FLORIDA

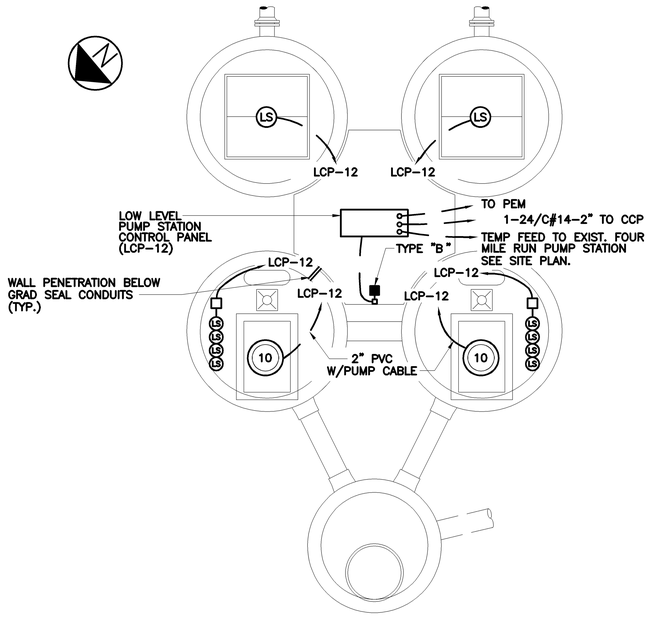

LOW LEVEL PUMP STATION

SCALE: 3/8"=1'-0"

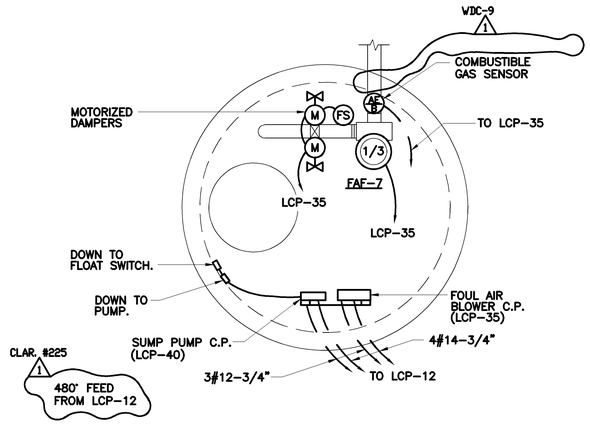

FOUL AIR PIPE ACCESS
MANHOLE & DRAIN SUMP NO. 2

SCALE: 1/2"=1'-0"

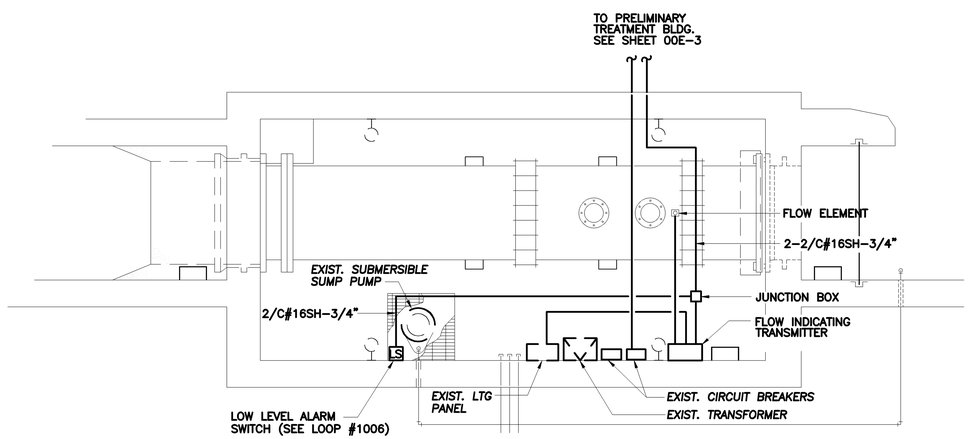

EXISTING FOUR MILE RUN
INTERCEPTOR METER CHAMBER

SCALE:3/8"=1'-0"

NO.	DATE	DRWN	CHK'D	DESCRIPTION
1	9/97	FXP	ASG	RECORD DRAWING

REVISIONS

DESIGNED BY: SEB
DRAWN BY: JSG
CHECKED BY/DATE: SEB/9-91
APPR'D BY/DATE: CEB/9-91

CAMP DRESSER & McKEE

THIS DRAWING HAS BEEN REVISED BY HAZEN AND SAWYER, P.C. TO REFLECT MODIFICATIONS MADE DURING CONSTRUCTION

CDM
environmental engineers, scientists, planners, & management consultants

ARLINGTON COUNTY, VIRGINIA
WATER POLLUTION CONTROL PLANT
UPGRADE AND EXPANSION- PHASE B

LOW LEVEL PUMP STATION & INTERCEPTOR METER CHAMBER
ELECTRICAL
PLANS

SCALE NOTE

SCALE BAR SHOWN BELOW IS ONE INCH LONG ON A FULL SIZE DRAWING. WHEN SCALING DRAWINGS, MEASURE BAR TO DETERMINE IF SCALES SHOWN WILL REQUIRE ADJUSTING.

ONE INCH

RECORD DRAWING

CONTRACT NO. 90-02-WPC
YEAR 1991
LOCATION CODE B0
SPECIALTY CODE E
PROJECT NO. 5002-33
FILE NAME B0E-01.DWG
DRAWING NO. B0E-1
SHEET NO. 284

C.E. BAILEY & ASSOCIATES, INC.
CONSULTING ENGINEERS
ORLANDO, CLEARWATER & FORT LAUDERDALE, FLORIDA

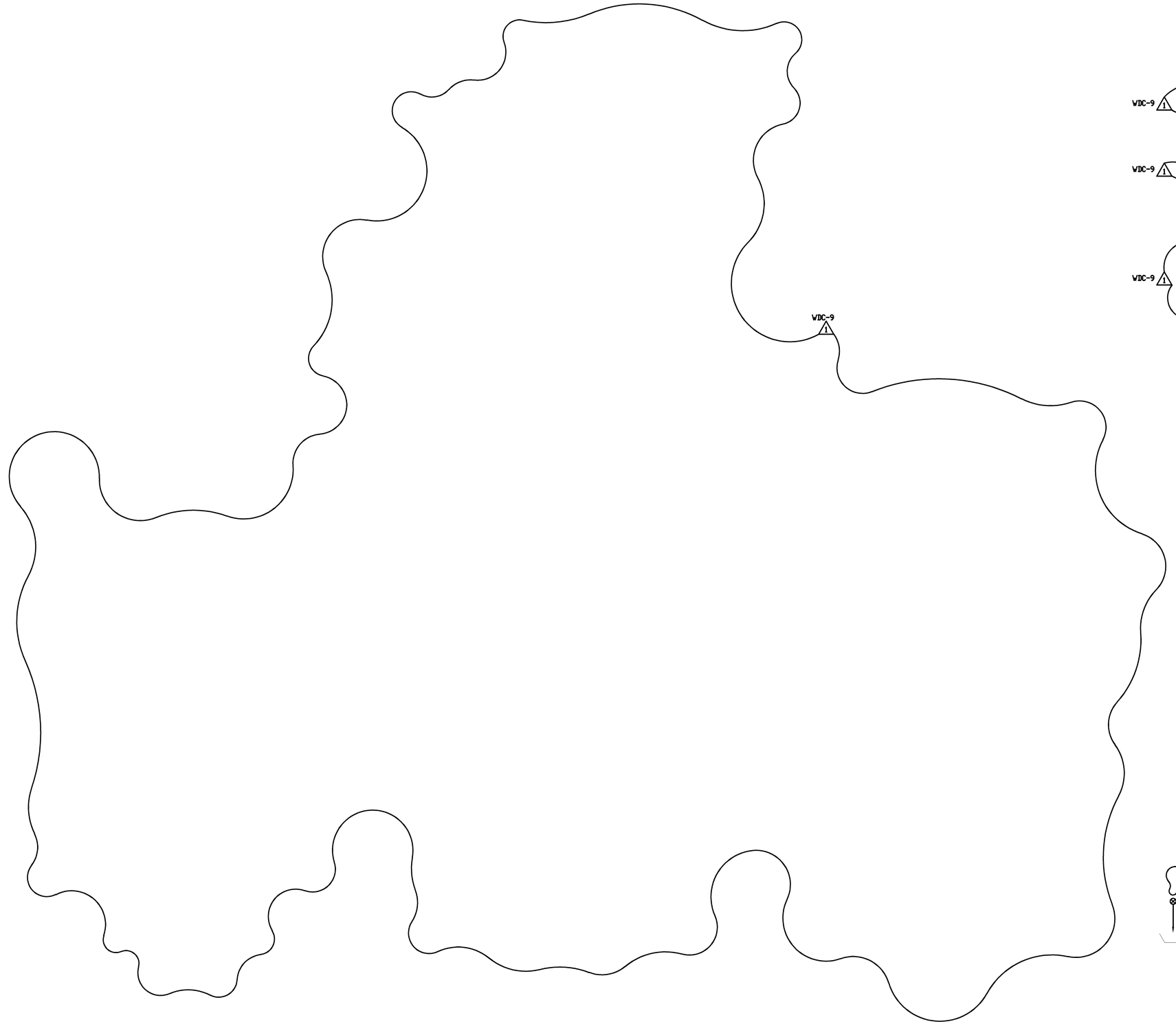

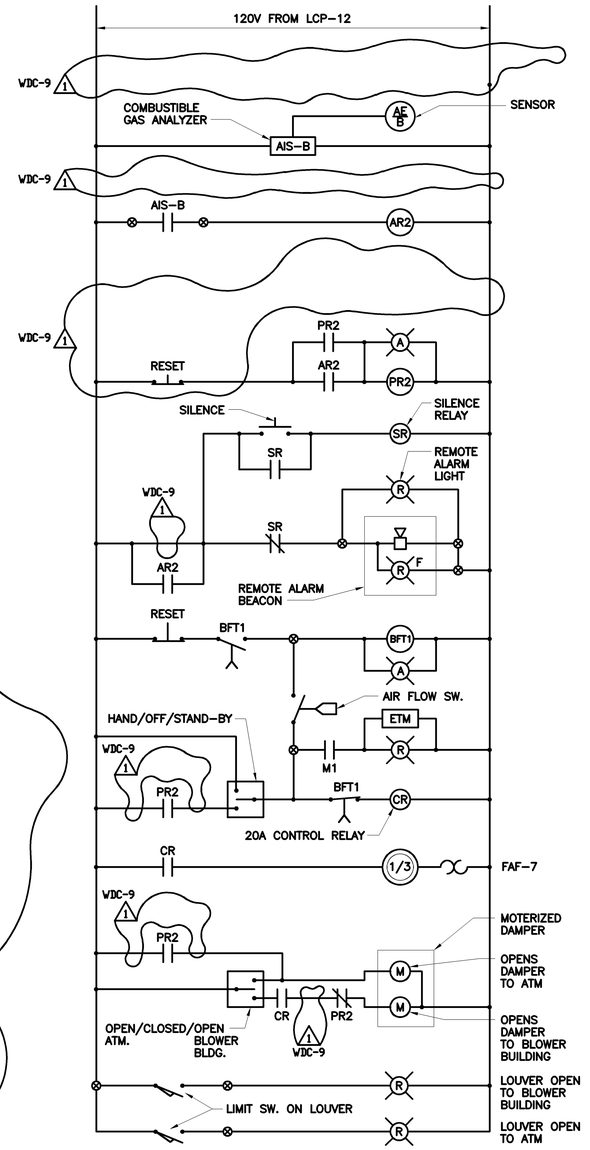

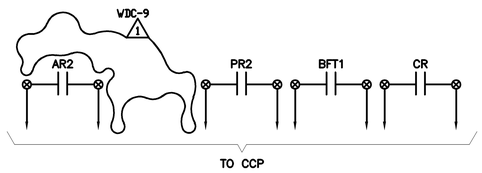

TO CCP

LOW LEVEL PUMP STATION
FOUL AIR BLOWER C.P.
LCP-35

RECORD DRAWING

C.E. BAILEY & ASSOCIATES, INC.
CONSULTING ENGINEERS
ORLANDO, CLEARWATER & FORT LAUDERDALE, FLORIDA

NO.	DATE	DRWN	CHK'D	REVISIONS DESCRIPTION
1	9/97	FXP	ASG	RECORD DRAWING

DESIGNED BY: CEB
DRAWN BY: TRH
CHECKED BY/DATE: SEB
APPRV'D BY/DATE: CEB

CAMP DRESSER & McKEE

THIS DRAWING HAS BEEN REVISED BY HAZEN AND SAWYER, P.C. TO REFLECT MODIFICATIONS MADE DURING CONSTRUCTION

CDM
environmental engineers, scientists, planners, & management consultants

ARLINGTON COUNTY, VIRGINIA
WATER POLLUTION CONTROL PLANT
UPGRADE AND EXPANSION- PHASE III

LOW LEVEL PUMP STATION
ELECTRICAL
CONTROL DIAGRAMS

SCALE NOTE
SCALE BAR SHOWN BELOW IS ONE INCH LONG ON A FULL SIZE DRAWING. WHEN SCALING DRAWINGS, MEASURE BAR TO DETERMINE IF SCALES SHOWN WILL REQUIRE ADJUSTING.
ONE INCH

CONTRACT NO. 90-02-WPC
YEAR 1991
LOCATION CODE B0
SPECIALTY CODE E
PROJECT NO. 5002-33
FILE NAME B0E-02.DWG
DRAWING NO. B0E-2
SHEET NO. 285

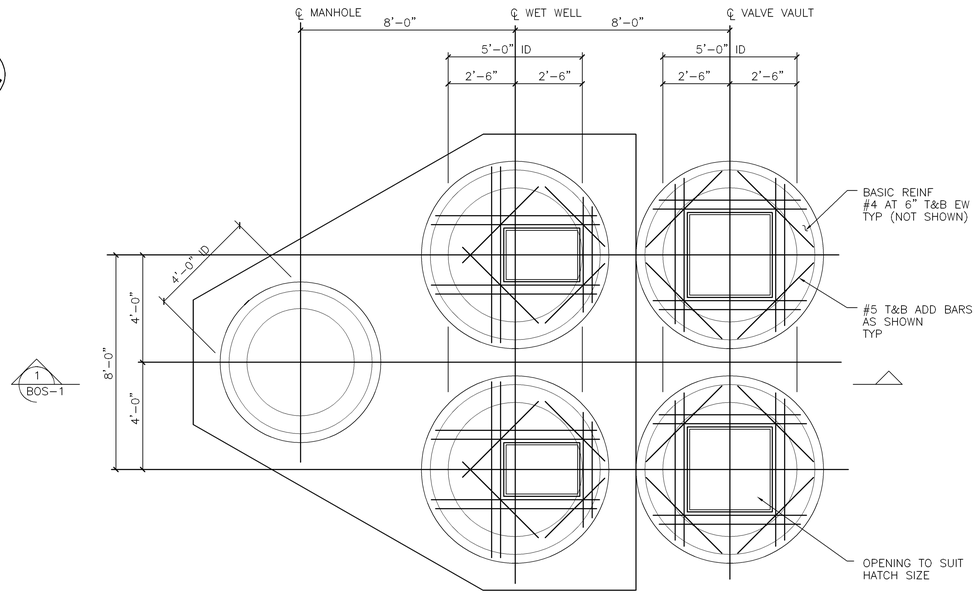

1
BOS-1

PLAN AT T/STRUCTURE

3/8"=1'-0"

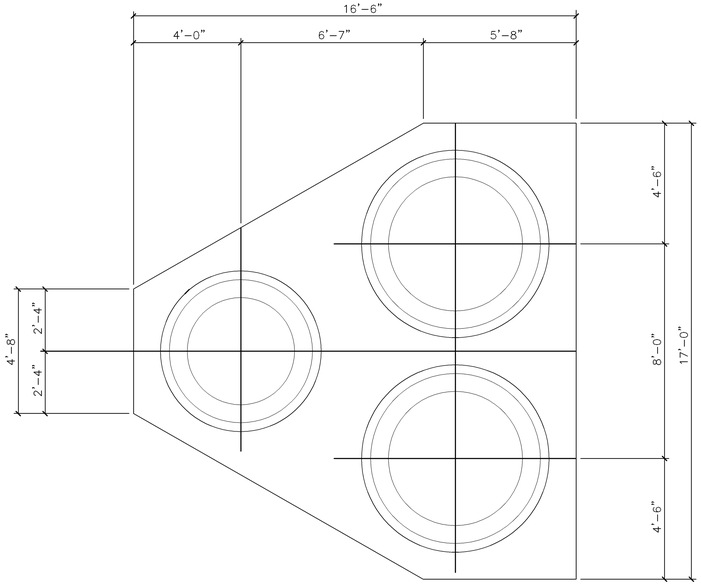

FOUNDATION PLAN

3/8"=1'-0"

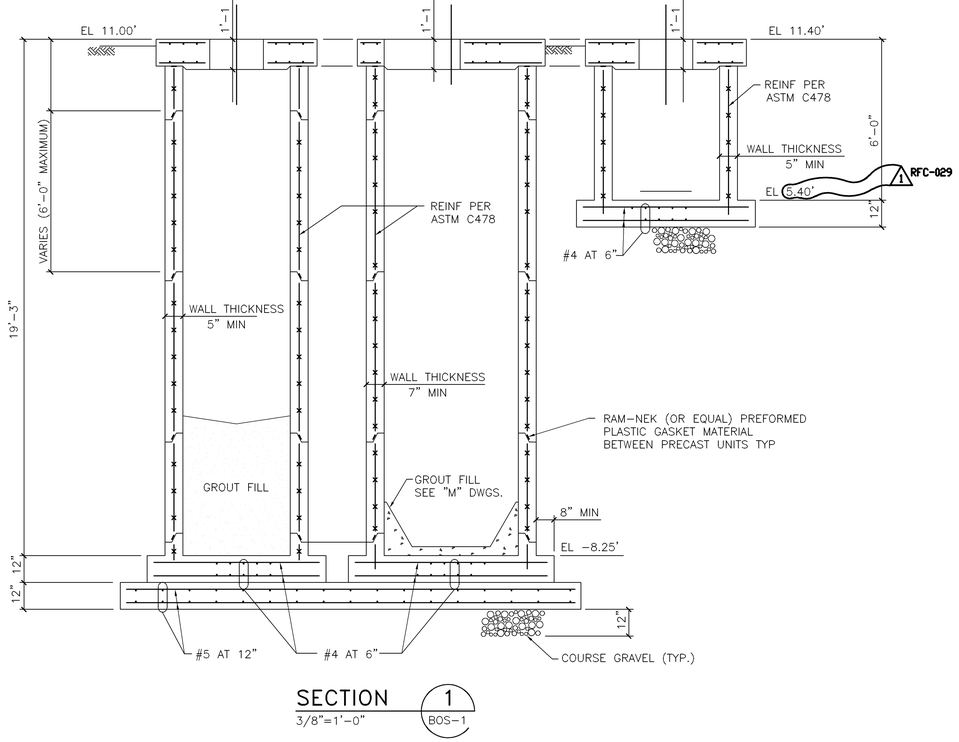

SECTION 1

3/8"=1'-0" BOS-1

NOTES:

CAST IN PLACE CONCRETE

- ALL MATERIALS AND METHODS OF CONSTRUCTION SHALL BE IN ACCORDANCE WITH ACI-350 AND ACI-318 REQUIREMENTS.
- CONCRETE: 28-DAY COMPRESSIVE STRENGTH-4000 PSI, CEMENT-TYPE II, AIR-ENTRAINING WATER REDUCING ADMIXTURES-PER SPECIFICATIONS.

PRE-CAST CONCRETE

- MATERIALS AND METHODS OF CONSTRUCTION SHALL BE PER SPECIFICATIONS.
- CONTRACTOR SHALL SUBMIT SHOP DRAWINGS FOR PRECAST ELEMENTS FOR ENGINEER'S REVIEW.

REINFORCEMENT

- REINFORCEMENT SHALL CONFORM TO ASTM A615-GRADE 60 REQUIREMENTS.
- ALL ACCESSORIES SHALL BE IN CONFORMANCE WITH ACI-315 REQUIREMENTS.
- THE CONTRACTOR SHALL PREPARE DETAILED PLACEMENT DRAWINGS AND SCHEDULES IN CONFORMANCE WITH ACI-315 REQUIREMENTS, FOR ENGINEER'S REVIEW.

FOUNDATIONS

- FOUNDATION DEWATERING SHALL BE MAINTAINED UNTIL FOUNDATION EXCAVATION IS TOTALLY BACKFILLED.

NOTE:

STANDARD DETAILS SHOWN ON ODS-2, ODS-3, AND ODS-4 APPLY TO ALL SIMILAR SITUATIONS ON THE PROJECT, EXCEPT WHERE A DIFFERENT DETAIL IS SHOWN.

structural technologies inc.
CONSULTING ENGINEERS
Wekiva Business Center
Suite 120, 1428 East Semoran Blvd., Apopka, Florida 32703
(407) 889-9660

DRAWN BY : RAH
CHECKED BY : REH
APPROVED BY : BE
DATE : SEPT 1990
JOB NO: 90-111

DESIGNED BY:
DRAWN BY:
CHECKED BY/DATE:
APPRV'D BY/DATE:

NO.	DATE	DRWN	CHK'D	DESCRIPTION
1	9/97	FXP	ASG	RECORD DRAWING

REVISIONS

CAMP DRESSER & McKEE

THIS DRAWING HAS BEEN REVISED BY HAZEN AND SAWYER, P.C. TO REFLECT MODIFICATIONS MADE DURING CONSTRUCTION

environmental engineers, scientists, planners, & management consultants. CDM

RECORD DRAWING

ARLINGTON COUNTY, VIRGINIA
WATER POLLUTION CONTROL PLANT
UPGRADE AND EXPANSION- PHASE IB

FOUR MILE RUN RELIEF PUMP STATION
LOW LEVEL PUMPING STATION

SCALE NOTE

SCALE BAR SHOWN BELOW IS ONE INCH LONG ON A FULL SIZE DRAWING. WHEN SCALING DRAWINGS, MEASURE BAR TO DETERMINE IF SCALES SHOWN WILL REQUIRE ADJUSTING.

ONE INCH

CONTRACT NO. 90-02-WPC
YEAR 1991

LOCATION CODE	SPECIALTY CODE
BO	S

PROJECT NO. 5002-33
FILE NAME BOS-1.DWG
DRAWING NO. BOS-1
SHEET NO. 286

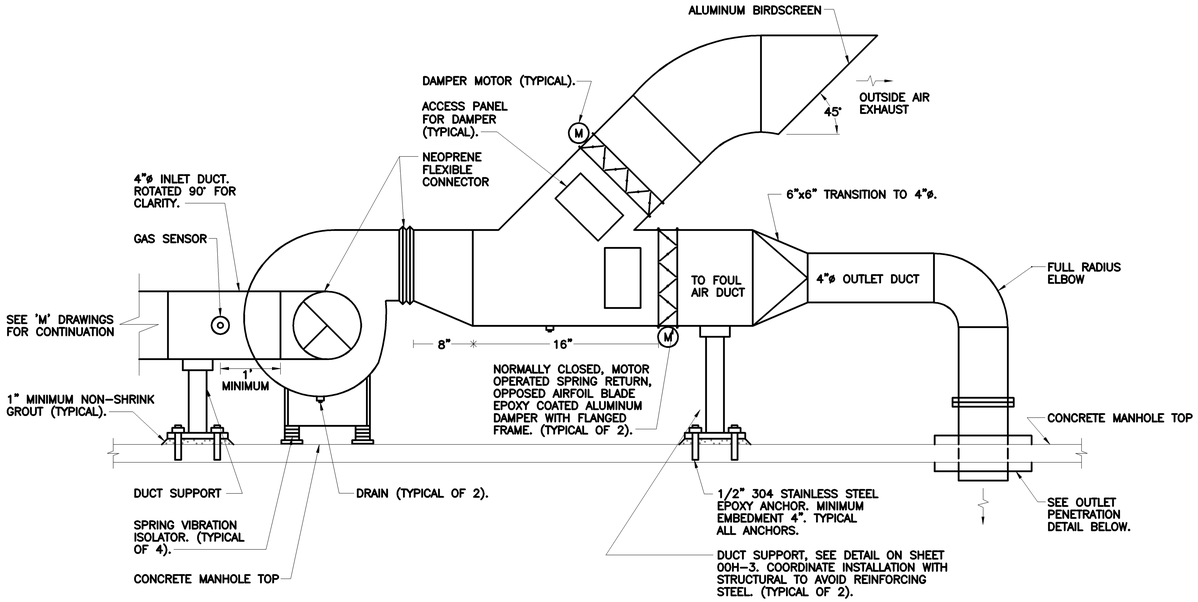

FAF-7 DETAIL

N.T.S.

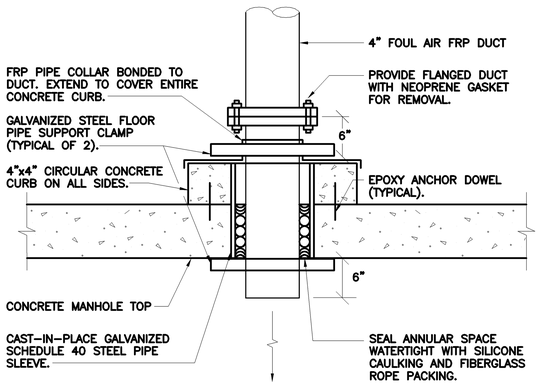

OUTLET PIPE PENETRATION DETAIL

N.T.S.

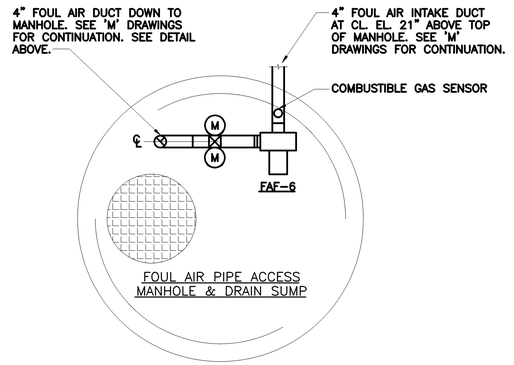

PLAN

SCALE: 1/2"=1'-0"

NO.	DATE	DRWN	CHK'D	DESCRIPTION
1	9/97	FXP	ASG	RECORD DRAWING

REVISIONS

DESIGNED BY: WRH
DRAWN BY: SFP
CHECKED BY/DATE: WRH/9-91
APPRV'D BY/DATE: WRH/9-91

CAMP DRESSER & McKEE

THIS DRAWING HAS BEEN REVISED BY HAZEN AND SAWYER, P.C. TO REFLECT MODIFICATIONS MADE DURING CONSTRUCTION

environmental engineers, scientists, planners, & management consultants CDM

ARLINGTON COUNTY, VIRGINIA
WATER POLLUTION CONTROL PLANT
UPGRADE AND EXPANSION- PHASE IIB

LOW LEVEL PUMP STATION
HVAC
TOP PLAN AND DETAILS

RECORD DRAWING

SCALE NOTE

SCALE BAR SHOWN BELOW IS ONE INCH LONG ON A FULL SIZE DRAWING. WHEN SCALING DRAWINGS, MEASURE BAR TO DETERMINE IF SCALES SHOWN WILL REQUIRE ADJUSTING.

ONE INCH

CONTRACT NO. 90-02-WPC
YEAR 1991
LOCATION CODE B0
SPECIALTY CODE H
PROJECT NO. 5002-33
FILE NAME B0H1.DWG
DRAWING NO. B0H-1
SHEET NO. 287

C.E. BAILEY & ASSOCIATES, INC.
CONSULTING ENGINEERS
ORLANDO, CLEARWATER & FORT LAUDERDALE, FLORIDA

TOP PLAN

1/16"=1'-0"

NOTES:

1. ALL WORK FOR FIRST STAGE TANKS SHOWN ON DRAWING EOM-2

09/16/91 - 16:41

RECORD DRAWING

NO.	DATE	DRWN	CHK'D	DESCRIPTION
1	9/97	FXP	ASG	RECORD DRAWING

REVISIONS

DESIGNED BY: —

DRAWN BY: GGM,PLR

CHECKED BY/DATE: TDH 9/91

APPRV'D BY/DATE: TDH 9/91

COMMONWEALTH OF VIRGINIA
THOMAS D. HALL
No. 12502
PROFESSIONAL ENGINEER

CAMP DRESSER & McKEE

THIS DRAWING HAS BEEN REVISED BY HAZEN AND SAWYER, P.C. TO REFLECT MODIFICATIONS MADE DURING CONSTRUCTION

environmental engineers, scientists, planners, & management consultants

CDM

ARLINGTON COUNTY, VIRGINIA
WATER POLLUTION CONTROL PLANT
UPGRADE AND EXPANSION- PHASE IIIB

LIME REACTION TANKS
FIRST STAGE TANKS TOP PLAN

SCALE NOTE

SCALE BAR SHOWN BELOW IS ONE INCH LONG ON A FULL SIZE DRAWING. WHEN SCALING DRAWINGS, MEASURE BAR TO DETERMINE IF SCALES SHOWN WILL REQUIRE ADJUSTING.

ONE INCH

CONTRACT NO.	90-02-WPC
YEAR	1991
LOCATION CODE	EO
SPECIALTY CODE	M
PROJECT NO.	5002-33
FILE NAME	EOM-01.DWG
DRAWING NO.	EOM-1
SHEET NO.	288

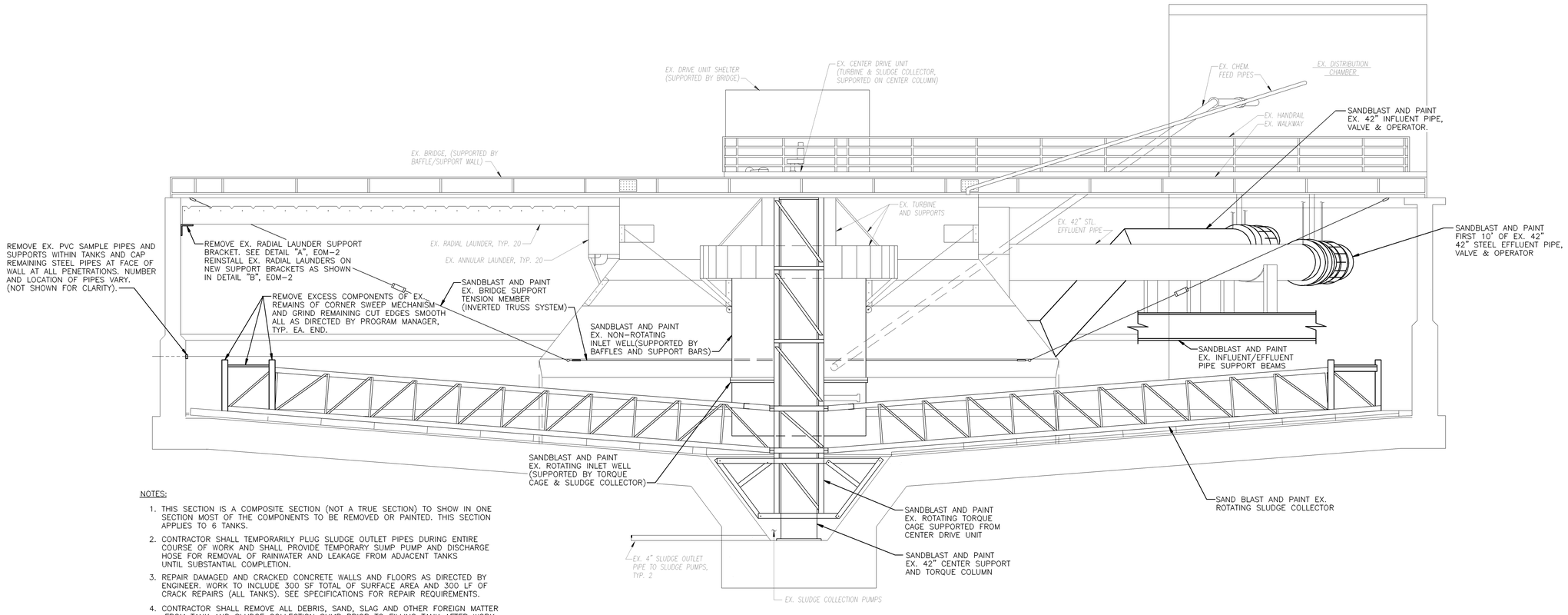

NOTES:

1. THIS SECTION IS A COMPOSITE SECTION (NOT A TRUE SECTION) TO SHOW IN ONE SECTION MOST OF THE COMPONENTS TO BE REMOVED OR PAINTED. THIS SECTION APPLIES TO 6 TANKS.
2. CONTRACTOR SHALL TEMPORARILY PLUG SLUDGE OUTLET PIPES DURING ENTIRE COURSE OF WORK AND SHALL PROVIDE TEMPORARY SUMP PUMP AND DISCHARGE HOSE FOR REMOVAL OF RAINWATER AND LEAKAGE FROM ADJACENT TANKS UNTIL SUBSTANTIAL COMPLETION.
3. REPAIR DAMAGED AND CRACKED CONCRETE WALLS AND FLOORS AS DIRECTED BY ENGINEER. WORK TO INCLUDE 300 SF TOTAL OF SURFACE AREA AND 300 LF OF CRACK REPAIRS (ALL TANKS). SEE SPECIFICATIONS FOR REPAIR REQUIREMENTS.
4. CONTRACTOR SHALL REMOVE ALL DEBRIS, SAND, SLAG AND OTHER FOREIGN MATTER FROM TANK AND SLUDGE COLLECTION SUMP PRIOR TO FILLING TANK AFTER WORK IS COMPLETED.

SECTION 1 / EOM-1
SCALE: 1 1/2"=1'-0"
SEE NOTE 1

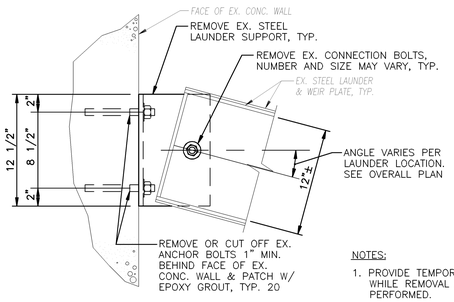

NOTES:

1. PROVIDE TEMPORARY SUPPORT FOR EX. LAUNDER WHILE REMOVAL AND INSTALLATION WORK IS BEING PERFORMED.

REMOVAL PLAN
DETAIL A / EOM-2
SCALE: 1 1/2"=1'-0"

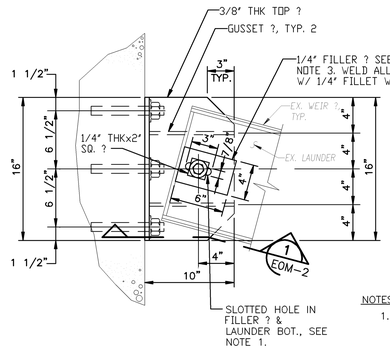

NOTES

1. EXISTING BOTTOM OF LAUNDER CONTAINS ONE OR MORE HOLES. BOTTOM TO BE REINFORCED W/ 1/4" FILLER PLATE WITH SHOP-CUT 7/8"Øx3" SLOTTED HOLE. HOT DIP GALV. FILLER PLATE. CUT SLOT OPENING IN EX. LAUNDER BOTTOM 1/8" LARGER THAN SLOT IN FILLER PLATE. CENTER SLOT OVER BOLT HOLE IN NEW SUPPORT.
2. CLEAN & COAT NEW SUPPORT & ALL SURFACES OF EX. LAUNDER AFFECTED BY THE WORK WITH HEAVY EPOXY COATING BEFORE & AFTER INSTALLING NEW SUPPORT & SETTING LAUNDER ON NEW SUPPORT.

NEW WORK PLAN
DETAIL B / EOM-2
SCALE: 1 1/2"=1'-0"

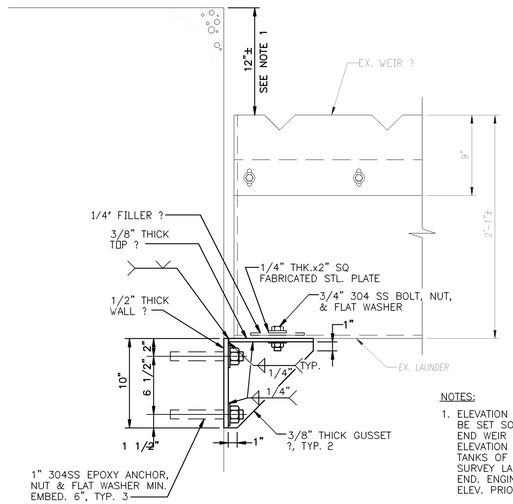

NOTES:

1. ELEVATION OF SUPPORT BRACKET TO BE SET SO THAT ELEVATION OF LAUNDER END WEIR TOP IS ±0.015 FT OF AVG. ELEVATION OF ALL LAUNDERS IN THE THREE TANKS OF EACH STAGE. CONTRACTOR TO SURVEY LAUNDER ELEVATIONS AT EACH END. ENGINEER TO APPROVE PROPOSED TOP ELEV. PRIOR TO INSTALLATION.
2. NEW SUPPORTS AND PLATES TO BE FABRICATED FROM STEEL & HOT DIP GALV. AFTER FAB.

SECTION 1 / EOM-2
SCALE: 1 1/2"=1'-0"

09/18/91 - 15:31

RECORD DRAWING

NO.	DATE	DRWN	CHK'D	DESCRIPTION
1	9/97	FXP	ASG	RECORD DRAWING

REVISIONS

DESIGNED BY: TDH
DRAWN BY: PLR/BRW
CHECKED BY/DATE: TDH 9/91
APPRV'D BY/DATE: TDH 9/91

COMMONWEALTH OF VIRGINIA
THOMAS D. HALL
No. 12502
PROFESSIONAL ENGINEER

CAMP DRESSER & McKEE

THIS DRAWING HAS BEEN REVISED BY HAZEN AND SAWYER, P.C. TO REFLECT MODIFICATIONS MADE DURING CONSTRUCTION

environmental engineers, scientists, planners, & management consultants

CDM

ARLINGTON COUNTY, VIRGINIA
WATER POLLUTION CONTROL PLANT
UPGRADE AND EXPANSION- PHASE IB

LIME REACTION TANKS
SECTIONS AND DETAILS

SCALE NOTE
SCALE BAR SHOWN BELOW IS ONE INCH LONG ON A FULL SIZE DRAWING. WHEN SCALING DRAWINGS, MEASURE BAR TO DETERMINE IF SCALES SHOWN WILL REQUIRE ADJUSTING.
ONE INCH

CONTRACT NO. 90-02-WPC
YEAR 1991
LOCATION CODE E1
SPECIALTY CODE R
PROJECT NO. 5002-33
FILE NAME EOM-02
DRAWING NO. EOM-2
SHEET NO. 289

TOP PLAN

1/16"=1'-0"

NOTES:

1. ALL WORK FOR SECOND STAGE TANKS SHOWN ON DRAWING EOM-2.

RECORD DRAWING

NO.	DATE	DRWN	CHK'D	DESCRIPTION
1	9/97	FXP	ASG	RECORD DRAWING

REVISIONS

DESIGNED BY: —
DRAWN BY: GGM,PLR
CHECKED BY/DATE: TDH 9/91
APPRV'D BY/DATE: TDH 9/91

COMMONWEALTH OF VIRGINIA
THOMAS D. HALL
No. 12502
PROFESSIONAL ENGINEER

CAMP DRESSER & McKEE

THIS DRAWING HAS BEEN REVISED BY HAZEN AND SAWYER, P.C. TO REFLECT MODIFICATIONS MADE DURING CONSTRUCTION

CDM
environmental engineers, scientists, planners, & management consultants

ARLINGTON COUNTY, VIRGINIA
WATER POLLUTION CONTROL PLANT
UPGRADE AND EXPANSION- PHASE IIIB

LIME REACTION TANKS
SECOND STAGE TANKS
TOP PLAN

SCALE NOTE

SCALE BAR SHOWN BELOW IS ONE INCH LONG ON A FULL SIZE DRAWING. WHEN SCALING DRAWINGS, MEASURE BAR TO DETERMINE IF SCALES SHOWN WILL REQUIRE ADJUSTING.

ONE INCH

CONTRACT NO. 90-02-WPC
YEAR 1991
LOCATION CODE E1
SPECIALTY CODE M
PROJECT NO. 5002-33
FILE NAME E1M-01.DWG
DRAWING NO. E1M-1
SHEET NO. 290

09/18/91 – 13:41

EX. PIPE FROM EX. LIME SOLIDS PROCESSING BUILDING

PREPARE & PAINT EX. POSTS & SUPPORTS, TYP.

EX. LIME SLUDGE THICKENER NO. 1

(ALL PREPARATION & PAINTING SHOWN FOR TANK NO. 1 SHALL BE TYP. FOR TANK NO. 2)

EX. LIME SLUDGE THICKENER NO. 2

1 / E2M-2

EX. V-NOTCH WEIR PLATE

EX. ROOF FAN

EX. ROOF

EX. LAMP & POST, TYP.

EX. DRIVE PLATFORMS

PREPARE & PAINT EX. LIFTING POST, TYP. 3

EX. SLUDGE COLLECTOR DRIVE UNITS, TYP. 2

SANDBLAST & PAINT EX. INFLUENT TROUGH BELOW

EX. LADDER

EX. CONTROL PNL., TYP.

EX. LIFT DRIVE UNIT, TYP. 3

PREPARE & PAINT EX. UPPER PLATFORM & SUPPORTS

PREPARE & PAINT EX. LOWER PLATFORM, SUPPORTS & RAILINGS

PREPARE & PAINT EX. BELT COVER & DRIVE SUPPORT, TYP.

PREPARE & PAINT EX. WALKWAY & GUARDRAIL

PREPARE & PAINT EX. INLET PIPES WITHIN LIMITS SHOWN ON DWG. NO. E2M-2

EX. ROOF VENT

EX. ROOF DRAIN

SANDBLAST & PAINT ALL EX. SLUDGE COLLECTION MECHANISMS, & SUPPORTS

PREPARE & PAINT EX. RAILING

PREPARE & PAINT VERT. EXPOSED PORTION OF EX. EFFLUENT PIPE

EX. EFFLUENT PIPE

NOTE:

1. SANDBLAST AND PAINT ALL RUSTED AND CORRODED AREAS FOUND ON EXISTING ACCESS WALKWAYS, STAIRWAYS AND RAILINGS AS DESIGNATED BY PROGRAM MANAGER. (UP TO 20 SF TOTAL).

2. SANDBLAST AND PAINT ALL PARTS OF CENTER COLUMN, TORQUE CAGE, INFLUENT BAFFLE, AND SLUDGE COLLECTOR. PREPARE AND PAINT ALL OTHER METAL COMPONENTS, INCLUDING DRIVE UNITS AND ELECTRICAL BOXES, CONTROLS, CONDUITS, AND LIGHT POSTS.

PLAN AT EL. 53.00

SCALE: 1/4"=1'-0"

09/17/91 - 08:04

RECORD DRAWING

NO.	DATE	DRWN	CHK'D	DESCRIPTION
1	9/97	FXP	ASG	RECORD DRAWING

REVISIONS

DESIGNED BY: TDH
DRAWN BY: CTC, GPB
CHECKED BY/DATE: TDH 9/91
APPRV'D BY/DATE: TDH 9/91

COMMONWEALTH OF VIRGINIA
THOMAS D. HALL
No. 12502
PROFESSIONAL ENGINEER

CAMP DRESSER & McKEE

THIS DRAWING HAS BEEN REVISED BY HAZEN AND SAWYER, P.C. TO REFLECT MODIFICATIONS MADE DURING CONSTRUCTION

environmental engineers, scientists, planners, & management consultants

CDM

ARLINGTON COUNTY, VIRGINIA
WATER POLLUTION CONTROL PLANT
UPGRADE AND EXPANSION- PHASE IIB

LIME SLUDGE THICKENERS
TOP PLAN

SCALE NOTE

SCALE BAR SHOWN BELOW IS ONE INCH LONG ON A FULL SIZE DRAWING. WHEN SCALING DRAWINGS, MEASURE BAR TO DETERMINE IF SCALES SHOWN WILL REQUIRE ADJUSTING.

ONE INCH

CONTRACT NO.	90-02-WPC
YEAR	1991
LOCATION CODE	E2
SPECIALTY CODE	M
PROJECT NO.	5002-33
FILE NAME	E2M-01.DWG
DRAWING NO.	E2M-1
SHEET NO.	291

SECTION 1 / E2M-1
SCALE: 1/4"=1'-0"

09/17/91 - 07:59

RECORD DRAWING

NO.	DATE	DRWN	CHK'D	DESCRIPTION
1	9/97	FXP	ASG	RECORD DRAWING

REVISIONS

DESIGNED BY: —
DRAWN BY: CTC, GPB
CHECKED BY/DATE: TDH 9/91
APPRV'D BY/DATE: TDH 9/91

COMMONWEALTH OF VIRGINIA
THOMAS D. HALL
No. 12502
PROFESSIONAL ENGINEER

CAMP DRESSER & McKEE
environmental engineers, scientists, planners, & management consultants

THIS DRAWING HAS BEEN REVISED BY HAZEN AND SAWYER, P.C. TO REFLECT MODIFICATIONS MADE DURING CONSTRUCTION

CDM

ARLINGTON COUNTY, VIRGINIA
WATER POLLUTION CONTROL PLANT
UPGRADE AND EXPANSION- PHASE IIB

LIME SLUDGE THICKENERS
SECTION

SCALE NOTE

SCALE BAR SHOWN BELOW IS ONE INCH LONG ON A FULL SIZE DRAWING. WHEN SCALING DRAWINGS, MEASURE BAR TO DETERMINE IF SCALES SHOWN WILL REQUIRE ADJUSTING.

ONE INCH

CONTRACT NO.	90-02-WPC
YEAR	1991
LOCATION CODE	E2
SPECIALTY CODE	M
PROJECT NO.	5002-33
FILE NAME	E2M-02.DWG
DRAWING NO.	E2M-2
SHEET NO.	292

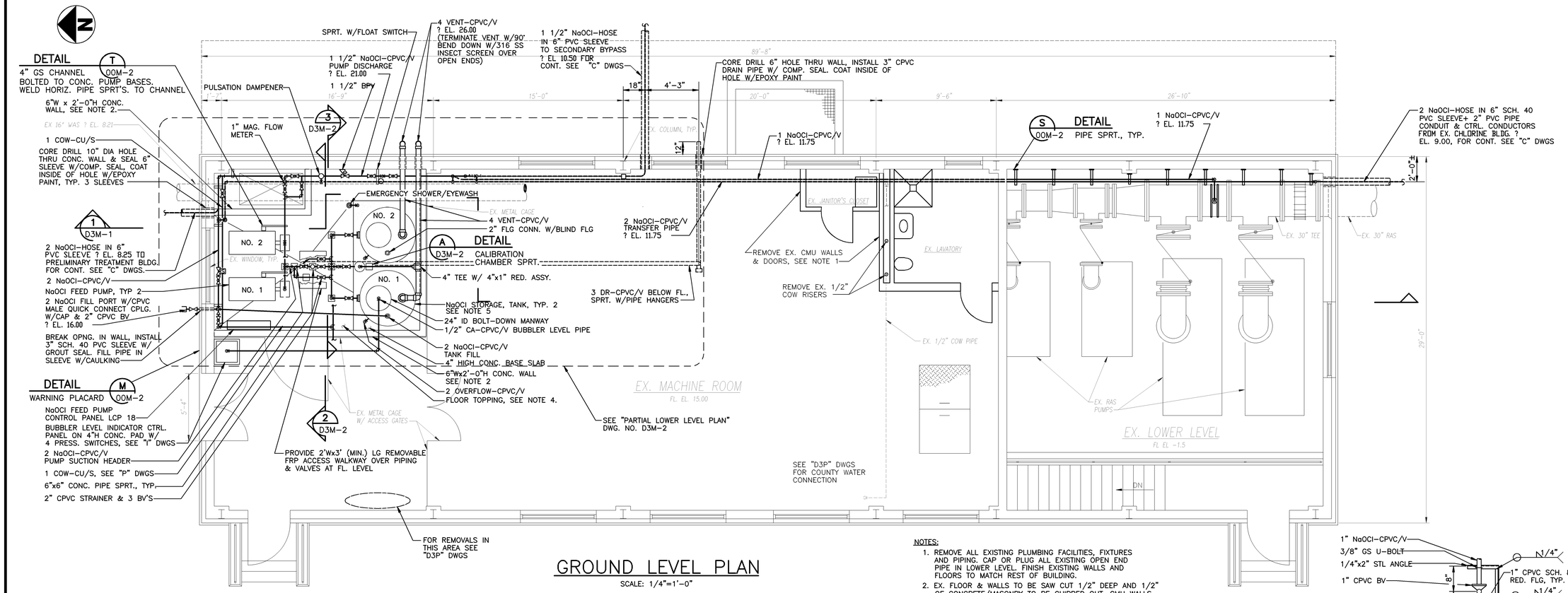

GROUND LEVEL PLAN

SCALE: 1/4"=1'-0"

NOTES:

1. REMOVE ALL EXISTING PLUMBING FACILITIES, FIXTURES AND PIPING. CAP OR PLUG ALL EXISTING OPEN END PIPE IN LOWER LEVEL. FINISH EXISTING WALLS AND FLOORS TO MATCH REST OF BUILDING.
2. EX. FLOOR & WALLS TO BE SAW CUT 1/2" DEEP AND 1/2" OF CONCRETE/MASONRY TO BE CHIPPED OUT. CMU WALLS TO BE SCABBLED ONLY. REINFORCE WALL WITH #4 BARS @ 12" O.C. EW IN THE CENTER OF WALL. VERTICAL BARS TO BE EPOXY ANCHORED TO FLOOR 6" DEEP. CONTAINMENT AREA FORMED BY WALLS TO BE LIQUID TIGHT TO 18" DEPTH OF HYPOCHLORITE. COAT INSIDE WALLS OF CONTAINMENT AREA WITH HYPOCHLORITE RESISTANT EPOXY PAINT.
3. FOR SCHEMATIC OF HYPOCHLORITE SYSTEM, SEE DWG. B8M-12.
4. INSTALL EPOXY GROUT FLOOR TOPPING TO AREA WITHIN CONTAINMENT WALLS EXCEPT CONCRETE PADS. FLOOR TOPPING TO BE 1/2" THICK AT FLOOR DRAIN AND 1 1/2" THICK AT WALLS. SCABBLE FLOOR & ACID ETCH PRIOR TO APPLICATION.
5. ALL PIPING CONNECTIONS TO STORAGE TANKS SHALL BE 150LB FLANGE TYPE.

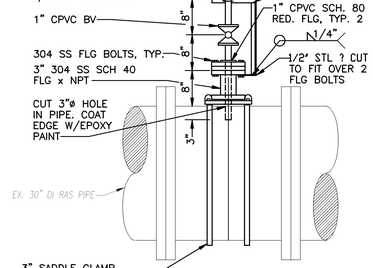

NaOCl PIPE CONNECTION

DETAIL A D3M-1

SCALE: NONE

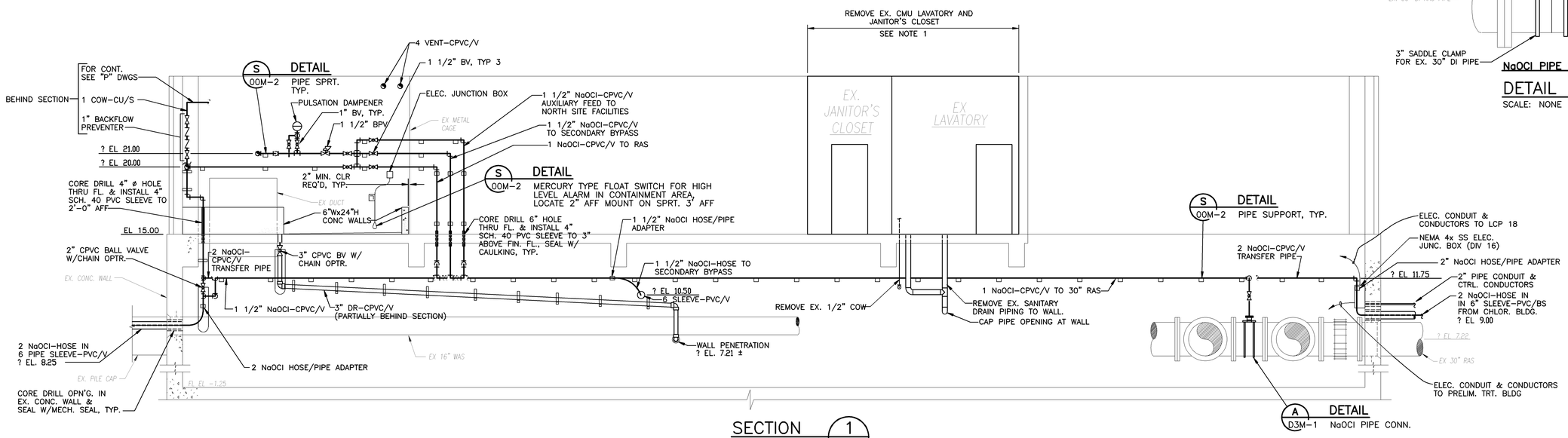

SECTION 1 D3M-1

SCALE: 1/4"=1'-0"

09/18/91 - 11:23

RECORD DRAWING

NO.	DATE	DRWN	CHK'D	DESCRIPTION
1	9/97	FXP	ASG	RECORD DRAWING

REVISIONS

DESIGNED BY: TBM
DRAWN BY: CTC/EGT
CHECKED BY/DATE: TDH 9/91
APPRV'D BY/DATE: TDH 9/91

COMMONWEALTH OF VIRGINIA THOMAS D. HALL No. 12502 PROFESSIONAL ENGINEER

CAMP DRESSER & McKEE

THIS DRAWING HAS BEEN REVISED BY HAZEN AND SAWYER, P.C. TO REFLECT MODIFICATIONS MADE DURING CONSTRUCTION

environmental engineers, scientists, planners, & management consultants

CDM

ARLINGTON COUNTY, VIRGINIA
WATER POLLUTION CONTROL PLANT
UPGRADE AND EXPANSION- PHASE IIB

SECONDARY SERVICE PUMP STATION PLAN AND SECTIONS

SCALE NOTE

SCALE BAR SHOWN BELOW IS ONE INCH LONG ON A FULL SIZE DRAWING. WHEN SCALING DRAWINGS, MEASURE BAR TO DETERMINE IF SCALES SHOWN WILL REQUIRE ADJUSTING.

ONE INCH

CONTRACT NO. 90-02-WPC
YEAR 1991
LOCATION CODE D3
SPECIALTY CODE M
PROJECT NO. 5002-33
FILE NAME D3M-01.DWG
DRAWING NO. D3M-1
SHEET NO. 293

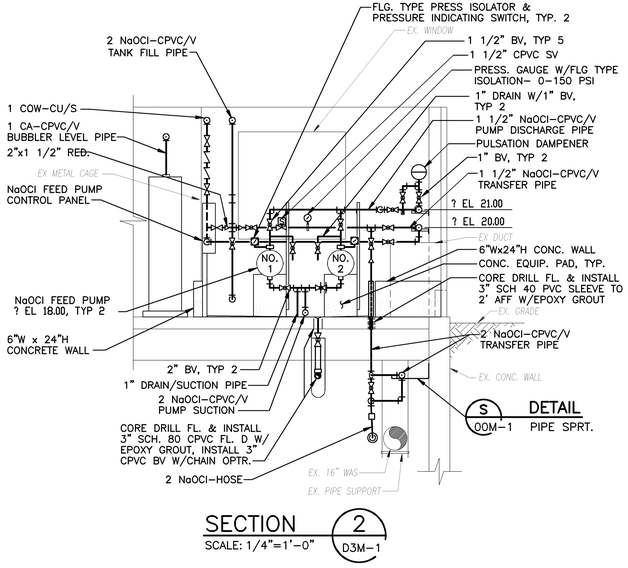

SECTION 2
SCALE: 1/4"=1'–0"
D3M–1

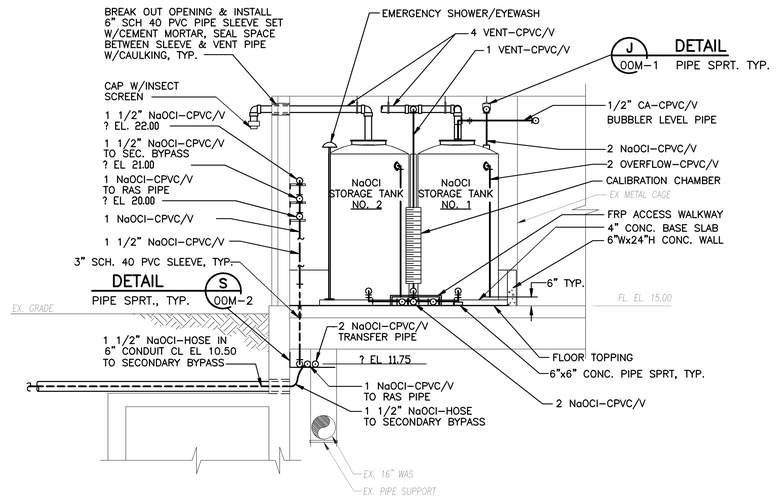

SECTION 3
SCALE: 1/4"=1'–0"
D3M–1

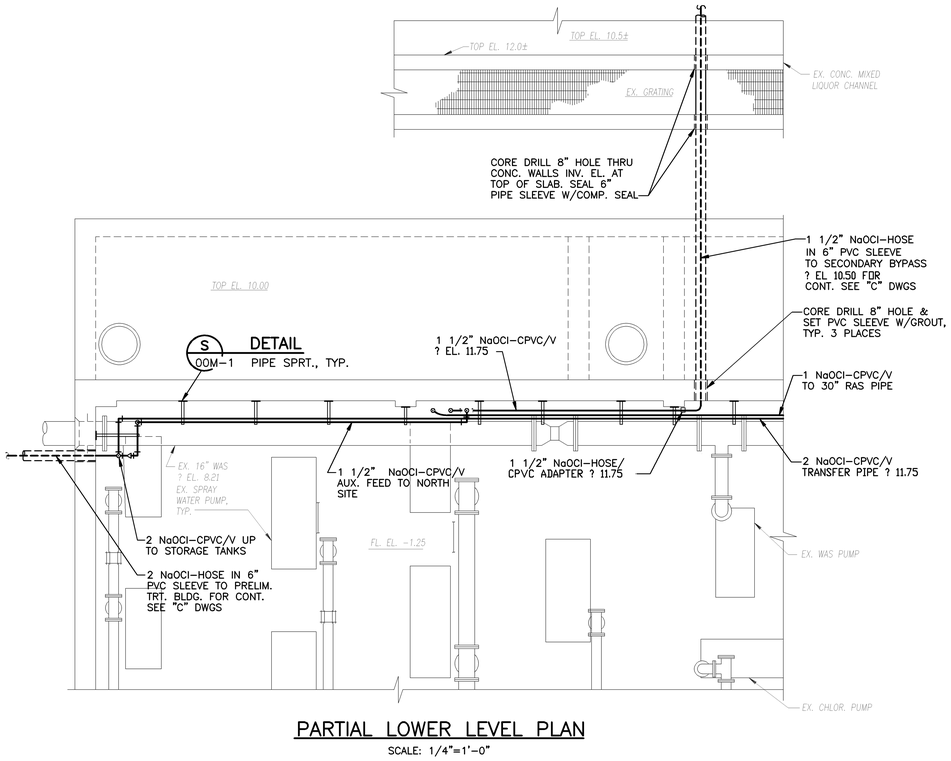

PARTIAL LOWER LEVEL PLAN
SCALE: 1/4"=1'–0"

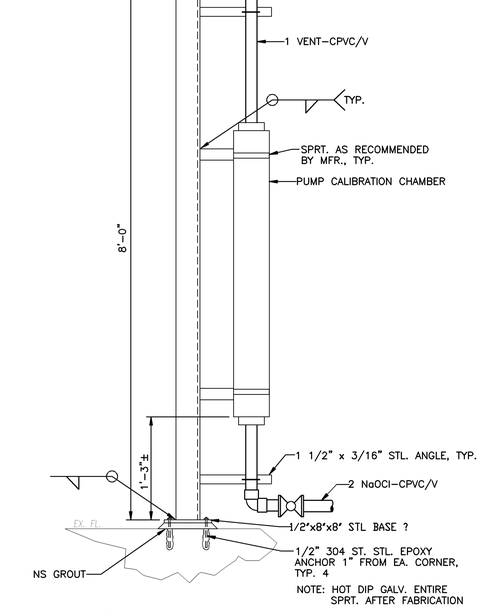

CALIBRATION CHAMBER SUPPORT

DETAIL
SCALE: NONE
A
D3M–1

09/18/91 – 11:18

NO.	DATE	DRWN	CHK'D	DESCRIPTION
1	9/97	FXP	ASG	RECORD DRAWING

REVISIONS

DESIGNED BY: TBM
DRAWN BY: EGT/CTC
CHECKED BY/DATE: TDH 9/91
APPRV'D BY/DATE: TDH 9/91

COMMONWEALTH OF VIRGINIA
THOMAS D. HALL
No. 12502
PROFESSIONAL ENGINEER

CAMP DRESSER & McKEE

RED DRAWING HAS BEEN REVISED BY HAZEN AND SAWYER, P.C. TO REFLECT MODIFICATIONS MADE DURING CONSTRUCTION

CDM
environmental engineers, scientists, planners, & management consultants

ARLINGTON COUNTY, VIRGINIA
WATER POLLUTION CONTROL PLANT
UPGRADE AND EXPANSION– PHASE IIB

SECONDARY SERVICE PUMP STATION
SECTIONS AND DETAILS

SCALE NOTE
SCALE BAR SHOWN BELOW IS ONE INCH LONG ON A FULL SIZE DRAWING. WHEN SCALING DRAWINGS, MEASURE BAR TO DETERMINE IF SCALES SHOWN WILL REQUIRE ADJUSTING.
ONE INCH

CONTRACT NO. 90–02–WPC
YEAR 1991
LOCATION CODE D3
SPECIALTY CODE M
PROJECT NO. 5002–33
FILE NAME D3M–02.DWG
DRAWING NO. D3M–2
SHEET NO. 294

RECORD DRAWING

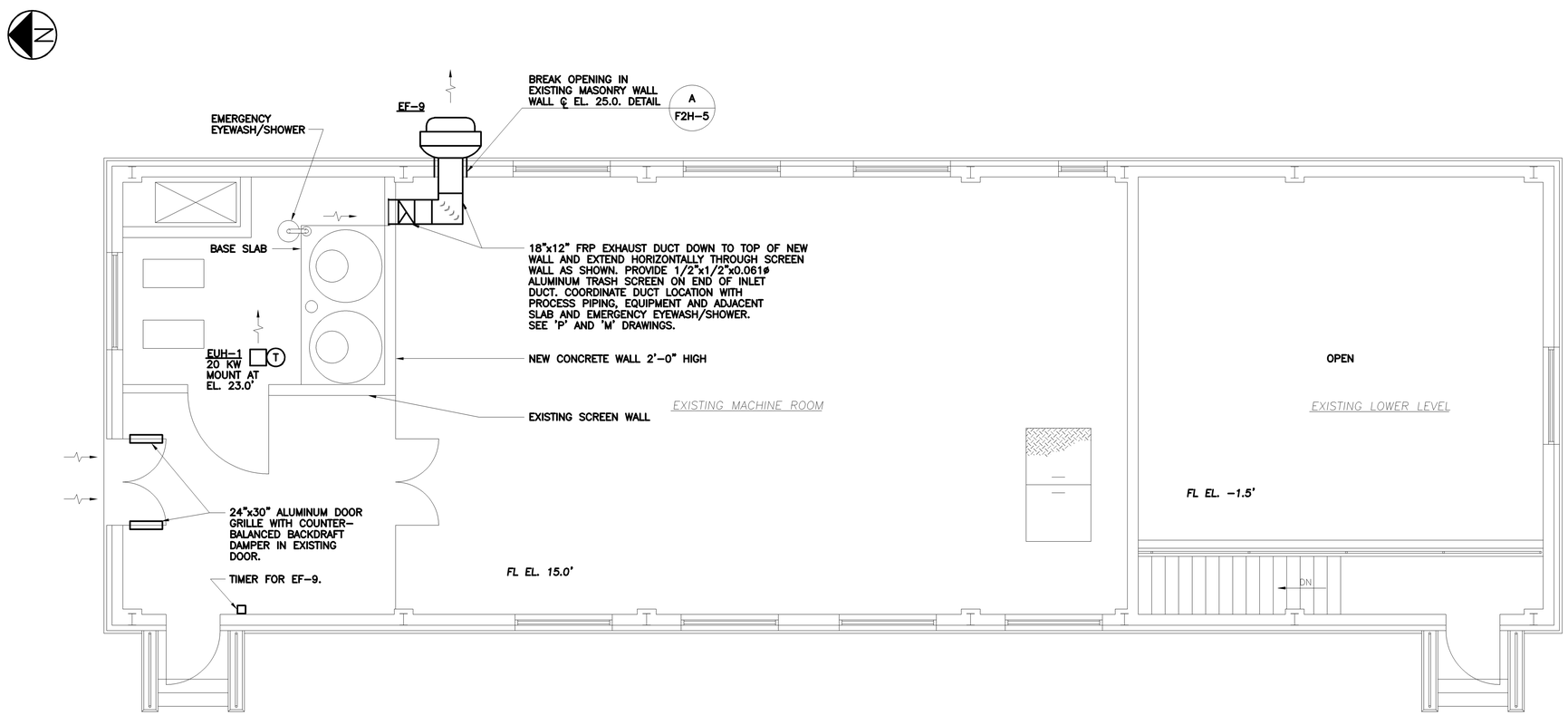

PLAN
SCALE: 1/4"=1'-0"

NO.	DATE	DRWN	CHK'D	DESCRIPTION
1	9/97	FXP	ASG	RECORD DRAWING

REVISIONS

DESIGNED BY: WRH
DRAWN BY: RMM,SFP
CHECKED BY/DATE: WRH/9-91
APPRV'D BY/DATE: WRH/9-91

CAMP DRESSER & McKEE

THIS DRAWING HAS BEEN REVISED BY HAZEN AND SAWYER, P.C. TO REFLECT MODIFICATIONS MADE DURING CONSTRUCTION

environmental engineers, scientists, planners, & management consultants CDM

ARLINGTON COUNTY, VIRGINIA
WATER POLLUTION CONTROL PLANT
UPGRADE AND EXPANSION- PHASE IIB

SECONDARY SERVICE PUMP STATION
HVAC
PLAN

SCALE NOTE

SCALE BAR SHOWN BELOW IS ONE INCH LONG ON A FULL SIZE DRAWING. WHEN SCALING DRAWINGS, MEASURE BAR TO DETERMINE IF SCALES SHOWN WILL REQUIRE ADJUSTING.

ONE INCH

RECORD DRAWING

CONTRACT NO. 90-02-WPC
YEAR 1991
LOCATION CODE D3
SPECIALTY CODE H
PROJECT NO. 5002-33
FILE NAME D3H1.DWG
DRAWING NO. D3H-1
SHEET NO. 295

C.E. BAILEY & ASSOCIATES, INC.
CONSULTING ENGINEERS
ORLANDO, CLEARWATER & FORT LAUDERDALE, FLORIDA

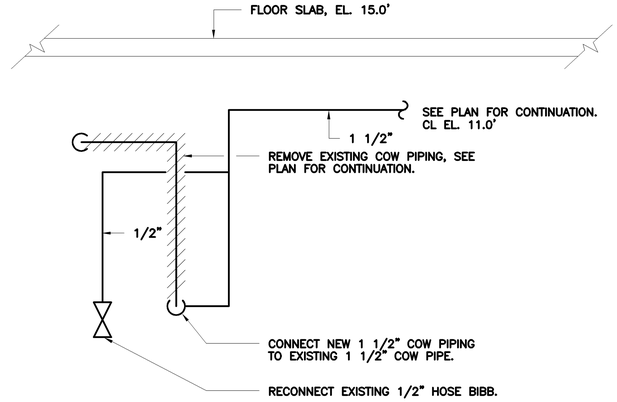

NEW COW PIPING CONNECTION DETAIL (A / D3P–1)

NTS

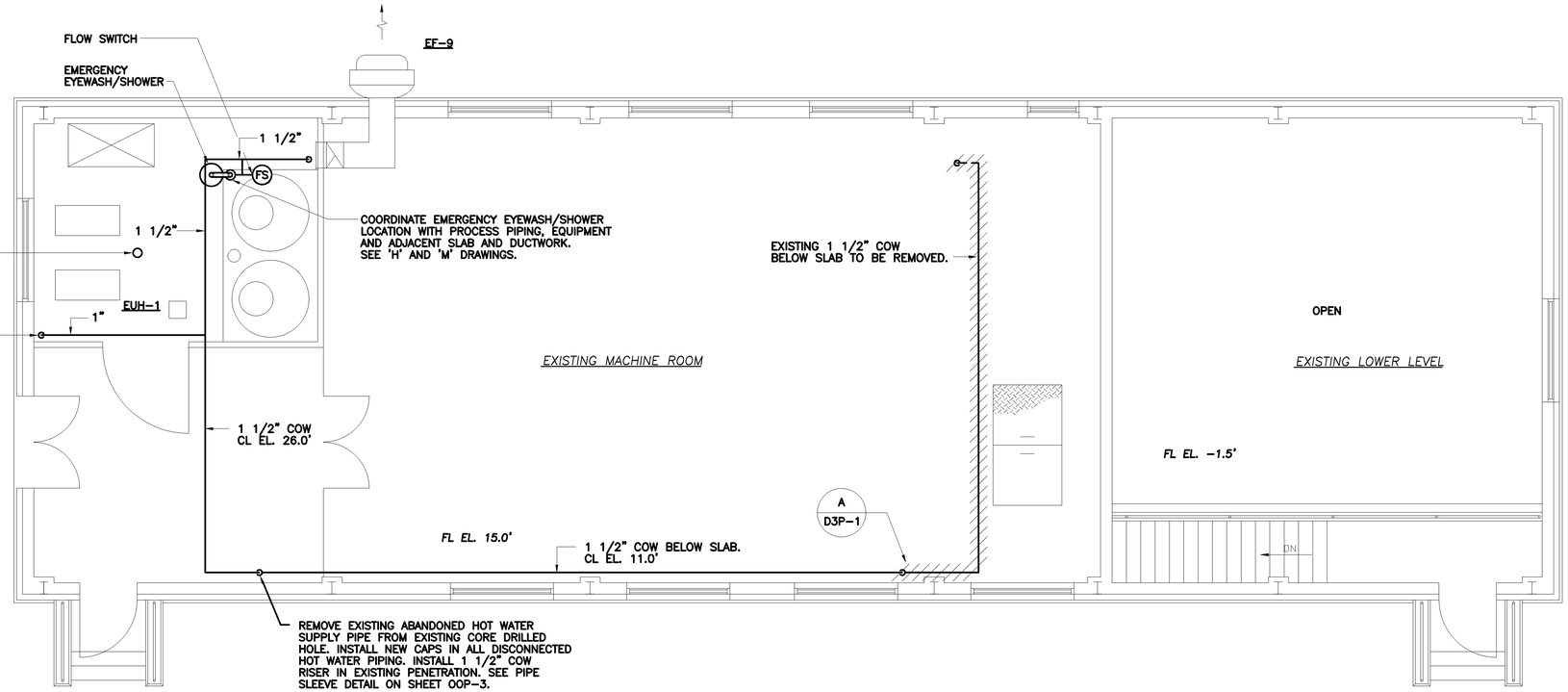

PLAN

SCALE: 1/4"=1'–0"

RECORD DRAWING

NO.	DATE	DRWN	CHK'D	DESCRIPTION
1	9/97	FXP	ASG	RECORD DRAWING

REVISIONS

DESIGNED BY: WRH
DRAWN BY: RMM,SFP
CHECKED BY/DATE: WRH/9–91
APPRV'D BY/DATE: WRH/9–91

CAMP DRESSER & McKEE

THIS DRAWING HAS BEEN REVISED BY HAZEN AND SAWYER, P.C. TO REFLECT MODIFICATIONS MADE DURING CONSTRUCTION

environmental engineers, scientists, planners, & management consultants CDM

ARLINGTON COUNTY, VIRGINIA
WATER POLLUTION CONTROL PLANT
UPGRADE AND EXPANSION- PHASE IIB

SECONDARY SERVICE PUMP STATION
PLUMBING
PLAN

SCALE NOTE

SCALE BAR SHOWN BELOW IS ONE INCH LONG ON A FULL SIZE DRAWING. WHEN SCALING DRAWINGS, MEASURE BAR TO DETERMINE IF SCALES SHOWN WILL REQUIRE ADJUSTING.

ONE INCH

CONTRACT NO. 90–02–WPC
YEAR 1991
LOCATION CODE D3
SPECIALTY CODE P
PROJECT NO. 5002–33
FILE NAME D3P1.DWG
DRAWING NO. D3P–1
SHEET NO. 296

C.E. BAILEY & ASSOCIATES, INC.
CONSULTING ENGINEERS
ORLANDO, CLEARWATER & FORT LAUDERDALE, FLORIDA

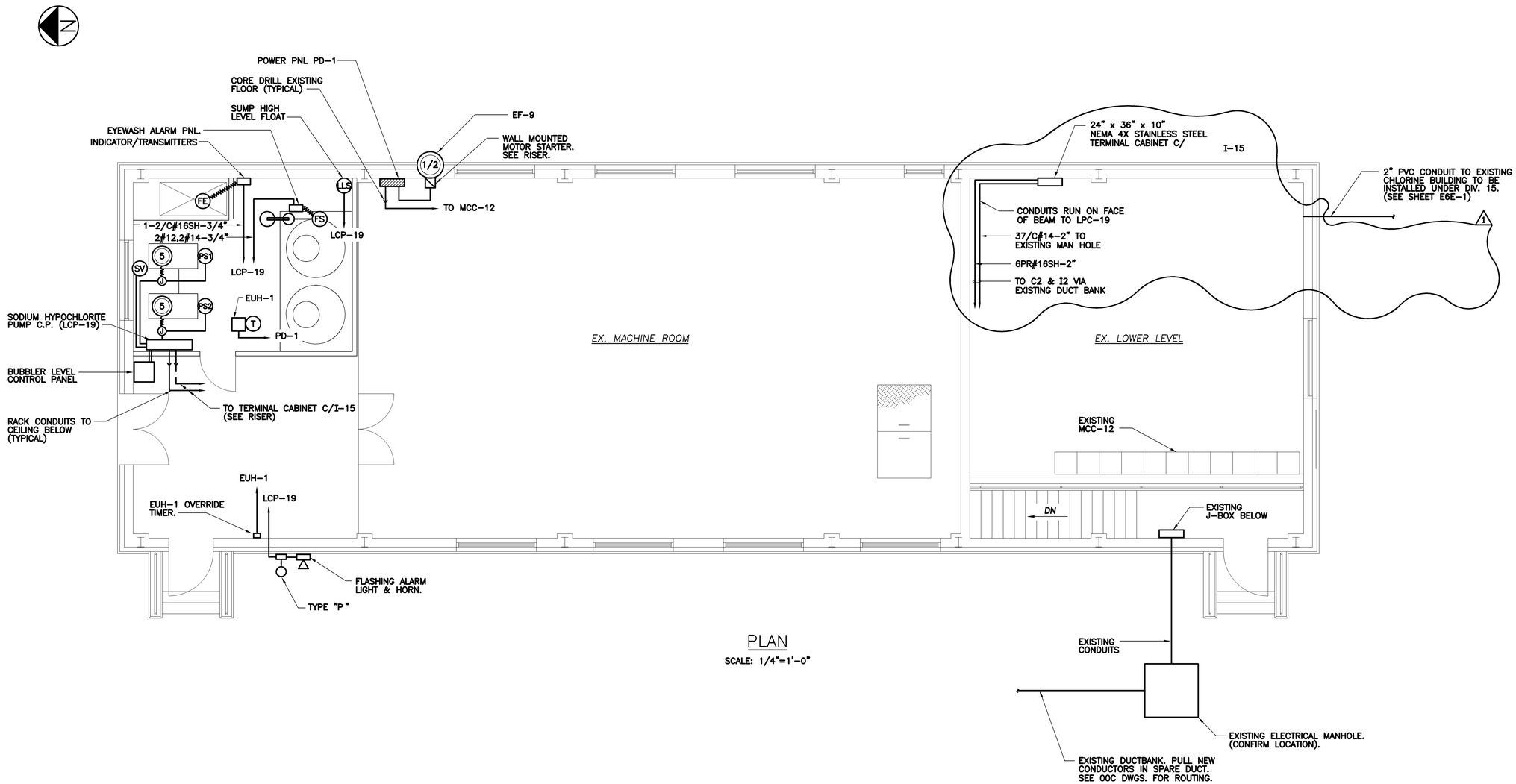

PLAN

SCALE: 1/4"=1'-0"

RECORD DRAWING

NO.	DATE	DRWN	CHK'D	DESCRIPTION
1	9/97	FXP	ASG	RECORD DRAWING

REVISIONS

DESIGNED BY: SEB
DRAWN BY: TRH
CHECKED BY/DATE: CEB/9-91
APPRV'D BY/DATE: CEB/9-91

CAMP DRESSER & McKEE

THIS DRAWING HAS BEEN REVISED BY HAZEN AND SAWYER, P.C. TO REFLECT MODIFICATIONS MADE DURING CONSTRUCTION

environmental engineers, consultants, planners, & program managers CDM

ARLINGTON COUNTY, VIRGINIA
WATER POLLUTION CONTROL PLANT
UPGRADE AND EXPANSION- PHASE B

SECONDARY SERVICE PUMP STATION
ELECTRICAL
PLAN

SCALE NOTE

SCALE BAR SHOWN BELOW IS ONE INCH LONG ON A FULL SIZE DRAWING. WHEN SCALING DRAWINGS, MEASURE BAR TO DETERMINE IF SCALES SHOWN WILL REQUIRE ADJUSTING.

ONE INCH

CONTRACT NO. 90-02-WPC
YEAR 1991
LOCATION CODE D3
SPECIALTY CODE E
PROJECT NO. 5002-33
FILE NAME D3E-01.DWG
DRAWING NO. D3E-1
SHEET NO. 297

C.E. BAILEY & ASSOCIATES, INC.
CONSULTING ENGINEERS
ORLANDO, CLEARWATER & FORT LAUDERDALE, FLORIDA

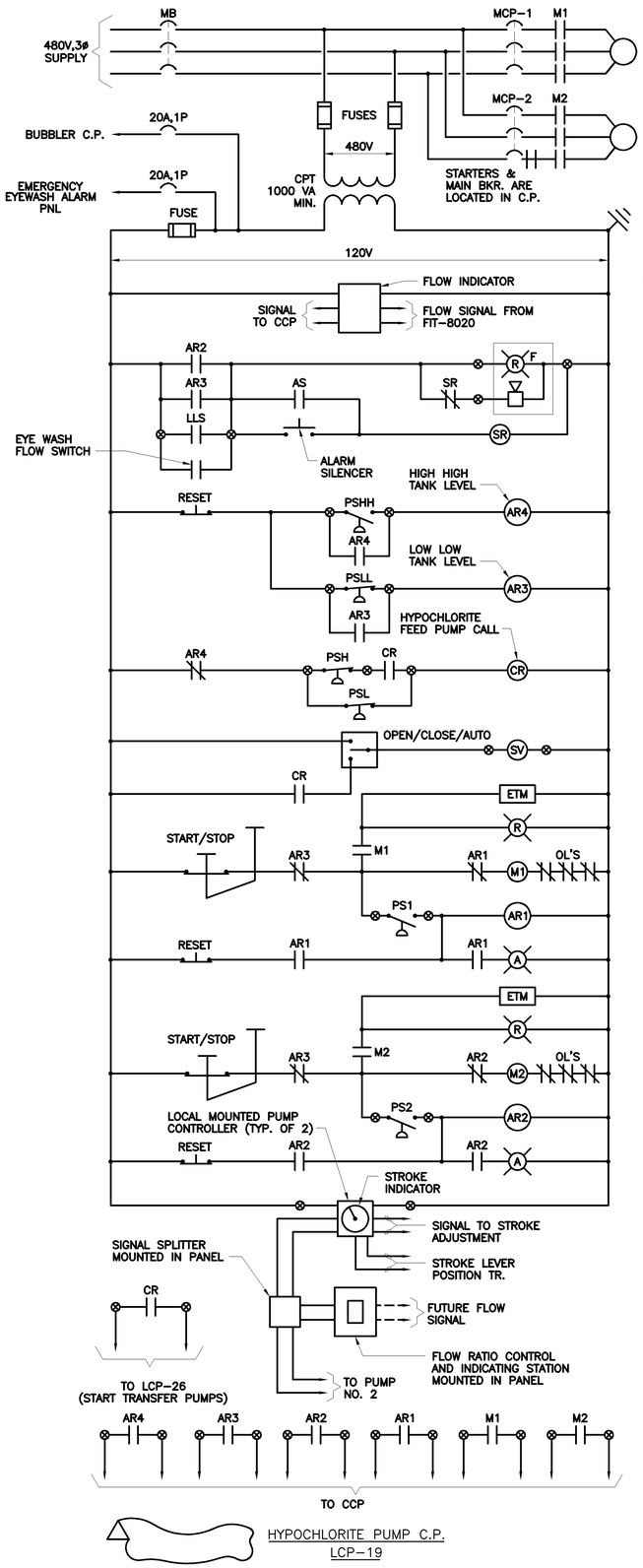

HYPOCHLORITE PUMP C.P.
LCP-19

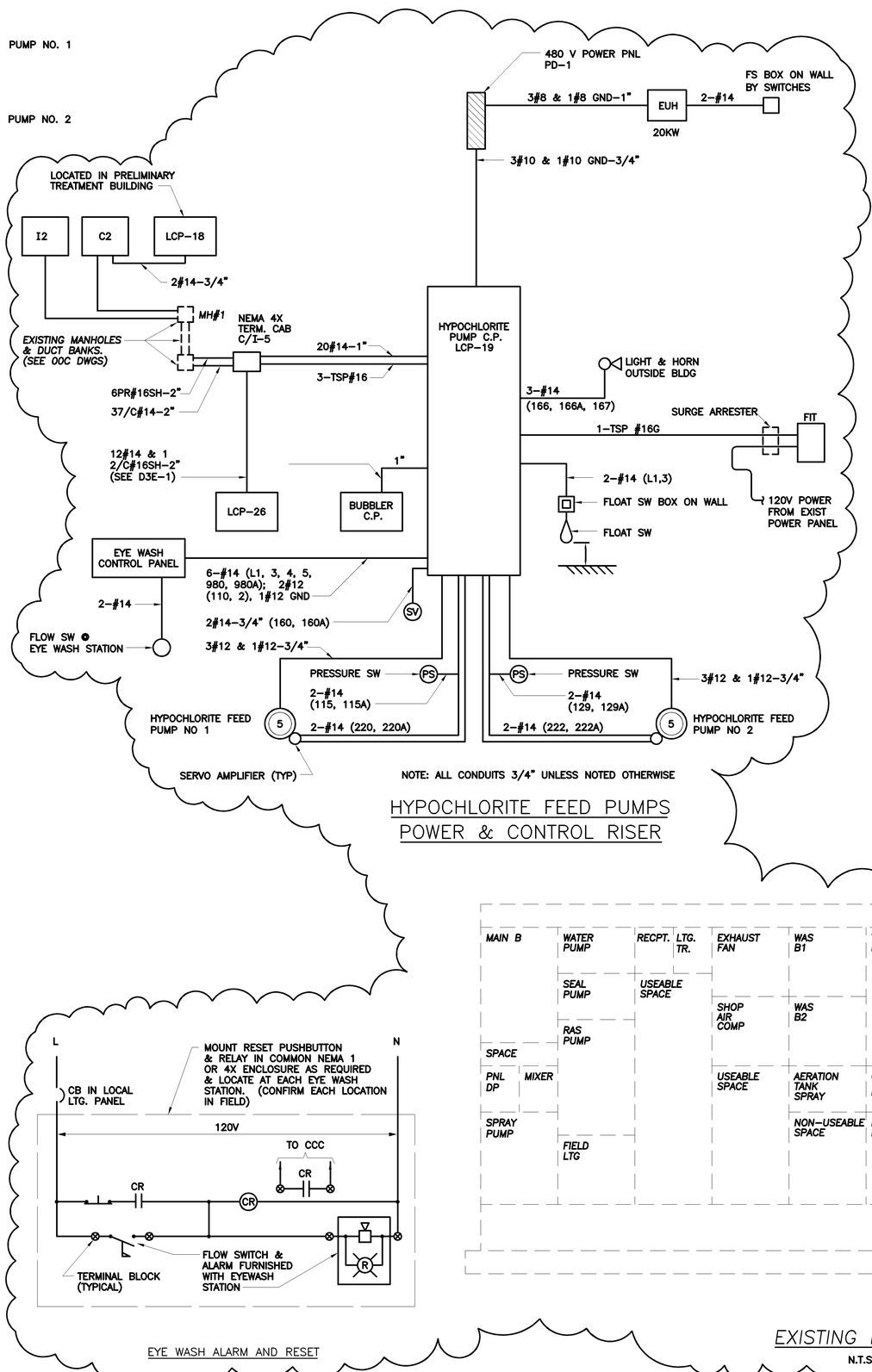

HYPOCHLORITE FEED PUMPS
POWER & CONTROL RISER

PANEL: PD-1		BUS: 100A W/70MB	VOLTAGE: 480V,3ø,3W	
MOUNTING: SURFACE		POLES: 18		
LOCATION: SEC SLUDGE EFF PUMP STATION-NEMA 12 ENCLOSURE				
CIR. NO.	DESCRIPTION	TRIP	POLES	REMARKS
1,3,5	EUH-1	40	3	
2,4,6	HYPOCHLORITE C.P.	30	3	
7,9,11	SPARE	15	3	
8,10,12	EXHAUST FAN EF-1	15	3	
13,15,17	SPARE	15	3	
14,16,18	SPARE	15	3	

EYE WASH ALARM AND RESET

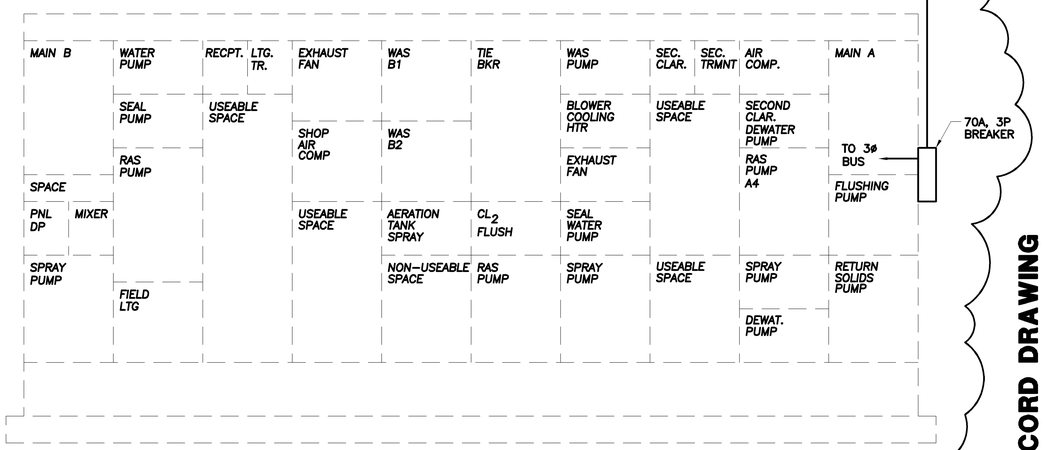

EXISTING MCC-12
N.T.S.

RECORD DRAWING

NO.	DATE	DRWN	CHK'D	DESCRIPTION
1	12/98	FXP	ASC	RECORD DRAWING

REVISIONS

DESIGNED BY: SEB
DRAWN BY: TRH
CHECKED BY/DATE: CEB/9-91
APPR'D BY/DATE: CEB/9-91

CAMP DRESSER & McKEE
HAZEN AND SAWYER, P.C.
CDM
environmental engineers, scientists, planners, & management consultants

ARLINGTON COUNTY, VIRGINIA
WATER POLLUTION CONTROL PLANT
UPGRADE AND EXPANSION- PHASE IIB

SECONDARY SERVICE PUMP STATION
ELECTRICAL
ELEMENTARY CONTROL DIAGRAMS & RISER DIAGRAMS

SCALE NOTE
SCALE BAR SHOWN BELOW IS ONE INCH LONG ON A FULL SIZE DRAWING. WHEN SCALING DRAWINGS, MEASURE BAR TO DETERMINE IF SCALES SHOWN WILL REQUIRE ADJUSTING.
ONE INCH

CONTRACT NO. 90-02-WPC
YEAR 1991
LOCATION CODE D3
SPECIALTY CODE E
PROJECT NO. 5002-33
FILE NAME D3E-02.DWG
DRAWING NO. D3E-2
SHEET NO. 298

C.E. BAILEY & ASSOCIATES, INC.
CONSULTING ENGINEERS
ORLANDO, CLEARWATER & FORT LAUDERDALE, FLORIDA

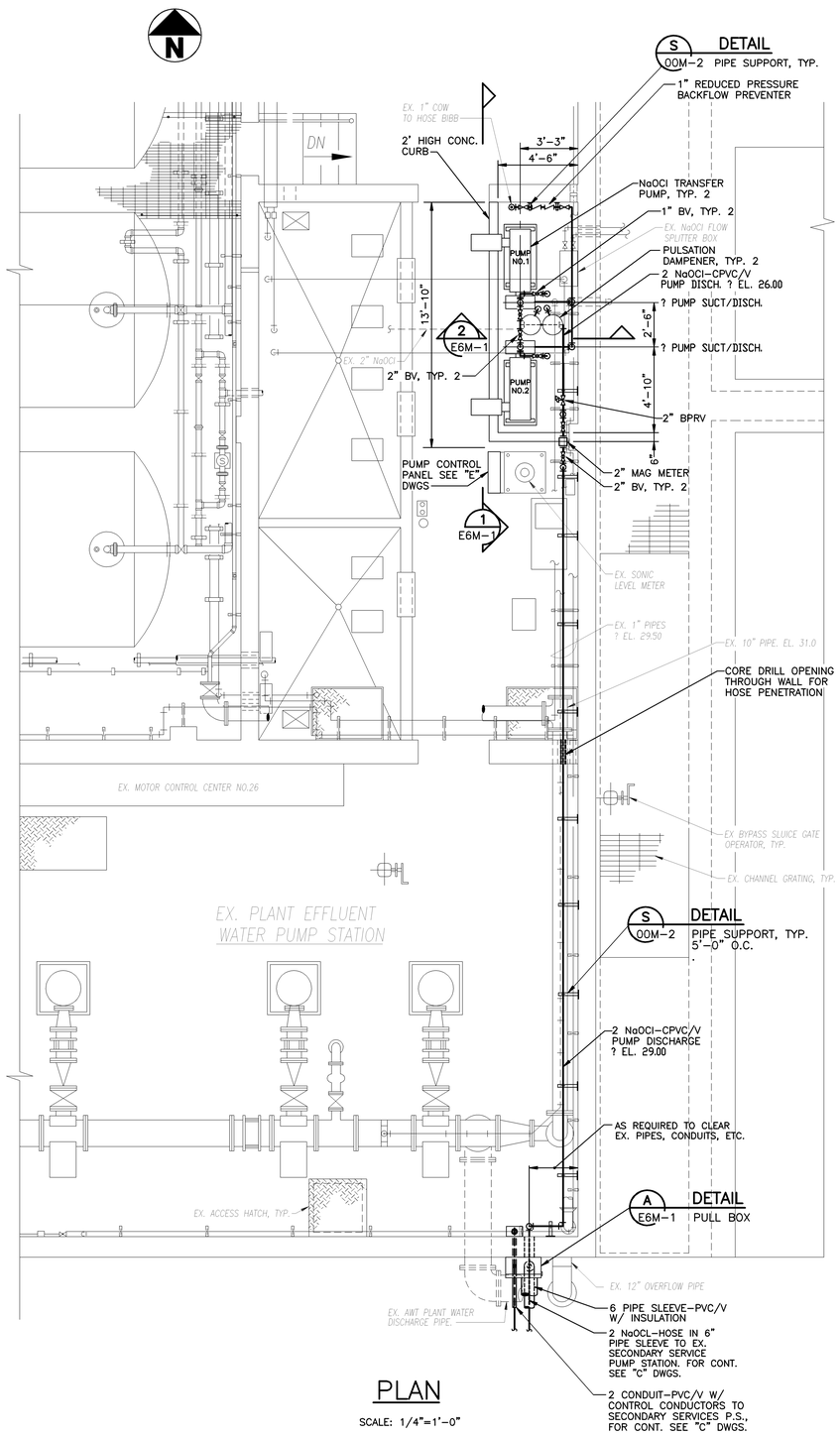

PLAN

SCALE: 1/4"=1'-0"

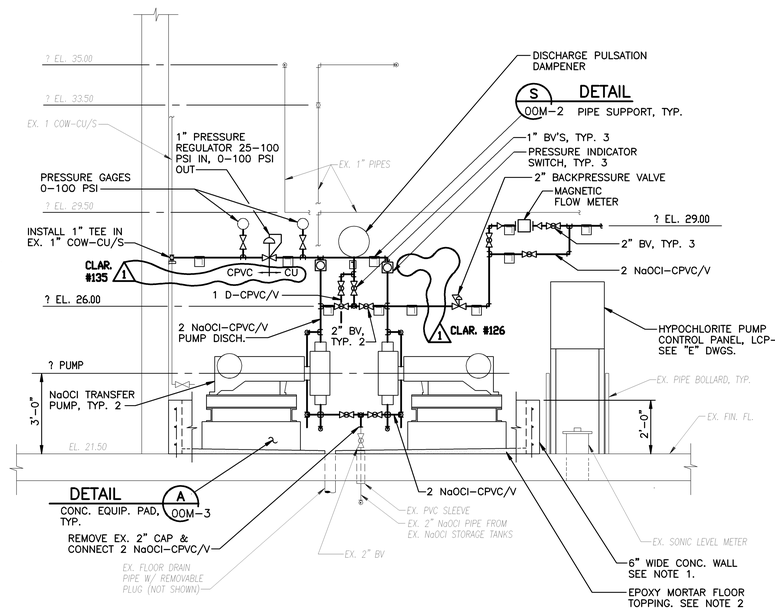

SECTION 1

SCALE: 3/8"=1'-0" — E6M-1

NOTES:

1. SAW CUT EXISTING FLOOR AND WALLS AND BREAK OUT ?" OF EXISTING CONCRETE AT NEW WALL. DRILL AND SET #4 BAR DOWELS 6" DEEP @ 12" OC IN EXISTING FLOOR AND WALLS AT CENTER OF NEW WALL. REINFORCE NEW WALL HORIZONTALLY W/ 3 #4 BARS @ 10" OC.
2. INSTALL NEW FLOOR TOPPING AND SLOPE TO EXISTING FLOOR DRAIN PIPE. TOPPING TO BE 2" THICK AT WALLS AND 1" THICK AT DRAIN PIPE. SEE SPEC. SECTION 03740.
3. ALL PIPING AND VALVING SHOWN FOR ANY ONE NaOCl TRANSFER PUMP SHALL BE TYPICAL FOR THE OTHER PUMP.

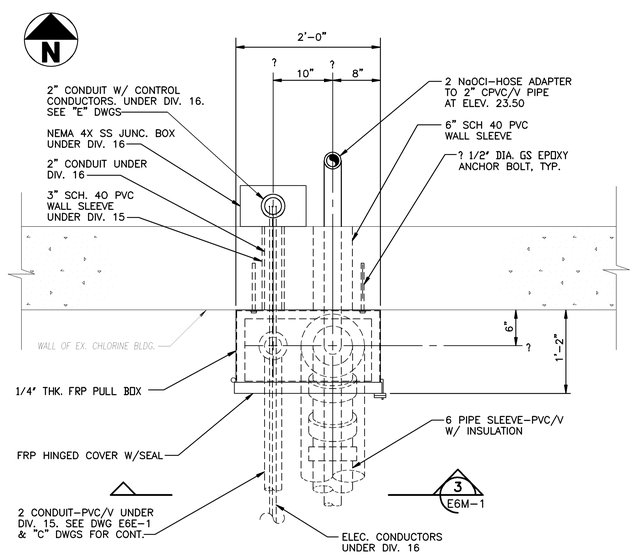

HYPOCHLORITE HOSE PULL BOX

DETAIL A — SCALE: 1"=1'-0" — E6M-1

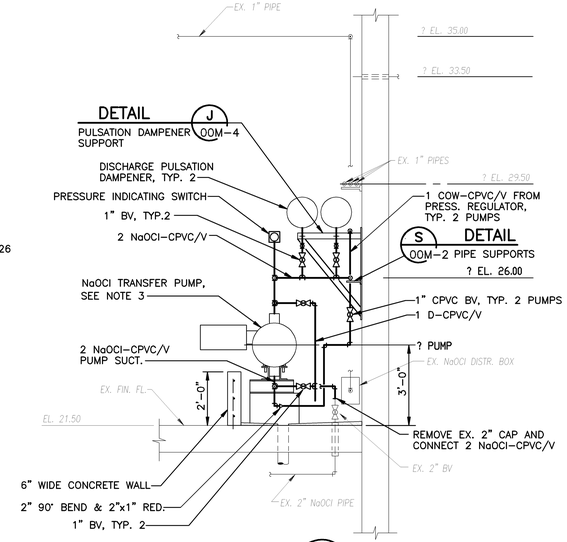

SECTION 2

SCALE: 3/8"=1'-0" — E6M-1

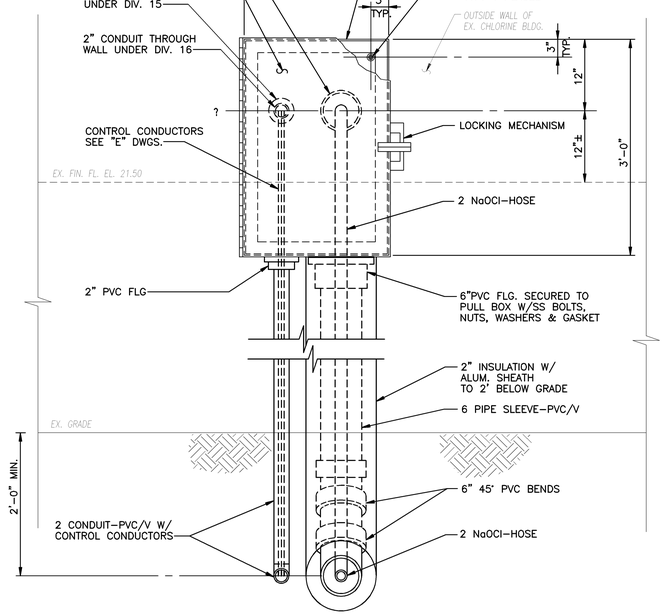

SECTION 3

SCALE: 1"=1'-0" — E6M-1

09/17/91 - 07:52

NO.	DATE	DRWN	CHK'D	DESCRIPTION
1	9/97	FKP	ASG	RECORD DRAWING

REVISIONS

DESIGNED BY: TBM
DRAWN BY: PLR/CTC
CHECKED BY/DATE: TDH 9/91
APPRV'D BY/DATE: TDH 9/91

COMMONWEALTH OF VIRGINIA — THOMAS D. HALL — No. 12502 — PROFESSIONAL ENGINEER

CAMP DRESSER & McKEE

PER DRAWING HAS BEEN REVISED BY HAZEN AND SAWYER, P.C. TO REFLECT MODIFICATIONS MADE DURING CONSTRUCTION

CDM — environmental engineers, scientists, planners, & management consultants

ARLINGTON COUNTY, VIRGINIA
WATER POLLUTION CONTROL PLANT
UPGRADE AND EXPANSION- PHASE IIB

CHLORINATION BUILDING
PLAN AND SECTIONS

SCALE NOTE

SCALE BAR SHOWN BELOW IS ONE INCH LONG ON A FULL SIZE DRAWING. WHEN SCALING DRAWINGS, MEASURE BAR TO DETERMINE IF SCALES SHOWN WILL REQUIRE ADJUSTING.

ONE INCH

CONTRACT NO.	90-02-WPC
YEAR	1991
LOCATION CODE	E6
SPECIALTY CODE	M
PROJECT NO.	5002-33
FILE NAME	E6M-01.DWG
DRAWING NO.	E6M-1
SHEET NO.	299

RECORD DRAWING

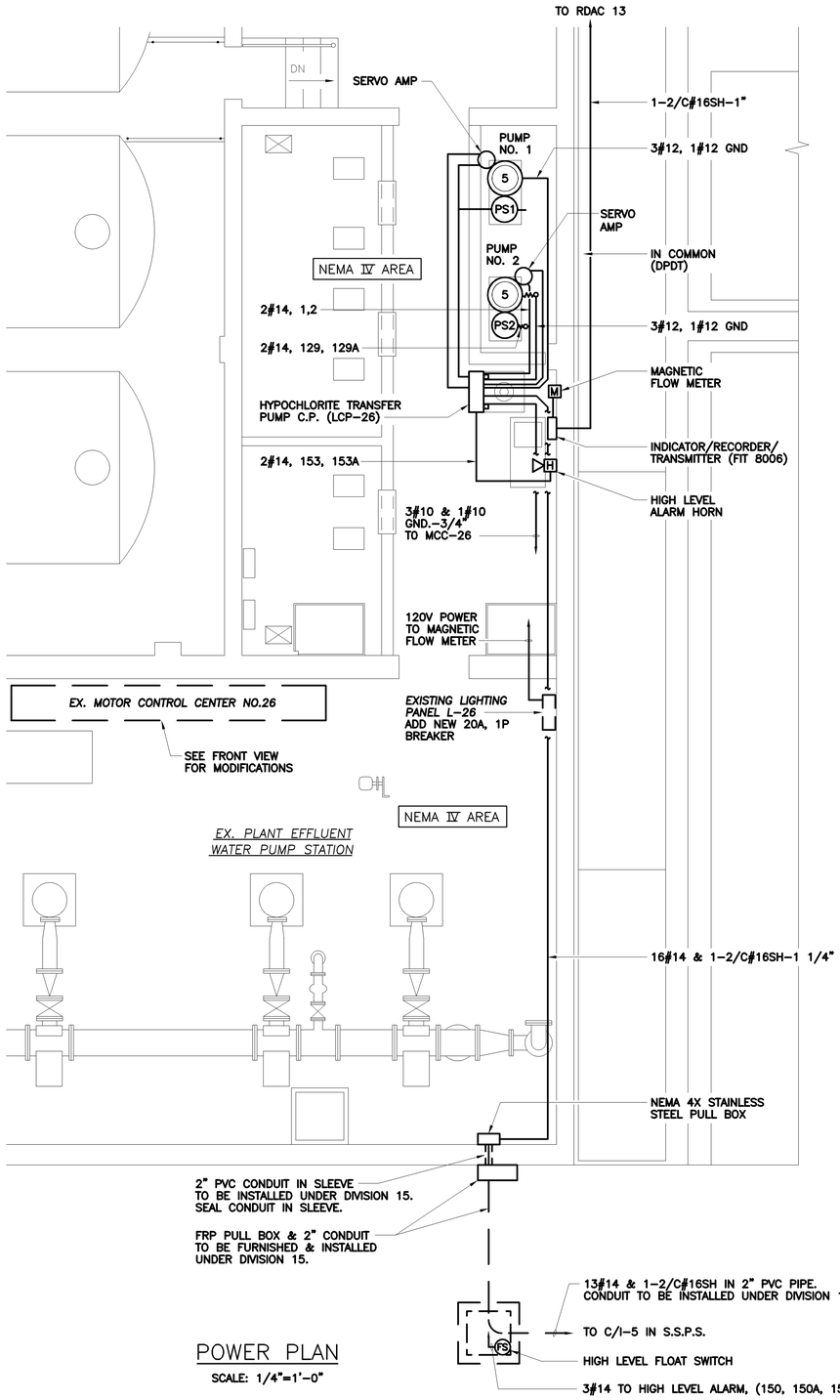

POWER PLAN

SCALE: 1/4"=1'-0"

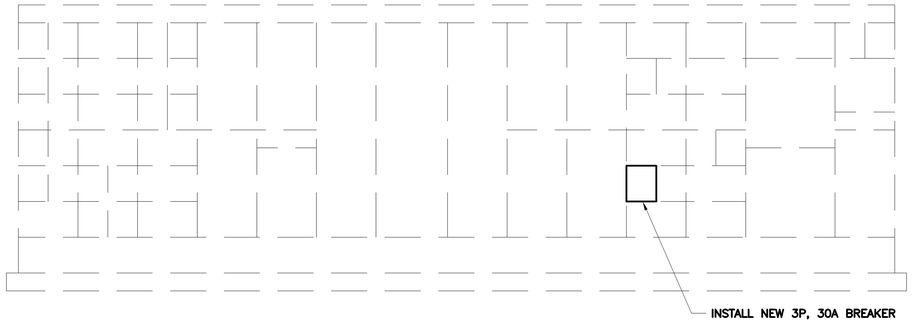

EXISTING MCC-26 FRONT VIEW

N.T.S.

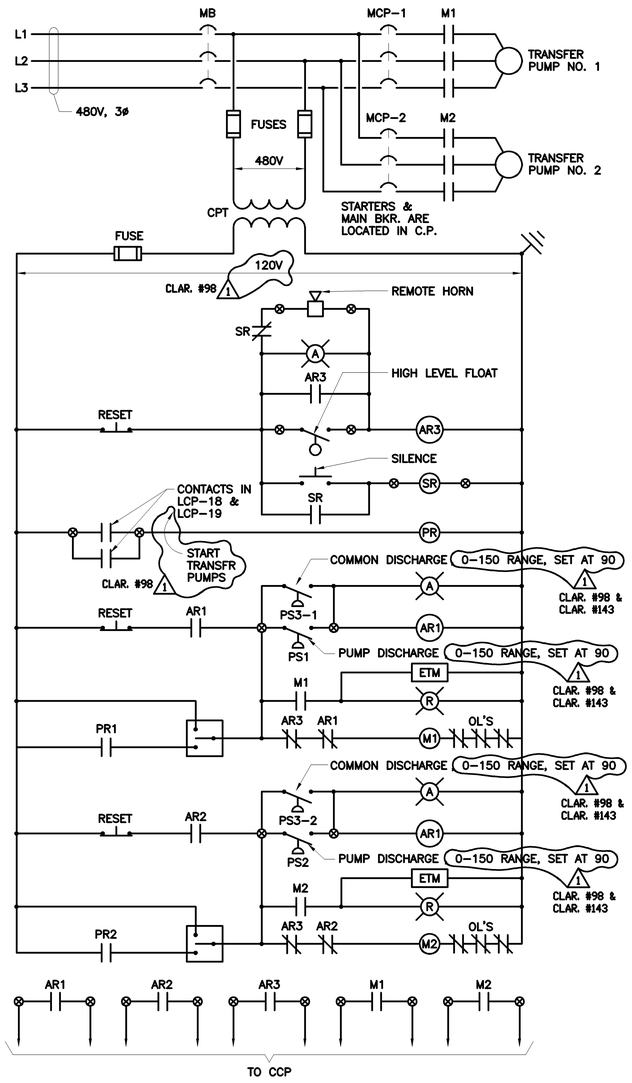

HYPOCHLORITE TRANSFER PUMP C.P. LCP-26

NOTES:

1.) EXISTING MCC MANUFACTURED BY ALLIS-CHALMERS.

2.) RATINGS: 480V, 3ø, 3W.

3.) INSTALL NEW 30A, 3P FEEDER BREAKER WHERE SHOWN ABOVE.

4.) PROVIDE LAMINATED NAMEPLATE "SODIUM HYPOCHLORITE TRANSFER PUMP CONTROL PANEL FEEDER" TO MATCH EXISTING NAMEPLATES.

5.) CONTROL PANEL SHALL BE MOUNTED ON VERTICAL ALUMINUM CHANNELS TYPICAL OF EXISTING CONTROL PANELS.

6.) ANCHOR BOLTS SHALL BE STAINLESS STEEL WITH EPOXY ANCHORS.

7.) ALL CONDUITS IN THIS BUILDING SHALL BE PVC COATED GRS.

NO.	DATE	DRWN	CHK'D	DESCRIPTION
				REVISIONS
1	12/98	FXP	ASG	RECORD DRAWING

DESIGNED BY: SEB
DRAWN BY: JSG
CHECKED BY/DATE: CEB/9-91
APPR'D BY/DATE: CEB/9-91

CAMP DRESSER & McKEE

THIS DRAWING HAS BEEN REVISED BY HAZEN AND SAWYER, P.C. TO REFLECT MODIFICATIONS MADE DURING CONSTRUCTION

CDM environmental engineers, scientists, planners, & management consultants

ARLINGTON COUNTY, VIRGINIA
WATER POLLUTION CONTROL PLANT
UPGRADE AND EXPANSION- PHASE B

CHLORINE BUILDING
ELECTRICAL
MODIFICATIONS, CONTROL DIAGRAM, & FRONT VIEW

SCALE NOTE

SCALE BAR SHOWN BELOW IS ONE INCH LONG ON A FULL SIZE DRAWING. WHEN SCALING DRAWINGS, MEASURE BAR TO DETERMINE IF SCALES SHOWN WILL REQUIRE ADJUSTING.

← ONE INCH →

CONTRACT NO. 90-02-WPC

YEAR 1991

LOCATION CODE	SPECIALTY CODE
E6	E

PROJECT NO. 5002-33

FILE NAME E6E-01.DWG

DRAWING NO. E6E-1

SHEET NO. 300

RECORD DRAWING

C.E. BAILEY & ASSOCIATES, INC.
CONSULTING ENGINEERS
ORLANDO, CLEARWATER & FORT LAUDERDALE, FLORIDA

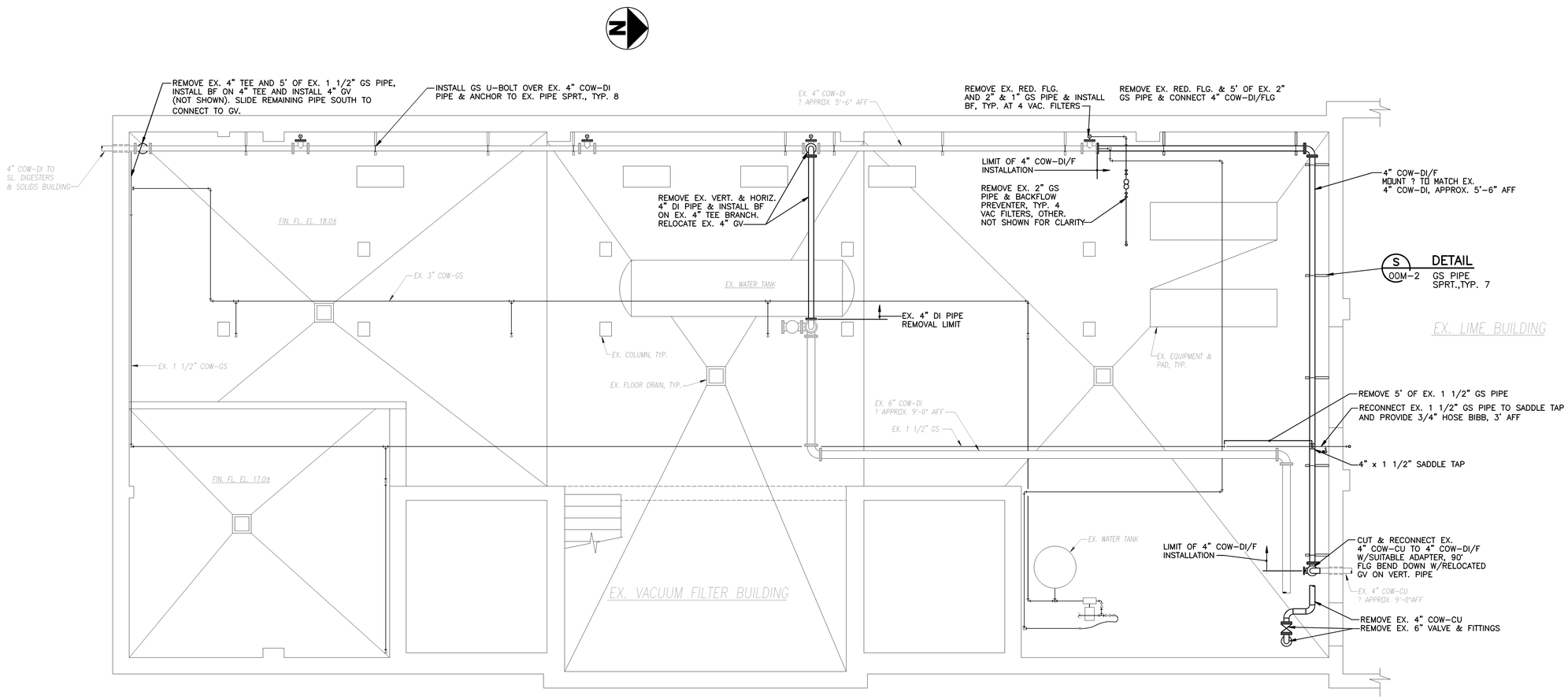

PLAN AT ELEV. 28.5

SCALE: 1/4"-1'-0"

NOTES:

1. ROOM CONTAINS CONSIDERABLE PIPING AND EQUIPMENT THAT IS NOT SHOWN FOR CLARITY.
2. COMPRESSION COUPLINGS MAY BE USED (MAX. 1 PER PIPE DIRECTION) IF DESIRED TO ADJUST PIPE LENGTHS BETWEEN FLANGES PER COM DWGS.
3. THE EXISTING 4" GV THAT IS BEING RELOCATED SHALL BE THROUGHLY CLEANED & ADJUSTED FOR SMOOTH OPERATION WITH NO PACKING LEAKAGE.
4. EXISTING AND NEW PIPING SHALL BE PRESSURE TESTED AND DISINFECTED WITH SODIUM HYPOCHLORITE PRIOR TO RETURNING TO SERVICE.

NO.	DATE	DRWN	CHK'D	DESCRIPTION
1	9/97	FXP	ASG	RECORD DRAWING

REVISIONS

DESIGNED BY: TDH
DRAWN BY: BRW
CHECKED BY/DATE: TDH 9/91
APPRV'D BY/DATE: TDH 9/91

COMMONWEALTH OF VIRGINIA — THOMAS D. HALL No. 12502 — PROFESSIONAL ENGINEER

CAMP DRESSER & McKEE

environmental engineers, scientists, planners, & management consultants

CDM

PER DRAWING HAS BEEN REVISED BY HAZEN AND SAWYER, P.C. TO REFLECT MODIFICATIONS MADE DURING CONSTRUCTION

ARLINGTON COUNTY, VIRGINIA
WATER POLLUTION CONTROL PLANT
UPGRADE AND EXPANSION- PHASE IIB

VACUUM FILTER BUILDING PLAN

SCALE NOTE

SCALE BAR SHOWN BELOW IS ONE INCH LONG ON A FULL SIZE DRAWING. WHEN SCALING DRAWINGS, MEASURE BAR TO DETERMINE IF SCALES SHOWN WILL REQUIRE ADJUSTING.

ONE INCH

CONTRACT NO. 90-02-WPC
YEAR 1991
LOCATION CODE C5
SPECIALTY CODE M
PROJECT NO. 5002-33
FILE NAME C5M-01.DWG
DRAWING NO. C5M-1
SHEET NO. 301

RECORD DRAWING

09/17/91 - 07:44

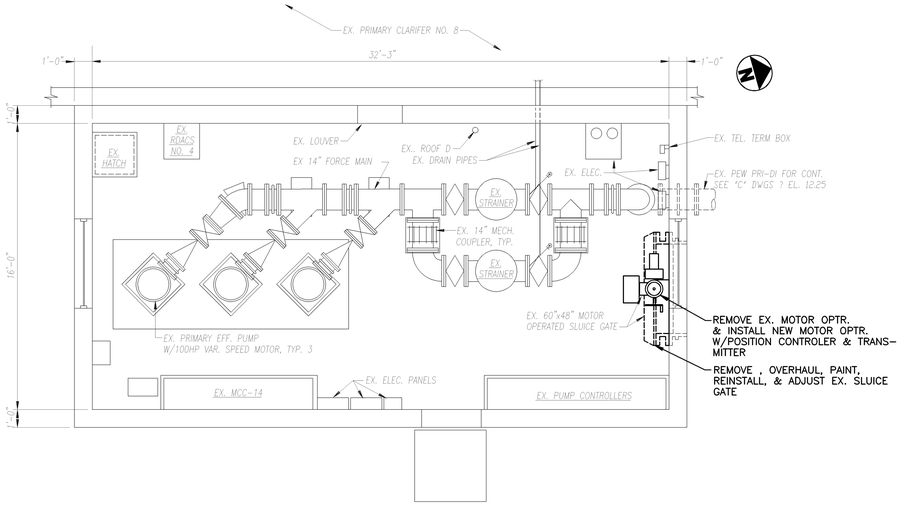

PRIMARY EFFLUENT PUMP STATION REMOVAL PLAN

SCALE: 1/4"=1'-0"

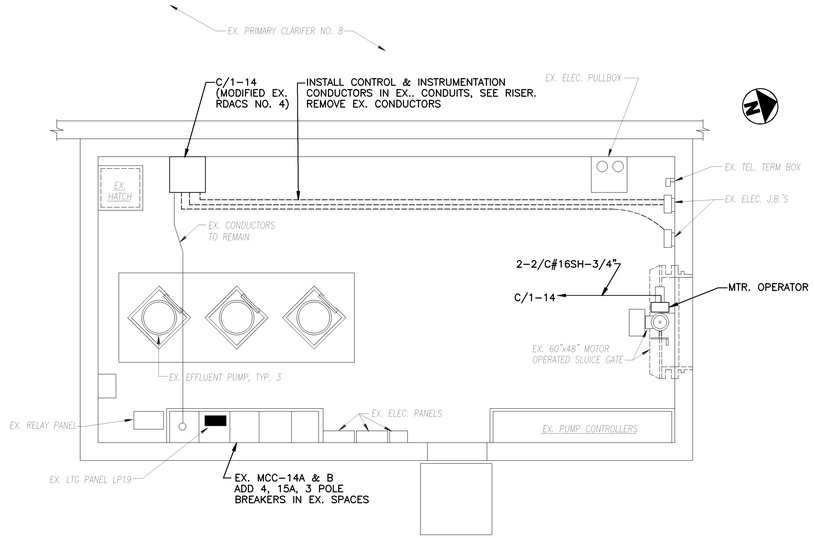

PRIMARY EFFLUENT PUMP STATION ELECTRICAL PLAN

SCALE: 1/4"=1'-0"

09/11/91 - 13:41

NO.	DATE	DRWN	CHK'D	DESCRIPTION
1	9/97	FXP	ASG	RECORD DRAWING

REVISIONS

DESIGNED BY: CEB
DRAWN BY: JSG/BRW
CHECKED BY/DATE: SEB 9-91
APPRV'D BY/DATE: CEB 9-91

CAMP DRESSER & McKEE
environmental engineers, scientists, planners, & management consultants

THIS DRAWING HAS BEEN REVISED BY HAZEN AND SAWYER, P.C. TO REFLECT MODIFICATIONS MADE DURING CONSTRUCTION

CDM

ARLINGTON COUNTY, VIRGINIA
WATER POLLUTION CONTROL PLANT
UPGRADE AND EXPANSION- PHASE IIB

PRIMARY EFFLUENT PUMP STATION
ELECTRIC
ELECTRICAL & REMOVAL/MAINTENANCE PLANS

SCALE NOTE

SCALE BAR SHOWN BELOW IS ONE INCH LONG ON A FULL SIZE DRAWING. WHEN SCALING DRAWINGS, MEASURE BAR TO DETERMINE IF SCALES SHOWN WILL REQUIRE ADJUSTING.

ONE INCH

RECORD DRAWING

CONTRACT NO. 90-02-WPC
YEAR 1991
LOCATION CODE C2
SPECIALTY CODE E
PROJECT NO. 5002-33
FILE NAME C2E-01.DWG
DRAWING NO. C2E-1
SHEET NO. 302

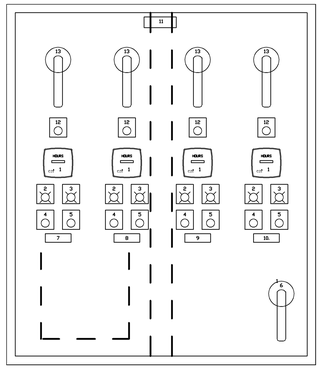

PANEL LAYOUT

PANEL TO BE 48"H X 36"W X 8"D(NEMA 4X, 14 GAUGE, 316 S. S.

LEGEND :

1. ELAPSED TIME METER (TYP 4)
2. RUN LIGHT (TYP 4)
3. TROUBLE LIGHT (TYP 4)
4. START PUSHBUTTON (TYP 4)
5. STOP PUSHBUTTON (TYP 4)
6. MAIN POWER BREAKER
7. NAMEPLATE- "TURBINE MIXER NO. 1"
8. NAMEPLATE- "TURBINE MIXER NO. 2"
9. NAMEPLATE- "TURBINE MIXER NO. 3"
10. NAMEPLATE- "TURBINE MIXER NO. 4"
11. NAMEPLATE- "GRIT TURBINE DRIVE CONTROL PANEL LCP-7"
12. RESET PUSHBUTTON (TYP 4)
13. MOTOR MECHANICAL DISCONNECT (TYP 4)

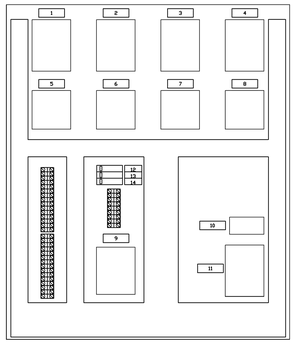

SUBPANEL LAYOUT

LEGEND :

1. NAMEPLATE- "MCP1"
2. NAMEPLATE- "MCP2"
3. NAMEPLATE- "MCP3"
4. NAMEPLATE- "MCP4"
5. NAMEPLATE- "M1"
6. NAMEPLATE- "M2"
7. NAMEPLATE- "M3"
8. NAMEPLATE- "M4"
9. NAMEPLATE- "CPT107"
10. NAMEPLATE- "SP106"
11. NAMEPLATE- "CB-M"
12. NAMEPLATE- "FU605A
13. NAMEPLATE- "FU605B"
14. NAMEPLATE- "FU608"

CONSTRUCTION NOTES:

1. SUBPANEL SHALL BE TAPPED TO ACCEPT ALL MOUNTING SCREWS. SELF-TAPPING SCREWS SHALL NOT BE USED TO MOUNT ANY COMPONENTS.
2. THE MAIN BREAKER SHALL BE INTERLOCKED WITH CABINET DOOR.
3. ALL INTERCONNECTING WIRING, EXCEPT FOR CONTROL CIRCUITS, SHALL BE 600 VOLT INSULATION AND RATED FOR NOT LESS 90 DEGREES C.
4. POWER DISTRIBUTION WIRING ON THE LINE SIDE OF FUSES SHALL BE 14 AVG MINIMUM. CONTROL WIRING ON THE SECONDARY SIDE OF FUSES SHALL BE 16 AVG MINIMUM. ELECTRONIC ANALOG CIRCUITS SHALL USE 16 AVG SHIELDED, TWISTED PAIR CABLES, INSULATED FOR NOT LESS THAN 300 VOLTS.
5. POWER AND LOV VOLTAGE DC WIRING SYSTEMS SHALL BE ROUTED IN SEPARATE WIREWAYS. CROSSING OF DIFFERENT SYSTEM WIRES SHALL BE AT RIGHT ANGLES. DIFFERENT SYSTEM WIRES ROUTED PARALLEL TO EACH OTHER SHALL BE SEPARATED BY AT LEAST 2 INCHES. DIFFERENT WIRING SYSTEMS SHALL TERMINATE ON SEPARATE TERMINAL BLOCKS. WIRING TROUGHS SHALL NOT BE FILLED TO MORE THAN 60 PERCENT VISIBLE FILL.
6. ALL WIRING SHALL TERMINATE IN A MASTER TERMINAL BOARD. RIGID TYPE AND NUMBERED. THE MASTER TERMINAL BOARD SHALL HAVE A MINIMUM OF 25 PERCENT SPARES. TERMINAL BLOCKS SHALL BE ARRANGED IN VERTICAL ROWS AND SEPARATED INTO THE FOLLOWING GROUPS: POWER, AC CONTROL, DC SIGNAL, AND ALARM. TERMINAL BLOCKS SHALL BE BARRIER TYPE WITH A MINIMUM 600 VOLTS RATING. THEY SHALL BE THE RAISED CHANNEL MOUNT TYPE. WIRING CONNECTORS SHALL BE THE HOOK FORK TYPE WITH NON-INSULATED BARREL FOR CRIMP TYPE COMPRESSION CONNECTION TO THE WIRE. WIRE AND TYPE MARKERS SHALL BE THE SLEEVE TYPE WITH HEAT IMPRESSED LETTERS AND NUMBERS. DIRECT INTERLOCK WIRING BETWEEN EQUIPMENT WILL NOT BE ALLOVED. ONLY ONE SIDE OF A TERMINAL BLOCK RDV SHALL BE USED FOR INTERNAL WIRING. THE FIELD WIRING SIDE OF THE TERMINAL SHALL NOT BE WITHIN 6-INCHES OF THE SIDE PANEL OR ADJACENT TERMINAL.
7. ALL WIRING TO HAND SWITCHES, ETC., WHICH ARE LIVE CIRCUITS INDEPENDENT OF THE PANEL'S NORMAL CIRCUIT BREAKER PROTECTION SHALL BE CLEARLY IDENTIFIED AS SUCH.
8. ALL COMPONENTS SHALL BE MOUNTED IN A MANNER THAT SHALL PERMIT SERVICING, ADJUSTMENT, TESTING AND REMOVAL WITHOUT DISCONNECTING, MOVING OR REMOVING ANY OTHER COMPONENT. COMPONENTS MOUNTED ON THE INSIDE OF PANELS SHALL BE MOUNTED ON REMOVABLE PLATES AND NOT DIRECTLY TO THE ENCLOSURE. INTERNAL COMPONENTS SHALL BE IDENTIFIED WITHPLASTIC ENGRAVED TAGS ATTATCHED WITH DRIVE PINS ADJACENT TO EACH COMPONENT IDENTIFYING THE COMPONENT IN ACCORDANCE WITH THE DRAWINGS.

NO	DATE	REVISION	BY
1	1-12-93	PANEL & SUBPAN LAYOUT	MFB

C2i CONTROL INSTRUMENTS, INC.
ATLANTA, GEORGIA

CONTROL PANEL LCP-7
SCHEMATIC & CONNECTION DIAGRAM
ARLINGTON COUNTY, VIRGINIA
WATER POLLUTION CONTROL PLANT

DRAWN	APP'D	SCALE	CUSTOMER NO.	DWG. NO.	SHEET
VNS		AS NOTED		ED-7956	1 of 2
FILE: 313-1-1		DATE: 9/17/92	JOB NO. 313		

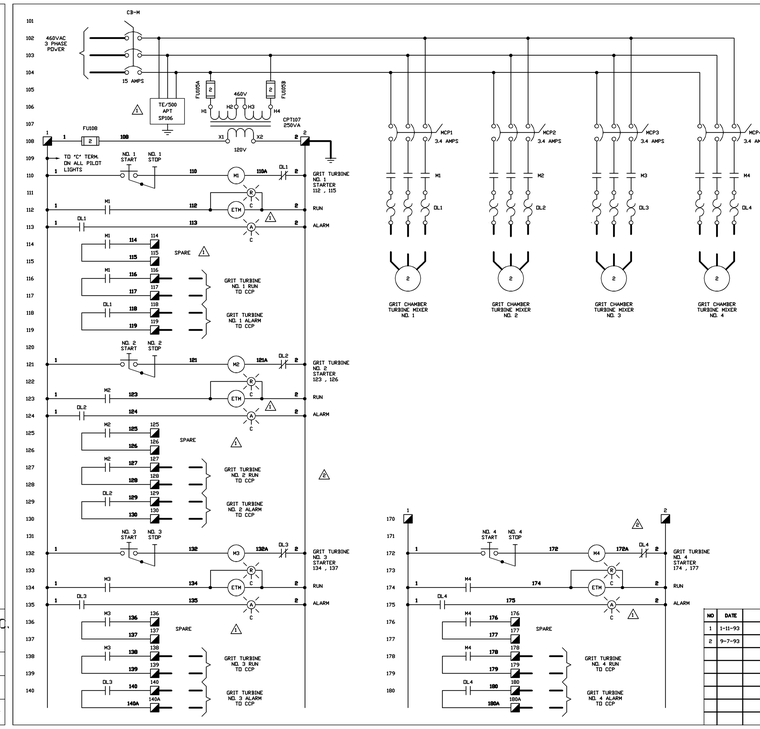

LEGEND :

- FIELD WIRING BY CONTRACTOR
- TERMINALS FOR FIELD WIRING
- EQUIPMENT NOT SUPPLIED BY C2i
- REVISION

COLOR CODE :

BLACK	AC HOT
WHITE	AC NEUTRAL
GREEN	AC GROUND
RED	AC CONTROL
BLUE	DC POSITIVE
GRAY	DC NEGATIVE
ORANGE	DC CONTROL
SHIELDED CABLE :	
WHITE	SIGNAL POSITIVE
BLACK	SIGNAL NEGATIVE
RED	REFERENCE

NO	DATE	REVISION	BY
1	1-11-93	AS NOTED	MFB
2	9-7-93	AS NOTED	MFB

C2i CONTROL INSTRUMENTS, INC.
ATLANTA, GEORGIA

CONTROL PANEL LCP-7
SCHEMATIC & CONNECTION DIAGRAM
ARLINGTON COUNTY, VIRGINIA
WATER POLLUTION CONTROL PLANT

DRAWN	APP'D	SCALE	CUSTOMER NO.	DWG. NO.	SHEET
VNS		AS NOTED		ED-7956	2 of 2
FILE: 313-1-2		DATE: 9/17/93	JOB NO. 313		

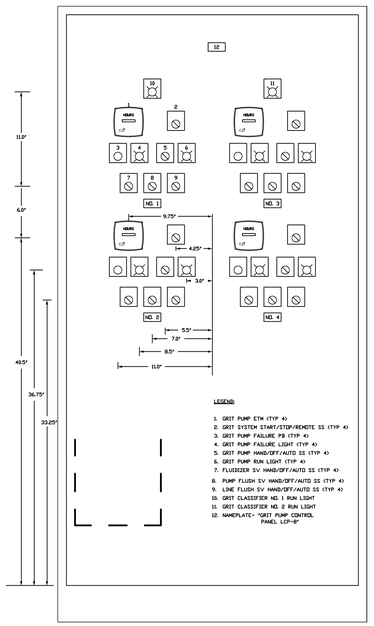

PANEL LAYOUT

PANEL TO BE 72"H X 42"W X 16"D NEMA 4X, 14 GAUGE, 316 S. S.

LEGEND :

1. GRIT PUMP ETM (TYP 4)
2. GRIT SYSTEM START/STOP/REMOTE SS (TYP 4)
3. GRIT PUMP FAILURE PB (TYP 4)
4. GRIT PUMP FAILURE LIGHT (TYP 4)
5. GRIT PUMP HAND/OFF/AUTO SS (TYP 4)
6. GRIT PUMP RUN LIGHT (TYP 4)
7. FLUIDIZER SV HAND/OFF/AUTO SS (TYP 4)
8. PUMP FLUSH SV HAND/OFF/AUTO SS (TYP 4)
9. LINE FLUSH SV HAND/OFF/AUTO SS (TYP 4)
10. GRIT CLASSIFIER NO. 1 RUN LIGHT
11. GRIT CLASSIFIER NO. 2 RUN LIGHT
12. NAMEPLATE- "GRIT PUMP CONTROL PANEL LCP-8"

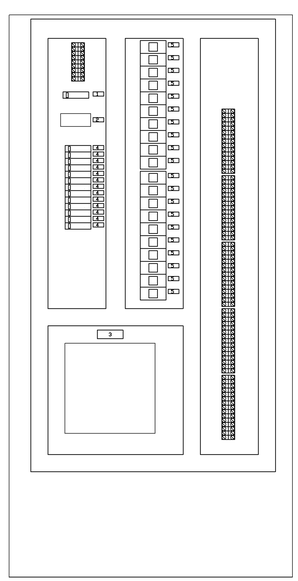

SUBPANEL LAYOUT

LEGEND :

1. NAMEPLATE- "CB002"
2. NAMEPLATE- "SP006"
3. NAMEPLATE- "TI PLC"
4. NAMEPLATE- "FUXXX"
5. NAMEPLATE- "CR-XXX"

CONSTRUCTION NOTES:

1. SUBPANEL SHALL BE TAPPED TO ACCEPT ALL MOUNTING SCREWS. SELF-TAPPING SCREWS SHALL NOT BE USED TO MOUNT ANY COMPONENTS.
2. THE MAIN BREAKER SHALL BE INTERLOCKED WITH CABINET DOOR.
3. ALL INTERCONNECTING WIRING, EXCEPT FOR CONTROL CIRCUITS, SHALL BE 600 VOLT INSULATION AND RATED FOR NOT LESS 90 DEGREES C.
4. POWER DISTRIBUTION WIRING ON THE LINE SIDE OF FUSES SHALL BE 14 AVG MINIMUM. CONTROL WIRING ON THE SECONDARY SIDE OF FUSES SHALL BE 16 AVG MINIMUM. ELECTRONIC ANALOG CIRCUITS SHALL USE 16 AVG SHIELDED, TWISTED PAIR CABLES, INSULATED FOR NOT LESS THAN 300 VOLTS.
5. POWER AND LOV VOLTAGE DC WIRING SYSTEMS SHALL BE ROUTED IN SEPARATE WIREWAYS. CROSSING OF DIFFERENT SYSTEM WIRES SHALL BE AT RIGHT ANGLES. DIFFERENT SYSTEM WIRES ROUTED PARALLEL TO EACH OTHER SHALL BE SEPARATED BY AT LEAST 2 INCHES. DIFFERENT WIRING SYSTEMS SHALL TERMINATE ON SEPARATE TERMINAL BLOCKS. WIRING TROUGHS SHALL NOT BE FILLED TO MORE THAN 60 PERCENT VISIBLE FILL.
6. ALL WIRING SHALL TERMINATE IN A MASTER TERMINAL BOARD. RIGID TYPE AND NUMBERED. THE MASTER TERMINAL BOARD SHALL HAVE A MINIMUM OF 25 PERCENT SPARES. TERMINAL BLOCKS SHALL BE ARRANGED IN VERTICAL ROWS AND SEPARATED INTO THE FOLLOWING GROUPS: POWER, AC CONTROL, DC SIGNAL, AND ALARM. TERMINAL BLOCKS SHALL BE BARRIER TYPE WITH A MINIMUM 600 VOLTS RATING. THEY SHALL BE THE RAISED CHANNEL MOUNT TYPE. WIRING CONNECTORS SHALL BE THE HOOK FORK TYPE WITH NON-INSULATED BARREL FOR CRIMP TYPE COMPRESSION CONNECTION TO THE WIRE. WIRE AND TYPE MARKERS SHALL BE THE SLEEVE TYPE WITH HEAT IMPRESSED LETTERS AND NUMBERS. DIRECT INTERLOCK WIRING BETWEEN EQUIPMENT WILL NOT BE ALLOVED. ONLY ONE SIDE OF A TERMINAL BLOCK RDV SHALL BE USED FOR INTERNAL WIRING. THE FIELD WIRING SIDE OF THE TERMINAL SHALL NOT BE WITHIN 6-INCHES OF THE SIDE PANEL OR ADJACENT TERMINAL.
7. ALL WIRING TO HAND SWITCHES, ETC., WHICH ARE LIVE CIRCUITS INDEPENDENT OF THE PANEL'S NORMAL CIRCUIT BREAKER PROTECTION SHALL BE CLEARLY IDENTIFIED AS SUCH.
8. ALL COMPONENTS SHALL BE MOUNTED IN A MANNER THAT SHALL PERMIT SERVICING, ADJUSTMENT, TESTING AND REMOVAL WITHOUT DISCONNECTING, MOVING OR REMOVING ANY OTHER COMPONENT. COMPONENTS MOUNTED ON THE INSIDE OF PANELS SHALL BE MOUNTED ON REMOVABLE PLATES AND NOT DIRECTLY TO THE ENCLOSURE. INTERNAL COMPONENTS SHALL BE IDENTIFIED WITHPLASTIC ENGRAVED TAGS ATTATCHED WITH DRIVE PINS ADJACENT TO EACH COMPONENT IDENTIFYING THE COMPONENT IN ACCORDANCE WITH THE DRAWINGS.

NO	DATE	REVISION	BY	NO	DATE	REVISION	BY
1	1-12-93	PANEL & SUBPAN LAYOUT	MFB				

C2i CONTROL INSTRUMENTS, INC.
ATLANTA, GEORGIA

CONTROL PANEL LCP-8
SCHEMATIC & CONNECTION DIAGRAM
ARLINGTON COUNTY, VIRGINIA
WATER POLLUTION CONTROL PLANT

DRAWN	APP'D	SCALE	CUSTOMER NO.	DWG. NO.	SHEET
VNS		AS NOTED		ED-7957	1 of 4
FILE: 313-2-1		DATE: 9/17/92	JOB NO. 313		

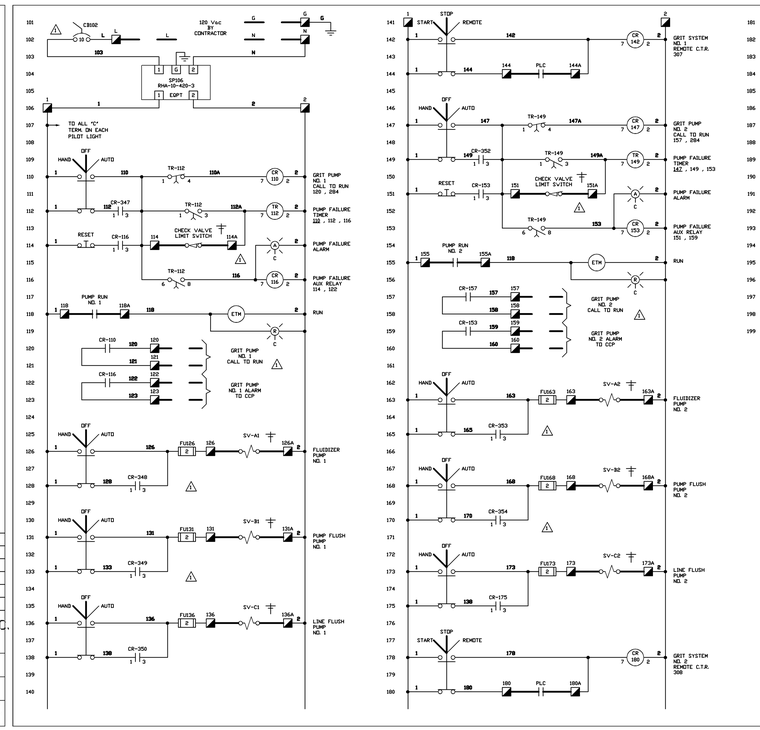

PLC RACK LAYOUT

LEGEND :

- FIELD WIRING BY CONTRACTOR
- TERMINALS FOR FIELD WIRING
- EQUIPMENT NOT SUPPLIED BY C2i
- REVISION

COLOR CODE :

BLACK	AC HOT
WHITE	AC NEUTRAL
GREEN	AC GROUND
RED	AC CONTROL
BLUE	DC POSITIVE
GRAY	DC NEGATIVE
ORANGE	DC CONTROL
SHIELDED CABLE :	
WHITE	SIGNAL POSITIVE
BLACK	SIGNAL NEGATIVE
RED	REFERENCE

NO	DATE	REVISION	BY	NO	DATE	REVISION	BY
1	1-12-93	AS NOTED	MFB				
2	9-7-93	AS NOTED	MFB				

C2i CONTROL INSTRUMENTS, INC.
ATLANTA, GEORGIA

CONTROL PANEL LCP-8
SCHEMATIC & CONNECTION DIAGRAM
ARLINGTON COUNTY, VIRGINIA
WATER POLLUTION CONTROL PLANT

DRAWN	APP'D	SCALE	CUSTOMER NO.	DWG. NO.	SHEET
VNS		AS NOTED		ED-7957	2 of 4
FILE: 313-2-2		DATE: 9/17/92	JOB NO. 313		

RECORD DRAWING

NO.	DATE	DESCRIPTION
0	11/98	RECORD DRAWING

DESIGNED BY: .
DRAWN BY: FXP
CHECKED BY/DATE/: ASG
APPROVED BY/DATE: FXP

REVISIONS

THIS DRAWING HAS BEEN COMPILED
HAZEN AND SAWYER, P.C.

ARLINGTON COUNTY, VIRGINIA
WATER POLLUTION CONTROL PLANT
UPGRADE AND EXPANSION- PHASE IIB

CONTROL INSTRUMENTS, INC. DRAWINGS
CONTROL PANELS LCP-7 AND LCP-8

SCALE NOTE

SCALE BAR SHOWN BELOW IS ONE INCH LONG ON A FULL SIZE DRAWING. WHEN SCALING DRAWINGS, MEASURE BAR TO DETERMINE IF SCALES SHOWN WILL REQUIRE ADJUSTING.

← ONE INCH →

CONTRACT NO.
9002 – WPC

YEAR 1991

LOCATION CODE

SPECIALTY CODE
I

PROJECT NO.
5002 – 033

FILE NAME
C2i01.DWG

DRAWING NO.
C2i–01

SHEET NO. 303

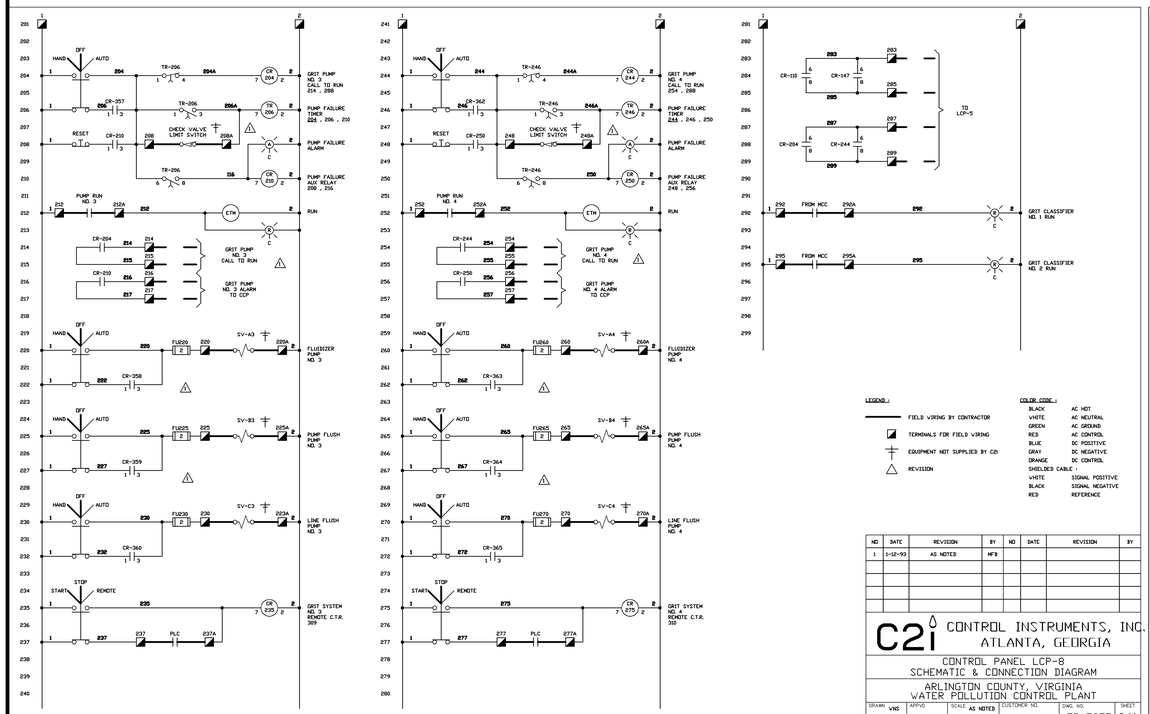

NO	DATE	REVISION	BY
1	1-12-93	AS NOTED	MFB

C2i CONTROL INSTRUMENTS, INC.
ATLANTA, GEORGIA

CONTROL PANEL LCP-8
SCHEMATIC & CONNECTION DIAGRAM

ARLINGTON COUNTY, VIRGINIA
WATER POLLUTION CONTROL PLANT

DRAWN	APP'D	SCALE	CUSTOMER NO.	DWG. NO.	SHEET
VNS		AS NOTED		ED-7957	3 of 4
FILE 313-2-3		DATE 9/17/92	JOB NO. 313		

NO	DATE	REVISION	BY
1	1-12-93	AS NOTED	MFB
2	9-7-93	AS NOTED	MFB

C2i CONTROL INSTRUMENTS, INC.
ATLANTA, GEORGIA

CONTROL PANEL LCP-8
SCHEMATIC & CONNECTION DIAGRAM

ARLINGTON COUNTY, VIRGINIA
WATER POLLUTION CONTROL PLANT

DRAWN	APP'D	SCALE	CUSTOMER NO.	DWG. NO.	SHEET
VNS		AS NOTED		ED-7957	4 of 4
FILE 313-2-4		DATE 9/17/92	JOB NO. 313		

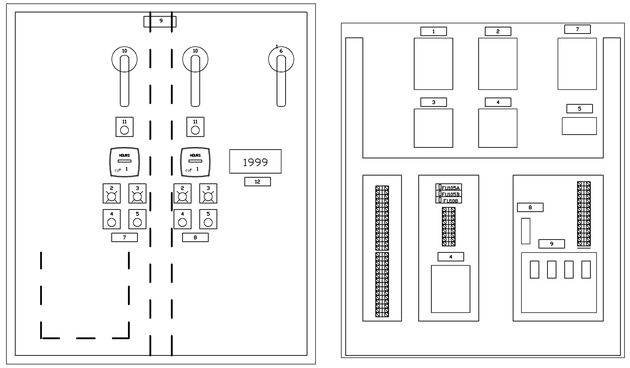

PANEL LAYOUT

PANEL TO BE 48"H X 36"W X 8"D, NEMA 4X 14 GAUGE, 316 S. S.

LEGEND :

1. ELAPSED TIME METER (TYP 4)
2. RUN LIGHT (TYP 4)
3. TROUBLE LIGHT (TYP 4)
4. START PUSHBUTTON (TYP 4)
5. STOP PUSHBUTTON (TYP 4)
6. MAIN POWER BREAKER
7. NAMEPLATE- "SCUM SLURRY TRANSFER PUMP NO. 1"
8. NAMEPLATE- "SCUM SLURRY TRANSFER PUMP NO. 2"
9. NAMEPLATE- SCUM SLURRY PUMP CONTROL PANEL LCP-10"
10. RESET PUSHBUTTON (TYP 4)
11. MOTOR MECHANICAL DISCONNECT (TYP 4)
12. NAMEPLATE- "SCUM SLURRY WETWELL LEVEL 0 - 15 FT."

SUBPANEL LAYOUT

LEGEND :

1. NAMEPLATE- "MCP1"
2. NAMEPLATE- "MCP2"
3. NAMEPLATE- "M1"
4. NAMEPLATE- "M2"
5. NAMEPLATE- "CP1107"
6. NAMEPLATE- "SP1106"
7. NAMEPLATE- "CB-1"
8. NAMEPLATE- "CS-1"
9. NAMEPLATE- "AGM RACK"

CONSTRUCTION NOTES:

1. SUBPANEL SHALL BE TAPPED TO ACCEPT ALL MOUNTING SCREWS. SELF-TAPPING SCREWS SHALL NOT BE USED TO MOUNT ANY COMPONENTS.
2. THE MAIN BREAKER SHALL BE INTERLOCKED WITH CABINET DOOR.
3. ALL INTERCONNECTING WIRING, EXCEPT FOR CONTROL CIRCUITS, SHALL BE 600 VOLT INSULATION AND RATED FOR NOT LESS 90 DEGREES C.
4. POWER DISTRIBUTION WIRING ON THE LINE SIDE OF FUSES SHALL BE 14 AVG MINIMUM. CONTROL WIRING IN THE SECONDARY SIDE OF FUSES SHALL BE 16 AVG MINIMUM. ELECTRONIC ANALOG CIRCUITS SHALL USE 16 AVG SHIELDED, TWISTED PAIR CABLES, INSULATED FOR NOT LESS THAN 300 VOLTS.
5. POWER AND LOW VOLTAGE DC WIRING SYSTEMS SHALL BE ROUTED IN SEPARATE WIREWAYS. CROSSING OF DIFFERENT SYSTEM WIRES SHALL BE AT RIGHT ANGLES. DIFFERENT SYSTEM WIRES ROUTED PARALLEL TO EACH OTHER SHALL BE SEPARATED BY AT LEAST 2 INCHES. DIFFERENT WIRING SYSTEMS SHALL TERMINATE ON SEPARATE TERMINAL BLOCKS. WIRING TROUGHS SHALL NOT BE FILLED TO MORE THAN 60 PERCENT VISIBLE FILL.
6. ALL WIRING SHALL TERMINATE IN A MASTER TERMINAL BOARD, RIGID TYPE AND NUMBERED. THE MASTER TERMINAL BOARD SHALL HAVE A MINIMUM OF 25 PERCENT SPARES. TERMINAL BLOCKS SHALL BE ARRANGED IN VERTICAL RDWS AND SEPARATED INTO THE FOLLOWING GROUPS: POWER, AC CONTROL, DC SIGNAL, AND ALARM. TERMINAL BLOCKS SHALL BE BARRIER TYPE WITH A MINIMUM 600 VOLTS RATING. THEY SHALL BE THE RAISED CHANNEL MOUNT TYPE. WIRING CONNECTORS SHALL BE THE SCREW TYPE, WITH PRESSURE PLATE. WIRE MARKERS SHALL BE THE SLEEVE TYPE WITH HEAT IMPRESSED LETTERS AND NUMBERS. DIRECT INTERLOCK WIRING BETWEEN EQUIPMENT WILL NOT BE ALLOWED. ONLY ONE SIDE OF A TERMINAL BLOCK RDW SHALL BE USED FOR INTERNAL WIRING. THE FIELD WIRING SIDE OF THE TERMINAL SHALL NOT BE WITHIN 6-INCHES OF THE SIDE PANEL OR ADJACENT TERMINAL.
7. ALL WIRING TO HAND SWITCHES, ETC, WHICH ARE LIVE CIRCUITS INDEPENDENT OF THE PANEL'S NORMAL CIRCUIT BREAKER PROTECTION SHALL BE CLEARLY IDENTIFIED AS SUCH.
8. ALL COMPONENTS SHALL BE MOUNTED IN A MANNER THAT SHALL PERMIT SERVICING, ADJUSTMENT, TESTING AND REMOVAL WITHOUT DISCONNECTING, REMOVING OR DISTURBING ANY OTHER COMPONENT. COMPONENTS MOUNTED ON THE INSIDE OF PANELS SHALL BE MOUNTED ON REMOVABLE PLATES AND NOT DIRECTLY TO THE ENCLOSURE. INTERNAL COMPONENTS SHALL BE IDENTIFIED WITHPLASTIC ENGRAVED TAGS ATTATCHED WITH DRIVE PINS ADJACENT TO EACH COMPONENT IDENTIFYING THE COMPONENT IN ACCORDANCE WITH THE DRAWINGS.

NO	DATE	REVISION	BY
1	1-12-93	PANEL & SUBPAN LAYOUT	MFB

C2i CONTROL INSTRUMENTS, INC.
ATLANTA, GEORGIA

CONTROL PANEL LCP-10
SCHEMATIC & CONNECTION DIAGRAM

ARLINGTON COUNTY, VIRGINIA
WATER POLLUTION CONTROL PLANT

DRAWN	APP'D	SCALE	CUSTOMER NO.	DWG. NO.	SHEET
VNS		AS NOTED		ED-7558	1 of 2
FILE 313-3-1		DATE 9/17/92	JOB NO. 313		

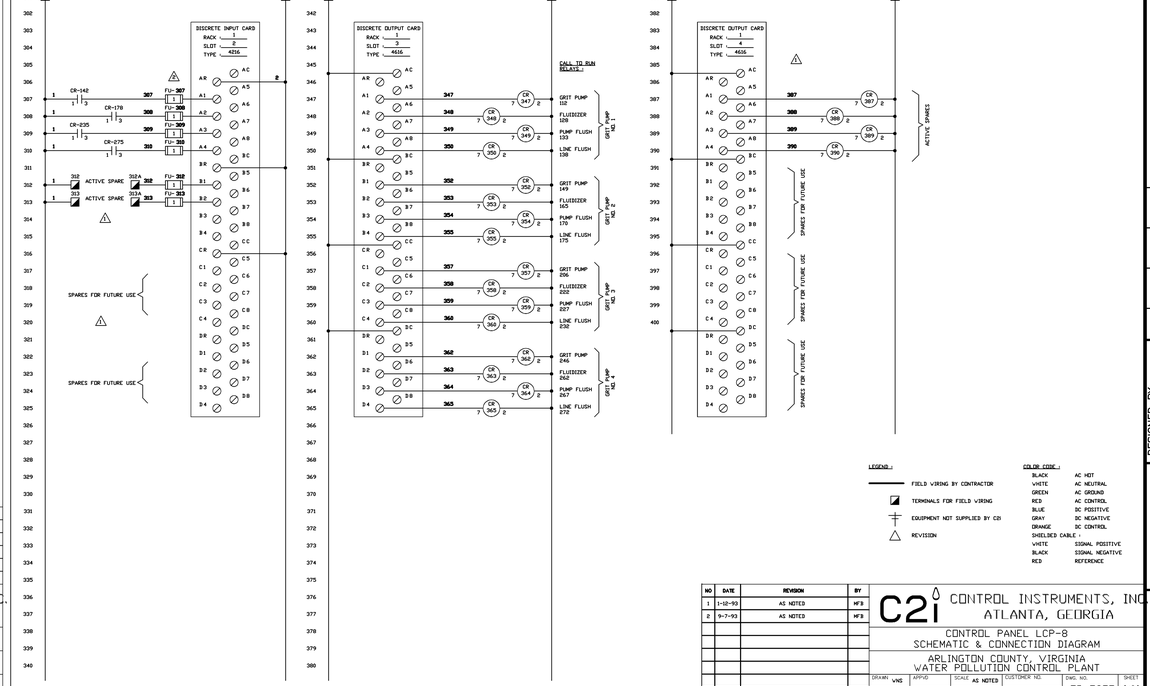

NO	DATE	REVISION	BY
1	1-12-93	AS NOTED	MFB

C2i CONTROL INSTRUMENTS, INC.
ATLANTA, GEORGIA

CONTROL PANEL LCP-10
SCHEMATIC & CONNECTION DIAGRAM

ARLINGTON COUNTY, VIRGINIA
WATER POLLUTION CONTROL PLANT

DRAWN	APP'D	SCALE	CUSTOMER NO.	DWG. NO.	SHEET
VNS		AS NOTED		ED-7558	2 of 2
FILE 313-3-2		DATE 9/17/92	JOB NO. 313		

RECORD DRAWING

NO.	DATE	DESCRIPTION
0	11/98	RECORD DRAWING
	FXP	ASG
	DRWN	CHKD
	DATE	REVISIONS

DESIGNED BY: .
DRAWN BY: FXP
CHECKED BY/DATE/:
APPROVED BY/DATE:

THIS DRAWING HAS BEEN COMPILED
HAZEN AND SAWYER, P.C.

ARLINGTON COUNTY, VIRGINIA
WATER POLLUTION CONTROL PLANT
UPGRADE AND EXPANSION- PHASE IIB

CONTROL INSTRUMENTS, INC. DRAWINGS
CONTROL PANELS LCP-8 AND LCP-10

SCALE NOTE

SCALE BAR SHOWN BELOW IS ONE INCH LONG ON A FULL SIZE DRAWING. WHEN SCALING DRAWINGS, MEASURE BAR TO DETERMINE IF SCALES SHOWN WILL REQUIRE ADJUSTING.

ONE INCH

CONTRACT NO.
9002 - WPC

YEAR 1991

LOCATION CODE

SPECIALTY CODE
I

PROJECT NO.
5002 - 033

FILE NAME
C2i02.DWG

DRAWING NO.
C2i-02

SHEET NO. 304

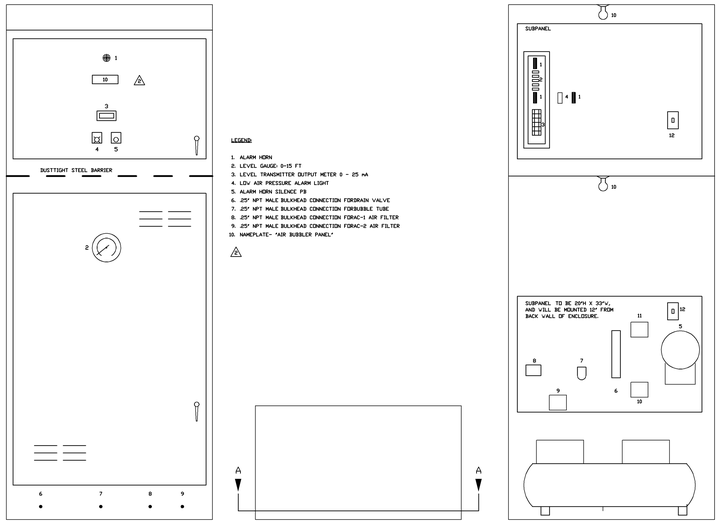

FRONT VIEW

PANEL TO BE 90"H X 36"W X 20"D, NEMA 4X, 14 GAUGE, 316 S. S.

LEGEND:

1. ALARM HORN
2. LEVEL GAUGE: 0-15 FT
3. LEVEL TRANSMITTER OUTPUT METER 0 - 25 mA
4. LOV AIR PRESSURE ALARM LIGHT
5. ALARM HORN SILENCE PB
6. .25" NPT MALE BULKHEAD CONNECTION FOR DRAIN VALVE
7. .25" NPT MALE BULKHEAD CONNECTION FOR BUBBLE TUBE
8. .25" NPT MALE BULKHEAD CONNECTION FOR AC-1 AIR FILTER
9. .25" NPT MALE BULKHEAD CONNECTION FOR AC-2 AIR FILTER
10. NAMEPLATE- "AIR BUBBLER PANEL"

TOP VIEW

VIEW A-A

CONSTRUCTION NOTES:

1. ALL PIPING WITHIN THE CABINET SHALL BE PER SPECIFICATION SECTION 13851-2.6.C.
2. CABINET WILL BE FABRICATED TO MEET SPECIFICATIONS SECTION 13851-2.02 .
3. NAMEPLATES WILL BE PROVIDED FOR EACH DEVICE INSIDE THE CABINET.

LEGEND:

1. TERMINALS
2. NAMEPLATES- "FUXXX"
3. NAMEPLATES- "CR-XXX"
4. NAMEPLATES- "24 VDC POWER SUPPLY"
5. NAMEPLATES- "PRESSURE TRANSMITTER"
6. NAMEPLATES- "ROTAMETER/DIFF. REG"
7. NAMEPLATES- "REGULATOR/FILTER"
8. NAMEPLATES- "AIR SUPPLY VALVE"
9. NAMEPLATES- "ALTERNATE AIR SUPPLY VALVE"
10. NAMEPLATES- "PURGE VALVE"
11. NAMEPLATES- "INSTRUMENT AIR VALVE"
12. NAMEPLATES- "LIGHT SWITCH"

NO	DATE	REVISION	BY	NO	DATE	REVISION	BY
1	1-13-93	PANEL SUBPAN LAYOUT	MFB				
2	3-01-93	AS NOTED	MFB				

C2i CONTROL INSTRUMENTS, INC.
ATLANTA, GEORGIA

AIR BUBBLER PANEL
SCHEMATIC, CONNECTION & PIPING DIAGRAM
ARLINGTON COUNTY, VIRGINIA
WATER POLLUTION CONTROL PLANT

DRAWN	APP'D	SCALE	CUSTOMER NO.	DWG. NO.	SHEET
VNS		AS NOTED		ED-7959	1 of 2
FILE 313-4-1		DATE 9/17/92	JOB NO. 313		

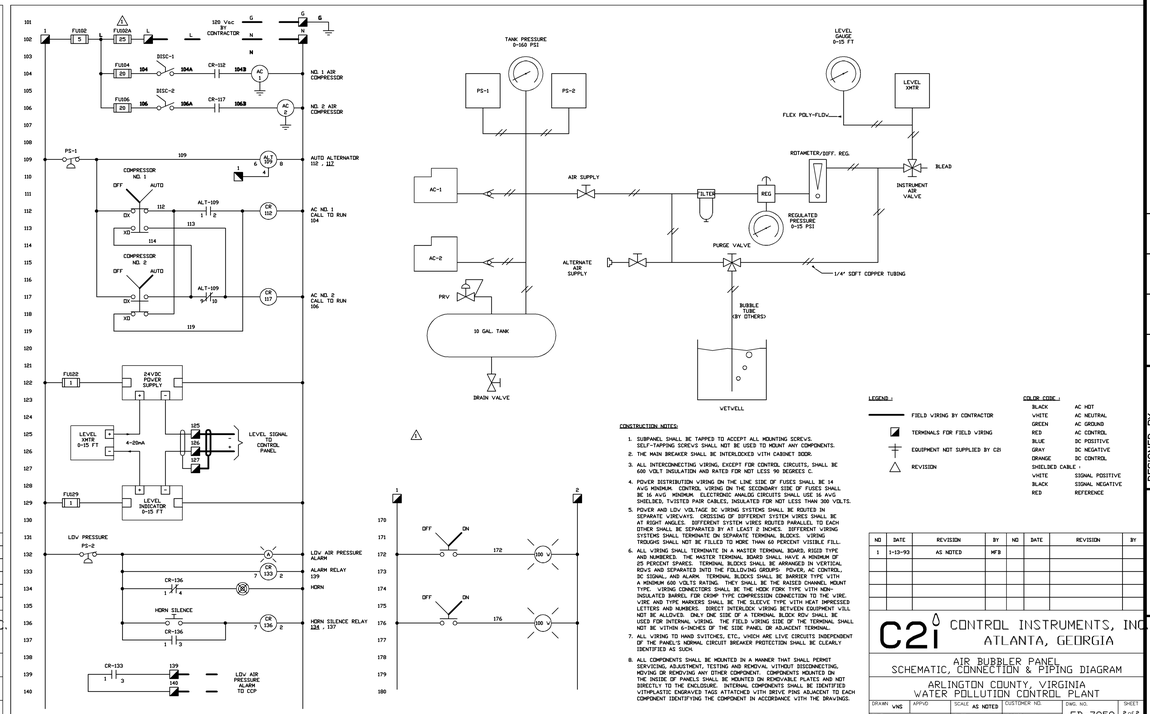

CONSTRUCTION NOTES:

1. SUBPANEL SHALL BE TAPPED TO ACCEPT ALL MOUNTING SCREWS. SELF-TAPPING SCREWS SHALL NOT BE USED TO MOUNT ANY COMPONENTS.
2. THE MAIN BREAKER SHALL BE INTERLOCKED WITH CABINET DOOR.
3. ALL INTERCONNECTING WIRING, EXCEPT FOR CONTROL CIRCUITS, SHALL BE 600 VOLT INSULATION AND RATED FOR NOT LESS 90 DEGREES C.
4. POWER DISTRIBUTION WIRING ON THE LINE SIDE OF FUSES SHALL BE 14 AVG MINIMUM. CONTROL WIRING ON THE SECONDARY SIDE OF FUSES SHALL BE 16 AVG MINIMUM. ELECTRONIC ANALOG CIRCUITS SHALL USE 16 AVG SHIELDED, TWISTED PAIR CABLES, INSULATED FOR NOT LESS THAN 300 VOLTS.
5. POWER AND LOV VOLTAGE DC WIRING SYSTEMS SHALL BE ROUTED IN SEPARATE WIREWAYS. CROSSING OF DIFFERENT SYSTEM WIRES SHALL BE AT RIGHT ANGLES. DIFFERENT SYSTEM WIRES ROUTED PARALLEL TO EACH OTHER SHALL BE SEPARATED BY AT LEAST 2 INCHES. DIFFERENT WIRING SYSTEMS SHALL TERMINATE ON SEPARATE TERMINAL BLOCKS. WIRING TROUGHS SHALL NOT BE FILLED TO MORE THAN 60 PERCENT VISIBLE FILL.
6. ALL WIRING SHALL TERMINATE IN A WATER TERMINAL BOARD, RSSD TYPE AND NUMBERED. THE MASTER TERMINAL BOARD SHALL HAVE A MINIMUM OF 25 PERCENT SPARES. TERMINAL BLOCKS SHALL BE ARRANGED IN VERTICAL ROWS AND SEPARATED INTO THE FOLLOWING GROUPS: POWER, AC CONTROL, DC CONTROL, AND SIGNAL. TERMINAL BLOCKS SHALL BE RATED 20 AMPS, A MINIMUM AND 600 VOLTS RATING. THEY SHALL BE THE RAISED CHANNEL WIDE TYPE. WIRING CONNECTORS SHALL BE THE HOOK FORK TYPE WITH NON-INSULATED BARREL FOR CRIMP TYPE COMPRESSION CONNECTION TO THE WIRE. WIRE AND TYPE MARKERS SHALL BE THE SLEEVE TYPE WITH HEAT IMPRESSED LETTERS AND NUMBERS. DIRECT INTERLOCK WIRING BETWEEN EQUIPMENT WILL NOT BE ALLOWED. ONLY ONE SIDE OF A TERMINAL BLOCK ROW SHALL BE USED FOR INTERNAL WIRING. THE FIELD WIRING SIDE OF THE TERMINAL SHALL NOT BE WITHIN 6-INCHES OF THE SIDE PANEL OR ADJACENT TERMINAL.
7. ALL WIRING TO HAND SWITCHES, ETC., WHICH ARE LIVE CIRCUITS INDEPENDENT OF THE PANEL'S NORMAL CIRCUIT BREAKER PROTECTION SHALL BE CLEARLY IDENTIFIED AS SUCH.
8. ALL COMPONENTS SHALL BE MOUNTED IN A MANNER THAT SHALL PERMIT SERVICING, ADJUSTMENT, TESTING AND REMOVAL WITHOUT DISCONNECTING, MOVING OR REMOVING ANY OTHER COMPONENT. COMPONENTS MOUNTED ON THE INSIDE OF PANELS SHALL BE MOUNTED ON REMOVABLE PLATES AND NOT DIRECTLY TO THE ENCLOSURE. INTERNAL COMPONENTS SHALL BE IDENTIFIED WITHPLASTIC ENGRAVED TAGS ATTATCHED WITH DRIVE PINS ADJACENT TO EACH COMPONENT IDENTIFYING THE COMPONENT IN ACCORDANCE WITH THE DRAWINGS.

LEGEND :

- FIELD WIRING BY CONTRACTOR
- TERMINALS FOR FIELD WIRING
- EQUIPMENT NOT SUPPLIED BY C2i
- REVISION

COLOR CODE :

BLACK	AC HOT
WHITE	AC NEUTRAL
GREEN	AC GROUND
RED	AC CONTROL
BLUE	DC POSITIVE
GRAY	DC NEGATIVE
ORANGE	DC CONTROL
SHIELDED CABLE :	
WHITE	SIGNAL POSITIVE
BLACK	SIGNAL NEGATIVE
RED	REFERENCE

NO	DATE	REVISION	BY	NO	DATE	REVISION	BY
1	1-13-93	AS NOTED	MFB				

C2i CONTROL INSTRUMENTS, INC.
ATLANTA, GEORGIA

AIR BUBBLER PANEL
SCHEMATIC, CONNECTION & PIPING DIAGRAM
ARLINGTON COUNTY, VIRGINIA
WATER POLLUTION CONTROL PLANT

DRAWN	APP'D	SCALE	CUSTOMER NO.	DWG. NO.	SHEET
VNS		AS NOTED		ED-7959	2 of 2
FILE 313-4-2		DATE 9/17/92	JOB NO. 313		

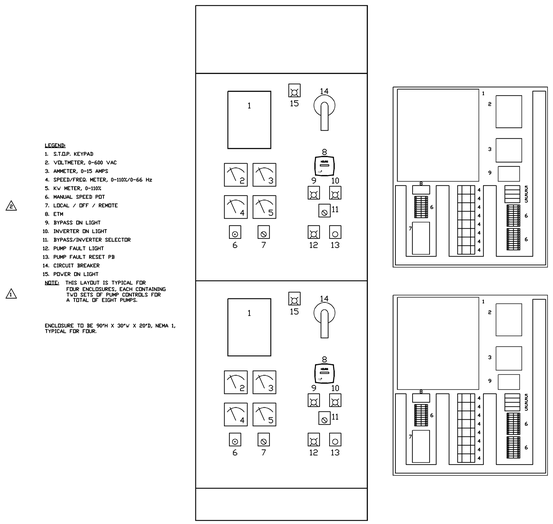

LEGEND:

1. S.T.D.P. KEYPAD
2. VOLTMETER, 0-600 VAC
3. AMMETER, 0-25 AMPS
4. SPEED/FREQ. METER, 0-1020/0-66 Hz
5. KW METER, 0-120%
6. MANUAL SPEED POT
7. LOCAL / OFF / REMOTE
8. ETM
9. BYPASS ON LIGHT
10. INVERTER ON LIGHT
11. BYPASS/INVERTER SELECTOR
12. PUMP FAULT LIGHT
13. PUMP FAULT RESET PB
14. CIRCUIT BREAKER
15. POWER ON LIGHT

NOTE: THIS LAYOUT IS TYPICAL FOR FOUR ENCLOSURES, EACH CONTAINING TWO SETS OF PUMP CONTROLS FOR A TOTAL OF EIGHT PUMPS.

ENCLOSURE TO BE 90"H X 30"W X 20"D, NEMA 1, TYPICAL FOR FOUR.

LEGEND:

1. NAMEPLATE-" VFD
2. NAMEPLATE-"CB-1"
3. NAMEPLATE-"VS"
4. NAMEPLATE-"CR-XXX
5. NAMEPLATE-"FUXXX
6. TERMINALS
7. NAMEPLATE-" SIGNAL CONDITIONER
8. NAMEPLATE-"LA/SP"
9. NAMEPLATE-"CS"

NO	DATE	REVISION	BY	NO	DATE	REVISION	BY
1	1-13-93	PANEL & SUBPAN LAYOUT	MFB				
2	3-01-93	AS NOTED	MFB				

C2i CONTROL INSTRUMENTS, INC.
ATLANTA, GEORGIA

PRIMARY SLUDGE PUMP VFD's (TYP 8)
SCHEMATIC & CONNECTION DIAGRAM
ARLINGTON COUNTY, VIRGINIA
WATER POLLUTION CONTROL PLANT

DRAWN	APP'D	SCALE	CUSTOMER NO.	DWG. NO.	SHEET
VNS		AS NOTED		ED-7960	1 of 2
FILE 313-5-1		DATE 9/17/92	JOB NO. 313		

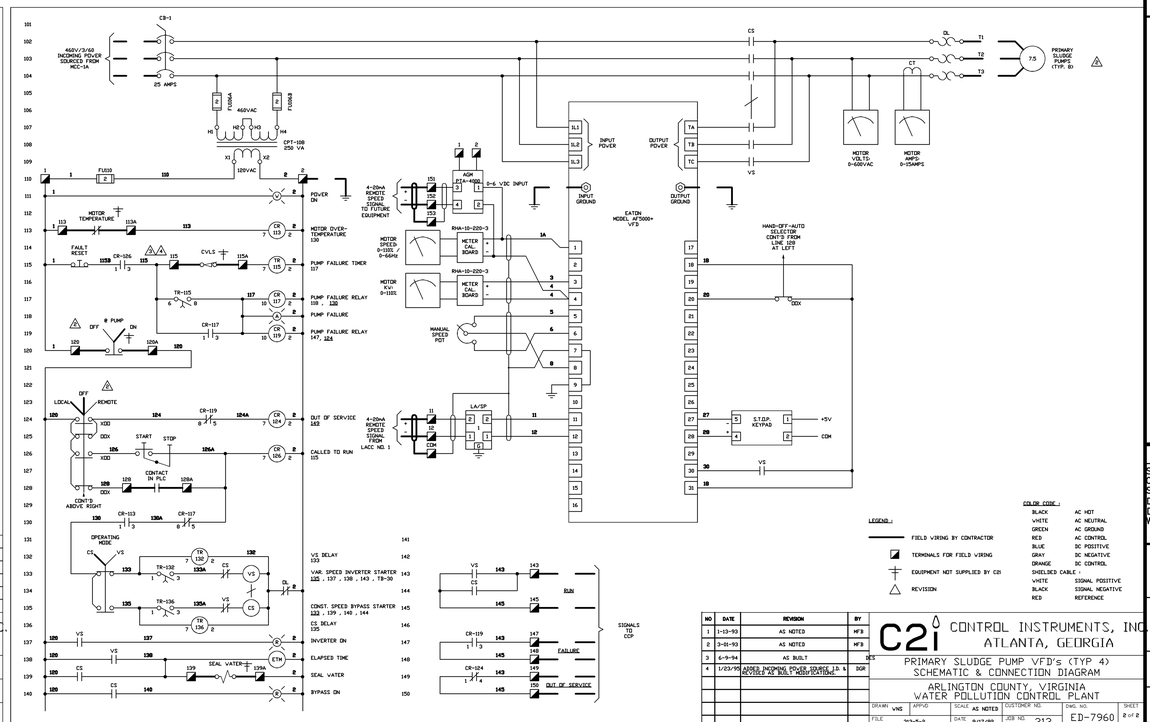

NO	DATE	REVISION	BY
1	1-13-93	AS NOTED	MFB
2	3-01-93	AS NOTED	MFB
3	6-9-94	AS BUILT	MFB
4	1/23/95	ADDED INCOMING POWER SOURCE (3) & REVISED AS BUILT MODIFICATIONS	DGR

C2i CONTROL INSTRUMENTS, INC.
ATLANTA, GEORGIA

PRIMARY SLUDGE PUMP VFD's (TYP 4)
SCHEMATIC & CONNECTION DIAGRAM
ARLINGTON COUNTY, VIRGINIA
WATER POLLUTION CONTROL PLANT

DRAWN	APP'D	SCALE	CUSTOMER NO.	DWG. NO.	SHEET
VNS		AS NOTED		ED-7960	2 of 2
FILE 313-5-2		DATE 9/17/92	JOB NO. 313		

RECORD DRAWING

NO.	DATE	DESCRIPTION
0	11/98	RECORD DRAWING

REVISIONS

DESIGNED BY: .
DRAWN BY: FXP
CHECKED BY/DATE/: ASG
APPROVED BY/DATE:

THIS DRAWING HAS BEEN COMPILED
HAZEN AND SAWYER, P.C.

ARLINGTON COUNTY, VIRGINIA
WATER POLLUTION CONTROL PLANT
UPGRADE AND EXPANSION- PHASE IIB

CONTROL INSTRUMENTS, INC. DRAWINGS
AIR BUBBLER PANEL AND PRIMARY SLUDGE PUMP VFD'S

SCALE NOTE

SCALE BAR SHOWN BELOW IS ONE INCH LONG ON A FULL SIZE DRAWING. WHEN SCALING DRAWINGS, MEASURE BAR TO DETERMINE IF SCALES SHOWN WILL REQUIRE ADJUSTING.

ONE INCH

CONTRACT NO.
9002 - WPC
YEAR 1991
LOCATION CODE
SPECIALTY CODE 1
PROJECT NO.
5002 - 033
FILE NAME
C2i03.DWG
DRAWING NO.
C2i-03
SHEET NO. 305

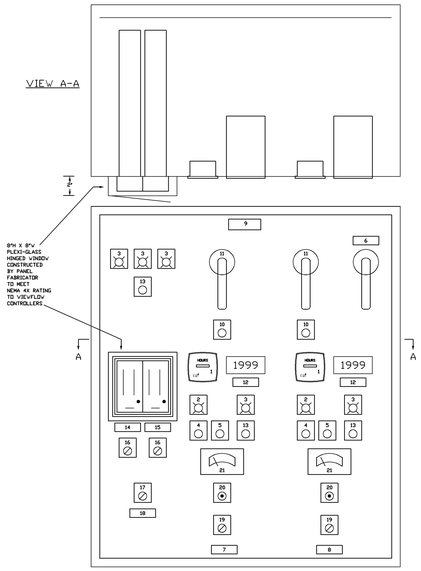

PANEL LAYOUT

PANEL TO BE 48"H X 36"W X 20"D, NEMA 4/14 GAUGE , 306 S.S.

LEGEND :

1. ELAPSED TIME METER(TYP 2)
2. RUN LIGHT(TYP 2)
3. TROUBLE LIGHT(TYP 5)
4. START PUSHBUTTON(TYP 2)
5. STOP PUSHBUTTON (TYP 2)
6. NAMEPLATE- " MAIN POWER BREAKER
7. NAMEPLATE- "SDIUM HYPOCHLORITE PUMP NO.1"
8. NAMEPLATE- "SDIUM HYPOCHLORITE PUMP NO.2"
9. NAMEPLATE- "SSDIUM HYPOCHLORITE TRANSFER PUMP CONTROL PANEL LCP-18P"
10. RESET PUSHBUTTON (TYP 2)
11. MOTOR MECHANICAL DISCONNECT(TYP 2)
12. NAMEPLATE- "SDIUM HYPOCHLORITE PUMP FLOW
13. ALARM RESET (TYP. 3)
14. NAMEPLAE- "PUMP NO. 1 RATIO FLOV CONTROLLER"
15. NAMEPLATE- "PUMP NO. 2 RATIO FLOV CONTROLLER"
16. SELECTOR SVITCH(TYP 2) "PRIMARY INFLUENT WASTEVATER BY-PASS GRIT CHAMBER EFFLUENT"
17. 3 POS. SELECTOR SVITCH "CLOSE OPEN AUTO"
18. NAMEPLAE- "SOLENOID VALVE"
19. SELECTOR SVITCH (TYP 2)"AUTO MANUAL"
20. MANUAL SPEED CONTROL (TYP 2)
21. PERCENT STROKE METER (TYP 2)

SUBPANEL LAYOUT

LEGEND :

1. NAMEPLATE- "MCP1"
2. NAMEPLATE- "MCP2"
3. NAMEPLATE- "M1"
4. NAMEPLATE- "M2"
5. NAMEPLATE- "CPT107"
6. NAMEPLATE- "SP106"
7. NAMEPLATE- "CB-1"
8. NAMEPLATE- "CR-XXX"
9. NAMEPLATE- "SP-XXX"
10. NAMEPLATE- "FU-XXX"

NO	DATE	REVISION	BY
1	03/19/93	PANEL LAYOUT	MF3
	03/31/94	AS BUILT	MF3

C2i CONTROL INSTRUMENTS, INC.
ATLANTA, GEORGIA

CONTROL PANEL LCP-18
SCHEMATIC & CONNECTION DIAGRAM
ARLINGTON COUNTY, VIRGINIA
WATER POLLUTION CONTROL PLANT

DRAWN	APP'D	SCALE	CUSTOMER NO.	DWG. NO.	SHEET
MF3		AS NOTED		ED-7961	1 of 3
FILE 313-6-1		DATE 01-29-93	JOB NO. 313		

CONSTRUCTION NOTES:

1. SUBPANEL SHALL BE TAPPED TO ACCEPT ALL MOUNTING SCREVS. SELF-TAPPING SCREVS SHALL NOT BE USED TO MOUNT ANY COMPONENTS.
2. THE MAIN BREAKER SHALL BE INTERLOCKED VITH CABINET DOOR.
3. ALL INTERCONNECTING VIRING, EXCEPT FOR CONTROL CIRCUITS, SHALL BE 600 VOLT INSULATION AND RATED FOR NOT LESS 90 DEGREES C.
4. POVER DISTRIBUTION VIRING ON THE LINE SIDE OF FUSES SHALL BE 14 AVG MINIMUM. CONTROL VIRING ON THE SECONDARY SIDE OF FUSES SHALL BE 16 AVG MINIMUM. ELECTRONIC ANALOG CIRCUITS SHALL USE 16 AVG SHIELDED, TVISTED PAIR CABLES, INSULATED FOR NOT LESS THAN 300 VOLTS.
5. POVER AND LOV VOLTAGE DC VIRING SYSTEMS SHALL BE ROUTED IN SEPARATE VIREVAYS. CROSSING OF DIFFERENT SYSTEM VIRES SHALL BE AT RIGHT ANGLES. DIFFERENT SYSTEM VIRES ROUTED PARALLEL TO EACH OTHER SHALL BE SEPARATED BY AT LEAST 2 INCHES. IF DIFFERENT VIRING SYSTEMS SHALL TERMINATE ON SEPARATE TERMINAL BLOCKS. VIRING TROUGHS SHALL NOT BE FILLED TO MORE THAN 60 PERCENT VISIBLE FILL.
6. ALL VIRING SHALL TERMINATE IN A MASTER TERMINAL BOARD. RIGID TYPE AND NUMBERED. THE MASTER TERMINAL BOARD SHALL HAVE A MINIMUM OF 25 PERCENT SPARES. TERMINAL BLOCKS SHALL BE ARRANGED IN VERTICAL ROVS AND SEPARATED INTO THE FOLLOVING GROUPS: POVER, AC CONTROL, DC SIGNAL, AND ALARM. TERMINAL BLOCKS SHALL BE BARRIER TYPE VITH A MINIMUM 600 VOLTS RATING. THEY SHALL BE THE RAISED CHANNEL MOUNT TYPE. VIRING CONNECTORS SHALL BE THE HOOK FORK TYPE VITH NON-INSULATED BARREL FOR CRIMP TYPE COMPRESSION CONNECTION TO THE VIRE. VIRE AND TYPE MARKERS SHALL BE THE SLEEVE TYPE VITH HEAT IMPRESSED LETTERS AND NUMBERS. DIRECT INTERLOCK VIRING BETVEEN EQUIPMENT VILL NOT BE ALLOVED. ONLY ONE SIDE OF A TERMINAL BLOCK ROV SHALL BE USED FOR INTERNAL VIRING. THE FIELD VIRING SIDE OF THE TERMINAL SHALL NOT BE VITHIN 6-INCHES OF THE SIDE PANEL OR ADJACENT TERMINAL.
7. ALL VIRING TO HAND SVITCHES, ETC., VHICH ARE LIVE CIRCUITS INDEPENDENT OF THE PANEL'S NORMAL CIRCUIT BREAKER PROTECTION SHALL BE CLEARLY IDENTIFIED AS SUCH.
8. ALL COMPONENTS SHALL BE MOUNTED IN A MANNER THAT SHALL PERMIT SERVICING, ADJUSTMENT, TESTING AND REMOVAL VITHOUT DISCONNECTING, MOVING OR REMOVING ANY OTHER COMPONENT. COMPONENTS MOUNTED ON THE INSIDE OF PANELS SHALL BE MOUNTED ON REMOVABLE PLATES AND NOT DIRECTLY TO THE ENCLOSURE. INTERNAL COMPONENTS SHALL BE IDENTIFIED VITHPLASTIC ENGRAVED TAGS ATTATCHED VITH DRIVE PINS ADJACENT TO EACH COMPONENT IDENTIFYING THE COMPONENT IN ACCORDANCE VITH THE DRAVINGS.

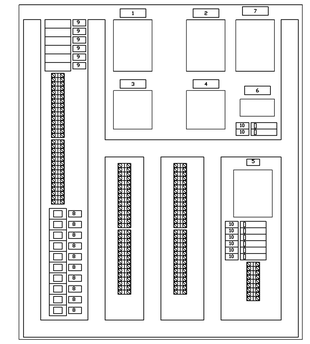

SUBPANEL LAYOUT

LEGEND :

1. NAMEPLATE- "MCP1"
2. NAMEPLATE- "MCP2"
3. NAMEPLATE- "M1"
4. NAMEPLATE- "M2"
5. NAMEPLATE- "CPT107"
6. NAMEPLATE- "SP106"
7. NAMEPLATE- "CB-1"
8. NAMEPLATE- "CR-XXX"
9. NAMEPLATE- "SP-XXX"
10. NAMEPLATE- "FU-XXX"

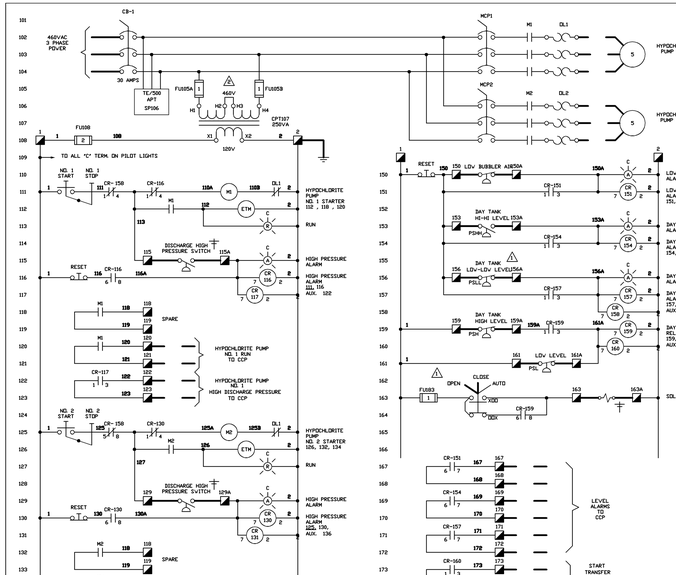

LEGEND :

FIELD VIRING BY CONTRACTOR
TERMINALS FOR FIELD VIRING
EQUIPMENT NOT SUPPLIED BY C2i
REVISION

COLOR CODE :

BLACK	AC HOT
VHITE	AC NEUTRAL
GREEN	AC GROUND
RED	AC CONTROL
BLUE	DC POSITIVE
GRAY	DC NEGATIVE
ORANGE	DC CONTROL
SHIELDED CABLE :	
VHITE	SIGNAL POSITIVE
BLACK	SIGNAL NEGATIVE
RED	REFERENCE

NO	DATE	REVISION	BY
1	03/17/93	AS NOTED	MF3
2	07/09/93	AS NOTED	MF3

C2i CONTROL INSTRUMENTS, INC.
ATLANTA, GEORGIA

CONTROL PANEL LCP-18
SCHEMATIC & CONNECTION DIAGRAM
ARLINGTON COUNTY, VIRGINIA
WATER POLLUTION CONTROL PLANT

DRAWN	APP'D	SCALE	CUSTOMER NO.	DWG. NO.	SHEET
MF3		AS NOTED		ED-7961	2 of 3
FILE 313-6-2		DATE 01/22/93	JOB NO. 313		

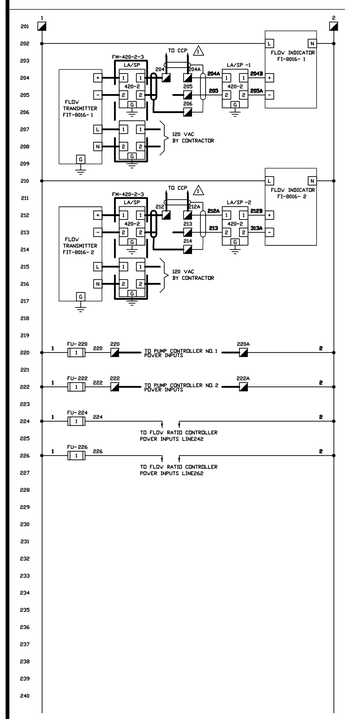

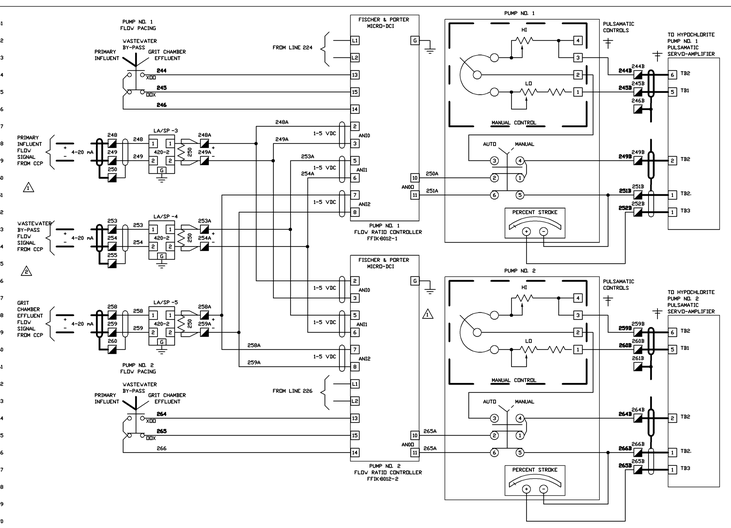

LEGEND :

FIELD VIRING BY CONTRACTOR
TERMINALS FOR FIELD VIRING
EQUIPMENT NOT SUPPLIED BY C2i
REVISION

COLOR CODE :

BLACK	AC HOT
VHITE	AC NEUTRAL
GREEN	AC GROUND
RED	AC CONTROL
BLUE	DC POSITIVE
GRAY	DC NEGATIVE
ORANGE	DC CONTROL
SHIELDED CABLE :	
VHITE	SIGNAL POSITIVE
BLACK	SIGNAL NEGATIVE
RED	REFERENCE

NO	DATE	REVISION	BY
1	03/17/93	FLOV PACING OF PUMPS	MF3
1	03/31/94	AS BUILT	MF3

C2i CONTROL INSTRUMENTS, INC.
ATLANTA, GEORGIA

CONTROL PANEL LCP-18
SCHEMATIC & CONNECTION DIAGRAM
ARLINGTON COUNTY, VIRGINIA
WATER POLLUTION CONTROL PLANT

DRAWN	APP'D	SCALE	CUSTOMER NO.	DWG. NO.	SHEET
MF3		AS NOTED		ED-7961	3 of 3
FILE 313-6-3		DATE 01/22/93	JOB NO. 313		

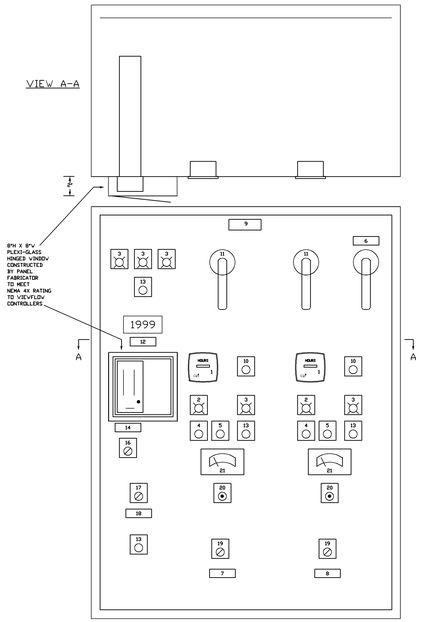

PANEL LAYOUT

PANEL TO BE 48"H X 36"W X 20"D, NEMA 4/14 GAUGE , 306 S.S.

LEGEND :

1. ELAPSED TIME METER(TYP 2)
2. RUN LIGHT(TYP 2)
3. TROUBLE LIGHT(TYP 5)
4. START PUSHBUTTON(TYP 2)
5. STOP PUSHBUTTON (TYP 2)
6. NAMEPLATE- " MAIN POVER BREAKER
7. NAMEPLATE- "SDIUM HYPOCHLORITE PUMP NO.1"
8. NAMEPLATE- "SDIUM HYPOCHLORITE PUMP NO.2"
9. NAMEPLATE- "SSDIUM HYPOCHLORITE TRANSFER PUMP CONTROL PANEL LCP-19P"
10. RESET PUSHBUTTON (TYP 2)
11. MOTOR MECHANICAL DISCONNECT(TYP 2)
12. NAMEPLATE- "SDIUM HYPOCHLORITE PUMP DISTRIBUTION FLOV
13. ALARM RESET (TYP. 3)
14. NAMEPLAE- " RATIO FLOV CONTROLLER"
15.
16. SELECTOR SVITCH"MAS. SECONDARY BY-PASS"
17. 3 POS. SELECTOR SVITCH "AUTO CLOSED OPEN"
18. NAMEPLAE- "SOLENOID VALVE"
19. SELECTOR SVITCH (TYP 2)"AUTO MANUAL"
20. MANUAL SPEED CONTROL (TYP 2)
21. PERCENT STROKE METER (TYP 2)

CONSTRUCTION NOTES:

1. SUBPANEL SHALL BE TAPPED TO ACCEPT ALL MOUNTING SCREVS. SELF-TAPPING SCREVS SHALL NOT BE USED TO MOUNT ANY COMPONENTS.
2. THE MAIN BREAKER SHALL BE INTERLOCKED VITH CABINET DOOR.
3. ALL INTERCONNECTING VIRING, EXCEPT FOR CONTROL CIRCUITS, SHALL BE 600 VOLT INSULATION AND RATED FOR NOT LESS 90 DEGREES C.
4. POVER DISTRIBUTION VIRING ON THE LINE SIDE OF FUSES SHALL BE 14 AVG MINIMUM. CONTROL VIRING ON THE SECONDARY SIDE OF FUSES SHALL BE 16 AVG MINIMUM. ELECTRONIC ANALOG CIRCUITS SHALL USE 16 AVG SHIELDED, TVISTED PAIR CABLES, INSULATED FOR NOT LESS THAN 300 VOLTS.
5. POVER AND LOV VOLTAGE DC VIRING SYSTEMS SHALL BE ROUTED IN SEPARATE VIREVAYS. CROSSING OF DIFFERENT SYSTEM VIRES SHALL BE AT RIGHT ANGLES. DIFFERENT SYSTEM VIRES ROUTED PARALLEL TO EACH OTHER SHALL BE SEPARATED BY AT LEAST 2 INCHES. IF DIFFERENT VIRING SYSTEMS SHALL TERMINATE ON SEPARATE TERMINAL BLOCKS. VIRING TROUGHS SHALL NOT BE FILLED TO MORE THAN 60 PERCENT VISIBLE FILL.
6. ALL VIRING SHALL TERMINATE IN A MASTER TERMINAL BOARD. RIGID TYPE AND NUMBERED. THE MASTER TERMINAL BOARD SHALL HAVE A MINIMUM OF 25 PERCENT SPARES. TERMINAL BLOCKS SHALL BE ARRANGED IN VERTICAL ROVS AND SEPARATED INTO THE FOLLOVING GROUPS: POVER, AC CONTROL, DC SIGNAL, AND ALARM. TERMINAL BLOCKS SHALL BE BARRIER TYPE VITH A MINIMUM 600 VOLTS RATING. THEY SHALL BE THE RAISED CHANNEL MOUNT TYPE. VIRING CONNECTORS SHALL BE THE HOOK FORK TYPE VITH NON-INSULATED BARREL FOR CRIMP TYPE COMPRESSION CONNECTION TO THE VIRE. VIRE AND TYPE MARKERS SHALL BE THE SLEEVE TYPE VITH HEAT IMPRESSED LETTERS AND NUMBERS. DIRECT INTERLOCK VIRING BETVEEN EQUIPMENT VILL NOT BE ALLOVED. ONLY ONE SIDE OF A TERMINAL BLOCK ROV SHALL BE USED FOR INTERNAL VIRING. THE FIELD VIRING SIDE OF THE TERMINAL SHALL NOT BE VITHIN 6-INCHES OF THE SIDE PANEL OR ADJACENT TERMINAL.
7. ALL VIRING TO HAND SVITCHES, ETC., VHICH ARE LIVE CIRCUITS INDEPENDENT OF THE PANEL'S NORMAL CIRCUIT BREAKER PROTECTION SHALL BE CLEARLY IDENTIFIED AS SUCH.
8. ALL COMPONENTS SHALL BE MOUNTED IN A MANNER THAT SHALL PERMIT SERVICING, ADJUSTMENT, TESTING AND REMOVAL VITHOUT DISCONNECTING, MOVING OR REMOVING ANY OTHER COMPONENT. COMPONENTS MOUNTED ON THE INSIDE OF PANELS SHALL BE MOUNTED ON REMOVABLE PLATES AND NOT DIRECTLY TO THE ENCLOSURE. INTERNAL COMPONENTS SHALL BE IDENTIFIED VITHPLASTIC ENGRAVED TAGS ATTATCHED VITH DRIVE PINS ADJACENT TO EACH COMPONENT IDENTIFYING THE COMPONENT IN ACCORDANCE VITH THE DRAVINGS.

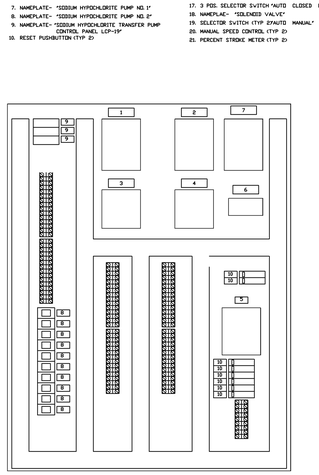

SUBPANEL LAYOUT

LEGEND :

1. NAMEPLATE- "MCP1"
2. NAMEPLATE- "MCP2"
3. NAMEPLATE- "M1"
4. NAMEPLATE- "M2"
5. NAMEPLATE- "CPT107"
6. NAMEPLATE- "SP106"
7. NAMEPLATE- "CB-1"
8. NAMEPLATE- "CR-XXX"
9. NAMEPLATE- "SP-XXX"
10. NAMEPLATE- "FU-XXX"

NO	DATE	REVISION	BY
1	03/19/93	PANEL LAYOUT	MF3

C2i CONTROL INSTRUMENTS, INC.
ATLANTA, GEORGIA

CONTROL PANEL LCP-19
SCHEMATIC & CONNECTION DIAGRAM
ARLINGTON COUNTY, VIRGINIA
WATER POLLUTION CONTROL PLANT

DRAWN	APP'D	SCALE	CUSTOMER NO.	DWG. NO.	SHEET
MF3		AS NOTED		ED-7962	1 of 3
FILE 313-7-1		DATE 01/22/93	JOB NO. 313		

NO	DATE	REVISION	BY
0	11/98	RECORD DRAWING	FXP

DESIGNED BY: .
DRAWN BY: FXP
CHECKED BY/DATE/:
APPROVED BY/DATE:

THIS DRAVING HAS BEEN COMPILED
HAZEN AND SAVYER, P.C.

ARLINGTON COUNTY, VIRGINIA
WATER POLLUTION CONTROL PLANT
UPGRADE AND EXPANSION- PHASE IIB

CONTROL INSTRUMENTS, INC. DRAVINGS
CONTROL PANELS LCP-18 AND LCP-19

SCALE NOTE

SCALE BAR SHOVN BELOV IS ONE INCH LONG ON A FULL SIZE DRAVING. VHEN SCALING DRAVINGS, MEASURE BAR TO DETERMINE IF SCALES SHOVN VILL REQUIRE ADJUSTING.

ONE INCH

CONTRACT NO.
9002 - VPC
YEAR 1991
LOCATION CODE
SPECIALTY CODE I
PROJECT NO.
5002 - 033
FILE NAME
C2i04.DVG
DRAVING NO.
C2i-04
SHEET NO. 306

RECORD DRAVING

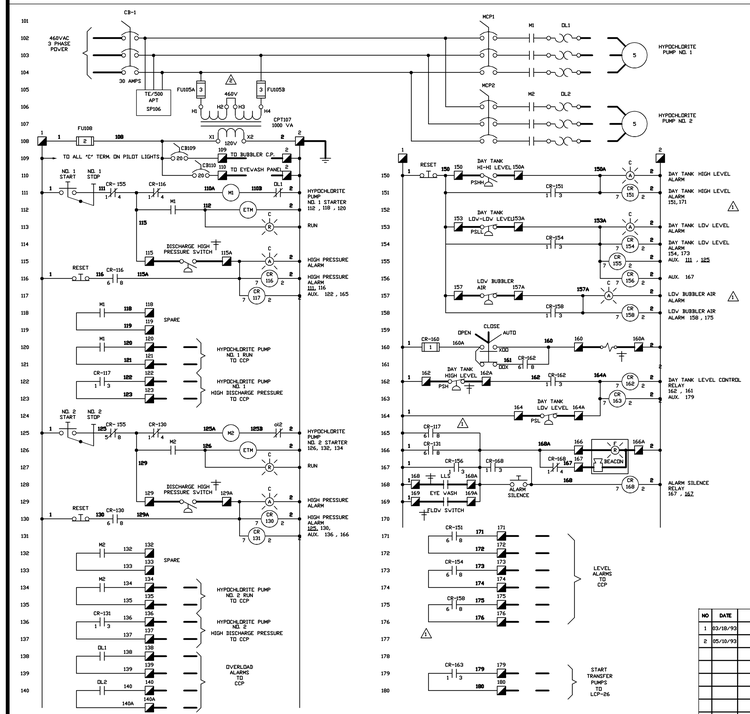

LEGEND :

- FIELD WIRING BY CONTRACTOR
- TERMINALS FOR FIELD WIRING
- EQUIPMENT NOT SUPPLIED BY C2i
- REVISION

COLOR CODE :

BLACK	AC HOT
WHITE	AC NEUTRAL
GREEN	AC GROUND
RED	AC CONTROL
BLUE	DC POSITIVE
GRAY	DC NEGATIVE
ORANGE	DC CONTROL
SHIELDED CABLE :	
WHITE	SIGNAL POSITIVE
BLACK	SIGNAL NEGATIVE
RED	REFERENCE

NO	DATE	REVISION	BY
1	03/18/93	AS NOTED	MF'B
2	05/10/93	AS BUILT	MF'B

C2i CONTROL INSTRUMENTS, INC.
ATLANTA, GEORGIA

CONTROL PANEL LCP-19
SCHEMATIC & CONNECTION DIAGRAM
ARLINGTON COUNTY, VIRGINIA
WATER POLLUTION CONTROL PLANT

DRAWN	APP'D	SCALE	CUSTOMER NO.	DWG. NO.	SHEET
MF'B		AS NOTED		ED-7962	2 of 3
FILE 313-7-2		DATE 02/01/93	JOB NO. 313		

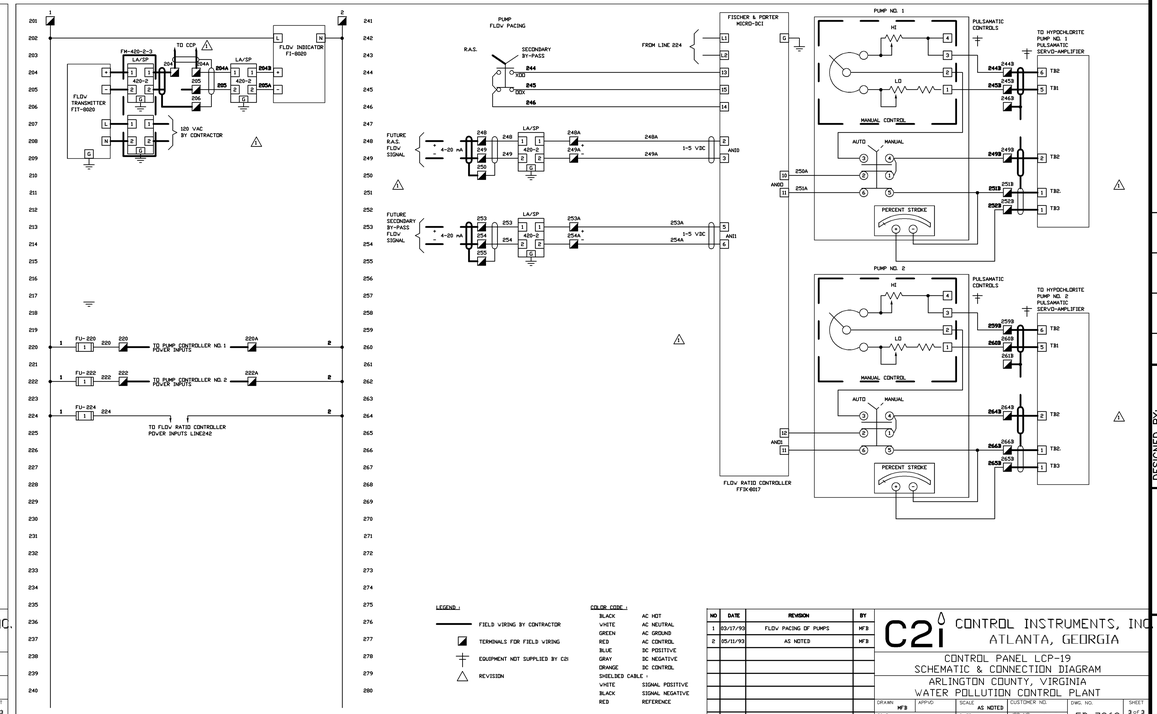

LEGEND :

- FIELD WIRING BY CONTRACTOR
- TERMINALS FOR FIELD WIRING
- EQUIPMENT NOT SUPPLIED BY C2i
- REVISION

COLOR CODE :

BLACK	AC HOT
WHITE	AC NEUTRAL
GREEN	AC GROUND
RED	AC CONTROL
BLUE	DC POSITIVE
GRAY	DC NEGATIVE
ORANGE	DC CONTROL
SHIELDED CABLE :	
WHITE	SIGNAL POSITIVE
BLACK	SIGNAL NEGATIVE
RED	REFERENCE

NO	DATE	REVISION	BY
1	03/17/93	FLOV PACING OF PUMPS	MF'B
2	05/11/93	AS NOTED	MF'B

C2i CONTROL INSTRUMENTS, INC.
ATLANTA, GEORGIA

CONTROL PANEL LCP-19
SCHEMATIC & CONNECTION DIAGRAM
ARLINGTON COUNTY, VIRGINIA
WATER POLLUTION CONTROL PLANT

DRAWN	APP'D	SCALE	CUSTOMER NO.	DWG. NO.	SHEET
MF'B		AS NOTED		ED-7962	3 of 3
FILE 313-7-3		DATE 02/02/93	JOB NO. 313		

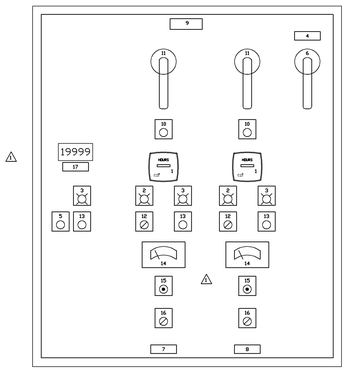

PANEL LAYOUT

PANEL TO BE 48"H X 36"W X 8"D, NEMA 4% 14 GAUGE , 306 S.S.

LEGEND :

1. ELAPSED TIME METER(TYP 2)
2. RUN LIGHT(TYP 2)
3. TROUBLE LIGHT(TYP 5)
4. NAMEPLATE="MAIN BREAKER"
5. ALARM SILENCE
6. MAIN POWER BREAKER
7. NAMEPLATE= "1000LM HYPOCHLORITE TRANSFER PUMP NO.1"
8. NAMEPLATE= "1000LM HYPOCHLORITE TRANSFER PUMP NO.2"
9. NAMEPLATE= "1000LM HYPOCHLORITE TRANSFER PUMP CONTROL PANEL LCP-26"
10. RESET PUSHBUTTON (TYP 2)
11. MOTOR MECHANICAL DISCONNECT (TYP 2)
12. 3 POS. SELECTOR SWITCH "HAND OFF AUTO"
13. ALARM RESET (TYP. 2)
14. PERCENT STROKE METER (TYP. 2)
15. MANUAL SPEED CONTROL (TYP. 2)
16. 2 POS. SELECTOR SWITCH "SPEED CONTROL OFF ON"
17. NAMEPLATE= "1000LM HYPOCHLORITE TRANSFER PUMP DISTRIBUTION FLOV (GPM)"

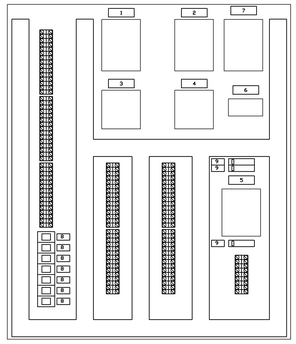

SUBPANEL LAYOUT

CONSTRUCTION NOTES:

1. SUBPANEL SHALL BE TAPPED TO ACCEPT ALL MOUNTING SCREWS. SELF-TAPPING SCREWS SHALL NOT BE USED TO MOUNT ANY COMPONENTS.
2. THE MAIN BREAKER SHALL BE INTERLOCKED WITH CABINET DOOR.
3. ALL INTERCONNECTING WIRING, EXCEPT FOR CONTROL CIRCUITS, SHALL BE 600 VOLT INSULATION AND RATED FOR NOT LESS 90 DEGREES C.
4. POWER DISTRIBUTION WIRING ON THE LINE SIDE OF FUSES SHALL BE 14 AVG MINIMUM. CONTROL WIRING ON THE SECONDARY SIDE OF FUSES SHALL BE 16 AVG MINIMUM. ELECTRONIC ANALOG CIRCUITS SHALL USE 16 AVG SHIELDED, TWISTED PAIR CABLES, INSULATED FOR NOT LESS THAN 300 VOLTS.
5. POWER AND LOW VOLTAGE DC WIRING SYSTEMS SHALL BE ROUTED IN SEPARATE WIREWAYS. CROSSING OF DIFFERENT SYSTEM WIRES SHALL BE AT RIGHT ANGLES. DIFFERENT SYSTEM WIRES ROUTED PARALLEL TO EACH OTHER SHALL BE SEPARATED BY AT LAST 2 INCHES. EACH WIRING SYSTEMS SHALL TERMINATE ON SEPARATE TERMINAL BLOCKS. WIRING TROUGHS SHALL NOT BE FILLED TO MORE THAN 60 PERCENT VISIBLE FILL.
6. ALL WIRING SHALL TERMINATE IN A MASTER TERMINAL BOARD, RIGID TYPE AND NUMBERED. THE MASTER TERMINAL BOARD SHALL HAVE A MINIMUM OF 25 PERCENT SPARES. TERMINAL BLOCKS SHALL BE ARRANGED IN VERTICAL ROWS AND SEPARATED INTO THE FOLLOWING GROUPS: POWER, CONTROL, ANALOG SIGNAL AND DISCRETE SIGNAL. TERMINAL BLOCKS SHALL BE RATED AT A MINIMUM 600 VOLTS RATING. THEY SHALL BE THE BARRIER CHANNEL MOUNT TYPE. WIRING CONNECTORS SHALL BE THE HIGH PRESSURE WITH NON-INSULATED BARREL FOR CRIMP TYPE COMPRESSION CONNECTION TO THE WIRE. WIRE AND TYPE MARKERS SHALL BE THE SLEEVE TYPE WITH HEAT IMPRESSED LETTERS AND NUMBERS. DIRECT INTERLOCK WIRING BETWEEN EQUIPMENT WILL NOT BE ALLOWED. ONLY ONE SIDE OF A TERMINAL BLOCK MAY SHALL BE USED FOR INTERNAL WIRING. THE FIELD WIRING SIDE OF THE TERMINAL SHALL NOT BE WITHIN 6-INCHES OF THE SIDE PANEL OR ADJACENT TERMINAL.
7. ALL WIRING TO HAND SWITCHES, ETC, WHICH ARE LIVE CIRCUITS INDEPENDENT OF THE PANEL'S NORMAL CIRCUIT BREAKER PROTECTION SHALL BE CLEARLY IDENTIFIED AS SUCH.
8. ALL COMPONENTS SHALL BE MOUNTED IN A MANNER THAT SHALL PERMIT SERVICING, ADJUSTMENT, TESTING AND REMOVAL WITHOUT DISCONNECTING, MOVING OR REMOVING ANY OTHER COMPONENT. COMPONENTS MOUNTED ON THE INSIDE IF PANELS SHALL BE MOUNTED ON REMOVABLE PLATES AND NOT DIRECTLY TO THE ENCLOSURE. INTERNAL COMPONENTS SHALL BE IDENTIFIED WITHPLASTIC ENGRAVED TAGS ATTATCHED WITH DRIVE PINS ADJACENT TO EACH COMPONENT IDENTIFYING THE COMPONENT IN ACCORDANCE WITH THE DRAWINGS.

LEGEND :

1. NAMEPLATE= "MCP1"
2. NAMEPLATE= "MCP2"
3. NAMEPLATE= "M1"
4. NAMEPLATE= "M2"
5. NAMEPLATE= "CPT107"
6. NAMEPLATE= "CP106"
7. NAMEPLATE= "CB-1"
8. NAMEPLATE= "CR-XXX"
9. NAMEPLATE= "FU-XXX"

NO	DATE	REVISION	BY
1	3-31-93	AS NOTED	MF'B
2	4-16-93	AS NOTED	MF'B

C2i CONTROL INSTRUMENTS, INC.
ATLANTA, GEORGIA

CONTROL PANEL LCP-26
SCHEMATIC & CONNECTION DIAGRAM
ARLINGTON COUNTY, VIRGINIA
WATER POLLUTION CONTROL PLANT

DRAWN	APP'D	SCALE	CUSTOMER NO.	DWG. NO.	SHEET
MF'B		AS NOTED		ED-7963	1 of 2
FILE 313-8-1		DATE 02-04-93	JOB NO. 313		

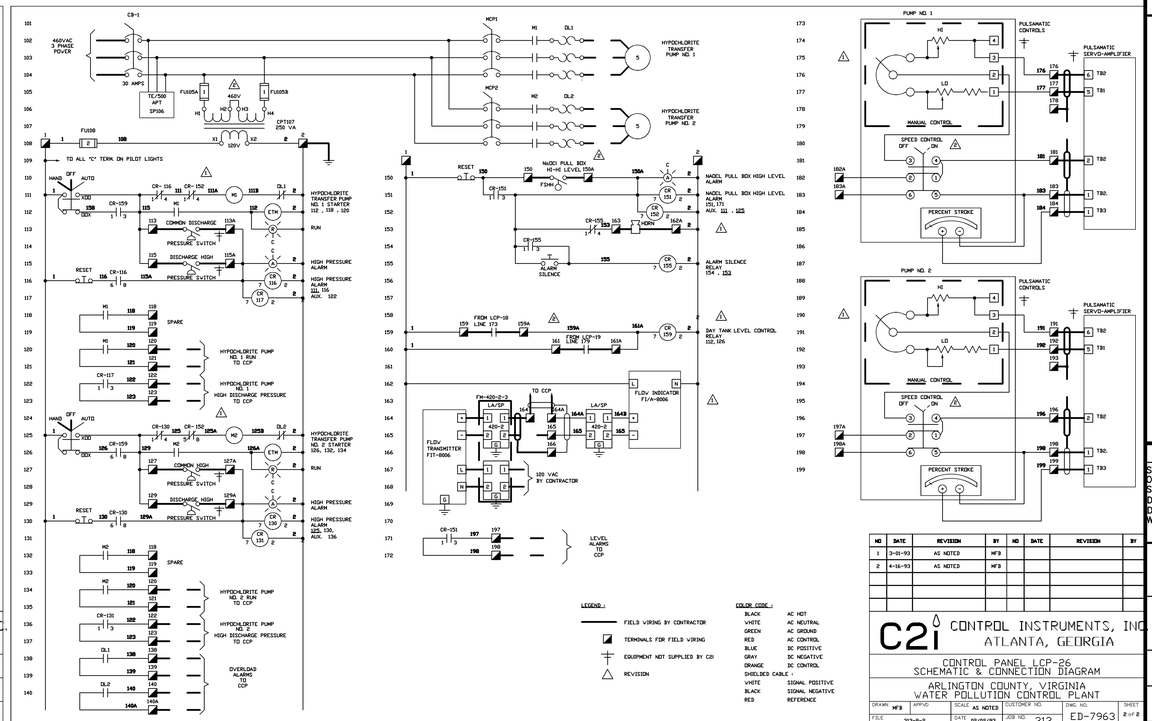

LEGEND :

- FIELD WIRING BY CONTRACTOR
- TERMINALS FOR FIELD WIRING
- EQUIPMENT NOT SUPPLIED BY C2i
- REVISION

COLOR CODE :

BLACK	AC HOT
WHITE	AC NEUTRAL
GREEN	AC GROUND
RED	AC CONTROL
BLUE	DC POSITIVE
GRAY	DC NEGATIVE
ORANGE	DC CONTROL
SHIELDED CABLE :	
WHITE	SIGNAL POSITIVE
BLACK	SIGNAL NEGATIVE
RED	REFERENCE

NO	DATE	REVISION	BY	NO	DATE	REVISION	BY
1	3-31-93	AS NOTED	MF'B				
2	4-16-93	AS NOTED	MF'B				

C2i CONTROL INSTRUMENTS, INC.
ATLANTA, GEORGIA

CONTROL PANEL LCP-26
SCHEMATIC & CONNECTION DIAGRAM
ARLINGTON COUNTY, VIRGINIA
WATER POLLUTION CONTROL PLANT

DRAWN	APP'D	SCALE	CUSTOMER NO.	DWG. NO.	SHEET
MF'B		AS NOTED		ED-7963	2 of 2
FILE 313-8-2		DATE 02/02/93	JOB NO. 313		

RECORD DRAWING

NO.	DATE	DESCRIPTION
0	11/98	RECORD DRAWING

DRAWN BY: FXP
CHECKED BY/DATE/: ASG
APPROVED BY/DATE: CHKD

REVISIONS

THIS DRAWING HAS BEEN COMPILED
HAZEN AND SAWYER, P.C.

ARLINGTON COUNTY, VIRGINIA
WATER POLLUTION CONTROL PLANT
UPGRADE AND EXPANSION- PHASE IIIB

CONTROL INSTRUMENTS, INC. DRAWINGS
CONTROL PANELS LCP-19 AND LCP-26

SCALE NOTE

SCALE BAR SHOWN BELOW IS ONE INCH LONG ON A FULL SIZE DRAWING. WHEN SCALING DRAWINGS, MEASURE BAR TO DETERMINE IF SCALES SHOWN WILL REQUIRE ADJUSTING.

← ONE INCH →

CONTRACT NO.
9002 - WPC

YEAR 1991

LOCATION CODE

SPECIALTY CODE
I

PROJECT NO.
5002 - 033

FILE NAME
C2i05.DWG

DRAWING NO.
C2i-05

SHEET NO. 307

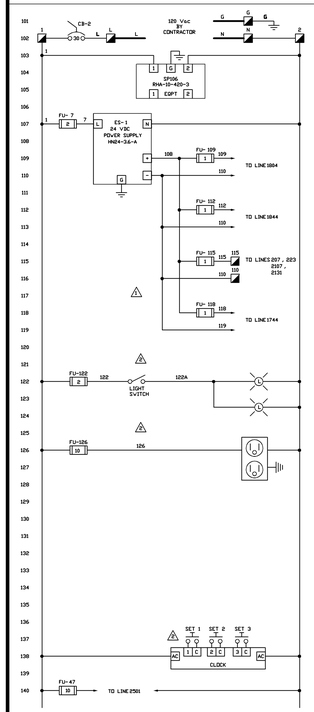

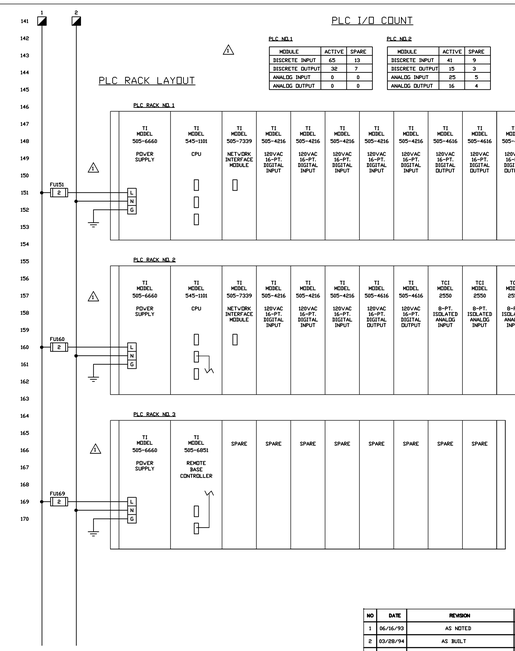

PLC I/O COUNT

PLC NO.1

MODULE	ACTIVE	SPARE
DISCRETE INPUT	65	15
DISCRETE OUTPUT	32	7
ANALOG INPUT	0	0
ANALOG OUTPUT	0	0

PLC NO.2

MODULE	ACTIVE	SPARE
DISCRETE INPUT	41	9
DISCRETE OUTPUT	25	3
ANALOG INPUT	25	5
ANALOG OUTPUT	16	4

LEGEND :
- FIELD WIRING BY CONTRACTOR
- TERMINALS FOR FIELD WIRING
- EQUIPMENT NOT SUPPLIED BY C2i
- REVISION

COLOR CODE :

BLACK	AC HOT
WHITE	AC NEUTRAL
GREEN	AC GROUND
RED	AC CONTROL
BLUE	DC POSITIVE
GRAY	DC NEGATIVE
ORANGE	DC CONTROL
SHIELDED CABLE :	
WHITE	SIGNAL POSITIVE
BLACK	SIGNAL NEGATIVE
RED	REFERENCE

NO	DATE	REVISION	BY
1	06/16/93	AS NOTED	MFB
2	03/28/94	AS BUILT	DCS

C2i CONTROL INSTRUMENTS, INC.
ATLANTA, GEORGIA

MAIN CONTROL PANEL CCP
SCHEMATIC & CONNECTION DIAGRAM
ARLINGTON COUNTY, VIRGINIA
WATER POLLUTION CONTROL PLANT

DRAWN	APP'D	SCALE	CUSTOMER NO.	DWG. NO.	SHEET
MFB		AS NOTED		ED-7964	1 of 30
FILE 313-9-1		DATE 02/18/93	JOB NO. 313		

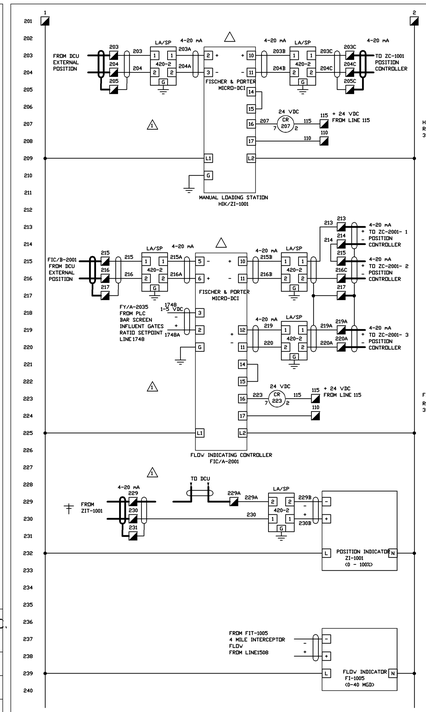

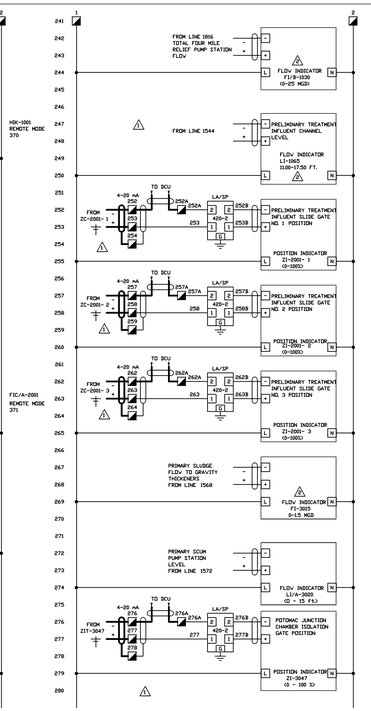

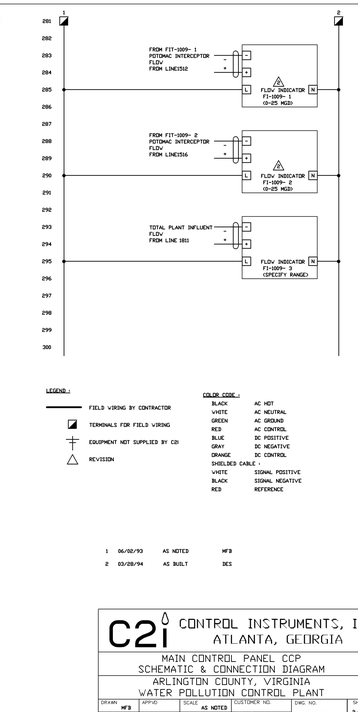

NO	DATE	REVISION	BY
1	06/02/93	AS NOTED	MFB
2	03/28/94	AS BUILT	DCS

C2i CONTROL INSTRUMENTS, INC.
ATLANTA, GEORGIA

MAIN CONTROL PANEL CCP
SCHEMATIC & CONNECTION DIAGRAM
ARLINGTON COUNTY, VIRGINIA
WATER POLLUTION CONTROL PLANT

DRAWN	APP'D	SCALE	CUSTOMER NO.	DWG. NO.	SHEET
MFB		AS NOTED		ED-7964	2 of 30
FILE 313-9-2		DATE 02/15/93	JOB NO. 313		

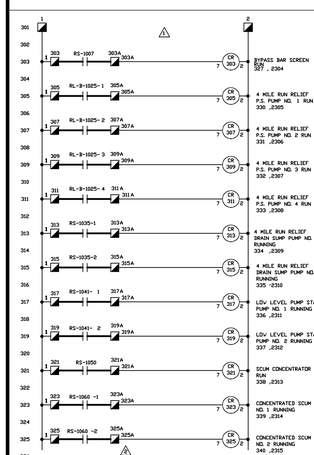

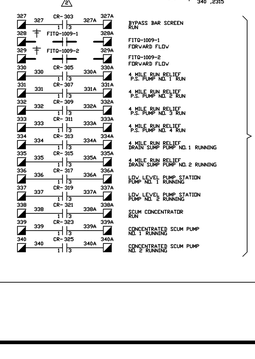

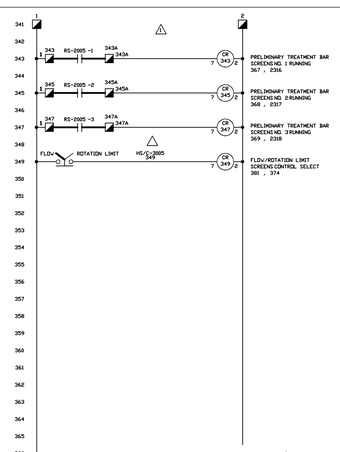

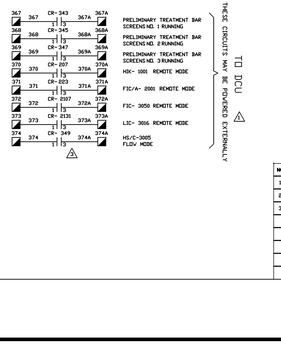

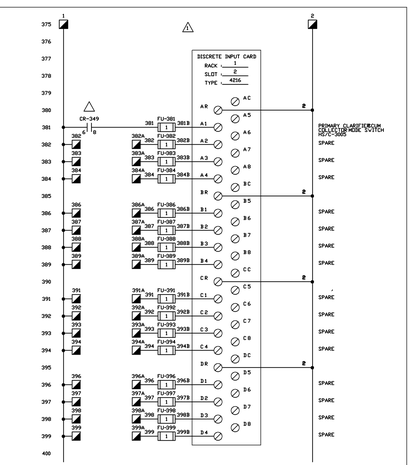

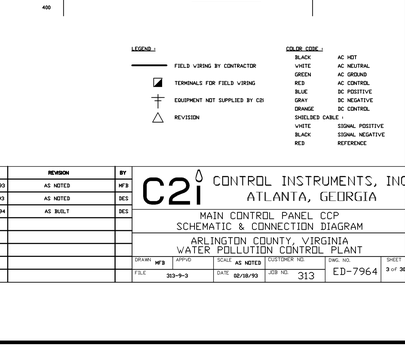

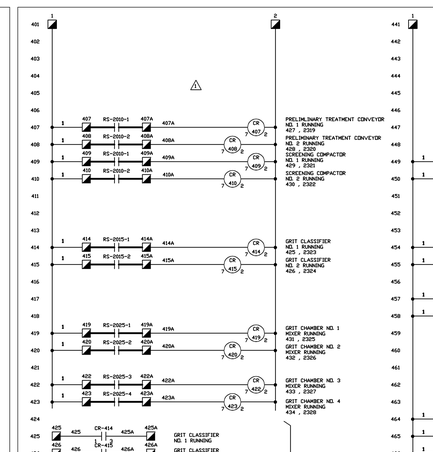

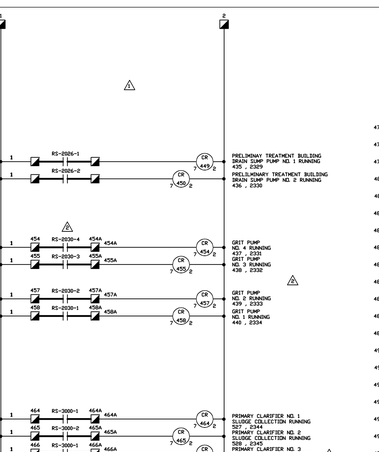

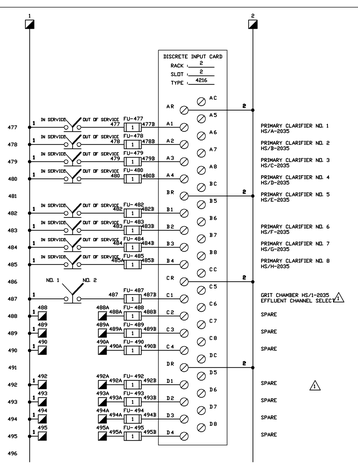

NO	DATE	REVISION	BY
1	06/04/93	AS NOTED	MFB
2	03/28/94	AS BUILT	DCS

C2i CONTROL INSTRUMENTS, INC.
ATLANTA, GEORGIA

MAIN CONTROL PANEL CCP
SCHEMATIC & CONNECTION DIAGRAM
ARLINGTON COUNTY, VIRGINIA
WATER POLLUTION CONTROL PLANT

DRAWN	APP'D	SCALE	CUSTOMER NO.	DWG. NO.	SHEET
MFB		AS NOTED		ED-7964	4 of 30
FILE 313-9-4		DATE 02/18/93	JOB NO. 313		

DESIGNED BY: .
DRAWN BY: FXP
CHECKED BY/DATE/: .
APPROVED BY/DATE: .

NO.	DATE	DRAWN	CHKD	DESCRIPTION
0	11/98	FXP	ASG	RECORD DRAWING

REVISIONS

THIS DRAWING HAS BEEN COMPILED
HAZEN AND SAWYER, P.C.

ARLINGTON COUNTY, VIRGINIA
WATER POLLUTION CONTROL PLANT
UPGRADE AND EXPANSION- PHASE IIB

CONTROL INSTRUMENTS, INC. DRAWINGS
MAIN CONTROL PANEL CCP - 1 OF 10

SCALE NOTE

SCALE BAR SHOWN BELOW IS ONE INCH LONG ON A FULL SIZE DRAWING. WHEN SCALING DRAWINGS, MEASURE BAR TO DETERMINE IF SCALES SHOWN WILL REQUIRE ADJUSTING.

← ONE INCH →

CONTRACT NO.
9002 - WPC

YEAR 1991

LOCATION CODE

SPECIALTY CODE
I

PROJECT NO.
5002 - 033

FILE NAME
C2i06.DWG

DRAWING NO.
C2i-06

SHEET NO. 308

RECORD DRAWING

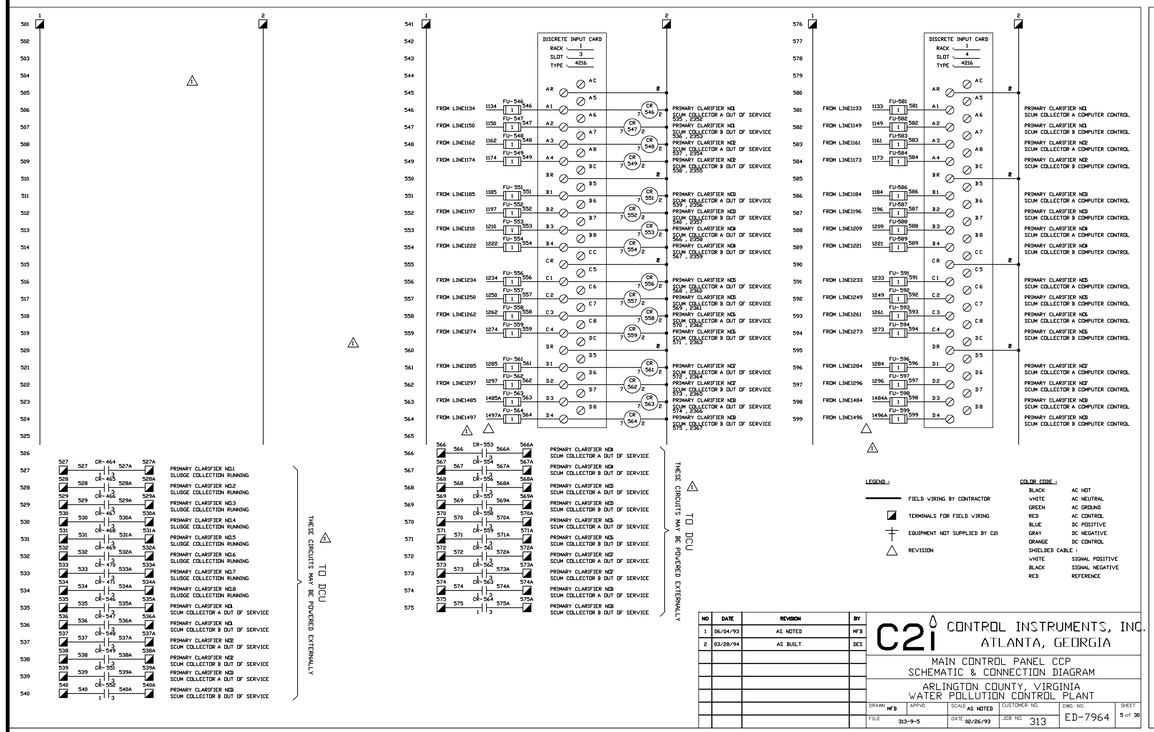

NO	DATE	REVISION	BY
1	06/04/93	AS NOTED	MF3
2	03/28/94	AS BUILT	DCS

C2i CONTROL INSTRUMENTS, INC.
ATLANTA, GEORGIA

MAIN CONTROL PANEL CCP
SCHEMATIC & CONNECTION DIAGRAM
ARLINGTON COUNTY, VIRGINIA
WATER POLLUTION CONTROL PLANT

DRAWN: MF3	APP'D:	SCALE: AS NOTED	CUSTOMER NO:	DWG. NO.	SHEET
FILE: 313-9-5		DATE: 02/28/93	JOB NO: 313	ED-7964	5 of 30

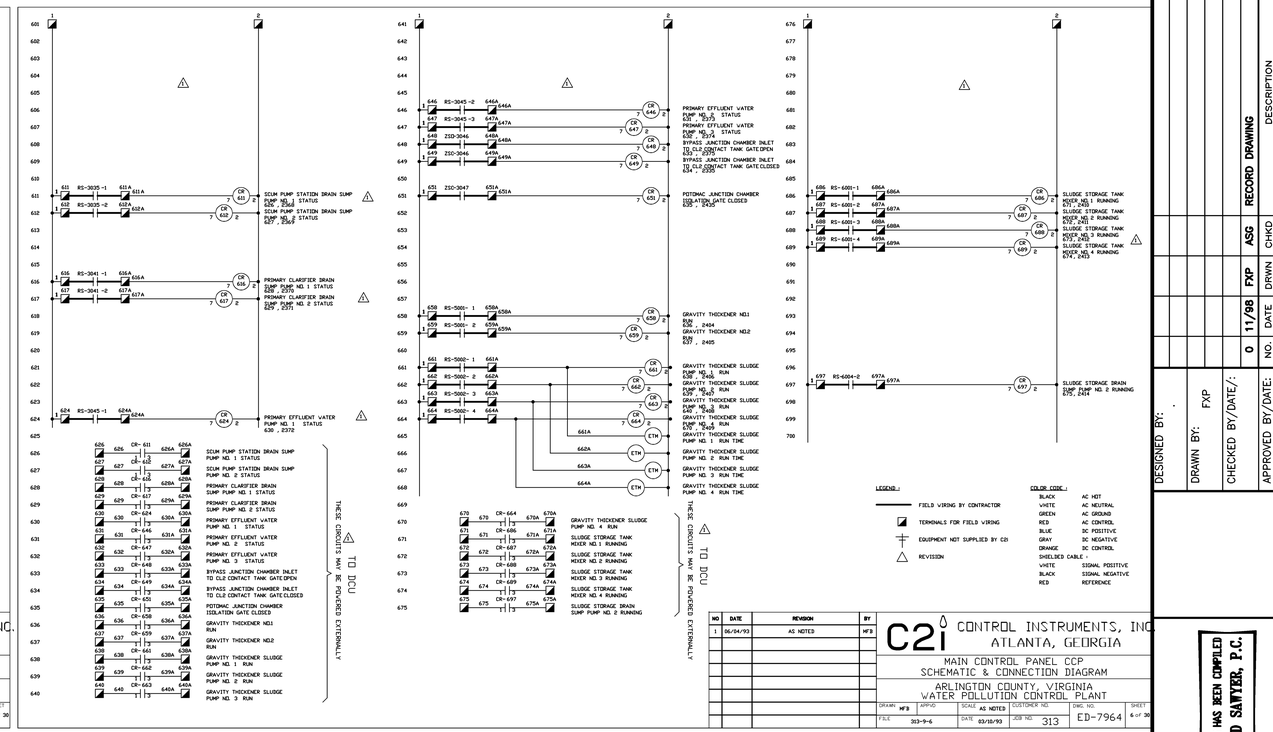

NO	DATE	REVISION	BY
1	06/04/93	AS NOTED	MF3

C2i CONTROL INSTRUMENTS, INC.
ATLANTA, GEORGIA

MAIN CONTROL PANEL CCP
SCHEMATIC & CONNECTION DIAGRAM
ARLINGTON COUNTY, VIRGINIA
WATER POLLUTION CONTROL PLANT

DRAWN: MF3	APP'D:	SCALE: AS NOTED	CUSTOMER NO:	DWG. NO.	SHEET
FILE: 313-9-6		DATE: 03/15/93	JOB NO: 313	ED-7964	6 of 30

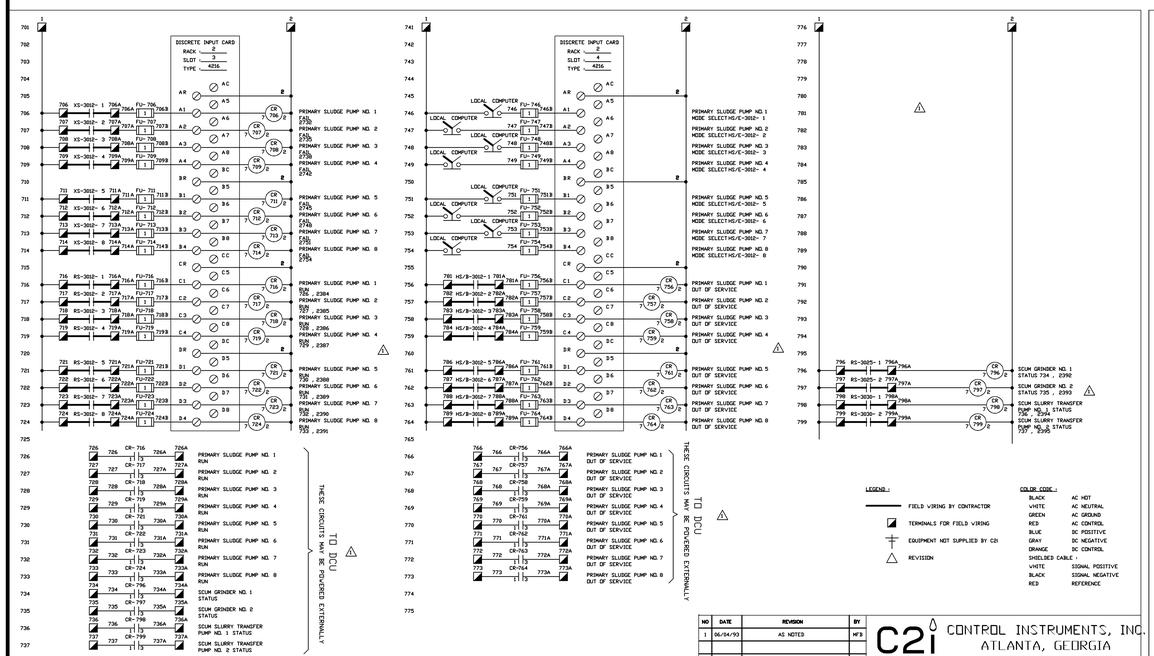

NO	DATE	REVISION	BY
1	06/04/93	AS NOTED	MF3

C2i CONTROL INSTRUMENTS, INC.
ATLANTA, GEORGIA

MAIN CONTROL PANEL CCP
SCHEMATIC & CONNECTION DIAGRAM
ARLINGTON COUNTY, VIRGINIA
WATER POLLUTION CONTROL PLANT

DRAWN: MF3	APP'D:	SCALE: AS NOTED	CUSTOMER NO:	DWG. NO.	SHEET
FILE: 313-9-7		DATE: 03/15/93	JOB NO: 313	ED-7964	7 of 30

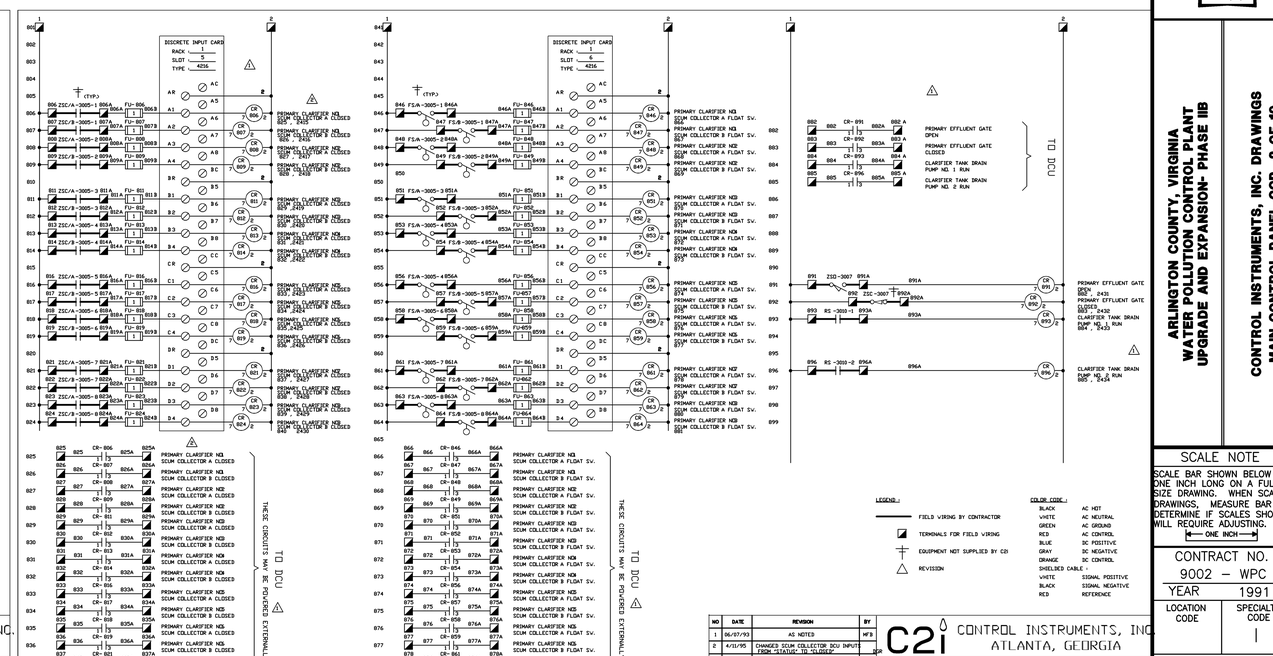

NO	DATE	REVISION	BY
1	06/07/93	AS NOTED	MF3
2	4/21/95	CHANGED SCUM COLLECTOR DCU INPUTS FROM "STATUS" TO "CLOSED"	SLM

C2i CONTROL INSTRUMENTS, INC.
ATLANTA, GEORGIA

MAIN CONTROL PANEL CCP
SCHEMATIC & CONNECTION DIAGRAM
ARLINGTON COUNTY, VIRGINIA
WATER POLLUTION CONTROL PLANT

DRAWN: MF3	APP'D:	SCALE: AS NOTED	CUSTOMER NO:	DWG. NO.	SHEET
FILE: 313-9-8		DATE: 03/09/93	JOB NO: 313	ED-7964	8 of 30

NO	DATE	REVISION	BY
0	11/98	RECORD DRAWING	FXP

DESIGNED BY: .
DRAWN BY: FXP
CHECKED BY/DATE/: ASG
APPROVED BY/DATE: CHKD

THIS DRAWING HAS BEEN COMPILED
HAZEN AND SAWYER, P.C.

ARLINGTON COUNTY, VIRGINIA
WATER POLLUTION CONTROL PLANT
UPGRADE AND EXPANSION- PHASE IIB

CONTROL INSTRUMENTS, INC. DRAWINGS
MAIN CONTROL PANEL CCP 2 OF 10

SCALE NOTE
SCALE BAR SHOWN BELOW IS ONE INCH LONG ON A FULL SIZE DRAWING. WHEN SCALING DRAWINGS, MEASURE BAR TO DETERMINE IF SCALES SHOWN WILL REQUIRE ADJUSTING.
← ONE INCH →

CONTRACT NO.
9002 – WPC
YEAR 1991
LOCATION CODE
SPECIALTY SUB CODE 1
PROJECT NO.
5002 – 033
FILE NAME
C2i07.DWG
DRAWING NO.
C2i–07
SHEET NO. 309

RECORD DRAWING

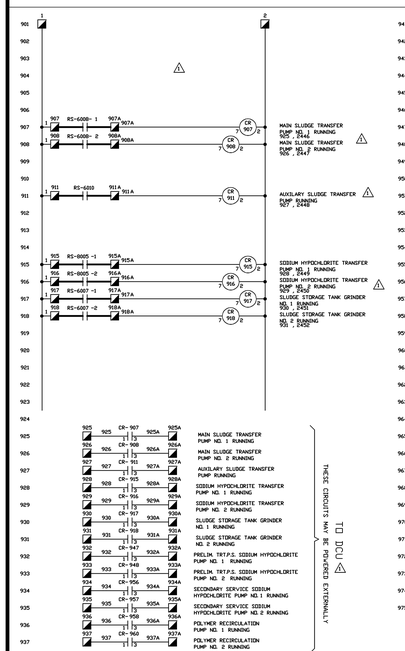

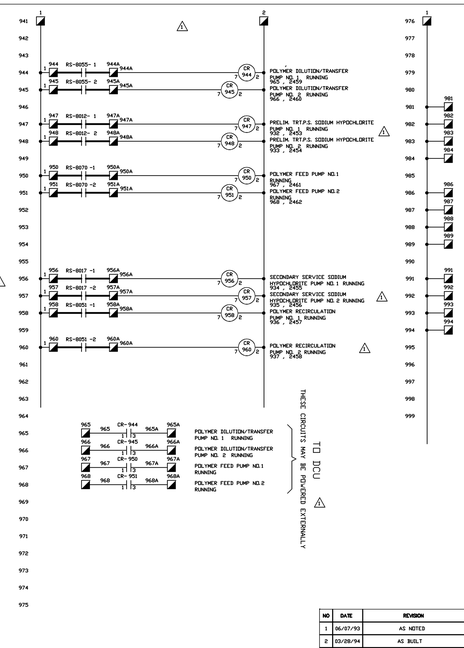

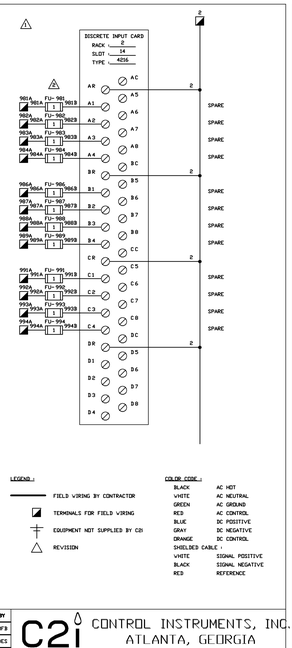

LEGEND :
- FIELD WIRING BY CONTRACTOR
- TERMINALS FOR FIELD WIRING
- EQUIPMENT NOT SUPPLIED BY C2i
- REVISION

COLOR CODE :

BLACK	AC HOT
WHITE	AC NEUTRAL
GREEN	AC GROUND
RED	AC CONTROL
BLUE	DC POSITIVE
GRAY	DC NEGATIVE
ORANGE	DC CONTROL
SHIELDED CABLE :	
WHITE	SIGNAL POSITIVE
BLACK	SIGNAL NEGATIVE
RED	REFERENCE

NO	DATE	REVISION	BY
1	06/07/93	AS NOTED	MF3
2	03/28/94	AS BUILT	DCS

C2i CONTROL INSTRUMENTS, INC.
ATLANTA, GEORGIA

MAIN CONTROL PANEL CCP
SCHEMATIC & CONNECTION DIAGRAM
ARLINGTON COUNTY, VIRGINIA
WATER POLLUTION CONTROL PLANT

DRAWN	APP'D	SCALE	CUSTOMER NO.	DWG. NO.	SHEET
MF3		AS NOTED		ED-7964	9 of 30
FILE 313-9-9		DATE 03/25/93	JOB NO. 313		

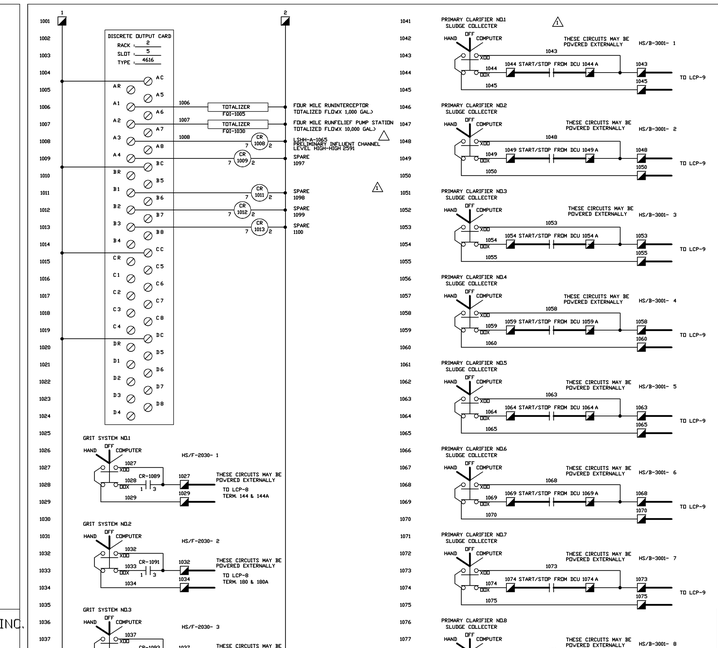

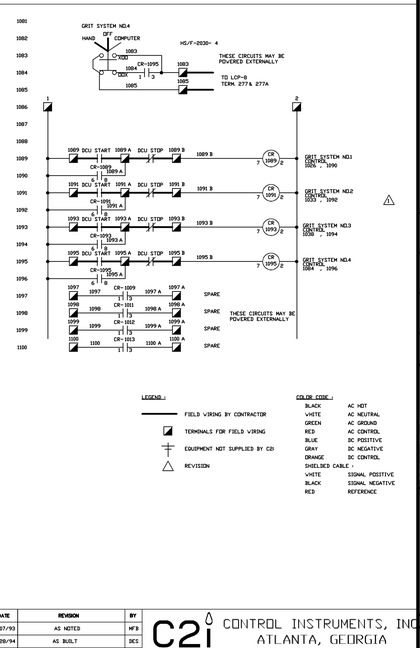

LEGEND :
- FIELD WIRING BY CONTRACTOR
- TERMINALS FOR FIELD WIRING
- EQUIPMENT NOT SUPPLIED BY C2i
- REVISION

COLOR CODE :

BLACK	AC HOT
WHITE	AC NEUTRAL
GREEN	AC GROUND
RED	AC CONTROL
BLUE	DC POSITIVE
GRAY	DC NEGATIVE
ORANGE	DC CONTROL
SHIELDED CABLE :	
WHITE	SIGNAL POSITIVE
BLACK	SIGNAL NEGATIVE
RED	REFERENCE

NO	DATE	REVISION	BY
1	06/07/93	AS NOTED	MF3
2	03/28/94	AS BUILT	DCS

C2i CONTROL INSTRUMENTS, INC.
ATLANTA, GEORGIA

MAIN CONTROL PANEL CCP
SCHEMATIC & CONNECTION DIAGRAM
ARLINGTON COUNTY, VIRGINIA
WATER POLLUTION CONTROL PLANT

DRAWN	APP'D	SCALE	CUSTOMER NO.	DWG. NO.	SHEET
MF3		AS NOTED		ED-7964	10 of 30
FILE 313-9-10		DATE 03/04/93	JOB NO. 313		

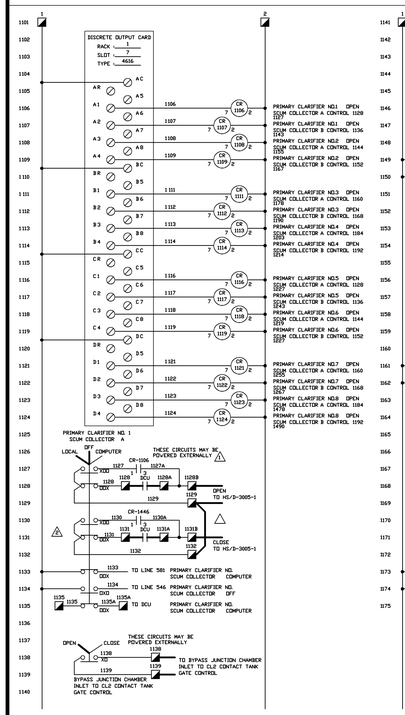

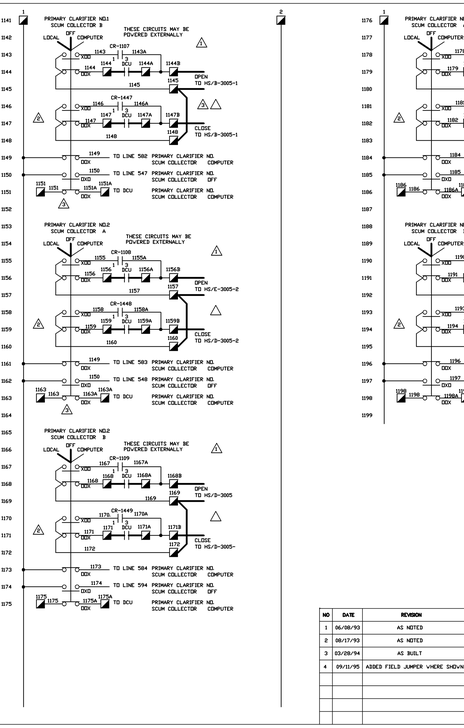

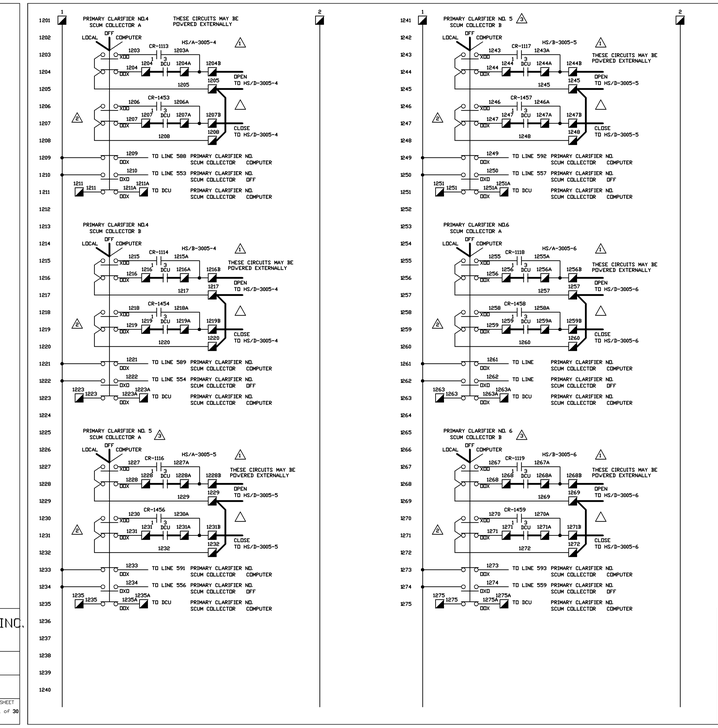

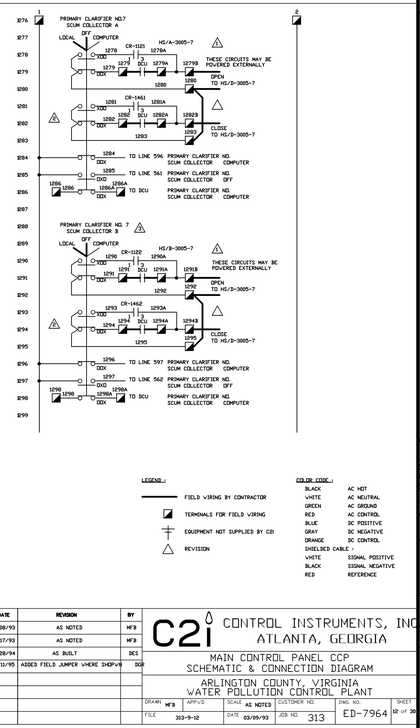

LEGEND :
- FIELD WIRING BY CONTRACTOR
- TERMINALS FOR FIELD WIRING
- EQUIPMENT NOT SUPPLIED BY C2i
- REVISION

COLOR CODE :

BLACK	AC HOT
WHITE	AC NEUTRAL
GREEN	AC GROUND
RED	AC CONTROL
BLUE	DC POSITIVE
GRAY	DC NEGATIVE
ORANGE	DC CONTROL
SHIELDED CABLE :	
WHITE	SIGNAL POSITIVE
BLACK	SIGNAL NEGATIVE
RED	REFERENCE

NO	DATE	REVISION	BY
1	06/08/93	AS NOTED	MF3
2	09/17/93	AS NOTED	MF3
3	03/28/94	AS BUILT	DCS
4	09/11/95	ADDED FIELD JUMPER WHERE SHOWN	DGP

C2i CONTROL INSTRUMENTS, INC.
ATLANTA, GEORGIA

MAIN CONTROL PANEL CCP
SCHEMATIC & CONNECTION DIAGRAM
ARLINGTON COUNTY, VIRGINIA
WATER POLLUTION CONTROL PLANT

DRAWN	APP'D	SCALE	CUSTOMER NO.	DWG. NO.	SHEET
MF3		AS NOTED		ED-7964	11 of 30
FILE 313-9-11		DATE 03/09/93	JOB NO. 313		

NO	DATE	REVISION	BY
1	06/08/93	AS NOTED	MF3
2	09/17/93	AS NOTED	MF3
3	03/28/94	AS BUILT	DCS
4	09/11/95	ADDED FIELD JUMPER WHERE SHOWN	DGP

C2i CONTROL INSTRUMENTS, INC.
ATLANTA, GEORGIA

MAIN CONTROL PANEL CCP
SCHEMATIC & CONNECTION DIAGRAM
ARLINGTON COUNTY, VIRGINIA
WATER POLLUTION CONTROL PLANT

DRAWN	APP'D	SCALE	CUSTOMER NO.	DWG. NO.	SHEET
MF3		AS NOTED		ED-7964	12 of 30
FILE 313-9-12		DATE 03/09/93	JOB NO. 313		

RECORD DRAWING

NO.	DATE	DRAWN	CHKD	DESCRIPTION
				REVISIONS
0	11/98	FXP	ASG	RECORD DRAWING

DESIGNED BY: .
DRAWN BY: FXP
CHECKED BY/DATE/:
APPROVED BY/DATE:

THIS DRAWING HAS BEEN COMPILED
HAZEN AND SAWYER, P.C.

ARLINGTON COUNTY, VIRGINIA
WATER POLLUTION CONTROL PLANT
UPGRADE AND EXPANSION- PHASE IIB

CONTROL INSTRUMENTS, INC. DRAWINGS
MAIN CONTROL PANEL CCP 3 OF 10

SCALE NOTE

SCALE BAR SHOWN BELOW IS ONE INCH LONG ON A FULL SIZE DRAWING. WHEN SCALING DRAWINGS, MEASURE BAR TO DETERMINE IF SCALES SHOWN WILL REQUIRE ADJUSTING.

ONE INCH

CONTRACT NO.
9002 - WPC
YEAR 1991
LOCATION CODE
SPECIALTY CODE 1
PROJECT NO.
5002 - 033
FILE NAME
C2i08.DWG
DRAWING NO.
C2i-08
SHEET NO. 310

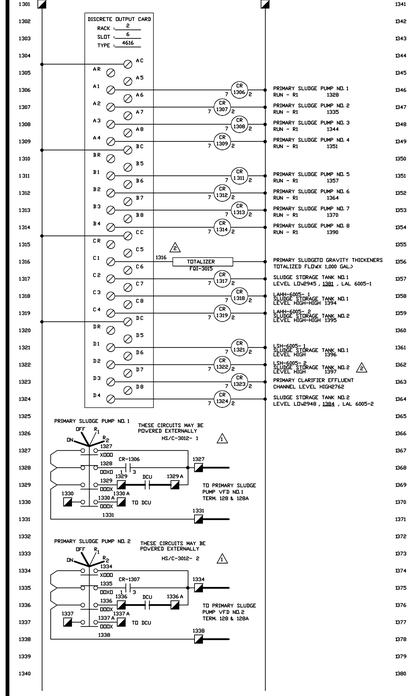

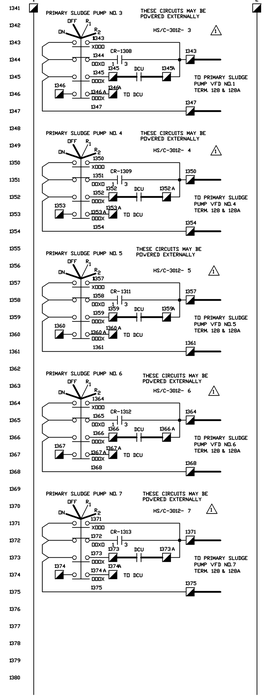

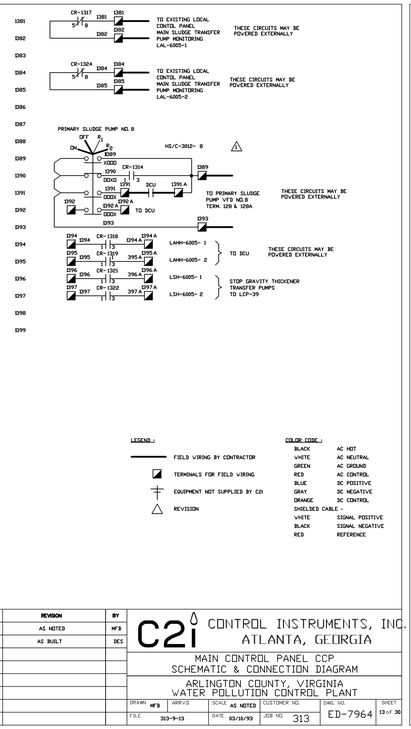

NO	DATE	REVISION	BY
1	06/08/93	AS NOTED	MFB
2	03/28/94	AS BUILT	DCS

C2i CONTROL INSTRUMENTS, INC.
ATLANTA, GEORGIA

MAIN CONTROL PANEL CCP
SCHEMATIC & CONNECTION DIAGRAM
ARLINGTON COUNTY, VIRGINIA
WATER POLLUTION CONTROL PLANT

DRAWN	APPV'D	SCALE	CUSTOMER NO.	DWG. NO.	SHEET
MFB		AS NOTED		ED-7964	13 of 30
FILE 313-9-13		DATE 03/18/93	JOB NO. 313		

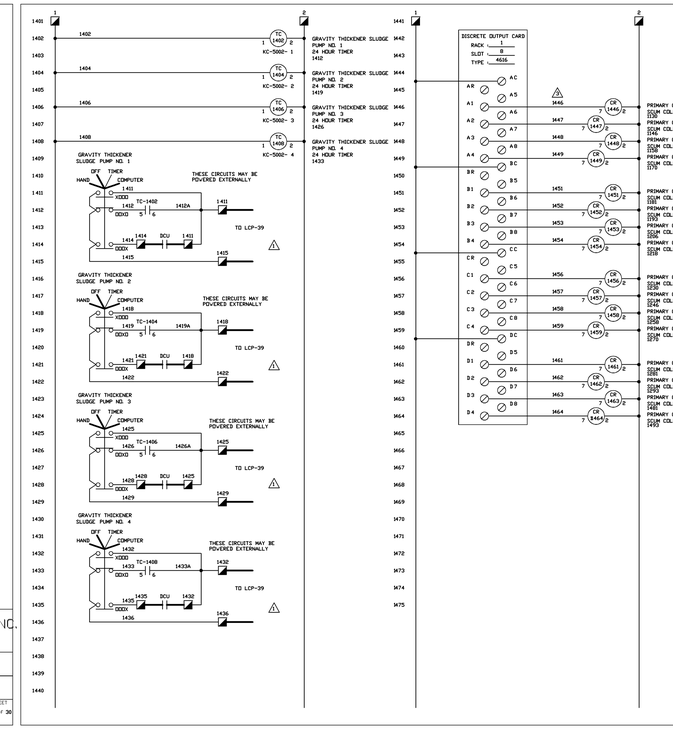

NO	DATE	REVISION	BY
1	06/08/93	AS NOTED	MFB
2	08/17/93	AS NOTED	MFB
3	03/28/94	AS BUILT	DCS

C2i CONTROL INSTRUMENTS, INC.
ATLANTA, GEORGIA

MAIN CONTROL PANEL CCP
SCHEMATIC & CONNECTION DIAGRAM
ARLINGTON COUNTY, VIRGINIA
WATER POLLUTION CONTROL PLANT

DRAWN	APPV'D	SCALE	CUSTOMER NO.	DWG. NO.	SHEET
MFB		AS NOTED		ED-7964	14 of 30
FILE 313-9-14		DATE 03/22/93	JOB NO. 313		

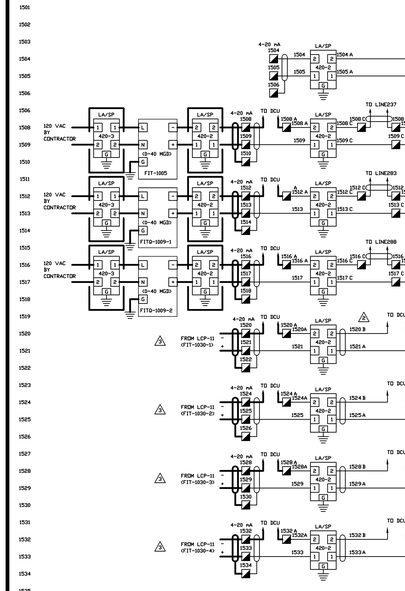

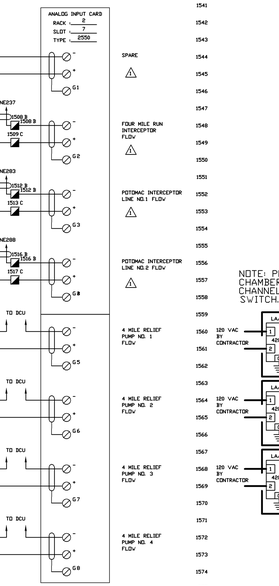

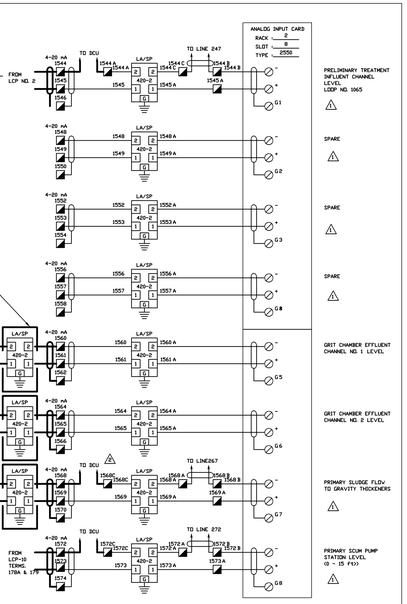

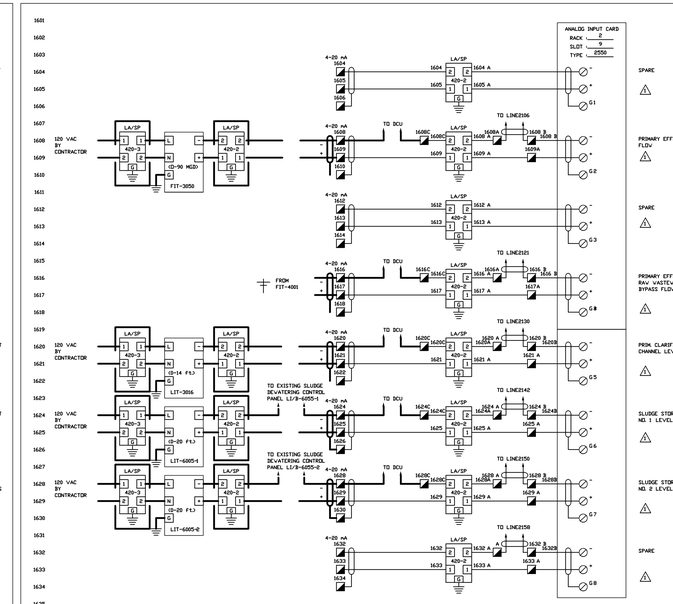

NO	DATE	REVISION	BY
1	06/03/93	AS NOTED	MFB
2	03/28/94	AS BUILT	DCS
3	4/5/95	REVISED SOURCE OF 4 MILE RELIEF PUMP FLOW SIGNALS	DGR

C2i CONTROL INSTRUMENTS, INC.
ATLANTA, GEORGIA

MAIN CONTROL PANEL CCP
SCHEMATIC & CONNECTION DIAGRAM
ARLINGTON COUNTY, VIRGINIA
WATER POLLUTION CONTROL PLANT

DRAWN	APPV'D	SCALE	CUSTOMER NO.	DWG. NO.	SHEET
MFB		AS NOTED		ED-7964	15 of 30
FILE 313-9-15		DATE 02/26/93	JOB NO. 313		

NO	DATE	REVISION	BY
1	06/03/93	AS NOTED	MFB

C2i CONTROL INSTRUMENTS, INC.
ATLANTA, GEORGIA

MAIN CONTROL PANEL CCP
SCHEMATIC & CONNECTION DIAGRAM
ARLINGTON COUNTY, VIRGINIA
WATER POLLUTION CONTROL PLANT

DRAWN	APPV'D	SCALE	CUSTOMER NO.	DWG. NO.	SHEET
MFB		AS NOTED		ED-7964	16 of 30
FILE 313-9-16		DATE 03/25/93	JOB NO. 313		

RECORD DRAWING

NO.	DATE	DRAWING DESCRIPTION REVISIONS	CHKD	DRWN
0	11/98	RECORD DRAWING	ASG	FXP

DESIGNED BY: .
DRAWN BY: FXP
CHECKED BY/DATE/: .
APPROVED BY/DATE: .

THIS DRAWING HAS BEEN COMPILED
HAZEN AND SAWYER, P.C.

ARLINGTON COUNTY, VIRGINIA
WATER POLLUTION CONTROL PLANT
UPGRADE AND EXPANSION- PHASE IIB

CONTROL INSTRUMENTS, INC. DRAWINGS
MAIN CONTROL PANEL CCP 4 OF 10

SCALE NOTE

SCALE BAR SHOWN BELOW IS ONE INCH LONG ON A FULL SIZE DRAWING. WHEN SCALING DRAWINGS, MEASURE BAR TO DETERMINE IF SCALES SHOWN WILL REQUIRE ADJUSTING.

ONE INCH

CONTRACT NO.
9002 - WPC

YEAR 1991

LOCATION CODE

SPECIALTY CODE
I

PROJECT NO.
5002 - 033

FILE NAME
C2i09.DWG

DRAWING NO.
C2i-09

SHEET NO. 311

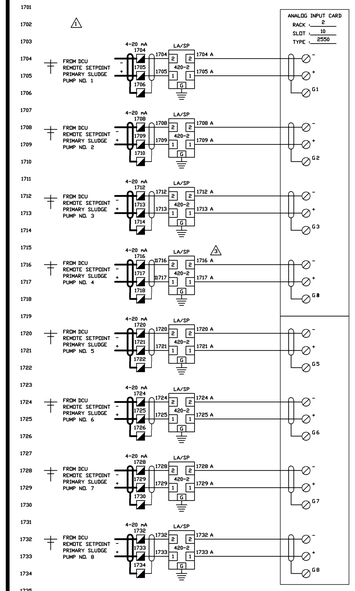

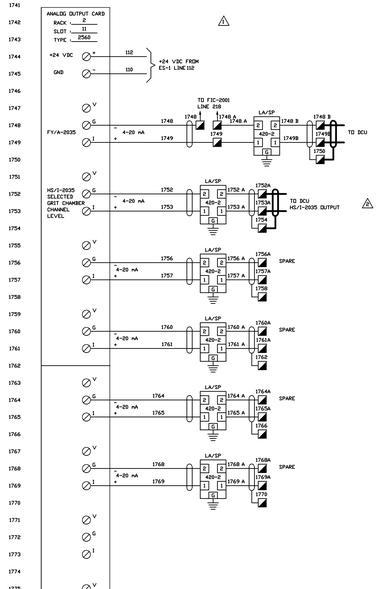

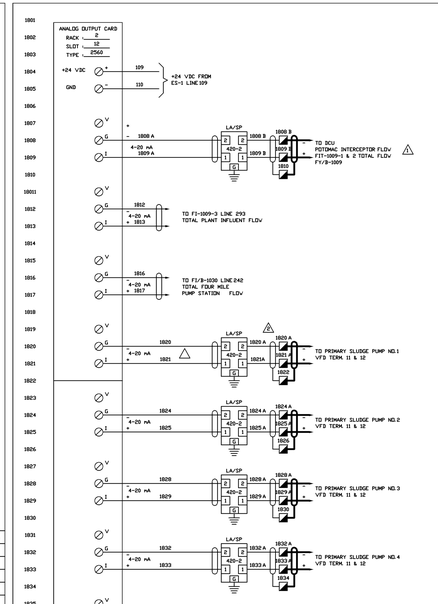

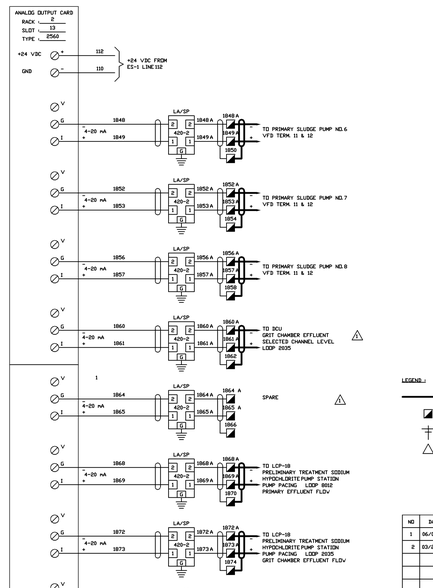

LEGEND :

- FIELD WIRING BY CONTRACTOR
- TERMINALS FOR FIELD WIRING
- EQUIPMENT NOT SUPPLIED BY C2i
- REVISION

COLOR CODE :

BLACK	AC HOT
WHITE	AC NEUTRAL
GREEN	AC GROUND
RED	AC CONTROL
BLUE	DC POSITIVE
GRAY	DC NEGATIVE
ORANGE	DC CONTROL
SHIELDED CABLE :	
WHITE	SIGNAL POSITIVE
BLACK	SIGNAL NEGATIVE
RED	REFERENCE

NO	DATE	REVISION	BY
1	06/03/93	AS NOTED	MFB
2	08/17/93	AS NOTED	MFB
3	3/28/94	AS BUILT	DES

C2i CONTROL INSTRUMENTS, INC.
ATLANTA, GEORGIA

MAIN CONTROL PANEL CCP
SCHEMATIC & CONNECTION DIAGRAM
ARLINGTON COUNTY, VIRGINIA
WATER POLLUTION CONTROL PLANT

DRAWN: MFB	APPV'D	SCALE: AS NOTED	CUSTOMER NO.	DWG. NO.	SHEET
FILE: 313-9-17		DATE: 03/17/93	JOB NO. 313	ED-7964	17 OF 30

NO	DATE	REVISION	BY
1	06/03/93	AS NOTED	MFB
2	03/28/94	AS BUILT	DES

C2i CONTROL INSTRUMENTS, INC.
ATLANTA, GEORGIA

MAIN CONTROL PANEL CCP
SCHEMATIC & CONNECTION DIAGRAM
ARLINGTON COUNTY, VIRGINIA
WATER POLLUTION CONTROL PLANT

DRAWN: MFB	APPV'D	SCALE: AS NOTED	CUSTOMER NO.	DWG. NO.	SHEET
FILE: 313-9-18		DATE: 02/15/93	JOB NO. 313	ED-7964	18 OF 30

DESIGNED BY: .
DRAWN BY: FXP
CHECKED BY/DATE/-:
APPROVED BY/DATE:

NO.	DATE	DRWN	CHKD	DESCRIPTION
				REVISIONS
0	11/98	FXP	ASG	RECORD DRAWING

THIS DRAWING HAS BEEN COMPILED
HAZEN AND SAWYER, P.C.

ARLINGTON COUNTY, VIRGINIA
WATER POLLUTION CONTROL PLANT
UPGRADE AND EXPANSION- PHASE IIB

CONTROL INSTRUMENTS, INC. DRAWINGS
MAIN CONTROL PANEL CCP 5 OF 10

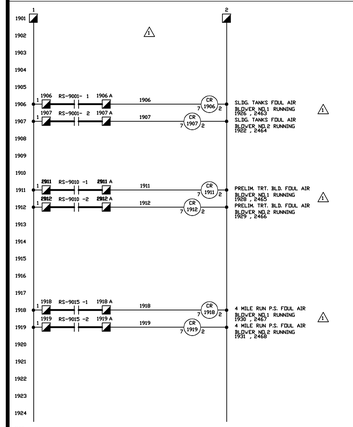

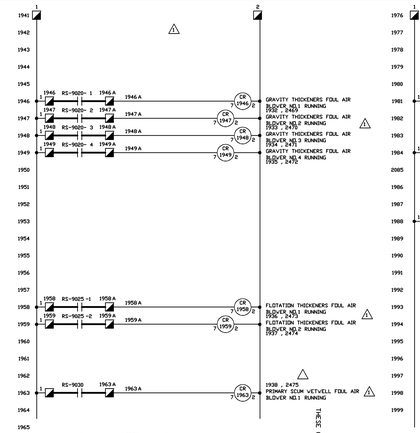

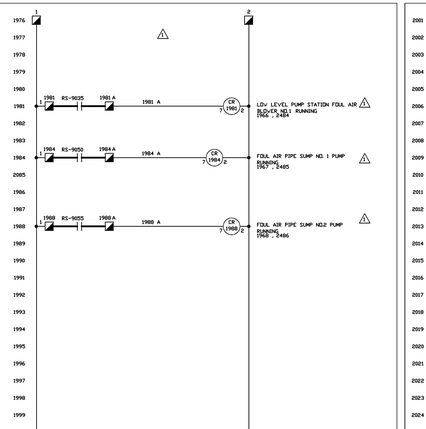

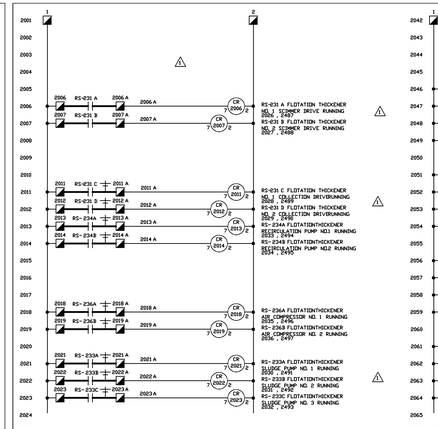

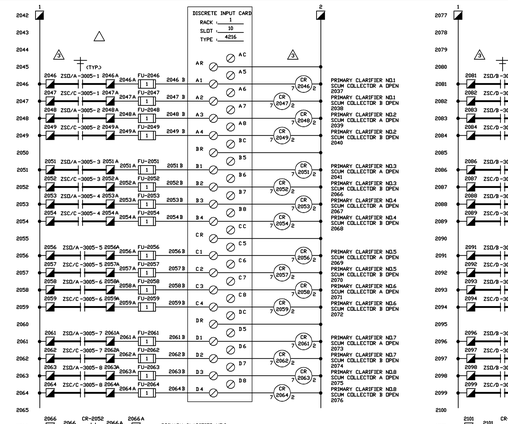

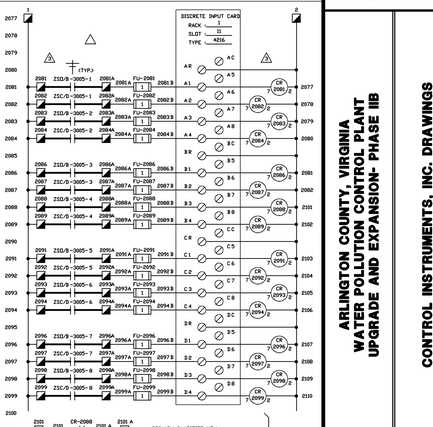

LEGEND :

- FIELD WIRING BY CONTRACTOR
- TERMINALS FOR FIELD WIRING
- EQUIPMENT NOT SUPPLIED BY C2i
- REVISION

COLOR CODE :

BLACK	AC HOT
WHITE	AC NEUTRAL
GREEN	AC GROUND
RED	AC CONTROL
BLUE	DC POSITIVE
GRAY	DC NEGATIVE
ORANGE	DC CONTROL
SHIELDED CABLE :	
WHITE	SIGNAL POSITIVE
BLACK	SIGNAL NEGATIVE
RED	REFERENCE

NO	DATE	REVISION	BY
1	06/03/93	AS NOTED	MFB
2	03/28/94	AS BUILT	DES

C2i CONTROL INSTRUMENTS, INC.
ATLANTA, GEORGIA

MAIN CONTROL PANEL CCP
SCHEMATIC & CONNECTION DIAGRAM
ARLINGTON COUNTY, VIRGINIA
WATER POLLUTION CONTROL PLANT

DRAWN: MFB	APPV'D	SCALE: AS NOTED	CUSTOMER NO.	DWG. NO.	SHEET
FILE: 313-9-19		DATE: 03/16/93	JOB NO. 313	ED-7964	19 OF 30

NO	DATE	REVISION	BY
1	06/03/93	AS NOTED	MFB
2	03/28/94	AS BUILT	DES
3	4/12/95	REVISED PRIMARY CLARIFIER FIELD INPUT ID, ADDED OPEN & OVER-TRAVEL SCU INPUT RELAYS AND FIELD TERMINALS	DGR

C2i CONTROL INSTRUMENTS, INC.
ATLANTA, GEORGIA

MAIN CONTROL PANEL CCP
SCHEMATIC & CONNECTION DIAGRAM
ARLINGTON COUNTY, VIRGINIA
WATER POLLUTION CONTROL PLANT

DRAWN: MFB	APPV'D	SCALE: AS NOTED	CUSTOMER NO.	DWG. NO.	SHEET
FILE: 313-9-20		DATE: 03/16/93	JOB NO. 313	ED-7964	20 OF 30

SCALE NOTE

SCALE BAR SHOWN BELOW IS ONE INCH LONG ON A FULL SIZE DRAWING. WHEN SCALING DRAWINGS, MEASURE BAR TO DETERMINE IF SCALES SHOWN WILL REQUIRE ADJUSTING.

← ONE INCH →

CONTRACT NO.
9002 - WPC

YEAR 1991

LOCATION CODE	SPECIALTY CODE
	I

PROJECT NO.
5002 - 033

FILE NAME
C2i10.DWG

DRAWING NO.
C2i-10

SHEET NO. 312

RECORD DRAWING

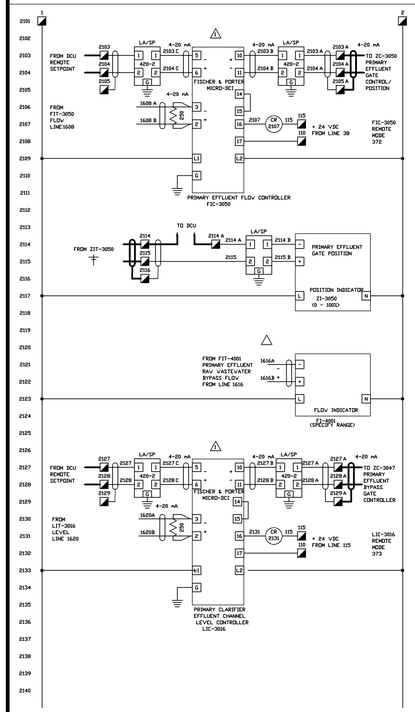

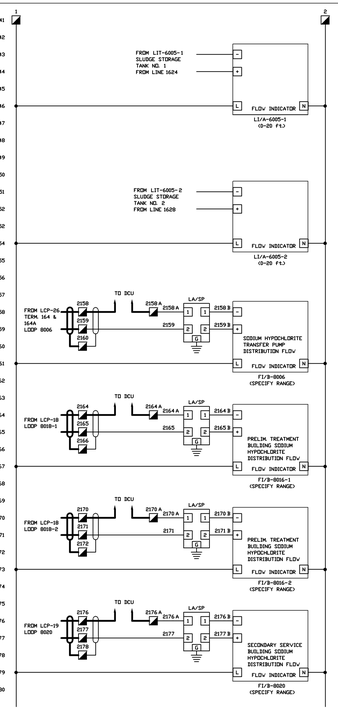

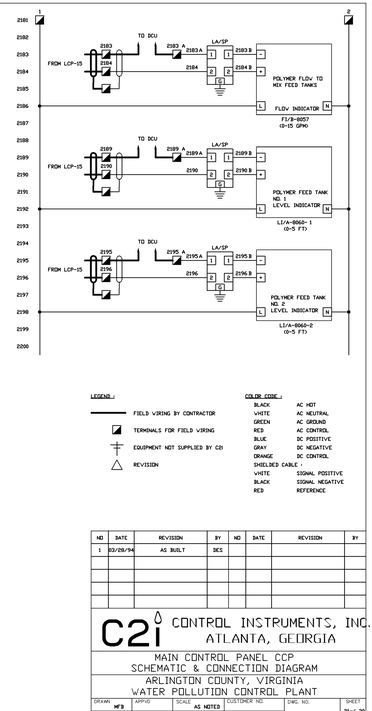

LEGEND :

- FIELD WIRING BY CONTRACTOR
- TERMINALS FOR FIELD WIRING
- EQUIPMENT NOT SUPPLIED BY C2i
- REVISION

COLOR CODE :

BLACK	AC HOT
WHITE	AC NEUTRAL
GREEN	AC GROUND
RED	AC CONTROL
BLUE	DC POSITIVE
GRAY	DC NEGATIVE
ORANGE	DC CONTROL
SHIELDED CABLE :	
WHITE	SIGNAL POSITIVE
BLACK	SIGNAL NEGATIVE
RED	REFERENCE

NO	DATE	REVISION	BY	NO	DATE	REVISION	BY
1	03/29/94	AS BUILT	DES				

C2i CONTROL INSTRUMENTS, INC.
ATLANTA, GEORGIA

MAIN CONTROL PANEL CCP
SCHEMATIC & CONNECTION DIAGRAM
ARLINGTON COUNTY, VIRGINIA
WATER POLLUTION CONTROL PLANT

DRAWN	APP'D	SCALE	CUSTOMER NO.	DWG. NO.	SHEET
MF'B		AS NOTED		ED-7964	21 of 36
FILE 313-9-21		DATE 03/10/93	JOB NO. 313		

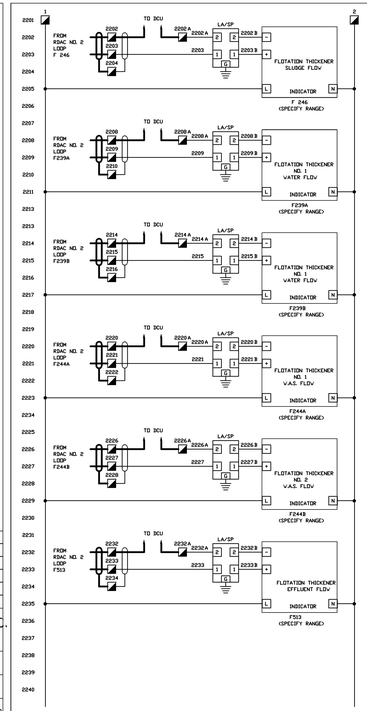

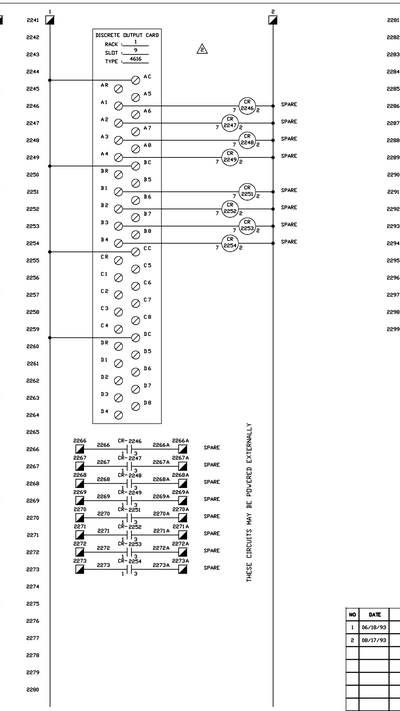

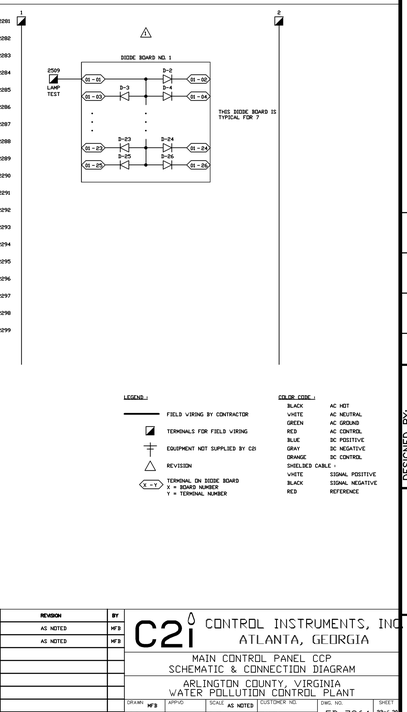

LEGEND :

- FIELD WIRING BY CONTRACTOR
- TERMINALS FOR FIELD WIRING
- EQUIPMENT NOT SUPPLIED BY C2i
- REVISION
- TERMINAL ON DIODE BOARD X = BOARD NUMBER Y = TERMINAL NUMBER

COLOR CODE :

BLACK	AC HOT
WHITE	AC NEUTRAL
GREEN	AC GROUND
RED	AC CONTROL
BLUE	DC POSITIVE
GRAY	DC NEGATIVE
ORANGE	DC CONTROL
SHIELDED CABLE :	
WHITE	SIGNAL POSITIVE
BLACK	SIGNAL NEGATIVE
RED	REFERENCE

NO	DATE	REVISION	BY
1	06/18/93	AS NOTED	MF'B
2	08/17/93	AS NOTED	MF'B

C2i CONTROL INSTRUMENTS, INC.
ATLANTA, GEORGIA

MAIN CONTROL PANEL CCP
SCHEMATIC & CONNECTION DIAGRAM
ARLINGTON COUNTY, VIRGINIA
WATER POLLUTION CONTROL PLANT

DRAWN	APP'D	SCALE	CUSTOMER NO.	DWG. NO.	SHEET
MF'B		AS NOTED		ED-7964	22 of 36
FILE 313-9-22		DATE 03/17/93	JOB NO. 313		

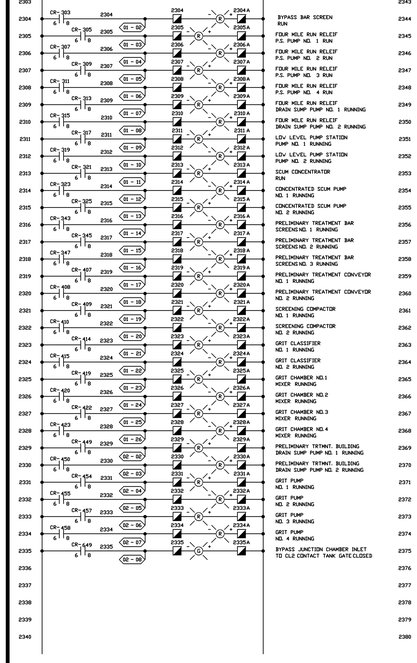

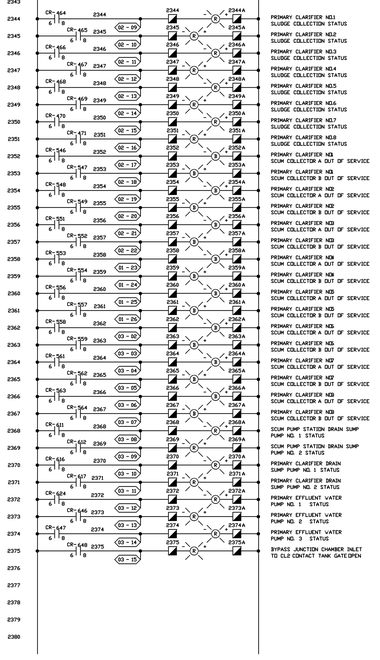

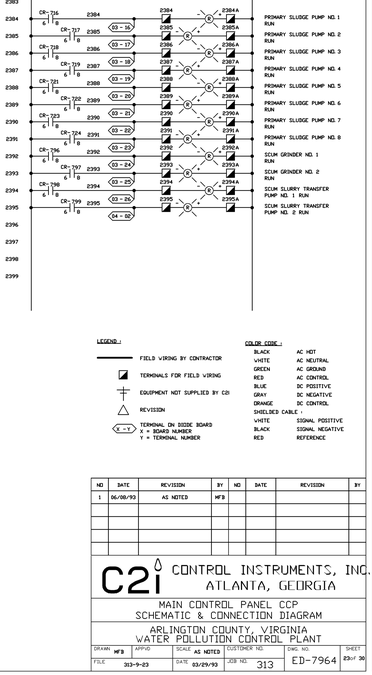

LEGEND :

- FIELD WIRING BY CONTRACTOR
- TERMINALS FOR FIELD WIRING
- EQUIPMENT NOT SUPPLIED BY C2i
- REVISION

COLOR CODE :

BLACK	AC HOT
WHITE	AC NEUTRAL
GREEN	AC GROUND
RED	AC CONTROL
BLUE	DC POSITIVE
GRAY	DC NEGATIVE
ORANGE	DC CONTROL
SHIELDED CABLE :	
WHITE	SIGNAL POSITIVE
BLACK	SIGNAL NEGATIVE
RED	REFERENCE

NO	DATE	REVISION	BY	NO	DATE	REVISION	BY
1	06/08/93	AS NOTED	MF'B				

C2i CONTROL INSTRUMENTS, INC.
ATLANTA, GEORGIA

MAIN CONTROL PANEL CCP
SCHEMATIC & CONNECTION DIAGRAM
ARLINGTON COUNTY, VIRGINIA
WATER POLLUTION CONTROL PLANT

DRAWN	APP'D	SCALE	CUSTOMER NO.	DWG. NO.	SHEET
MF'B		AS NOTED		ED-7964	23 of 36
FILE 313-9-23		DATE 03/29/93	JOB NO. 313		

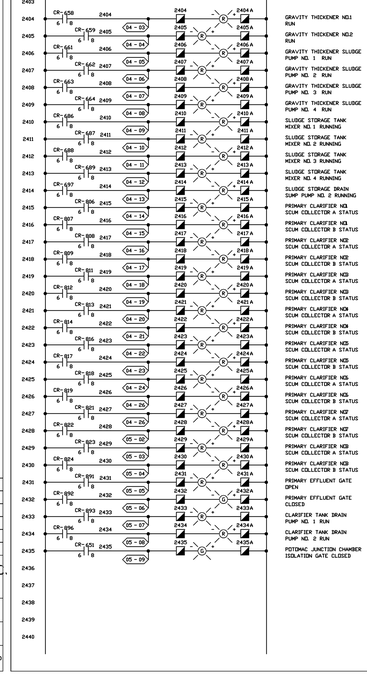

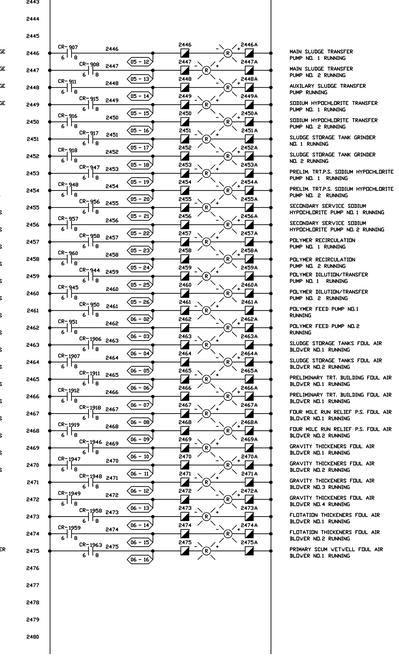

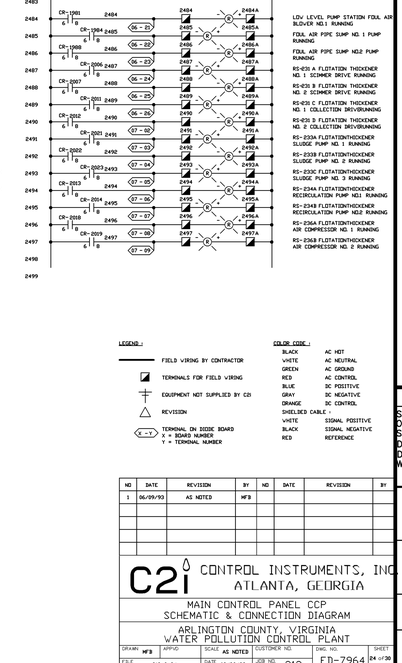

LEGEND :

- FIELD WIRING BY CONTRACTOR
- TERMINALS FOR FIELD WIRING
- EQUIPMENT NOT SUPPLIED BY C2i
- REVISION
- TERMINAL ON DIODE BOARD X = BOARD NUMBER Y = TERMINAL NUMBER

COLOR CODE :

BLACK	AC HOT
WHITE	AC NEUTRAL
GREEN	AC GROUND
RED	AC CONTROL
BLUE	DC POSITIVE
GRAY	DC NEGATIVE
ORANGE	DC CONTROL
SHIELDED CABLE :	
WHITE	SIGNAL POSITIVE
BLACK	SIGNAL NEGATIVE
RED	REFERENCE

NO	DATE	REVISION	BY	NO	DATE	REVISION	BY
1	06/09/93	AS NOTED	MF'B				

C2i CONTROL INSTRUMENTS, INC.
ATLANTA, GEORGIA

MAIN CONTROL PANEL CCP
SCHEMATIC & CONNECTION DIAGRAM
ARLINGTON COUNTY, VIRGINIA
WATER POLLUTION CONTROL PLANT

DRAWN	APP'D	SCALE	CUSTOMER NO.	DWG. NO.	SHEET
MF'B		AS NOTED		ED-7964	24 of 36
FILE 313-9-24		DATE 03/29/93	JOB NO. 313		

NO.	DATE	DESCRIPTION
0	11/98	RECORD DRAWING

DESIGNED BY:	.
DRAWN BY:	FXP
CHECKED BY/DATE/:	ASG
APPROVED BY/DATE:	FXP

THIS DRAWING HAS BEEN COMPILED
HAZEN AND SAWYER, P.C.

ARLINGTON COUNTY, VIRGINIA
WATER POLLUTION CONTROL PLANT
UPGRADE AND EXPANSION- PHASE IIB

CONTROL INSTRUMENTS, INC. DRAWINGS
MAIN CONTROL PANEL CCP 6 OF 10

SCALE NOTE

SCALE BAR SHOWN BELOW IS ONE INCH LONG ON A FULL SIZE DRAWING. WHEN SCALING DRAWINGS, MEASURE BAR TO DETERMINE IF SCALES SHOWN WILL REQUIRE ADJUSTING.

ONE INCH

CONTRACT NO.
9002 – WPC
YEAR 1991
LOCATION CODE
SPECIALTY CODE I
PROJECT NO.
5002 – 033
FILE NAME
C2i11.DWG
DRAWING NO.
C2i – 11
SHEET NO. 313

RECORD DRAWING

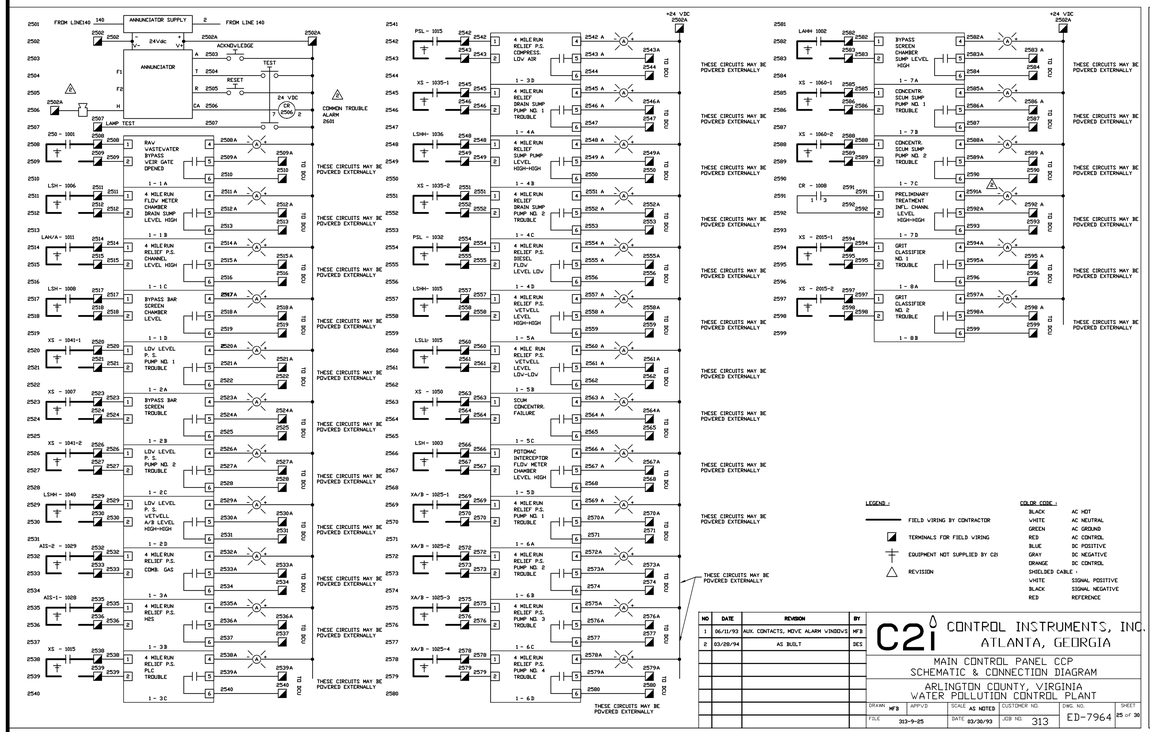

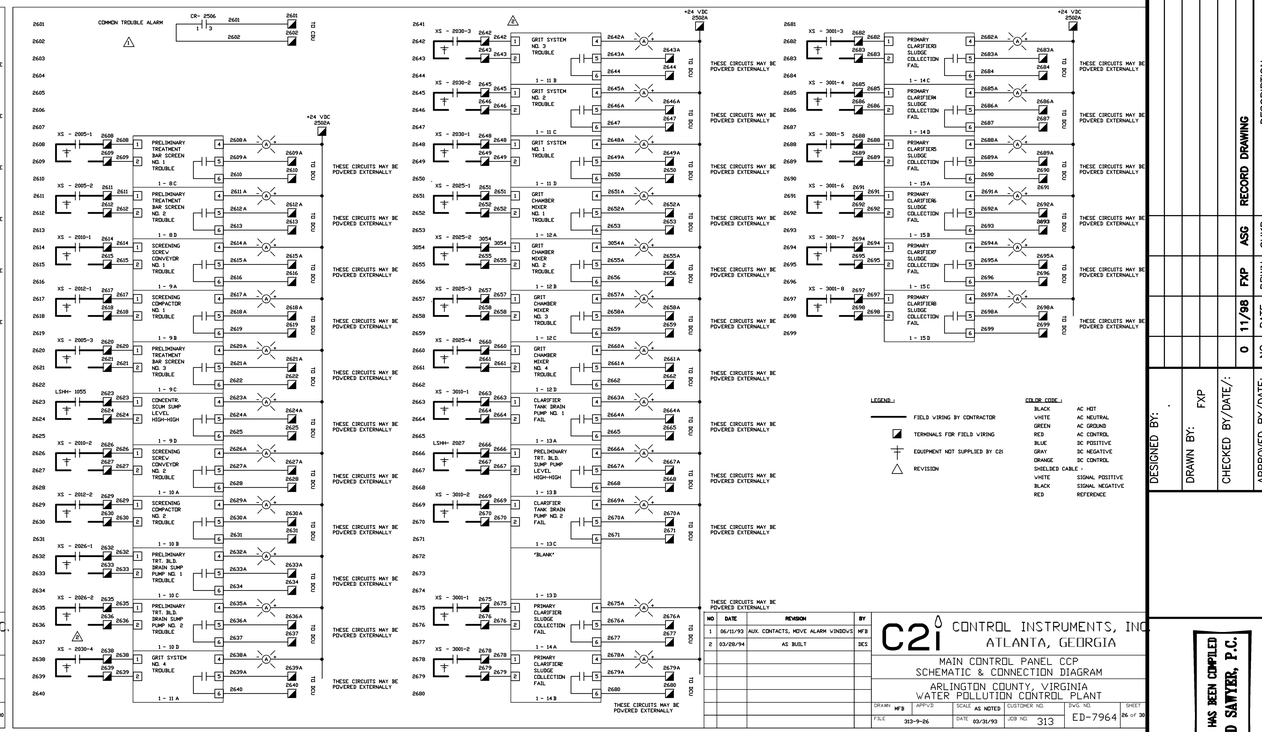

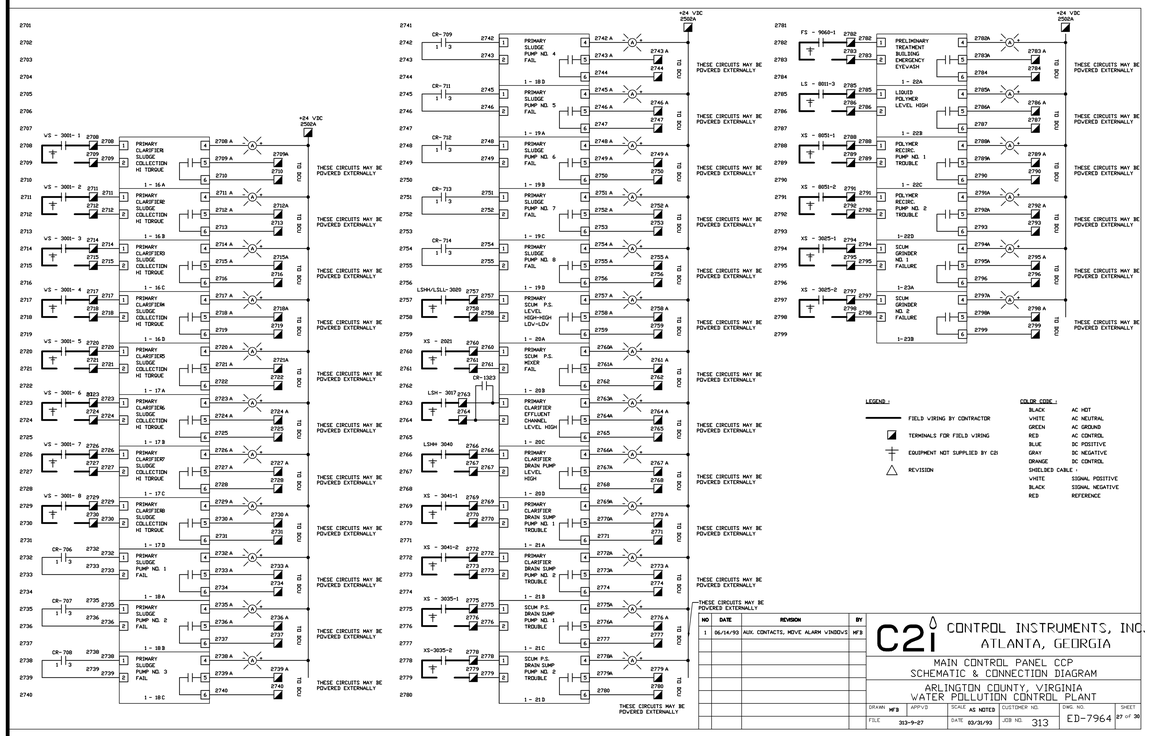

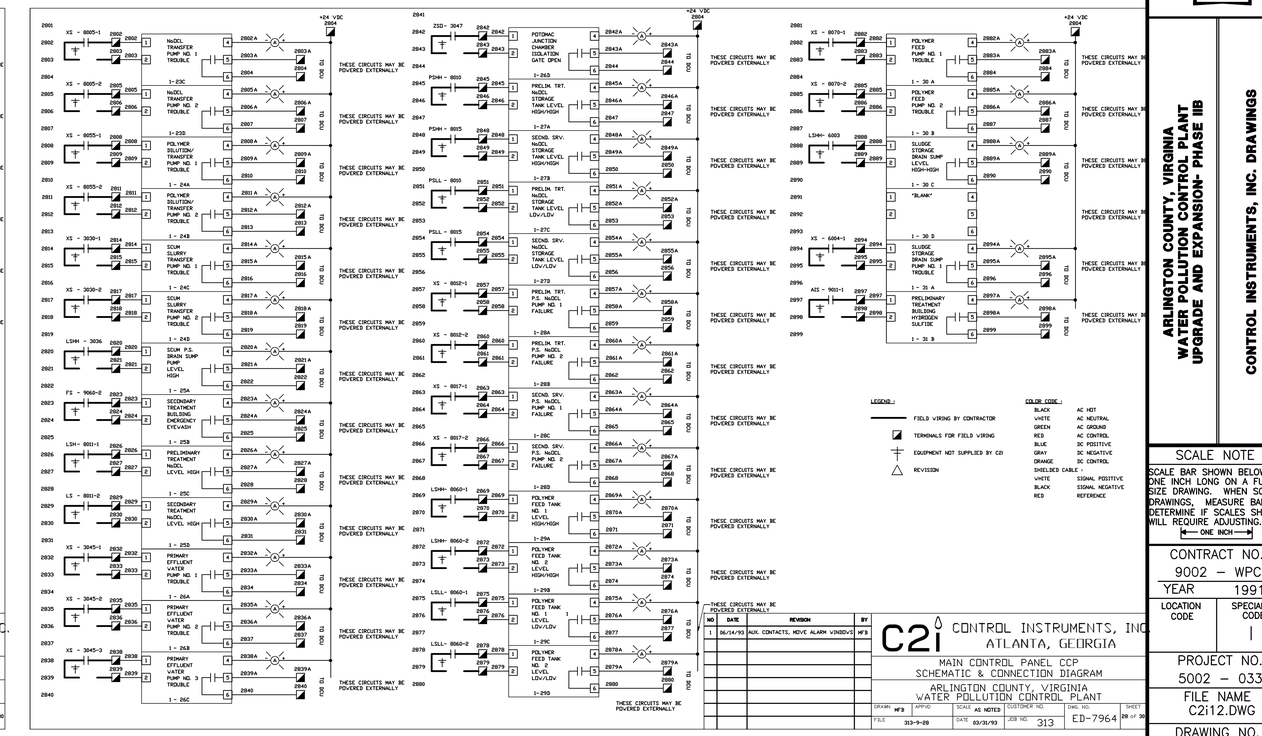

RECORD DRAWING

NO.	DATE	BY	DESCRIPTION
0	11/98	FXP	ASG RECORD DRAWING

DESIGNED BY: .
DRAWN BY: FXP
CHECKED BY/DATE/-:
APPROVED BY/DATE:

THIS DRAWING HAS BEEN COMPILED
HAZEN AND SAWYER, P.C.

ARLINGTON COUNTY, VIRGINIA
WATER POLLUTION CONTROL PLANT
UPGRADE AND EXPANSION- PHASE IIB

CONTROL INSTRUMENTS, INC. DRAWINGS
MAIN CONTROL PANEL CCP 7 OF 10

SCALE NOTE

SCALE BAR SHOWN BELOW IS ONE INCH LONG ON A FULL SIZE DRAWING. WHEN SCALING DRAWINGS, MEASURE BAR TO DETERMINE IF SCALES SHOWN WILL REQUIRE ADJUSTING.

← ONE INCH →

CONTRACT NO.
9002 - WPC
YEAR 1991
LOCATION CODE
SPECIALTY CODE I
PROJECT NO.
5002 - 033
FILE NAME
C2i12.DWG
DRAWING NO.
C2i-12
SHEET NO. 314

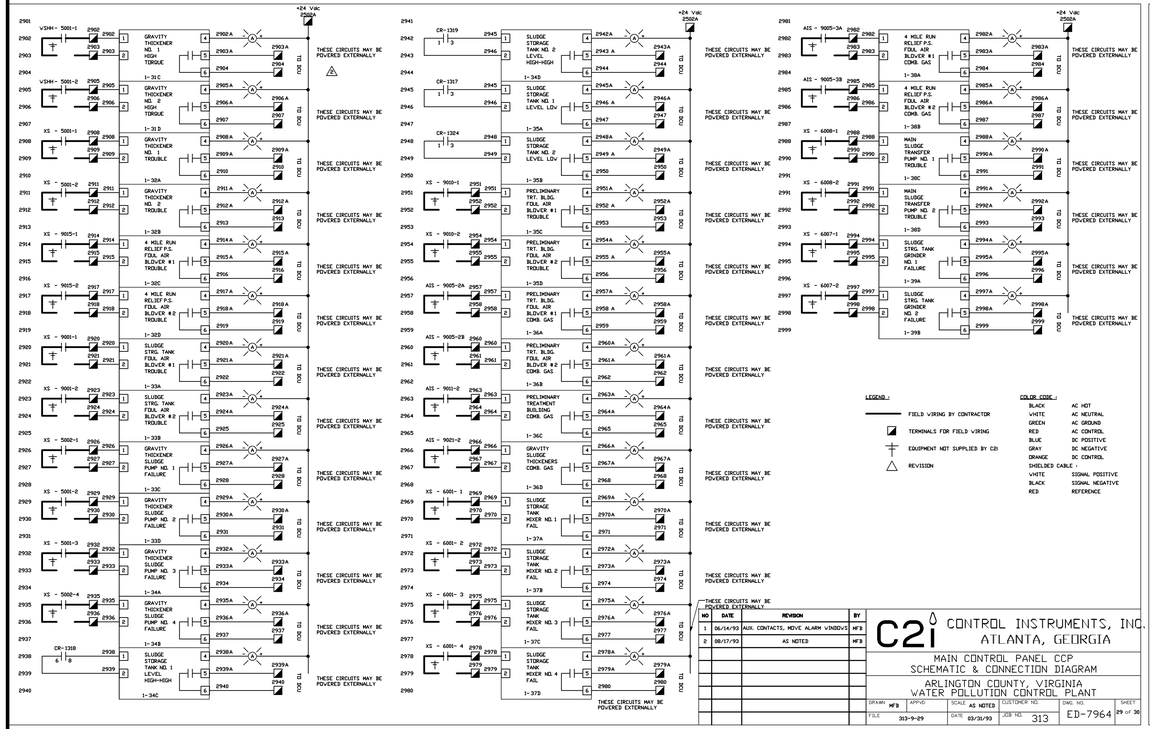

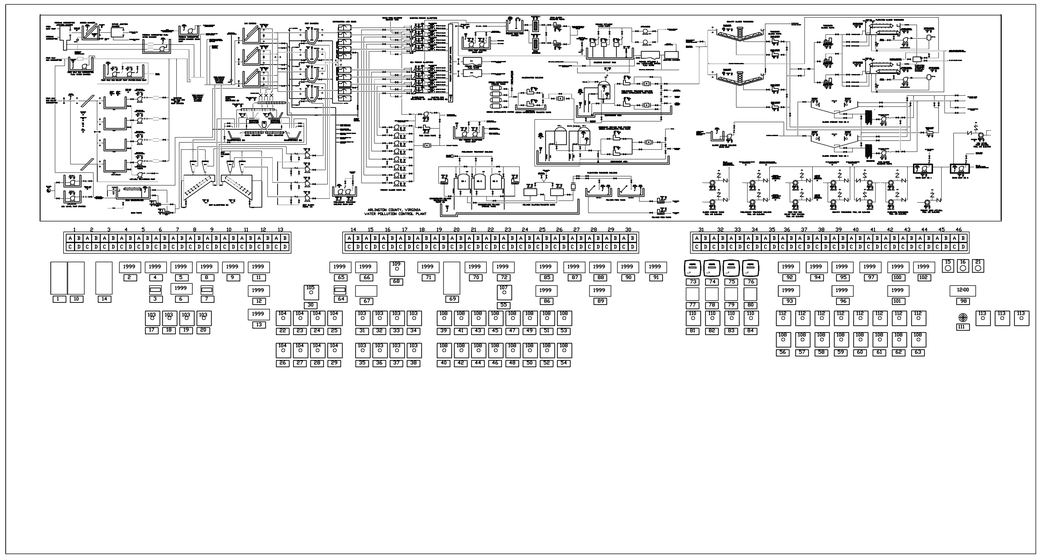
ARLINGTON COUNTY, VIRGINIA
WATER POLLUTION CONTROL PLANT
1 2 3 4 5 6 7 8 9 10 11 12 13
14 15 16 17 18 19 20 21 22 23 24 25 26 27 28 29 30
31 32 33 34 35 36 37 38 39 40 41 42 43 44 45 46
A B A B A B A B A B A B A B A B A B A B A B A B A B A B A B A B A B A B A B A B A B A B A B A B A B A B
C D C D C D C D C D C D C D C D C D C D C D C D C D C D C D C D C D C D C D C D C D C D C D C D C D
1999 1999 1999

ANNUNCIATOR LEGEND

SECTION 1

RDV	COL	VIN	ENGRAVING (SEE NOTE)				
			LINE 1	LINE 2	LINE 3	LINE 4	LINE 5
1	1	A	RAV	WASTEWATER	BYPASS	WEIR GATE	OPEN/3
1	1	B	4 MILE RUN	FLOW METER	CHAMBER	DRAIN SUMP	LEVEL HIGH
1	1	C	4 MILE RUN	RELIEF P.S.	CHANNEL	LEVEL HIGH	
1	1	D	BYPASS BAR	SCREEN	CHAMBER	LEVEL	
1	2	A	LDV LEVEL	P. S.	PUMP NO. 1	TROUBLE	
1	2	B	BYPASS BAR	SCREEN	TROUBLE		
1	2	C	LDV LEVEL	P. S.	PUMP NO. 2	TROUBLE	
1	2	D	LDV LEVEL	P. S.	VETVELL		
1	3	A	4 MILE RUN	RELIEF P.S.	COMB. GAS	A/B LEVEL	HIGH-HIGH
1	3	B	4 MILE RUN	RELIEF P.S.	H2S		
1	3	C	4 MILE RUN	RELIEF P.S.	PLC	TROUBLE	
1	3	D	4 MILE RUN	RELIEF P.S.	COMPRESS.	LDV AIR	
1	4	A	4 MILE RUN	RELIEF	DRAIN SUMP	PUMP NO. 1	TROUBLE
1	4	B	4 MILE RUN	RELIEF	SUMP PUMP	LEVEL	HIGH-HIGH
1	4	C	4 MILE RUN	RELIEF	DRAIN SUMP	PUMP NO. 2	TROUBLE
1	4	D	4 MILE RUN	RELIEF P.S.	DIESEL	FLDV	LEVEL LDV
1	5	A	4 MILE RUN	RELIEF P.S.	VETVELL	LEVEL	HIGH-HIGH
1	5	B	4 MILE RUN	RELIEF P.S.	VETVELL	LEVEL	LDV-LDV
1	5	C	SEAM	CONDENSTRE	FAILURE		
1	5	D	POTOMAC	INTERCEPTOR	FLDV METER	CHAMBER	LEVEL HIGH
1	6	A	4 MILE RUN	RELIEF P.S.	PUMP NO. 1	TROUBLE	
1	6	B	4 MILE RUN	RELIEF P.S.	PUMP NO. 2	TROUBLE	
1	6	C	4 MILE RUN	RELIEF P.S.	PUMP NO. 3	TROUBLE	
1	6	D	4 MILE RUN	RELIEF P.S.	PUMP NO. 4	TROUBLE	
1	7	A	BYPASS	SCREEN	CHAMBER	SUMP LEVEL	HIGH
1	7	B	CONCENTR.	SCUM SUMP	PUMP NO. 1	TROUBLE	
1	7	C	CONCENTR.	SCUM SUMP	PUMP NO. 2	TROUBLE	
1	7	D	PRELIMINARY	TREATMENT	INFL. CHANN	LEVEL	HIGH-HIGH
1	8	A	GRIT	CLASSIFIER	NO. 1	TROUBLE	
1	8	B	GRIT	CLASSIFIER	NO. 2	TROUBLE	
1	8	C	PRELIMINARY	TREATMENT	BAR SCREEN	NO. 1	TROUBLE
1	8	D	PRELIMINARY	TREATMENT	BAR SCREEN	NO. 2	TROUBLE
1	9	A	SCREENING	SCREW	CONVEYOR	NO. 1	TROUBLE
1	9	C	SCREENING	COMPACTOR	NO. 1	TROUBLE	
1	9	C	PRELIMINARY	TREATMENT	BAR SCREEN	NO. 3	TROUBLE
1	9	D	CONCENTR.	SCUM SUMP	LEVEL	HIGH-HIGH	
1	10	A	SCREENING	SCREW	CONVEYOR	NO. 2	TROUBLE
1	10	B	SCREENING	COMPACTOR	NO. 2	TROUBLE	
1	10	C	PRELIMINARY	TRT. BLD.	DRAIN SUMP	PUMP NO. 1	TROUBLE
1	10	D	PRELIMINARY	TRT. BLD.	SUMP PUMP	PUMP NO. 2	TROUBLE
1	11	A	GRIT SYSTEM	NO. 1	TROUBLE		
1	11	B	GRIT SYSTEM	NO. 2	TROUBLE		
1	11	C	GRIT SYSTEM	NO. 3	TROUBLE		
1	11	D	GRIT SYSTEM	NO. 4	TROUBLE		
1	12	A	GRIT	CHAMBER	MIXER	NO. 1	TROUBLE
1	12	B	GRIT	CHAMBER	MIXER	NO. 2	TROUBLE
1	12	C	GRIT	CHAMBER	MIXER	NO. 3	TROUBLE
1	12	D	GRIT	CHAMBER	MIXER	NO. 4	TROUBLE
1	13	A	CLARIFIER	TANK DRAIN	PUMP NO. 1	FAIL	
1	13	B	PRELIMINARY	TRT. BLD.	SUMP PUMP	LEVEL	HIGH-HIGH
1	13	C	CLARIFIER	TANK DRAIN	PUMP NO. 2	FAIL	
1	13	D	"BLANK"				

SECTION 2

RDV	COL	VIN	ENGRAVING (SEE NOTE)				
			LINE 1	LINE 2	LINE 3	LINE 4	LINE 5
1	14	A	PRELIMINARY	CLARIFIER	SLUDGE	COLLECTION	FAIL
1	14	B	PRELIMINARY	CLARIFIER	SLUDGE	COLLECTION	FAIL
1	14	C	PRELIMINARY	CLARIFIER	SLUDGE	COLLECTION	FAIL
1	14	D	PRELIMINARY	CLARIFIER	SLUDGE	COLLECTION	FAIL
1	15	A	PRELIMINARY	CLARIFIER	SLUDGE	COLLECTION	FAIL
1	15	B	PRELIMINARY	CLARIFIER	SLUDGE	COLLECTION	FAIL
1	15	C	PRELIMINARY	CLARIFIER	SLUDGE	COLLECTION	FAIL
1	15	D	PRELIMINARY	CLARIFIER	SLUDGE	COLLECTION	FAIL
1	16	A	PRIMARY	CLARIFIER	SLUDGE	COLLECTION	HI TORQUE
1	16	B	PRIMARY	CLARIFIER	SLUDGE	COLLECTION	HI TORQUE
1	16	C	PRIMARY	CLARIFIER	SLUDGE	COLLECTION	HI TORQUE
1	16	D	PRIMARY	CLARIFIER	SLUDGE	COLLECTION	HI TORQUE
1	17	A	PRIMARY	CLARIFIER	SLUDGE	COLLECTION	HI TORQUE
1	17	B	PRIMARY	CLARIFIER	SLUDGE	COLLECTION	HI TORQUE
1	17	C	PRIMARY	CLARIFIER	SLUDGE	COLLECTION	HI TORQUE
1	17	D	PRIMARY	CLARIFIER	SLUDGE	COLLECTION	HI TORQUE
1	18	A	PRIMARY	SLUDGE	PUMP NO. 1	FAIL	
1	18	B	PRIMARY	SLUDGE	PUMP NO. 2	FAIL	
1	18	C	PRIMARY	SLUDGE	PUMP NO. 3	FAIL	
1	18	D	PRIMARY	SLUDGE	PUMP NO. 4	FAIL	
1	19	A	PRIMARY	SLUDGE	PUMP NO. 5	FAIL	
1	19	B	PRIMARY	SLUDGE	PUMP NO. 6	FAIL	
1	19	C	PRIMARY	SLUDGE	PUMP NO. 7	FAIL	
1	19	D	PRIMARY	SLUDGE	PUMP NO. 8	FAIL	
1	20	A	PRIMARY	SCUM P.S.	LEVEL	HIGH-HIGH	LDV-LDV
1	20	B	PRIMARY	SCUM P.S.	MIXER	FAIL	
1	20	C	PRIMARY	CLARIFIER	EFFLUENT	CHANNEL	LEVEL HIGH
1	20	D	PRIMARY	CLARIFIER	DRAIN PUMP	LEVEL	HIGH
1	21	A	PRIMARY	CLARIFIER	DRAIN SUMP	PUMP NO. 1	TROUBLE
1	21	B	PRIMARY	CLARIFIER	DRAIN SUMP	PUMP NO. 2	TROUBLE
1	21	C	SCUM P.S.	DRAIN SUMP	PUMP NO. 1	TROUBLE	
1	21	D	SCUM P.S.	DRAIN SUMP	PUMP NO. 2	TROUBLE	
1	22	A	PRELIMINARY	TREATMENT	BUILDING	EMERGENCY	EYE+ASH
1	22	B	LIQUID	POLYMER	CONTAINMENT		LEVEL HIGH
1	22	C	POLYMER	RECIRC	PUMP NO. 1	TROUBLE	
1	22	D	POLYMER	RECIRC	PUMP NO. 2	TROUBLE	
1	23	A	SCUM	GRINDER	NO. 1	FAILURE	
1	23	B	SCUM	GRINDER	NO. 2	FAILURE	
1	23	C	NaOCL	TRANSFER	PUMP NO. 1	TROUBLE	
1	23	D	NaOCL	TRANSFER	PUMP NO. 2	TROUBLE	
1	24	A	POLYMER	DILUTION/	TRANSFER	PUMP NO. 1	TROUBLE
1	24	B	POLYMER	DILUTION/	TRANSFER	PUMP NO. 2	TROUBLE
1	24	C	SCUM	SLURRY	TRANSFER	PUMP NO. 1	TROUBLE
1	24	D	SCUM	SLURRY	TRANSFER	PUMP NO. 2	TROUBLE
1	25	A	SCUM P.S.	DRAIN SUMP	PUMP	LEVEL	HIGH
1	25	B	SECONDARY	TREATMENT	BUILDING	EMERGENCY	EYE+ASH
1	25	C	PRELIMINARY	TREATMENT	NaOCL	CONTAINMENT	LEVEL HIGH
1	25	D	SECONDARY	TREATMENT	NaOCL	CONTAINMENT	LEVEL HIGH
1	26	A	PRIMARY	EFFLUENT	WATER	PUMP NO. 1	TROUBLE
1	26	B	PRIMARY	EFFLUENT	WATER	PUMP NO. 2	TROUBLE
1	26	C	PRIMARY	EFFLUENT	WATER	PUMP NO. 3	TROUBLE
1	26	D	POTOMAC	JUNCTION	CHAMBER	ISOLATION	GATE OPEN
1	27	A	PRELIM. TRT.	NaOCL	STORAGE	TANK LEVEL	HIGH-HIGH
1	27	B	SECND. SRV.	NaOCL	STORAGE	TANK LEVEL	HIGH-HIGH
1	27	C	PRELIM. TRT.	NaOCL	STORAGE	TANK LEVEL	LDV-LDV
1	27	D	SECND. SRV.	NaOCL	STORAGE	TANK LEVEL	LDV-LDV
1	28	A	PRELIM. TRT.	P.S. NaOCL	PUMP NO. 1	FAILURE	
1	28	B	PRELIM. TRT.	P.S. NaOCL	PUMP NO. 2	FAILURE	
1	28	C	SECND. SRV.	P.S. NaOCL	PUMP NO. 1	FAILURE	
1	28	D	SECND. SRV.	P.S. NaOCL	PUMP NO. 2	FAILURE	
1	29	A	POLYMER	FEED TANK	NO. 1	LEVEL	HIGH/HIGH
1	29	B	POLYMER	FEED TANK	NO. 2	LEVEL	HIGH/HIGH
1	29	C	POLYMER	FEED TANK	NO. 1	LEVEL	LDV-LDV
1	29	D	POLYMER	FEED TANK	NO. 2	LEVEL	LDV-LDV
1	30	A	POLYMER	FEED	PUMP NO. 1	TROUBLE	
1	30	B	POLYMER	FEED	PUMP NO. 2	TROUBLE	
1	30	C	SLUDGE	STORAGE	DRAIN SUMP	LEVEL	HIGH-HIGH
1	30	D	"BLANK"				

SECTION 3

RDV	COL	VIN	ENGRAVING (SEE NOTE)				
			LINE 1	LINE 2	LINE 3	LINE 4	LINE 5
1	31	A	SLUDGE	STORAGE	DRAIN SUMP	PUMP NO. 2	TROUBLE
1	31	B	PRELIMINARY	TREATMENT	BUILDING	HYDROGEN	SULFIDE
1	31	C	GRAVITY	THICKENER	NO. 1	HIGH	TORQUE
1	31	D	GRAVITY	THICKENER	NO. 2	HIGH	TORQUE
1	32	A	GRAVITY	THICKENER	NO. 1	TROUBLE	
1	32	B	GRAVITY	THICKENER	NO. 2	TROUBLE	
1	32	C	4 MILE RUN	RELIEF P.S.	FOUL AIR	BLOWER #1	TROUBLE
1	32	D	4 MILE RUN	RELIEF P.S.	FOUL AIR	BLOWER #2	TROUBLE
1	33	A	SLUDGE	STRG. TANK	FOUL AIR	BLOWER #1	TROUBLE
1	33	B	SLUDGE	STRG. TANK	FOUL AIR	BLOWER #2	TROUBLE
1	33	C	GRAVITY	THICKENER	SLUDGE	PUMP NO. 1	FAILURE
1	33	D	GRAVITY	THICKENER	SLUDGE	PUMP NO. 2	FAILURE
1	34	A	GRAVITY	THICKENER	SLUDGE	PUMP NO. 3	FAILURE
1	34	B	GRAVITY	THICKENER	SLUDGE	PUMP NO. 4	FAILURE
1	34	C	SLUDGE	STORAGE	TANK NO. 1	LEVEL LDV	
1	34	D	SLUDGE	STORAGE	TANK NO. 2	LEVEL LDV	
1	35	A	PRELIMINARY	TRT. BLDG.	FOUL AIR	BLOWER #1	TROUBLE
1	35	B	PRELIMINARY	TRT. BLDG.	FOUL AIR	BLOWER #2	TROUBLE
1	35	C	PRELIMINARY	TRT. BLDG.	FOUL AIR	BLOWER #1	COMB. GAS
1	35	D	PRELIMINARY	TRT. BLDG.	FOUL AIR	BLOWER #2	COMB. GAS
1	36	A	PRELIMINARY	TREATMENT	BUILDING	COMB. GAS	
1	36	B	GRAVITY	SLUDGE	THICKENERS	COMB. GAS	
1	36	C	SLUDGE	STORAGE	TANK	MIXER NO. 1	FAIL
1	36	D	SLUDGE	STORAGE	TANK	MIXER NO. 2	FAIL
1	37	A	SLUDGE	STORAGE	TANK	MIXER NO. 3	FAIL
1	37	B	SLUDGE	STORAGE	TANK	MIXER NO. 4	FAIL
1	37	C	4 MILE RUN	RELIEF P.S.	FOUL AIR	BLOWER #1	COMB. GAS
1	37	D	4 MILE RUN	RELIEF P.S.	FOUL AIR	BLOWER #2	COMB. GAS
1	38	A	MAIN	SLUDGE	TRANSFER	PUMP NO. 1	TROUBLE
1	38	B	MAIN	SLUDGE	TRANSFER	PUMP NO. 2	TROUBLE
1	38	C	SLUDGE	STRG. TANK	GRINDER	NO. 1	FAILURE
1	38	D	SLUDGE	STRG. TANK	GRINDER	NO. 2	FAILURE
1	39	A	GRAVITY	THICKENERS	FOUL AIR	BLOWER #1	TROUBLE
1	39	B	GRAVITY	THICKENERS	FOUL AIR	BLOWER #2	TROUBLE
1	39	C	GRAVITY	THICKENERS	FOUL AIR	BLOWER #3	TROUBLE
1	39	D	GRAVITY	THICKENERS	FOUL AIR	BLOWER #4	TROUBLE
1	40	A	FLOTATION	THICKENER	SKIMMER	DRIVE NO. 2	TROUBLE
1	40	B	FLOTATION	THICKENER	SKIMMER	DRIVE NO. 1	TROUBLE
1	40	C	FLOTATION	THICKENER	SLUDGE	PUMP NO. 2	TROUBLE
1	40	D	FLOTATION	THICKENER	SLUDGE	PUMP NO. 1	TROUBLE
1	41	A	GRAVITY	SLUDGE	THICKENERS	HYDROGEN	SULFIDE
1	41	B	FLOTATION	THICKENER	COLLECTION	DRIVE NO. 2	TROUBLE
1	41	C	FLOTATION	THICKENER	SLUDGE	PUMP NO. 3	TROUBLE
1	41	D	FLOTATION	THICKENER	COLLECTION	DRIVE NO. 1	TROUBLE
1	42	A	FLOTATION	THICKENER	SLUDGE	WELL NO. 2	LEVEL HIGH
1	42	B	FLOTATION	THICKENER	SLUDGE	WELL NO. 1	
1	42	C	FLOTATION	THICKENER	SLUDGE	WELL NO. 2	LEVEL LDV
1	42	D	FLOTATION	THICKENER	SLUDGE	WELL NO. 1	LEVEL LDV
1	43	A	FLOTATION	THICKENER	RECIRCULATION	PUMP NO. 1	FAIL
1	43	B	FLOTATION	THICKENER	RECIRCULATION	PUMP NO. 2	FAIL
1	43	C	FLOTATION	THICKENERS	FOUL AIR	BLOWER #1	TROUBLE
1	43	D	FLOTATION	THICKENERS	FOUL AIR	BLOWER #2	TROUBLE
1	44	A	FLOTATION	THICKENER	NO. 1 AIR	COMPRESSOR	FAIL
1	44	B	FLOTATION	THICKENER	NO. 2 AIR	COMPRESSOR	FAIL
1	44	C	"SPARE"				
1	44	D	AUXILIARY	SLUDGE	TRANSFER	PUMP	FAILURE
1	45	A	DOOR	CONTROL	SUMP NO. 1	LEVEL	HIGH/HIGH
1	45	B	FOUL AIR	PIPE SUMP	NO. 2 PUMP	TROUBLE	
1	45	C	FOUL AIR	PIPE SUMP	NO. 1 PUMP	TROUBLE	
1	45	D	FOUL AIR	PIPE SUMP	NO. 2 PUMP	LEVEL	HIGH/HIGH
1	46	A	LDV LEVEL	P.S.	FOUL AIR	BLOWER #1	TROUBLE
1	46	B	PRIM. SCUM	VETVELL	FOUL AIR	BLOWER #1	TROUBLE
1	46	C	LDV LEVEL	P.S.	FOUL AIR	BLOWER #1	COMB. GAS
1	46	D	"BLANK"				

NOTE : 1. THE "BLANK" DENOTES A BLANK LENS AND IS NOT INCLUDED ON THE ENGRAVING.
2. MOLLIES MARKED "SPARE" ARE NOT TO BE ENGRAVED AT THIS TIME.
3. ENGRAVINGS ARE TO BE 1/8 INCHES HIGH.

LEGEND :
- FIELD WIRING BY CONTRACTOR
- TERMINALS FOR FIELD WIRING
- EQUIPMENT NOT SUPPLIED BY C2i
- REVISION

COLOR CODE :

BLACK	AC HOT
WHITE	AC NEUTRAL
GREEN	AC GROUND
RED	AC CONTROL
BLUE	DC POSITIVE
GRAY	DC NEGATIVE
ORANGE	DC CONTROL
SHIELDED CABLE :	
WHITE	SIGNAL POSITIVE
BLACK	SIGNAL NEGATIVE
RED	REFERENCE

C2i CONTROL INSTRUMENTS, INC.
ATLANTA, GEORGIA

MAIN CONTROL PANEL CCP
PANEL LAYOUT

ARLINGTON COUNTY, VIRGINIA
WATER POLLUTION CONTROL PLANT

DRAWN	APPVD	SCALE	CUSTOMER NO.	DWG. NO.	SHEET
MF'B		AS NOTED		ED-7965	3 of 6
FILE 313-10-3		DATE 03/30/93	JOB NO. 313		

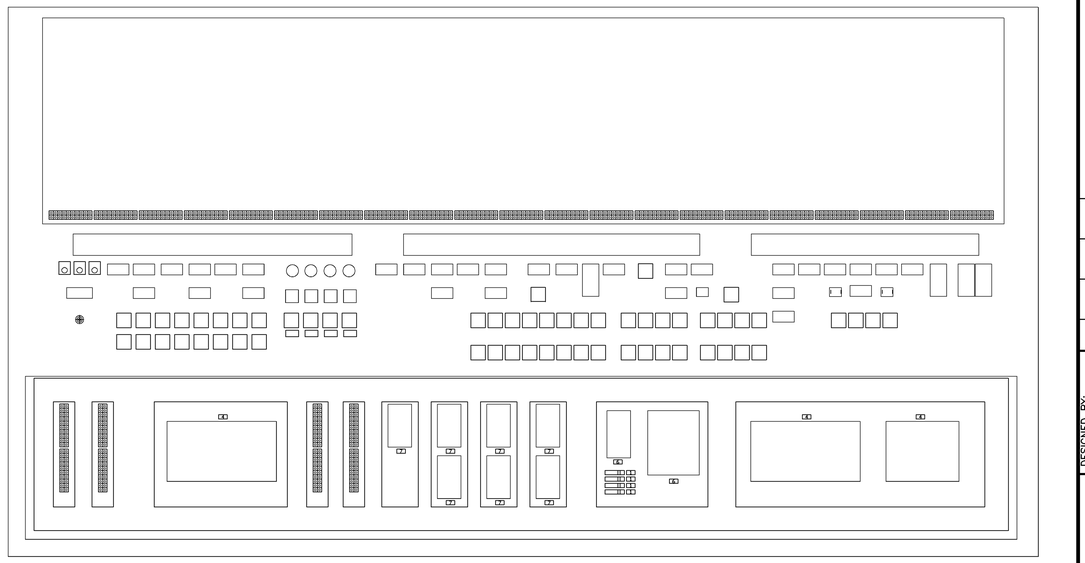

VIEW A-A

PANEL TO BE 96"H X 100"W X 36"D , MEMA 12 , FIVE DOOR REAR ACCESS

LEGEND :
1. NAMEPLATE= "FU-XXX"
2. NAMEPLATE= "CB-XXX"
3. NAMEPLATE= "SP-XXXX"
4. NAMEPLATE= "PLC RACK NO. X"
5. NAMEPLATE= "CR-XXXX"
6. NAMEPLATE= "ES-X"
7. NAMEPLATE= "RIDDIC BOARD NO. X"

NO	DATE	REVISION	BY
1	06/24/93	LAYOUT	MF'B

C2i CONTROL INSTRUMENTS, INC.
ATLANTA, GEORGIA

MAIN CONTROL PANEL CCP
PANEL LAYOUT

ARLINGTON COUNTY, VIRGINIA
WATER POLLUTION CONTROL PLANT

DRAWN	APPVD	SCALE	CUSTOMER NO.	DWG. NO.	SHEET
MF'B		AS NOTED		ED-7965	4 of 6
FILE 313-10-4		DATE 04/09/93	JOB NO. 313		

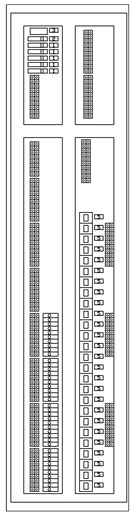

SIDE PANEL NO.1

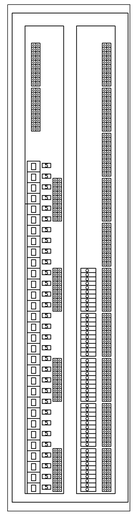

SIDE PANEL NO.2

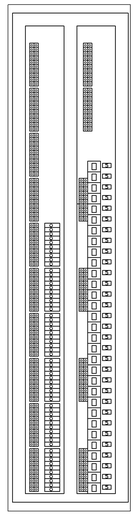

SIDE PANEL NO.3

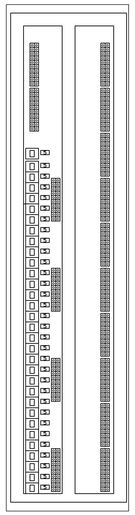

SIDE PANEL NO.4

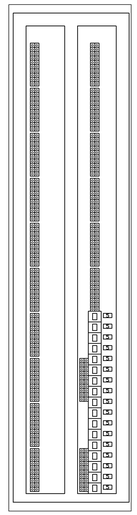

SIDE PANEL NO.5

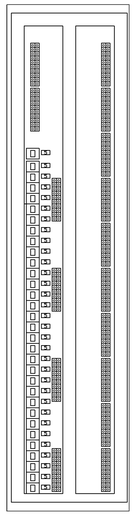

SIDE PANEL NO.6

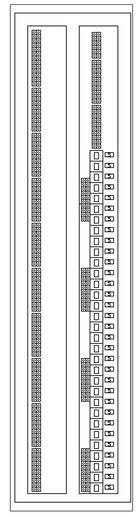

SIDE PANEL NO.7

SIDE PANELS LAYOUT

SIDE PANELS TO BE 90"H X 21"W (TYP. 10)

LEGEND :
1. NAMEPLATE= "FU-XXX"
2. NAMEPLATE= "CB-XXX"
3. NAMEPLATE= "SP-XXXX"
4. NAMEPLATE= "PLC RACK NO. X"
5. NAMEPLATE= "CR-XXXX"

NO	DATE	REVISION	BY
1	06/24/93	LAYOUT	MF'B

C2i CONTROL INSTRUMENTS, INC.
ATLANTA, GEORGIA

MAIN CONTROL PANEL CCP
PANEL LAYOUT

ARLINGTON COUNTY, VIRGINIA
WATER POLLUTION CONTROL PLANT

DRAWN	APPVD	SCALE	CUSTOMER NO.	DWG. NO.	SHEET
MF'B		AS NOTED		ED-7965	5 of 6
FILE 313-10-5		DATE 04/15/93	JOB NO. 313		

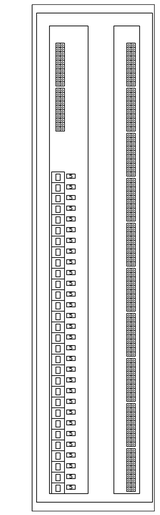

SIDE PANEL NO.8

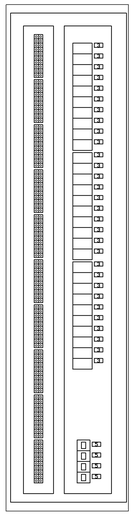

SIDE PANEL NO.9

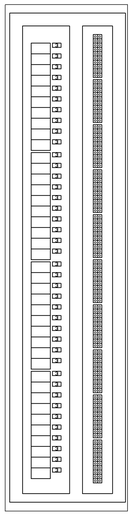

SIDE PANEL NO.10

SIDE PANELS LAYOUT

SIDE PANELS TO BE 90"H X 21"W (TYP. 10)

LEGEND :
1. NAMEPLATE= "FU-XXX"
2. NAMEPLATE= "CB-XXX"
3. NAMEPLATE= "SP-XXXX"
4. NAMEPLATE= "PLC RACK NO. X"
5. NAMEPLATE= "CR-XXXX"

C2i CONTROL INSTRUMENTS, INC.
ATLANTA, GEORGIA

MAIN CONTROL PANEL CCP
PANEL LAYOUT

ARLINGTON COUNTY, VIRGINIA
WATER POLLUTION CONTROL PLANT

DRAWN	APPVD	SCALE	CUSTOMER NO.	DWG. NO.	SHEET
MF'B		AS NOTED		ED-7965	6 of 6
FILE 313-10-6		DATE 04/15/93	JOB NO. 313		

RECORD DRAWING

NO.	DATE	DESCRIPTION
0	11/98	RECORD DRAWING
		REVISIONS

DESIGNED BY:	.	ASG
DRAWN BY:	FXP	FXP
CHECKED BY/DATE/:		CHKD
APPROVED BY/DATE:		DRWN

THIS DRAWING HAS BEEN COMPILED BY HAZEN AND SAWYER, P.C.

ARLINGTON COUNTY, VIRGINIA
WATER POLLUTION CONTROL PLANT
UPGRADE AND EXPANSION- PHASE IIIB

CONTROL INSTRUMENTS, INC. DRAWINGS
MAIN CONTROL PANEL CCP 9 OF 10

SCALE NOTE

SCALE BAR SHOWN BELOW IS ONE INCH LONG ON A FULL SIZE DRAWING. WHEN SCALING DRAWINGS, MEASURE BAR TO DETERMINE IF SCALES SHOWN WILL REQUIRE ADJUSTING.

ONE INCH

CONTRACT NO.
9002 - WPC

YEAR 1991

LOCATION CODE

SPECIALTY CODE
I

PROJECT NO.
5002 - 033

FILE NAME
C2i14.DWG

DRAWING NO.
C2i-14

SHEET NO. 316

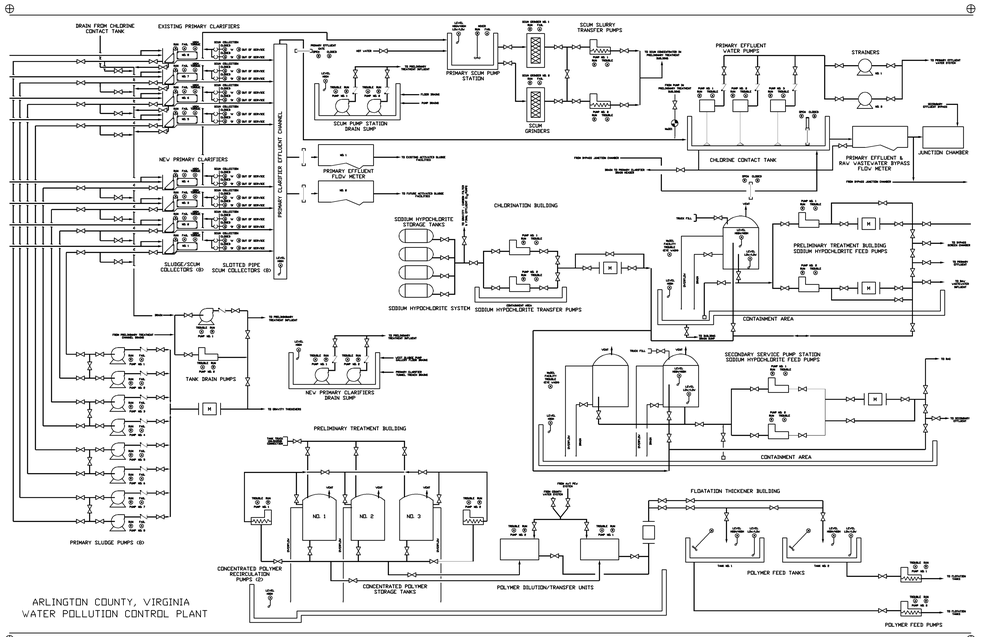

ARLINGTON COUNTY, VIRGINIA
WATER POLLUTION CONTROL PLANT

SHEET 2 OF 3
HALF SIZE DRAWING

LEGEND:
- 1/4" LINE WIDTH
- 1/8" LINE WIDTH
- ① HOLE FOR AMBER LIGHT 0.376"ø 0.375" DIA.
- ② HOLE FOR RED LIGHT 0.376"ø 0.375" DIA.
- ③ HOLE FOR BLUE LIGHT 0.376"ø 0.375" DIA.

C2i CONTROL INSTRUMENTS, INC.
ATLANTA, GEORGIA

MAIN CONTROL PANEL CCP
GRAPHIC PANEL

ARLINGTON COUNTY, VIRGINIA
WATER POLLUTION CONTROL PLANT

DRAWN	APPVD	SCALE	CUSTOMER NO.	DWG. NO.	SHEET
MFB		AS NOTED		ED-7965	2 OF 3
F.I.E.	313-121-2	DATE 04/02/93	JOB NO. 313		

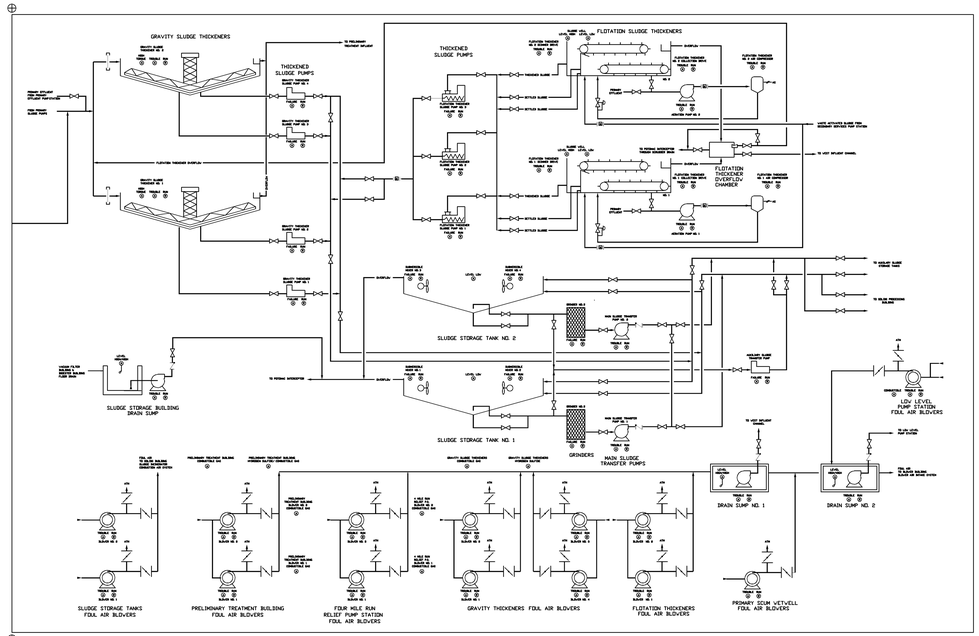

LEGEND:
- 1/4" LINE WIDTH
- 1/8" LINE WIDTH
- ① HOLE FOR AMBER LIGHT 0.376"ø 0.375" DIA.
- ② HOLE FOR RED LIGHT 0.376"ø 0.375" DIA.
- ③ HOLE FOR BLUE LIGHT 0.376"ø 0.375" DIA.

SHEET 3 OF 3
HALF SIZE DRAWING

C2i CONTROL INSTRUMENTS, INC.
ATLANTA, GEORGIA

MAIN CONTROL PANEL CCP
GRAPHIC PANEL

ARLINGTON COUNTY, VIRGINIA
WATER POLLUTION CONTROL PLANT

DRAWN	APPVD	SCALE	CUSTOMER NO.	DWG. NO.	SHEET
MFB		AS NOTED		ED-7965	3 OF 3
F.I.E.	313-121-3	DATE 04/02/93	JOB NO. 313		

NO.	DATE	DRWN	CHKD	DESCRIPTION
0	11/98	FXP	ASG	RECORD DRAWING

REVISIONS

DESIGNED BY: .
DRAWN BY: FXP
CHECKED BY/DATE/:
APPROVED BY/DATE:

THIS DRAWING HAS BEEN COMPILED
HAZEN AND SAWYER, P.C.

ARLINGTON COUNTY, VIRGINIA
WATER POLLUTION CONTROL PLANT
UPGRADE AND EXPANSION- PHASE IIB

CONTROL INSTRUMENTS, INC. DRAWINGS
MAIN CONTROL PANEL CCP 10 OF 10
AND NaOCL AIR BUBBLER PANEL

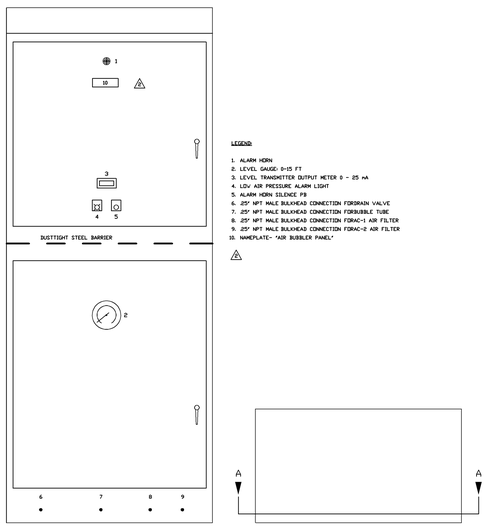

PANEL TO BE 90"H X 36"W X 20"D, NEMA 4X, 14 GAUGE, 316 S. S.

LEGEND:
1. ALARM HORN
2. LEVEL GAUGE: 0-15 FT
3. LEVEL TRANSMITTER OUTPUT METER 0 - 25 mA
4. LOW AIR PRESSURE ALARM LIGHT
5. ALARM HORN SILENCE PB
6. .25" NPT MALE BULKHEAD CONNECTION FOR DRAIN VALVE
7. .25" NPT MALE BULKHEAD CONNECTION FOR BUBBLE TUBE
8. .25" NPT MALE BULKHEAD CONNECTION FOR AC-1 AIR FILTER
9. .25" NPT MALE BULKHEAD CONNECTION FOR AC-2 AIR FILTER
10. NAMEPLATE- "AIR BUBBLER PANEL"

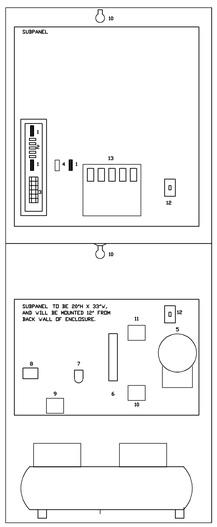

CONSTRUCTION NOTES:
1. ALL PIPING WITHIN THE CABINET SHALL BE PER SPECIFICATION SECTION 13801-2.06.C.
2. CABINET WILL BE FABRICATED TO MEET SPECIFICATIONS SECTION 13801-2.02 .
3. NAMEPLATES WILL BE PROVIDED FOR EACH DEVICE INSIDE THE CABINET.

LEGEND:
1. TERMINALS
2. NAMEPLATES- "FU-XXX"
3. NAMEPLATES- "CR-XXX"
4. NAMEPLATES- "24 VDC POWER SUPPLY"
5. NAMEPLATES- "PRESSURE TRANSMITTER"
6. NAMEPLATES- "ROTAMETER/DIFF. REG."
7. NAMEPLATES- "REGULATOR/FILTER"
8. NAMEPLATES- "AIR SUPPLY VALVE"
9. NAMEPLATES- "ALTERNATE AIR SUPPLY VALVE"
10. NAMEPLATES- "PURGE VALVE"
11. NAMEPLATES- "INSTRUMENT AIR VALVE"
12. NAMEPLATES- "LIGHT SWITCH"
13. NAMEPLATES- "AGM RACK"

C2i CONTROL INSTRUMENTS, INC.
ATLANTA, GEORGIA

AIR BUBBLER PANEL (NaOCL SYSTEM)
SCHEMATIC, CONNECTION & PIPING DIAGRAM

ARLINGTON COUNTY, VIRGINIA
WATER POLLUTION CONTROL PLANT

DRAWN	APPVD	SCALE	CUSTOMER NO.	DWG. NO.	SHEET
MFB		AS NOTED		ED-7967	1 of 2
FILE	313-12-1	DATE 05/05/93	JOB NO. 313		

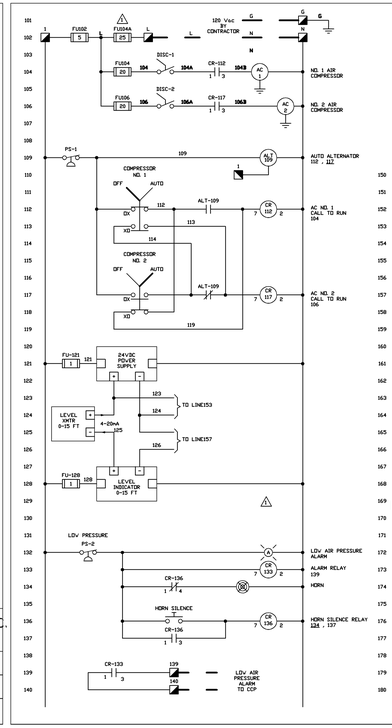

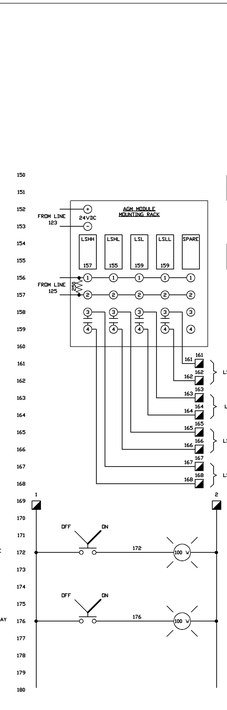

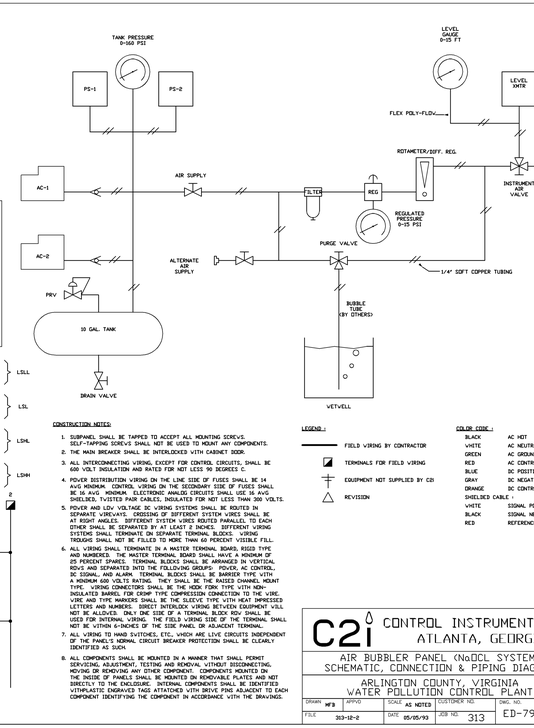

CONSTRUCTION NOTES:
1. SUBPANEL SHALL BE TAPPED TO ACCEPT ALL MOUNTING SCREWS. SELF-TAPPING SCREWS SHALL NOT BE USED TO MOUNT ANY COMPONENTS.
2. THE MAIN BREAKER SHALL BE INTERLOCKED WITH CABINET DOOR.
3. ALL INTERCONNECTING WIRING, EXCEPT FOR CONTROL CIRCUITS, SHALL BE 600 VOLT INSULATION AND RATED FOR NOT LESS 90 DEGREES C.
4. POWER DISTRIBUTION WIRING ON THE LINE SIDE OF FUSES SHALL BE #14 AVG MINIMUM. CONTROL WIRING ON THE SECONDARY SIDE OF FUSES SHALL BE 16 AVG MINIMUM. ELECTRONIC ANALOG CIRCUITS SHALL USE 16 AVG SHIELDED, TWISTED PAIR CABLES, INSULATED FOR NOT LESS THAN 300 VOLTS.
5. POWER AND LOW VOLTAGE DC WIRING SYSTEMS SHALL BE ROUTED IN SEPARATE WIREWAYS. CROSSING OF DIFFERENT SYSTEM WIRES SHALL BE AT RIGHT ANGLES. DIFFERENT SYSTEM WIRES ROUTED PARALLEL TO EACH OTHER SHALL BE SEPARATED BY AT LEAST 2 INCHES. DIFFERENT WIRING SYSTEMS SHALL TERMINATE ON SEPARATE TERMINAL BLOCKS. WIRING TROUGHS SHALL NOT BE FILLED TO MORE THAN 60 PERCENT VISIBLE FILL.
6. ALL WIRING SHALL TERMINATE IN A MASTER TERMINAL BOARD, RIGID TYPE AND NUMBERED. THE MASTER TERMINAL BOARD SHALL HAVE A MINIMUM OF 25 PERCENT SPARES. TERMINAL BLOCKS SHALL BE ARRANGED IN VERTICAL RDVS AND SEPARATED INTO THE FOLLOWING GROUPS: POWER, AC CONTROL, DC SIGNAL, AND ALARM. TERMINAL BLOCKS SHALL BE BARRIER TYPE WITH A MINIMUM 600 VOLTS RATING. THEY SHALL BE THE RAISED CHANNEL MOUNT TYPE. WIRING CONNECTORS SHALL BE THE HOOK FORK TYPE WITH NON-LOOSE AND TYPE TO SUIT THE CONNECTION CONFIGURATION AND WIRE. LABELING STRIPS SHALL BE THE PERMANENT MARKING TYPE WITH RECESSED LETTERS AND NUMBERS. DIRECT INTERCONNECTING WIRING BETWEEN EQUIPMENT WILL NOT BE ALLOWED. ONLY ONE SIDE OF A TERMINAL BLOCK RDV SHALL BE USED FOR INTERNAL WIRING. THE FIELD WIRING SIDE OF THE TERMINAL SHALL NOT BE WITHIN 6-INCHES OF THE SIDE PANEL OR ADJACENT TERMINAL.
7. ALL WIRING TO HAND SWITCHES, ETC., WHICH ARE LIVE CIRCUITS INDEPENDENT OF THE PANEL'S NORMAL CIRCUIT BREAKER PROTECTION SHALL BE CLEARLY IDENTIFIED AS SUCH.
8. ALL COMPONENTS SHALL BE MOUNTED IN A MANNER THAT SHALL PERMIT SERVICING, ADJUSTMENT, TESTING AND REMOVAL WITHOUT DISCONNECTING, MOVING OR REMOVING ANY OTHER COMPONENT. COMPONENTS MOUNTED ON DOORS SHALL BE WIRED WITH FLEXIBLE CONDUCTORS THAT SHALL NOT DIRECTLY TO THE ENCLOSURE. INTERNAL COMPONENTS SHALL BE IDENTIFIED WITHPLASTIC ENGRAVED TAGS ATTATCHED WITH DRIVE PINS ADJACENT TO EACH COMPONENT IDENTIFYING THE COMPONENT IN ACCORDANCE WITH THE DRAWINGS.

LEGEND :
- FIELD WIRING BY CONTRACTOR
- TERMINALS FOR FIELD WIRING
- EQUIPMENT NOT SUPPLIED BY CCI
- REVISION

COLOR CODE :	
BLACK	AC HOT
WHITE	AC NEUTRAL
GREEN	AC GROUND
RED	AC CONTROL
BLUE	DC POSITIVE
GRAY	DC NEGATIVE
ORANGE	DC CONTROL
SHIELDED CABLE :	
WHITE	SIGNAL POSITIVE
BLACK	SIGNAL NEGATIVE
RED	REFERENCE

C2i CONTROL INSTRUMENTS, INC.
ATLANTA, GEORGIA

AIR BUBBLER PANEL (NaOCL SYSTEM)
SCHEMATIC, CONNECTION & PIPING DIAGRAM

ARLINGTON COUNTY, VIRGINIA
WATER POLLUTION CONTROL PLANT

DRAWN	APPVD	SCALE	CUSTOMER NO.	DWG. NO.	SHEET
MFB		AS NOTED		ED-7967	2 of 2
FILE	313-12-2	DATE 05/05/93	JOB NO. 313		

SCALE NOTE

SCALE BAR SHOWN BELOW IS ONE INCH LONG ON A FULL SIZE DRAWING. WHEN SCALING DRAWINGS, MEASURE BAR TO DETERMINE IF SCALES SHOWN WILL REQUIRE ADJUSTING.

← ONE INCH →

CONTRACT NO.	
9002 - WPC	
YEAR 1991	
LOCATION CODE	SPECIALTY CODE I

PROJECT NO.
5002 - 033

FILE NAME
C2i15.DWG

DRAWING NO.
C2i-15

SHEET NO. 317

RECORD DRAWING

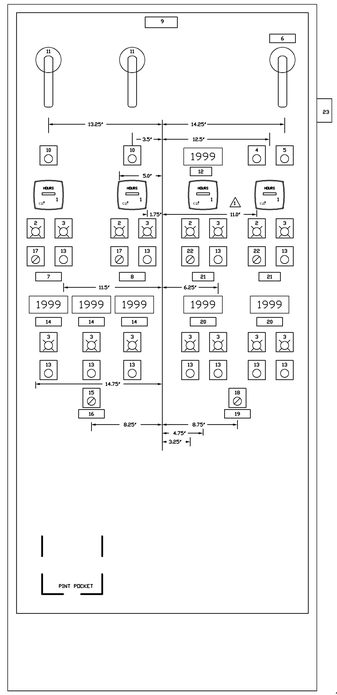

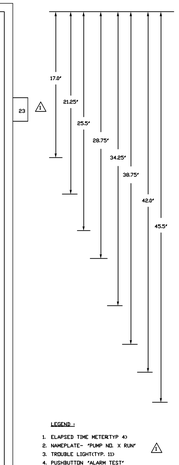

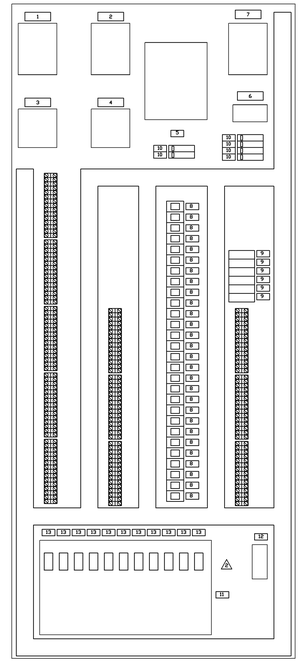

LEGEND :

1. ELAPSED TIME METER(TYP 4)
2. NAMEPLATE- "PUMP NO. X RUN"
3. TROUBLE LIGHT(TYP. 11)
4. PUSHBUTTON "ALARM TEST"
5. PUSHBUTTON "ALARM SILENCE"
6. NAMEPLATE- " MAIN POWER BREAKER
7. NAMEPLATE- "POLYMER RECIRCULATION PUMP NO1"
8. NAMEPLATE- "POLYMER RECIRCULATION PUMP NO2"
9. NAMEPLATE- "POLYMER DILUTION/TRANSFER CONTROL PANEL LCP-15"
10. NAMEPLATE- "PUMP NO. X RECEPT" (TYP. 2)
11. MOTOR MECHANICAL DISCONNECT(TYP 2)
12. NAMEPLATE- "POLYMER FLOV TO MIX FEED TANKS (GPM)
13. PUSHBUTTON "ALARM RESET" (TYP. 11)
14. NAMEPLATE- " STORAGE TANK NO. X LEVEL (FEET)(TYP. 3)
15. 3 POS. SELECTOR SWITCH "NO. 1 NO. 2" NO. 3"
16. NAMEPLATE- " SUPPLY TANK LEVEL CUTOUT SELECT"
17. 3 POS. SELECTOR SWITCH "ON OFF TIMER"(TYP. 2)
18. 2 POS. SELECTOR SWITCH(TYP. 1 NO. 2"
19. NAMEPLATE- " FEED TANK LEVEL CONTROL SELECT"
20. NAMEPLATE- " FEED TANK NO. X LEVEL (FEET)(TYP. 2)
21. NAMEPLATE- " DILUTION/TRANSFER PUMP NO. X" (TYP. 2)
22. 3 POS. SELECTOR SWITCH "HAND OFF AUTO" (TYP. 2)
23. HORN

PANEL LAYOUT

PANEL TO BE 78"H X 36"V X 16"D
NEMA 4X, 14 GAUGE MIN. .105 S.S.

CONSTRUCTION NOTES:

1. SUBPANEL SHALL BE TAPPED TO ACCEPT ALL MOUNTING SCREWS. SELF-TAPPING SCREWS SHALL NOT BE USED TO MOUNT ANY COMPONENTS.
2. THE MAIN BREAKER SHALL BE INTERLOCKED WITH CABINET DOOR.
3. ALL INTERCONNECTING WIRING, EXCEPT FOR CONTROL CIRCUITS, SHALL BE 600 VOLT INSULATION AND RATED FOR NOT LESS 90 DEGREES C.
4. POWER DISTRIBUTION WIRING ON THE LINE SIDE OF FUSES SHALL BE 14 AVG MINIMUM. CONTROL WIRING ON THE SECONDARY SIDE OF FUSES SHALL BE 16 AVG MINIMUM. ELECTRONIC ANALOG CIRCUITS SHALL USE 16 AVG SHIELDED, TWISTED PAIR CABLES. INSULATION FOR NOT LESS THAN 300 VOLTS.
5. POWER AND LOV VOLTAGE DC WIRING SYSTEMS SHALL BE ROUTED IN SEPARATE WIREVAYS. CROSSING OF DIFFERENT SYSTEM WIRES SHALL BE AT RIGHT ANGLES. DIFFERENT SYSTEM WIRES ROUTED PARALLEL TO EACH OTHER SHALL BE SEPARATED BY AT LEAST 2 INCHES. DIFFERENT WIRING SYSTEMS SHALL TERMINATE ON SEPARATE TERMINAL BLOCKS. WIRING THROUGH SHALL NOT BE FILLED TO MORE THAN 60 PERCENT VISIBLE FILL.
6. ALL WIRING SHALL TERMINATE IN A MASTER TERMINAL BOARD, RIGID TYPE AND NUMBERED STRIP. MASTER TERMINAL BOARDS SHALL BE ARRANGED HORIZONTAL, WITH ALL INPUTS ENTERING FROM ONE SIDE, ALL OUTPUTS LEAVING FROM THE OPPOSITE SIDE, AND SEPARATED INTO THE FOLLOWING GROUPS: POWER, AC CONTROL, DC SIGNAL, AND ALARM. TERMINAL BLOCKS SHALL BE BARRIER TYPE WITH A MINIMUM 600 VOLTS RATING. THEY SHALL BE THE RAISED CHANNEL MOUNT TYPE. WIRING CONNECTORS SHALL BE THE HOOK FORK TYPE WITH NON-INSULATED BARREL FOR CRIMP TYPE COMPRESSION CONNECTION TO THE WIRE. WIRE AND TYPE MARKERS SHALL BE THE SLEEVE TYPE WITH HEAT IMPRESSED LETTERS AND NUMBERS. DIRECT INTERLOCK WIRING BETWEEN EQUIPMENT WILL NOT BE ALLOWED. ONLY ONE SIDE OF A TERMINAL BLOCK MAY SHALL BE USED FOR INTERNAL WIRING. THE FIELD WIRING SIDE OF THE TERMINAL SHALL NOT BE WITHIN 6-INCHES OF THE SIDE PANEL OR ADJACENT TERMINAL.
7. ALL WIRING TO HAND SWITCHES, ETC., WHICH ARE LIVE CIRCUITS INDEPENDENT OF THE PANEL'S NORMAL CIRCUIT BREAKER PROTECTION SHALL BE CLEARLY IDENTIFIED AS SUCH.
8. ALL COMPONENTS SHALL BE MOUNTED IN A MANNER THAT SHALL PERMIT SERVICING, ADJUSTMENT, TESTING AND REMOVAL WITHOUT DISCONNECTING, MOVING OR REMOVING ANY OTHER COMPONENT. COMPONENTS MOUNTED ON THE INSIDE OF PANELS SHALL BE MOUNTED ON REMOVABLE PLATES AND NOT DIRECTLY TO THE ENCLOSURE. INTERNAL COMPONENTS SHALL BE IDENTIFIED WITHPLASTIC ENGRAVED TAGS ATTATCHED WITH BRIVE PINS ADJACENT TO EACH COMPONENT IDENTIFYING THE COMPONENT IN ACCORDANCE WITH THE DRAWINGS.

SUBPANEL LAYOUT

LEGEND :

1. NAMEPLATE- "MCP1"
2. NAMEPLATE- "MCP2"
3. NAMEPLATE- "M1"
4. NAMEPLATE- "M2"
5. NAMEPLATE- "CPT107"
6. NAMEPLATE- "SP396"
7. NAMEPLATE- "CB-1"
8. NAMEPLATE- "CR-XXX"
9. NAMEPLATE- "TP-XXX"
10. NAMEPLATE- "FU-XXX"
11. NAMEPLATE- "AOM RACK"
12. NAMEPLATE- "ES-1"
13. NAMEPLATE- "XXXX-XXXX-X"

NO	DATE	REVISION	BY	NO	DATE	REVISION	BY
1	07/09/93	AS NOTED	MFB				
2	04/11/94	AS BUILT	MFB				

C2i CONTROL INSTRUMENTS, INC.
ATLANTA, GEORGIA

CONTROL PANEL LCP-15
SCHEMATIC & CONNECTION DIAGRAM
ARLINGTON COUNTY, VIRGINIA
WATER POLLUTION CONTROL PLANT

DRAWN: MFB	APP'D:	SCALE: AS NOTED	CUSTOMER NO.	DWG. NO.	SHEET
FILE: 313-13-1		DATE: 05/06/93	JOB NO. 313	ED-7968	1 of 4

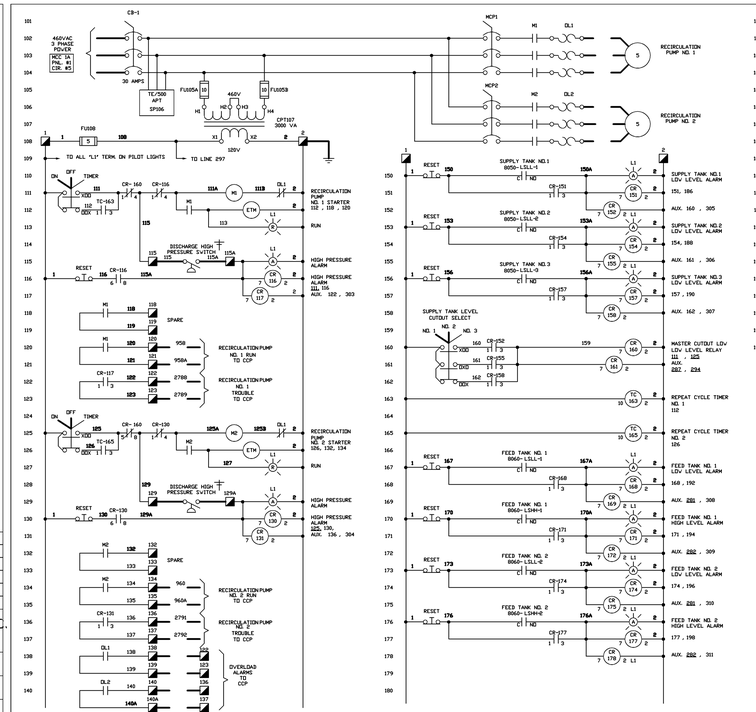

LEGEND :

- FIELD WIRING BY CONTRACTOR
- TERMINALS FOR FIELD WIRING
- EQUIPMENT NOT SUPPLIED BY C2i
- REVISION

COLOR CODE :

BLACK	AC HOT
WHITE	AC NEUTRAL
GREEN	AC GROUND
RED	AC CONTROL
BLUE	DC POSITIVE
GRAY	DC NEGATIVE
ORANGE	DC CONTROL
SHIELDED CABLE :	
WHITE	SIGNAL POSITIVE
BLACK	SIGNAL NEGATIVE
RED	REFERENCE

NO	DATE	REVISION	BY	NO	DATE	REVISION	BY
1	07/09/93	AS NOTED	MFB				
2	10/7/94	ADDED LINE NUMBERS TO FIELD WIRES	DES				

C2i CONTROL INSTRUMENTS, INC.
ATLANTA, GEORGIA

CONTROL PANEL LCP-15
SCHEMATIC & CONNECTION DIAGRAM
ARLINGTON COUNTY, VIRGINIA
WATER POLLUTION CONTROL PLANT

DRAWN: MFB	APP'D:	SCALE: AS NOTED	CUSTOMER NO.	DWG. NO.	SHEET
FILE: 313-13-2		DATE: 05/06/93	JOB NO. 313	ED-7968	2 of 4

NO	DATE	REVISION	BY
0	11/98	RECORD DRAWING	FXP

DESIGNED BY: .
DRAWN BY: FXP
CHECKED BY/DATE/: ASG
APPROVED BY/DATE: CHKD

THIS DRAWING HAS BEEN COMPILED
HAZEN AND SAWYER, P.C.

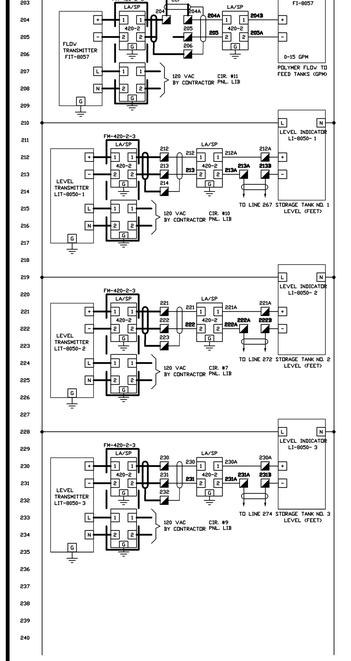

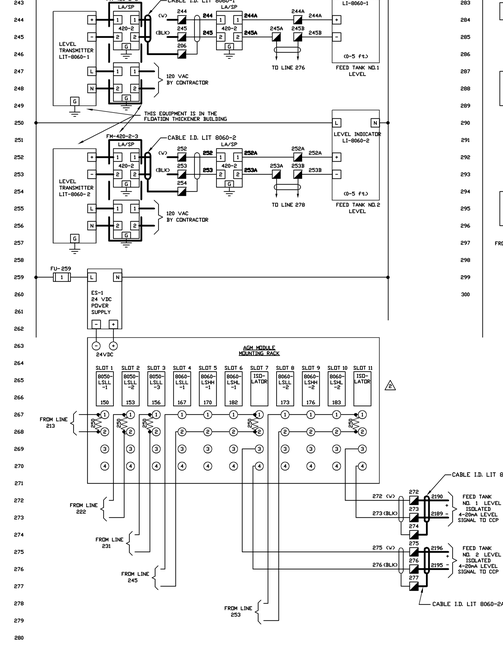

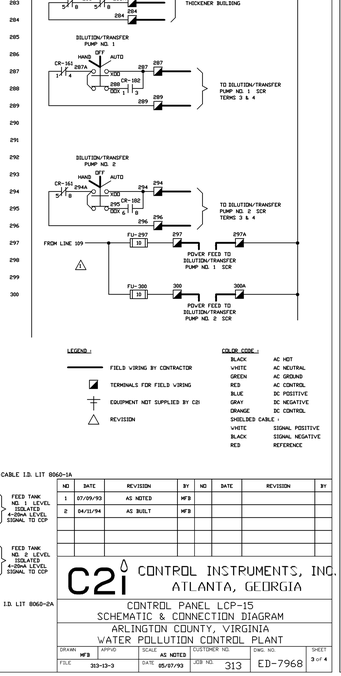

LEGEND :

- FIELD WIRING BY CONTRACTOR
- TERMINALS FOR FIELD WIRING
- EQUIPMENT NOT SUPPLIED BY C2i
- REVISION

COLOR CODE :

BLACK	AC HOT
WHITE	AC NEUTRAL
GREEN	AC GROUND
RED	AC CONTROL
BLUE	DC POSITIVE
GRAY	DC NEGATIVE
ORANGE	DC CONTROL
SHIELDED CABLE :	
WHITE	SIGNAL POSITIVE
BLACK	SIGNAL NEGATIVE
RED	REFERENCE

NO	DATE	REVISION	BY	NO	DATE	REVISION	BY
1	07/09/93	AS NOTED	MFB				
2	04/11/94	AS BUILT	MFB				

C2i CONTROL INSTRUMENTS, INC.
ATLANTA, GEORGIA

CONTROL PANEL LCP-15
SCHEMATIC & CONNECTION DIAGRAM
ARLINGTON COUNTY, VIRGINIA
WATER POLLUTION CONTROL PLANT

DRAWN: MFB	APP'D:	SCALE: AS NOTED	CUSTOMER NO.	DWG. NO.	SHEET
FILE: 313-13-3		DATE: 05/07/93	JOB NO. 313	ED-7968	3 of 4

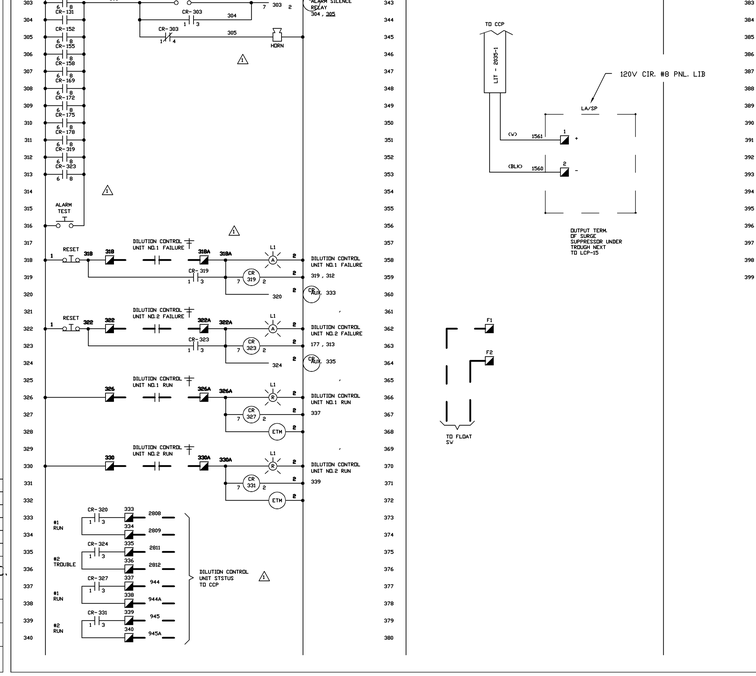

LEGEND :

- FIELD WIRING BY CONTRACTOR
- TERMINALS FOR FIELD WIRING
- EQUIPMENT NOT SUPPLIED BY C2i
- REVISION

COLOR CODE :

BLACK	AC HOT
WHITE	AC NEUTRAL
GREEN	AC GROUND
RED	AC CONTROL
BLUE	DC POSITIVE
GRAY	DC NEGATIVE
ORANGE	DC CONTROL
SHIELDED CABLE :	
WHITE	SIGNAL POSITIVE
BLACK	SIGNAL NEGATIVE
RED	REFERENCE

NO	DATE	REVISION	BY	NO	DATE	REVISION	BY
1	07/09/93	AS NOTED	MFB				

C2i CONTROL INSTRUMENTS, INC.
ATLANTA, GEORGIA

CONTROL PANEL LCP-15
SCHEMATIC & CONNECTION DIAGRAM
ARLINGTON COUNTY, VIRGINIA
WATER POLLUTION CONTROL PLANT

DRAWN: MFB	APP'D:	SCALE: AS NOTED	CUSTOMER NO.	DWG. NO.	SHEET
FILE: 313-13-4		DATE: 05/06/93	JOB NO. 313	ED-7968	4 of 4

ARLINGTON COUNTY, VIRGINIA
WATER POLLUTION CONTROL PLANT
UPGRADE AND EXPANSION- PHASE IIB

CONTROL INSTRUMENTS, INC. DRAWINGS
CONTROL PANEL LCP-15

SCALE NOTE

SCALE BAR SHOWN BELOW IS ONE INCH LONG ON A FULL SIZE DRAWING. WHEN SCALING DRAWINGS, MEASURE BAR TO DETERMINE IF SCALES SHOWN WILL REQUIRE ADJUSTING.

ONE INCH

CONTRACT NO.
9002 - WPC
YEAR 1991
LOCATION CODE
SPECIALTY CODE I
PROJECT NO.
5002 - 033
FILE NAME
C2i16.DWG
DRAWING NO.
C2i-16
SHEET NO. 318

RECORD DRAWING

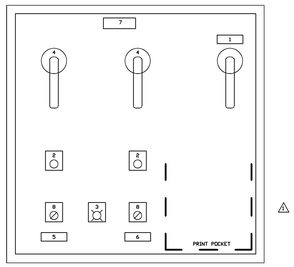

PANEL LAYOUT

PANEL TO BE 30"H X 30"W X 8"D , NEMA 4X 14 GAUGE MIN. , 316 S.S.

LEGEND :

1. NAMEPLATE= "MAIN POWER BREAKER"
2. RESET PUSHBUTTON "PUMP NO. X RESET" (TYP 2)
3. TROUBLE LIGHT "HYDRO-TANK LOW PRESSURE"
4. MOTOR MECHANICAL DISCONNECT (TYP 2)
5. NAMEPLATE= "SEAL WATER PUMP NO.1"
6. NAMEPLATE= "SEAL WATER PUMP NO.2"
7. NAMEPLATE= "SEAL WATER PUMP CONTROL PANEL LCP-21"
8. 3 POS. SELECTOR SWITCH "HAND OFF AUTO" (TYP 2)

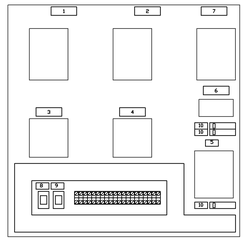

SUBPANEL LAYOUT

LEGEND :

1. NAMEPLATE= "MCP1"
2. NAMEPLATE= "MCP2"
3. NAMEPLATE= "M1"
4. NAMEPLATE= "M2"
5. NAMEPLATE= "CPT107"
6. NAMEPLATE= "SP106"
7. NAMEPLATE= "CB-1"
8. NAMEPLATE= "CR-XXX"
9. NAMEPLATE= "ALT-XXX"
10. NAMEPLATE= "FU-XXX"

CONSTRUCTION NOTES:

1. SUBPANEL SHALL BE TAPPED TO ACCEPT ALL MOUNTING SCREWS. SELF-TAPPING SCREWS SHALL NOT BE USED TO MOUNT ANY COMPONENTS.
2. THE MAIN BREAKER SHALL BE INTERLOCKED WITH CABINET DOOR.
3. ALL INTERCONNECTING WIRING, EXCEPT FOR CONTROL CIRCUITS, SHALL BE 600 VOLT INSULATION AND RATED FOR NOT LESS 90 DEGREES C.
4. POWER DISTRIBUTION WIRING ON THE LINE SIDE OF FUSES SHALL BE 14 AWG MINIMUM. CONTROL WIRING ON THE SECONDARY SIDE OF FUSES SHALL BE 16 AWG MINIMUM. ELECTRONIC ANALOG CIRCUITS SHALL USE 18 AWG SHIELDED, TWISTED PAIR CABLES, INSULATED FOR NOT LESS THAN 300 VOLTS.
5. POWER AND LOW VOLTAGE DC WIRING SYSTEMS SHALL BE ROUTED IN SEPARATE RACEWAYS. CROSSING OF DIFFERENT SYSTEM WIRES SHALL BE AT 90 DEGREES TO AVOID INDUCTION. IF POSSIBLE, WIRES OF ONE SYSTEM FROM OTHER SHALL BE SEPARATED BY AT LEAST 2 INCHES. DIFFERENT WIRING SYSTEMS SHALL TERMINATE ON SEPARATE TERMINAL BLOCKS. WIRING TROUGHS SHALL NOT BE FILLED TO MORE THAN 60 PERCENT VISIBLE FILL.
6. ALL WIRING SHALL TERMINATE IN A MASTER TERMINAL BOARD, RIGID TYPE AND NUMBERED. THE MASTER TERMINAL BOARD SHALL HAVE A MINIMUM OF 25 PERCENT SPARES. TERMINAL BLOCKS SHALL BE ARRANGED IN VERTICAL RO-VS AND SEPARATED INTO THE FOLLOWING GROUPS: POWER, AC CONTROL, DC SIGNAL, AND ALARM. TERMINAL BLOCKS SHALL BE BARRIER TYPE WITH A MINIMUM 600 VOLTS RATING. THEY SHALL BE THE RAISED CHANNEL MOUNT TYPE. WIRING CONNECTORS SHALL BE THE HOOK FORK TYPE WITH NON-INSULATED BARREL FOR CRIMP TYPE COMPRESSION CONNECTION TO THE WIRE. WIRE AND TYPE MARKERS SHALL BE THE SLEEVE TYPE WITH HEAT IMPRESSED LETTERS AND NUMBERS. DIRECT INTERLOCK WIRING BETWEEN EQUIPMENT WILL NOT BE ALLOWED. ONLY ONE SIDE OF A TERMINAL BLOCK RO-W SHALL BE USED FOR INTERNAL WIRING. THE FIELD WIRING SIDE OF THE TERMINAL SHALL NOT BE WITHIN 6-INCHES OF THE SIDE PANEL OR ADJACENT TERMINAL.
7. ALL WIRING TO HAND SWITCHES, ETC., WHICH ARE LIVE CIRCUITS INDEPENDENT OF THE PANEL'S NORMAL CIRCUIT BREAKER PROTECTION SHALL BE CLEARLY IDENTIFIED AS SUCH.
8. ALL COMPONENTS SHALL BE MOUNTED IN A MANNER THAT SHALL PERMIT SERVICING, ADJUSTMENT, TESTING AND REMOVAL WITHOUT DISCONNECTING, MOVING OR REMOVING ANY OTHER COMPONENT. COMPONENTS MOUNTED ON THE INSIDE OF PANELS SHALL BE MOUNTED ON REMOVABLE PLATES AND NOT DIRECTLY TO THE ENCLOSURE. INTERNAL COMPONENTS SHALL BE IDENTIFIED WITH PLASTIC ENGRAVED TAGS ATTATCHED WITH DRIVE PINS ADJACENT TO EACH COMPONENT IDENTIFYING THE COMPONENT IN ACCORDANCE WITH THE DRAWINGS.

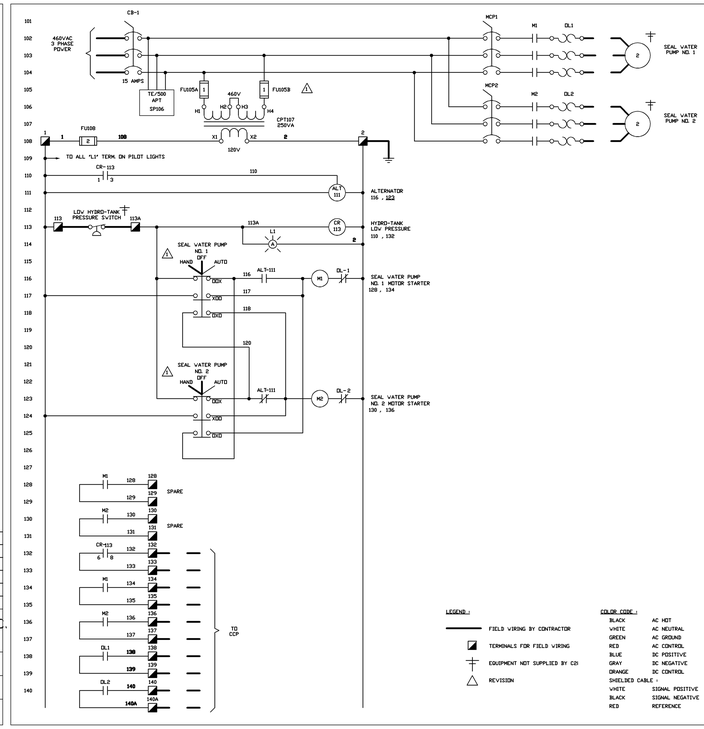

NO	DATE	REVISION	BY	NO	DATE	REVISION	BY
1	07/12/93	AS NOTED	MFB				

C2i CONTROL INSTRUMENTS, INC.
ATLANTA, GEORGIA

CONTROL PANEL LCP-21
SCHEMATIC & CONNECTION DIAGRAM

ARLINGTON COUNTY, VIRGINIA
WATER POLLUTION CONTROL PLANT

DRAWN	APP'D	SCALE	CUSTOMER NO.	DWG. NO.	SHEET
MFB		AS NOTED		ED-7969	1 of 2
FILE 313-14-1		DATE 05/19/93	JOB NO. 313		

LEGEND :

- FIELD WIRING BY CONTRACTOR
- TERMINALS FOR FIELD WIRING
- EQUIPMENT NOT SUPPLIED BY C2i
- REVISION

COLOR CODE :

BLACK	AC HOT
WHITE	AC NEUTRAL
GREEN	AC GROUND
RED	AC CONTROL
BLUE	DC POSITIVE
GRAY	DC NEGATIVE
ORANGE	DC CONTROL
SHIELDED CABLE :	
WHITE	SIGNAL POSITIVE
BLACK	SIGNAL NEGATIVE
RED	REFERENCE

NO	DATE	REVISION	BY	NO	DATE	REVISION	BY
1	07/12/93	AS NOTED	MFB				

C2i CONTROL INSTRUMENTS, INC.
ATLANTA, GEORGIA

CONTROL PANEL LCP-21
SCHEMATIC & CONNECTION DIAGRAM

ARLINGTON COUNTY, VIRGINIA
WATER POLLUTION CONTROL PLANT

DRAWN	APP'D	SCALE	CUSTOMER NO.	DWG. NO.	SHEET
MFB		AS NOTED		ED-7969	2 of 2
FILE 313-14-2		DATE 05/07/93	JOB NO. 313		

DESIGNED BY: .
DRAWN BY: FXP
CHECKED BY/DATE/: .
APPROVED BY/DATE: .

NO.	DATE	DESCRIPTION
0	11/98	RECORD DRAWING
	FXP	DRWN
	ASG	CHKD

REVISIONS

THIS DRAWING HAS BEEN COMPILED
HAZEN AND SAWYER, P.C.

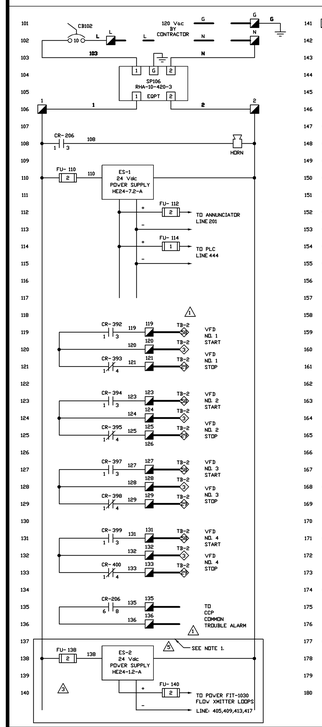

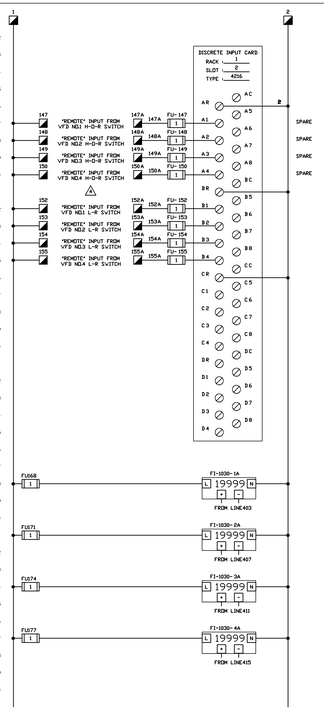

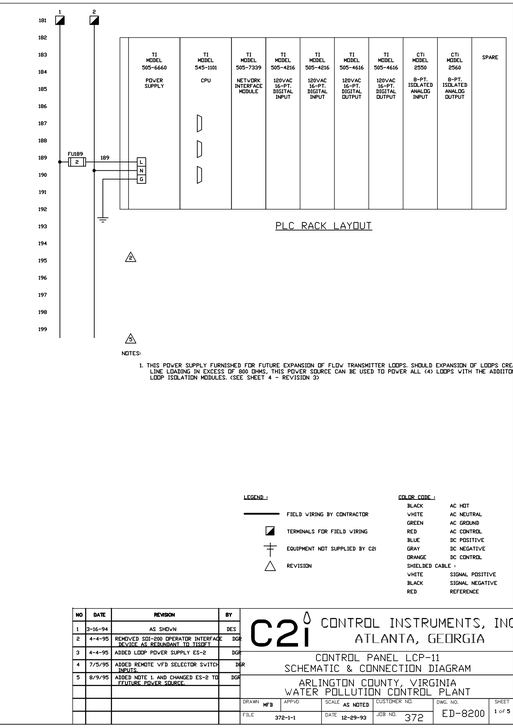

PLC RACK LAYOUT

NOTES:

1. THIS POWER SUPPLY FURNISHED FOR FUTURE EXPANSION OF FLOW TRANSMITTER LOOPS. SHOULD EXPANSION OF LOOPS CREATE LINE LOADING IN EXCESS OF 800 OHMS, THIS POWER SOURCE CAN BE USED TO POWER ALL (4) LOOPS WITH THE ADDITION OF LOOP ISOLATION MODULES. (SEE SHEET 4 - REVISION 3)

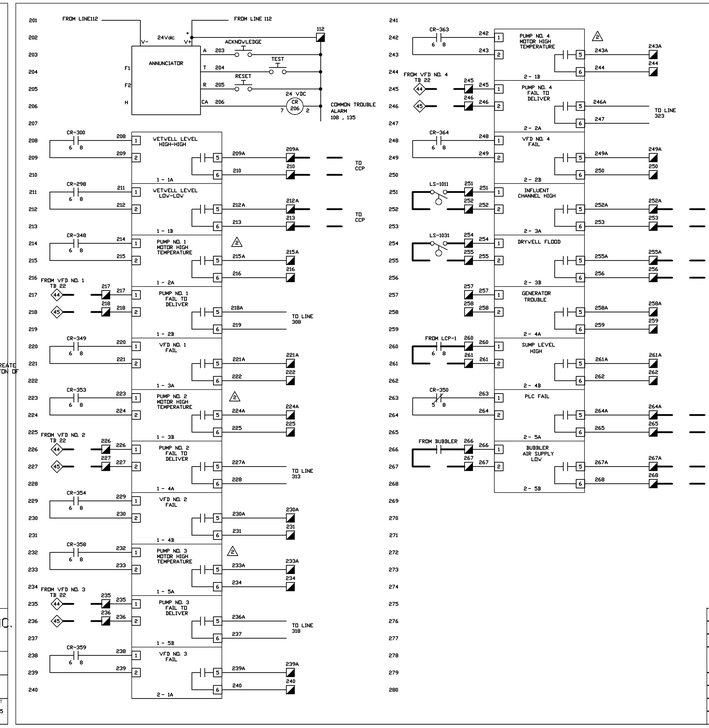

LEGEND :

- FIELD WIRING BY CONTRACTOR
- TERMINALS FOR FIELD WIRING
- EQUIPMENT NOT SUPPLIED BY C2i
- REVISION

COLOR CODE :

BLACK	AC HOT
WHITE	AC NEUTRAL
GREEN	AC GROUND
RED	AC CONTROL
BLUE	DC POSITIVE
GRAY	DC NEGATIVE
ORANGE	DC CONTROL
SHIELDED CABLE :	
WHITE	SIGNAL POSITIVE
BLACK	SIGNAL NEGATIVE
RED	REFERENCE

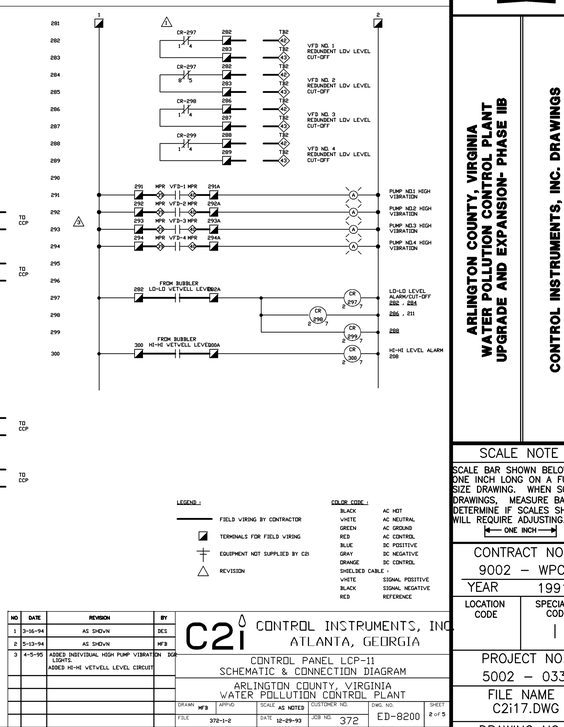

NO	DATE	REVISION	BY
2	3-16-94	AS SHOWN	DCS
3	4-4-95	ADDED LOOP POWER SUPPLY ES-2	JGK
4	7/5/95	ADDED REMOTE VFD SELECTOR SWITCH SIGNALS	JGK
5	8/9/95	ADDED NOTE 1, AND CHANGED ES-2 TO FUTURE POWER SOURCE	JGK

C2i CONTROL INSTRUMENTS, INC.
ATLANTA, GEORGIA

CONTROL PANEL LCP-11
SCHEMATIC & CONNECTION DIAGRAM

ARLINGTON COUNTY, VIRGINIA
WATER POLLUTION CONTROL PLANT

DRAWN	APP'D	SCALE	CUSTOMER NO.	DWG. NO.	SHEET
MFB		AS NOTED		ED-8200	1 of 5
FILE 372-1-1		DATE 12-29-93	JOB NO. 372		

NO	DATE	REVISION	BY
3	3-16-94	AS SHOWN	DCS
4	5-13-94	AS SHOWN	JGK
5	4-5-95	ADDED INDIVIDUAL HIGH PUMP VIBRATION LIGHTS ADDED HI-HI VETWELL LEVEL CIRCUIT	JGK

C2i CONTROL INSTRUMENTS, INC.
ATLANTA, GEORGIA

CONTROL PANEL LCP-11
SCHEMATIC & CONNECTION DIAGRAM

ARLINGTON COUNTY, VIRGINIA
WATER POLLUTION CONTROL PLANT

DRAWN	APP'D	SCALE	CUSTOMER NO.	DWG. NO.	SHEET
MFB		AS NOTED		ED-8200	2 of 5
FILE 372-1-2		DATE 12-29-93	JOB NO. 372		

ARLINGTON COUNTY, VIRGINIA
WATER POLLUTION CONTROL PLANT
UPGRADE AND EXPANSION- PHASE IIB

CONTROL INSTRUMENTS, INC. DRAWINGS
CONTROL PANEL LCP-21 AND LCP-11

SCALE NOTE

SCALE BAR SHOWN BELOW IS ONE INCH LONG ON A FULL SIZE DRAWING. WHEN SCALING DRAWINGS, MEASURE BAR TO DETERMINE IF SCALES SHOWN WILL REQUIRE ADJUSTING.

← ONE INCH →

CONTRACT NO.
9002 - WPC

YEAR 1991

LOCATION CODE	SPECIALTY CODE
	I

PROJECT NO.
5002 - 033

FILE NAME
C2i17.DWG

DRAWING NO.
C2i-17

SHEET NO. 319

RECORD DRAWING

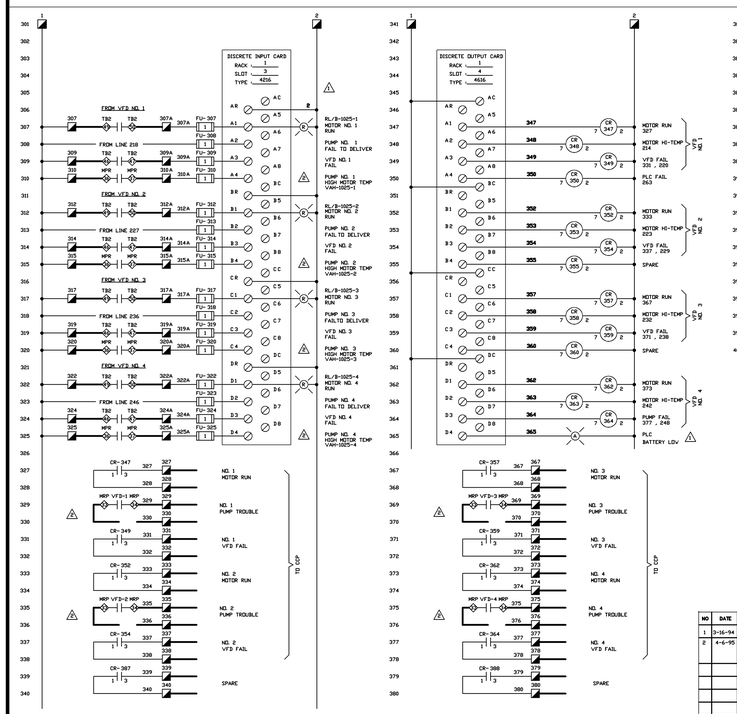

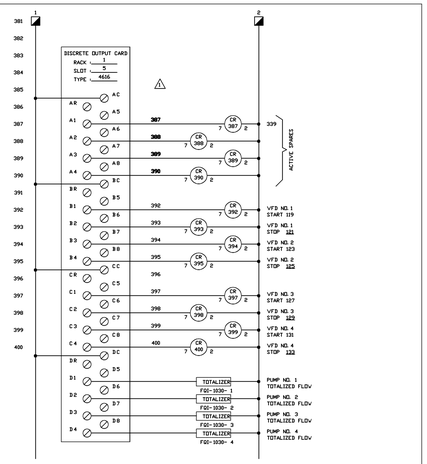

LEGEND :
- FIELD WIRING BY CONTRACTOR
- TERMINALS FOR FIELD WIRING
- EQUIPMENT NOT SUPPLIED BY C2i
- REVISION

COLOR CODE :

BLACK	AC HOT
WHITE	AC NEUTRAL
GREEN	AC GROUND
RED	AC CONTROL
BLUE	DC POSITIVE
GRAY	DC NEGATIVE
ORANGE	DC CONTROL
SHIELDED CABLE :	
WHITE	SIGNAL POSITIVE
BLACK	SIGNAL NEGATIVE
RED	REFERENCE

NO	DATE	REVISION	BY
1	3-16-94	AS SHOWN	DES
2	4-6-95	REVISED PUMP FAIL AND MOTOR HIGH TEMP LIGHTS SOURCING, ETC. CONVERTED CR355 & CR360 TO SPARES	DGR

C2i CONTROL INSTRUMENTS, INC.
ATLANTA, GEORGIA

CONTROL PANEL LCP-11
SCHEMATIC & CONNECTION DIAGRAM
ARLINGTON COUNTY, VIRGINIA
WATER POLLUTION CONTROL PLANT

DRAWN	APP'D	SCALE	CUSTOMER NO.	DWG. NO.	SHEET
MFB		AS NOTED		ED-8200	3 of 5
FILE 372-1-3		DATE 12-29-93	JOB NO. 372		

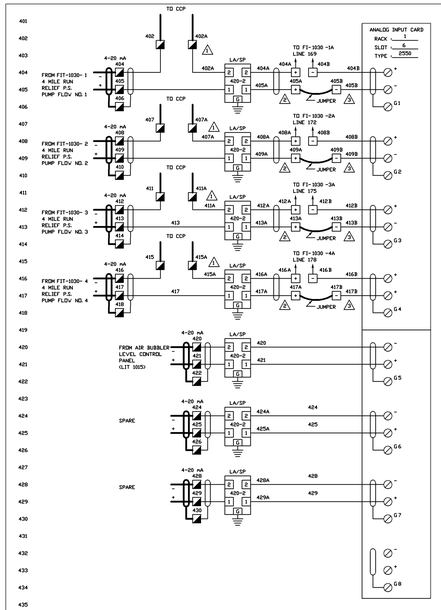

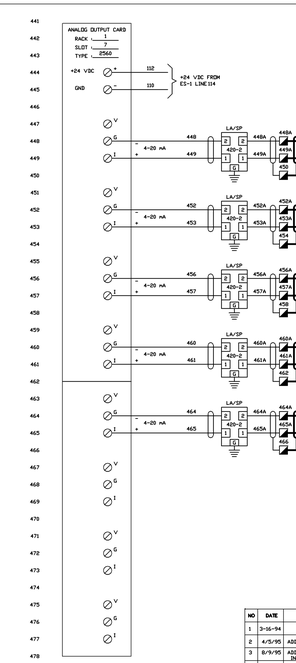

LEGEND :
- FIELD WIRING BY CONTRACTOR
- TERMINALS FOR FIELD WIRING
- EQUIPMENT NOT SUPPLIED BY C2i
- REVISION
- TERMINALS FOR INTERNAL WIRING

COLOR CODE :

BLACK	AC HOT
WHITE	AC NEUTRAL
GREEN	AC GROUND
RED	AC CONTROL
BLUE	DC POSITIVE
GRAY	DC NEGATIVE
ORANGE	DC CONTROL
SHIELDED CABLE :	
WHITE	SIGNAL POSITIVE
BLACK	SIGNAL NEGATIVE
RED	REFERENCE

NO	DATE	REVISION	BY
1	3-16-94	AS SHOWN	DES
2	4/5/95	ADDED LOOP POWER SUPPLY TERMINALS	DGR
3	8/9/95	ADDED FIELD JUMPER & REMOVED SHIELD INTERCONNECT. NOTE. (SEE SHT.1 NOTE)	DGR

C2i CONTROL INSTRUMENTS, INC.
ATLANTA, GEORGIA

CONTROL PANEL LCP-11
SCHEMATIC & CONNECTION DIAGRAM
ARLINGTON COUNTY, VIRGINIA
WATER POLLUTION CONTROL PLANT

DRAWN	APP'D	SCALE	CUSTOMER NO.	DWG. NO.	SHEET
MFB		AS NOTED		ED-8200	4 of 5
FILE 372-1-4		DATE 12-29-93	JOB NO. 372		

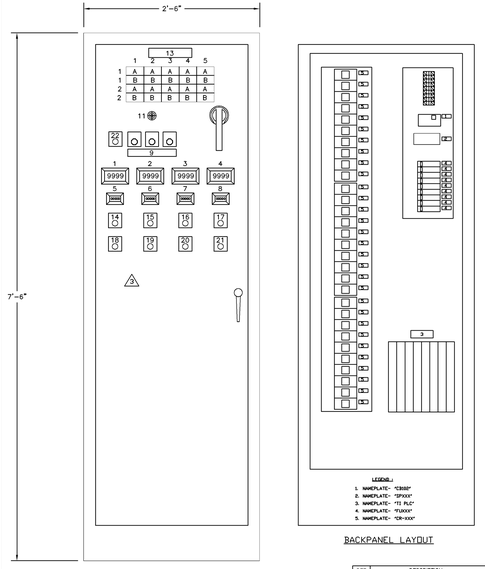

ROW	COL	REF.	LINE 1	LINE 2	LINE 3	LENS TYPE
1	1	A	WETWELL LEVEL	HIGH — HIGH		WHITE FRONT/RED REAR
1	1	B	WETWELL LEVEL	LOW — LOW		WHITE FRONT/RED REAR
1	2	A	PUMP NO. 1	MOTOR HIGH	TEMPERATURE	WHITE FRONT/RED REAR
1	2	B	PUMP NO. 1	FAIL TO	DELIVER	WHITE FRONT/RED REAR
1	3	A	VFD NO. 1	FAIL		WHITE FRONT/RED REAR
1	3	B	PUMP NO. 2	MOTOR HIGH	TEMPERATURE	WHITE FRONT/RED REAR
1	4	A	PUMP NO. 2	FAIL TO	DELIVER	WHITE FRONT/RED REAR
1	4	B	VFD NO. 2	FAIL		WHITE FRONT/RED REAR
1	5	A	PUMP NO. 3	MOTOR HIGH	TEMPERATURE	WHITE FRONT/RED REAR
1	5	B	PUMP NO. 3	FAIL TO	DELIVER	WHITE FRONT/RED REAR
2	1	A	VFD NO. 3	FAIL		WHITE FRONT/RED REAR
2	1	B	PUMP NO. 4	MOTOR HIGH	TEMPERATURE	WHITE FRONT/RED REAR
2	2	A	PUMP NO. 4	FAIL TO	DELIVER	WHITE FRONT/RED REAR
2	2	B	VFD NO. 4	FAIL		WHITE FRONT/RED REAR
2	3	A	INFLUENT	CHANNEL HIGH		WHITE FRONT/RED REAR
2	3	B	DRYWELL FLOOD			WHITE FRONT/RED REAR
2	4	A	GENERATOR	TROUBLE		WHITE FRONT/RED REAR
2	4	B	SUMP LEVEL	HIGH		WHITE FRONT/RED REAR
2	5	A	PLC FAIL			WHITE FRONT/RED REAR
2	5	B	BUBBLER	AIR SUPPLY	LOW	WHITE FRONT/RED REAR

CONSTRUCTION NOTES:

1. SUBPANEL SHALL BE TAPPED TO ACCEPT ALL MOUNTING SCREWS. SELF-TAPPING SCREWS SHALL NOT BE USED TO MOUNT ANY COMPONENTS.
2. THE MAIN BREAKER SHALL BE INTERLOCKED WITH CABINET DOOR.
3. ALL INTERCONNECTING WIRING, EXCEPT FOR CONTROL CIRCUITS, SHALL BE 600 VOLT INSULATION AND RATED FOR NOT LESS 90 DEGREES C.
4. POWER DISTRIBUTION WIRING ON THE LINE SIDE OF FUSES SHALL BE 14 AVG MINIMUM. CONTROL WIRING ON THE SECONDARY SIDE OF FUSES SHALL BE #16 AVG MINIMUM. ELECTRONIC ANALOG CIRCUITS SHALL USE 16 AVG SHIELDED, TWISTED PAIR CABLES, INSULATED FOR NOT LESS THAN 300 VOLTS.
5. POWER AND LOW VOLTAGE DC WIRING SYSTEMS SHALL BE ROUTED IN SEPARATE WIREWAYS. CROSSING OF DIFFERENT SYSTEM WIRES SHALL BE AT RIGHT ANGLES. DIFFERENT SYSTEM WIRES ROUTED PARALLEL TO EACH OTHER SHALL BE SEPARATED BY AT LEAST 2 INCHES. DIFFERENT WIRING SYSTEMS SHALL TERMINATE ON SEPARATE TERMINAL BLOCKS. WIRING TROUGHS SHALL NOT BE FILLED TO MORE THAN 60 PERCENT VISIBLE FILL.
6. ALL WIRING SHALL TERMINATE IN A MASTER TERMINAL BOARD, RIGID TYPE AND NUMBERED. THE MASTER TERMINAL BOARD SHALL HAVE A MINIMUM OF 25 PERCENT SPARES. TERMINAL BLOCKS SHALL BE ARRANGED IN VERTICAL ROWS AND SEPARATED INTO THE FOLLOWING GROUPS: POWER, AC CONTROL, DC SIGNAL, AND ALARM. TERMINAL BLOCKS SHALL BE BARRIER TYPE WITH A MINIMUM 600 VOLTS RATING. THEY SHALL BE THE RAISED CHANNEL MOUNT TYPE. WIRING CONNECTORS SHALL BE THE HOOK FORK TYPE WITH NON-INSULATED BARREL FOR CRIMP TYPE COMPRESSION CONNECTION TO THE WIRE. WIRE AND TYPE MARKERS SHALL BE THE SLEEVE TYPE WITH HEAT IMPRESSED LETTERS AND NUMBERS. DIRECT INTERLOCK WIRING BETWEEN EQUIPMENT WILL NOT BE ALLOWED. ONLY ONE SIDE OF A TERMINAL BLOCK RDV SHALL BE USED FOR INTERNAL WIRING. THE FIELD WIRING SIDE OF THE TERMINAL SHALL NOT BE WITHIN 6-INCHES OF THE SIDE PANEL OR ADJACENT TERMINAL.
7. ALL WIRING TO HAND SWITCHES, ETC., WHICH ARE LIVE CIRCUITS INDEPENDENT OF THE PANEL'S NORMAL CIRCUIT BREAKER PROTECTION SHALL BE CLEARLY IDENTIFIED AS SUCH.
8. ALL COMPONENTS SHALL BE MOUNTED IN A MANNER THAT SHALL PERMIT SERVICING, ADJUSTMENT, TESTING AND REMOVAL WITHOUT DISCONNECTING, MOVING OR REMOVING ANY OTHER COMPONENT. COMPONENTS MOUNTED ON THE INSIDE OF PANELS SHALL BE MOUNTED ON REMOVABLE PLATES AND NOT DIRECTLY TO THE ENCLOSURE. INTERNAL COMPONENTS SHALL BE IDENTIFIED WITHPLASTIC ENGRAVED TAGS ATTATCHED WITH DRIVE PINS ADJACENT TO EACH COMPONENT IDENTIFYING THE COMPONENT IN ACCORDANCE WITH THE DRAWINGS.

REF.	DESCRIPTION	REF.	DESCRIPTION
1	PUMP NO. 1 DISCHARGE FLOW (FI1030-1A)	14	MOTOR NO. 1 RUN
2	PUMP NO. 2 DISCHARGE FLOW (FI1030-2A)	15	MOTOR NO. 2 RUN
3	PUMP NO. 3 DISCHARGE FLOW (FI1030-3A)	16	MOTOR NO. 3 RUN
4	PUMP NO. 4 DISCHARGE FLOW (FI1030-4A)	17	MOTOR NO. 4 RUN
5	PUMP NO. 1 DISCHARGE FLOW (TOTALIZER)	18	PUMP NO. 1 HIGH VIBRATION
6	PUMP NO. 2 DISCHARGE FLOW (TOTALIZER)	19	PUMP NO. 2 HIGH VIBRATION
7	PUMP NO. 3 DISCHARGE FLOW (TOTALIZER)	20	PUMP NO. 3 HIGH VIBRATION
8	PUMP NO. 4 DISCHARGE FLOW (TOTALIZER)	21	PUMP NO. 4 HIGH VIBRATION
9	ANNUNCIATOR (TEST , SILENCE , RESET)	22	PLC BATTERY LOW
10	⚠		
11	HORN		
12	MAIN CIRCUIT BREAKER		
13	LCP-11 PUMP CONTROL PANEL		

⚠ ⚠
PANEL TO BE 90" H X 30" W X 20" D ,
NEMA 12 , FRONT ACCESS.
COLOR: ASA #61 GREY-TNEMEC HI-BUILD EPOXOLINE #66-1211 (5 DFT)
#66-COLOR (6 DFT)

NO	DATE	REVISION	BY
1	3/16/94	SUB-PANEL LAYOUT	DES
2	5/13/94	AS NOTED	MFB
3	4/4/95	REMOVED TCP-300 OPER. INTERFACE ADDED PAINT COLOR SPEC.	DGR
4	5/10/95	REVISED PAINT SPEC.	DGR

C2i CONTROL INSTRUMENTS, INC.
ATLANTA, GEORGIA

CONTROL PANEL LCP-11
SCHEMATIC + CONNECTION DIAGRAM
ARLINGTON COUNTY, VIRGINIA
WATER POLLUTION CONTROL PLANT

DRAWN	APP'D	SCALE	CUSTOMER NO.	DWG. NO.	SHEET
DES	MFB	1" = 1'-0"		ED-8200	5 of 5
FILE 372-1-5		DATE 1-4-94	JOB NO. 313		

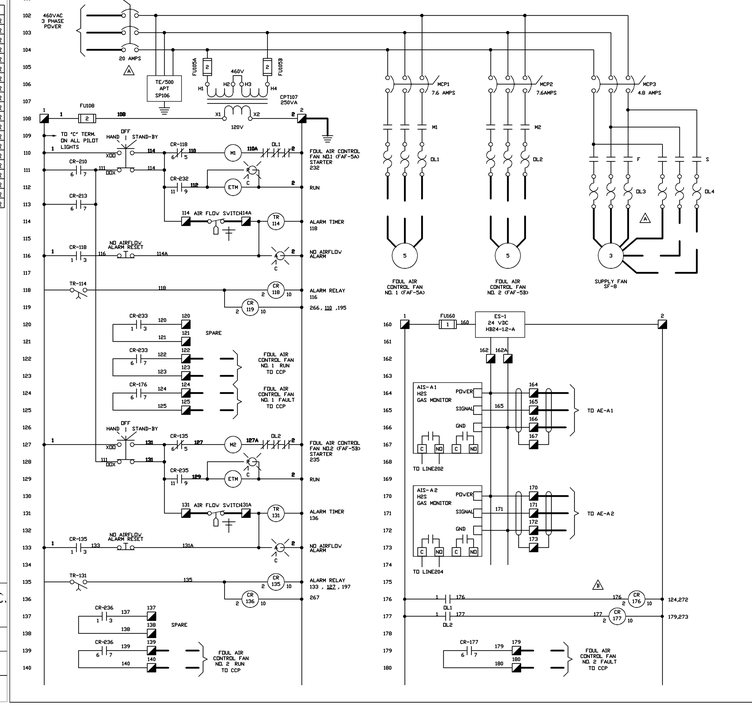

LEGEND :
- FIELD WIRING BY CONTRACTOR
- TERMINALS FOR FIELD WIRING
- EQUIPMENT NOT SUPPLIED BY C2i
- REVISION

COLOR CODE :

BLACK	AC HOT
WHITE	AC NEUTRAL
GREEN	AC GROUND
RED	AC CONTROL
BLUE	DC POSITIVE
GRAY	DC NEGATIVE
ORANGE	DC CONTROL
SHIELDED CABLE :	
WHITE	SIGNAL POSITIVE
BLACK	SIGNAL NEGATIVE
RED	REFERENCE

NO	DATE	REVISION	BY	NO	DATE	REVISION	BY
A	4/13/95	SUPPLY FAN HP was 10, CORRECTED DL34-L CB-M was 50 AMP.	DGR				
B	5/26/95	ADDED D/L INTERFACE RELAY FOR ASPL CONT.	DGR				

C2i CONTROL INSTRUMENTS, INC.
ATLANTA, GEORGIA

CONTROL PANEL LCP-33
SCHEMATIC & CONNECTION DIAGRAM
ARLINGTON COUNTY, VIRGINIA
WATER POLLUTION CONTROL PLANT

DRAWN	APP'D	SCALE	CUSTOMER NO.	DWG. NO.	SHEET
MFB		NONE		ED-8201	1 of 3
FILE 372-2-1		DATE 05/02/94	JOB NO. 372		

RECORD DRAWING

NO.	DATE	DESCRIPTION
0	11/98	RECORD DRAWING

DESIGNED BY: .
DRAWN BY: FXP
CHECKED BY/DATE/:
APPROVED BY/DATE:

THIS DRAWING HAS BEEN COMPILED
HAZEN AND SAWYER, P.C.

ARLINGTON COUNTY, VIRGINIA
WATER POLLUTION CONTROL PLANT
UPGRADE AND EXPANSION- PHASE IIB

CONTROL INSTRUMENTS, INC. DRAWINGS
CONTROL PANEL LCP-11 AND LCP-33

SCALE NOTE
SCALE BAR SHOWN BELOW IS ONE INCH LONG ON A FULL SIZE DRAWING. WHEN SCALING DRAWINGS, MEASURE BAR TO DETERMINE IF SCALES SHOWN WILL REQUIRE ADJUSTING.
ONE INCH

CONTRACT NO.
9002 – WPC
YEAR 1991
LOCATION CODE
SPECIALTY CODE I
PROJECT NO.
5002 – 033
FILE NAME
C2i18.DWG
DRAWING NO.
C2i–18
SHEET NO. 320

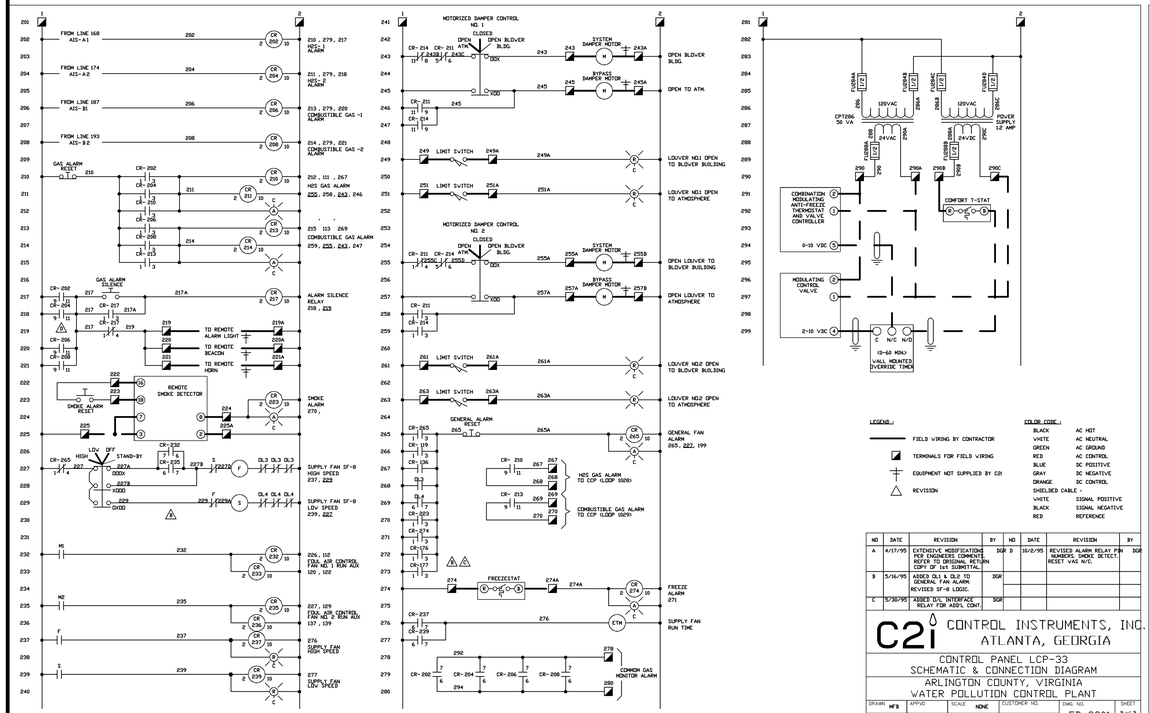

NO	DATE	REVISION	BY
A	4/17/95	EXTENSIVE MODIFICATIONS PER EXISTING CONDITIONS AND AS-BUILT DRAWINGS. RETURN COPY OF 1ST SUBMITTAL.	DGR
B	5/16/95	ADDED DL1 & DL2 TO GENERAL FAN ALARM. REVISED SF-8 LOGIC.	DGR
C	5/30/95	ADDED 2I/O INTERFACE RELAY FOR ADD'L CONT.	DGR

NO	DATE	REVISION	BY
D	10/2/95	REVISED ALARM RELAY PIN NUMBERS. SMOKE DETECT. RESET WAS N/C.	DGR

C2i CONTROL INSTRUMENTS, INC.
ATLANTA, GEORGIA

CONTROL PANEL LCP-33
SCHEMATIC & CONNECTION DIAGRAM
ARLINGTON COUNTY, VIRGINIA
WATER POLLUTION CONTROL PLANT

DRAWN	APP'D	SCALE	CUSTOMER NO.	DWG. NO.	SHEET
MFB		NONE		ED-8201	2 of 3
FILE 372-2-2		DATE 05/02/94	JOB NO. 372		

PANEL LAYOUT

PANEL TO BE 48"H x 36"W x 16"D, NEMA 4X14 GAUGE, 316 S. S.

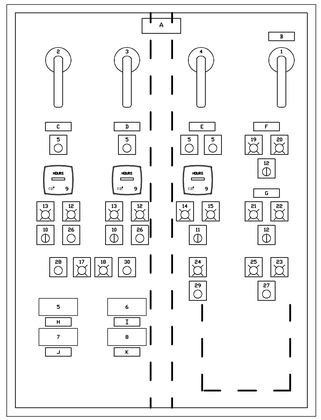

SUBPANEL LAYOUT

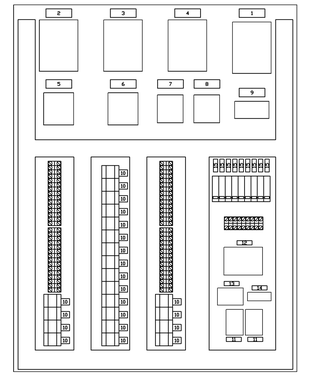

PANEL FACE LEGEND

1. MAIN INCOMING POWER BREAKER
2. FDUL AIR FAN NO1 C.B. DISCONNECT
3. FDUL AIR FAN NO.2 C.B. DISCONNECT
4. SUPPLY FAN C.B. DISCONNECT
5. H2S GAS MONITOR NO1 DISPLAY
6. H2S GAS MONITOR NO.2 DISPLAY
7. COMBUSTIBLE GAS MONITOR NO1 DISPLAY
8. COMBUSTIBLE GAS MONITOR NO.2 DISPLAY
9. ELAPSED TIME METER
10. SELECTOR SVITCH - (HAND-OFF-STANDBY)
11. SELECTOR SVITCH - (HIGH-LOW-OFF-STANDBY)
12. SELECTOR SVITCH - (OPEN/ATH-CLOSED-OPEN/BLDG)
13. PILOT LIGHT - (FAN "ON")
14. PILOT LIGHT - (FAN "SLOW")
15. PILOT LIGHT - (FAN "FAST")
16. PILOT LIGHT - (NO AIRFLOW ALARM)
17. PILOT LIGHT - (H2S GAS ALARM)
18. PILOT LIGHT - (COMBUSTIBLE GAS ALARM)
19. PILOT LIGHT - (LOUVER NO1 OPEN TO BLDG)
20. PILOT LIGHT - (LOUVER NO1 OPEN TO ATM)
21. PILOT LIGHT - (LOUVER NO.2 OPEN TO BLDG)
22. PILOT LIGHT - (LOUVER NO.2 OPEN TO ATM)
23. PILOT LIGHT - (GENERAL FAN ALARM)
24. PILOT LIGHT - (SMOKE ALARM)
25. PILOT LIGHT - (FREEZE ALARM)
26. PUSHBUTTON RESET - (NO AIRFLOW ALARM)
27. PUSHBUTTON RESET - (GENERAL FAN ALARM)
28. PUSHBUTTON RESET - (GAS ALARM)
29. PUSHBUTTON RESET - (SMOKE ALARM)
30. PUSHBUTTON SILENCE - (GAS ALARM)

NAMEPLATE LEGEND

A. FDUL AIR FAN CONTROL PANEL (LCP-33)
B. MAIN INCOMING POWER BREAKER
C. FDUL AIR FAN NO.1 (FAF-5A)
D. FDUL AIR FAN NO.2 (FAF-5B)
E. AIR SUPPLY FAN (SF-8)
F. LOUVER NO.1
G. LOUVER NO.2
H. H2S GAS MONITOR NO.1
I. H2S GAS MONITOR NO.2
J. COMBUSTIBLE GAS MONITOR NO.1
K. COMBUSTIBLE GAS MONITOR NO.2

SUBPANEL LEGEND TAGS

1. MB
2. MCP-1
3. MCP-2
4. MCP-3
5. M1
6. M2
7. M3
8. M4
9. SP-106
10. RELAY (CR-XXX)
11. TIMER (TDR-XXX)
12. CPT 460/120
13. CPT 120/24VAC
14. PS 120/24VDC
15. FUSE (FU-XXX)

CONSTRUCTION NOTES:

1. SUBPANEL SHALL BE TAPPED TO ACCEPT ALL MOUNTING SCREWS. SELF-TAPPING SCREWS SHALL NOT BE USED TO MOUNT ANY COMPONENTS.
2. THE MAIN BREAKER SHALL BE INTERLOCKED WITH CABINET DOOR.
3. ALL INTERCONNECTING WIRING, EXCEPT FOR CONTROL CIRCUITS, SHALL BE 600 VOLT INSULATION AND RATED FOR NOT LESS 90 DEGREES C.
4. POWER DISTRIBUTION WIRING ON THE LINE SIDE OF FUSES SHALL BE 14 AWG MINIMUM. CONTROL WIRING ON THE SECONDARY SIDE OF FUSES SHALL BE 16 AWG MINIMUM. ELECTRONIC ANALOG CIRCUITS SHALL USE 16 AWG SHIELDED, TVISTED PAIR CABLES, INSULATED FOR NOT LESS THAN 300 VOLTS.
5. POWER AND LOV VOLTAGE DC WIRING SYSTEMS SHALL BE ROUTED IN SEPARATE WIREWAYS. CROSSING OF DIFFERENT SYSTEM WIRES SHALL BE AT RIGHT ANGLES. DIFFERENT SYSTEM WIRES ROUTED PARALLEL TO EACH OTHER SHALL BE SEPARATED BY AT LEAST 2 INCHES. DIFFERENT WIRING SYSTEMS SHALL TERMINATE ON SEPARATE TERMINAL BLOCKS. WIRING TROUGHS SHALL NOT BE FILLED TO MORE THAN 60 PERCENT VISIBLE FILL.
6. ALL WIRING SHALL TERMINATE IN A MASTER TERMINAL BOARD, RIGID TYPE AND NUMBERED. THE MASTER TERMINAL BOARD SHALL HAVE A MINIMUM OF 25 PERCENT SPARES. TERMINAL BLOCKS SHALL BE ARRANGED IN VERTICAL ROVS AND SEPARATED INTO THE FOLLOWING GROUPS: POVER, AC CONTROL, DC SIGNAL, AND ALARM. TERMINAL BLOCKS SHALL BE BARRIER TYPE WITH A MINIMUM 600 VOLTS RATING. THEY SHALL BE THE RAISED CHANNEL MOUNT TYPE. WIRING CONNECTORS SHALL BE THE HOOK FORK TYPE WITH NON-INSULATED BARREL FOR CRIMP TYPE COMPRESSION CONNECTION TO THE WIRE. WIRE AND TYPE MARKERS SHALL BE THE SLEEVE TYPE WITH HEAT IMPRESSED LETTERS AND NUMBERS. DIRECT INTERLOCK WIRING BETVEEN EQUIPMENT WILL NOT BE ALLOVED. ONLY ONE SIDE OF A TERMINAL BLOCK ROV SHALL BE USED FOR INTERNAL WIRING. THE FIELD WIRING SIDE OF THE TERMINAL SHALL NOT BE WITHIN 6-INCHES OF THE SIDE PANEL OR ADJACENT TERMINAL.
7. ALL WIRING TO HAND SVITCHES, ETC., WHICH ARE LIVE CIRCUITS INDEPENDENT OF THE PANEL'S NORMAL CIRCUIT BREAKER PROTECTION SHALL BE CLEARLY IDENTIFIED AS SUCH.
8. ALL COMPONENTS SHALL BE MOUNTED IN A MANNER THAT SHALL PERMIT SERVICING, ADJUSTMENT, TESTING AND REMOVAL VITHOUT DISCONNECTING, MOVING OR REMOVING ANY OTHER COMPONENT. COMPONENTS MOUNTED ON THE INSIDE OF PANELS SHALL BE MOUNTED ON REMOVABLE PLATES AND NOT DIRECTLY TO THE ENCLOSURE. INTERNAL COMPONENTS SHALL BE IDENTIFIED VITHPLASTIC ENGRAVED TAGS ATTATCHED VITH DRIVE PINS ADJACENT TO EACH COMPONENT IDENTIFYING THE COMPONENT IN ACCORDANCE VITH THE DRAVINGS.

NO	DATE	REVISION	BY
A	4/17/95	REVISED DL3/4, PANEL LAYOUT & IDENTIFIED RESETS. REDRAWN PANEL FACE LAYOUT & LEGEND	DGR

NO	DATE	REVISION	BY

C2i CONTROL INSTRUMENTS, INC.
ATLANTA, GEORGIA

CONTROL PANEL LCP-33
SCHEMATIC & CONNECTION DIAGRAM
ARLINGTON COUNTY, VIRGINIA
WATER POLLUTION CONTROL PLANT

DRAWN	APP'D	SCALE	CUSTOMER NO.	DWG. NO.	SHEET
MFB		NONE		ED-8201	3 of 3
FILE 372-2-3		DATE 05/02/94	JOB NO. 372		

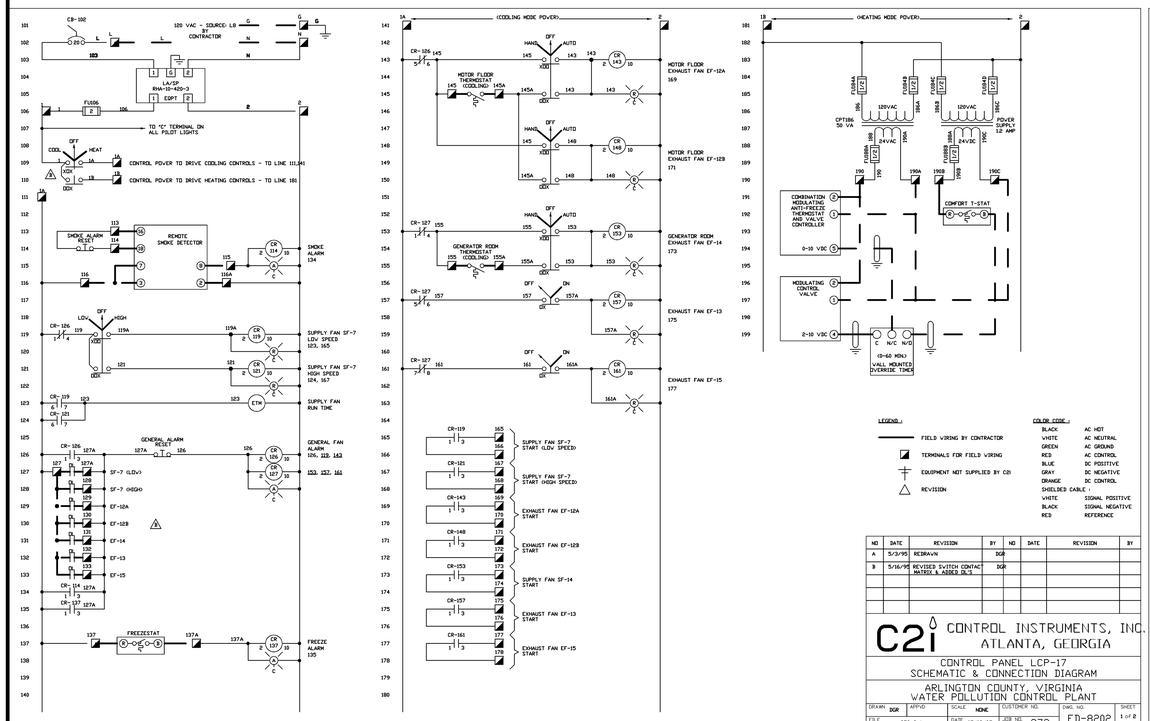

NO	DATE	REVISION	BY
A	5/3/95	REDRAVN	DGR
B	5/16/95	REVISED SVITCH CONTACT MATRIX & ADDED DL-5	DGR

C2i CONTROL INSTRUMENTS, INC.
ATLANTA, GEORGIA

CONTROL PANEL LCP-17
SCHEMATIC & CONNECTION DIAGRAM
ARLINGTON COUNTY, VIRGINIA
WATER POLLUTION CONTROL PLANT

DRAWN	APP'D	SCALE	CUSTOMER NO.	DWG. NO.	SHEET
DGR		NONE		ED-8202	1 of 2
FILE 372-3-1		DATE 05/03/95	JOB NO. 372		

PANEL LAYOUT

PANEL TO BE 36"H x 30"W x 8"D, NEMA 4X 14 GAUGE, 316 S. S.

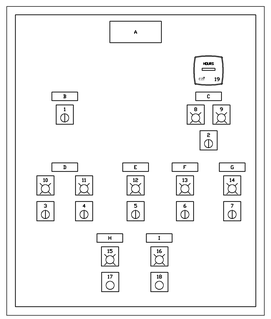

SUBPANEL LAYOUT

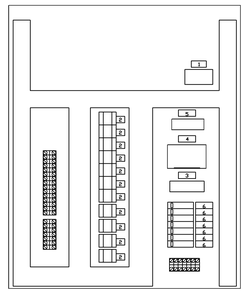

PANEL FACE LEGEND

1. SELECTOR SVITCH - (COOL-OFF-HEAT)
2. SELECTOR SVITCH - (LOV-OFF-HIGH)
3. SELECTOR SVITCH - (HAND-OFF-AUTO)
4. SELECTOR SVITCH - (HAND-OFF-AUTO)
5. SELECTOR SVITCH - (HAND-OFF-AUTO)
6. SELECTOR SVITCH - (OFF-ON)
7. SELECTOR SVITCH - (OFF-ON)
8. PILOT LIGHT - (FAN SF-7 "SLOV")
9. PILOT LIGHT - (FAN SF-7 "FAST")
10. PILOT LIGHT - (FAN EF-12A "ON")
11. PILOT LIGHT - (FAN SF-12B "ON")
12. PILOT LIGHT - (FAN EF-14 "ON")
13. PILOT LIGHT - (FAN EF-13 "ON")
14. PILOT LIGHT - (FAN EF-15 "ON")
15. PILOT LIGHT - (SMOKE ALARM)
16. PILOT LIGHT - (GENERAL FAN ALARM)
17. PUSHBUTTON RESET - (SMOKE ALARM)
18. PUSHBUTTON RESET - (GENERAL ALARM)
19. ELAPSED TIME METER

NAMEPLATE LEGEND

A. VENTILATION FAN CONTROL PANEL (LCP-17)
B. COOLING / HEATING MODE SELECTOR
C. AIR SUPPLY FAN
D. MOTOR FLOOR EXHAUST FANS
E. GENERATOR ROOM EXHAUST FAN
F. UPPER STAIRVELL EXHAUST FAN
G. LOVER STAIRVELL EXHAUST FAN
H. SMOKE DETECTOR
I. GENERAL FAN ALARM

SUBPANEL LEGEND TAGS

1. SP-104
2. RELAY (CR-XXX)
3. CB-102
4. CPT-186 120/24VAC
5. PS-186 120/24VDC
6. FUSE (FU-XXX)

CONSTRUCTION NOTES:

1. SUBPANEL SHALL BE TAPPED TO ACCEPT ALL MOUNTING SCREWS. SELF-TAPPING SCREWS SHALL NOT BE USED TO MOUNT ANY COMPONENTS.
2. THE MAIN BREAKER SHALL BE INTERLOCKED WITH CABINET DOOR.
3. ALL INTERCONNECTING WIRING, EXCEPT FOR CONTROL CIRCUITS, SHALL BE 600 VOLT INSULATION AND RATED FOR NOT LESS 90 DEGREES C.
4. POWER DISTRIBUTION WIRING ON THE LINE SIDE OF FUSES SHALL BE 14 AVG MINIMUM. CONTROL WIRING ON THE SECONDARY SIDE OF FUSES SHALL BE 16 AVG MINIMUM. ELECTRONIC ANALOG CIRCUITS SHALL USE 16 AVG SHIELDED, TVISTED PAIR CABLES, INSULATED FOR NOT LESS THAN 300 VOLTS.
5. POVER AND LOV VOLTAGE DC VIRING SYSTEMS SHALL BE ROUTED IN SEPARATE VIREVAYS. CROSSING OF DIFFERENT SYSTEM VIRES SHALL BE AT RIGHT ANGLES. DIFFERENT SYSTEM VIRES ROUTED PARALLEL TO EACH OTHER SHALL BE SEPARATED BY AT LEAST 2 INCHES. DIFFERENT VIRING SYSTEMS SHALL TERMINATE ON SEPARATE TERMINAL BLOCKS. VIRING TROUGHS SHALL NOT BE FILLED TO MORE THAN 60 PERCENT VISIBLE FILL.
6. ALL VIRING SHALL TERMINATE IN A MASTER TERMINAL BOARD, RIGID TYPE AND NUMBERED. THE MASTER TERMINAL BOARD SHALL HAVE A MINIMUM OF 25 PERCENT SPARES. TERMINAL BLOCKS SHALL BE ARRANGED IN VERTICAL ROVS AND SEPARATED INTO THE FOLLOVING GROUPS: POVER, AC CONTROL, DC SIGNAL, AND ALARM. TERMINAL BLOCKS SHALL BE BARRIER TYPE VITH A MINIMUM 600 VOLTS RATING. THEY SHALL BE THE RAISED CHANNEL MOUNT TYPE. VIRING CONNECTORS SHALL BE THE HOOK FORK TYPE VITH NON-INSULATED BARREL FOR CRIMP TYPE COMPRESSION CONNECTION TO THE VIRE. VIRE AND TYPE MARKERS SHALL BE THE SLEEVE TYPE VITH HEAT IMPRESSED LETTERS AND NUMBERS. DIRECT INTERLOCK VIRING BETVEEN EQUIPMENT VILL NOT BE ALLOVED. ONLY ONE SIDE OF A TERMINAL BLOCK ROV SHALL BE USED FOR INTERNAL VIRING. THE FIELD VIRING SIDE OF THE TERMINAL SHALL NOT BE VITHIN 6-INCHES OF THE SIDE PANEL OR ADJACENT TERMINAL.
7. ALL VIRING TO HAND SVITCHES, ETC., VHICH ARE LIVE CIRCUITS INDEPENDENT OF THE PANEL'S NORMAL CIRCUIT BREAKER PROTECTION SHALL BE CLEARLY IDENTIFIED AS SUCH.
8. ALL COMPONENTS SHALL BE MOUNTED IN A MANNER THAT SHALL PERMIT SERVICING, ADJUSTMENT, TESTING AND REMOVAL VITHOUT DISCONNECTING, MOVING OR REMOVING ANY OTHER COMPONENT. COMPONENTS MOUNTED ON THE INSIDE OF PANELS SHALL BE MOUNTED ON REMOVABLE PLATES AND NOT DIRECTLY TO THE ENCLOSURE. INTERNAL COMPONENTS SHALL BE IDENTIFIED VITHPLASTIC ENGRAVED TAGS ATTATCHED VITH DRIVE PINS ADJACENT TO EACH COMPONENT IDENTIFYING THE COMPONENT IN ACCORDANCE VITH THE DRAVINGS.

NO	DATE	REVISION	BY
A	5/2/95	REDRAVN	DGR
B	6/9/95	PANEL SIZE VAS 48x36x16	DGR

NO	DATE	REVISION	BY

C2i CONTROL INSTRUMENTS, INC.
ATLANTA, GEORGIA

CONTROL PANEL LCP-17
SCHEMATIC & CONNECTION DIAGRAM
ARLINGTON COUNTY, VIRGINIA
WATER POLLUTION CONTROL PLANT

DRAWN	APP'D	SCALE	CUSTOMER NO.	DWG. NO.	SHEET
DGR		NONE		ED-8202	2 of 2
FILE 372-3-2		DATE 05/02/95	JOB NO. 372		

RECORD DRAWING

NO.	DATE	DESCRIPTION
0	11/98	RECORD DRAWING
		REVISIONS

DESIGNED BY: .
DRAWN BY: FXP
CHECKED BY/DATE/: ASG
APPROVED BY/DATE: CHKD

THIS DRAWING HAS BEEN COMPILED BY HAZEN AND SAWYER, P.C.

ARLINGTON COUNTY, VIRGINIA
WATER POLLUTION CONTROL PLANT
UPGRADE AND EXPANSION- PHASE IIB

CONTROL INSTRUMENTS, INC. DRAWINGS
CONTROL PANEL LCP-33 AND LCP-17

SCALE NOTE

SCALE BAR SHOWN BELOW IS ONE INCH LONG ON A FULL SIZE DRAWING. WHEN SCALING DRAWINGS, MEASURE BAR TO DETERMINE IF SCALES SHOWN WILL REQUIRE ADJUSTING.

← ONE INCH →

CONTRACT NO.
9002 - WPC
YEAR 1991
LOCATION CODE
SPECIALTY CODE 1
PROJECT NO.
5002 - 033
FILE NAME
C2i19.DWG
DRAWING NO.
C2i-19
SHEET NO. 321

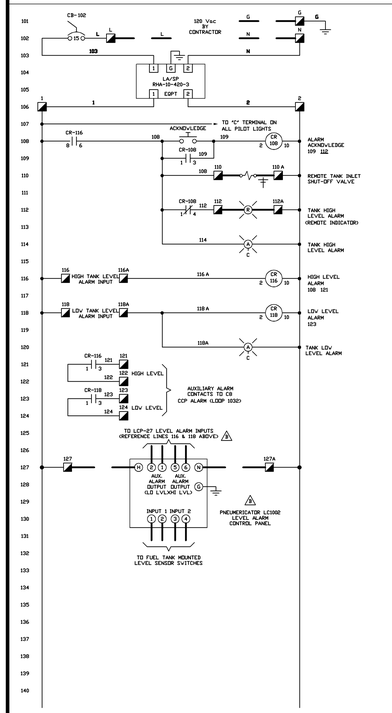

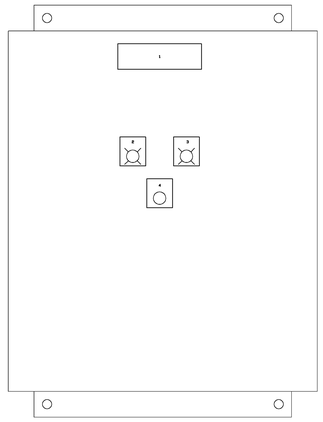

PANEL LAYOUT

PANEL TO BE 16"H x 12"W x 6"D - NEMA 4X - 316 SS

PANEL LEGEND:

1. DIESEL FUEL TANK LEVEL ALARM PANEL (LCP-27)
2. FUEL TANK HIGH LEVEL PILOT LIGHT
3. FUEL TANK LOW LEVEL PILOT LIGHT
4. ACKNOWLEDGE PUSHBUTTON

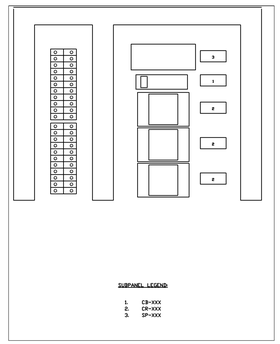

SUBPANEL LEGEND:

1. CB-XXX
2. CR-XXX
3. SP-XXX

LEGEND :

- FIELD WIRING BY CONTRACTOR
- TERMINALS FOR FIELD WIRING
- EQUIPMENT NOT SUPPLIED BY C2i
- REVISION

COLOR CODE :

BLACK	AC HOT
WHITE	AC NEUTRAL
GREEN	AC GROUND
RED	AC CONTROL
BLUE	DC POSITIVE
GRAY	DC NEGATIVE
ORANGE	DC CONTROL
SHIELDED CABLE :	
WHITE	SIGNAL POSITIVE
BLACK	SIGNAL NEGATIVE
RED	REFERENCE

NO	DATE	REVISION	BY
A	5/4/95	REDRAWN	DGR
B	5/15/95	ADDED ADDITIONAL NOTES	DGR
C	10/3/95	ADDED FUEL LEVEL ALARM CCP LOOP IDENTIFICATION	DGR

C2i CONTROL INSTRUMENTS, INC.
ATLANTA, GEORGIA

CONTROL PANEL LCP-27
SCHEMATIC & CONNECTION DIAGRAM

ARLINGTON COUNTY, VIRGINIA
WATER POLLUTION CONTROL PLANT

DRAWN	APP'VD	SCALE	CUSTOMER NO.	DWG. NO.	SHEET
DGR		NONE		ED-8203	1 of 1
FILE 372-4-1		DATE 05/03/95	JOB NO. 372		

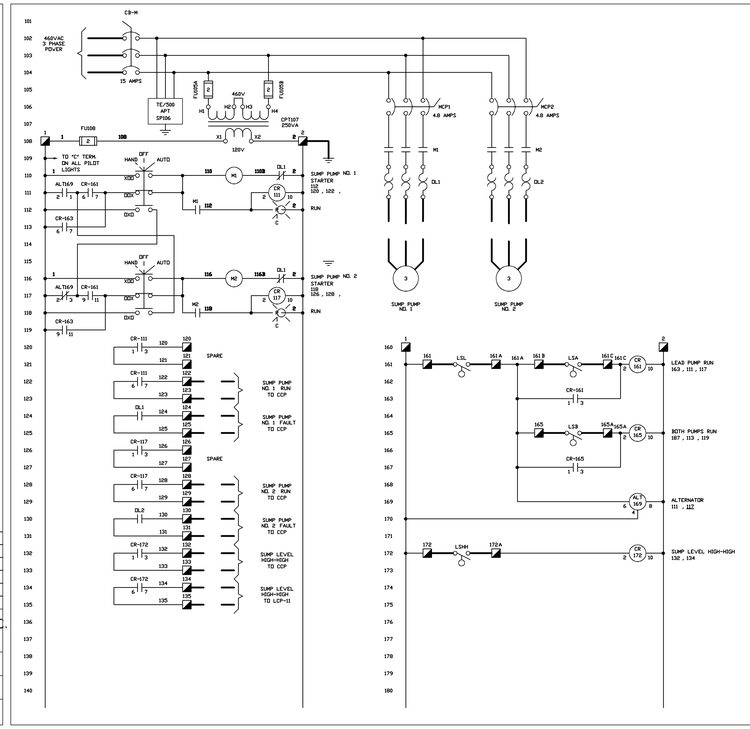

LEGEND :

- FIELD WIRING BY CONTRACTOR
- TERMINALS FOR FIELD WIRING
- EQUIPMENT NOT SUPPLIED BY C2i
- REVISION

COLOR CODE :

BLACK	AC HOT
WHITE	AC NEUTRAL
GREEN	AC GROUND
RED	AC CONTROL
BLUE	DC POSITIVE
GRAY	DC NEGATIVE
ORANGE	DC CONTROL
SHIELDED CABLE :	
WHITE	SIGNAL POSITIVE
BLACK	SIGNAL NEGATIVE
RED	REFERENCE

C2i CONTROL INSTRUMENTS, INC.
ATLANTA, GEORGIA

CONTROL PANEL LCP-1
SCHEMATIC & CONNECTION DIAGRAM

ARLINGTON COUNTY, VIRGINIA
WATER POLLUTION CONTROL PLANT

DRAWN	APP'VD	SCALE	CUSTOMER NO.	DWG. NO.	SHEET
MFB		NONE		ED-8204	1 of 2
FILE 372-5-1		DATE 05/25/94	JOB NO. 372		

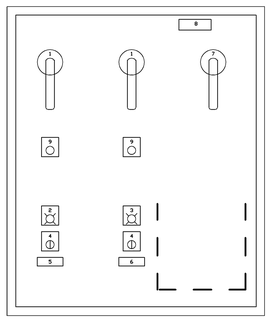

PANEL LAYOUT

PANEL TO BE 36"H X 30"W X 8"D,NEMA 4X, 14 GAUGE, 316 S. S.

LEGEND :

1. MOTOR MECHANICAL DISCONNECT (TYP 2)
2. NAMEPLATE- "SUMP PUMP NO. 1 RUN"
3. NAMEPLATE- "SUMP PUMP NO. 2 RUN"
4. NAMEPLATE- "HAND OFF AUTO"
5. NAMEPLATE- "SUMP PUMP NO. 1"
6. NAMEPLATE- "SUMP PUMP NO. 2"
7. NAMEPLATE- "MAIN POWER BREAKER"
8. NAMEPLATE- "SUMP PUMP CONTROL PANEL LCP-1"
9. NAMEPLATE- "MOTOR RESET"

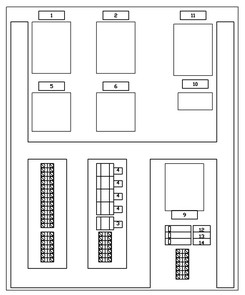

SUBPANEL LAYOUT

LEGEND :

1. NAMEPLATE- "MCP1"
2. NAMEPLATE- "MCP2"
3. NAMEPLATE- "ALT-169"
4. NAMEPLATE- "CR-XXX"
5. NAMEPLATE- "M1"
6. NAMEPLATE- "M2"
7. SPARE
8. SPARE
9. NAMEPLATE- "CPT107"
10. NAMEPLATE- "SP106"
11. NAMEPLATE- "CB-M"
12. NAMEPLATE- "FU5054"
13. NAMEPLATE- "FU5059"
14. NAMEPLATE- "FU508"

CONSTRUCTION NOTES:

1. SUBPANEL SHALL BE TAPPED TO ACCEPT ALL MOUNTING SCREWS. SELF-TAPPING SCREWS SHALL NOT BE USED TO MOUNT ANY COMPONENTS.
2. THE MAIN BREAKER SHALL BE INTERLOCKED WITH CABINET DOOR.
3. ALL INTERCONNECTING WIRING, EXCEPT FOR CONTROL CIRCUITS, SHALL BE 600 VOLT INSULATION AND RATED FOR NOT LESS 90 DEGREES C.
4. POWER DISTRIBUTION WIRING ON THE LINE SIDE OF FUSES SHALL BE 14 AVG MINIMUM. CONTROL WIRING ON THE SECONDARY SIDE OF FUSES SHALL BE 16 AVG MINIMUM. ELECTRONIC ANALOG CIRCUITS SHALL USE 16 AVG SHIELDED, TWISTED PAIR CABLES, INSULATED FOR NOT LESS THAN 300 VOLTS.
5. POWER AND LOW VOLTAGE DC WIRING SYSTEMS SHALL BE ROUTED IN SEPARATE WIREWAYS. CROSSING OF DIFFERENT SYSTEM WIRES SHALL BE AT RIGHT ANGLES. DIFFERENT SYSTEM WIRES ROUTED PARALLEL TO EACH OTHER SHALL BE SEPARATED BY AT LEAST 2 INCHES. DIFFERENT WIRING SYSTEMS SHALL TERMINATE ON SEPARATE TERMINAL BLOCKS. WIRING TROUGHS SHALL NOT BE FILLED TO MORE THAN 60 PERCENT VISIBLE FILL.
6. ALL WIRING SHALL TERMINATE IN A MASTER TERMINAL BOARD, RIGID TYPE AND NUMBERED. THE MASTER TERMINAL BOARD SHALL HAVE A MINIMUM OF 25 PERCENT SPARES. TERMINAL BLOCKS SHALL BE ARRANGED IN VERTICAL ROWS AND SEPARATED INTO THE FOLLOWING GROUPS: POWER, AC CONTROL, DC SIGNAL, AND ALARM. TERMINAL BLOCKS SHALL BE BARRIER TYPE WITH A MINIMUM 600 VOLTS RATING. THEY SHALL BE THE RAISED CHANNEL MOUNT TYPE. WIRING CONNECTORS SHALL BE THE HOOK FORK TYPE WITH NON-INSULATED METAL SLEEVE. WIRE MARKERS SHALL BE SLEEVE TYPE FOR EACH WIRE. WIRE AND TYPE MARKERS SHALL BE THE SLEEVE TYPE WITH HEAT IMPRESSED LETTERS AND NUMBERS. DIRECT INTERLOCK WIRING BETWEEN EQUIPMENT WILL NOT BE ALLOWED. ONLY ONE SIDE OF A TERMINAL BLOCK ROW SHALL BE USED FOR INTERNAL WIRING. THE FIELD WIRING SIDE OF THE TERMINAL SHALL NOT BE WITHIN 6-INCHES OF THE SIDE PANEL OR ADJACENT TERMINAL.
7. ALL WIRING TO HAND SWITCHES, ETC., WHICH ARE LIVE CIRCUITS INDEPENDENT OF THE PANEL'S NORMAL CIRCUIT BREAKER PROTECTION SHALL BE CLEARLY IDENTIFIED AS SUCH.
8. ALL COMPONENTS SHALL BE MOUNTED IN A MANNER THAT SHALL PERMIT SERVICING, ADJUSTMENT, TESTING AND REMOVAL, WITHOUT DISCONNECTING, REMOVING OR DISTURBING ADJACENT COMPONENTS. COMPONENTS MOUNTED ON THE INSIDE OF PANELS SHALL BE MOUNTED ON REMOVABLE PLATES AND NOT DIRECTLY TO THE ENCLOSURE. INTERNAL COMPONENTS SHALL BE IDENTIFIED WITHPLASTIC ENGRAVED TAGS ATTATCHED WITH DRIVE PINS ADJACENT TO EACH COMPONENT IDENTIFYING THE COMPONENT IN ACCORDANCE WITH THE DRAWINGS.

C2i CONTROL INSTRUMENTS, INC.
ATLANTA, GEORGIA

CONTROL PANEL LCP-1
SCHEMATIC & CONNECTION DIAGRAM

ARLINGTON COUNTY, VIRGINIA
WATER POLLUTION CONTROL PLANT

DRAWN	APP'VD	SCALE	CUSTOMER NO.	DWG. NO.	SHEET
MFB		NONE		ED-8204	2 of 2
FILE 372-5-2		DATE 05/25/94	JOB NO. 372		

RECORD DRAWING

NO.	DATE	DRAWN	CHKD	DESCRIPTION
				REVISIONS
0	11/98	FXP	ASG	RECORD DRAWING

DESIGNED BY: .

DRAWN BY: FXP

CHECKED BY/DATE/: .

APPROVED BY/DATE: .

THIS DRAWING HAS BEEN COMPILED
HAZEN AND SAWYER, P.C.

ARLINGTON COUNTY, VIRGINIA
WATER POLLUTION CONTROL PLANT
UPGRADE AND EXPANSION- PHASE IIB

CONTROL INSTRUMENTS, INC. DRAWINGS
CONTROL PANEL LCP-27 AND LCP-1

SCALE NOTE

SCALE BAR SHOWN BELOW IS ONE INCH LONG ON A FULL SIZE DRAWING. WHEN SCALING DRAWINGS, MEASURE BAR TO DETERMINE IF SCALES SHOWN WILL REQUIRE ADJUSTING.

ONE INCH

CONTRACT NO.
9002 - WPC

YEAR 1991

LOCATION CODE

SPECIALTY CODE
I

PROJECT NO.
5002 - 033

FILE NAME
C2i20.DWG

DRAWING NO.
C2i-20

SHEET NO. 322

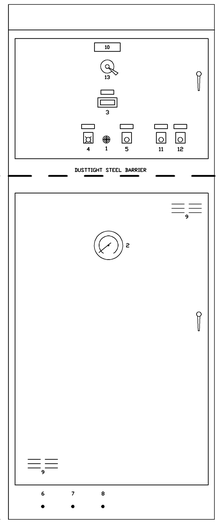

FRONT VIEW

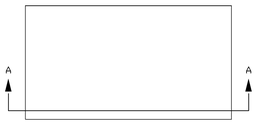

TOP VIEW

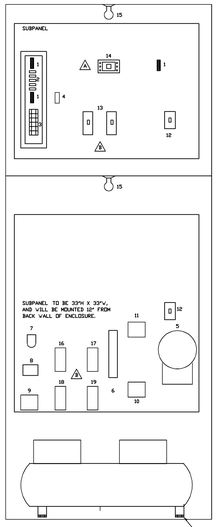

VIEW A-A

RUBBER ANTI-VIBRATION PADS w/ THROUGH BOLTING TO BOTTOM OF ENCLOSURE.

NOTES:
1. PANEL TO BE 90"H X 36"W X 20"D.
2. NEMA 12 UPPER COMPARTMENT AND NEMA 1 LOWER COMPARTMENT #14 GAUGE MINIMUM
3. COLOR: ASA #61 GREY - THEMEC HI-BUILD EPOXOLINE #66-1221 (5 SFT) #66-COLOR (6 SFT)

LEGEND:
1. ALARM HORN
2. LEVEL GAUGE- 0-15 FT
3. LEVEL TRANSMITTER OUTPUT METER 0 - 25 mA
4. LOV AIR PRESSURE ALARM LIGHT (PUSH-TO-TEST)
5. ALARM HORN SILENCE PUSHBUTTON
6. .25" NPT MALE BULKHEAD CONNECTION FOR ALTERNATE AIR SUPPLY
7. .25" NPT MALE BULKHEAD CONNECTION FORBUBBLE TUBE
8. .25" NPT MALE BULKHEAD CONNECTION FORDRAIN VALVE
9. LOUVERS
10. NAMEPLATE- "AIR BUBBLER PANEL"
11. COMPRESSOR NO1 HAND/OFF/AUTO SELECTOR SWITCH
12. COMPRESSOR NO2 HAND/OFF/AUTO SELECTOR SWITCH
13. DISCONNECT HANDLE

CONSTRUCTION NOTES:
1. ALL PIPING WITHIN THE CABINET SHALL BE PER SPECIFICATION SECTION 13860-2.06.C.
2. CABINET WILL BE FABRICATED TO MEET SPECIFICATIONS SECTION 13860-2.02.
3. NAMEPLATES WILL BE PROVIDED FOR EACH DEVICE INSIDE THE CABINET.
4. PRESSURE GAUGES TO INCLUDE SNUBBERS.
5. ISOLATION COCKS TO BE USED ON ALL DEVICES REQUIRING REMOVAL FOR MAINTENANCE.

LEGEND
1. TERMINALS
2. NAMEPLATES- "FUXXX"
3. NAMEPLATES- "CR-XXX"
4. NAMEPLATES- "24 VDC POWER SUPPLY"
5. NAMEPLATES- "PRESSURE TRANSMITTER"
6. NAMEPLATES- "ROTAMETER/DIFF. REG."
7. NAMEPLATES- "REGULATOR/FILTER"
8. NAMEPLATES- "AIR SUPPLY VALVE"
9. NAMEPLATES- "ALTERNATE AIR SUPPLY VALVE"
10. NAMEPLATES- "PURGE VALVE"
11. NAMEPLATES- "INSTRUMENT AIR VALVE"
12. NAMEPLATES- "LIGHT SVITCH"
13. NAMEPLATES- "COMPRESSOR D/L SVITCH"
14. NAMEPLATES- "DISCONNECT SVITCH DS103" WITH SEPARATE FUSING.
15. LIGHT <75 vAtT>
16. PRESSURE SVITCH - LOV VETVELL LEVEL (LSLL-1015)
17. PRESSURE SVITCH - HIGH VETVELL LEVEL (LSHH-1015) A
18. PRESSURE SVITCH - COMPRESSOR CYCLING
19. PRESSURE SVITCH - COMPRESSOR LOV PRESSURE (PSL-1015)

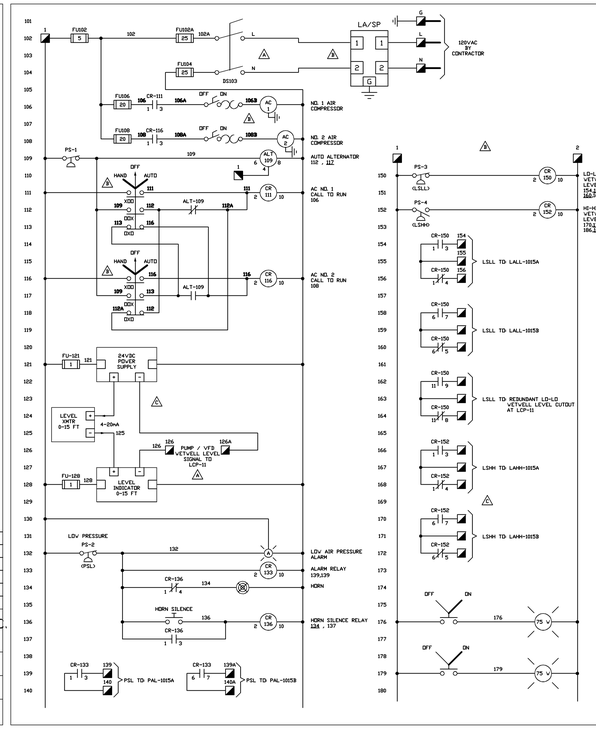

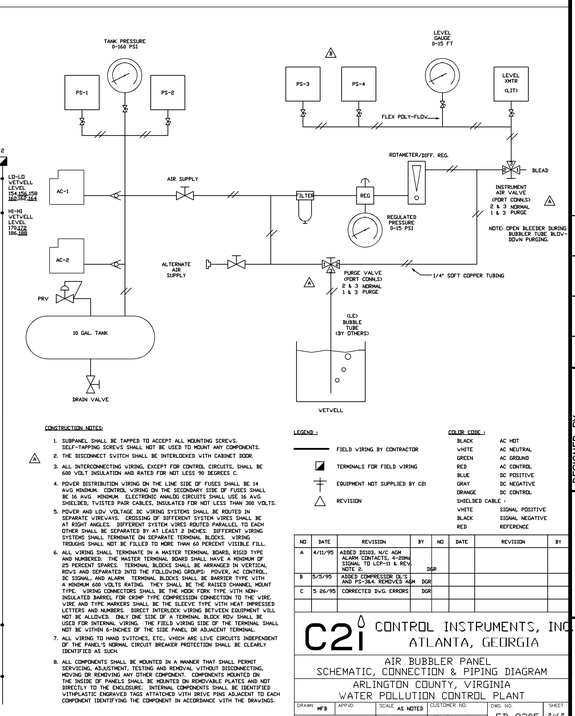

CONSTRUCTION NOTES:
1. SUBPANEL SHALL BE TAPPED TO ACCEPT ALL MOUNTING SCREVS. SELF-TAPPING SCREVS SHALL NOT BE USED TO MOUNT ANY COMPONENTS.
2. THE DISCONNECT SVITCH SHALL BE INTERLOCKED VITH CABINET DOOR.
3. ALL INTERCONNECTING VIRING, EXCEPT FOR CONTROL CIRCUITS, SHALL BE 600 VOLT INSULATION AND RATED FOR NOT LESS 90 DEGREES C.
4. POVER DISTRIBUTION VIRING ON THE LINE SIDE OF FUSES SHALL BE 14 AVG MINIMUM. CONTROL VIRING ON THE SECONDARY SIDE OF FUSES SHALL BE 16 AVG MINIMUM. ELECTRONIC ANALOG CIRCUITS SHALL USE 16 AVG SHIELDED, TVISTED PAIR CABLES, INSULATED FOR NOT LESS THAN 300 VOLTS.
5. POVER AND LOV VOLTAGE DC VIRING SYSTEMS SHALL BE ROUTED IN SEPARATE VIREVAYS. CROSSING OF DIFFERENT SYSTEM VIRES SHALL BE AT RIGHT ANGLES. DIFFERENT SYSTEM VIRES ROUTED PARALLEL TO EACH OTHER SHALL BE SEPARATED BY AT LEAST 2 INCHES. DIFFERENT VIRING SYSTEMS SHALL TERMINATE ON SEPARATE TERMINAL BLOCKS. VIRING TROUGHS SHALL NOT BE FILLED TO MORE THAN 60 PERCENT VISIBLE FILL.
6. ALL VIRING SHALL TERMINATE ON A MASTER TERMINAL BOARD, RISED TYPE AND NUMBERED. THE MASTER TERMINAL BOARD SHALL HAVE A MINIMUM OF 25 PERCENT SPARES. TERMINAL BLOCKS SHALL BE ARRANGED IN VERTICAL ROVS AND SEPARATED INTO THE FOLLVING GROUPS: POVER, AC CONTROL, DC CONTROL, AND INSTRUMENTATION. TERMINAL BLOCKS SHALL BE RATED FOR A MINIMUM 600 VOLTS RATING. THEY SHALL BE THE RAISED CHANNEL MOUNT TYPE. VIRING CONNECTORS SHALL BE THE HOOK FORK TYPE VITH NON-INSULATED BARREL FOR CRIMP TYPE COMPRESSION CONNECTION TO THE VIRE. VIRE AND TYPE MARKERS SHALL BE THE SLEEVE TYPE VITH HEAT IMPRESSED LETTERS AND NUMBERS. DIRECT INTERLOCK VIRING BETVEEN EQUIPMENT VILL NOT BE ALLOVED. ONLY ONE SIDE OF A TERMINAL BLOCK ROV SHALL BE USED FOR INTERNAL VIRING. THE FIELD VIRING SIDE OF THE TERMINAL SHALL NOT BE VITHIN 6-INCHES OF THE SIDE PANEL OR ADJACENT TERMINAL.
7. ALL VIRING TO HAND SVITCHES, ETC., VHICH ARE LIVE CIRCUITS INDEPENDENT OF THE PANEL'S NORMAL CIRCUIT BREAKER PROTECTION SHALL BE CLEARLY IDENTIFIED AS SUCH.
8. ALL COMPONENTS SHALL BE MOUNTED IN A MANNER THAT SHALL PERMIT SERVICING, ADJUSTMENT, TESTING AND REMOVAL VITHOUT DISCONNECTING, MOVING OR REMOVING ANY OTHER COMPONENT. COMPONENTS MOUNTED ON THE INSIDE OF PANELS SHALL BE MOUNTED ON REMOVABLE PLATES AND NOT DIRECTLY TO THE ENCLOSURE. INTERNAL COMPONENTS SHALL BE IDENTIFIED VITHPLASTIC ENGRAVED TAGS ATTATCHED VITH DRIVE PINS ADJACENT TO EACH COMPONENT IDENTIFYING THE COMPONENT IN ACCORDANCE VITH THE DRAVINGS.

LEGEND :
- FIELD VIRING BY CONTRACTOR
- TERMINALS FOR FIELD VIRING
- EQUIPMENT NOT SUPPLIED BY C2i
- REVISION

COLOR CODE :

BLACK	AC HOT
VHITE	AC NEUTRAL
GREEN	AC GROUND
RED	AC CONTROL
BLUE	DC POSITIVE
GRAY	DC NEGATIVE
ORANGE	DC CONTROL
SHIELDED CABLE :	
VHITE	SIGNAL POSITIVE
BLACK	SIGNAL NEGATIVE
RED	REFERENCE

NO	DATE	REVISION	BY
A	4/12/95	ADDED DS103, COMPRESSOR SELECTOR SV. PRESS TRANSMITTER, PRESSURE PLATES AND COMPRESSOR PADS.	DGR
B	5/5/95	REMOVED AGM RACK. ADD ITEMS 16,17,18&19 & NOTES. REVISED PAINT COLOR NOTE	DGR

C2i CONTROL INSTRUMENTS, INC.
ATLANTA, GEORGIA

AIR BUBBLER PANEL
SCHEMATIC, CONNECTION & PIPING DIAGRAM
ARLINGTON COUNTY, VIRGINIA
VATER POLLUTION CONTROL PLANT

DRAVN	APP'D	SCALE	CUSTOMER NO.	DWG. NO.	SHEET
MFB		AS NOTED		ED-8205	1 of 2
FILE 372-6-1		DATE 05/18/94	JOB NO. 372		

NO	DATE	REVISION	BY
A	4/11/95	ADDED DS103, N/C AGM ALARM CONTACTS, 4-20MA SIGNAL TO LCP-11 & W/O NOTE 3.	DGR
B	5/5/95	ADDED COMPRESSOR DL'S AND PS-3&4. REMOVED AGM RACK	DGR
C	5 26-95	CORRECTED DVG ERRORS	DGR

C2i CONTROL INSTRUMENTS, INC.
ATLANTA, GEORGIA

AIR BUBBLER PANEL
SCHEMATIC, CONNECTION & PIPING DIAGRAM
ARLINGTON COUNTY, VIRGINIA
VATER POLLUTION CONTROL PLANT

DRAVN	APP'D	SCALE	CUSTOMER NO.	DWG. NO.	SHEET
MFB		AS NOTED		ED-8205	2 of 2
FILE 372-6-2		DATE 05/31/95	JOB NO. 372		

RECORD DRAWING

NO.	DATE	BY	CHKD	DESCRIPTION
				REVISIONS
0	11/98	FXP	ASG	RECORD DRAWING

DESIGNED BY: .
DRAVN BY: FXP
CHECKED BY/DATE/:
APPROVED BY/DATE:

THIS DRAVING HAS BEEN COMPILED HAZEN AND SAVYER, P.C.

ARLINGTON COUNTY, VIRGINIA
VATER POLLUTION CONTROL PLANT
UPGRADE AND EXPANSION- PHASE IIIB

CONTROL INSTRUMENTS, INC. DRAVINGS
AIR BUBBLER PANEL

SCALE NOTE
SCALE BAR SHOVN BELOV IS ONE INCH LONG ON A FULL SIZE DRAVING. VHEN SCALING DRAVINGS, MEASURE BAR TO DETERMINE IF SCALES SHOVN VILL REQUIRE ADJUSTING.
ONE INCH

CONTRACT NO. 9002 – VPC
YEAR 1991
LOCATION CODE
SPECIALTY CODE I
PROJECT NO. 5002 – 033
FILE NAME C2i21.DVG
DRAVING NO. C2i–21
SHEET NO. 323

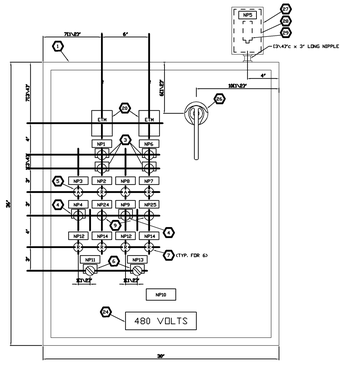

PANEL FRONT
SCALE 1\4"=1'-0"

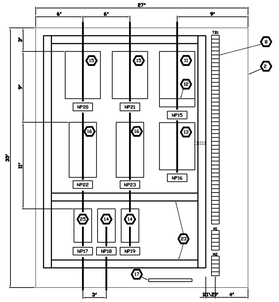

BACKPLATE
SCALE 1\4"=1'-0"

ITEM NO.	QTY	MANUF & CAT. NO.	DESCRIPTION	REMARKS
A	1	HOFFMAN A4-36H36SSELP	36" HIGH X 36" WIDE X 12" DEEP SINGLE DOOR STAIN STEEL NEMA TYPE 4X	
B	1	HOFFMAN A4-36P36	BACK PLATE FOR USE WITH ITEM #1 36" HIGH X 27" WIDE MOUNTING PANEL	
C	2	SQUARE D CLASS 9001 SKR3UHK3	PUSH BUTTONS MAINTAINED INTERLOCKED ASSEMBLY WITH 1 NO & 1 NC CONTACT	-V/KN9316P START\ LEG PLATES -V/KN9317P STOP/
D	2	SQUARE D CLASS 9001 SKR3UHK3	PUSH BUTTON MOMENTARY WITH 1 NO CONTACT & 1 NC BLOCK	V/ GD KN8032P RESET
E	2	SQUARE D CLASS 9001 SK7GA16	AMBER PILOT LIGHT 120-125 VOLT NEMA 4X, PUSH-TO-TEST	
F	2	SQUARE D CLASS 9001 SKR3UHK3	SELECTOR BUTTON MANUAL RETURN WITH GD NO & NC CONTACT BLOCKS	V/ KN8995P ATM/CLOSE/BLDG
G	6	SQUARE D CLASS 9001 SK7GP3	RED PILOT LIGHT 120-125 VOLT NEMA 4X, PUSH-TO-TEST	
H	54 1 1 6 2	SQUARE "D" QAA (TERMINAL) QA3A (CHANNEL) QF2B (END BARRIER) QA2 (CENTER BARRIER) QA3G (MARKING STR)	TERMINAL BLOCK ASSEMBLY CONSISTING OF TERMINALS WITH MOUNTING CHANNEL, END BARRIER, ANCHOR & MARKING STRIP	SEE WIRING DIAGRAMS FOR ARRANGEMENT
I	2	SQUARE D CLASS 9006 TYPE XA	EXTERNAL RESET MECHANISM	
J		NOT USED		
K	1	SQUARE "D" FAL34020	THERMAL MAGNETIC CIR. BREAKER 20A 480 VOLT 3P	INTERLOCK W/DOOR VIA ITEM (A)
L	1	SQUARE "D" PSGAF4G	POWER DISTRIBUTION CONNECTOR	
M	1	SQUARE "D" KF5002SI	CONTROL POWER TRANSFORMER 500 VA 480\120VAC	W/ TOP MOUNTED FUSE BLOCK & GD 6\10 AMP PREM & CU SAMP SEC FUSES
N	2	SQUARE "D" CLASS 9050 TYPE PSID FIG1	SOLID STATE 120VAC TIMING RELAY WITH DPDT 10 AMP CONTACTS, INCL TIMING AND INVIS. SYNC INSTANTANEOUS CONTACTS.	
O	2	SQUARE "D" FAL36003-11M	INSTANTANEOUS TRIP CIR. BREAKER DAMP 480 VOLT 3P	1 HP
P	2	SQUARE "D" CLASS 8536 SCO3V16S	480V. 3P, STARTER, FVNR, NEMA SIZE 1, 120VAC COIL W\3 B\O THERMAL UNITS AND 1\0\1NA N.O. AUXILIARY CONTACTS.	1 HP
Q	1	SQUARE "D" PK3GTA-L	GROUND BAR KIT	
R		NOT USED		
S		NOT USED		
T	2	EAGLE #HK450	ELAPSED TIME INDICATOR. 120VAC	
U		NOT USED		
V		NOT USED		
W	AS REQ'D	PANDUIT	1"x4" WITH COVER	
X	1	BRADY 44415	VOLTAGE WARNING LABEL - 480 VOLT	
Y	1	SQUARE "D" LF1\LT2D W\LC4G HANDLE	DOOR MTD. CKT. BKR. OPERATOR, 3P, NEMA 4	LONG SHAFT REQUIRED
Z	1	HOFFMAN # A-08064FSS	BYPASS + 8" WIDE + 4" DEEP, CLAMP COVER, STAIN. STEEL, NEMA 4x	
AA	1	HOFFMAN A-BP6	BACK PLATE FOR USE WITH ITEM #27, 8CD-AY-HSH, + HCH-A7 VIDC MOUNTING PANEL	
AB	1	SQUARE "D" CLASS 6671 SPD60W	SURGE SUPPRESSOR 3Ø 4W, PHASE TO GROUND	MOUNTING BRACKET INCLUDED
AC	2	SQUARE "D" CLASS 9006 TYPE XA	EXTERNAL RESET MECHANISM	

NP NO.	ENGRAVING	SIZE *
1	FDA, AIR BLOWER FAF-4A START/STOP	
2	FDA, AIR BLOWER FAF-4A RUN	
3	FDA, AIR BLOWER FAF-4A AIR FLOW ALARM	
4	FDA, AIR BLOWER FAF-4A ALARM RESET	
5	SURGE SUPPRESSOR TVSS	
6	FDA, AIR BLOWER FAF-4B START/STOP	
7	FDA, AIR BLOWER FAF-4B RUN	
8	FDA, AIR BLOWER FAF-4B AIR FLOW ALARM	
9	FDA, AIR BLOWER FAF-4B RESET	
10	FDA, AIR BLOWER CONTROL PANEL LCP-29	83\4"x4"
11	LOUVER FAF-4A ATM-CLOSE BLDG	
12	LOUVER OPEN TO ATM	AS REQ'D
13	LOUVER FAF-4B ATM-CLOSE BLDG	
14	LOUVER OPEN TO BLDG	AS REQ'D
15	MAIN CIRCUIT BREAKER	-
16	TRANSFORMER T1	-
17	120V. RECEPTACLE	-
18	SFT1	-
19	SFT2	-
20	MCP-1	-
21	MCP-2	-
22	FAF-4A MOTOR STARTER	-
23	FAF-4B MOTOR STARTER	-
24	FAF-4A MOTOR STARTER RESET	-
25	FAF-4B MOTOR STARTER RESET	-

* ALL NAMEPLATES ARE 1"x3\1\2" U.O.N.

-	-	-	3	AS BUILT SUBMITTAL	GJL	3-24-93	
4	AS BUILT	GJL	C	RESUBMIT FOR CLIENT APPROVAL	REA	2-09-93	DRAWN BY
P3	REVISE PER CLIENT COMMENTS	REA	3	RESUBMIT FOR CLIENT APPROVAL	VAW	11-16-92	CHECKED BY
P2	REVISE PER CLIENT COMMENTS	VAW	A	FOR CLIENT APPROVAL	SAW	6-26-92	APPD. BY
NO.	REVISION	BY	DATE	DRAWING HISTORY	BY	DATE	CLIENT APPD.

REFERENCE DRAWINGS

CASE ENGINEERING
LAKELAND, FLORIDA

ARLINGTON COUNTY, VIRGINIA
WATER POLLUTION CONTROL PLANT
PANEL LCP-29 LAYOUT

DRAWN BY: SAW | 3-13-92
SCALE: 1\4"=1'-0"
DRAWING NO.: 2049-E-001
REV: 0

SEE FILE DRAWING
LCP\ MODEL 84-04-03 E 2049

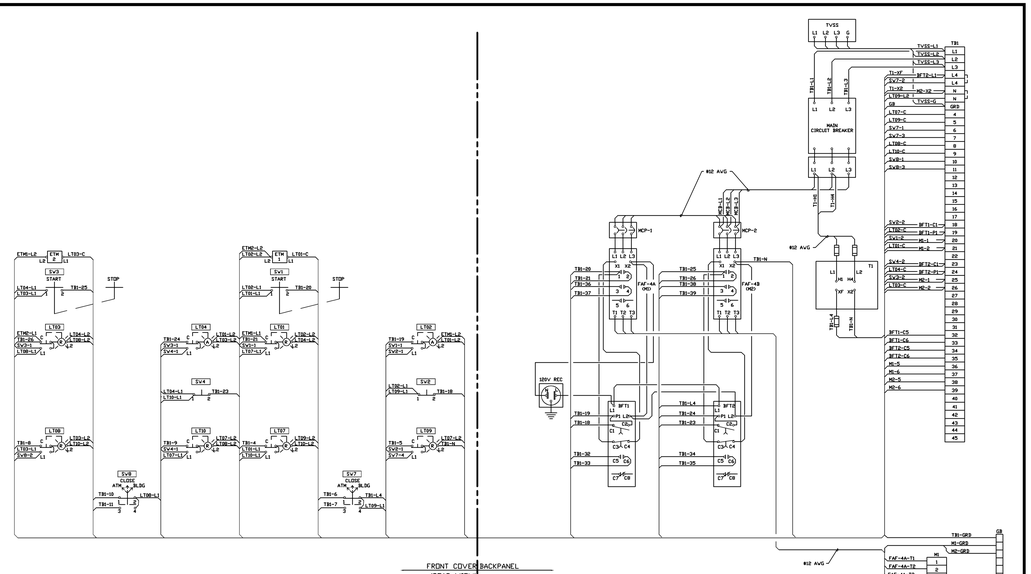

FRONT COVER BACKPANEL
(REAR VIEW)

PANEL WIRING DIAGRAM

ALL WIRE TO BE #14 AWG SINGLE CONDUCTOR COPPER UNLESS OTHERWISE NOTED.
ALL CABLE TO BE TYPE XHHW-2 600 VOLT INSULATION.

-	-	-	3	AS BUILT SUBMITTAL	GJL	3-09-93	
0	AS BUILT	GJL	C	RESUBMIT FOR CLIENT APPROVAL	REA	2-09-93	DRAWN BY
P3	REVISE PER CLIENT COMMENTS	REA	3	RESUBMIT FOR CLIENT APPROVAL	VAW	11-16-92	CHECKED BY
P2	REVISE PER CLIENT COMMENTS	VAW	A	FOR CLIENT APPROVAL	SAW	6-26-92	APPD. BY
NO.	REVISION	BY	DATE	DRAWING HISTORY	BY	DATE	CLIENT APPD.

REFERENCE DRAWINGS

CASE ENGINEERING
LAKELAND, FLORIDA

ARLINGTON COUNTY, VIRGINIA
WATER POLLUTION CONTROL PLANT
PANEL LCP-29 WIRING DIAGRAM

DRAWN BY: SAW | 3-30-92
SCALE: NONE
DRAWING NO.: 2049-E-002
REV: 0

SEE FILE DRAWING
LCP\ MODEL 84-04-03 E 2049

NO.	DATE	BY	DESCRIPTION
0	11/98	FXP	RECORD DRAWING
		ASG	CHKD
		FXP	DRWN
			REVISIONS

DESIGNED BY: -
DRAWN BY: FXP
CHECKED BY/DATE/:-
APPROVED BY/DATE:

THIS DRAWING HAS BEEN COMPILED FROM RECORDS OF HAZEN AND SAWYER, P.C.

ARLINGTON COUNTY, VIRGINIA
WATER POLLUTION CONTROL PLANT
UPGRADE AND EXPANSION- PHASE IIB

CASE ENGINEERING DRAWINGS
PANEL LCP-29 AND LCP-31

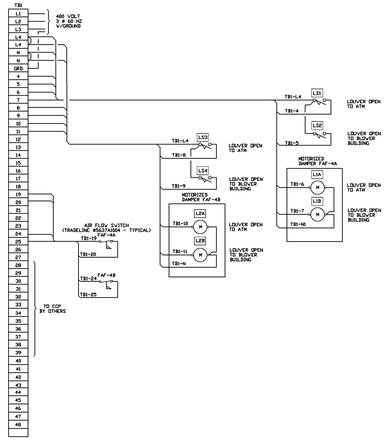

"FIELD" WIRING DIAGRAM

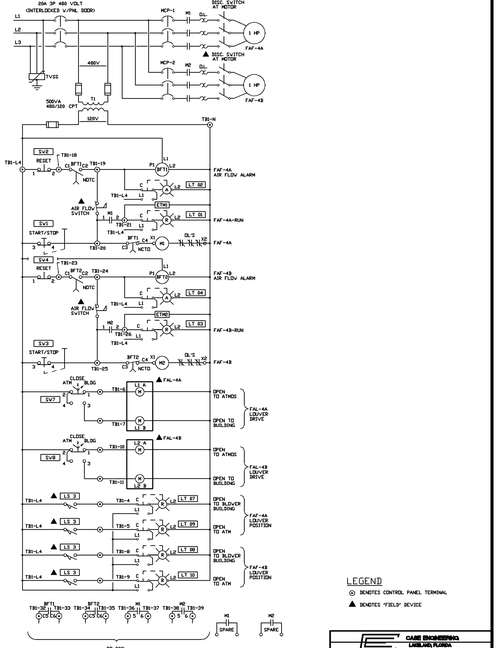

SCHEMATIC WIRING DIAGRAM

LEGEND
⊙ DENOTES CONTROL PANEL TERMINAL
▲ DENOTES "FIELD" DEVICE

-	-	-	3	AS BUILT SUBMITTAL	GJL	3-09-93	
4	AS BUILT	GJL	C	RESUBMIT FOR CLIENT APPROVAL	REA	2-09-93	DRAWN BY
P3	REVISE PER CLIENT COMMENTS	REA	3	RESUBMIT FOR CLIENT APPROVAL	VAW	11-16-92	CHECKED BY
P2	REVISE PER CLIENT COMMENTS	VAW	A	FOR CLIENT APPROVAL	SAW	6-26-92	APPD. BY
NO.	REVISION	BY	DATE	DRAWING HISTORY	BY	DATE	CLIENT APPD.

REFERENCE DRAWINGS

CASE ENGINEERING
LAKELAND, FLORIDA

ARLINGTON COUNTY, VIRGINIA
WATER POLLUTION CONTROL PLANT
PANEL LCP-29 FIELD WIRING DIAGRAM

DRAWN BY: SAW | 3-13-92
SCALE: 1\4"=1'-0"
DRAWING NO.: 2049-E-003
REV: 0

SEE FILE DRAWING
LCP\ MODEL 84-04-03 E 2049

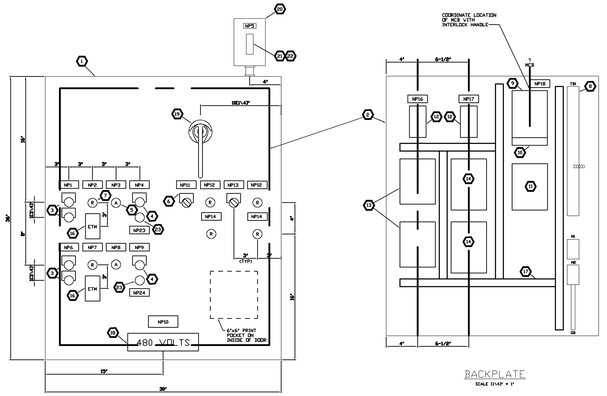

PANEL FRONT
SCALE 1\4"=1'-0"

BACKPLATE
SCALE 1\4"=1'-0"

ITEM NO.	QTY	MANUF & CAT. NO.	DESCRIPTION	REMARKS
A	1	HOFFMAN A4-36H36SSELP	36" HIGH X 36" WIDE X 12" DEEP SINGLE DOOR STAIN. STEEL NEMA TYPE 4X	
B	1	HOFFMAN A4-36P36	BACK PLATE FOR USE WITH ITEM #1 36" HIGH X 27" WIDE MOUNTING PANEL	
C	2	SQUARE D CLASS 9001 SKR3UHK3	PUSH BUTTONS MAINTAINED INTERLOCKED ASSEMBLY WITH 1 NO & 1 NC CONTACT	-V/KN9316P START\ LEG PLATES -V/KN9317P STOP/
D	2	SQUARE D CLASS 9001 SKR3UHK3	PUSH BUTTON MOMENTARY WITH 1 NO CONTACT & 1 NC BLOCK	V/ GD KN8032P RESET
E	2	SQUARE D CLASS 9001 SK7GA16	AMBER PILOT LIGHT 120-125 VOLT NEMA 4X, PUSH-TO-TEST	
F	2	SQUARE D CLASS 9001 SKR3UHK3	SELECTOR BUTTON MANUAL RETURN WITH GD NO & NC CONTACT BLOCKS	V/ KN8995P ATM/CLOSE/BLDG
G	6	SQUARE D CLASS 9001 SK7GP3	RED PILOT LIGHT 120-125 VOLT NEMA 4X, PUSH-TO-TEST	
H	54 1 1 6 2	SQUARE "D" QAA (TERMINAL) QA3A (CHANNEL) QF2B (END BARRIER) QA2 (CENTER BARRIER) QA3G (MARKING STR)	TERMINAL BLOCK ASSEMBLY CONSISTING OF TERMINALS WITH MOUNTING CHANNEL, END BARRIER, ANCHOR AND MARKING STRIP	SEE WIRING DIAGRAMS FOR ARRANGEMENT
I	1	SQUARE "D" FAL34030	THERMAL MAGNETIC CIR. BREAKER 30A 480 VOLT 3P	INTERLOCK W/DOOR VIA ITEM (A)
J	1	SQUARE "D" PSGAF4G	POWER DISTRIBUTION CONNECTOR	
K	1	SQUARE "D" KF5002SI	CONTROL POWER TRANSFORMER 500 VA 480\120VAC	W/ TOP MOUNTED FUSE BLOCK & GD 6\10 AMP PREM & CU SAMP SEC FUSES
L	2	SQUARE "D" CLASS 9050 TYPE PSID FIG1	SOLID STATE 120VAC TIMING RELAY WITH DPDT 10 AMP CONTACTS, INCL TIMING AND INVIS. SYNC INSTANTANEOUS CONTACTS.	
M	2	SQUARE "D" FAL36015-13M	INSTANTANEOUS TRIP CIR. BREAKER 15 AMP 480 VOLT 3P	5 HP
N	2	SQUARE "D" CLASS 8536 SCO3V16S	480V 3P STARTER, FVNR, NEMA SIZE 1, 120VAC COIL W\3 B\O THERMAL UNITS AND 1\0\1NA N.O. AUXILIARY CONTACTS.	5 HP
O	1	SQUARE "D" PK3GTA-L	GROUND BAR KIT	
P	2	EAGLE #HK450	ELAPSED TIME INDICATOR - 120V AC	
Q	19"	PANDUIT	1"x3\1\2" WITH COVER	
R	1	BRADY 44415	VOLTAGE WARNING LABEL - 480 VOLT	
S	1	SQUARE "D" LF1\LT2D W\LC4G HANDLE	DOOR MTD. CKT. BKR. OPERATOR, 3P, NEMA 4	LONG SHAFT REQUIRED
T	1	HOFFMAN # A-08064FSS	BYPASS + 8" WIDE + 4" DEEP, CLAMP COVER, STAIN. STEEL, NEMA 4x	
U	1	HOFFMAN A-BP6	BACK PLATE FOR USE WITH ITEM #27, 8CD-AY-HSH, + HCH-A7 VIDC MOUNTING PANEL	
V	1	SQUARE "D" CLASS 6671 SPD60W	SURGE SUPPRESSOR 3Ø 4W, PHASE TO GROUND	MOUNTING BRACKET INCLUDED
W	2	SQUARE "D" CLASS 9006 TYPE XA	EXTERNAL RESET MECHANISM	

NP NO.	ENGRAVING	SIZE *
1	FDA, AIR BLOWER FAF-4A START/STOP	
2	FDA, AIR BLOWER FAF-4A RUN	
3	FDA, AIR BLOWER FAF-4A AIR FLOW ALARM	
4	FDA, AIR BLOWER FAF-4A ALARM RESET	
5	SURGE SUPPRESSOR TVSS	
6	FDA, AIR BLOWER FAF-4B START/STOP	
7	FDA, AIR BLOWER FAF-4B RUN	
8	FDA, AIR BLOWER FAF-4B AIR FLOW ALARM	
9	FDA, AIR BLOWER FAF-4B RESET	
10	FDA, AIR BLOWER CONTROL PANEL LCP-31	83\4"x4"
11	LOUVER FAF-4A ATM-CLOSE BLDG	
12	LOUVER OPEN TO ATM	
13	LOUVER FAF-4B ATM-CLOSE BLDG	
14	LOUVER OPEN TO BUILDING	
15	TRANSFORMER T1	
16	SFT1	
17	SFT2	
18	MAIN CIRCUIT BREAKER - MCB	
19	MCP-1	
20	MCP-2	
21	FAF-4A MOTOR STARTER	
22	FAF-4B MOTOR STARTER	
23	FAF-4A MOTOR STARTER RESET	
24	FAF-4B MOTOR STARTER RESET	

* ALL NAMEPLATES ARE 1"x3\1\2" U.O.N.

-	-	-	C	"AS BUILT" SUBMITTAL	SH	03/02/93	DRAWN BY
5	AS BUILT	SH	3	RESUBMIT FOR CLIENT APPROVAL	VAW	11/16/92	CHECKED BY
P2	REVISE PER CLIENT COMMENTS	VAW	A	FOR CLIENT APPROVAL	SAW	6-26-92	APPD. BY
NO.	REVISION	BY	DATE	DRAWING HISTORY	BY	DATE	CLIENT APPD.

REFERENCE DRAWINGS

CASE ENGINEERING
LAKELAND, FLORIDA

ARLINGTON COUNTY, VIRGINIA
WATER POLLUTION CONTROL PLANT
PANEL LCP-31 LAYOUT

DRAWN BY: SH | 03/02/93
SCALE: 1\4"=1'-0"
DRAWING NO.: 2049-E-004
REV: 0

SEE FILE DRAWING
LCP\ MODEL 84-04-03 E 2049

SCALE NOTE

SCALE BAR SHOWN BELOW IS ONE INCH LONG ON A FULL SIZE DRAWING. WHEN SCALING DRAWINGS, MEASURE BAR TO DETERMINE IF SCALES SHOWN WILL REQUIRE ADJUSTING.

ONE INCH

CONTRACT NO.
9002 - WPC

YEAR 1991

LOCATION CODE

SPECIALTY CODE
I

PROJECT NO.
5002 - 033

FILE NAME
CASE01.DWG

DRAWING NO.
CASE01

SHEET NO. 324

RECORD DRAWING

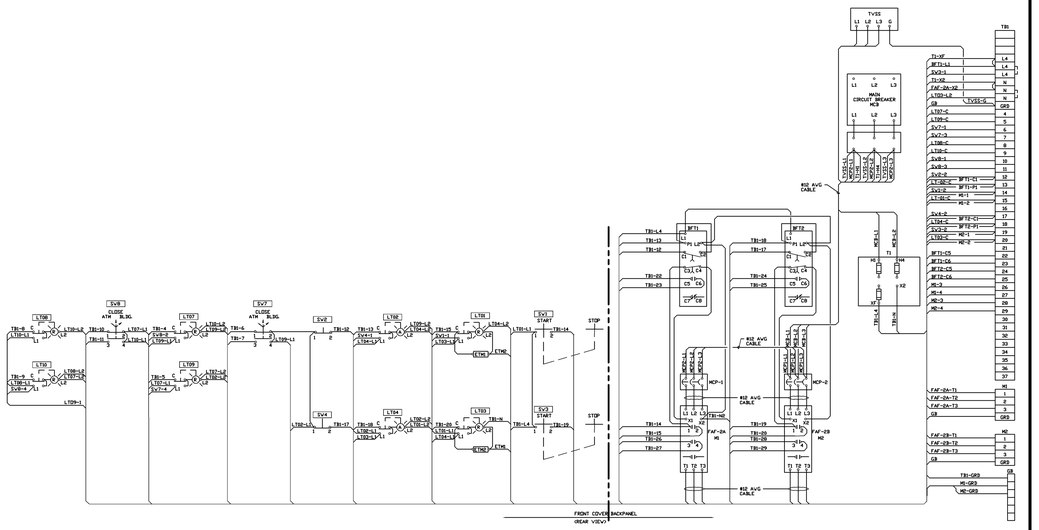

PANEL WIRING DIAGRAM

ALL PANEL WIRING TO BE #14 AVG SINGLE CONDUCTOR COPPER UNLESS OTHERWISE NOTED. ALL CABLE TO BE TYPE XHHW-2 600 VOLT INSULATION.

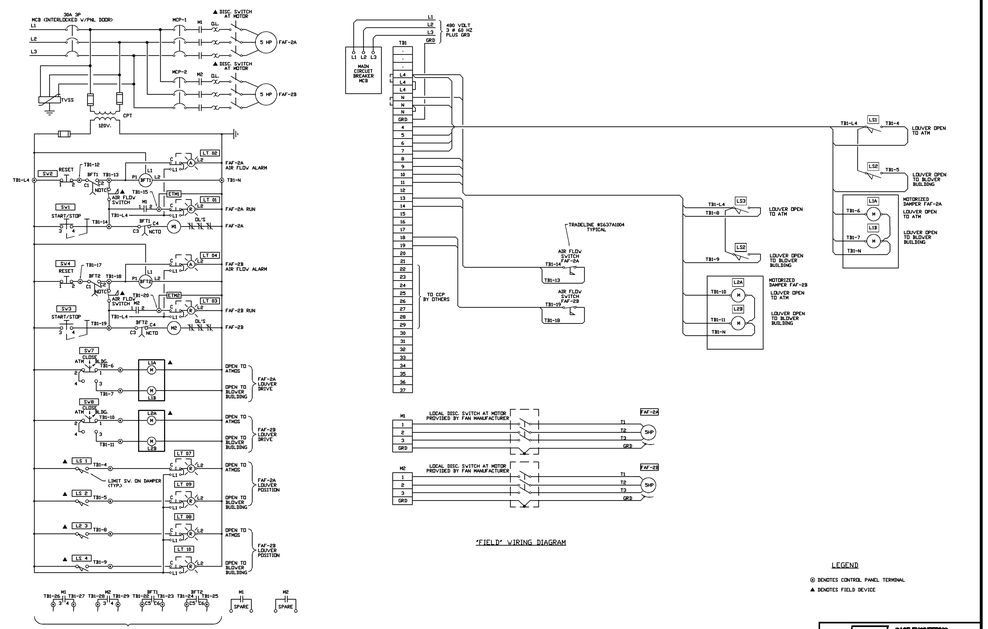

SCHEMATIC DIAGRAM

"FIELD" WIRING DIAGRAM

LEGEND

⊙ DENOTES CONTROL PANEL TERMINAL

▲ DENOTES FIELD DEVICE

-	-	-	-	-	-	-			
-	-	-	-	-	-	-			
-	-	-	-	-	-	-			
-	-	-	-	-	-	-			
REFERENCE DRAWINGS									

CASE ENGINEERING
LAKELAND, FLORIDA

ARLINGTON COUNTY, VIRGINIA
WATER POLLUTION CONTROL PLANT
PANEL LCP-31 WIRING DIAGRAM

NO.	REVISION	BY	DATE	ISSUE	DRAWING HISTORY	BY	DATE	CLIENT APPD.
-	-	-	-	-	-	-	-	-
-	-	-	-	-	-	-	-	-
-	-	-	-	C	AS BUILT SUBMITTAL	SFA	2-25-93	-
9	AS BUILT	SFA	2-25-93	9	RESUBMIT FOR CLIENT APPROVAL	VAW	11-16-92	-
P8	REVISE PER CLIENT COMMENTS	VAW	11-16-92	A	FOR CLIENT APPROVAL	SAW	6-25-92	-

DRAWN BY: SAW 3-30-92
CHECKED BY: JV 4-7-92
SCALE: NONE
DRAWING NO. 2049-E-006
REV. 0

DGN FILE CHANGED
LAST CHANGED 93-03-01 8:00A

DESIGNED BY:	.		
DRAWN BY:	FXP		
CHECKED BY/DATE/:	0	11/98	FXP
APPROVED BY/DATE:	NO.	DATE	DRWN

ASG	RECORD DRAWING	DESCRIPTION
CHKD		REVISIONS

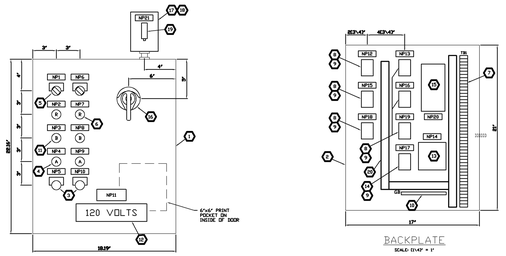

PANEL FRONT

SCALE: 1"=1'-0" x 1"

BACKPLATE

SCALE: 1"=1'-0" x 1"

ITEM NO.	QUANTITY	MANUF. & CAT. NO.	DESCRIPTION	REMARKS
A	1	HOFFMAN A4-24H20SSLP	24" HIGH X 20" WIDE X 10" DEEP SINGLE DOOR STAIN STEEL NEMA TYPE 4X	
B	1	HOFFMAN A4-24P20	BACK PLATE FOR 24"H X 20"W FOR USE WITH ITEM A	PAINTED STEEL
C	2	SQUARE D CLASS 9001 TYPE SKR3H13	MOMENTARY PUSH BUTTON 120 VOLT AT 60 HZ 1 NC CONTACTS	W/ANNODISP RESET LEGEND PLATE
D	2	SQUARE D CLASS 9001 TYPE SKS43BH3	AMBER PILOT LIGHT 120 VOLT AT 60 HZ TYPE NEMA 4X, PUSH-TO-TEST	
E	2	SQUARE D CLASS 9001 TYPE SKR3H13	(3) POS. SELECTOR SWITCH MANUAL RETURN WITH 120 VAC & 120 VDC NO. CONTACTS	W/ ANNODISP FAST/OFF/SLOW LEGEND PLATE
F	2	SQUARE D CLASS 9001 TYPE SKR3B13	RED PILOT LIGHT 120 VOLT AT 60 HZ TYPE NEMA 4X, PUSH-TO-TEST	
G	70	ALLEN-BRADLEY CONSISTING OF TERMINALS WITH MOUNTING CHANNEL, END BARRIER, ANCHOR & MARKING STRIP (1492-EBFDC35-1) (1492-EBFDC35-2) (1492-EMARKING ST.)	TERMINAL BLOCK ASSEMBLY CONSISTING OF TERMINALS WITH MOUNTING CHANNEL, END BARRIER, ANCHOR & MARKING STRIP	SEE WIRING DIAGRAMS FOR ARRANGEMENT
H	9	SQUARE "D" CLASS 8501 TYPE KP32V20	PLUG-IN RELAY, 120V. COIL, DPDT	
J	7	SQUARE "D" CLASS 8501 TYPE NR	8 PIN TUBULAR RELAY SOCKET	
K	1	SQUARE "D" PK3GSTA-L	GROUND BAR KIT	
L	2	SQUARE "D" CLASS 9001 TYPE SKTSL3H	BLUE PILOT LIGHT 120 VOLT AT/MR TYPE NEMA 4X, PUSH-TO-TEST	
M	1	BRADY 84404	VOLTAGE WARNING LABEL - 120 VOLT	
N	1	SQUARE "D" CLASS 9070 TYPE SRT30D23	24 VOLT TRANSFORMER, 120VA 120 VOLT PRI 24 VOLT SEC.	(V-) TOP MOUNTED FUSE BLOCK
P	1	SQUARE "D" CLASS 8501 TYPE KP32V24	PLUG-IN RELAY-24 VOLT COIL DPDT	
Q	1	SQUARE "D" FAL26015	THERMAL MAGNETIC CKT. BREAKER 240V., 15 AMP, 2 POLE	INTERLOCK W/DOOR VIA ITEM Q
R	1	SQUARE "D" CLASS 9070 LF31/L32 W/LC43	DOOR MTD. CKT. BREAKER OPERATING MECHANISM	NEMA 4 RATING
S	1	HOFFMAN A4-66H48FSS	67 HIGH x 4" WIDE x 4" DEEP, SLANT TOP COVER, STAIN STEEL, NEMA 4X	
T	1	HOFFMAN A4-66P	BACK PLATE FOR USE WITH ITEM R17, #23.47 HIGH x #23.47 MOUNTING PANEL	PAINTED STEEL WIRE
U	1	SQUARE "D" CLASS 6671 TYPE SP1375	SECONDARY SURGE ARRESTOR SINGLE PHASE, 175VAC	PROVIDE MOUNTING BRACKET
V	AS REQ'D	PANDUIT TYPE E1X4LG6	1"x4" GRAY PLASTIC	WITH 1" COVER

BILL OF MATERIALS

* ALL NAMEPLATES ARE 1"=#21/32" U.O.N.

NAMEPLATE SCHEDULE		
NP NO.	ENGRAVING	SIZE *
1	SF-2 FAST-OFF-SLOW	
2	SF-2 FAST	
3	SF-2 SLOW	
4	SF-2 ALARM	
5	SF-2 RESET	
6	SF-1 FAST-OFF-SLOW	
7	SF-1 FAST	
8	SF-1 SLOW	
9	SF-1 ALARM	
10	SF-1 RESET	
11	VENTILATION CONTROL PANEL LCP-41	51/32"x4"
12	ARI	
13	ARZ	
14	TRANSFORMER T1	
15	MR2F	
16	MR1S	
17	R1	
18	MR2F	
19	MR2S	
20	MAIN CIRCUIT BREAKER - MCB	

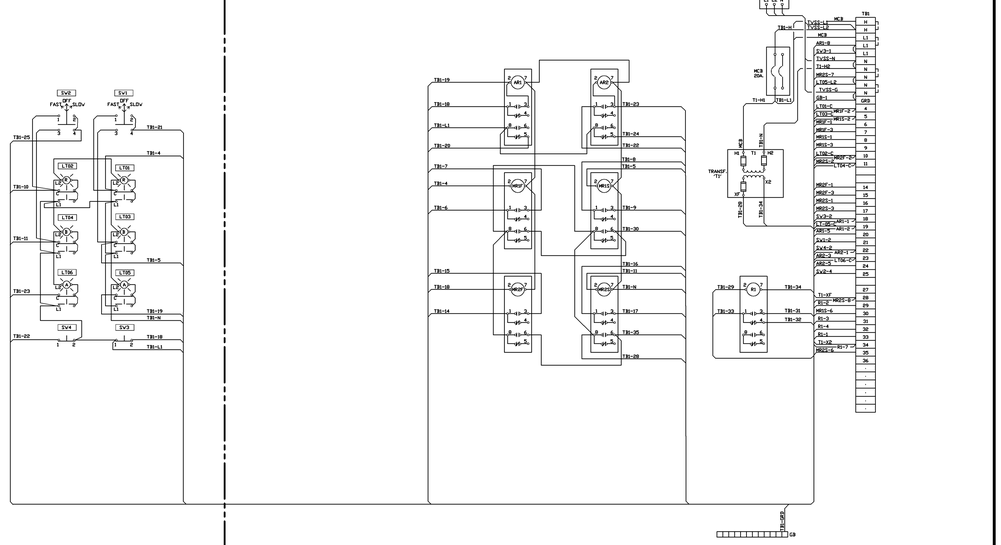

REAR VIEW OF DOOR

FRONT VIEW OF BACKPLATE

FOUL AIR BLOWER CONTROL PANEL LCP-41

ALL PANEL WIRING TO BE #14 AVG SINGLE CONDUCTOR COPPER WITH TYPE XHHW-2 600 VOLT INSULATION.

-	-	-	-
-	-	-	-
-	-	-	-
-	-	-	-
REFERENCE DRAWINGS			

CASE ENGINEERING
LAKELAND, FLORIDA

ARLINGTON COUNTY, VIRGINIA
WATER POLLUTION CONTROL PLANT
PANEL LCP-41 LAYOUT

NO.	REVISION	BY	DATE	ISSUE	DRAWING HISTORY	BY	DATE	CLIENT APPD.
-	-	-	-	-	-	-	-	-
-	-	-	-	-	-	-	-	-
-	-	-	-	C	AS BUILT SUBMITTAL	SFA	2-23-93	-
9	AS BUILT	SFA	2-23-93	9	RESUBMIT FOR CLIENT APPROVAL	VAW	11/16/92	-
P8	REVISE PER CLIENT COMMENTS	VAW	11/16/92	A	FOR CLIENT APPROVAL	SAW	6-25-92	-

DRAWN BY: SFA 2-23-93
CHECKED BY: JV 6-18-92
SCALE: 1"=1"
DRAWING NO. 2049-E-007
REV. 0

DGN FILE CHANGED
LAST CHANGED 93-03-01 8:00A

-	-	-	-
-	-	-	-
-	-	-	-
-	-	-	-
REFERENCE DRAWINGS			

CASE ENGINEERING
LAKELAND, FLORIDA

ARLINGTON COUNTY, VIRGINIA
WATER POLLUTION CONTROL PLANT
PANEL LCP-41 WIRING DIAGRAM

NO.	REVISION	BY	DATE	ISSUE	DRAWING HISTORY	BY	DATE	CLIENT APPD.
-	-	-	-	-	-	-	-	-
-	-	-	-	-	-	-	-	-
-	-	-	-	C	AS BUILT SUBMITTAL	SFA	2-24-93	-
9	AS BUILT	SFA	2-24-93	9	RESUBMIT FOR CLIENT APPROVAL	VAW	11/16/92	-
P8	REVISE PER CLIENT COMMENTS	VAW	11/16/92	A	FOR CLIENT APPROVAL	SAW	6-25-92	-

DRAWN BY: SAW 3-30-92
CHECKED BY: JV 4-7-92
SCALE: NONE
DRAWING NO. 2049-E-008
REV. 0

DGN FILE CHANGED
LAST CHANGED 93-03-01 8:00A

THIS DRAWING HAS BEEN COMPILED BY HAZEN AND SAWYER, P.C.

ARLINGTON COUNTY, VIRGINIA
WATER POLLUTION CONTROL PLANT
UPGRADE AND EXPANSION- PHASE IIB

CASE ENGINEERING DRAWINGS
PANEL LCP-31 AND LCP-41

SCALE NOTE

SCALE BAR SHOWN BELOW IS ONE INCH LONG ON A FULL SIZE DRAWING. WHEN SCALING DRAWINGS, MEASURE BAR TO DETERMINE IF SCALES SHOWN WILL REQUIRE ADJUSTING.

ONE INCH

CONTRACT NO.	9002 - WPC
YEAR	1991
LOCATION CODE	SPECIALTY CODE I
PROJECT NO.	5002 - 033
FILE NAME	CASE02.DWG
DRAWING NO.	CASE02
SHEET NO.	325

RECORD DRAWING

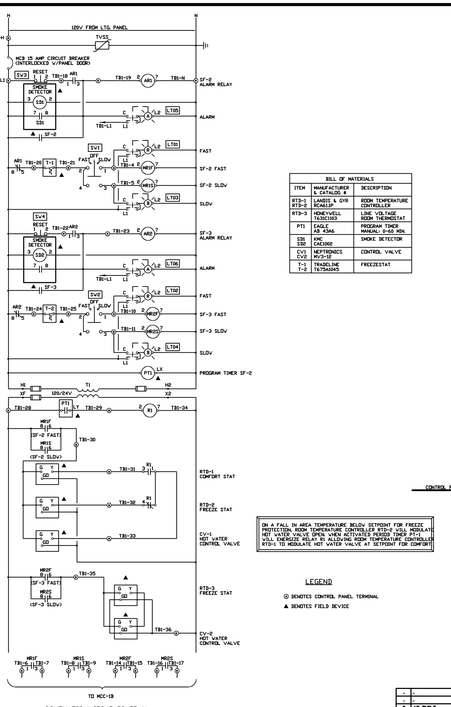

BILL OF MATERIALS		
ITEM	MANUFACTURER CATALOG #	DESCRIPTION
RTD-1 RTD-2	LANDIS & GYR SCI611	ROOM TEMPERATURE CONTROLLER
RTD-3	HONEYWELL T6351093	LINE VOLTAGE ROOM THERMOSTAT
PT1	EAGLE AS 934G	PROGRAM TIMER MANUAL, 0-450 MIN.
SSD SSB	KNC CAS2800	SMOKE DETECTOR
CV1 CV2	NEPTRONICS MV3-2E	CONTROL VALVE
T-1 T-2	TRADELINE TA734A3A3	FREEZESTAT

ON A FALL IN AREA TEMPERATURE BELOW SETPOINT FOR FREEZE PROTECTION, ROOM TEMPERATURE CONTROLLER RTD-1 WILL MODULATE HOT WATER VALVE CV-1 TO MAINTAIN SETPOINT. FREEZE STAT T-1 WILL ENERGIZE RELAY IN ALLOWING ROOM TEMPERATURE CONTROLLER RTD-1 TO MODULATE HOT WATER VALVE AT SETPOINT FOR COMFORT.

LEGEND
⊗ DENOTES CONTROL PANEL TERMINAL
▲ DENOTES FIELD DEVICE

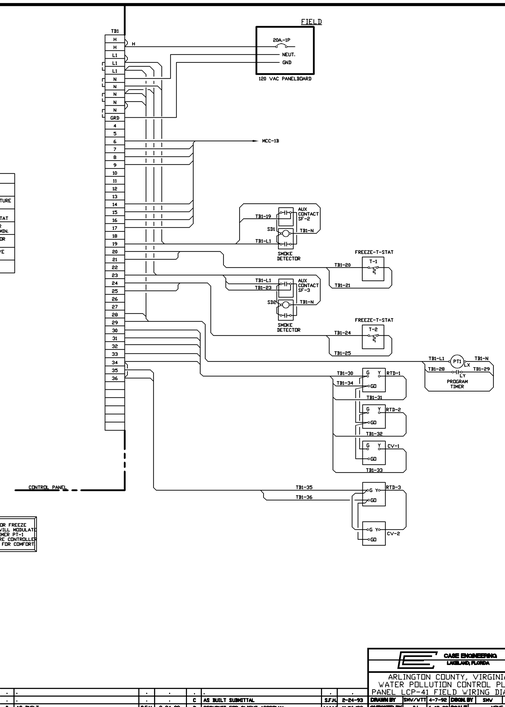

-			-	-	-				
1	AS BUILT	S.F.A.	2-24-93	C	AS BUILT SUBMITTAL	S.F.A.	2-24-93	DRAWN BY	SMV/VTT 4-7-92
PS	REVISE PER CLIENT COMMENTS	V.A.V.	11/26/92	B	RESUBMIT FOR CLIENT APPROVAL	V.A.V.	11/26/92	CHECKED BY	JV 6-29-92
NO.	REVISION	BY	DATE	ISSUE	DRAWING HISTORY	BY	DATE	CLIENT APPD.	- -

CASE ENGINEERING
FAIRFAX, VIRGINIA
LORTON, FLORIDA
ARLINGTON COUNTY, VIRGINIA
WATER POLLUTION CONTROL PLANT
PANEL LCP-41 FIELD WIRING DIAGRAM
SCALE: NONE
DRAWING NO. 2049-E-009
REV. 0
CAD FILE NAME: LCP41WIRE-09-09-93.DWG
CAD FILE WRITTEN ON 9-9-93 @ 8:58A

REFERENCE DRAWINGS

BILL OF MATERIALS			
ITEM	QTY	MANUF. & CAT. NO.	DESCRIPTION / REMARKS
A	1	HOFFMAN A-24H20SSLP	24" HIGH x 20" WIDE x 10" DEEP SINGLE DOOR STAINLESS STEEL NEMA TYPE 4X
B	1	HOFFMAN A-24P20	BACK PLATE FOR USE WITH ITEM A(1) 24" HIGH x 20" WIDE MOUNTING PANEL
C	1	SQUARE D CLASS 9001 SKR11AB2	PUSH BUTTON MAINTAINED INTERLOCKED ASSEMBLY WITH 2 NO CONTACTS
D	1	SQUARE D CLASS 9001 SKR11AB2	PUSH BUTTON MOMENTARY WITH 1 NO CONTACT & 1 NC BLOCK
E	1	SQUARE D CLASS 9001 SKS43BH3	SELECTOR SWITCH 3 POSITION MANUAL RETURN WITH 1 NO & 1 NC CONTACT BLOCKS
F	1	SQUARE D CLASS 9001 SKT3P5	RED PILOT LIGHT 120-125 VOLT NEMA 4X, PUSH-TO-TEST
G	1	SQUARE "D" CLASS 9080 SJ1 (TERMINAL) SJ2 (CHANNEL) SJ3 (END BARRIER) SJ4 (END CLAMP) SJ5 (MARKING STR.)	TERMINAL BLOCK ASSEMBLY CONSISTING OF TERMINALS WITH MOUNTING CHANNEL, END BARRIER, ANCHOR AND MARKING STRIP
H	1	SQUARE "D" CLASS 9065 KP14D20	THERMAL MAGNETIC CIR BREAKER 240 VOLT, 15 AMP, 2 POLE
I	1	SQUARE "D" PK2DSTA-L	GROUND BAR KIT
J	6"	PANDUIT	1"x17"x27" WITH COVER
K	1	BRADY 844104	VOLTAGE WARNING LABEL - 120 VOLT
L1	1	SQUARE "D" CLASS 8501 XR04H10	RELAY 20 AMP 120 VOLT WITH 3 NO & 1 NC CONTACTS
L2	1	SQUARE "D" LFU/LSU V/LC43 HANDLE	30DR MTD EXT. BKR. OPERATOR SP, NEMA 4
L3	1	EAGLE 898430	ELAPSED TIME INDICATOR 120VAC
M	1	SQUARE "D" CLASS 9001 SKR3H43	PUSH BUTTON MOMENTARY WITH 1 NO CONTACT & 1 NC CONTACT BLOCK
N1	1	SQUARE "D" CLASS 9050 FS32	SOLID STATE TIMING RELAY 120VAC/DC 3-30 SEC 10 AMP INSTANTANEOUS & 1 NO & 1 NC INSTANTANEOUS, 1 NO & 1 NC TIMED
N2	1	HOFFMAN A4-6044NFSS	6" HIGH x 4" WIDE x 4" DEEP, CLAMP COVER, STAIN STEEL, NEMA 4X
N3	1	HOFFMAN A4-6P4	BACK PLATE FOR USE WITH ITEM #(6), 4(3)"x4" HIGH x 4(3)"x4" WIDE MOUNTING PANEL
N4	1	SQUARE "D" SP5175	SURGE SUPPRESSOR 1 ø 3W, PHASE TO GROUND
N5	1	SQUARE "D" CLASS 9001 SKTAH9	AMBER PILOT LIGHT 120-125 VOLT NEMA 4X, PUSH-TO-TEST

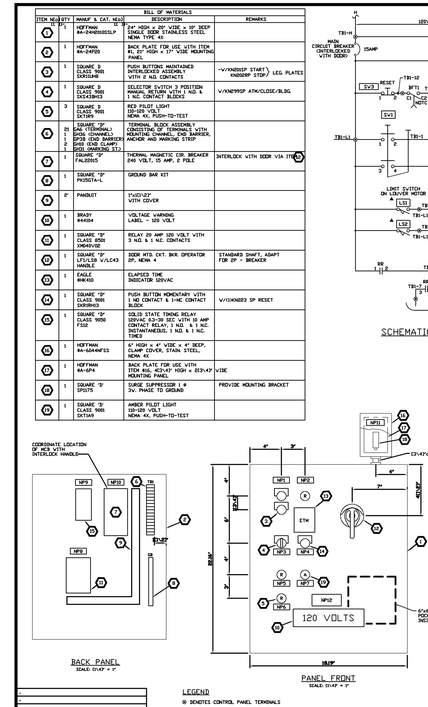

★ ALL NAMEPLATES ARE 1"x3"(1/2" LIGHA

NAMEPLATE SCHEDULE		
NP NO.	ENGRAVING	SIZE ★
1	FDNL AIR BLOWER FAF-5 START/STOP	
2	FDNL AIR BLOWER FAF-5 RUN	
3	LOUVER FAF-5A ATM-CLOSE-BLDG	
4	ALARM RESET	
5	LOUVER OPEN TO ATM	
6	LOUVER OPEN TO BLOWER BUILDING	
7	ALARM	
8	RM	
9	BFT1	
10	MAIN CIRCUIT BREAKER - MCB	
11	SURGE SUPPRESSOR - TVSS	
12	FDNL AIR BLOWER VENTILATION CONTROL PANEL	BT1-27★4

LEGEND
⊗ DENOTES CONTROL PANEL TERMINALS
▲ DENOTES "FIELD" DEVICES

-			-	-	-				
0	AS BUILT	G.G.	2-24-93	C	AS BUILT SUBMITTAL	G.G.	2-24-93	DRAWN BY	SMV/VTT 3-13-92
P3	REVISE PER CLIENT COMMENTS	V.A.V.	11-26-92	B	RESUBMIT FOR CLIENT APPROVAL	V.A.V.	11-26-92	CHECKED BY	JV 3-29-92
P2	REVISE PER CLIENT COMMENTS	S.A.V.	6-25-92	A	FOR CLIENT APPROVAL	S.A.V.	6-25-92	APPD. BY	- -
NO.	REVISION	BY	DATE	ISSUE	DRAWING HISTORY	BY	DATE	CLIENT APPD.	- -

CASE ENGINEERING
FAIRFAX, VIRGINIA
LORTON, FLORIDA
ARLINGTON COUNTY, VIRGINIA
WATER POLLUTION CONTROL PLANT
PANEL LCP-41 LAYOUT & DIAGRAMS
SCALE: 01/4" = 1"
DRAWING NO. 2049-E-010
REV. 0
CAD FILE NAME: LCP41WIRE-09-09-93.DWG
CAD FILE WRITTEN ON 9-9-93 @ 8:58A

REFERENCE DRAWINGS

DESIGNED BY:	.
DRAWN BY:	FXP
CHECKED BY/DATE/:	
APPROVED BY/DATE:	

NO.	DATE	DRWN	CHKD	DESCRIPTION
0	11/98	FXP	ASG	RECORD DRAWING
				REVISIONS

THIS DRAWING HAS BEEN COMPILED FROM RECORDS FURNISHED BY HAZEN AND SAWYER, P.C.

ARLINGTON COUNTY, VIRGINIA
WATER POLLUTION CONTROL PLANT
UPGRADE AND EXPANSION- PHASE IIB

CASE ENGINEERING DRAWINGS
PANEL LCP-41, VENTILATION CONTROL PANEL, AND LCP-32

SCALE NOTE

SCALE BAR SHOWN BELOW IS ONE INCH LONG ON A FULL SIZE DRAWING. WHEN SCALING DRAWINGS, MEASURE BAR TO DETERMINE IF SCALES SHOWN WILL REQUIRE ADJUSTING.

ONE INCH

CONTRACT NO.	
9002 – WPC	
YEAR	1991
LOCATION CODE	SPECIALTY CODE I
PROJECT NO.	
5002 – 033	
FILE NAME	
CASE03.DWG	
DRAWING NO.	
CASE03	
SHEET NO.	326

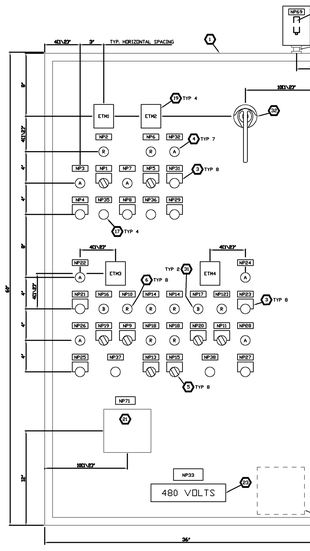

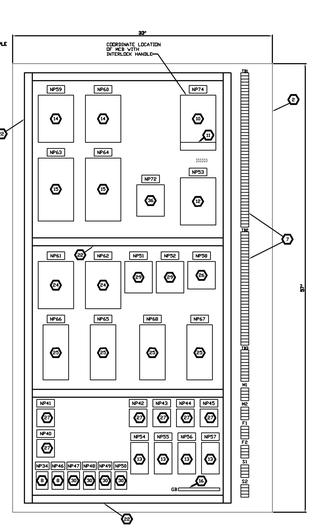

BILL OF MATERIALS			
ITEM	QTY	MANUF. & CAT. NO.	DESCRIPTION / REMARKS
A	1	HOFFMAN A4-48H36SSLP	48" HIGH x 36" WIDE x 10" DEEP SINGLE DOOR STAIN STEEL NEMA TYPE 4X
B	1	HOFFMAN A4-48P36	BACK PLATE FOR USE WITH ITEM A(1) 48" HIGH x 36" WIDE MOUNTING PANEL
C	8	SQUARE D CLASS 9001 SKR3H43	PUSH BUTTON MOMENTARY WITH 1 NO CONTACT & 1 NC BLOCK
D	7	SQUARE D CLASS 9001 SKTAH9	8MADR PILOT LIGHT 120-125 VOLT NEMA 4X, PUSH-TO-TEST
E	8	SQUARE D CLASS 9001 SKS43BH3	SELECTOR SWITCH MANUAL RETURN WITH (2) NO & NC CONTACT BLOCKS
F	8	SQUARE D CLASS 9001 SKT3P5	RED PILOT LIGHT 120-125 VOLT NEMA 4X, PUSH-TO-TEST
G	156 96 6 8 10 4	SQUARE "D" QMC (TERMINAL) QMC2 (CHANNEL) QMC5 (END BARRIER) QMC3 (END CLAMP) QMC1 (MARKING STR.)	TERMINAL BLOCK ASSEMBLY CONSISTING OF TERMINALS WITH MOUNTING CHANNEL, END BARRIER, ANCHOR AND MARKING STRIP
H	2	SQUARE "D" KP14D20	RELAY 8 PIN, 20 AMP, 120 VOLT
I	6	SQUARE "D" CLASS 8501 NR01	RELAY BASE
J	1	SQUARE "D" FAL34030	THERMAL MAGNETIC CIR. BREAKER 30A - 480 VOLT, 3P
K	1	SQUARE "D" PSC3F4C	POWER DISTRIBUTION CONNECTOR
L1	1	SQUARE "D" KT75003	CONTROL POWER TRANSFORMER 500 VA 480/120VAC
L2	4	SQUARE "D" CLASS 9050 FS32	SOLID STATE TIMING RELAY 120VAC 3.0 - 30 SEC
L3	2	SQUARE "D" FAL36030-1SH	INSTANTANEOUS TRIP CIR. BREAKER 30A 480 VOLT, 3P
L4	2	SQUARE "D" S18EV1052	FULL VOLTAGE STARTER 480V, 120VAC COIL, V/CD, 18.25 AMP, 1 NO & 1 NC AUXILIARY CONTACTS
L5	1	SQUARE "D" CLASS 9070 S1	120V PRI 24V SEC 50VA
L6	6	SQUARE "D" KP32V20	RELAY 32 PIN 20 AMP 120 VOLT CLASS 8501
L7	6	SQUARE "D" NR02	RELAY BASE
L8	2	LANDIS & GYR SCI611	24 VOLT RELAY
L9	4	SQUARE "D" KP3DY24	24 VOLT RELAY
L10	2	SQUARE "D" CLASS 9001 SKTAL31	BLUE PILOT LIGHT 120-125 VOLT NEMA 4X, PUSH-TO-TEST
L11	1	SQUARE "D" LFU/LSU V/LC46 HANDLE	30DR MTD EXT. BKR. OPERATOR SP, NEMA 4
L12	1	HOFFMAN A4-606448FSS	8" HIGH x 6" WIDE x 4" DEEP, CLAMP COVER, STAIN STEEL, NEMA 4X
L13	1	HOFFMAN A4-6P6	BACK PLATE FOR USE WITH ITEM #(6), 6(3)"x6" HIGH x 4(3)"x4" WIDE MOUNTING PANEL
L14	1	SQUARE "D" SP4252	SURGE SUPPRESSOR 3Ø 4W, PHASE TO GROUND
L15	1	HUBBELL #5362-I	30AMP DUPLEX RECEPTACLE WITH HANDY BOX & SS COVER

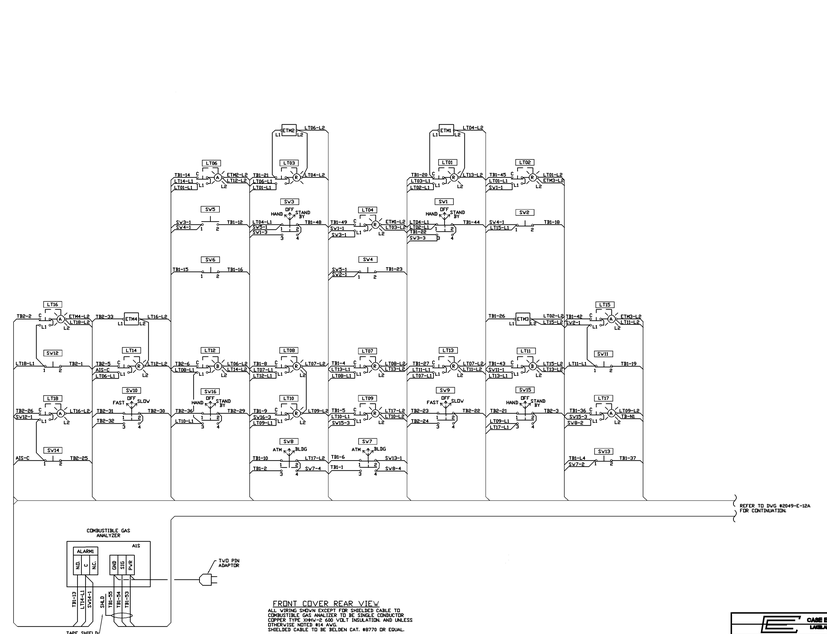

-			-	-	-				
3	AS BUILT	G.G.	3-17-93	3	AS BUILT SUBMITTAL	G.G.	3-17-93	DRAWN BY	REA 3-29-93
2	AS BUILT	G.G.	2-24-93	2	RESUBMIT FOR CLIENT APPROVAL	REA	2-29-93	CHECKED BY	JV 3-13-92
P3	REVISE PER CLIENT COMMENTS	REA	2-29-93	1	RESUBMIT FOR CLIENT APPROVAL	V.A.V.	11-26-92	SCALE	NONE
P2	REVISE PER CLIENT COMMENTS	V.A.V.	11-26-92	A	FOR CLIENT APPROVAL	S.A.V.	6-25-92	APPD. BY	- -
NO.	REVISION	BY	DATE	ISSUE	DRAWING HISTORY	BY	DATE	CLIENT APPD.	- -

CASE ENGINEERING
FAIRFAX, VIRGINIA
LORTON, FLORIDA
ARLINGTON COUNTY, VIRGINIA
WATER POLLUTION CONTROL PLANT
PANEL LCP-41 LAYOUT & DIAGRAMS
DRAWING NO. 2049-E-011
REV. 0
CAD FILE NAME: LCP41WIRE-09-09-93.DWG
CAD FILE WRITTEN ON 9-9-93 @ 8:58A

REFERENCE DRAWINGS

-			-	-	-				
0	AS BUILT	G.G.	3-25-93	0	AS BUILT SUBMITTAL	G.G.	3-25-93	DRAWN BY	SMV/VTT 3-16-92
P3	REVISE PER CLIENT COMMENTS	REA	3-29-93	3	RESUBMIT FOR CLIENT APPROVAL	V.A.V.	11-26-92	CHECKED BY	JV 7-7-92
P2	REVISE PER CLIENT COMMENTS	V.A.V.	11-26-92	A	FOR CLIENT APPROVAL	S.A.V.	7-9-92	APPD. BY	- -
NO.	REVISION	BY	DATE	ISSUE	DRAWING HISTORY	BY	DATE	CLIENT APPD.	- -

CASE ENGINEERING
FAIRFAX, VIRGINIA
LORTON, FLORIDA
ARLINGTON COUNTY, VIRGINIA
WATER POLLUTION CONTROL PLANT
PANEL LCP-32 WIRING DIAGRAM
DRAWING NO. 2049-E-012
REV. 0
CAD FILE NAME: LCP41WIRE-09-09-93.DWG
CAD FILE WRITTEN ON 9-9-93 @ 8:58A

REFERENCE DRAWINGS

RECORD DRAWING

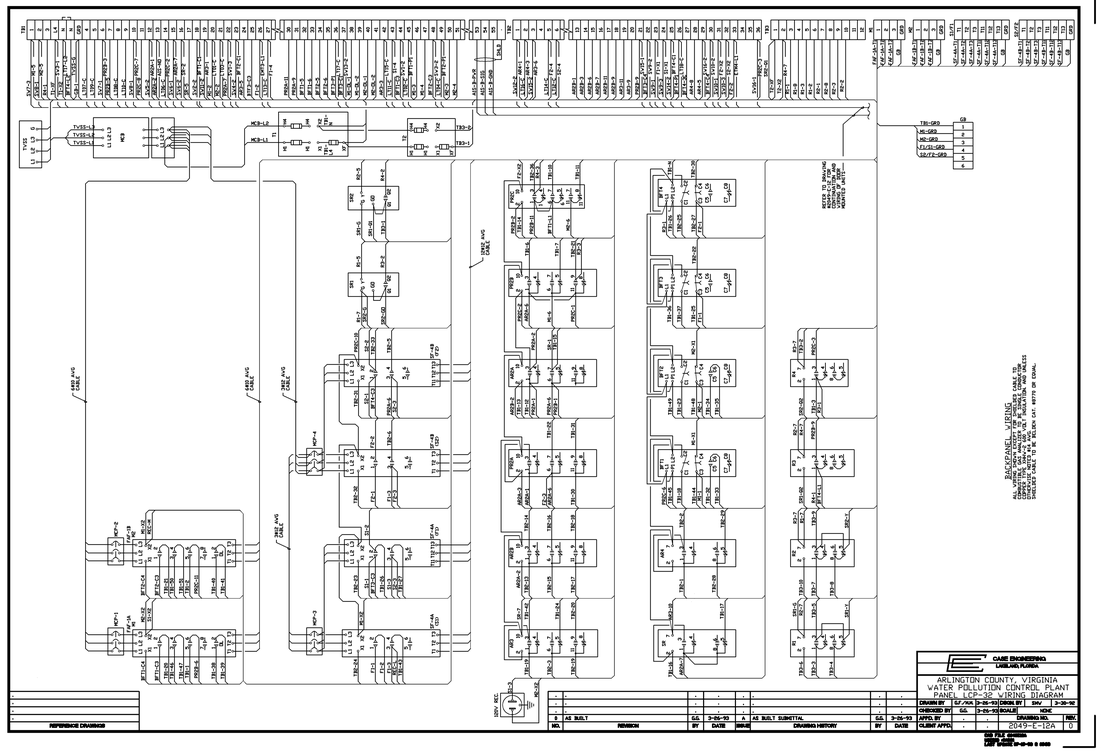

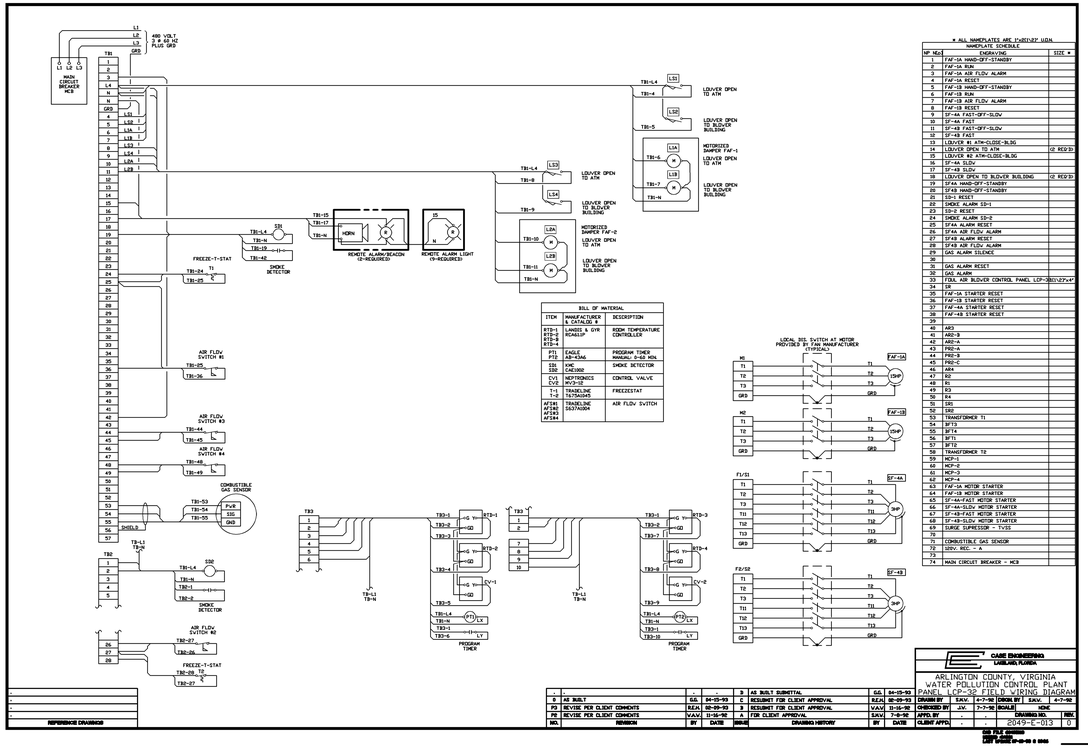

* ALL NAMEPLATES ARE 1"x3"x1/2" U.O.N.

NAMEPLATE SCHEDULE

NP NO.	ENGRAVING	SIZE *
1	SMOKE DETECTOR ALARM RESET	
2	SMOKE DETECTOR ALARM	
3	EF-1S	
4	EF-1S	
5	EF-1S	
6	EF-1S	
7	TRANSFORMER T1	
8	MCP-1	
9	MCP-2	
10	MCP-3	
11	MCP-4	
12	MAIN CIRCUIT BREAKER - MCB	
13	R1	
14	R2	
15	VENTILATION CONTROL PANEL LCP-42	21"x3"x1/4"
16	TRANSFORMER T2	
17	SR-1	
18	SURGE SUPPRESSOR - TVSS	
19		
20	HEAT - OFF - COOL	
21	AR1	

* ALL NAMEPLATES ARE 1"x3"x1/2" U.O.N.

NAMEPLATE SCHEDULE

NP NO.	ENGRAVING	SIZE *
1	FAF-1A HAND-OFF-STANDBY	
2	FAF-1A AIR FLOW ALARM	
3	FAF-1A RESET	
4	FAF-1B HAND-OFF-STANDBY	
5	FAF-1B AIR FLOW ALARM	
6	FAF-1B RESET	
7	SF-4A FAST-OFF-SLOW	
8	SF-4A FAST	
9	SF-4B FAST-OFF-SLOW	
10	SF-4B FAST	
11	LOUVER #1 ATM-CLOSE-BLDG	
12	LOUVER OPEN TO ATM	(2 REQ'D)
13	LOUVER #2 ATM-CLOSE-BLDG	
14	SF-4A SLOW	
15	SF-4B SLOW	
16	LOUVER OPEN TO BLOWER BUILDING	(2 REQ'D)
17	SF-4A HAND-OFF-STANDBY	
18	SF-4B HAND-OFF-STANDBY	
19	SS-1 RESET	
20	SMOKE ALARM SS-1	
21	SS-2 RESET	
22	SMOKE ALARM SS-2	
23	SF-4A ALARM RESET	
24	SF-4A AIR FLOW ALARM	
25	SF-4B ALARM RESET	
26	SF-4B AIR FLOW ALARM	
27	GAS ALARM SILENCE	
28	GAS ALARM RESET	
29	GAS ALARM	
30	FD&R AIR BLOWER CONTROL PANEL LCP-3801-X7"x4"	
31	SR	
32	FAF-1A STARTER RESET	
33	FAF-1B STARTER RESET	
34	FAF-4A STARTER RESET	
35	FAF-4B STARTER RESET	
36	AR3	
37	AR2-B	
38	AR2-A	
39	PR2-A	
40	PR2-B	
41	PR2-C	
42	AR4	
43	R2	
44	R1	
45	R3	
46	R4	
47	SR3	
48	SR2	
49	TRANSFORMER T1	
50	SF13	
51	SF14	
52	SF11	
53	SF12	
54	TRANSFORMER T2	
55	MCP-1	
56	MCP-2	
57	MCP-3	
58	MCP-4	
59	FAF-1A MOTOR STARTER	
60	FAF-1B MOTOR STARTER	
61	FAF-4A FAST MOTOR STARTER	
62	SF-4A-SLOW MOTOR STARTER	
63	SF-4B-FAST MOTOR STARTER	
64	SF-4B-SLOW MOTOR STARTER	
65	SURGE SUPPRESSOR - TVSS	
66	COMBUSTIBLE GAS SENSOR	
67	120V. REC. - # 66	
68		
69	MAIN CIRCUIT BREAKER - MCB	

BILL OF MATERIAL

ITEM	MANUFACTURER & CATALOG #	DESCRIPTION
RTD-1 RTD-2 RTD-3	LUMBEE & GYR RD4833-P	ROOM TEMPERATURE CONTROLLER
PT1 PT2	EAGLE AB-434A	PROGRAM TIMER MANUAL: 0-60 MIN.
SD1 SD2	KMC CAE1002	SMOKE DETECTOR
CV1 CV2	HEPTRONICS CVS-HY-SE	CONTROL VALVE
T-1 T-2	TRADELINE T6T6N0A3	FREEZESTAT
AFS#1 AFS#2 AFS#3 AFS#4	TRADELINE S6TA0A3A	AIR FLOW SWITCH

BILL OF MATERIAL

ITEM NO.	QTY	MANUF & CAT. NO.	DESCRIPTION	REMARKS
A	11	HOFFMAN A24H12SSLP	24"H HIGH X 24" LONG X 12" DEEP SINGLE DOOR STAINLESS STEEL NEMA TYPE 4X	CAT. CLASS 9966 TYPE 4-X SIZE
B	1	HOFFMAN A4-36P30	36" HIGH X 24" LONG X 10" DEEP SINGLE DOOR STAINLESS STEEL NEMA TYPE 4X	
C	2	SQUARE D CLASS 9001 SKR3UM2	BACK PLATE FOR USE WITH ITEM 30"H x 17"W FOR USE WITH ITEM #B	CUSTOM INSTALLATION; PAINTED STEEL
D	1	SQUARE D CLASS 9001 SKR1AM2	PUSH BUTTONS MAINTAINED INTERLOCKED ASSEMBLY WITH 1 NO & 1 NC CONTACT	"-W/KNOBSP START" LEG PLATE KNOBSP STOP"
E	1	SQUARE D CLASS 9001 SKR1AM2	PUSH BUTTON MOMENTARY WITH 1 NO CONTACT & 1 N.C. BLOCK	W/- (2) KNOBSP RESET LEGEND PLATE
F	5	SQUARE D CLASS 9001 SK11A3H	AMBER PILOT LIGHT 120 VOLT NEMA 4X, PUSH-TO-TEST	W/- KNOBSP ALARM LEGEND PLATE
G	4	SQUARE D CLASS 9001 SK13H3M2	SELECTOR SWITCH MANUAL RETURN WITH 2 NO & 1 NC CONTACT BLOCKS	W/- KNOBSP HAND/OFF/AUTO LEGEND PLATE
H	4	SQUARE D CLASS 9001 SK11D9	RED PILOT LIGHT 120 VOLT NEMA 4X, PUSH-TO-TEST	W/- KNOBSP RUN LEGEND PLATE
I	AS REQ.	SQUARE "D" GAE 1TERMINAL 2 WIRE CONNECTOR #12 (CAD SHARCK GAGE (CAD CLAMP) 2 WIRE CONNECTOR, STA ADJUSTABLE	TERMINAL BLOCK ASSEMBLY CONSISTING OF TERMINALS WITH MOUNTING BRACKETS, END BARRIERS, ANCHOR AND MARKING STRIPS	SEE WIRING DIAGRAMS FOR ARRANGEMENT
J	1	SQUARE "D" CLASS 8501 NR52	RELAY (1 POL 10 AMP, 120 VOLT	
K	1	SQUARE "D" CLASS 8536 NR52	11 PIN TUBULAR RELAY SOCKET	
L	1	SQUARE "D" FAL34000	THERMAL MAGNETIC CIR. BREAKER 20A 480 VOLT 3P	INTERLOCK W/DOOR VIA ITEM AA
M	1	SQUARE "D" PDGF66	PDVER DISTRIBUTION CONNECTOR	
N	1	SQUARE "D" KT7500S	CONTROL POVER TRANSFORMER 500 VA 480-120VAC	W/- TWO MOUNTED FUSE BLOCK PRIMARY 2 AMP FROM & 1.0 AMP SEC FUSES
O	3	SQUARE "D" FAL36020-1M	INSTANTANEOUS TRIP MAGNETIC DNLY CIRCUIT BREAKER 3A 480 VOLT 3P	1 hp
P	4	SQUARE "D" CLASS 8536 SDI5V483	FULL VOLTAGE STARTER, NEMA SIZE 1, 3P, 480V 120VAC COIL W/ (2) THERMAL UNITS AND (2) 2NO, NC AUXILIARY CONTACTS	CSH hp @ 1125rpm 3Ø4 FOR (3) @ 3HP 3Ø15 FOR 2HP
Q	1	SQUARE "D" PK15GTA-L	GROUND BAR KIT	
R	AS REQ.	PANDUIT	1" x 4" WITH COVER	
S	1	BRADY 84-4125	VOLTAGE WARNING LABEL - 480 VOLT	
T	1	SQUARE "D" CLASS 9070 INF1000D3	TRANSFORMER 120V. PRIM-24V. SEC. 100VA	
U	1	LANSIS & GYR SE2A44	24 VOLT RELAY WITH BASE	
V	2	SQUARE "D" KP12V14	24 VOLT RELAY	
W	2	SQUARE "D" CLASS 8536 NR52	8 PIN TUBULAR RELAY SOCKET	
X	1	SQUARE "D" FAL 36601-1M	INSTANTANEOUS TRIP MAGNETIC DNLY CIRCUIT BREAKER 7A 480V 3P	2 hp
Y	1	SQUARE "D" CLASS 9421 LP1/LS1S8 V/LC43	SIDE MTD CKT. BREAKER OPERATING MECHANISM	NEMA 4 RATING
Z	1	HOFFMAN A4-66P4	BACK PLATE FOR USE WITH ITEM A(25, 62)"x27 HIGH x 4(3)"x9" WIDE MOUNTING PANEL	PAINTED STEEL
AA	1	SQUARE "D" CLASS 9066 TYPE RA-1	SECONDARY SURGE ARRESTER THREE PHASE, 600V/NO	PROVIDE MOUNTING BRACKET
BB	4	SQUARE "D" CLASS 9066 TYPE RA-1	EXTERNAL RESET MECHANISM	

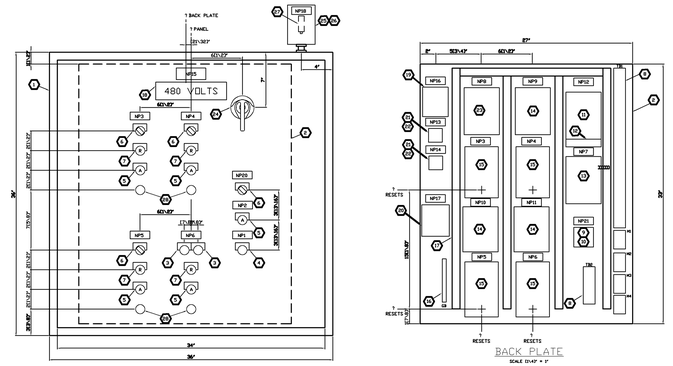

				3	AS BUILT SUBMITTAL	SJA	3-1-93
				C	RESUBMIT FOR CLIENT APPROVAL	VAV	11-15-92
				B	RESUBMIT FOR CLIENT APPROVAL	SJV	7-7-92
				A	FOR CLIENT APPROVAL	SJV	6-26-92
NO.	REVISION	BY	DATE	ISSUE	DRAWING HISTORY	BY	DATE

CASE ENGINEERING
LANSING, FLORIDA

ARLINGTON COUNTY, VIRGINIA
WATER POLLUTION CONTROL PLANT
PANEL LCP-32 FIELD WIRING DIAGRAM

DRAWN BY	SJV	3-1-93	
CHECKED BY	JV	7-7-92	SCALE: NONE
APPD. BY			DRAWING NO. 2049-E-013 REV. 0
CLIENT APPD.			

SEE FILE DRAWING
CAD FILE NAME: LCP-32-E-013

				3	AS BUILT SUBMITTAL	SJA	3-17-93
				C	RESUBMIT FOR CLIENT APPROVAL	SJV	2-25-93
				B	RESUBMIT FOR CLIENT APPROVAL	VAV	11-15-92
				A	FOR CLIENT APPROVAL	SJV	7-7-92
NO.	REVISION	BY	DATE	ISSUE	DRAWING HISTORY	BY	DATE

CASE ENGINEERING
LANSING, FLORIDA

ARLINGTON COUNTY, VIRGINIA
WATER POLLUTION CONTROL PLANT
PANEL LCP-32 SCHEMATIC DIAGRAM

DRAWN BY	SJV	3-17-93	
CHECKED BY	SJA	3-25-93	SCALE: NONE
APPD. BY			DRAWING NO. 2049-E-014 REV. 0
CLIENT APPD.			

SEE FILE DRAWING
CAD FILE NAME: LCP-32-E-014

				1	AS BUILT	MV	11-15-94
				0	AS BUILT	SJA	3-1-93
				P3	REVISE PER CLIENT COMMENTS	VAV	11-16-92
				P2	REVISE PER CLIENT COMMENTS	SJV	7-7-92
NO.	REVISION	BY	DATE	ISSUE	DRAWING HISTORY	BY	DATE

				C	AS BUILT SUBMITTAL	SJA	3-1-93
				B	RESUBMIT FOR CLIENT APPROVAL	VAV	11/16/92
				A	FOR CLIENT APPROVAL	SJV	6-26-92
NO.	REVISION	BY	DATE	ISSUE	DRAWING HISTORY	BY	DATE

CASE ENGINEERING
LANSING, FLORIDA

ARLINGTON COUNTY, VIRGINIA
WATER POLLUTION CONTROL PLANT
PANEL LCP-42 LAYOUT

DRAWN BY	SNV/VTS	5-16-92	
CHECKED BY	JV	6-26-92	SCALE: 0"=3" = 1'
APPD. BY			DRAWING NO. CASE04.DWG REV. 1
CLIENT APPD.			

SEE FILE DRAWING
CAD FILE NAME: CASE04

RECORD DRAWING

NO.	DATE	DESCRIPTION
0	10/97	RECORD DRAWING

DESIGNED BY:	.
DRAWN BY:	FXP
CHECKED BY/DATE/:	FXP ASG
APPROVED BY/DATE:	

THIS DRAWING HAS BEEN COMPILED FROM RECORDS OF HAZEN AND SAWYER, P.C.

ARLINGTON COUNTY, VIRGINIA
WATER POLLUTION CONTROL PLANT
UPGRADE AND EXPANSION- PHASE IIB

CASE ENGINEERING DRAWINGS
PANEL LCP-32 AND LCP-42

SCALE NOTE

SCALE BAR SHOWN BELOW IS ONE INCH LONG ON A FULL SIZE DRAWING. WHEN SCALING DRAWINGS, MEASURE BAR TO DETERMINE IF SCALES SHOWN WILL REQUIRE ADJUSTING.

ONE INCH

CONTRACT NO.
9002 - WPC

YEAR 1991

LOCATION CODE | SPECIALTY CODE I

PROJECT NO.
5002 - 033

FILE NAME
CASE04.DWG

DRAWING NO.
CASE04

SHEET NO. 327

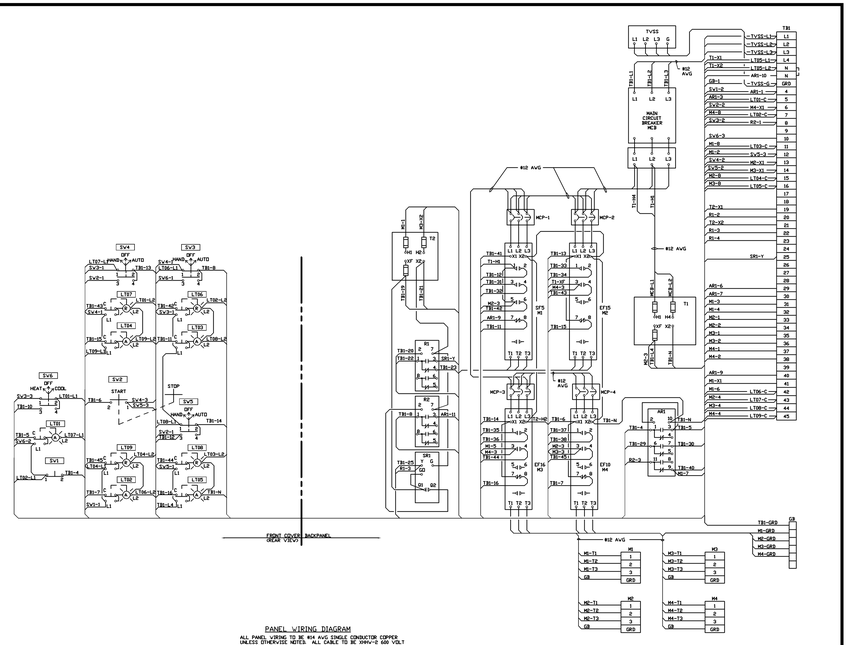

PANEL WIRING DIAGRAM

ALL PANEL WIRING TO BE #14 AWG SINGLE CONDUCTOR COPPER UNLESS OTHERWISE NOTED. ALL CABLE TO BE 2KMV-O 600 VOLT INSULATION.

-	-	-	-	-	-	-	-	CASE ENGINEERING LAKELAND, FLORIDA	
-	-	-	-	-	-	-	-	ARLINGTON COUNTY, VIRGINIA	
-	-	-	-	-	-	-	-	WATER POLLUTION CONTROL PLANT	
-	-	-	-	-	-	-	-	PANEL LCP-42 WIRING DIAGRAM	
1	AS BUILT	GG	3-24-93	B	RESUBMIT FOR CLIENT APPROVAL	VAW	11-16-92	CHECKED BY	JV
P2	REVISE PER CLIENT COMMENTS	VAW	11-16-92	A	FOR CLIENT APPROVAL	SAW	6-05-92	SCALE	NONE
NO.	REVISION	BY	DATE	ISSUE	DRAWING HISTORY	BY	DATE	CLIENT APPD.	-

DRAWING NO. 2049-E-016 REV. 0

SEE FILE CASE05 FOR MORE INFORMATION

CAD FILE NAME: LCP-42.DWG

LAST WORKED ON 03-09-93 @ 2:38P

REFERENCE DRAWINGS

'FIELD' WIRING DIAGRAM

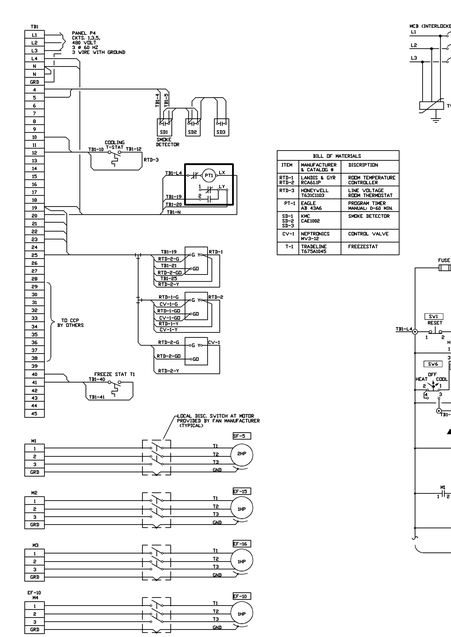

ITEM	MANUFACTURER & CATALOG #	DESCRIPTION
RTD-1 RTD-2	LANDIS & GYR RCA61JP	ROOM TEMPERATURE CONTROLLER
RTD-3	HONEYWELL T6351A1013	LINE VOLTAGE ROOM THERMOSTAT
PT-1	EAGLE AB 924AS	PROGRAM TIMER MANUAL 2-150 MIN.
SD-1 SD-2 SD-3	KMC DAE1002	SMOKE DETECTOR
CV-1	NORTRONICS MV3-1/2	CONTROL VALVE
T-1	TRANSLINE TX75A3MS	FREEZESTAT

BILL OF MATERIALS

SCHEMATIC WIRING DIAGRAM

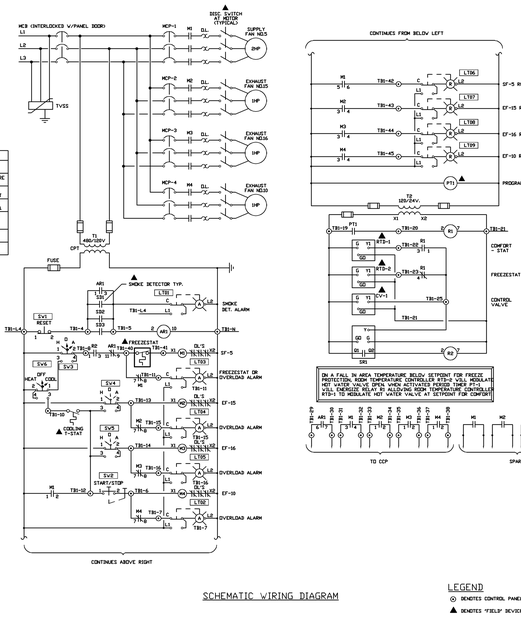

LEGEND

⊙ DENOTES CONTROL PANEL TERMINAL

▲ DENOTES "FIELD" DEVICE

-	-	-	-	-	-	-	-	CASE ENGINEERING LAKELAND, FLORIDA	
-	-	-	-	-	-	-	-	ARLINGTON COUNTY, VIRGINIA	
-	-	-	-	-	-	-	-	WATER POLLUTION CONTROL PLANT	
-	-	-	-	-	-	-	-	PANEL LCP-42 FIELD WIRING DIAGRAM	
1	AS BUILT	GG	3-26-93	C	AS BUILT SUBMITTAL	GG	3-26-93	DRAWN BY	SNV/VIT
P3	REVISE PER CLIENT COMMENTS	REH	02/25/93	B	RESUBMIT FOR CLIENT APPROVAL	VAW	11-16-92	CHECKED BY	JV
P2	REVISE PER CLIENT COMMENTS	VAW	11-16-92	A	FOR CLIENT APPROVAL	SAW	6-05-92	SCALE	NONE
NO.	REVISION	BY	DATE	ISSUE	DRAWING HISTORY	BY	DATE	CLIENT APPD.	-

DRAWING NO. 2049-E-017 REV. 0

SEE FILE CASE05 FOR MORE INFORMATION

CAD FILE NAME: LCP-42.DWG

LAST WORKED ON 03-09-93 @ 2:38P

REFERENCE DRAWINGS

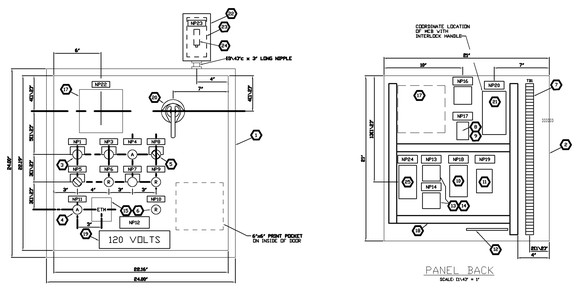

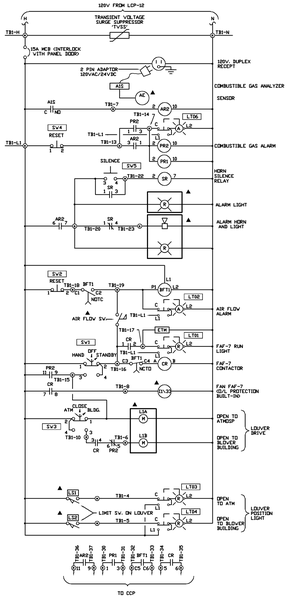

SCHEMATIC WIRING DIAGRAM

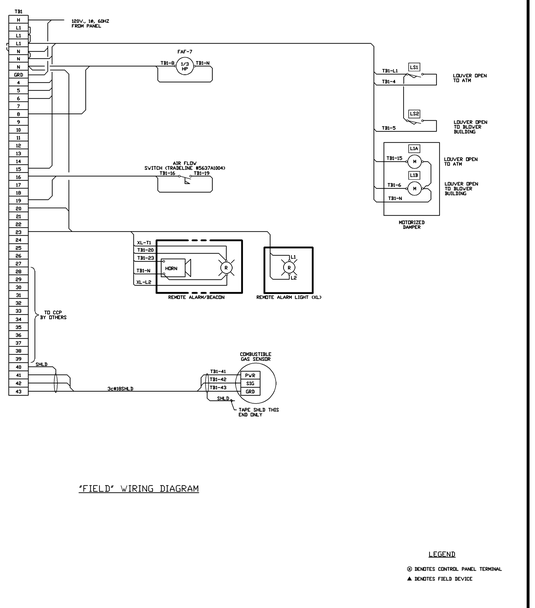

'FIELD' WIRING DIAGRAM

LEGEND

◎ DENOTES CONTROL PANEL TERMINAL

▲ DENOTES FIELD DEVICE

-	-	-	-	-	3	AS BUILT SUBMITTAL	GJL	2-22-93	DRAWN BY	SNV/VTT 6-1-92
2	AS BUILT	GJL	2-22-93	C	2	RESUBMIT FOR CLIENT APPROVAL	REA	2-22-93	DESIGN BY	SNV 6-1-92
P3	REVISE PER CLIENT COMMENTS	REA	2-22-93	B	1	RESUBMIT FOR CLIENT APPROVAL	VAW	11-16-92	CHECKED BY	JV 6-26-92
P2	REVISE PER CLIENT COMMENTS	VAW	11-16-92	A	0	FOR CLIENT APPROVAL	SAW	6-26-92	SCALE	NONE
NO.	REVISION	BY	DATE	MARK	DRAWING HISTORY		BY	DATE	APPD. BY	- -
									CLIENT APPD.	- -

DRAWING NO. 2049-E-020 REV. 0

GSB FILE #3486B
LAST SAVED 10-20-93 8:39AM
LAST PLOTTED 10-20-93 8:39AM

CASE ENGINEERING
LABELLING FLORIDA

ARLINGTON COUNTY, VIRGINIA
WATER POLLUTION CONTROL PLANT
PANEL LCP-35 FIELD WIRING DIAGRAM

REFERENCE DRAWINGS

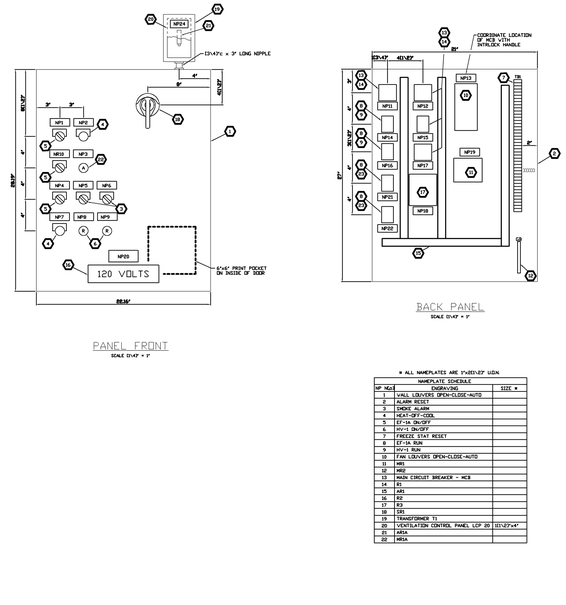

SCALE 0'-1" = 1'

ITEM NO.	QTY	MANUF. & CAT. NO.	DESCRIPTION	REMARKS
A	1	HOFFMAN 84-30H24SSLP	30" HIGH x 24" WIDE x 10" DEEP SINGLE DOOR STAIN. STEEL NEMA TYPE 4X	
A	1	HOFFMAN 84-30P24	BACK PLATE FOR USE WITH ITEM #1 27" HIGH x 21" WIDE MOUNTING PANEL	
A	2	SQUARE D CLASS 9001 TYPE SK13GBH3	SELECTOR SWITCH MANUAL RETURN 2 POSITION WITH 1 NO & 1 NC CONTACT	
A	2	SQUARE D CLASS 9001 TYPE SK2GBH3	PUSH BUTTON MOMENTARY WITH 1 NO CONTACT & 1 NC CONTACT BLOCK	LED KN24SSP ON-OFF
A	3	SQUARE D CLASS 9001 TYPE SK1GBH3	SELECTOR SWITCH MANUAL RETURN 3 POSITION WITH 1 NO & 1 NC CONTACT BLOCKS	W/LED KN2959P OPEN/CLOSE/AUTO
A	2	SQUARE D CLASS 9001 TYPE SK11B9	RED PILOT LIGHT 110-125 VOLT NEMA 4X, PUSH-TO-TEST	
A	46 1 1 2 2	SQUARE D GAS (TERMINAL) GP3B (END BARRIER) GP3B (END MARKER) GH3D (END CLAMP) GH3L (MARKING STR.)	TERMINAL BLOCK ASSEMBLY CONSISTING OF TERMINALS WITH MOUNTING CHANNEL, END BARRIER, ANCHOR & MARKING STRIP	SEE WIRING DIAGRAMS FOR ARRANGEMENT
A	4	SQUARE D CLASS 8501 TYPE NR2G	8 PIN TUBULAR RELAY BASE	
A	8	SQUARE 'D' CLASS 8501 TYPE KP8DV14	SPDT PLUG-IN RELAY WITH CONTACTS RATED FOR 10 AMP AND SUITABLE FOR 24VDC COIL	
A	1	SQUARE 'D' FAL22015	THERMAL MAGNETIC CKR. BREAKER 240V, 15AMP, 2P	
A	1	SQUARE 'D' 6VT100D3	100 VA TRANSFORMER 120 VOLT PRI 24 VOLT SEC	1V-3 TDP MOUNTED FUSE BLOCK
A	1	SQUARE 'D' PK3GTA4	GROUND BAR KIT	
A	4	SQUARE 'D' CLASS 8501 KP13V20	SPDT PLUG-IN RELAY WITH CONTACTS RATED FOR 30 AMP AND SUITABLE FOR 120V. 60HZ SUPPLY	
A	4	SQUARE 'D' CLASS 8501 NR4S	11 PIN TUBULAR RELAY BASE	
A	AS REQ.	PANDUIT	1"x4" WITH COVER	
A	1	BRADY 44604	VOLTAGE WARNING LABEL - 120 VOLT	
A	1	LAMBDA & DYR SC2611	24 VOLT RELAY	
A	1	SQUARE 'D' FAL15150 W/LC43 HANDLE	200R MTD. CIRCUIT BREAKER OPERATOR, 2P, NEMA 4	LONG SHAFT REQ'D
A	1	HOFFMAN 84-4844FSS	6" HIGH x 4 1/2" WIDE x 4" DEEP, CLAMP COVER, STAIN. STEEL, NEMA 4X	
A	1	HOFFMAN 84-4P4	BACK PLATE FOR USE WITH ITEM #25. #23-#29 HIGH x #23-#27 WIDE MOUNTING PANEL	
A	1	SQUARE 'D' SP13175	SURGE SUPPRESSOR 3Ø 4W	PROVIDE MOUNTING BRACKET
A	1	SQUARE 'D' CLASS 9001 SK11A31	AMBER PILOT LIGHT 110-125 VOLT NEMA 4x, PUSH-TO-TEST	
A	2	SQUARE 'D' CLASS 8501 KP13V20	SPDT PLUG IN RELAY WITH CONTACTS RATED FOR 10 AMP AND SUITABLE FOR 120V. 60HZ SUPPLY	

* ALL NAMEPLATES ARE 1"x3.01/2" LIGN.

NAMEPLATE SCHEDULE		
NP NO.	ENGRAVING	SIZE *
1	WALL LOUVERS OPEN-CLOSE-AUTO	
2	ALARM RESET	
3	SMOKE ALARM	
4	HEAT-OFF-COOL	
5	EF-1A ON-OFF	
6	HV-1 ON-OFF	
7	FREEZE STAT RESET	
8	EF-1A RUN	
9	HV-1 RUN	
10	FAN LOUVERS OPEN-CLOSE-AUTO	
11	MR1	
12	MR2	
13	MAIN CIRCUIT BREAKER - MCB	
14	R1	
15	AR1	
16	R2	
17	R3	
18	SR1	
19	TRANSFORMER T1	
20	VENTILATION CONTROL PANEL LCP 20 (51/2"x4"	
21	ARSA	
22	MRSA	

-	-	-	-	-	-	-	-	-	-	-
2	AS BUILT	GJL	2-22-93	C	AS BUILT SUBMITTAL	GJL	2-22-93	DRAWN BY	SNV/VTT 6-1-92	
P3	REVISE PER CLIENT COMMENTS	VAW	11-16-92	B	RESUBMIT FOR CLIENT APPROVAL	VAW	11-16-92	CHECKED BY	JV 6-26-92	
P2	REVISE PER CLIENT COMMENTS	VAW	11-16-92	A	FOR CLIENT APPROVAL	SAW	6-26-92	APPD. BY	- -	
NO.	REVISION	BY	DATE	MARK	DRAWING HISTORY	BY	DATE	CLIENT APPD.	- -	

DRAWING NO. 2049-E-021 REV. 0

GSB FILE #3486B
LAST SAVED 10-20-93 8:39AM
LAST PLOTTED 10-20-93 8:39AM

CASE ENGINEERING
LABELLING FLORIDA

ARLINGTON COUNTY, VIRGINIA
WATER POLLUTION CONTROL PLANT
PANEL LCP-20 LAYOUT

REFERENCE DRAWINGS

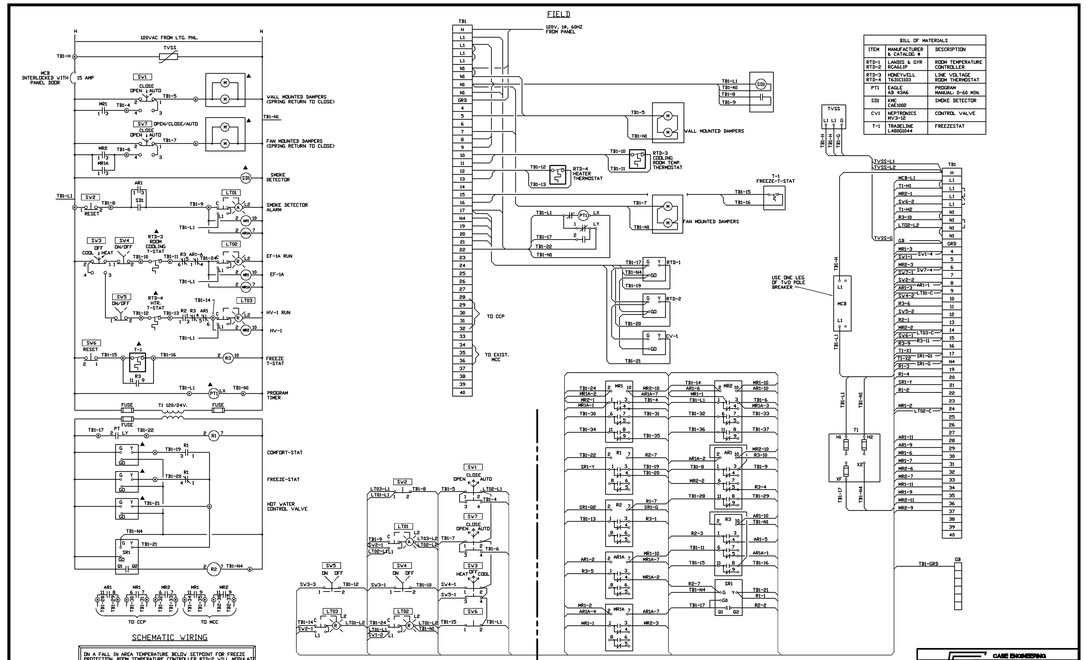

ITEM	MANUFACTURER & CATALOG NO.	DESCRIPTION
RTD-1 RTD-2	BALCO 2CA10	ROOM TEMPERATURE CONTROLLER
RTD-3 RTD-4	HONEYWELL T87D1033	LINE VOLTAGE ROOM THERMOSTAT
PT1	EAGLE A9 #346	PROGRAM MANUAL; D-60 MIN.
SS	IDE CAE1000	SMOKE DETECTOR
CV1	MYTRONICS M2W2-050	CONTROL VALVE
T-1	HONEYWELL L4006A1044	FREEZESTAT

BILL OF MATERIALS

NOTE:
ALL PANEL WIRING SHOWN TO BE #14AVG SINGLE CONDUCTOR COPPER WITH TYPE XHHW-2 600V. INSULATION

-	-	-	-	-	-	-	-	-	-	-
2	AS BUILT	GJL	2-22-93	C	AS BUILT SUBMITTAL	GJL	2-22-93	DRAWN BY	SNV/VTT 6-1-92	
P3	REVISE PER CLIENT COMMENTS	VAW	11-16-92	A	FOR CLIENT APPROVAL	SAW	6-26-92	CHECKED BY	JV 6-26-92	
NO.	REVISION	BY	DATE	MARK	DRAWING HISTORY	BY	DATE	APPD. BY	- -	
								CLIENT APPD.	- -	

DRAWING NO. 2049-E-020 REV. 0

GSB FILE #3486B
LAST SAVED 10-20-93 8:39AM
LAST PLOTTED 10-20-93 8:39AM

CASE ENGINEERING
LABELLING FLORIDA

ARLINGTON COUNTY, VIRGINIA
WATER POLLUTION CONTROL PLANT
PANEL LCP-20 WIRING DIAGRAM

REFERENCE DRAWINGS

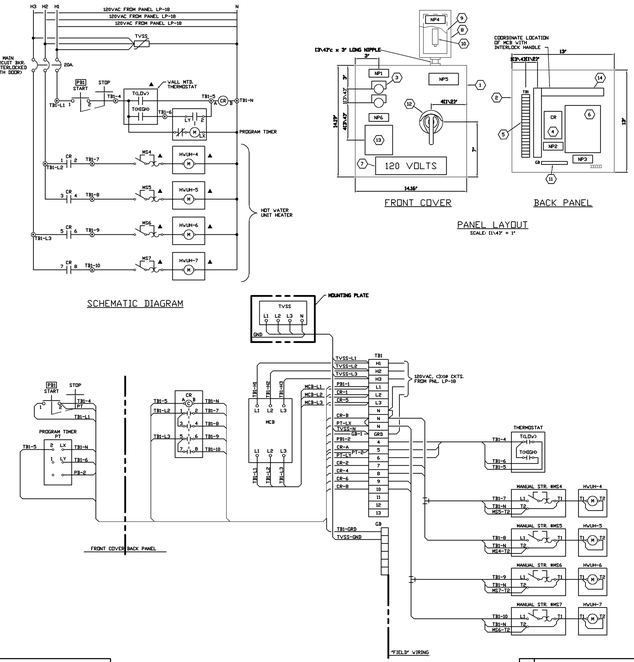

ITEM NO.	QTY	MANUF. & CAT. NO.	DESCRIPTION	REMARKS
A	1	HOFFMAN 84-16P16SSLP	16" HIGH x 16" WIDE x 6" DEEP STAINLESS STEEL, NEMA TYPE 4X BOX	
A	1	HOFFMAN 84-16P16	15" HIGH x 13" WIDE MOUNTING PANEL FOR USE WITH ITEM #1	
A	1	SQUARE D CLASS 9001 SK13GBH3	PUSH BUTTING, MAINTANCE INTERLOCKED ASSEMBLY WITH 1 NO & 1 NC CONTACT	WITH KN2959P START AND KN2959P STOP LEGEND PLATES
A	1	SQUARE D CLASS 8501 KN40V02	AC CONTROL RELAY, 120VAC COIL, (4) NO CONTACTS	
A	28 1 1 2 2	SQUARE D GAS (TERMINAL) GP3B (END BARRIER) GP3B (END MARKER) GH3D (END CLAMP)	TERMINAL BLOCK ASSEMBLY CONSISTING OF TERMINALS WITH MOUNTING CHANNEL, END BARRIER, ANCHOR & MARKING STRIP	SEE WIRING DIAGRAMS FOR ARRANGEMENT
A	1	SQUARE D FAL36060	THERMAL MAGNETIC CKT. BREAKER 240V, 2P AMP, 3 POLE	INTERLOCK W/DOOR VIA ITEM #2
A	1	BRADY 44604	VOLTAGE WARNING LABEL, 120 VOLT	
A	1	HOFFMAN 84-3864FSS	8" HIGH x 6" WIDE x 4" DEEP, CLAMP COVER, STAIN. STEEL, NEMA 4X	
A	1	HOFFMAN 84-3P6	BACK PLATE FOR USE WITH ITEM 9, #23-#27 HIGH x #23-#27 WIDE MOUNTING PANEL	
A	1	SQUARE 'D' SP36061	SURGE SUPPRESSOR 3Ø 4W	MOUNTING BRACKET INCLUDED
A	1	SQUARE 'D' PK3GTA4	GROUND BAR KIT	
A	1	SQUARE 'D' LF1/LS3 W/LC43 HANDLE	200R MTD. CKT. BREAKER OPERATOR, 3P, NEMA 4	STANDARD SHAFT
A	1	EAGLE SIGNAL A8 #346	PROGRAM TIMER MANUAL; D-60 MIN.	
A	AS REQ'D	PANDUIT	1" x 4" SLOT DUCT WITH COVER	

* SIZE OF NAMEPLATE IS 1"x3.01/2" LIGN.

NAMEPLATE SCHEDULE		
NP NO.	ENGRAVING	* SIZE
1	HOT WATER UNIT HEATERS	
2	NC	
3	MAIN CIRCUIT BREAKER - MCB	
4	SURGE SUPPRESSOR - TVSS	
5	UNIT HEATER CONTROL PANEL LCP-34	10"x12"x4"
6	PROGRAM TIMER	

LEGEND

◎ DENOTES CONTROL PANEL TERMINAL

▲ DENOTES FIELD DEVICE

-	-	-	-	-	-	-	-	-	-	-
-	-	-	-	-	C	AS BUILT SUBMITTAL	GJL	2-22-93	DRAWN BY	SNV 2-23-94
2	AS BUILT	GJL	2-22-93	B	RESUBMIT FOR CLIENT APPROVAL	VAW	11-16-92	CHECKED BY	JV 7-7-92	
P2	REVISE PER CLIENT COMMENTS	VAW	11-16-92	A	FOR CLIENT APPROVAL	SAW	7-6-92	APPD. BY	- -	
NO.	REVISION	BY	DATE	MARK	DRAWING HISTORY	BY	DATE	CLIENT APPD.	- -	

DRAWING NO. 2049-E-023 REV. 0

GSB FILE #3486B
LAST SAVED 10-20-93 8:39AM
LAST PLOTTED 10-20-93 8:39AM

CASE ENGINEERING
LABELLING FLORIDA

ARLINGTON COUNTY, VIRGINIA
WATER POLLUTION CONTROL PLANT
PANEL LCP-34 LAYOUT & DIAGRAMS

REFERENCE DRAWINGS

NOTE:
ALL PANEL WIRING TO BE #12 AVG SINGLE CONDUCTOR COPPER WITH TYPE XHHW-2 600 VOLT INSULATION

-	-	-	-	-	-	-	-	-	-	-
-	-	-	-	-	C	AS BUILT SUBMITTAL	GJL	2-22-93	DRAWN BY	SNV 2-23-94
2	AS BUILT	GJL	2-22-93	B	RESUBMIT FOR CLIENT APPROVAL	VAW	11-16-92	CHECKED BY	JV 7-7-92	
P2	REVISE PER CLIENT COMMENTS	VAW	11-16-92	A	FOR CLIENT APPROVAL	SAW	7-6-92	APPD. BY	- -	
NO.	REVISION	BY	DATE	MARK	DRAWING HISTORY	BY	DATE	CLIENT APPD.	- -	

DRAWING NO. 2049-E-022 REV. 0

GSB FILE #3486B
LAST SAVED 10-20-93 8:39AM
LAST PLOTTED 10-20-93 8:39AM

RECORD DRAWING

NO.	DATE	DRAWN	CHKD	DESCRIPTION
0	11/98	FXP	ASG	RECORD DRAWING

REVISIONS

DESIGNED BY: .

DRAWN BY: FXP

CHECKED BY/DATE/-:

APPROVED BY/DATE:

THIS DRAWING HAS BEEN COMPILED FROM RECORDS OF HAZEN AND SAWYER, P.C.

ARLINGTON COUNTY, VIRGINIA
WATER POLLUTION CONTROL PLANT
UPGRADE AND EXPANSION- PHASE IIB

CASE ENGINEERING DRAWINGS
PANEL LCP-35, LCP-20, AND LCP-34

SCALE NOTE

SCALE BAR SHOWN BELOW IS ONE INCH LONG ON A FULL SIZE DRAWING. WHEN SCALING DRAWINGS, MEASURE BAR TO DETERMINE IF SCALES SHOWN WILL REQUIRE ADJUSTING.

ONE INCH

CONTRACT NO.
9002 – WPC

YEAR 1991

LOCATION CODE

SPECIALTY CODE
I

PROJECT NO.
5002 – 033

FILE NAME
CASE06.DWG

DRAWING NO.
CASE06

SHEET NO. 329

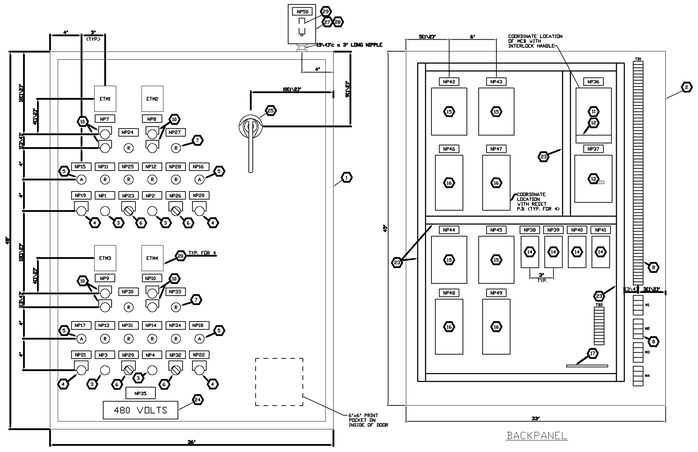

ITEM NO.	QTY	MANUF & CAT. NO(S)	DESCRIPTION	REMARKS
A1	1	HOFFMAN A84H3636SSLP	48" HIGH X 36" WIDE X 16" DEEP CLAMP COVER STAIN STEEL NEMA TYPE 4X	
A2	1	HOFFMAN A64P24	BACK PLATE FOR USE WITH ITEM #1 45R-HIGH X 33" WIDE MOUNTING PANEL	
A3	4	SQUARE D CLASS 9066 TYPE - 9A-1	EXTERNAL RESET MECHANISM	
A4	4	SQUARE D CLASS 9001 SKR3M03	PUSH BUTTON MOMENTARY WITH 1 NOE CONTACT & 1 N.C. BLOCK	W/ (4) KNB3SP RESET
A5	4	SQUARE D CLASS 9001 SKTM33	AMBER PILOT LIGHT 110-120 VOLT NEMA 4X, PUSH-TO-TEST	
A6	4	SQUARE D CLASS 9001 SKS63BH03	SELECTOR SWITCH MANUAL RETURN WITH 2 NOE & 1 N.C. CONTACT BLOCKS	W/ KNB9SP ATM/CLOSE/BLDG (4)
A7	18	SQUARE D CLASS 9001 SKTR4	RED PILOT LIGHT 120-VOLT NEMA 4X, PUSH-TO-TEST	
A8	8 8 1 1 10 3	SQUARE "D" SAE (TERMINAL) CATS (CHANNEL) CATS (MOUNTING RAIL) QMD-QUICK DUCT (RAIL) MISC. DRAWING ETC.	TERMINAL BLOCK ASSEMBLY IDENTIFICATION SYSTEM WITH MOUNTING CHANNEL, END BARRIER, ANCHOR & MARKING STRIP	SEE WIRING DIAGRAMS FOR ARRANGEMENT
A9		NOT USED		
A10	4	SQUARE "D" CLASS 9001 SKRH03	PUSH BUTTONS MAINTAINED CONTACT TYPE MOMENTARY WITH 1 NOE & 1 N.C. CONTACT	WITH KNB9SP START LEG. PLATES KNB9SP STOP
A11	1	SQUARE "D" FAL34020	THERMAL MAGNETIC CIR. BREAKER 480 VOLT, 3P, 100 AMP	INTERLOCK W/DOOR VIA ITEM A6
A12	1	SQUARE "D" PJ3CAF46	POWER DISTRIBUTION CONNECTOR	
A13	1	SQUARE "D" VF30001	CONTROL POWER TRANSFORMER 500 VA 480/120VAC	W/ TOP MOUNTED FUSE BLOCK & (2) 10/32 AMP PRIM & (2) 6AMP SEC FUSES
A14	4	SQUARE "D" CLASS 9050 FI3D	SOLID STATE TIMING RELAY 120VAC 0.3 - 30 SEC.	10 AMP CONTACT RELAY 1 NO, 1NC INSTANTANEOUS 1 NO, 1 NC TIMED
A15	4	SQUARE "D" FAL36020-1SH	INSTANTANEOUS TRIP CIR. BREAKER 3PH 480 VOLT 3P	20 hp
A16	4	SQUARE "D" CLASS 8536 SCO3VBS1	FULL VOLTAGE STARTER SIZE 1, 3P, 480V 60HZ COIL W/(3) B25 THERMAL UNITS AND (2) 2NO 1NC AUXILIARY CONTACTS	20 hp
A17	1	SQUARE "D" PK050TA-L	GROUND BAR KIT	
A18		NOT USED		
A19		NOT USED		
A20	4	EAGLE #1814CID	ELAPSED TIME INDICATOR - 120VAC	
A21		NOT USED		
A22		NOT USED		
A23	AS REQ	PANDUIT	1"x4" VEIN COVER	
A24	1	BRADY #44405	VOLTAGE WARNING LABEL - 480 VOLT	
A25	1	SQUARE "D" CLASS 9422 V-LC46	DOOR MTD. EXT. BKR. OPERATOR 3P., NEMA 4	LONG SHAFT REQUIRED
A26		NOT USED		
A27	1	HOFFMAN A64H24FSS	9" HIGH x 6" WIDE x 4" DEEP, CLAMP COVER, STAIN. STEEL, NEMA 4X	
A28	1	HOFFMAN A64P24	BACK PLATE FOR USE WITH ITEM #27, 6(D)-6" HIGH x 4(D)-6" WIDE MOUNTING PANEL	
A29	1	SQUARE 'D' SP3650	SURGE SUPPRESSOR 3Ø 4W, PHASE TO GROUND	MOUNTING BRACKET INCLUDED

* ALL NAMEPLATES ARE 1"x3½"x1/8" LGDA.

NAMEPLATE SCHEDULE		
NP NO.	ENGRAVING	SIZE *
1	F3A STARTER RESET	
2	F3B STARTER RESET	
3	F3C STARTER RESET	
4	F3D STARTER RESET	
5		
6		
7	FAF-3A START/STOP	
8	FAF-3B START/STOP	
9	FAF-3A START/STOP	
10	FAF-3D START/STOP	
11	FAF-3A RUN	
12	FAF-3B RUN	
13	FAF-3C RUN	
14	FAF-3D RUN	
15	FAF-3A AIR FLOW ALARM	
16	FAF-3B AIR FLOW ALARM	
17	FAF-3C AIR FLOW ALARM	
18	FAF-3D AIR FLOW ALARM	
19	FAF-3A ALARM RESET	
20	FAF-3B ALARM RESET	
21	FAF-3C ALARM RESET	
22	FAF-3D ALARM RESET	
23	FAF-3A DAMPER ATM-CLOSE-BLDG	

NAMEPLATE SCHEDULE		
NP NO.	ENGRAVING	SIZE *
24	FAF-3A LOUVER OPEN TO ATMOS.	
25	FAF-3A LOUVER OPEN TO BUILDING	
26	FAF-3A DAMPER ATM-CLOSE-BLDG.	
27	FAF-3B LOUVER OPEN TO ATMOS.	
28	FAF-3B LOUVER OPEN TO BUILDING	
29	FAF-3C DAMPER ATM-CLOSE-BLDG.	
30	FAF-3C LOUVER OPEN TO ATMOS.	
31	FAF-3C LOUVER OPEN TO BUILDING	
32	FAF-3D DAMPER ATM-CLOSE-BLDG.	
33	FAF-3D LOUVER OPEN TO ATMOS.	
34	FAF-3D LOUVER OPEN TO BUILDING	
35	FDAL AIR BLOWER CONTROL PANEL LCP-30	
36	MAIN CIRCUIT BREAKER - MCB	
37	TRANSFORMER T1	
38	BF11	
39	BF12	
40	BF13	
41	BF14	
42	MCP-1	
43	MCP-2	
44	MCP-3	
45	MCP-4	
46	FAF-3A MOTOR STARTER	

NAMEPLATE SCHEDULE		
NP NO.	ENGRAVING	SIZE *
47	FAF-3B MOTOR STARTER	
48	FAF-3C MOTOR STARTER	
49	FAF-3D MOTOR STARTER	
50	SURGE SUPPRESSOR - TVSS	

NO.	REVISION	BY	DATE	ISSUE
-	-	-	-	0
1	AS BUILT	GJL	3-15-93	A
P3	REVISE PER CLIENT COMMENTS	REA	2-09-93	B
P2	REVISE PER CLIENT COMMENTS	VAW	2-16-93	C
P1	REVISE PER CLIENT COMMENTS	VAW	3-16-93	D
-	-	-	-	0

DRAWING HISTORY

REFERENCE DRAWINGS

CASE ENGINEERING
LAKELAND, FLORIDA

ARLINGTON COUNTY, VIRGINIA
WATER POLLUTION CONTROL PLANT
PANEL LCP-30 PANEL LAYOUT

DRAWN BY	GJL	3-01-93	
CHECKED BY	JVF	3-01-93	
APPD. BY		7-7-93	
CLIENT APPD.			

SCALE: 1/4" = 1"

DRAWING NO. 2049-E-024 REV. 0

SEE FILE NUMBER
CAD FILE NAME: P30-00-0-E-0000

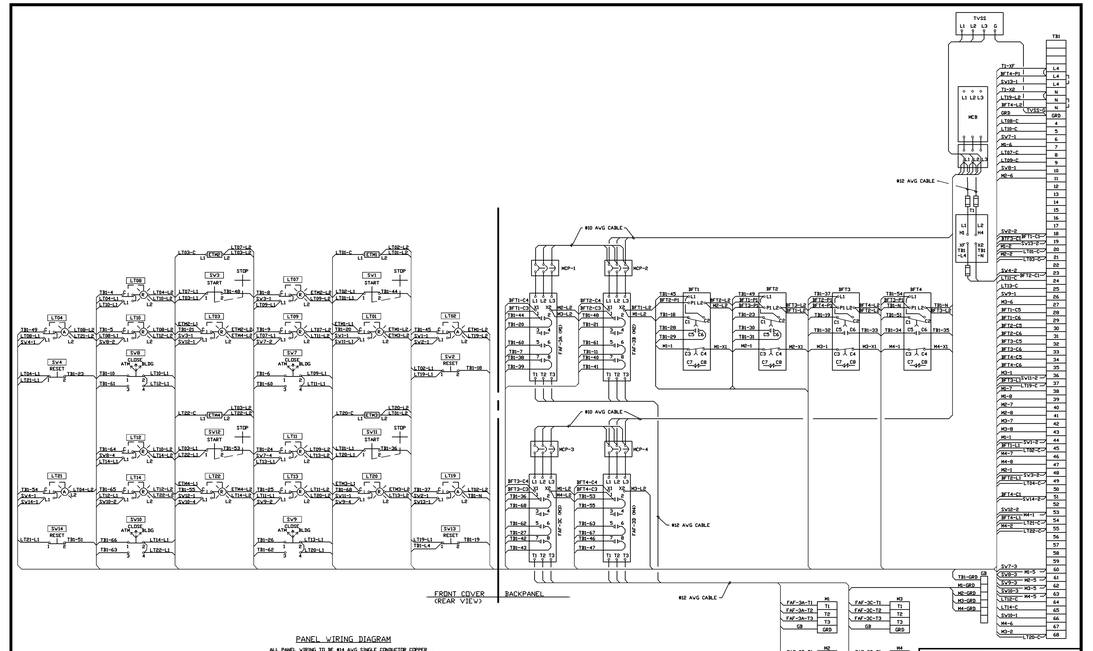

PANEL WIRING DIAGRAM

ALL PANEL WIRING TO BE #14 AWG SINGLE CONDUCTOR COPPER UNLESS OTHERWISE NOTED. ALL CABLE TO BE XHHW-2 600 VOLT INSULATION

NO.	REVISION	BY	DATE	ISSUE
-	-	-	-	0
1	AS BUILT	GJL	3-16-93	A
P3	REVISE PER CLIENT COMMENTS	REA	2-09-93	B
P2	REVISE PER CLIENT COMMENTS	VAW	2-16-93	C
P1	REVISE PER CLIENT COMMENTS	VAW	3-16-93	D
-	-	-	-	0

DRAWING HISTORY

REFERENCE DRAWINGS

CASE ENGINEERING
LAKELAND, FLORIDA

ARLINGTON COUNTY, VIRGINIA
WATER POLLUTION CONTROL PLANT
PANEL LCP-30 WIRING DIAGRAM

DRAWN BY	GJL	3-01-93	
CHECKED BY	JVF	3-30-93	
APPD. BY		7-7-93	
CLIENT APPD.			

SCALE: NONE

DRAWING NO. 2049-E-025 REV. 0

SEE FILE NUMBER
CAD FILE NAME: P30-00-0-E-0000

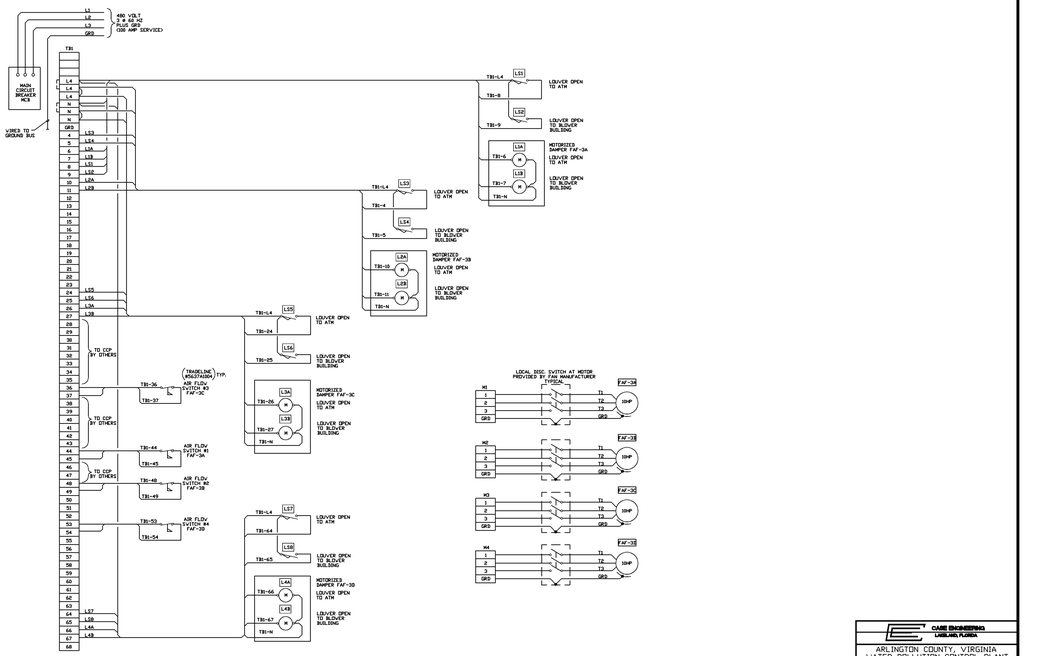

NO.	REVISION	BY	DATE	ISSUE
-	-	-	-	0
1	AS BUILT	GJL	3-16-93	A
P3	REVISE PER CLIENT COMMENTS	REA	2-09-93	B
P2	REVISE PER CLIENT COMMENTS	VAW	2-16-93	C
P1	REVISE PER CLIENT COMMENTS	VAW	3-16-93	D
-	-	-	-	0

DRAWING HISTORY

REFERENCE DRAWINGS

CASE ENGINEERING
LAKELAND, FLORIDA

ARLINGTON COUNTY, VIRGINIA
WATER POLLUTION CONTROL PLANT
PANEL LCP-30 FIELD WIRING DIAGRAM

DRAWN BY	GJL	3-16-93	
CHECKED BY	JVF	7-7-93	
APPD. BY			
CLIENT APPD.			

SCALE: NONE

DRAWING NO. 2049-E-026 REV. 0

SEE FILE NUMBER
CAD FILE NAME: P30-00-0-E-0000

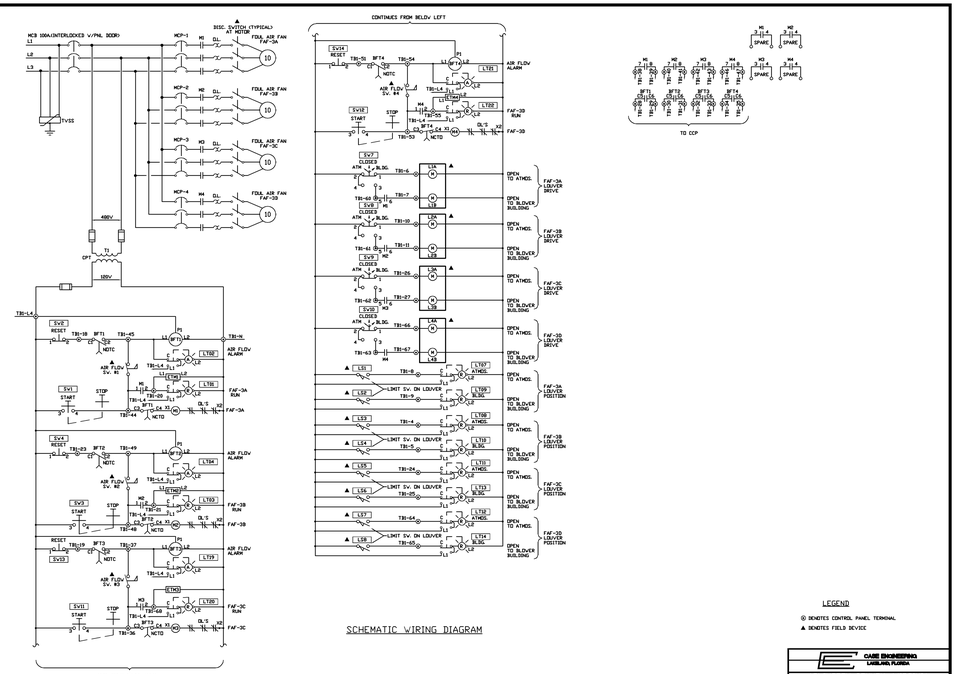

SCHEMATIC WIRING DIAGRAM

LEGEND

◎ DENOTES CONTROL PANEL TERMINAL
▲ DENOTES FIELD DEVICE

NO.	REVISION	BY	DATE	ISSUE
-	-	-	-	0
1	AS BUILT	GJL	3-16-93	A
P3	REVISE PER CLIENT COMMENTS	REA	2-09-93	B
P2	REVISE PER CLIENT COMMENTS	VAW	2-16-93	C
P1	REVISE PER CLIENT COMMENTS	VAW	3-16-93	D
-	-	-	-	0

DRAWING HISTORY

REFERENCE DRAWINGS

CASE ENGINEERING
LAKELAND, FLORIDA

ARLINGTON COUNTY, VIRGINIA
WATER POLLUTION CONTROL PLANT
PANEL LCP-30 SCHEM. DIAG.

DRAWN BY	GJL	3-16-93	
CHECKED BY	JVF	7-7-93	
APPD. BY		7-8-93	
CLIENT APPD.			

SCALE: 1/4" = 1"

DRAWING NO. 2049-E-027 REV. 0

SEE FILE NUMBER
CAD FILE NAME: P30-00-0-E-0000

RECORD DRAWING

NO.	DATE	DRAWN	CHKD	DESCRIPTION
0	11/98	FXP	ASG	RECORD DRAWING

REVISIONS

DESIGNED BY: -
DRAWN BY: FXP
CHECKED BY/DATE/:-
APPROVED BY/DATE:

THIS DRAWING HAS BEEN COMPILED FROM RECORDS OF CAMP DRESSER & MCKEE INC. AND HAZEN AND SAWYER, P.C.

ARLINGTON COUNTY, VIRGINIA
WATER POLLUTION CONTROL PLANT
UPGRADE AND EXPANSION- PHASE IIB

CASE ENGINEERING DRAWINGS
PANEL LCP-30

SCALE NOTE

SCALE BAR SHOWN BELOW IS ONE INCH LONG ON A FULL SIZE DRAWING. WHEN SCALING DRAWINGS, MEASURE BAR TO DETERMINE IF SCALES SHOWN WILL REQUIRE ADJUSTING.

ONE INCH

CONTRACT NO.
9002 - WPC

YEAR 1991

LOCATION CODE

SPECIALTY CODE
|

PROJECT NO.
5002 - 033

FILE NAME
CASE07.DWG

DRAWING NO.
CASE07

SHEET NO. 330

CONTROL PANEL FACE VIEW
P/N D-92791-000-G01

NOTE:

1. ENCLOSURE TO BE HOFFMAN, CAT.# A-60CPX60ZLP EXCEPT:
   A.) CONSTRUCTED WITH 316L STAINLESS STEEL INSTEAD OF MILD STEEL.
   B.) CONSTRUCTED TO NEMA 4X STANDARDS INSTEAD OF NEMA 12 STANDARDS.
   C.) DESIGNED AND CONSTRUCTED TO ACCEPT A SQUARE "D" CLASS 9422 - TYPE A2, 6", NEMA 4,4X HANDLE MECHANISM.

   ENCLOSURE TO BE 62 1/8"H X 60 1/8"W X 10"D WITH 15"H LEG STANDS. INTERIOR PANEL TO BE MILD STEEL, PAINTED HIGH GLOSS WHITE ENAMEL. 56"H X 56"W, HOFFMAN CAT.# A-56P60.
2. ALARM HORN IS TO BE MOUNTED IN THE CENTER OF THE TOP OF THE ENCLOSURE.
3. FOR INTERIOR PANEL LAYOUT AND DETAILS, SEE DRAWING D-92791-02-001.
4. FOR TERMINAL BLOCK DETAILS, SEE DRAWING D-92791-02-002.

   FOR LOCAL CONTROL STATION DETAILS, SEE DRAWING D-92791-02-003.

   FOR 460 VOLT POWER WIRING DIAGRAM, BAR SCREENS #1-3, SEE DRAWING D-92791-02-004.

   FOR 460 VOLT POWER WIRING DIAGRAM, SCREW CONVEYORS #1-2, SEE DRAWING D-92791-02-005.

   FOR SHCEMATIC WIRING DIAGRAM, BAR SCREEN #1, SEE DRAWING D-92791-02-101.

   FOR SCHEMATIC WIRING DIAGRAM, BAR SCREEN #2, SEE DRAWING D-92791-02-102.

   FOR SCHEMATIC WIRING DIAGRAM, BAR SCREEN #3, SEE DRAWING D-92791-02-103.

   FOR SCHEMATIC WIRING DIAGRAM, SCREW CONVEYOR #1, SEE DRAWING D-92791-02-104.

   FOR SCHEMATIC WIRING DIAGRAM, SCREW CONVEYOR #2, SEE DRAWING D-92791-02-105.

   FOR ALARM SYSTEM WIRING, BAR SCREENS #1-3 AND LEVEL DETECTION SYSTEM WIRING, SEE DRAWING D-92791-02-106.
5. NAMEPLATES 1-6NP ARE TO BE 2" X 3" WHITE PHENOLIC WITH 1/4" HIGH BLACK LETTERING, ENGRAVED AS SHOWN ON THIS DRAWING.

   NAMEPLATE 7NP IS TO BE 1 1/4" X 6" WHITE PHENOLIC WITH 1/4" HIGH BLACK LETTERING, ENGRAVED AS SHOWN ON THIS DRAWING.
6. PANEL VENDOR TO DETERMINE EXACT MOUNTING LOCATION FOR OVERLOAD RESET PUSHBUTTONS, AFTER PANEL IS ASSEMBLED.

LEGEND PLATE ENGRAVING						
DEVICE					FIRST LINE	SECOND LINE
101LT	201LT	301LT	401LT	501LT	CONTROL	POWER ON
105LT	205LT	305LT	405LT	505LT	SAFETY	PULLED
107LT	207LT	307LT	407LT	507LT	REVERSE	
115LT	215LT	315LT	415LT	515LT	FORWARD	
			413LT	513LT	ZERO	
118LT	218LT	318LT	418LT	518LT	STARTER O/L	TRIPPED
120LT	220LT	320LT			HIGH DRIVE	TEMP
146LT	246LT	346LT			CHECK ALT.	SYNC.
149LT	249LT	349LT	416LT	516LT	TORQUE	OVERLOAD
609LT					HIGH	LEVEL
610LT					HIGH/HIGH	LEVEL
642P3					SILENCE	
642P8					RESET	

NAMEPLATE DETAIL 1-6NP

1NP = BAR SCREEN #1
2NP = BAR SCREEN #2
3NP = BAR SCREEN #3
4NP = SCREW CONVEYOR #1
5NP = SCREW CONVEYOR #2
6NP = INFLUENT CHANNEL LEVEL

NAMEPLATE DETAIL 7NP

A	JJ	96	JJ
B	JJ	98	JJ
C	JJ	98	JJ
D	JJ	98	JJ
E	JJ	98	JJ
F	JJ	98	JJ

REVISED PER ENGINEERS REVIEW COMMENTS 96-5-7/20. CHANGED DISCONNECT TO 100AMP W/ ADDED O/L RESETS FOR EACH STARTER AND NAMEPLATE 7NP. CHANGED ALARM HORN/LIGHT TO CDVARSS 31R-NS. REVISED NOTES

THIS DRAWING CONTAINS INFORMATION PROPRIETARY TO INFILCO DEGREMONT INC. AND MAY NOT BE REPRODUCED OR USED IN WHOLE OR IN PART FOR THE PURPOSE OF MANUFACTURING OR REPRODUCING EQUIPMENT OR PROCESSES NOT FURNISHED BY INFILCO DEGREMONT INC. UNLESS AUTHORIZED IN WRITING. ENCLOSED OR USE OTHERWISE IN WHOLE OR IN PART WITHOUT THE WRITTEN AUTHORIZATION OF INFILCO DEGREMONT INCORPORATED.

Infilco Degremont Inc.
☐ Information Only – Prints not stamped.
☐ Preliminary – Bid to be used for construction.
☐ For Approval – Changes or changes are not
☐ Certified – To print and delay shipment
For ARLINGTON COUNTY, VIRGI
ARLINGTON COUNTY, VA
Cust. Ord. No. 764-90-120
Infilco Degremont Inc. No. 92791
Date _____ Item No. 0201

Infilco Degremont Inc.
Post Office Box 26900 Richmond, Virginia 23228

DR	CAD
CHK	R.JH
APP	JC.J
MFR	

LCP-2 EXTERIOR PANEL LAYOUT
CLIMBER SCREEN® NOS 1-3
SCREW CONVEYORS NO. 1 & 2

CODE NO. 79102000-G10
ASSEMBLY
REFERENCE
SCALE 1/4"
DWG D
DWG. NO. 92791-02-000
REV. A

INTERIOR PANEL

A	JJ	96	JJ
B	JJ	98	JJ
C	JJ	98	JJ
D	JJ	98	JJ
E	JJ	98	JJ
F	JJ	98	JJ

REARRANGED RELAY LOGIC TO ACCOMODATE SQUARE "D" 9422T3 MCC AND DISCONNECT. CHANGED COMPONENTS ADDED SECONDARY LINE SURGE PROTECTION (T-SP) PER ENGINEERS REVIEW COMMENT OF 10-20-96

THIS DRAWING CONTAINS INFORMATION PROPRIETARY TO INFILCO DEGREMONT INC. AND MAY NOT BE REPRODUCED OR USED IN WHOLE OR IN PART FOR THE PURPOSE OF MANUFACTURING OR REPRODUCING EQUIPMENT OR PROCESSES NOT FURNISHED BY INFILCO DEGREMONT INC. UNLESS AUTHORIZED IN WRITING. ENCLOSED OR USE OTHERWISE IN WHOLE OR IN PART WITHOUT THE WRITTEN AUTHORIZATION OF INFILCO DEGREMONT INCORPORATED.

Infilco Degremont Inc.
☐ Information Only – Prints not stamped.
☐ Preliminary – Bid to be used for construction.
☐ For Approval – Changes or changes are not
☐ Certified – To print and delay shipment
For ARLINGTON COUNTY, VIRGI
ARLINGTON COUNTY, VA
Cust. Ord. No. 764-90-120
Infilco Degremont Inc. No. 92791
Date _____ Item No. 0201

Infilco Degremont Inc.
Post Office Box 26900 Richmond, Virginia 23228

DR	CAD
CHK	R.JH
APP	JC.J
MFR	

LCP-2 INTERIOR PANEL LAYOUT
CLIMBER SCREEN® NOS 1-3
SCREW CONVEYORS NO. 1 & 2

CODE NO. 79102001-G10
ASSEMBLY
REFERENCE
SCALE 1/4"
DWG D
DWG. NO. 92791-02-001
REV. B

A	JJ	96	JJ
B	JJ	98	JJ
C	JJ	98	JJ
D	JJ	98	JJ
E	JJ	98	JJ
F	JJ	98	JJ

ADDED TERMINALS NO. 1272, 1274, 5272, 5274, 3272, 3274, 5273, 5275, 3273, 3275, 5201, 5202, 3201, 3202 TO CONVEYOR NOS. 1 & 2 DRIVE. CONVEYOR MOUNTED CONTROLS. ADDED SYS. 1 & 2 ALARM TO LT-1065. ADDED ONE ADDITIONAL TERMINAL BLOCK TO EACH RDV.

THIS DRAWING CONTAINS INFORMATION PROPRIETARY TO INFILCO DEGREMONT INC. AND MAY NOT BE REPRODUCED OR USED IN WHOLE OR IN PART FOR THE PURPOSE OF MANUFACTURING OR REPRODUCING EQUIPMENT OR PROCESSES NOT FURNISHED BY INFILCO DEGREMONT INC. UNLESS AUTHORIZED IN WRITING. ENCLOSED OR USE OTHERWISE IN WHOLE OR IN PART WITHOUT THE WRITTEN AUTHORIZATION OF INFILCO DEGREMONT INCORPORATED.

Infilco Degremont Inc.
☐ Information Only – Prints not stamped.
☐ Preliminary – Bid to be used for construction.
☐ For Approval – Changes or changes are not
☐ Certified – To print and delay shipment
For ARLINGTON COUNTY, VIRGI
ARLINGTON COUNTY, VA
Cust. Ord. No. 764-90-120
Infilco Degremont Inc. No. 92791
Date _____ Item No. 0201

Infilco Degremont Inc.
Post Office Box 26900 Richmond, Virginia 23228

DR	CAD
CHK	R.JH
APP	JC.J
MFR	

LCP-2 TERMINAL STRIP DETAILS
CLIMBER SCREEN® NOS 1-3
SCREW CONVEYORS NO. 1 & 2

CODE NO. 79102002-G10
ASSEMBLY
REFERENCE
SCALE 1/4"
DWG D
DWG. NO. 92791-02-002
REV. A

NOTES:

1) ENCLOSURE TO BE ADALET, NEMA 7 CLASS 1, DIV. 1, GROUP D, CAST IRON 6"X 6"X 5".
   CAT. NO. XCE-060805/XSB-0608
2) ALLEN-BRADLEY SELECTOR SWITCH NEMA 7, 3 POS., SPRING RETURN FROM LEFT TO CENTER.
   CAT. NO. 800H-JPDK3TAXXX
   TAG 108SV2, 208SV2, 308SV2
3) ALLEN-BRADLEY SELECTOR SWITCH NEMA 7, 2 POS., MAINTAINED WITH PADLOCKABLE COVER.
   CAT. NO. 800H-JPDK2TAXXX/-NP4
   TAG 108SV1, 208SV1, 308SV1
4) BURNDY GROUND LUG OR EQUAL TO FIT #10 AWG WIRE
5) ALLEN-BRADLEY TERMINAL BLOCK ASSY. 4-1492-T3 TERMINALS COMPLETE W/ END BARRIER, MOUNTING CHANNEL & VINYL MARKING STRIP
6) ENCLOSURE TO BE FURNISHED COMPLETE WITH (2) 1-1/2" NPT CONDUIT HUBS, WITH THREADED/REMOVABLE CLOSING PLUGS, LOCATED TOP AND BOTTOM CENTER.
7) "#" DENOTES "1" FOR BAR SCREEN NO. 1
   "#" DENOTES "2" FOR BAR SCREEN NO. 2
   "#" DENOTES "3" FOR BAR SCREEN NO. 3
   COMPLETE DEVICE NUMBERS, TERMINAL NUMBERS AND WIRE NUMBERS ACCORDINGLY.

TYPICAL LOCAL STATION LAYOUT
PART # D-92791-02-003-G01

NOTES:

1) ENCLOSURE TO BE ADALET, NEMA 7 CLASS 1, DIV. 1, GROUP D, CAST IRON 6"X 6"X 5".
   CAT. NO. XCE-060805/XSB-0608
2) ALLEN-BRADLEY SELECTOR SWITCH NEMA 7, 3 POS., MAINTAINED CONTACT.
   CAT. NO. 800H-JPDK3TAXXX
   TAG 108SV2, 208SV2, 308SV2
3) ALLEN-BRADLEY SELECTOR SWITCH NEMA 7, 2 POS., MAINTAINED WITH PADLOCKABLE COVER.
   CAT. NO. 800H-JPDK2TAXXX/-NP4
   TAG 108SV1, 208SV1, 308SV1
4) BURNDY GROUND LUG OR EQUAL TO FIT #10 AWG WIRE
5) ALLEN-BRADLEY TERMINAL BLOCK ASSY. 4-1492-T3 TERMINALS COMPLETE W/ END BARRIER, MOUNTING CHANNEL & VINYL MARKING STRIP
6) ENCLOSURE TO BE FURNISHED COMPLETE WITH (2) 1-1/2" NPT CONDUIT HUBS, WITH THREADED/REMOVABLE CLOSING PLUGS, LOCATED TOP AND BOTTOM CENTER.
7) "#" DENOTES "4" FOR SCREW CONVEYOR NO. 1
   "#" DENOTES "5" FOR SCREW CONVEYOR NO. 2
   COMPLETE DEVICE NUMBERS, TERMINAL NUMBERS AND WIRE NUMBERS ACCORDINGLY.

TYPICAL LOCAL STATION LAYOUT
PART # D-92791-02-003-G02

INTERIOR PANEL
CLIMBER SCREEN® NOS 1-3

TYPICAL FOR (3) THREE ASSEMBLIES

INTERIOR PANEL
SCREW CONVEYORS NO. 1 & 2

TYPICAL FOR (2) TWO ASSEMBLIES

SCHEMATIC WIRING DIAGRAM
CLIMBER SCREEN® NOS 1-3

SCHEMATIC WIRING DIAGRAM
SCREW CONVEYORS NO. 1 & 2

A	JJ	96	JJ
B	JJ	98	JJ
C	JJ	98	JJ
D	JJ	98	JJ
E	JJ	98	JJ
F	JJ	98	JJ

REVISED "XJF" TO "XCE" IN NOTE 1 OF EACH ASSEMBLY.

THIS DRAWING CONTAINS INFORMATION PROPRIETARY TO INFILCO DEGREMONT INC. AND MAY NOT BE REPRODUCED OR USED IN WHOLE OR IN PART FOR THE PURPOSE OF MANUFACTURING OR REPRODUCING EQUIPMENT OR PROCESSES NOT FURNISHED BY INFILCO DEGREMONT INC. UNLESS AUTHORIZED IN WRITING. ENCLOSED OR USE OTHERWISE IN WHOLE OR IN PART WITHOUT THE WRITTEN AUTHORIZATION OF INFILCO DEGREMONT INCORPORATED.

Infilco Degremont Inc.
☐ Information Only – Prints not stamped.
☐ Preliminary – Bid to be used for construction.
☐ For Approval – Changes or changes are not
☐ Certified – To print and delay shipment
For ARLINGTON COUNTY, VIRGI
ARLINGTON COUNTY, VA
Cust. Ord. No. 764-90-120
Infilco Degremont Inc. No. 92791
Date _____ Item No. 0201

Infilco Degremont Inc.
Post Office Box 26900 Richmond, Virginia 23228

DR	CAD
CHK	R.JH
APP	JC.J
MFR	

CLIMBER SCREEN NOS 1-3
SCREW CONVEYORS NO. 1 & 2
LOCAL CONTROL STATION'S

CODE NO. 79102003-G10
ASSEMBLY
REFERENCE
SCALE 1/4"
DWG D
DWG. NO. 92791-02-003
REV. A

RECORD DRAWING

1	11/98	FXP	ASG	RECORD DRAWING		
NO.	DATE	DRWN	CHKD	DESCRIPTION		
REVISIONS						

DESIGNED BY: .
DRAWN BY: FXP
CHECKED BY/DATE/:
APPROVED BY/DATE:

THIS DRAWING HAS BEEN COMPILED
HAZEN AND SAWYER, P.C.

ARLINGTON COUNTY, VIRGINIA
WATER POLLUTION CONTROL PLANT
UPGRADE AND EXPANSION- PHASE IIB

INFILCO DRAWINGS
CLIMBER SCREENS NO 1 THROUGH 3
AND SCREW CONVEYORS NO. 1 AND 2

SCALE NOTE

SCALE BAR SHOWN BELOW IS ONE INCH LONG ON A FULL SIZE DRAWING. WHEN SCALING DRAWINGS, MEASURE BAR TO DETERMINE IF SCALES SHOWN WILL REQUIRE ADJUSTING.

ONE INCH

CONTRACT NO.
9002 – WPC
YEAR 1991
LOCATION CODE
SPECIALTY CODE
I
PROJECT NO.
5002 – 033
FILE NAME
INFILCO1.DWG
DRAWING NO.
INFILCO1
SHEET NO. 331

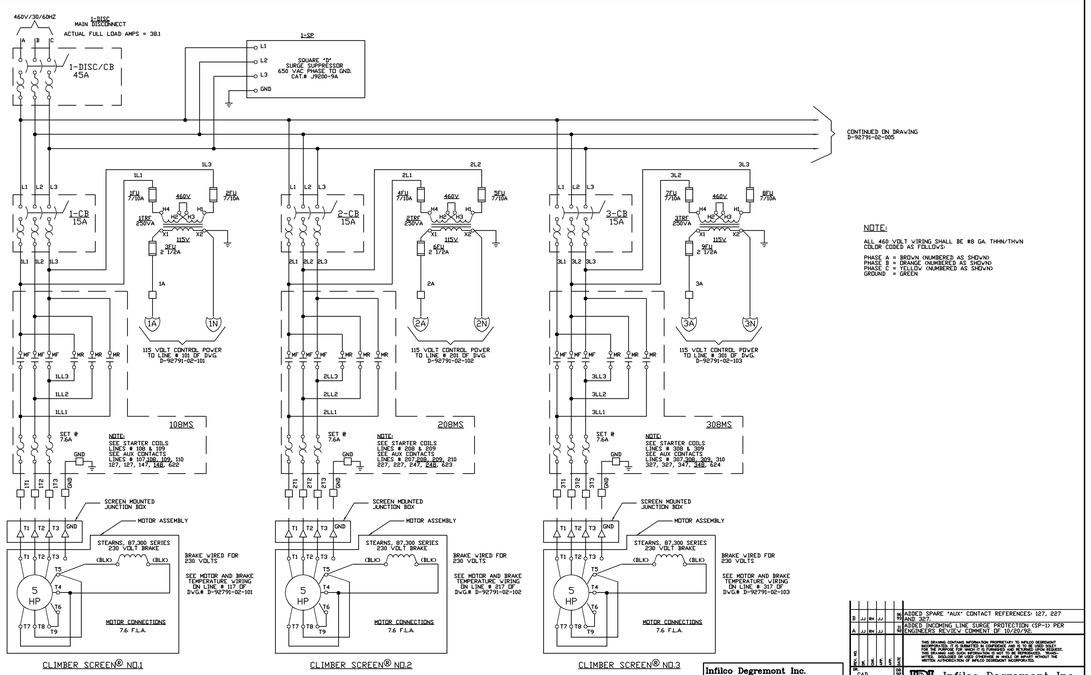

ADDED SPARE "AUX" CONTACT REFERENCES 127, 227 AND 327.
ADDED INCOMING LINE SURGE PROTECTION (SP-1) PER ENGINEERS REVIEW COMMENT OF 10/20/92.

THIS DRAWING CONTAINS INFORMATION PROPRIETARY TO INFILCO DEGREMONT INC. AND IS LOANED SUBJECT TO THE AGREEMENT THAT IT WILL NOT BE REPRODUCED OR USED FOR THE PURPOSE FOR WHICH IT IS FURNISHED OTHER THAN THAT FOR WHICH IT IS SPECIFICALLY LOANED. DISCLOSURE OF SUCH INFORMATION BY WAY OF REPORT WITHOUT THE WRITTEN AUTHORIZATION OF INFILCO DEGREMONT INCORPORATED.

Infilco Degremont Inc.
Information Only - Does not require:
Preliminary - Bid to be used for construction.
For Approval - Regards for changes as set to plan and delay shipment
Certified
For ARLINGTON COUNTY, VIRGINIA
ARLINGTON COUNTY, VA.
Cust. Ord. No. 764-92-120
Infilco Degremont Inc. No. 92791
Date _____ Item No. 0201

Infilco Degremont Inc.
Post Office Box 26908 Richmond Virginia 23228

POWER WIRING DIAGRAM
CLIMBER SCREEN® NOS 1-3

DRAWN: CAD
TRACED: R.JH
DESIGNED: JC.J
CHK:
APP:
DWG NO. 79102004-G03
ASSEMBLY
REFERENCE
SCALE
MICRO
SIZE D
DWG. NO. 92791-02-004
REV. B

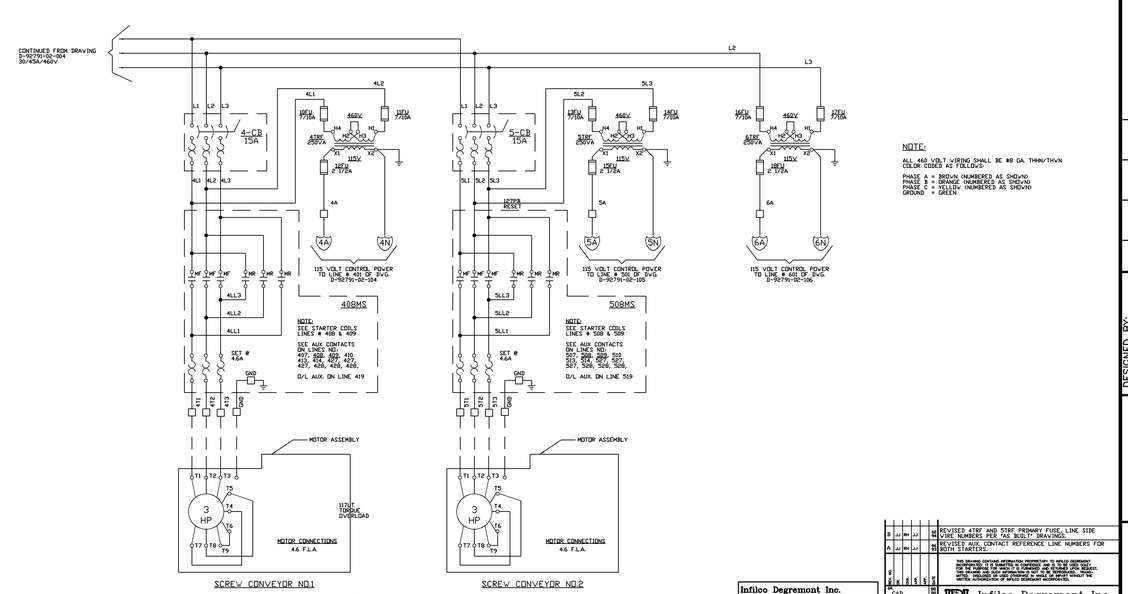

REVISED AT&F AND STRF PRIMARY FUSE, LINE SIDE WIRE NUMBERS PER "AS BUILT" DRAWINGS.
REVISED AUX. CONTACT REFERENCE LINE NUMBERS FOR BOTH STARTERS.

THIS DRAWING CONTAINS INFORMATION PROPRIETARY TO INFILCO DEGREMONT INC. AND IS LOANED SUBJECT TO THE AGREEMENT THAT IT WILL NOT BE REPRODUCED OR USED FOR THE PURPOSE FOR WHICH IT IS FURNISHED OTHER THAN THAT FOR WHICH IT IS SPECIFICALLY LOANED. DISCLOSURE OF SUCH INFORMATION BY WAY OF REPORT WITHOUT THE WRITTEN AUTHORIZATION OF INFILCO DEGREMONT INCORPORATED.

Infilco Degremont Inc.
Information Only - Does not require:
Preliminary - Bid to be used for construction.
For Approval - Regards for changes as set to plan and delay shipment
Certified
For ARLINGTON COUNTY, VIRGINIA
ARLINGTON COUNTY, VA.
Cust. Ord. No. 764-92-120
Infilco Degremont Inc. No. 92791
Date _____ Item No. 0201

Infilco Degremont Inc.
Post Office Box 26908 Richmond Virginia 23228

POWER WIRING DIAGRAM
SCREW CONVEYORS NO. 1 & 2
AND COMMON CONTROL POWER

DRAWN: CAD
TRACED: R.JH
DESIGNED: JC.J
CHK:
APP:
DWG NO. 79102005-G03
ASSEMBLY
REFERENCE
SCALE
MICRO
SIZE D
DWG. NO. 92791-02-005
REV. B

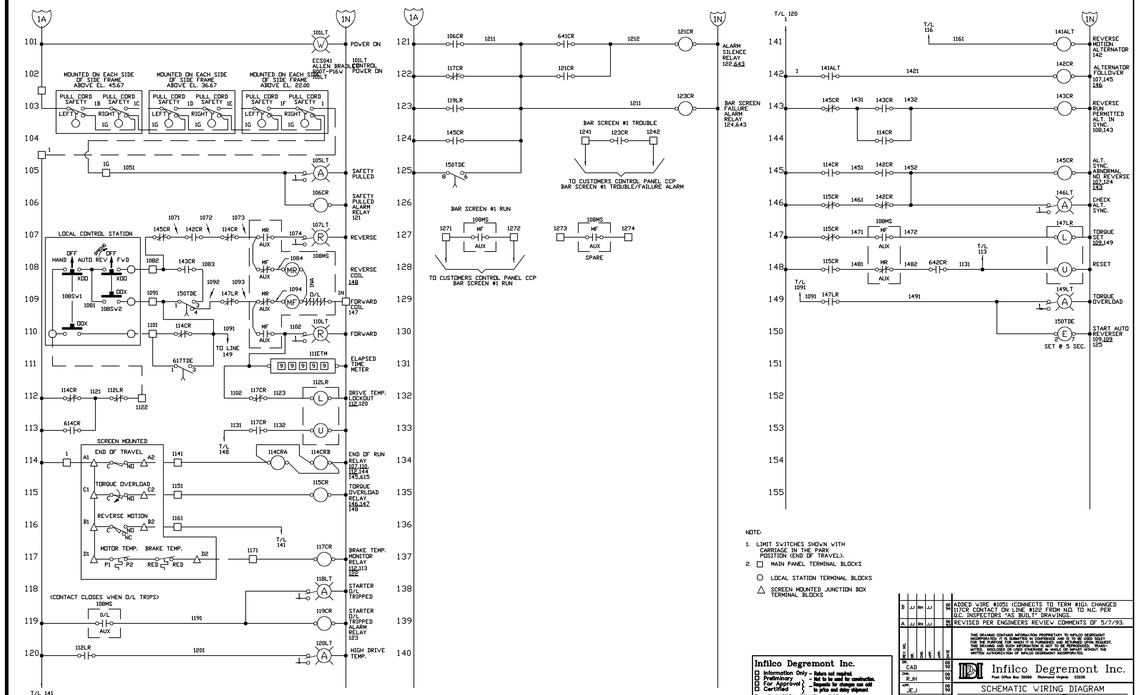

ADDED V.3RE 49(5) (CONNECTS TO TERM #1G). CHANGED "FOR CLIMBER SCREEN" REFERENCES TO NO. PER DRAWING STRUCTURE AS BUILT DRAWINGS.
REVISED PER ENGINEERS REVIEW COMMENTS OF 5/7/93.

THIS DRAWING CONTAINS INFORMATION PROPRIETARY TO INFILCO DEGREMONT INC. AND IS LOANED SUBJECT TO THE AGREEMENT THAT IT WILL NOT BE REPRODUCED OR USED FOR THE PURPOSE FOR WHICH IT IS FURNISHED OTHER THAN THAT FOR WHICH IT IS SPECIFICALLY LOANED. DISCLOSURE OF SUCH INFORMATION BY WAY OF REPORT WITHOUT THE WRITTEN AUTHORIZATION OF INFILCO DEGREMONT INCORPORATED.

Infilco Degremont Inc.
Information Only - Does not require:
Preliminary - Bid to be used for construction.
For Approval - Regards for changes as set to plan and delay shipment
Certified
For ARLINGTON COUNTY, VIRGINIA
ARLINGTON COUNTY, VA.
Cust. Ord. No. 764-92-120
Infilco Degremont Inc. No. 92791
Date _____ Item No. 0201

Infilco Degremont Inc.
Post Office Box 26908 Richmond Virginia 23228

SCHEMATIC WIRING DIAGRAM
CLIMBER SCREEN® NO. 1

DRAWN: CAD
TRACED: R.JH
DESIGNED: JC.J
CHK:
APP:
DWG NO. 79102101-G01
ASSEMBLY
REFERENCE
SCALE
MICRO
SIZE D
DWG. NO. 92791-02-101
REV. B

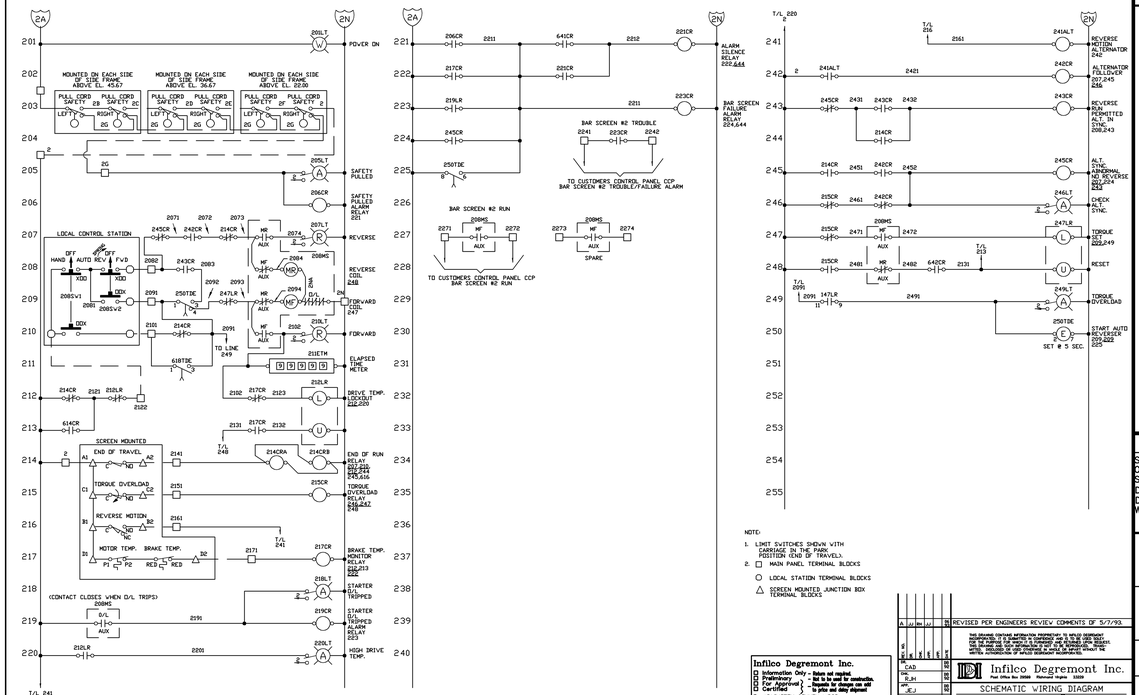

REVISED PER ENGINEERS REVIEW COMMENTS OF 5/7/93.

THIS DRAWING CONTAINS INFORMATION PROPRIETARY TO INFILCO DEGREMONT INC. AND IS LOANED SUBJECT TO THE AGREEMENT THAT IT WILL NOT BE REPRODUCED OR USED FOR THE PURPOSE FOR WHICH IT IS FURNISHED OTHER THAN THAT FOR WHICH IT IS SPECIFICALLY LOANED. DISCLOSURE OF SUCH INFORMATION BY WAY OF REPORT WITHOUT THE WRITTEN AUTHORIZATION OF INFILCO DEGREMONT INCORPORATED.

Infilco Degremont Inc.
Information Only - Does not require:
Preliminary - Bid to be used for construction.
For Approval - Regards for changes as set to plan and delay shipment
Certified
For ARLINGTON COUNTY, VIRGINIA
ARLINGTON COUNTY, VA.
Cust. Ord. No. 764-92-120
Infilco Degremont Inc. No. 92791
Date _____ Item No. 0201

Infilco Degremont Inc.
Post Office Box 26908 Richmond Virginia 23228

SCHEMATIC WIRING DIAGRAM
CLIMBER SCREEN® NO. 2

DRAWN: CAD
TRACED: R.JH
DESIGNED: JC.J
CHK:
APP:
DWG NO. 79102102-G01
ASSEMBLY
REFERENCE
SCALE
MICRO
SIZE D
DWG. NO. 92791-02-102
REV. A

RECORD DRAWING

ARLINGTON COUNTY, VIRGINIA
WATER POLLUTION CONTROL PLANT
UPGRADE AND EXPANSION- PHASE IIB

DESIGNED BY: -
DRAWN BY: FXP

THIS DRAWING HAS BEEN COMPILED FROM RECORD INFORMATION AND DATA FURNISHED BY THE CONTRACTOR. THE ENGINEER AND OWNER ASSUME NO RESPONSIBILITY FOR THE ACCURACY OR COMPLETENESS OF THIS DRAWING.

SCALE
SCALE BAR SHOWN ONE INCH LONG SIZE DRAWING. DRAWINGS, MEAS DETERMINE IF SC WILL REQUIRE AD
ONE IN

CONTRAC
9002 –
YEAR
LOCATION CODE

PROJEC
5002 –

FILE N
INFILC

DRAWING
INFIL

SHEET NO.

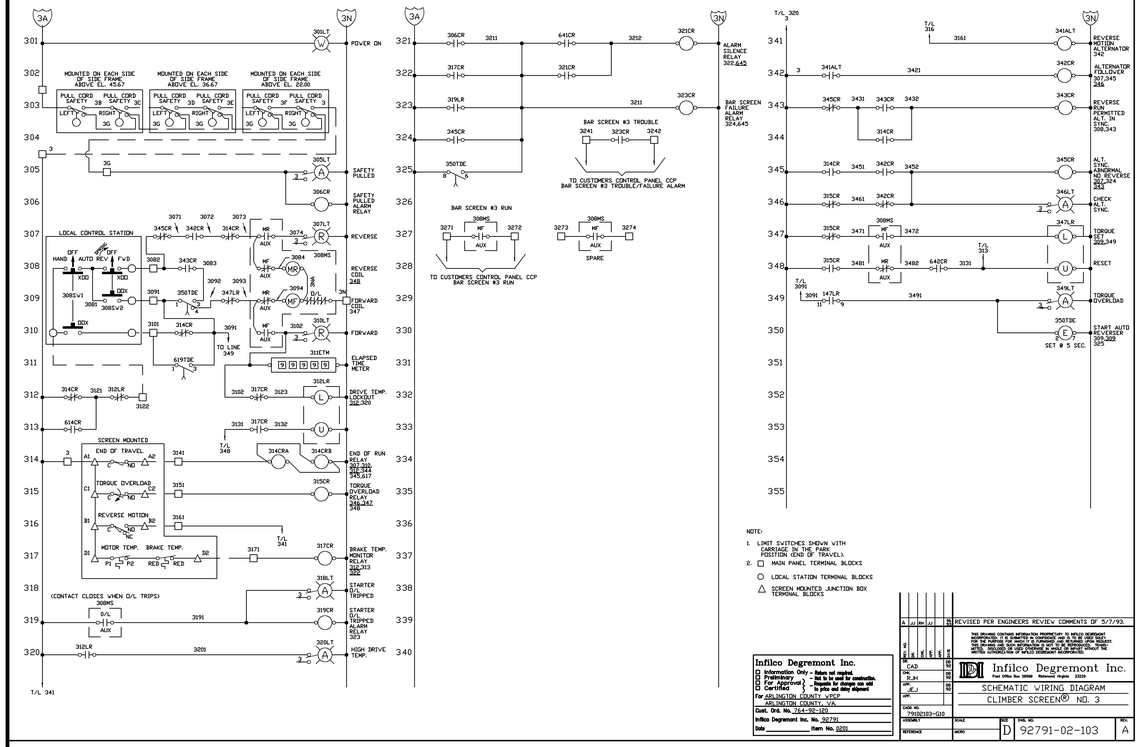

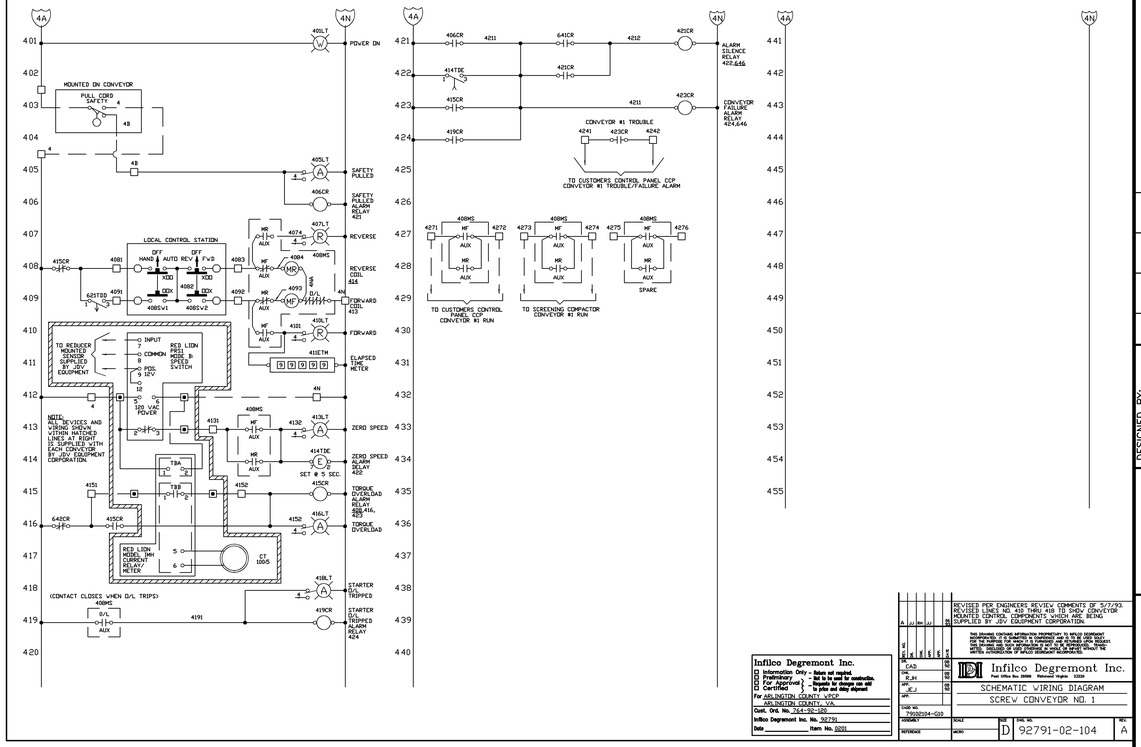

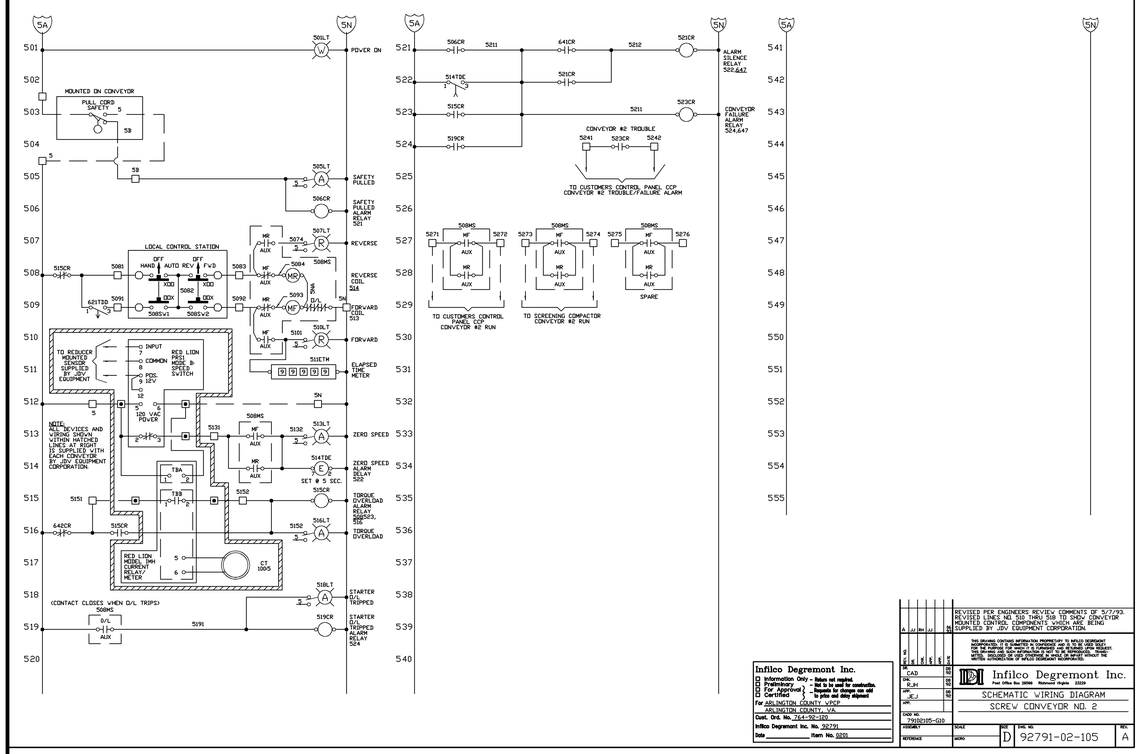

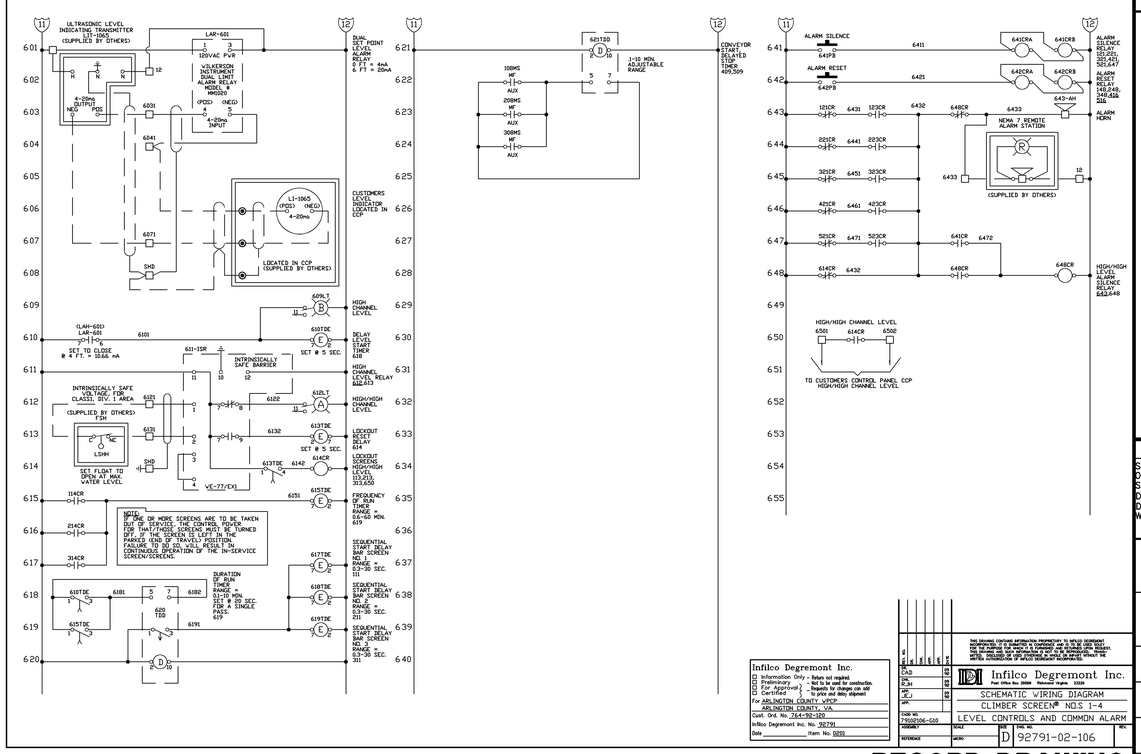

RECORD DRAWING

NO.	DATE	DRWN	CHKD	DESCRIPTION
0	11/98	FXP	ASG	RECORD DRAWING

REVISIONS

DESIGNED BY: .
DRAWN BY: FXP
CHECKED BY/DATE/:
APPROVED BY/DATE:

THIS DRAWING HAS BEEN COMPILED
HAZEN AND SAWYER, P.C.

ARLINGTON COUNTY, VIRGINIA
WATER POLLUTION CONTROL PLANT
UPGRADE AND EXPANSION- PHASE IIB

INFILCO DRAWINGS
CLIMBER SCREENS NO. 1 THROUGH 4
AND SCREW CONVEYORS NO. 1 AND 2

SCALE NOTE

SCALE BAR SHOWN BELOW IS ONE INCH LONG ON A FULL SIZE DRAWING. WHEN SCALING DRAWINGS, MEASURE BAR TO DETERMINE IF SCALES SHOWN WILL REQUIRE ADJUSTING.

ONE INCH

CONTRACT NO. 9002 – WPC
YEAR 1991
LOCATION CODE
SPECIALTY CODE I
PROJECT NO. 5002 – 033
FILE NAME INFILCO3.DWG
DRAWING NO. INFILCO3
SHEET NO. 333

CONTRACT DWG#	F&P DWG#	LOOP #	DESCRIPTION
001-23	L00A	–	INDEX
001-23	L00B	–	INDEX
001-23	L00C	–	INDEX
–	L001	–	NOTES AND LEGEND
–	L002	231A&B	FLOTATION THICKENER 1 & 2 SKIMMER DRIVE ALARM & STATUS
–	L003	231C&D	FLOTATION THICKENER 1 & 2 COLLECTOR DRIVE ALARM & STATUS
–	L004	232A&B	FLOTATION THICKENER 1 & 2 SLUDGE WELLS LEVEL
–	L005	233A	FLOTATION THICKENER SLUDGE PUMP 1 ALARM AND STATUS
–	L006	233B	FLOTATION THICKENER SLUDGE PUMP 2 ALARM AND STATUS
–	L007	233C	FLOTATION THICKENER SLUDGE PUMP 3 ALARM AND STATUS
–	L008	234A	FLOTATION THICKENER RECIRCULATION PUMP 1 ALARM AND STATUS
–	L009	234B	FLOTATION THICKENER RECIRCULATION PUMP 2 ALARM AND STATUS
–	L010	236A	FLOTATION THICKENER COMPRESSOR 1 ALARM AND STATUS
–	L011	236B	FLOTATION THICKENER COMPRESSOR 2 ALARM AND STATUS
–	L012	239A&B	FLOTATION THICKENER 1 AND 2 WATER FLOW
–	L013	244A&B	FLOTATION THICKENER 1 AND 2 WASTE ACTIVATED SLUDGE FLOW
–	L014	246	FLOTATION THICKENER SLUDGE FLOW
–	L015	513	FLOTATION THICKENER SLUDGE FLOW
–	L016	904-07	KILOWATTS AND BUS VOLTAGES SERVICES A AND B
–	L017	1001	RAW WASTEWATER BYPASS WEIR GATE CONTROL TO CHLORINE TANK
–	L018	1002	BYPASS SCREEN CHAMBER DRAIN SUMP LEVEL
–	L019	1003	POTOMAC INTERCEPTOR FLOW METER CHAMBER LEVEL
–	L020	1005	FOUR MILE RUN INTERCEPTOR FLOW
–	L021	1006	FOUR MILE RUN INTERCEPTOR FLOW METER CHAMBER DRAIN SUMP LEVEL
–	L022	1007	BYPASS BAR SCREEN STATUS
–	L023	1008	BYPASS BAR SCREEN CHAMBER LEVEL
–	L024	1009	POTOMAC INTERCEPTOR FLOWS
–	L025	1011	FOUR MILE RUN PUMP STATION LEVEL
–	L026	1015	FOUR MILE RUN RELIEF PUMP STATION LEVEL CONTROL
–	L027	1025-1	FOUR MILE RUN RELIEF PUMP STATION PUMP 1 ALARM AND STATUS
–	L028	1025-2	FOUR MILE RUN RELIEF PUMP STATION PUMP 2 ALARM AND STATUS
–	L029	1025-3	FOUR MILE RUN RELIEF PUMP STATION PUMP 3 ALARM AND STATUS
–	L030	1025-4	FOUR MILE RUN RELIEF PUMP STATION PUMP 4 ALARM AND STATUS
–	L031	1028/29	FOUR MILE RUN RELIEF PUMP STATION H2S & COMB. GAS MONITORING
–	L032-1	1030-1	FOUR MILE RUN RELIEF PUMP STATION PUMP 1 FLOW
–	L032-2	1030-2	FOUR MILE RUN RELIEF PUMP STATION PUMP 2 FLOW
–	L032-3	1030-3	FOUR MILE RUN RELIEF PUMP STATION PUMP 3 FLOW
–	L032-4	1030-4	FOUR MILE RUN RELIEF PUMP STATION PUMP 4 FLOW
–	L033	1031	FOUR MILE RUN RELIEF PUMP STATION DRY WELL LEVEL
–	L034	1032	FOUR MILE RUN RELIEF PUMP STATION DIESEL FUEL LEVEL
–	L035-1	1035-1	FOUR MILE RUN RELIEF PUMP STATION DRAIN SUMP PUMP 1 STATUS
–	L035-2	1035-2	FOUR MILE RUN RELIEF PUMP STATION DRAIN SUMP PUMP 2 STATUS
–	L036	1036	FOUR MILE RUN RELIEF PUMP STATION DRAIN SUMP LEVEL
001-24	L037	1040	LOW LEVEL PUMP STATION WETWELL A/B LEVEL
001-24	L038	2041-1	LOW LEVEL PUMP STATION WETWELL PUMP 1 ALARM AND STATUS
001-24	L039	2041-2	LOW LEVEL PUMP STATION WETWELL PUMP 2 ALARM AND STATUS
001-24	L040	1050	SCUM CONCENTRATOR ALARM AND STATUS
001-24	L041	1055	CONCENTRATED SCUM SUMP LEVEL
001-24	L042	1060-1	CONCENTRATED SCUM PUMP 1 ALARM AND STATUS
001-24	L043	1060-2	CONCENTRATED SCUM PUMP 2 ALARM AND STATUS
001-24	L044	1065	PRIMARY TREATMENT INFLUENT CHANNEL LEVEL
001-24	L045	2001-1	PRELIM. TREATMENT BAR SCREEN INFLUENT SLIDE GATE 1 CONTROL
001-25	L046	2001-2	PRELIM. TREATMENT BAR SCREEN INFLUENT SLIDE GATE 2 CONTROL
001-25	L047	2001-3	PRELIM. TREATMENT BAR SCREEN INFLUENT SLIDE GATE 3 CONTROL
001-25	L048	2005-1	PRELIMINARY TREATMENT BAR SCREEN 1 ALARM AND STATUS
001-25	L049	2005-2	PRELIMINARY TREATMENT BAR SCREEN 2 ALARM AND STATUS
001-25	L050	2005-3	PRELIMINARY TREATMENT BAR SCREEN 3 ALARM AND STATUS
001-25	L051	2010-1	SCREENING SCREW CONVEYOR 1 ALARM AND STATUS
001-25	L052	2010-2	SCREENING SCREW CONVEYOR 2 ALARM AND STATUS
001-25	L053	2012-1	SCREENING SCREW COMPACTOR 1 ALARM AND STATUS
001-25	L054	2012-2	SCREENING SCREW COMPACTOR 2 ALARM AND STATUS
001-26	L055	2015-1	GRIT CLASSIFIER 1 ALARM AND STATUS
001-26	L056	2015-2	GRIT CLASSIFIER 2 ALARM AND STATUS
001-26	L057	2025-1	GRIT CHAMBER 1 MIXER ALARM AND STATUS
001-26	L058	2025-2	GRIT CHAMBER 2 MIXER ALARM AND STATUS
001-26	L059	2025-3	GRIT CHAMBER 3 MIXER ALARM AND STATUS
001-26	L060	2025-4	GRIT CHAMBER 4 MIXER ALARM AND STATUS
001-26	L061-1	2026-1	PRELIM. TREATMENT BLDG DRAIN SUMP PUMP 1 ALARM AND STATUS
–	L061-2	2026-2	PRELIM. TREATMENT BLDG DRAIN SUMP PUMP 2 ALARM AND STATUS
001-26	L062	2027	PRELIMINARY TREATMENT BUILDING DRAIN SUMP LEVEL
001-26	L063	2030-1	GRIT PUMP AND SYSTEM 1 ALARM AND STATUS
001-27	L064	2030-2	GRIT PUMP AND SYSTEM 2 ALARM AND STATUS
001-27	L065	2030-3	GRIT PUMP AND SYSTEM 3 ALARM AND STATUS
001-27	L066	2030-4	GRIT PUMP AND SYSTEM 4 ALARM AND STATUS
001-27	L067	2035	GRIT CHAMBER EFFL CHANNEL LEVEL & BAR SCREEN INFL GATES RATIO SET PT

CONTRACT DWG#	F&P DWG#	LOOP #	DESCRIPTION
001-27	L068	3001-1	PRIMARY CLARIFIER 1 SLUDGE COLLECTION ALARM AND STATUS
001-27	L069	3001-2	PRIMARY CLARIFIER 2 SLUDGE COLLECTION ALARM AND STATUS
001-27	L070	3001-3	PRIMARY CLARIFIER 3 SLUDGE COLLECTION ALARM AND STATUS
001-27	L071	3001-4	PRIMARY CLARIFIER 4 SLUDGE COLLECTION ALARM AND STATUS
001-27	L072	3001-5	PRIMARY CLARIFIER 5 SLUDGE COLLECTION ALARM AND STATUS
001-28	L073	3001-6	PRIMARY CLARIFIER 6 SLUDGE COLLECTION ALARM AND STATUS
001-28	L074	3001-7	PRIMARY CLARIFIER 7 SLUDGE COLLECTION ALARM AND STATUS
001-28	L075	3001-8	PRIMARY CLARIFIER 8 SLUDGE COLLECTION ALARM AND STATUS
001-28	L076	3005-1	PRIMARY CLARIFIER 1 SCUM COLLECTOR A ALARM, CONTROL AND STATUS
001-28	L077	3005-1	PRIMARY CLARIFIER 1 SCUM COLLECTOR B ALARM, CONTROL AND STATUS
001-28	L078	3005-2	PRIMARY CLARIFIER 2 SCUM COLLECTOR A ALARM, CONTROL AND STATUS
001-28	L079	3005-2	PRIMARY CLARIFIER 2 SCUM COLLECTOR B ALARM, CONTROL AND STATUS
001-28	L080	3005-3	PRIMARY CLARIFIER 3 SCUM COLLECTOR A ALARM, CONTROL AND STATUS
001-28	L081	3005-3	PRIMARY CLARIFIER 3 SCUM COLLECTOR B ALARM, CONTROL AND STATUS
001-29	L082	3005-4	PRIMARY CLARIFIER 4 SCUM COLLECTOR A ALARM, CONTROL AND STATUS
001-29	L083	3005-4	PRIMARY CLARIFIER 4 SCUM COLLECTOR B ALARM, CONTROL AND STATUS
001-29	L084	3005-5	PRIMARY CLARIFIER 5 SCUM COLLECTOR A ALARM, CONTROL AND STATUS
001-29	L085	3005-5	PRIMARY CLARIFIER 5 SCUM COLLECTOR B ALARM, CONTROL AND STATUS
001-29	L086	3005-6	PRIMARY CLARIFIER 6 SCUM COLLECTOR A ALARM, CONTROL AND STATUS
001-29	L087	3005-6	PRIMARY CLARIFIER 6 SCUM COLLECTOR B ALARM, CONTROL AND STATUS
001-29	L088	3005-7	PRIMARY CLARIFIER 7 SCUM COLLECTOR A ALARM, CONTROL AND STATUS
001-29	L089	3005-7	PRIMARY CLARIFIER 7 SCUM COLLECTOR B ALARM, CONTROL AND STATUS
001-29	L090	3005-8	PRIMARY CLARIFIER 8 SCUM COLLECTOR A ALARM, CONTROL AND STATUS
001-30	L091	3005-8	PRIMARY CLARIFIER 8 SCUM COLLECTOR B ALARM, CONTROL AND STATUS
001-30	L092	3005	PRIMARY CLARIFIER SCUM COLLECTOR FLOW MODE SELECT
001-30	L093	3007	PRIMARY EFFL GATE TO PRIMARY EFFL PUMP STATION STATUS
001-30	L094	3010	CLARIFIER TANK DRAIN PUMPS ALARM AND STATUS
001-30	L095	3012-1	PRIMARY SLUDGE PUMP 1 CONTROL, ALARM AND STATUS
001-30	L096	3012-2	PRIMARY SLUDGE PUMP 2 CONTROL, ALARM AND STATUS
001-30	L097	3012-3	PRIMARY SLUDGE PUMP 3 CONTROL, ALARM AND STATUS
001-30	L098	3012-4	PRIMARY SLUDGE PUMP 4 CONTROL, ALARM AND STATUS
001-30	L099	3012-5	PRIMARY SLUDGE PUMP 5 CONTROL, ALARM AND STATUS
001-31	L100	3012-6	PRIMARY SLUDGE PUMP 6 CONTROL, ALARM AND STATUS
001-31	L101	3012-7	PRIMARY SLUDGE PUMP 7 CONTROL, ALARM AND STATUS
001-31	L102	3012-8	PRIMARY SLUDGE PUMP 8 CONTROL, ALARM AND STATUS
001-31	L103	3015	PRIMARY SLUDGE FLOW TO GRAVITY THICKENERS
001-31	L104	3016	PRIMARY CLARIFIER EFFLUENT CHANNEL LEVEL CONTROL
001-31	L105	3020	PRIMARY SCUM PUMP STATION LEVEL
001-31	L106	3021	PRIMARY SCUM PUMP STATION MIXER ALARM
001-31	L107	3025	SCUM GRINDERS 1 AND 2 ALARM AND STATUS
001-31	L108	3030	SCUM SLURRY TRANSFER PUMPS ALARM AND STATUS
001-32	L109	3035	SCUM PUMP STATION DRAIN SUMP PUMPS ALARM AND STATUS
001-32	L110	3036	SCUM PUMP STATION DRAIN SUMP LEVEL
001-32	L111	3040	PRIMARY CLARIFIER DRAIN SUMP LEVEL
001-32	L112	3041	PRIMARY CLARIFIER DRAIN SUMP PUMPS ALARM AND STATUS
001-32	L113	3045	PRIMARY EFFLUENT WATER PUMPS 1-3 ALARM AND STATUS
001-32	L114	3046	RAW WASTEWATER BYPASS INLET GATE TO CHLORINE CONTACT TANK STATUS
001-32	L115	3047	PRIMARY EFFLUENT BYPASS GATE CONTROL, STATUS AND ALARM
001-32	L116	3050	PRIMARY EFFLUENT FLOW, CONTROL, POSITION AND STATUS
–	L117	3055	PRIMARY EFFLUENT PUMP STATION FLOW TO THICKENER BUILDING
001-33	L118	4001	PRIMARY EFFLUENT/RAW WASTEWATER FLOW
001-33	L119	5001-1	GRAVITY THICKENER 1 ALARM AND STATUS
001-33	L120	5001-2	GRAVITY THICKENER 2 ALARM AND STATUS
001-33	L121	5002-1	GRAVITY THICKENER SLUDGE PUMP 1 CONTROL, ALARM AND STATUS
001-33	L122	5002-2	GRAVITY THICKENER SLUDGE PUMP 2 CONTROL, ALARM AND STATUS
001-33	L123	5002-3	GRAVITY THICKENER SLUDGE PUMP 3 CONTROL, ALARM AND STATUS
001-33	L124	5002-4	GRAVITY THICKENER SLUDGE PUMP 4 CONTROL, ALARM AND STATUS
–	L125	5003	AWT SLUDGE FLOW TO GRAVITY THICKENERS
001-33	L126	6001-1	SLUDGE STORAGE TANK MIXER 1 ALARM AND STATUS
001-34	L127	6001-2	SLUDGE STORAGE TANK MIXER 2 ALARM AND STATUS
001-34	L128	6001-3	SLUDGE STORAGE TANK MIXER 3 ALARM AND STATUS
001-34	L129	6001-4	SLUDGE STORAGE TANK MIXER 4 ALARM AND STATUS
001-34	L130	6003	SLUDGE STORAGE DRAIN SUMP PUMP LEVEL
001-34	L131	6004	SLUDGE STORAGE DRAIN SUMP 2 ALARM AND STATUS
001-34	L132	6005-1	SLUDGE STORAGE TANK 1 LEVEL AND ALARM
001-34	L133	6005-2	SLUDGE STORAGE TANK 2 LEVEL AND ALARM
001-34	L134	6007	SLUDGE STORAGE TANK GRINDERS ALARM AND STATUS
001-34	L135	6008	MAIN SLUDGE TRANSFER PUMPS ALARM AND STATUS
001-35	L136	6010	AUXILIARY SLUDGE TRANSFER PUMP ALARM AND STATUS
001-35	L137	8005	SODIUM HYPOCHLORITE TRANSFER PUMPS ALARM AND STATUS
001-35	L138	8006	SODIUM HYPOCHLORITE TRANSFER PUMP DISTRIBUTION FLOW
001-35	L139	8010	PRELIMINARY TREATMENT BUILDING NaOCL LEVEL
001-35	L140	8011-1	PRELIMINARY TREATMENT NaOCL LEVEL
001-35	L141	8011-2	SECONDARY TREATMENT NaOCL LEVEL
001-35	L142	8011-3	LIQUID POLYMER LEVEL

CONTRACT DWG#	F&P DWG#	LOOP #	DESCRIPTION
001-35	L143	8012	PRELIMINARY TREATMENT BLDG NaOCL PUMPS ALARM AND STATUS
001-35	L144	SPARE	SPARE DIGITAL INPUTS
001-36	L145	8015	SECONDARY SERVICE PUMP STATION NaOCL STORAGE TANK LEVEL
001-36	L146	8016	PRIMARY TREATMENT NaOCL DISTRIBUTION PUMPS FLOWS
001-36	L147	8017	SECOND. SERVICE NaOCL DISTRIBUTION PUMPS ALARM AND STATUS
001-36	L148	8020	SECONDARY SERVICE NaOCL PUMP STATION DISTRIBUTION FLOW
001-36	L149	8051	LIQUID POLYMER RECIRCULATION PUMPS ALARM AND STATUS
001-36	L150	8055	POLYMER DILUTION/TRANSFER PUMPS ALARM AND STATUS
001-36	L151	8057	POLYMER FLOW TO MIX FEED TANKS
001-36	L152	8060-1	POLYMER FEED TANK 1 LEVEL AND ALARM
001-36	L153	8060-2	POLYMER FEED TANK 2 LEVEL AND ALARM
001-37	L154	8070	POLYMER FEED PUMPS ALARM AND STATUS
001-37	L155	9001	SLUDGE STORAGE TANKS FOUL AIR BLOWERS ALARM AND STATUS
001-37	L156	9005	PRELIMINARY TREATMENT BUILDING FOUL AIR BLOWERS COMB. GAS
001-37	L157	9005	FOUR MILE RUN RELIEF PUMP STA. FOUL AIR BLOWERS COMB. GAS
001-37	L158	9005	LOW LEVEL PUMP STATION FOUL AIR BLOWER COMBUSTIBLE GAS
001-37	L159	9010	PRELIM. TREATMENT BLDG FOUL AIR BLOWERS ALARM AND STATUS
001-37	L160	9011	PRELIMINARY TREATMENT BUILDING HYDROGEN SULFIDE
001-37	L161	9012	PRELIMINARY TREATMENT BUILDING COMBUSTIBLE GAS
001-37	L162	9015	FOUR MILE RELIEF PUMP STATION FOUL AIR BLOWERS ALARM AND STATUS
001-38	L163	9020-1	GRAVITY THICKENERS FOUL AIR BLOWER 1 ALARM AND STATUS
001-38	L164	9020-2	GRAVITY THICKENERS FOUL AIR BLOWER 2 ALARM AND STATUS
001-38	L165	9020-3	GRAVITY THICKENERS FOUL AIR BLOWER 3 ALARM AND STATUS
001-38	L166	9020-4	GRAVITY THICKENERS FOUL AIR BLOWER 4 ALARM AND STATUS
001-38	L167	9021	GRAVITY SLUDGE THICKENERS H2S/COMBUSTIBLE GAS ALARM
001-38	L168	9025	FLOTATION THICKENERS FOUL AIR BLOWER PUMPS ALARM & STATUS
001-38	L169	9030	PRIMARY SCUM WETWELL FOUL AIR BLOWER ALARM AND STATUS
001-38	L170	9035	LOW LEVEL PUMP STATION FOUL AIR BLOWER ALARM AND STATUS
001-38	L171	9050	FOUL AIR PIPE SUMP 1 PUMP ALARM AND STATUS
001-39	L172	9051	ODOR CONTROL SUMP 1 LEVEL
001-39	L173	9055	FOUL AIR PIPE SUMP 2 PUMP ALARM AND STATUS
001-39	L174	9056	FOUL AIR PIPE SUMP 2 LEVEL
001-39	L175	9060-1	PRELIM. TREATMENT BLDG NaOCL FACILITY EMERGENCY EYEWASH/SHOWER ALARM
001-39	L176	9060-2	SECONDARY SERVICE BLDG NaOCL FACILITY EMERGENCY EYEWASH/SHOWER ALARM

THE FISCHER AND PORTER COMPANY
QUALITY SYSTEM IS CERTIFIED
COMPLIANT TO THE ISO 9001 STANDARD

☐ DRAWING ISSUED FOR APPROVAL ONLY, NOT FOR CONSTRUCTION

☒ DRAWING ISSUED FOR CONSTRUCTION

REV	REVISION DESCRIPTION	DRAWN	DATE	CHKD	ENGR
1	FINAL – AS INSTALLED	LR	11/27/95	LFR	DB
0	APPROVAL	LR	6/15/94	LFR	JF

INDEX

UPGRADE AND EXPANSION–PHASE V B.
ARLINGTON COUNTY WPCP, VA

AUTHORITY E931215.913 (NC15INDC)

FISCHER & PORTER
WARMINSTER, PA 18974 USA

DRAWING NUMBER	REV
Combined 931215-L00A, B and C	1

NOT REFERRED FROM CONTRACT DRAWINGS

RECORD DRAWING

NO.	DATE	DRWN	CHKD	DESCRIPTION
1	11/98	FXP	ASG	RECORD DRAWING

REVISIONS

DESIGNED BY: JRD
DRAWN BY: JRD
CHECKED BY/DATE/:
APPROVED BY/DATE:

THIS DRAWING HAS BEEN COMPILED
HAZEN AND SAWYER, P.C.

ARLINGTON COUNTY, VIRGINIA
WATER POLLUTION CONTROL PLANT
UPGRADE AND EXPANSION- PHASE IIB

LOOP DIAGRAMS INDEX PAGES

SCALE NOTE

SCALE BAR SHOWN BELOW IS ONE INCH LONG ON A FULL SIZE DRAWING. WHEN SCALING DRAWINGS, MEASURE BAR TO DETERMINE IF SCALES SHOWN WILL REQUIRE ADJUSTING.

← ONE INCH →

CONTRACT NO.
9002 – WPC
YEAR 1991
LOCATION CODE
SPECIALTY CODE
I
PROJECT NO.
5002 – 033
FILE NAME
001-23.DWG
DRAWING NO.
001-23
SHEET NO. 334

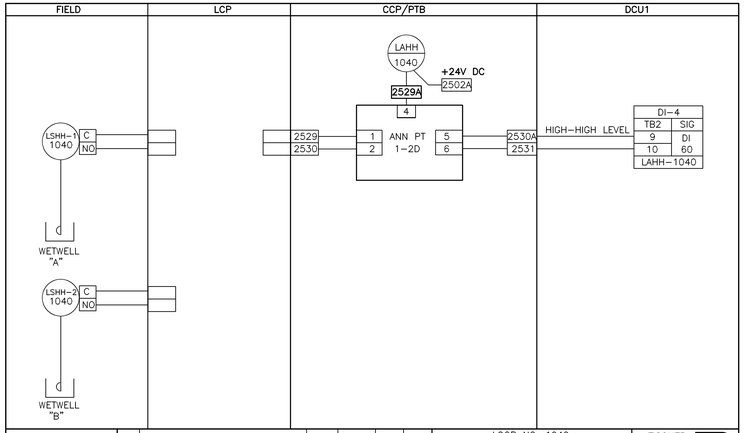

X DRAWING ISSUED FOR APPROVAL ONLY, NOT FOR CONSTRUCTION	2	REV – AS INSTALLED	DFG	02JAN98	DGR	DGR	LOOP NO. 1040 LOW LEVEL PUMP STATION WETWELL A/B LEVEL UPGRADE AND EXPANSION–PHASE V B ARLINGTON COUNTY WPCP, VA.	FISCHER & PORTER WARMINSTER, PA 18974 USA	
	1	FINAL – AS INSTALLED	GTS	08SEP95	LR	DB		DRAWING NUMBER	REV
☐ DRAWING ISSUED FOR CONSTRUCTION	0	APPROVAL	LR	10JUN94	LFR	JF			
	REV	REVISION DESCRIPTION	DRAWN	DATE	CHKD	ENGR	AUTHORITY E931215.913 (NC15L037)	931215–L037	1

REFER TO CONTRACT DRAWING NUMBER 001–7

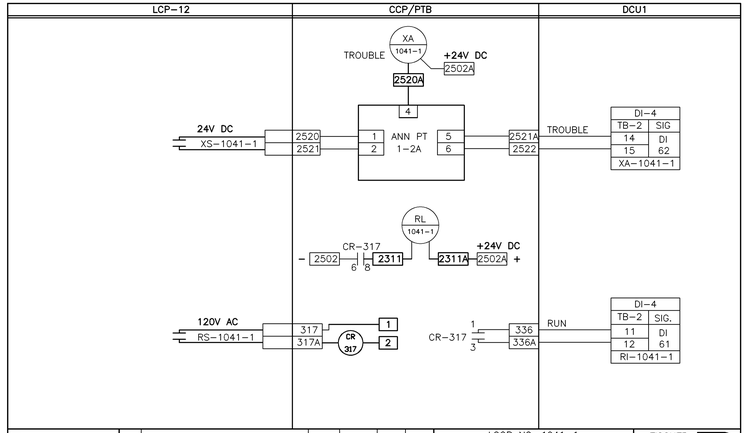

X DRAWING ISSUED FOR APPROVAL ONLY, NOT FOR CONSTRUCTION	2	REV – AS INSTALLED	DFG	02JAN98	DGR	DGR	LOOP NO. 1041–1 LOW LEVEL PUMP STATION WETWELL PUMP 1 ALARM AND STATUS UPGRADE AND EXPANSION–PHASE V B ARLINGTON COUNTY WPCP, VA.	FISCHER & PORTER WARMINSTER, PA 18974 USA	
	1	FINAL – AS INSTALLED	GTS	08SEP95	LR	DB		DRAWING NUMBER	REV
☐ DRAWING ISSUED FOR CONSTRUCTION	0	APPROVAL	LR	10JUN94	LFR	JF			
	REV	REVISION DESCRIPTION	DRAWN	DATE	CHKD	ENGR	AUTHORITY E931215.913 (NC15L038)	931215–L038	1

REFER TO CONTRACT DRAWING NUMBER 001–7

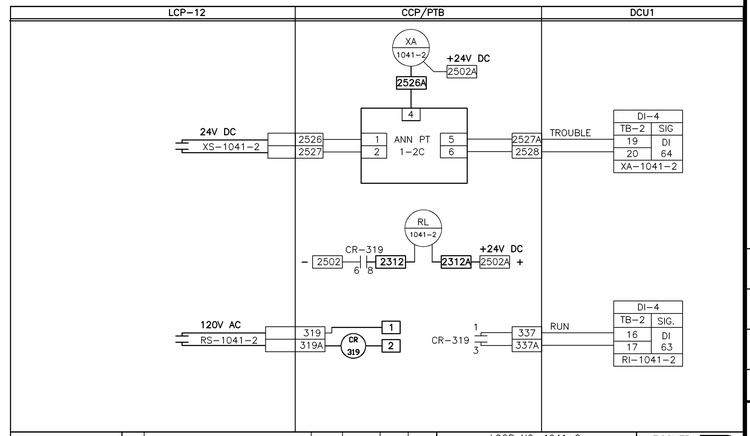

X DRAWING ISSUED FOR APPROVAL ONLY, NOT FOR CONSTRUCTION	2	REV – AS INSTALLED	DFG	02JAN98	DGR	DGR	LOOP NO. 1041–2 LOW LEVEL PUMP STATION WETWELL PUMP 2 ALARM AND STATUS UPGRADE AND EXPANSION–PHASE V B ARLINGTON COUNTY WPCP, VA.	FISCHER & PORTER WARMINSTER, PA 18974 USA	
	1	FINAL – AS INSTALLED	GTS	08SEP95	LR	DB		DRAWING NUMBER	REV
☐ DRAWING ISSUED FOR CONSTRUCTION	0	APPROVAL	LR	10JUN94	LFR	JF			
	REV	REVISION DESCRIPTION	DRAWN	DATE	CHKD	ENGR	AUTHORITY E931215.913 (NC15L039)	931215–L039	1

REFER TO CONTRACT DRAWING NUMBER 001–7

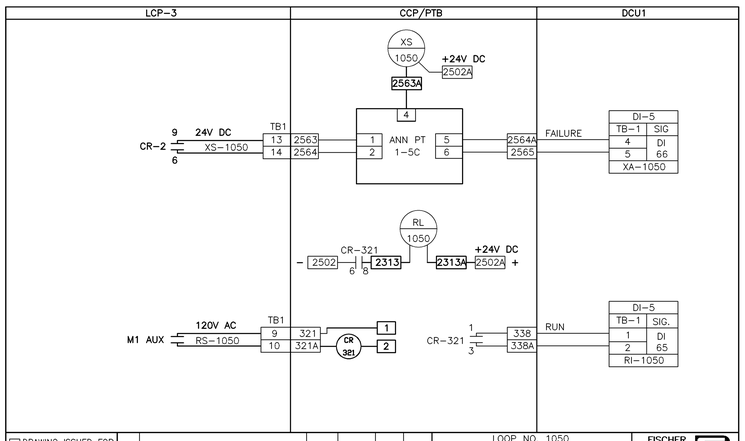

X DRAWING ISSUED FOR APPROVAL ONLY, NOT FOR CONSTRUCTION	2	REV – AS INSTALLED	DFG	02JAN98	DGR	DGR	LOOP NO. 1050 SCUM CONCENTRATOR ALARM AND STATUS UPGRADE AND EXPANSION–PHASE V B ARLINGTON COUNTY WPCP, VA.	FISCHER & PORTER WARMINSTER, PA 18974 USA	
	1	FINAL – AS INSTALLED	GTS	08SEP95	LR	DB		DRAWING NUMBER	REV
☐ DRAWING ISSUED FOR CONSTRUCTION	0	APPROVAL	LR	10JUN94	LFR	JF			
	REV	REVISION DESCRIPTION	DRAWN	DATE	CHKD	ENGR	AUTHORITY E931215.913 (NC15L040)	931215–L040	1

REFER TO CONTRACT DRAWING NUMBER 001–7

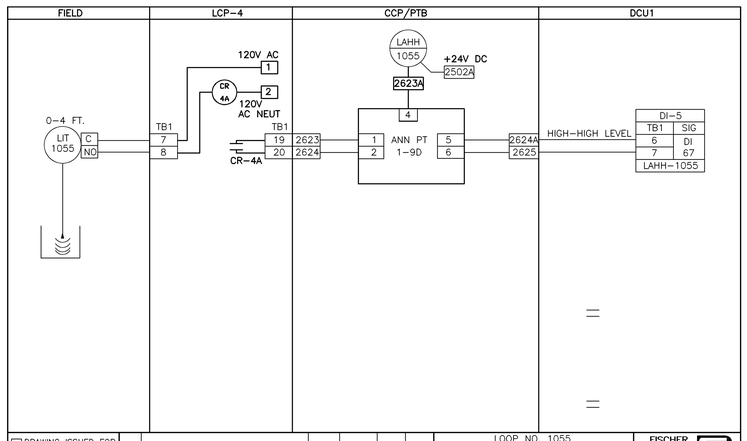

X DRAWING ISSUED FOR APPROVAL ONLY, NOT FOR CONSTRUCTION	2	REV – AS INSTALLED	DFG	02JAN98	DGR	DGR	LOOP NO. 1055 CONCENTRATED SCUM SUMP LEVEL UPGRADE AND EXPANSION–PHASE V B ARLINGTON COUNTY WPCP, VA.	FISCHER & PORTER WARMINSTER, PA 18974 USA	
	1	FINAL – AS INSTALLED	GTS	08SEP95	LR	DB		DRAWING NUMBER	REV
☐ DRAWING ISSUED FOR CONSTRUCTION	0	APPROVAL	LR	10JUN94	LFR	JF			
	REV	REVISION DESCRIPTION	DRAWN	DATE	CHKD	ENGR	AUTHORITY E931215.913 (NC15L041)	931215–L041	1

REFER TO CONTRACT DRAWING NUMBER 001–8

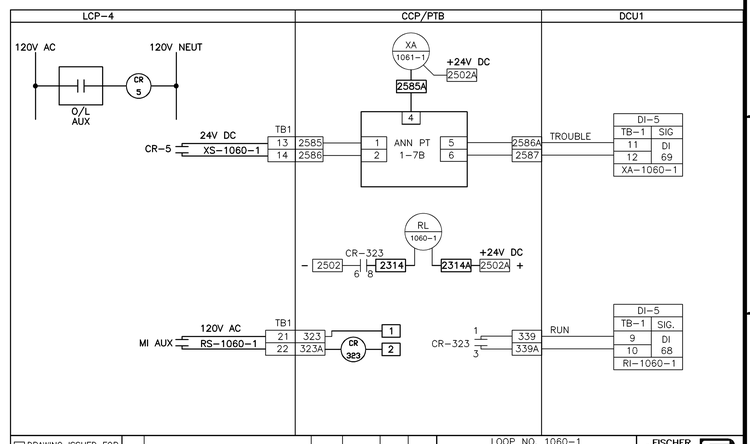

X DRAWING ISSUED FOR APPROVAL ONLY, NOT FOR CONSTRUCTION	2	REV – AS INSTALLED	DFG	02JAN98	DGR	DGR	LOOP NO. 1060–1 CONCENTRATED SCUM PUMP 1 ALARM AND STATUS UPGRADE AND EXPANSION–PHASE V B ARLINGTON COUNTY WPCP, VA.	FISCHER & PORTER WARMINSTER, PA 18974 USA	
	1	FINAL – AS INSTALLED	GTS	08SEP95	LR	DB		DRAWING NUMBER	REV
☐ DRAWING ISSUED FOR CONSTRUCTION	0	APPROVAL	LR	10JUN94	LFR	JF			
	REV	REVISION DESCRIPTION	DRAWN	DATE	CHKD	ENGR	AUTHORITY E931215.913 (NC15L042)	931215–L042	1

REFER TO CONTRACT DRAWING NUMBER 001–8

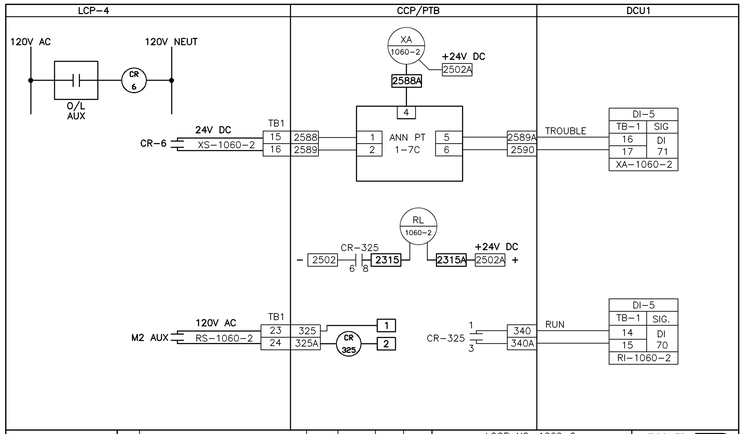

X DRAWING ISSUED FOR APPROVAL ONLY, NOT FOR CONSTRUCTION	2	REV – AS INSTALLED	DFG	02JAN98	DGR	DGR	LOOP NO. 1060–2 CONCENTRATED SCUM PUMP 2 ALARM AND STATUS UPGRADE AND EXPANSION–PHASE V B ARLINGTON COUNTY WPCP, VA.	FISCHER & PORTER WARMINSTER, PA 18974 USA	
	1	FINAL – AS INSTALLED	GTS	08SEP95	LR	DB		DRAWING NUMBER	REV
☐ DRAWING ISSUED FOR CONSTRUCTION	0	APPROVAL	LR	10JUN94	LFR	JF			
	REV	REVISION DESCRIPTION	DRAWN	DATE	CHKD	ENGR	AUTHORITY E931215.913 (NC15L043)	931215–L043	1

REFER TO CONTRACT DRAWING NUMBER 001–8

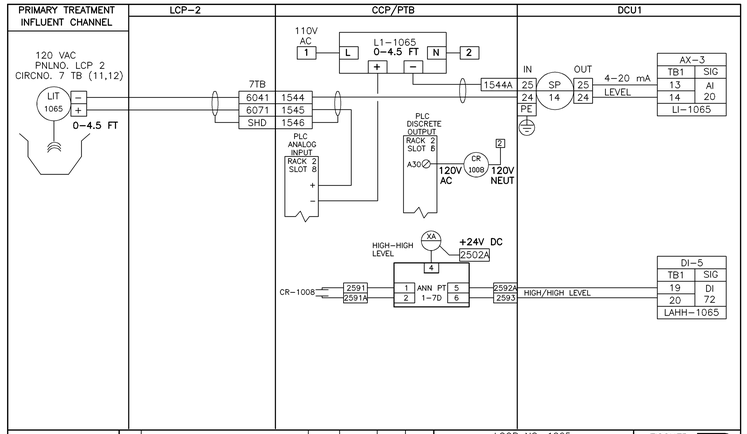

X DRAWING ISSUED FOR APPROVAL ONLY, NOT FOR CONSTRUCTION	2	REV – AS INSTALLED	DFG	02JAN98	DGR	DGR	LOOP NO. 1065 PRIMARY TREATMENT INFLUENT CHANNEL LEVEL UPGRADE AND EXPANSION–PHASE V B ARLINGTON COUNTY WPCP, VA.	FISCHER & PORTER WARMINSTER, PA 18974 USA	
	1	FINAL – AS INSTALLED	GTS	08SEP95	LR	DB		DRAWING NUMBER	REV
☐ DRAWING ISSUED FOR CONSTRUCTION	0	APPROVAL	LR	10JUN94	LFR	JF			
	REV	REVISION DESCRIPTION	DRAWN	DATE	CHKD	ENGR	AUTHORITY E931215.913 (NC15L044)	931215–L044	1

REFER TO CONTRACT DRAWING NUMBER 001–8

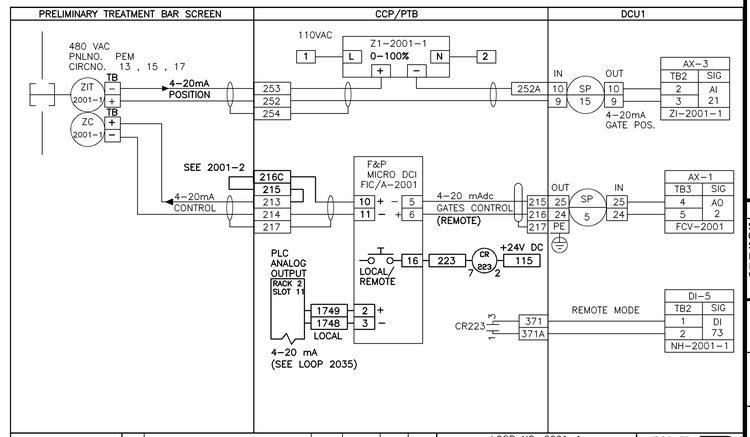

X DRAWING ISSUED FOR APPROVAL ONLY, NOT FOR CONSTRUCTION	2	REV – AS INSTALLED	DFG	02JAN98	DGR	DGR	LOOP NO. 2001–1 PRELIMINARY TREATMENT BAR SCREEN INFLUENT SLIDE GATE 1 CONTROL UPGRADE AND EXPANSION–PHASE V B ARLINGTON COUNTY WPCP, VA.	FISCHER & PORTER WARMINSTER, PA 18974 USA	
	1	FINAL – AS INSTALLED	GTS	08SEP95	LR	DB		DRAWING NUMBER	REV
☐ DRAWING ISSUED FOR CONSTRUCTION	0	APPROVAL	LR	10JUN94	LFR	JF			
	REV	REVISION DESCRIPTION	DRAWN	DATE	CHKD	ENGR	AUTHORITY E931215.913 (NC15L045)	931215–L045	1

REFER TO CONTRACT DRAWING NUMBER 001–8

RECORD DRAWING

NO.	DATE	DRWN	CHKD	DESCRIPTION
1	11/98	FJP	ASG	RECORD DRAWING

REVISIONS

DESIGNED BY: JRD

DRAWN BY: JRD

CHECKED BY/DATE/:

APPROVED BY/DATE:

THIS DRAWING HAS BEEN COMPILED HAZEN AND SAWYER, P.C.

ARLINGTON COUNTY, VIRGINIA
WATER POLLUTION CONTROL PLANT
UPGRADE AND EXPANSION- PHASE IIB

LOOP DIAGRAMS

SCALE NOTE

SCALE BAR SHOWN BELOW IS ONE INCH LONG ON A FULL SIZE DRAWING. WHEN SCALING DRAWINGS, MEASURE BAR TO DETERMINE IF SCALES SHOWN WILL REQUIRE ADJUSTING.

ONE INCH

CONTRACT NO. 9002 – WPC

YEAR 1991

LOCATION CODE

SPECIALTY CODE I

PROJECT NO. 5002 – 033

FILE NAME 001–24.DWG

DRAWING NO. 001–24

SHEET NO. 335

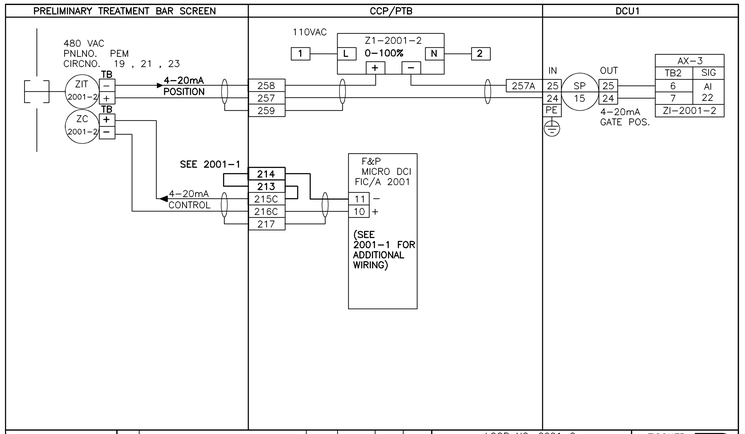

☒ DRAWING ISSUED FOR APPROVAL ONLY, NOT FOR CONSTRUCTION	2	REV – AS INSTALLED	DFG	02JAN98	DGR	DGR	LOOP NO. 2001-2 PRELIMINARY TREATMENT BAR SCREEN INFLUENT SLIDE GATE 2 CONTROL UPGRADE AND EXPANSION–PHASE V B ARLINGTON COUNTY WPCP, VA.	FISCHER & PORTER WARMINSTER, PA 18974 USA
	1	FINAL – AS INSTALLED	GTS	08SEP95	LR	DB		DRAWING NUMBER / REV
☐ DRAWING ISSUED FOR CONSTRUCTION	0	APPROVAL	LR	10JUN94	LFR	JF		
	REV	REVISION DESCRIPTION	DRAWN	DATE	CHKD	ENGR	AUTHORITY E931215.913 (NC15L046)	931215-L046 / 1

REFER TO CONTRACT DRAWING NUMBER 001-8

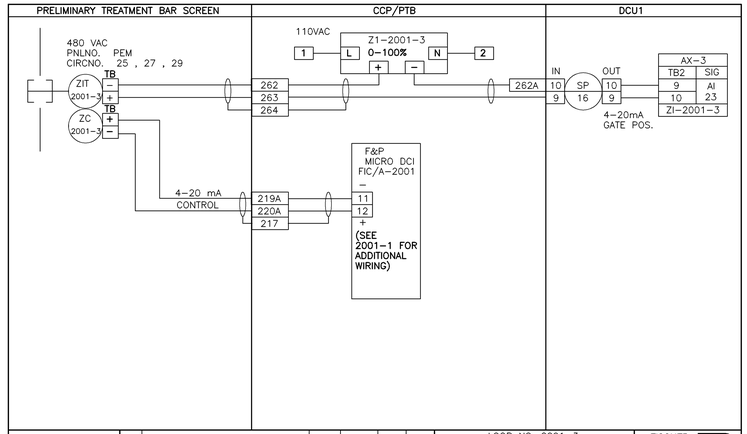

☒ DRAWING ISSUED FOR APPROVAL ONLY, NOT FOR CONSTRUCTION							LOOP NO. 2001-3 PRELIMINARY TREATMENT BAR SCREEN INFLUENT SLIDE GATE 3 CONTROL UPGRADE AND EXPANSION–PHASE V B ARLINGTON COUNTY WPCP, VA.	FISCHER & PORTER WARMINSTER, PA 18974 USA
	1	FINAL – AS INSTALLED	GTS	08SEP95	LR	DB		DRAWING NUMBER / REV
☐ DRAWING ISSUED FOR CONSTRUCTION	0	APPROVAL	LR	10JUN94	LFR	JF		
	REV	REVISION DESCRIPTION	DRAWN	DATE	CHKD	ENGR	AUTHORITY E931215.913 (NC15L047)	931215-L047 / 1

REFER TO CONTRACT DRAWING NUMBER 001-8

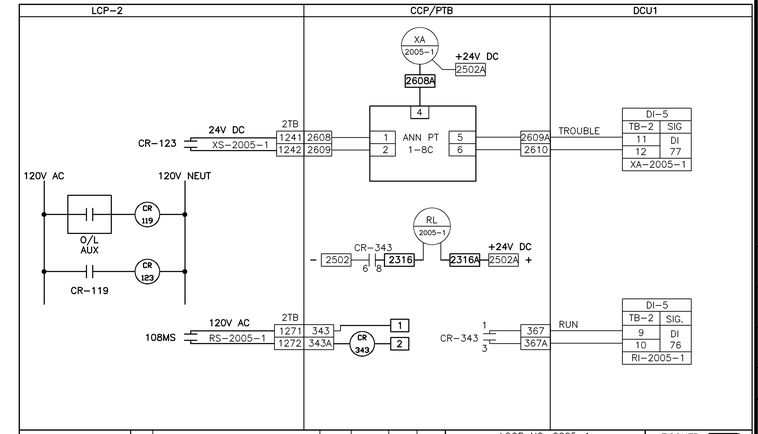

☒ DRAWING ISSUED FOR APPROVAL ONLY, NOT FOR CONSTRUCTION	2	REV – AS INSTALLED	DFG	02JAN98	DGR	DGR	LOOP NO. 2005-1 PRELIMINARY TREATMENT BAR SCREEN 1 ALARM AND STATUS UPGRADE AND EXPANSION–PHASE V B ARLINGTON COUNTY WPCP, VA.	FISCHER & PORTER WARMINSTER, PA 18974 USA
	1	FINAL – AS INSTALLED	GTS	08SEP95	LR	DB		DRAWING NUMBER / REV
☐ DRAWING ISSUED FOR CONSTRUCTION	0	APPROVAL	LR	10JUN94	LFR	JF		
	REV	REVISION DESCRIPTION	DRAWN	DATE	CHKD	ENGR	AUTHORITY E931215.913 (NC15L048)	931215-L048 / 1

REFER TO CONTRACT DRAWING NUMBER 001-8

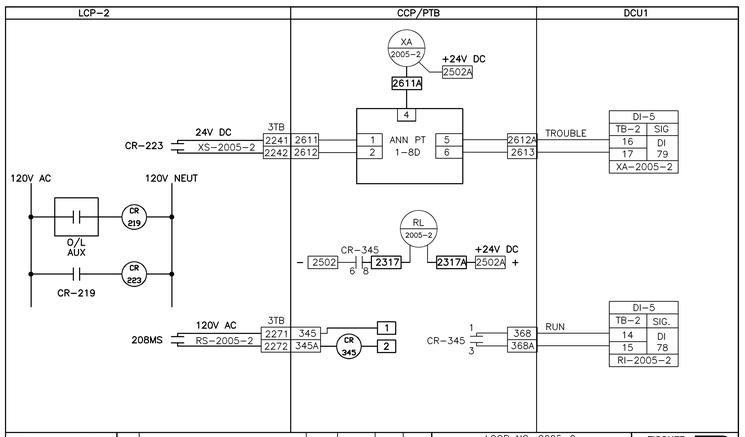

☒ DRAWING ISSUED FOR APPROVAL ONLY, NOT FOR CONSTRUCTION	2	REV – AS INSTALLED	DFG	02JAN98	DGR	DGR	LOOP NO. 2005-2 PRELIMINARY TREATMENT BAR SCREEN 2 ALARM AND STATUS UPGRADE AND EXPANSION–PHASE V B ARLINGTON COUNTY WPCP, VA.	FISCHER & PORTER WARMINSTER, PA 18974 USA
	1	FINAL – AS INSTALLED	GTS	08SEP95	LR	DB		DRAWING NUMBER / REV
☐ DRAWING ISSUED FOR CONSTRUCTION	0	APPROVAL	LR	10JUN94	LFR	JF		
	REV	REVISION DESCRIPTION	DRAWN	DATE	CHKD	ENGR	AUTHORITY E931215.913 (NC15L049)	931215-L049 / 1

REFER TO CONTRACT DRAWING NUMBER 001-8

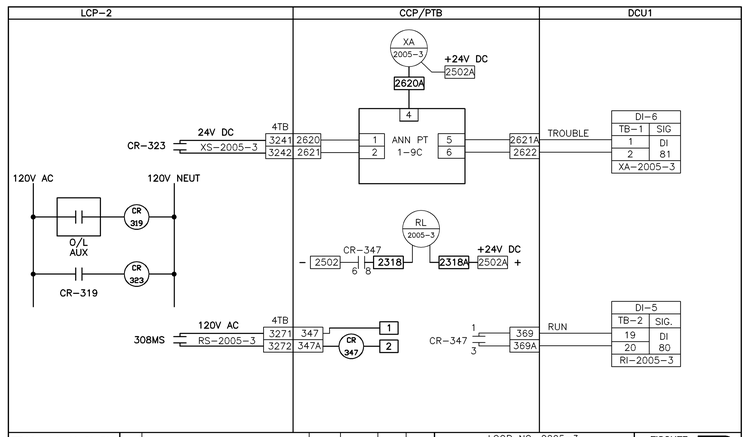

☒ DRAWING ISSUED FOR APPROVAL ONLY, NOT FOR CONSTRUCTION	2	REV – AS INSTALLED	DFG	02JAN98	DGR	DGR	LOOP NO. 2005-3 PRELIMINARY TREATMENT BAR SCREEN 3 ALARM AND STATUS UPGRADE AND EXPANSION–PHASE V B ARLINGTON COUNTY WPCP, VA.	FISCHER & PORTER WARMINSTER, PA 18974 USA
	1	FINAL – AS INSTALLED	GTS	08SEP95	LR	DB		DRAWING NUMBER / REV
☐ DRAWING ISSUED FOR CONSTRUCTION	0	APPROVAL	LR	10JUN94	LFR	JF		
	REV	REVISION DESCRIPTION	DRAWN	DATE	CHKD	ENGR	AUTHORITY E931215.913 (NC15L050)	931215-L050 / 1

REFER TO CONTRACT DRAWING NUMBER 001-8

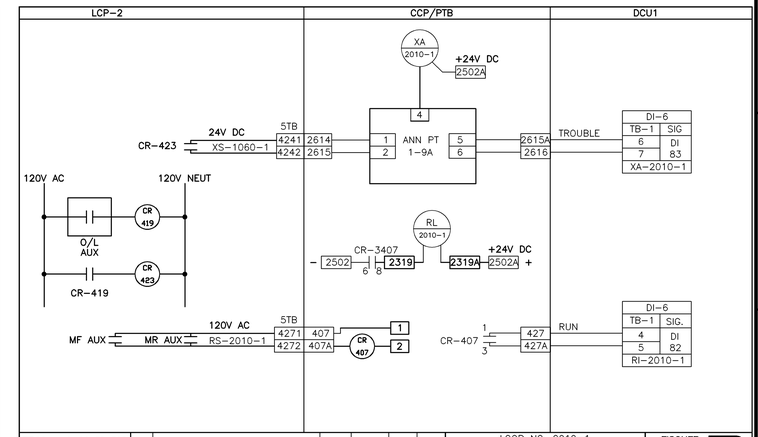

☒ DRAWING ISSUED FOR APPROVAL ONLY, NOT FOR CONSTRUCTION	2	REV – AS INSTALLED	DFG	02JAN98	DGR	DGR	LOOP NO. 2010-1 SCREENINGS SCREW CONVEYOR 1 ALARM AND STATUS UPGRADE AND EXPANSION–PHASE V B ARLINGTON COUNTY WPCP, VA.	FISCHER & PORTER WARMINSTER, PA 18974 USA
	1	FINAL – AS INSTALLED	GTS	08SEP95	LR	DB		DRAWING NUMBER / REV
☐ DRAWING ISSUED FOR CONSTRUCTION	0	APPROVAL	LR	10JUN94	LFR	JF		
	REV	REVISION DESCRIPTION	DRAWN	DATE	CHKD	ENGR	AUTHORITY E931215.913 (NC15L051)	931215-L051 / 1

REFER TO CONTRACT DRAWING NUMBER 001-8

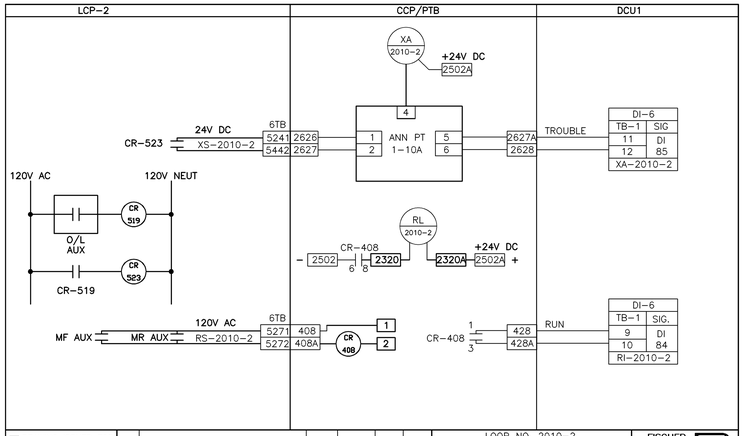

☒ DRAWING ISSUED FOR APPROVAL ONLY, NOT FOR CONSTRUCTION	2	REV – AS INSTALLED	DFG	02JAN98	DGR	DGR	LOOP NO. 2010-2 SCREENINGS SCREW CONVEYOR 2 ALARM AND STATUS UPGRADE AND EXPANSION–PHASE V B ARLINGTON COUNTY WPCP, VA.	FISCHER & PORTER WARMINSTER, PA 18974 USA
	1	FINAL – AS INSTALLED	GTS	08SEP95	LR	DB		DRAWING NUMBER / REV
☐ DRAWING ISSUED FOR CONSTRUCTION	0	APPROVAL	LR	10JUN94	LFR	JF		
	REV	REVISION DESCRIPTION	DRAWN	DATE	CHKD	ENGR	AUTHORITY E931215.913 (NC15L052)	931215-L052 / 1

REFER TO CONTRACT DRAWING NUMBER 001-8

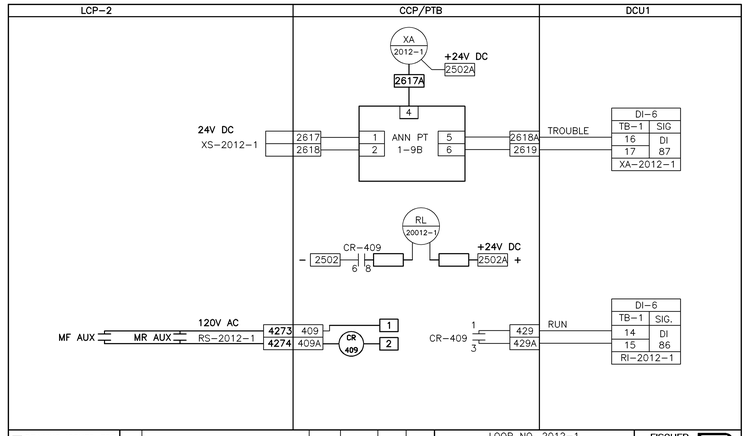

☒ DRAWING ISSUED FOR APPROVAL ONLY, NOT FOR CONSTRUCTION	2	REV – AS INSTALLED	DFG	02JAN98	DGR	DGR	LOOP NO. 2012-1 SCREENINGS SCREW COMPACTOR 1 ALARM AND STATUS UPGRADE AND EXPANSION–PHASE V B ARLINGTON COUNTY WPCP, VA.	FISCHER & PORTER WARMINSTER, PA 18974 USA
	1	FINAL – AS INSTALLED	GTS	08SEP95	LR	DB		DRAWING NUMBER / REV
☐ DRAWING ISSUED FOR CONSTRUCTION	0	APPROVAL	LR	10JUN94	LFR	JF		
	REV	REVISION DESCRIPTION	DRAWN	DATE	CHKD	ENGR	AUTHORITY E931215.913 (NC15L053)	931215-L053 / 1

REFER TO CONTRACT DRAWING NUMBER 001-9

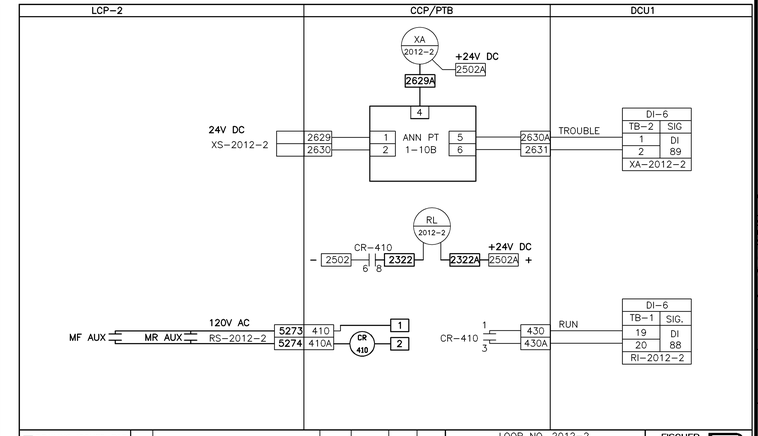

☒ DRAWING ISSUED FOR APPROVAL ONLY, NOT FOR CONSTRUCTION	2	REV – AS INSTALLED	DFG	02JAN98	DGR	DGR	LOOP NO. 2012-2 SCREENINGS SCREW COMPACTOR 2 ALARM AND STATUS UPGRADE AND EXPANSION–PHASE V B ARLINGTON COUNTY WPCP, VA.	FISCHER & PORTER WARMINSTER, PA 18974 USA
	1	FINAL – AS INSTALLED	GTS	08SEP95	LR	DB		DRAWING NUMBER / REV
☐ DRAWING ISSUED FOR CONSTRUCTION	0	APPROVAL	LR	10JUN94	LFR	JF		
	REV	REVISION DESCRIPTION	DRAWN	DATE	CHKD	ENGR	AUTHORITY E931215.913 (NC15L054)	931215-L054 / 1

REFER TO CONTRACT DRAWING NUMBER 001-9

RECORD DRAWING

NO.	DATE	DRWN	CHKD	DESCRIPTION
				REVISIONS
1	11/98	FXP	ASG	RECORD DRAWING

DESIGNED BY: JRD
DRAWN BY: JRD
CHECKED BY/DATE/:
APPROVED BY/DATE:

THIS DRAWING HAS BEEN COMPILED
HAZEN AND SAWYER, P.C.

ARLINGTON COUNTY, VIRGINIA
WATER POLLUTION CONTROL PLANT
UPGRADE AND EXPANSION- PHASE IIB

LOOP DIAGRAMS

SCALE NOTE

SCALE BAR SHOWN BELOW IS ONE INCH LONG ON A FULL SIZE DRAWING. WHEN SCALING DRAWINGS, MEASURE BAR TO DETERMINE IF SCALES SHOWN WILL REQUIRE ADJUSTING.

ONE INCH

CONTRACT NO. 9002 – WPC
YEAR 1991
LOCATION CODE
SPECIALTY CODE I
PROJECT NO. 5002 – 033
FILE NAME 001-25.DWG
DRAWING NO. 001-25
SHEET NO. 336

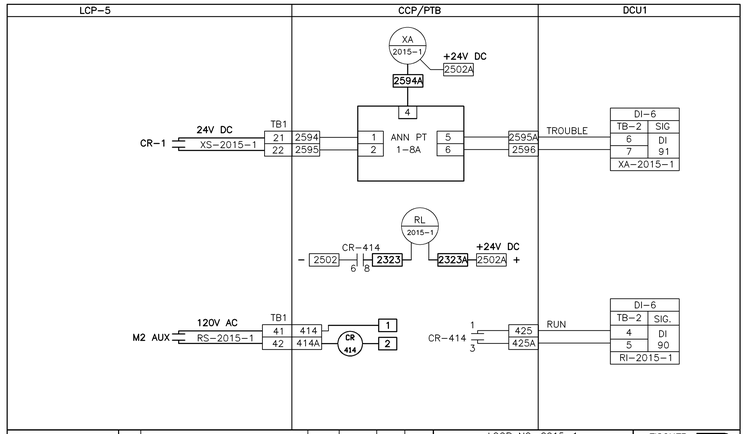

X DRAWING ISSUED FOR APPROVAL ONLY, NOT FOR CONSTRUCTION	2	REV – AS INSTALLED	DFG	02JAN96	DGR	DGR	LOOP NO. 2015-1 GRIT CLASSIFIER 1 ALARM AND STATUS UPGRADE AND EXPANSION-PHASE V B ARLINGTON COUNTY WPCP, VA.	FISCHER & PORTER WARMINSTER, PA 18974 USA	
	1	FINAL – AS INSTALLED	GTS	08SEP95	LR	DB		DRAWING NUMBER	REV
☐ DRAWING ISSUED FOR CONSTRUCTION	0	APPROVAL	LR	13JUN94	LFR	JF			
	REV	REVISION DESCRIPTION	DRAWN	DATE	CHKD	ENGR	AUTHORITY E931215.913 (NC15L055)	931215-L055	1

REFER TO CONTRACT DRAWING NUMBER 001-9

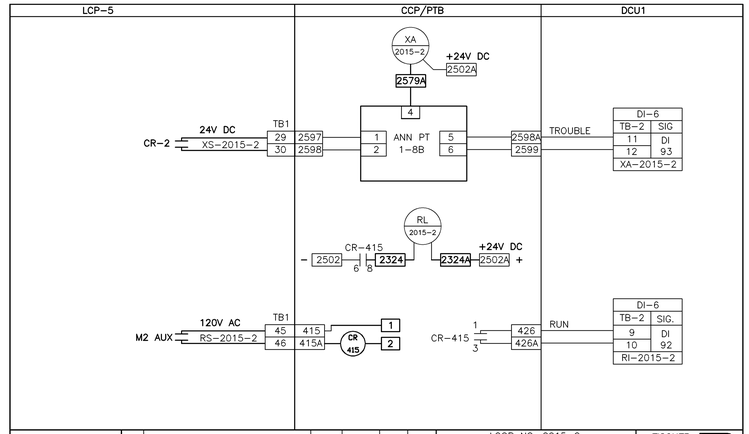

X DRAWING ISSUED FOR APPROVAL ONLY, NOT FOR CONSTRUCTION	2	REV – AS INSTALLED	DFG	02JAN96	DGR	DGR	LOOP NO. 2015-2 GRIT CLASSIFIER 2 ALARM AND STATUS UPGRADE AND EXPANSION-PHASE V B ARLINGTON COUNTY WPCP, VA.	FISCHER & PORTER WARMINSTER, PA 18974 USA	
	1	FINAL – AS INSTALLED	GTS	08SEP95	LR	DB		DRAWING NUMBER	REV
☐ DRAWING ISSUED FOR CONSTRUCTION	0	APPROVAL	LR	13JUN94	LFR	JF			
	REV	REVISION DESCRIPTION	DRAWN	DATE	CHKD	ENGR	AUTHORITY E931215.913 (NC15L056)	931215-L056	1

REFER TO CONTRACT DRAWING NUMBER 001-9

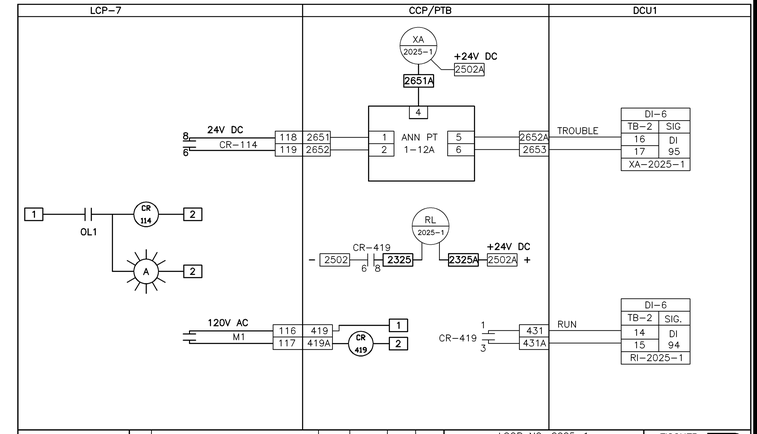

X DRAWING ISSUED FOR APPROVAL ONLY, NOT FOR CONSTRUCTION	2	REV – AS INSTALLED	DFG	02JAN96	DGR	DGR	LOOP NO. 2025-1 GRIT CHAMBER 1 MIXER ALARM AND STATUS UPGRADE AND EXPANSION-PHASE V B ARLINGTON COUNTY WPCP, VA.	FISCHER & PORTER WARMINSTER, PA 18974 USA	
	1	FINAL – AS INSTALLED	GTS	08SEP95	LR	DB		DRAWING NUMBER	REV
☐ DRAWING ISSUED FOR CONSTRUCTION	0	APPROVAL	LR	13JUN94	LFR	JF			
	REV	REVISION DESCRIPTION	DRAWN	DATE	CHKD	ENGR	AUTHORITY E931215.913 (NC15L057)	931215-L057	1

REFER TO CONTRACT DRAWING NUMBER 001-9

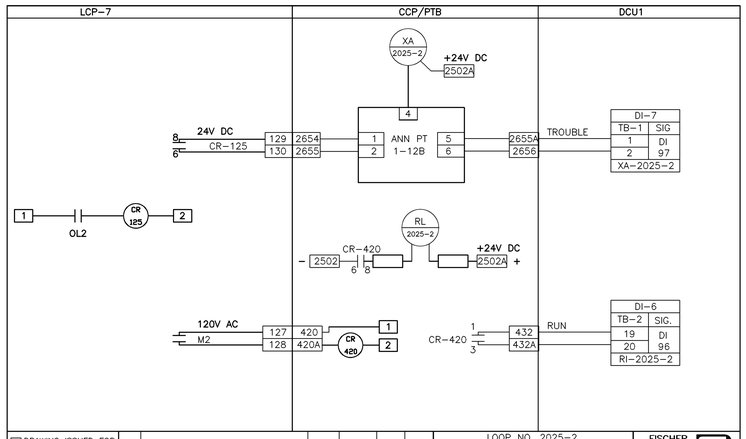

X DRAWING ISSUED FOR APPROVAL ONLY, NOT FOR CONSTRUCTION	2	REV – AS INSTALLED	DFG	02JAN96	DGR	DGR	LOOP NO. 2025-2 GRIT CHAMBER 2 MIXER ALARM AND STATUS UPGRADE AND EXPANSION-PHASE V B ARLINGTON COUNTY WPCP, VA.	FISCHER & PORTER WARMINSTER, PA 18974 USA	
	1	FINAL – AS INSTALLED	GTS	08SEP95	LR	DB		DRAWING NUMBER	REV
☐ DRAWING ISSUED FOR CONSTRUCTION	0	APPROVAL	LR	13JUN94	LFR	JF			
	REV	REVISION DESCRIPTION	DRAWN	DATE	CHKD	ENGR	AUTHORITY E931215.913 (NC15L058)	931215-L058	1

REFER TO CONTRACT DRAWING NUMBER 001-9

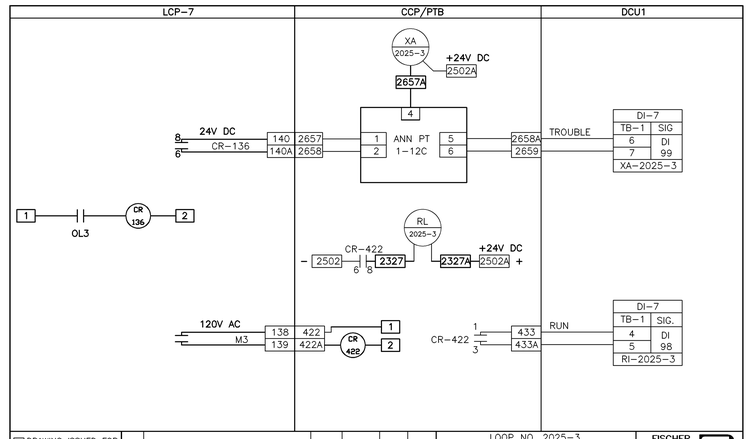

X DRAWING ISSUED FOR APPROVAL ONLY, NOT FOR CONSTRUCTION	2	REV – AS INSTALLED	DFG	02JAN96	DGR	DGR	LOOP NO. 2025-3 GRIT CHAMBER 3 MIXER ALARM AND STATUS UPGRADE AND EXPANSION-PHASE V B ARLINGTON COUNTY WPCP, VA.	FISCHER & PORTER WARMINSTER, PA 18974 USA	
	1	FINAL – AS INSTALLED	GTS	08SEP95	LR	DB		DRAWING NUMBER	REV
☐ DRAWING ISSUED FOR CONSTRUCTION	0	APPROVAL	LR	13JUN94	LFR	JF			
	REV	REVISION DESCRIPTION	DRAWN	DATE	CHKD	ENGR	AUTHORITY E931215.913 (NC15L059)	931215-L059	1

REFER TO CONTRACT DRAWING NUMBER 001-9

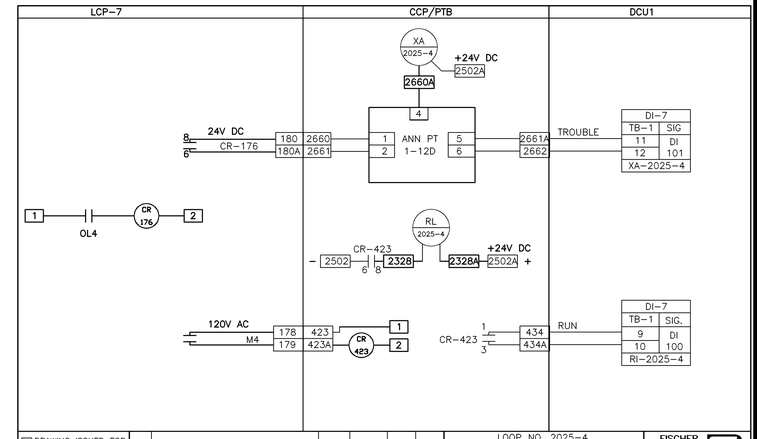

X DRAWING ISSUED FOR APPROVAL ONLY, NOT FOR CONSTRUCTION	2	REV – AS INSTALLED	DFG	02JAN96	DGR	DGR	LOOP NO. 2025-4 GRIT CHAMBER 4 MIXER ALARM AND STATUS UPGRADE AND EXPANSION-PHASE V B ARLINGTON COUNTY WPCP, VA.	FISCHER & PORTER WARMINSTER, PA 18974 USA	
	1	FINAL – AS INSTALLED	GTS	08SEP95	LR	DB		DRAWING NUMBER	REV
☐ DRAWING ISSUED FOR CONSTRUCTION	0	APPROVAL	LR	13JUN94	LFR	JF			
	REV	REVISION DESCRIPTION	DRAWN	DATE	CHKD	ENGR	AUTHORITY E931215.913 (NC15L060)	931215-L060	1

REFER TO CONTRACT DRAWING NUMBER 001-9

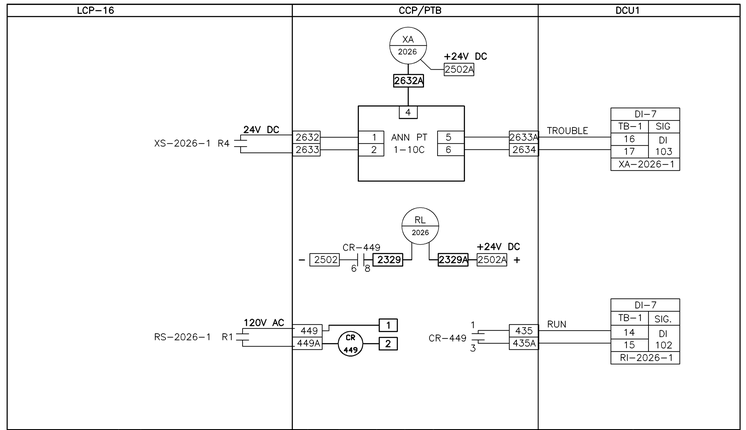

X DRAWING ISSUED FOR APPROVAL ONLY, NOT FOR CONSTRUCTION	2	REV – AS INSTALLED	DFG	02JAN96	DGR	DGR	LOOP NO. 2026-1 PRELIMINARY TREATMENT BLDG DRAIN SUMP PUMP 1 ALARM AND STATUS UPGRADE AND EXPANSION-PHASE V B ARLINGTON COUNTY WPCP, VA.	FISCHER & PORTER WARMINSTER, PA 18974 USA	
	1	FINAL –AS INSTALLED	GTS	08SEP95	LR	DB		DRAWING NUMBER	REV
☐ DRAWING ISSUED FOR CONSTRUCTION	0	APPROVAL	LR	13JUN94	LFR	JF			
	REV	REVISION DESCRIPTION	DRAWN	DATE	CHKD	ENGR	AUTHORITY E931215.913 (NC15L061)	931215-L061-1	1

REFER TO CONTRACT DRAWING NUMBER 001-9

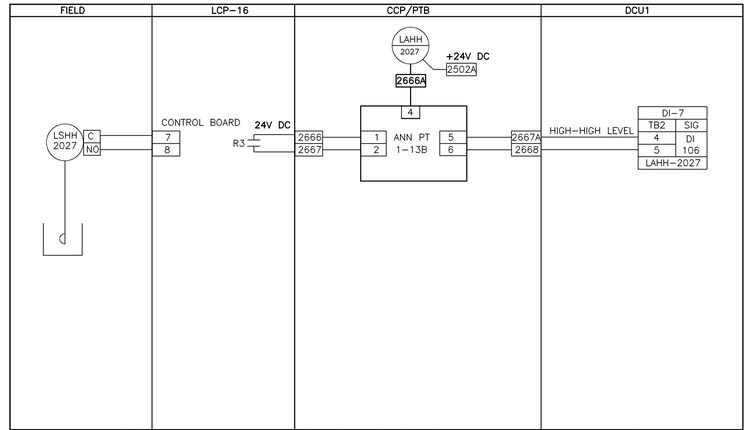

X DRAWING ISSUED FOR APPROVAL ONLY, NOT FOR CONSTRUCTION	2	REV – AS INSTALLED	DFG	02JAN96	DGR	DGR	LOOP NO. 2027 PRELIMINARY TREATMENT BUILDING DRAIN SUMP LEVEL UPGRADE AND EXPANSION-PHASE V B ARLINGTON COUNTY WPCP, VA.	FISCHER & PORTER WARMINSTER, PA 18974 USA	
	1	FINAL – AS INSTALLED	GTS	08SEP95	LR	DB		DRAWING NUMBER	REV
☐ DRAWING ISSUED FOR CONSTRUCTION	0	APPROVAL	LR	13JUN94	LFR	JF			
	REV	REVISION DESCRIPTION	DRAWN	DATE	CHKD	ENGR	AUTHORITY E931215.913 (NC15L062)	931215-L062	1

REFER TO CONTRACT DRAWING NUMBER 001-9

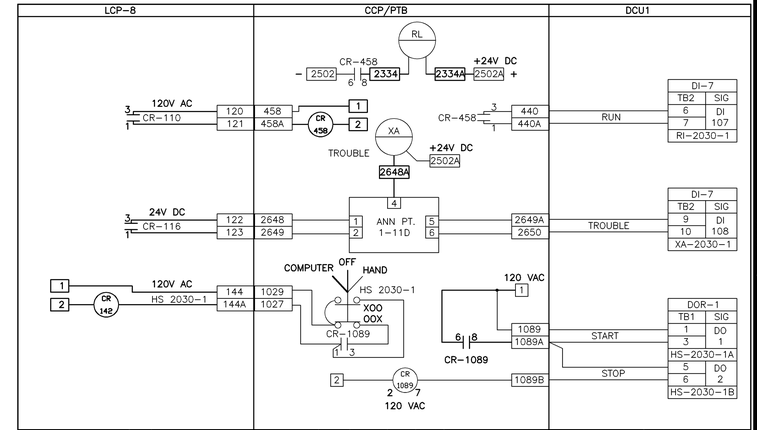

X DRAWING ISSUED FOR APPROVAL ONLY, NOT FOR CONSTRUCTION	2	REV – AS INSTALLED	DFG	02JAN96	DGR	DGR	LOOP NO. 2030-1 GRIT PUMP AND SYSTEM 1 ALARM AND STATUS UPGRADE AND EXPANSION-PHASE V B ARLINGTON COUNTY WPCP, VA.	FISCHER & PORTER WARMINSTER, PA 18974 USA	
	1	FINAL – AS INSTALLED	GTS	08SEP95	LR	DB		DRAWING NUMBER	REV
☐ DRAWING ISSUED FOR CONSTRUCTION	0	APPROVAL	LR	13JUN94	LFR	JF			
	REV	REVISION DESCRIPTION	DRAWN	DATE	CHKD	ENGR	AUTHORITY E931215.913 (NC15L063)	931215-L063	1

REFER TO CONTRACT DRAWING NUMBER 001-9

NO.	DATE	DRWN	CHKD	REVISIONS DESCRIPTION
1	11/98	FXP	ASG	RECORD DRAWING

DESIGNED BY: JRD
DRAWN BY: JRD
CHECKED BY/DATE/:
APPROVED BY/DATE:

THIS DRAWING HAS BEEN COMPILED HAZEN AND SAWYER, P.C.

ARLINGTON COUNTY, VIRGINIA
WATER POLLUTION CONTROL PLANT
UPGRADE AND EXPANSION- PHASE IIB

LOOP DIAGRAMS

SCALE NOTE

SCALE BAR SHOWN BELOW IS ONE INCH LONG ON A FULL SIZE DRAWING. WHEN SCALING DRAWINGS, MEASURE BAR TO DETERMINE IF SCALES SHOWN WILL REQUIRE ADJUSTING.

ONE INCH

CONTRACT NO.
9002 – WPC
YEAR 1991
LOCATION CODE
SPECIALTY CODE |
PROJECT NO.
5002 – 033
FILE NAME
001-26.DWG
DRAWING NO.
001-26
SHEET NO. 337

RECORD DRAWING

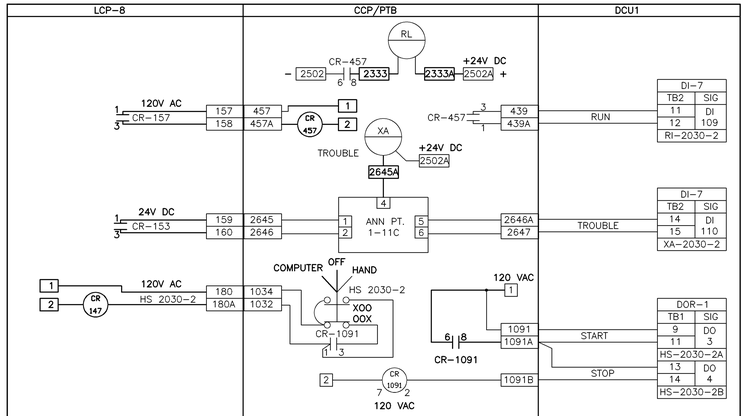

X DRAWING ISSUED FOR APPROVAL ONLY, NOT FOR CONSTRUCTION	2	REV – AS INSTALLED	DFG	02JAN96	DGR	DGR	LOOP NO. 2030-2 GRIT PUMP AND SYSTEM 2 ALARM AND STATUS UPGRADE AND EXPANSION–PHASE V B ARLINGTON COUNTY WPCP, VA.		FISCHER & PORTER WARMINSTER, PA 18974 USA		
	1	FINAL – AS INSTALLED	GTS	08SEP95	LR	DB			DRAWING NUMBER	REV	
☐ DRAWING ISSUED FOR CONSTRUCTION	0	APPROVAL	LR	13JUN94	LFR	JF			931215–L064	1	
	REV	REVISION DESCRIPTION	DRAWN	DATE	CHKD	ENGR	AUTHORITY	E931215.913 (NC15L064)			

REFER TO CONTRACT DRAWING NUMBER 001-09

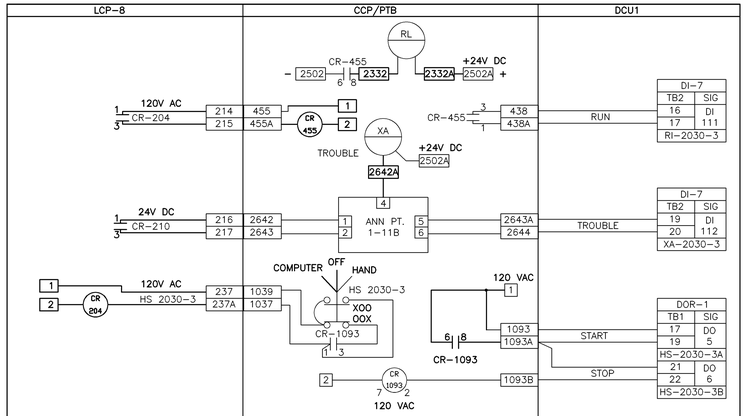

X DRAWING ISSUED FOR APPROVAL ONLY, NOT FOR CONSTRUCTION	2	REV – AS INSTALLED	DFG	02JAN96	DGR	DGR	LOOP NO. 2030-3 GRIT PUMP AND SYSTEM 3 ALARM AND STATUS UPGRADE AND EXPANSION–PHASE V B ARLINGTON COUNTY WPCP, VA.		FISCHER & PORTER WARMINSTER, PA 18974 USA		
	1	FINAL – AS INSTALLED	GTS	08SEP95	LR	DB			DRAWING NUMBER	REV	
☐ DRAWING ISSUED FOR CONSTRUCTION	0	APPROVAL	LR	13JUN94	LFR	JF			931215–L065	1	
	REV	REVISION DESCRIPTION	DRAWN	DATE	CHKD	ENGR	AUTHORITY	E931215.913 (NC15L065)			

REFER TO CONTRACT DRAWING NUMBER 001-9

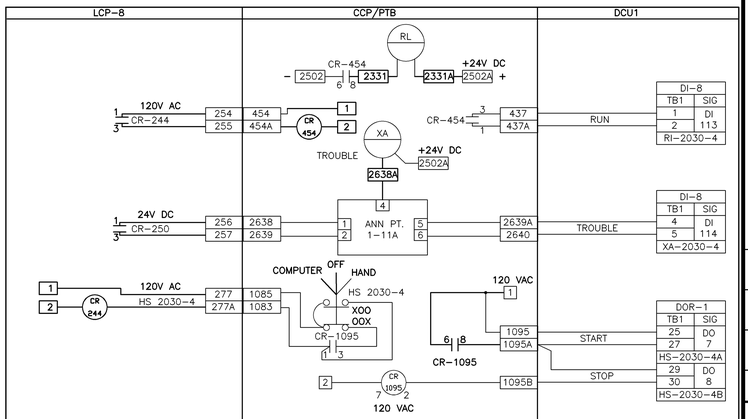

X DRAWING ISSUED FOR APPROVAL ONLY, NOT FOR CONSTRUCTION	2	REV – AS INSTALLED	DFG	02JAN96	DGR	DGR	LOOP NO. 2030-4 GRIT PUMP AND SYSTEM 4 ALARM AND STATUS UPGRADE AND EXPANSION–PHASE V B ARLINGTON COUNTY WPCP, VA.		FISCHER & PORTER WARMINSTER, PA 18974 USA		
	1	FINAL – AS INSTALLED	GTS	08SEP95	LR	DB			DRAWING NUMBER	REV	
☐ DRAWING ISSUED FOR CONSTRUCTION	0	APPROVAL	LR	13JUN94	LFR	JF			931215–L066	1	
	REV	REVISION DESCRIPTION	DRAWN	DATE	CHKD	ENGR	AUTHORITY	E931215.913 (NC15L066)			

REFER TO CONTRACT DRAWING NUMBER 001-9

X DRAWING ISSUED FOR APPROVAL ONLY, NOT FOR CONSTRUCTION	2	REV – AS INSTALLED	DFG	02JAN96	DGR	DGR	LOOP NO. 2035 GRIT CHAMBER EFFL. CHANNEL LEVEL & BAR SCREEN INFL. GATES RATIO SET PT. UPGRADE AND EXPANSION–PHASE V B ARLINGTON COUNTY WPCP, VA.		FISCHER & PORTER WARMINSTER, PA 18974 USA		
	1	FINAL – AS INSTALLED	GTS	08SEP95	LR	DB			DRAWING NUMBER	REV	
☐ DRAWING ISSUED FOR CONSTRUCTION	0	APPROVAL	LR	13JUN94	LFR	JF			931215–L067	1	
	REV	REVISION DESCRIPTION	DRAWN	DATE	CHKD	ENGR	AUTHORITY	E931215.913 (NC15L067)			

REFER TO CONTRACT DRAWING NUMBER 001-10

X DRAWING ISSUED FOR APPROVAL ONLY, NOT FOR CONSTRUCTION	2	REV – AS INSTALLED	DFG	02JAN96	DGR	DGR	LOOP NO. 3001-1 PRIMARY CLARIFIER 1 SLUDGE COLLECTION ALARM AND STATUS UPGRADE AND EXPANSION–PHASE V B ARLINGTON COUNTY WPCP, VA.		FISCHER & PORTER WARMINSTER, PA 18974 USA		
	1	FINAL – AS INSTALLED	GTS	08SEP95	LR	DB			DRAWING NUMBER	REV	
☐ DRAWING ISSUED FOR CONSTRUCTION	0	APPROVAL	LR	13JUN94	LFR	JF			931215–L068	1	
	REV	REVISION DESCRIPTION	DRAWN	DATE	CHKD	ENGR	AUTHORITY	E931215.913 (NC15L068)			

REFER TO CONTRACT DRAWING NUMBER 001-10

X DRAWING ISSUED FOR APPROVAL ONLY, NOT FOR CONSTRUCTION	2	REV – AS INSTALLED	DFG	02JAN96	DGR	DGR	LOOP NO. 3001-2 PRIMARY CLARIFIER 2 SLUDGE COLLECTION ALARM AND STATUS UPGRADE AND EXPANSION–PHASE V B ARLINGTON COUNTY WPCP, VA.		FISCHER & PORTER WARMINSTER, PA 18974 USA		
	1	FINAL – AS INSTALLED	GTS	08SEP95	LR	DB			DRAWING NUMBER	REV	
☐ DRAWING ISSUED FOR CONSTRUCTION	0	APPROVAL	LR	13JUN94	LFR	JF			931215–L069	1	
	REV	REVISION DESCRIPTION	DRAWN	DATE	CHKD	ENGR	AUTHORITY	E931215.913 (NC15L069)			

REFER TO CONTRACT DRAWING NUMBER 001-10

X DRAWING ISSUED FOR APPROVAL ONLY, NOT FOR CONSTRUCTION	2	REV – AS INSTALLED	DFG	02JAN96	DGR	DGR	LOOP NO. 3001-3 PRIMARY CLARIFIER 3 SLUDGE COLLECTION ALARM AND STATUS UPGRADE AND EXPANSION–PHASE V B ARLINGTON COUNTY WPCP, VA.		FISCHER & PORTER WARMINSTER, PA 18974 USA		
	1	FINAL – AS INSTALLED	GTS	08SEP95	LR	DB			DRAWING NUMBER	REV	
☐ DRAWING ISSUED FOR CONSTRUCTION	0	APPROVAL	LR	13JUN94	LFR	JF			931215–L070	1	
	REV	REVISION DESCRIPTION	DRAWN	DATE	CHKD	ENGR	AUTHORITY	E931215.913 (NC15L070)			

REFER TO CONTRACT DRAWING NUMBER 001-10

X DRAWING ISSUED FOR APPROVAL ONLY, NOT FOR CONSTRUCTION	2	REV – AS INSTALLED	DFG	02JAN96	DGR	DGR	LOOP NO. 3001-4 PRIMARY CLARIFIER 4 SLUDGE COLLECTION ALARM AND STATUS UPGRADE AND EXPANSION–PHASE V B ARLINGTON COUNTY WPCP, VA.		FISCHER & PORTER WARMINSTER, PA 18974 USA		
	1	FINAL – AS INSTALLED	GTS	08SEP95	LR	DB			DRAWING NUMBER	REV	
☐ DRAWING ISSUED FOR CONSTRUCTION	0	APPROVAL	LR	13JUN94	LFR	JF			931215–L071	1	
	REV	REVISION DESCRIPTION	DRAWN	DATE	CHKD	ENGR	AUTHORITY	E931215.913 (NC15L071)			

REFER TO CONTRACT DRAWING NUMBER 001-10

X DRAWING ISSUED FOR APPROVAL ONLY, NOT FOR CONSTRUCTION	2	REV – AS INSTALLED	DFG	02JAN96	DGR	DGR	LOOP NO. 3001-5 PRIMARY CLARIFIER 5 SLUDGE COLLECTION ALARM AND STATUS UPGRADE AND EXPANSION–PHASE V B ARLINGTON COUNTY WPCP, VA.		FISCHER & PORTER WARMINSTER, PA 18974 USA		
	1	FINAL – AS INSTALLED	GTS	08SEP95	LR	DB			DRAWING NUMBER	REV	
☐ DRAWING ISSUED FOR CONSTRUCTION	0	APPROVAL	LR	13JUN94	LFR	JF			931215–L072	1	
	REV	REVISION DESCRIPTION	DRAWN	DATE	CHKD	ENGR	AUTHORITY	E931215.913 (NC15L072)			

REFER TO CONTRACT DRAWING NUMBER 001-10

NO.	DATE	DRWN	CHKD	REVISIONS DESCRIPTION
1	9/97	FXP	ASG	RECORD DRAWING

DESIGNED BY: JRD
DRAWN BY: JRD
CHECKED BY/DATE/: ASG 9/97
APPROVED BY/DATE:

THIS DRAWING HAS BEEN COMPILED FROM RECORDS OF HAZEN AND SAWYER, P.C.

ARLINGTON COUNTY, VIRGINIA
WATER POLLUTION CONTROL PLANT
UPGRADE AND EXPANSION- PHASE IIB

LOOP DIAGRAMS

SCALE NOTE

SCALE BAR SHOWN BELOW IS ONE INCH LONG ON A FULL SIZE DRAWING. WHEN SCALING DRAWINGS, MEASURE BAR TO DETERMINE IF SCALES SHOWN WILL REQUIRE ADJUSTING.

ONE INCH

CONTRACT NO.
9002 – WPC
YEAR 1991
LOCATION CODE
SPECIALTY CODE |

PROJECT NO.
5002 – 033
FILE NAME
001-27.DWG
DRAWING NO.
001-27
SHEET NO. 338

RECORD DRAWING

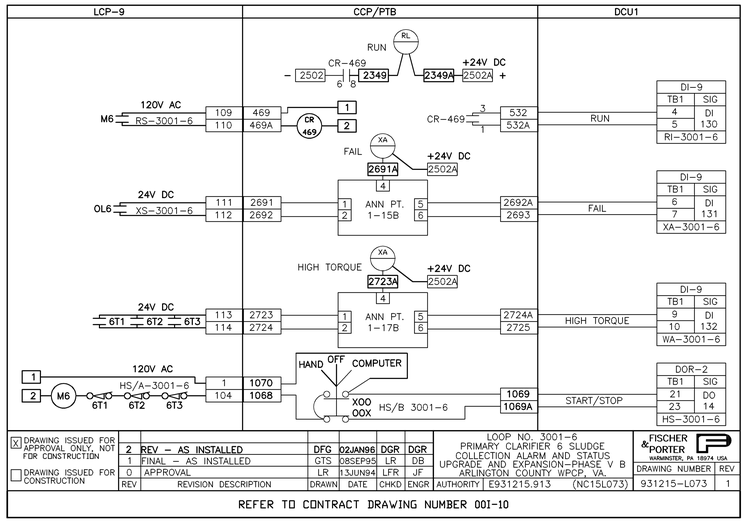

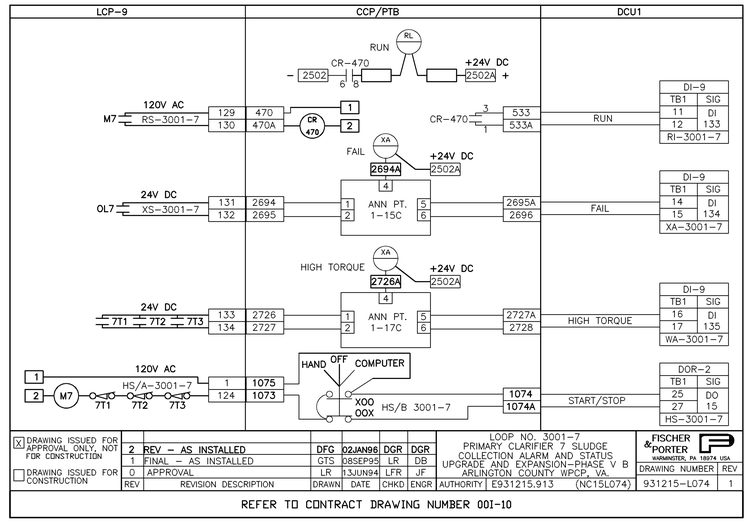

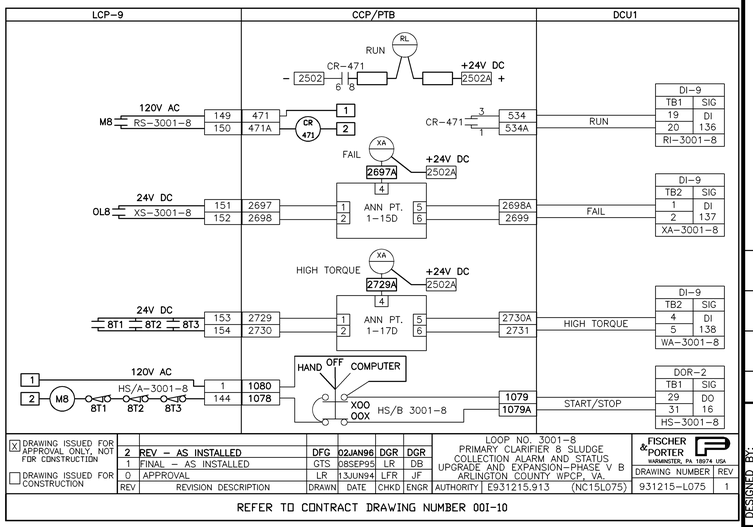

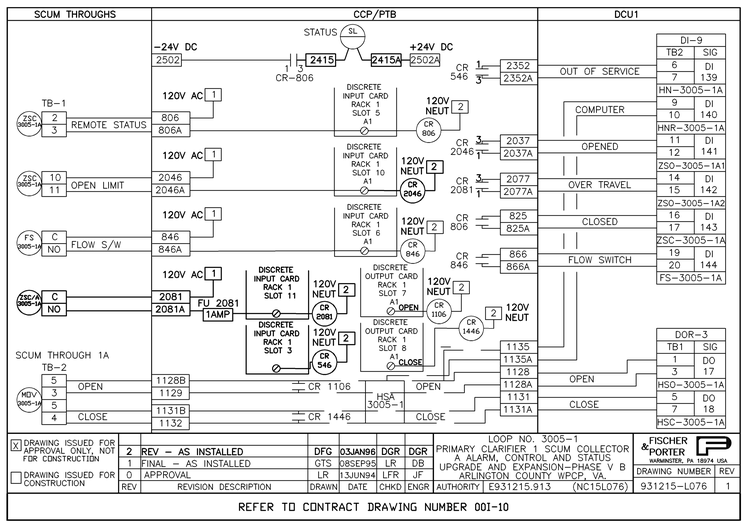

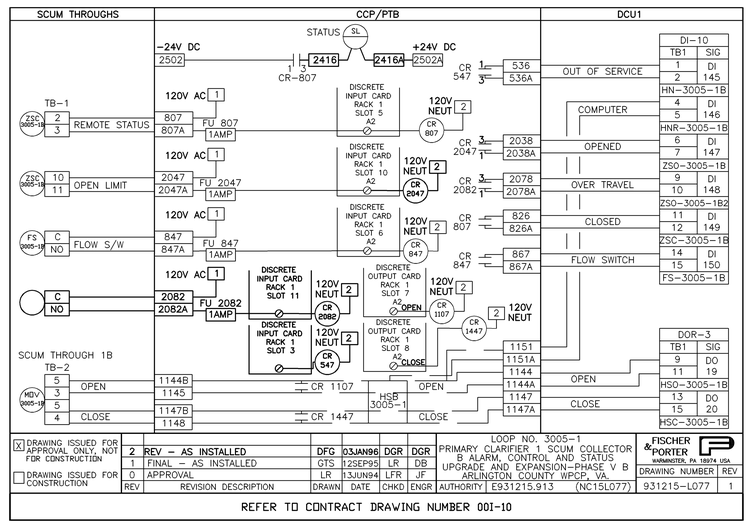

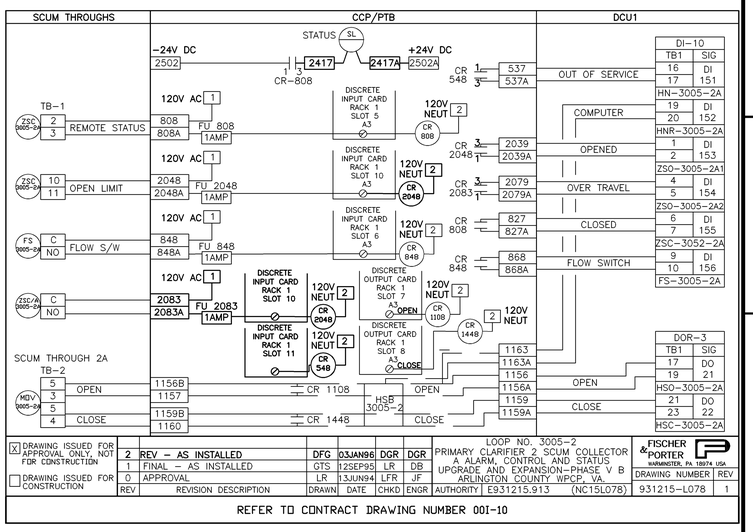

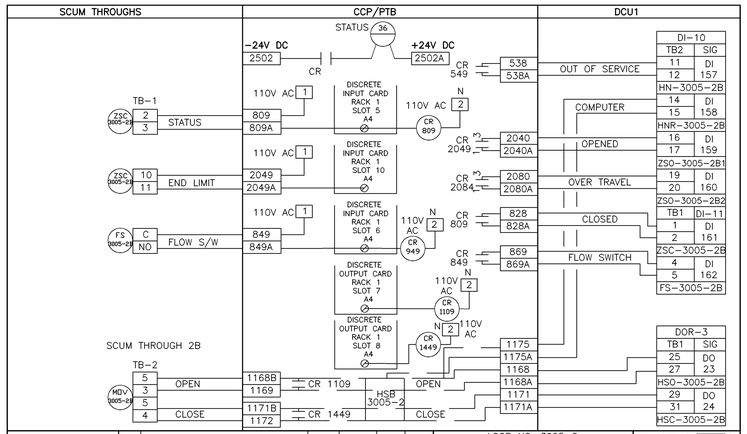

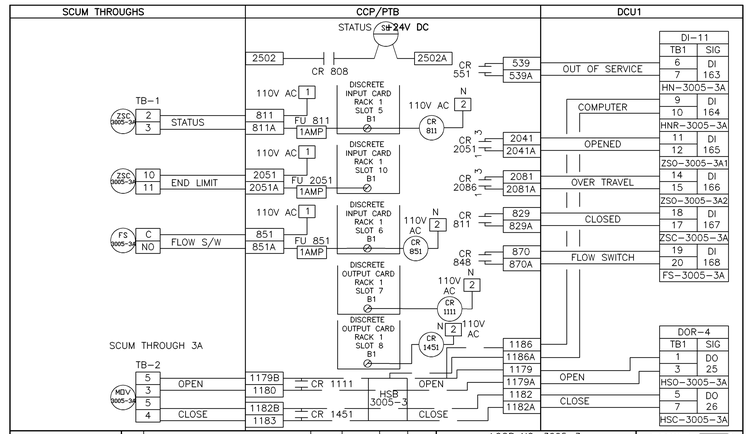

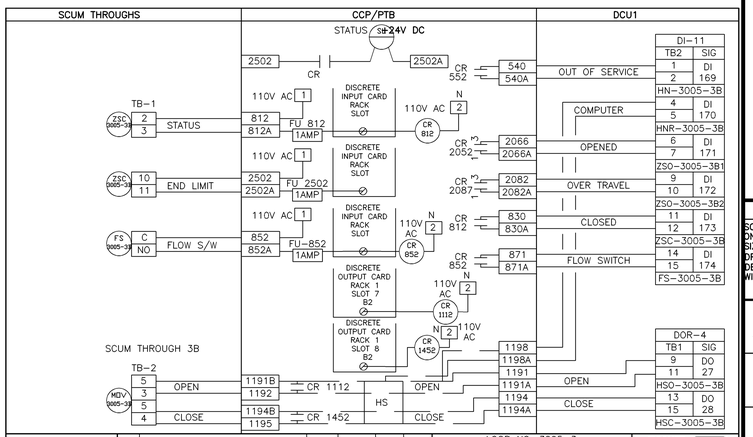

NO.	DATE	DRWN	CHKD	REVISIONS DESCRIPTION
1	9/97	FXP	ASG	RECORD DRAWING

DESIGNED BY: JRD
DRAWN BY: JRD
CHECKED BY/DATE/:
APPROVED BY/DATE:

THIS DRAWING HAS BEEN COMPILED FROM RECORDS OF HAZEN AND SAWYER, P.C.

ARLINGTON COUNTY, VIRGINIA
WATER POLLUTION CONTROL PLANT
UPGRADE AND EXPANSION- PHASE IIB

LOOP DIAGRAMS

SCALE NOTE

SCALE BAR SHOWN BELOW IS ONE INCH LONG ON A FULL SIZE DRAWING. WHEN SCALING DRAWINGS, MEASURE BAR TO DETERMINE IF SCALES SHOWN WILL REQUIRE ADJUSTING.

ONE INCH

CONTRACT NO. 9002 – WPC
YEAR 1991
LOCATION CODE
SPECIALTY CODE |
PROJECT NO. 5002 – 033
FILE NAME 001-28.DWG
DRAWING NO. 001-28
SHEET NO. 339

RECORD DRAWING

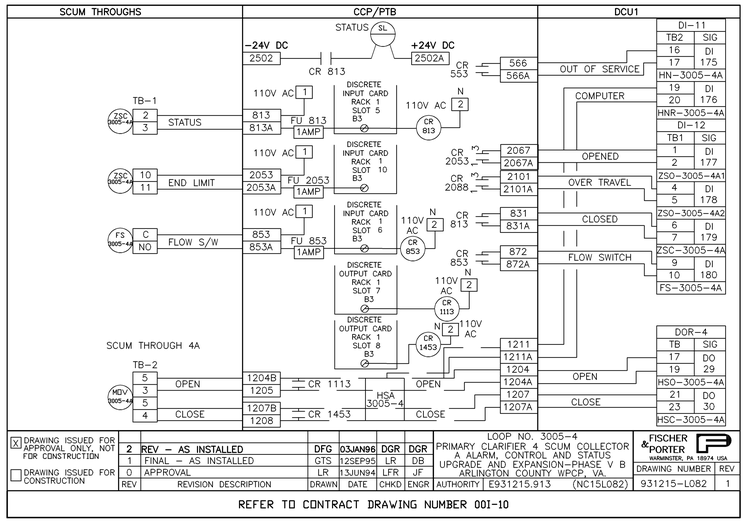

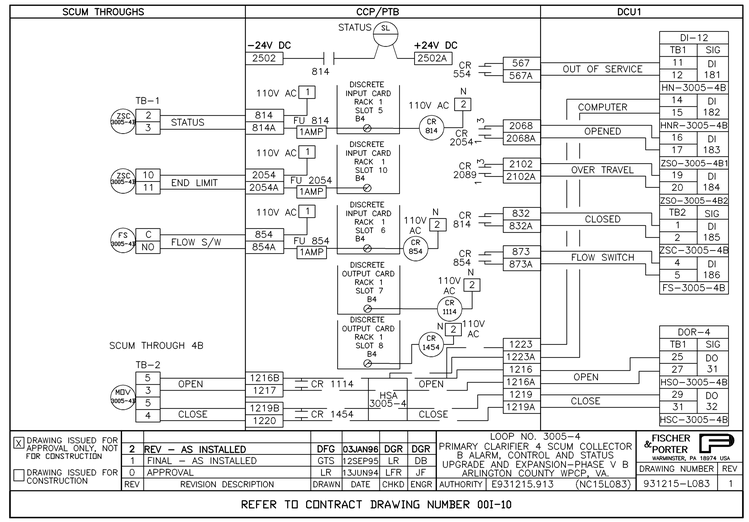

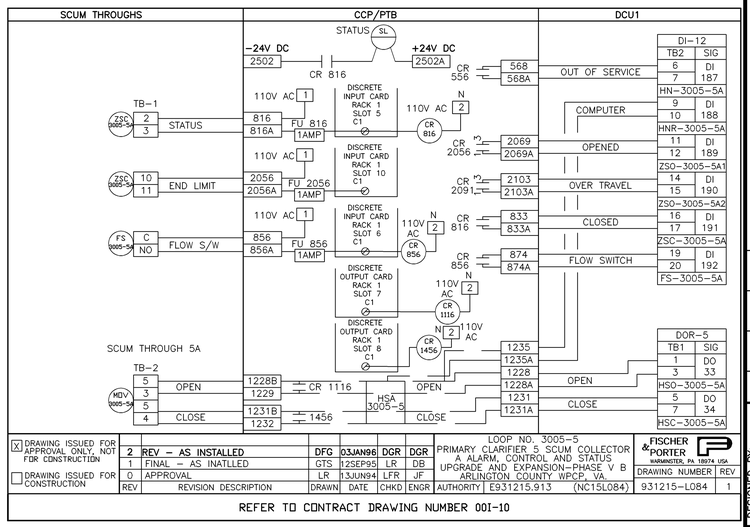

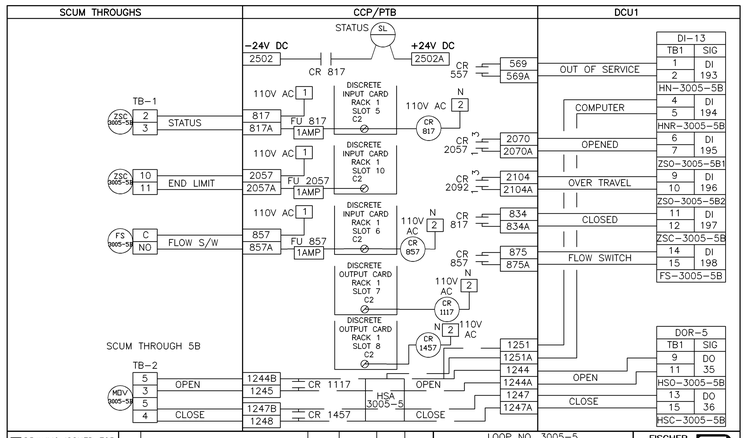

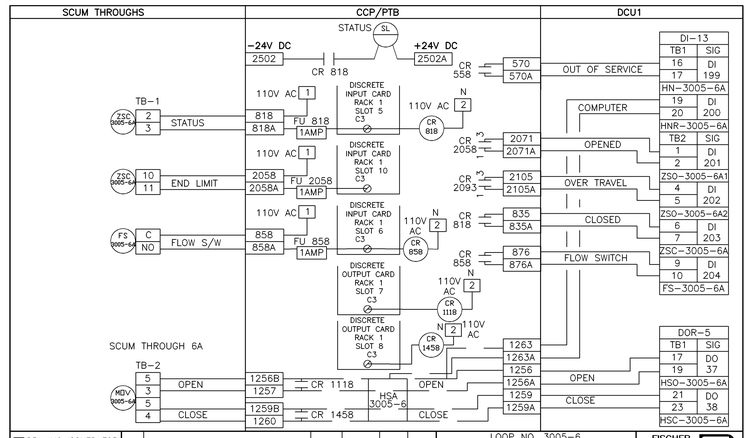

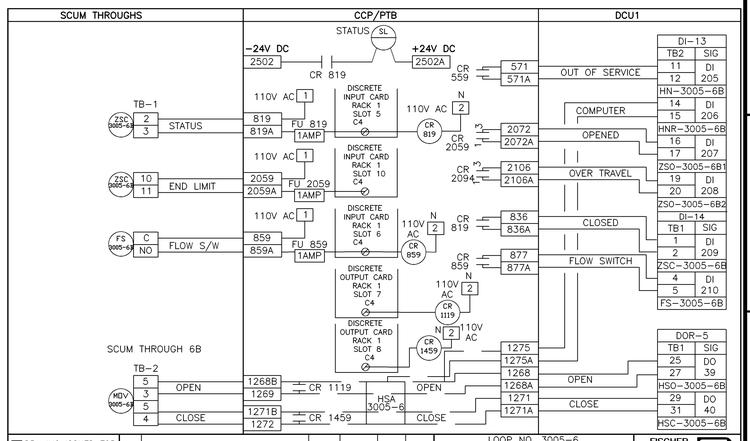

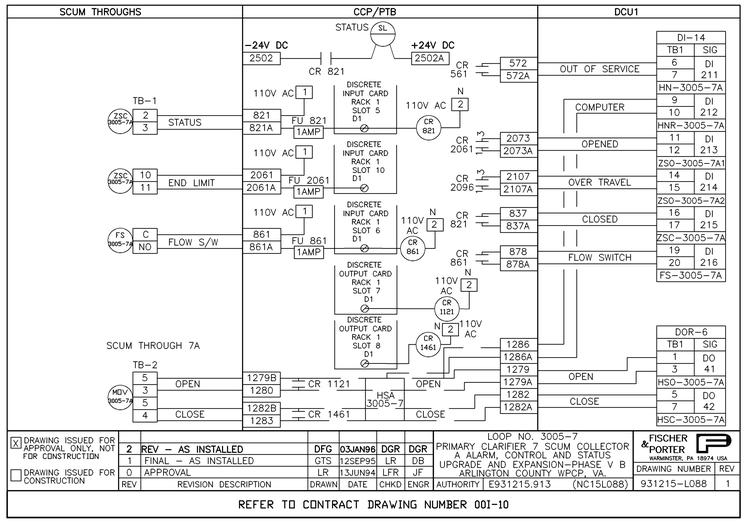

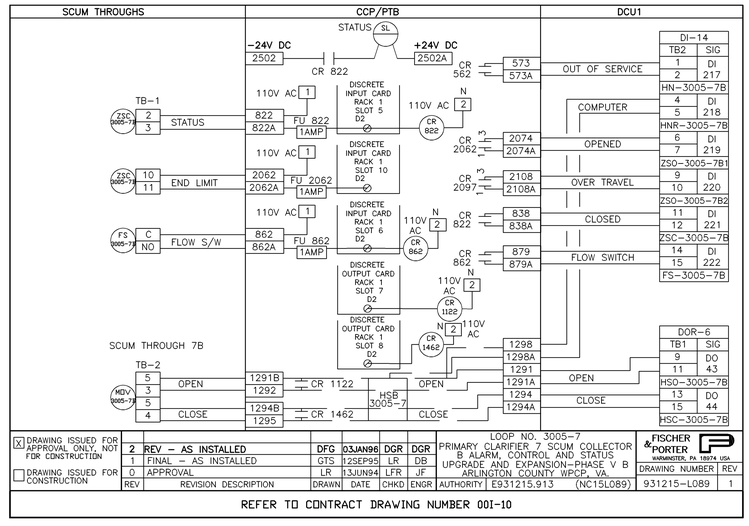

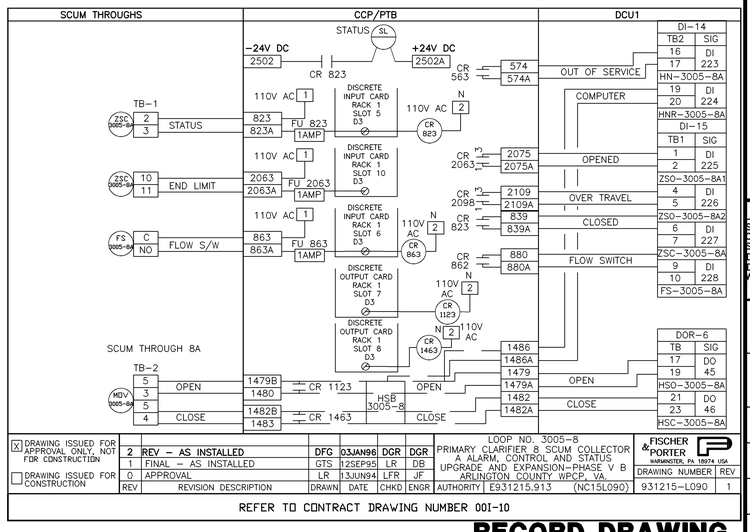

REVISIONS				
NO.	DATE	DRWN	CHKD	DESCRIPTION
1	9/97	FXP	ASG	RECORD DRAWING

DESIGNED BY: JRD
DRAWN BY: JRD
CHECKED BY/DATE/:
APPROVED BY/DATE:

THIS DRAWING HAS BEEN COMPILED
HAZEN AND SAWYER, P.C.

ARLINGTON COUNTY, VIRGINIA
WATER POLLUTION CONTROL PLANT
UPGRADE AND EXPANSION- PHASE IIB

LOOP DIAGRAMS

SCALE NOTE

SCALE BAR SHOWN BELOW IS ONE INCH LONG ON A FULL SIZE DRAWING. WHEN SCALING DRAWINGS, MEASURE BAR TO DETERMINE IF SCALES SHOWN WILL REQUIRE ADJUSTING.

ONE INCH

CONTRACT NO.
9002 – WPC
YEAR 1991
LOCATION CODE | SPECIALTY CODE |
PROJECT NO.
5002 – 033
FILE NAME
001-29.DWG
DRAWING NO.
001-29
SHEET NO. 340

RECORD DRAWING

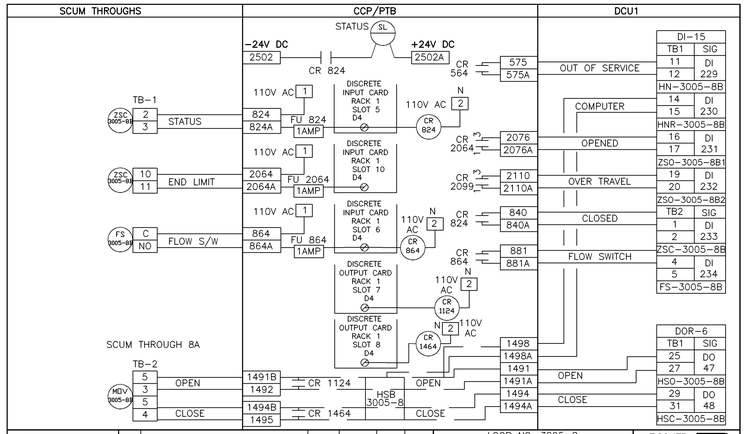

X DRAWING ISSUED FOR APPROVAL ONLY, NOT FOR CONSTRUCTION								LOOP NO. 3005-8	FISCHER & PORTER WARMINSTER, PA 18974 USA	
	2	REV – AS INSTALLED	DFG	03JAN96	DGR	DGR		PRIMARY CLARIFIER 8 SCUM COLLECTOR 8 ALARM, CONTROL AND STATUS	DRAWING NUMBER	REV
☐ DRAWING ISSUED FOR CONSTRUCTION	1	FINAL – AS INSTALLED	GTS	12SEP95	LR	DB		UPGRADE AND EXPANSION–PHASE V B ARLINGTON COUNTY WPCP, VA.	931215–L091	1
	0	APPROVAL	LR	13JUN94	LFR	JF		AUTHORITY E931215.913 (NC15L091)		
	REV	REVISION DESCRIPTION	DRAWN	DATE	CHKD	ENGR				

REFER TO CONTRACT DRAWING NUMBER 001-10

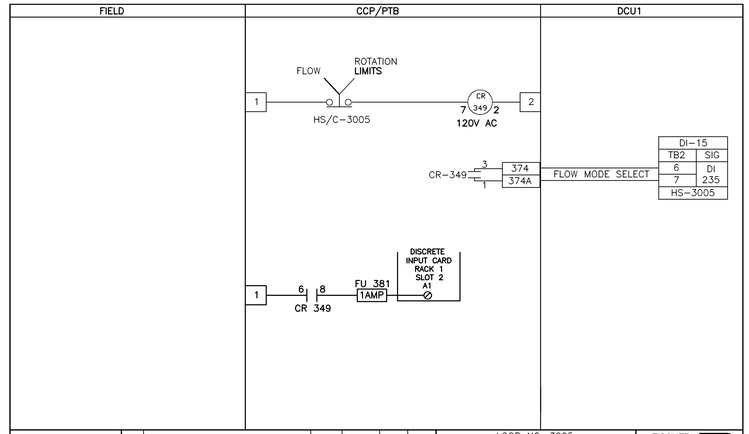

X DRAWING ISSUED FOR APPROVAL ONLY, NOT FOR CONSTRUCTION								LOOP NO. 3005	FISCHER & PORTER WARMINSTER, PA 18974 USA	
	2	REV – AS INSTALLED	DFG	03JAN96	DGR	DGR		PRIMARY CLARIFIER SCUM COLLECTOR FLOW MODE SELECT	DRAWING NUMBER	REV
☐ DRAWING ISSUED FOR CONSTRUCTION	1	FINAL – AS INSTALLED	GTS	12SEP95	LR	DB		UPGRADE AND EXPANSION–PHASE V B ARLINGTON COUNTY WPCP, VA.	931215–L092	1
	0	APPROVAL	LR	13JUN94	LFR	JF		AUTHORITY E931215.913 (NC15L092)		
	REV	REVISION DESCRIPTION	DRAWN	DATE	CHKD	ENGR				

REFER TO CONTRACT DRAWING NUMBER 001-10

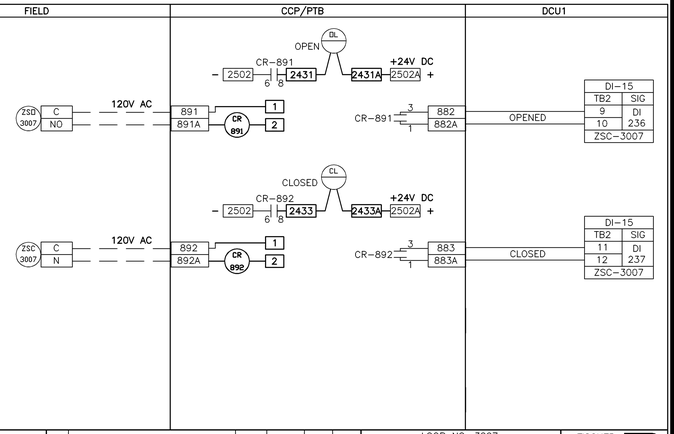

X DRAWING ISSUED FOR APPROVAL ONLY, NOT FOR CONSTRUCTION								LOOP NO. 3007	FISCHER & PORTER WARMINSTER, PA 18974 USA	
	2	REV – AS INSTALLED	DFG	03JAN96	DGR	DGR		PRIMARY EFFLUENT GATE TO PRIMARY EFFLUENT PUMP STATION STATUS	DRAWING NUMBER	REV
☐ DRAWING ISSUED FOR CONSTRUCTION	1	FINAL – AS INSTALLED	GTS	12SEP95	LR	DB		UPGRADE AND EXPANSION–PHASE V B ARLINGTON COUNTY WPCP, VA.	931215–L093	1
	0	APPROVAL	LR	13JUN94	LFR	JF		AUTHORITY E931215.913 (NC15L093)		
	REV	REVISION DESCRIPTION	DRAWN	DATE	CHKD	ENGR				

REFER TO CONTRACT DRAWING NUMBER 001-10

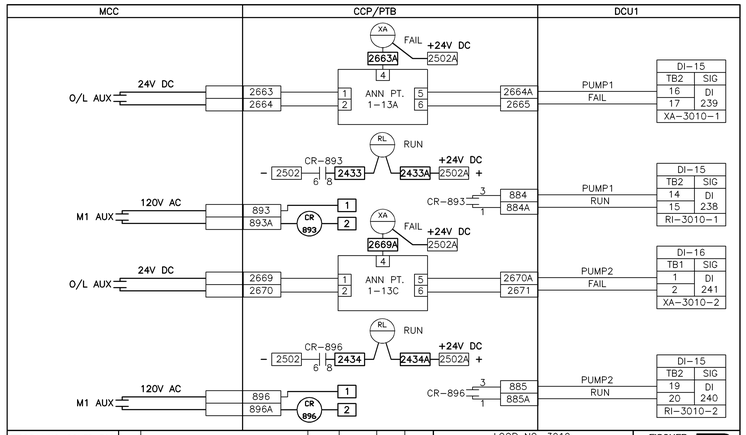

X DRAWING ISSUED FOR APPROVAL ONLY, NOT FOR CONSTRUCTION								LOOP NO. 3010	FISCHER & PORTER WARMINSTER, PA 18974 USA	
	2	REV – AS INSTALLED	DFG	03JAN96	DGR	DGR		CLARIFIER TANK DRAIN PUMPS ALARM AND STATUS	DRAWING NUMBER	REV
☐ DRAWING ISSUED FOR CONSTRUCTION	1	FINAL – AS INSTALLED	GTS	12SEP95	LR	DB		UPGRADE AND EXPANSION–PHASE V B ARLINGTON COUNTY WPCP, VA.	931215–L094	1
	0	APPROVAL	LR	15JUN94	LFR	JF		AUTHORITY E931215.913 (NC15L094)		
	REV	REVISION DESCRIPTION	DRAWN	DATE	CHKD	ENGR				

REFER TO CONTRACT DRAWING NUMBER 001-10

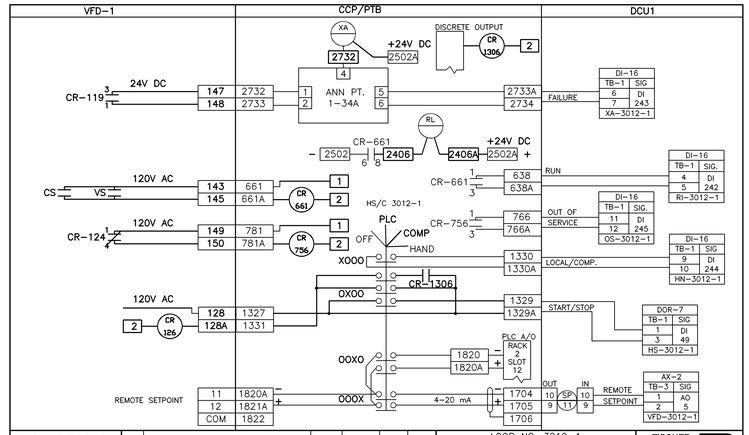

X DRAWING ISSUED FOR APPROVAL ONLY, NOT FOR CONSTRUCTION								LOOP NO. 3012-1	FISCHER & PORTER WARMINSTER, PA 18974 USA	
	2	REV – AS INSTALLED	DFG	03JAN96	DGR	DGR		PRIMARY SLUDGE PUMP 1 CONTROL, ALARM AND STATUS	DRAWING NUMBER	REV
☐ DRAWING ISSUED FOR CONSTRUCTION	1	FINAL – AS INSTALLED	GTS	12SEP95	LR	DB		UPGRADE AND EXPANSION–PHASE V B ARLINGTON COUNTY WPCP, VA.	931215–L095	1
	0	APPROVAL	LR	15JUN94	LFR	JF		AUTHORITY E931215.913 (NC15L095)		
	REV	REVISION DESCRIPTION	DRAWN	DATE	CHKD	ENGR				

REFER TO CONTRACT DRAWING NUMBER 001-11

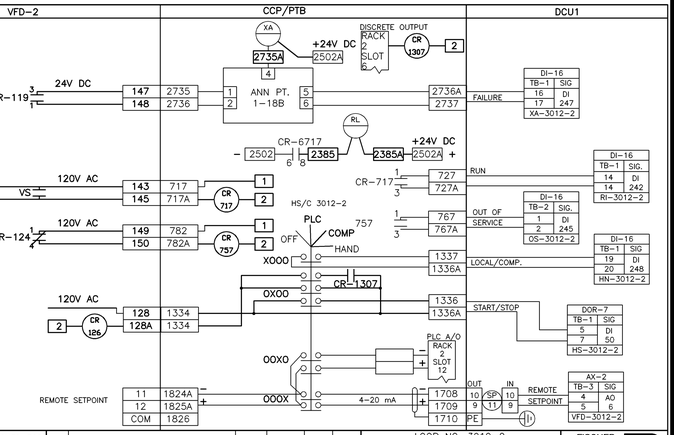

X DRAWING ISSUED FOR APPROVAL ONLY, NOT FOR CONSTRUCTION								LOOP NO. 3012-2	FISCHER & PORTER WARMINSTER, PA 18974 USA	
	2	REV – AS INSTALLED	DFG	03JAN96	DGR	DGR		PRIMARY SLUDGE PUMP 2 CONTROL, ALARM AND STATUS	DRAWING NUMBER	REV
☐ DRAWING ISSUED FOR CONSTRUCTION	1	FINAL – AS INSTALLED	GTS	12SEP95	LR	DB		UPGRADE AND EXPANSION–PHASE V B ARLINGTON COUNTY WPCP, VA.	931215–L096	1
	0	APPROVAL	LR	15JUN94	LFR	JF		AUTHORITY E931215.913 (NC15L096)		
	REV	REVISION DESCRIPTION	DRAWN	DATE	CHKD	ENGR				

REFER TO CONTRACT DRAWING NUMBER 001-11

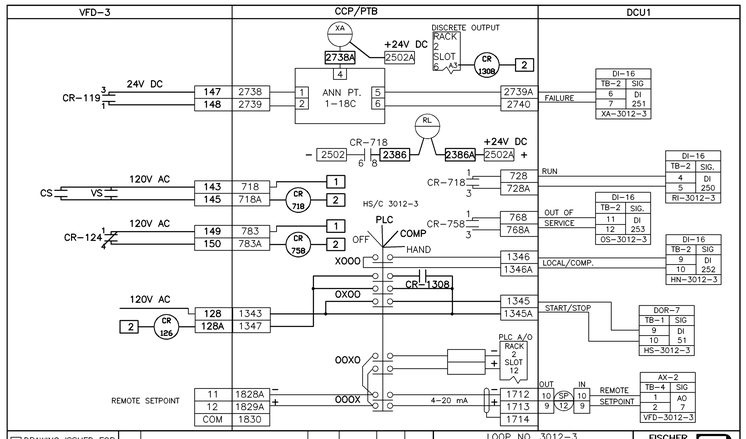

X DRAWING ISSUED FOR APPROVAL ONLY, NOT FOR CONSTRUCTION								LOOP NO. 3012-3	FISCHER & PORTER WARMINSTER, PA 18974 USA	
	2	REV – AS INSTALLED	DFG	08JAN96	DGR	DGR		PRIMARY SLUDGE PUMP 3 CONTROL, ALARM AND STATUS	DRAWING NUMBER	REV
☐ DRAWING ISSUED FOR CONSTRUCTION	1	FINAL – AS INSTALLED	GTS	12SEP95	LR	DB		UPGRADE AND EXPANSION–PHASE V B ARLINGTON COUNTY WPCP, VA.	931215–L097	1
	0	APPROVAL	LR	15JUN94	LFR	JF		AUTHORITY E931215.913 (NC15L097)		
	REV	REVISION DESCRIPTION	DRAWN	DATE	CHKD	ENGR				

REFER TO CONTRACT DRAWING NUMBER 001-11

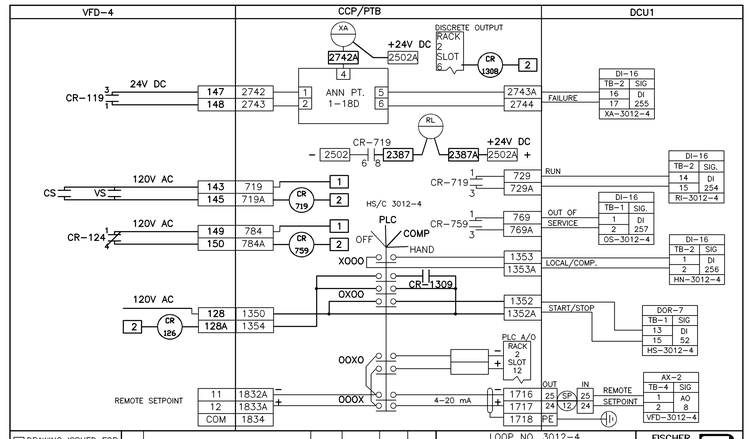

X DRAWING ISSUED FOR APPROVAL ONLY, NOT FOR CONSTRUCTION								LOOP NO. 3012-4	FISCHER & PORTER WARMINSTER, PA 18974 USA	
	2	REV – AS INSTALLED	DFG	08JAN96	DGR	DGR		PRIMARY SLUDGE PUMP 4 CONTROL, ALARM AND STATUS	DRAWING NUMBER	REV
☐ DRAWING ISSUED FOR CONSTRUCTION	1	FINAL – AS INSTALLED	GTS	12SEP95	LR	DB		UPGRADE AND EXPANSION–PHASE V B ARLINGTON COUNTY WPCP, VA.	931215–L098	1
	0	APPROVAL	LR	15JUN94	LFR	JF		AUTHORITY E931215.913 (NC15L098)		
	REV	REVISION DESCRIPTION	DRAWN	DATE	CHKD	ENGR				

REFER TO CONTRACT DRAWING NUMBER 001-11

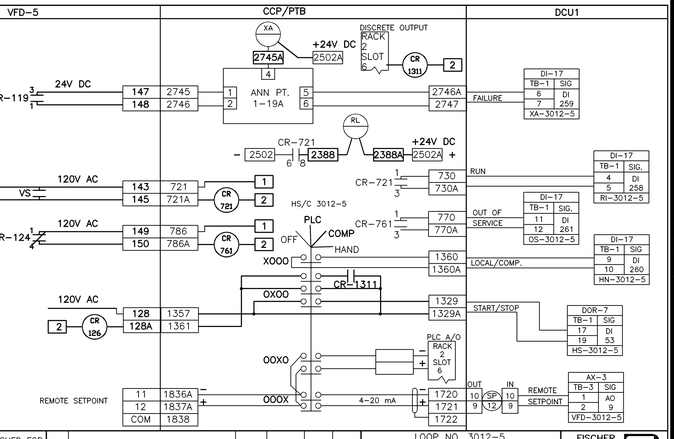

X DRAWING ISSUED FOR APPROVAL ONLY, NOT FOR CONSTRUCTION								LOOP NO. 3012-5	FISCHER & PORTER WARMINSTER, PA 18974 USA	
	2	REV – AS INSTALLED	DFG	08JAN96	DGR	DGR		PRIMARY SLUDGE PUMP 5 CONTROL, ALARM AND STATUS	DRAWING NUMBER	REV
☐ DRAWING ISSUED FOR CONSTRUCTION	1	FINAL – AS INSTALLED	GTS	12SEP95	LR	DB		UPGRADE AND EXPANSION–PHASE V B ARLINGTON COUNTY WPCP, VA.	931215–L099	1
	0	APPROVAL	LR	15JUN94	LFR	JF		AUTHORITY E931215.913 (NC15L099)		
	REV	REVISION DESCRIPTION	DRAWN	DATE	CHKD	ENGR				

REFER TO CONTRACT DRAWING NUMBER 001-11

RECORD DRAWING

NO.	DATE	DRWN	CHKD	REVISIONS DESCRIPTION
1	11/98	FXP	ASG	RECORD DRAWING

DESIGNED BY: JRD
DRAWN BY: JRD
CHECKED BY/DATE/:
APPROVED BY/DATE:

THIS DRAWING HAS BEEN COMPILED
HAZEN AND SAWYER, P.C.

ARLINGTON COUNTY, VIRGINIA
WATER POLLUTION CONTROL PLANT
UPGRADE AND EXPANSION- PHASE IIB

LOOP DIAGRAMS

SCALE NOTE

SCALE BAR SHOWN BELOW IS ONE INCH LONG ON A FULL SIZE DRAWING. WHEN SCALING DRAWINGS, MEASURE BAR TO DETERMINE IF SCALES SHOWN WILL REQUIRE ADJUSTING.

← ONE INCH →

CONTRACT NO. 9002 – WPC
YEAR 1991
LOCATION CODE
SPECIALTY CODE |

PROJECT NO. 5002 – 033
FILE NAME 001-30.DWG
DRAWING NO. 001-30
SHEET NO. 341

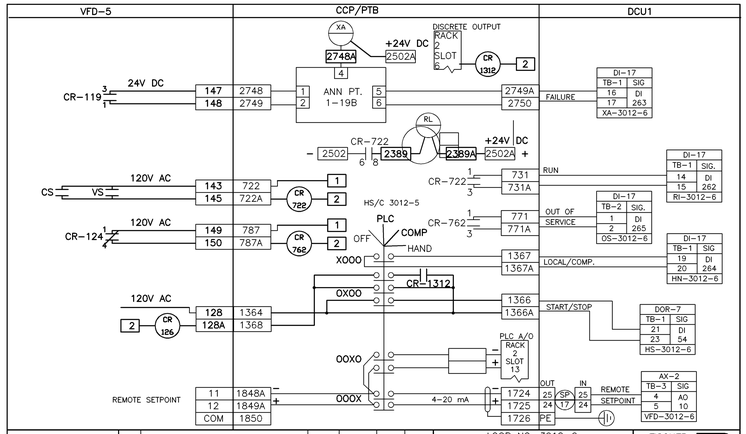

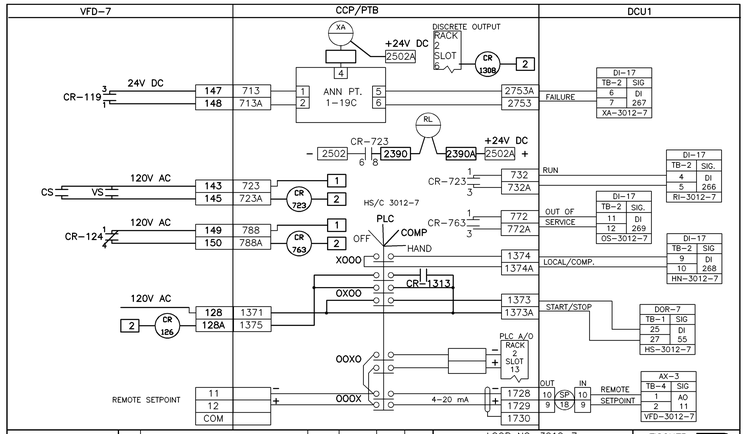

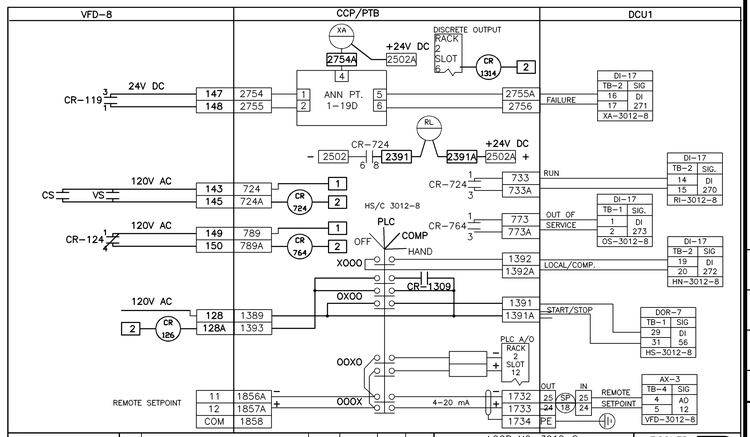

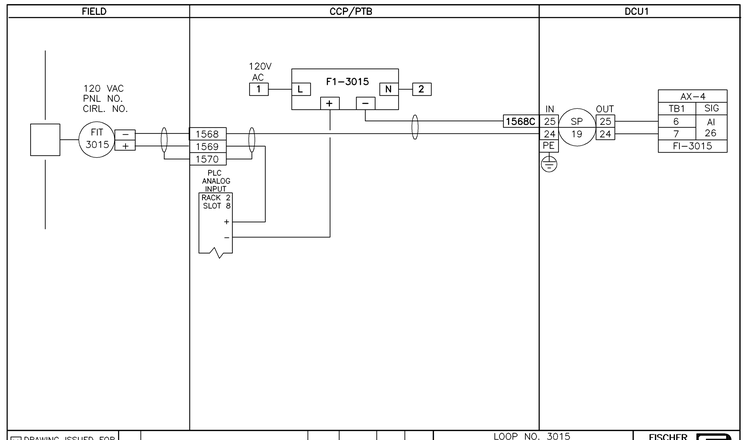

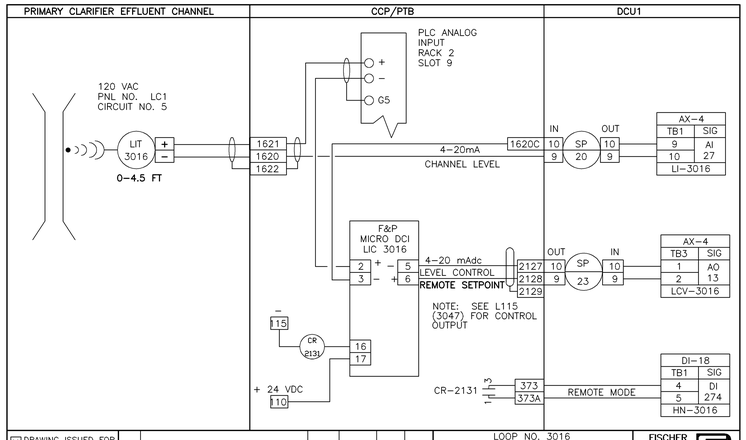

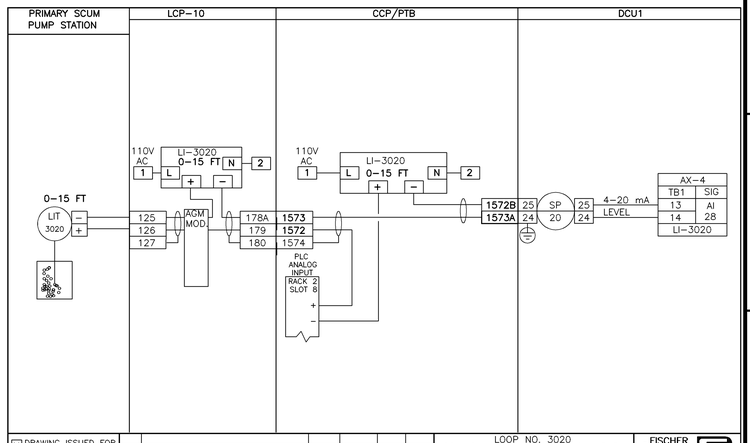

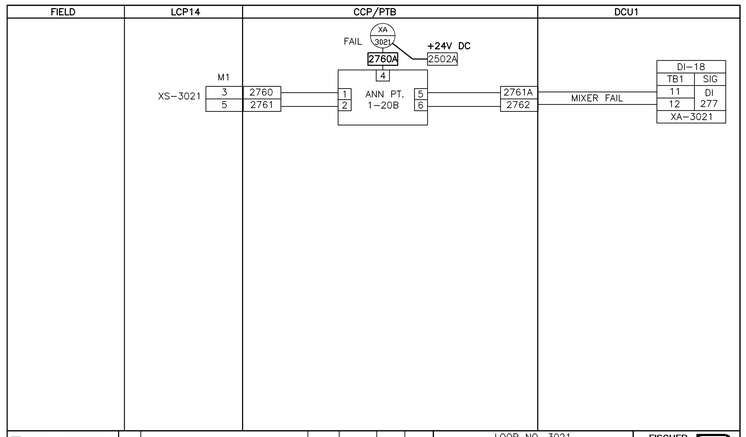

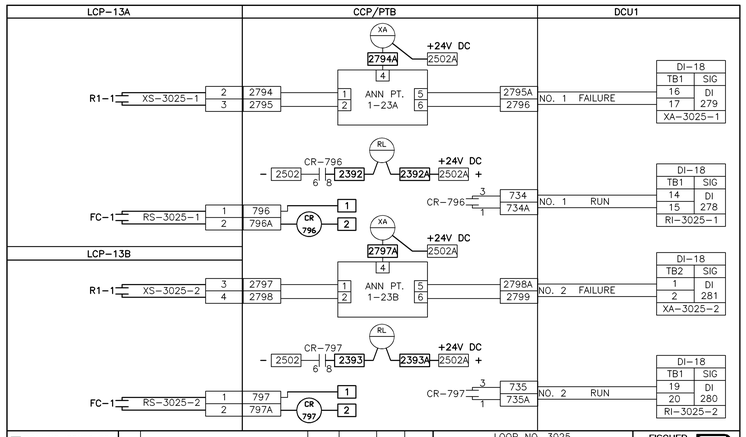

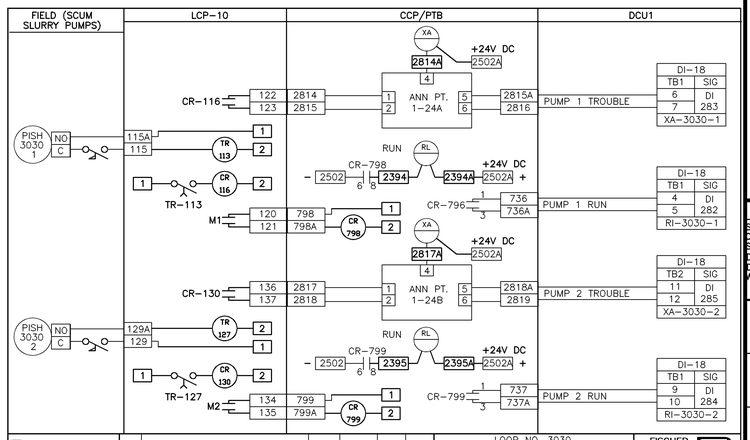

NO.	DATE	DRWN	CHKD	DESCRIPTION
1	9/97	FXP	ASG	RECORD DRAWING

REVISIONS

DESIGNED BY: JRD
DRAWN BY: JRD
CHECKED BY/DATE/:
APPROVED BY/DATE:

THIS DRAWING HAS BEEN COMPILED
HAZEN AND SAWYER, P.C.

ARLINGTON COUNTY, VIRGINIA
WATER POLLUTION CONTROL PLANT
UPGRADE AND EXPANSION- PHASE IIIB

LOOP DIAGRAMS

SCALE NOTE

SCALE BAR SHOWN BELOW IS ONE INCH LONG ON A FULL SIZE DRAWING. WHEN SCALING DRAWINGS, MEASURE BAR TO DETERMINE IF SCALES SHOWN WILL REQUIRE ADJUSTING.

← ONE INCH →

CONTRACT NO.
9002 – WPC
YEAR 1991
LOCATION CODE
SPECIALTY CODE
|
PROJECT NO.
5002 – 033
FILE NAME
001-31.DWG
DRAWING NO.
001-31
SHEET NO. 342

RECORD DRAWING

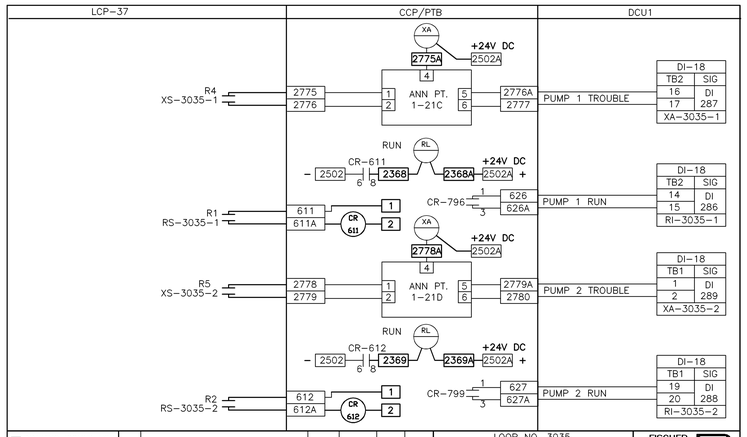

X DRAWING ISSUED FOR APPROVAL ONLY, NOT FOR CONSTRUCTION	2	REV – AS INSTALLED	DFG	03JAN96	DGR	DGR	LOOP NO. 3035 SCUM PUMP STATION DRAIN SUMP PUMPS ALARM AND STATUS UPGRADE AND EXPANSION–PHASE V B ARLINGTON COUNTY WPCP, VA.	FISCHER & PORTER WARMINSTER, PA 18974 USA	
	1	FINAL – AS INSTALLED	GTS	12SEP95	LR	DB		DRAWING NUMBER	REV
☐ DRAWING ISSUED FOR CONSTRUCTION	0	APPROVAL	LR	16JUN94	LFR	JF		931215–L109	1
	REV	REVISION DESCRIPTION	DRAWN	DATE	CHKD	ENGR	AUTHORITY E931215.913 (NC15L109)		

REFER TO CONTRACT DRAWING NUMBER 001-12

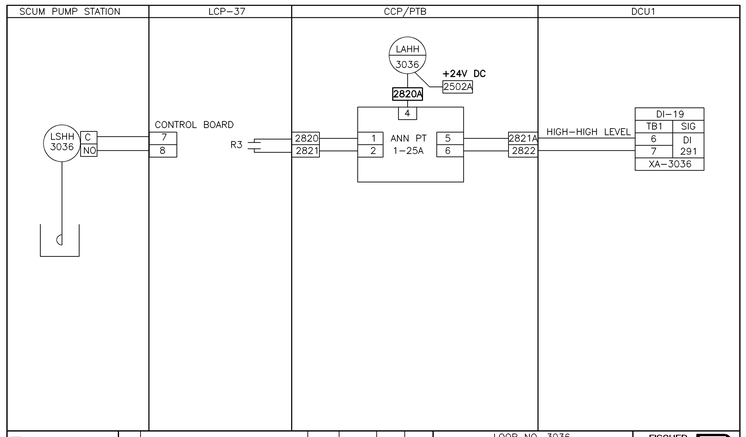

X DRAWING ISSUED FOR APPROVAL ONLY, NOT FOR CONSTRUCTION	2	REV – AS INSTALLED	DFG	03JAN96	DGR	DGR	LOOP NO. 3036 SCUM PUMP STATION DRAIN SUMP LEVEL UPGRADE AND EXPANSION–PHASE V B ARLINGTON COUNTY WPCP, VA.	FISCHER & PORTER WARMINSTER, PA 18974 USA	
	1	FINAL – AS INSTALLED	GTS	12SEP95	LR	DB		DRAWING NUMBER	REV
☐ DRAWING ISSUED FOR CONSTRUCTION	0	APPROVAL	LR	16JUN94	LFR	JF		931215–L110	1
	REV	REVISION DESCRIPTION	DRAWN	DATE	CHKD	ENGR	AUTHORITY E931215.913 (NC15L110)		

REFER TO CONTRACT DRAWING NUMBER 001-12

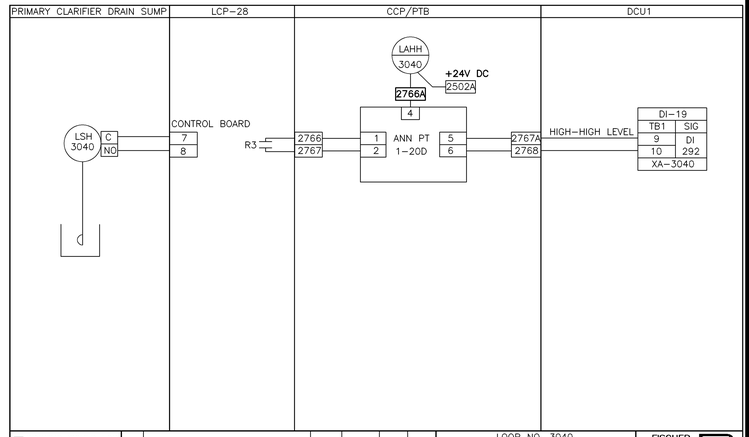

X DRAWING ISSUED FOR APPROVAL ONLY, NOT FOR CONSTRUCTION	2	REV – AS INSTALLED	DFG	03JAN96	DGR	DGR	LOOP NO. 3040 PRIMARY CLARIFIER DRAIN SUMP LEVEL UPGRADE AND EXPANSION–PHASE V B ARLINGTON COUNTY WPCP, VA.	FISCHER & PORTER WARMINSTER, PA 18974 USA	
	1	FINAL – AS INSTALLED	GTS	12SEP95	LR	DB		DRAWING NUMBER	REV
☐ DRAWING ISSUED FOR CONSTRUCTION	0	APPROVAL	LR	16JUN94	LFR	JF		931215–L111	1
	REV	REVISION DESCRIPTION	DRAWN	DATE	CHKD	ENGR	AUTHORITY E931215.913 (NC15L111)		

REFER TO CONTRACT DRAWING NUMBER 001-12

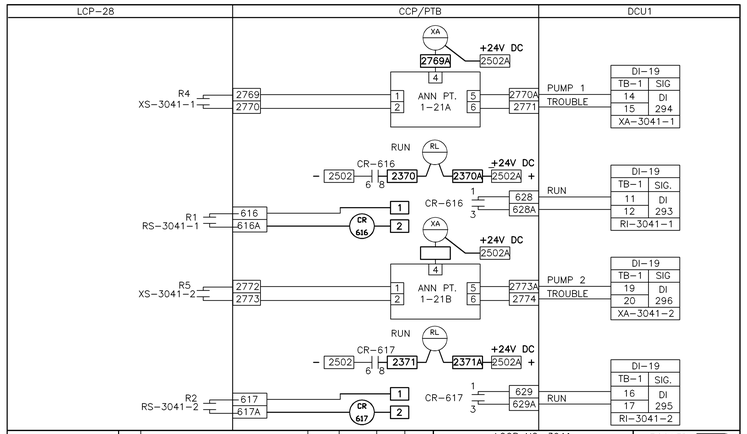

X DRAWING ISSUED FOR APPROVAL ONLY, NOT FOR CONSTRUCTION	2	REV – AS INSTALLED	DFG	03JAN96	DGR	DGR	LOOP NO. 3041 PRIMARY CLARIFIER DRAIN SUMP PUMPS ALARM AND STATUS UPGRADE AND EXPANSION–PHASE V B ARLINGTON COUNTY WPCP, VA.	FISCHER & PORTER WARMINSTER, PA 18974 USA	
	1	FINAL – AS INSTALLED	GTS	12SEP95	LR	DB		DRAWING NUMBER	REV
☐ DRAWING ISSUED FOR CONSTRUCTION	0	APPROVAL	LR	16JUN94	LFR	JF		931215–L112	1
	REV	REVISION DESCRIPTION	DRAWN	DATE	CHKD	ENGR	AUTHORITY E931215.913 (NC15L112)		

REFER TO CONTRACT DRAWING NUMBER 001-12

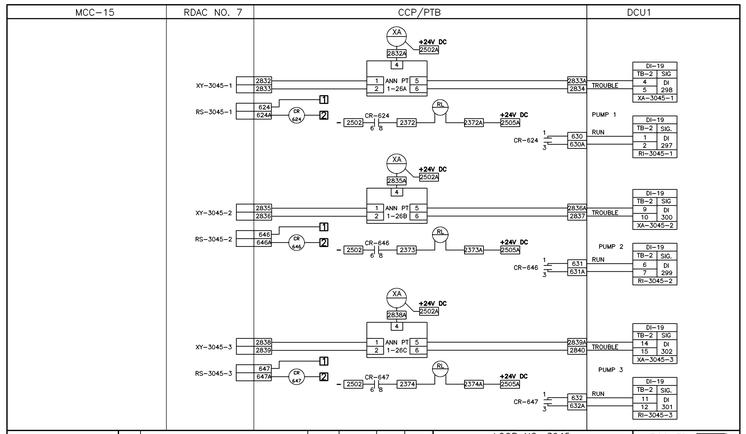

X DRAWING ISSUED FOR APPROVAL ONLY, NOT FOR CONSTRUCTION	2	REV – AS INSTALLED	DFG	05JAN96	DGR	DGR	LOOP NO. 3045 PRIMARY EFFLUENT WATER PUMPS 1–3 ALARM AND STATUS UPGRADE AND EXPANSION–PHASE V B ARLINGTON COUNTY WPCP, VA.	FISCHER & PORTER WARMINSTER, PA 18974 USA	
	1	FINAL – AS INSTALLED	GTS	12SEP95	LR	DB		DRAWING NUMBER	REV
☐ DRAWING ISSUED FOR CONSTRUCTION	0	APPROVAL	LR	16JUN94	LFR	JF		931215–L113	1
	REV	REVISION DESCRIPTION	DRAWN	DATE	CHKD	ENGR	AUTHORITY E931215.913 (NC15L113)		

REFER TO CONTRACT DRAWING NUMBER 001-12

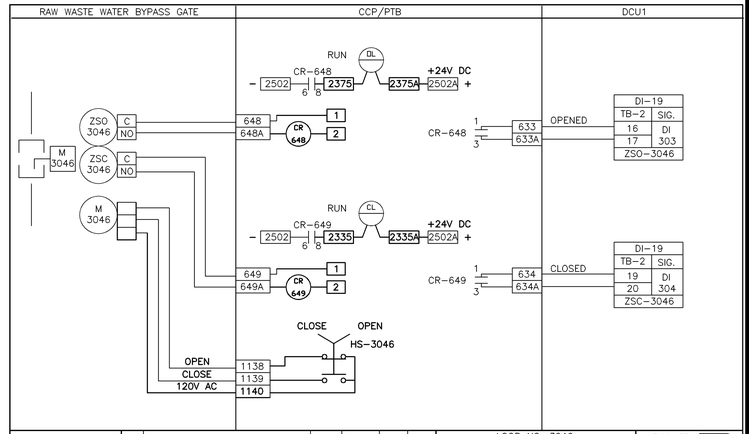

X DRAWING ISSUED FOR APPROVAL ONLY, NOT FOR CONSTRUCTION	2	REV – AS INSTALLED	DFG	03JAN96	DGR	DGR	LOOP NO. 3046 RAW WASTEWATER BYPASS INLET GATE TO CHLORINE CONTACT TANK STATUS UPGRADE AND EXPANSION–PHASE V B ARLINGTON COUNTY WPCP, VA.	FISCHER & PORTER WARMINSTER, PA 18974 USA	
	1	FINAL – AS INSTALLED	GTS	12SEP95	LR	DB		DRAWING NUMBER	REV
☐ DRAWING ISSUED FOR CONSTRUCTION	0	APPROVAL	LR	16JUN94	LFR	JF		931215–L114	1
	REV	REVISION DESCRIPTION	DRAWN	DATE	CHKD	ENGR	AUTHORITY E931215.913 (NC15L114)		

REFER TO CONTRACT DRAWING NUMBER 001-12

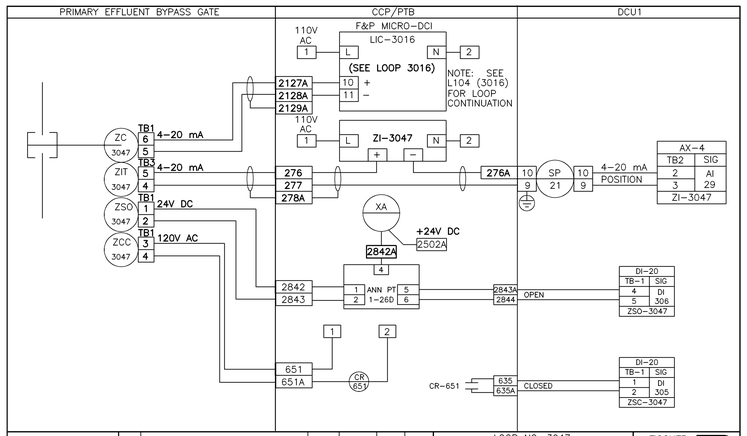

X DRAWING ISSUED FOR APPROVAL ONLY, NOT FOR CONSTRUCTION	2	REV – AS INSTALLED	DFG	03JAN96	DGR	DGR	LOOP NO. 3047 PRIMARY EFFLUENT BYPASS GATE CONTROL, ALARM AND STATUS UPGRADE AND EXPANSION–PHASE V B ARLINGTON COUNTY WPCP, VA.	FISCHER & PORTER WARMINSTER, PA 18974 USA	
	1	FINAL – AS INSTALLED	GTS	12SEP95	LR	DB		DRAWING NUMBER	REV
☐ DRAWING ISSUED FOR CONSTRUCTION	0	APPROVAL	LR	16JUN94	LFR	JF		931215–L115	1
	REV	REVISION DESCRIPTION	DRAWN	DATE	CHKD	ENGR	AUTHORITY E931215.913 (NC15L115)		

REFER TO CONTRACT DRAWING NUMBER 001-12

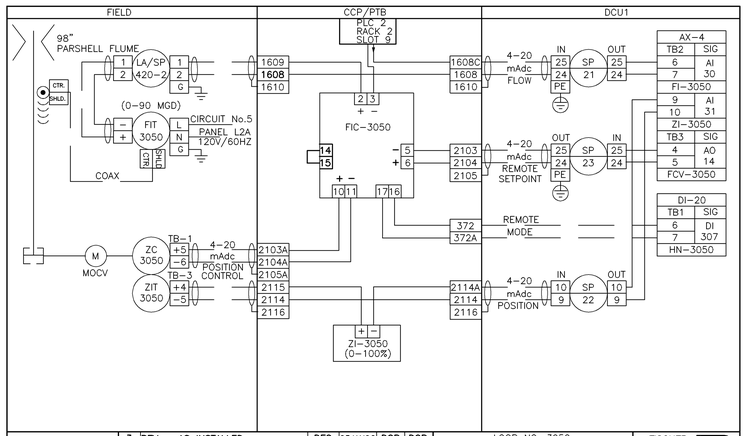

X DRAWING ISSUED FOR APPROVAL ONLY, NOT FOR CONSTRUCTION	3	REV – AS INSTALLED	DFG	05JAN96	DGR	DGR	LOOP NO. 3050 PRIMARY EFFLUENT FLOW, CONTROL, POSITION AND STATUS UPGRADE AND EXPANSION–PHASE V B ARLINGTON COUNTY WPCP, VA.	FISCHER & PORTER WARMINSTER, PA 18974 USA	
	2	CORRECTIONS TO REVISION	DGR	DEC94				DRAWING NUMBER	REV
☐ DRAWING ISSUED FOR CONSTRUCTION	1	REVISED PER C2i AS BUILT	DGR	DEC 94				931215–L116	2
	0	APPROVAL	LR	16JUN94	LFR	JF			
	REV	REVISION DESCRIPTION	DRAWN	DATE	CHKD	ENGR	AUTHORITY E931215.913 (NC15L116)		

REFER TO CONTRACT DRAWING NUMBER 001-12

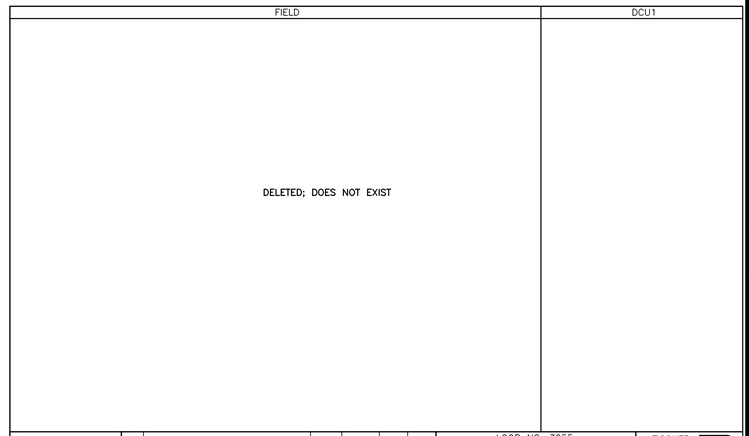

X DRAWING ISSUED FOR APPROVAL ONLY, NOT FOR CONSTRUCTION							LOOP NO. 3055 PRIMARY EFFLUENT PUMP STATION FLOW TO THICKENER BUILDING UPGRADE AND EXPANSION–PHASE V B ARLINGTON COUNTY WPCP, VA.	FISCHER & PORTER WARMINSTER, PA 18974 USA	
	1	FINAL – AS INSTALLED	GTS	12SEP95	LR	DB		DRAWING NUMBER	REV
☐ DRAWING ISSUED FOR CONSTRUCTION	0	APPROVAL	LR	16JUN94	LFR	JF		931215–L117	1
	REV	REVISION DESCRIPTION	DRAWN	DATE	CHKD	ENGR	AUTHORITY E931215.913 (NC15L117)		

NOT ON CONTRACT DRAWINGS

RECORD DRAWING

NO.	DATE	DRWN	CHKD	REVISIONS DESCRIPTION
1	11/98	FXP	ASG	RECORD DRAWING

DESIGNED BY: JRD
DRAWN BY: JRD
CHECKED BY/DATE/:
APPROVED BY/DATE:

THIS DRAWING HAS BEEN COMPILED HAZEN AND SAWYER, P.C.

ARLINGTON COUNTY, VIRGINIA
WATER POLLUTION CONTROL PLANT
UPGRADE AND EXPANSION- PHASE IIB

LOOP DIAGRAMS

SCALE NOTE

SCALE BAR SHOWN BELOW IS ONE INCH LONG ON A FULL SIZE DRAWING. WHEN SCALING DRAWINGS, MEASURE BAR TO DETERMINE IF SCALES SHOWN WILL REQUIRE ADJUSTING.

← ONE INCH →

CONTRACT NO.
9002 – WPC
YEAR 1991
LOCATION CODE
SPECIALTY CODE I
PROJECT NO.
5002 – 033
FILE NAME
001-32.DWG
DRAWING NO.
001-32
SHEET NO. 343

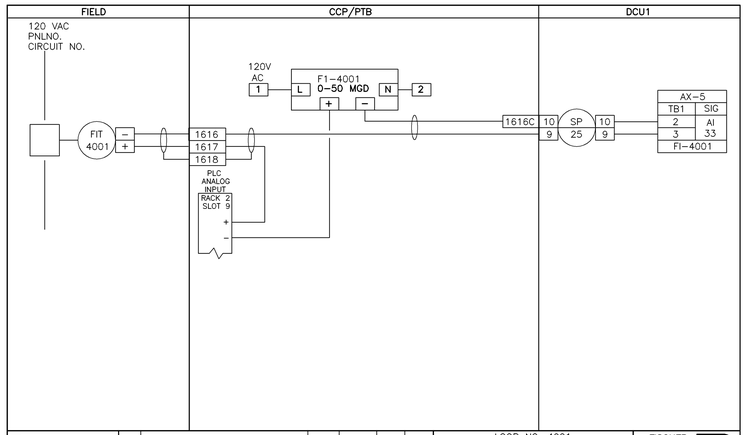

X DRAWING ISSUED FOR APPROVAL ONLY, NOT FOR CONSTRUCTION	2	REV – AS INSTALLED	DFG	05JAN96	DGR	DGR	LOOP NO. 4001 PRIMARY EFFLUENT/RAW WASTEWATER FLOW UPGRADE AND EXPANSION–PHASE V B ARLINGTON COUNTY WPCP, VA.
	1	FINAL – AS INSTALLED	GTS	12SEP95	LR	DB	
☐ DRAWING ISSUED FOR CONSTRUCTION	0	APPROVAL	LR	16JUN94	LFR	JF	
	REV	REVISION DESCRIPTION	DRAWN	DATE	CHKD	ENGR	AUTHORITY E931215.913 (NC15L118)

FISCHER & PORTER WARMINSTER, PA 18974 USA

DRAWING NUMBER	REV
931215–L118	1

REFER TO CONTRACT DRAWING NUMBER 001–13

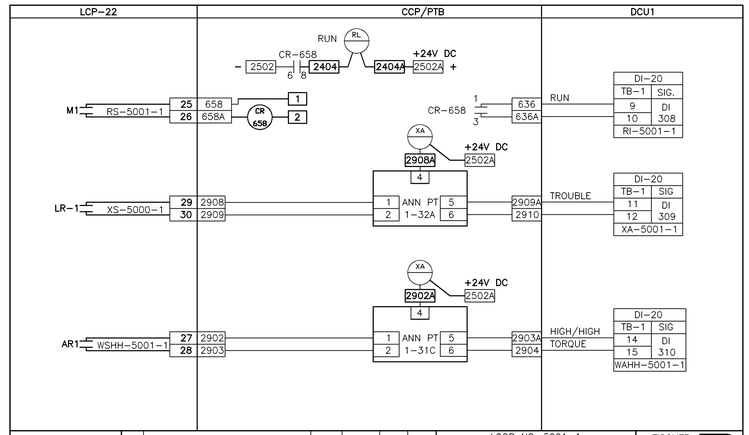

X DRAWING ISSUED FOR APPROVAL ONLY, NOT FOR CONSTRUCTION	2	REV – AS INSTALLED	DFG	05JAN96	DGR	DGR	LOOP NO. 5001–1 GRAVITY THICKENER 1 ALARM AND STATUS UPGRADE AND EXPANSION–PHASE V B ARLINGTON COUNTY WPCP, VA.
	1	FINAL – AS INSTALLED	GTS	12SEP95	LR	DB	
☐ DRAWING ISSUED FOR CONSTRUCTION	0	APPROVAL	LR	16JUN94	LFR	JF	
	REV	REVISION DESCRIPTION	DRAWN	DATE	CHKD	ENGR	AUTHORITY E931215.913 (NC15L119)

FISCHER & PORTER WARMINSTER, PA 18974 USA

DRAWING NUMBER	REV
931215–L119	1

REFER TO CONTRACT DRAWING NUMBER 001–13

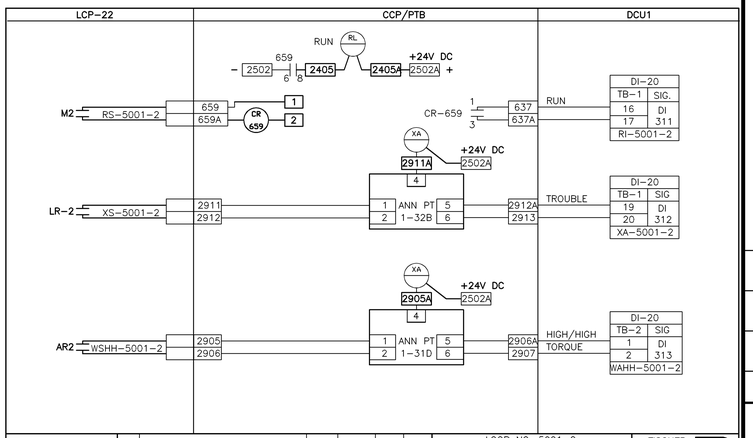

X DRAWING ISSUED FOR APPROVAL ONLY, NOT FOR CONSTRUCTION	2	REV – AS INSTALLED	DFG	05JAN96	DGR	DGR	LOOP NO. 5001–2 GRAVITY THICKENER 2 ALARM AND STATUS UPGRADE AND EXPANSION–PHASE V B ARLINGTON COUNTY WPCP, VA.
	1	FINAL – AS INSTALLED	GTS	12SEP95	LR	DB	
☐ DRAWING ISSUED FOR CONSTRUCTION	0	APPROVAL	LR	16JUN94	LFR	JF	
	REV	REVISION DESCRIPTION	DRAWN	DATE	CHKD	ENGR	AUTHORITY E931215.913 (NC15L120)

FISCHER & PORTER WARMINSTER, PA 18974 USA

DRAWING NUMBER	REV
931215–L120	1

REFER TO CONTRACT DRAWING NUMBER 001–13

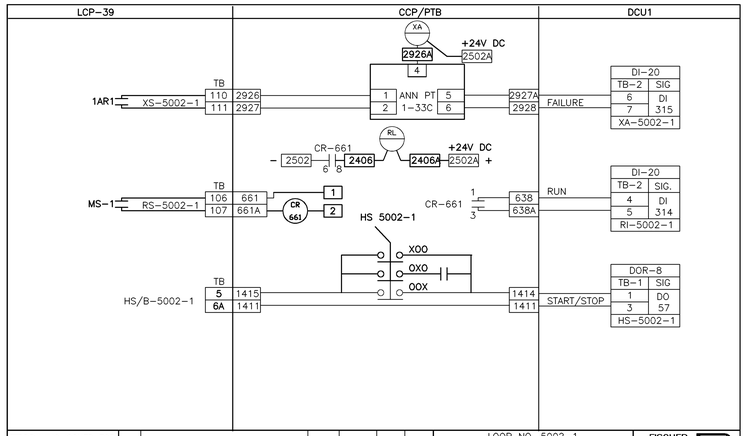

X DRAWING ISSUED FOR APPROVAL ONLY, NOT FOR CONSTRUCTION	2	REV – AS INSTALLED	DFG	05JAN96	DGR	DGR	LOOP NO. 5002–1 GRAVITY THICKENER SLUDGE PUMP 1 CONTROL, ALARM AND STATUS UPGRADE AND EXPANSION–PHASE V B ARLINGTON COUNTY WPCP, VA.
	1	FINAL – AS INSTALLED	GTS	12SEP95	LR	DB	
☐ DRAWING ISSUED FOR CONSTRUCTION	0	APPROVAL	LR	16JUN94	LFR	JF	
	REV	REVISION DESCRIPTION	DRAWN	DATE	CHKD	ENGR	AUTHORITY E931215.913 (NC15L121)

FISCHER & PORTER WARMINSTER, PA 18974 USA

DRAWING NUMBER	REV
931215–L121	1

REFER TO CONTRACT DRAWING NUMBER 001–13

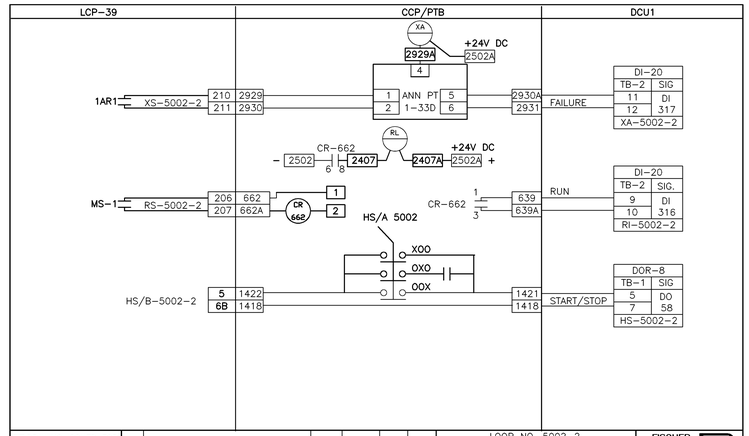

X DRAWING ISSUED FOR APPROVAL ONLY, NOT FOR CONSTRUCTION	2	REV – AS INSTALLED	DFG	05JAN96	DGR	DGR	LOOP NO. 5002–2 GRAVITY THICKENER SLUDGE PUMP 2 CONTROL, ALARM AND STATUS UPGRADE AND EXPANSION–PHASE V B ARLINGTON COUNTY WPCP, VA.
	1	FINAL – AS INSTALLED	GTS	12SEP95	LR	DB	
☐ DRAWING ISSUED FOR CONSTRUCTION	0	APPROVAL	LR	16JUN94	LFR	JF	
	REV	REVISION DESCRIPTION	DRAWN	DATE	CHKD	ENGR	AUTHORITY E931215.913 (NC15L122)

FISCHER & PORTER WARMINSTER, PA 18974 USA

DRAWING NUMBER	REV
931215–L122	1

REFER TO CONTRACT DRAWING NUMBER 001–13

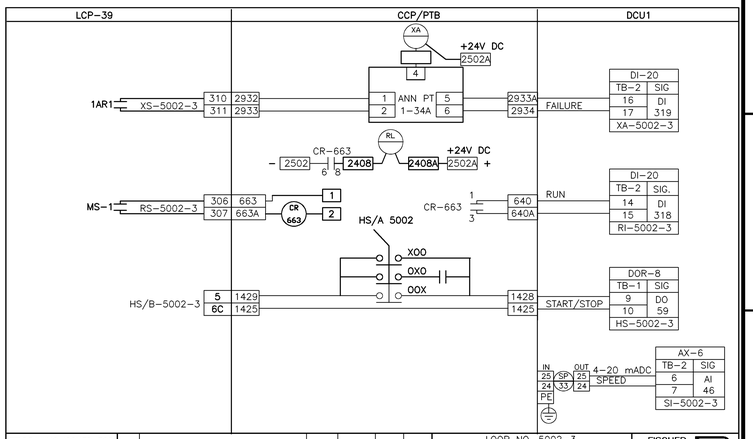

X DRAWING ISSUED FOR APPROVAL ONLY, NOT FOR CONSTRUCTION	2	REV – AS INSTALLED	DFG	05JAN96	DGR	DGR	LOOP NO. 5002–3 GRAVITY THICKENER SLUDGE PUMP 3 CONTROL, ALARM AND STATUS UPGRADE AND EXPANSION–PHASE V B ARLINGTON COUNTY WPCP, VA.
	1	FINAL – AS INSTALLED	GTS	12SEP95	LR	DB	
☐ DRAWING ISSUED FOR CONSTRUCTION	0	APPROVAL	LR	16JUN94	LFR	JF	
	REV	REVISION DESCRIPTION	DRAWN	DATE	CHKD	ENGR	AUTHORITY E931215.913 (NC15L123)

FISCHER & PORTER WARMINSTER, PA 18974 USA

DRAWING NUMBER	REV
931215–L123	1

REFER TO CONTRACT DRAWING NUMBER 001–13

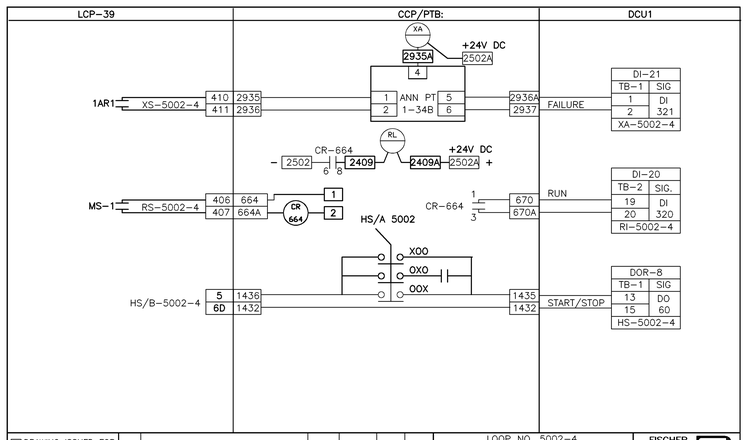

X DRAWING ISSUED FOR APPROVAL ONLY, NOT FOR CONSTRUCTION	2	REV – AS INSTALLED	DFG	05JAN96	DGR	DGR	LOOP NO. 5002–4 GRAVITY THICKENER SLUDGE PUMP 4 CONTROL, ALARM AND STATUS UPGRADE AND EXPANSION–PHASE V B ARLINGTON COUNTY WPCP, VA.
	1	FINAL – AS INSTALLED	GTS	12SEP95	LR	DB	
☐ DRAWING ISSUED FOR CONSTRUCTION	0	APPROVAL	LR	16JUN94	LFR	JF	
	REV	REVISION DESCRIPTION	DRAWN	DATE	CHKD	ENGR	AUTHORITY E931215.913 (NC15L124)

FISCHER & PORTER WARMINSTER, PA 18974 USA

DRAWING NUMBER	REV
931215–L124	1

REFER TO CONTRACT DRAWING NUMBER 001–13

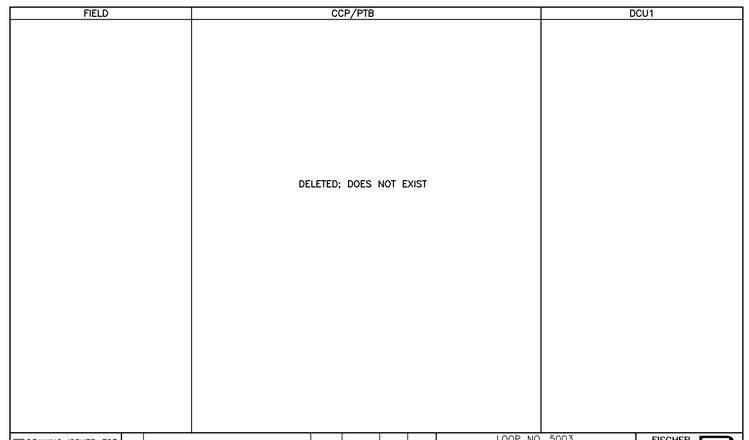

X DRAWING ISSUED FOR APPROVAL ONLY, NOT FOR CONSTRUCTION	2	REV – AS INSTALLED	DFG	05JAN96	DGR	DGR	LOOP NO. 5003 AWT SLUDGE FLOW TO GRAVITY THICKENERS UPGRADE AND EXPANSION–PHASE V B ARLINGTON COUNTY WPCP, VA.
	1	FINAL – AS INSTALLED	GTS	12SEP95	LR	DB	
☐ DRAWING ISSUED FOR CONSTRUCTION	0	APPROVAL	LR	16JUN94	LFR	JF	
	REV	REVISION DESCRIPTION	DRAWN	DATE	CHKD	ENGR	AUTHORITY E931215.913 (NC15L125)

FISCHER & PORTER WARMINSTER, PA 18974 USA

DRAWING NUMBER	REV
931215–L125	1

REFER TO CONTRACT DRAWING NUMBER 001–13

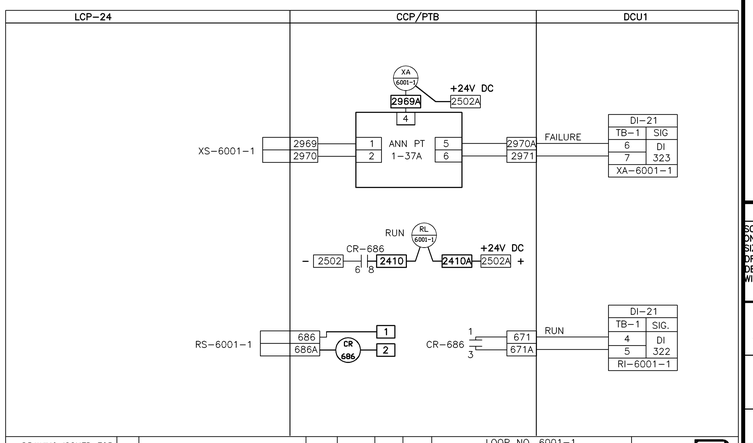

X DRAWING ISSUED FOR APPROVAL ONLY, NOT FOR CONSTRUCTION	2	REV – AS INSTALLED	DFG	05JAN96	DGR	DGR	LOOP NO. 6001–1 SLUDGE STORAGE TANK MIXER 1 ALARM AND STATUS UPGRADE AND EXPANSION–PHASE V B ARLINGTON COUNTY WPCP, VA.
	1	FINAL – AS INSTALLED	GTS	12SEP95	LR	DB	
☐ DRAWING ISSUED FOR CONSTRUCTION	0	APPROVAL	LR	17JUN94	LFR	JF	
	REV	REVISION DESCRIPTION	DRAWN	DATE	CHKD	ENGR	AUTHORITY E931215.913 (NC15L126)

FISCHER & PORTER WARMINSTER, PA 18974 USA

DRAWING NUMBER	REV
931215–L126	1

REFER TO CONTRACT DRAWING NUMBER 001–13

RECORD DRAWING

NO.	DATE	DRWN	CHKD	REVISIONS DESCRIPTION
1	11/98	FXP	ASG	RECORD DRAWING

DESIGNED BY: JRD
DRAWN BY: JRD
CHECKED BY/DATE/:
APPROVED BY/DATE:

THIS DRAWING HAS BEEN COMPILED
HAZEN AND SAWYER, P.C.

ARLINGTON COUNTY, VIRGINIA
WATER POLLUTION CONTROL PLANT
UPGRADE AND EXPANSION– PHASE IIB

LOOP DIAGRAMS

SCALE NOTE

SCALE BAR SHOWN BELOW IS ONE INCH LONG ON A FULL SIZE DRAWING. WHEN SCALING DRAWINGS, MEASURE BAR TO DETERMINE IF SCALES SHOWN WILL REQUIRE ADJUSTING.

ONE INCH

CONTRACT NO.
9002 – WPC
YEAR 1991
LOCATION CODE
SPECIALTY CODE
|
PROJECT NO.
5002 – 033
FILE NAME
001–33.DWG
DRAWING NO.
001–33
SHEET NO. 344

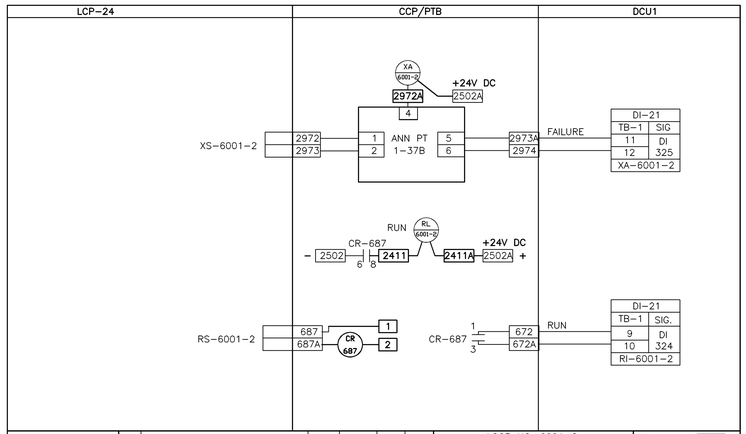

X DRAWING ISSUED FOR APPROVAL ONLY, NOT FOR CONSTRUCTION	2	REV – AS INSTALLED	DFG	05JAN96	DGR	DGR	LOOP NO. 6001-2 SLUDGE STORAGE TANK MIXER 2 ALARM AND STATUS UPGRADE AND EXPANSION-PHASE V B ARLINGTON COUNTY WPCP, VA.	FISCHER & PORTER WARMINSTER, PA 18974 USA	
	1	FINAL – AS INSTALLED	GTS	12SEP95	LR	DB		DRAWING NUMBER	REV
☐ DRAWING ISSUED FOR CONSTRUCTION	0	APPROVAL	LR	17JUN94	LFR	JF		931215-L127	1
	REV	REVISION DESCRIPTION	DRAWN	DATE	CHKD	ENGR	AUTHORITY E931215.913 (NC15L127)		

REFER TO CONTRACT DRAWING NUMBER 001-13

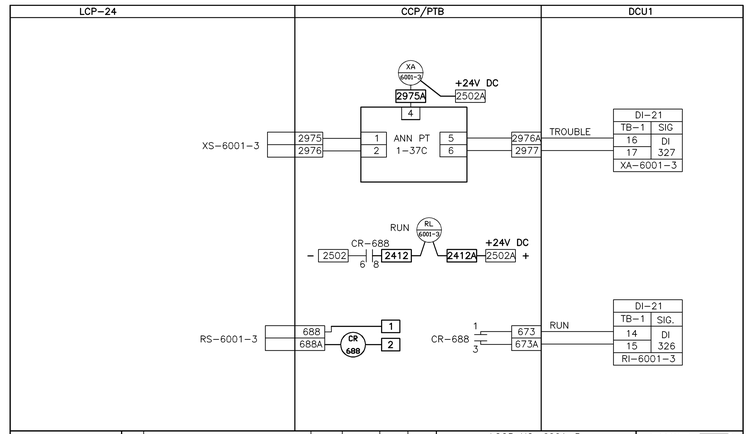

X DRAWING ISSUED FOR APPROVAL ONLY, NOT FOR CONSTRUCTION	2	REV – AS INSTALLED	DFG	05JAN96	DGR	DGR	LOOP NO. 6001-3 SLUDGE STORAGE TANK MIXER 3 ALARM AND STATUS UPGRADE AND EXPANSION-PHASE V B ARLINGTON COUNTY WPCP, VA.	FISCHER & PORTER WARMINSTER, PA 18974 USA	
	1	FINAL – AS INSTALLED	GTS	12SEP95	LR	DB		DRAWING NUMBER	REV
☐ DRAWING ISSUED FOR CONSTRUCTION	0	APPROVAL	LR	17JUN94	LFR	JF		931215-L128	1
	REV	REVISION DESCRIPTION	DRAWN	DATE	CHKD	ENGR	AUTHORITY E931215.913 (NC15L128)		

REFER TO CONTRACT DRAWING NUMBER 001-13

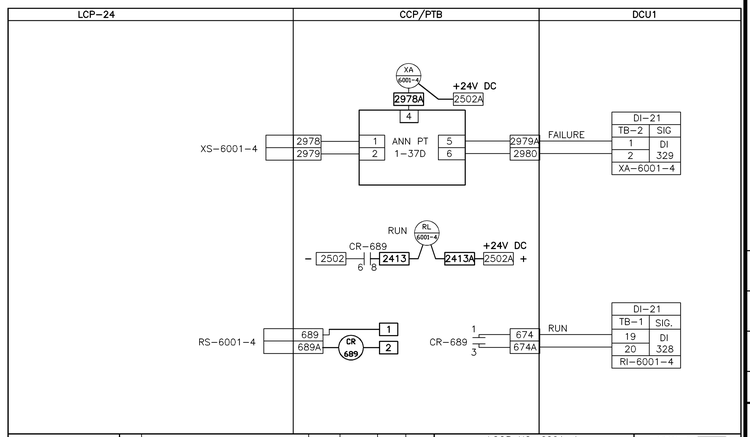

X DRAWING ISSUED FOR APPROVAL ONLY, NOT FOR CONSTRUCTION	2	REV – AS INSTALLED	DFG	05JAN96	DGR	DGR	LOOP NO. 6001-4 SLUDGE STORAGE TANK MIXER 4 ALARM AND STATUS UPGRADE AND EXPANSION-PHASE V B ARLINGTON COUNTY WPCP, VA.	FISCHER & PORTER WARMINSTER, PA 18974 USA	
	1	FINAL – AS INSTALLED	GTS	12SEP95	LR	DB		DRAWING NUMBER	REV
☐ DRAWING ISSUED FOR CONSTRUCTION	0	APPROVAL	LR	17JUN94	LFR	JF		931215-L129	1
	REV	REVISION DESCRIPTION	DRAWN	DATE	CHKD	ENGR	AUTHORITY E931215.913 (NC15L129)		

REFER TO CONTRACT DRAWING NUMBER 001-13

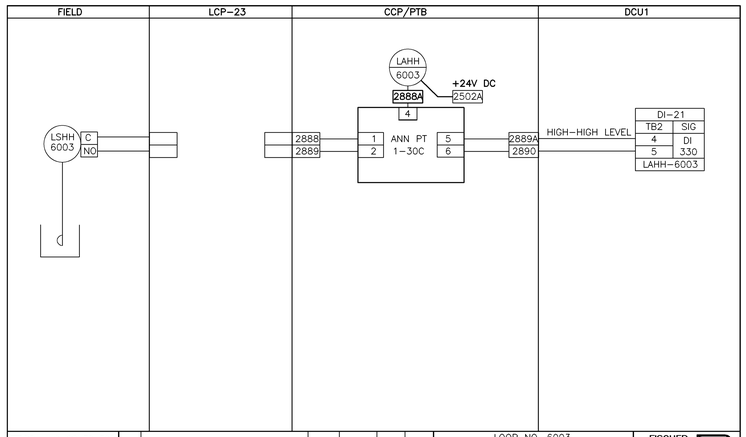

X DRAWING ISSUED FOR APPROVAL ONLY, NOT FOR CONSTRUCTION	2	REV – AS INSTALLED	DFG	05JAN96	DGR	DGR	LOOP NO. 6003 SLUDGE STORAGE DRAIN SUMP PUMP LEVEL UPGRADE AND EXPANSION-PHASE V B ARLINGTON COUNTY WPCP, VA.	FISCHER & PORTER WARMINSTER, PA 18974 USA	
	1	FINAL – AS INSTALLED	GTS	12SEP95	LR	DB		DRAWING NUMBER	REV
☐ DRAWING ISSUED FOR CONSTRUCTION	0	APPROVAL	LR	17JUN94	LFR	JF		931215-L130	1
	REV	REVISION DESCRIPTION	DRAWN	DATE	CHKD	ENGR	AUTHORITY E931215.913 (NC15L130)		

REFER TO CONTRACT DRAWING NUMBER 001-13

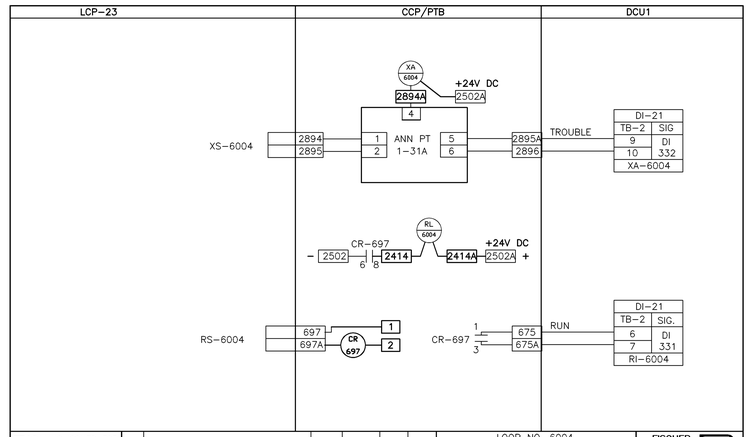

X DRAWING ISSUED FOR APPROVAL ONLY, NOT FOR CONSTRUCTION	2	REV – AS INSTALLED	DFG	05JAN96	DGR	DGR	LOOP NO. 6004 SLUDGE STORAGE DRAIN SUMP PUMP 2 ALARM AND STATUS UPGRADE AND EXPANSION-PHASE V B ARLINGTON COUNTY WPCP, VA.	FISCHER & PORTER WARMINSTER, PA 18974 USA	
	1	FINAL – AS INSTALLED	GTS	12SEP95	LR	DB		DRAWING NUMBER	REV
☐ DRAWING ISSUED FOR CONSTRUCTION	0	APPROVAL	LR	17JUN94	LFR	JF		931215-L131	1
	REV	REVISION DESCRIPTION	DRAWN	DATE	CHKD	ENGR	AUTHORITY E931215.913 (NC15L131)		

REFER TO CONTRACT DRAWING NUMBER 001-13

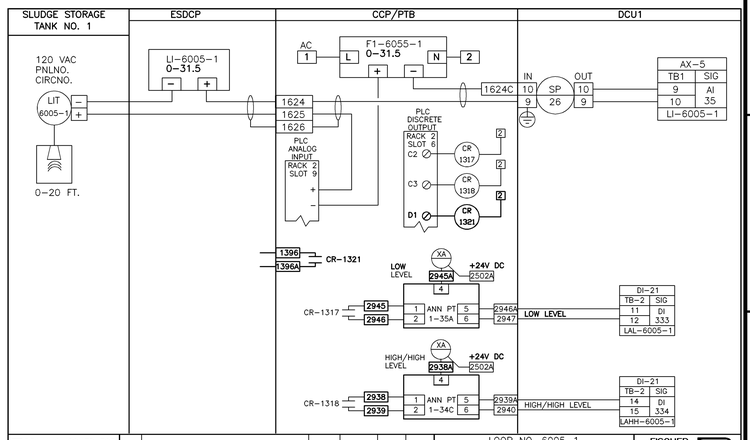

X DRAWING ISSUED FOR APPROVAL ONLY, NOT FOR CONSTRUCTION	2	REV – AS INSTALLED	DFG	05JAN96	DGR	DGR	LOOP NO. 6005-1 SLUDGE STORAGE TANK 1 LEVEL AND ALARM UPGRADE AND EXPANSION-PHASE V B ARLINGTON COUNTY WPCP, VA.	FISCHER & PORTER WARMINSTER, PA 18974 USA	
	1	FINAL – AS INSTALLED	GTS	12SEP95	LR	DB		DRAWING NUMBER	REV
☐ DRAWING ISSUED FOR CONSTRUCTION	0	APPROVAL	LR	17JUN94	LFR	JF		931215-L132	1
	REV	REVISION DESCRIPTION	DRAWN	DATE	CHKD	ENGR	AUTHORITY E931215.913 (NC15L132)		

REFER TO CONTRACT DRAWING NUMBER 001-14

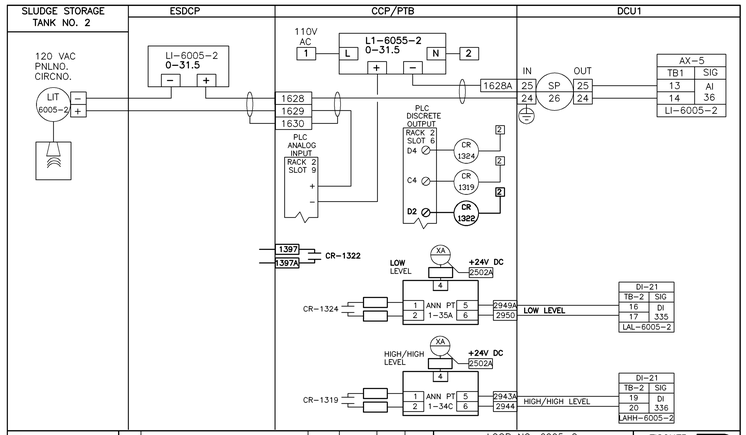

X DRAWING ISSUED FOR APPROVAL ONLY, NOT FOR CONSTRUCTION	2	REV – AS INSTALLED	DFG	05JAN96	DGR	DGR	LOOP NO. 6005-2 SLUDGE STORAGE TANK 2 LEVEL AND ALARM UPGRADE AND EXPANSION-PHASE V B ARLINGTON COUNTY WPCP, VA.	FISCHER & PORTER WARMINSTER, PA 18974 USA	
	1	FINAL – AS INSTALLED	GTS	12SEP95	LR	DB		DRAWING NUMBER	REV
☐ DRAWING ISSUED FOR CONSTRUCTION	0	APPROVAL	LR	17JUN94	LFR	JF		931215-L133	1
	REV	REVISION DESCRIPTION	DRAWN	DATE	CHKD	ENGR	AUTHORITY E931215.913 (NC15L133)		

REFER TO CONTRACT DRAWING NUMBER 001-14

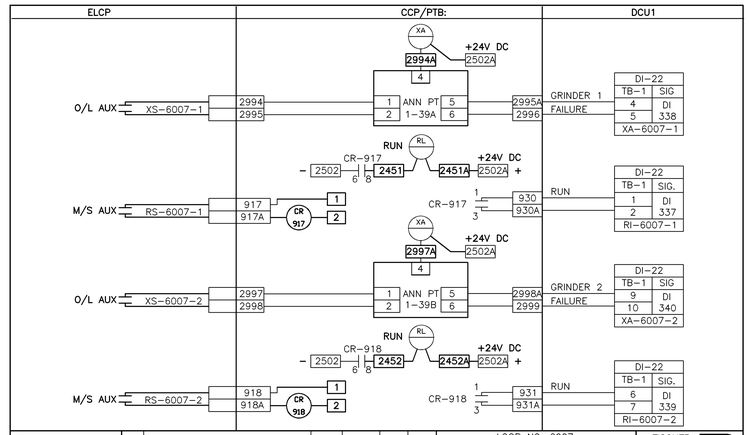

X DRAWING ISSUED FOR APPROVAL ONLY, NOT FOR CONSTRUCTION	2	REV – AS INSTALLED	DFG	05JAN96	DGR	DGR	LOOP NO. 6007 SLUDGE STORAGE TANK GRINDERS ALARM AND STATUS UPGRADE AND EXPANSION-PHASE V B ARLINGTON COUNTY WPCP, VA.	FISCHER & PORTER WARMINSTER, PA 18974 USA	
	1	FINAL – AS INSTALLED	GTS	12SEP95	LR	DB		DRAWING NUMBER	REV
☐ DRAWING ISSUED FOR CONSTRUCTION	0	APPROVAL	LR	17JUN94	LFR	JF		931215-L134	0
	REV	REVISION DESCRIPTION	DRAWN	DATE	CHKD	ENGR	AUTHORITY E931215.913 (NC15L134)		

REFER TO CONTRACT DRAWING NUMBER 001-14

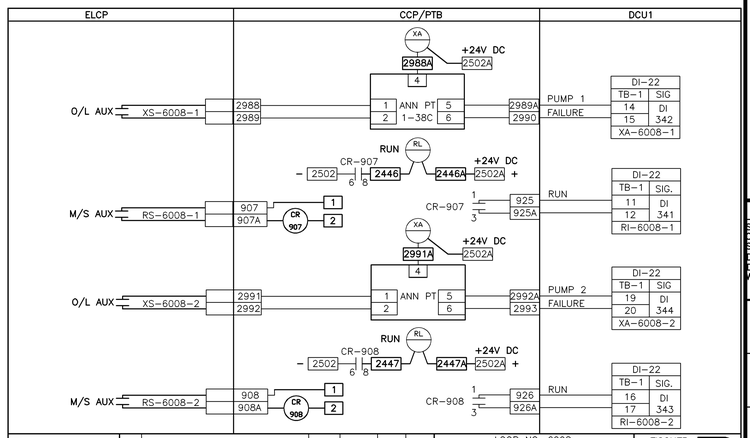

X DRAWING ISSUED FOR APPROVAL ONLY, NOT FOR CONSTRUCTION	2	REV – AS INSTALLED	DFG	05JAN96	DGR	DGR	LOOP NO. 6008 MAIN SLUDGE TRANSFER PUMPS ALARM AND STATUS UPGRADE AND EXPANSION-PHASE V B ARLINGTON COUNTY WPCP, VA.	FISCHER & PORTER WARMINSTER, PA 18974 USA	
	1	FINAL – AS INSTALLED	GTS	12SEP95	LR	DB		DRAWING NUMBER	REV
☐ DRAWING ISSUED FOR CONSTRUCTION	0	APPROVAL	LR	17JUN94	LFR	JF		931215-L135	1
	REV	REVISION DESCRIPTION	DRAWN	DATE	CHKD	ENGR	AUTHORITY E931215.913 (NC15L135)		

REFER TO CONTRACT DRAWING NUMBER 001-14

NO.	DATE	DRWN	CHKD	REVISIONS DESCRIPTION
1	11/98	FXP	ASG	RECORD DRAWING

DESIGNED BY: JRD
DRAWN BY: JRD
CHECKED BY/DATE/:
APPROVED BY/DATE:

THIS DRAWING HAS BEEN COMPILED
HAZEN AND SAWYER, P.C.

ARLINGTON COUNTY, VIRGINIA
WATER POLLUTION CONTROL PLANT
UPGRADE AND EXPANSION- PHASE IIB

LOOP DIAGRAMS

SCALE NOTE

SCALE BAR SHOWN BELOW IS ONE INCH LONG ON A FULL SIZE DRAWING. WHEN SCALING DRAWINGS, MEASURE BAR TO DETERMINE IF SCALES SHOWN WILL REQUIRE ADJUSTING.

← ONE INCH →

CONTRACT NO.
9002 – WPC
YEAR 1991
LOCATION CODE
SPECIALTY CODE 1
PROJECT NO.
5002 – 033
FILE NAME
001-34.DWG
DRAWING NO.
001-34
SHEET NO. 345

RECORD DRAWING

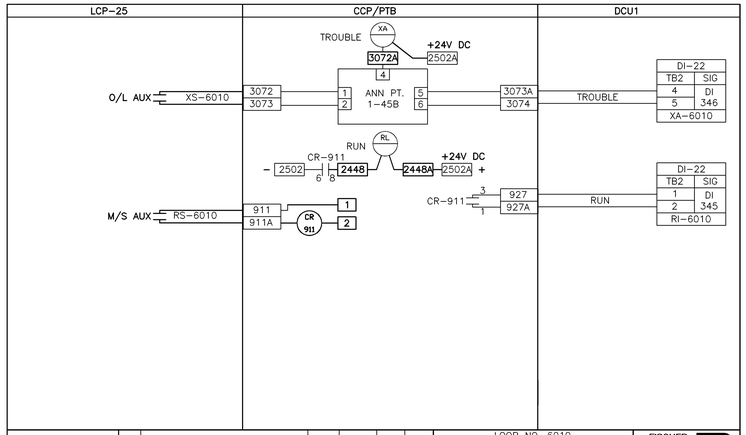

X DRAWING ISSUED FOR APPROVAL ONLY, NOT FOR CONSTRUCTION								LOOP NO. 6010	FISCHER & PORTER WARMINSTER, PA 18974 USA	
	2	REV – AS INSTALLED	DFG	05JAN96	DGR	DGR		AUXILIARY SLUDGE TRANSFER PUMP ALARM AND STATUS	DRAWING NUMBER	REV
	1	FINAL – AS INSTALLED	GTS	12SEP95	LR	DB		UPGRADE AND EXPANSION–PHASE V B		
☐ DRAWING ISSUED FOR CONSTRUCTION	0	APPROVAL	LR	13JUN94	LFR	JF		ARLINGTON COUNTY WPCP, VA.	931215-L136	1
	REV	REVISION DESCRIPTION	DRAWN	DATE	CHKD	ENGR	AUTHORITY	E931215.913 (NC15L136)		

REFER TO CONTRACT DRAWING NUMBER 001-14

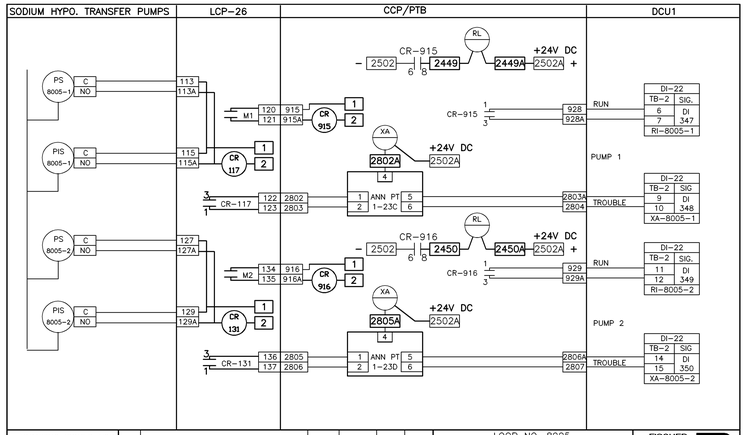

X DRAWING ISSUED FOR APPROVAL ONLY, NOT FOR CONSTRUCTION								LOOP NO. 8005	FISCHER & PORTER WARMINSTER, PA 18974 USA	
	2	REV – AS INSTALLED	DFG	05JAN96	DGR	DGR		SODIUM HYPOCHLORITE TRANSFER PUMPS ALARM AND STATUS	DRAWING NUMBER	REV
	1	FINAL – AS INSTALLED	GTS	12SEP95	LR	DB		UPGRADE AND EXPANSION–PHASE V B		
☐ DRAWING ISSUED FOR CONSTRUCTION	0	APPROVAL	LR	17JUN94	LFR	JF		ARLINGTON COUNTY WPCP, VA.	931215-L137	1
	REV	REVISION DESCRIPTION	DRAWN	DATE	CHKD	ENGR	AUTHORITY	E931215.913 (NC15L137)		

REFER TO CONTRACT DRAWING NUMBER 001-14

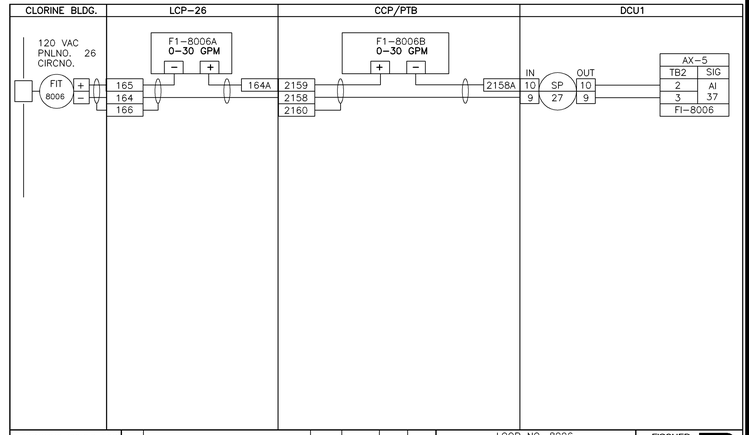

X DRAWING ISSUED FOR APPROVAL ONLY, NOT FOR CONSTRUCTION								LOOP NO. 8006	FISCHER & PORTER WARMINSTER, PA 18974 USA	
	2	REV – AS INSTALLED	DFG	05JAN96	DGR	DGR		SODIUM HYPOCHLORITE TRANSFER PUMP DISTRIBUTION FLOW	DRAWING NUMBER	REV
	1	FINAL – AS INSTALLED	GTS	12SEP95	LR	DB		UPGRADE AND EXPANSION–PHASE V B		
☐ DRAWING ISSUED FOR CONSTRUCTION	0	APPROVAL	LR	17JUN94	LFR	JF		ARLINGTON COUNTY WPCP, VA.	931215-L138	1
	REV	REVISION DESCRIPTION	DRAWN	DATE	CHKD	ENGR	AUTHORITY	E931215.913 (NC15L138)		

REFER TO CONTRACT DRAWING NUMBER 001-14

X DRAWING ISSUED FOR APPROVAL ONLY, NOT FOR CONSTRUCTION								LOOP NO. 8015 SECONDARY SERVICE NaOCL LEVEL	FISCHER & PORTER WARMINSTER, PA 18974 USA	
	2	REV – AS INSTALLED	DFG	05JAN96	DGR	DGR		UPGRADE AND EXPANSION–PHASE V B	DRAWING NUMBER	REV
	1	FINAL – AS INSTALLED	GTS	12SEP95	LR	DB		ARLINGTON COUNTY WPCP, VA.		
☐ DRAWING ISSUED FOR CONSTRUCTION	0	APPROVAL	LR	13JUN94	LFR	JF			931215-L139	1
	REV	REVISION DESCRIPTION	DRAWN	DATE	CHKD	ENGR	AUTHORITY	E931215.913 (NC15L139)		

REFER TO CONTRACT DRAWING NUMBER 001-15

X DRAWING ISSUED FOR APPROVAL ONLY, NOT FOR CONSTRUCTION								LOOP NO. 8011-1 PRELIMINARY TREATMENT NaOCL LEVEL	FISCHER & PORTER WARMINSTER, PA 18974 USA	
	2	REV – AS INSTALLED	DFG	05JAN96	DGR	DGR		UPGRADE AND EXPANSION–PHASE V B	DRAWING NUMBER	REV
	1	FINAL – AS INSTALLED	LR	13JUN94	LFR	JF		ARLINGTON COUNTY WPCP, VA.		
☐ DRAWING ISSUED FOR CONSTRUCTION	0	APPROVAL	LR	13JUN94	LFR	JF			931215-L140	1
	REV	REVISION DESCRIPTION	DRAWN	DATE	CHKD	ENGR	AUTHORITY	E931215.913 (NC15L140)		

REFER TO CONTRACT DRAWING NUMBER 001-16

X DRAWING ISSUED FOR APPROVAL ONLY, NOT FOR CONSTRUCTION								LOOP NO. 8011-2 SECONDARY TREATMENT NaOCL LEVEL	FISCHER & PORTER WARMINSTER, PA 18974 USA	
	2	REV – AS INSTALLED	DFG	05JAN96	DGR	DGR		UPGRADE AND EXPANSION–PHASE V B	DRAWING NUMBER	REV
	1	FINAL – AS INSTALLED	GTS	12SEP95	LR	DB		ARLINGTON COUNTY WPCP, VA.		
☐ DRAWING ISSUED FOR CONSTRUCTION	0	APPROVAL	LR	13JUN94	LFR	JF			931215-L141	1
	REV	REVISION DESCRIPTION	DRAWN	DATE	CHKD	ENGR	AUTHORITY	E931215.913 (NC15L141)		

REFER TO CONTRACT DRAWING NUMBER 001-16

X DRAWING ISSUED FOR APPROVAL ONLY, NOT FOR CONSTRUCTION								LOOP NO. 8011-3 LIQUID POLYMER LEVEL	FISCHER & PORTER WARMINSTER, PA 18974 USA	
	2	REV – AS INSTALLED	DFG	05JAN96	DGR	DGR		UPGRADE AND EXPANSION–PHASE V B	DRAWING NUMBER	REV
	1	FINAL – AS INSTALLED	GTS	12SEP95	LR	DB		ARLINGTON COUNTY WPCP, VA.		
☐ DRAWING ISSUED FOR CONSTRUCTION	0	APPROVAL	LR	13JUN94	LFR	JF			931215-L142	1
	REV	REVISION DESCRIPTION	DRAWN	DATE	CHKD	ENGR	AUTHORITY	E931215.913 (NC15L142)		

REFER TO CONTRACT DRAWING NUMBER 001-16

X DRAWING ISSUED FOR APPROVAL ONLY, NOT FOR CONSTRUCTION								LOOP NO. 8012 PRELIMINARY TREATMENT BLDG NaOCL PUMPS ALARM AND STATUS	FISCHER & PORTER WARMINSTER, PA 18974 USA	
	2	REV – AS INSTALLED	DFG	05JAN96	DGR	DGR		UPGRADE AND EXPANSION–PHASE V B	DRAWING NUMBER	REV
	1	FINAL – AS INSTALLED	GTS	12SEP95	LR	DB		ARLINGTON COUNTY WPCP, VA.		
☐ DRAWING ISSUED FOR CONSTRUCTION	0	APPROVAL	LR	17JUN94	LFR	JF			931215-L143	1
	REV	REVISION DESCRIPTION	DRAWN	DATE	CHKD	ENGR	AUTHORITY	E931215.913 (NC15L143)		

REFER TO CONTRACT DRAWING NUMBER 001-15

X DRAWING ISSUED FOR APPROVAL ONLY, NOT FOR CONSTRUCTION								LOOP NO. SPARE SPARE DIGITAL INPUTS	FISCHER & PORTER WARMINSTER, PA 18974 USA	
									DRAWING NUMBER	REV
	1	FINAL – AS INSTALLED	GTS	12SEP95	LR	DB		UPGRADE AND EXPANSION–PHASE V B		
☐ DRAWING ISSUED FOR CONSTRUCTION	0	APPROVAL	LR	17JUN94	LFR	JF		ARLINGTON COUNTY WPCP, VA.	931215-L144	1
	REV	REVISION DESCRIPTION	DRAWN	DATE	CHKD	ENGR	AUTHORITY	E931215.913 (NC15L144)		

NOT ON CONTRACT DRAWINGS

NO.	DATE	DRWN	CHKD	REVISIONS DESCRIPTION
1	11/98	FXP	ASG	RECORD DRAWING

DESIGNED BY: JRD
DRAWN BY: JRD
CHECKED BY/DATE/: ASG 11/98
APPROVED BY/DATE:

THIS DRAWING HAS BEEN COMPILED BY HAZEN AND SAWYER, P.C.

ARLINGTON COUNTY, VIRGINIA
WATER POLLUTION CONTROL PLANT
UPGRADE AND EXPANSION- PHASE IIB

LOOP DIAGRAMS

SCALE NOTE

SCALE BAR SHOWN BELOW IS ONE INCH LONG ON A FULL SIZE DRAWING. WHEN SCALING DRAWINGS, MEASURE BAR TO DETERMINE IF SCALES SHOWN WILL REQUIRE ADJUSTING.

ONE INCH

CONTRACT NO. 9002 – WPC
YEAR 1991
LOCATION CODE
SPECIALTY CODE I
PROJECT NO. 5002 – 033
FILE NAME 001-35.DWG
DRAWING NO. 001-35
SHEET NO. 346

RECORD DRAWING

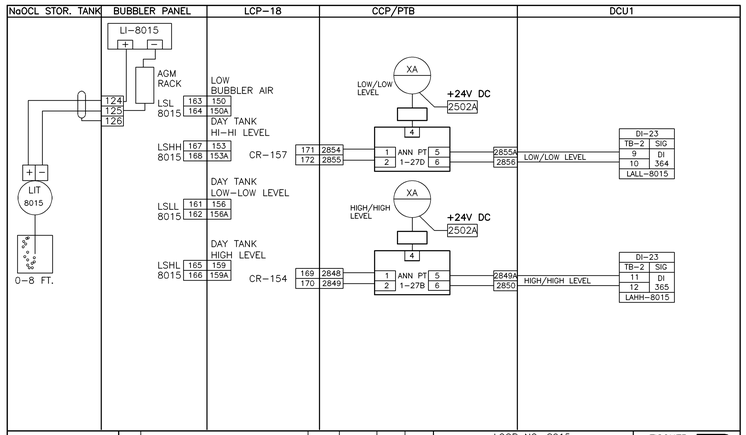

X DRAWING ISSUED FOR APPROVAL ONLY, NOT FOR CONSTRUCTION	2	REV – AS INSTALLED	DFG	08JAN96	DGR	DGR
	1	FINAL – AS INSTALLED	GTS	12SEP95	LR	DB
☐ DRAWING ISSUED FOR CONSTRUCTION	0	APPROVAL	LR	17JUN94	LFR	JF
	REV	REVISION DESCRIPTION	DRAWN	DATE	CHKD	ENGR

LOOP NO. 8015
SECONDARY SERVICE PUMP STATION
NaOCL STORAGE TANK LEVEL
UPGRADE AND EXPANSION–PHASE V B
ARLINGTON COUNTY WPCP, VA.
AUTHORITY E931215.913 (NC15L145)

FISCHER & PORTER WARMINSTER, PA 18974 USA
DRAWING NUMBER 931215–L145 REV 1

REFER TO CONTRACT DRAWING NUMBER 001–15

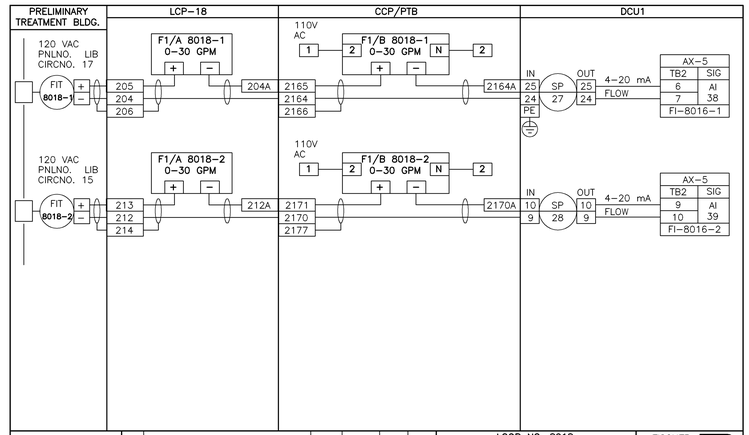

X DRAWING ISSUED FOR APPROVAL ONLY, NOT FOR CONSTRUCTION	2	REV – AS INSTALLED	DFG	05JAN96	DGR	DGR
	1	FINAL – AS INSTALLED	GTS	12SEP95	LR	DB
☐ DRAWING ISSUED FOR CONSTRUCTION	0	APPROVAL	LR	17JUN94	LFR	JF
	REV	REVISION DESCRIPTION	DRAWN	DATE	CHKD	ENGR

LOOP NO. 8018
PRELIMINARY TREATMENT NaOCL
DISTRIBUTION PUMPS FLOWS
UPGRADE AND EXPANSION–PHASE V B
ARLINGTON COUNTY WPCP, VA.
AUTHORITY E931215.913 (NC15L146)

FISCHER & PORTER WARMINSTER, PA 18974 USA
DRAWING NUMBER 931215–L146 REV 1

REFER TO CONTRACT DRAWING NUMBER 001–15

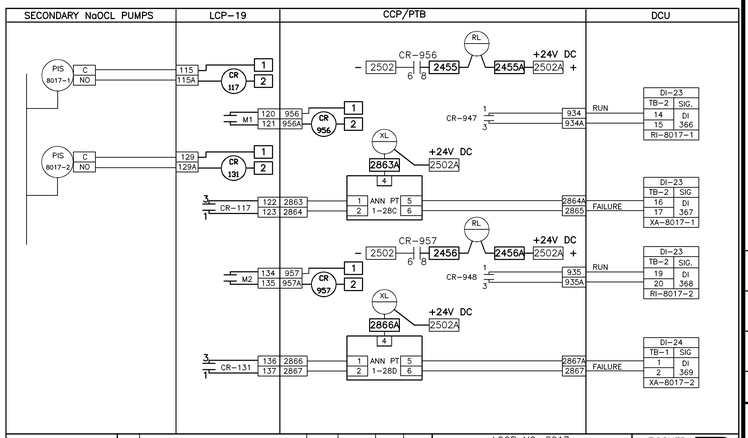

X DRAWING ISSUED FOR APPROVAL ONLY, NOT FOR CONSTRUCTION	2	REV – AS INSTALLED	DFG	05JAN96	DGR	DGR
	1	FINAL – AS INSTALLED	GTS	12SEP95	LR	DB
☐ DRAWING ISSUED FOR CONSTRUCTION	0	APPROVAL	LR	17JUN94	LFR	JF
	REV	REVISION DESCRIPTION	DRAWN	DATE	CHKD	ENGR

LOOP NO. 8017
SECONDARY SERVICE NaOCL DISTRIBUT'N
PUMPS ALARM AND STATUS
UPGRADE AND EXPANSION–PHASE V B
ARLINGTON COUNTY WPCP, VA.
AUTHORITY E931215.913 (NC15L147)

FISCHER & PORTER WARMINSTER, PA 18974 USA
DRAWING NUMBER 931215–L147 REV 1

REFER TO CONTRACT DRAWING NUMBER 001–16

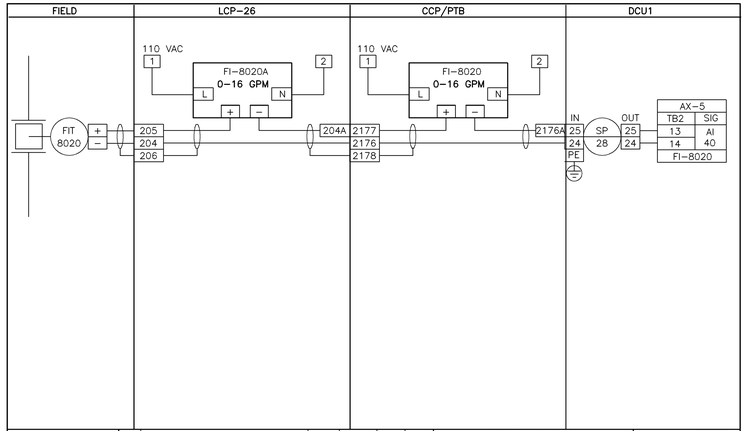

X DRAWING ISSUED FOR APPROVAL ONLY, NOT FOR CONSTRUCTION	2	REV – AS INSTALLED	DFG	05JAN96	DGR	DGR
	1	FINAL – AS INSTALLED	GTS	12SEP95	LR	DB
☐ DRAWING ISSUED FOR CONSTRUCTION	0	APPROVAL	LR	17JUN94	LFR	JF
	REV	REVISION DESCRIPTION	DRAWN	DATE	CHKD	ENGR

LOOP NO. 8020
SECONDARY SERVICE NaOCL
PUMP STATION DISTRIBUTION FLOW
UPGRADE AND EXPANSION–PHASE V B
ARLINGTON COUNTY WPCP, VA.
AUTHORITY E931215.913 (NC15L148)

FISCHER & PORTER WARMINSTER, PA 18974 USA
DRAWING NUMBER 931215–L148 REV 1

REFER TO CONTRACT DRAWING NUMBER 001–16

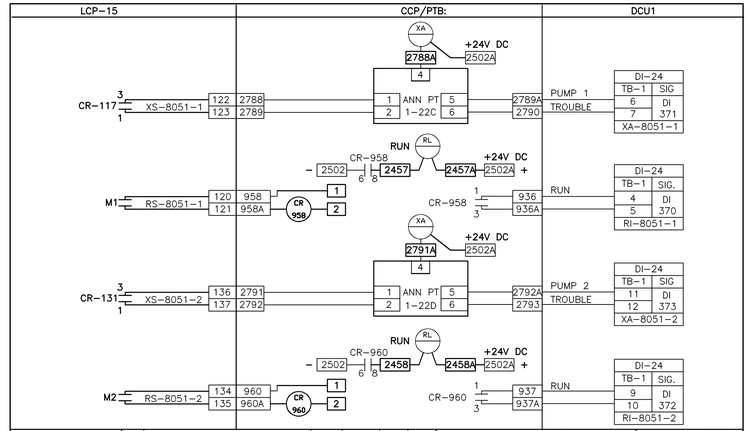

X DRAWING ISSUED FOR APPROVAL ONLY, NOT FOR CONSTRUCTION	2	REV – AS INSTALLED	DFG	03JAN96	DGR	DGR
	1	FINAL – AS INSTALLED	GTS	17JUN94	LR	DB
☐ DRAWING ISSUED FOR CONSTRUCTION	0	APPROVAL	LR	17JUN94	LFR	JF
	REV	REVISION DESCRIPTION	DRAWN	DATE	CHKD	ENGR

LOOP NO.8051
LIQUID POLYMER RECIRCULATION PUMPS
ALARM AND STATUS
UPGRADE AND EXPANSION–PHASE V B
ARLINGTON COUNTY WPCP, VA.
AUTHORITY E931215.913 (NC15L149)

FISCHER & PORTER WARMINSTER, PA 18974 USA
DRAWING NUMBER 931215–L149 REV 1

REFER TO CONTRACT DRAWING NUMBER 001–16

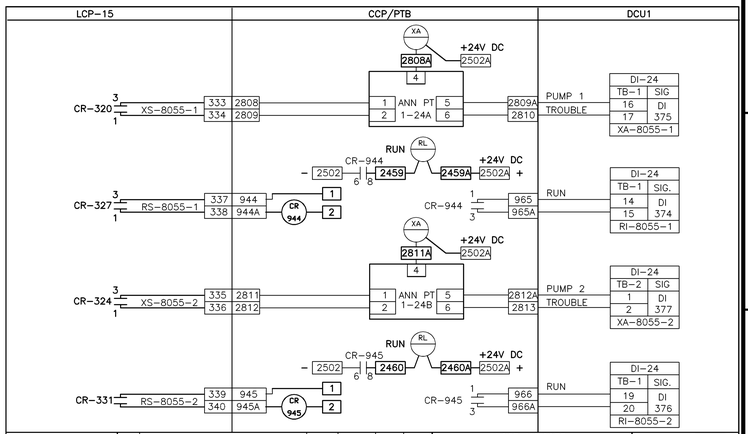

X DRAWING ISSUED FOR APPROVAL ONLY, NOT FOR CONSTRUCTION	2	REV – AS INSTALLED	DFG	03JAN96	DGR	DGR
	1	FINAL – AS INSTALLED	GTS	12SEP95	LR	DB
☐ DRAWING ISSUED FOR CONSTRUCTION	0	APPROVAL	LR	17JUN94	LFR	JF
	REV	REVISION DESCRIPTION	DRAWN	DATE	CHKD	ENGR

LOOP NO.8055
POLYMER DILUTION/TRANSFER PUMPS
ALARM AND STATUS
UPGRADE AND EXPANSION–PHASE V B
ARLINGTON COUNTY WPCP, VA.
AUTHORITY E931215.913 (NC15L150)

FISCHER & PORTER WARMINSTER, PA 18974 USA
DRAWING NUMBER 931215–L150 REV 1

REFER TO CONTRACT DRAWING NUMBER 001–17

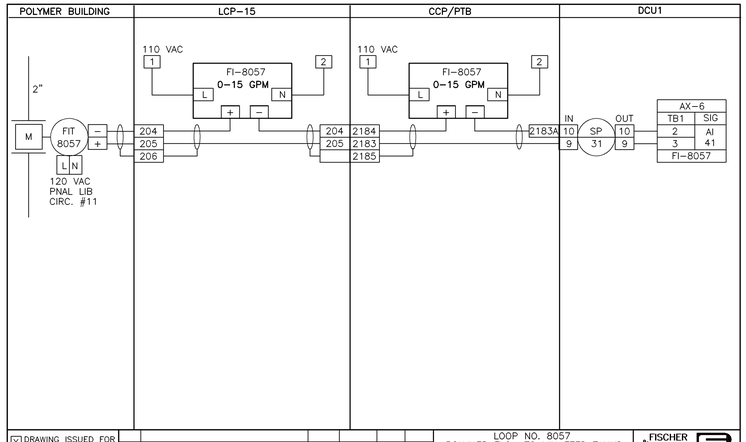

X DRAWING ISSUED FOR APPROVAL ONLY, NOT FOR CONSTRUCTION	2	REV – AS INSTALLED	DFG	05JAN96	DGR	DGR
	1	FINAL – AS INSTALLED	GTS	12SEP95	LR	DB
☐ DRAWING ISSUED FOR CONSTRUCTION	0	APPROVAL	LR	17JUN94	LFR	JF
	REV	REVISION DESCRIPTION	DRAWN	DATE	CHKD	ENGR

LOOP NO. 8057
POLYMER FLOW TO MIX FEED TANKS
UPGRADE AND EXPANSION–PHASE V B
ARLINGTON COUNTY WPCP, VA.
AUTHORITY E931215.913 (NC15L151)

FISCHER & PORTER WARMINSTER, PA 18974 USA
DRAWING NUMBER 931215–L151 REV 1

REFER TO CONTRACT DRAWING NUMBER 001–17

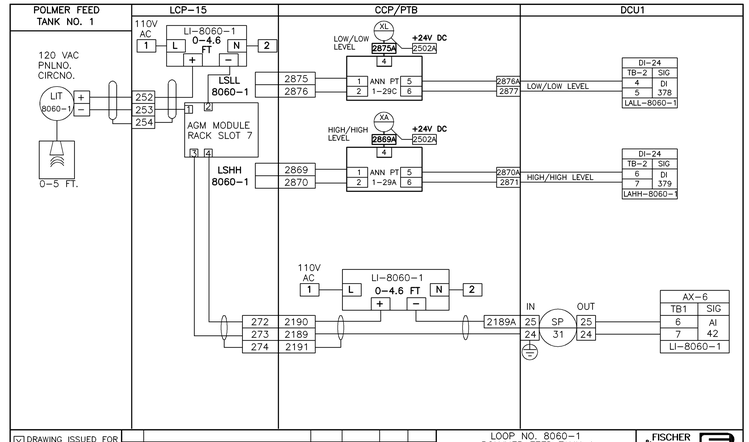

X DRAWING ISSUED FOR APPROVAL ONLY, NOT FOR CONSTRUCTION	2	REV – AS INSTALLED	DFG	05JAN96	DGR	DGR
	1	FINAL – AS INSTALLED	GTS	12SEP95	LR	DB
☐ DRAWING ISSUED FOR CONSTRUCTION	0	APPROVAL	LR	18JUN94	LFR	JF
	REV	REVISION DESCRIPTION	DRAWN	DATE	CHKD	ENGR

LOOP NO. 8060–1
POLYMER FEED TANK 1
LEVEL AND ALARM
UPGRADE AND EXPANSION–PHASE V B
ARLINGTON COUNTY WPCP, VA.
AUTHORITY E931215.913 (NC15L152)

FISCHER & PORTER WARMINSTER, PA 18974 USA
DRAWING NUMBER 931215–L152 REV 1

REFER TO CONTRACT DRAWING NUMBER 001–17

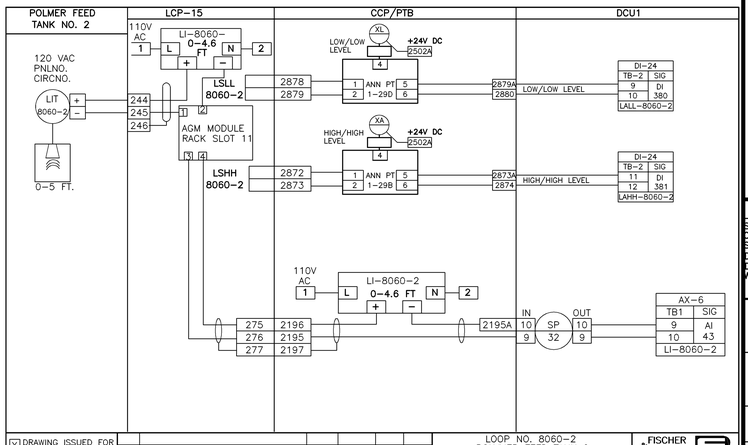

X DRAWING ISSUED FOR APPROVAL ONLY, NOT FOR CONSTRUCTION	2	REV – AS INSTALLED	DFG	03JAN96	DGR	DGR
	1	FINAL – AS INSTALLED	GTS	12SEP95	LR	DB
☐ DRAWING ISSUED FOR CONSTRUCTION	0	APPROVAL	LR	18JUN94	LFR	JF
	REV	REVISION DESCRIPTION	DRAWN	DATE	CHKD	ENGR

LOOP NO. 8060–2
POLYMER FEED TANK 2
LEVEL AND ALARM
UPGRADE AND EXPANSION–PHASE V B
ARLINGTON COUNTY WPCP, VA.
AUTHORITY E931215.913 (NC15L153)

FISCHER & PORTER WARMINSTER, PA 18974 USA
DRAWING NUMBER 931215–L153 REV 1

REFER TO CONTRACT DRAWING NUMBER 001–17

NO.	DATE	DRWN	CHKD	REVISIONS DESCRIPTION
1	11/98	FXP	ASG	RECORD DRAWING

DESIGNED BY: JRD
DRAWN BY: JRD
CHECKED BY/DATE/:
APPROVED BY/DATE:

THIS DRAWING HAS BEEN COMPILED
HAZEN AND SAWYER, P.C.

ARLINGTON COUNTY, VIRGINIA
WATER POLLUTION CONTROL PLANT
UPGRADE AND EXPANSION– PHASE IIB

LOOP DIAGRAMS

SCALE NOTE

SCALE BAR SHOWN BELOW IS ONE INCH LONG ON A FULL SIZE DRAWING. WHEN SCALING DRAWINGS, MEASURE BAR TO DETERMINE IF SCALES SHOWN WILL REQUIRE ADJUSTING.

← ONE INCH →

CONTRACT NO. 9002 – WPC
YEAR 1991
LOCATION CODE
SPECIALTY CODE I
PROJECT NO. 5002 – 033
FILE NAME 001–36.DWG
DRAWING NO. 001–36
SHEET NO. 347

RECORD DRAWING

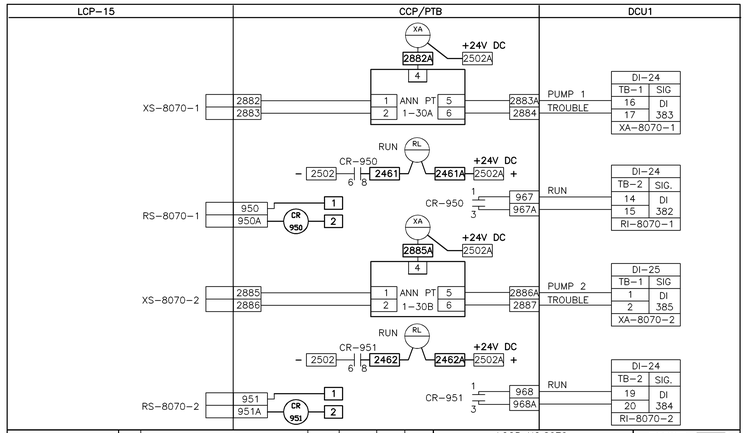

X DRAWING ISSUED FOR APPROVAL ONLY, NOT FOR CONSTRUCTION	2	REV – AS INSTALLED	DFG	03JAN96	DGR	DGR	LOOP NO.8070 POLYMER FEED PUMPS ALARM AND STATUS UPGRADE AND EXPANSION-PHASE V B ARLINGTON COUNTY WPCP, VA.	FISCHER & PORTER WARMINSTER, PA 18974 USA	
	1	FINAL – AS INSTALLED	GTS	12SEP95	LR	DB		DRAWING NUMBER	REV
☐ DRAWING ISSUED FOR CONSTRUCTION	0	APPROVAL	LR	18JUN94	LFR	JF			
	REV	REVISION DESCRIPTION	DRAWN	DATE	CHKD	ENGR	AUTHORITY E931215.913 (NC15L154)	931215-L154	1

REFER TO CONTRACT DRAWING NUMBER 001-17

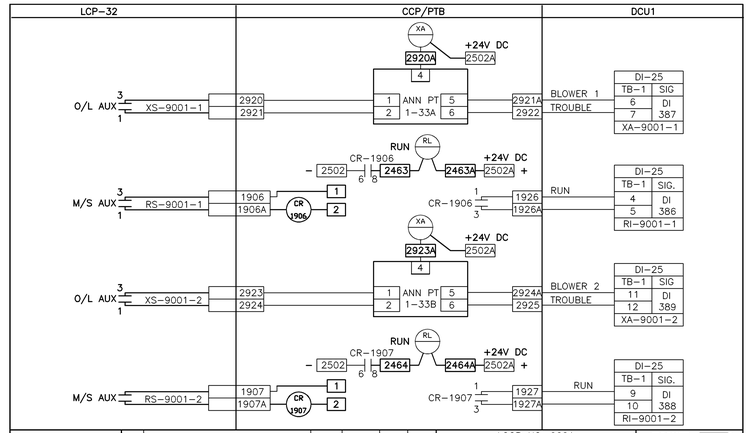

X DRAWING ISSUED FOR APPROVAL ONLY, NOT FOR CONSTRUCTION	2	REV – AS INSTALLED	DFG	03JAN96	DGR	DGR	LOOP NO. 9001 SLUDGE STORAGE TANKS FOUL AIR BLOWERS ALARM AND STATUS UPGRADE AND EXPANSION-PHASE V B ARLINGTON COUNTY WPCP, VA.	FISCHER & PORTER WARMINSTER, PA 18974 USA	
	1	FINAL – AS INSTALLED	GTS	12SEP95	LFR	JF		DRAWING NUMBER	REV
☐ DRAWING ISSUED FOR CONSTRUCTION	0	APPROVAL	LR	18JUN94	LFR	JF			
	REV	REVISION DESCRIPTION	DRAWN	DATE	CHKD	ENGR	AUTHORITY E931215.913 (NC15L155)	931215-L155	1

REFER TO CONTRACT DRAWING NUMBER 001-18

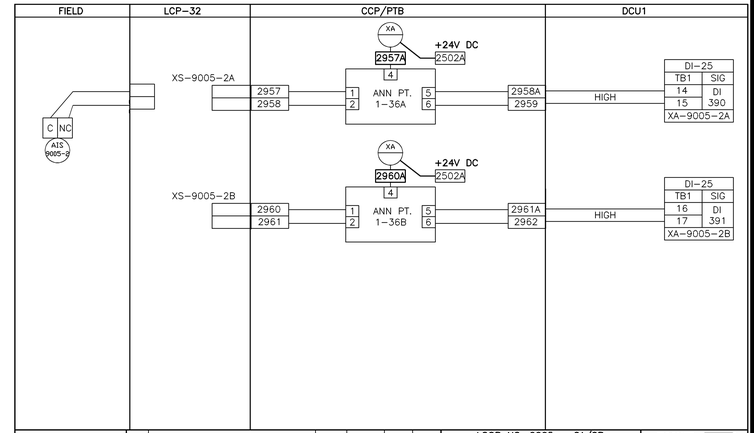

X DRAWING ISSUED FOR APPROVAL ONLY, NOT FOR CONSTRUCTION	2	REV – AS INSTALLED	DFG	03JAN96	DGR	DGR	LOOP NO. 9005 – 2A/2B PRELIMINARY TREATMENT BUILDING FOUL AIR BLOWERS COMBUSTIBLE GAS UPGRADE AND EXPANSION-PHASE V B ARLINGTON COUNTY WPCP, VA.	FISCHER & PORTER WARMINSTER, PA 18974 USA	
	1	FINAL – AS INSTALLED	GTS	12SEP95	LR	DB		DRAWING NUMBER	REV
☐ DRAWING ISSUED FOR CONSTRUCTION	0	APPROVAL	LR	13JUN94	LFR	JF			
	REV	REVISION DESCRIPTION	DRAWN	DATE	CHKD	ENGR	AUTHORITY E931215.913 (NC15L156)	931215-L156	1

REFER TO CONTRACT DRAWING NUMBER 001-18

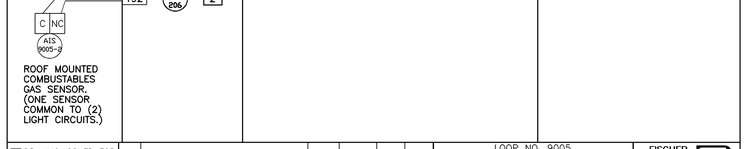

X DRAWING ISSUED FOR APPROVAL ONLY, NOT FOR CONSTRUCTION	2	REV – AS INSTALLED	DFG	03JAN96	DGR	DGR	LOOP NO. 9005 FOUR MILE RUN RELIEF PUMP STATION FOUL AIR BLOWERS COMBUSITBLE GAS UPGRADE AND EXPANSION-PHASE V B ARLINGTON COUNTY WPCP, VA.	FISCHER & PORTER WARMINSTER, PA 18974 USA	
	1	FINAL – AS INSTALLED	GTS	12SEP95	LR	DB		DRAWING NUMBER	REV
☐ DRAWING ISSUED FOR CONSTRUCTION	0	APPROVAL	LR	13JUN94	LFR	JF			
	REV	REVISION DESCRIPTION	DRAWN	DATE	CHKD	ENGR	AUTHORITY E931215.913 (NC15L157)	931215-L157	1

REFER TO CONTRACT DRAWING NUMBER 001-18

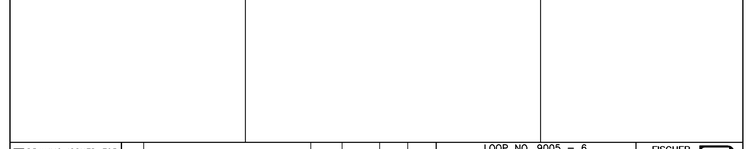

X DRAWING ISSUED FOR APPROVAL ONLY, NOT FOR CONSTRUCTION	2	REV – AS INSTALLED	DFG	03JAN96	DGR	DGR	LOOP NO. 9005 – 6 LOW LEVEL PUMP STATION FOUL AIR BLOWER COMBUSTIBLE GAS UPGRADE AND EXPANSION-PHASE V B ARLINGTON COUNTY WPCP, VA.	FISCHER & PORTER WARMINSTER, PA 18974 USA	
	1	FINAL – AS INSTALLED	GTS	12SEP95	LR	DB		DRAWING NUMBER	REV
☐ DRAWING ISSUED FOR CONSTRUCTION	0	APPROVAL	LR	13JUN94	LFR	JF			
	REV	REVISION DESCRIPTION	DRAWN	DATE	CHKD	ENGR	AUTHORITY E931215.913 (NC15L158)	931215-L158	1

REFER TO CONTRACT DRAWING NUMBER 001-18

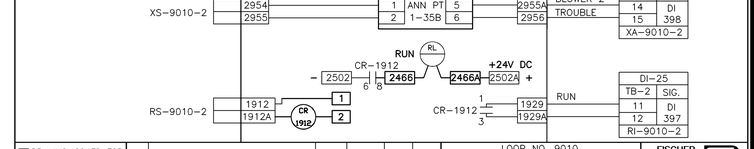

X DRAWING ISSUED FOR APPROVAL ONLY, NOT FOR CONSTRUCTION	2	REV – AS INSTALLED	DFG	03JAN96	DGR	DGR	LOOP NO. 9010 PRELIMINARY TREATMENT BLDG FOUL AIR BLOWERS ALARM AND STATUS UPGRADE AND EXPANSION-PHASE V B ARLINGTON COUNTY WPCP, VA.	FISCHER & PORTER WARMINSTER, PA 18974 USA	
	1	FINAL – AS INSTALLED	GTS	12SEP95	LR	DB		DRAWING NUMBER	REV
☐ DRAWING ISSUED FOR CONSTRUCTION	0	APPROVAL	LR	18JUN94	LFR	JF			
	REV	REVISION DESCRIPTION	DRAWN	DATE	CHKD	ENGR	AUTHORITY E931215.913 (NC15L159)	931215-L159	1

REFER TO CONTRACT DRAWING NUMBER 001-18

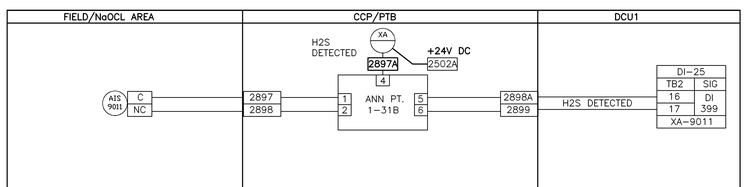

X DRAWING ISSUED FOR APPROVAL ONLY, NOT FOR CONSTRUCTION	2	REV – AS INSTALLED	DFG	03JAN96	DGR	DGR	LOOP NO. 9011 PRELIMINARY TREATMENT BUILDING HYDROGEN SULFIDE UPGRADE AND EXPANSION-PHASE V B ARLINGTON COUNTY WPCP, VA.	FISCHER & PORTER WARMINSTER, PA 18974 USA	
	1	FINAL – AS INSTALLED	GTS	12SEP95	LR	DB		DRAWING NUMBER	REV
☐ DRAWING ISSUED FOR CONSTRUCTION	0	APPROVAL	LR	13JUN94	LFR	JF			
	REV	REVISION DESCRIPTION	DRAWN	DATE	CHKD	ENGR	AUTHORITY E931215.913 (NC15L160)	931215-L160	1

REFER TO CONTRACT DRAWING NUMBER 001-18

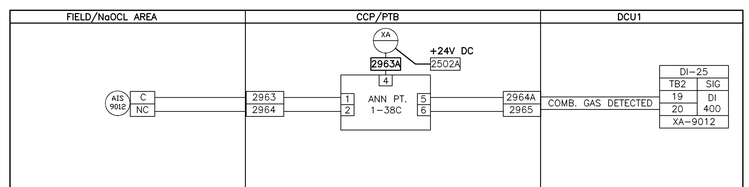

X DRAWING ISSUED FOR APPROVAL ONLY, NOT FOR CONSTRUCTION	2	REV – AS INSTALLED	DFG	03JAN96	DGR	DGR	LOOP NO. 9012 PRELIMINARY TREATMENT BUILDING COMBUSTIBLE GAS UPGRADE AND EXPANSION-PHASE V B ARLINGTON COUNTY WPCP, VA.	FISCHER & PORTER WARMINSTER, PA 18974 USA	
	1	FINAL – AS INSTALLED	GTS	12SEP95	LR	DB		DRAWING NUMBER	REV
☐ DRAWING ISSUED FOR CONSTRUCTION	0	APPROVAL	LR	13JUN94	LFR	JF			
	REV	REVISION DESCRIPTION	DRAWN	DATE	CHKD	ENGR	AUTHORITY E931215.913 (NC15L161)	931215-L161	1

REFER TO CONTRACT DRAWING NUMBER 001-18

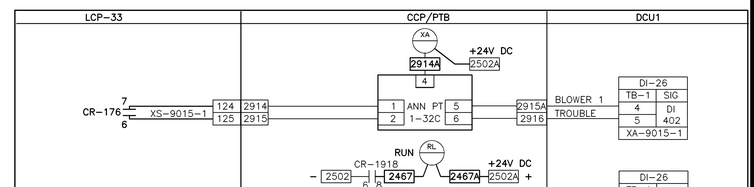

X DRAWING ISSUED FOR APPROVAL ONLY, NOT FOR CONSTRUCTION	2	REV – AS INSTALLED	DFG	03JAN96	DGR	DGR	LOOP NO. 9015-1 & 2 FOUR MILE RUN RELIEF PUMP STATION FOUL AIR BLOWERS ALARM AND STATUS UPGRADE AND EXPANSION-PHASE V B ARLINGTON COUNTY WPCP, VA.	FISCHER & PORTER WARMINSTER, PA 18974 USA	
	1	FINAL AS – INSTALLED	GTS	12SEP95	LR	DB		DRAWING NUMBER	REV
☐ DRAWING ISSUED FOR CONSTRUCTION	0	APPROVAL	LR	18JUN94	LFR	JF			
	REV	REVISION DESCRIPTION	DRAWN	DATE	CHKD	ENGR	AUTHORITY E931215.913 (NC15L162)	931215-L162	1

REFER TO CONTRACT DRAWING NUMBER 001-18

RECORD DRAWING

NO.	DATE	DRWN	CHKD	REVISIONS DESCRIPTION
1	9/97	FXP	ASG	RECORD DRAWING

DESIGNED BY: JRD
DRAWN BY: JRD
CHECKED BY/DATE/:
APPROVED BY/DATE:

THIS DRAWING HAS BEEN COMPILED
HAZEN AND SAWYER, P.C.

ARLINGTON COUNTY, VIRGINIA
WATER POLLUTION CONTROL PLANT
UPGRADE AND EXPANSION- PHASE IIB

LOOP DIAGRAMS

SCALE NOTE

SCALE BAR SHOWN BELOW IS ONE INCH LONG ON A FULL SIZE DRAWING. WHEN SCALING DRAWINGS, MEASURE BAR TO DETERMINE IF SCALES SHOWN WILL REQUIRE ADJUSTING.

ONE INCH

CONTRACT NO.
9002 – WPC
YEAR 1991
LOCATION CODE
SPECIALTY CODE I
PROJECT NO.
5002 – 033
FILE NAME
001-37.DWG
DRAWING NO.
001-37
SHEET NO. 348

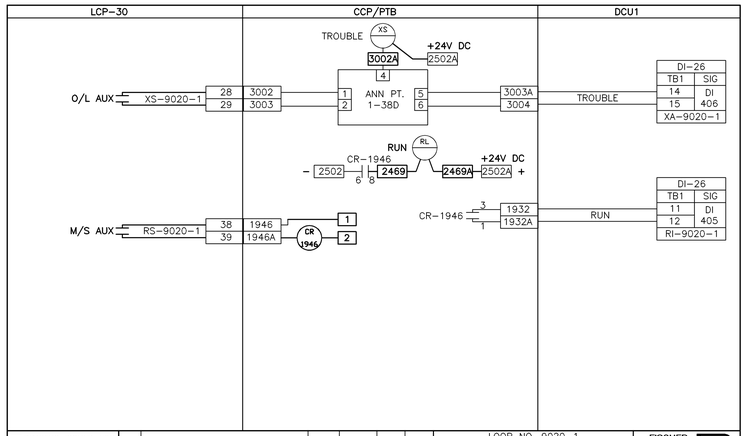

X DRAWING ISSUED FOR APPROVAL ONLY, NOT FOR CONSTRUCTION	2	REV – AS INSTALLED	DFG	03JAN96	DGR	DGR	LOOP NO. 9020-1 GRAVITY THICKENERS FOUL AIR BLOWER 1 ALARM & STATUS UPGRADE AND EXPANSION-PHASE V B ARLINGTON COUNTY WPCP, VA.	FISCHER & PORTER WARMINSTER, PA 18974 USA	
	1	FINAL – AS INSTALLED	GTS	12SEP95	LR	DB		DRAWING NUMBER	REV
☐ DRAWING ISSUED FOR CONSTRUCTION	0	APPROVAL	LR	13JUN94	LFR	JF			
	REV	REVISION DESCRIPTION	DRAWN	DATE	CHKD	ENGR	AUTHORITY E931215.913 (NC15L163)	931215-L163	1

REFER TO CONTRACT DRAWING NUMBER 001-19

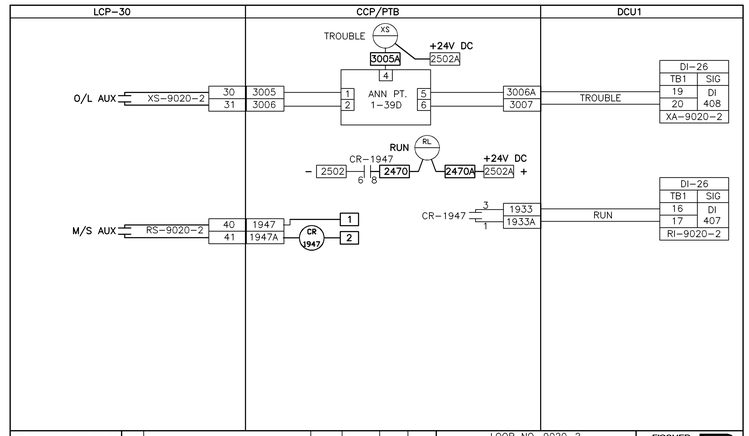

X DRAWING ISSUED FOR APPROVAL ONLY, NOT FOR CONSTRUCTION	2	REV – AS INSTALLED	DFG	03JAN96	DGR	DGR	LOOP NO. 9020-2 GRAVITY THICKENERS FOUL AIR BLOWER 2 ALARM & STATUS UPGRADE AND EXPANSION-PHASE V B ARLINGTON COUNTY WPCP, VA.	FISCHER & PORTER WARMINSTER, PA 18974 USA	
	1	FINAL – AS INSTALLED	GTS	12SEP95	LR	DB		DRAWING NUMBER	REV
☐ DRAWING ISSUED FOR CONSTRUCTION	0	APPROVAL	LR	13JUN94	LFR	JF			
	REV	REVISION DESCRIPTION	DRAWN	DATE	CHKD	ENGR	AUTHORITY E931215.913 (NC15L164)	931215-L164	1

REFER TO CONTRACT DRAWING NUMBER 001-19

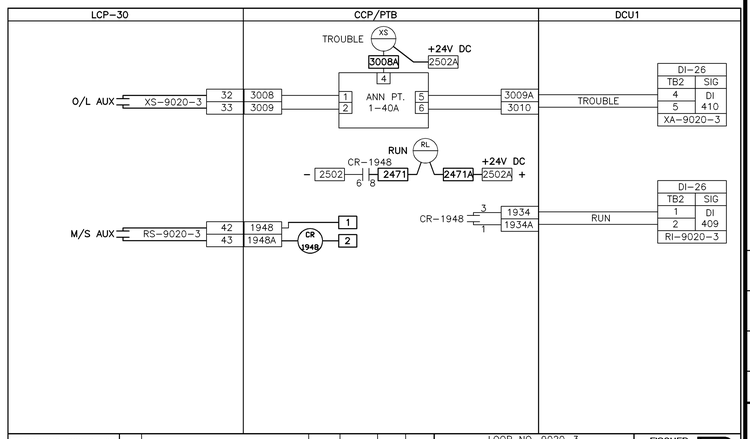

X DRAWING ISSUED FOR APPROVAL ONLY, NOT FOR CONSTRUCTION	2	REV – AS INSTALLED	DFG	03JAN96	DGR	DGR	LOOP NO. 9020-3 GRAVITY THICKENERS FOUL AIR BLOWER 3 ALARM & STATUS UPGRADE AND EXPANSION-PHASE V B ARLINGTON COUNTY WPCP, VA.	FISCHER & PORTER WARMINSTER, PA 18974 USA	
	1	FINAL – AS INSTALLED	GTS	12SEP95	LR	DB		DRAWING NUMBER	REV
☐ DRAWING ISSUED FOR CONSTRUCTION	0	APPROVAL	LR	13JUN94	LFR	JF			
	REV	REVISION DESCRIPTION	DRAWN	DATE	CHKD	ENGR	AUTHORITY E931215.913 (NC15L165)	931215-L165	1

REFER TO CONTRACT DRAWING NUMBER 001-19

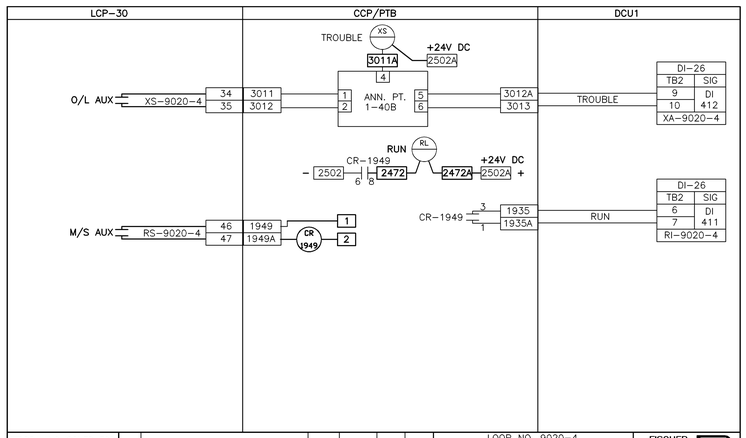

X DRAWING ISSUED FOR APPROVAL ONLY, NOT FOR CONSTRUCTION	2	REV – AS INSTALLED	DFG	03JAN96	DGR	DGR	LOOP NO. 9020-4 GRAVITY THICKENERS FOUL AIR BLOWER 4 ALARM & STATUS UPGRADE AND EXPANSION-PHASE V B ARLINGTON COUNTY WPCP, VA.	FISCHER & PORTER WARMINSTER, PA 18974 USA	
	1	FINAL – AS INSTALLED	GTS	12SEP95	LR	DB		DRAWING NUMBER	REV
☐ DRAWING ISSUED FOR CONSTRUCTION	0	APPROVAL	LR	13JUN94	LFR	JF			
	REV	REVISION DESCRIPTION	DRAWN	DATE	CHKD	ENGR	AUTHORITY E931215.913 (NC15L166)	931215-L166	1

REFER TO CONTRACT DRAWING NUMBER 001-19

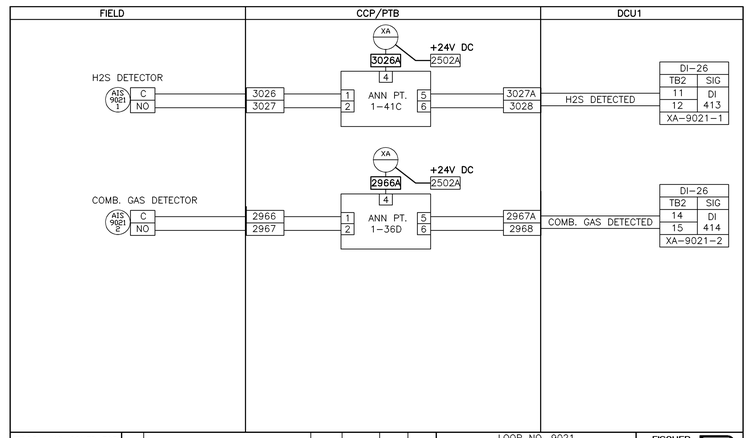

X DRAWING ISSUED FOR APPROVAL ONLY, NOT FOR CONSTRUCTION	2	REV – AS INSTALLED	DFG	03JAN96	DGR	DGR	LOOP NO. 9021 GRAVITY SLUDGE THICKENERS H2S/COMBUSTIBLE GAS ALARM UPGRADE AND EXPANSION-PHASE V B ARLINGTON COUNTY WPCP, VA.	FISCHER & PORTER WARMINSTER, PA 18974 USA	
	1	FINAL – AS INSTALLED	GTS	12SEP95	LR	DB		DRAWING NUMBER	REV
☐ DRAWING ISSUED FOR CONSTRUCTION	0	APPROVAL	LR	13JUN94	LFR	JF			
	REV	REVISION DESCRIPTION	DRAWN	DATE	CHKD	ENGR	AUTHORITY E931215.913 (NC15L167)	931215-L167	1

REFER TO CONTRACT DRAWING NUMBER 001-19

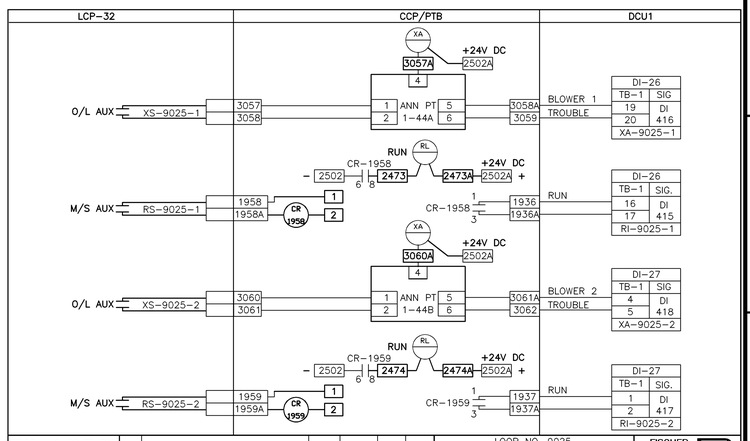

X DRAWING ISSUED FOR APPROVAL ONLY, NOT FOR CONSTRUCTION	2	REV – AS INSTALLED	DFG	03JAN96	DGR	DGR	LOOP NO. 9025 FLOTATION THICKENERS FOUL AIR BLOWERS ALARM AND STATUS UPGRADE AND EXPANSION-PHASE V B ARLINGTON COUNTY WPCP, VA.	FISCHER & PORTER WARMINSTER, PA 18974 USA	
	1	FINAL – AS INSTALLED	GTS	12SEP95	LR	DB		DRAWING NUMBER	REV
☐ DRAWING ISSUED FOR CONSTRUCTION	0	APPROVAL	LR	9JUN94	LFR	JF			
	REV	REVISION DESCRIPTION	DRAWN	DATE	CHKD	ENGR	AUTHORITY E931215.913 (NC15L168)	931215-L168	1

REFER TO CONTRACT DRAWING NUMBER 001-19

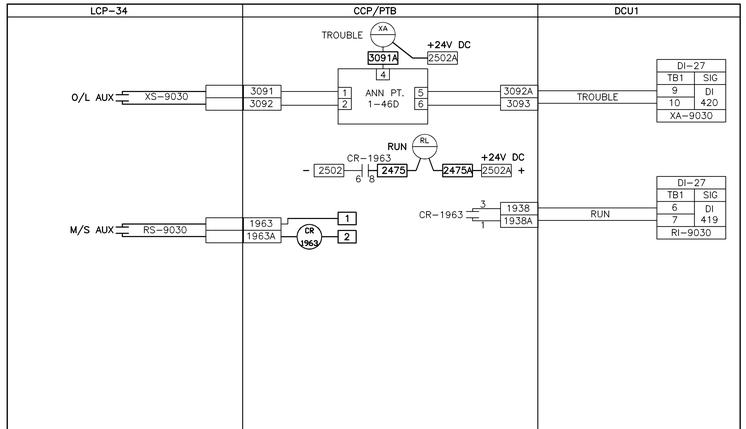

X DRAWING ISSUED FOR APPROVAL ONLY, NOT FOR CONSTRUCTION	2	REV – AS INSTALLED	DFG	03JAN96	DGR	DGR	LOOP NO. 9030 PRIMARY SCUM WETWELL FOUL AIR BLOWER ALARM AND STATUS UPGRADE AND EXPANSION-PHASE V B ARLINGTON COUNTY WPCP, VA.	FISCHER & PORTER WARMINSTER, PA 18974 USA	
	1	FINAL – AS INSTALLED	GTS	12SEP95	LR	DB		DRAWING NUMBER	REV
☐ DRAWING ISSUED FOR CONSTRUCTION	0	APPROVAL	LR	13JUN94	LFR	JF			
	REV	REVISION DESCRIPTION	DRAWN	DATE	CHKD	ENGR	AUTHORITY E931215.913 (NC15L169)	931215-L169	1

REFER TO CONTRACT DRAWING NUMBER 001-19

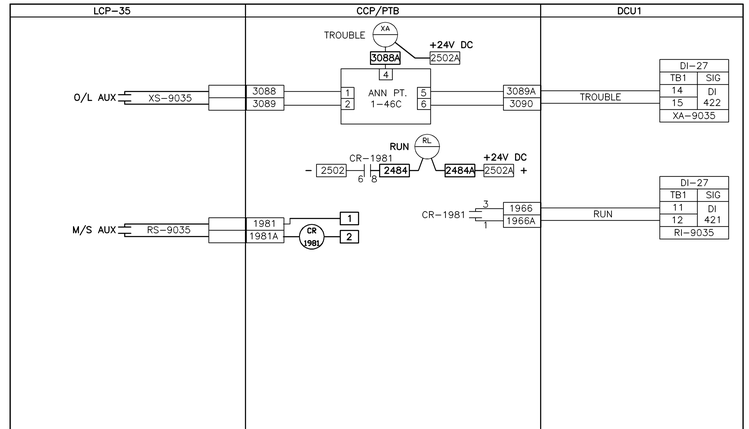

X DRAWING ISSUED FOR APPROVAL ONLY, NOT FOR CONSTRUCTION	2	REV – AS INSTALLED	DFG	03JAN96	DGR	DGR	LOOP NO. 9035 LOW LEVEL PUMP STATION FOUL AIR BLOWER ALARM AND STATUS UPGRADE AND EXPANSION-PHASE V B ARLINGTON COUNTY WPCP, VA.	FISCHER & PORTER WARMINSTER, PA 18974 USA	
	1	FINAL – AS INSTALLED	GTS	12SEP95	LR	DB		DRAWING NUMBER	REV
☐ DRAWING ISSUED FOR CONSTRUCTION	0	APPROVAL	LR	13JUN94	LFR	JF			
	REV	REVISION DESCRIPTION	DRAWN	DATE	CHKD	ENGR	AUTHORITY E931215.913 (NC15L170)	931215-L170	1

REFER TO CONTRACT DRAWING NUMBER 001-20

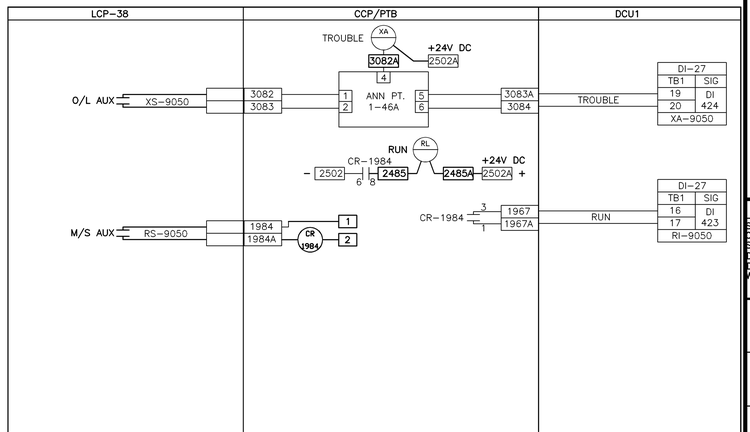

X DRAWING ISSUED FOR APPROVAL ONLY, NOT FOR CONSTRUCTION	2	REV – AS INSTALLED	DFG	03JAN96	DGR	DGR	LOOP NO. 9050 FOUL AIR PIPE SUMP 1 PUMP ALARM AND STATUS UPGRADE AND EXPANSION-PHASE V B ARLINGTON COUNTY WPCP, VA.	FISCHER & PORTER WARMINSTER, PA 18974 USA	
	1	FINAL – AS INSTALLED	GTS	12SEP95	LR	DB		DRAWING NUMBER	REV
☐ DRAWING ISSUED FOR CONSTRUCTION	0	APPROVAL	LR	13JUN94	LFR	JF			
	REV	REVISION DESCRIPTION	DRAWN	DATE	CHKD	ENGR	AUTHORITY E931215.913 (NC15L171)	931215-L171	1

REFER TO CONTRACT DRAWING NUMBER 001-20

RECORD DRAWING

NO.	DATE	DRWN	CHKD	REVISIONS DESCRIPTION
1	11/98	FXP	ASG	RECORD DRAWING

DESIGNED BY: JRD
DRAWN BY: JRD
CHECKED BY/DATE/:
APPROVED BY/DATE:

THIS DRAWING HAS BEEN COMPILED
HAZEN AND SAWYER, P.C.

ARLINGTON COUNTY, VIRGINIA
WATER POLLUTION CONTROL PLANT
UPGRADE AND EXPANSION- PHASE IIB

LOOP DIAGRAMS

SCALE NOTE

SCALE BAR SHOWN BELOW IS ONE INCH LONG ON A FULL SIZE DRAWING. WHEN SCALING DRAWINGS, MEASURE BAR TO DETERMINE IF SCALES SHOWN WILL REQUIRE ADJUSTING.

ONE INCH

CONTRACT NO.
9002 – WPC
YEAR 1991
LOCATION CODE
SPECIALTY CODE
I
PROJECT NO.
5002 – 033
FILE NAME
001-38.DWG
DRAWING NO.
001-38
SHEET NO. 349

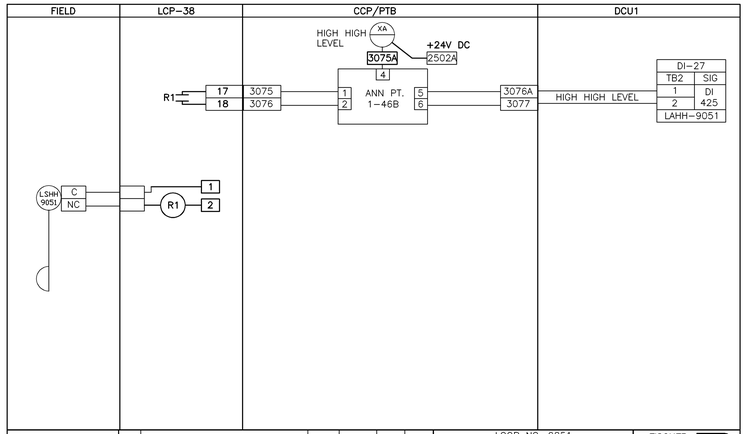

X DRAWING ISSUED FOR APPROVAL ONLY, NOT FOR CONSTRUCTION	2	REV – AS INSTALLED	DFG	03JAN96	DGR	DGR	LOOP NO. 9051 ODOR CONTROL SUMP 1 LEVEL	FISCHER & PORTER WARMINSTER, PA 18974 USA
	1	FINAL – AS INSTALLED	GTS	12SEP95	LR	DB	UPGRADE AND EXPANSION–PHASE V B	DRAWING NUMBER / REV
☐ DRAWING ISSUED FOR CONSTRUCTION	0	APPROVAL	LR	13JUN94	LFR	JF	ARLINGTON COUNTY WPCP, VA.	931215–L172 / 1
	REV	REVISION DESCRIPTION	DRAWN	DATE	CHKD	ENGR	AUTHORITY E931215.913 (NC15L172)	

REFER TO CONTRACT DRAWING NUMBER 001-20

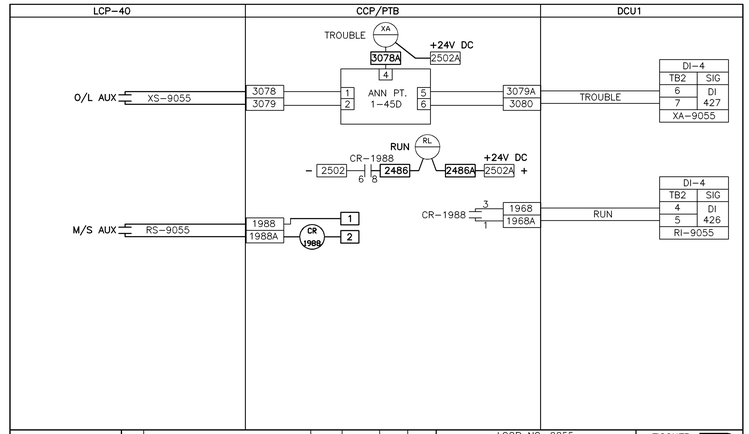

X DRAWING ISSUED FOR APPROVAL ONLY, NOT FOR CONSTRUCTION	2	REV – AS INSTALLED	DFG	03JAN96	DGR	DGR	LOOP NO. 9055 FOUL AIR PIPE SUMP 2 PUMP ALARM AND STATUS	FISCHER & PORTER WARMINSTER, PA 18974 USA
	1	FINAL – AS INSTALLED	GTS	13JUN94	LR	DB	UPGRADE AND EXPANSION–PHASE V B	DRAWING NUMBER / REV
☐ DRAWING ISSUED FOR CONSTRUCTION	0	APPROVAL	LR	13JUN94	LFR	JF	ARLINGTON COUNTY WPCP, VA.	931215–L173 / 1
	REV	REVISION DESCRIPTION	DRAWN	DATE	CHKD	ENGR	AUTHORITY E931215.913 (NC15L173)	

REFER TO CONTRACT DRAWING NUMBER 001-20

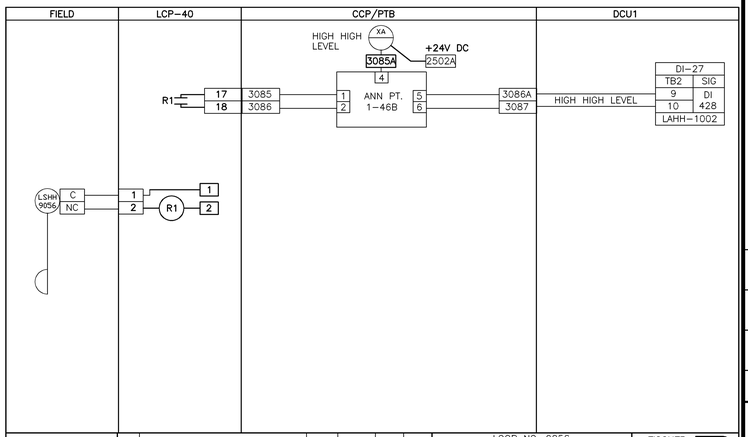

X DRAWING ISSUED FOR APPROVAL ONLY, NOT FOR CONSTRUCTION	2	REV – AS INSTALLED	DFG	03JAN96	DGR	DGR	LOOP NO. 9056 ODOR CONTROL SUMP 2 LEVEL	FISCHER & PORTER WARMINSTER, PA 18974 USA
	1	FINAL – AS INSTALLED	GTS	12SEP95	LR	DB	UPGRADE AND EXPANSION–PHASE V B	DRAWING NUMBER / REV
☐ DRAWING ISSUED FOR CONSTRUCTION	0	APPROVAL	LR	13JUN94	LFR	JF	ARLINGTON COUNTY WPCP, VA.	931215–L174 / 1
	REV	REVISION DESCRIPTION	DRAWN	DATE	CHKD	ENGR	AUTHORITY E931215.913 (NC15L174)	

REFER TO CONTRACT DRAWING NUMBER 001-20

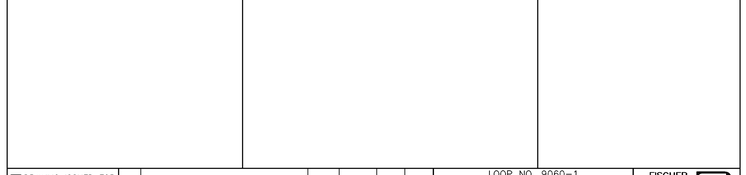

X DRAWING ISSUED FOR APPROVAL ONLY, NOT FOR CONSTRUCTION	2	REV – AS INSTALLED	DFG	03JAN96	DGR	DGR	LOOP NO. 9060–1 PRELIM. TREAT. BLDG. NaOCL FACILITY EMERGENCY EYEWASH/SHOWER ALARM UPGRADE AND EXPANSION–PHASE V B ARLINGTON COUNTY WPCP, VA.	FISCHER & PORTER WARMINSTER, PA 18974 USA
	1	FINAL – AS INSTALLED	LR	13JUN94	LFR	JF		DRAWING NUMBER / REV
☐ DRAWING ISSUED FOR CONSTRUCTION	0	APPROVAL	LR	13JUN94	LFR	JF		931215–L175 / 1
	REV	REVISION DESCRIPTION	DRAWN	DATE	CHKD	ENGR	AUTHORITY E931215.913 (NC15L175)	

REFER TO CONTRACT DRAWING NUMBER 001-20

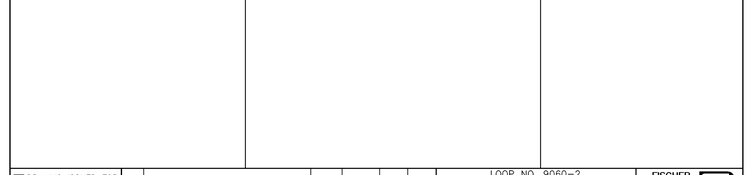

X DRAWING ISSUED FOR APPROVAL ONLY, NOT FOR CONSTRUCTION	2	REV – AS INSTALLED	DFG	03JAN96	DGR	DGR	LOOP NO. 9060–2 SEC. SERVICE BLDG. NaOCL FACILITY EMERGENCY EYEWASH/SHOWER ALARM UPGRADE AND EXPANSION–PHASE V B ARLINGTON COUNTY WPCP, VA.	FISCHER & PORTER WARMINSTER, PA 18974 USA
	1	FINAL – AS INSTALLED	GTS	12SEP95	LFR	DB		DRAWING NUMBER / REV
☐ DRAWING ISSUED FOR CONSTRUCTION	0	APPROVAL	LR	13JUN94	LFR	JF		931215–L176 / 1
	REV	REVISION DESCRIPTION	DRAWN	DATE	CHKD	ENGR	AUTHORITY E931215.913 (NC15L176)	

REFER TO CONTRACT DRAWING NUMBER 001-20

NO.	DATE	DRWN	CHKD	REVISIONS DESCRIPTION
1	11/98	FXP	ASG	RECORD DRAWING

DESIGNED BY: JRD
DRAWN BY: JRD
CHECKED BY/DATE/:
APPROVED BY/DATE:

THIS DRAWING HAS BEEN COMPILED HAZEN AND SAWYER, P.C.

ARLINGTON COUNTY, VIRGINIA
WATER POLLUTION CONTROL PLANT
UPGRADE AND EXPANSION- PHASE IIB

LOOP DIAGRAMS

SCALE NOTE

SCALE BAR SHOWN BELOW IS ONE INCH LONG ON A FULL SIZE DRAWING. WHEN SCALING DRAWINGS, MEASURE BAR TO DETERMINE IF SCALES SHOWN WILL REQUIRE ADJUSTING.

ONE INCH

CONTRACT NO.
9002 – WPC
YEAR 1991
LOCATION CODE
SPECIALTY CODE 1
PROJECT NO.
5002 – 033
FILE NAME
001–39.DWG
DRAWING NO.
001–39
SHEET NO. 350

RECORD DRAWING

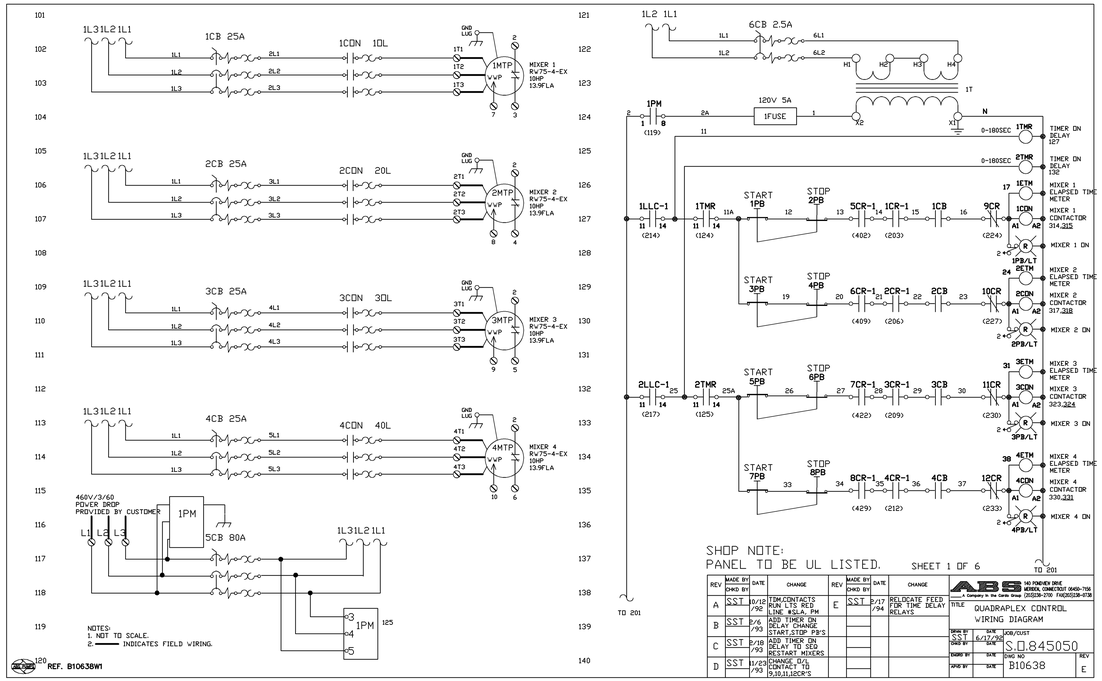

B10638W1.DWG

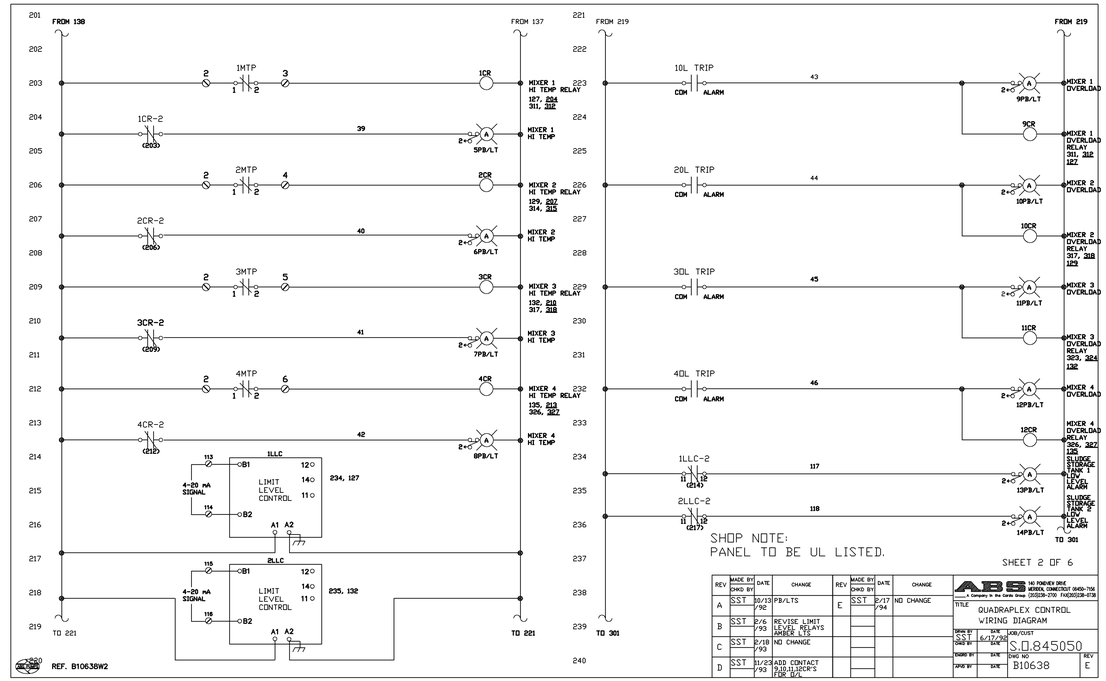

B10638W2.DWG

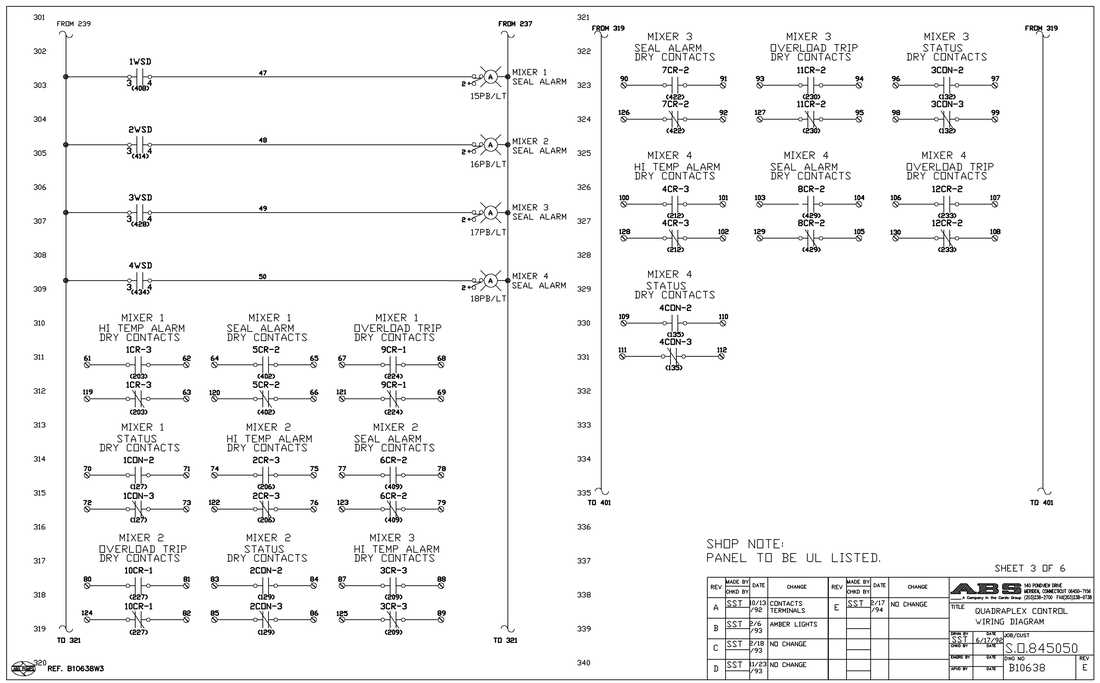

B10638W3.DWG

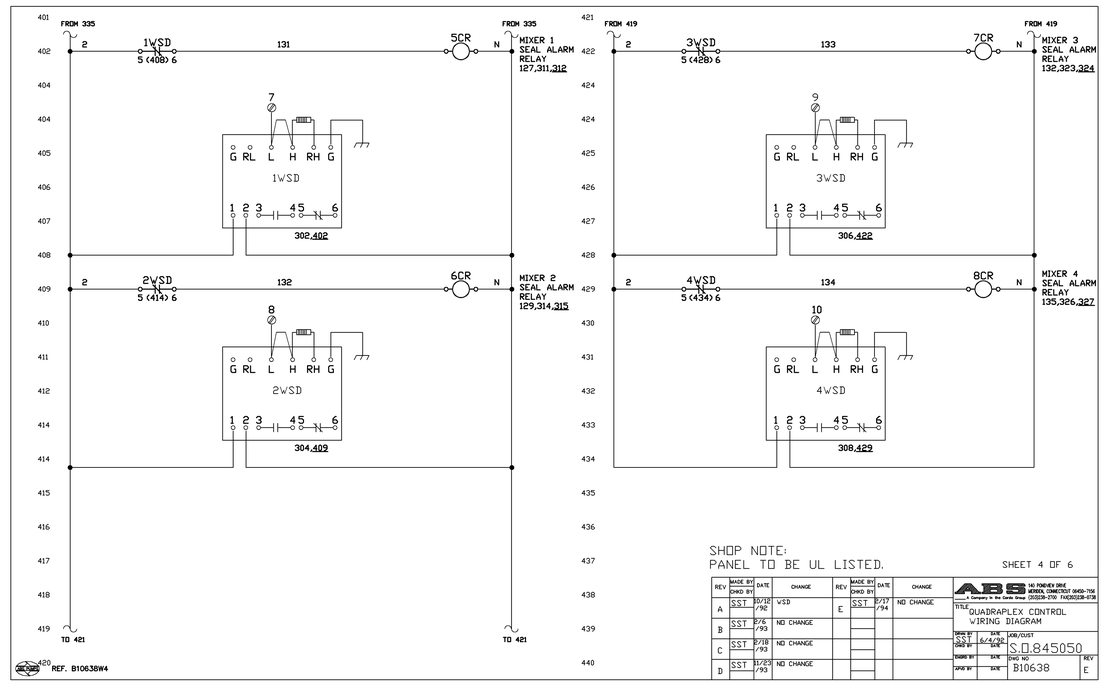

B10638W4.DWG

REV	MADE BY / CHKD BY	DATE	CHANGE
A	SST	10/19/92	CONTACTS TERMINALS
B	SST	2/6/93	AMBER LIGHTS
C	SST	2/18/93	NO CHANGE
D	SST	11/23/93	CHANGE P/L 9,10,11,12CR'S
E	SST	2/17/94	NO CHANGE

ABS — 140 FOUNDERS DRIVE, MIDDLETOWN, CONNECTICUT 06457-7106 (203)238-2700 FAX(203)238-0738

TITLE: QUADRAPLEX CONTROL WIRING DIAGRAM

DRAWN BY: SST 6/17/96 — JOB/CUST: S.O.845050

ENGRD BY: DATE — CHKD BY: DATE — DWG NO: B10638 — REV: E

SHEET 1 OF 6 | SHEET 2 OF 6 | SHEET 3 OF 6 | SHEET 4 OF 6

REV	MADE BY / CHKD BY	DATE	CHANGE
A	SST	10/12/92	PB/LTS
B	SST	2/6/93	REVISE LIMIT LEVEL RELAYS AMBER LTS
C	SST	2/18/93	NO CHANGE
D	SST	11/23/93	ADD CONTACT 9,10,11,12CR'S FOR W/L
E	SST	2/17/94	NO CHANGE

TITLE: QUADRAPLEX CONTROL WIRING DIAGRAM

DRAWN BY: SST 6/4/96 — JOB/CUST: S.O.845050

CHKD BY: DATE — DWG NO: B10638 — REV: E

REV	MADE BY / CHKD BY	DATE	CHANGE
A	SST	10/19/92	CONTACTS TERMINALS
B	SST	2/6/93	AMBER LIGHTS
C	SST	2/18/93	NO CHANGE
D	SST	11/23/93	CHANGE P/L 9,10,11,12CR'S
E	SST	2/17/94	NO CHANGE

TITLE: QUADRAPLEX CONTROL WIRING DIAGRAM

DRAWN BY: SST 6/17/96 — JOB/CUST: S.O.845050

ENGRD BY: DATE — CHKD BY: DATE — DWG NO: B10638 — REV: E

REV	MADE BY / CHKD BY	DATE	CHANGE
A	SST	10/12/92	WSD
B	SST	2/6/93	NO CHANGE
C	SST	2/18/93	NO CHANGE
D	SST	11/23/93	NO CHANGE
E	SST	2/17/94	NO CHANGE

TITLE: QUADRAPLEX CONTROL WIRING DIAGRAM

DRAWN BY: SST 6/4/96 — JOB/CUST: S.O.845050

CHKD BY: DATE — DWG NO: B10638 — REV: E

NO.	DATE	DRWN	CHKD	DESCRIPTION
0	11/98	FXP	ASG	RECORD DRAWING

REVISIONS

DESIGNED BY: .

DRAWN BY: FXP

CHECKED BY/DATE/:

APPROVED BY/DATE:

THIS DRAWING HAS BEEN COMPILED
HAZEN AND SAWYER, P.C.

ARLINGTON COUNTY, VIRGINIA
WATER POLLUTION CONTROL PLANT
UPGRADE AND EXPANSION- PHASE IIB

ABS DRAWINGS
QUADRAPLEX CONTROL WIRING DIAGRAMS
SHEET 1 OF 2

SCALE NOTE

SCALE BAR SHOWN BELOW IS ONE INCH LONG ON A FULL SIZE DRAWING. WHEN SCALING DRAWINGS, MEASURE BAR TO DETERMINE IF SCALES SHOWN WILL REQUIRE ADJUSTING.

ONE INCH

CONTRACT NO.
9002 – WPC

YEAR 1991

LOCATION CODE

SPECIALTY CODE
I

PROJECT NO.
5002 – 033

FILE NAME
ABS-01

DRAWING NO.
ABS-01

SHEET NO. 351

RECORD DRAWING

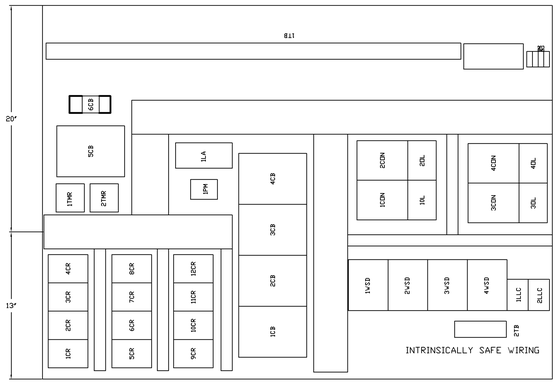

BACK PANEL LAYOUT

LEGEND

ABE —— ALARM BELL
AH —— ALARM HORN
ALT —— ALTERNATOR
AM —— AMMETER
ASW —— AMMETER SWITCH
CAP —— CAPACITOR
CB —— CIRCUIT BREAKER
CON —— CONTACTOR
CR —— CONTROL RELAY
CT —— CURRENT TRANSFORMER
CV —— GFI DUPLEX RECEPTACLE
DI —— DIODE
DISC —— DISCONNECT SWITCH
DR —— DISCHARGE RESISTOR
DSW —— DOOR INTERLOCK SWITCH
ETM —— ELAPSED TIME METER
FLS —— FLOAT LEVEL SWITCH
FU —— FUSE
GEN —— GENERATOR RECEPTACLE
GFI —— GROUND FAULT INTERRUPTER
HTR —— HEATER
ISR —— INTRINSICALLY SAFE RELAY
LA —— LIGHTNING ARRESTOR
LT —— PILOT LIGHT
M —— MOTOR STARTER
MCB —— MAIN CIRCUIT BREAKER
MCP —— MOTOR CIRCUIT PROTECTOR
MTP —— MOTOR TEMPERATURE PROTECTOR
OL —— OVERLOAD
PB —— PUSHBUTTON
PM —— PHASE/POWER MONITOR
RC —— RUN CAPACITOR
SC —— START CAPACITOR
SH —— SPACE HEATER
SR —— START RELAY
SS —— SELECTOR SWITCH
T —— TRANSFORMER
TAS —— TEMPERATURE ACTUATED SWITCH
TB —— TERMINAL BLOCK
TC —— TIME CLOCK
TDM —— TIME DELAY MODULE
TM —— THERMISTOR SENSOR RELAY
TS —— TRANSFER SWITCH
VM —— VOLTMETER
WSD —— WATER SENSING DEVICE
WWP —— WATER PROBE

SHOP NOTE:
PANEL TO BE UL LISTED.

SHEET 6 OF 6

REV	MADE BY / CHKD BY	DATE	CHANGE
A	SST /	10/18 /92	VSD, CBS, CR LAYOUT
B	SST /	2/6 /93	ADD TIMER CH TB LAYOUT
C	SST /	2/19 /93	ADD 2ND TIMER
D	SST /	11/23 /93	REMOVE TRANSFORMER
E	SST /	2/17 /94	NO CHANGE

ABS PUMPS INC.
TITLE: QUADRAPLEX CONTROL BACKPLATE LAYOUT
DRWN BY: SST — DATE: 6/18/92
CHKD BY: — DATE:
JOB/DIST: SO 845050
NAME PLT — DATE — CHG NO: B10638 — REV: E
CAD ID — DATE

REF. B10638BP

B10638BP.DWG

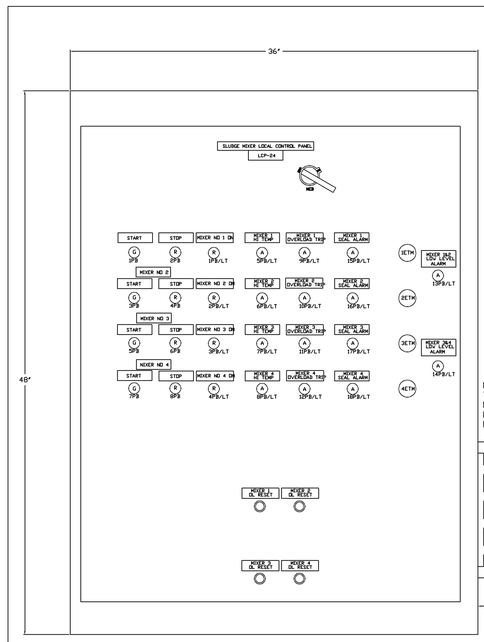

OUTER DOOR LAYOUT

FIELD CONNECTIONS

GROUND TERMINALS
L1
L2
L3
FROM CUSTOMER 460/3/60 POWER SUPPLY
1TB
MIXER NO 1
MIXER NO 2
MIXER NO 3
MIXER NO 4
2TB
MIXER 1,2 2-20mA SIGNAL
MIXER 3,4 2-20mA SIGNAL
1WWP
2WWP
3WWP
4WWP
1TB*CONT
MIXER 1 HI TEMP ALARM DRY CONTACTS
MIXER 1 SEAL ALARM DRY CONTACTS
MIXER 1 OVERLOAD TRIP DRY CONTACTS
MIXER 1 STATUS DRY CONTACTS
MIXER 2 HI TEMP ALARM DRY CONTACTS
MIXER 2 SEAL ALARM DRY CONTACTS
MIXER 2 OVERLOAD TRIP DRY CONTACTS
MIXER 2 STATUS DRY CONTACTS
1TB*CONT
MIXER 3 HI TEMP ALARM DRY CONTACTS
MIXER 3 SEAL ALARM DRY CONTACTS
MIXER 3 OVERLOAD ALARM DRY CONTACTS
MIXER 3 STATUS DRY CONTACTS
MIXER 4 HI TEMP ALARM DRY CONTACTS
MIXER 4 SEAL ALARM DRY CONTACTS
MIXER 4 OVERLOAD TRIP DRY CONTACTS
MIXER 4 STATUS DRY CONTACTS
SPARES

SHOP NOTE:
PANEL TO BE UL LISTED.

SHEET 5 OF 6

REV	MADE BY / CHKD BY	DATE	CHANGE
A	SST /	10/12 /92	OL RESETS LAYOUT
B	SST /	2/6 /93	AMBER ALARM LIGHTS
C	SST /	2/18 /93	NO CHANGE
D	SST /	11/23 /93	REMOVE DEAD-FRONT, ADD TX
E	SST /	2/17 /94	NO CHANGE

ABS PUMPS INC.
TITLE: QUADRAPLEX CONTROL DEADFRONT LAYOUT
DRWN BY: SST — DATE: 6/17/92
CHKD BY: — DATE:
JOB/DIST: SO 845050
NAME PLT — DATE — CHG NO: B10638 — REV: E
CAD ID — DATE

REF. B10638DD

B10638DD.DWG

RECORD DRAWING

NO.	DATE	DRWN	CHKD	DESCRIPTION
0	11/98	FXP	ASG	RECORD DRAWING

REVISIONS

DESIGNED BY: .
DRAWN BY: FXP
CHECKED BY/DATE/:
APPROVED BY/DATE:

THIS DRAWING HAS BEEN COMPILED
HAZEN AND SAWYER, P.C.

ARLINGTON COUNTY, VIRGINIA
WATER POLLUTION CONTROL PLANT
UPGRADE AND EXPANSION- PHASE IIB

ABS DRAWINGS
QUADRAPLEX CONTROL WIRING DIAGRAMS
SHEET 2 OF 2

SCALE NOTE

SCALE BAR SHOWN BELOW IS ONE INCH LONG ON A FULL SIZE DRAWING. WHEN SCALING DRAWINGS, MEASURE BAR TO DETERMINE IF SCALES SHOWN WILL REQUIRE ADJUSTING.

ONE INCH

CONTRACT NO.
9002 – WPC
YEAR 1991
LOCATION CODE
SPECIALTY CODE 1
PROJECT NO.
5002 – 033
FILE NAME
ABS-02
DRAWING NO.
ABS-02
SHEET NO. 352

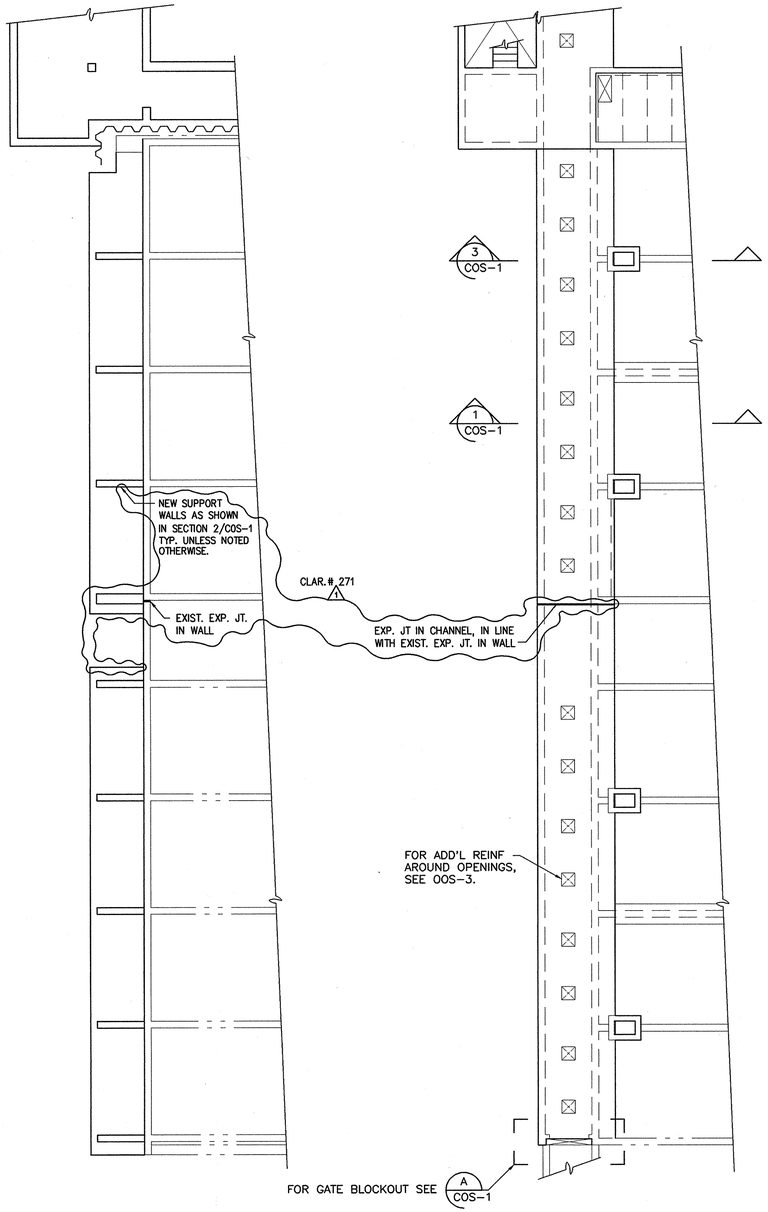

NEW FOUNDATION PLAN
3/32"=1'-0"

NEW PLAN T/STRUCTURE
3/32"=1'-0"

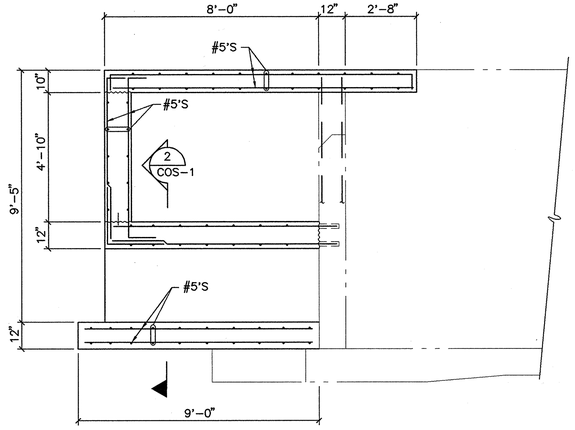

SECTION 1
SCALE: 3/8"=1'-0"
COS-1

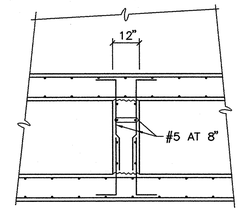

SECTION 2
SCALE: 3/8"=1'-0"
COS-1

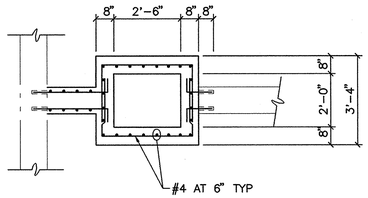

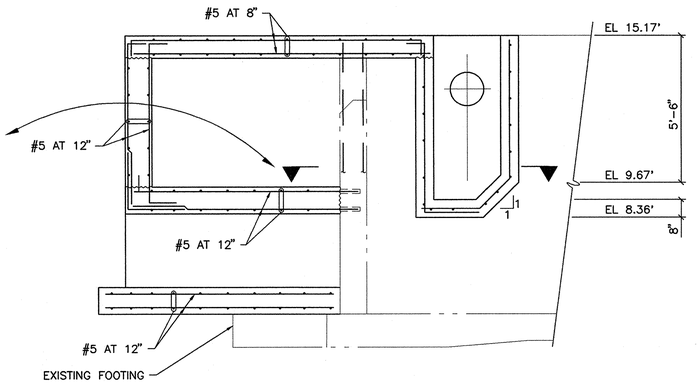

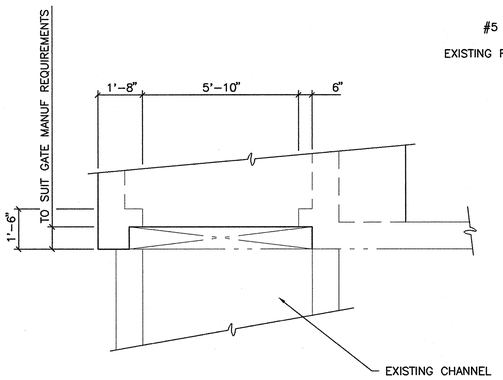

DETAIL A
SCALE: 3/8"=1'-0"
COS-1

SECTION 3
SCALE: 3/8"=1'-0"
COS-1

ADD. #1
1

NOTE:
1. INCORPORATE EXISTING REBAR IN NEW SLAB AS PROVIDED FOR IN DRAWING COR-05. SHOW EXISTING REBAR IN NEW REBAR SHOP DRAWINGS AFTER EXISTING REBARS ARE EXPOSED.

NOTE:
STANDARD DETAILS SHOWN ON OOS-2, OOS-3, AND OOS-4 APPLY TO ALL SIMILAR SITUATIONS ON THE PROJECT, EXCEPT WHERE A DIFFERENT DETAIL IS SHOWN.

RECORD DRAWING

NO.	DATE	DRWN	CHK'D	DESCRIPTION
1	8/97	FXP	ASG	RECORD DRAWING

REVISIONS

DESIGNED BY:
DRAWN BY:
CHECKED BY/DATE:
APPRV'D BY/DATE:

CAMP DRESSER & McKEE
THIS DRAWING HAS BEEN REVISED BY HAZEN AND SAWYER, P.C. TO REFLECT MODIFICATIONS MADE DURING CONSTRUCTION
environmental engineers, scientists, planners, & management consultants
CDM

ARLINGTON COUNTY, VIRGINIA
WATER POLLUTION CONTROL PLANT
UPGRADE AND EXPANSION- PHASE IIB

EXISTING PRIMARY CLARIFIERS STRUCTURAL-
PLANS AND SECTIONS

SCALE NOTE
SCALE BAR SHOWN BELOW IS ONE INCH LONG ON A FULL SIZE DRAWING. WHEN SCALING DRAWINGS, MEASURE BAR TO DETERMINE IF SCALES SHOWN WILL REQUIRE ADJUSTING.
ONE INCH

CONTRACT NO.
90-02-WPC
YEAR 1991
LOCATION CODE: CO
SPECIALTY CODE: S
PROJECT NO.
5002-33
FILE NAME
COS-01.DWG
DRAWING NO.
COS-1
SHEET NO. 249

STI structural technologies inc.
CONSULTING ENGINEERS
Wekiva Business Center
Suite 120, 1428 East Semoran Blvd., Apopka, Florida 32703
(407) 889-9660

DRAWN BY : RAH
CHECKED BY : REH
APPROVED BY : BE
DATE : OCT 1990
JOB NO : 90-111

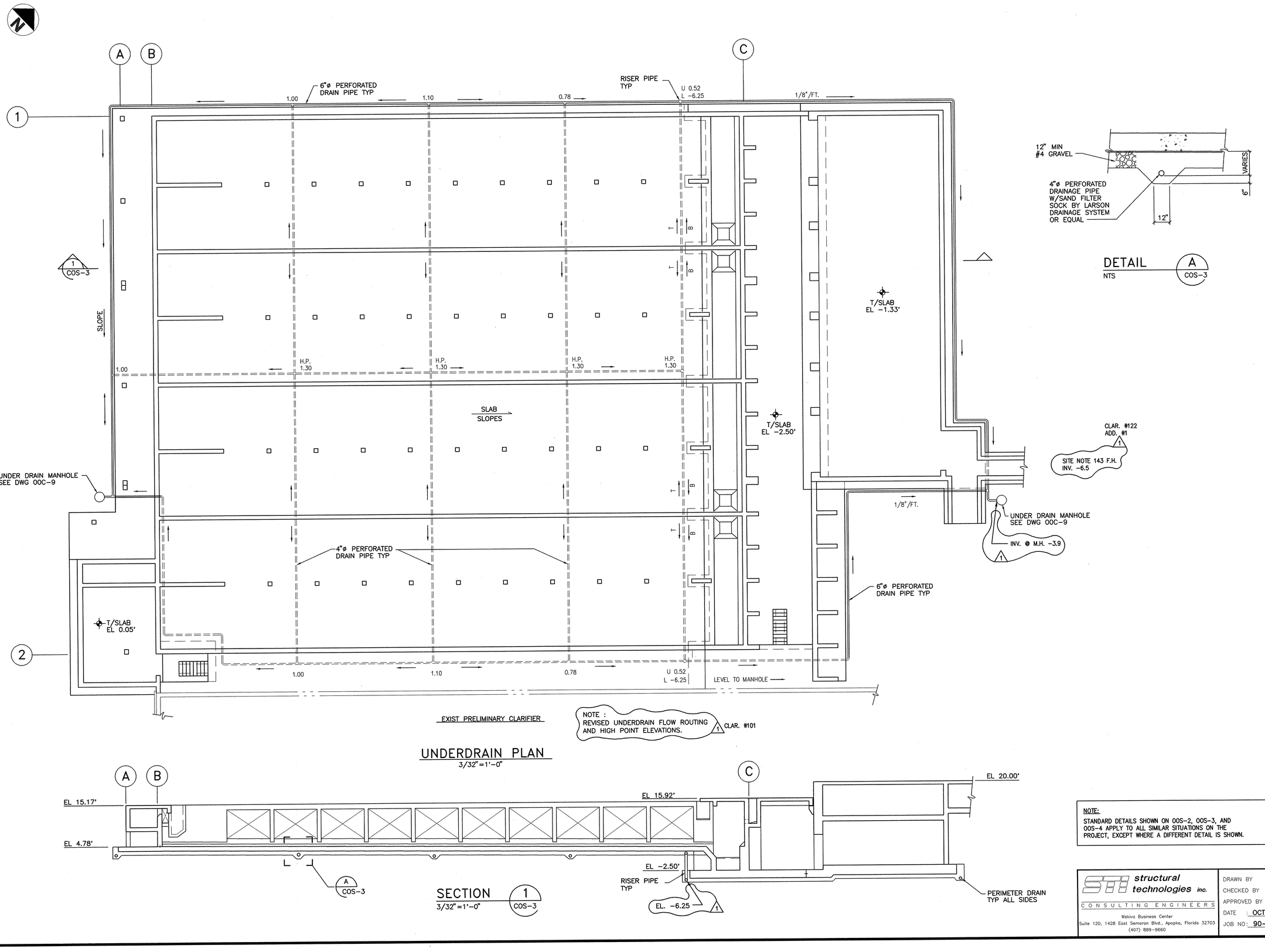

NOTE:
STANDARD DETAILS SHOWN ON 00S-2, 00S-3, AND 00S-4 APPLY TO ALL SIMILAR SITUATIONS ON THE PROJECT, EXCEPT WHERE A DIFFERENT DETAIL IS SHOWN.

RECORD DRAWING

NO.	DATE	DRWN	CHK'D	DESCRIPTION
1	9/97	FXP	ASG	RECORD DRAWING

REVISIONS

DESIGNED BY:
DRAWN BY:
CHECKED BY/DATE:
APPRV'D BY/DATE:

CAMP DRESSER & McKEE
THIS DRAWING HAS BEEN REVISED BY HAZEN AND SAWYER, P.C. TO REFLECT MODIFICATIONS MADE DURING CONSTRUCTION
CDM environmental engineers, scientists, planners, & management consultants

ARLINGTON COUNTY, VIRGINIA
WATER POLLUTION CONTROL PLANT
UPGRADE AND EXPANSION- PHASE IIB

NEW PRIMARY CLARIFIERS-STRUCTURAL-
UNDERDRAIN PLAN

SCALE NOTE
SCALE BAR SHOWN BELOW IS ONE INCH LONG ON A FULL SIZE DRAWING. WHEN SCALING DRAWINGS, MEASURE BAR TO DETERMINE IF SCALES SHOWN WILL REQUIRE ADJUSTING.
ONE INCH

CONTRACT NO. 90-02-WPC
YEAR 1991
LOCATION CODE: CO
SPECIALTY CODE: S
PROJECT NO. 5002-33
FILE NAME COS-03.DWG
DRAWING NO. COS-3
SHEET NO. 265

STI structural technologies inc.
CONSULTING ENGINEERS
Wekiva Business Center
Suite 120, 1428 East Semoran Blvd., Apopka, Florida 32703
(407) 889-9660

DRAWN BY : RAH
CHECKED BY : REH
APPROVED BY : BE
DATE : OCT 1990
JOB NO : 90-111

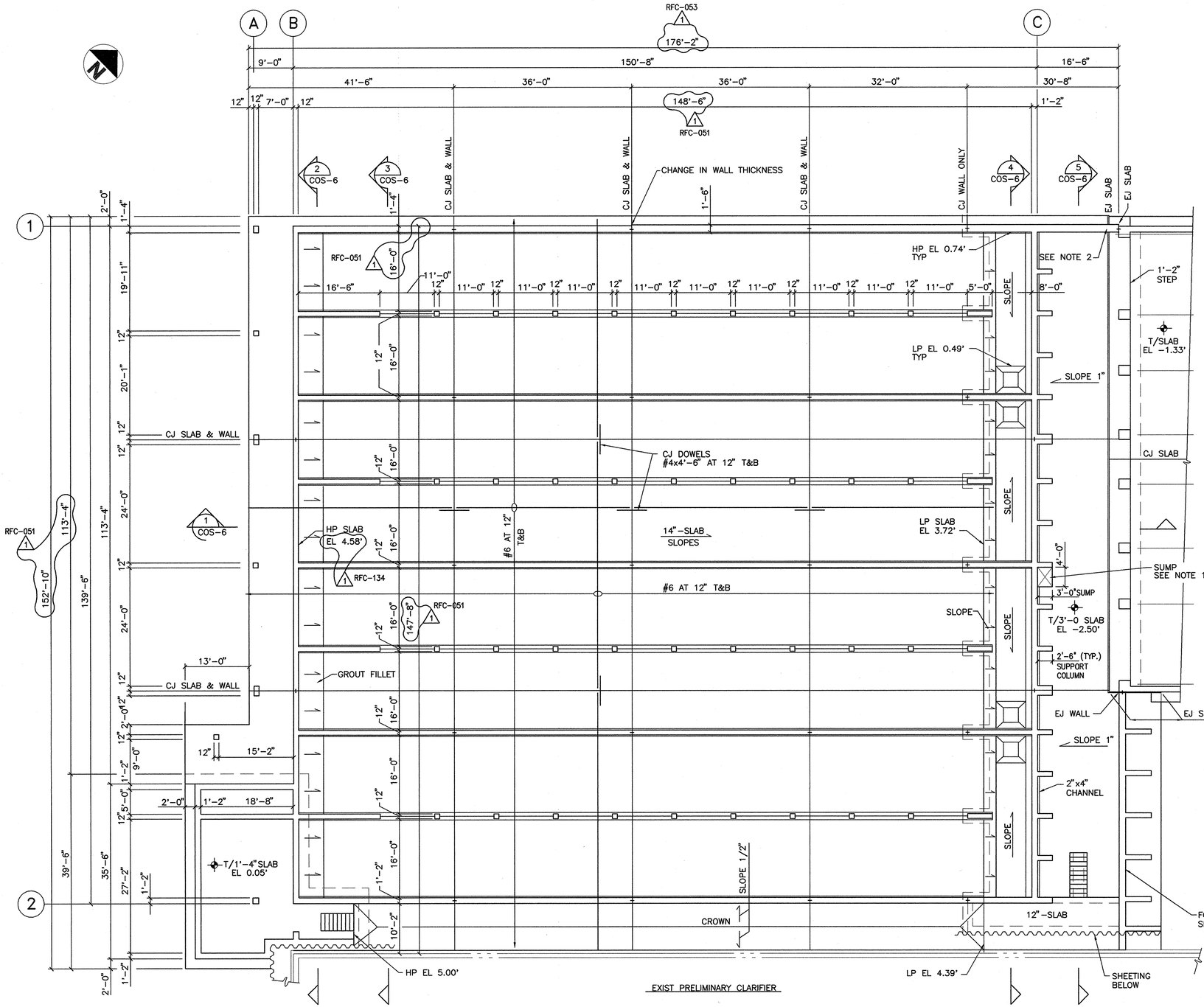

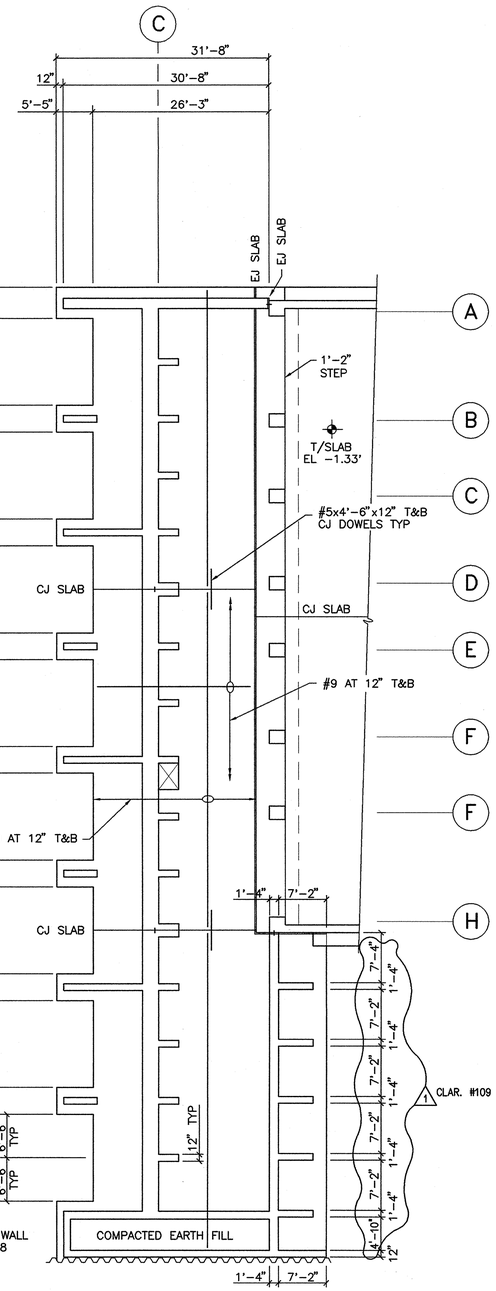

FOUNDATION PLAN
3/32"=1'-0"

PLAN-SLAB AT EL-2.50"
3/32"=1'-0"

NOTES

1- 2'-0" DEEP SUMP. REINFORCE EACH FACE #4 AT 8" EACH WAY.

2- PROVIDE EJ WATERSTOP ALONG BASE OF 18" WALL EXTENDING N-S FROM SLAB EJ TO WALL EJ.

NOTE:
STANDARD DETAILS SHOWN ON OOS-2, OOS-3, AND OOS-4 APPLY TO ALL SIMILAR SITUATIONS ON THE PROJECT, EXCEPT WHERE A DIFFERENT DETAIL IS SHOWED.

RECORD DRAWING

NO.	DATE	DRWN	CHK'D	DESCRIPTION
1	8/97	FXP	ASG	RECORD DRAWING

REVISIONS

DESIGNED BY:
DRAWN BY:
CHECKED BY/DATE:
APPRVD BY/DATE:

CAMP DRESSER & McKEE

THIS DRAWING HAS BEEN REVISED BY HAZEN AND SAWYER, P.C. TO REFLECT MODIFICATIONS MADE DURING CONSTRUCTION

environmental engineers, scientists, planners, & management consultants CDM

ARLINGTON COUNTY, VIRGINIA
WATER POLLUTION CONTROL PLANT
UPGRADE AND EXPANSION- PHASE IIB

NEW PRIMARY CLARIFIERS-STRUCTURAL-FOUNDATION PLAN

SCALE NOTE
SCALE BAR SHOWN BELOW IS ONE INCH LONG ON A FULL SIZE DRAWING. WHEN SCALING DRAWINGS, MEASURE BAR TO DETERMINE IF SCALES SHOWN WILL REQUIRE ADJUSTING.
ONE INCH

CONTRACT NO. 90-02-WPC
YEAR 1991
LOCATION CODE: CO
SPECIALTY CODE: S
PROJECT NO. 5002-33
FILE NAME COS-04
DRAWING NO. COS-4
SHEET NO. 266

STI structural technologies inc.
CONSULTING ENGINEERS
Wekiva Business Center
Suite 120, 1428 East Semoran Blvd., Apopka, Florida 32703
(407) 889-9660

DRAWN BY : RAH
CHECKED BY : REH
APPROVED BY : BE
DATE : OCT 1990
JOB NO : 90-111

FILE: COS-4.DWG , SCALE: 3/32"=1'-0" , LATEST REVISIONS MADE ON: 08/17/91 AT 13:30

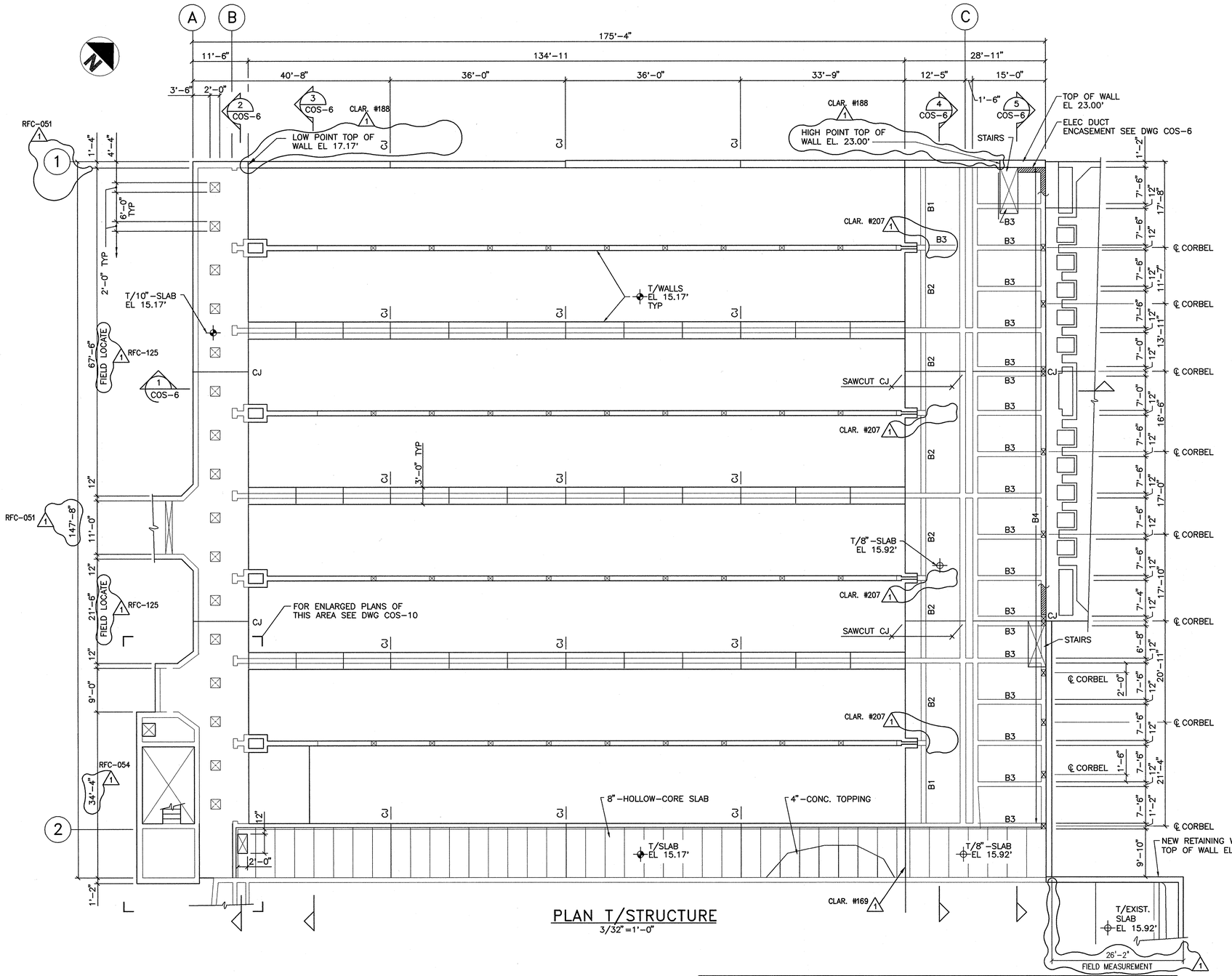

PLAN T/STRUCTURE
3/32"=1'-0"

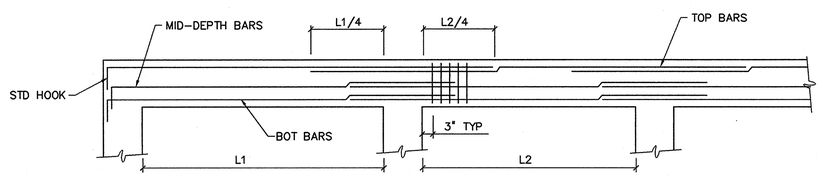

BEAM SCHEDULE

MARK	ELEV. T/BEAM	SIZE	BOT BARS	TOP BARS	MID-DEPTH BARS	STIRRUPS SIZE	STIRRUPS TYPE	STIRRUPS SPA	SKETCH ℄ SUPPORT ℄ SUPPORT	REMARKS
B1	EL 15.92'	12x24	3#9	2#9	2#6 EF	#3		10" OC		TOP BARS LAP=3'-0"
B2	EL 15.92'	12x24	3#9	3#9	2#6 EF	#3		10" OC		BUNDLE TOP BARS AT SUPPORT
B3	EL 15.92'	12x24	3#9	2#9	2#6 EF	#3		10" OC		
B4	EL 15.92'	12x24	2#9	2#9	2#6 EF	#3		10" OC		

NOTE:
STANDARD DETAILS SHOWN ON OOS-2, OOS-3, AND OOS-4 APPLY TO ALL SIMILAR SITUATIONS ON THE PROJECT, EXCEPT WHERE A DIFFERENT DETAIL IS SHOWN.

RECORD DRAWING

NO.	DATE	DRWN	CHK'D	DESCRIPTION
1	9/97	FXP	ASG	RECORD DRAWING

REVISIONS

DESIGNED BY:
DRAWN BY:
CHECKED BY/DATE:
APPRV'D BY/DATE:

CAMP DRESSER & McKEE
THIS DRAWING HAS BEEN REVISED BY HAZEN AND SAWYER, P.C. TO REFLECT MODIFICATIONS MADE DURING CONSTRUCTION
environmental engineers, scientists, planners, & management consultants
CDM

ARLINGTON COUNTY, VIRGINIA
WATER POLLUTION CONTROL PLANT
UPGRADE AND EXPANSION- PHASE IIB

NEW PRIMARY CLARIFIERS-STRUCTURAL-
PLAN AT TOP OF STRUCTURE

SCALE NOTE
SCALE BAR SHOWN BELOW IS ONE INCH LONG ON A FULL SIZE DRAWING. WHEN SCALING DRAWINGS, MEASURE BAR TO DETERMINE IF SCALES SHOWN WILL REQUIRE ADJUSTING.
ONE INCH

CONTRACT NO. 90-02-WPC
YEAR 1991
LOCATION CODE CO
SPECIALTY CODE S
PROJECT NO. 5002-33
FILE NAME COS-05
DRAWING NO. COS-5
SHEET NO. 267

STI structural technologies inc.
CONSULTING ENGINEERS
Wekiva Business Center
Suite 120, 1428 East Semoran Blvd., Apopka, Florida 32703
(407) 889-9660

DRAWN BY : RAH
CHECKED BY : REH
APPROVED BY : BE
DATE : OCT 1990
JOB NO : 90-111

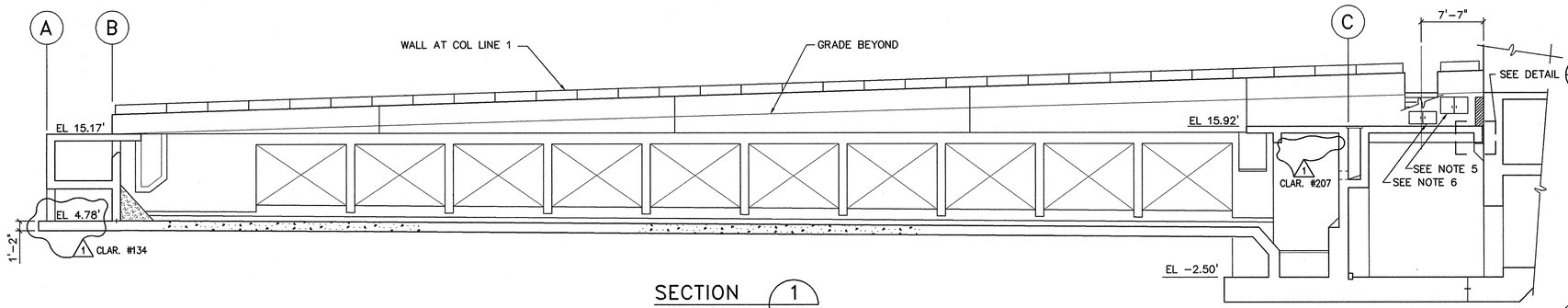

SECTION 1 1/8"=1'-0" COS-4

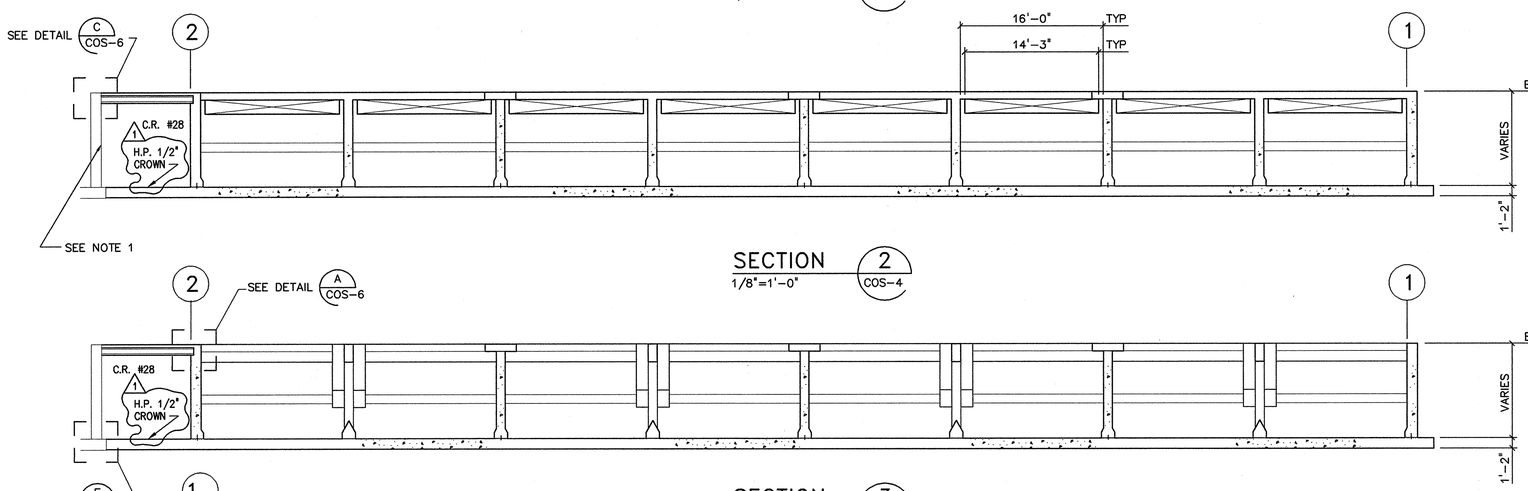

SECTION 2 1/8"=1'-0" COS-4

SECTION 3 1/8"=1'-0" COS-4

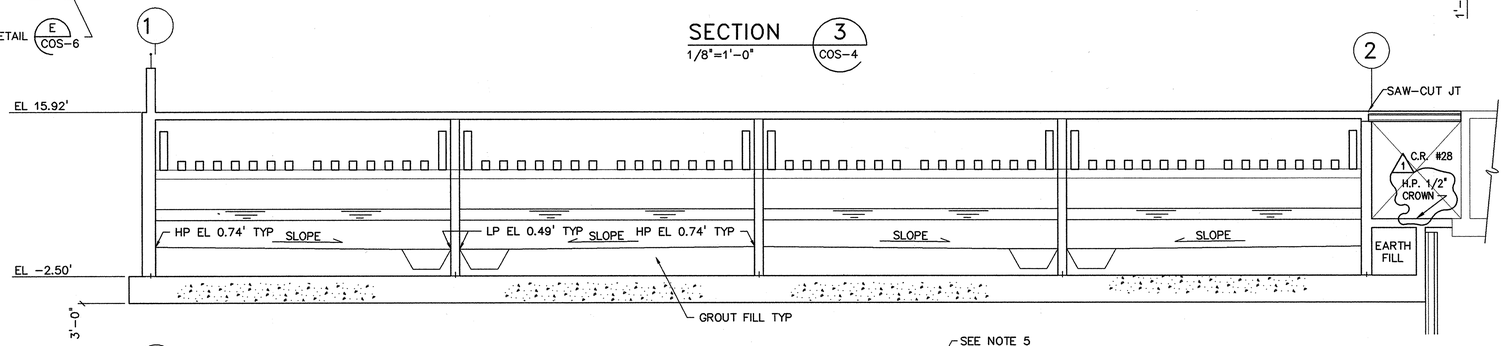

SECTION 4 1/8"=1'-0" COS-4

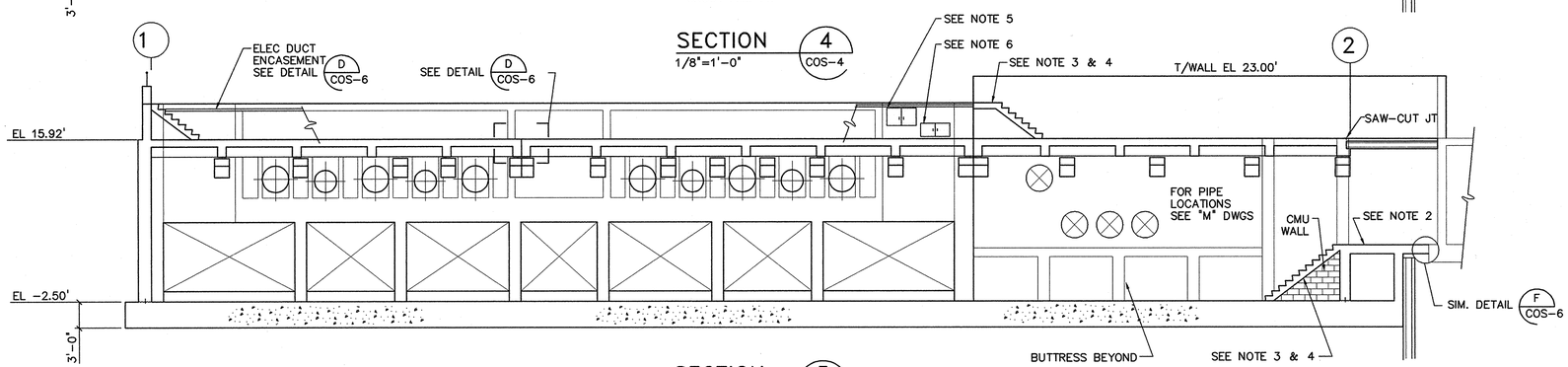

SECTION 5 1/8"=1'-0" COS-4

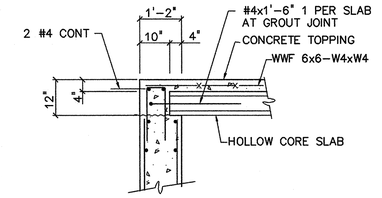

DETAIL A 1/2"=1'-0" COS-6

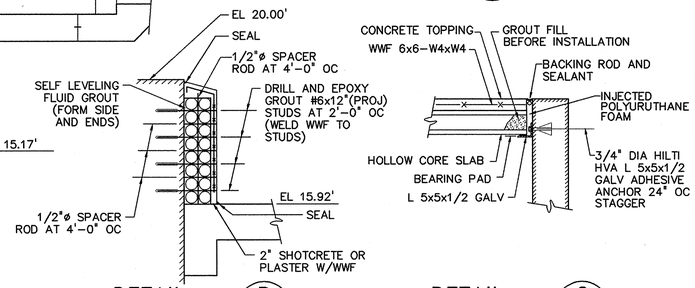

DETAIL B 1/2"=1'-0" COS-6

DETAIL C 1/2"=1'-0" COS-6

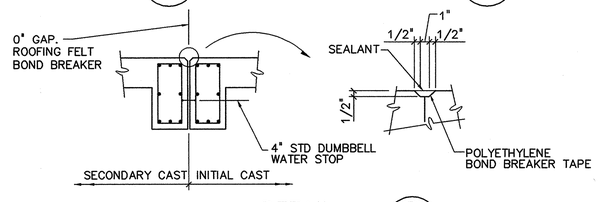

DETAIL D 1/2"=1'-0" COS-6

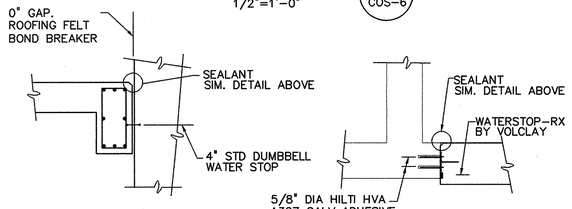

DETAIL E 1/2"=1'-0" COS-6

DETAIL F 1/2"=1'-0" COS-6

NOTES

1 – CLEAN WALLS BY WATER OR SAND BLASTING. INJECT WATER ACTIVATED POLYURETHANE TO ACTIVE SEEPAGE CRACKS, IF ANY. (ESTIMATED INJECTION 500 LF). APPLY XYPEX WATERPROOFING TO ALL EXISTING CONCRETE SURFACES PER MANUF. RECOMMENDATIONS.

2 – 12"–SLAB–ON–GRADE REINF. #4 AT 8" T&B EW.

3 – 8"–STAIR SLABS. #4 AT 8" T&B EW.

4 – STAIRS: EQUAL RISERS 7 TO 7.5" RANGE, 11" TREADS. FOR NON–SKID NOSING AND ADDED REINF SEE STD DETAILS.

5 – 24"x48"x11" PULLBOX CABINET DOOR. GALVANIZED STEEL W/WATERTIGHT DOORS AND STD LATCH/LOCK.

6 – 18"x48"x11" PULLBOX CABINET DOOR. GALVANIZED STEEL W/WATERTIGHT DOORS AND STD LATCH/LOCK.

NOTE:
STANDARD DETAILS SHOWN ON OOS–2, OOS–3, AND OOS–4 APPLY TO ALL SIMILAR SITUATIONS ON THE PROJECT, EXCEPT WHERE A DIFFERENT DETAIL IS SHOWN.

RECORD DRAWING

NO.	DATE	DRWN	CHK'D	DESCRIPTION
1	9/97	FXP	ASG	RECORD DRAWING

REVISIONS

DESIGNED BY:
DRAWN BY:
CHECKED BY/DATE:
APPRV'D BY/DATE:

CAMP DRESSER & McKEE

THIS DRAWING HAS BEEN REVISED BY HAZEN AND SAWYER, P.C. TO REFLECT MODIFICATIONS MADE DURING CONSTRUCTION

environmental engineers, scientists, planners, & management consultants CDM

ARLINGTON COUNTY, VIRGINIA
WATER POLLUTION CONTROL PLANT
UPGRADE AND EXPANSION- PHASE IIB

NEW PRIMARY CLARIFIERS-STRUCTURAL-SECTIONS

SCALE NOTE
SCALE BAR SHOWN BELOW IS ONE INCH LONG ON A FULL SIZE DRAWING. WHEN SCALING DRAWINGS, MEASURE BAR TO DETERMINE IF SCALES SHOWN WILL REQUIRE ADJUSTING.
ONE INCH

CONTRACT NO. 90-02-WPC
YEAR 1991
LOCATION CODE CO
SPECIALTY CODE S
PROJECT NO. 5002-33
FILE NAME COS-06.DWG
DRAWING NO. COS-6
SHEET NO. 268

STI structural technologies inc.
CONSULTING ENGINEERS
Wekiva Business Center
Suite 120, 1428 East Semoran Blvd., Apopka, Florida 32703
(407) 889-9660

DRAWN BY : RAH
CHECKED BY : REH
APPROVED BY : BE
DATE : OCT 1990
JOB NO : 90-111

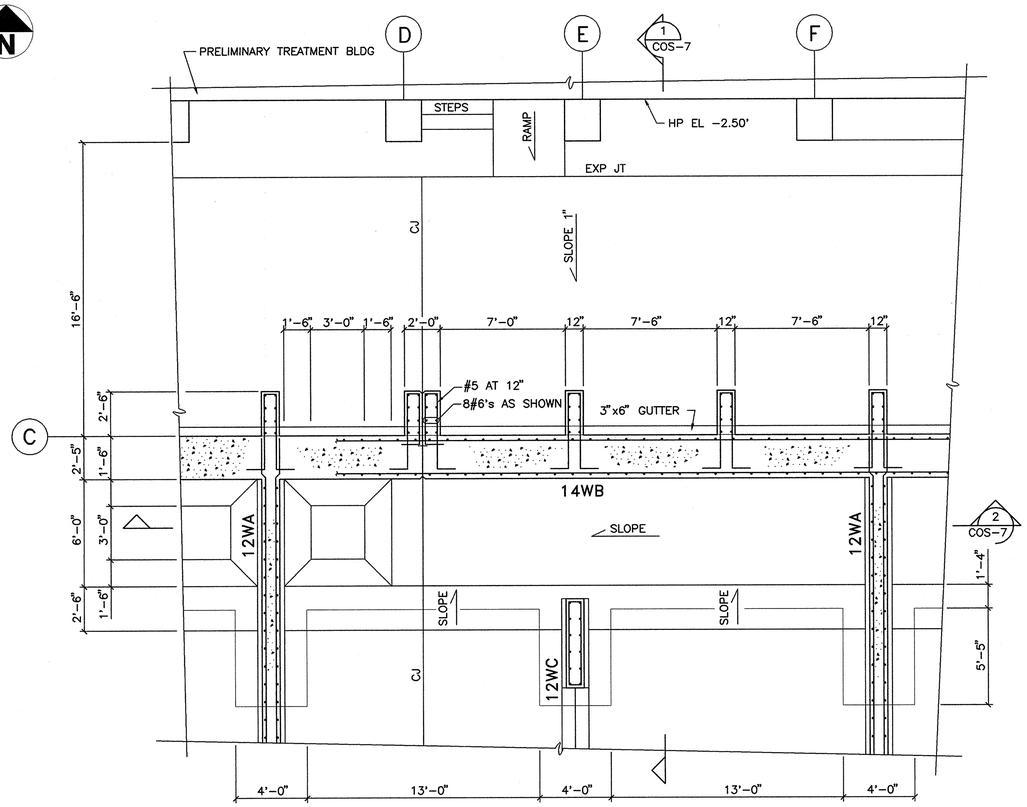

PARTIAL PLAN AT EL 7.00'

SCALE: 1/4"=1'-0"

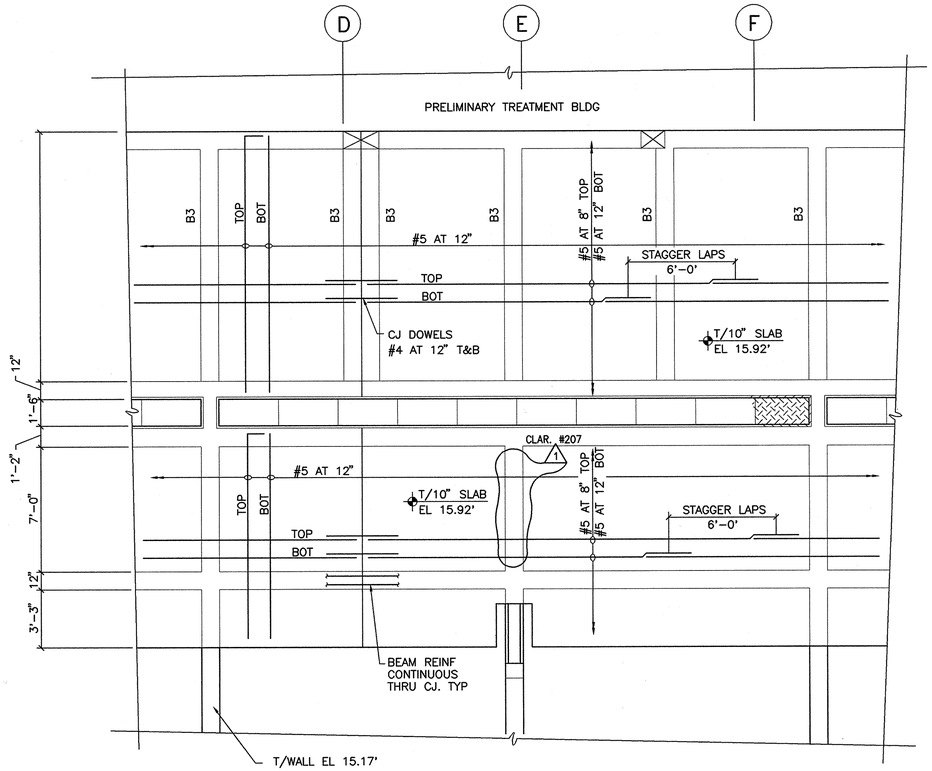

PARTIAL PLAN AT T/STRUCTURE

SCALE: 1/4"=1'-0"

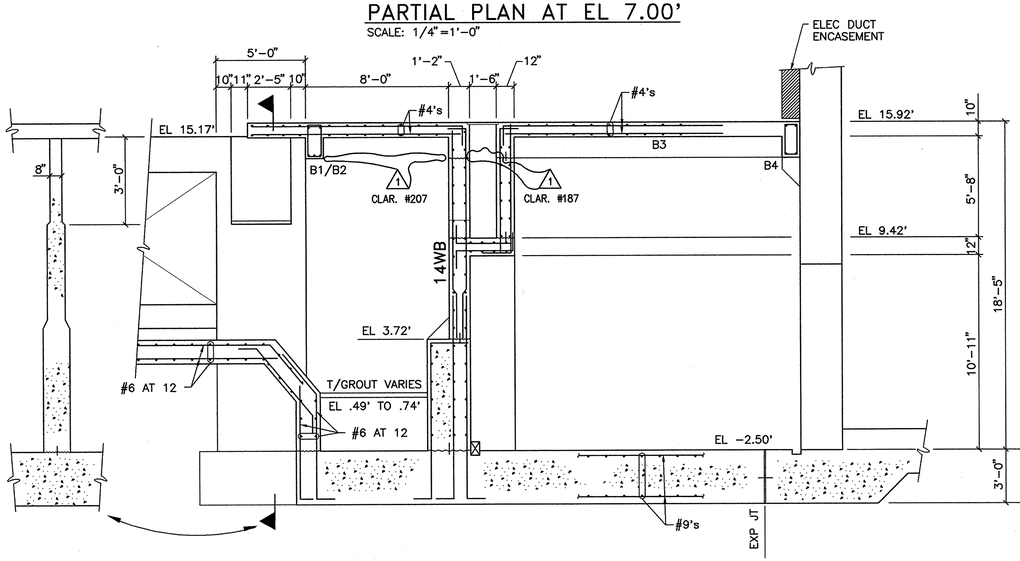

SECTION 1

1/4"=1'-0" COS-7

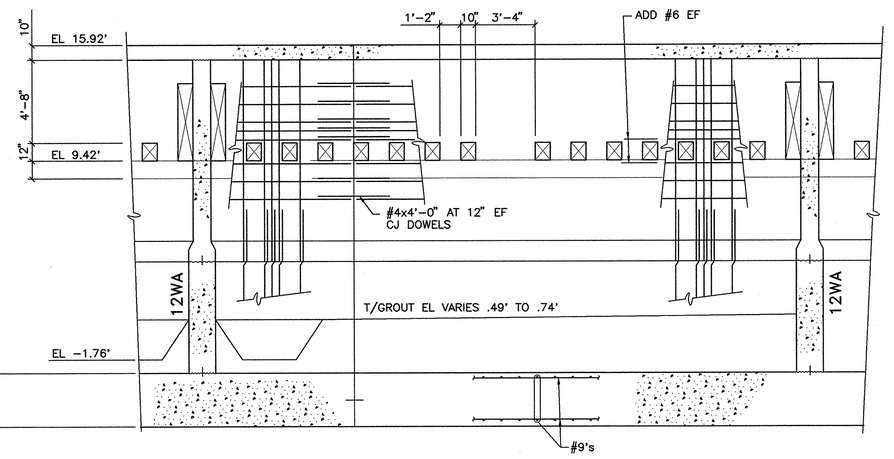

SECTION 2

1/4"=1'-0" COS-7

NOTE:

STANDARD DETAILS SHOWN ON S2, S3, AND S4 APPLY TO ALL SIMILAR SITUATIONS ON THE PROJECT, EXCEPT WHERE A DIFFERENT DETAIL IS SHOWN.

structural technologies inc.
CONSULTING ENGINEERS
Wekiva Business Center
Suite 120, 1428 East Semoran Blvd., Apopka, Florida 32703
(407) 889-9660

DRAWN BY : RAH
CHECKED BY : REH
APPROVED BY : BE
DATE : OCT 1990
JOB NO : 90-111

NO.	DATE	DRWN	CHK'D	DESCRIPTION
1	9/97	FXP	ASG	RECORD DRAWING

REVISIONS

DESIGNED BY:

DRAWN BY:

CHECKED BY/DATE:

APPRV'D BY/DATE:

CAMP DRESSER & McKEE

THIS DRAWING HAS BEEN REVISED BY HAZEN AND SAWYER, P.C. TO REFLECT MODIFICATIONS MADE DURING CONSTRUCTION

environmental engineers, scientists, planners, & management consultants CDM

ARLINGTON COUNTY, VIRGINIA
WATER POLLUTION CONTROL PLANT
UPGRADE AND EXPANSION- PHASE IIB

NEW PRIMARY CLARIFIERS-STRUCTURAL-
ENLARGED INFLUENT PLANS AND SECTIONS

RECORD DRAWING

SCALE NOTE

SCALE BAR SHOWN BELOW IS ONE INCH LONG ON A FULL SIZE DRAWING. WHEN SCALING DRAWINGS, MEASURE BAR TO DETERMINE IF SCALES SHOWN WILL REQUIRE ADJUSTING.

ONE INCH

CONTRACT NO. 90-02-WPC

YEAR 1991

LOCATION CODE	SPECIALTY CODE
CO	S

PROJECT NO. 5002-33

FILE NAME COS-07.DWG

DRAWING NO. COS-7

SHEET NO. 269

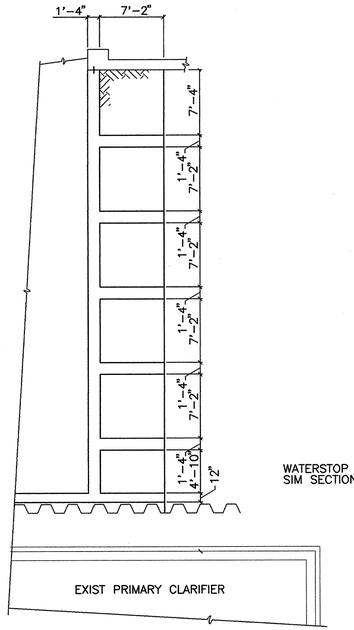

PLAN–SLAB AT EL –2.50'
1/8"=1'–0"

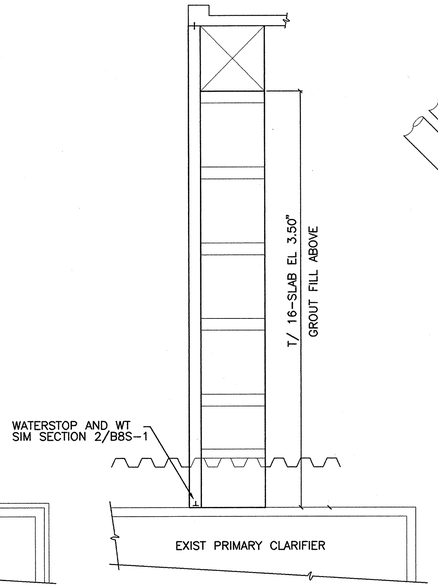

PLAN–SLAB AT EL 3.50'
1/8"=1'–0"

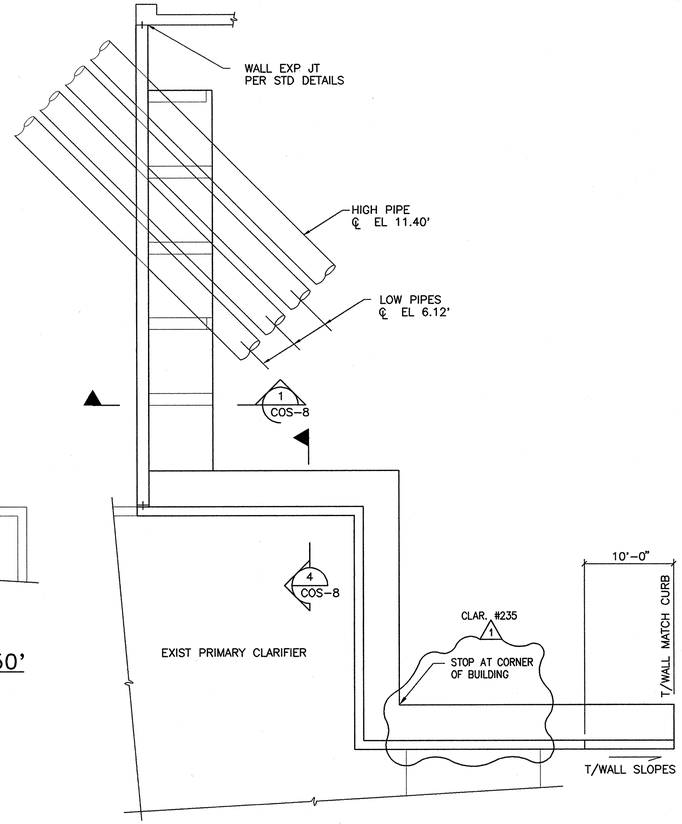

PLAN–T/RETAINING WALL
1/4"=1'–0"

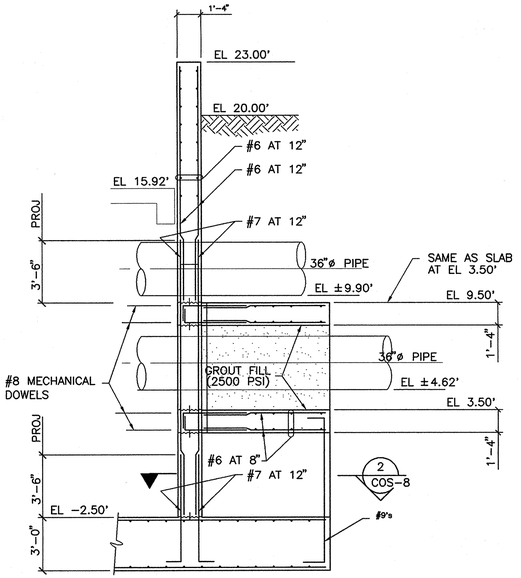

SECTION 1
1/4"=1'–0"
COS–8

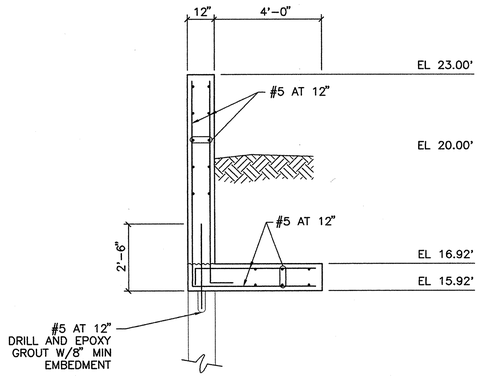

SECTION 4
3/8"=1'–0"
COS–8

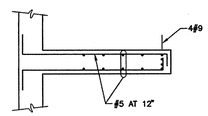

SECTION 2
1/4"=1'–0"
COS–8

NOTE:
STANDARD DETAILS SHOWN ON OOS–2, OOS–3, AND OOS–4 APPLY TO ALL SIMILAR SITUATIONS ON THE PROJECT, EXCEPT WHERE A DIFFERENT DETAIL IS SHOWN.

NO.	DATE	DRWN	CHK'D	DESCRIPTION
1	9/97	FXP	ASG	RECORD DRAWING

REVISIONS

DESIGNED BY:
DRAWN BY:
CHECKED BY/DATE:
APPRV'D BY/DATE:

CAMP DRESSER & McKEE

THIS DRAWING HAS BEEN REVISED BY HAZEN AND SAWYER, P.C. TO REFLECT MODIFICATIONS MADE DURING CONSTRUCTION

CDM
environmental engineers, scientists, planners, & management consultants

RECORD DRAWING

ARLINGTON COUNTY, VIRGINIA
WATER POLLUTION CONTROL PLANT
UPGRADE AND EXPANSION- PHASE IIB

NEW PRIMARY CLARIFIERS-STRUCURAL-
PLAN AT TOP OF STRUCTURE

SCALE NOTE
SCALE BAR SHOWN BELOW IS ONE INCH LONG ON A FULL SIZE DRAWING. WHEN SCALING DRAWINGS, MEASURE BAR TO DETERMINE IF SCALES SHOWN WILL REQUIRE ADJUSTING.
ONE INCH

CONTRACT NO.
90–02–WPC
YEAR 1991
LOCATION CODE: CO
SPECIALTY CODE: S
PROJECT NO.
5002–33
FILE NAME
COS–08.DWG
DRAWING NO.
COS–8
SHEET NO. 270

structural technologies inc.
CONSULTING ENGINEERS
Wekiva Business Center
Suite 120, 1428 East Semoran Blvd., Apopka, Florida 32703
(407) 889–9660

DRAWN BY : CL
CHECKED BY : REH
APPROVED BY : BE
DATE : OCT 1990
JOB NO : 90–111

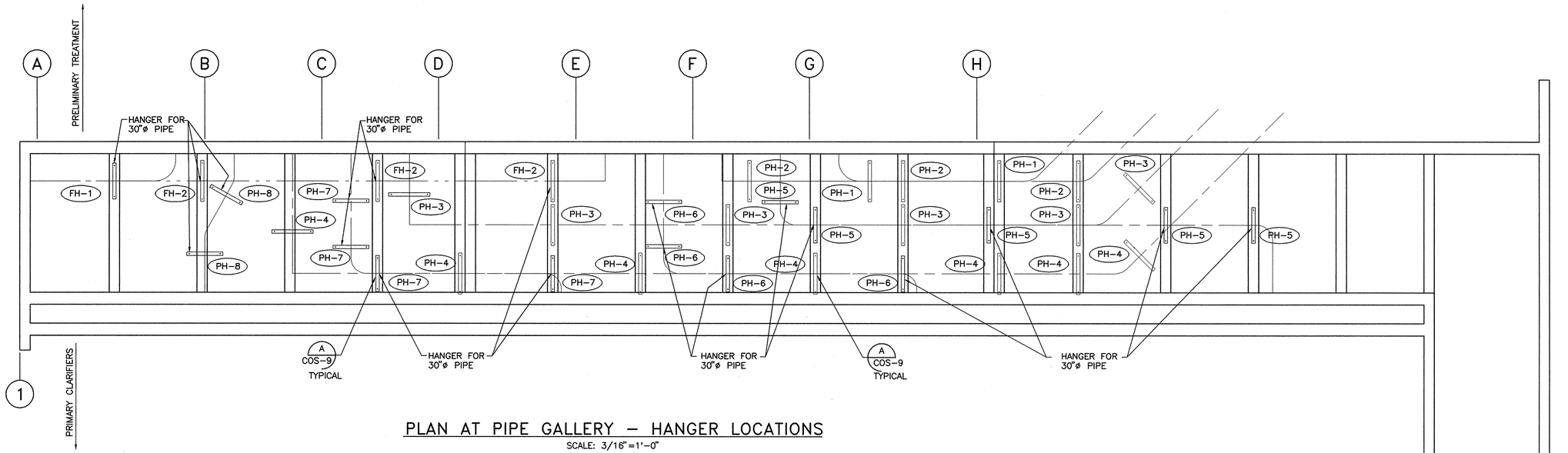

PLAN AT PIPE GALLERY – HANGER LOCATIONS

SCALE: 3/16"=1'-0"

NOTES:

1. ALL PIPE SUPPORTS ARE FOR 36"ø PIPES UNLESS OTHERWISE NOTED.
2. FOR PIPE ELEVATIONS SEE "M" DWGS.

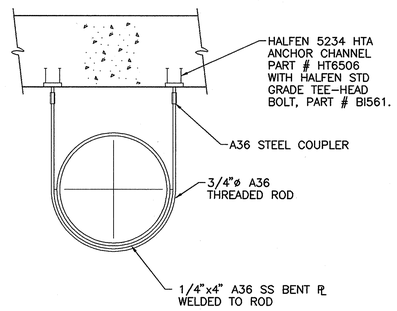

TYPICAL PIPE HANGER

DETAIL B / COS-9

SCALE: 1/2"=1'-0"

LEGEND

FH – FUTURE PIPE. INSTALL CONCRETE INSERTS ONLY.

PH – PIPE HANGER

PH-1 — PIPE NUMBER TO BE SUPPORTED

PIPE HANGER DESIGNATION

NOTE:
STANDARD DETAILS SHOWN ON OOS-2, OOS-3, AND OOS-4 APPLY TO ALL SIMILAR SITUATIONS ON THE PROJECT, EXCEPT WHERE A DIFFERENT DETAIL IS SHOWN.

RECORD DRAWING

NO.	DATE	DRWN	CHK'D	DESCRIPTION
1	9/97	FXP	ASG	RECORD DRAWING

REVISIONS

DESIGNED BY:
DRAWN BY:
CHECKED BY/DATE:
APPRV'D BY/DATE:

CAMP DRESSER & McKEE
THIS DRAWING HAS BEEN REVISED BY HAZEN AND SAWYER, P.C. TO REFLECT MODIFICATIONS MADE DURING CONSTRUCTION
environmental engineers, scientists, planners, & management consultants
CDM

ARLINGTON COUNTY, VIRGINIA
WATER POLLUTION CONTROL PLANT
UPGRADE AND EXPANSION- PHASE IIB

WEST SLUDGE PUMP GALLERY
PLANS AND SECTIONS

SCALE NOTE
SCALE BAR SHOWN BELOW IS ONE INCH LONG ON A FULL SIZE DRAWING. WHEN SCALING DRAWINGS, MEASURE BAR TO DETERMINE IF SCALES SHOWN WILL REQUIRE ADJUSTING.
—ONE INCH—

CONTRACT NO. 90-02-WPC
YEAR 1991
LOCATION CODE: CO
SPECIALTY CODE: S
PROJECT NO. 5002-33
FILE NAME COS-09.DWG
DRAWING NO. COS-9
SHEET NO. 271

structural technologies inc.
CONSULTING ENGINEERS
Wekiva Business Center
Suite 120, 1428 East Semoran Blvd., Apopka, Florida 32703
(407) 889-9660

DRAWN BY : RAH
CHECKED BY : REH
APPROVED BY : BE
DATE : OCT 1990
JOB NO : 90-111

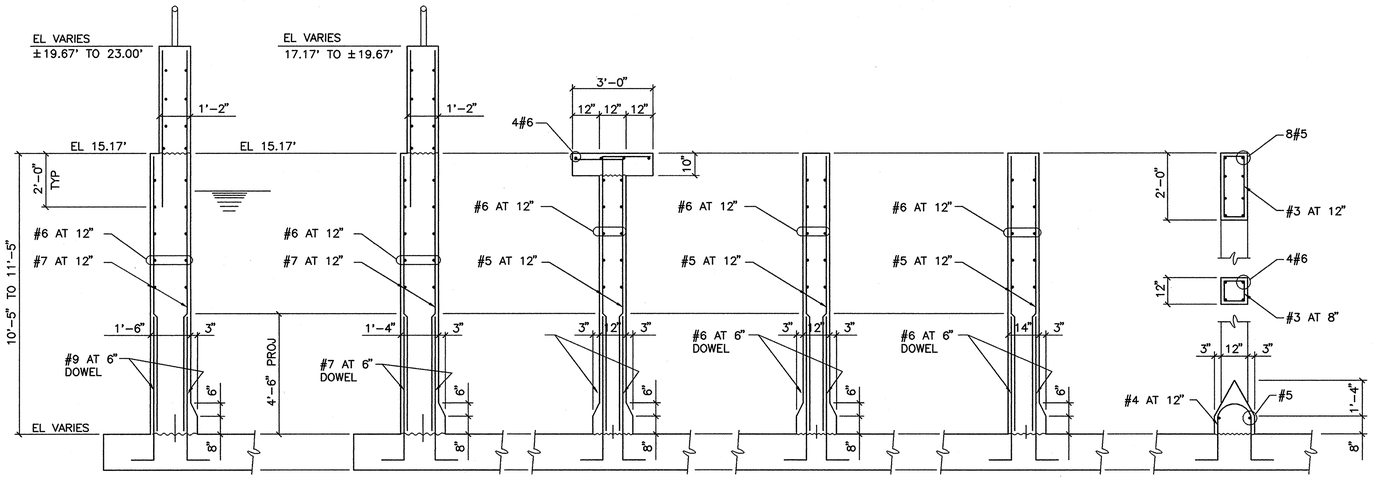

18WA

16WA

12WA

12WB

14WA

12WC

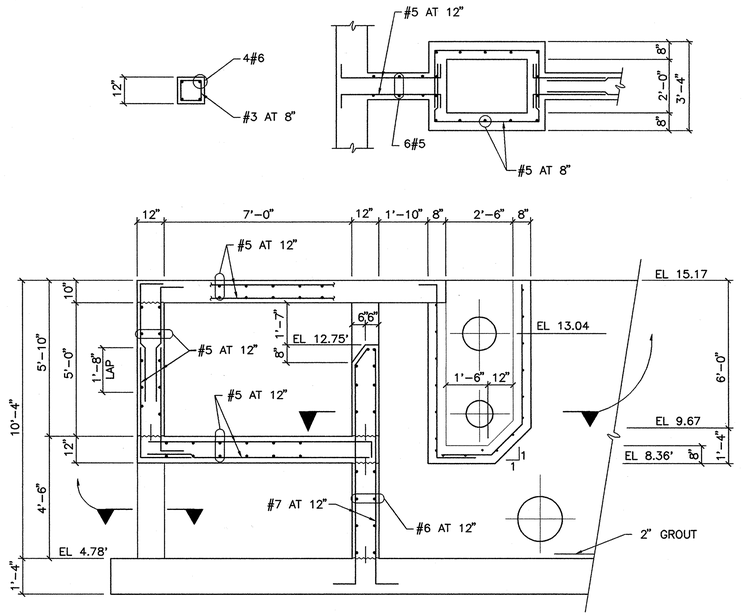

12WD

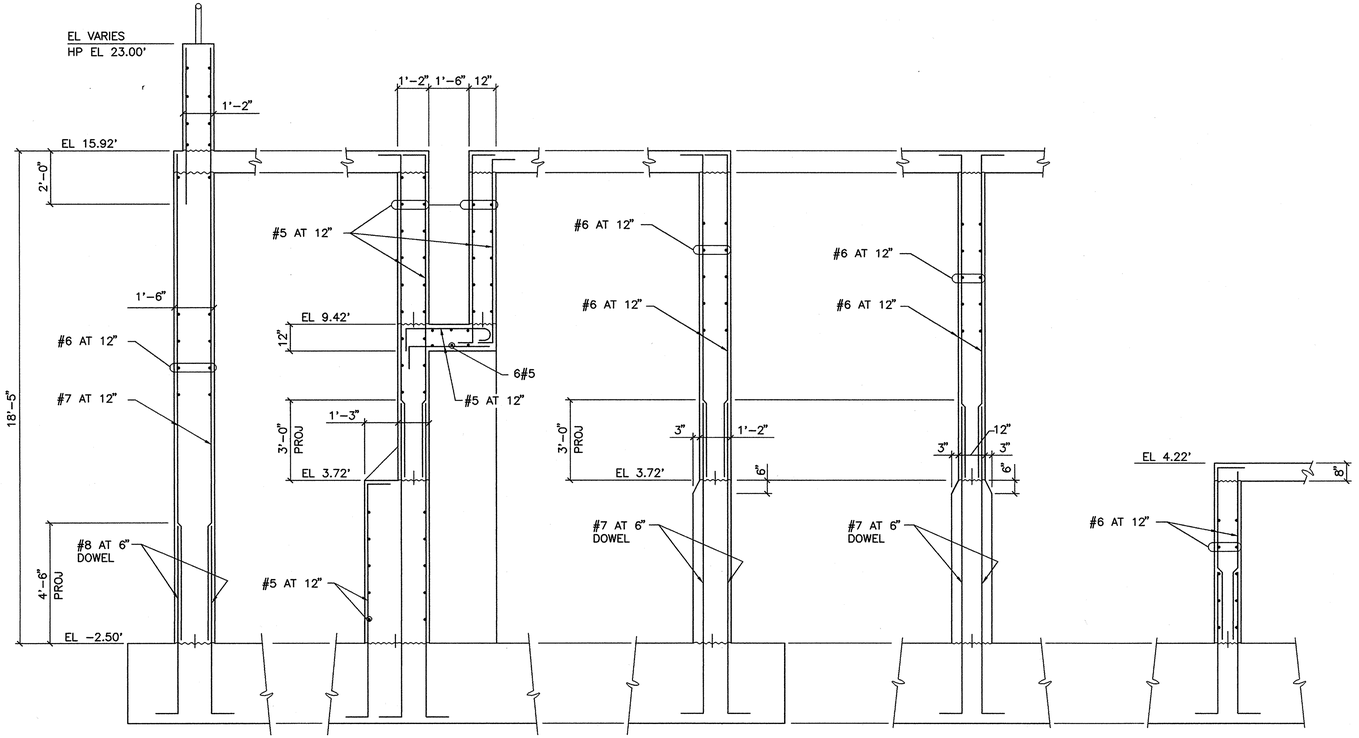

18WB 14WB 14WC 12WE 12WF

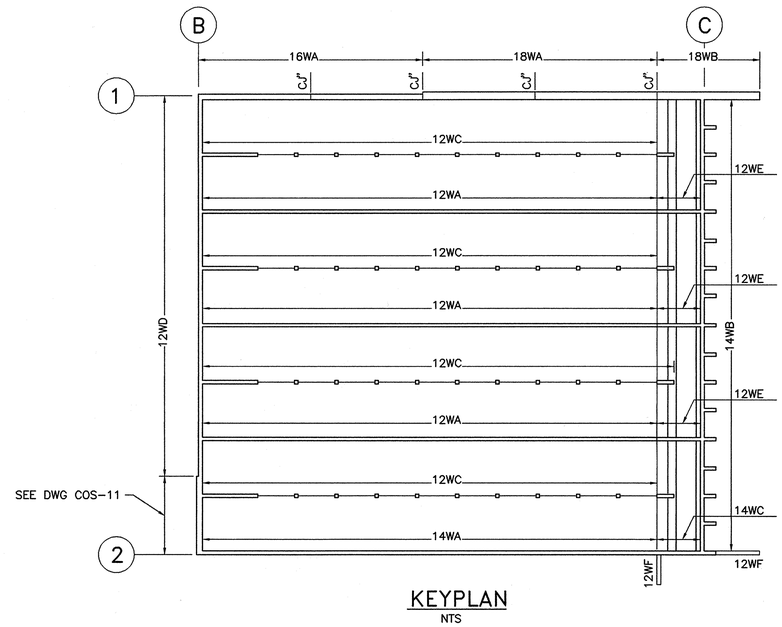

KEYPLAN
NTS

NOTE:
STANDARD DETAILS SHOWN ON COS-2, COS-3, AND COS-4 APPLY TO ALL SIMILAR SITUATIONS ON THE PROJECT, EXCEPT WHERE A DIFFERENT DETAIL IS SHOWN.

RECORD DRAWING

NO.	DATE	DRWN	CHK'D	DESCRIPTION
1	9/97	FXP	ASG	RECORD DRAWING

REVISIONS

DESIGNED BY:
DRAWN BY:
CHECKED BY/DATE:
APPRV'D BY/DATE:

CAMP DRESSER & McKEE
environmental engineers, scientists, planners, & management consultants

THIS DRAWING HAS BEEN REVISED BY HAZEN AND SAWYER, P.C. TO REFLECT MODIFICATIONS MADE DURING CONSTRUCTION

CDM

ARLINGTON COUNTY, VIRGINIA
WATER POLLUTION CONTROL PLANT
UPGRADE AND EXPANSION- PHASE IIB

NEW PRIMARY CLARIFIERS-STRUCTURAL-
WALL DETAILS

SCALE NOTE
SCALE BAR SHOWN BELOW IS ONE INCH LONG ON A FULL SIZE DRAWING. WHEN SCALING DRAWINGS, MEASURE BAR TO DETERMINE IF SCALES SHOWN WILL REQUIRE ADJUSTING.
ONE INCH

CONTRACT NO.
90-02-WPC
YEAR 1991
LOCATION CODE: CO
SPECIALTY CODE: S
PROJECT NO.
5002-33
FILE NAME
COS-10.DWG
DRAWING NO.
COS-10
SHEET NO. 272

structural technologies inc.
CONSULTING ENGINEERS
Wekiva Business Center
Suite 120, 1428 East Semoran Blvd., Apopka, Florida 32703
(407) 889-9660

DRAWN BY : RAH
CHECKED BY : REH
APPROVED BY : BE
DATE : OCT 1990
JOB NO: 90-111

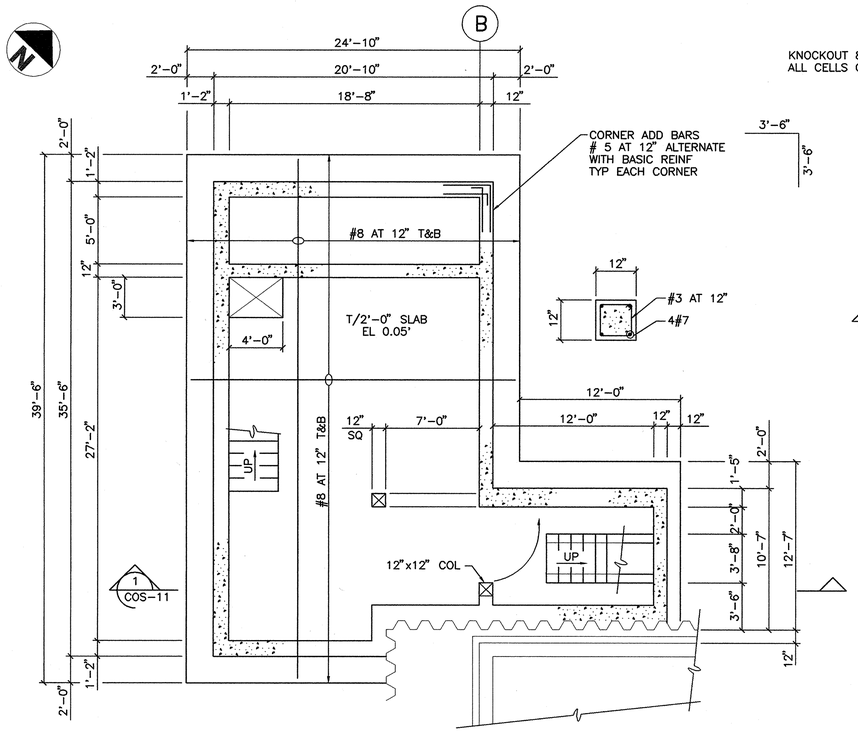

FOUNDATION PLAN
3/16"=1'-0"

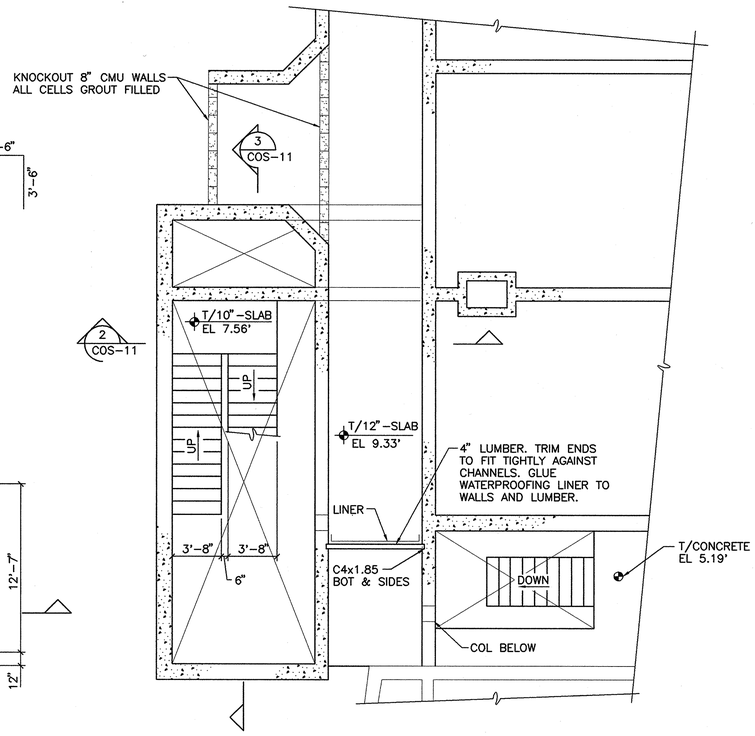

PLAN AT EL 10.00'
3/16"=1'-0"

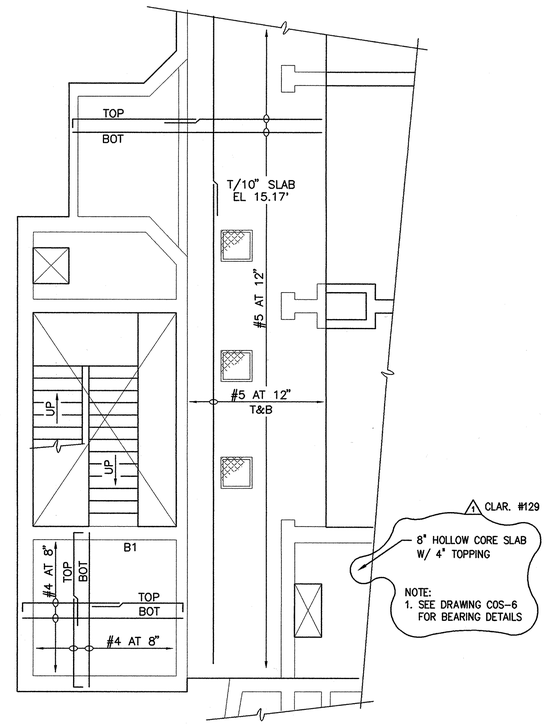

PLAN AT EL 15.17'
3/16"=1'-0"

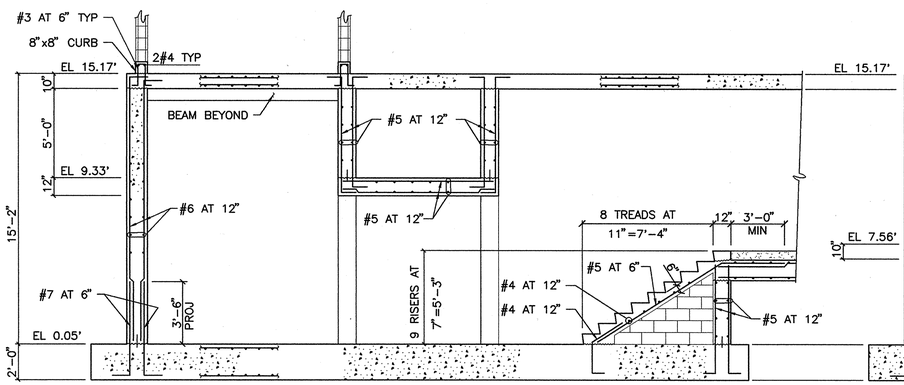

DETAIL 1 / COS-11
1/4"=1'-0"

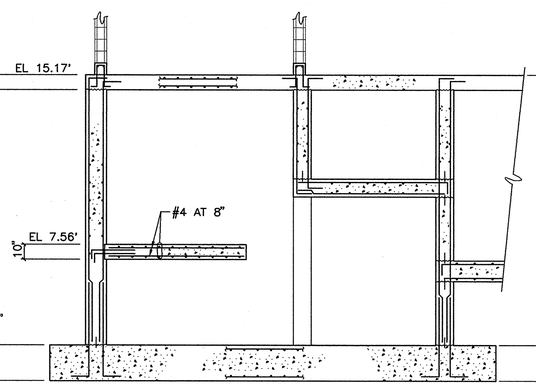

DETAIL 2 / COS-11
1/4"=1'-0"

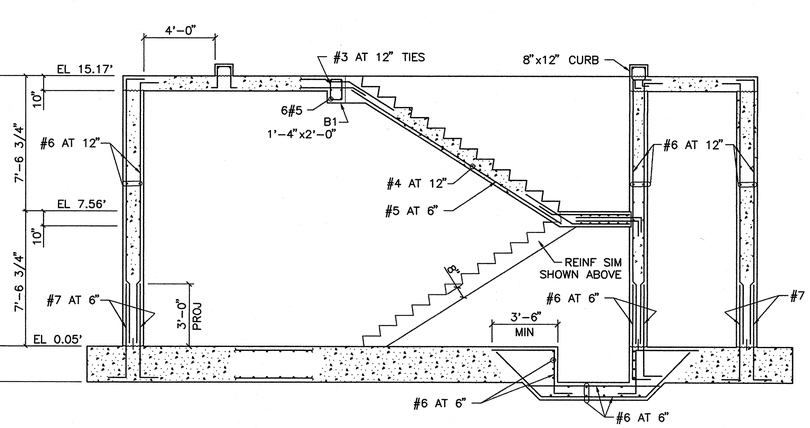

DETAIL 3 / COS-11
1/4"=1'-0"

NOTE:
STANDARD DETAILS SHOWN ON OOS-2, OOS-3, AND OOS-4 APPLY TO ALL SIMILAR SITUATIONS ON THE PROJECT, EXCEPT WHERE A DIFFERENT DETAIL IS SHOWN.

RECORD DRAWING

NO.	DATE	DRWN	CHK'D	DESCRIPTION
1	9/97	FXP	ASG	RECORD DRAWING

REVISIONS

DESIGNED BY:
DRAWN BY:
CHECKED BY/DATE:
APPRVD BY/DATE:

CAMP DRESSER & McKEE
THIS DRAWING HAS BEEN REVISED BY HAZEN AND SAWYER, P.C. TO REFLECT MODIFICATIONS MADE DURING CONSTRUCTION
environmental engineers, scientists, planners, & management consultants
CDM

ARLINGTON COUNTY, VIRGINIA
WATER POLLUTION CONTROL PLANT
UPGRADE AND EXPANSION- PHASE IIB

NEW PRIMARY CLARIFIERS-STRUCTURAL-
TUNNEL ACCESS-PLANS AND SECTIONS

SCALE NOTE
SCALE BAR SHOWN BELOW IS ONE INCH LONG ON A FULL SIZE DRAWING. WHEN SCALING DRAWINGS, MEASURE BAR TO DETERMINE IF SCALES SHOWN WILL REQUIRE ADJUSTING.
1—ONE INCH—1

CONTRACT NO.
90-02-WPC
YEAR 1991
LOCATION CODE: CO
SPECIALTY CODE: S
PROJECT NO.
5002-33
FILE NAME
COS-11.DWG
DRAWING NO.
COS-11
SHEET NO. 273

STI structural technologies inc.
CONSULTING ENGINEERS
Wekiva Business Center
Suite 120, 1428 East Semoran Blvd., Apopka, Florida 32703
(407) 889-9660

DRAWN BY : RAH
CHECKED BY : REH
APPROVED BY : BE
DATE : OCT 1990
JOB NO: 90-111

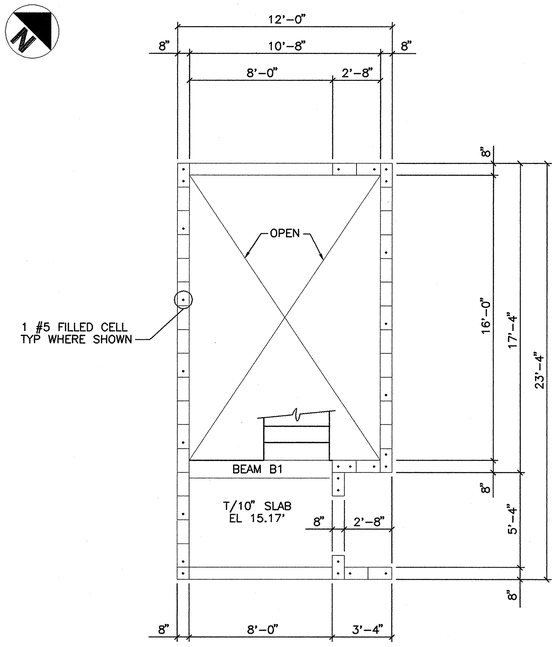

SLAB PLAN
1/4"=1'-0"

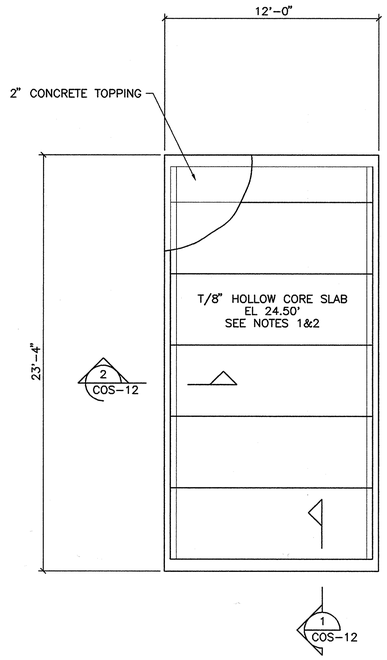

ROOF PLAN
1/4"=1'-0"

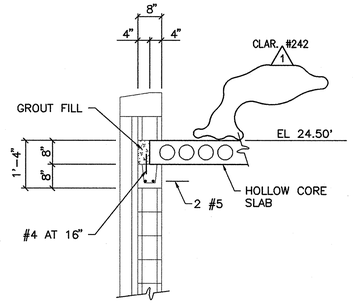

SECTION 1
1/2"=1'-0"
COS-12

NOTE:
1. THIS IS CORRECT DETAIL FOR PRECAST BEARING ON CMU.

1
CLAR. #157

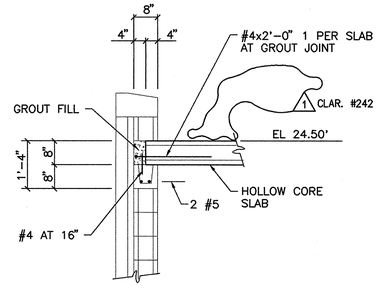

SECTION 2
1/2"=1'-0"
COS-12

NOTE:
1. THIS IS CORRECT DETAIL FOR PRECAST BEARING ON CMU.

1
CLAR. #157

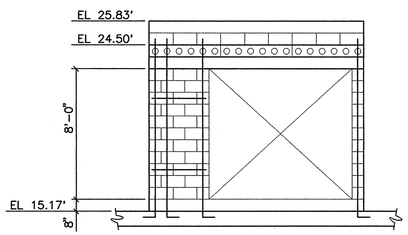

NORTH ELEVATION
1/4"=1'-0"

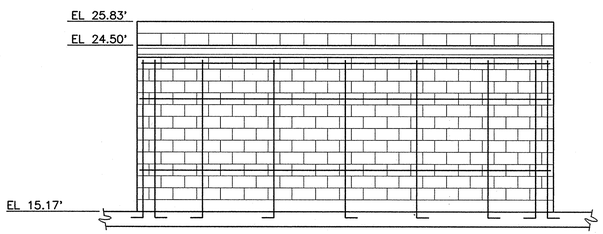

WEST ELEVATION
1/4"=1'-0"

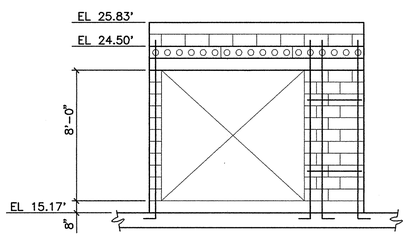

SOUTH ELEVATION
1/4"=1'-0"

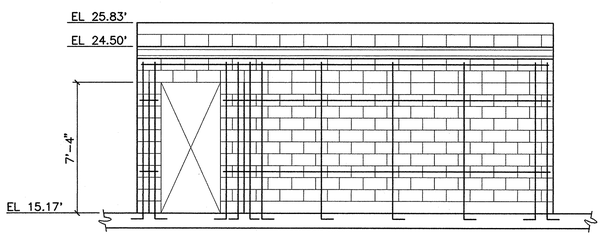

EAST ELEVATION
1/4"=1'-0"

NOTES:
1. 8" HOLLOW CORE SLABS SHALL BE DESIGNED BY THE PRECST SUPPLIER FOR THE FOLLOWING LOADS:

   SUPERIMPOSED LL = 30 PSF
   SUPERIMPOSED DL = 30 PSF

2. HOLLOW CORE SLAB SHOP DRAWINGS AND CALCULATIONS SHALL BE SIGNED AND SEALED BY A VIRGINIA REGISTERED PROFESSIONAL ENGINEER AND SUBMITTED TO ENGINEER FOR REVIEW.

NOTE:
STANDARD DETAILS SHOWN ON OOS-2, OOS-3, AND OOS-4 APPLY TO ALL SIMILAR SITUATIONS ON THE PROJECT, EXCEPT WHERE A DIFFERENT DETAIL IS SHOWN.

RECORD DRAWING

NO.	DATE	DRWN	CHK'D	DESCRIPTION
1	11/98	FXP	ASG	RECORD DRAWING

REVISIONS

DESIGNED BY:
DRAWN BY:
CHECKED BY/DATE:
APPRV'D BY/DATE:

CAMP DRESSER & McKEE

THIS DRAWING HAS BEEN REVISED BY HAZEN AND SAWYER, P.C. TO REFLECT MODIFICATIONS MADE DURING CONSTRUCTION

environmental engineers, scientists, planners, & management consultants CDM

ARLINGTON COUNTY, VIRGINIA
WATER POLLUTION CONTROL PLANT
UPGRADE AND EXPANSION- PHASE IIB

NEW PRIMARY CLARIFIERS-STRUCTURAL-
TUNNEL ACCESS BUILDING-PLANS, SECTIONS, ELEVATIONS

SCALE NOTE
SCALE BAR SHOWN BELOW IS ONE INCH LONG ON A FULL SIZE DRAWING. WHEN SCALING DRAWINGS, MEASURE BAR TO DETERMINE IF SCALES SHOWN WILL REQUIRE ADJUSTING.
ONE INCH

CONTRACT NO.

YEAR

LOCATION CODE	SPECIALTY CODE
CO	S

PROJECT NO.
5002-33

FILE NAME
COS-12.DWG

DRAWING NO.
COS-12

SHEET NO. 274

sti structural technologies inc.
CONSULTING ENGINEERS
Wekiva Business Center
Suite 120, 1428 East Semoran Blvd., Apopka, Florida 32703
(407) 889-9660

DRAWN BY : RAH
CHECKED BY : REH
APPROVED BY : BE
DATE : OCT 1990
JOB NO : 90-111

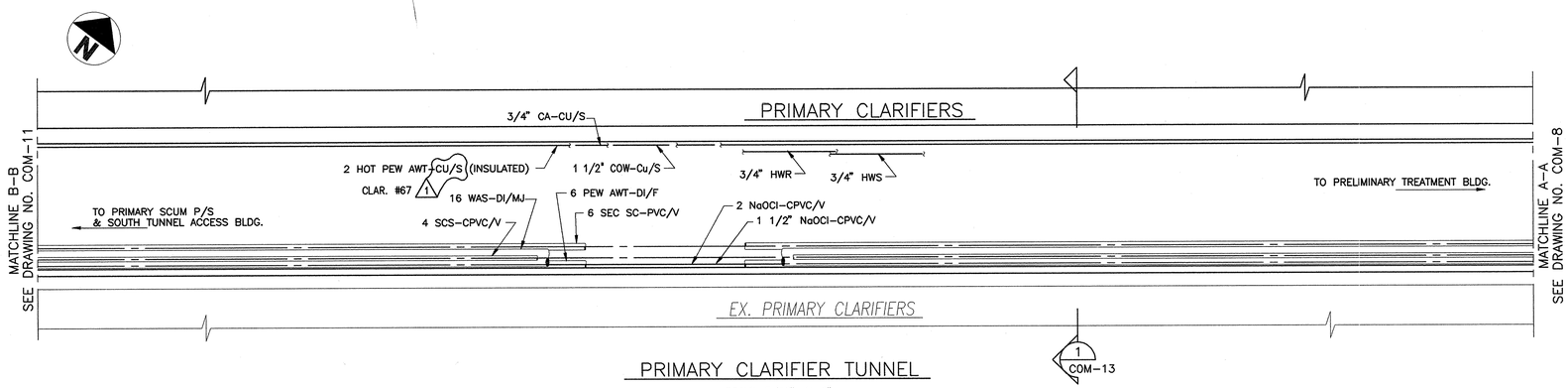

PRIMARY CLARIFIER TUNNEL

SCALE: 3/16"=1'-0"

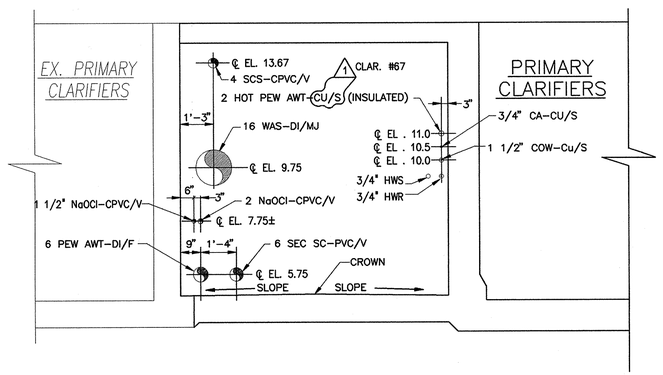

SECTION 1 / COM-13

SCALE: 3/8"=1'-0"

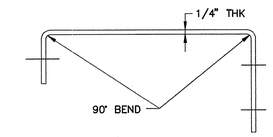

TOP

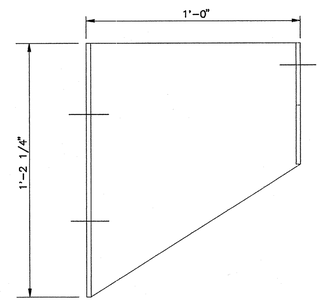

FRONT

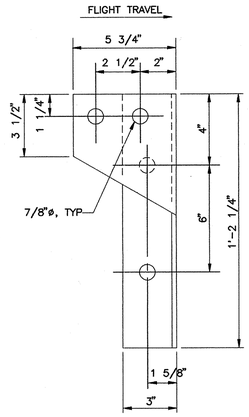

SIDE

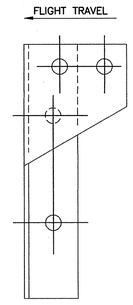

OPPOSITE

NOTES

1. BRACKETS SHALL BE HOT DIP GALVANIZED AFTER FABRICATION.
2. BRACKETS SHALL BE SPACED AT MAXIMUM 12'-0" INTERVALS.
3. BREAK ALL SHARP EDGES.
4. ALL NUTS, WASHERS, BOLTS AND ANCHORS TO BE GALVANIZED STEEL. ALL BOLTS AND ANCHORS TO BE 3/4"ø. MINIMUM ANCHOR EMBEDMENT 6".

DETAIL B / COM-7.9

SCALE: 3"=1'-0"

09/17/91 - 09:38

NO.	DATE	DRWN	CHK'D	DESCRIPTION
1	9/97	FXP	ASG	RECORD DRAWING

REVISIONS

DESIGNED BY: DAO
DRAWN BY: CLP
CHECKED BY/DATE: TDH 9/91
APPRV'D BY/DATE: TDH 9/91

COMMONWEALTH OF VIRGINIA
THOMAS D. HALL
No. 12502
PROFESSIONAL ENGINEER

CAMP DRESSER & McKEE

THIS DRAWING HAS BEEN REVISED BY HAZEN AND SAWYER, P.C. TO REFLECT MODIFICATIONS MADE DURING CONSTRUCTION

environmental engineers, scientists, planners, & management consultants CDM

ARLINGTON COUNTY, VIRGINIA
WATER POLLUTION CONTROL PLANT
UPGRADE AND EXPANSION- PHASE IIB

NEW PRIMARY CLARIFIERS
PRIMARY CLARIFIER TUNNEL
PLAN, SECTIONS AND DETAILS

SCALE NOTE

SCALE BAR SHOWN BELOW IS ONE INCH LONG ON A FULL SIZE DRAWING. WHEN SCALING DRAWINGS, MEASURE BAR TO DETERMINE IF SCALES SHOWN WILL REQUIRE ADJUSTING.

ONE INCH

RECORD DRAWING

CONTRACT NO. 90-02-WPC
YEAR 1991
LOCATION CODE CO
SPECIALTY CODE M
PROJECT NO. 5002-33
FILE NAME COM-0013.DWG
DRAWING NO. COM-13
SHEET NO. 263

VOLUME 1 • DRAWINGS INCLUDED IN VOLUME 2

SHEET NO.		
GENERAL		
1	•00G–1	Title & Location Maps
2	•00G–2	Drawings Index
3	00G–3	Abbreviations, Symbols, Legend, & General Notes
4	00G–4	Existing Facilities Location Plan – General Removals
5	00G–5	New/Modified Facilities Location Plan – General New Work
6	00G–6	Primary & Secondary Facilities–Hydraulic Profile
7	00G–7	Basic Preliminary & Primary Process Schematic After Modifications
CIVIL		
8	00C–1	Area N1 Site Plan – General Removals
9	00C–2	Area N2 Site Plan – General Removals
10	00C–3	Area N3 Site Plan – General Removals
11	00C–4	Area N4 Site Plan – General Removals
12	00C–5	Area S1 Site Plan – General Removals and Structures & Piping
13	00C–6	Area S2 Site Plan – General Removals and Structures & Piping
14	00C–7	Area S3 Site Plan – General Removals and Structures and Piping
15	00C–8	Area S4 Site Plan – General Removals and Structures & Piping
16	00C–9	Area N1 Site Plan – Structures & Piping
17	00C–10	Area N2 Site Plan – Structures & Piping
18	00C–11	Area N3 Site Plan – Structures & Piping
19	00C–12	Area N4 Site Plan – Structures & Piping
	00C–13	NOT USED
	00C–14	NOT USED
20	00C–15	Area N1 Site Plan – Grading, Paving, Drainage, & Landscaping
21	00C–16	Area N2 Site Plan – Grading, Paving, Drainage, & Landscaping
22	00C–17	Area N3 Site Plan – Grading, Paving, Drainage, & Landscaping
23	00C–18	Area N4 Site Plan – Grading, Paving, Drainage, & Landscaping
24	00C–19	Site Piping – Details
25	00C–20	Site Piping – Details
26	00C–21	Site Piping – Details
27	00C–22	Storm Drainage Profiles
28	00C–23	Storm Drainage Profiles
29	00C–24	Paving and Drainage Details
30	00C–25	Storm Drainage Structure Details
31	00C–26	West Influent Channel–Profile
32	00C–27	Miscellaneous Details
33	00C–28	Miscellaneous Details
34	00C–29	Miscellaneous Details
35	00C–30	Foul Air Pipe–Profile
GENERAL MECHANICAL		
36	00M–1	Mechanical Details
37	00M–2	Mechanical Details
38	00M–3	Mechanical Details
39	00M–4	Mechanical Details
40	00M–5	Duct Support – Sections and Details
GENERAL STRUCTURAL		
41	00S–1	Structural – General Notes
42	00S–2	Structural – Standard Details
43	00S–3	Structural – Standard Details
44	00S–4	Structural – Standard Details
GENERAL HVAC		
45	00H–1	HVAC – Notes & Symbols
46	00H–2	HVAC – Schedules
47	00H–3	HVAC – Details
48	00H–4	HVAC – Details
GENERAL PLUMBING		
49	00P–1	Plumbing – Notes & Symbols
50	00P–2	Plumbing – Details
GENERAL ELECTRICAL		
51	00E–1	Electrical – Symbols & Abbreviations
52	00E–2	Electrical – Area N1 Site Plan
53	00E–3	Electrical – Area N2 Site Plan
54	00E–4	Electrical – Area N3 Site Plan
55	00E–5	Electrical – Area N4 Site Plan
56	00E–6	Electrical – Single Line Power Diagram
57	00E–7	Electrical – Conduit & Wire Riser Diagrams
58	00E–8	Electrical – Process Wiring Diagram
59	00E–9	Electrical – Lighting Fixture Schedule
60	00E–10	Electrical – Details
61	00E–11	Electrical – Duct Bank Sections I
62	00E–12	Electrical – Duct Bank Sections II
63	00E–13	Electrical – Duct Bank Sections III
INSTRUMENTATION		
64	00I–1	Instrumentation Legend Sheet
65	00I–2	Process & Instrumentation Diagram
66	00I–3	Process & Instrumentation Diagram
67	00I–4	Process & Instrumentation Diagram
68	00I–5	Loop Diagrams
69	00I–6	Loop Diagrams
70	00I–7	Loop Diagrams
71	00I–8	Loop Diagrams
72	00I–9	Loop Diagrams
73	00I–10	Loop Diagrams
74	00I–11	Loop Diagrams
75	00I–12	Loop Diagrams
76	00I–13	Loop Diagrams
77	00I–14	Loop Diagrams
78	00I–15	Loop Diagrams
79	00I–16	Loop Diagrams
80	00I–17	Loop Diagrams
81	00I–18	Loop Diagrams
82	00I–19	Loop Diagrams
83	00I–20	Loop Diagrams
84	00I–21	Loop Diagrams
85	00I–22	Details
PLANT SERVICE BUILDING		
86	G5R–1	Plant Service Building – Removal – Basement Plan
87	G5R–2	Plant Service Building – Removal – Ground Floor Plan
88	G5R–3	Plant Service Building – Removal – Upper Floor Plan
89	G5R–4	Plant Service Building – Removal – Section
90	G5R–5	Plant Service Building – Removal – Section
91	G5R–6	Storage Building – Removal – Plans and Section
FOUR MILE RUN INTERCEPTOR SCREEN & GRIT CHAMBERS		
92	B4R–1	Four Mile Run Interceptor – Screens, Channels & Grit Chambers – General Removal Plan
93	B4R–2	Four Mile Run Interceptor – Screens, Channels & Grit Chambers – General Removals
94	B4M–1	Four Mile Run Interceptor – Screens, Channels & Grit Chambers – Four Mile Run Relief Force Mains
POTOMAC INTERCEPTOR SCREEN & GRIT CHAMBERS		
95	B5R–1	Potomac Interceptor Screen & Grit Chambers – General Removal – Plan
96	B5R–2	Potomac Interceptor Screen & Grit Chambers – General Removal – Sectional Plan
97	B5R–3	Potomac Interceptor Screen & Grit Chambers – General Removal – Sections
98	B5M–1	Potomac Interceptor Screens & Grit Chambers – Plans and Sections
99	B5A–1	Potomac Interceptor Screens & Grit Chambers – Architectural – New Primary Clarifiers – South Tunnel Access Building
100	B5E–1	Potomac Interceptor Screens & Grit Chambers – Electrical – Control Building Plan
101	B5E–2	Electrical – Elementary Control – Diagrams & Schedule

SEE DRAWINGS 00I–23 THROUGH 00I–39 FOR INSTRUMENTATION RECORD DRAWINGS.

SHEET NO.		
102		
103		
104		
105		
106		
107		
108		
109		
110		
111		
112		
113		
114		
115		
116		
117		
118		
119		
120		
121		
122		
123		
124		
125		
126		
127		
128		
129		
130		
131		
132		
133		
134		
135		
136		
137		
138		
139		
140		
141		
142		
143		
144		
145		
146		
147		
148		
149		
150		
151		
152		
153		
154		
155		
156		
157		
158		
159		
160		
161		
162		
163		

VOLUME 2

SHEET NO.		
POTOMAC INTERCEPTOR METERING CHAMBER & JUNCTION CHAMBER		
	B6R–1	Potomac Interceptor Metering Chamber and Junction Chambers – General Removal – Plan and Section
	B6M–1	Potomac Interceptor Metering Chamber & Junction Chamber – Plans, Sections and Details
	B6M–2	Potomac Interceptor Meter Chamber – Plans, Sections, and Details
	B6S–1	Potomac Interceptor Junction Chamber – Plans & Sections
	B6S–2	Potomac Interceptor Meter Chamber – Plans & Sections
	B6H–1	Potomac Interceptor – HVAC – Plan & Sections
PRIMARY EFFLUENT CHANNEL & METER CHAMBER		
	C7M–1	Primary Effluent Channel and Flow Meter Chamber – Plans and Sections
	C7S–1	Primary Effluent Channel and Flow Meter Chamber – Plans and Sections
	C7S–2	Primary Effluent Channel and Flow Meter Chamber – Construction Phases
FOUR MILE RUN INTERCEPTOR FLOW METER CHAMBER		
	B2R–1	Four Mile Run Interceptor Flow Meter Chamber – Removal Plans
	B2R–2	Four Mile Interceptor Flow Meter Chamber – Removal Section
	B2M–1	Four Mile Run Interceptor Flow Meter Chamber – Plans
WEST INFLUENT CHANNEL		
	B9S–1	West Influent Channel – Structural – Plan, Sections, & Details
	B9S–2	West Influent Channel – Structural – Enlarged Plans and Sections
BLOWER BUILDING		
	D0A–1	Blower Building – Air Plenum – Architectural – Plans & Sections
	D0A–2	Blower Building – Air Plenum – Architectural – Elevations & Details
	D0M–1	Blower Building – Main Floor plan
	D0S–1	Blower Building – Structural – Air Chase – Plans & Sections 1 of 2
	D0S–2	Blower Building – Structural – Air Plenum – Elevations, Sections and Details
SOLIDS PROCESSING BUILDING		
	F7M–1	Solids Processing Building – Plans, Sections and Detail
FLOTATION THICKENERS		
	F1M–1	Flotation Thickener – Plan, Sections, and Details
	F1H–1	Flotation Thickener – HVAC – Lower Level Plan
	F1H–2	Flotation Thickener – HVAC – Upper Level Plan
	F1H–3	Flotation Thickener – HVAC – Roof Plan
	F1H–4	Flotation Thickener – HVAC – Details
	F1E–1	Flotation Thickener – Electrical – 1st. Floor Plan
	F1E–2	Flotation Thickener – Electrical – 2nd. Floor Plan
	F1E–3	Flotation Thickener – Electrical – Roof Plan
	F1E–4	Flotation Thickener – Electrical – Riser Diagrams
	F1E–5	Flotation Thickener – Electrical – Control Diagrams
SLUDGE STORAGE TANKS		
	F2R–1	Sludge Storage Tanks – Removal – Plans & Sections
	F2R–2	Sludge Storage Tanks – Removal – Plans & Sections
	F2R–3	Sludge Storage Tanks – Removal – Plan & Section
	F2M–1	Sludge Storage Tanks – Top Plan
	F2M–2	Sludge Storage Tanks – Upper Level Plan
	F2M–3	Sludge Storage Tanks – Lower Level Plan, Section & Details
	F2M–4	Sludge Storage Tanks – Sections
	F2H–1	Sludge Storage Tanks – HVAC – Sublevel Plan
	F2H–2	Sludge Storage Tanks – HVAC – Lower Level Plan
	F2H–3	Sludge Storage Tanks – HVAC – Upper Level Plan
	F2H–4	Sludge Storage Tanks – HVAC – Top Plan
	F2H–5	Sludge Storage Tanks – HVAC – Details
	F2S–1	Sludge Storage Tanks – Structural – Plans & Sections
	F2E–1	Sludge Storage Tanks – Electrical – Roof Plan
	F2E–2	Sludge Storage Tanks – Electrical – Intermediate Elevations Plans
	F2E–3	Sludge Storage Tanks – Electrical – Riser Diagrams
	F2E–4	Sludge Storage Tanks – Electrical – Control Diagrams
	F2E–5	Sludge Storage Tanks – Electrical – Control Diagrams
GRAVITY THICKENERS		
	F0R–1	Gravity Thickeners – Removal – Basement Plan & Section
	F0R–2	Gravity Thickeners – Removal – Top Plan
	F0M–1	Gravity Thickeners – Basement – Plan & Section
	F0M–2	Gravity Thickeners – Top Plan
	F0M–3	Gravity Thickeners – Sections & Detail
	F0H–1	Gravity Thickeners – HVAC – Top Plan
	F0H–2	Gravity Thickeners – HVAC – Section
	F0E–1	Gravity Sludge Thickeners – Electrical – Basement Plan
	F0E–2	Gravity Sludge Thickeners – Electrical – Upper Level Plan
	F0E–3	Gravity Sludge Thickeners – Electrical – Riser Diagrams
	F0E–4	Gravity Sludge Thickeners – Electrical – Control Diagrams
	F0E–5	Gravity Sludge Thickeners – Electrical – Control Diagrams
GRIT & CHLORINE BUILDING		
	C3R–1	Chemical Building – Roof Removal – Plan & Sections
	C3R–2	Chemical Building – Removal – Plan & Sections
PRELIMINARY TREATMENT BUILDING		
	B8A–1	Preliminary Treatment Building – Architectural – First Floor Plan
	B8A–2	Preliminary Treatment Building – Architectural – Second Floor Plan
	B8A–3	Preliminary Treatment Building – Architectural – Opening & Finish Schedules
	B8A–4	Preliminary Treatment Building – Architectural – Stair No.1 – Plan & Details, Building Sections
	B8A–5	Preliminary Treatment Building – Architectural – Building Sections & Details
	B8A–6	Preliminary Treatment Building – Architectural – Bldg. Sections, Exterior Elevations & Details
	B8A–7	Preliminary Treatment Building – Architectural – Exterior Elevations & Details
	B8A–8	Preliminary Treatment Building – Architectural – Wall Sections & Details
	B8A–9	Preliminary Treatment Building – Architectural – Wall Sections & Details
	B8A–10	Preliminary Treatment Building – Architectural – Wall Sections & Details
	B8A–11	Preliminary Treatment Building – Architectural – Stairs Nos. 2 & 3 Plans & Sections
	B8A–12	Preliminary Treatment Building – Architectural – Stair Nos. 2 & 3 Sections & Details
	B8A–13	Preliminary Treatment Building – Architectural – Reflected Ceiling Plans, Roof Plan, & Details
	B8A–14	Preliminary Treatment Building – Architectural – Skylight Plan, Details & Miscellaneous Details
	B8M–1	Preliminary Treatment Building – Basement Plan
	B8M–2	Preliminary Treatment Building – Plan Below First Floor
	B8M–3	Preliminary Treatment Building – First Floor Plan
	B8M–4	Preliminary Treatment Building – Second Floor Plan
	B8M–5	Preliminary Treatment Building – Second Floor Plan Above Grating
	B8M–6	Preliminary Treatment Building – Sections
	B8M–7	Preliminary Treatment Building – Sections
	B8M–8	Preliminary Treatment Building – Sections
	B8M–9	Preliminary Treatment Building – Sections
	B8M–10	Preliminary Treatment Building – Sections
	B8M–11	Preliminary Treatment Building – Sections & Details
	B8M–12	Preliminary Treatment Building – Polymer & Sodium Hypochlorite – Process Schematics
	B8M–13	Preliminary Treatment Building – Sections & Details
	B8S–1	Preliminary Treatment Building – Structural – Plan at Elevation –1.33'

SHEET NO.		
PRELIMINARY TREATMENT BUILDING (cont.)		
	B8S–2	Preliminary Treatment Building – Structural – Plan at Elevation 13.00'
	B8S–3	Preliminary Treatment Building – Structural – Plan at Elevation 22.00'
	B8S–4	Preliminary Treatment Building – Structural – Enlarged Plan at Elevation 9.83'
	B8S–5	Preliminary Treatment Building – Structural – Enlarged Plan at Elevation 12.50'
	B8S–6	Preliminary Treatment Building – Structural – Enlarged Plan at Elevation 13.00' 1 of 2
	B8S–7	Preliminary Treatment Building – Structural – Enlarged Plan at Elevation 13.00' 2 of 2
	B8S–8	Preliminary Treatment Building – Structural – Enlarged Plan at Elevation 20.00' 1 of 2
	B8S–9	Preliminary Treatment Building – Structural – Enlarged Plan at Elevation 20.00' 2 of 2
	B8S–10	Preliminary Treatment Building – Structural – North and South Elevations
	B8S–11	Preliminary Treatment Building – Structural – East and West Elevations
	B8S–12	Preliminary Treatment Building – Structural – Sections
	B8S–13	Preliminary Treatment Building – Structural – Sections
	B8S–14	NOT USED
	B8S–15	NOT USED
	B8S–16	Preliminary Treatment Building – Structural – Plan at Elevation 36.67'
	B8S–17	Preliminary Treatment Building – Structural – Roof Plans
	B8S–18	Preliminary Treatment Building – Structural – North and South Building Elevations
	B8S–19	Preliminary Treatment Building – Structural – East and West Building Elevations
	B8S–20	Preliminary Treatment Building – Structural – Equipment Platform at EL. 45.67
	B8S–21	Preliminary Treatment Building – Structural – Framing Sections and Details
	B8S–22	Preliminary Treatment Building – Structural – Sections and Details
	B8S–23	Preliminary Treatment Building – Structural – Steel Details
	B8S–24	Preliminary Treatment Building – Structural – Grating Plan at EL. 20.00'
	B8H–1	Preliminary Treatment Building – HVAC – Basement Plan
	B8H–2	Preliminary Treatment Building – HVAC – 1st Floor Plan
	B8H–3	Preliminary Treatment Building – HVAC – 2nd Floor Plan
	B8H–4	Preliminary Treatment Building – HVAC – Roof Plan
	B8H–5	Preliminary Treatment Building – HVAC – Details
	B8H–6	Preliminary Treatment Building – HVAC – Details
	B8P–1	Preliminary Treatment Building – Plumbing – Riser Diagrams
	B8P–2	Preliminary Treatment Building – Fire Protection – Basement Plan
	B8P–3	Preliminary Treatment Building – Plumbing and Fire Protection – 1st Floor Plan
	B8P–4	Preliminary Treatment Building – Plumbing – 2nd Floor Plan
	B8E–1	Preliminary Treatment Building – Electrical – Basement Power Plan
	B8E–2	Preliminary Treatment Building – Electrical – 1st Floor Power Plan
	B8E–3	Preliminary Treatment Building – Electrical – 2nd Floor Power Plan
	B8E–4	Preliminary Treatment Building – Electrical – Roof Plan
	B8E–5	Preliminary Treatment Building – Electrical – Basement Lighting Plan
	B8E–6	Preliminary Treatment Building – Electrical – 1st Floor Lighting Plan
	B8E–7	Preliminary Treatment Building – Electrical – 2nd Floor Lighting Plan
	B8E–8	Preliminary Treatment Building – Electrical – MCC–1 Single Line Diagram
	B8E–9	Preliminary Treatment Building – Electrical – Power Panels PIA & PIB Single Line Diagram
	B8E–10	Preliminary Treatment Building – Electrical – MCC Front Views & Schedules
	B8E–11	Preliminary Treatment Building & Scum Pump Station – Electrical – Riser Diagrams
	B8E–12	Preliminary Treatment Building – Electrical – Control Diagrams
	B8E–13	Preliminary Treatment Building – Electrical – Control Diagrams
	B8E–14	Preliminary Treatment Building – Electrical – Control Diagrams
236A	B8E–15	Preliminary Treatment Building – Electrical – Control Diagrams
EXISTING PRIMARY CLARIFIERS		
237	C0R–1	Existing Primary Clarifiers – Removal – Clarifiers and East Tunnel Access Building – Top Plan
238	C0R–2	Existing Primary Clarifiers – Removal – East Sludge Pump Gallery & Sludge Storage Tank Tunnel Plans
239	C0R–3	Existing Primary Clarifiers – Removal – East Tunnel Access Building – Plans and Sections
240	C0R–4	Existing Primary Clarifiers – Removal – South End of Clarifiers – Plans and Sections
241	C0R–5	Existing Primary Clarifiers – Removal – South End of Clarifiers – Sections
242	C0A–1	Existing Primary Clarifiers – East Tunnel Access Building –Architectural – Plan & Exterior Elevations
243	C0M–1	Existing Primary Clarifiers – Clarifiers and East Tunnel Access Building – Top Plan
244	C0M–2	Existing Primary Clarifiers – East Sludge Pump Gallery – Plan & Sections
245	C0M–3	Existing Primary Clarifiers – Clarifiers and East Tunnel Access Building – Top Plan
246	C0M–4	Existing Primary Clarifiers – South End of Clarifiers – Plan & Sections
247	C0M–5	Existing Primary Clarifiers – Sections
248	C0M–6	Existing Primary Clarifiers – Sections
249	C0S–1	Existing Primary Clarifiers – Structural – Plans and Sections
	C0S–2	NOT USED
250	C0H–1	Existing Primary Clarifiers – HVAC – East Tunnel Access Bldg. & East Sludge Pump Gallery – Floor Plan
251	C0E–1	Existing Primary Clarifiers – Electrical – Clarifiers and East Tunnel Access Building – Top Plan
252	C0E–2	Existing Primary Clarifiers – Electrical – East Tunnel Access Building & East Sludge Pump Gallery – Top Electrical Plan
253	C0E–3	Existing Primary Clarifiers – Electrical – East Tunnel Access Building & East Sludge Pump Gallery – Basement Power Plan
254	C0E–4	Existing Primary Clarifiers – Electrical – East Tunnel Access Building & East Sludge Pump Gallery – Basement Lighting Plan
1 254A	C0E–11	New Primary Clarifiers – Electrical – Foundation Plan
NEW PRIMARY CLARIFIERS		
255	C0A–2	New Primary Clarifiers – South Tunnel Access Building – Architectural – Plans, Sections, & Details
256	C0A–3	New Primary Clarifiers – South Tunnel Access Building – Architectural – Schedules, Sections, Details, & Elevations
257	C0M–7	New Primary Clarifiers – Top Plan
258	C0M–8	New Primary Clarifiers – West Sludge Pump Gallery & North End of Clarifiers – Plans
259	C0M–9	New Primary Clarifiers – West Sludge Pump Gallery & North End of Clarifiers – Sections & Details
260	C0M–10	New Primary Clarifiers – West Sludge Pump Gallery & North End of Clarifiers – Sections & Details
261	C0M–11	New Primary Clarifiers – South End of Clarifiers & Scum Pump Station – Plan and Sections
262	C0M–12	New Primary Clarifiers – South End of Clarifiers & Scum Pump Station – Sections
263	C0M–13	New Primary Clarifiers – Primary Clarifier Tunnel – Plan, Sections and Details
264	C0M–14	Existing and New Primary Clarifiers – Sections and Details
265	C0S–3	New Primary Clarifiers – Structural – Underdrain Plan
266	C0S–4	New Primary Clarifiers – Structural – Foundation Plan
267	C0S–5	New Primary Clarifiers – Structural – Plan at Top of Structure

SHEET NO.		
NEW PRIMARY CLARIFIERS (cont.)		
268	C0S–6	New Primary Clarifiers – Structural – Sections
269	C0S–7	New Primary Clarifiers – Structural – Enlarged Influent Plans and Sections
270	C0S–8	New Primary Clarifiers – Structural – Plan at Top of Structure
271	C0S–9	West Sludge Pump Gallery – Plans and Sections
272	C0S–10	New Primary Clarifiers – Structural – Wall Details
273	C0S–11	New Primary Clarifiers – Structural – Tunnel Access – Plans ans Sections
274	C0S–12	New Primary Clarifiers – Structural – Tunnel Access Building – Plans, Sections, Elevations
275	C0H–2	New Primary Clarifiers – HVAC – West Sludge Pump Gallery – Floor Plan
276	C0H–3	New Primary Clarifiers – HVAC – South Tunnel Access Building – Plans and Sections
277	C0E–5	New Primary Clarifiers – Electrical – Clarifiers & South Tunnel Access Building – Top Plan
278	C0E–6	New Primary Clarifiers – Electrical – Scum Pump Station & Primary Clarifier Tunnel – Power & Lighting Plans
279	C0E–7	New Primary Clarifiers – Electrical – West Sludge Pump Gallery – Power & Lighting Plans
280	C0E–8	Existing & New Primary Clarifiers – Electrical – Scum Pump Station Single Line Diagrams & Schedules
281	C0E–9	Existing & New Primary Clarifiers – Electrical – Elementary Control Diagrams & Riser Diagrams
282	C0E–10	Existing & New Primary Clarifiers – Electrical – Elementary Control Diagrams & Riser Diagrams
LOW LEVEL PUMP STATION		
283	B0M–1	Low Level Pump Station – Plan, Sections, & Details
284	B0E–1	Low Level Pump Station & Flow Meter Chamber – Electrical – Plans
285	B0E–2	Low Level Pump Station – Electrical – Control Diagrams
286	B0S–1	Four Mile Run Relief Pump Station – Low Level Pumping Station
287	B0H–1	Low Level Pump Station – HVAC – Top Plan and Details
LIME REACTION TANKS		
288	E0M–1	Lime Reaction Tanks – First Stage Tanks – Top Plan
289	E0M–2	Lime Reaction Tanks – Sections & Details
290	E1M–1	Lime Reaction Tanks – Second Stage Tanks – Top Plan
LIME SLUDGE THICKENERS		
291	E2M–1	Lime Sludge Thickeners – Top Plan
292	E2M–2	Lime Sludge Thickeners – Section
SECONDARY SERVICE PUMP STATION		
293	D3M–1	Secondary Service Pump Station – Plan and Sections
294	D3M–2	Secondary Service Pump Station – Sections and Details
295	D3H–1	Secondary Service Pump Station – HVAC – Plan
296	D3P–1	Secondary Service Pump Station – Plumbing – Plan
297	D3E–1	Secondary Service Pump Station – Electrical
298	D3E–2	Secondary Service Pump Station – Electrical – Elementary Control Diagrams & Riser Diagrams
CHLORINATION BUILDING		
299	E6M–1	Chlorination Building – Plan and Sections
300	E6E–1	Chlorine Building – Electrical – Modifications, Control Diagram & Front View
VACUUM FILTER BUILDING		
301	C5M–1	Vacuum Filter Building – Plan
PRIMARY EFFLUENT PUMP STATION		
302	C2E–1	Primary Effluent Pump Station – Electrical – Electrical & Removal/Maintenance Plans
CONTROL INSTRUMENTS, INC. DRAWINGS		
303	C2i–01	Control Panel LCP–7 and LCP–8
304	C2i–02	Control Panels LCP–8 and LCP–10
305	C2i–03	Air Bubbler Panel and Primary Sludge Pump VFD's
306	C2i–04	Control Panels LCP–18 and LCP–19
307	C2i–05	Control Panels LCP–19 and LCP–26
308	C2i–06	Main Control Panel CCP, 1 of 10
309	C2i–07	Main Control Panel CCP, 2 of 10
310	C2i–08	Main Control Panel CCP, 3 of 10
311	C2i–09	Main Control Panel CCP, 4 of 10
312	C2i–10	Main Control Panel CCP, 5 of 10
313	C2i–11	Main Control Panel CCP, 6 of 10
314	C2i–12	Main Control Panel CCP, 7 of 10
315	C2i–13	Main Control Panel CCP, 8 of 10
316	C2i–14	Main Control Panel CCP, 9 of 10
317	C2i–15	Main Control Panel CCP, 10 of 10 and NaOCL Air Bubbler System
318	C2i–16	Control Panel LCP–15
319	C2i–17	Control Panel LCP–21 and LCP–11
320	C2i–18	Control Panel LCP–11 and LCP–33
321	C2i–19	Control Panel LCP–33 and LCP–17
322	C2i–20	Control Panel LCP–27 and LCP–1
323	C2i–21	Air Bubbler Panel
CASE ENGINEERING DRAWINGS		
324	CASE01	Panels LCP–29 and LCP–31
325	CASE02	Panels LCP–31 and LCP–41
326	CASE03	Panel LCP–41, Ventilation Control Panel, and Panel LCP–32
327	CASE04	Panels LCP–32 and LCP–42
328	CASE05	Panels LCP–42 and LCP–35
329	CASE06	Panels LCP–35, LCP–20, and LCP–34
330	CASE07	Panel LCP–30
INFILCO DRAWINGS		
331	INFILC01	Climber screens No. 1–3 and Screw Conveyors no. 1 & 2
332	INFILC02	Climber screens No. 1–3, and Screw conveyors No. 1 and 2
333	INFILC03	Climber screen No.s 1–4 and Screw Conveyors No. 1 and 2
FISCHER & PORTER DRAWINGS		
334	00I–23	COMPILED LOOP DIAGRAMS INDEX PAGES
335	00I–24	COMPILED LOOP DIAGRAMS 931215–L037 THRU 931215–L045
336	00I–25	COMPILED LOOP DIAGRAMS 931215–L046 THRU 931215–L054
337	00I–26	COMPILED LOOP DIAGRAMS 931215–L055 THRU 931215–L063
338	00I–27	COMPILED LOOP DIAGRAMS 931215–L064 THRU 931215–L072
339	00I–28	COMPILED LOOP DIAGRAMS 931215–L073 THRU 931215–L081
340	00I–29	COMPILED LOOP DIAGRAMS 931215–L082 THRU 931215–L090
341	00I–30	COMPILED LOOP DIAGRAMS 931215–L091 THRU 931215–L099
342	00I–31	COMPILED LOOP DIAGRAMS 931215–L100 THRU 931215–L108
343	00I–32	COMPILED LOOP DIAGRAMS 931215–L109 THRU 931215–L117
344	00I–33	COMPILED LOOP DIAGRAMS 931215–L118 THRU 931215–L126
345	00I–34	COMPILED LOOP DIAGRAMS 931215–L127 THRU 931215–L135
346	00I–35	COMPILED LOOP DIAGRAMS 931215–L136 THRU 931215–L144
347	00I–36	COMPILED LOOP DIAGRAMS 931215–L145 THRU 931215–L153
348	00I–37	COMPILED LOOP DIAGRAMS 931215–L154 THRU 931215–L162
349	00I–38	COMPILED LOOP DIAGRAMS 931215–L163 THRU 931215–L171
350	00I–39	COMPILED LOOP DIAGRAMS 931215–L172 THRU 931215–L176
ABS CONTROL PANEL		
351	ABS	CONTROL PANEL 51/52 SUBMERSIBLE MIXERS
352	ABS	CONTROL PANEL 51/52 SUBMERSIBLE MIXERS

1 ADDED 12/98 FXP

REVISIONS				
NO.	DATE	DRWN	CHK'D	DESCRIPTION
1	12/98	FXP	ASG	RECORD DRAWING

DESIGNED BY: --
DRAWN BY: CLP
CHECKED BY/DATE: --
APPRV'D BY/DATE: --

COMMONWEALTH OF VIRGINIA — THOMAS D. HALL No. 12502 — PROFESSIONAL ENGINEER

CAMP DRESSER & McKEE

THIS DRAWING HAS BEEN REVISED BY HAZEN AND SAWYER, P.C. TO REFLECT MODIFICATIONS MADE DURING CONSTRUCTION

CDM — environmental engineers, scientists, planners, & management consultants

ARLINGTON COUNTY, VIRGINIA
WATER POLLUTION CONTROL PLANT
UPGRADE AND EXPANSION - PHASE IIB

DRAWING INDEX

SCALE NOTE

SCALE BAR SHOWN BELOW IS ONE INCH LONG ON A FULL SIZE DRAWING. WHEN SCALING DRAWINGS, MEASURE BAR TO DETERMINE IF SCALES SHOWN WILL REQUIRE ADJUSTING.

← ONE INCH →

RECORD DRAWING

CONTRACT NO. 90–02–WPC
YEAR 1991
LOCATION CODE 00
SPECIALTY CODE G
PROJECT NO. 5002–33
FILE NAME 00G–0002.DWG
DRAWING NO. 00G–2
SHEET NO. 2

05/15/91 - 16:39