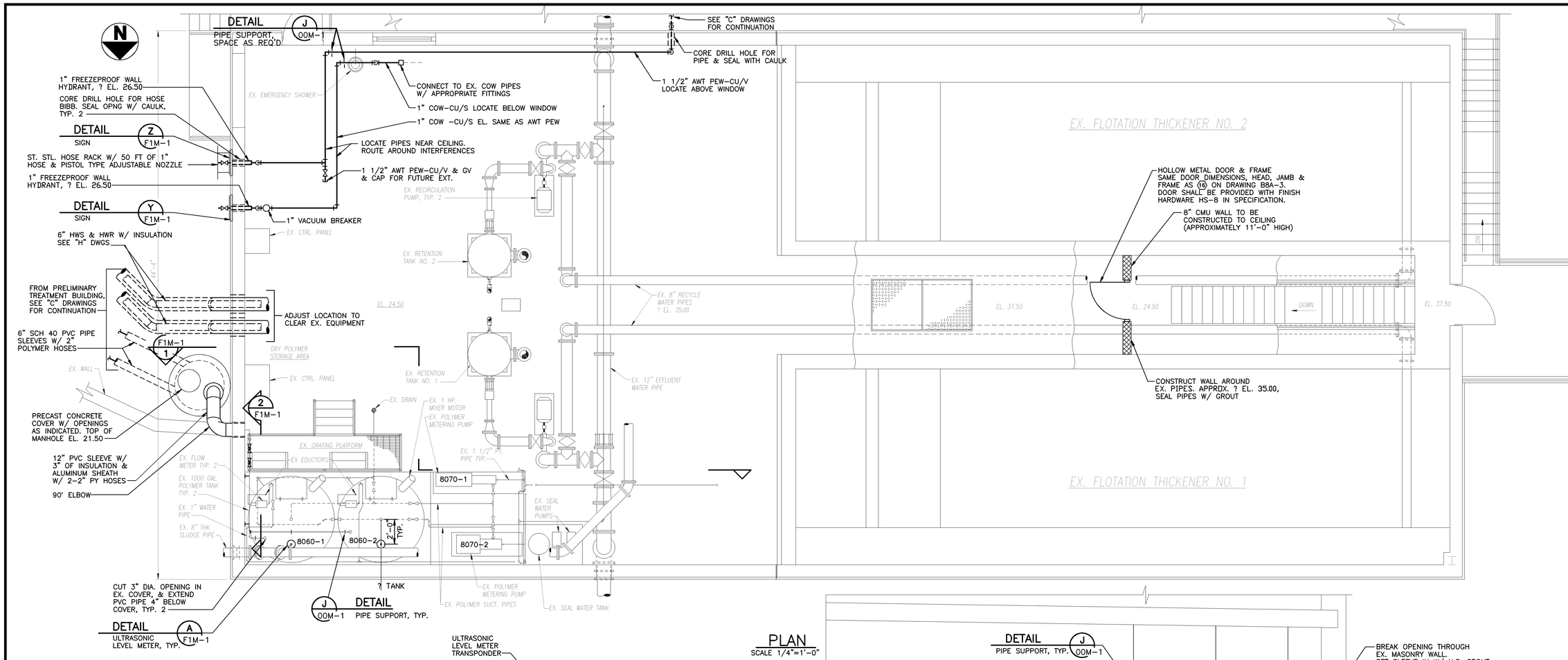

PLAN
SCALE 1/4"=1'-0"

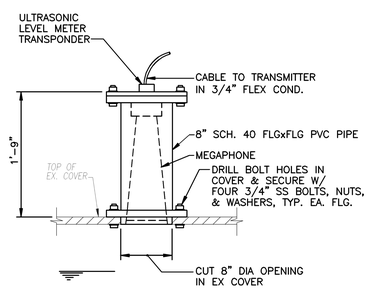

ULTRASONIC LEVEL METER

DETAIL A F1M-1
SCALE: 1"=1'-0"

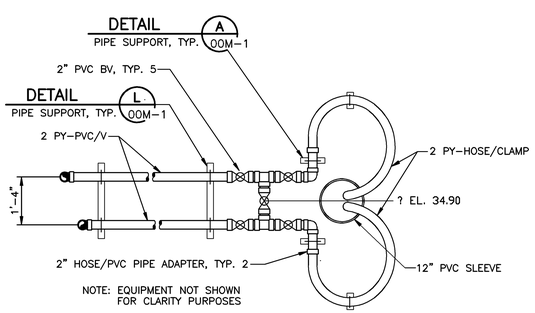

SECTION 2 F1M-1
SCALE: 1/2"=1'-0"

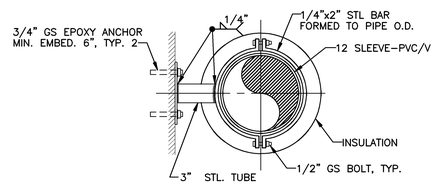

HORIZONTAL PIPE SUPPORT

DETAIL B F1M-1
SCALE: NTS

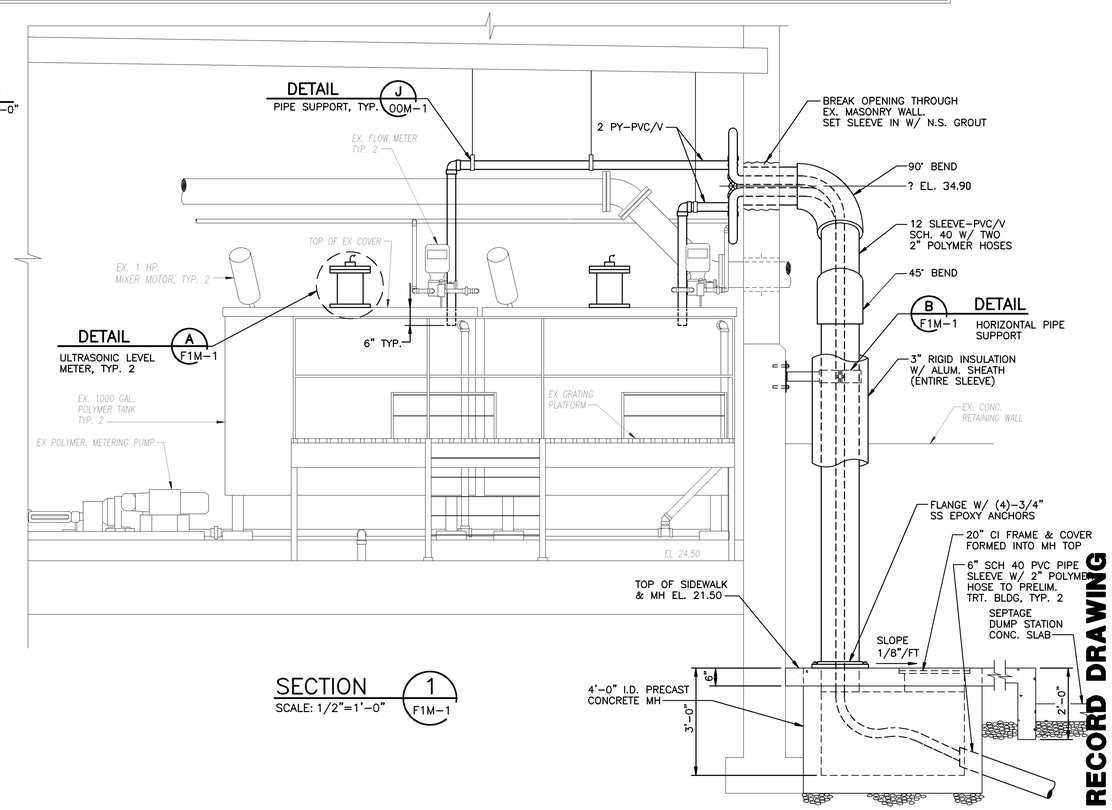

SECTION 1 F1M-1
SCALE: 1/2"=1'-0"

RECORD DRAWING

NO.	DATE	DRWN	CHK'D	DESCRIPTION
1	9/97	FXP	ASG	RECORD DRAWING

REVISIONS

DESIGNED BY: AMR
DRAWN BY: BRW/CTC/PLR
CHECKED BY/DATE: TDH 9/91
APPRV'D BY/DATE: TDH 9/91

COMMONWEALTH OF VIRGINIA
THOMAS D. HALL
No. 12602
PROFESSIONAL ENGINEER

CAMP DRESSER & McKEE

THIS DRAWING HAS BEEN REVISED BY HAZEN AND SAWYER, P.C. TO REFLECT MODIFICATIONS MADE DURING CONSTRUCTION

CDM
environmental engineers, scientists, planners, & management consultants

ARLINGTON COUNTY, VIRGINIA
WATER POLLUTION CONTROL PLANT
UPGRADE AND EXPANSION- PHASE IIB

FLOTATION THICKENER
PLAN, SECTIONS, AND DETAILS

SCALE NOTE
SCALE BAR SHOWN BELOW IS ONE INCH LONG ON A FULL SIZE DRAWING. WHEN SCALING DRAWINGS, MEASURE BAR TO DETERMINE IF SCALES SHOWN WILL REQUIRE ADJUSTING.
ONE INCH

CONTRACT NO. 90-02-WPC
YEAR 1991
LOCATION CODE F1
SPECIALTY CODE M
PROJECT NO. 5002-33
FILE NAME F1M-0001.DWG
DRAWING NO. F1M-1
SHEET NO. 122

08/21/91 - 15:36