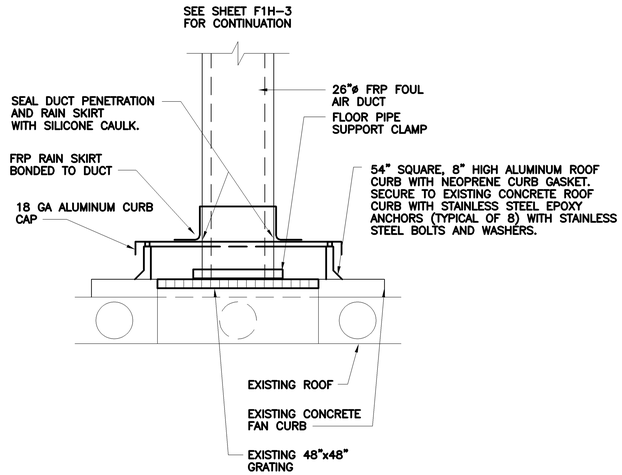

ROOFTOP DUCT PENETRATION DETAIL

N.T.S.

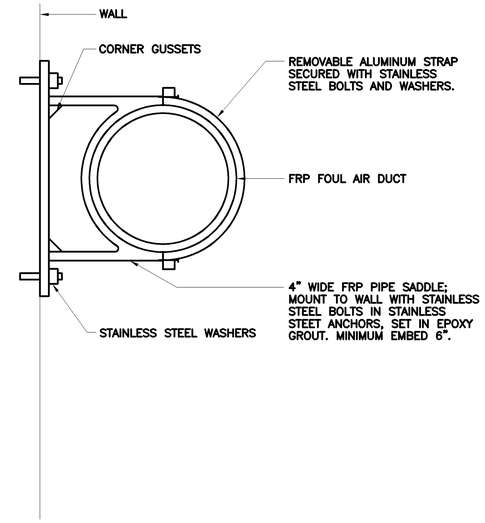

FOUL AIR PIPE WALL SUPPORT DETAIL

N.T.S.

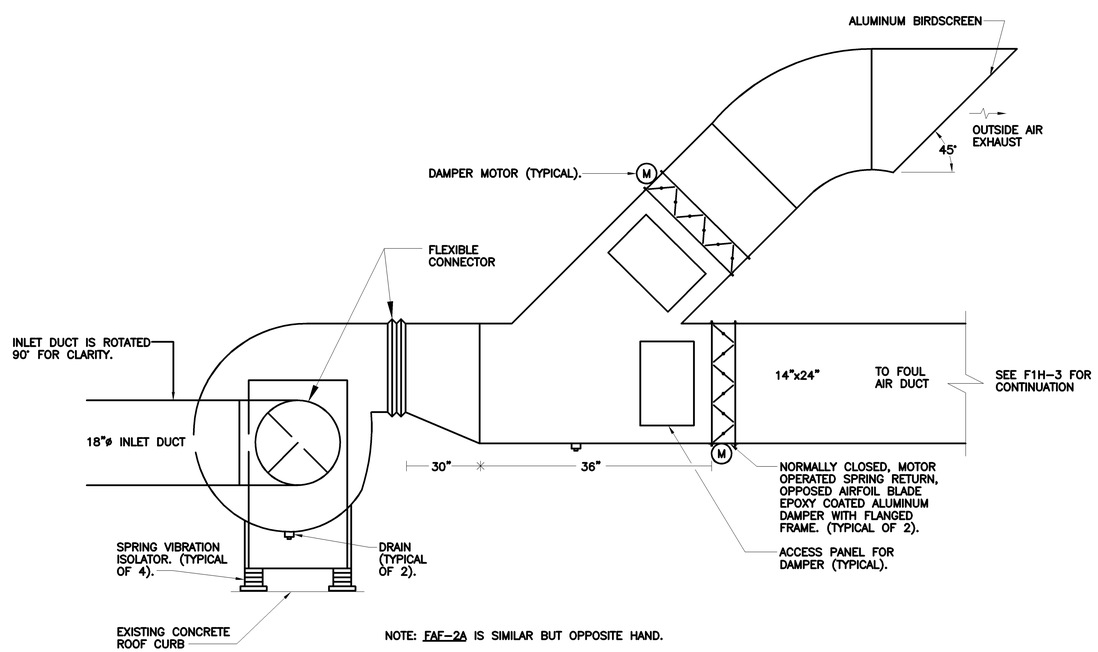

NOTE: FAF-2A IS SIMILAR BUT OPPOSITE HAND.

FAF-2B DETAIL

N.T.S.

NO.	DATE	DRWN	CHK'D	DESCRIPTION
1	9/97	FXP	ASG	RECORD DRAWING

REVISIONS

DESIGNED BY: WRH
DRAWN BY: SFP
CHECKED BY/DATE: WRH/9-91
APPR'D BY/DATE: WRH/9-91

CAMP DRESSER & McKEE

THIS DRAWING HAS BEEN REVISED BY HAZEN AND SAWYER, P.C. TO REFLECT MODIFICATIONS MADE DURING CONSTRUCTION

environmental engineers, scientists, planners, & management consultants CDM

ARLINGTON COUNTY, VIRGINIA
WATER POLLUTION CONTROL PLANT
UPGRADE AND EXPANSION- PHASE IIB

FLOATATION THICKENER
HVAC
DETAILS

RECORD DRAWING

SCALE NOTE

SCALE BAR SHOWN BELOW IS ONE INCH LONG ON A FULL SIZE DRAWING. WHEN SCALING DRAWINGS, MEASURE BAR TO DETERMINE IF SCALES SHOWN WILL REQUIRE ADJUSTING.

← ONE INCH →

CONTRACT NO. 000000000

YEAR 1991

LOCATION CODE	SPECIALTY CODE
F1	H

PROJECT NO. 5002-33

FILE NAME F1H4.DWG

DRAWING NO. F1H-4

SHEET NO. 126

C.E. BAILEY & ASSOCIATES, INC.
CONSULTING ENGINEERS
ORLANDO, CLEARWATER & FORT LAUDERDALE, FLORIDA