TRACK AND FIELD ATHLETIC FACILITY IMPROVEMENTS PROGRAM

February 22, 2021

HORRY COUNTY SCHOOLS
OFFICE OF FACILITIES
1160 E. HIGHWAY 501
CONWAY. SC 29526

SITE VICINITY MAP - AYNOR HIGH SCHOOL
SCALE: NOT TO SCALE

SITE VICINITY MAP - GREEN SEA FLOYDS HIGH SCHOOL
SCALE: NOT TO SCALE

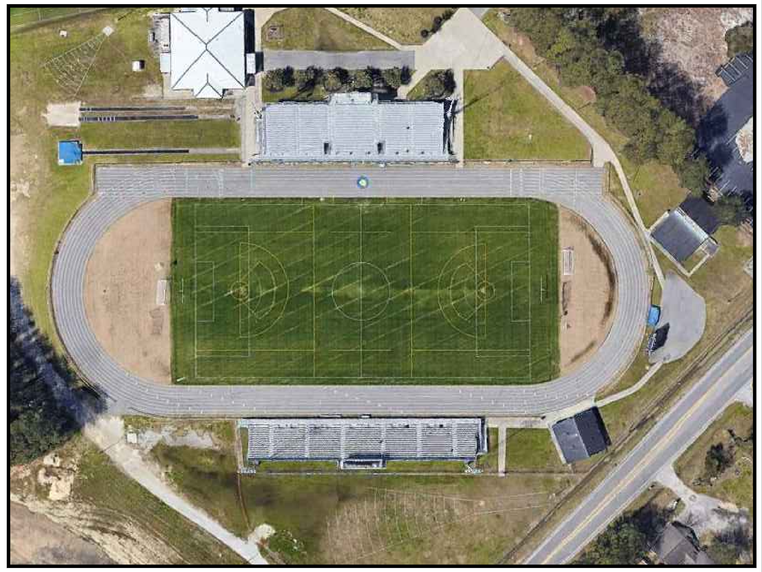

SITE VICINITY MAP - NORTH MYRTLE HIGH SCHOOL
SCALE: NOT TO SCALE

ISSUED FOR CONSTRUCTION

Sheet Index

SITE PLANS

Sheet Number	Sheet Title
G-000	TITLE SHEET
C-010	AYNOR HS EXISTING CONDITIONS PLAN
C-011	AYNOR HS DEMOLITION PLAN
C-110	AYNOR HS LAYOUT PLAN
C-111	AYNOR HS SURFACING AND DIMENSION PLAN
C-210	AYNOR HS GRADING PLAN
C-310	AYNOR HS DRAINAGE AND UTILITY PLAN
C-510	SEDIMENT AND EROSION CONTROL PLAN PHASE I
C-511	SEDIMENT AND EROSION CONTROL PLAN PHASE II
C-512	SEDIMENT AND EROSION CONTROL DETAILS
E-001	AYNOR HS ELECTRICAL SITE PLAN
C-020	GREEN SEA FLOYDS HS EXISTING CONDITIONS PLAN
C-021	GREEN SEA FLOYDS HS DEMOLITION PLAN
C-120	GREEN SEA FLOYDS HS LAYOUT PLAN
C-121	GREEN SEA FLOYDS HS SURFACING AND DIMENSION PLAN
C-220	GREEN SEA FLOYDS HS GRADING PLAN
C-320	GREEN SEA FLOYDS HS DRAINAGE AND UTILITY PLAN
C-520	SEDIMENT AND EROSION CONTROL PLAN PHASE I
C-521	SEDIMENT AND EROSION CONTROL PLAN PHASE II
C-522	SEDIMENT AND EROSION CONTROL DETAILS
E-001	GREEN SEA FLOYDS HS ELECTRICAL SITE PLAN
C-030	NORTH MYRTLE HS EXISTING CONDITIONS PLAN
C-031	NORTH MYRTLE HS DEMOLITION PLAN
C-130	NORTH MYRTLE HS LAYOUT PLAN
C-131	NORTH MYRTLE HS SURFACING AND DIMENSION PLAN
C-230	NORTH MYRTLE HS GRADING PLAN
C-330	NORTH MYRTLE HS DRAINAGE AND UTILITY PLAN
C-530	SEDIMENT AND EROSION CONTROL PLAN PHASE I
C-531	SEDIMENT AND EROSION CONTROL PLAN PHASE I
C-532	SEDIMENT AND EROSION CONTROL PLAN PHASE II
C-533	SEDIMENT AND EROSION CONTROL PLAN PHASE II
C-534	SEDIMENT AND EROSION CONTROL DETAILS
E-001	NORTH MYRTLE HS ELECTRICAL SITE PLAN
C-600	TRACK AND FIELD DETAILS
C-601	TRACK AND FIELD DETAILS
C-602	TRACK AND FIELD DETAILS
C-603	TRACK AND FIELD DETAILS
C-604	TRACK AND FIELD DETAILS

CHA
1258 Professional Drive
Myrtle Beach, SC 29577-5896
843.692.3105 x284 • www.chacompanies.com

HCS Horry County Schools

DDC ENGINEERS

HORRY COUNTY SCHOOLS

OFFICE OF FACILITIES
1160 E. HIGHWAY 501
CONWAY, SC 29526

SOUTH CAROLINA CERTIFICATE OF AUTHORIZATION
CHA, Inc.
No. 3955

SOUTH CAROLINA LICENSED PROFESSIONAL ENGINEER
No. 24401
2-22-2021
PATRICK N. GRAHAM

IT IS A VIOLATION OF LAW FOR ANY PERSON, UNLESS THEY ARE ACTING UNDER THE DIRECTION OF A LICENSED PROFESSIONAL ENGINEER, ARCHITECT, LANDSCAPE ARCHITECT OR LAND SURVEYOR, TO ALTER IN ANY WAY, A PLAN, SPECIFICATION, REPORT OR OTHER DOCUMENT BEARING THE SEAL OF A LICENSED PROFESSIONAL ENGINEER, ARCHITECT, LANDSCAPE ARCHITECT OR LAND SURVEYOR. SHALL STAMP THE DOCUMENT AND INCLUDE THE NOTATION "ALTERED BY" FOLLOWED BY THEIR SIGNATURE, THE DATE OF SUCH ALTERATION, AND A SPECIFIC DESCRIPTION OF THE ALTERATION.

PHASE 2

AYNOR HS
GREEN SEA FLOYDS HS
NORTH MYRTLE HS

TRACK AND FIELD
ATHLETIC FACILITY
IMPROVEMENTS PROGRAM

No.	Submittal / Revision	App'd.	By	Date

TITLE SHEET

Designed By:	Drawn By:	Checked By:
JRP	RH	PG
Issue Date:	Project No:	Scale:
2/22/2021	36108	AS SHOWN

Drawing No.:
G-000

File: V:\PROJECTS\ANY\K5\36108\CADD_ACAD\C-000_PH2.DWG
Sheet: 2/22/2021 1:09:33 PM Revised: 2/22/2021 2:22:53 PM Current User: Lindsay, Cody Last Saved By: 8170

SURVEY NOTES

1. THE MAP IS BASED ON A FIELD SURVEY COMPLETED BY DDC ENGINEERS IN JULY 2019

2. ELEVATIONS ARE REFERENCED TO THE NAVD 88 VERTICAL DATUM.

3. IRRIGATION AND DRAINAGE ARE BASED ON RECORD DRAWINGS AND SHOULD BE VERIFIED IN FIELD

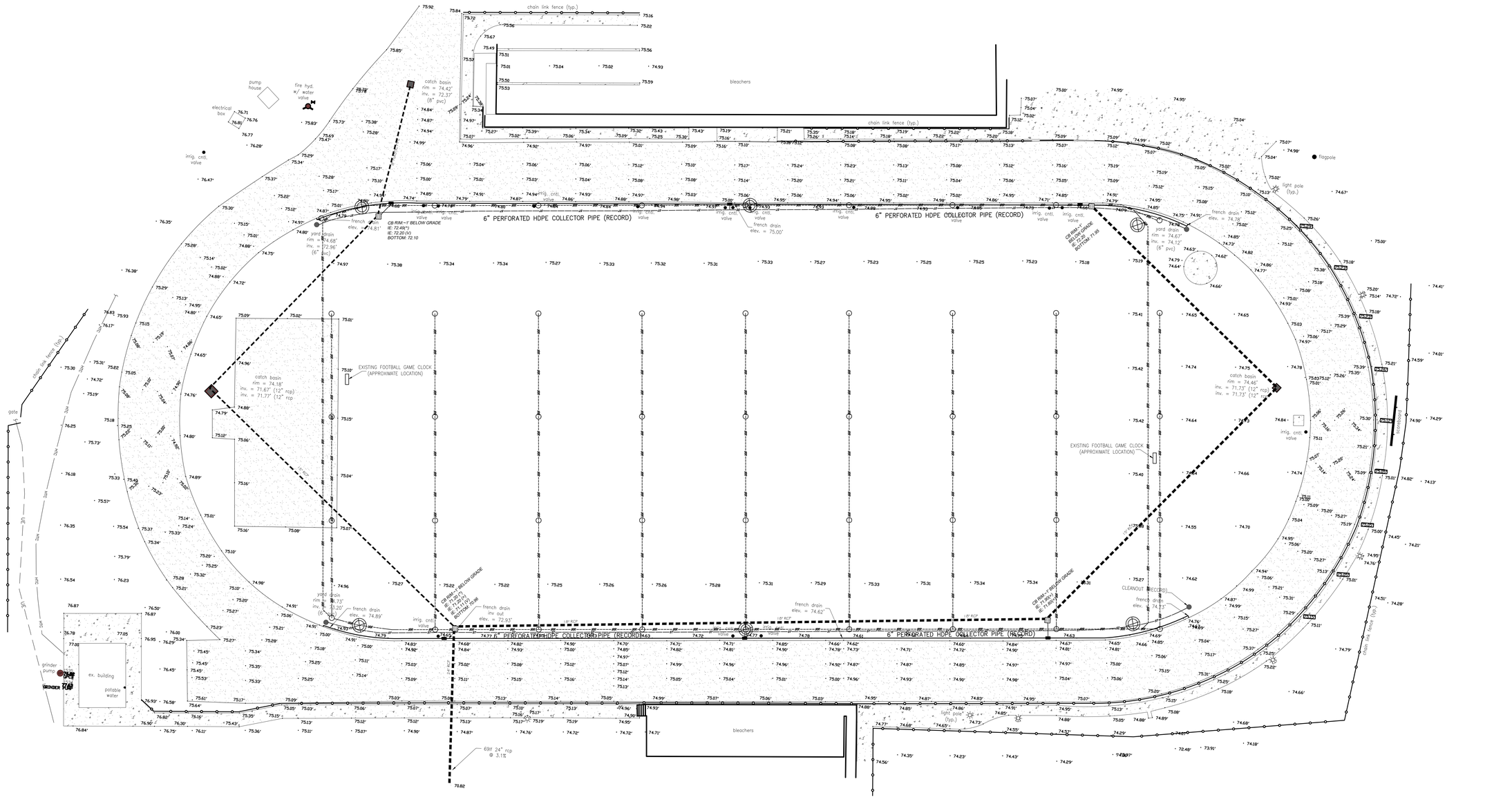

CHA
1258 Professional Drive
Myrtle Beach, SC 29577-5896
843.692.3105 x284 • www.chacompanies.com

HCS Horry County Schools

DDC ENGINEERS

HORRY COUNTY SCHOOLS

OFFICE OF FACILITIES
1160 E. HIGHWAY 501
CONWAY, SC 29526

SOUTH CAROLINA CERTIFICATE OF AUTHORIZATION CHA, Inc. No. 3955

SOUTH CAROLINA LICENSED PROFESSIONAL ENGINEER No. 24401 2-22-2021 PATRICK N. GRAHAM

IT IS A VIOLATION OF LAW FOR ANY PERSON, UNLESS THEY ARE ACTING UNDER THE DIRECTION OF A LICENSED PROFESSIONAL ENGINEER, ARCHITECT, LANDSCAPE ARCHITECT OR LAND SURVEYOR TO ALTER AN ITEM IN ANY WAY. IF AN ITEM BEARING THE STAMP OF A LICENSED PROFESSIONAL IS ALTERED, THE ALTERING ENGINEER, ARCHITECT, LANDSCAPE ARCHITECT OR LAND SURVEYOR SHALL ATTACH TO THE ITEM THE PHRASE "ALTERED BY" FOLLOWED BY THEIR SIGNATURE, THE DATE OF SUCH ALTERATION, AND A SPECIFIC DESCRIPTION OF THE ALTERATION.

PHASE 2

AYNOR HS
GREEN SEA FLOYDS HS
NORTH MYRTLE HS

TRACK AND FIELD
ATHLETIC FACILITY
IMPROVEMENTS PROGRAM

No.	Submittal / Revision	App'd.	By	Date

AYNOR HS EXISTING CONDITIONS PLAN

Designed By:	Drawn By:	Checked By:
JRP	CL	PG
Issue Date:	Project No:	Scale:
2/22/2021	36108	AS SHOWN

Drawing No.:

C-010

File: V:\PROJECTS\ANY\K5\36108\CADD_ACAD\C-010_PH2 - AHS.DWG
Saved: 2/10/2021 9:43:15 AM Printed: 2/26/2021 2:23:33 PM Current User: Lindsay, Cody LastSavedBy: 6170

SURVEY NOTES

1. THE MAP IS BASED ON A FIELD SURVEY COMPLETED BY DDC ENGINEERS IN JULY 2019

2. ELEVATIONS ARE REFERENCED TO THE NAVD 88 VERTICAL DATUM.

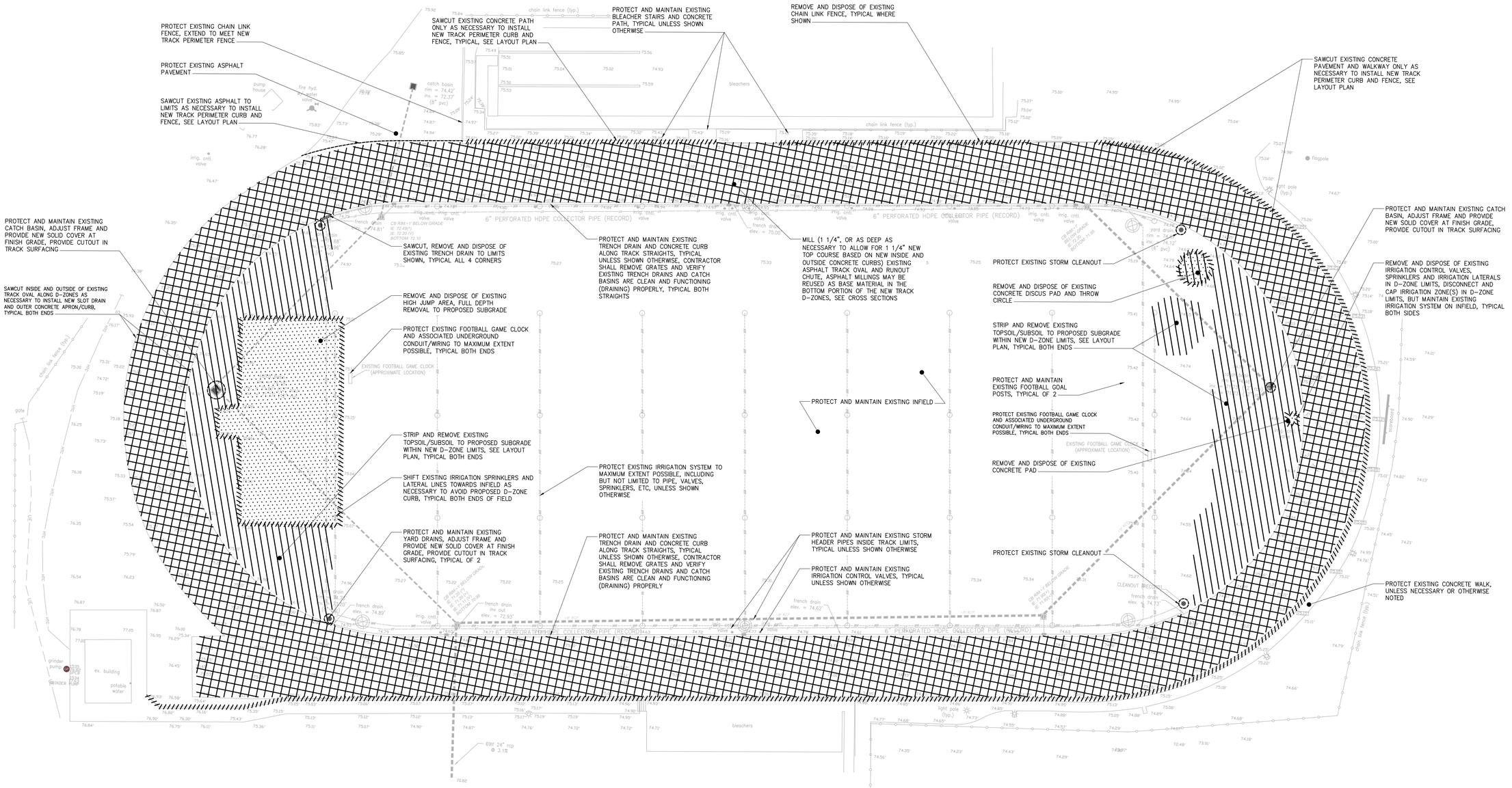

CHA
1258 Professional Drive
Myrtle Beach, SC 29577-5896
843.692.3105 x284 • www.chacompanies.com

HCS Horry County Schools

DDC ENGINEERS

HORRY COUNTY SCHOOLS

OFFICE OF FACILITIES
1160 E. HIGHWAY 501
CONWAY, SC 29526

SOUTH CAROLINA CERTIFICATE OF AUTHORIZATION
CHA, Inc.
No. 3955

SOUTH CAROLINA LICENSED PROFESSIONAL ENGINEER
No. 24401
2-22-2021
PATRICK N. GRAHAM

IT IS A VIOLATION OF LAW FOR ANY PERSON, UNLESS THEY ARE ACTING UNDER THE DIRECTION OF A LICENSED PROFESSIONAL ENGINEER, ARCHITECT, LANDSCAPE ARCHITECT OR LAND SURVEYOR, TO ALTER IN ANY WAY ANY ITEM BEARING THE SEAL OF THE STAMP OF A LICENSED PROFESSIONAL IS ALTERED, THE ALTERING ENGINEER, ARCHITECT, LANDSCAPE ARCHITECT OR LAND SURVEYOR SHALL ATTACH TO THE ITEM THE PHRASE "ALTERED BY" FOLLOWED BY THEIR SIGNATURE, THE DATE OF SUCH ALTERATION, AND A SPECIFIC DESCRIPTION OF THE ALTERATION.

PHASE 2

AYNOR HS
GREEN SEA FLOYDS HS
NORTH MYRTLE HS

TRACK AND FIELD
ATHLETIC FACILITY
IMPROVEMENTS PROGRAM

No.	Submittal / Revision	App'd.	By	Date

AYNOR HS
DEMOLITION PLAN

Designed By:	Drawn By:	Checked By:
JRP	CL	PG
Issue Date: 2/22/2021	Project No: 36108	Scale: AS SHOWN

Drawing No.:
C-011

File: V:\PROJECTS\ANY\VCS\36108\CADD_ACAD\C-011_PH2 - AHS.DWG
Saved: 2/10/2021 10:31:36 AM Printed: 2/22/2021 2:24:33 PM Current User: Lindsay, Cody LastSavedBy: 6970

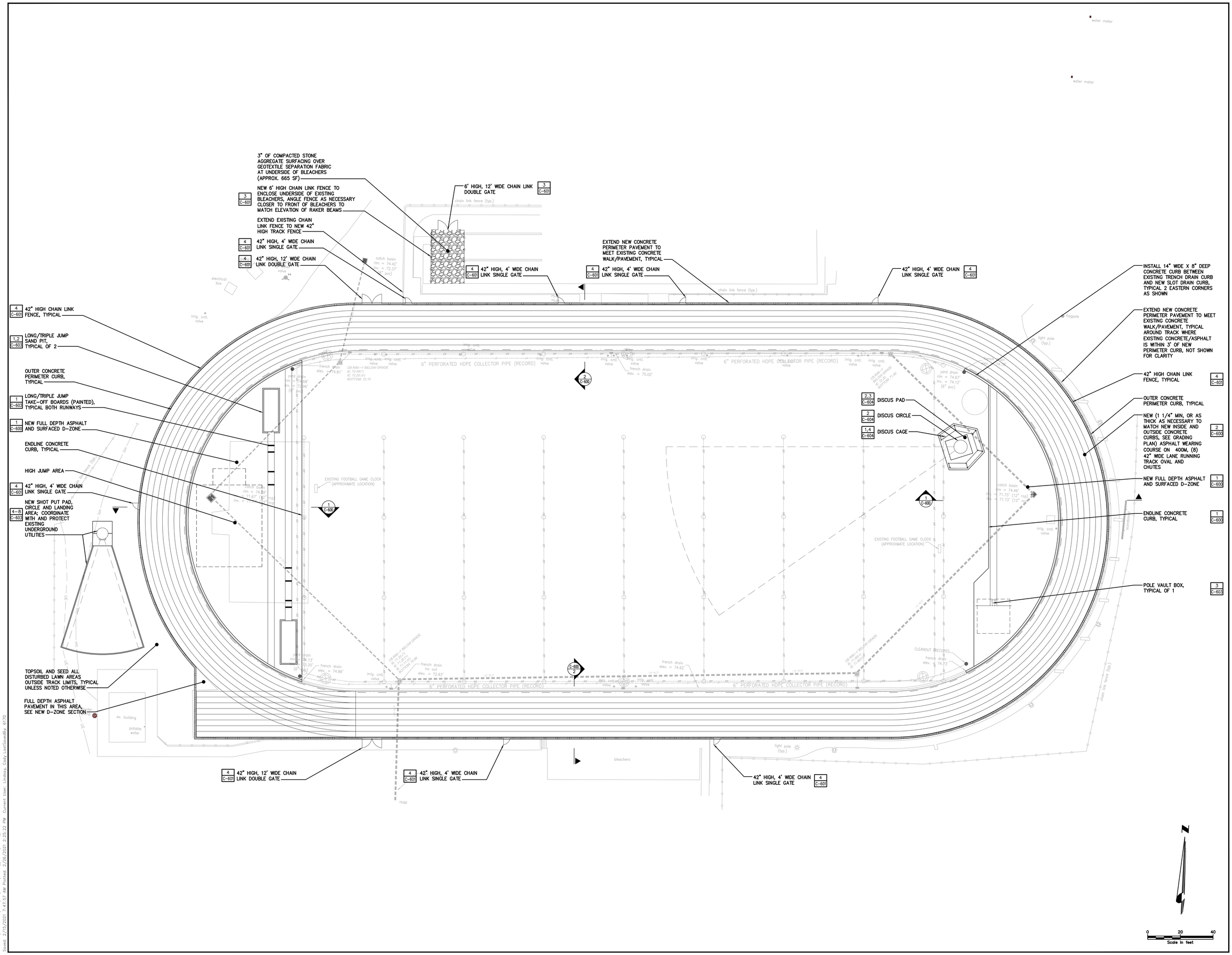

CHA
1258 Professional Drive
Myrtle Beach, SC 29577-5896
843.692.3105 x286 • www.chacompanies.com

HCS Horry County Schools

DDC ENGINEERS

HORRY COUNTY SCHOOLS

OFFICE OF FACILITIES
1160 E. HIGHWAY 501
CONWAY, SC 29526

SOUTH CAROLINA CERTIFICATE OF AUTHORIZATION
CHA, Inc.
No. 3955

SOUTH CAROLINA REGISTERED PROFESSIONAL ENGINEER
No. 24401
2-22-2021
PATRICK N. GRAHAM

IT IS A VIOLATION OF LAW FOR ANY PERSON, UNLESS THEY ARE ACTING UNDER THE DIRECTION OF A LICENSED PROFESSIONAL ENGINEER, ARCHITECT, LANDSCAPE ARCHITECT OR LICENSED SURVEYOR TO ALTER AN ITEM IN ANY WAY. IF AN ITEM BEARING THE STAMP OF A LICENSED PROFESSIONAL IS ALTERED, THE ALTERING ENGINEER, ARCHITECT, LANDSCAPE ARCHITECT OR LICENSED SURVEYOR SHALL STAMP THE DOCUMENT AND INCLUDE THE NOTATION "ALTERED BY" FOLLOWED BY THEIR SIGNATURE, THE DATE OF SUCH ALTERATION, AND A SPECIFIC DESCRIPTION OF THE ALTERATION.

PHASE 2

AYNOR HS
GREEN SEA FLOYDS HS
NORTH MYRTLE HS

TRACK AND FIELD
ATHLETIC FACILITY
IMPROVEMENTS PROGRAM

No.	Submittal / Revision	App'd.	By	Date

AYNOR HS LAYOUT PLAN

Designed By:	Drawn By:	Checked By:
JRP	CL	PG
Issue Date:	Project No:	Scale:
2/22/2021	36108	AS SHOWN

Drawing No.:
C-110

File: V:\PROJECTS\ANY\K5\36108\CADD_ACAD\C-110_PH2 - AHS.DWG
Saved: 2/19/2021 7:41:57 AM Modified: 2/26/2021 2:25:22 PM Current User: Lindsay, Cody LastSaveAs By: 6170

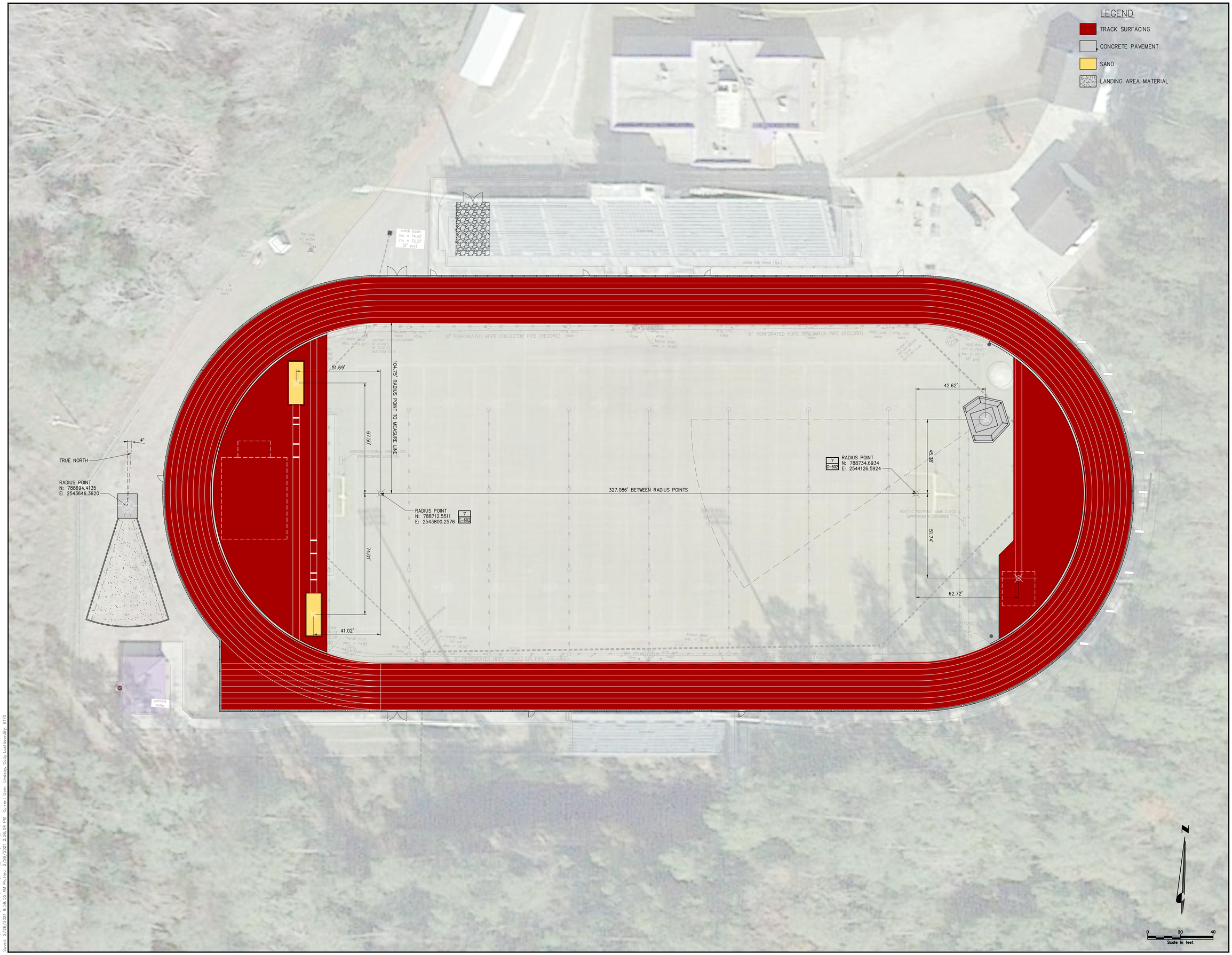

CHA
1258 Professional Drive
Myrtle Beach, SC 29577-5896
843.692.3105 x284 • www.chacompanies.com

HCS
Horry County Schools

DDC
ENGINEERS

HORRY COUNTY SCHOOLS

OFFICE OF FACILITIES
1160 E. HIGHWAY 501
CONWAY, SC 29526

SOUTH CAROLINA
CERTIFICATE OF AUTHORIZATION
CHA, Inc.
No. 3955

SOUTH CAROLINA
REGISTERED PROFESSIONAL ENGINEER
No. 24401
2-22-2021
PATRICK N. GRAHAM

IT IS A VIOLATION OF LAW FOR ANY PERSON, UNLESS THEY ARE ACTING UNDER THE DIRECTION OF A PROFESSIONAL ENGINEER, ARCHITECT, LANDSCAPE ARCHITECT OR LAND SURVEYOR TO ALTER AN ITEM IN ANY WAY. IF AN ITEM BEARING THE STAMP OF A PROFESSIONAL ENGINEER, ARCHITECT, LANDSCAPE ARCHITECT OR LAND SURVEYOR SHALL STAMP THE DOCUMENT AND INCLUDE THE NOTATION "ALTERED BY" FOLLOWED BY THEIR SIGNATURE, THE DATE OF SUCH ALTERATION, AND A SPECIFIC DESCRIPTION OF THE ALTERATION.

PHASE 2

AYNOR HS
GREEN SEA FLOYDS HS
NORTH MYRTLE HS

TRACK AND FIELD
ATHLETIC FACILITY
IMPROVEMENTS PROGRAM

No.	Submittal / Revision	App'd	By	Date

AYNOR HS
SURFACING AND
DIMENSION PLAN

Designed By:	Drawn By:	Checked By:
JRP	CL	PG
Issue Date:	Project No:	Scale:
2/22/2021	36108	AS SHOWN

Drawing No.:
C-111

File: V:\PROJECTS\ANY\VC5\36108\CADD_ACAD\C-111_PH2 - AHS.DWG
Saved: 2/26/2021 9:59:55 AM Printed: 2/26/2021 2:26:04 PM Current User: Lindsay, Cody LastSavedBy: 8170

LEGEND

TA = TOP OF ASPHALT
TC = TOP OF CONCRETE
TD = TOP OF DRAIN
TS = TOP OF SURFACING

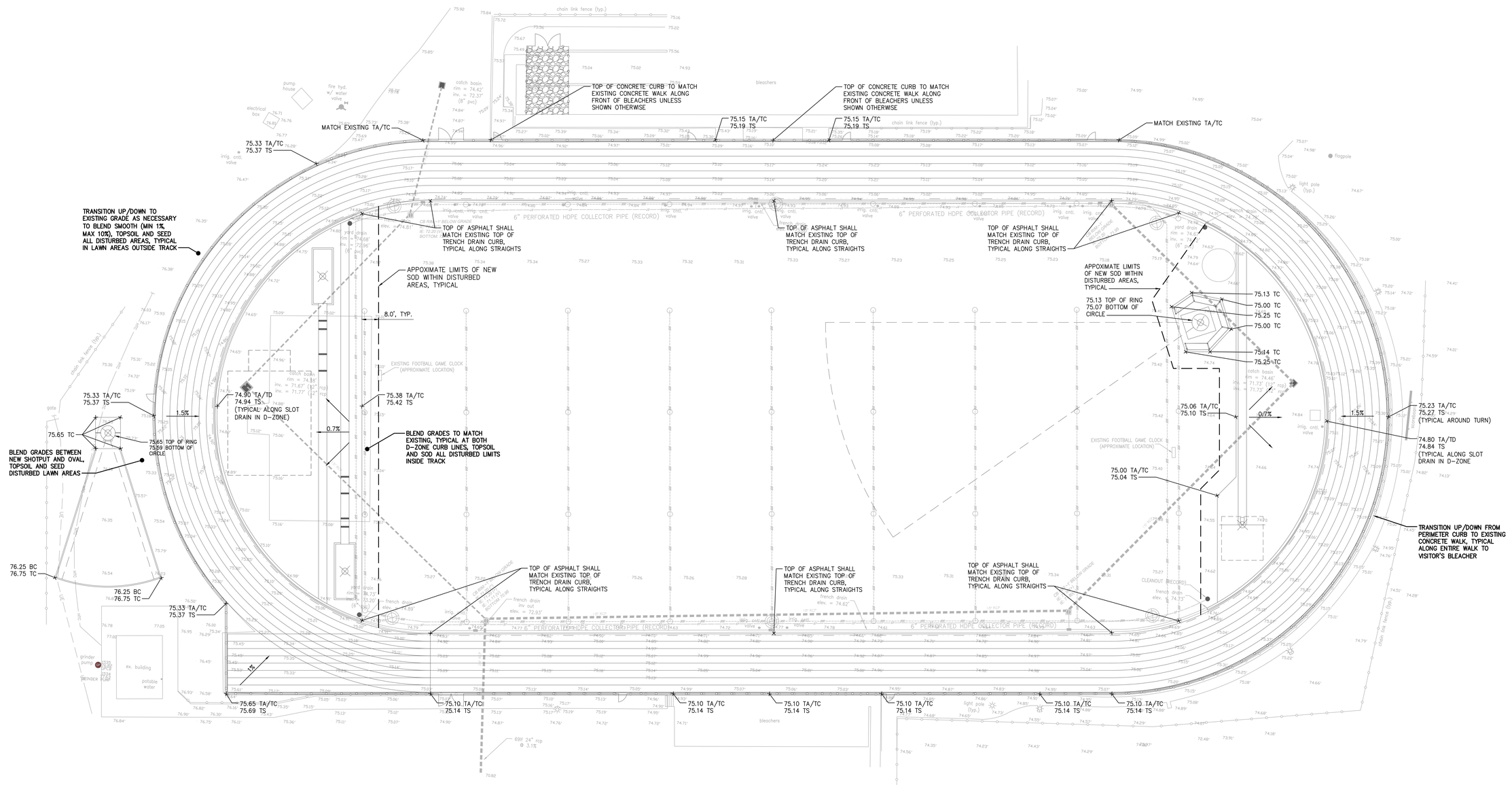

File: V:\PROJECTS\ANY\K5\36108\CADD_ACAD\C-210_PH2 - AHS.DWG
Saved: 2/26/2021 10:03:25 AM Printed: 2/26/2021 2:26:38 PM Current User: Lindsay, Cody Last Saved By: 6170

CHA
1258 Professional Drive
Myrtle Beach, SC 29577-5896
843.692.3105 x284 • www.chacompanies.com

HCS Horry County Schools

DDC ENGINEERS

HORRY COUNTY SCHOOLS

OFFICE OF FACILITIES
1160 E. HIGHWAY 501
CONWAY, SC 29526

SOUTH CAROLINA CERTIFICATE OF AUTHORIZATION
CHA, Inc.
No. 3955

SOUTH CAROLINA REGISTERED PROFESSIONAL ENGINEER
No. 24401
2-22-2021
PATRICK N. GRAHAM

IT IS A VIOLATION OF LAW FOR ANY PERSON, UNLESS THEY ARE ACTING UNDER THE DIRECTION OF A LICENSED PROFESSIONAL ENGINEER, TO ALTER AN ITEM IN ANY WAY. IF AN ITEM BEARING THE STAMP OF A LICENSED PROFESSIONAL IS ALTERED, THE ALTERING ENGINEER OR LICENSED PROFESSIONAL SURVEYOR SHALL STAMP THE DOCUMENT AND INCLUDE THE NOTATION "ALTERED BY" FOLLOWED BY THEIR SIGNATURE, THE DATE OF SUCH ALTERATION, AND A SPECIFIC DESCRIPTION OF THE ALTERATION.

PHASE 2

AYNOR HS
GREEN SEA FLOYDS HS
NORTH MYRTLE HS

TRACK AND FIELD
ATHLETIC FACILITY
IMPROVEMENTS PROGRAM

No.	Submittal / Revision	App'd.	By	Date

AYNOR HS GRADING PLAN

Designed By:	Drawn By:	Checked By:
JRP	CL	PG
Issue Date:	Project No:	Scale:
2/22/2021	36108	AS SHOWN

Drawing No.:

C-210

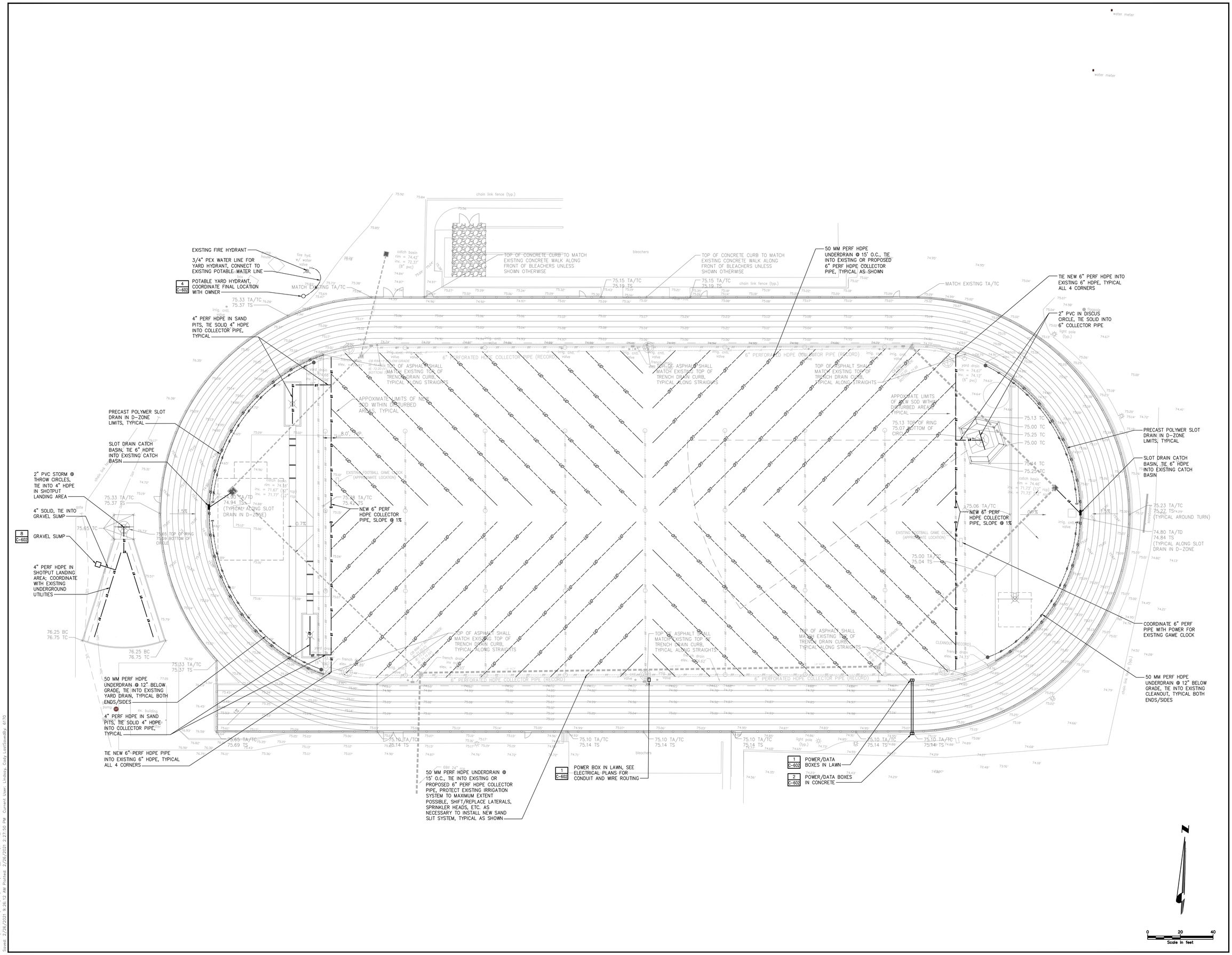

CHA
1258 Professional Drive
Myrtle Beach, SC 29577-5896
843.692.3105 x284 • www.chacompanies.com

HCS Horry County Schools

DDC ENGINEERS

HORRY COUNTY SCHOOLS

OFFICE OF FACILITIES
1160 E. HIGHWAY 501
CONWAY, SC 29526

SOUTH CAROLINA CERTIFICATE OF AUTHORIZATION
CHA, Inc.
No. 3955

SOUTH CAROLINA PROFESSIONAL ENGINEER
No. 24401
2-22-2021
PATRICK N. GRAHAM

IT IS A VIOLATION OF LAW FOR ANY PERSON, UNLESS THEY ARE ACTING UNDER THE DIRECTION OF A LICENSED PROFESSIONAL ENGINEER, ARCHITECT, LANDSCAPE ARCHITECT OR LAND SURVEYOR, TO ALTER IN ANY WAY, AN ITEM BEARING THE SEAL OR THE STAMP OF A LICENSED PROFESSIONAL IS ALTERED. THE ALTERING ENGINEER, ARCHITECT, LANDSCAPE ARCHITECT OR LAND SURVEYOR MUST AFFIX TO THE ITEM THE PHRASE "ALTERED BY" FOLLOWED BY THEIR SIGNATURE, THE DATE OF SUCH ALTERATION, AND A SPECIFIC DESCRIPTION OF THE ALTERATION.

PHASE 2

AYNOR HS
GREEN SEA FLOYDS HS
NORTH MYRTLE HS

TRACK AND FIELD ATHLETIC FACILITY IMPROVEMENTS PROGRAM

No.	Submittal / Revision	App'd.	By	Date

AYNOR HS
DRAINAGE AND UTILITY PLAN

Designed By:	Drawn By:	Checked By:
JRP	CL	PG
Issue Date:	Project No:	Scale:
2/22/2021	36108	AS SHOWN

Drawing No.:
C-310

File: V:\PROJECTS\ANY\VS\36108\CADD_ACAD\C-310_PH2 - AHS.DWG
Saved: 2/26/2021 8:26:12 AM Plotted: 2/26/2021 2:27:53 PM Current User: lindsay, Cody (ardSoredP) 6170

SEEDING NOTES:

1. INCLUDES RURAL AREAS ADJACENT TO WELL-DEVELOPED LAWNS.
2. NOT REQUIRED ON SHOULDERS, MEDIANS, ETC., AND SLOPES UNDER 5 FEET IN HEIGHT.
3. GIANT BERMUDA SEED, INCLUDING NK-37, SHALL NOT BE USED.
4. RESEEDING CRIMSON CLOVER SHALL BE INOCULATED IN ACCORDANCE WITH SUBSECTION 810.05. DO NOT PLANT CLOVER IN MEDIANS OR IN RURAL AREAS ADJACENT TO WELL-DEVELOPED LAWNS.
5. PENSACOLA BAHIA SHALL BE ALLOWED ONLY AS SHOWN IN SEEDING SCHEDULES 3 AND 4 AT THE RATE OF 50 POUNDS PER ACRE ONLY WHEN SEEDING PIT AREAS THAT ARE GOVERNED BY THE SOUTH CAROLINA MINING ACT. OTHERWISE, DO NOT INCLUDE BAHIA SEED IN THE MIX.
6. THE CONTRACTOR SHALL OBTAIN A SATISFACTORY STAND OF PERENNIAL VEGETATION WHOSE ROOT SYSTEM SHALL BE DEVELOPED SUFFICIENTLY TO SURVIVE DRY PERIODS AND WINTER WEATHER, AND BE CAPABLE OF RE-ESTABLISHMENT IN THE SPRING. THE PERENNIAL VEGETATIVE COVER SHALL HAVE A MINIMUM COVERAGE DENSITY OF 70% FOR THE SEEDED AREAS. CONTRACTOR SHALL DETERMINE ALL RATES OF APPLICATION NECESSARY TO PRODUCE THE REQUIRED STAND OF GRASS, AND SHALL FOLLOW THE APPLICATION PROCEDURES AS SPECIFIED HEREIN.
7. GIANT BERMUDA SEED, INCLUDING NK-37, SHALL NOT BE USED.

SEEDING SCHEDULE FOR TEMPORARY VEGETATION Ds3

SCHEDULE NO.	COMMON NAME OF SEED	RATE PER ACRE (LBS.)	PLANTING DATES
1	COMMON BERMUDA (HULLED)	210	MARCH 16 TO AUG. 31
	TALL FESCUE	140	
2	COMMON BERMUDA (UNHULLED)	175	SEPT. 1 TO MARCH 15
	ANNUAL RYEGRASS	175	

NOTES:

THE CONTRACTOR SHALL OBTAIN A SATISFACTORY STAND OF PERENNIAL VEGETATION WHOSE ROOT SYSTEM SHALL BE DEVELOPED SUFFICIENTLY TO SURVIVE DRY PERIODS AND WINTER WEATHER, AND BE CAPABLE OF RE-ESTABLISHMENT IN THE SPRING. THE PERENNIAL VEGETATIVE COVER SHALL HAVE A MINIMUM COVERAGE DENSITY OF 70% FOR THE SEEDED AREAS. CONTRACTOR SHALL DETERMINE ALL RATES OF APPLICATION NECESSARY TO PRODUCE THE REQUIRED STAND OF GRASS, AND SHALL FOLLOW THE APPLICATION PROCEDURES AS SPECIFIED HEREIN.

SEEDING SCHEDULE FOR PERMANENT VEGETATION

SCHEDULE NO.	COMMON NAME OF SEED	RURAL RATE	URBAN RATE[1]	PLANTING DATES
3[5]	COMMON BERMUDA (HULLED)[3]	30	30	MARCH 1 TO AUG. 14
	WEEPING LOVEGRASS[2]	10	10	
	SERICEA LESPEDEZA (SCARIFIED)[7]	50	50	
4[5]	COMMON BERMUDA (UNHULLED)[3]	40	40	AUG. 5 TO FEB. 28
	WEEPING LOVEGRASS[2]	10	10	
	SERICEA LESPEDEZA (UNHULLED, UNSCARIFIED)[7]	80	80	
	RESEEDING CRIMSON CLOVER[4]	20	0	
	RYE GRAIN	20	0	

NOTES:

1 INCLUDES RURAL AREAS ADJACENT TO WELL-DEVELOPED LAWNS.

2 NOT REQUIRED ON SHOULDERS, MEDIANS, ECT., AND SLOPES UNDER 5 FEET IN HEIGHT

3 GIANT BERMUDA SEED, INCLUDING NK-37, SHALL NOT BE USED.

4 RESEEDING CRIMSON CLOVER SHALL BE INOCULATED IN ACCORDANCE WITH SUBSECTION 810.05. DO NOT PLANT CLOVER IN MEDIANS OR IN RURAL AREAS ADJACENT TO WELL-DEVELOPED LAWNS.

5 PENSACOLA BAHIA SHALL BE ALLOWED ONLY AS SHOWN IN SEEDING SCHEDULES 3 AND 4 AT THE RATE OF 50 POUNDS PER ACRE ONLY WHEN SEEDING PIT AREAS THAT ARE GOVERNED BY THE SOUTH CAROLINA MINING ACT. OTHERWISE, DO NOT INCLUDE BAHIA SEED IN THE MIX.

THE CONTRACTOR SHALL OBTAIN A SATISFACTORY STAND OF PERENNIAL VEGETATION WHOSE ROOT SYSTEM SHALL BE DEVELOPED SUFFICIENTLY TO SURVIVE DRY PERIODS AND WINTER WEATHER, AND BE CAPABLE OF RE-ESTABLISHMENT IN THE SPRING. THE PERENNIAL VEGETATIVE COVER SHALL HAVE A MINIMUM COVERAGE DENSITY OF 70% FOR THE SEEDED AREAS. CONTRACTOR SHALL DETERMINE ALL RATES OF APPLICATION NECESSARY TO PRODUCE THE REQUIRED STAND OF GRASS, AND SHALL FOLLOW THE APPLICATION PROCEDURES AS SPECIFIED HEREIN.

THE CONTRACTOR MAY INCLUDE QUANTITIES OF RYE GRAIN AND MILLET IN SCHEDULE 1 AND 3 IN ORDER TO ESTABLISH QUICK GROUND COVER FOR EROSION CONTROL PURPOSES.

SEEDING SCHEDULE FOR TEMPORARY VEGETATION

SCHEDULE NO.	COMMON NAME OF SEED	RATE PER ACRE (LBS.)	PLANTING DATES
1	ANNUAL SUDAN GRASS (SWEET OR TIFF)	40	APRIL 1- AUGUST 15
2	BROWN TOP MILLET	50	APRIL 1- AUGUST 15
3	RYE GRAIN	55	AUGUST 16- MARCH 31

OAT GRAIN IS TO BE ADDED TO ALL SCHEDULES, IF SEEDING DATE IS BETWEEN MARCH 1 AND APRIL 16, AT THE RATE OF 10 POUNDS PER ACRE.

THE CONTRACTOR SHALL OBTAIN A SATISFACTORY STAND OF VEGETATION THAT IS CAPABLE OF EROSION CONTROL. CONTRACTOR SHALL DETERMINE ALL RATES OF APPLICATION NECESSARY TO PRODUCE THE REQUIRED RESULTS. THE TEMPORARY VEGETATION SHALL PROVIDE MINIMUM DENSITY COVERAGE OF 70% OF THE SEEDED AREA.

CONSTRUCTION SEQUENCE:

1. CONTRACTOR TO LOCATE ALL EXISTING UTILITIES WITHIN AND IMMEDIATELY ADJACENT TO PROJECT AREA.
2. INSTALL CONSTRUCTION ENTRANCE.
3. INSTALL PERIMETER EROSION CONTROL DEVICES, INCLUDING ALL TREE PROTECTION.
4. DEMO EXISTING TRACK AND APPURTENANCES.

EROSION CONTROL LEGEND

SYMBOL	PRACTICE	DESCRIPTION
IP	INLET PROTECTION	A TEMPORARY SEDIMENT BARRIER LAID AROUND A STORM DRAIN INLET TO PREVENT SEDIMENT FROM ENTERING THE DRAINAGE SYSTEM.
OP	OUTLET PROTECTION	RIP RAP CHANNEL / BANK PLACED BELOW DRAINAGE OUTLETS TO REDUCE THE VELOCITY OF FLOW, EROSION, AND STABILIZE GRADES DOWNSTREAM OF OUTLET STRUCTURES.
CD	TEMPORARY CHECK DAM	RIP RAP BANK PLACED BELOW DRAINAGE OUTLETS TO REDUCE THE VELOCITY OF FLOW, EROSION AND STABILIZE GRADES DOWN STREAM OF DRAINAGE OUTLETS.
SF	SILT FENCE	A TEMPORARY STRUCTURE USED TO SLOW THE VELOCITY OF RUN-OFF, CAUSE SEDIMENT DEPOSITION AT THE STRUCTURE, AND FILTER SEDIMENT FROM RUN-OFF.
SF_2	DOUBLE ROW SILT FENCE	A TEMPORARY STRUCTURE USED TO SLOW THE VELOCITY OF RUN-OFF, CAUSE SEDIMENT DEPOSITION AT THE STRUCTURE, AND FILTER SEDIMENT FROM RUN-OFF.
CL	CONSTRUCTION LIMITS	A DEFINED AREA THAT ALL LAND DISTURBANCE WILL OCCUR DURING CONSTRUCTION.
ECB	PERMANENT EROSION CONTROL MATTING (HIGH PERFORMANCE TRM PYRAMAT BY SI GEOSOLUTIONS OR EQUAL)	A PERMANENT REINFORCEMENT MAT TO PREVENT SOIL EROSION AND MAINTAIN PERMANENT GROUND COVER.
Ds3	DISTURBED AREA STABILIZATION (WITH TEMPORARY VEGETATION)	ESTABLISHING PERMANENT VEGETATIVE COVER SUCH AS TREES, SHRUBS, VINES, GRASSES, SOD, OR LEGUMES ON DISTURBED AREAS.
ST	SEDIMENT TUBE	SEDIMENT TUBE PLACED IN EXISTING OR PROPOSED DITCH SECTIONS TO REDUCE THE VELOCITY OF FLOW, EROSION AND STABILIZE GRADES DOWN STREAM OR DRAINAGE OUTLETS.
CE	CONSTRUCTION ENTRANCE	A STONE STABILIZED PAD LOCATED AT ANY POINT THAT TRAFFIC WILL BE LEAVING A CONSTRUCTION SITE TO A PUBLIC RIGHT-OF-WAY, STREET, ALLEY, SIDEWALK, OR PARKING PLOT WHICH WILL REDUCE OR ELIMINATE THE TRANSPORT OF MUD FROM THE CONSTRUCTION SITE.

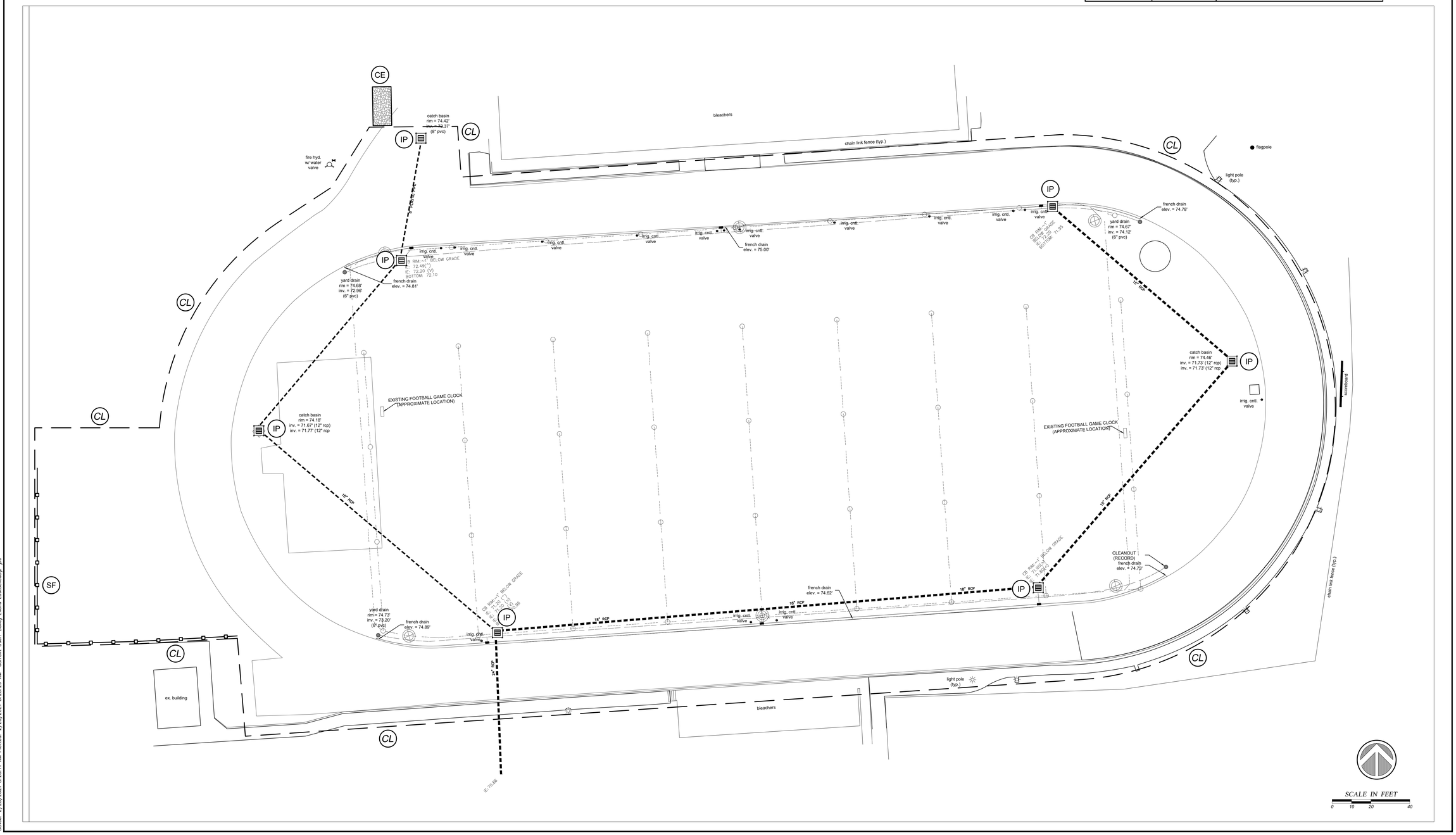

Drawing Copyright © 2016

CHA
1298 Professional Drive
Myrtle Beach, SC 29577-5896
843.692.3255 x184 • www.thecompanies.com

HCS Horry County Schools

DDC ENGINEERS
Consulting Engineers, Surveyors, Planners, Landscape Architects & Environmentalists
1298 Professional Dr., Myrtle Beach, SC 29577
Phone: (843) 692-3200 Fax: (843) 692-3210

HORRY COUNTY SCHOOLS

OFFICE OF FACILITIES
1160 E. HIGHWAY 501
CONWAY, SC 29526

SOUTH CAROLINA CERTIFICATE OF AUTHORIZATION
BOLTON & MENK SOUTHEAST, LLC
No. 6475

SOUTH CAROLINA PROFESSIONAL ENGINEER
No. 29814
2/22/21
ERIC K. SANFORD

IT IS A VIOLATION OF LAW FOR ANY PERSON, UNLESS THEY ARE ACTING UNDER THE DIRECTION OF A LICENSED PROFESSIONAL ENGINEER, ARCHITECT, LANDSCAPE ARCHITECT OR LICENSED SURVEYOR TO ALTER AN ITEM IN ANY WAY. IF AN ITEM BEARING THE STAMP OF A LICENSED PROFESSIONAL IS ALTERED, THE ALTERING ENGINEER, ARCHITECT, LANDSCAPE ARCHITECT OR LICENSED SURVEYOR SHALL STAMP THE DOCUMENT AND INCLUDE THE NOTATION "ALTERED BY" FOLLOWED BY THEIR SIGNATURE, THE DATE OF SUCH ALTERATION, AND A SPECIFIC DESCRIPTION OF THE ALTERATION.

AYNOR HIGH SCHOOL
TRACK AND FIELD
ATHLETIC FACILITY
IMPROVEMENTS PROGRAM

No.	Submittal / Revision	App'd	By	Date

SEDIMENT AND EROSION CONTROL PLAN
PHASE I

Designed By:	Drawn By:	Checked By:
EKS	KJG	EKS
Issue Date:	Project No:	Scale:
2/17/21	20095E	1" = 20'

Drawing No.:
C-510

File: J:\PLANS\2020\20095E - HORRY COUNTY SCHOOLS PHASE 2 TRACK AND FIELD IMPROVEMENTS\EVA\NOR\20095E-AYNOR-TRACK-ERO.DWG
Saved: 2/23/2021 8:28:11 AM Plotted: 2/23/2021 8:28:29 AM Current User: Bailey Evans LastSaveBy: jbe

SEEDING NOTES:

1. INCLUDES RURAL AREAS ADJACENT TO WELL-DEVELOPED LAWNS.
2. NOT REQUIRED ON SHOULDERS, MEDIANS, ETC.., AND SLOPES UNDER 5 FEET IN HEIGHT.
3. GIANT BERMUDA SEED, INCLUDING NK-37, SHALL NOT BE USED.
4. RESEEDING CRIMSON CLOVER SHALL BE INOCULATED IN ACCORDANCE WITH SUBSECTION 810.05. DO NOT PLANT CLOVER IN MEDIANS OR IN RURAL AREAS ADJACENT TO WELL-DEVELOPED LAWNS.
5. PENSACOLA BAHIA SHALL BE ALLOWED ONLY AS SHOWN IN SEEDING SCHEDULES 3 AND 4 AT THE RATE OF 50 POUNDS PER ACRE ONLY WHEN SEEDING PIT AREAS THAT ARE GOVERNED BY THE SOUTH CAROLINA MINING ACT. OTHERWISE, DO NOT INCLUDE BAHIA SEED IN THE MIX.
6. THE CONTRACTOR SHALL OBTAIN A SATISFACTORY STAND OF PERENNIAL VEGETATION WHOSE ROOT SYSTEM SHALL BE DEVELOPED SUFFICIENTLY TO SURVIVE DRY PERIODS AND WINTER WEATHER, AND BE CAPABLE OF RE-ESTABLISHMENT IN THE SPRING. THE PERENNIAL VEGETATIVE COVER SHALL HAVE A MINIMUM COVERAGE DENSITY OF 70% FOR THE SEEDED AREAS. CONTRACTOR SHALL DETERMINE ALL RATES OF APPLICATION NECESSARY TO PRODUCE THE REQUIRED STAND OF GRASS, AND SHALL FOLLOW THE APPLICATION PROCEDURES AS SPECIFIED HEREIN.
7. GIANT BERMUDA SEED, INCLUDING NK-37, SHALL NOT BE USED.

SEEDING SCHEDULE FOR TEMPORARY VEGETATION Ds3

SCHEDULE NO.	COMMON NAME OF SEED	RATE PER ACRE (LBS.)	PLANTING DATES
1	COMMON BERMUDA (HULLED)	210	MARCH 16 TO AUG. 31
	TALL FESCUE	140	
2	COMMON BERMUDA (UNHULLED)	175	SEPT. 1 TO MARCH 15
	ANNUAL RYEGRASS	175	

NOTES:

THE CONTRACTOR SHALL OBTAIN A SATISFACTORY STAND OF PERENNIAL VEGETATION WHOSE ROOT SYSTEM SHALL BE DEVELOPED SUFFICIENTLY TO SURVIVE DRY PERIODS AND WINTER WEATHER, AND BE CAPABLE OF RE-ESTABLISHMENT IN THE SPRING. THE PERENNIAL VEGETATIVE COVER SHALL HAVE A MINIMUM COVERAGE DENSITY OF 70% FOR THE SEEDED AREAS. CONTRACTOR SHALL DETERMINE ALL RATES OF APPLICATION NECESSARY TO PRODUCE THE REQUIRED STAND OF GRASS, AND SHALL FOLLOW THE APPLICATION PROCEDURES AS SPECIFIED HEREIN.

SEEDING SCHEDULE FOR PERMANENT VEGETATION

SCHEDULE NO.	COMMON NAME OF SEED	RURAL RATE	URBAN RATE[1]	PLANTING DATES
3[3]	COMMON BERMUDA (HULLED)[2]	30	30	MARCH 1 TO AUG. 14
	WEEPING LOVEGRASS[2]	10	10	
	SERICEA LESPEDEZA (SCARIFIED)[2]	50	50	
4[3]	COMMON BERMUDA (UNHULLED)[2]	40	40	AUG. 5 TO FEB. 28
	WEEPING LOVEGRASS[2]	10	10	
	SERICEA LESPEDEZA (UNHULLED, UNSCARIFIED)[2]	80	80	
	RESEEDING CRIMSON CLOVER[4]	20	0	
	RYE GRAIN	20	0	

NOTES:

1. INCLUDES RURAL AREAS ADJACENT TO WELL-DEVELOPED LAWNS.
2. NOT REQUIRED ON SHOULDERS, MEDIANS, ECT., AND SLOPES UNDER 5 FEET IN HEIGHT
3. GIANT BERMUDA SEED, INCLUDING NK-37, SHALL NOT BE USED.
4. RESEEDING CRIMSON CLOVER SHALL BE INOCULATED IN ACCORDANCE WITH SUBSECTION 810.05. DO NOT PLANT CLOVER IN MEDIANS OR IN RURAL AREAS ADJACENT TO WELL-DEVELOPED LAWNS.
5. PENSACOLA BAHIA SHALL BE ALLOWED ONLY AS SHOWN IN SEEDING SCHEDULES 3 AND 4 AT THE RATE OF 50 POUNDS PER ACRE ONLY WHEN SEEDING PIT AREAS THAT ARE GOVERNED BY THE SOUTH CAROLINA MINING ACT. OTHERWISE, DO NOT INCLUDE BAHIA SEED IN THE MIX.

THE CONTRACTOR SHALL OBTAIN A SATISFACTORY STAND OF PERENNIAL VEGETATION WHOSE ROOT SYSTEM SHALL BE DEVELOPED SUFFICIENTLY TO SURVIVE DRY PERIODS AND WINTER WEATHER, AND BE CAPABLE OF RE-ESTABLISHMENT IN THE SPRING. THE PERENNIAL VEGETATIVE COVER SHALL HAVE A MINIMUM COVERAGE DENSITY OF 70% FOR THE SEEDED AREAS. CONTRACTOR SHALL DETERMINE ALL RATES OF APPLICATION NECESSARY TO PRODUCE THE REQUIRED STAND OF GRASS, AND SHALL FOLLOW THE APPLICATION PROCEDURES AS SPECIFIED HEREIN.

THE CONTRACTOR MAY INCLUDE QUANTITIES OF RYE GRAIN AND MILLET IN SCHEDULE 1 AND 3 IN ORDER TO ESTABLISH QUICK GROUND COVER FOR EROSION CONTROL PURPOSES.

SEEDING SCHEDULE FOR TEMPORARY VEGETATION

SCHEDULE NO.	COMMON NAME OF SEED	RATE PER ACRE (LBS.)	PLANTING DATES
1	ANNUAL SUDAN GRASS (SWEET OR TIFF)	40	APRIL 1- AUGUST 15
2	BROWN TOP MILLET	50	APRIL 1- AUGUST 15
3	RYE GRAIN	55	AUGUST 16- MARCH 31

OAT GRAIN IS TO BE ADDED TO ALL SCHEDULES, IF SEEDING DATE IS BETWEEN MARCH 1 AND APRIL 16, AT THE RATE OF 10 POUNDS PER ACRE.

THE CONTRACTOR SHALL OBTAIN A SATISFACTORY STAND OF VEGETATION THAT IS CAPABLE OF EROSION CONTROL. CONTRACTOR SHALL DETERMINE ALL RATES OF APPLICATION NECESSARY TO PRODUCE THE REQUIRED RESULTS. THE TEMPORARY VEGETATION SHALL PROVIDE MINIMUM DENSITY COVERAGE OF 70% OF THE SEEDED AREA.

CONSTRUCTION SEQUENCE:

1. EXCAVATE END ZONE TRACK EXTENSION AREA.
2. INSTALL UNDER DRAINAGE SYSTEM.
3. FINE GRADE TRACK AND INFIELD AREAS.
4. PAVE TRACK AND INSTALL SYNTHETIC SURFACING.
5. PAINT TRACK LINES AND FINISH REMAINING SITE IMPROVEMENTS.
6. GRADE AND SEED PERIMETER TIE IN POINTS.
7. FINAL STABILIZATION OF ALL DENUDED AREAS.
8. PER SEEDING SCHEDULE, WATER AND MAINTAIN TO INSURE PROPER GROUND COVERAGE.
9. UPON APPROVAL BY HORRY COUNTY, REMOVE ALL TEMPORARY EROSION CONTROL DEVICES.

EROSION CONTROL LEGEND

SYMBOL	PRACTICE	DESCRIPTION
IP	INLET PROTECTION	A TEMPORARY SEDIMENT BARRIER LAID AROUND A STORM DRAIN INLET TO PREVENT SEDIMENT FROM ENTERING THE DRAINAGE SYSTEM.
OP	OUTLET PROTECTION	RIP RAP CHANNEL / BANK PLACED BELOW DRAINAGE OUTLETS TO REDUCE THE VELOCITY OF FLOW, EROSION, AND STABILIZE GRADES DOWNSTREAM OF OUTLET STRUCTURES.
CD	TEMPORARY CHECK DAM	RIP RAP BANK PLACED BELOW DRAINAGE OUTLETS TO REDUCE THE VELOCITY OF FLOW, EROSION AND STABILIZE GRADES DOWN STREAM OF DRAINAGE OUTLETS.
SF	SILT FENCE	A TEMPORARY STRUCTURE USED TO SLOW THE VELOCITY OF RUN-OFF, CAUSE SEDIMENT DEPOSITION AT THE STRUCTURE, AND FILTER SEDIMENT FROM RUN-OFF.
SF_2	DOUBLE ROW SILT FENCE	A TEMPORARY STRUCTURE USED TO SLOW THE VELOCITY OF RUN-OFF, CAUSE SEDIMENT DEPOSITION AT THE STRUCTURE, AND FILTER SEDIMENT FROM RUN-OFF.
CL	CONSTRUCTION LIMITS	A DEFINED AREA THAT ALL LAND DISTURBANCE WILL OCCUR DURING CONSTRUCTION.
ECB	PERMANENT EROSION CONTROL MATTING (HIGH PERFORMANCE TRM PYRAMAT BY SI GEOSOLUTIONS OR EQUAL)	A PERMANENT REINFORCEMENT MAT TO PREVENT SOIL EROSION AND MAINTAIN PERMANENT GROUND COVER.
Ds3	DISTURBED AREA STABILIZATION (WITH TEMPORARY VEGETATION)	ESTABLISHING PERMANENT VEGETATIVE COVER SUCH AS TREES, SHRUBS, VINES, GRASSES, SOD, OR LEGUMES ON DISTURBED AREAS.
ST	SEDIMENT TUBE	SEDIMENT TUBE PLACED IN EXISTING OR PROPOSED DITCH SECTIONS TO REDUCE THE VELOCITY OF FLOW, EROSION AND STABILIZE GRADES DOWN STREAM OR DRAINAGE OUTLETS.
CE	CONSTRUCTION ENTRANCE	A STONE STABILIZED PAD LOCATED AT ANY POINT THAT TRAFFIC WILL BE LEAVING A CONSTRUCTION SITE TO A PUBLIC RIGHT-OF-WAY, STREET, ALLEY, SIDEWALK, OR PARKING PLOT WHICH WILL REDUCE OR ELIMINATE THE TRANSPORT OF MUD FROM THE CONSTRUCTION SITE.

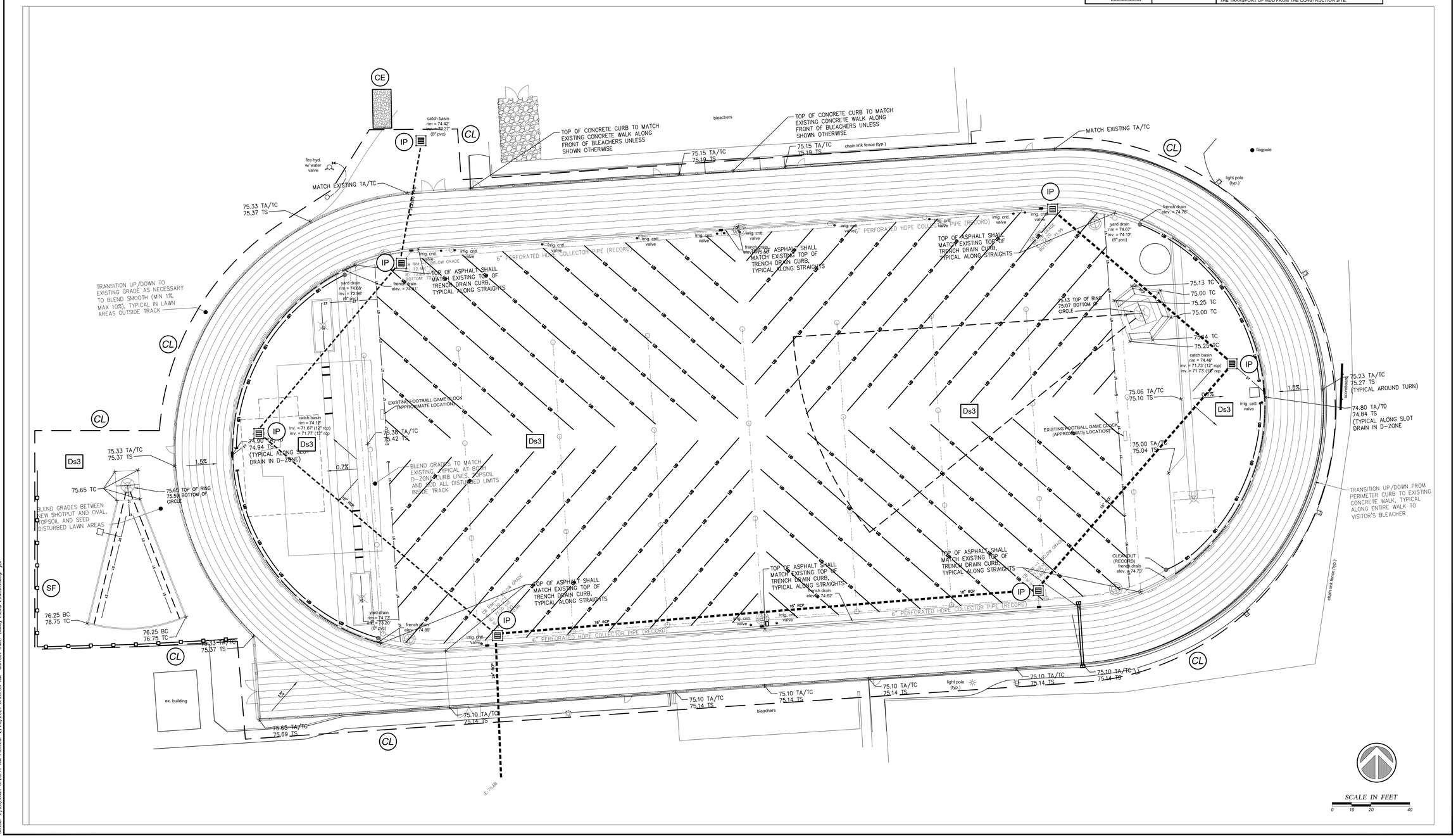

Drawing Copyright © 2016

CHA
1298 Professional Drive
Myrtle Beach, SC 29577-5896
843.692.3201 x184 • www.thecompanies.com

HCS Horry County Schools

DDC ENGINEERS
Consulting Engineers, Surveyors, Planners, Landscape Architects & Environmentalists
1298 Professional Dr., Myrtle Beach, SC 29577
Phone: (843) 692-3200 Fax: (843) 692-3210

HORRY COUNTY SCHOOLS

OFFICE OF FACILITIES
1160 E. HIGHWAY 501
CONWAY, SC 29526

SOUTH CAROLINA CERTIFICATE OF AUTHORIZATION
BOLTON & MENK SOUTHEAST, LLC
No. 6475

SOUTH CAROLINA PROFESSIONAL ENGINEER
No. 29814
ERIC K. SANFORD
2/22/21

IT IS A VIOLATION OF LAW FOR ANY PERSON, UNLESS THEY ARE ACTING UNDER THE DIRECTION OF A LICENSED PROFESSIONAL ENGINEER, ARCHITECT, LANDSCAPE ARCHITECT OR LAND SURVEYOR TO ALTER AN ITEM IN ANY WAY. IF AN ITEM BEARING THE STAMP OF A LICENSED PROFESSIONAL IS ALTERED, THE ALTERING ENGINEER, ARCHITECT, LANDSCAPE ARCHITECT OR LAND SURVEYOR SHALL STAMP THE DOCUMENT AND INCLUDE THE NOTATION "ALTERED BY" FOLLOWED BY THEIR SIGNATURE, THE DATE OF SUCH ALTERATION, AND A SPECIFIC DESCRIPTION OF THE ALTERATION.

AYNOR HIGH SCHOOL
TRACK AND FIELD
ATHLETIC FACILITY
IMPROVEMENTS PROGRAM

No.	Submittal / Revision	App'd	By	Date

SEDIMENT AND EROSION
CONTROL PLAN
PHASE II

Designed By:	Drawn By:	Checked By:
EKS	KJG	EKS
Issue Date:	Project No:	Scale:
2/17/21	20095E	1" = 20'

Drawing No.:
C-511

File: J:\PLANS\2020\20095E - HORRY COUNTY SCHOOLS PHASE 2 TRACK AND FIELD IMPROVEMENTS\EVAYNOR\20095E-AYNOR-TRACK-ERO.DWG
Saved: 2/23/2021 8:28:11 AM Plotted: 2/23/2021 8:28:30 AM Current User: Bailey Evans LastSaveby: jbe

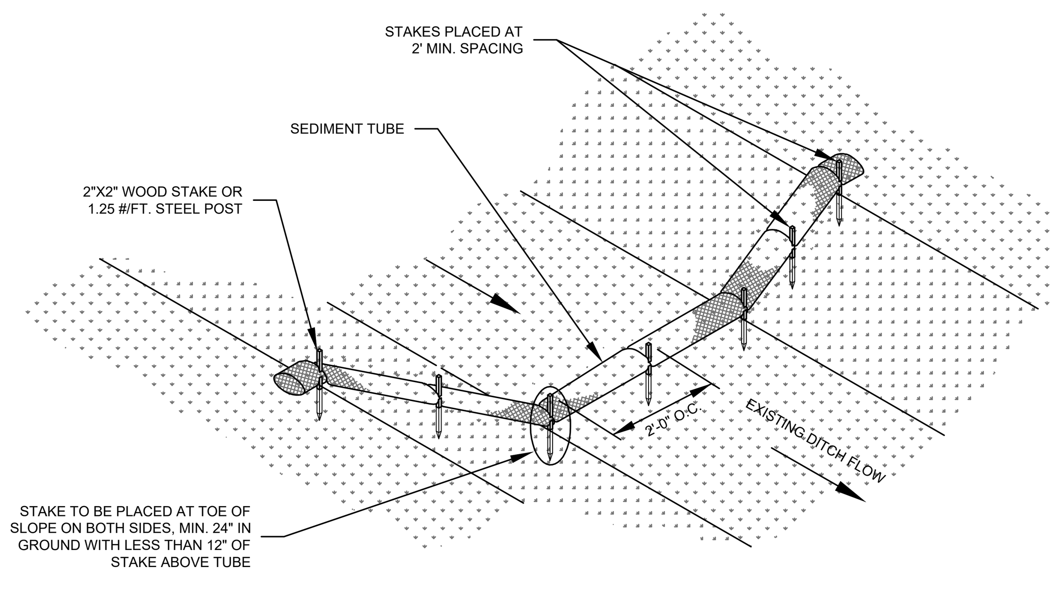

SEDIMENT TUBE CHECK DAM DETAIL (NO BLANKET)

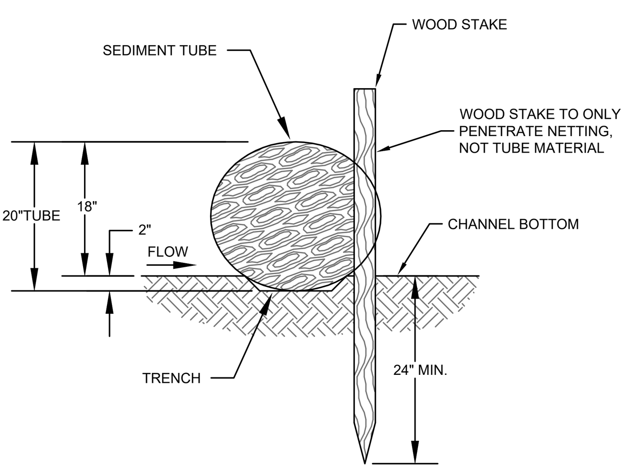

1 1/8" x 1 1/8" x 48" WOODEN STAKES ARE RECOMMENDED FOR 20" SEDIMENT LOGS.

STAKE DETAIL (WITH TRENCH)

SEDIMENT TUBES - GENERAL NOTES

1. SEDIMENT TUBES MAY BE INSTALLED ALONG CONTOURS, IN DRAINAGE CONVEYANCE CHANNELS, AND AROUND INLETS TO HELP PREVENT OFF SITE DISCHARGE OF SEDIMENT LADEN STORM WATER RUNOFF.
2. SEDIMENT TUBES ARE ELONGATED TUBES OF COMPACTED GEOTEXTILES, CURLED EXCELSIOR WOOD, NATURAL COCONUT FIBER, OR HARDWOOD MULCH. STRAW, PINE NEEDLE AND LEAF MULCH FILLED SEDIMENT TUBES ARE NOT PERMITTED.
3. THE OUTER NETTING OF THE SEDIMENT TUBE SHOULD CONSIST OF SEAMLESS, HIGH DENSITY POLYETHYLENE PHOTODEGRADABLE MATERIALS TREATED WITH ULTRAVIOLET STABILIZERS OR A SEAMLESS, HIGH DENSITY POLYETHYLENE NON DEGRADABLE MATERIAL.
4. SEDIMENT TUBES, WHEN USED AS CHECKS WITHIN CHANNELS, SHOULD RANGE BETWEEN 18 INCHES AND 24 INCHES DEPENDING ON CHANNEL DIMENSIONS. DIAMETERS OUTSIDE THIS RANGE MAY BE ALLOWED WHERE NECESSARY WHEN APPROVED.
5. CURLED EXCELSIOR WOOD, OR NATURAL COCONUT PRODUCTS THAT ARE ROLLED UP TO CREATE A SEDIMENT TUBE ARE NOT ALLOWED.
6. SEDIMENT TUBES SHOULD BE STAKED USING WOODEN STAKES (2" X 2") OR STEEL POSTS (STANDARD "U" OR "T" SECTIONS WITH A MINIMUM WEIGHT OF 1.25 POUNDS PER FOOT) AT A MINIMUM OF 48 INCHES IN LENGTH PLACED ON 2 FOOT CENTERS.
7. INSTALL ALL SEDIMENT TUBES TO ENSURE THAT NO GAPS EXIST BETWEEN THE SOIL AND THE BOTTOM OF THE TUBE. MANUFACTURER'S RECOMMENDATIONS SHOULD ALWAYS BE CONSULTED BEFORE INSTALLATION.
8. THE ENDS OF ADJACENT SEDIMENT TUBES SHOULD BE OVERLAPPED 6 INCHES TO PREVENT FLOW AND SEDIMENT FROM PASSING THROUGH THE FIELD JOINT.
9. SEDIMENT TUBES SHOULD NOT BE STACKED ON TOP OF ONE ANOTHER, UNLESS RECOMMENDED BY MANUFACTURER.
10. EACH SEDIMENT TUBE SHOULD BE INSTALLED IN A TRENCH WITH A DEPTH EQUAL TO 1/5 THE DIAMETER OF THE SEDIMENT TUBE.
11. SEDIMENT TUBES SHOULD CONTINUE UP THE SIDE SLOPES A MINIMUM OF 1 FOOT ABOVE THE DESIGN FLOW DEPTH OF THE CHANNEL.
12. INSTALL STAKES AT A DIAGONAL FACING INCOMING RUNOFF.

SEDIMENT TUBES - INSPECTION & MAINTENANCE

1. THE KEY TO FUNCTIONAL SEDIMENT TUBES IS WEEKLY INSPECTIONS, ROUTINE MAINTENANCE AND REGULAR SEDIMENT REMOVAL.
2. REGULAR INSPECTIONS OF SEDIMENT TUBES SHALL BE CONDUCTED ONCE EVERY CALENDAR WEEK AND, AS RECOMMENDED, WITHIN 24 HOURS AFTER EACH RAINFALL EVEN THAT PRODUCES 1/2 INCH OR MORE OF PRECIPITATION.
3. ATTENTION TO SEDIMENT ACCUMULATIONS IN FRONT OF THE SEDIMENT TUBE IS EXTREMELY IMPORTANT. ACCUMULATED SEDIMENT SHOULD BE CONTINUALLY MONITORED AND REMOVED WHEN NECESSARY.
4. REMOVE ACCUMULATED SEDIMENT WHEN IT REACHES 1/3 THE HEIGHT OF THE SEDIMENT TUBE.
5. REMOVED SEDIMENT SHALL BE PLACED IN STOCKPILE STORAGE AREAS OR SPREAD THINLY ACROSS DISTURBED AREA. STABILIZE THE REMOVED SEDIMENT AFTER IT IS RELOCATED.
6. LARGE DEBRIS, TRASH AND LEAVES SHOULD BE REMOVED FROM IN FRONT OF TUBES WHEN FOUND.
7. IF EROSION CAUSES THE EDGES TO FALL TO A HEIGHT EQUAL TO OR BELOW THE HEIGHT OF THE SEDIMENT TUBE, REPAIRS SHOULD BE MADE IMMEDIATELY TO PREVENT RUNOFF FROM BYPASSING TUBE.
8. SEDIMENT TUBES SHOULD BE REMOVED AFTER THE CONTRIBUTING DRAINAGE AREA HAS BEEN COMPLETELY STABILIZED. PERMANENT VEGETATION SHOULD REPLACE AREAS FROM WHICH SEDIMENT TUBES HAVE BEEN REMOVED.

SEDIMENT TUBE SPACING

SLOPE	MAX. SEDIMENT TUBE SPACING
LESS THAN 2%	150-FEET
2%	100-FEET
3%	75-FEET
4%	50-FEET
5%	40-FEET
6%	30-FEET
GREATER THAN 6%	25-FEET

ST SEDIMENT TUBE DETAIL
SCALE: N.T.S.

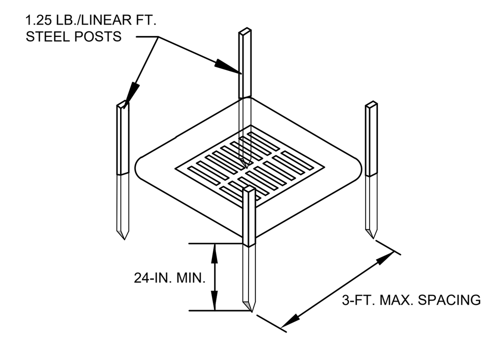

POST INSTALLATION DETAIL

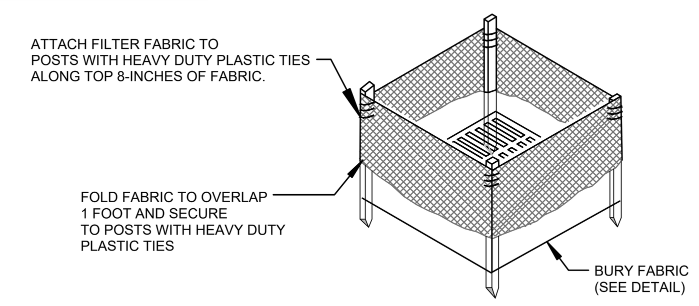

FILTER FABRIC INSTALLATION DETAIL

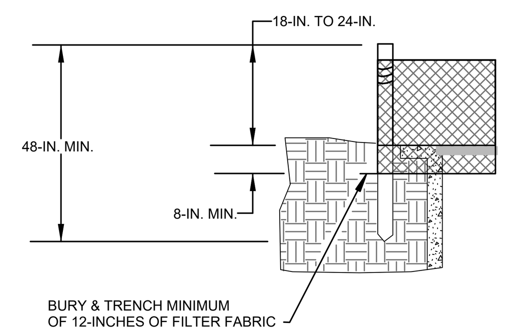

FILTER FABRIC BURIAL DETAIL

TYPE A - POST REQUIREMENTS

1. SILT FENCE POSTS MUST BE 48 INCH LONG STEEL POSTS THAT MEET, AT A MINIMUM, THE FOLLOWING PHYSICAL CHARACTERISTICS.
   - COMPOSED OF A HIGH STRENGTH STEEL WITH A MINIMUM YIELD STRENGTH OF 50,000 PSI.
   - INCLUDE A STANDARD "T" SECTION WITH A NOMINAL FACE WIDTH OF 1.38 INCHES AND A NOMINAL "T" LENGTH OF 1.48 INCHES.
   - WEIGH 1.25 POUNDS PER FOOT (±8%).
2. POSTS SHALL BE EQUIPPED WITH PROJECTIONS TO AID IN FASTENING OF FILTER FABRIC.
3. INSTALL POSTS TO A MINIMUM OF 24 INCHES. A MINIMUM HEIGHT OF 1 TO 2 INCHES ABOVE THE FABRIC SHALL BE MAINTAINED, AND A MAXIMUM HEIGHT OF 3 FEET SHALL BE MAINTAINED ABOVE THE GROUND.
4. POST SPACING SHALL BE AT A MAXIMUM OF 3 FEET ON CENTER.

TYPE A - FILTER FABRIC REQUIREMENTS

1. SILT FENCE MUST BE COMPOSED OF WOVEN GEOTEXTILE FILTER FABRIC THAT CONSISTS OF THE FOLLOWING REQUIREMENTS:
   - COMPOSED OF FIBERS CONSISTING OF LONG CHAIN SYNTHETIC POLYMERS OF AT LEAST 85% BY WEIGHT OF POLYOLEFINS, POLYESTERS OR POLYAMIDES THAT ARE FORMED INTO A NETWORK SUCH THAT THE FILAMENTS OR YARNS RETAIN DIMENSIONAL STABILITY RELATIVE TO EACH OTHER;
   - FREE OF ANY TREATMENT OR COATING WHICH MIGHT ADVERSELY ALTER ITS PHYSICAL PROPERTIES AFTER INSTALLATION;
   - FREE OF ANY DEFECTS OR FLAWS THAT SIGNIFICANTLY AFFECT ITS PHYSICAL AND/OR FILTERING PROPERTIES; AND,
   - HAVE A MINIMUM WIDTH OF 36 INCHES.
2. USE ONLY FABRIC APPEARING ON SC DOT'S QUALIFIED PRODUCTS LISTING (QPL), APPROVAL SHEET #34 MEETING THE REQUIREMENTS OF THE MOST CURRENT EDITION OF THE SC DOT STANDARD SPECIFICATIONS FOR HIGHWAY CONSTRUCTION.
3. 12 INCHES OF THE FABRIC SHOULD BE PLACED WITHIN EXCAVATED TRENCH AND TOED IN WHEN THE TRENCH IS BACKFILLED.
4. FILTER FABRIC SHALL BE PURCHASED IN CONTINUOUS ROLLS AND CUT TO THE LENGTH OF THE BARRIER TO AVOID JOINTS.
5. FILTER FABRIC SHALL BE INSTALLED AT A MINIMUM OF 24 INCHES ABOVE THE GROUND.

TYPE A - INSPECTION & MAINTENANCE

1. THE KEY TO FUNCTIONAL INLET PROTECTION IS WEEKLY INSPECTIONS, ROUTINE MAINTENANCE AND REGULAR SEDIMENT REMOVAL.
2. REGULAR INSPECTIONS OF INLET PROTECTION SHALL BE CONDUCTED ONCE EVERY CALENDAR WEEK AND, AS RECOMMENDED, WITHIN 24 HOURS AFTER EACH RAINFALL EVEN THAT PRODUCES 1/2 INCH OR MORE OF PRECIPITATION.
3. ATTENTION TO SEDIMENT ACCUMULATIONS ALONG THE FILTER FABRIC IS EXTREMELY IMPORTANT. ACCUMULATED SEDIMENT SHOULD BE CONTINUALLY MONITORED AND REMOVED WHEN NECESSARY.
4. REMOVE ACCUMULATED SEDIMENT WHEN IT REACHES 1/3 THE HEIGHT OF THE FILTER FABRIC. WHEN A SUMP IS INSTALLED IN FRONT OF THE FABRIC, SEDIMENT SHOULD BE REMOVED WHEN IT FILLS APPROXIMATELY 1/3 THE DEPTH OF THE SUMP.
5. REMOVED SEDIMENT SHALL BE PLACED IN STOCKPILE STORAGE AREAS OR SPREAD THINLY ACROSS DISTURBED AREA. STABILIZE THE REMOVED SEDIMENT AFTER IT IS RELOCATED.
6. CHECK FOR AREAS WHERE STORM WATER RUNOFF HAS ERODED A CHANNEL BENEATH THE FILTER FABRIC, BENEATH THE FILTER FABRIC, OR WHERE THE FABRIC HAS SAGGED OR COLLAPSED DUE TO RUNOFF OVERTOPPING THE INLET PROTECTION.
7. CHECK FOR TEARS WITHIN THE FILTER FABRIC, AREAS WHERE FABRIC HAS BEGUN TO DECOMPOSE, AND FOR ANY OTHER CIRCUMSTANCE THAT MAY RENDER THE INLET PROTECTION INEFFECTIVE. REMOVE DAMAGED FABRIC AND REINSTALL NEW FILTER FABRIC IMMEDIATELY.
8. INLET PROTECTION STRUCTURES SHOULD BE REMOVED AFTER ALL THE DISTURBED AREAS ARE PERMANENTLY STABILIZED. REMOVE ALL CONSTRUCTION MATERIAL AND SEDIMENT, AND DISPOSE OF THEM PROPERLY. GRADE THE DISTURBED AREA TO THE ELEVATION OF THE DROP INLET STRUCTURE CREST. STABILIZE ALL BARE AREAS IMMEDIATELY.

IP INLET PROTECTION
SCALE: N.T.S.

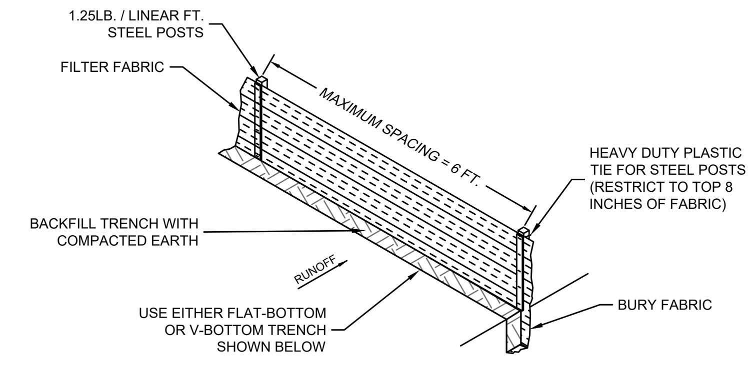

SILT FENCE INSTALLATION

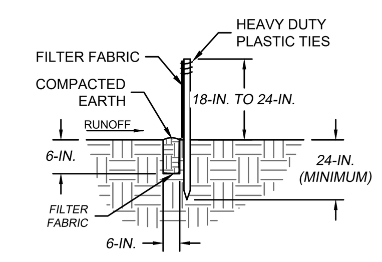

FLAT-BOTTOM TRENCH DETAIL

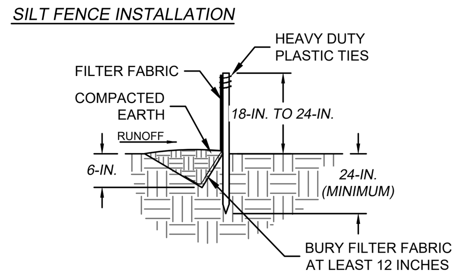

V-SHAPED TRENCH DETAIL

SILT FENCE - GENERAL NOTES:

1. DO NOT PLACE SILT FENCE ACROSS CHANNELS OR IN OTHER AREAS SUBJECT TO CONCENTRATED FLOWS. SILT FENCE SHOULD NOT BE USED AS A VELOCITY CONTROL BMP. CONCENTRATED FLOWS ARE ANY FLOWS GREATER THAN 0.5 CFS.
2. MAXIMUM SHEET OR OVERLAND FLOW PATH LENGTH TO THE SILT FENCE SHALL BE 100 FEET.
3. MAXIMUM SLOPE STEEPNESS (NORMAL [PERPENDICULAR] TO THE FENCE LINE) SHALL BE 2:1.
4. SILT FENCE JOINTS, WHEN NECESSARY SHALL BE COMPLETED BY ONE OF THE FOLLOWING OPTIONS:
   - WRAP EACH FABRIC TOGETHER AT A SUPPORT POST WITH BOTH ENDS FASTENED TO THE POST, WITH A 1 FOOT MINIMUM OVERLAP.
   - OVERLAP SILT FENCE BY INSTALLING 3 FEET PAST THE SUPPORT POST TO WHICH THE NEW SILT FENCE ROLL IS ATTACHED. ATTACH OLD ROLL TO NEW ROLL WITH HEAVY DUTY PLASTIC TIES; OR
   - OVERLAP ENTIRE WIDTH OF EACH SILT FENCE ROLL FROM ONE SUPPORT POST TO THE NEXT SUPPORT POST.
5. ATTACH FILTER FABRIC TO THE STEEL POSTS USING HEAVY DUTY PLASTIC TIES THAT ARE EVENLY SPACED WITHIN THE TOP 8 INCHES OF THE FABRIC.
6. INSTALL THE SILT FENCE PERPENDICULAR TO THE DIRECTION OF THE STORM WATER FLOW AND PLACE THE SILT FENCE THE PROPER DISTANCE FROM THE TOE OF STEEP SLOPES TO PROVIDE SEDIMENT STORAGE AND ACCESS FOR MAINTENANCE AND CLEAN OUT.
7. INSTALL SILT FENCE CHECKS (TIE-BACKS) EVERY 50-100 FEET, DEPENDENT ON SLOPE, ALONG SILT FENCE THAT IS INSTALLED WITH SLOPE AND WHERE CONCENTRATED FLOWS ARE EXPECTED OR ARE DOCUMENTED ALONG THE PROPOSED / INSTALLED SILT FENCE.

SILT FENCE - POST REQUIREMENTS

1. SILT FENCE POSTS MUST BE 48 INCH LONG STEEL POSTS THAT MEET, AT A MINIMUM, THE FOLLOWING PHYSICAL CHARACTERISTICS.
   - COMPOSED OF A HIGH STRENGTH STEEL WITH A MINIMUM YIELD STRENGTH OF 50,000 PSI.
   - INCLUDE A STANDARD "T" SECTION WITH A NOMINAL FACE WIDTH OF 1.38 INCHES AND A NOMINAL "T" LENGTH OF 1.48 INCHES.
   - WEIGH 1.25 POUNDS PER FOOT (±8%).
2. POSTS SHALL BE EQUIPPED WITH PROJECTIONS TO AID IN FASTENING OF FILTER FABRIC.
3. STEEL POSTS MAY NEED TO HAVE A METAL SOIL STABILIZATION PLATE WELDED NEAR THE BOTTOM WHEN INSTALLED ALONG STEEP SLOPES OR INSTALLED IN LOOSE SOILS. THE PLATE SHOULD HAVE A MINIMUM CROSS SECTION OF 17 SQUARE INCHES AND BE COMPOSED OF 15 GAUGE STEEL, AT A MINIMUM. THE METAL SOIL STABILIZATION PLATE SHOULD BE COMPLETELY BURIED.
4. INSTALL POSTS A MINIMUM OF 24 INCHES. A MINIMUM HEIGHT OF 1 TO 2 INCHES ABOVE THE FABRIC SHALL BE MAINTAINED, AND A MAXIMUM HEIGHT OF 3 FEET SHALL BE MAINTAINED ABOVE THE GROUND.
5. POST SPACING SHALL BE AT A MAXIMUM OF 6 FEET ON CENTER.

SILT FENCE - FABRIC REQUIREMENTS

1. SILT FENCE MUST BE COMPOSED OF WOVEN GEOTEXTILE FILTER FABRIC THAT CONSISTS OF THE FOLLOWING REQUIREMENTS:
   - COMPOSED OF FIBERS CONSISTING OF LONG CHAIN SYNTHETIC POLYMERS OF AT LEAST 85% BY WEIGHT OF POLYOLEFINS, POLYESTERS OR POLYAMIDES THAT ARE FORMED INTO A NETWORK SUCH THAT THE FILAMENTS OR YARNS RETAIN DIMENSIONAL STABILITY RELATIVE TO EACH OTHER;
   - FREE OF ANY TREATMENT OR COATING WHICH MIGHT ADVERSELY ALTER ITS PHYSICAL PROPERTIES AFTER INSTALLATION;
   - FREE OF ANY DEFECTS OR FLAWS THAT SIGNIFICANTLY AFFECT ITS PHYSICAL AND/OR FILTERING PROPERTIES; AND,
   - HAVE A MINIMUM WIDTH OF 36 INCHES.
2. USE ONLY FABRIC APPEARING ON SC DOT'S QUALIFIED PRODUCTS LISTING (QPL), APPROVAL SHEET #34 MEETING THE REQUIREMENTS OF THE MOST CURRENT EDITION OF THE SC DOT STANDARD SPECIFICATIONS FOR HIGHWAY CONSTRUCTION.
3. 12 INCHES OF THE FABRIC SHOULD BE PLACED WITHIN EXCAVATED TRENCH AND TOED IN WHEN THE TRENCH IS BACKFILLED.
4. FILTER FABRIC SHALL BE PURCHASED IN CONTINUOUS ROLLS AND CUT TO THE LENGTH OF THE BARRIER TO AVOID JOINTS.
5. FILTER FABRIC SHALL BE INSTALLED AT A MINIMUM OF 24 INCHES ABOVE THE GROUND.

SILT FENCE - INSPECTION & MAINTENANCE

1. THE KEY TO FUNCTIONAL SILT FENCE IS WEEKLY INSPECTIONS, ROUTINE MAINTENANCE AND REGULAR SEDIMENT REMOVAL.
2. REGULAR INSPECTIONS OF SILT FENCE SHALL BE CONDUCTED ONCE EVERY CALENDAR WEEK AND, AS RECOMMENDED, WITHIN 24 HOURS AFTER EACH RAINFALL EVEN THAT PRODUCES 1/2 INCH OR MORE OF PRECIPITATION.
3. ATTENTION TO SEDIMENT ACCUMULATIONS ALONG THE SILT FENCE IS EXTREMELY IMPORTANT. ACCUMULATED SEDIMENT SHOULD BE CONTINUALLY MONITORED AND REMOVED WHEN NECESSARY.
4. REMOVE ACCUMULATED SEDIMENT WHEN IT REACHES 1/3 THE HEIGHT OF THE SILT FENCE.
5. REMOVED SEDIMENT SHALL BE PLACED IN STOCKPILE STORAGE AREAS OR SPREAD THINLY ACROSS DISTURBED AREA. STABILIZE THE REMOVED SEDIMENT AFTER IT IS RELOCATED.
6. CHECK FOR AREAS WHERE STORM WATER RUNOFF HAS ERODED A CHANNEL BENEATH THE SILT FENCE, OR WHERE THE FENCE HAS SAGGED OR COLLAPSED DUE TO RUNOFF OVERTOPPING THE SILT FENCE. INSTALL CHECKS/TIE-BACKS AND/OR REINSTALL SILT FENCE, AS NECESSARY.
7. CHECK FOR TEARS WITHIN THE SILT FENCE, AREAS WHERE SILT FENCE HAS BEGUN TO DECOMPOSE, AND FOR ANY OTHER CIRCUMSTANCE THAT MAY RENDER THE SILT FENCE INEFFECTIVE. REMOVE DAMAGED SILT FENCE AND REINSTALL NEW SILT FENCE IMMEDIATELY.
8. SILT FENCE SHOULD BE REMOVED WITHIN 30 DAYS AFTER FINAL STABILIZATION IS ACHIEVED AND ONCE IT IS REMOVED, THE RESULTING DISTURBED AREA SHALL BE PERMANENTLY STABILIZED.

SF CONSTRUCTION OF A SILT FENCE
SCALE: N.T.S.

EROSION CONTROL NOTES:

1. TOTAL DEVELOPMENT AREA : 3.90 ± ACRES
2. DISTURBED AREA THIS PHASE: 1.16 ± ACRES
3. IF NECESSARY, SLOPES, WHICH EXCEED EIGHT (8) VERTICAL FEET SHOULD BE STABILIZED WITH SYNTHETIC OR VEGETATIVE MATS, IN ADDITION TO HYDROSEEDING. IT MAY BE NECESSARY TO INSTALL TEMPORARY SLOPE DRAINS DURING CONSTRUCTION. TEMPORARY BERMS MAY BE NEEDED UNTIL THE SLOPE IS BROUGHT TO GRADE.
4. STABILIZATION MEASURES SHALL BE INITIATED AS SOON AS PRACTICABLE IN PORTIONS OF THE SITE WHERE CONSTRUCTION ACTIVITIES HAVE TEMPORARILY OR PERMANENTLY CEASED, BUT IN NO CASE MORE THAN FOURTEEN (14) DAYS AFTER WORK HAS CEASED, EXCEPT AS STATED BELOW:
   - WHERE STABILIZATION BY THE 14TH DAY IS PRECLUDED BY SNOW COVER OR FROZEN GROUND CONDITIONS STABILIZATION MEASURES MUST BE INITIATED AS SOON AS PRACTICABLE.
   - WHERE CONSTRUCTION ACTIVITY ON A PORTION OF THE SITE IS TEMPORARILY CEASED, AND EARTH-DISTURBING ACTIVITIES WILL BE RESUMED WITHIN 14 DAYS, TEMPORARY STABILIZATION MEASURES DO NOT HAVE TO BE INITIATED ON THAT PORTION OF THE SITE.
5. ALL SEDIMENT AND EROSION CONTROL DEVICES SHALL BE INSPECTED EVERY CALENDAR WEEK. IF PERIODIC INSPECTION OR OTHER INFORMATION INDICATES THAT A BMP HAS BEEN INAPPROPRIATELY OR INCORRECTLY INSTALLED, THE PERMITTEE MUST ADDRESS THE NECESSARY REPLACEMENT OR MODIFICATION REQUIRED TO CORRECT THE BMP WITHIN 48 HOURS OF IDENTIFICATION.
6. PROVIDE SILT FENCE AND/OR OTHER CONTROL DEVICES, AS MAY BE REQUIRED, TO CONTROL SOIL EROSION DURING UTILITY CONSTRUCTION. ALL DISTURBED AREAS SHALL BE CLEANED, GRADED AND STABILIZED WITH GRASSING IMMEDIATELY AFTER THE UTILITY INSTALLATION. FILL, COVER AND TEMPORARY SEEDING AT THE END OF EACH DAY ARE RECOMMENDED. IF WATER IS ENCOUNTERED WHILE TRENCHING, THE WATER SHOULD BE FILTERED TO REMOVE ANY SEDIMENTS BEFORE BEING PUMPED BACK INTO ANY WATERS OF THE STATE.
7. ALL EROSION CONTROL DEVICES SHALL BE PROPERLY MAINTAINED DURING ALL PHASES OF CONSTRUCTION UNTIL THE COMPLETION OF ALL CONSTRUCTION ACTIVITIES AND ALL DISTURBED AREAS HAVE BEEN STABILIZED. ADDITIONAL CONTROL DEVICES MAY BE REQUIRED DURING CONSTRUCTION IN ORDER TO CONTROL EROSION AND/OR OFF SITE SEDIMENTATION. ALL TEMPORARY CONTROL DEVICES SHALL BE REMOVED ONCE CONSTRUCTION IS COMPLETE AND THE SITE IS STABILIZED.
8. THE CONTRACTOR MUST TAKE NECESSARY ACTION TO MINIMIZE THE TRACKING OF MUD ONTO PAVED ROADWAYS FROM CONSTRUCTION AREAS AND THE GENERATION OF DUST. THE CONTRACTOR SHALL DAILY REMOVE MUD/SOIL FROM PAVEMENT, AS MAY BE REQUIRED.
9. RESIDENTIAL SUBDIVISIONS REQUIRE EROSION CONTROL FEATURES FOR INFRASTRUCTURE AS WELL AS FOR INDIVIDUAL LOT CONSTRUCTION. INDIVIDUAL PROPERTY OWNERS SHALL FOLLOW THESE PLANS DURING CONSTRUCTION OR OBTAIN APPROVAL OF AN INDIVIDUAL PLAN IN ACCORDANCE WITH S.C. REG. 72-300 ET SEQ. AND SCR 100000.
10. TEMPORARY DIVERSION BERMS AND/OR DITCHES WILL BE PROVIDED AS NEEDED DURING CONSTRUCTION TO PROTECT WORK AREAS FROM UPSLOPE RUNOFF AND/OR TO DIVERT SEDIMENT-LADEN WATER TO APPROPRIATE TRAPS OR STABLE OUTLETS.
11. ALL WATERS OF THE STATE (WoS), INCLUDING WETLANDS, ARE TO BE FLAGGED OR OTHERWISE CLEARLY MARKED IN THE FIELD. A DOUBLE ROW OF SILT FENCE IS TO BE INSTALLED IN ALL AREAS WHERE A 50 FOOT BUFFER CANNOT BE MAINTAINED BETWEEN THE DISTURBED AREA AND ALL WoS. A 10 FOOT BUFFER SHOULD BE MAINTAINED BETWEEN THE LAST ROW OF SILT FENCE AND ALL WoS.
12. LITTER, CONSTRUCTION DEBRIS, OILS, FUELS AND BUILDING PRODUCTS WITH SIGNIFICANT POTENTIAL FOR IMPACT (SUCH AS STOCKPILES OF FRESHLY TREATED LUMBER) AND CONSTRUCTION CHEMICALS THAT COULD BE EXPOSED TO STORM WATER MUST BE PREVENTED FROM BECOMING A POLLUTANT SOURCE IN STORM WATER DISCHARGES.
13. A COPY OF THE SWPPP, INSPECTION RECORDS, AND RAINFALL DATA MUST BE RETAINED AT THE CONSTRUCTION SITE OR A NEARBY LOCATION EASILY ACCESSIBLE DURING NORMAL BUSINESS HOURS, FROM THE DATE OF COMMENCEMENT OF CONSTRUCTION ACTIVITIES TO THE DATE THAT FINAL STABILIZATION IS REACHED.
14. INITIATE STABILIZATION MEASURES ON ANY EXPOSED STEEP SLOPE (3H:1V OR GREATER) WHERE LAND DISTURBING ACTIVITIES HAVE PERMANENTLY OR TEMPORARILY CEASED, AND WILL NOT RESUME FOR A PERIOD OF 7 CALENDAR DAYS.
15. MINIMIZE SOIL COMPACTION AND, UNLESS INFEASIBLE, PRESERVE TOPSOIL.
16. MINIMIZE THE DISCHARGE OF POLLUTANTS FROM EQUIPMENT AND VEHICLE WASHING, WHEEL WASH WATER, AND OTHER WASH WATERS. WASH WATERS MUST BE TREATED IN A SEDIMENT BASIN OR ALTERNATIVE CONTROL THAT PROVIDES EQUIVALENT OR BETTER TREATMENT PRIOR TO DISCHARGE.
17. MINIMIZE THE DISCHARGE OF POLLUTANTS FROM DEWATERING OF TRENCHES AND EXCAVATED AREAS. THESE DISCHARGES ARE TO BE ROUTED THROUGH APPROPRIATE BMPs (SEDIMENT BASIN, FILTER BAG, ETC.).
18. THE FOLLOWING DISCHARGES FROM SITES ARE PROHIBITED:
   - WASTEWATER FROM WASHOUT OF CONCRETE, UNLESS MANAGED BY AN APPROPRIATE CONTROL;
   - WASTEWATER FROM WASHOUT AND CLEANOUT OF STUCCO, PAINT, FORM RELEASE OILS CURING COMPOUNDS AND OTHER CONSTRUCTION MATERIALS;
   - FUELS, OILS, OR OTHER POLLUTANTS USED IN VEHICLE AND EQUIPMENT OPERATION AND MAINTENANCE; AND
   - SOAPS OR SOLVENTS USED IN VEHICLE AND EQUIPMENT WASHING.
19. AFTER CONSTRUCTION ACTIVITIES BEGIN, INSPECTIONS MUST BE CONDUCTED AT A MINIMUM OF AT LEAST ONCE EVERY CALENDAR WEEK AND MUST BE CONDUCTED UNTIL FINAL STABILIZATION IS REACHED ON ALL AREAS OF THE CONSTRUCTION SITE.
20. IF EXISTING BMPs NEED TO BE MODIFIED OR IF ADDITIONAL BMPs ARE NECESSARY TO COMPLY WITH THE REQUIREMENTS OF THIS PERMIT AND / OR SC'S WATER QUALITY STANDARDS, IMPLEMENTATION MUST BE COMPLETED BEFORE THE NEXT STORM EVENT WHENEVER PRACTICABLE. IF IMPLEMENTATION BEFORE THE NEXT STORM EVENT IS IMPRACTICABLE, THE SITUATION MUST BE DOCUMENTED IN THE SWPPP AND ALTERNATIVE BMPs MUST BE IMPLEMENTED AS SOON AS REASONABLY POSSIBLE.
21. A PRE-CONSTRUCTION CONFERENCE MUST BE HELD FOR EACH CONSTRUCTION SITE WITH AN APPROVED ON-SITE SWPPP PRIOR TO THE IMPLEMENTATION OF CONSTRUCTION ACTIVITIES. FOR NON-LINEAR PROJECTS THAT DISTURB 10 ACRES OR MORE THIS CONFERENCE MUST BE HELD ON-SITE UNLESS THE DEPARTMENT HAS APPROVED OTHERWISE.
22. THE CONTRACTOR SHALL BE RESPONSIBLE FOR MAINTAINING ALL SILT BARRIERS AND SEDIMENT CONTROL INSTALLATIONS DURING CONSTRUCTION UNTIL THE COMPLETION OF THE SITE DEVELOPMENT.
23. EROSION CONTROL DEVICES MUST BE INSTALLED IMMEDIATELY AFTER LAND DISTURBANCE OCCURS. THE LOCATION OF SOME OF THE CONTROL DEVICES MAY BE ALTERED FROM THAT SHOWN ON THE APPROVED PLANS, IF DRAINAGE PATTERNS DURING CONSTRUCTION VARY FROM THE FINAL DRAINAGE PATTERNS. IT SHALL BE THE CONTRACTORS RESPONSIBILITY TO PROVIDE SOIL EROSION CONTROL FOR ALL DRAINAGE PATTERNS DURING ALL STAGES OF CONSTRUCTION. ALL INADEQUACIES IN SOIL EROSION CONTROL DURING ANY PHASE OF CONSTRUCTION MUST BE REPORTED IMMEDIATELY TO THE ENGINEER.
24. THE CONTRACTOR SHALL MAINTAIN ALL EROSION CONTROL MEASURES UNTIL PERMANENT VEGETATION HAS BEEN ESTABLISHED. THE CONTRACTOR SHALL INSPECT EROSION CONTROL MEASURES AT THE END OF EACH WORKING DAY TO ENSURE PROPER FUNCTIONING OF ALL DEVICES.
25. FAILURE TO INSTALL, OPERATE AND MAINTAIN ALL EROSION CONTROL MEASURES, AS SHOWN ON THE APPROVED PLANS OR AS DIRECTED BY THE ENGINEER AND/OR OCRM WILL RESULT IN ALL WORK ON THE CONSTRUCTION SITE BEING STOPPED UNTIL PROPER CORRECTIVE MEASURES HAVE BEEN MET, AS REQUIRED AND/OR DIRECTED.
26. ALL LAND DISTURBING ACTIVITIES REQUIRES COMPLIANCE UNDER THE NPDES GENERAL PERMIT FOR STORM WATER DISCHARGES FROM THE CONSTRUCTION ACTIVITIES (PERMIT NO. SCR100000). ANY NONCOMPLIANCE WITH THESE REGULATIONS IS A VIOLATION OF THE FEDERAL CLEAN WATER ACT AND MAY REQUIRE ENFORCEMENT ACTION BY HORRY COUNTY OR SCDHEC.
27. CONTRACTOR SHALL PROVIDE A WATER TIGHT ENCLOSURE FOR STORAGE OF THE OCRM CERTIFIED PLANS AND INSPECTION REPORTS. ENCLOSURE SHALL BE LOCATED IN AN AREA ACCESSIBLE TO REGULATORY PERSONNEL.
28. ALL STOCKPILE TO BE PROTECTED WITH SILT FENCE.
29. ALL CONCRETE TO BE WASHED OUT IN AN APPROVED AREA.

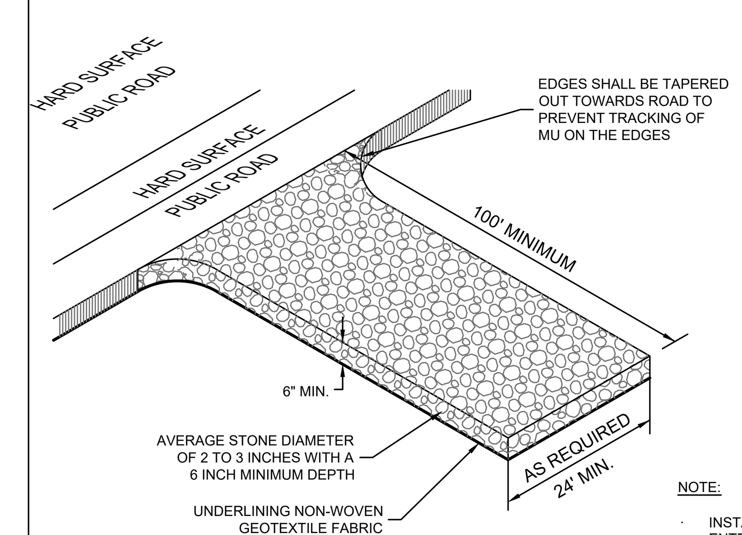

NOTE:

- INSTALL A CULVERT PIPE ACROSS THE ENTRANCE WHEN NEEDED TO PROVIDE POSITIVE DRAINAGE.
- DIVERT ALL SURFACE RUNOFF AND DRAINAGE FROM THE STONE PAD TO A SEDIMENT TRAP OR BASIN OR OTHER SEDIMENT TRAPPING STRUCTURE.
- ENTRANCES SHALL COMPLY WITH SCDOT STANDARD DRAWING 651-115-01

CE STABILIZIED CONSTRUCTION ENTRANCE
SCALE: N.T.S.

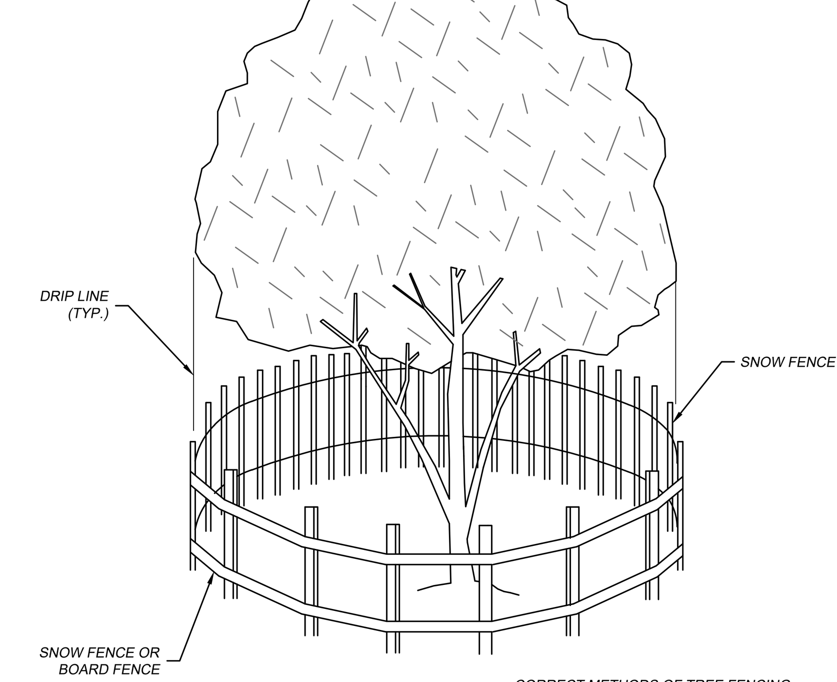

CORRECT METHODS OF TREE FENCING

TREE PROTECTION
SCALE: N.T.S.

Drawing Copyright © 2016

CHA
1298 Professional Drive
Myrtle Beach, SC 29577-5896
843.692.3205 x284 • www.chacompanies.com

HCS Horry County Schools

DDC ENGINEERS®
Consulting Engineers, Surveyors, Planners, Landscape Architects & Environmentalists
1298 Professional Dr., Myrtle Beach, SC 29577
Phone: (843) 692-3200 Fax: (843) 692-3210

HORRY COUNTY SCHOOLS

OFFICE OF FACILITIES
1160 E. HIGHWAY 501
CONWAY, SC 29526

SOUTH CAROLINA
BOLTON & MENK SOUTHEAST, LLC
No. 6475
CERTIFICATE OF AUTHORIZATION

SOUTH CAROLINA LICENSED PROFESSIONAL ENGINEER
No. 29814
2/22/21
ERIC K. SANFORD

IT IS A VIOLATION OF LAW FOR ANY PERSON, UNLESS THEY ARE ACTING UNDER THE DIRECTION OF A LICENSED PROFESSIONAL ENGINEER, ARCHITECT, LANDSCAPE ARCHITECT OR LAND SURVEYOR TO ALTER AN ITEM IN ANY WAY. IF AN ITEM BEARING THE STAMP OF A LICENSED PROFESSIONAL IS ALTERED, THE ALTERING ENGINEER, ARCHITECT, LANDSCAPE ARCHITECT OR LAND SURVEYOR SHALL STAMP THE DOCUMENT AND INCLUDE THE NOTATION "ALTERED BY" FOLLOWED BY THEIR SIGNATURE, THE DATE OF SUCH ALTERATION, AND A SPECIFIC DESCRIPTION OF THE ALTERATION.

AYNOR HIGH SCHOOL
TRACK AND FIELD
ATHLETIC FACILITY
IMPROVEMENTS PROGRAM

No.	Submittal / Revision	App'd.	By	Date

SEDIMENT AND EROSION CONTROL DETAILS

Designed By:	Drawn By:	Checked By:
EKS	KJG	EKS
Issue Date:	Project No:	Scale:
2/1/21	20095E	NO SCALE

Drawing No.:
C-512

File: J:\PLANS\2020\20095E - HORRY COUNTY SCHOOLS PHASE 2 TRACK AND FIELD IMPROVEMENTS\E\AYNOR\20095E-AYNOR-TRACK-ERO.DWG
Saved: 2/23/2021 8:28:11 AM Plotted: 2/23/2021 8:28:35 AM Current User: Bailey Evans LastSavedBy: jbe

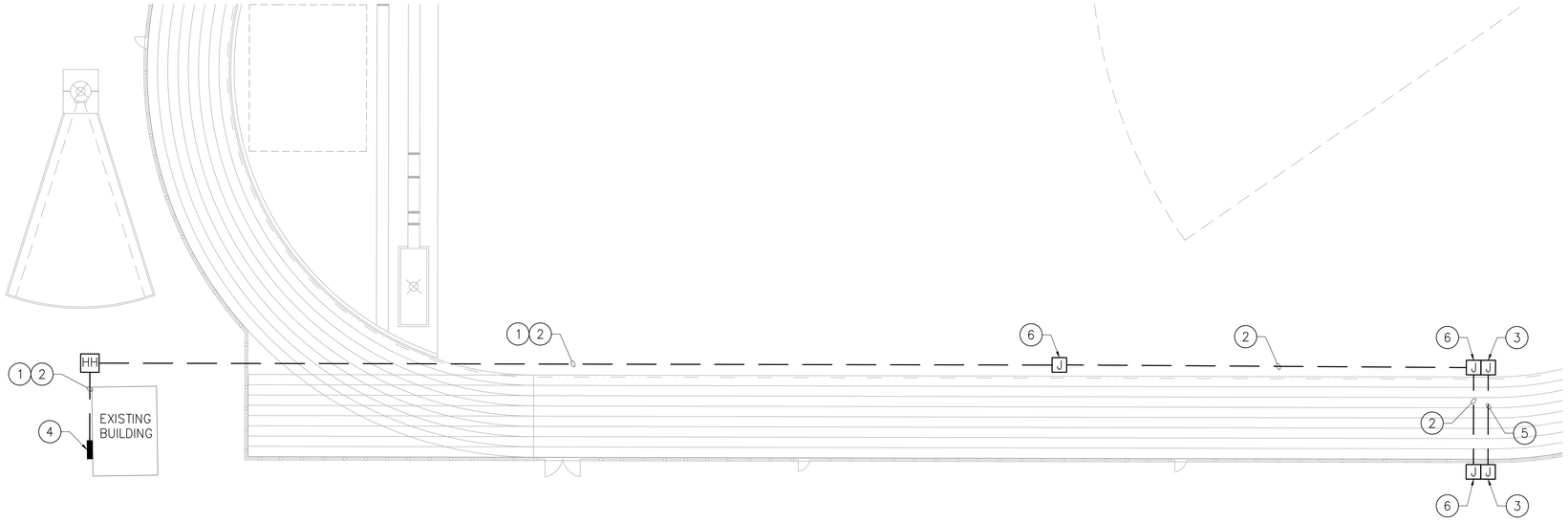

AYNOR HS ELECTRICAL SITE PLAN

SCALE: 1" = 20'

ABBREVIATIONS

A	AMPERE
AC	ALTERNATING CURRENT
AF	AMPERE FRAME
AFF/G	ABOVE FINISHED FLOOR/GRADE
AIC	AMPERE INTERRUPTING CAPACITY
AT	AMPERE TRIP
AUX	AUXILIARY
AWG	AMERICAN WIRE GAUGE
BTM	BOTTOM
BKR	BREAKER
BLDG	BUILDING
C	CONDUIT
CAB	CABINET
CB	CIRCUIT BREAKER
CIR	CIRCUIT
CKT	CIRCUIT
℄	CENTER LINE
CO	COMPANY
COMM	COMMUNICATIONS
CONN	CONNECTION, CONNECT
CTRL	CONTROL
CU	COPPER
△	DELTA CONNECTION
DIA	DIAMETER
DISC	DISCONNECT
DIST	DISTRIBUTION
DIV	DIVISION
DN	DOWN
DWG	DRAWING
EA	EACH
EF	EXHAUST FAN
EL	ELEVATION
ELEC	ELECTRIC(AL)
ENCL	ENCLOSURE
EQUIP	EQUIPMENT
ETR	EXISTING TO REMAIN
EXT	EXTERIOR
F	FUSE(D)
FC	FOOTCANDLES
FIXT	FIXTURE
FLR	FLOOR
FT	FOOT (FEET)
FUT	FUTURE
G, GND	GROUND
GALV	GALVANIZE(D)
GC	GENERAL CONTRACTOR
GFI	GROUND FAULT CIRCUIT INTERRUPTER
GFP	GROUND FAULT PROTECTION
HGT	HEIGHT
HPS	HIGH PRESSURE SODIUM
HTR	HEATER
HV	HIGH VOLTAGE
HW	HOT WATER
ID	IDENTIFY, IDENTIFICATION
INCAND	INCANDESCENT
J-BOX	JUNCTION BOX
JCT	JUNCTION
KCM/Kcmil	THOUSAND CIRCULAR MILS
KVA	KILO VOLT AMPERE
KW	KILOWATT
LGT	LIGHTING
LT(S)	LIGHT(S)
LED	LIGHT EMITTING DIODE
L	LOUVER
MAX	MAXIMUM
MCB	MAIN CIRCUIT BREAKER
MC	METAL CLAD CABLE
MFR	MANUFACTURER
MH	METAL HALIDE
MECH	MECHANICAL
MIN	MINIMUM
MLO	MAIN LUGS ONLY
MT	MOUNT
MTD	MOUNTED
N	NORTH
NEC	NATIONAL ELECTRICAL CODE
NF	NON-FUSED
NL	NIGHT LIGHT
No/#	NUMBER
OL	OVERLOAD
P	POLE(S)
PNL	PANEL
PR	PAIR
PRI	PRIMARY
PWR	POWER
ø	PHASE
PT	PRESSURE TREATED
RECEPT	RECEPTACLE
RGS	RIGID GALVANIZED STEEL
RLY	RELAY
RM	ROOM
SEC	SECONDARY
SH	SHIELDED
SW	SWITCH
TEMP	TEMPORARY/TEMPERATURE
TB	TERMINAL BOARD
TYP	TYPICAL
UON	UNLESS OTHERWISE NOTED
V	VOLT, VOLTS
VA	VOLT-AMPERES
W	WATT, WIRE
W/	WITH
WP	WEATHERPROOF
XFMR/T	TRANSFORMER
Y	WYE CONNECTION

DEVICES AND APPURTENANCES

- DUPLEX RECEPTACLE
- TWO – 20 AMP DUPLEX RECEPTACLES UNDER SINGLE COVER
- J JUNCTION BOX

RACEWAYS

- CONDUIT CONCEALED OR EXPOSED AS SPECIFIED
- CONDUIT TURNING UP
- CONDUIT TURNING DOWN
- PP-1 1/3/5 — HOMERUN BACK TO PANEL (PANEL AND CIRCUITS INDICATED)
- CIRCUIT CONTINUED OR CONNECTED TO EQUIPMENT AS INDICATED
- UNDERGROUND CONDUIT

POWER DISTRIBUTION EQUIPMENT

- SURFACE MOUNTED BRANCH CIRCUIT PANELBOARD 240/120V, 1ø, 3W, UON
- HH — HAND HOLE
- CR — CONTROL RELAY PANEL

GENERAL

- (#) — NUMBER IN CIRCLE, WITH OR WITHOUT ARROW OR LEADER, REFER TO MATCHING NUMBERED CODED NOTE
- X / XXX — DETAIL CALLOUT

GENERAL NOTES

1. REFER TO CIVIL DRAWINGS FOR SYMBOLS ASSOCIATED WITH WORK, EQUIPMENT, ETC. BY OTHER(S).
2. ALL WORK SHOWN ON THE ELECTRICAL DRAWINGS SHALL BE BY THE ELECTRICAL CONTRACT UNLESS OTHERWISE INDICATED.
3. CONDUIT RUNS SHOWN ARE DIAGRAMMATIC UON. EXACT LOCATION OF ALL CONDUIT RUNS SHALL BE DETERMINED IN THE FIELD. COORDINATE INSTALLATIONS AND AVOID CONFLICT WITH PIPING, DUCTWORK, ACCESS DOORS AND WORK BY OTHER TRADES.
4. GENERAL NOTES APPLY TO ALL ELECTRICAL CONTRACT DRAWINGS.

CODED NOTES

1. 1" SCHEDULE 40 CONDUIT WITH (2)#6 AND (1)#6G FOR MIDFIELD RECEPTACLE FROM EXISTING PANEL
2. 1" SCHEDULE 40 PVC CONDUIT WITH (2)#4 AND (1)#4G FOR FINISH LINE RECEPTACLE FROM EXISTING PANEL.
3. PROVIDE COMMUNICATION JUNCTION BOX (SEE DETAILS 1 AND 2 ON C-602).
4. EXISTING POWER PANEL
5. 1 1/2" SCHEDULE 40 PVC CONDUIT WITH PULL STRING BETWEEN JUNCTION BOXES FOR INSTALLATION OF COMMUNICATION WIRING.
6. PROVIDE JUNCTION BOX WITH GFI RECEPTACLE (SEE DETAILS 1 & 2 ON C-602).

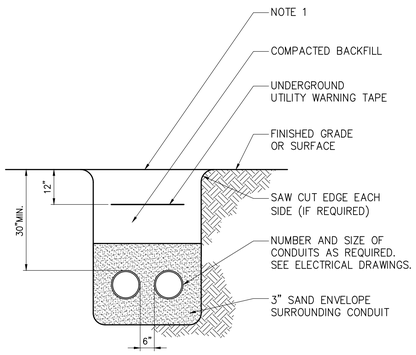

NOTE

1. REPLACE EXISTING SURFACE CONDITIONS IN KIND TO INCLUDE, BUT NOT LIMITED TO: CONCRETE, CRUSHED STONE, SELECT GRAVEL, ASPHALT, TOPSOIL AND GRASS.

1 TYPICAL DIRECT BURIED CONDUIT(S) DETAIL

– NOT TO SCALE

LOCATION: ?
MOUNTING: EXTERIOR WALL IN NEMA 3R ENCLOSURE
SOURCE: ?

PANEL ID: **EXISTING POWER PANEL**

VOLTS, PHASE, WIRE: 120/240V, 1ϕ, 3W
MAINS: XXXA
SHORT CIRCUIT RATING: 10KAIC

CKT	LOAD DESCRIPTION	CB AMPS/ POLE	CONN LOAD KVA	CONN LOAD KVA	CONN LOAD KVA	CONN LOAD KVA	CONN LOAD KVA	CONN LOAD KVA	CB AMPS/ POLE	LOAD DESCRIPTION	CKT
1	EXISTING LOAD TO REMAIN	20/1							30/2	EXISTING MAIN CIRCUIT BREAKER TO REMAIN	2
3	EXISTING LOAD TO REMAIN	20/1									4
5	MIDFIELD RECEPTACLES (NOTE 2)	20/1								SPACE	6
7	FINISH LINE RECEPTACLES (NOTE 2)									SPACE	8
			####	####	####	####	####	####			
			TOTAL kVA								
			####								

NOTES:
1. EXISTING POWER PANEL IS GE POWER MARK GOLD LOAD CENTER.
2. PROVIDE CIRCUIT BREAKER, TYPE TO MATCH EXISTING.

0 20 40
Scale in feet

CHA
1298 Professional Drive
Myrtle Beach, SC 29577-5896
843.692.5005 x284 • www.chacompanies.com

HCS Horry County Schools

DDC ENGINEERS

HORRY COUNTY SCHOOLS

OFFICE OF FACILITIES
1160 E. HIGHWAY 501
CONWAY, SC 29526

SOUTH CAROLINA CERTIFICATE OF AUTHORIZATION CHA, Inc. No. 3955

SOUTH CAROLINA PROFESSIONAL ENGINEER No. 24377 JAMES B. FUTSCHER

IT IS A VIOLATION OF LAW FOR ANY PERSON, UNLESS THEY ARE ACTING UNDER THE DIRECTION OF A LICENSED PROFESSIONAL ENGINEER, ARCHITECT, LANDSCAPE ARCHITECT OR LAND SURVEYOR TO ALTER AN ITEM IN ANY WAY. IF AN ITEM BEARING THE STAMP OF A LICENSED PROFESSIONAL ENGINEER, LANDSCAPE ARCHITECT, ARCHITECT, LANDSCAPE ARCHITECT OR LAND SURVEYOR SHALL STAMP THE DOCUMENT AND INCLUDE THE NOTATION "ALTERED BY" FOLLOWED BY THE STAMP, SIGNATURE, DATE OF SUCH ALTERATION, AND A SPECIFIC DESCRIPTION OF THE ALTERATION.

PHASE 2

AYNOR HS
GREEN SEA FLOYDS HS
NORTH MYRTLE HS

TRACK AND FIELD
ATHLETIC FACILITY
IMPROVEMENTS PROGRAM

No.	Submittal / Revision	App'd.	By	Date

AYNOR HS
ELECTRICAL SITE
PLAN

Designed By:	Drawn By:	Checked By:
SAM	SAM	JJD
Issue Date:	Project No:	Scale:
2/22/2021	36108	AS SHOWN

Drawing No.:
E-001

File: V:\PROJECTS\ANYKS\36108\CADD_ACAD\E-002-36108.DWG
Saved: 2/22/2021 2:23:13 PM Plotted: 2/22/2021 2:26:35 PM Current User: Mobidlis, Stefica LastSavedBy: 5427

SURVEY NOTES

1. THE MAP IS BASED ON A FIELD SURVEY COMPLETED BY DDC ENGINEERS IN JULY 2019

2. ELEVATIONS ARE REFERENCED TO THE NAVD 88 VERTICAL DATUM.

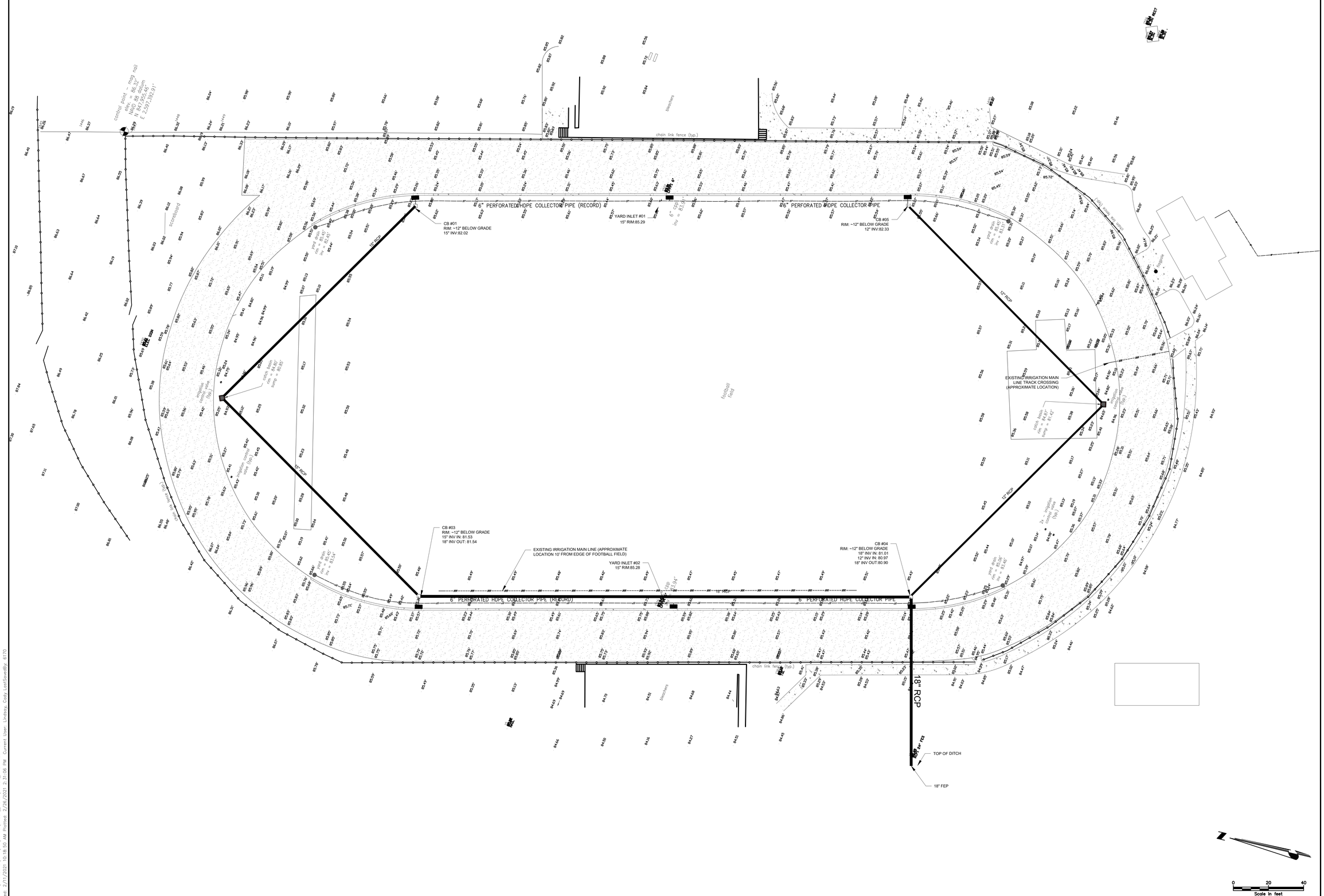

CHA
1258 Professional Drive
Myrtle Beach, SC 29577-5896
843.692.3355 x236 • www.chacompanies.com

HCS Horry County Schools

DDC ENGINEERS

HORRY COUNTY SCHOOLS

OFFICE OF FACILITIES
1160 E. HIGHWAY 501
CONWAY, SC 29526

SOUTH CAROLINA CERTIFICATE OF AUTHORIZATION CHA, Inc. No. 3955

SOUTH CAROLINA REGISTERED PROFESSIONAL ENGINEER No. 24401 2-22-2021 PATRICK N. GRAHAM

IT IS A VIOLATION OF LAW FOR ANY PERSON, UNLESS THEY ARE ACTING UNDER THE DIRECTION OF A LICENSED PROFESSIONAL ENGINEER, ARCHITECT, LANDSCAPE ARCHITECT OR LAND SURVEYOR, TO ALTER AN ITEM BEARING THE SEAL OF A LICENSED PROFESSIONAL ENGINEER, ARCHITECT, LANDSCAPE ARCHITECT OR LAND SURVEYOR. IF THE STAMP OF A LICENSED PROFESSIONAL IS ALTERED, THE ALTERING ENGINEER, ARCHITECT, LANDSCAPE ARCHITECT OR LAND SURVEYOR SHALL STAMP THE DOCUMENT AND INCLUDE THE NOTATION "ALTERED BY" FOLLOWED BY THEIR SIGNATURE, THE DATE OF SUCH ALTERATION, AND A SPECIFIC DESCRIPTION OF THE ALTERATION.

PHASE 2

AYNOR HS
GREEN SEA FLOYDS HS
NORTH MYRTLE HS

TRACK AND FIELD
ATHLETIC FACILITY
IMPROVEMENTS PROGRAM

No.	Submittal / Revision	App'd.	By	Date

GREEN SEA FLOYDS HS EXISTING CONDITIONS PLAN

Designed By:	Drawn By:	Checked By:
JRP	CL	PG
Issue Date:	Project No:	Scale:
2/22/2021	36108	AS SHOWN

Drawing No.:

C-020

File: V:\PROJECTS\ANYKS\36108\CADD_ACAD\C-020_PH2 – GSFHS.DWG
Saved: 2/11/2021 10:45:50 AM Plotted: 2/26/2021 2:31:06 PM Current User: Lindsay, Cory LastSaveBy: 6170

SURVEY NOTES

1. THE MAP IS BASED ON A FIELD SURVEY COMPLETED BY DDC ENGINEERS IN JULY 2019

2. ELEVATIONS ARE REFERENCED TO THE NAVD 88 VERTICAL DATUM.

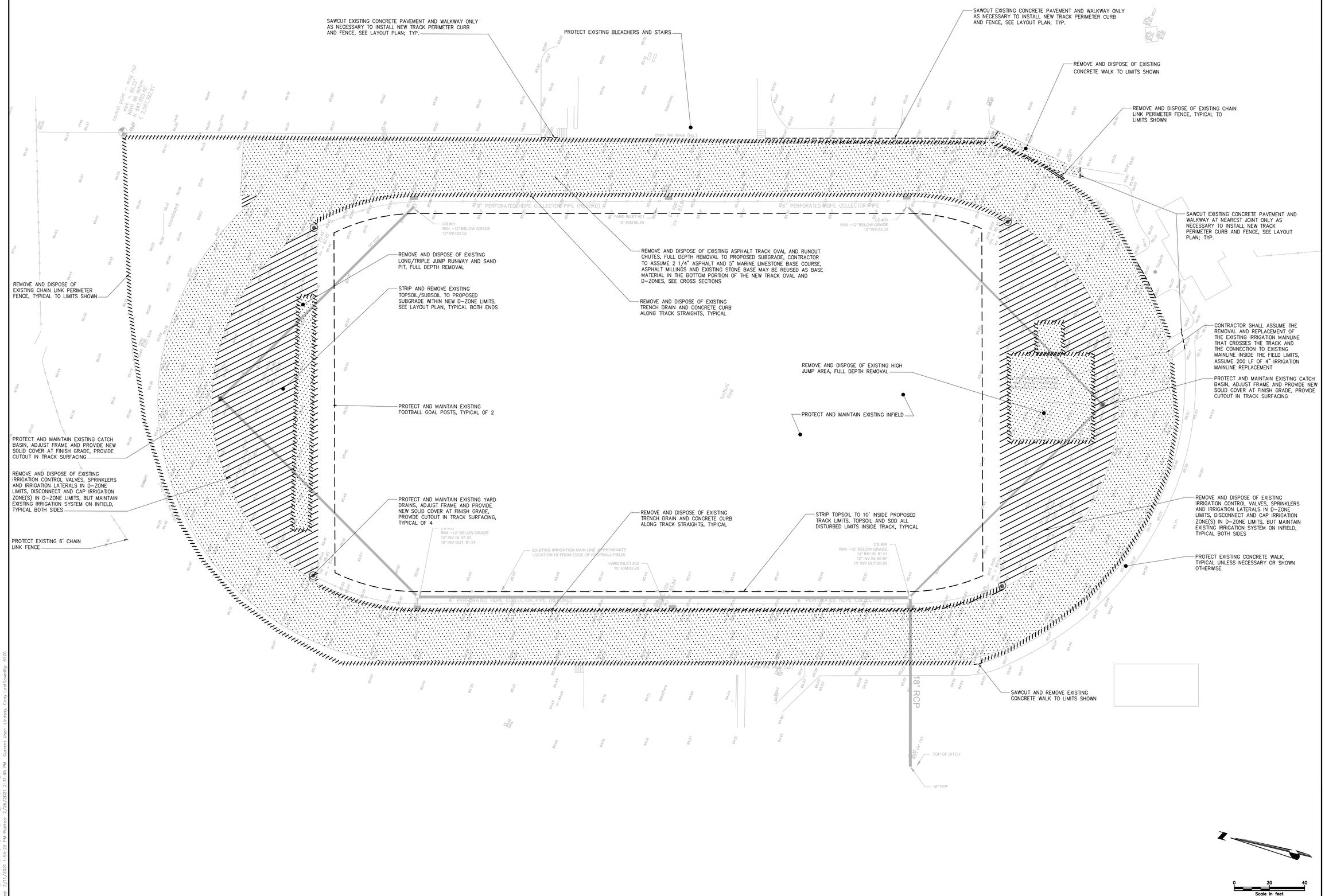

CHA
1258 Professional Drive
Myrtle Beach, SC 29577-5896
843.692.3105 x236 • www.chacompanies.com

HCS Horry County Schools

DDC ENGINEERS

HORRY COUNTY SCHOOLS

OFFICE OF FACILITIES
1160 E. HIGHWAY 501
CONWAY, SC 29526

SOUTH CAROLINA CERTIFICATE OF AUTHORIZATION
CHA, Inc.
No. 3955

SOUTH CAROLINA LICENSED PROFESSIONAL ENGINEER
No. 24401
2-22-2021
PATRICK N. GRAHAM

IT IS A VIOLATION OF LAW FOR ANY PERSON, UNLESS THEY ARE ACTING UNDER THE DIRECTION OF A LICENSED PROFESSIONAL ENGINEER, ARCHITECT, LANDSCAPE ARCHITECT OR LAND SURVEYOR, TO ALTER AN ITEM IN ANY WAY. IF AN ITEM BEARING THE STAMP OF A LICENSED PROFESSIONAL IS ALTERED, THE ALTERING ENGINEER, ARCHITECT, LANDSCAPE ARCHITECT OR LAND SURVEYOR SHALL STAMP THE DOCUMENT AND INCLUDE THE NOTATION "ALTERED BY" FOLLOWED BY THEIR SIGNATURE, THE DATE OF SUCH ALTERATION, AND A SPECIFIC DESCRIPTION OF THE ALTERATION.

PHASE 2

AYNOR HS
GREEN SEA FLOYDS HS
NORTH MYRTLE HS

TRACK AND FIELD
ATHLETIC FACILITY
IMPROVEMENTS PROGRAM

No.	Submittal / Revision	App'd.	By	Date

GREEN SEA FLOYDS
HS DEMOLITION
PLAN

Designed By:	Drawn By:	Checked By:
JRP	CL	PG
Issue Date:	Project No:	Scale:
2/22/2021	36108	AS SHOWN

Drawing No.:

C-021

File: V:\PROJECTS\ANY\K5\36108\CADD_ACAD\C-021.DWG
Saved: 2/11/2021 1:55:22 PM Revised: 2/26/2021 2:31:45 PM Current User: Lindsay, Cody LastSaveBy: 6170

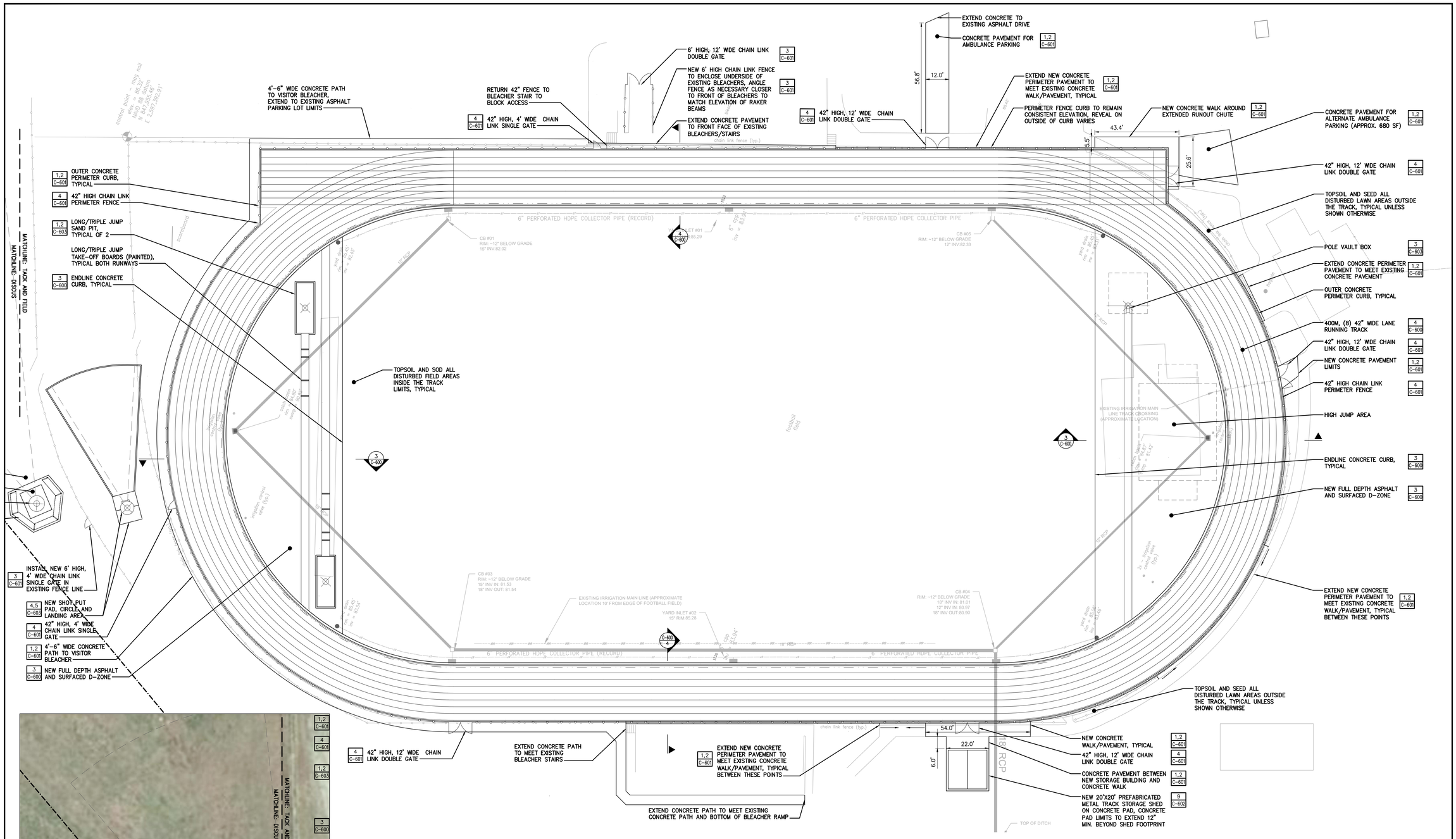

1 TRACK AND FIELD
SCALE:

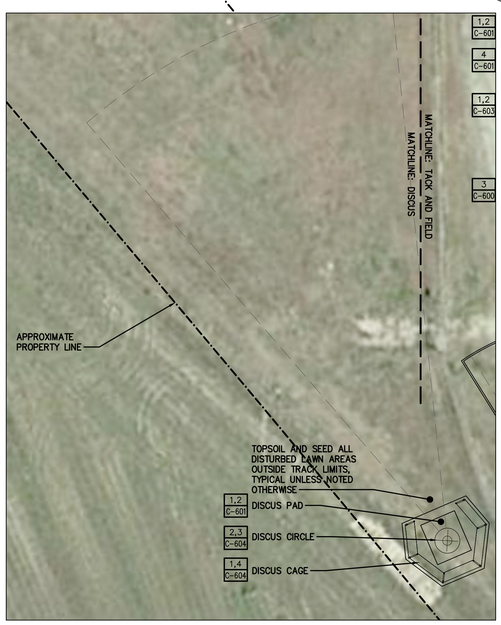

2 DISCUS
SCALE:

CHA
1258 Professional Drive
Myrtle Beach, SC 29577-5896
843.692.3105 x284 • www.chacompanies.com

HCS Horry County Schools

DDC ENGINEERS

HORRY COUNTY SCHOOLS

OFFICE OF FACILITIES
1160 E. HIGHWAY 501
CONWAY, SC 29526

SOUTH CAROLINA CERTIFICATE OF AUTHORIZATION CHA, Inc. No. 3955

SOUTH CAROLINA REGISTERED PROFESSIONAL ENGINEER No. 24401 2-22-2021 PATRICK N. GRAHAM

IT IS A VIOLATION OF LAW FOR ANY PERSON, UNLESS THEY ARE ACTING UNDER THE DIRECTION OF A LICENSED PROFESSIONAL ENGINEER, ARCHITECT, LANDSCAPE ARCHITECT OR LAND SURVEYOR TO ALTER AN ITEM IN ANY WAY. IF AN ITEM BEARING THE STAMP OF A LICENSED PROFESSIONAL ENGINEER, LANDSCAPE ARCHITECT OR LAND SURVEYOR SHALL STAMP THE DOCUMENT AND INCLUDE THE NOTATION "ALTERED BY" FOLLOWED BY THEIR SIGNATURE, THE DATE OF SUCH ALTERATION, AND A SPECIFIC DESCRIPTION OF THE ALTERATION.

PHASE 2

AYNOR HS
GREEN SEA FLOYDS HS
NORTH MYRTLE HS

TRACK AND FIELD
ATHLETIC FACILITY
IMPROVEMENTS PROGRAM

No.	Submittal / Revision	App'd	By	Date

GREEN SEA FLOYDS HS LAYOUT PLAN

Designed By:	Drawn By:	Checked By:
JRP	CL	PG
Issue Date:	Project No:	Scale:
2/22/2021	36108	AS SHOWN

Drawing No.:
C-120

File: V:\PROJECTS\ANY\V5\36108\CADD_ACAD\C-120_PH2 - GSFHS.DWG
Saved: 2/11/2021 11:03:27 AM Plotted: 2/26/2021 2:32:29 PM Current User: Lindsay, Cody LastSaveBy: 6170

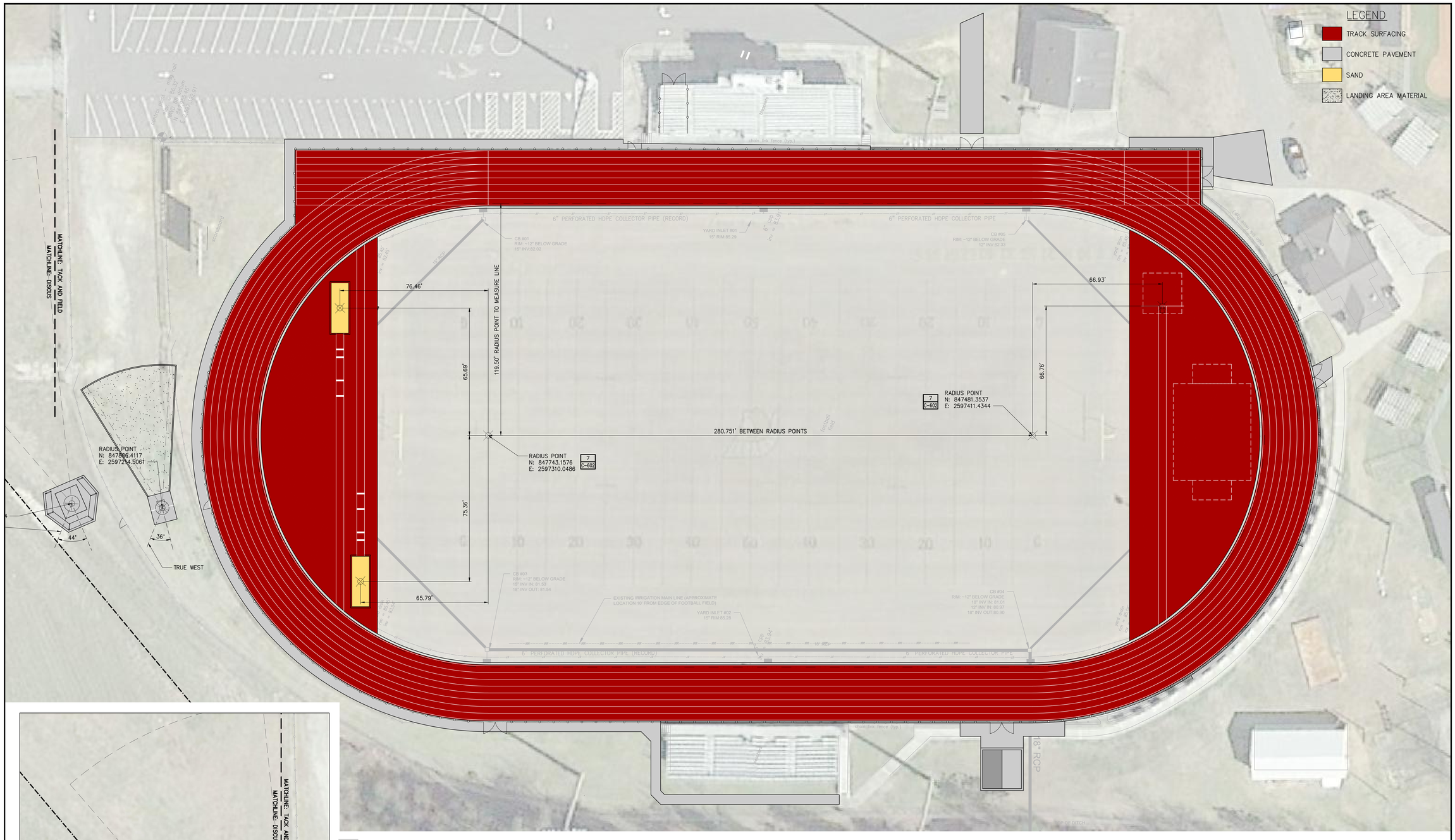

1 TRACK AND FIELD
SCALE:

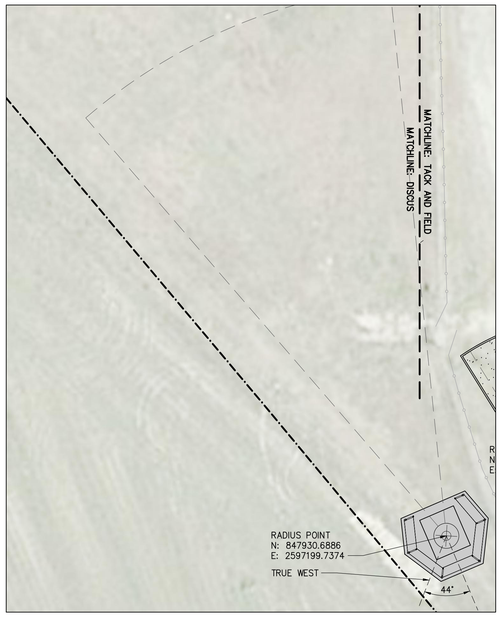

2 DISCUS
SCALE:

0 20 40
Scale in feet

CHA
1258 Professional Drive
Myrtle Beach, SC 29577-5896
843.692.3105 x284 • www.chacompanies.com

HCS Horry County Schools

DDC ENGINEERS

HORRY COUNTY SCHOOLS

OFFICE OF FACILITIES
1160 E. HIGHWAY 501
CONWAY, SC 29526

SOUTH CAROLINA CERTIFICATE OF AUTHORIZATION
CHA, Inc.
No. 3955

SOUTH CAROLINA REGISTERED PROFESSIONAL ENGINEER
No. 24401
2-22-2021
PATRICK N. GRAHAM

IT IS A VIOLATION OF LAW FOR ANY PERSON, UNLESS THEY ARE ACTING UNDER THE DIRECTION OF A LICENSED PROFESSIONAL ENGINEER, ARCHITECT, LANDSCAPE ARCHITECT OR LAND SURVEYOR, TO ALTER AN ITEM IN ANY WAY. IF AN ITEM BEARING THE STAMP OF A LICENSED PROFESSIONAL IS ALTERED, THE ALTERING ENGINEER, ARCHITECT, LANDSCAPE ARCHITECT OR LAND SURVEYOR SHALL STAMP THE DOCUMENT AND INCLUDE THE NOTATION "ALTERED BY" FOLLOWED BY their SIGNATURE, THE DATE OF SUCH ALTERATION, AND A SPECIFIC DESCRIPTION OF THE ALTERATION.

PHASE 2

AYNOR HS
GREEN SEA FLOYDS HS
NORTH MYRTLE HS

TRACK AND FIELD
ATHLETIC FACILITY
IMPROVEMENTS PROGRAM

No.	Submittal / Revision	App'd.	By:	Date

GREEN SEA FLOYDS HS SURFACING AND DIMENSION PLAN

Designed By:	Drawn By:	Checked By:
JRP	CL	PG
Issue Date:	Project No:	Scale:
2/22/2021	36108	AS SHOWN

Drawing No.:
C-121

File: V:\PROJECTS\ANY\K5\36108\CADD_ACAD\C-121_PH2 - GSFHS.DWG
Saved: 2/11/2021 11:16:43 AM Plotted: 2/26/2021 2:33:11 PM Current User: Lindsay, Cody LastSaveBy: 6170

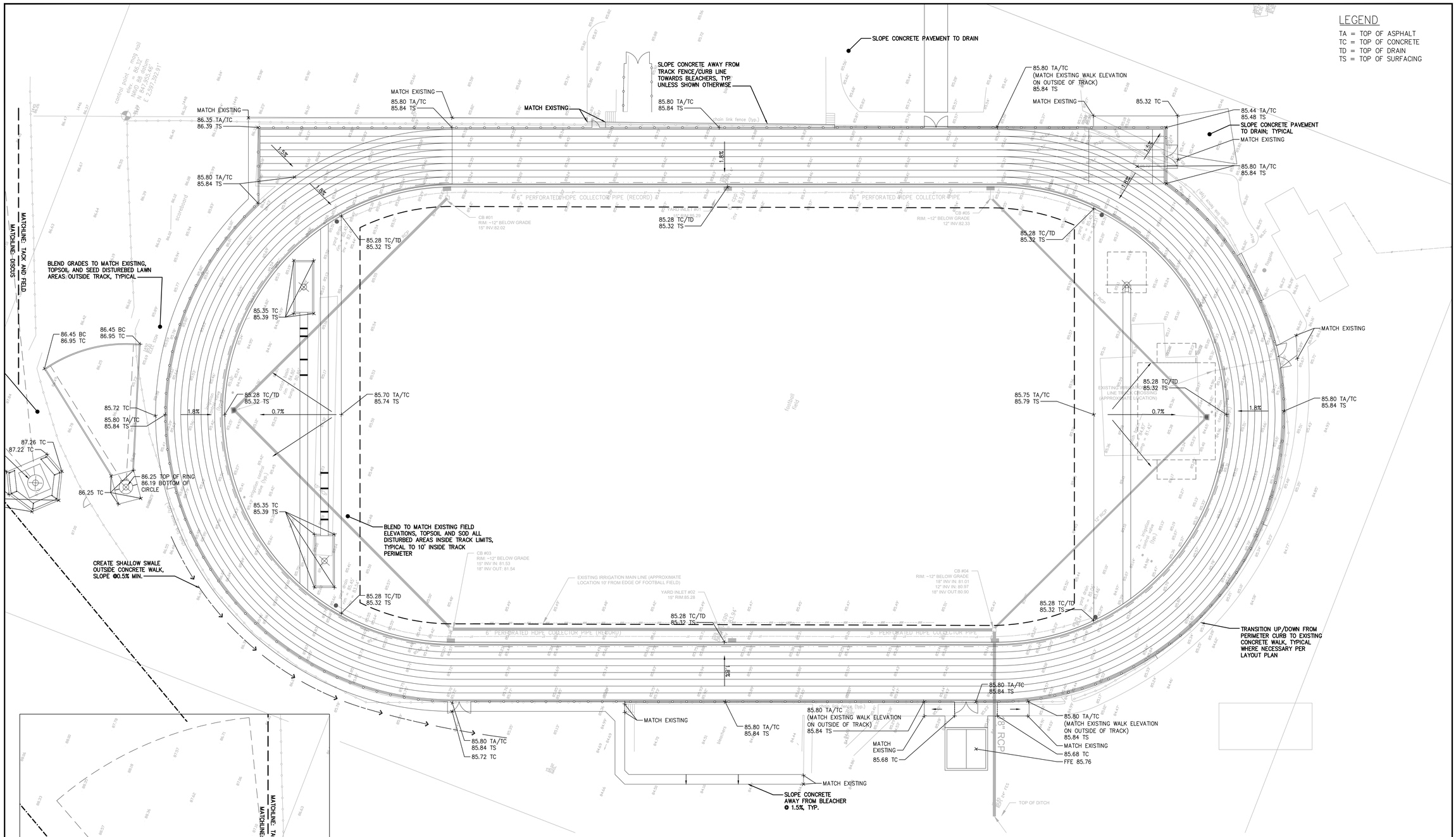

1 TRACK AND FIELD
SCALE:

2 DISCUS
SCALE:

0 20 40
Scale in feet

CHA
1258 Professional Drive
Myrtle Beach, SC 29577-5896
843.692.3105 x284 • www.chacompanies.com

HCS Horry County Schools

DDC ENGINEERS

HORRY COUNTY SCHOOLS

OFFICE OF FACILITIES
1160 E. HIGHWAY 501
CONWAY, SC 29526

SOUTH CAROLINA CERTIFICATE OF AUTHORIZATION
CHA, Inc.
No. 3955

REGISTERED PROFESSIONAL ENGINEER
No. 24401
2-22-2021
PATRICK N. GRAHAM

IT IS A VIOLATION OF LAW FOR ANY PERSON, UNLESS THEY ARE ACTING UNDER THE DIRECTION OF A LICENSED PROFESSIONAL ENGINEER, ARCHITECT, LANDSCAPE ARCHITECT OR LAND SURVEYOR, TO ALTER THIS DOCUMENT IN ANY WAY. ALTERING THE STAMP OF A LICENSED PROFESSIONAL ENGINEER, ARCHITECT, LANDSCAPE ARCHITECT OR LAND SURVEYOR SHALL STAMP THE DOCUMENT AND INCLUDE THE NOTATION "ALTERED BY" FOLLOWED BY THEIR SIGNATURE, THE DATE OF SUCH ALTERATION, AND A SPECIFIC DESCRIPTION OF THE ALTERATION.

PHASE 2

AYNOR HS
GREEN SEA FLOYDS HS
NORTH MYRTLE HS

TRACK AND FIELD
ATHLETIC FACILITY
IMPROVEMENTS PROGRAM

No.	Submittal / Revision	App'd.	By	Date

GREEN SEA FLOYDS HS GRADING PLAN

Designed By:	Drawn By:	Checked By:
JRP	CL	PG
Issue Date:	Project No:	Scale:
2/22/2021	36108	AS SHOWN

Drawing No.:
C-220

File: V:\PROJECTS\ANY\K5\36108\CADD_ACAD\C-220_PH2 - GSFHS.DWG
Saved: 2/19/2021 8:01:54 AM Plotted: 2/26/2021 2:33:56 PM Current User: Lindsay, Cody LastSavedBy: 6170

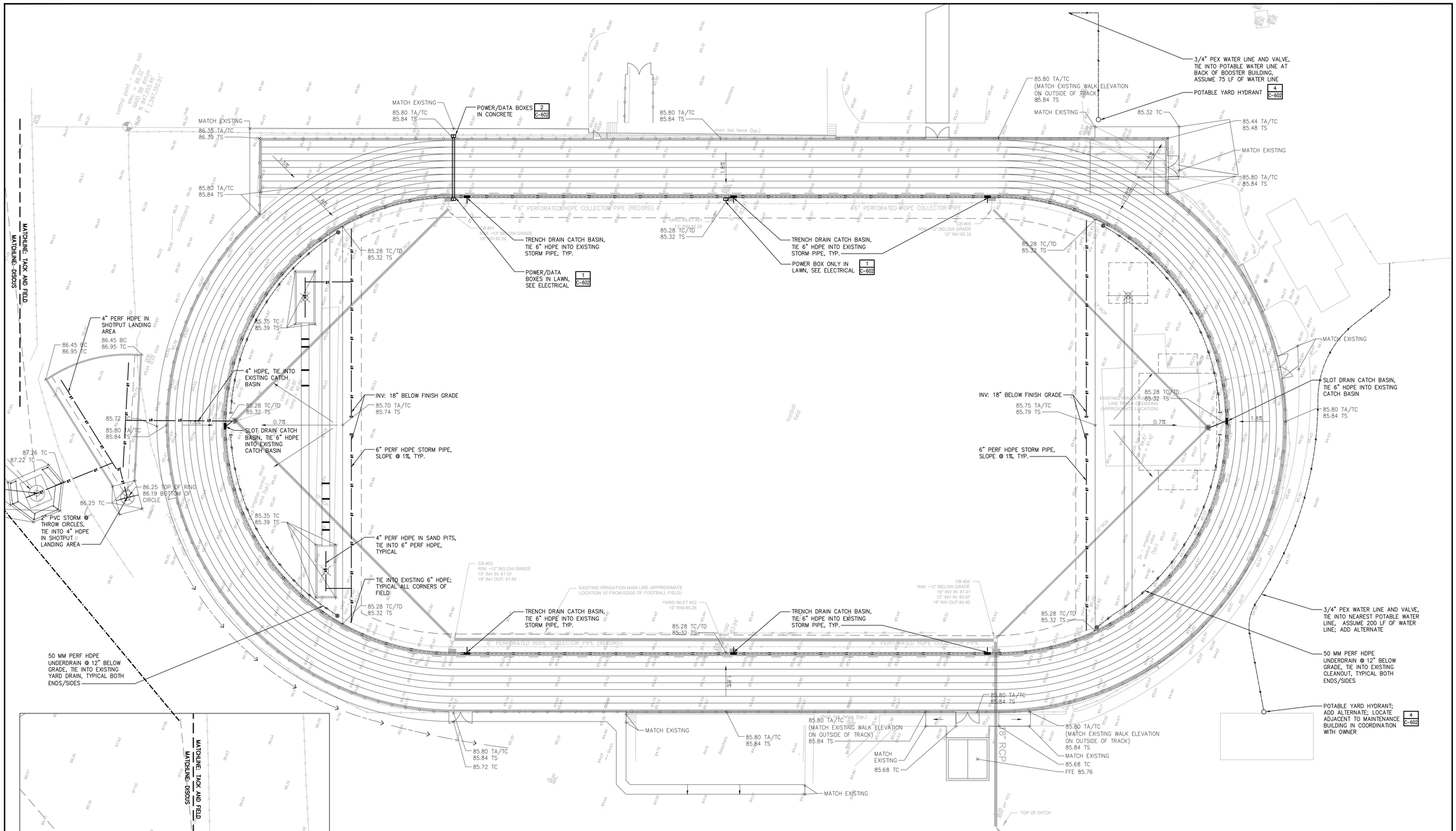

1 TRACK AND FIELD
SCALE:

2 DISCUS
SCALE:

CHA
1258 Professional Drive
Myrtle Beach, SC 29577-5896
843.692.3105 x284 • www.chacompanies.com

HCS Horry County Schools

DDC ENGINEERS

HORRY COUNTY SCHOOLS

OFFICE OF FACILITIES
1160 E. HIGHWAY 501
CONWAY, SC 29526

SOUTH CAROLINA CERTIFICATE OF AUTHORIZATION
CHA, Inc. No. 3955

SOUTH CAROLINA REGISTERED PROFESSIONAL ENGINEER No. 24401
2-22-2021
PATRICK N. GRAHAM

IT IS A VIOLATION OF LAW FOR ANY PERSON, UNLESS THEY ARE ACTING UNDER THE DIRECTION OF A LICENSED PROFESSIONAL ENGINEER, ARCHITECT, LANDSCAPE ARCHITECT OR LAND SURVEYOR, TO ALTER THIS DOCUMENT IN ANY WAY. IF ALTERED, THE STAMP OF A LICENSED PROFESSIONAL ENGINEER, LANDSCAPE ARCHITECT, ENGINEER, ARCHITECT, LANDSCAPE ARCHITECT OR LAND SURVEYOR SHALL STAMP THE DOCUMENT AND INCLUDE THE NOTATION "ALTERED BY" FOLLOWED BY THEIR SIGNATURE, THE DATE OF SUCH ALTERATION, AND A SPECIFIC DESCRIPTION OF THE ALTERATION.

PHASE 2

AYNOR HS
GREEN SEA FLOYDS HS
NORTH MYRTLE HS

TRACK AND FIELD
ATHLETIC FACILITY
IMPROVEMENTS PROGRAM

No.	Submittal / Revision	App'd.	By	Date

GREEN SEA FLOYDS HS DRAINAGE AND UTILITY PLAN

Designed By:	Drawn By:	Checked By:
JRP	CL	PG
Issue Date: 2/22/2021	Project No: 36108	Scale: AS SHOWN

Drawing No.:
C-320

0 20 40
Scale in feet

File: V:\PROJECTS\ANYYKS\36108\CADD_ACAD\C-320_PH2 - GSFHS.DWG
Saved: 2/26/2021 8:35:24 AM Printed: 2/26/2021 2:34:45 PM Current User: Lindsay, Cody LastSaveBy: 8170

SEEDING NOTES:

1. INCLUDES RURAL AREAS ADJACENT TO WELL-DEVELOPED LAWNS.
2. NOT REQUIRED ON SHOULDERS, MEDIANS, ETC., AND SLOPES UNDER 5 FEET IN HEIGHT.
3. GIANT BERMUDA SEED, INCLUDING NK-37, SHALL NOT BE USED.
4. RESEEDING CRIMSON CLOVER SHALL BE INOCULATED IN ACCORDANCE WITH SUBSECTION 810.05. DO NOT PLANT CLOVER IN MEDIANS OR IN RURAL AREAS ADJACENT TO WELL-DEVELOPED LAWNS.
5. PENSACOLA BAHIA SHALL BE ALLOWED ONLY AS SHOWN IN SEEDING SCHEDULES 3 AND 4 AT THE RATE OF 50 POUNDS PER ACRE ONLY WHEN SEEDING PIT AREAS THAT ARE GOVERNED BY THE SOUTH CAROLINA MINING ACT. OTHERWISE, DO NOT INCLUDE BAHIA SEED IN THE MIX.
6. THE CONTRACTOR SHALL OBTAIN A SATISFACTORY STAND OF PERENNIAL VEGETATION WHOSE ROOT SYSTEM SHALL BE DEVELOPED SUFFICIENTLY TO SURVIVE DRY PERIODS AND WINTER WEATHER, AND BE CAPABLE OF RE-ESTABLISHMENT IN THE SPRING. THE PERENNIAL VEGETATIVE COVER SHALL HAVE A MINIMUM COVERAGE DENSITY OF 70% FOR THE SEEDED AREAS. CONTRACTOR SHALL DETERMINE ALL RATES OF APPLICATION NECESSARY TO PRODUCE THE REQUIRED STAND OF GRASS, AND SHALL FOLLOW THE APPLICATION PROCEDURES AS SPECIFIED HEREIN.
7. GIANT BERMUDA SEED, INCLUDING NK-37, SHALL NOT BE USED.

SEEDING SCHEDULE FOR TEMPORARY VEGETATION Ds3

SCHEDULE NO.	COMMON NAME OF SEED	RATE PER ACRE (LBS.)	PLANTING DATES
1	COMMON BERMUDA (HULLED)	210	MARCH 16 TO AUG. 31
	TALL FESCUE	140	
2	COMMON BERMUDA (UNHULLED)	175	SEPT. 1 TO MARCH 15
	ANNUAL RYEGRASS	175	

NOTES:

THE CONTRACTOR SHALL OBTAIN A SATISFACTORY STAND OF PERENNIAL VEGETATION WHOSE ROOT SYSTEM SHALL BE DEVELOPED SUFFICIENTLY TO SURVIVE DRY PERIODS AND WINTER WEATHER, AND BE CAPABLE OF RE-ESTABLISHMENT IN THE SPRING. THE PERENNIAL VEGETATIVE COVER SHALL HAVE A MINIMUM COVERAGE DENSITY OF 70% FOR THE SEEDED AREAS. CONTRACTOR SHALL DETERMINE ALL RATES OF APPLICATION NECESSARY TO PRODUCE THE REQUIRED STAND OF GRASS, AND SHALL FOLLOW THE APPLICATION PROCEDURES AS SPECIFIED HEREIN.

SEEDING SCHEDULE FOR PERMANENT VEGETATION

SCHEDULE NO.	COMMON NAME OF SEED	RURAL RATE	URBAN RATE	PLANTING DATES
3 [5]	COMMON BERMUDA (HULLED) [1]	30	30	MARCH 1 TO AUG. 14
	WEEPING LOVEGRASS [2]	10	10	
	SERICEA LESPEDEZA (SCARIFIED) [3]	50	50	
4 [5]	COMMON BERMUDA (UNHULLED) [1]	40	40	AUG. 5 TO FEB. 28
	WEEPING LOVEGRASS [2]	10	10	
	SERICEA LESPEDEZA (UNHULLED, UNSCARIFIED) [3]	80	80	
	RESEEDING CRIMSON CLOVER [4]	20	0	
	RYE GRAIN	20	0	

NOTES:

1 INCLUDES RURAL AREAS ADJACENT TO WELL-DEVELOPED LAWNS.

2 NOT REQUIRED ON SHOULDERS, MEDIANS, ECT., AND SLOPES UNDER 5 FEET IN HEIGHT

3 GIANT BERMUDA SEED, INCLUDING NK-37, SHALL NOT BE USED.

4 RESEEDING CRIMSON CLOVER SHALL BE INOCULATED IN ACCORDANCE WITH SUBSECTION 810.05. DO NOT PLANT CLOVER IN MEDIANS OR IN RURAL AREAS ADJACENT TO WELL-DEVELOPED LAWNS.

5 PENSACOLA BAHIA SHALL BE ALLOWED ONLY AS SHOWN IN SEEDING SCHEDULES 3 AND 4 AT THE RATE OF 50 POUNDS PER ACRE ONLY WHEN SEEDING PIT AREAS THAT ARE GOVERNED BY THE SOUTH CAROLINA MINING ACT. OTHERWISE, DO NOT INCLUDE BAHIA SEED IN THE MIX.

THE CONTRACTOR SHALL OBTAIN A SATISFACTORY STAND OF PERENNIAL VEGETATION WHOSE ROOT SYSTEM SHALL BE DEVELOPED SUFFICIENTLY TO SURVIVE DRY PERIODS AND WINTER WEATHER, AND BE CAPABLE OF RE-ESTABLISHMENT IN THE SPRING. THE PERENNIAL VEGETATIVE COVER SHALL HAVE A MINIMUM COVERAGE DENSITY OF 70% FOR THE SEEDED AREAS. CONTRACTOR SHALL DETERMINE ALL RATES OF APPLICATION NECESSARY TO PRODUCE THE REQUIRED STAND OF GRASS, AND SHALL FOLLOW THE APPLICATION PROCEDURES AS SPECIFIED HEREIN.

THE CONTRACTOR MAY INCLUDE QUANTITIES OF RYE GRAIN AND MILLET IN SCHEDULE 1 AND 3 IN ORDER TO ESTABLISH QUICK GROUND COVER FOR EROSION CONTROL PURPOSES.

SEEDING SCHEDULE FOR TEMPORARY VEGETATION

SCHEDULE NO.	COMMON NAME OF SEED	RATE PER ACRE (LBS.)	PLANTING DATES
1	ANNUAL SUDAN GRASS (SWEET OR TIFF)	40	APRIL 1 - AUGUST 15
2	BROWN TOP MILLET	50	APRIL 1- AUGUST 15
3	RYE GRAIN	55	AUGUST 16- MARCH 31

OAT GRAIN IS TO BE ADDED TO ALL SCHEDULES, IF SEEDING DATE IS BETWEEN MARCH 1 AND APRIL 16, AT THE RATE OF 10 POUNDS PER ACRE.

THE CONTRACTOR SHALL OBTAIN A SATISFACTORY STAND OF VEGETATION THAT IS CAPABLE OF EROSION CONTROL. CONTRACTOR SHALL DETERMINE ALL RATES OF APPLICATION NECESSARY TO PRODUCE THE REQUIRED RESULTS. THE TEMPORARY VEGETATION SHALL PROVIDE MINIMUM DENSITY COVERAGE OF 70% OF THE SEEDED AREA.

CONSTRUCTION SEQUENCE:

1. CONTRACTOR TO LOCATE ALL EXISTING UTILITIES WITHIN AND IMMEDIATELY ADJACENT TO PROJECT AREA.
2. INSTALL CONSTRUCTION ENTRANCE.
3. INSTALL PERIMETER EROSION CONTROL DEVICES, INCLUDING ALL TREE PROTECTION.
4. DEMO EXISTING TRACK AND APPURTENANCES.

EROSION CONTROL LEGEND

SYMBOL	PRACTICE	DESCRIPTION
IP	INLET PROTECTION	A TEMPORARY SEDIMENT BARRIER LAID AROUND A STORM DRAIN INLET TO PREVENT SEDIMENT FROM ENTERING THE DRAINAGE SYSTEM.
OP	OUTLET PROTECTION	RIP RAP CHANNEL / BANK PLACED BELOW DRAINAGE OUTLETS TO REDUCE THE VELOCITY OF FLOW, EROSION, AND STABILIZE GRADES DOWNSTREAM OF OUTLET STRUCTURES.
CD	TEMPORARY CHECK DAM	RIP RAP BANK PLACED BELOW DRAINAGE OUTLETS TO REDUCE THE VELOCITY OF FLOW, EROSION AND STABILIZE GRADES DOWN STREAM OF DRAINAGE OUTLETS.
SF	SILT FENCE	A TEMPORARY STRUCTURE USED TO SLOW THE VELOCITY OF RUN-OFF, CAUSE SEDIMENT DEPOSITION AT THE STRUCTURE, AND FILTER SEDIMENT FROM RUN-OFF.
SF	DOUBLE ROW SILT FENCE	A TEMPORARY STRUCTURE USED TO SLOW THE VELOCITY OF RUN-OFF, CAUSE SEDIMENT DEPOSITION AT THE STRUCTURE, AND FILTER SEDIMENT FROM RUN-OFF.
CL	CONSTRUCTION LIMITS	A DEFINED AREA THAT ALL LAND DISTURBANCE WILL OCCUR DURING CONSTRUCTION.
ECB	PERMANENT EROSION CONTROL MATTING (PECP PERFORMANCE TRM PYRAMAT BY S! GEOSOLUTIONS OR EQUAL)	A PERMANENT REINFORCEMENT MAT TO PREVENT SOIL EROSION AND MAINTAIN PERMANENT GROUND COVER.
Ds3	DISTURBED AREA STABILIZATION (WITH TEMPORARY VEGETATION)	ESTABLISHING PERMANENT VEGETATIVE COVER SUCH AS TREES, SHRUBS, VINES, GRASSES, SOD, OR LEGUMES ON DISTURBED AREAS.
ST	SEDIMENT TUBE	SEDIMENT TUBE PLACED IN EXISTING OR PROPOSED DITCH SECTIONS TO REDUCE THE VELOCITY OF FLOW, EROSION AND STABILIZE GRADES DOWN STREAM OR DRAINAGE OUTLETS.
CE	CONSTRUCTION ENTRANCE	A STONE STABILIZED PAD LOCATED AT ANY POINT THAT TRAFFIC WILL BE LEAVING A CONSTRUCTION SITE TO A PUBLIC RIGHT-OF-WAY, STREET, ALLEY, SIDEWALK, OR PARKING PLOT WHICH WILL REDUCE OR ELIMINATE THE TRANSPORT OF MUD FROM THE CONSTRUCTION SITE.

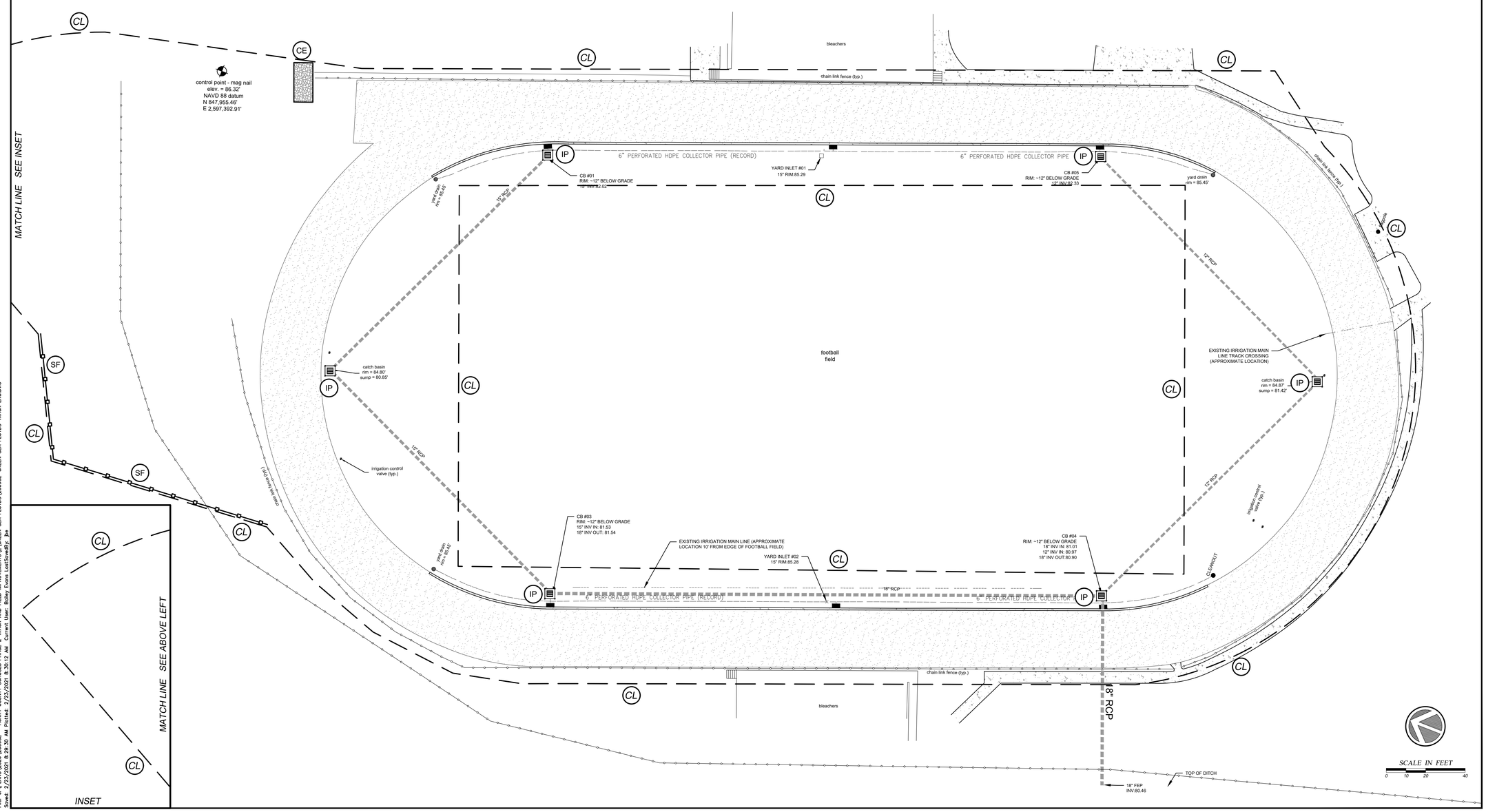

Drawing Copyright © 2016

CHA
1298 Professional Drive
Myrtle Beach, SC 29577-5896
843.692.3205 x234 • www.chacompanies.com

HCS
Horry County Schools

DDC
ENGINEERS
Consulting Engineers, Surveyors, Planners, Landscape Architects & Environmentalists
1298 Professional Dr., Myrtle Beach, SC 29577
Phone: (843) 692-3200 Fax: (843) 692-3210

HORRY COUNTY SCHOOLS

OFFICE OF FACILITIES
1160 E. HIGHWAY 501
CONWAY, SC 29526

SOUTH CAROLINA CERTIFICATE OF AUTHORIZATION
BOLTON & MENK SOUTHEAST, LLC
No. 6475

SOUTH CAROLINA PROFESSIONAL ENGINEER
No. 29814
2/22/21
ERIC K. SANFORD

IT IS A VIOLATION OF LAW FOR ANY PERSON, UNLESS THEY ARE ACTING UNDER THE DIRECTION OF A LICENSED PROFESSIONAL ENGINEER, TO ALTER AN ITEM IN ANY WAY. IF AN ITEM BEARING THE STAMP OF A LICENSED PROFESSIONAL IS ALTERED, THE ALTERING ENGINEER SHALL ATTACH A PROPERLY DESIGNED SEAL TO THE DOCUMENT. SURVEYOR SHALL STAMP THE DOCUMENT AND INCLUDE THE NOTATION "ALTERED BY" FOLLOWED BY THEIR SIGNATURE, THE DATE OF SUCH ALTERATION, AND A SPECIFIC DESCRIPTION OF THE ALTERATION.

GREEN SEA FLOYDS
HIGH SCHOOL
TRACK AND FIELD
ATHLETIC FACILITY
IMPROVEMENTS PROGRAM

No.	Submittal / Revision	App'd	By	Date

SEDIMENT AND EROSION CONTROL PLAN
PHASE I

Designed By:	Drawn By:	Checked By:
EKS	KJG	EKS
Issue Date: 2/18/21	Project No: 20095E	Scale: 1" = 20'

Drawing No.:
C-520

File: J:\Pr-JAN\2020\20095E -- HORRY COUNTY SCHOOLS PHASE 2 TRACK AND FIELD IMPROVEMENTS\C\GREEN SEA FLOYDS TRACK ERO.DWG
Saved: 2/22/2021 8:29:30 AM Plotted: 2/22/2021 8:30:12 AM Current User: Bailey Evans LastSaveBy: jpr

SEEDING NOTES:

1. INCLUDES RURAL AREAS ADJACENT TO WELL-DEVELOPED LAWNS.
2. NOT REQUIRED ON SHOULDERS, MEDIANS, ETC., AND SLOPES UNDER 5 FEET IN HEIGHT.
3. GIANT BERMUDA SEED, INCLUDING NK-37, SHALL NOT BE USED.
4. RESEEDING CRIMSON CLOVER SHALL BE INOCULATED IN ACCORDANCE WITH SUBSECTION 810.05. DO NOT PLANT CLOVER IN MEDIANS OR IN RURAL AREAS ADJACENT TO WELL-DEVELOPED LAWNS.
5. PENSACOLA BAHIA SHALL BE ALLOWED ONLY AS SHOWN IN SEEDING SCHEDULES 3 AND 4 AT THE RATE OF 50 POUNDS PER ACRE ONLY WHEN SEEDING PIT AREAS THAT ARE GOVERNED BY THE SOUTH CAROLINA MINING ACT. OTHERWISE, DO NOT INCLUDE BAHIA SEED IN THE MIX.
6. THE CONTRACTOR SHALL OBTAIN A SATISFACTORY STAND OF PERENNIAL VEGETATION WHOSE ROOT SYSTEM SHALL BE DEVELOPED SUFFICIENTLY TO SURVIVE DRY PERIODS AND WINTER WEATHER, AND BE CAPABLE OF RE-ESTABLISHMENT IN THE SPRING. THE PERENNIAL VEGETATIVE COVER SHALL HAVE A MINIMUM COVERAGE DENSITY OF 70% FOR THE SEEDED AREAS. CONTRACTOR SHALL DETERMINE ALL RATES OF APPLICATION NECESSARY TO PRODUCE THE REQUIRED STAND OF GRASS, AND SHALL FOLLOW THE APPLICATION PROCEDURES AS SPECIFIED HEREIN.
7. GIANT BERMUDA SEED, INCLUDING NK-37, SHALL NOT BE USED.

SEEDING SCHEDULE FOR TEMPORARY VEGETATION Ds3

SCHEDULE NO.	COMMON NAME OF SEED	RATE PER ACRE (LBS.)	PLANTING DATES
1	COMMON BERMUDA (HULLED)	210	MARCH 16 TO AUG. 31
	TALL FESCUE	140	
2	COMMON BERMUDA (UNHULLED)	175	SEPT. 1 TO MARCH 15
	ANNUAL RYEGRASS	175	

NOTES:

THE CONTRACTOR SHALL OBTAIN A SATISFACTORY STAND OF PERENNIAL VEGETATION WHOSE ROOT SYSTEM SHALL BE DEVELOPED SUFFICIENTLY TO SURVIVE DRY PERIODS AND WINTER WEATHER, AND BE CAPABLE OF RE-ESTABLISHMENT IN THE SPRING. THE PERENNIAL VEGETATIVE COVER SHALL HAVE A MINIMUM COVERAGE DENSITY OF 70% FOR THE SEEDED AREAS. CONTRACTOR SHALL DETERMINE ALL RATES OF APPLICATION NECESSARY TO PRODUCE THE REQUIRED STAND OF GRASS, AND SHALL FOLLOW THE APPLICATION PROCEDURES AS SPECIFIED HEREIN.

SEEDING SCHEDULE FOR PERMANENT VEGETATION

SCHEDULE NO.	COMMON NAME OF SEED	RURAL RATE	URBAN RATE	PLANTING DATES
3 [5]	COMMON BERMUDA (HULLED) [1]	30	30	MARCH 1 TO AUG. 14
	WEEPING LOVEGRASS [1]	10	10	
	SERICEA LESPEDEZA (SCARIFIED) [1]	50	50	
4 [5]	COMMON BERMUDA (UNHULLED) [1]	40	40	AUG. 5 TO FEB. 28
	WEEPING LOVEGRASS [1]	10	10	
	SERICEA LESPEDEZA (UNHULLED, UNSCARIFIED) [1]	80	80	
	RESEEDING CRIMSON CLOVER [4]	20	0	
	RYE GRAIN	20	0	

NOTES:

1 INCLUDES RURAL AREAS ADJACENT TO WELL-DEVELOPED LAWNS.

2 NOT REQUIRED ON SHOULDERS, MEDIANS, ECT., AND SLOPES UNDER 5 FEET IN HEIGHT

3 GIANT BERMUDA SEED, INCLUDING NK-37, SHALL NOT BE USED.

4 RESEEDING CRIMSON CLOVER SHALL BE INOCULATED IN ACCORDANCE WITH SUBSECTION 810.05. DO NOT PLANT CLOVER IN MEDIANS OR IN RURAL AREAS ADJACENT TO WELL-DEVELOPED LAWNS.

5 PENSACOLA BAHIA SHALL BE ALLOWED ONLY AS SHOWN IN SEEDING SCHEDULES 3 AND 4 AT THE RATE OF 50 POUNDS PER ACRE ONLY WHEN SEEDING PIT AREAS THAT ARE GOVERNED BY THE SOUTH CAROLINA MINING ACT. OTHERWISE, DO NOT INCLUDE BAHIA SEED IN THE MIX.

THE CONTRACTOR SHALL OBTAIN A SATISFACTORY STAND OF PERENNIAL VEGETATION WHOSE ROOT SYSTEM SHALL BE DEVELOPED SUFFICIENTLY TO SURVIVE DRY PERIODS AND WINTER WEATHER, AND BE CAPABLE OF RE-ESTABLISHMENT IN THE SPRING. THE PERENNIAL VEGETATIVE COVER SHALL HAVE A MINIMUM COVERAGE DENSITY OF 70% FOR THE SEEDED AREAS. CONTRACTOR SHALL DETERMINE ALL RATES OF APPLICATION NECESSARY TO PRODUCE THE REQUIRED STAND OF GRASS, AND SHALL FOLLOW THE APPLICATION PROCEDURES AS SPECIFIED HEREIN.

THE CONTRACTOR MAY INCLUDE QUANTITIES OF RYE GRAIN AND MILLET IN SCHEDULE 1 AND 3 IN ORDER TO ESTABLISH QUICK GROUND COVER FOR EROSION CONTROL PURPOSES.

SEEDING SCHEDULE FOR TEMPORARY VEGETATION

SCHEDULE NO.	COMMON NAME OF SEED	RATE PER ACRE (LBS.)	PLANTING DATES
1	ANNUAL SUDAN GRASS (SWEET OR TIFF)	40	APRIL 1 - AUGUST 15
2	BROWN TOP MILLET	50	APRIL 1- AUGUST 15
3	RYE GRAIN	55	AUGUST 16- MARCH 31

OAT GRAIN IS TO BE ADDED TO ALL SCHEDULES, IF SEEDING DATE IS BETWEEN MARCH 1 AND APRIL 16, AT THE RATE OF 10 POUNDS PER ACRE.

THE CONTRACTOR SHALL OBTAIN A SATISFACTORY STAND OF VEGETATION THAT IS CAPABLE OF EROSION CONTROL. CONTRACTOR SHALL DETERMINE ALL RATES OF APPLICATION NECESSARY TO PRODUCE THE REQUIRED RESULTS. THE TEMPORARY VEGETATION SHALL PROVIDE MINIMUM DENSITY COVERAGE OF 70% OF THE SEEDED AREA.

CONSTRUCTION SEQUENCE:

1. EXCAVATE END ZONE TRACK EXTENSION AREA.
2. INSTALL UNDER DRAINAGE SYSTEM.
3. FINE GRADE TRACK AND INFIELD AREAS.
4. PAVE TRACK AND INSTALL SYNTHETIC SURFACING.
5. PAINT TRACK LINES AND FINISH REMAINING SITE IMPROVEMENTS.
6. GRADE AND SEED PERIMETER TIE IN POINTS.
7. FINAL STABILIZATION OF ALL DENUDED AREAS.
8. PER SEEDING SCHEDULE, WATER AND MAINTAIN TO INSURE PROPER GROUND COVERAGE.
9. UPON APPROVAL BY HORRY COUNTY, REMOVE ALL TEMPORARY EROSION CONTROL DEVICES.

EROSION CONTROL LEGEND

SYMBOL	PRACTICE	DESCRIPTION
IP	INLET PROTECTION	A TEMPORARY SEDIMENT BARRIER LAID AROUND A STORM DRAIN INLET TO PREVENT SEDIMENT FROM ENTERING THE DRAINAGE SYSTEM.
OP	OUTLET PROTECTION	RIP RAP CHANNEL / BANK PLACED BELOW DRAINAGE OUTLETS TO REDUCE THE VELOCITY OF FLOW, EROSION, AND STABILIZE GRADES DOWNSTREAM OF OUTLET STRUCTURES.
CD	TEMPORARY CHECK DAM	RIP RAP BANK PLACED BELOW DRAINAGE OUTLETS TO REDUCE THE VELOCITY OF FLOW, EROSION AND STABILIZE GRADES DOWN STREAM OF DRAINAGE OUTLETS.
SF	SILT FENCE	A TEMPORARY STRUCTURE USED TO SLOW THE VELOCITY OF RUN-OFF, CAUSE SEDIMENT DEPOSITION AT THE STRUCTURE, AND FILTER SEDIMENT FROM RUN-OFF.
SF	DOUBLE ROW SILT FENCE	A TEMPORARY STRUCTURE USED TO SLOW THE VELOCITY OF RUN-OFF, CAUSE SEDIMENT DEPOSITION AT THE STRUCTURE, AND FILTER SEDIMENT FROM RUN-OFF.
CL	CONSTRUCTION LIMITS	A DEFINED AREA THAT ALL LAND DISTURBANCE WILL OCCUR DURING CONSTRUCTION.
ECB	PERMANENT EROSION CONTROL MATTING (HIGH PERFORMANCE TRM PYRAMAT BY S/ GEOSOLUTIONS OR EQUAL)	A PERMANENT REINFORCEMENT MAT TO PREVENT SOIL EROSION AND MAINTAIN PERMANENT GROUND COVER.
Ds3	DISTURBED AREA STABILIZATION (WITH TEMPORARY VEGETATION)	ESTABLISHING PERMANENT VEGETATIVE COVER SUCH AS TREES, SHRUBS, VINES, GRASSES, SOD, OR LEGUMES ON DISTURBED AREAS.
ST	SEDIMENT TUBE	SEDIMENT TUBE PLACED IN EXISTING OR PROPOSED DITCH SECTIONS TO REDUCE THE VELOCITY OF FLOW, EROSION AND STABILIZE GRADES DOWN STREAM OR DRAINAGE OUTLETS.
CE	CONSTRUCTION ENTRANCE	A STONE STABILIZED PAD LOCATED AT ANY POINT THAT TRAFFIC WILL BE LEAVING A CONSTRUCTION SITE TO A PUBLIC RIGHT-OF-WAY, STREET, ALLEY, SIDEWALK, OR PARKING PLOT WHICH WILL REDUCE OR ELIMINATE THE TRANSPORT OF MUD FROM THE CONSTRUCTION SITE.

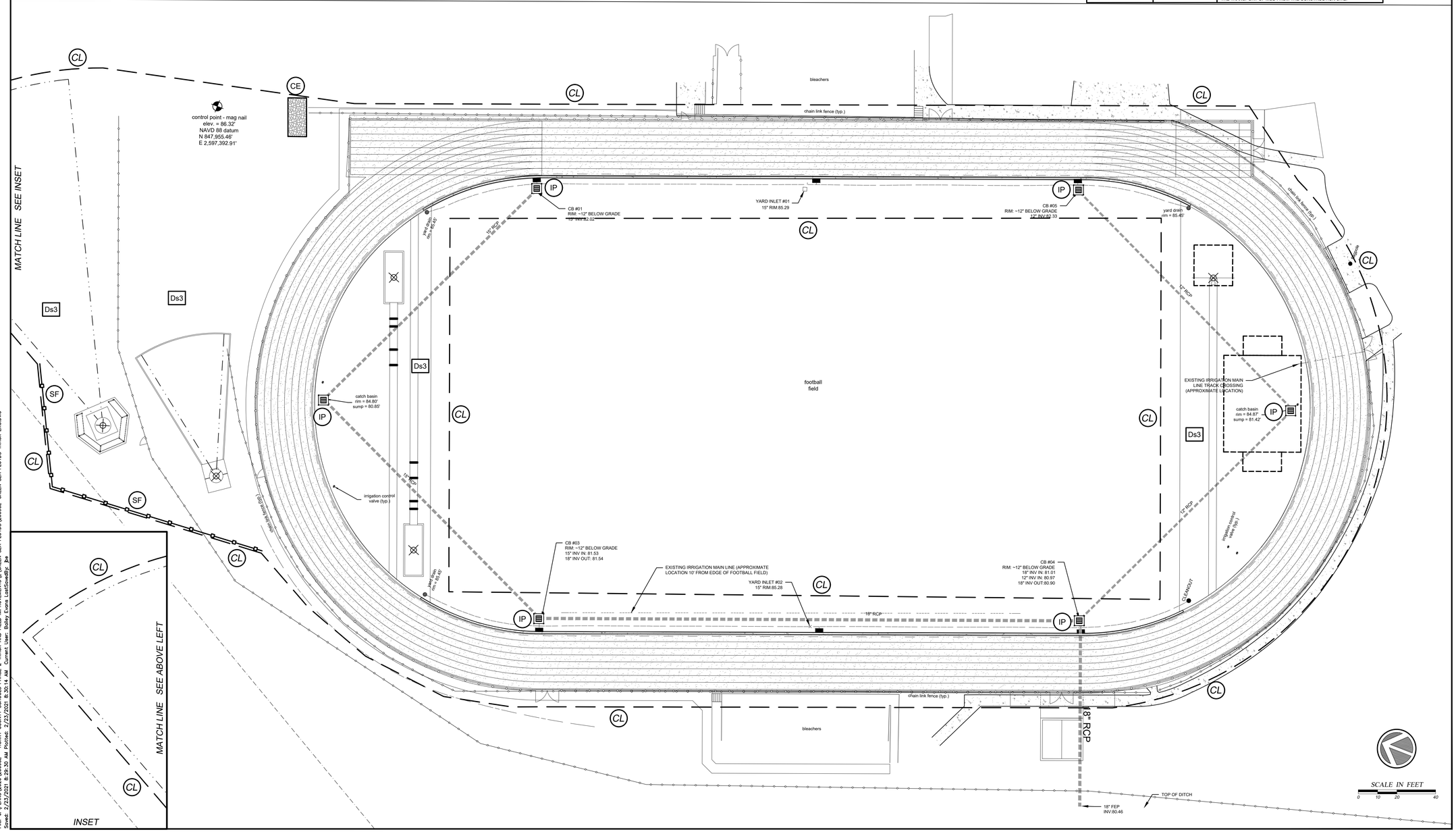

Drawing Copyright © 2016

CHA
1298 Professional Drive
Myrtle Beach, SC 29577-5896
843.692.3205 x234 • www.chacompanies.com

HCS Horry County Schools

DDC ENGINEERS
Consulting Engineers, Surveyors, Planners, Landscape Architects & Environmentalists
1298 Professional Dr., Myrtle Beach, SC 29577
Phone: (843) 692-3200 Fax: (843) 692-3210

HORRY COUNTY SCHOOLS

OFFICE OF FACILITIES
1160 E. HIGHWAY 501
CONWAY, SC 29526

SOUTH CAROLINA CERTIFICATE OF AUTHORIZATION
BOLTON & MENK SOUTHEAST, LLC
No. 6475

SOUTH CAROLINA REGISTERED PROFESSIONAL ENGINEER
No. 29814
2/22/21
ERIC K. SANFORD

IT IS A VIOLATION OF LAW FOR ANY PERSON, UNLESS THEY ARE ACTING UNDER THE DIRECTION OF A LICENSED PROFESSIONAL ENGINEER, ARCHITECT, LANDSCAPE ARCHITECT OR LAND SURVEYOR, TO ALTER AN ITEM IN ANY WAY. IF AN ITEM BEARING THE STAMP OF A LICENSED PROFESSIONAL IS ALTERED, THE ALTERING ENGINEER, ARCHITECT, LANDSCAPE ARCHITECT OR LAND SURVEYOR SHALL ATTACH TO THE ITEM A DESCRIPTIVE ADDITIONAL NOTATION "ALTERED BY" FOLLOWED BY THEIR SIGNATURE, THE DATE OF SUCH ALTERATION, AND A SPECIFIC DESCRIPTION OF THE ALTERATION.

GREEN SEA FLOYDS
HIGH SCHOOL
TRACK AND FIELD
ATHLETIC FACILITY
IMPROVEMENTS PROGRAM

No.	Submittal / Revision	App'd	By	Date

SEDIMENT AND EROSION CONTROL PLAN
PHASE II

Designed By:	Drawn By:	Checked By:
EKS	KJG	EKS
Issue Date: 2/18/21	Project No: 20095E	Scale: 1" = 20'

Drawing No.:
C-521

File: J:\Y-A-W\3-0001-0099\95 – HORRY COUNTY SCHOOLS PHASE 2, TRACK AND FIELD IMPROVEMENTS\C\GREEN SEA FLOYDS\20095E–GREEN SEA FLOYDS TRACK EROJ.DWG
Saved: 2/23/2021 8:29:30 AM Plotted: 2/23/2021 8:30:14 AM Current User: Bailey Evora LastSaveBy: JLa

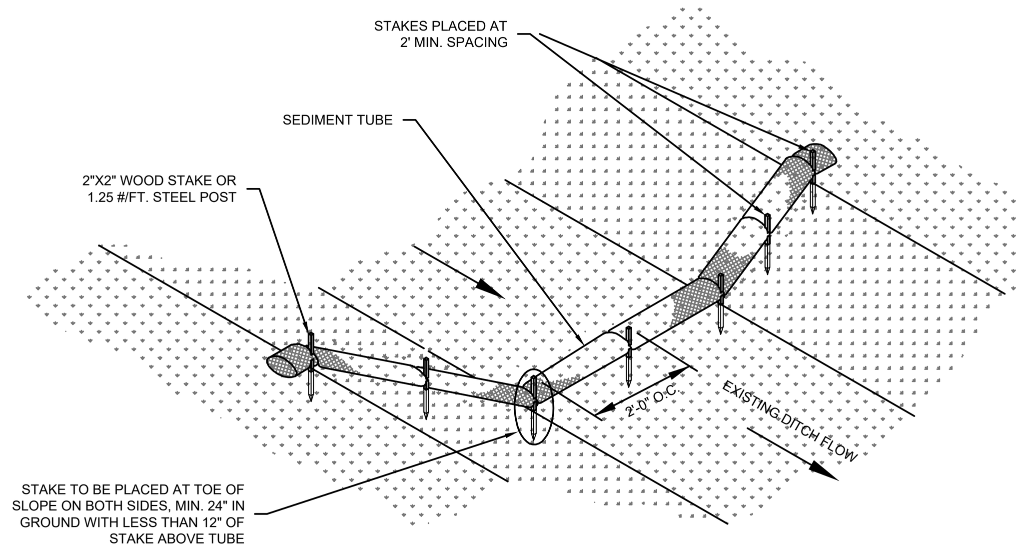

SEDIMENT TUBE CHECK DAM DETAIL (NO BLANKET)

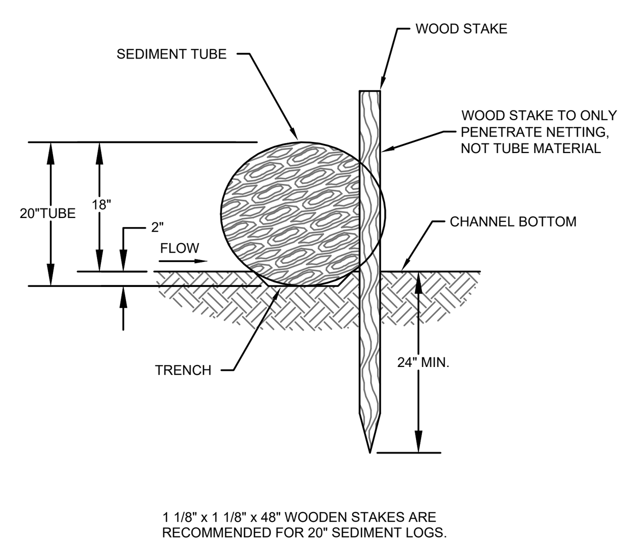

1 1/8" x 1 1/8" x 48" WOODEN STAKES ARE
RECOMMENDED FOR 20" SEDIMENT LOGS.

STAKE DETAIL (WITH TRENCH)

SEDIMENT TUBES - GENERAL NOTES

1. SEDIMENT TUBES MAY BE INSTALLED ALONG CONTOURS, IN DRAINAGE CONVEYANCE CHANNELS, AND AROUND INLETS TO HELP PREVENT OFF SITE DISCHARGE OF SEDIMENT LADEN STORM WATER RUNOFF.
2. SEDIMENT TUBES ARE ELONGATED TUBES OF COMPACTED GEOTEXTILES, CURLED EXCELSIOR WOOD, NATURAL COCONUT FIBER, OR HARDWOOD MULCH. STRAW, PINE NEEDLE AND LEAF MULCH FILLED SEDIMENT TUBES ARE NOT PERMITTED.
3. THE OUTER NETTING OF THE SEDIMENT TUBE SHOULD CONSIST OF SEAMLESS, HIGH DENSITY POLYETHYLENE PHOTODEGRADABLE MATERIALS TREATED WITH ULTRAVIOLET STABILIZERS OR A SEAMLESS, HIGH DENSITY POLYETHYLENE NON DEGRADABLE MATERIAL.
4. SEDIMENT TUBES, WHEN USED AS CHECKS WITHIN CHANNELS, SHOULD RANGE BETWEEN 18 INCHES AND 24 INCHES DEPENDING ON CHANNEL DIMENSIONS. DIAMETERS OUTSIDE THIS RANGE MAY BE ALLOWED WHERE NECESSARY WHEN APPROVED.
5. CURLED EXCELSIOR WOOD, OR NATURAL COCONUT PRODUCTS THAT ARE ROLLED UP TO CREATE A SEDIMENT TUBE ARE NOT ALLOWED.
6. SEDIMENT TUBES SHOULD BE STAKED USING WOODEN STAKES (2" X 2") OR STEEL POSTS (STANDARD "U" OR "T" SECTIONS WITH A MINIMUM WEIGHT OF 1.25 POUNDS PER FOOT) AT A MINIMUM OF 48 INCHES IN LENGTH PLACED ON 2 FOOT CENTERS.
7. INSTALL ALL SEDIMENT TUBES TO ENSURE THAT NO GAPS EXIST BETWEEN THE SOIL AND THE BOTTOM OF THE TUBE. MANUFACTURER'S RECOMMENDATIONS SHOULD ALWAYS BE CONSULTED BEFORE INSTALLATION.
8. THE ENDS OF ADJACENT SEDIMENT TUBES SHOULD BE OVERLAPPED 6 INCHES TO PREVENT FLOW AND SEDIMENT FROM PASSING THROUGH THE FIELD JOINT.
9. SEDIMENT TUBES SHOULD NOT BE STACKED ON TOP OF ONE ANOTHER, UNLESS RECOMMENDED BY MANUFACTURER.
10. EACH SEDIMENT TUBE SHOULD BE INSTALLED IN A TRENCH WITH A DEPTH EQUAL TO 1/5 THE DIAMETER OF THE SEDIMENT TUBE.
11. SEDIMENT TUBES SHOULD CONTINUE UP THE SIDE SLOPES A MINIMUM OF 1 FOOT ABOVE THE DESIGN FLOW DEPTH OF THE CHANNEL.
12. INSTALL STAKES AT A DIAGONAL FACING INCOMING RUNOFF.

SEDIMENT TUBES - INSPECTION & MAINTENANCE

1. THE KEY TO FUNCTIONAL SEDIMENT TUBES IS WEEKLY INSPECTIONS, ROUTINE MAINTENANCE AND REGULAR SEDIMENT REMOVAL.
2. REGULAR INSPECTIONS OF SEDIMENT TUBES SHALL BE CONDUCTED ONCE EVERY CALENDAR WEEK AND, AS RECOMMENDED, WITHIN 24 HOURS AFTER EACH RAINFALL EVEN THAT PRODUCES 1/2 INCH OR MORE OF PRECIPITATION.
3. ATTENTION TO SEDIMENT ACCUMULATIONS IN FRONT OF THE SEDIMENT TUBE IS EXTREMELY IMPORTANT. ACCUMULATED SEDIMENT SHOULD BE CONTINUALLY MONITORED AND REMOVED WHEN NECESSARY.
4. REMOVE ACCUMULATED SEDIMENT WHEN IT REACHES 1/3 THE HEIGHT OF THE SEDIMENT TUBE.
5. REMOVED SEDIMENT SHALL BE PLACED IN STOCKPILE STORAGE AREAS OR SPREAD THINLY ACROSS DISTURBED AREA. STABILIZE THE REMOVED SEDIMENT AFTER IT IS RELOCATED.
6. LARGE DEBRIS, TRASH AND LEAVES SHOULD BE REMOVED FROM IN FRONT OF TUBES WHEN FOUND.
7. IF EROSION CAUSES THE EDGES TO FALL TO A HEIGHT EQUAL TO OR BELOW THE HEIGHT OF THE SEDIMENT TUBE, REPAIRS SHOULD BE MADE IMMEDIATELY TO PREVENT RUNOFF FROM BYPASSING TUBE.
8. SEDIMENT TUBES SHOULD BE REMOVED AFTER THE CONTRIBUTING DRAINAGE AREA HAS BEEN COMPLETELY STABILIZED. PERMANENT VEGETATION SHOULD REPLACE AREAS FROM WHICH SEDIMENT TUBES HAVE BEEN REMOVED.

SEDIMENT TUBE SPACING

SLOPE	MAX. SEDIMENT TUBE SPACING
LESS THAN 2%	150-FEET
2%	100-FEET
3%	75-FEET
4%	50-FEET
5%	40-FEET
6%	30-FEET
GREATER THAN 6%	25-FEET

ST SEDIMENT TUBE DETAIL
SCALE: N.T.S.

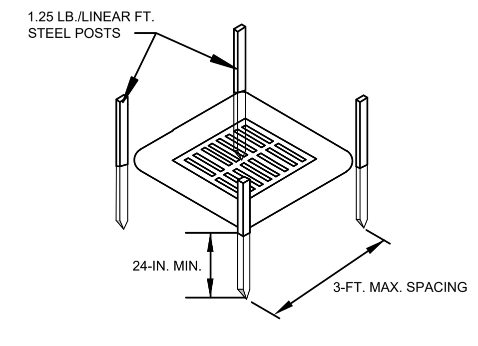

POST INSTALLATION DETAIL

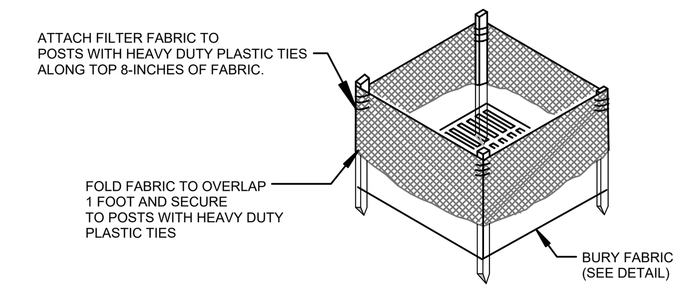

FILTER FABRIC INSTALLATION DETAIL

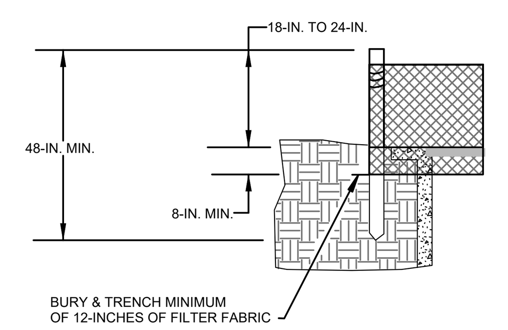

FILTER FABRIC BURIAL DETAIL

TYPE A - POST REQUIREMENTS

1. SILT FENCE POSTS MUST BE 48 INCH LONG STEEL POSTS THAT MEET, AT A MINIMUM, THE FOLLOWING PHYSICAL CHARACTERISTICS.
   - COMPOSED OF A HIGH STRENGTH STEEL WITH A MINIMUM YIELD STRENGTH OF 50,000 PSI.
   - INCLUDE A STANDARD "T" SECTION WITH A NOMINAL FACE WIDTH OF 1.38 INCHES AND A NOMINAL "T" LENGTH OF 1.48 INCHES.
   - WEIGH 1.25 POUNDS PER FOOT (±8%).
2. POSTS SHALL BE EQUIPPED WITH PROJECTIONS TO AID IN FASTENING OF FILTER FABRIC.
3. INSTALL POSTS TO A MINIMUM OF 24 INCHES. A MINIMUM HEIGHT OF 1 TO 2 INCHES ABOVE THE FABRIC SHALL BE MAINTAINED, AND A MAXIMUM HEIGHT OF 3 FEET SHALL BE MAINTAINED ABOVE THE GROUND.
4. POST SPACING SHALL BE AT A MAXIMUM OF 3 FEET ON CENTER.

TYPE A - FILTER FABRIC REQUIREMENTS

1. SILT FENCE MUST BE COMPOSED OF WOVEN GEOTEXTILE FILTER FABRIC THAT CONSISTS OF THE FOLLOWING REQUIREMENTS:
   - COMPOSED OF FIBERS CONSISTING OF LONG CHAIN SYNTHETIC POLYMERS OF AT LEAST 85% BY WEIGHT OF POLYOLEFINS, POLYESTERS OR POLYAMIDES THAT ARE FORMED INTO A NETWORK SUCH THAT THE FILAMENTS OR YARNS RETAIN DIMENSIONAL STABILITY RELATIVE TO EACH OTHER;
   - FREE OF ANY TREATMENT OR COATING WHICH MIGHT ADVERSELY ALTER ITS PHYSICAL PROPERTIES AFTER INSTALLATION;
   - FREE OF ANY DEFECTS OR FLAWS THAT SIGNIFICANTLY AFFECT ITS PHYSICAL AND/OR FILTERING PROPERTIES; AND,
   - HAVE A MINIMUM WIDTH OF 36 INCHES.
2. USE ONLY FABRIC APPEARING ON SC DOT'S QUALIFIED PRODUCTS LISTING (QPL), APPROVAL SHEET #34 MEETING THE REQUIREMENTS OF THE MOST CURRENT EDITION OF THE SC DOT STANDARD SPECIFICATIONS FOR HIGHWAY CONSTRUCTION.
3. 12 INCHES OF THE FABRIC SHOULD BE PLACED WITHIN EXCAVATED TRENCH AND TOED IN WHEN THE TRENCH IS BACKFILLED.
4. FILTER FABRIC SHALL BE PURCHASED IN CONTINUOUS ROLLS AND CUT TO THE LENGTH OF THE BARRIER TO AVOID JOINTS.
5. FILTER FABRIC SHALL BE INSTALLED AT A MINIMUM OF 24 INCHES ABOVE THE GROUND.

TYPE A - INSPECTION & MAINTENANCE

1. THE KEY TO FUNCTIONAL INLET PROTECTION IS WEEKLY INSPECTIONS, ROUTINE MAINTENANCE AND REGULAR SEDIMENT REMOVAL.
2. REGULAR INSPECTIONS OF INLET PROTECTION SHALL BE CONDUCTED ONCE EVERY CALENDAR WEEK AND, AS RECOMMENDED, WITHIN 24 HOURS AFTER EACH RAINFALL EVEN THAT PRODUCES 1/2 INCH OR MORE OF PRECIPITATION.
3. ATTENTION TO SEDIMENT ACCUMULATIONS ALONG THE FILTER FABRIC IS EXTREMELY IMPORTANT. ACCUMULATED SEDIMENT SHOULD BE CONTINUALLY MONITORED AND REMOVED WHEN NECESSARY.
4. REMOVE ACCUMULATED SEDIMENT WHEN IT REACHES 1/3 THE HEIGHT OF THE FILTER FABRIC. WHEN A SUMP IS INSTALLED IN FRONT OF THE FABRIC, SEDIMENT SHOULD BE REMOVED WHEN IT FILLS APPROXIMATELY 1/3 THE DEPTH OF THE SUMP.
5. REMOVED SEDIMENT SHALL BE PLACED IN STOCKPILE STORAGE AREAS OR SPREAD THINLY ACROSS DISTURBED AREA. STABILIZE THE REMOVED SEDIMENT AFTER IT IS RELOCATED.
6. CHECK FOR AREAS WHERE STORM WATER RUNOFF HAS ERODED A CHANNEL BENEATH THE FILTER FABRIC, BENEATH THE FILTER FABRIC, OR WHERE THE FABRIC HAS SAGGED OR COLLAPSED DUE TO RUNOFF OVERTOPPING THE INLET PROTECTION.
7. CHECK FOR TEARS WITHIN THE FILTER FABRIC, AREAS WHERE FABRIC HAS BEGUN TO DECOMPOSE, AND FOR ANY OTHER CIRCUMSTANCE THAT MAY RENDER THE INLET PROTECTION INEFFECTIVE. REMOVE DAMAGED FABRIC AND REINSTALL NEW FILTER FABRIC IMMEDIATELY.
8. INLET PROTECTION STRUCTURES SHOULD BE REMOVED AFTER ALL THE DISTURBED AREAS ARE PERMANENTLY STABILIZED. REMOVE ALL CONSTRUCTION MATERIAL AND SEDIMENT, AND DISPOSE OF THEM PROPERLY. GRADE THE DISTURBED AREA TO THE ELEVATION OF THE DROP INLET STRUCTURE CREST. STABILIZE ALL BARE AREAS IMMEDIATELY.

IP INLET PROTECTION
SCALE: N.T.S.

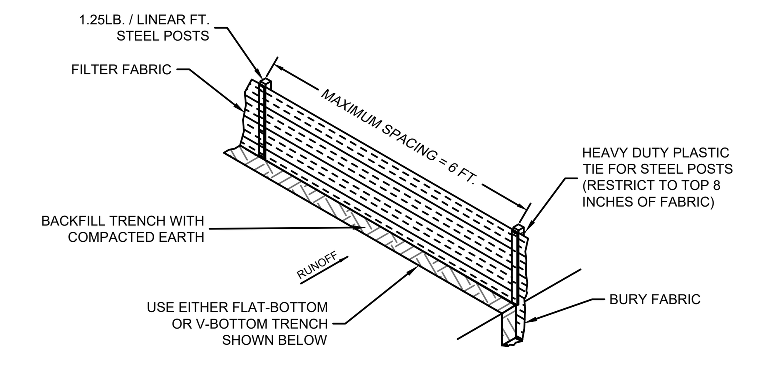

SILT FENCE INSTALLATION

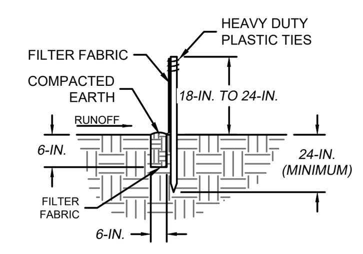

FLAT-BOTTOM TRENCH DETAIL

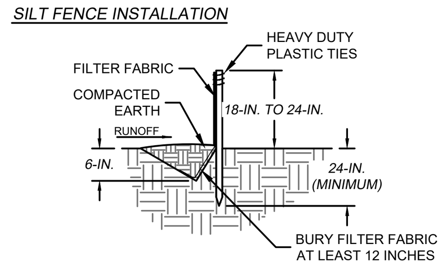

V-SHAPED TRENCH DETAIL

SILT FENCE - GENERAL NOTES:

1. DO NOT PLACE SILT FENCE ACROSS CHANNELS OR IN OTHER AREAS SUBJECT TO CONCENTRATED FLOWS. SILT FENCE SHOULD NOT BE USED AS A VELOCITY CONTROL BMP. CONCENTRATED FLOWS ARE ANY FLOWS GREATER THAN 0.5 CFS.
2. MAXIMUM SHEET OR OVERLAND FLOW PATH LENGTH TO THE SILT FENCE SHALL BE 100 FEET.
3. MAXIMUM SLOPE STEEPNESS (NORMAL [PERPENDICULAR] TO THE FENCE LINE) SHALL BE 2:1.
4. SILT FENCE JOINTS, WHEN NECESSARY SHALL BE COMPLETED BY ONE OF THE FOLLOWING OPTIONS:
   - WRAP EACH FABRIC TOGETHER AT A SUPPORT POST WITH BOTH ENDS FASTENED TO THE POST, WITH A 1 FOOT MINIMUM OVERLAP.
   - OVERLAP SILT FENCE BY INSTALLING 3 FEET PAST THE SUPPORT POST TO WHICH THE NEW SILT FENCE ROLL IS ATTACHED. ATTACH OLD ROLL TO NEW ROLL WITH HEAVY DUTY PLASTIC TIES; OR
   - OVERLAP ENTIRE WIDTH OF EACH SILT FENCE ROLL FROM ONE SUPPORT POST TO THE NEXT SUPPORT POST.
5. ATTACH FILTER FABRIC TO THE STEEL POSTS USING HEAVY DUTY PLASTIC TIES THAT ARE EVENLY SPACED WITHIN THE TOP 8 INCHES OF THE FABRIC.
6. INSTALL THE SILT FENCE PERPENDICULAR TO THE DIRECTION OF THE STORM WATER FLOW AND PLACE THE SILT FENCE THE PROPER DISTANCE FROM THE TOE OF STEEP SLOPES TO PROVIDE SEDIMENT STORAGE AND ACCESS FOR MAINTENANCE AND CLEAN OUT.
7. INSTALL SILT FENCE CHECKS (TIE-BACKS) EVERY 50-100 FEET, DEPENDENT ON SLOPE, ALONG SILT FENCE THAT IS INSTALLED WITH SLOPE AND WHERE CONCENTRATED FLOWS ARE EXPECTED OR ARE DOCUMENTED ALONG THE PROPOSED / INSTALLED SILT FENCE.

SILT FENCE - POST REQUIREMENTS

1. SILT FENCE POSTS MUST BE 48 INCH LONG STEEL POSTS THAT MEET, AT A MINIMUM, THE FOLLOWING PHYSICAL CHARACTERISTICS.
   - COMPOSED OF A HIGH STRENGTH STEEL WITH A MINIMUM YIELD STRENGTH OF 50,000 PSI.
   - INCLUDE A STANDARD "T" SECTION WITH A NOMINAL FACE WIDTH OF 1.38 INCHES AND A NOMINAL "T" LENGTH OF 1.48 INCHES.
   - WEIGH 1.25 POUNDS PER FOOT (±8%).
2. POSTS SHALL BE EQUIPPED WITH PROJECTIONS TO AID IN FASTENING OF FILTER FABRIC.
3. STEEL POSTS MAY NEED TO HAVE A METAL SOIL STABILIZATION PLATE WELDED NEAR THE BOTTOM WHEN INSTALLED ALONG STEEP SLOPES OR INSTALLED IN LOOSE SOILS. THE PLATE SHOULD HAVE A MINIMUM CROSS SECTION OF 17 SQUARE INCHES AND BE COMPOSED OF 15 GAUGE STEEL, AT A MINIMUM. THE METAL SOIL STABILIZATION PLATE SHOULD BE COMPLETELY BURIED.
4. INSTALL POSTS A MINIMUM OF 24 INCHES. A MINIMUM HEIGHT OF 1 TO 2 INCHES ABOVE THE FABRIC SHALL BE MAINTAINED, AND A MAXIMUM HEIGHT OF 3 FEET SHALL BE MAINTAINED ABOVE THE GROUND.
5. POST SPACING SHALL BE AT A MAXIMUM OF 6 FEET ON CENTER.

SILT FENCE - FABRIC REQUIREMENTS

1. SILT FENCE MUST BE COMPOSED OF WOVEN GEOTEXTILE FILTER FABRIC THAT CONSISTS OF THE FOLLOWING REQUIREMENTS:
   - COMPOSED OF FIBERS CONSISTING OF LONG CHAIN SYNTHETIC POLYMERS OF AT LEAST 85% BY WEIGHT OF POLYOLEFINS, POLYESTERS OR POLYAMIDES THAT ARE FORMED INTO A NETWORK SUCH THAT THE FILAMENTS OR YARNS RETAIN DIMENSIONAL STABILITY RELATIVE TO EACH OTHER;
   - FREE OF ANY TREATMENT OR COATING WHICH MIGHT ADVERSELY ALTER ITS PHYSICAL PROPERTIES AFTER INSTALLATION;
   - FREE OF ANY DEFECTS OR FLAWS THAT SIGNIFICANTLY AFFECT ITS PHYSICAL AND/OR FILTERING PROPERTIES; AND,
   - HAVE A MINIMUM WIDTH OF 36 INCHES.
2. USE ONLY FABRIC APPEARING ON SC DOT'S QUALIFIED PRODUCTS LISTING (QPL), APPROVAL SHEET #34 MEETING THE REQUIREMENTS OF THE MOST CURRENT EDITION OF THE SC DOT STANDARD SPECIFICATIONS FOR HIGHWAY CONSTRUCTION.
3. 12 INCHES OF THE FABRIC SHOULD BE PLACED WITHIN EXCAVATED TRENCH AND TOED IN WHEN THE TRENCH IS BACKFILLED.
4. FILTER FABRIC SHALL BE PURCHASED IN CONTINUOUS ROLLS AND CUT TO THE LENGTH OF THE BARRIER TO AVOID JOINTS.
5. FILTER FABRIC SHALL BE INSTALLED AT A MINIMUM OF 24 INCHES ABOVE THE GROUND.

SILT FENCE - INSPECTION & MAINTENANCE

1. THE KEY TO FUNCTIONAL SILT FENCE IS WEEKLY INSPECTIONS, ROUTINE MAINTENANCE AND REGULAR SEDIMENT REMOVAL.
2. REGULAR INSPECTIONS OF SILT FENCE SHALL BE CONDUCTED ONCE EVERY CALENDAR WEEK AND, AS RECOMMENDED, WITHIN 24 HOURS AFTER EACH RAINFALL EVEN THAT PRODUCES 1/2 INCH OR MORE OF PRECIPITATION.
3. ATTENTION TO SEDIMENT ACCUMULATIONS ALONG THE SILT FENCE IS EXTREMELY IMPORTANT. ACCUMULATED SEDIMENT SHOULD BE CONTINUALLY MONITORED AND REMOVED WHEN NECESSARY.
4. REMOVE ACCUMULATED SEDIMENT WHEN IT REACHES 1/3 THE HEIGHT OF THE SILT FENCE.
5. REMOVED SEDIMENT SHALL BE PLACED IN STOCKPILE STORAGE AREAS OR SPREAD THINLY ACROSS DISTURBED AREA. STABILIZE THE REMOVED SEDIMENT AFTER IT IS RELOCATED.
6. CHECK FOR AREAS WHERE STORM WATER RUNOFF HAS ERODED A CHANNEL BENEATH THE SILT FENCE, OR WHERE THE FENCE HAS SAGGED OR COLLAPSED DUE TO RUNOFF OVERTOPPING THE SILT FENCE. INSTALL CHECKS/TIE-BACKS AND/OR REINSTALL SILT FENCE, AS NECESSARY.
7. CHECK FOR TEARS WITHIN THE SILT FENCE, AREAS WHERE SILT FENCE HAS BEGUN TO DECOMPOSE, AND FOR ANY OTHER CIRCUMSTANCE THAT MAY RENDER THE SILT FENCE INEFFECTIVE. REMOVE DAMAGED SILT FENCE AND REINSTALL NEW SILT FENCE IMMEDIATELY.
8. SILT FENCE SHOULD BE REMOVED WITHIN 30 DAYS AFTER FINAL STABILIZATION IS ACHIEVED AND ONCE IT IS REMOVED, THE RESULTING DISTURBED AREA SHALL BE PERMANENTLY STABILIZED.

SF CONSTRUCTION OF A SILT FENCE
SCALE: N.T.S.

EROSION CONTROL NOTES:

1. TOTAL DEVELOPMENT AREA : 3.90 ± ACRES
2. DISTURBED AREA THIS PHASE: 1.16 ± ACRES
3. IF NECESSARY, SLOPES, WHICH EXCEED EIGHT (8) VERTICAL FEET SHOULD BE STABILIZED WITH SYNTHETIC OR VEGETATIVE MATS, IN ADDITION TO HYDROSEEDING. IT MAY BE NECESSARY TO INSTALL TEMPORARY SLOPE DRAINS DURING CONSTRUCTION. TEMPORARY BERMS MAY BE NEEDED UNTIL THE SLOPE IS BROUGHT TO GRADE.
4. STABILIZATION MEASURES SHALL BE INITIATED AS SOON AS PRACTICABLE IN PORTIONS OF THE SITE WHERE CONSTRUCTION ACTIVITIES HAVE TEMPORARILY OR PERMANENTLY CEASED, BUT IN NO CASE MORE THAN FOURTEEN (14) DAYS AFTER WORK HAS CEASED, EXCEPT AS STATED BELOW:
   - WHERE STABILIZATION BY THE 14TH DAY IS PRECLUDED BY SNOW COVER OR FROZEN GROUND CONDITIONS STABILIZATION MEASURES MUST BE INITIATED AS SOON AS PRACTICABLE.
   - WHERE CONSTRUCTION ACTIVITY ON A PORTION OF THE SITE IS TEMPORARILY CEASED, AND EARTH-DISTURBING ACTIVITIES WILL BE RESUMED WITHIN 14 DAYS, TEMPORARY STABILIZATION MEASURES DO NOT HAVE TO BE INITIATED ON THAT PORTION OF THE SITE.
5. ALL SEDIMENT AND EROSION CONTROL DEVICES SHALL BE INSPECTED EVERY CALENDAR WEEK. IF PERIODIC INSPECTION OR OTHER INFORMATION INDICATES THAT A BMP HAS BEEN INAPPROPRIATELY OR INCORRECTLY INSTALLED, THE PERMITTEE MUST ADDRESS THE NECESSARY REPLACEMENT OR MODIFICATION REQUIRED TO CORRECT THE BMP WITHIN 48 HOURS OF IDENTIFICATION.
6. PROVIDE SILT FENCE AND/OR OTHER CONTROL DEVICES, AS MAY BE REQUIRED, TO CONTROL SOIL EROSION DURING UTILITY CONSTRUCTION. ALL DISTURBED AREAS SHALL BE CLEANED, GRADED AND STABILIZED WITH GRASSING IMMEDIATELY AFTER THE UTILITY INSTALLATION. FILL, COVER AND TEMPORARY SEEDING AT THE END OF EACH DAY ARE RECOMMENDED. IF WATER IS ENCOUNTERED WHILE TRENCHING, THE WATER SHOULD BE FILTERED TO REMOVE ANY SEDIMENTS BEFORE BEING PUMPED BACK INTO ANY WATERS OF THE STATE.
7. ALL EROSION CONTROL DEVICES SHALL BE PROPERLY MAINTAINED DURING ALL PHASES OF CONSTRUCTION UNTIL THE COMPLETION OF ALL CONSTRUCTION ACTIVITIES AND ALL DISTURBED AREAS HAVE BEEN STABILIZED. ADDITIONAL CONTROL DEVICES MAY BE REQUIRED DURING CONSTRUCTION IN ORDER TO CONTROL EROSION AND/OR OFF SITE SEDIMENTATION. ALL TEMPORARY CONTROL DEVICES SHALL BE REMOVED ONCE CONSTRUCTION IS COMPLETE AND THE SITE IS STABILIZED.
8. THE CONTRACTOR MUST TAKE NECESSARY ACTION TO MINIMIZE THE TRACKING OF MUD ONTO PAVED ROADWAYS FROM CONSTRUCTION AREAS AND THE GENERATION OF DUST. THE CONTRACTOR SHALL DAILY REMOVE MUD/SOIL FROM PAVEMENT, AS MAY BE REQUIRED.
9. RESIDENTIAL SUBDIVISIONS REQUIRE EROSION CONTROL FEATURES FOR INFRASTRUCTURE AS WELL AS FOR INDIVIDUAL LOT CONSTRUCTION. INDIVIDUAL PROPERTY OWNERS SHALL FOLLOW THESE PLANS DURING CONSTRUCTION OR OBTAIN APPROVAL OF AN INDIVIDUAL PLAN IN ACCORDANCE WITH S.C. REG. 72-300 ET SEQ. AND SCR 100000.
10. TEMPORARY DIVERSION BERMS AND/OR DITCHES WILL BE PROVIDED AS NEEDED DURING CONSTRUCTION TO PROTECT WORK AREAS FROM UPSLOPE RUNOFF AND/OR TO DIVERT SEDIMENT-LADEN WATER TO APPROPRIATE TRAPS OR STABLE OUTLETS.
11. ALL WATERS OF THE STATE (WoS), INCLUDING WETLANDS, ARE TO BE FLAGGED OR OTHERWISE CLEARLY MARKED IN THE FIELD. A DOUBLE ROW OF SILT FENCE IS TO BE INSTALLED IN ALL AREAS WHERE A 50 FOOT BUFFER CANNOT BE MAINTAINED BETWEEN THE DISTURBED AREA AND ALL WoS. A 10 FOOT BUFFER SHOULD BE MAINTAINED BETWEEN THE LAST ROW OF SILT FENCE AND ALL WoS.
12. LITTER, CONSTRUCTION DEBRIS, OILS, FUELS AND BUILDING PRODUCTS WITH SIGNIFICANT POTENTIAL FOR IMPACT (SUCH AS STOCKPILES OF FRESHLY TREATED LUMBER) AND CONSTRUCTION CHEMICALS THAT COULD BE EXPOSED TO STORM WATER MUST BE PREVENTED FROM BECOMING A POLLUTANT SOURCE IN STORM WATER DISCHARGES.
13. A COPY OF THE SWPPP, INSPECTION RECORDS, AND RAINFALL DATA MUST BE RETAINED AT THE CONSTRUCTION SITE OR A NEARBY LOCATION EASILY ACCESSIBLE DURING NORMAL BUSINESS HOURS, FROM THE DATE OF COMMENCEMENT OF CONSTRUCTION ACTIVITIES TO THE DATE THAT FINAL STABILIZATION IS REACHED.
14. INITIATE STABILIZATION MEASURES ON ANY EXPOSED STEEP SLOPE (3H:1V OR GREATER) WHERE LAND DISTURBING ACTIVITIES HAVE PERMANENTLY OR TEMPORARILY CEASED, AND WILL NOT RESUME FOR A PERIOD OF 7 CALENDAR DAYS.
15. MINIMIZE SOIL COMPACTION AND, UNLESS INFEASIBLE, PRESERVE TOPSOIL.
16. MINIMIZE THE DISCHARGE OF POLLUTANTS FROM EQUIPMENT AND VEHICLE WASHING, WHEEL WASH WATER, AND OTHER WASH WATERS. WASH WATERS MUST BE TREATED IN A SEDIMENT BASIN OR ALTERNATIVE CONTROL THAT PROVIDES EQUIVALENT OR BETTER TREATMENT PRIOR TO DISCHARGE.
17. MINIMIZE THE DISCHARGE OF POLLUTANTS FROM DEWATERING OF TRENCHES AND EXCAVATED AREAS. THESE DISCHARGES ARE TO BE ROUTED THROUGH APPROPRIATE BMPs (SEDIMENT BASIN, FILTER BAG, ETC.).
18. THE FOLLOWING DISCHARGES FROM SITES ARE PROHIBITED:
   - WASTEWATER FROM WASHOUT OF CONCRETE, UNLESS MANAGED BY AN APPROPRIATE CONTROL;
   - WASTEWATER FROM WASHOUT AND CLEANOUT OF STUCCO, PAINT, FORM RELEASE OILS CURING COMPOUNDS AND OTHER CONSTRUCTION MATERIALS;
   - FUELS, OILS, OR OTHER POLLUTANTS USED IN VEHICLE AND EQUIPMENT OPERATION AND MAINTENANCE; AND
   - SOAPS OR SOLVENTS USED IN VEHICLE AND EQUIPMENT WASHING.
19. AFTER CONSTRUCTION ACTIVITIES BEGIN, INSPECTIONS MUST BE CONDUCTED AT A MINIMUM OF AT LEAST ONCE EVERY CALENDAR WEEK AND MUST BE CONDUCTED UNTIL FINAL STABILIZATION IS REACHED ON ALL AREAS OF THE CONSTRUCTION SITE.
20. IF EXISTING BMPs NEED TO BE MODIFIED OR IF ADDITIONAL BMPs ARE NECESSARY TO COMPLY WITH THE REQUIREMENTS OF THIS PERMIT AND / OR SC'S WATER QUALITY STANDARDS, IMPLEMENTATION MUST BE COMPLETED BEFORE THE NEXT STORM EVENT WHENEVER PRACTICABLE. IF IMPLEMENTATION BEFORE THE NEXT STORM EVENT IS IMPRACTICABLE, THE SITUATION MUST BE DOCUMENTED IN THE SWPPP AND ALTERNATIVE BMPs MUST BE IMPLEMENTED AS SOON AS REASONABLY POSSIBLE.
21. A PRE-CONSTRUCTION CONFERENCE MUST BE HELD FOR EACH CONSTRUCTION SITE WITH AN APPROVED ON-SITE SWPPP PRIOR TO THE IMPLEMENTATION OF CONSTRUCTION ACTIVITIES. FOR NON-LINEAR PROJECTS THAT DISTURB 10 ACRES OR MORE THIS CONFERENCE MUST BE HELD ON-SITE UNLESS THE DEPARTMENT HAS APPROVED OTHERWISE.
22. THE CONTRACTOR SHALL BE RESPONSIBLE FOR MAINTAINING ALL SILT BARRIERS AND SEDIMENT CONTROL INSTALLATIONS DURING CONSTRUCTION UNTIL THE COMPLETION OF THE SITE DEVELOPMENT.
23. EROSION CONTROL DEVICES MUST BE INSTALLED IMMEDIATELY AFTER LAND DISTURBANCE OCCURS. THE LOCATION OF SOME OF THE CONTROL DEVICES MAY BE ALTERED FROM THAT SHOWN ON THE APPROVED PLANS, IF DRAINAGE PATTERNS DURING CONSTRUCTION VARY FROM THE FINAL DRAINAGE PATTERNS. IT SHALL BE THE CONTRACTORS RESPONSIBILITY TO PROVIDE SOIL EROSION CONTROL FOR ALL DRAINAGE PATTERNS DURING ALL STAGES OF CONSTRUCTION. ALL INADEQUACIES IN SOIL EROSION CONTROL DURING ANY PHASE OF CONSTRUCTION MUST BE REPORTED IMMEDIATELY TO THE ENGINEER.
24. THE CONTRACTOR SHALL MAINTAIN ALL EROSION CONTROL MEASURES UNTIL PERMANENT VEGETATION HAS BEEN ESTABLISHED. THE CONTRACTOR SHALL INSPECT EROSION CONTROL MEASURES AT THE END OF EACH WORKING DAY TO ENSURE PROPER FUNCTIONING OF ALL DEVICES.
25. FAILURE TO INSTALL, OPERATE AND MAINTAIN ALL EROSION CONTROL MEASURES, AS SHOWN ON THE APPROVED PLANS OR AS DIRECTED BY THE ENGINEER AND/OR OCRM WILL RESULT IN ALL WORK ON THE CONSTRUCTION SITE BEING STOPPED UNTIL PROPER CORRECTIVE MEASURES HAVE BEEN MET, AS REQUIRED AND/OR DIRECTED.
26. ALL LAND DISTURBING ACTIVITIES REQUIRES COMPLIANCE UNDER THE NPDES GENERAL PERMIT FOR STORM WATER DISCHARGES FROM THE CONSTRUCTION ACTIVITIES (PERMIT NO. SCR100000). ANY NONCOMPLIANCE WITH THESE REGULATIONS IS A VIOLATION OF THE FEDERAL CLEAN WATER ACT AND MAY REQUIRE ENFORCEMENT ACTION BY HORRY COUNTY OR SCDHEC.
27. CONTRACTOR SHALL PROVIDE A WATER TIGHT ENCLOSURE FOR STORAGE OF THE OCRM CERTIFIED PLANS AND INSPECTION REPORTS. ENCLOSURE SHALL BE LOCATED IN AN AREA ACCESSIBLE TO REGULATORY PERSONNEL.
28. ALL STOCKPILE TO BE PROTECTED WITH SILT FENCE.
29. ALL CONCRETE TO BE WASHED OUT IN AN APPROVED AREA.

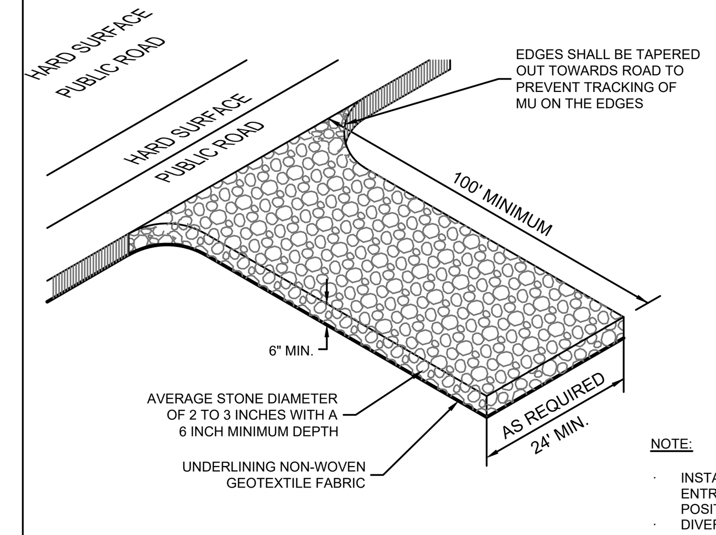

NOTE:

- INSTALL A CULVERT PIPE ACROSS THE ENTRANCE WHEN NEEDED TO PROVIDE POSITIVE DRAINAGE.
- DIVERT ALL SURFACE RUNOFF AND DRAINAGE FROM THE STONE PAD TO A SEDIMENT TRAP OR BASIN OR OTHER SEDIMENT TRAPPING STRUCTURE.
- ENTRANCES SHALL COMPLY WITH SCDOT STANDARD DRAWING 651-115-01

CE STABILIZIED CONSTRUCTION ENTRANCE
SCALE: N.T.S.

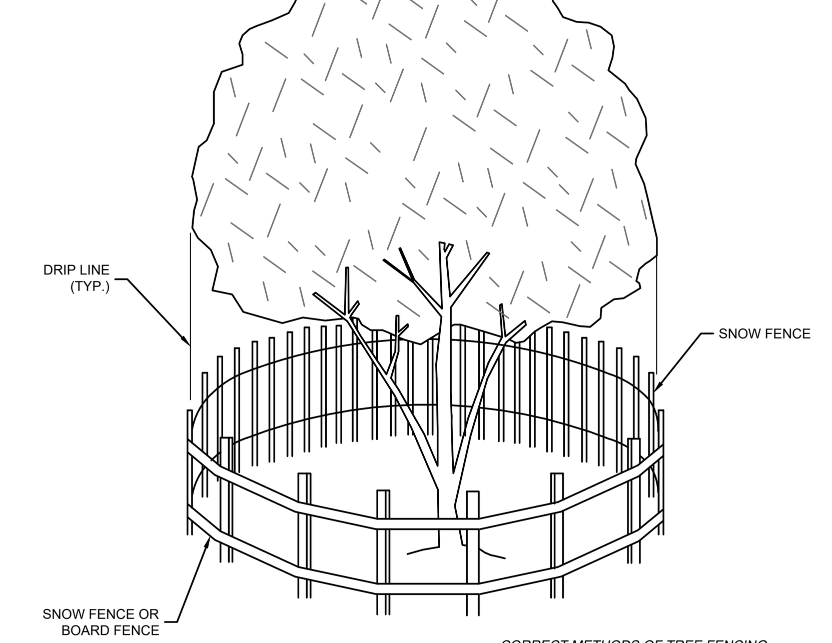

CORRECT METHODS OF TREE FENCING

TREE PROTECTION
SCALE: N.T.S.

Drawing Copyright © 2016

CHA
1298 Professional Drive
Myrtle Beach, SC 29577-5896
843.692.3205 x284 • www.chacompanies.com

HCS Horry County Schools

DDC ENGINEERS®
Consulting Engineers, Surveyors, Planners, Landscape Architects & Environmentalists
1298 Professional Dr., Myrtle Beach, SC 29577
Phone: (843) 692-3200 Fax: (843) 692-3210

HORRY COUNTY SCHOOLS

OFFICE OF FACILITIES
1160 E. HIGHWAY 501
CONWAY, SC 29526

SOUTH CAROLINA CERTIFICATE OF AUTHORIZATION
BOLTON & MENK SOUTHEAST, LLC
No. 6475

SOUTH CAROLINA LICENSED PROFESSIONAL ENGINEER
No. 29814
2/22/21
ERIC K. SANFORD

IT IS A VIOLATION OF LAW FOR ANY PERSON, UNLESS THEY ARE ACTING UNDER THE DIRECTION OF A LICENSED PROFESSIONAL ENGINEER, ARCHITECT, LANDSCAPE ARCHITECT OR LAND SURVEYOR TO ALTER AN ITEM IN ANY WAY. IF AN ITEM BEARING THE STAMP OF A LICENSED PROFESSIONAL IS ALTERED, THE ALTERING ENGINEER, ARCHITECT, LANDSCAPE ARCHITECT OR LAND SURVEYOR SHALL STAMP THE DOCUMENT AND INCLUDE THE NOTATION "ALTERED BY" FOLLOWED BY THEIR SIGNATURE, THE DATE OF SUCH ALTERATION, AND A SPECIFIC DESCRIPTION OF THE ALTERATION.

GREEN SEA FLOYDS
HIGH SCHOOL
TRACK AND FIELD
ATHLETIC FACILITY
IMPROVEMENTS PROGRAM

No.	Submittal / Revision	App'd.	By	Date

SEDIMENT AND EROSION CONTROL DETAILS

Designed By:	Drawn By:	Checked By:
EKS	KJG	EKS
Issue Date:	Project No:	Scale:
2/18/21	20095E	NO SCALE

Drawing No.:
C-522

File: J:\PLANS\2020\20095E - HORRY COUNTY SCHOOLS PHASE 2 TRACK AND FIELD IMPROVEMENTS\E\GREEN SEA FLOYDS\20095E-GREEN SEA FLOYDS TRACK ERO.DWG
Saved: 2/23/2021 8:29:30 AM Plotted: 2/23/2021 8:30:19 AM Current User: Bailey Evans LastSavedBy: jbe

ABBREVIATIONS

A	AMPERE
AC	ALTERNATING CURRENT
AF	AMPERE FRAME
AFF/G	ABOVE FINISHED FLOOR/GRADE
AIC	AMPERE INTERRUPTING CAPACITY
AT	AMPERE TRIP
AUX	AUXILIARY
AWG	AMERICAN WIRE GAUGE
BTM	BOTTOM
BKR	BREAKER
BLDG	BUILDING
C	CONDUIT
CAB	CABINET
CB	CIRCUIT BREAKER
CIR	CIRCUIT
CKT	CIRCUIT
℄	CENTER LINE
CO	COMPANY
COMM	COMMUNICATIONS
CONN	CONNECTION, CONNECT
CTRL	CONTROL
CU	COPPER
△	DELTA CONNECTION
DIA	DIAMETER
DISC	DISCONNECT
DIST	DISTRIBUTION
DIV	DIVISION
DN	DOWN
DWG	DRAWING
EA	EACH
EF	EXHAUST FAN
EL	ELEVATION
ELEC	ELECTRIC(AL)
ENCL	ENCLOSURE
EQUIP	EQUIPMENT
ETR	EXISTING TO REMAIN
EXT	EXTERIOR
F	FUSE(D)
FC	FOOTCANDLES
FIXT	FIXTURE
FLR	FLOOR
FT	FOOT (FEET)
FUT	FUTURE
G, GND	GROUND
GALV	GALVANIZE(D)
GC	GENERAL CONTRACTOR
GFI	GROUND FAULT CIRCUIT INTERRUPTER
GFP	GROUND FAULT PROTECTION
HGT	HEIGHT
HPS	HIGH PRESSURE SODIUM
HTR	HEATER
HV	HIGH VOLTAGE
HW	HOT WATER
ID	IDENTIFY, IDENTIFICATION
INCAND	INCANDESCENT
J-BOX	JUNCTION BOX
JCT	JUNCTION
KCM/Kcmil	THOUSAND CIRCULAR MILS
KVA	KILO VOLT AMPERE
KW	KILOWATT
LGT	LIGHTING
LT(S)	LIGHT(S)
LED	LIGHT EMITTING DIODE
L	LOUVER
MAX	MAXIMUM
MCB	MAIN CIRCUIT BREAKER
MC	METAL CLAD CABLE
MFR	MANUFACTURER
MH	METAL HALIDE
MECH	MECHANICAL
MIN	MINIMUM
MLO	MAIN LUGS ONLY
MT	MOUNT
MTD	MOUNTED
N	NORTH
NEC	NATIONAL ELECTRICAL CODE
NF	NON-FUSED
NL	NIGHT LIGHT
No/#	NUMBER
OL	OVERLOAD
P	POLE(S)
PNL	PANEL
PR	PAIR
PRI	PRIMARY
PWR	POWER
ø	PHASE
PT	PRESSURE TREATED
RECEPT	RECEPTACLE
RGS	RIGID GALVANIZED STEEL
RLY	RELAY
RM	ROOM
SEC	SECONDARY
SH	SHIELDED
SW	SWITCH
TEMP	TEMPORARY/TEMPERATURE
TB	TERMINAL BOARD
TYP	TYPICAL
UON	UNLESS OTHERWISE NOTED
V	VOLT, VOLTS
VA	VOLT-AMPERES
W	WATT, WIRE
W/	WITH
WP	WEATHERPROOF
XFMR/T	TRANSFORMER
Y	WYE CONNECTION

DEVICES AND APPURTENANCES

- DUPLEX RECEPTACLE
- TWO – 20 AMP DUPLEX RECEPTACLES UNDER SINGLE COVER
- J JUNCTION BOX

RACEWAYS

- CONDUIT CONCEALED OR EXPOSED AS SPECIFIED
- CONDUIT TURNING UP
- CONDUIT TURNING DOWN
- PP-1 1/3/5 — HOMERUN BACK TO PANEL (PANEL AND CIRCUITS INDICATED)
- CIRCUIT CONTINUED OR CONNECTED TO EQUIPMENT AS INDICATED
- UNDERGROUND CONDUIT

POWER DISTRIBUTION EQUIPMENT

- SURFACE MOUNTED BRANCH CIRCUIT PANELBOARD 208/120V, 1ø, 3W, UON
- HH HAND HOLE
- CR CONTROL RELAY PANEL

GENERAL

- # NUMBER IN CIRCLE, WITH OR WITHOUT ARROW OR LEADER, REFER TO MATCHING NUMBERED CODED NOTE
- X / XXX DETAIL CALLOUT

GENERAL NOTES

1. REFER TO CIVIL DRAWINGS FOR SYMBOLS ASSOCIATED WITH WORK, EQUIPMENT, ETC. BY OTHER(S).
2. ALL WORK SHOWN ON THE ELECTRICAL DRAWINGS SHALL BE BY THE ELECTRICAL CONTRACT UNLESS OTHERWISE INDICATED.
3. CONDUIT RUNS SHOWN ARE DIAGRAMMATIC UON. EXACT LOCATION OF ALL CONDUIT RUNS SHALL BE DETERMINED IN THE FIELD. COORDINATE INSTALLATIONS AND AVOID CONFLICT WITH PIPING, DUCTWORK, ACCESS DOORS AND WORK BY OTHER TRADES.
4. GENERAL NOTES APPLY TO ALL ELECTRICAL CONTRACT DRAWINGS.

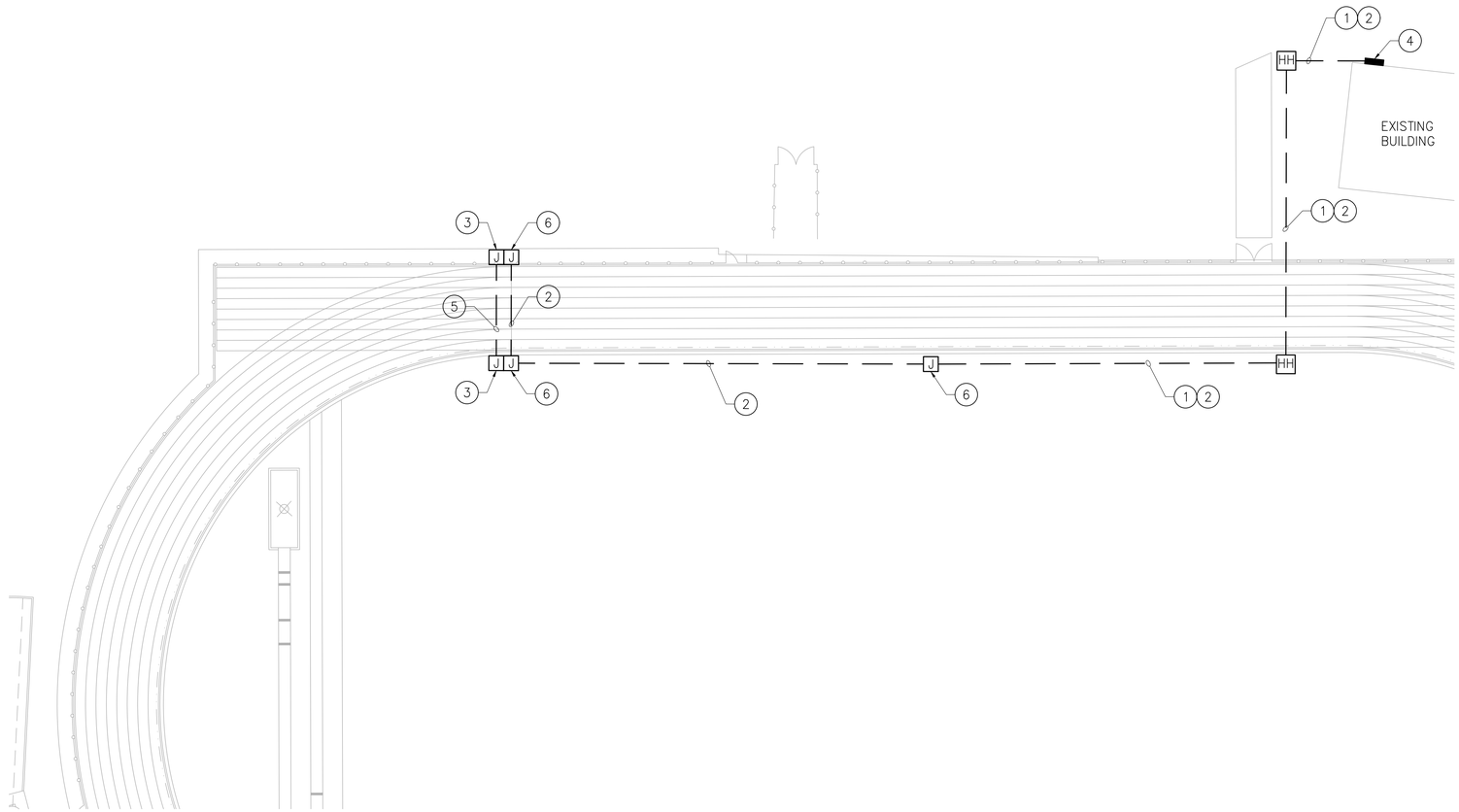

GREEN SEA FLOYDS HS ELECTRICAL SITE PLAN

SCALE: 1" = 20'

CODED NOTES

1. 1" SCHEDULE 40 CONDUIT WITH (2)#10 AND (1)#10G FOR MIDFIELD RECEPTACLE FROM EXISTING PANEL
2. 1" SCHEDULE 40 PVC CONDUIT WITH (2)#8 AND (1)#8G FOR FINISH LINE RECEPTACLE FROM EXISTING PANEL.
3. PROVIDE COMMUNICATION JUNCTION BOX (SEE DETAILS 1 AND 2 ON C-602).
4. EXISTING POWER PANEL
5. 1 1/2" SCHEDULE 40 PVC CONDUIT WITH PULL STRING BETWEEN JUNCTION BOXES FOR INSTALLATION OF COMMUNICATION WIRING.
6. PROVIDE JUNCTION BOX WITH GFI RECEPTACLE (SEE DETAILS 1 & 2 ON C-602).

LOCATION:	?	PANEL ID	VOLTS, PHASE, WIRE: 120/208V, 3ø, 4W
MOUNTING:	EXTERIOR WALL IN NEMA 3R ENCLOSURE	EXISTING POWER PANEL	MAINS: 225A MCB
SOURCE:	?		SHORT CIRCUIT RATING: ?

CKT	LOAD DESCRIPTION	CB AMPS/ POLE	CONN LOAD KVA	CONN LOAD KVA	CONN LOAD KVA	CONN LOAD KVA	CONN LOAD KVA	CONN LOAD KVA	CB AMPS/ POLE	LOAD DESCRIPTION	CKT
1	EXISTING LOAD TO REMAIN	20/1							20/1	EXISTING LOAD TO REMAIN	2
3	FINISH LINE RECEPTACLES (NOTE 2)	20/1								SPACE	4
5	MIDFIELD RECEPTACLE (NOTE 2)	20/1								SPACE	6
7										SPACE	8
9	EXISTING LOAD TO REMAIN	60/3								SPACE	10
11										SPACE	12
13											14
15	EXISTING LOAD TO REMAIN	30/3							100/3	EXISTING LOAD TO REMAIN	16
17											18
19										SPACE	20
21										SPACE	22
23	EXISTING CONCESSION STAND	150/3								SPACE	24
25										SPACE	26
27										SPACE	28
29										SPACE	30
			####	####	####	####	####	####			
			TOTAL kVA								
			####								

NOTES:
1. EXISTING POWER PANEL IS SQUARE D NQOD3225Q2MB.
2. PROVIDE CIRCUIT BREAKER, TYPE TO MATCH EXISTING.

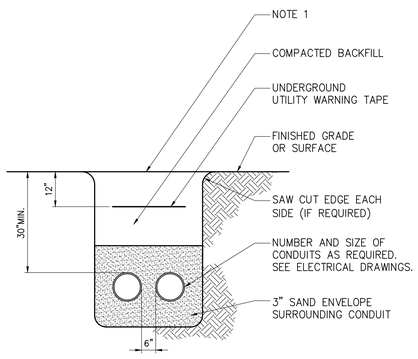

NOTE

1. REPLACE EXISTING SURFACE CONDITIONS IN KIND TO INCLUDE, BUT NOT LIMITED TO: CONCRETE, CRUSHED STONE, SELECT GRAVEL, ASPHALT, TOPSOIL AND GRASS.

1 TYPICAL DIRECT BURIED CONDUIT(S) DETAIL

– NOT TO SCALE

0 20 40
Scale in feet

CHA
1298 Professional Drive
Myrtle Beach, SC 29577-5896
843.692.5005 x284 • www.chacompanies.com

HCS Horry County Schools

DDC ENGINEERS

HORRY COUNTY SCHOOLS

OFFICE OF FACILITIES
1160 E. HIGHWAY 501
CONWAY, SC 29526

SOUTH CAROLINA CERTIFICATE OF AUTHORIZATION CHA, Inc. No. 3955

SOUTH CAROLINA PROFESSIONAL ENGINEER No. 24377 JAMES B. FUGLEWICZ

IT IS A VIOLATION OF LAW FOR ANY PERSON, UNLESS THEY ARE ACTING UNDER THE DIRECTION OF A PROFESSIONAL ENGINEER, ENGINEER, ARCHITECT, LANDSCAPE ARCHITECT OR LAND SURVEYOR TO ALTER AN ITEM IN ANY WAY. IF AN ITEM BEARING THE STAMP OF A LICENSED PROFESSIONAL IS ALTERED, THE ALTERING ENGINEER, ARCHITECT, LANDSCAPE ARCHITECT OR LAND SURVEYOR SHALL STAMP THE DOCUMENT AND INCLUDE THE NOTATION "ALTERED BY" FOLLOWED BY THEIR SIGNATURE, THE DATE OF SUCH ALTERATION, AND A SPECIFIC DESCRIPTION OF THE ALTERATION.

PHASE 2

AYNOR HS
GREEN SEA FLOYDS HS
NORTH MYRTLE HS

TRACK AND FIELD
ATHLETIC FACILITY
IMPROVEMENTS PROGRAM

No.	Submittal / Revision	App'd.	By	Date

GREEN SEA FLOYDS HS ELECTRICAL SITE PLAN

Designed By:	Drawn By:	Checked By:
SAM	SAM	JJD
Issue Date: 2/22/2021	Project No: 36108	Scale: AS SHOWN

Drawing No.:

E-001

File: V:\PROJECTS\ANY\K5\36108\CADD_ACAD\E-003-36108.DWG
Saved: 2/23/2021 3:56:15 PM Plotted: 2/23/2021 2:27:09 PM Current User: Mobidia, Stefan LastSavedBy: 5427

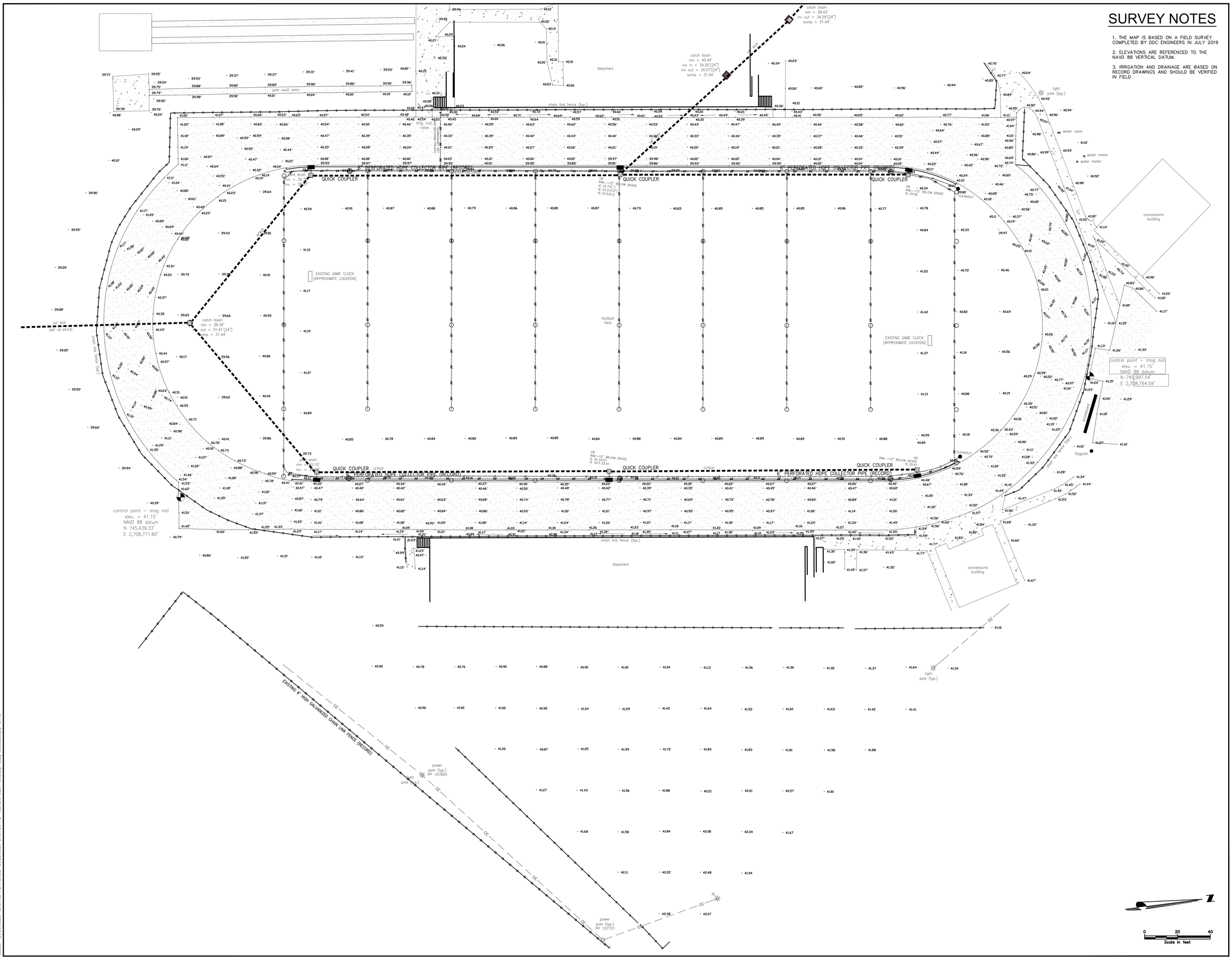

SURVEY NOTES

1. THE MAP IS BASED ON A FIELD SURVEY COMPLETED BY DDC ENGINEERS IN JULY 2019

2. ELEVATIONS ARE REFERENCED TO THE NAVD 88 VERTICAL DATUM.

3. IRRIGATION AND DRAINAGE ARE BASED ON RECORD DRAWINGS AND SHOULD BE VERIFIED IN FIELD

0 20 40
Scale in feet

CHA
1258 Professional Drive
Myrtle Beach, SC 29577-5896
843.692.3105 x284 • www.chacompanies.com

HCS
Horry County Schools

DDC ENGINEERS

HORRY COUNTY SCHOOLS

OFFICE OF FACILITIES
1160 E. HIGHWAY 501
CONWAY, SC 29526

SOUTH CAROLINA CERTIFICATE OF AUTHORIZATION
CHA, Inc.
No. 3955

SOUTH CAROLINA REGISTERED PROFESSIONAL ENGINEER
No. 24401
2-22-2021
PATRICK N. GRAHAM

IT IS A VIOLATION OF LAW FOR ANY PERSON, UNLESS THEY ARE ACTING UNDER THE DIRECTION OF A LICENSED PROFESSIONAL ENGINEER, ARCHITECT, LANDSCAPE ARCHITECT OR LAND SURVEYOR, TO ALTER IN ANY WAY AN ITEM BEARING THE SEAL OR STAMP OF A LICENSED PROFESSIONAL ENGINEER, ARCHITECT, LANDSCAPE ARCHITECT OR LAND SURVEYOR. SHALL STAMP THE DOCUMENT AND INCLUDE THE NOTATION "ALTERED BY" FOLLOWED BY THEIR SIGNATURE, THE DATE OF SUCH ALTERATION, AND A SPECIFIC DESCRIPTION OF THE ALTERATION.

PHASE 2

AYNOR HS
GREEN SEA FLOYDS HS
NORTH MYRTLE HS

TRACK AND FIELD
ATHLETIC FACILITY
IMPROVEMENTS PROGRAM

No.	Submittal / Revision	App'd.	By	Date

NORTH MYRTLE HS
EXISTING
CONDITIONS PLAN

Designed By:	Drawn By:	Checked By:
JRP	CL	PG
Issue Date:	Project No:	Scale:
2/22/2021	36108	AS SHOWN

Drawing No.:
C-030

File: V:\PROJECTS\ANY\K5\36108\CADD_AC4D\C-030_PH2 - NMHS.DWG
Saved: 12/29/2020 12:31:56 PM Plotted: 2/26/2021 2:33:34 PM Current User: Lindsay, Cody LastSaveBy: 6170

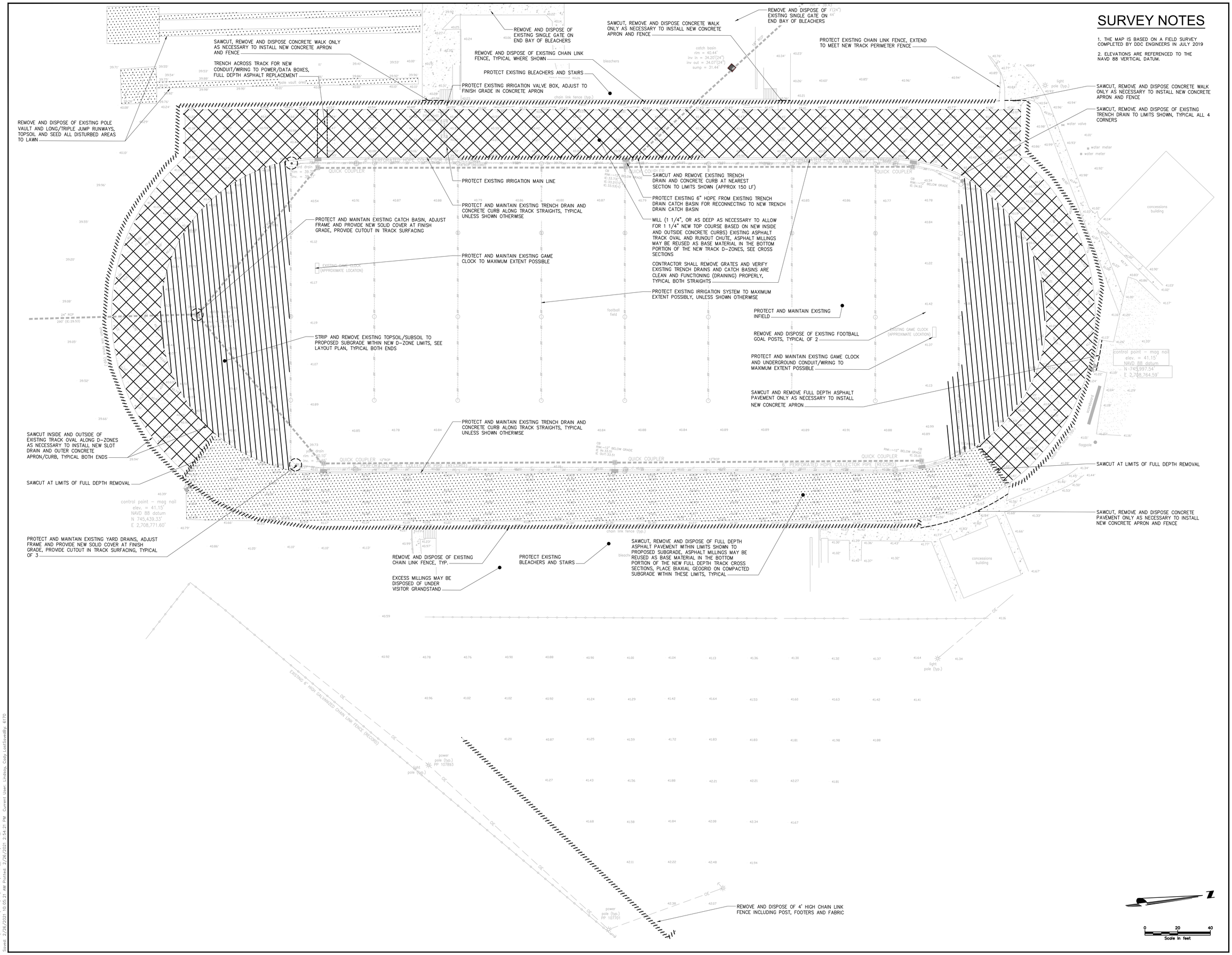

SURVEY NOTES

1. THE MAP IS BASED ON A FIELD SURVEY COMPLETED BY DDC ENGINEERS IN JULY 2019

2. ELEVATIONS ARE REFERENCED TO THE NAVD 88 VERTICAL DATUM.

CHA
1258 Professional Drive
Myrtle Beach, SC 29577-5896
843.692.3105 x284 • www.chacompanies.com

Horry County Schools

DDC ENGINEERS

HORRY COUNTY SCHOOLS

OFFICE OF FACILITIES
1160 E. HIGHWAY 501
CONWAY, SC 29526

SOUTH CAROLINA CERTIFICATE OF AUTHORIZATION
CHA, Inc.
No. 3955

REGISTERED PROFESSIONAL ENGINEER
No. 24401
2-22-2021
PATRICK N. GRAHAM

IT IS A VIOLATION OF LAW FOR ANY PERSON, UNLESS THEY ARE ACTING UNDER THE DIRECTION OF A LICENSED PROFESSIONAL ENGINEER, ARCHITECT, LANDSCAPE ARCHITECT OR LAND SURVEYOR TO ALTER AN ITEM IN ANY WAY. IF AN ITEM BEARING THE STAMP OF A LICENSED PROFESSIONAL IS ALTERED, THE ALTERING ENGINEER, ARCHITECT, LANDSCAPE ARCHITECT OR LAND SURVEYOR SHALL STAMP THE DOCUMENT AND INCLUDE THE NOTATION "ALTERED BY" FOLLOWED BY THEIR SIGNATURE, THE DATE OF SUCH ALTERATION, AND A SPECIFIC DESCRIPTION OF THE ALTERATION.

PHASE 2

AYNOR HS
GREEN SEA FLOYDS HS
NORTH MYRTLE HS

TRACK AND FIELD
ATHLETIC FACILITY
IMPROVEMENTS PROGRAM

No.	Submittal / Revision	App'd	By	Date

NORTH MYRTLE HS
DEMOLITION PLAN

Designed By:	Drawn By:	Checked By:
JRP	CL	PG
Issue Date:	Project No:	Scale:
2/22/2021	36108	AS SHOWN

Drawing No.:
C-031

File: V:\PROJECTS\ANY\V45\36108\CADD_ACAD\C-031_PH2 - NMHS.DWG
Saved: 2/26/2021 10:25:21 AM Printed: 2/26/2021 2:54:21 PM Current User: lindsay, Cody LastSaveBy: 6170

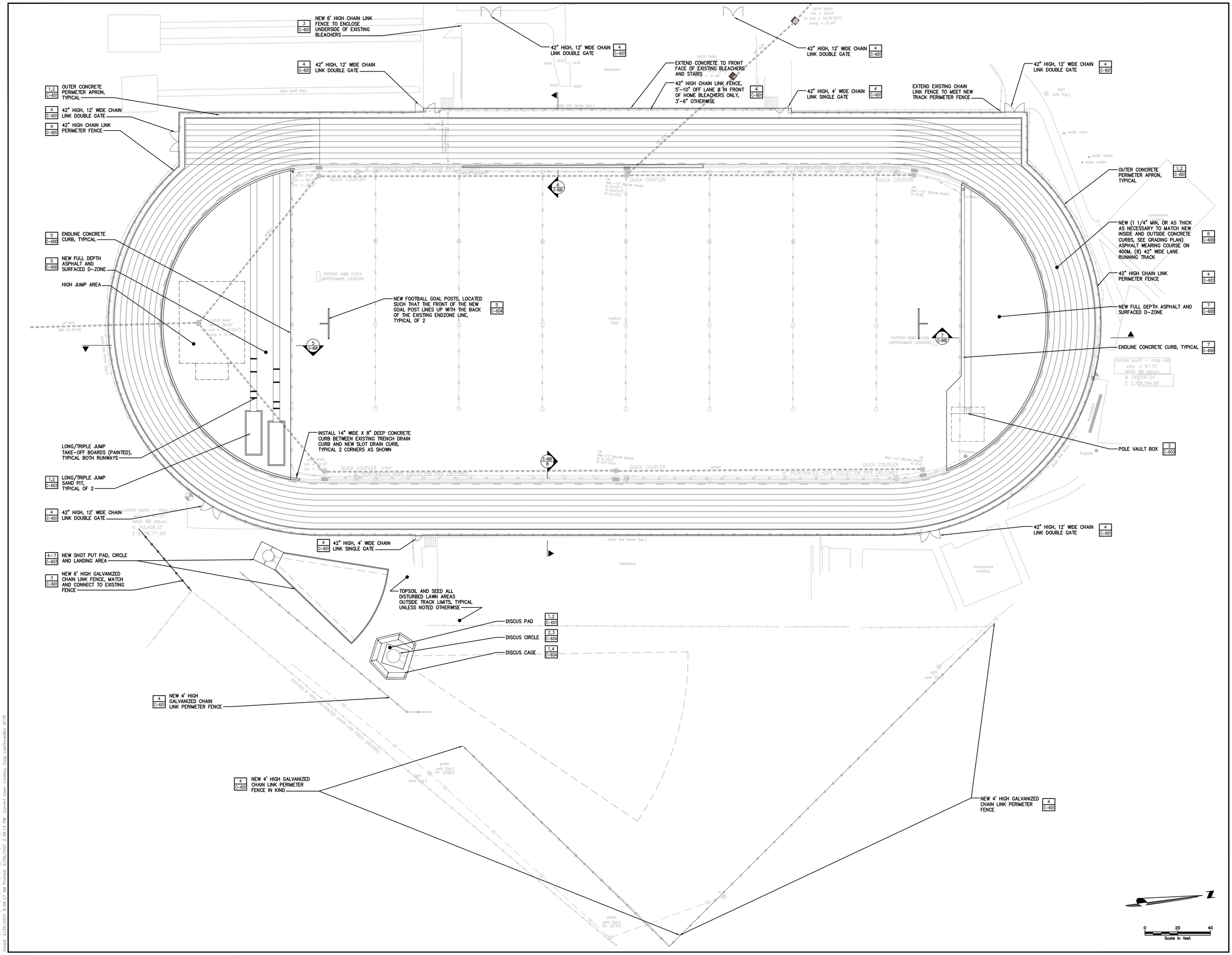

CHA
1258 Professional Drive
Myrtle Beach, SC 29577-5896
843.692.3105 x284 • www.chacompanies.com

HCS Horry County Schools

DDC ENGINEERS

HORRY COUNTY SCHOOLS

OFFICE OF FACILITIES
1160 E. HIGHWAY 501
CONWAY, SC 29526

SOUTH CAROLINA CERTIFICATE OF AUTHORIZATION
CHA, Inc.
No. 3955

SOUTH CAROLINA LICENSED PROFESSIONAL ENGINEER
No. 24401
2-22-2021
PATRICK N. GRAHAM

IT IS A VIOLATION OF LAW FOR ANY PERSON, UNLESS THEY ARE ACTING UNDER THE DIRECTION OF A LICENSED PROFESSIONAL ENGINEER, ARCHITECT, LANDSCAPE ARCHITECT OR LAND SURVEYOR TO ALTER AN ITEM IN ANY WAY. IF AN ITEM BEARING THE STAMP OF A LICENSED PROFESSIONAL IS ALTERED, THE ALTERING ENGINEER, ARCHITECT, LANDSCAPE ARCHITECT OR LAND SURVEYOR SHALL AFFIX TO THE ITEM THE PERSON'S SEAL AND THE NOTATION "ALTERED BY" FOLLOWED BY THEIR SIGNATURE, THE DATE OF SUCH ALTERATION, AND A SPECIFIC DESCRIPTION OF THE ALTERATION.

PHASE 2

AYNOR HS
GREEN SEA FLOYDS HS
NORTH MYRTLE HS

TRACK AND FIELD
ATHLETIC FACILITY
IMPROVEMENTS PROGRAM

No.	Submittal / Revision	App'd.	By	Date

NORTH MYRTLE HS
LAYOUT PLAN

Designed By:	Drawn By:	Checked By:
JRP	CL	PG
Issue Date:	Project No:	Scale:
2/22/2021	36108	AS SHOWN

Drawing No.:
C-130

File: V:\PROJECTS\ANY\V53\36108\CADD_ACAD\C-130_PH2 - NMHS.DWG
Saved: 2/25/2021 9:39:27 AM Printed: 2/25/2021 2:38:13 PM Current User: Lindsay, Cody (ctl0Saved0) 6170

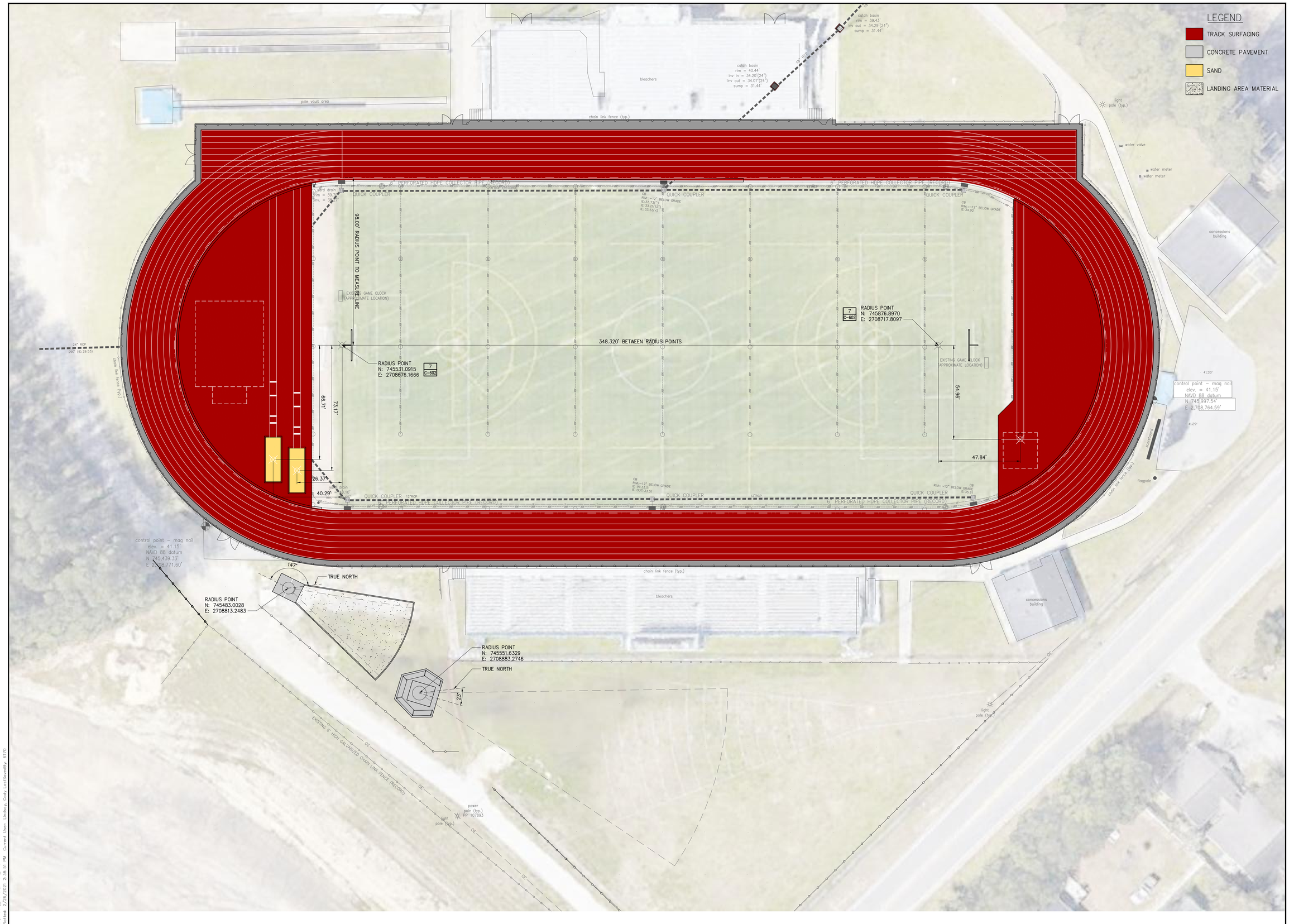

0 20 40
Scale in feet

CHA
1258 Professional Drive
Myrtle Beach, SC 29577-5896
843.692.3105 x284 • www.chacompanies.com

HCS Horry County Schools

DDC ENGINEERS

HORRY COUNTY SCHOOLS

OFFICE OF FACILITIES
1160 E. HIGHWAY 501
CONWAY, SC 29526

SOUTH CAROLINA CERTIFICATE OF AUTHORIZATION
CHA, Inc.
No. 3955

SOUTH CAROLINA REGISTERED PROFESSIONAL ENGINEER
No. 24401
2-22-2021
PATRICK N. GRAHAM

IT IS A VIOLATION OF LAW FOR ANY PERSON, UNLESS THEY ARE ACTING UNDER THE DIRECTION OF A LICENSED PROFESSIONAL ENGINEER, TO ALTER AN ITEM IN ANY WAY. IF AN ITEM BEARING THE STAMP OF A LICENSED PROFESSIONAL IS ALTERED, THE ALTERING ENGINEER SHALL STAMP THE DOCUMENT AND INCLUDE THE NOTATION "ALTERED BY" FOLLOWED BY THEIR SIGNATURE, THE DATE OF SUCH ALTERATION, AND A SPECIFIC DESCRIPTION OF THE ALTERATION.

PHASE 2

AYNOR HS
GREEN SEA FLOYDS HS
NORTH MYRTLE HS

TRACK AND FIELD
ATHLETIC FACILITY
IMPROVEMENTS PROGRAM

No.	Submittal / Revision	App'd.	By	Date

NORTH MYRTLE HS
SURFACING AND
DIMENSION PLAN

Designed By:	Drawn By:	Checked By:
JRP	CL	PG
Issue Date:	Project No:	Scale:
2/22/2021	36108	AS SHOWN

Drawing No.:
C-131

File: V:\PROJECTS\ANY\K5\36108\CADD_ACAD\C-131_Ph2 - NMHS.DWG
Saved: 2/26/2021 9:49:33 AM Plotted: 2/26/2021 2:38:51 PM Current User: Lindsay, Cody (cmlSpendBy: 6170

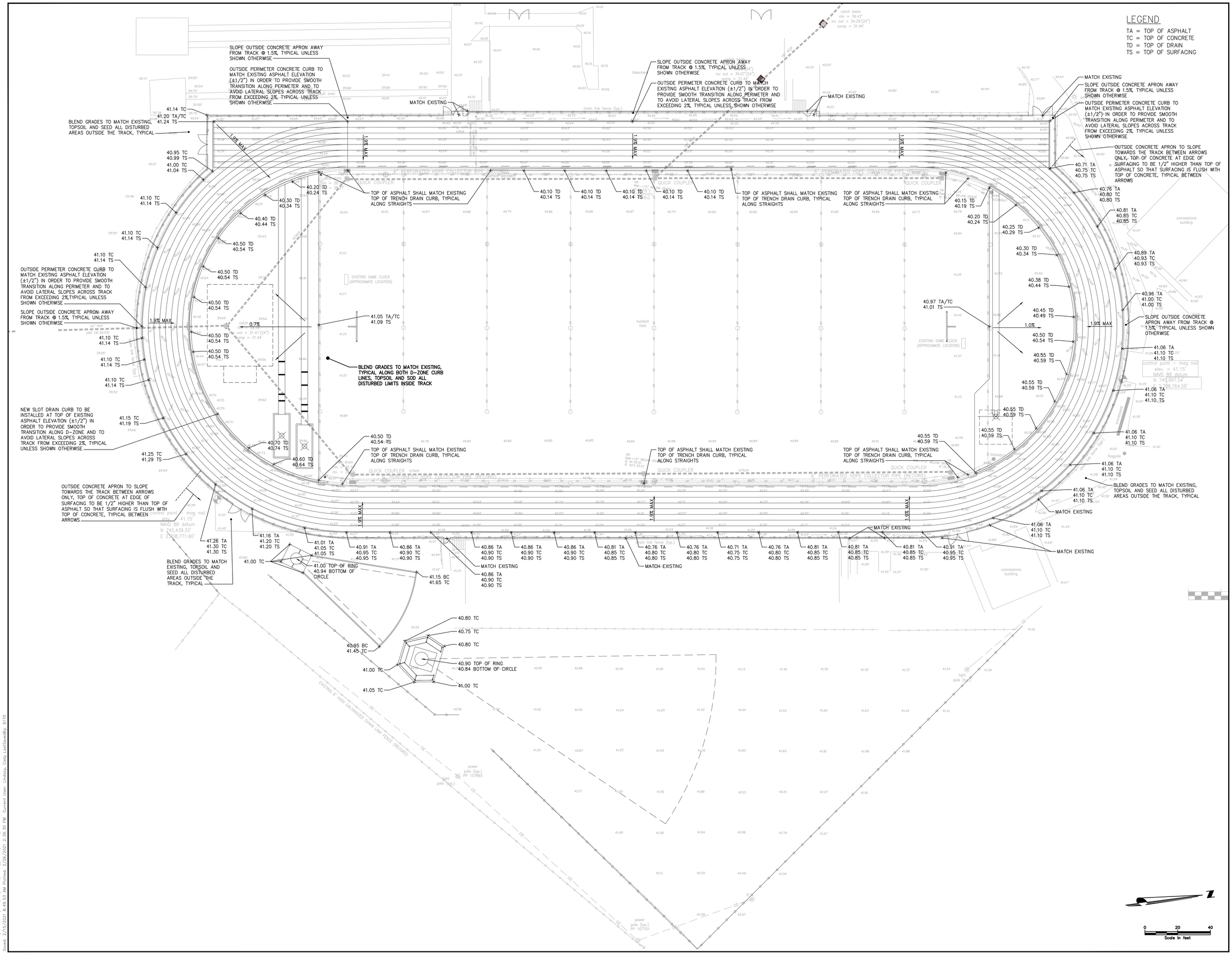

CHA
1258 Professional Drive
Myrtle Beach, SC 29577-5896
843.692.3105 x284 • www.chacompanies.com

HCS Horry County Schools

DDC ENGINEERS

HORRY COUNTY SCHOOLS

OFFICE OF FACILITIES
1160 E. HIGHWAY 501
CONWAY, SC 29526

SOUTH CAROLINA CERTIFICATE OF AUTHORIZATION
CHA, Inc.
No. 3955

SOUTH CAROLINA REGISTERED PROFESSIONAL ENGINEER
No. 24401
2-22-2021
PATRICK N. GRAHAM

IT IS A VIOLATION OF LAW FOR ANY PERSON, UNLESS THEY ARE ACTING UNDER THE DIRECTION OF A LICENSED PROFESSIONAL ENGINEER, TO ALTER AN ITEM IN ANY WAY. IF AN ITEM BEARING THE STAMP OF A LICENSED PROFESSIONAL IS ALTERED, THE ALTERING ENGINEER SHALL AFFIX TO THE ITEM THE ENGINEER'S SEAL AND THE SURVEYOR SHALL STAMP THE DOCUMENT AND INCLUDE THE NOTATION "ALTERED BY" FOLLOWED BY THEIR SIGNATURE, THE DATE OF SUCH ALTERATION, AND A SPECIFIC DESCRIPTION OF THE ALTERATION.

PHASE 2

AYNOR HS
GREEN SEA FLOYDS HS
NORTH MYRTLE HS

TRACK AND FIELD
ATHLETIC FACILITY
IMPROVEMENTS PROGRAM

No.	Submittal / Revision	App'd.	By	Date

NORTH MYRTLE HS
GRADING PLAN

Designed By:	Drawn By:	Checked By:
JRP	CL	PG
Issue Date:	Project No:	Scale:
2/22/2021	36108	AS SHOWN

Drawing No.:
C-230

File: V:\PROJECTS\ANY\65\36108\CADD_ACAD\C-230_PH2 - NMHS.DWG
Saved: 2/19/2021 8:49:53 AM Modified: 2/26/2021 2:39:30 PM Current User: Lindsay, Cody LastSavedBy: 6170

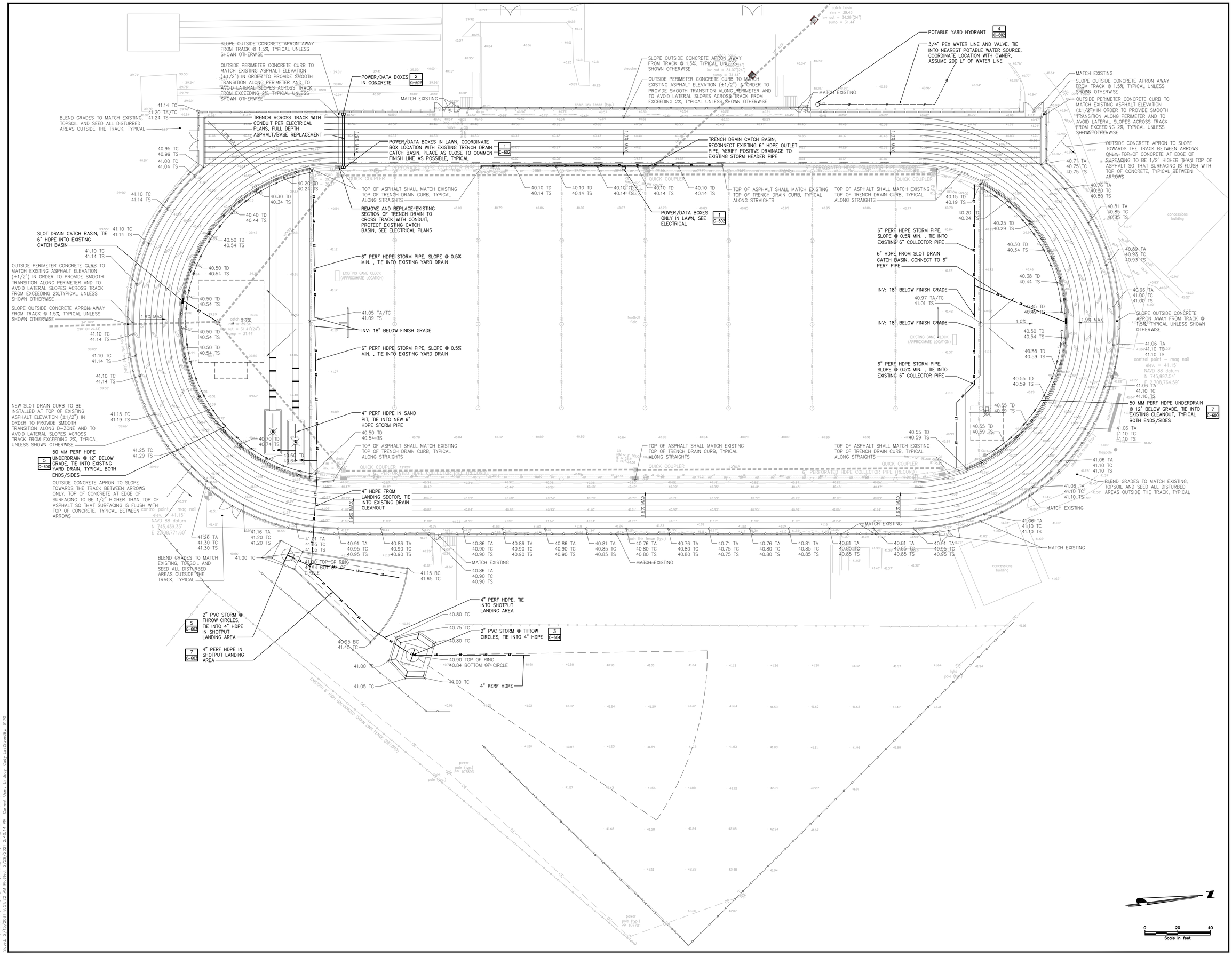

CHA
1258 Professional Drive
Myrtle Beach, SC 29577-5896
843.692.3105 x284 • www.chacompanies.com

HCS Horry County Schools

DDC ENGINEERS

HORRY COUNTY SCHOOLS

OFFICE OF FACILITIES
1160 E. HIGHWAY 501
CONWAY, SC 29526

SOUTH CAROLINA CERTIFICATE OF AUTHORIZATION
CHA, Inc.
No. 3955

SOUTH CAROLINA REGISTERED PROFESSIONAL ENGINEER
No. 24401
2-22-2021
PATRICK N. GRAHAM

IT IS A VIOLATION OF LAW FOR ANY PERSON, UNLESS THEY ARE ACTING UNDER THE DIRECTION OF A LICENSED PROFESSIONAL ENGINEER, ARCHITECT, LANDSCAPE ARCHITECT OR LAND SURVEYOR TO ALTER AN ITEM IN ANY WAY. IF AN ITEM BEARING THE STAMP OF A LICENSED PROFESSIONAL IS ALTERED, THE ALTERING ENGINEER, ARCHITECT, LANDSCAPE ARCHITECT OR LAND SURVEYOR SHALL ATTACH A PROPERLY SIGNED COPY OF THE NOTATION "ALTERED BY" FOLLOWED BY THEIR SIGNATURE, THE DATE OF SUCH ALTERATION, AND A SPECIFIC DESCRIPTION OF THE ALTERATION.

PHASE 2

AYNOR HS
GREEN SEA FLOYDS HS
NORTH MYRTLE HS

TRACK AND FIELD
ATHLETIC FACILITY
IMPROVEMENTS PROGRAM

No.	Submittal / Revision	App'd.	By	Date

NORTH MYRTLE HS
DRAINAGE AND
UTILITY PLAN

Designed By:	Drawn By:	Checked By:
JRP	CL	PG
Issue Date:	Project No:	Scale:
2/22/2021	36108	AS SHOWN

Drawing No.:
C-330

File: V:\PROJECTS\ANY\W5\36108\CADD_ACAD\C-330_PH2 - NMHS.DWG
Saved: 2/15/2021 8:51:22 AM Plotted: 2/26/2021 2:46:14 PM Current User: Lindsay, Cody (ctrlGuest@) P: 6170

SEEDING NOTES:

1. INCLUDES RURAL AREAS ADJACENT TO WELL-DEVELOPED LAWNS.
2. NOT REQUIRED ON SHOULDERS, MEDIANS, ETC... AND SLOPES UNDER 5 FEET IN HEIGHT.
3. GIANT BERMUDA SEED, INCLUDING NK-37, SHALL NOT BE USED.
4. RESEEDING CRIMSON CLOVER SHALL BE INOCULATED IN ACCORDANCE WITH SUBSECTION 810.05. DO NOT PLANT CLOVER IN MEDIANS OR IN RURAL AREAS ADJACENT TO WELL-DEVELOPED LAWNS.
5. PENSACOLA BAHIA SHALL BE ALLOWED ONLY AS SHOWN IN SEEDING SCHEDULES 3 AND 4 AT THE RATE OF 50 POUNDS PER ACRE ONLY WHEN SEEDING PIT AREAS THAT ARE GOVERNED BY THE SOUTH CAROLINA MINING ACT. OTHERWISE, DO NOT INCLUDE BAHIA SEED IN THE MIX.
6. THE CONTRACTOR SHALL OBTAIN A SATISFACTORY STAND OF PERENNIAL VEGETATION WHOSE ROOT SYSTEM SHALL BE DEVELOPED SUFFICIENTLY TO SURVIVE DRY PERIODS AND WINTER WEATHER, AND BE CAPABLE OF RE-ESTABLISHMENT IN THE SPRING. THE PERENNIAL VEGETATIVE COVER SHALL HAVE A MINIMUM COVERAGE DENSITY OF 70% FOR THE SEEDED AREAS. CONTRACTOR SHALL DETERMINE ALL RATES OF APPLICATION NECESSARY TO PRODUCE THE REQUIRED STAND OF GRASS, AND SHALL FOLLOW THE APPLICATION PROCEDURES AS SPECIFIED HEREIN.
7. GIANT BERMUDA SEED, INCLUDING NK-37, SHALL NOT BE USED.

SEEDING SCHEDULE FOR TEMPORARY VEGETATION Ds3

SCHEDULE NO.	COMMON NAME OF SEED	RATE PER ACRE (LBS.)	PLANTING DATES
1	COMMON BERMUDA (HULLED)	210	MARCH 16 TO AUG. 31
	TALL FESCUE	140	
2	COMMON BERMUDA (UNHULLED)	175	SEPT. 1 TO MARCH 15
	ANNUAL RYEGRASS	175	

NOTES:

THE CONTRACTOR SHALL OBTAIN A SATISFACTORY STAND OF PERENNIAL VEGETATION WHOSE ROOT SYSTEM SHALL BE DEVELOPED SUFFICIENTLY TO SURVIVE DRY PERIODS AND WINTER WEATHER, AND BE CAPABLE OF RE-ESTABLISHMENT IN THE SPRING. THE PERENNIAL VEGETATIVE COVER SHALL HAVE A MINIMUM COVERAGE DENSITY OF 70% FOR THE SEEDED AREAS. CONTRACTOR SHALL DETERMINE ALL RATES OF APPLICATION NECESSARY TO PRODUCE THE REQUIRED STAND OF GRASS, AND SHALL FOLLOW THE APPLICATION PROCEDURES AS SPECIFIED HEREIN.

SEEDING SCHEDULE FOR PERMANENT VEGETATION

SCHEDULE NO.	COMMON NAME OF SEED	RURAL RATE	URBAN RATE	PLANTING DATES
3 [1]	COMMON BERMUDA (HULLED) [2]	30	30	MARCH 1 TO AUG. 14
	WEEPING LOVEGRASS [3]	10	10	
	SERICEA LESPEDEZA (SCARIFIED) [4]	50	50	
4 [1]	COMMON BERMUDA (UNHULLED) [2]	40	40	AUG. 5 TO FEB. 28
	WEEPING LOVEGRASS [3]	10	10	
	SERICEA LESPEDEZA (UNHULLED, UNSCARIFIED) [4]	80	80	
	RESEEDING CRIMSON CLOVER [5]	20	0	
	RYE GRAIN	20	0	

NOTES:

1 INCLUDES RURAL AREAS ADJACENT TO WELL-DEVELOPED LAWNS.

2 NOT REQUIRED ON SHOULDERS, MEDIANS, ECT., AND SLOPES UNDER 5 FEET IN HEIGHT

3 GIANT BERMUDA SEED, INCLUDING NK-37, SHALL NOT BE USED.

4 RESEEDING CRIMSON CLOVER SHALL BE INOCULATED IN ACCORDANCE WITH SUBSECTION 810.05. DO NOT PLANT CLOVER IN MEDIANS OR IN RURAL AREAS ADJACENT TO WELL-DEVELOPED LAWNS.

5 PENSACOLA BAHIA SHALL BE ALLOWED ONLY AS SHOWN IN SEEDING SCHEDULES 3 AND 4 AT THE RATE OF 50 POUNDS PER ACRE ONLY WHEN SEEDING PIT AREAS THAT ARE GOVERNED BY THE SOUTH CAROLINA MINING ACT. OTHERWISE, DO NOT INCLUDE BAHIA SEED IN THE MIX.

THE CONTRACTOR SHALL OBTAIN A SATISFACTORY STAND OF PERENNIAL VEGETATION WHOSE ROOT SYSTEM SHALL BE DEVELOPED SUFFICIENTLY TO SURVIVE DRY PERIODS AND WINTER WEATHER, AND BE CAPABLE OF RE-ESTABLISHMENT IN THE SPRING. THE PERENNIAL VEGETATIVE COVER SHALL HAVE A MINIMUM COVERAGE DENSITY OF 70% FOR THE SEEDED AREAS. CONTRACTOR SHALL DETERMINE ALL RATES OF APPLICATION NECESSARY TO PRODUCE THE REQUIRED STAND OF GRASS, AND SHALL FOLLOW THE APPLICATION PROCEDURES AS SPECIFIED HEREIN.

THE CONTRACTOR MAY INCLUDE QUANTITIES OF RYE GRAIN AND MILLET IN SCHEDULE 1 AND 3 IN ORDER TO ESTABLISH QUICK GROUND COVER FOR EROSION CONTROL PURPOSES.

SEEDING SCHEDULE FOR TEMPORARY VEGETATION

SCHEDULE NO.	COMMON NAME OF SEED	RATE PER ACRE (LBS.)	PLANTING DATES
1	ANNUAL SUDAN GRASS (SWEET OR TIFF)	40	APRIL 1- AUGUST 15
2	BROWN TOP MILLET	50	APRIL 1- AUGUST 15
3	RYE GRAIN	55	AUGUST 16- MARCH 31

OAT GRAIN IS TO BE ADDED TO ALL SCHEDULES, IF SEEDING DATE IS BETWEEN MARCH 1 AND APRIL 16, AT THE RATE OF 10 POUNDS PER ACRE.

THE CONTRACTOR SHALL OBTAIN A SATISFACTORY STAND OF VEGETATION THAT IS CAPABLE OF EROSION CONTROL. CONTRACTOR SHALL DETERMINE ALL RATES OF APPLICATION NECESSARY TO PRODUCE THE REQUIRED RESULTS. THE TEMPORARY VEGETATION SHALL PROVIDE MINIMUM DENSITY COVERAGE OF 70% OF THE SEEDED AREA.

CONSTRUCTION SEQUENCE:

1. CONTRACTOR TO LOCATE ALL EXISTING UTILITIES WITHIN AND IMMEDIATELY ADJACENT TO PROJECT AREA.
2. INSTALL CONSTRUCTION ENTRANCE.
3. INSTALL PERIMETER EROSION CONTROL DEVICES, INCLUDING ALL TREE PROTECTION.
4. DEMO EXISTING TRACK AND APPURTENANCES.

EROSION CONTROL LEGEND

SYMBOL	PRACTICE	DESCRIPTION
IP	INLET PROTECTION	A TEMPORARY SEDIMENT BARRIER LAID AROUND A STORM DRAIN INLET TO PREVENT SEDIMENT FROM ENTERING THE DRAINAGE SYSTEM.
OP	OUTLET PROTECTION	RIP RAP CHANNEL / BANK PLACED BELOW DRAINAGE OUTLETS TO REDUCE THE VELOCITY OF FLOW, EROSION, AND STABILIZE GRADES DOWNSTREAM OF OUTLET STRUCTURES.
CD	TEMPORARY CHECK DAM	RIP RAP BANK PLACED BELOW DRAINAGE OUTLETS TO REDUCE THE VELOCITY OF FLOW, EROSION AND STABILIZE GRADES DOWN STREAM OF DRAINAGE OUTLETS.
SF	SILT FENCE	A TEMPORARY STRUCTURE USED TO SLOW THE VELOCITY OF RUN-OFF, CAUSE SEDIMENT DEPOSITION AT THE STRUCTURE, AND FILTER SEDIMENT FROM RUN-OFF.
SF_2	DOUBLE ROW SILT FENCE	A TEMPORARY STRUCTURE USED TO SLOW THE VELOCITY OF RUN-OFF, CAUSE SEDIMENT DEPOSITION AT THE STRUCTURE, AND FILTER SEDIMENT FROM RUN-OFF.
CL	CONSTRUCTION LIMITS	A DEFINED AREA THAT ALL LAND DISTURBANCE WILL OCCUR DURING CONSTRUCTION.
ECB	PERMANENT EROSION CONTROL MATTING (HIGH PERFORMANCE TRM PYRAMAT BY SI GEOSOLUTIONS OR EQUAL)	A PERMANENT REINFORCEMENT MAT TO PREVENT SOIL EROSION AND MAINTAIN PERMANENT GROUND COVER.
Ds3	DISTURBED AREA STABILIZATION (WITH TEMPORARY VEGETATION)	ESTABLISHING PERMANENT VEGETATIVE COVER SUCH AS TREES, SHRUBS, VINES, GRASSES, SOD, OR LEGUMES ON DISTURBED AREAS.
ST	SEDIMENT TUBE	SEDIMENT TUBE PLACED IN EXISTING OR PROPOSED DITCH SECTIONS TO REDUCE THE VELOCITY OF FLOW, EROSION AND STABILIZE GRADES DOWN STREAM OR DRAINAGE OUTLETS.
CE	CONSTRUCTION ENTRANCE	A STONE STABILIZED PAD LOCATED AT ANY POINT THAT TRAFFIC WILL BE LEAVING A CONSTRUCTION SITE TO A PUBLIC RIGHT-OF-WAY, STREET, ALLEY, SIDEWALK, OR PARKING PLOT WHICH WILL REDUCE OR ELIMINATE THE TRANSPORT OF MUD FROM THE CONSTRUCTION SITE.

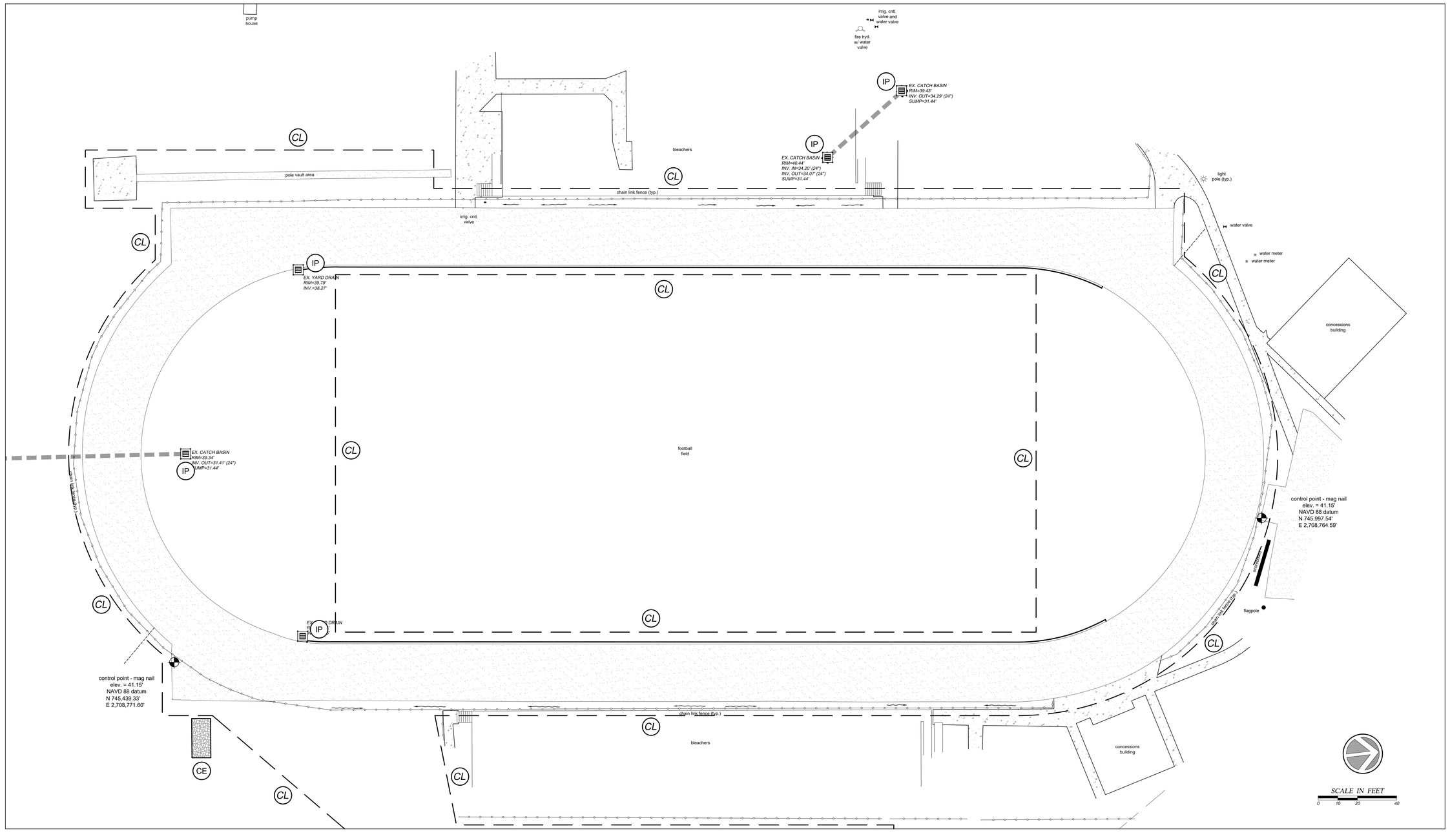

Drawing Copyright © 2016

CHA
1298 Professional Drive
Myrtle Beach, SC 29577-5896
843.692.3205 x284 • www.chacompanies.com

HCS Horry County Schools

DDC ENGINEERS®
Consulting Engineers, Surveyors, Planners, Landscape Architects & Environmentalists
1298 Professional Dr., Myrtle Beach, SC 29577
Phone: (843) 692-3200 Fax: (843) 692-3210

HORRY COUNTY SCHOOLS

OFFICE OF FACILITIES
1160 E. HIGHWAY 501
CONWAY, SC 29526

SOUTH CAROLINA CERTIFICATE OF AUTHORIZATION
BOLTON & MENK SOUTHEAST, LLC
No. 6475

SOUTH CAROLINA REGISTERED PROFESSIONAL ENGINEER
No. 29814
2/22/21
ERICK K. SANFORD

IT IS A VIOLATION OF LAW FOR ANY PERSON, UNLESS THEY ARE ACTING UNDER THE DIRECTION OF A LICENSED PROFESSIONAL ENGINEER, ARCHITECT, LANDSCAPE ARCHITECT OR LAND SURVEYOR, TO ALTER AN ITEM IN ANY WAY. IF AN ITEM BEARING THE STAMP OF A LICENSED PROFESSIONAL ENGINEER, ARCHITECT, LANDSCAPE ARCHITECT OR LAND SURVEYOR SHALL STAMP THE DOCUMENT AND INCLUDE THE NOTATION "ALTERED BY" FOLLOWED BY THEIR SIGNATURE, THE DATE OF SUCH ALTERATION, AND A SPECIFIC DESCRIPTION OF THE ALTERATION.

NORTH MYRTLE BEACH
HIGH SCHOOL
TRACK AND FIELD
ATHLETIC FACILITY
IMPROVEMENTS PROGRAM

No.	Submittal / Revision	App'd	By	Date

SEDIMENT AND EROSION CONTROL PLAN
PHASE I

Designed By:	Drawn By:	Checked By:
EKS	KJG	EKS
Issue Date:	Project No:	Scale:
2/1/21	20095E	1" = 20'

Drawing No.:
C-530

File: J:\PLANS\2020\20095E - HORRY COUNTY SCHOOLS PHASE 2, TRACK AND FIELD IMPROVEMENTS\C\NORTH MYRTLE BEACH\20095E-NORTH MYRTLE TRACK ERO.DWG
Saved: 2/23/2021 8:32:04 AM Plotted: 2/23/2021 8:32:41 AM Current User: Bailey Evans LastSavedBy: jbe

SEEDING NOTES:

1. INCLUDES RURAL AREAS ADJACENT TO WELL-DEVELOPED LAWNS.
2. NOT REQUIRED ON SHOULDERS, MEDIANS, ETC... AND SLOPES UNDER 5 FEET IN HEIGHT.
3. GIANT BERMUDA SEED, INCLUDING NK-37, SHALL NOT BE USED.
4. RESEEDING CRIMSON CLOVER SHALL BE INOCULATED IN ACCORDANCE WITH SUBSECTION 810.05. DO NOT PLANT CLOVER IN MEDIANS OR IN RURAL AREAS ADJACENT TO WELL-DEVELOPED LAWNS.
5. PENSACOLA BAHIA SHALL BE ALLOWED ONLY AS SHOWN IN SEEDING SCHEDULES 3 AND 4 AT THE RATE OF 50 POUNDS PER ACRE ONLY WHEN SEEDING PIT AREAS THAT ARE GOVERNED BY THE SOUTH CAROLINA MINING ACT. OTHERWISE, DO NOT INCLUDE BAHIA SEED IN THE MIX.
6. THE CONTRACTOR SHALL OBTAIN A SATISFACTORY STAND OF PERENNIAL VEGETATION WHOSE ROOT SYSTEM SHALL BE DEVELOPED SUFFICIENTLY TO SURVIVE DRY PERIODS AND WINTER WEATHER, AND BE CAPABLE OF RE-ESTABLISHMENT IN THE SPRING. THE PERENNIAL VEGETATIVE COVER SHALL HAVE A MINIMUM COVERAGE DENSITY OF 70% FOR THE SEEDED AREAS. CONTRACTOR SHALL DETERMINE ALL RATES OF APPLICATION NECESSARY TO PRODUCE THE REQUIRED STAND OF GRASS, AND SHALL FOLLOW THE APPLICATION PROCEDURES AS SPECIFIED HEREIN.
7. GIANT BERMUDA SEED, INCLUDING NK-37, SHALL NOT BE USED.

SEEDING SCHEDULE FOR TEMPORARY VEGETATION Ds3

SCHEDULE NO.	COMMON NAME OF SEED	RATE PER ACRE (LBS.)	PLANTING DATES
1	COMMON BERMUDA (HULLED)	210	MARCH 16 TO AUG. 31
	TALL FESCUE	140	
2	COMMON BERMUDA (UNHULLED)	175	SEPT. 1 TO MARCH 15
	ANNUAL RYEGRASS	175	

NOTES:

THE CONTRACTOR SHALL OBTAIN A SATISFACTORY STAND OF PERENNIAL VEGETATION WHOSE ROOT SYSTEM SHALL BE DEVELOPED SUFFICIENTLY TO SURVIVE DRY PERIODS AND WINTER WEATHER, AND BE CAPABLE OF RE-ESTABLISHMENT IN THE SPRING. THE PERENNIAL VEGETATIVE COVER SHALL HAVE A MINIMUM COVERAGE DENSITY OF 70% FOR THE SEEDED AREAS. CONTRACTOR SHALL DETERMINE ALL RATES OF APPLICATION NECESSARY TO PRODUCE THE REQUIRED STAND OF GRASS, AND SHALL FOLLOW THE APPLICATION PROCEDURES AS SPECIFIED HEREIN.

SEEDING SCHEDULE FOR PERMANENT VEGETATION

SCHEDULE NO.	COMMON NAME OF SEED	RURAL RATE	URBAN RATE[1]	PLANTING DATES
3[4]	COMMON BERMUDA (HULLED)[3]	30	30	MARCH 1 TO AUG. 14
	WEEPING LOVEGRASS[2]	10	10	
	SERICEA LESPEDEZA (SCARIFIED)[7]	50	50	
4[5]	COMMON BERMUDA (UNHULLED)[3]	40	40	AUG. 5 TO FEB. 28
	WEEPING LOVEGRASS[2]	10	10	
	SERICEA LESPEDEZA (UNHULLED, UNSCARIFIED)	80	80	
	RESEEDING CRIMSON CLOVER[6]	20	0	
	RYE GRAIN	20	0	

NOTES:

1 INCLUDES RURAL AREAS ADJACENT TO WELL-DEVELOPED LAWNS.

2 NOT REQUIRED ON SHOULDERS, MEDIANS, ECT., AND SLOPES UNDER 5 FEET IN HEIGHT

3 GIANT BERMUDA SEED, INCLUDING NK-37, SHALL NOT BE USED.

4 RESEEDING CRIMSON CLOVER SHALL BE INOCULATED IN ACCORDANCE WITH SUBSECTION 810.05. DO NOT PLANT CLOVER IN MEDIANS OR IN RURAL AREAS ADJACENT TO WELL-DEVELOPED LAWNS.

5 PENSACOLA BAHIA SHALL BE ALLOWED ONLY AS SHOWN IN SEEDING SCHEDULES 3 AND 4 AT THE RATE OF 50 POUNDS PER ACRE ONLY WHEN SEEDING PIT AREAS THAT ARE GOVERNED BY THE SOUTH CAROLINA MINING ACT. OTHERWISE, DO NOT INCLUDE BAHIA SEED IN THE MIX.

THE CONTRACTOR SHALL OBTAIN A SATISFACTORY STAND OF PERENNIAL VEGETATION WHOSE ROOT SYSTEM SHALL BE DEVELOPED SUFFICIENTLY TO SURVIVE DRY PERIODS AND WINTER WEATHER, AND BE CAPABLE OF RE-ESTABLISHMENT IN THE SPRING. THE PERENNIAL VEGETATIVE COVER SHALL HAVE A MINIMUM COVERAGE DENSITY OF 70% FOR THE SEEDED AREAS. CONTRACTOR SHALL DETERMINE ALL RATES OF APPLICATION NECESSARY TO PRODUCE THE REQUIRED STAND OF GRASS, AND SHALL FOLLOW THE APPLICATION PROCEDURES AS SPECIFIED HEREIN.

THE CONTRACTOR MAY INCLUDE QUANTITIES OF RYE GRAIN AND MILLET IN SCHEDULE 1 AND 3 IN ORDER TO ESTABLISH QUICK GROUND COVER FOR EROSION CONTROL PURPOSES.

SEEDING SCHEDULE FOR TEMPORARY VEGETATION

SCHEDULE NO.	COMMON NAME OF SEED	RATE PER ACRE (LBS.)	PLANTING DATES
1	ANNUAL SUDAN GRASS (SWEET OR TIFF)	40	APRIL 1- AUGUST 15
2	BROWN TOP MILLET	50	APRIL 1- AUGUST 15
3	RYE GRAIN	55	AUGUST 16- MARCH 31

OAT GRAIN IS TO BE ADDED TO ALL SCHEDULES, IF SEEDING DATE IS BETWEEN MARCH 1 AND APRIL 16, AT THE RATE OF 10 POUNDS PER ACRE.

THE CONTRACTOR SHALL OBTAIN A SATISFACTORY STAND OF VEGETATION THAT IS CAPABLE OF EROSION CONTROL. CONTRACTOR SHALL DETERMINE ALL RATES OF APPLICATION NECESSARY TO PRODUCE THE REQUIRED RESULTS. THE TEMPORARY VEGETATION SHALL PROVIDE MINIMUM DENSITY COVERAGE OF 70% OF THE SEEDED AREA.

CONSTRUCTION SEQUENCE:

1. CONTRACTOR TO LOCATE ALL EXISTING UTILITIES WITHIN AND IMMEDIATELY ADJACENT TO PROJECT AREA.
2. INSTALL CONSTRUCTION ENTRANCE.
3. INSTALL PERIMETER EROSION CONTROL DEVICES, INCLUDING ALL TREE PROTECTION.
4. DEMO EXISTING TRACK AND APPURTENANCES.

EROSION CONTROL LEGEND

SYMBOL	PRACTICE	DESCRIPTION
IP	INLET PROTECTION	A TEMPORARY SEDIMENT BARRIER LAID AROUND A STORM DRAIN INLET TO PREVENT SEDIMENT FROM ENTERING THE DRAINAGE SYSTEM.
OP	OUTLET PROTECTION	RIP RAP CHANNEL / BANK PLACED BELOW DRAINAGE OUTLETS TO REDUCE THE VELOCITY OF FLOW, EROSION, AND STABILIZE GRADES DOWNSTREAM OF OUTLET STRUCTURES.
CD	TEMPORARY CHECK DAM	RIP RAP BANK PLACED BELOW DRAINAGE OUTLETS TO REDUCE THE VELOCITY OF FLOW, EROSION AND STABILIZE GRADES DOWN STREAM OF DRAINAGE OUTLETS.
SF	SILT FENCE	A TEMPORARY STRUCTURE USED TO SLOW THE VELOCITY OF RUN-OFF, CAUSE SEDIMENT DEPOSITION AT THE STRUCTURE, AND FILTER SEDIMENT FROM RUN-OFF.
SF_2	DOUBLE ROW SILT FENCE	A TEMPORARY STRUCTURE USED TO SLOW THE VELOCITY OF RUN-OFF, CAUSE SEDIMENT DEPOSITION AT THE STRUCTURE, AND FILTER SEDIMENT FROM RUN-OFF.
CL	CONSTRUCTION LIMITS	A DEFINED AREA THAT ALL LAND DISTURBANCE WILL OCCUR DURING CONSTRUCTION.
ECB	PERMANENT EROSION CONTROL MATTING (HIGH PERFORMANCE TRM PYRAMAT BY SI GEOSOLUTIONS OR EQUAL)	A PERMANENT REINFORCEMENT MAT TO PREVENT SOIL EROSION AND MAINTAIN PERMANENT GROUND COVER.
Ds3	DISTURBED AREA STABILIZATION (WITH TEMPORARY VEGETATION)	ESTABLISHING PERMANENT VEGETATIVE COVER SUCH AS TREES, SHRUBS, VINES, GRASSES, SOD, OR LEGUMES ON DISTURBED AREAS.
ST	SEDIMENT TUBE	SEDIMENT TUBE PLACED IN EXISTING OR PROPOSED DITCH SECTIONS TO REDUCE THE VELOCITY OF FLOW, EROSION AND STABILIZE GRADES DOWN STREAM OR DRAINAGE OUTLETS.
CE	CONSTRUCTION ENTRANCE	A STONE STABILIZED PAD LOCATED AT ANY POINT THAT TRAFFIC WILL BE LEAVING A CONSTRUCTION SITE TO A PUBLIC RIGHT-OF-WAY, STREET, ALLEY, SIDEWALK, OR PARKING PLOT WHICH WILL REDUCE OR ELIMINATE THE TRANSPORT OF MUD FROM THE CONSTRUCTION SITE.

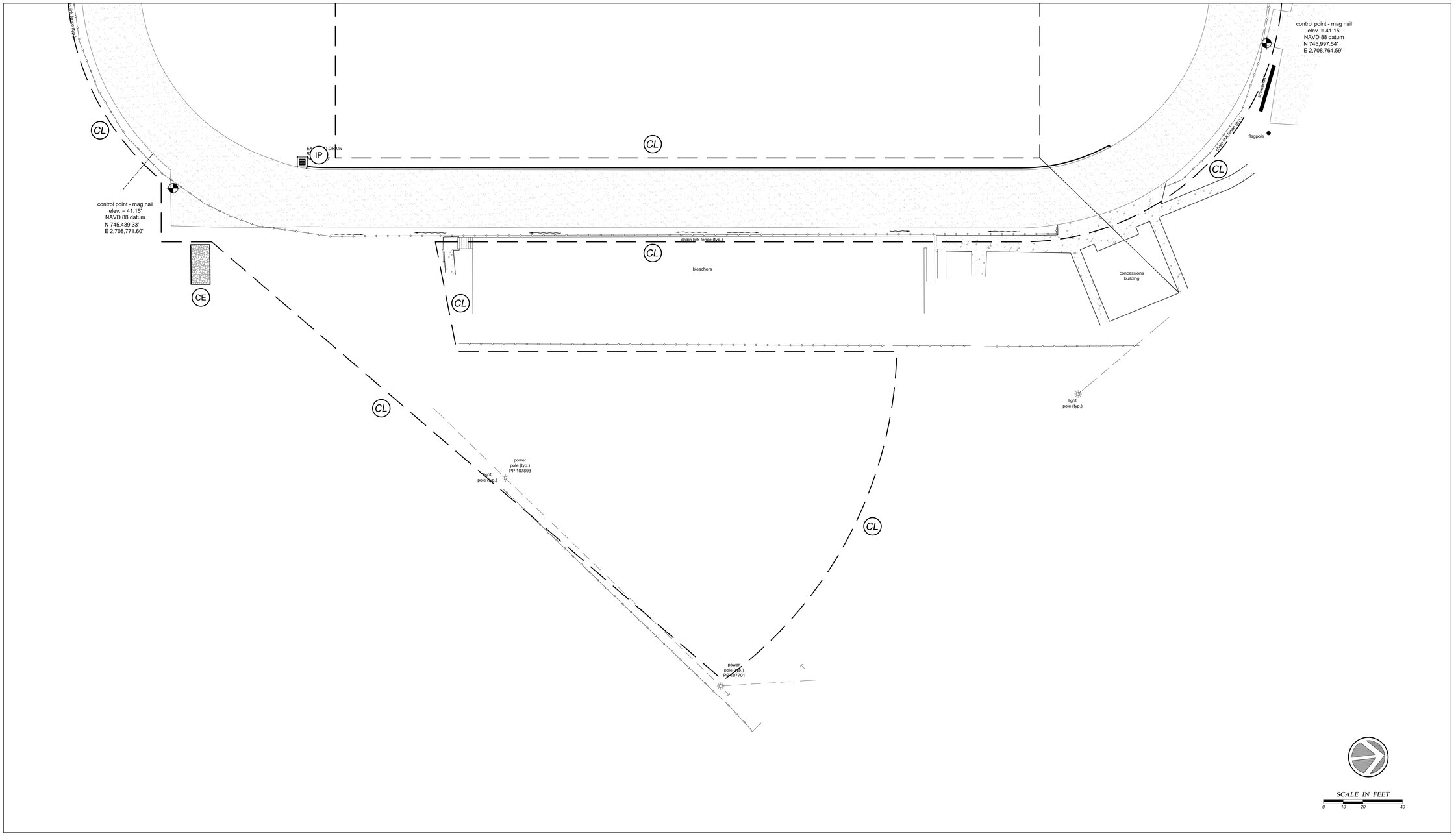

Drawing Copyright © 2016

CHA
1298 Professional Drive
Myrtle Beach, SC 29577-5896
843.692.3205 x284 • www.chacompanies.com

HCS Horry County Schools

DDC ENGINEERS®
Consulting Engineers, Surveyors, Planners, Landscape Architects & Environmentalists
1298 Professional Dr., Myrtle Beach, SC 29577
Phone: (843) 692-3200 Fax: (843) 692-3210

HORRY COUNTY SCHOOLS

OFFICE OF FACILITIES
1160 E. HIGHWAY 501
CONWAY, SC 29526

SOUTH CAROLINA BOLTON & MENK SOUTHEAST, LLC No. 6475 CERTIFICATE OF AUTHORIZATION

SOUTH CAROLINA PROFESSIONAL ENGINEER No. 29814 2/22/21 ERIC K. SANFORD

IT IS A VIOLATION OF LAW FOR ANY PERSON, UNLESS THEY ARE ACTING UNDER THE DIRECTION OF A LICENSED PROFESSIONAL ENGINEER, ARCHITECT, LANDSCAPE ARCHITECT OF LAND SURVEYOR, TO ALTER AN ITEM IN ANY WAY. IF AN ITEM BEARING THE STAMP OF A LICENSED PROFESSIONAL IS ALTERED, THE ALTERING ENGINEER, ARCHITECT, LANDSCAPE ARCHITECT OF LAND SURVEYOR SHALL ATTACH A DESIGNATION TO THE SEAL NEXT TO THE NOTATION "ALTERED BY" FOLLOWED BY THEIR SIGNATURE, THE DATE OF SUCH ALTERATION, AND A SPECIFIC DESCRIPTION OF THE ALTERATION.

NORTH MYRTLE BEACH
HIGH SCHOOL
TRACK AND FIELD
ATHLETIC FACILITY
IMPROVEMENTS PROGRAM

No.	Submittal / Revision	App'd	By	Date

SEDIMENT AND EROSION CONTROL PLAN
PHASE I

Designed By:	Drawn By:	Checked By:
EKS	KJG	EKS
Issue Date:	Project No:	Scale:
2/1/21	20095E	1" = 20'

Drawing No.:
C-531

File: J:\PLANS\2020\20095E -- HORRY COUNTY SCHOOLS PHASE 3 TRACK AND FIELD IMPROVEMENTS\E\NORTH MYRTLE BEACH\20095E-NORTH MYRTLE TRACK ERO.DWG
Saved: 2/23/2021 8:32:04 AM Plotted: 2/23/2021 8:32:42 AM Current User: Bailey Evans LastSavedBy: jse

Ds3

SEEDING NOTES:

1. INCLUDES RURAL AREAS ADJACENT TO WELL-DEVELOPED LAWNS.
2. NOT REQUIRED ON SHOULDERS, MEDIANS, ETC... AND SLOPES UNDER 5 FEET IN HEIGHT.
3. GIANT BERMUDA SEED, INCLUDING NK-37, SHALL NOT BE USED.
4. RESEEDING CRIMSON CLOVER SHALL BE INOCULATED IN ACCORDANCE WITH SUBSECTION 810.05. DO NOT PLANT CLOVER IN MEDIANS OR IN RURAL AREAS ADJACENT TO WELL-DEVELOPED LAWNS.
5. PENSACOLA BAHIA SHALL BE ALLOWED ONLY AS SHOWN IN SEEDING SCHEDULES 3 AND 4 AT THE RATE OF 50 POUNDS PER ACRE ONLY WHEN SEEDING PIT AREAS THAT ARE GOVERNED BY THE SOUTH CAROLINA MINING ACT. OTHERWISE, DO NOT INCLUDE BAHIA SEED IN THE MIX.
6. THE CONTRACTOR SHALL OBTAIN A SATISFACTORY STAND OF PERENNIAL VEGETATION WHOSE ROOT SYSTEM SHALL BE DEVELOPED SUFFICIENTLY TO SURVIVE DRY PERIODS AND WINTER WEATHER, AND BE CAPABLE OF RE-ESTABLISHMENT IN THE SPRING. THE PERENNIAL VEGETATIVE COVER SHALL HAVE A MINIMUM COVERAGE DENSITY OF 70% FOR THE SEEDED AREAS. CONTRACTOR SHALL DETERMINE ALL RATES OF APPLICATION NECESSARY TO PRODUCE THE REQUIRED STAND OF GRASS, AND SHALL FOLLOW THE APPLICATION PROCEDURES AS SPECIFIED HEREIN.
7. GIANT BERMUDA SEED, INCLUDING NK-37, SHALL NOT BE USED.

SEEDING SCHEDULE FOR TEMPORARY VEGETATION Ds3

SCHEDULE NO.	COMMON NAME OF SEED	RATE PER ACRE (LBS.)	PLANTING DATES
1	COMMON BERMUDA (HULLED)	210	MARCH 16 TO AUG. 31
	TALL FESCUE	140	
2	COMMON BERMUDA (UNHULLED)	175	SEPT. 1 TO MARCH 15
	ANNUAL RYEGRASS	175	

NOTES:

THE CONTRACTOR SHALL OBTAIN A SATISFACTORY STAND OF PERENNIAL VEGETATION WHOSE ROOT SYSTEM SHALL BE DEVELOPED SUFFICIENTLY TO SURVIVE DRY PERIODS AND WINTER WEATHER, AND BE CAPABLE OF RE-ESTABLISHMENT IN THE SPRING. THE PERENNIAL VEGETATIVE COVER SHALL HAVE A MINIMUM COVERAGE DENSITY OF 70% FOR THE SEEDED AREAS. CONTRACTOR SHALL DETERMINE ALL RATES OF APPLICATION NECESSARY TO PRODUCE THE REQUIRED STAND OF GRASS, AND SHALL FOLLOW THE APPLICATION PROCEDURES AS SPECIFIED HEREIN.

SEEDING SCHEDULE FOR PERMANENT VEGETATION

SCHEDULE NO.	COMMON NAME OF SEED	RURAL RATE	URBAN RATE[1]	PLANTING DATES
3[4]	COMMON BERMUDA (HULLED)[3]	30	30	MARCH 1 TO AUG. 14
	WEEPING LOVEGRASS[7]	10	10	
	SERICEA LESPEDEZA (SCARIFIED)[7]	50	50	
4[5]	COMMON BERMUDA (UNHULLED)[3]	40	40	AUG. 5 TO FEB. 28
	WEEPING LOVEGRASS[7]	10	10	
	SERICEA LESPEDEZA, (UNHULLED, UNSCARIFIED)	80	80	
	RESEEDING CRIMSON CLOVER[6]	20	0	
	RYE GRAIN	20	0	

NOTES:

1 INCLUDES RURAL AREAS ADJACENT TO WELL-DEVELOPED LAWNS.

2 NOT REQUIRED ON SHOULDERS, MEDIANS, ECT., AND SLOPES UNDER 5 FEET IN HEIGHT

3 GIANT BERMUDA SEED, INCLUDING NK-37, SHALL NOT BE USED.

4 RESEEDING CRIMSON CLOVER SHALL BE INOCULATED IN ACCORDANCE WITH SUBSECTION 810.05. DO NOT PLANT CLOVER IN MEDIANS OR IN RURAL AREAS ADJACENT TO WELL-DEVELOPED LAWNS.

5 PENSACOLA BAHIA SHALL BE ALLOWED ONLY AS SHOWN IN SEEDING SCHEDULES 3 AND 4 AT THE RATE OF 50 POUNDS PER ACRE ONLY WHEN SEEDING PIT AREAS THAT ARE GOVERNED BY THE SOUTH CAROLINA MINING ACT. OTHERWISE, DO NOT INCLUDE BAHIA SEED IN THE MIX.

THE CONTRACTOR SHALL OBTAIN A SATISFACTORY STAND OF PERENNIAL VEGETATION WHOSE ROOT SYSTEM SHALL BE DEVELOPED SUFFICIENTLY TO SURVIVE DRY PERIODS AND WINTER WEATHER, AND BE CAPABLE OF RE-ESTABLISHMENT IN THE SPRING. THE PERENNIAL VEGETATIVE COVER SHALL HAVE A MINIMUM COVERAGE DENSITY OF 70% FOR THE SEEDED AREAS. CONTRACTOR SHALL DETERMINE ALL RATES OF APPLICATION NECESSARY TO PRODUCE THE REQUIRED STAND OF GRASS, AND SHALL FOLLOW THE APPLICATION PROCEDURES AS SPECIFIED HEREIN.

THE CONTRACTOR MAY INCLUDE QUANTITIES OF RYE GRAIN AND MILLET IN SCHEDULE 1 AND 3 IN ORDER TO ESTABLISH QUICK GROUND COVER FOR EROSION CONTROL PURPOSES.

SEEDING SCHEDULE FOR TEMPORARY VEGETATION

SCHEDULE NO.	COMMON NAME OF SEED	RATE PER ACRE (LBS.)	PLANTING DATES
1	ANNUAL SUDAN GRASS (SWEET OR TIFF)	40	APRIL 1- AUGUST 15
2	BROWN TOP MILLET	50	APRIL 1- AUGUST 15
3	RYE GRAIN	55	AUGUST 16- MARCH 31

OAT GRAIN IS TO BE ADDED TO ALL SCHEDULES, IF SEEDING DATE IS BETWEEN MARCH 1 AND APRIL 16, AT THE RATE OF 10 POUNDS PER ACRE.

THE CONTRACTOR SHALL OBTAIN A SATISFACTORY STAND OF VEGETATION THAT IS CAPABLE OF EROSION CONTROL. CONTRACTOR SHALL DETERMINE ALL RATES OF APPLICATION NECESSARY TO PRODUCE THE REQUIRED RESULTS. THE TEMPORARY VEGETATION SHALL PROVIDE MINIMUM DENSITY COVERAGE OF 70% OF THE SEEDED AREA.

CONSTRUCTION SEQUENCE:

1. EXCAVATE END ZONE TRACK EXTENSION AREA.
2. INSTALL UNDER DRAINAGE SYSTEM.
3. FINE GRADE TRACK AND INFIELD AREAS.
4. PAVE TRACK AND INSTALL SYNTHETIC SURFACING.
5. PAINT TRACK LINES AND FINISH REMAINING SITE IMPROVEMENTS.
6. GRADE AND SEED PERIMETER TIE IN POINTS.
7. FINAL STABILIZATION OF ALL DENUDED AREAS.
8. PER SEEDING SCHEDULE, WATER AND MAINTAIN TO INSURE PROPER GROUND COVERAGE.
9. UPON APPROVAL BY HORRY COUNTY, REMOVE ALL TEMPORARY EROSION CONTROL DEVICES.

EROSION CONTROL LEGEND

SYMBOL	PRACTICE	DESCRIPTION
IP	INLET PROTECTION	A TEMPORARY SEDIMENT BARRIER LAID AROUND A STORM DRAIN INLET TO PREVENT SEDIMENT FROM ENTERING THE DRAINAGE SYSTEM.
OP	OUTLET PROTECTION	RIP RAP CHANNEL / BANK PLACED BELOW DRAINAGE OUTLETS TO REDUCE THE VELOCITY OF FLOW, EROSION, AND STABILIZE GRADES DOWNSTREAM OF OUTLET STRUCTURES.
CD	TEMPORARY CHECK DAM	RIP RAP BANK PLACED BELOW DRAINAGE OUTLETS TO REDUCE THE VELOCITY OF FLOW, EROSION AND STABILIZE GRADES DOWN STREAM OF DRAINAGE OUTLETS.
SF	SILT FENCE	A TEMPORARY STRUCTURE USED TO SLOW THE VELOCITY OF RUN-OFF, CAUSE SEDIMENT DEPOSITION AT THE STRUCTURE, AND FILTER SEDIMENT FROM RUN-OFF.
SF_2	DOUBLE ROW SILT FENCE	A TEMPORARY STRUCTURE USED TO SLOW THE VELOCITY OF RUN-OFF, CAUSE SEDIMENT DEPOSITION AT THE STRUCTURE, AND FILTER SEDIMENT FROM RUN-OFF.
CL	CONSTRUCTION LIMITS	A DEFINED AREA THAT ALL LAND DISTURBANCE WILL OCCUR DURING CONSTRUCTION.
ECB	PERMANENT EROSION CONTROL MATTING (HIGH PERFORMANCE TRM PYRAMAT BY SI GEOSOLUTIONS OR EQUAL)	A PERMANENT REINFORCEMENT MAT TO PREVENT SOIL EROSION AND MAINTAIN PERMANENT GROUND COVER.
Ds3	DISTURBED AREA STABILIZATION (WITH TEMPORARY VEGETATION)	ESTABLISHING PERMANENT VEGETATIVE COVER SUCH AS TREES, SHRUBS, VINES, GRASSES, SOD, OR LEGUMES ON DISTURBED AREAS.
ST	SEDIMENT TUBE	SEDIMENT TUBE PLACED IN EXISTING OR PROPOSED DITCH SECTIONS TO REDUCE THE VELOCITY OF FLOW, EROSION AND STABILIZE GRADES DOWN STREAM OR DRAINAGE OUTLETS.
CE	CONSTRUCTION ENTRANCE	A STONE STABILIZED PAD LOCATED AT ANY POINT THAT TRAFFIC WILL BE LEAVING A CONSTRUCTION SITE TO A PUBLIC RIGHT-OF-WAY, STREET, ALLEY, SIDEWALK, OR PARKING PLOT WHICH WILL REDUCE OR ELIMINATE THE TRANSPORT OF MUD FROM THE CONSTRUCTION SITE.

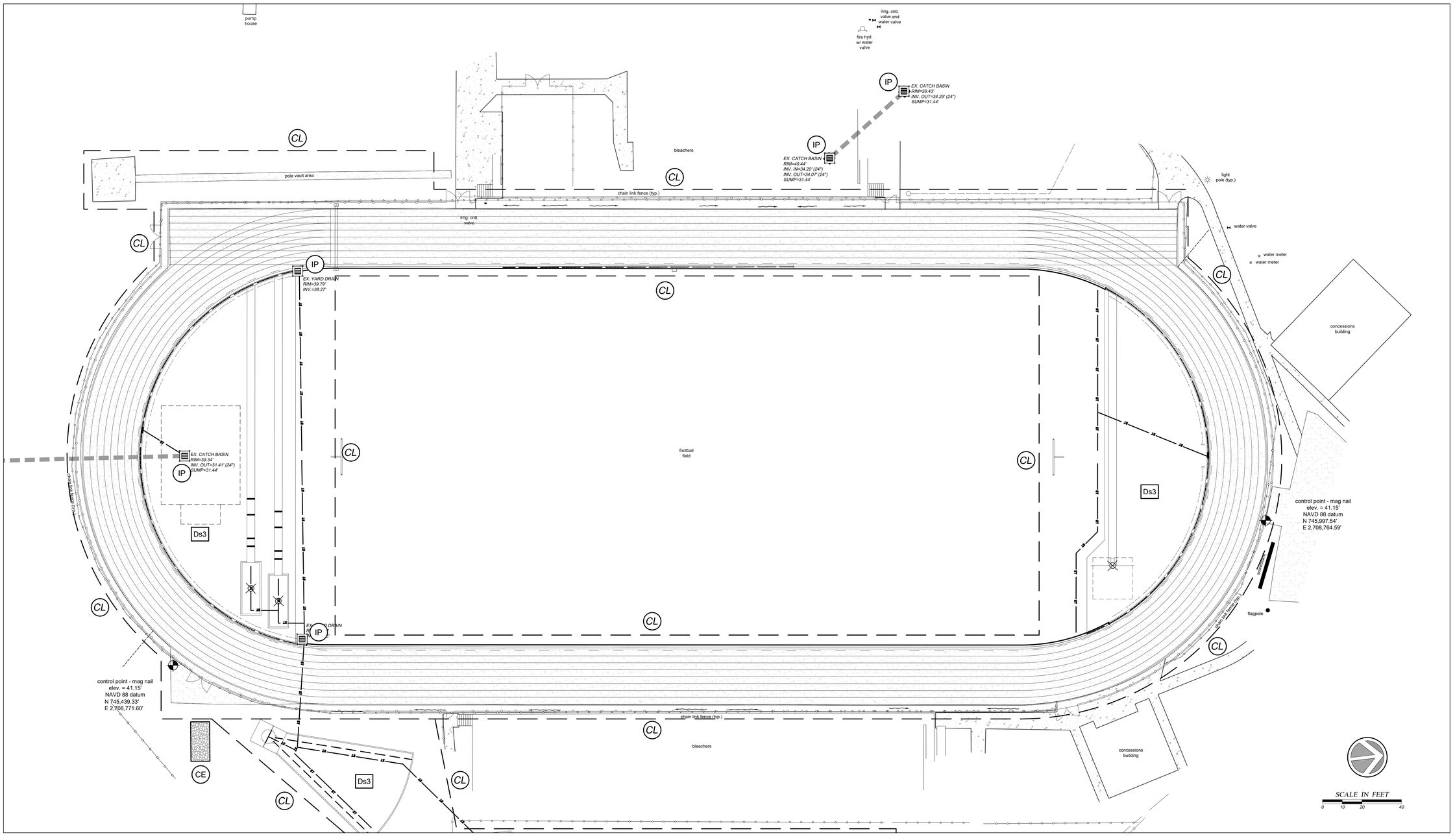

Drawing Copyright © 2016

CHA
1298 Professional Drive
Myrtle Beach, SC 29577-5896
843.692.3205 x284 • www.chacompanies.com

HCS Horry County Schools

DDC ENGINEERS®
Consulting Engineers, Surveyors, Planners, Landscape Architects & Environmentalists
1298 Professional Dr., Myrtle Beach, SC 29577
Phone: (843) 692-3200 Fax: (843) 692-3210

HORRY COUNTY SCHOOLS

OFFICE OF FACILITIES
1160 E. HIGHWAY 501
CONWAY, SC 29526

SOUTH CAROLINA CERTIFICATE OF AUTHORIZATION
BOLTON & MENK, SOUTHEAST, LLC
No. 6475

SOUTH CAROLINA PROFESSIONAL ENGINEER
No. 29814
2/22/21
ERIC K. SANFORD

IT IS A VIOLATION OF LAW FOR ANY PERSON, UNLESS THEY ARE ACTING UNDER THE DIRECTION OF A LICENSED PROFESSIONAL ENGINEER, ARCHITECT, LANDSCAPE ARCHITECT OF LAND SURVEYOR, TO ALTER AN ITEM IN ANY WAY. IF AN ITEM BEARING THE STAMP OF A LICENSED PROFESSIONAL IS ALTERED, THE ALTERING ENGINEER, ARCHITECT, LANDSCAPE ARCHITECT OF LAND SURVEYOR SHALL ATTACH A TRACEABLE DESCRIPTION OF THE ALTERATION. "ALTERED BY" FOLLOWED BY THEIR SIGNATURE, THE DATE OF SUCH ALTERATION, AND A SPECIFIC DESCRIPTION OF THE ALTERATION.

NORTH MYRTLE BEACH HIGH SCHOOL TRACK AND FIELD ATHLETIC FACILITY IMPROVEMENTS PROGRAM

No.	Submittal / Revision	App'd	By	Date

SEDIMENT AND EROSION CONTROL PLAN PHASE II

Designed By:	Drawn By:	Checked By:
EKS	KJG	EKS
Issue Date: 2/1/21	Project No: 20095E	Scale: 1" = 20'

Drawing No.: C-532

File: J:\PLANS\2020\20095E - HORRY COUNTY SCHOOLS PHASE 3 TRACK AND FIELD IMPROVEMENTS\E\NORTH MYRTLE BEACH\20095E-NORTH MYRTLE TRACK ERO.DWG
Saved: 2/23/2021 8:32:04 AM Plotted: 2/23/2021 8:32:48 AM Current User: Bailey Evans LastSavedBy: Jae

SEEDING NOTES:

1. INCLUDES RURAL AREAS ADJACENT TO WELL-DEVELOPED LAWNS.
2. NOT REQUIRED ON SHOULDERS, MEDIANS, ETC... AND SLOPES UNDER 5 FEET IN HEIGHT.
3. GIANT BERMUDA SEED, INCLUDING NK-37, SHALL NOT BE USED.
4. RESEEDING CRIMSON CLOVER SHALL BE INOCULATED IN ACCORDANCE WITH SUBSECTION 810.05. DO NOT PLANT CLOVER IN MEDIANS OR IN RURAL AREAS ADJACENT TO WELL-DEVELOPED LAWNS.
5. PENSACOLA BAHIA SHALL BE ALLOWED ONLY AS SHOWN IN SEEDING SCHEDULES 3 AND 4 AT THE RATE OF 50 POUNDS PER ACRE ONLY WHEN SEEDING PIT AREAS THAT ARE GOVERNED BY THE SOUTH CAROLINA MINING ACT. OTHERWISE, DO NOT INCLUDE BAHIA SEED IN THE MIX.
6. THE CONTRACTOR SHALL OBTAIN A SATISFACTORY STAND OF PERENNIAL VEGETATION WHOSE ROOT SYSTEM SHALL BE DEVELOPED SUFFICIENTLY TO SURVIVE DRY PERIODS AND WINTER WEATHER, AND BE CAPABLE OF RE-ESTABLISHMENT IN THE SPRING. THE PERENNIAL VEGETATIVE COVER SHALL HAVE A MINIMUM COVERAGE DENSITY OF 70% FOR THE SEEDED AREAS. CONTRACTOR SHALL DETERMINE ALL RATES OF APPLICATION NECESSARY TO PRODUCE THE REQUIRED STAND OF GRASS, AND SHALL FOLLOW THE APPLICATION PROCEDURES AS SPECIFIED HEREIN.
7. GIANT BERMUDA SEED, INCLUDING NK-37, SHALL NOT BE USED.

SEEDING SCHEDULE FOR TEMPORARY VEGETATION Ds3

SCHEDULE NO.	COMMON NAME OF SEED	RATE PER ACRE (LBS.)	PLANTING DATES
1	COMMON BERMUDA (HULLED)	210	MARCH 16 TO AUG. 31
	TALL FESCUE	140	
2	COMMON BERMUDA (UNHULLED)	175	SEPT. 1 TO MARCH 15
	ANNUAL RYEGRASS	175	

NOTES:

THE CONTRACTOR SHALL OBTAIN A SATISFACTORY STAND OF PERENNIAL VEGETATION WHOSE ROOT SYSTEM SHALL BE DEVELOPED SUFFICIENTLY TO SURVIVE DRY PERIODS AND WINTER WEATHER, AND BE CAPABLE OF RE-ESTABLISHMENT IN THE SPRING. THE PERENNIAL VEGETATIVE COVER SHALL HAVE A MINIMUM COVERAGE DENSITY OF 70% FOR THE SEEDED AREAS. CONTRACTOR SHALL DETERMINE ALL RATES OF APPLICATION NECESSARY TO PRODUCE THE REQUIRED STAND OF GRASS, AND SHALL FOLLOW THE APPLICATION PROCEDURES AS SPECIFIED HEREIN.

SEEDING SCHEDULE FOR PERMANENT VEGETATION

SCHEDULE NO.	COMMON NAME OF SEED	RURAL RATE	URBAN RATE[1]	PLANTING DATES
3[4]	COMMON BERMUDA (HULLED)[3]	30	30	MARCH 1 TO AUG. 14
	WEEPING LOVEGRASS[7]	10	10	
	SERICEA LESPEDEZA (SCARIFIED)[7]	50	50	
4[5]	COMMON BERMUDA (UNHULLED)[3]	40	40	AUG. 5 TO FEB. 28
	WEEPING LOVEGRASS[7]	10	10	
	SERICEA LESPEDEZA (UNHULLED, UNSCARIFIED)	80	80	
	RESEEDING CRIMSON CLOVER[6]	20	0	
	RYE GRAIN	20	0	

NOTES:

1 INCLUDES RURAL AREAS ADJACENT TO WELL-DEVELOPED LAWNS.

2 NOT REQUIRED ON SHOULDERS, MEDIANS, ECT., AND SLOPES UNDER 5 FEET IN HEIGHT

3 GIANT BERMUDA SEED, INCLUDING NK-37, SHALL NOT BE USED.

4 RESEEDING CRIMSON CLOVER SHALL BE INOCULATED IN ACCORDANCE WITH SUBSECTION 810.05. DO NOT PLANT CLOVER IN MEDIANS OR IN RURAL AREAS ADJACENT TO WELL-DEVELOPED LAWNS.

5 PENSACOLA BAHIA SHALL BE ALLOWED ONLY AS SHOWN IN SEEDING SCHEDULES 3 AND 4 AT THE RATE OF 50 POUNDS PER ACRE ONLY WHEN SEEDING PIT AREAS THAT ARE GOVERNED BY THE SOUTH CAROLINA MINING ACT. OTHERWISE, DO NOT INCLUDE BAHIA SEED IN THE MIX.

THE CONTRACTOR SHALL OBTAIN A SATISFACTORY STAND OF PERENNIAL VEGETATION WHOSE ROOT SYSTEM SHALL BE DEVELOPED SUFFICIENTLY TO SURVIVE DRY PERIODS AND WINTER WEATHER, AND BE CAPABLE OF RE-ESTABLISHMENT IN THE SPRING. THE PERENNIAL VEGETATIVE COVER SHALL HAVE A MINIMUM COVERAGE DENSITY OF 70% FOR THE SEEDED AREAS. CONTRACTOR SHALL DETERMINE ALL RATES OF APPLICATION NECESSARY TO PRODUCE THE REQUIRED STAND OF GRASS, AND SHALL FOLLOW THE APPLICATION PROCEDURES AS SPECIFIED HEREIN.

THE CONTRACTOR MAY INCLUDE QUANTITIES OF RYE GRAIN AND MILLET IN SCHEDULE 1 AND 3 IN ORDER TO ESTABLISH QUICK GROUND COVER FOR EROSION CONTROL PURPOSES.

SEEDING SCHEDULE FOR TEMPORARY VEGETATION

SCHEDULE NO.	COMMON NAME OF SEED	RATE PER ACRE (LBS.)	PLANTING DATES
1	ANNUAL SUDAN GRASS (SWEET OR TIFF)	40	APRIL 1- AUGUST 15
2	BROWN TOP MILLET	50	APRIL 1- AUGUST 15
3	RYE GRAIN	55	AUGUST 16- MARCH 31

OAT GRAIN IS TO BE ADDED TO ALL SCHEDULES, IF SEEDING DATE IS BETWEEN MARCH 1 AND APRIL 16, AT THE RATE OF 10 POUNDS PER ACRE.

THE CONTRACTOR SHALL OBTAIN A SATISFACTORY STAND OF VEGETATION THAT IS CAPABLE OF EROSION CONTROL. CONTRACTOR SHALL DETERMINE ALL RATES OF APPLICATION NECESSARY TO PRODUCE THE REQUIRED RESULTS. THE TEMPORARY VEGETATION SHALL PROVIDE MINIMUM DENSITY COVERAGE OF 70% OF THE SEEDED AREA.

CONSTRUCTION SEQUENCE:

1. EXCAVATE END ZONE TRACK EXTENSION AREA.
2. INSTALL UNDER DRAINAGE SYSTEM.
3. FINE GRADE TRACK AND INFIELD AREAS.
4. PAVE TRACK AND INSTALL SYNTHETIC SURFACING.
5. PAINT TRACK LINES AND FINISH REMAINING SITE IMPROVEMENTS.
6. GRADE AND SEED PERIMETER TIE IN POINTS.
7. FINAL STABILIZATION OF ALL DENUDED AREAS.
8. PER SEEDING SCHEDULE, WATER AND MAINTAIN TO INSURE PROPER GROUND COVERAGE.
9. UPON APPROVAL BY HORRY COUNTY, REMOVE ALL TEMPORARY EROSION CONTROL DEVICES.

EROSION CONTROL LEGEND

SYMBOL	PRACTICE	DESCRIPTION
IP	INLET PROTECTION	A TEMPORARY SEDIMENT BARRIER LAID AROUND A STORM DRAIN INLET TO PREVENT SEDIMENT FROM ENTERING THE DRAINAGE SYSTEM.
OP	OUTLET PROTECTION	RIP RAP CHANNEL / BANK PLACED BELOW DRAINAGE OUTLETS TO REDUCE THE VELOCITY OF FLOW, EROSION, AND STABILIZE GRADES DOWNSTREAM OF OUTLET STRUCTURES.
CD	TEMPORARY CHECK DAM	RIP RAP BANK PLACED BELOW DRAINAGE OUTLETS TO REDUCE THE VELOCITY OF FLOW, EROSION AND STABILIZE GRADES DOWN STREAM OF DRAINAGE OUTLETS.
SF	SILT FENCE	A TEMPORARY STRUCTURE USED TO SLOW THE VELOCITY OF RUN-OFF, CAUSE SEDIMENT DEPOSITION AT THE STRUCTURE, AND FILTER SEDIMENT FROM RUN-OFF.
SF_2	DOUBLE ROW SILT FENCE	A TEMPORARY STRUCTURE USED TO SLOW THE VELOCITY OF RUN-OFF, CAUSE SEDIMENT DEPOSITION AT THE STRUCTURE, AND FILTER SEDIMENT FROM RUN-OFF.
CL	CONSTRUCTION LIMITS	A DEFINED AREA THAT ALL LAND DISTURBANCE WILL OCCUR DURING CONSTRUCTION.
ECB	PERMANENT EROSION CONTROL MATTING (HIGH PERFORMANCE TRM PYRAMAT BY SI GEOSOLUTIONS OR EQUAL)	A PERMANENT REINFORCEMENT MAT TO PREVENT SOIL EROSION AND MAINTAIN PERMANENT GROUND COVER.
Ds3	DISTURBED AREA STABILIZATION (WITH TEMPORARY VEGETATION)	ESTABLISHING PERMANENT VEGETATIVE COVER SUCH AS TREES, SHRUBS, VINES, GRASSES, SOD, OR LEGUMES ON DISTURBED AREAS.
ST	SEDIMENT TUBE	SEDIMENT TUBE PLACED IN EXISTING OR PROPOSED DITCH SECTIONS TO REDUCE THE VELOCITY OF FLOW, EROSION AND STABILIZE GRADES DOWN STREAM OR DRAINAGE OUTLETS.
CE	CONSTRUCTION ENTRANCE	A STONE STABILIZED PAD LOCATED AT ANY POINT THAT TRAFFIC WILL BE LEAVING A CONSTRUCTION SITE TO A PUBLIC RIGHT-OF-WAY, STREET, ALLEY, SIDEWALK, OR PARKING PLOT WHICH WILL REDUCE OR ELIMINATE THE TRANSPORT OF MUD FROM THE CONSTRUCTION SITE.

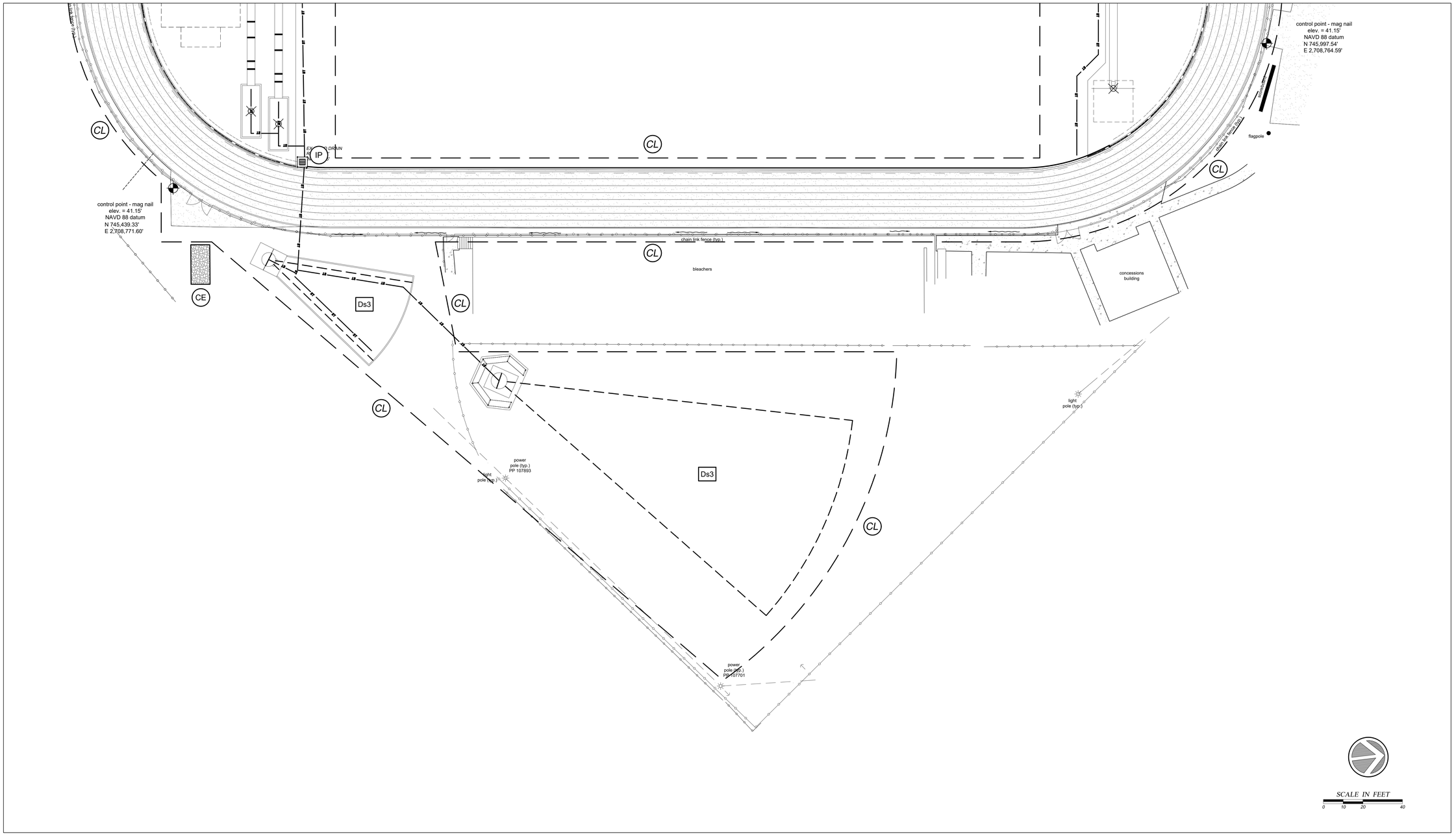

Drawing Copyright © 2016

CHA
1298 Professional Drive
Myrtle Beach, SC 29577-5896
843.692.3205 x284 • www.chacompanies.com

HCS Horry County Schools

DDC ENGINEERS®
Consulting Engineers, Surveyors, Planners, Landscape Architects & Environmentalists
1298 Professional Dr., Myrtle Beach, SC 29577
Phone: (843) 692-3200 Fax: (843) 692-3210

HORRY COUNTY SCHOOLS

OFFICE OF FACILITIES
1160 E. HIGHWAY 501
CONWAY, SC 29526

SOUTH CAROLINA BOLTON & MENK SOUTHEAST, LLC No. 6475 CERTIFICATE OF AUTHORIZATION

SOUTH CAROLINA PROFESSIONAL ENGINEER No. 29814 2/22/21 ERIC K. SANFORD

IT IS A VIOLATION OF LAW FOR ANY PERSON, UNLESS THEY ARE ACTING UNDER THE DIRECTION OF A LICENSED PROFESSIONAL ENGINEER, ARCHITECT, LANDSCAPE ARCHITECT OF LAND SURVEYOR, TO ALTER AN ITEM IN ANY WAY. IF AN ITEM BEARING THE STAMP OF A LICENSED PROFESSIONAL IS ALTERED, THE ALTERING ENGINEER, ARCHITECT, LANDSCAPE ARCHITECT OF LAND SURVEYOR SHALL ATTACH A DESIGNATION TO THE SEAL NEXT TO THE NOTATION "ALTERED BY" FOLLOWED BY THEIR SIGNATURE, THE DATE OF SUCH ALTERATION, AND A SPECIFIC DESCRIPTION OF THE ALTERATION.

NORTH MYRTLE BEACH
HIGH SCHOOL
TRACK AND FIELD
ATHLETIC FACILITY
IMPROVEMENTS PROGRAM

No.	Submittal / Revision	App'd	By	Date

SEDIMENT AND EROSION CONTROL PLAN
PHASE II

Designed By:	Drawn By:	Checked By:
EKS	KJG	EKS
Issue Date:	Project No:	Scale:
2/1/21	20095E	1" = 20'

Drawing No.:
C-533

File: J:\PLANS\2020\20095E - HORRY COUNTY SCHOOLS PHASE 3 TRACK AND FIELD IMPROVEMENTS\E\NORTH MYRTLE BEACH\20095E-NORTH MYRTLE TRACK ERO.DWG
Saved: 2/23/2021 8:32:04 AM Plotted: 2/23/2021 8:32:52 AM Current User: Bailey Evans LastSavedBy: jse

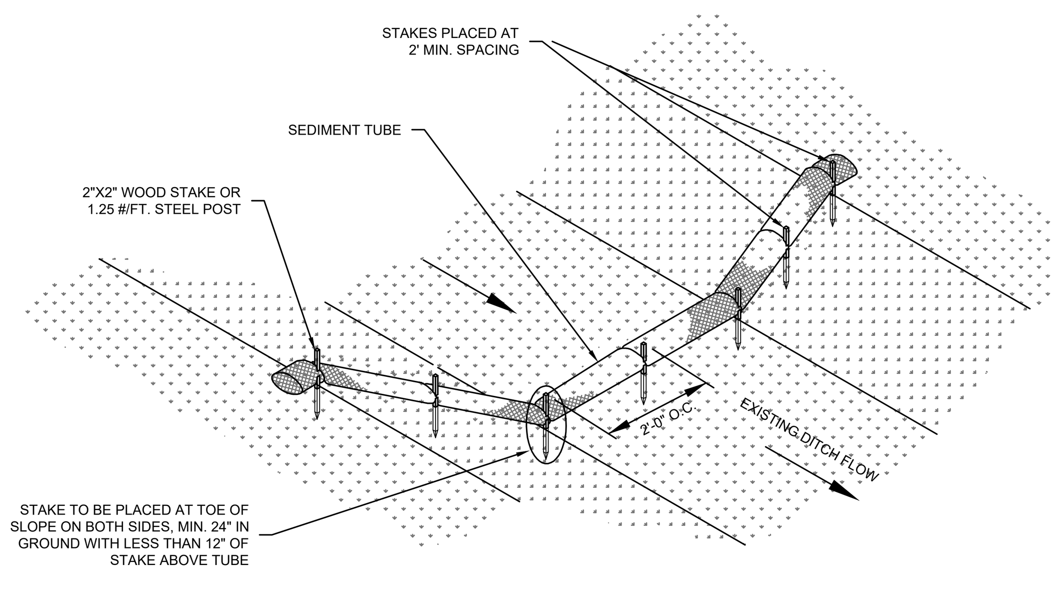

SEDIMENT TUBE CHECK DAM DETAIL (NO BLANKET)

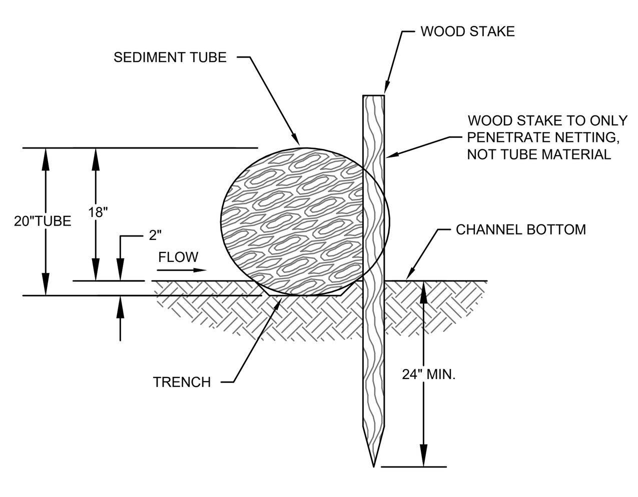

1 1/8" x 1 1/8" x 48" WOODEN STAKES ARE RECOMMENDED FOR 20" SEDIMENT LOGS.

STAKE DETAIL (WITH TRENCH)

SEDIMENT TUBES - GENERAL NOTES

1. SEDIMENT TUBES MAY BE INSTALLED ALONG CONTOURS, IN DRAINAGE CONVEYANCE CHANNELS, AND AROUND INLETS TO HELP PREVENT OFF SITE DISCHARGE OF SEDIMENT LADEN STORM WATER RUNOFF.
2. SEDIMENT TUBES ARE ELONGATED TUBES OF COMPACTED GEOTEXTILES, CURLED EXCELSIOR WOOD, NATURAL COCONUT FIBER, OR HARDWOOD MULCH. STRAW, PINE NEEDLE AND LEAF MULCH FILLED SEDIMENT TUBES ARE NOT PERMITTED.
3. THE OUTER NETTING OF THE SEDIMENT TUBE SHOULD CONSIST OF SEAMLESS, HIGH DENSITY POLYETHYLENE PHOTODEGRADABLE MATERIALS TREATED WITH ULTRAVIOLET STABILIZERS OR A SEAMLESS, HIGH DENSITY POLYETHYLENE NON DEGRADABLE MATERIAL.
4. SEDIMENT TUBES, WHEN USED AS CHECKS WITHIN CHANNELS, SHOULD RANGE BETWEEN 18 INCHES AND 24 INCHES DEPENDING ON CHANNEL DIMENSIONS. DIAMETERS OUTSIDE THIS RANGE MAY BE ALLOWED WHERE NECESSARY WHEN APPROVED.
5. CURLED EXCELSIOR WOOD, OR NATURAL COCONUT PRODUCTS THAT ARE ROLLED UP TO CREATE A SEDIMENT TUBE ARE NOT ALLOWED.
6. SEDIMENT TUBES SHOULD BE STAKED USING WOODEN STAKES (2" X 2") OR STEEL POSTS (STANDARD "U" OR "T" SECTIONS WITH A MINIMUM WEIGHT OF 1.25 POUNDS PER FOOT) AT A MINIMUM OF 48 INCHES IN LENGTH PLACED ON 2 FOOT CENTERS.
7. INSTALL ALL SEDIMENT TUBES TO ENSURE THAT NO GAPS EXIST BETWEEN THE SOIL AND THE BOTTOM OF THE TUBE. MANUFACTURER'S RECOMMENDATIONS SHOULD ALWAYS BE CONSULTED BEFORE INSTALLATION.
8. THE ENDS OF ADJACENT SEDIMENT TUBES SHOULD BE OVERLAPPED 6 INCHES TO PREVENT FLOW AND SEDIMENT FROM PASSING THROUGH THE FIELD JOINT.
9. SEDIMENT TUBES SHOULD NOT BE STACKED ON TOP OF ONE ANOTHER, UNLESS RECOMMENDED BY MANUFACTURER.
10. EACH SEDIMENT TUBE SHOULD BE INSTALLED IN A TRENCH WITH A DEPTH EQUAL TO 1/5 THE DIAMETER OF THE SEDIMENT TUBE.
11. SEDIMENT TUBES SHOULD CONTINUE UP THE SIDE SLOPES A MINIMUM OF 1 FOOT ABOVE THE DESIGN FLOW DEPTH OF THE CHANNEL.
12. INSTALL STAKES AT A DIAGONAL FACING INCOMING RUNOFF.

SEDIMENT TUBES - INSPECTION & MAINTENANCE

1. THE KEY TO FUNCTIONAL SEDIMENT TUBES IS WEEKLY INSPECTIONS, ROUTINE MAINTENANCE AND REGULAR SEDIMENT REMOVAL.
2. REGULAR INSPECTIONS OF SEDIMENT TUBES SHALL BE CONDUCTED ONCE EVERY CALENDAR WEEK AND, AS RECOMMENDED, WITHIN 24 HOURS AFTER EACH RAINFALL EVEN THAT PRODUCES 1/2 INCH OR MORE OF PRECIPITATION.
3. ATTENTION TO SEDIMENT ACCUMULATIONS IN FRONT OF THE SEDIMENT TUBE IS EXTREMELY IMPORTANT. ACCUMULATED SEDIMENT SHOULD BE CONTINUALLY MONITORED AND REMOVED WHEN NECESSARY.
4. REMOVE ACCUMULATED SEDIMENT WHEN IT REACHES 1/3 THE HEIGHT OF THE SEDIMENT TUBE.
5. REMOVED SEDIMENT SHALL BE PLACED IN STOCKPILE STORAGE AREAS OR SPREAD THINLY ACROSS DISTURBED AREA. STABILIZE THE REMOVED SEDIMENT AFTER IT IS RELOCATED.
6. LARGE DEBRIS, TRASH AND LEAVES SHOULD BE REMOVED FROM IN FRONT OF TUBES WHEN FOUND.
7. IF EROSION CAUSES THE EDGES TO FALL TO A HEIGHT EQUAL TO OR BELOW THE HEIGHT OF THE SEDIMENT TUBE, REPAIRS SHOULD BE MADE IMMEDIATELY TO PREVENT RUNOFF FROM BYPASSING TUBE.
8. SEDIMENT TUBES SHOULD BE REMOVED AFTER THE CONTRIBUTING DRAINAGE AREA HAS BEEN COMPLETELY STABILIZED. PERMANENT VEGETATION SHOULD REPLACE AREAS FROM WHICH SEDIMENT TUBES HAVE BEEN REMOVED.

SEDIMENT TUBE SPACING

SLOPE	MAX. SEDIMENT TUBE SPACING
LESS THAN 2%	150-FEET
2%	100-FEET
3%	75-FEET
4%	50-FEET
5%	40-FEET
6%	30-FEET
GREATER THAN 6%	25-FEET

ST — SEDIMENT TUBE DETAIL
SCALE: N.T.S.

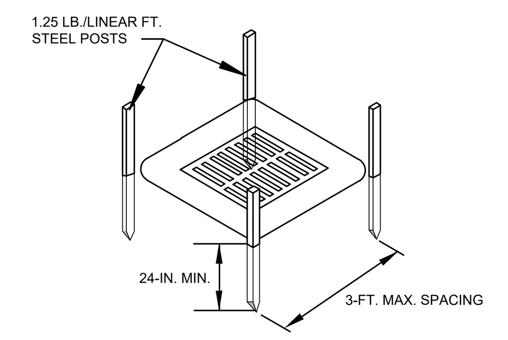

POST INSTALLATION DETAIL

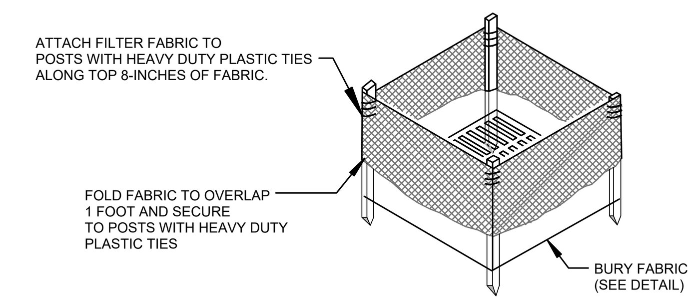

FILTER FABRIC INSTALLATION DETAIL

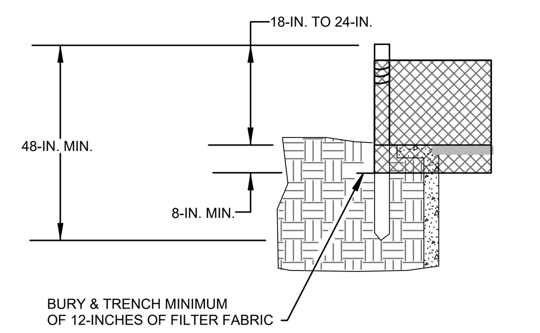

FILTER FABRIC BURIAL DETAIL

TYPE A - POST REQUIREMENTS

1. SILT FENCE POSTS MUST BE 48 INCH LONG STEEL POSTS THAT MEET, AT A MINIMUM, THE FOLLOWING PHYSICAL CHARACTERISTICS.
   - COMPOSED OF A HIGH STRENGTH STEEL WITH A MINIMUM YIELD STRENGTH OF 50,000 PSI.
   - INCLUDE A STANDARD "T" SECTION WITH A NOMINAL FACE WIDTH OF 1.38 INCHES AND A NOMINAL "T" LENGTH OF 1.48 INCHES.
   - WEIGH 1.25 POUNDS PER FOOT (±8%).
2. POSTS SHALL BE EQUIPPED WITH PROJECTIONS TO AID IN FASTENING OF FILTER FABRIC.
3. INSTALL POSTS TO A MINIMUM OF 24 INCHES. A MINIMUM HEIGHT OF 1 TO 2 INCHES ABOVE THE FABRIC SHALL BE MAINTAINED, AND A MAXIMUM HEIGHT OF 3 FEET SHALL BE MAINTAINED ABOVE THE GROUND.
4. POST SPACING SHALL BE AT A MAXIMUM OF 3 FEET ON CENTER.

TYPE A - FILTER FABRIC REQUIREMENTS

1. SILT FENCE MUST BE COMPOSED OF WOVEN GEOTEXTILE FILTER FABRIC THAT CONSISTS OF THE FOLLOWING REQUIREMENTS:
   - COMPOSED OF FIBERS CONSISTING OF LONG CHAIN SYNTHETIC POLYMERS OF AT LEAST 85% BY WEIGHT OF POLYOLEFINS, POLYESTERS OR POLYAMIDES THAT ARE FORMED INTO A NETWORK SUCH THAT THE FILAMENTS OR YARNS RETAIN DIMENSIONAL STABILITY RELATIVE TO EACH OTHER;
   - FREE OF ANY TREATMENT OR COATING WHICH MIGHT ADVERSELY ALTER ITS PHYSICAL PROPERTIES AFTER INSTALLATION;
   - FREE OF ANY DEFECTS OR FLAWS THAT SIGNIFICANTLY AFFECT ITS PHYSICAL AND/OR FILTERING PROPERTIES; AND,
   - HAVE A MINIMUM WIDTH OF 36 INCHES.
2. USE ONLY FABRIC APPEARING ON SC DOT'S QUALIFIED PRODUCTS LISTING (QPL), APPROVAL SHEET #34 MEETING THE REQUIREMENTS OF THE MOST CURRENT EDITION OF THE SC DOT STANDARD SPECIFICATIONS FOR HIGHWAY CONSTRUCTION.
3. 12 INCHES OF THE FABRIC SHOULD BE PLACED WITHIN EXCAVATED TRENCH AND TOED IN WHEN THE TRENCH IS BACKFILLED.
4. FILTER FABRIC SHALL BE PURCHASED IN CONTINUOUS ROLLS AND CUT TO THE LENGTH OF THE BARRIER TO AVOID JOINTS.
5. FILTER FABRIC SHALL BE INSTALLED AT A MINIMUM OF 24 INCHES ABOVE THE GROUND.

TYPE A - INSPECTION & MAINTENANCE

1. THE KEY TO FUNCTIONAL INLET PROTECTION IS WEEKLY INSPECTIONS, ROUTINE MAINTENANCE AND REGULAR SEDIMENT REMOVAL.
2. REGULAR INSPECTIONS OF INLET PROTECTION SHALL BE CONDUCTED ONCE EVERY CALENDAR WEEK AND, AS RECOMMENDED, WITHIN 24 HOURS AFTER EACH RAINFALL EVEN THAT PRODUCES 1/2 INCH OR MORE OF PRECIPITATION.
3. ATTENTION TO SEDIMENT ACCUMULATIONS ALONG THE FILTER FABRIC IS EXTREMELY IMPORTANT. ACCUMULATED SEDIMENT SHOULD BE CONTINUALLY MONITORED AND REMOVED WHEN NECESSARY.
4. REMOVE ACCUMULATED SEDIMENT WHEN IT REACHES 1/3 THE HEIGHT OF THE FILTER FABRIC. WHEN A SUMP IS INSTALLED IN FRONT OF THE FABRIC, SEDIMENT SHOULD BE REMOVED WHEN IT FILLS APPROXIMATELY 1/3 THE DEPTH OF THE SUMP.
5. REMOVED SEDIMENT SHALL BE PLACED IN STOCKPILE STORAGE AREAS OR SPREAD THINLY ACROSS DISTURBED AREA. STABILIZE THE REMOVED SEDIMENT AFTER IT IS RELOCATED.
6. CHECK FOR AREAS WHERE STORM WATER RUNOFF HAS ERODED A CHANNEL BENEATH THE FILTER FABRIC, BENEATH THE FILTER FABRIC, OR WHERE THE FABRIC HAS SAGGED OR COLLAPSED DUE TO RUNOFF OVERTOPPING THE INLET PROTECTION.
7. CHECK FOR TEARS WITHIN THE FILTER FABRIC, AREAS WHERE FABRIC HAS BEGUN TO DECOMPOSE, AND FOR ANY OTHER CIRCUMSTANCE THAT MAY RENDER THE INLET PROTECTION INEFFECTIVE. REMOVE DAMAGED FABRIC AND REINSTALL NEW FILTER FABRIC IMMEDIATELY.
8. INLET PROTECTION STRUCTURES SHOULD BE REMOVED AFTER ALL THE DISTURBED AREAS ARE PERMANENTLY STABILIZED. REMOVE ALL CONSTRUCTION MATERIAL AND SEDIMENT, AND DISPOSE OF THEM PROPERLY. GRADE THE DISTURBED AREA TO THE ELEVATION OF THE DROP INLET STRUCTURE CREST. STABILIZE ALL BARE AREAS IMMEDIATELY.

IP — INLET PROTECTION
SCALE: N.T.S.

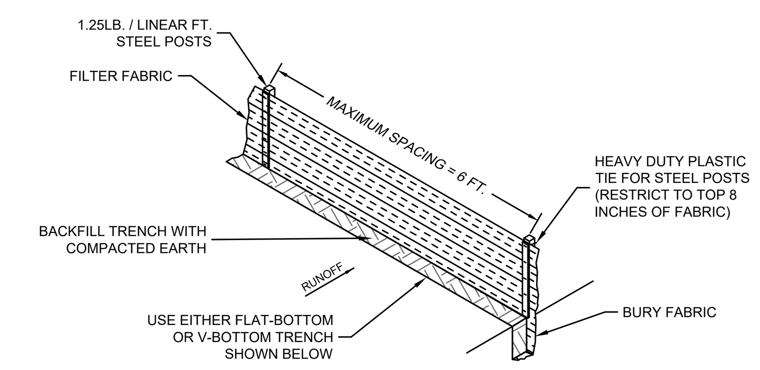

SILT FENCE INSTALLATION

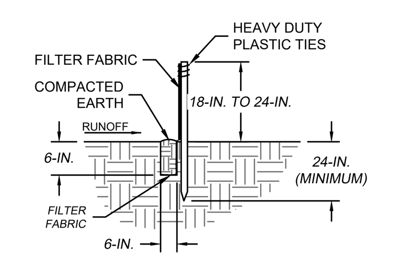

FLAT-BOTTOM TRENCH DETAIL

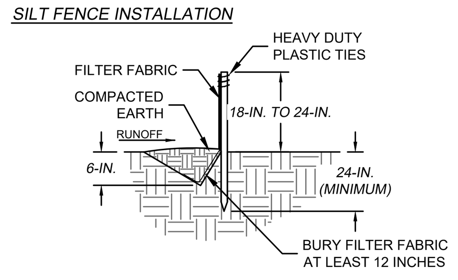

V-SHAPED TRENCH DETAIL

SILT FENCE - GENERAL NOTES:

1. DO NOT PLACE SILT FENCE ACROSS CHANNELS OR IN OTHER AREAS SUBJECT TO CONCENTRATED FLOWS. SILT FENCE SHOULD NOT BE USED AS A VELOCITY CONTROL BMP. CONCENTRATED FLOWS ARE ANY FLOWS GREATER THAN 0.5 CFS.
2. MAXIMUM SHEET OR OVERLAND FLOW PATH LENGTH TO THE SILT FENCE SHALL BE 100 FEET.
3. MAXIMUM SLOPE STEEPNESS (NORMAL [PERPENDICULAR] TO THE FENCE LINE) SHALL BE 2:1.
4. SILT FENCE JOINTS, WHEN NECESSARY SHALL BE COMPLETED BY ONE OF THE FOLLOWING OPTIONS:
   - WRAP EACH FABRIC TOGETHER AT A SUPPORT POST WITH BOTH ENDS FASTENED TO THE POST, WITH A 1 FOOT MINIMUM OVERLAP.
   - OVERLAP SILT FENCE BY INSTALLING 3 FEET PAST THE SUPPORT POST TO WHICH THE NEW SILT FENCE ROLL IS ATTACHED. ATTACH OLD ROLL TO NEW ROLL WITH HEAVY DUTY PLASTIC TIES; OR
   - OVERLAP ENTIRE WIDTH OF EACH SILT FENCE ROLL FROM ONE SUPPORT POST TO THE NEXT SUPPORT POST.
5. ATTACH FILTER FABRIC TO THE STEEL POSTS USING HEAVY DUTY PLASTIC TIES THAT ARE EVENLY SPACED WITHIN THE TOP 8 INCHES OF THE FABRIC.
6. INSTALL THE SILT FENCE PERPENDICULAR TO THE DIRECTION OF THE STORM WATER FLOW AND PLACE THE SILT FENCE THE PROPER DISTANCE FROM THE TOE OF STEEP SLOPES TO PROVIDE SEDIMENT STORAGE AND ACCESS FOR MAINTENANCE AND CLEAN OUT.
7. INSTALL SILT FENCE CHECKS (TIE-BACKS) EVERY 50-100 FEET, DEPENDENT ON SLOPE, ALONG SILT FENCE THAT IS INSTALLED WITH SLOPE AND WHERE CONCENTRATED FLOWS ARE EXPECTED OR ARE DOCUMENTED ALONG THE PROPOSED / INSTALLED SILT FENCE.

SILT FENCE - POST REQUIREMENTS

1. SILT FENCE POSTS MUST BE 48 INCH LONG STEEL POSTS THAT MEET, AT A MINIMUM, THE FOLLOWING PHYSICAL CHARACTERISTICS.
   - COMPOSED OF A HIGH STRENGTH STEEL WITH A MINIMUM YIELD STRENGTH OF 50,000 PSI.
   - INCLUDE A STANDARD "T" SECTION WITH A NOMINAL FACE WIDTH OF 1.38 INCHES AND A NOMINAL "T" LENGTH OF 1.48 INCHES.
   - WEIGH 1.25 POUNDS PER FOOT (±8%).
2. POSTS SHALL BE EQUIPPED WITH PROJECTIONS TO AID IN FASTENING OF FILTER FABRIC.
3. STEEL POSTS MAY NEED TO HAVE A METAL SOIL STABILIZATION PLATE WELDED NEAR THE BOTTOM WHEN INSTALLED ALONG STEEP SLOPES OR INSTALLED IN LOOSE SOILS. THE PLATE SHOULD HAVE A MINIMUM CROSS SECTION OF 17 SQUARE INCHES AND BE COMPOSED OF 15 GAUGE STEEL, AT A MINIMUM. THE METAL SOIL STABILIZATION PLATE SHOULD BE COMPLETELY BURIED.
4. INSTALL POSTS A MINIMUM OF 24 INCHES. A MINIMUM HEIGHT OF 1 TO 2 INCHES ABOVE THE FABRIC SHALL BE MAINTAINED, AND A MAXIMUM HEIGHT OF 3 FEET SHALL BE MAINTAINED ABOVE THE GROUND.
5. POST SPACING SHALL BE AT A MAXIMUM OF 6 FEET ON CENTER.

SILT FENCE - FABRIC REQUIREMENTS

1. SILT FENCE MUST BE COMPOSED OF WOVEN GEOTEXTILE FILTER FABRIC THAT CONSISTS OF THE FOLLOWING REQUIREMENTS:
   - COMPOSED OF FIBERS CONSISTING OF LONG CHAIN SYNTHETIC POLYMERS OF AT LEAST 85% BY WEIGHT OF POLYOLEFINS, POLYESTERS OR POLYAMIDES THAT ARE FORMED INTO A NETWORK SUCH THAT THE FILAMENTS OR YARNS RETAIN DIMENSIONAL STABILITY RELATIVE TO EACH OTHER;
   - FREE OF ANY TREATMENT OR COATING WHICH MIGHT ADVERSELY ALTER ITS PHYSICAL PROPERTIES AFTER INSTALLATION;
   - FREE OF ANY DEFECTS OR FLAWS THAT SIGNIFICANTLY AFFECT ITS PHYSICAL AND/OR FILTERING PROPERTIES; AND,
   - HAVE A MINIMUM WIDTH OF 36 INCHES.
2. USE ONLY FABRIC APPEARING ON SC DOT'S QUALIFIED PRODUCTS LISTING (QPL), APPROVAL SHEET #34 MEETING THE REQUIREMENTS OF THE MOST CURRENT EDITION OF THE SC DOT STANDARD SPECIFICATIONS FOR HIGHWAY CONSTRUCTION.
3. 12 INCHES OF THE FABRIC SHOULD BE PLACED WITHIN EXCAVATED TRENCH AND TOED IN WHEN THE TRENCH IS BACKFILLED.
4. FILTER FABRIC SHALL BE PURCHASED IN CONTINUOUS ROLLS AND CUT TO THE LENGTH OF THE BARRIER TO AVOID JOINTS.
5. FILTER FABRIC SHALL BE INSTALLED AT A MINIMUM OF 24 INCHES ABOVE THE GROUND.

SILT FENCE - INSPECTION & MAINTENANCE

1. THE KEY TO FUNCTIONAL SILT FENCE IS WEEKLY INSPECTIONS, ROUTINE MAINTENANCE AND REGULAR SEDIMENT REMOVAL.
2. REGULAR INSPECTIONS OF SILT FENCE SHALL BE CONDUCTED ONCE EVERY CALENDAR WEEK AND, AS RECOMMENDED, WITHIN 24 HOURS AFTER EACH RAINFALL EVEN THAT PRODUCES 1/2 INCH OR MORE OF PRECIPITATION.
3. ATTENTION TO SEDIMENT ACCUMULATIONS ALONG THE SILT FENCE IS EXTREMELY IMPORTANT. ACCUMULATED SEDIMENT SHOULD BE CONTINUALLY MONITORED AND REMOVED WHEN NECESSARY.
4. REMOVE ACCUMULATED SEDIMENT WHEN IT REACHES 1/3 THE HEIGHT OF THE SILT FENCE.
5. REMOVED SEDIMENT SHALL BE PLACED IN STOCKPILE STORAGE AREAS OR SPREAD THINLY ACROSS DISTURBED AREA. STABILIZE THE REMOVED SEDIMENT AFTER IT IS RELOCATED.
6. CHECK FOR AREAS WHERE STORM WATER RUNOFF HAS ERODED A CHANNEL BENEATH THE SILT FENCE, OR WHERE THE FENCE HAS SAGGED OR COLLAPSED DUE TO RUNOFF OVERTOPPING THE SILT FENCE. INSTALL CHECKS/TIE-BACKS AND/OR REINSTALL SILT FENCE, AS NECESSARY.
7. CHECK FOR TEARS WITHIN THE SILT FENCE, AREAS WHERE SILT FENCE HAS BEGUN TO DECOMPOSE, AND FOR ANY OTHER CIRCUMSTANCE THAT MAY RENDER THE SILT FENCE INEFFECTIVE. REMOVE DAMAGED SILT FENCE AND REINSTALL NEW SILT FENCE IMMEDIATELY.
8. SILT FENCE SHOULD BE REMOVED WITHIN 30 DAYS AFTER FINAL STABILIZATION IS ACHIEVED AND ONCE IT IS REMOVED, THE RESULTING DISTURBED AREA SHALL BE PERMANENTLY STABILIZED.

SF — CONSTRUCTION OF A SILT FENCE
SCALE: N.T.S.

EROSION CONTROL NOTES:

1. TOTAL DEVELOPMENT AREA : 6.19 ± ACRES
2. DISTURBED AREA THIS PHASE: 2.48 ± ACRES
3. IF NECESSARY, SLOPES, WHICH EXCEED EIGHT (8) VERTICAL FEET SHOULD BE STABILIZED WITH SYNTHETIC OR VEGETATIVE MATS, IN ADDITION TO HYDROSEEDING. IT MAY BE NECESSARY TO INSTALL TEMPORARY SLOPE DRAINS DURING CONSTRUCTION. TEMPORARY BERMS MAY BE NEEDED UNTIL THE SLOPE IS BROUGHT TO GRADE.
4. STABILIZATION MEASURES SHALL BE INITIATED AS SOON AS PRACTICABLE IN PORTIONS OF THE SITE WHERE CONSTRUCTION ACTIVITIES HAVE TEMPORARILY OR PERMANENTLY CEASED, BUT IN NO CASE MORE THAN FOURTEEN (14) DAYS AFTER WORK HAS CEASED, EXCEPT AS STATED BELOW:
   - WHERE STABILIZATION BY THE 14TH DAY IS PRECLUDED BY SNOW COVER OR FROZEN GROUND CONDITIONS STABILIZATION MEASURES MUST BE INITIATED AS SOON AS PRACTICABLE.
   - WHERE CONSTRUCTION ACTIVITY ON A PORTION OF THE SITE IS TEMPORARILY CEASED, AND EARTH-DISTURBING ACTIVITIES WILL BE RESUMED WITHIN 14 DAYS, TEMPORARY STABILIZATION MEASURES DO NOT HAVE TO BE INITIATED ON THAT PORTION OF THE SITE.
5. ALL SEDIMENT AND EROSION CONTROL DEVICES SHALL BE INSPECTED EVERY CALENDAR WEEK. IF PERIODIC INSPECTION OR OTHER INFORMATION INDICATES THAT A BMP HAS BEEN INAPPROPRIATELY OR INCORRECTLY INSTALLED, THE PERMITTEE MUST ADDRESS THE NECESSARY REPLACEMENT OR MODIFICATION REQUIRED TO CORRECT THE BMP WITHIN 48 HOURS OF IDENTIFICATION.
6. PROVIDE SILT FENCE AND/OR OTHER CONTROL DEVICES, AS MAY BE REQUIRED, TO CONTROL SOIL EROSION DURING UTILITY CONSTRUCTION. ALL DISTURBED AREAS SHALL BE CLEANED, GRADED AND STABILIZED WITH GRASSING IMMEDIATELY AFTER THE UTILITY INSTALLATION. FILL, COVER AND TEMPORARY SEEDING AT THE END OF EACH DAY ARE RECOMMENDED. IF WATER IS ENCOUNTERED WHILE TRENCHING, THE WATER SHOULD BE FILTERED TO REMOVE ANY SEDIMENTS BEFORE BEING PUMPED BACK INTO ANY WATERS OF THE STATE.
7. ALL EROSION CONTROL DEVICES SHALL BE PROPERLY MAINTAINED DURING ALL PHASES OF CONSTRUCTION UNTIL THE COMPLETION OF ALL CONSTRUCTION ACTIVITIES AND ALL DISTURBED AREAS HAVE BEEN STABILIZED. ADDITIONAL CONTROL DEVICES MAY BE REQUIRED DURING CONSTRUCTION IN ORDER TO CONTROL EROSION AND/OR OFF SITE SEDIMENTATION. ALL TEMPORARY CONTROL DEVICES SHALL BE REMOVED ONCE CONSTRUCTION IS COMPLETE AND THE SITE IS STABILIZED.
8. THE CONTRACTOR MUST TAKE NECESSARY ACTION TO MINIMIZE THE TRACKING OF MUD ONTO PAVED ROADWAYS FROM CONSTRUCTION AREAS AND THE GENERATION OF DUST. THE CONTRACTOR SHALL DAILY REMOVE MUD/SOIL FROM PAVEMENT, AS MAY BE REQUIRED.
9. RESIDENTIAL SUBDIVISIONS REQUIRE EROSION CONTROL FEATURES FOR INFRASTRUCTURE AS WELL AS FOR INDIVIDUAL LOT CONSTRUCTION. INDIVIDUAL PROPERTY OWNERS SHALL FOLLOW THESE PLANS DURING CONSTRUCTION OR OBTAIN APPROVAL OF AN INDIVIDUAL PLAN IN ACCORDANCE WITH S.C. REG. 72-300 ET SEQ. AND SCR 100000.
10. TEMPORARY DIVERSION BERMS AND/OR DITCHES WILL BE PROVIDED AS NEEDED DURING CONSTRUCTION TO PROTECT WORK AREAS FROM UPSLOPE RUNOFF AND/OR TO DIVERT SEDIMENT-LADEN WATER TO APPROPRIATE TRAPS OR STABLE OUTLETS.
11. ALL WATERS OF THE STATE (WoS), INCLUDING WETLANDS, ARE TO BE FLAGGED OR OTHERWISE CLEARLY MARKED IN THE FIELD. A DOUBLE ROW OF SILT FENCE IS TO BE INSTALLED IN ALL AREAS WHERE A 50 FOOT BUFFER CANNOT BE MAINTAINED BETWEEN THE DISTURBED AREA AND ALL WoS. A 10 FOOT BUFFER SHOULD BE MAINTAINED BETWEEN THE LAST ROW OF SILT FENCE AND ALL WoS.
12. LITTER, CONSTRUCTION DEBRIS, OILS, FUELS AND BUILDING PRODUCTS WITH SIGNIFICANT POTENTIAL FOR IMPACT (SUCH AS STOCKPILES OF FRESHLY TREATED LUMBER) AND CONSTRUCTION CHEMICALS THAT COULD BE EXPOSED TO STORM WATER MUST BE PREVENTED FROM BECOMING A POLLUTANT SOURCE IN STORM WATER DISCHARGES.
13. A COPY OF THE SWPPP, INSPECTION RECORDS, AND RAINFALL DATA MUST BE RETAINED AT THE CONSTRUCTION SITE OR A NEARBY LOCATION EASILY ACCESSIBLE DURING NORMAL BUSINESS HOURS, FROM THE DATE OF COMMENCEMENT OF CONSTRUCTION ACTIVITIES TO THE DATE THAT FINAL STABILIZATION IS REACHED.
14. INITIATE STABILIZATION MEASURES ON ANY EXPOSED STEEP SLOPE (3H:1V OR GREATER) WHERE LAND DISTURBING ACTIVITIES HAVE PERMANENTLY OR TEMPORARILY CEASED, AND WILL NOT RESUME FOR A PERIOD OF 7 CALENDAR DAYS.
15. MINIMIZE SOIL COMPACTION AND, UNLESS INFEASIBLE, PRESERVE TOPSOIL.
16. MINIMIZE THE DISCHARGE OF POLLUTANTS FROM EQUIPMENT AND VEHICLE WASHING, WHEEL WASH WATER, AND OTHER WASH WATERS. WASH WATERS MUST BE TREATED IN A SEDIMENT BASIN OR ALTERNATIVE CONTROL THAT PROVIDES EQUIVALENT OR BETTER TREATMENT PRIOR TO DISCHARGE.
17. MINIMIZE THE DISCHARGE OF POLLUTANTS FROM DEWATERING OF TRENCHES AND EXCAVATED AREAS. THESE DISCHARGES ARE TO BE ROUTED THROUGH APPROPRIATE BMPs (SEDIMENT BASIN, FILTER BAG, ETC.).
18. THE FOLLOWING DISCHARGES FROM SITES ARE PROHIBITED:
   - WASTEWATER FROM WASHOUT OF CONCRETE, UNLESS MANAGED BY AN APPROPRIATE CONTROL;
   - WASTEWATER FROM WASHOUT AND CLEANOUT OF STUCCO, PAINT, FORM RELEASE OILS CURING COMPOUNDS AND OTHER CONSTRUCTION MATERIALS;
   - FUELS, OILS, OR OTHER POLLUTANTS USED IN VEHICLE AND EQUIPMENT OPERATION AND MAINTENANCE; AND
   - SOAPS OR SOLVENTS USED IN VEHICLE AND EQUIPMENT WASHING.
19. AFTER CONSTRUCTION ACTIVITIES BEGIN, INSPECTIONS MUST BE CONDUCTED AT A MINIMUM OF AT LEAST ONCE EVERY CALENDAR WEEK AND MUST BE CONDUCTED UNTIL FINAL STABILIZATION IS REACHED ON ALL AREAS OF THE CONSTRUCTION SITE.
20. IF EXISTING BMPs NEED TO BE MODIFIED OR IF ADDITIONAL BMPs ARE NECESSARY TO COMPLY WITH THE REQUIREMENTS OF THIS PERMIT AND / OR SC'S WATER QUALITY STANDARDS, IMPLEMENTATION MUST BE COMPLETED BEFORE THE NEXT STORM EVENT WHENEVER PRACTICABLE. IF IMPLEMENTATION BEFORE THE NEXT STORM EVENT IS IMPRACTICABLE, THE SITUATION MUST BE DOCUMENTED IN THE SWPPP AND ALTERNATIVE BMPs MUST BE IMPLEMENTED AS SOON AS REASONABLY POSSIBLE.
21. A PRE-CONSTRUCTION CONFERENCE MUST BE HELD FOR EACH CONSTRUCTION SITE WITH AN APPROVED ON-SITE SWPPP PRIOR TO THE IMPLEMENTATION OF CONSTRUCTION ACTIVITIES. FOR NON-LINEAR PROJECTS THAT DISTURB 10 ACRES OR MORE THIS CONFERENCE MUST BE HELD ON-SITE UNLESS THE DEPARTMENT HAS APPROVED OTHERWISE.
22. THE CONTRACTOR SHALL BE RESPONSIBLE FOR MAINTAINING ALL SILT BARRIERS AND SEDIMENT CONTROL INSTALLATIONS DURING CONSTRUCTION UNTIL THE COMPLETION OF THE SITE DEVELOPMENT.
23. EROSION CONTROL DEVICES MUST BE INSTALLED IMMEDIATELY AFTER LAND DISTURBANCE OCCURS. THE LOCATION OF SOME OF THE CONTROL DEVICES MAY BE ALTERED FROM THAT SHOWN ON THE APPROVED PLANS, IF DRAINAGE PATTERNS DURING CONSTRUCTION VARY FROM THE FINAL DRAINAGE PATTERNS. IT SHALL BE THE CONTRACTORS RESPONSIBILITY TO PROVIDE SOIL EROSION CONTROL FOR ALL DRAINAGE PATTERNS DURING ALL STAGES OF CONSTRUCTION. ALL INADEQUACIES IN SOIL EROSION CONTROL DURING ANY PHASE OF CONSTRUCTION MUST BE REPORTED IMMEDIATELY TO THE ENGINEER.
24. THE CONTRACTOR SHALL MAINTAIN ALL EROSION CONTROL MEASURES UNTIL PERMANENT VEGETATION HAS BEEN ESTABLISHED. THE CONTRACTOR SHALL INSPECT EROSION CONTROL MEASURES AT THE END OF EACH WORKING DAY TO ENSURE PROPER FUNCTIONING OF ALL DEVICES.
25. FAILURE TO INSTALL, OPERATE AND MAINTAIN ALL EROSION CONTROL MEASURES, AS SHOWN ON THE APPROVED PLANS OR AS DIRECTED BY THE ENGINEER AND/OR OCRM WILL RESULT IN ALL WORK ON THE CONSTRUCTION SITE BEING STOPPED UNTIL PROPER CORRECTIVE MEASURES HAVE BEEN MET, AS REQUIRED AND/OR DIRECTED.
26. ALL LAND DISTURBING ACTIVITIES REQUIRES COMPLIANCE UNDER THE NPDES GENERAL PERMIT FOR STORM WATER DISCHARGES FROM THE CONSTRUCTION ACTIVITIES (PERMIT NO. SCR100000). ANY NONCOMPLIANCE WITH THESE REGULATIONS IS A VIOLATION OF THE FEDERAL CLEAN WATER ACT AND MAY REQUIRE ENFORCEMENT ACTION BY HORRY COUNTY OR SCDHEC.
27. CONTRACTOR SHALL PROVIDE A WATER TIGHT ENCLOSURE FOR STORAGE OF THE OCRM CERTIFIED PLANS AND INSPECTION REPORTS. ENCLOSURE SHALL BE LOCATED IN AN AREA ACCESSIBLE TO REGULATORY PERSONNEL.
28. ALL STOCKPILE TO BE PROTECTED WITH SILT FENCE.
29. ALL CONCRETE TO BE WASHED OUT IN AN APPROVED AREA.

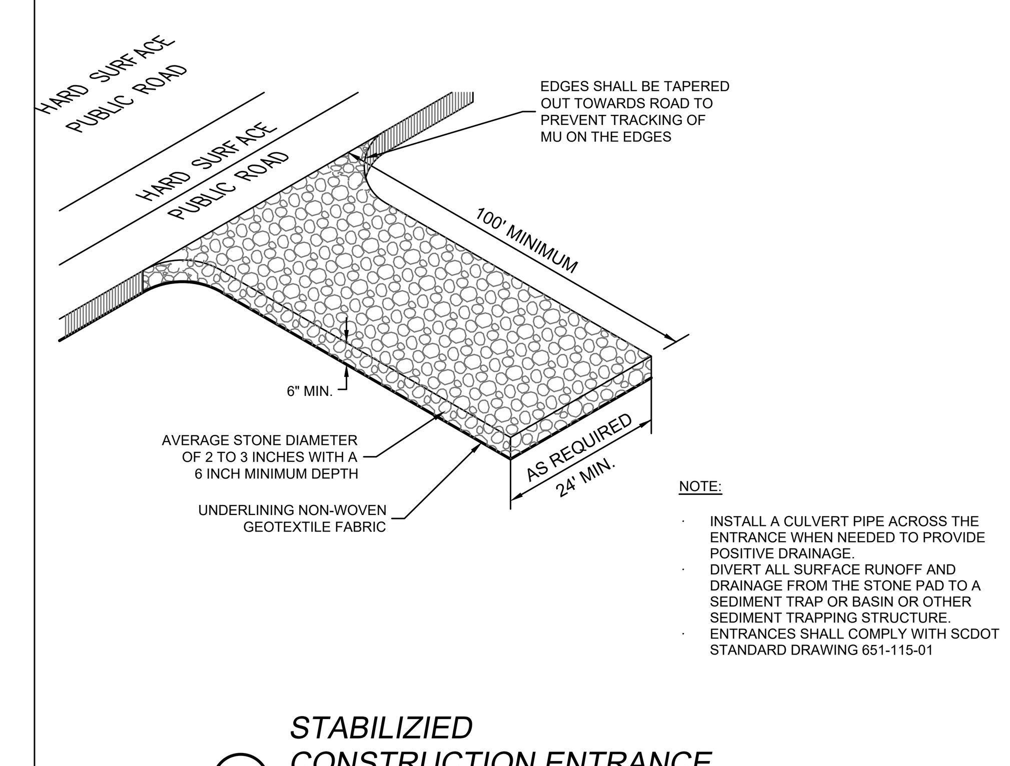

NOTE:

- INSTALL A CULVERT PIPE ACROSS THE ENTRANCE WHEN NEEDED TO PROVIDE POSITIVE DRAINAGE.
- DIVERT ALL SURFACE RUNOFF AND DRAINAGE FROM THE STONE PAD TO A SEDIMENT TRAP OR BASIN OR OTHER SEDIMENT TRAPPING STRUCTURE.
- ENTRANCES SHALL COMPLY WITH SCDOT STANDARD DRAWING 651-115-01

CE — STABILIZIED CONSTRUCTION ENTRANCE
SCALE: N.T.S.

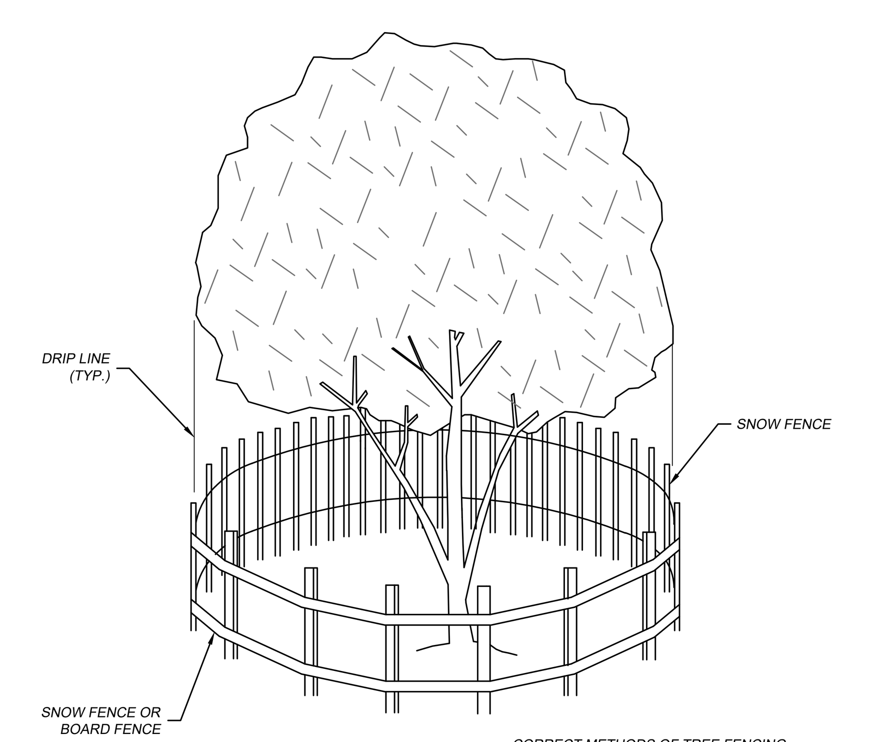

CORRECT METHODS OF TREE FENCING

TREE PROTECTION
SCALE: N.T.S.

Drawing Copyright © 2016

CHA
1298 Professional Drive
Myrtle Beach, SC 29577-5896
843.692.3205 x284 • www.chacompanies.com

HCS
Horry County Schools

DDC ENGINEERS®
Consulting Engineers, Surveyors, Planners, Landscape Architects & Environmentalists
1298 Professional Dr., Myrtle Beach, SC 29577
Phone: (843) 692-3200 Fax: (843) 692-3210

HORRY COUNTY SCHOOLS

OFFICE OF FACILITIES
1160 E. HIGHWAY 501
CONWAY, SC 29526

SOUTH CAROLINA CERTIFICATE OF AUTHORIZATION
BOLTON & MENK SOUTHEAST, LLC
No. 6475

SOUTH CAROLINA LICENSED PROFESSIONAL ENGINEER
No. 29814
ERIC K. SANFORD
2/22/21

IT IS A VIOLATION OF LAW FOR ANY PERSON, UNLESS THEY ARE ACTING UNDER THE DIRECTION OF A LICENSED PROFESSIONAL ENGINEER, ARCHITECT, LANDSCAPE ARCHITECT OR LAND SURVEYOR TO ALTER AN ITEM IN ANY WAY. IF AN ITEM BEARING THE STAMP OF A LICENSED PROFESSIONAL IS ALTERED, THE ALTERING ENGINEER, ARCHITECT, LANDSCAPE ARCHITECT OR LAND SURVEYOR SHALL STAMP THE DOCUMENT AND INCLUDE THE NOTATION "ALTERED BY" FOLLOWED BY THEIR SIGNATURE, THE DATE OF SUCH ALTERATION, AND A SPECIFIC DESCRIPTION OF THE ALTERATION.

NORTH MYRTLE BEACH HIGH SCHOOL TRACK AND FIELD ATHLETIC FACILITY IMPROVEMENTS PROGRAM

No.	Submittal / Revision	App'd.	By	Date

SEDIMENT AND EROSION CONTROL DETAILS

Designed By:	Drawn By:	Checked By:
EKS	KJG	EKS
Issue Date:	Project No:	Scale:
2/1/21	20095E	NO SCALE

Drawing No.:
C-534

File: J:\PLANS\2020\20095E - HORRY COUNTY SCHOOLS PHASE 2 TRACK AND FIELD IMPROVEMENTS\E\NORTH MYRTLE BEACH\20095E-NORTH MYRTLE TRACK ERO.DWG
Saved: 2/23/2021 8:32:04 AM Plotted: 2/23/2021 8:32:57 AM Current User: Bailey Evans LastSavedBy: jbe

ABBREVIATIONS

A	AMPERE
AC	ALTERNATING CURRENT
AF	AMPERE FRAME
AFF/G	ABOVE FINISHED FLOOR/GRADE
AIC	AMPERE INTERRUPTING CAPACITY
AT	AMPERE TRIP
AUX	AUXILIARY
AWG	AMERICAN WIRE GAUGE
BTM	BOTTOM
BKR	BREAKER
BLDG	BUILDING
C	CONDUIT
CAB	CABINET
CB	CIRCUIT BREAKER
CIR	CIRCUIT
CKT	CIRCUIT
℄	CENTER LINE
CO	COMPANY
COMM	COMMUNICATIONS
CONN	CONNECTION, CONNECT
CTRL	CONTROL
CU	COPPER
△	DELTA CONNECTION
DIA	DIAMETER
DISC	DISCONNECT
DIST	DISTRIBUTION
DIV	DIVISION
DN	DOWN
DWG	DRAWING
EA	EACH
EF	EXHAUST FAN
EL	ELEVATION
ELEC	ELECTRIC(AL)
ENCL	ENCLOSURE
EQUIP	EQUIPMENT
ETR	EXISTING TO REMAIN
EXT	EXTERIOR
F	FUSE(D)
FC	FOOTCANDLES
FIXT	FIXTURE
FLR	FLOOR
FT	FOOT (FEET)
FUT	FUTURE
G, GND	GROUND
GALV	GALVANIZE(D)
GC	GENERAL CONTRACTOR
GFI	GROUND FAULT CIRCUIT INTERRUPTER
GFP	GROUND FAULT PROTECTION
HGT	HEIGHT
HPS	HIGH PRESSURE SODIUM
HTR	HEATER
HV	HIGH VOLTAGE
HW	HOT WATER
ID	IDENTIFY, IDENTIFICATION
INCAND	INCANDESCENT
J-BOX	JUNCTION BOX
JCT	JUNCTION
KCM/Kcmil	THOUSAND CIRCULAR MILS
KVA	KILO VOLT AMPERE
KW	KILOWATT
LGT	LIGHTING
LT(S)	LIGHT(S)
LED	LIGHT EMITTING DIODE
L	LOUVER
MAX	MAXIMUM
MCB	MAIN CIRCUIT BREAKER
MC	METAL CLAD CABLE
MFR	MANUFACTURER
MH	METAL HALIDE
MECH	MECHANICAL
MIN	MINIMUM
MLO	MAIN LUGS ONLY
MT	MOUNT
MTD	MOUNTED
N	NORTH
NEC	NATIONAL ELECTRICAL CODE
NF	NON-FUSED
NL	NIGHT LIGHT
No/#	NUMBER
OL	OVERLOAD
P	POLE(S)
PNL	PANEL
PR	PAIR
PRI	PRIMARY
PWR	POWER
ø	PHASE
PT	PRESSURE TREATED
RECEPT	RECEPTACLE
RGS	RIGID GALVANIZED STEEL
RLY	RELAY
RM	ROOM
SEC	SECONDARY
SH	SHIELDED
SW	SWITCH
TEMP	TEMPORARY/TEMPERATURE
TB	TERMINAL BOARD
TYP	TYPICAL
UON	UNLESS OTHERWISE NOTED
V	VOLT, VOLTS
VA	VOLT-AMPERES
W	WATT, WIRE
W/	WITH
WP	WEATHERPROOF
XFMR/T	TRANSFORMER
Y	WYE CONNECTION

DEVICES AND APPURTENANCES

- DUPLEX RECEPTACLE
- TWO – 20 AMP DUPLEX RECEPTACLES UNDER SINGLE COVER
- J JUNCTION BOX

RACEWAYS

- CONDUIT CONCEALED OR EXPOSED AS SPECIFIED
- CONDUIT TURNING UP
- CONDUIT TURNING DOWN
- PP-1 / 1/3/5 — HOMERUN BACK TO PANEL (PANEL AND CIRCUITS INDICATED)
- CIRCUIT CONTINUED OR CONNECTED TO EQUIPMENT AS INDICATED
- UNDERGROUND CONDUIT

POWER DISTRIBUTION EQUIPMENT

- SURFACE MOUNTED BRANCH CIRCUIT PANELBOARD 208/120V, 1ø, 3W, UON
- HH — HAND HOLE
- CR — CONTROL RELAY PANEL

GENERAL

- # — NUMBER IN CIRCLE, WITH OR WITHOUT ARROW OR LEADER, REFER TO MATCHING NUMBERED CODED NOTE
- X / XXX — DETAIL CALLOUT

GENERAL NOTES

1. REFER TO CIVIL DRAWINGS FOR SYMBOLS ASSOCIATED WITH WORK, EQUIPMENT, ETC. BY OTHER(S).
2. ALL WORK SHOWN ON THE ELECTRICAL DRAWINGS SHALL BE BY THE ELECTRICAL CONTRACT UNLESS OTHERWISE INDICATED.
3. CONDUIT RUNS SHOWN ARE DIAGRAMMATIC UON. EXACT LOCATION OF ALL CONDUIT RUNS SHALL BE DETERMINED IN THE FIELD. COORDINATE INSTALLATIONS AND AVOID CONFLICT WITH PIPING, DUCTWORK, ACCESS DOORS AND WORK BY OTHER TRADES.
4. GENERAL NOTES APPLY TO ALL ELECTRICAL CONTRACT DRAWINGS.

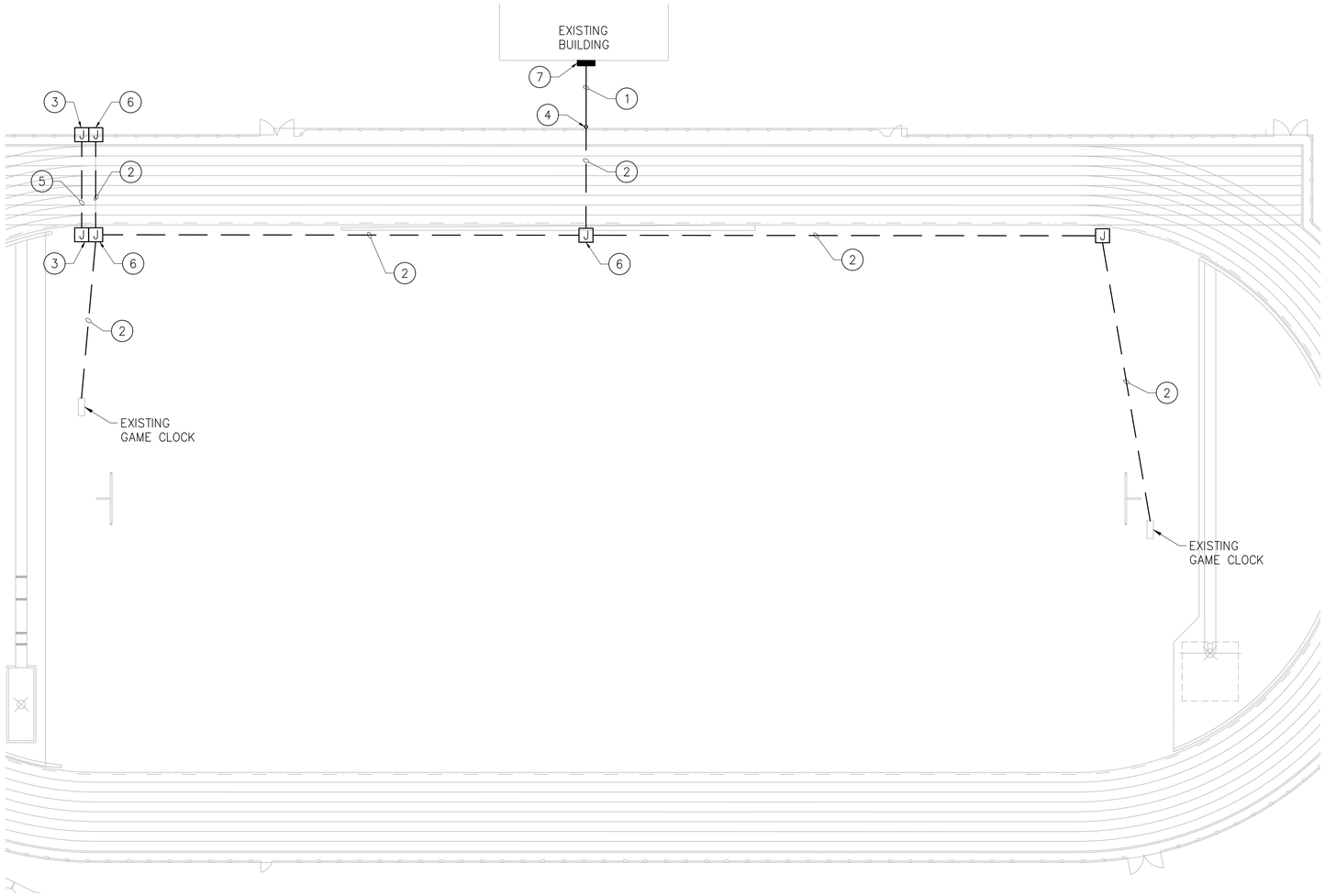

NORTH MYRTLE HS ELECTRICAL SITE PLAN

SCALE: 1" = 20'

LOCATION: ?
MOUNTING: EXTERIOR WALL IN NEMA 3R ENCLOSURE
SOURCE: ?

PANEL ID: **EXISTING POWER PANEL**

VOLTS, PHASE, WIRE: 120/240V, 3ø, 4W
MAINS: 300A
SHORT CIRCUIT RATING: 10KAIC

CKT	LOAD DESCRIPTION	CB AMPS/ POLE	CONN LOAD KVA	CONN LOAD KVA	CONN LOAD KVA	CONN LOAD KVA	CONN LOAD KVA	CONN LOAD KVA	CB AMPS/ POLE	LOAD DESCRIPTION	CKT
1	EXISTING LIGHTING	20/1							20/1	EXISTING F/A PANEL	2
3	EXISTING LIGHTING	20/1							20/1	EXISTING SITE LIGHTING	4
5	EXISTING LIGHTING	20/1							20/1	MIDFIELD AND FINISH LINE RECEPTACLES AND GAME CLOCKS (NOTE 2)	6
7	EXISTING FEED TO P-C1	100/2							60/3	EXISTING WATER HEATER	8
9											10
11	EXISTING CONVENIENCE OUTLET	20/1 20/1									12
13	EXISTING CONVENIENCE OUTLET	20/1 20/1							20/1	EXISTING WATER HEATER	14
15	EXISTING CONVENIENCE OUTLET	30/2							20/1	EXISTING CONVENIENCE OUTLET	16
17									20/1	EXISTING CONVENIENCE OUTLET	18
19		30/2							20/1	EXISTING EXHAUST FAN	20
21									20/1	EXISTING EXHAUST FAN	22
23	EXISTING OUTLET	20/1 20/1							20/1	EXISTING EXHAUST FAN	24
25	EXISTING OUTLET	20/1 20/1							20/1	EXISTING FLY FAN	26
27	EXISTING OUTLET	20/1							20/1	EXISTING FLY FAN	28
29	EXISTING OUTLET	20/1							20/1	EXISTING SITE LIGHTING	30
31	EXISTING OUTLET	20/1							20/1	EXISTING CMT CONTROL	32
33	EXISTING OUTLET	20/1							60/2	EXISTING FEED TO PA-2	34
35	EXISTING HAND DRYER	20/1									36
37											38
39	EXISTING HAND DRYER	30/3							50/3	EXISTING FEED TO PA-1	40
41											42
			####	####	####	####	####	####			
			TOTAL kVA								
			####								

NOTES:
1. EXISTING POWER PANEL IS SQUARE D NQ
2. USE EXISTING SPARE BREAKER.

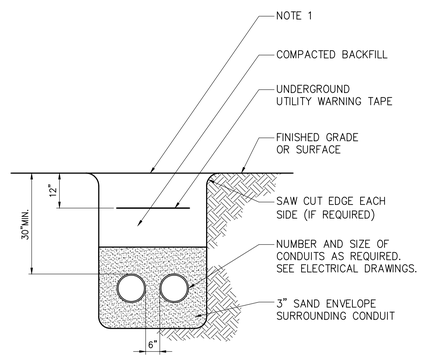

NOTE

1. REPLACE EXISTING SURFACE CONDITIONS IN KIND TO INCLUDE, BUT NOT LIMITED TO: CONCRETE, CRUSHED STONE, SELECT GRAVEL, ASPHALT, TOPSOIL AND GRASS.

1 TYPICAL DIRECT BURIED CONDUIT(S) DETAIL
– NOT TO SCALE

CODED NOTES

1. 1" RGS CONDUIT WITH (2)#8 AND (1)#8G FOR MIDFIELD RECEPTACLE, FINISH LINE RECEPTACLE, AND GAME CLOCKS FROM EXISTING PANEL. CONDUIT TO RUN ALONG UNDERSIDE OF THE EXISTING BLEACHERS.
2. 1" SCHEDULE 40 PVC CONDUIT WITH (2)#8 AND (1)#8G FOR MIDFIELD RECEPTACLE, FINISH LINE RECEPTACLES AND GAME CLOCKS.
3. PROVIDE COMMUNICATION JUNCTION BOX (SEE DETAILS 1 AND 2 ON C-602).
4. TRANSITION FROM ABOVE GROUND RGS TO CONDUIT BELOW GRADE SCHEDULE 40 PVC CONDUIT.
5. 1 1/2" SCHEDULE 40 PVC CONDUIT WITH PULL STRING BETWEEN JUNCTION BOXES FOR INSTALLATION OF COMMUNICATION WIRING.
6. PROVIDE JUNCTION BOX WITH GFCI RECEPTACLE (SEE DETAILS 1 & 2 ON C-602).
7. EXISTING POWER PANEL.

0 20 40
Scale in feet

CHA
1298 Professional Drive
Myrtle Beach, SC 29577-5896
843.692.5005 x284 • www.chacompanies.com

HCS Horry County Schools

DDC ENGINEERS

HORRY COUNTY SCHOOLS

OFFICE OF FACILITIES
1160 E. HIGHWAY 501
CONWAY, SC 29526

SOUTH CAROLINA CERTIFICATE OF AUTHORIZATION CHA, Inc. No. 3955

SOUTH CAROLINA PROFESSIONAL ENGINEER No. 24377 JAMES B. FUGLESTAD

IT IS A VIOLATION OF LAW FOR ANY PERSON, UNLESS THEY ARE ACTING UNDER THE DIRECTION OF A PROFESSIONAL ENGINEER, ENGINEER, ARCHITECT, LANDSCAPE ARCHITECT OR LAND SURVEYOR TO ALTER AN ITEM IN ANY WAY. IF AN ITEM BEARING THE STAMP OF A PROFESSIONAL ENGINEER IS ALTERED, THE ALTERING ENGINEER SHALL ATTACH A DESCRIPTION OF THE ALTERATION. LANDSCAPE ARCHITECT OR LAND SURVEYOR SHALL STAMP THE DOCUMENT AND INCLUDE THE NOTATION "ALTERED BY" FOLLOWED BY THEIR SIGNATURE, THE DATE OF SUCH ALTERATION, AND A SPECIFIC DESCRIPTION OF THE ALTERATION.

PHASE 2

AYNOR HS
GREEN SEA FLOYDS HS
NORTH MYRTLE HS

TRACK AND FIELD
ATHLETIC FACILITY
IMPROVEMENTS PROGRAM

No.	Submittal / Revision	App'd.	By	Date

NORTH MYRTLE HS
ELECTRICAL SITE
PLAN

Designed By:	Drawn By:	Checked By:
SAM	SAM	JJD
Issue Date: 2/22/2021	Project No: 36108	Scale: AS SHOWN

Drawing No.:
E-001

File: V:\PROJECTS\ANY\VCS\36108\CADD_ACAD\E-004-36108.DWG
Saved: 2/23/2021 3:56:22 PM Plotted: 2/23/2021 2:27:28 PM Current User: Mcfadin, Stefine LastSavedBy: 5427

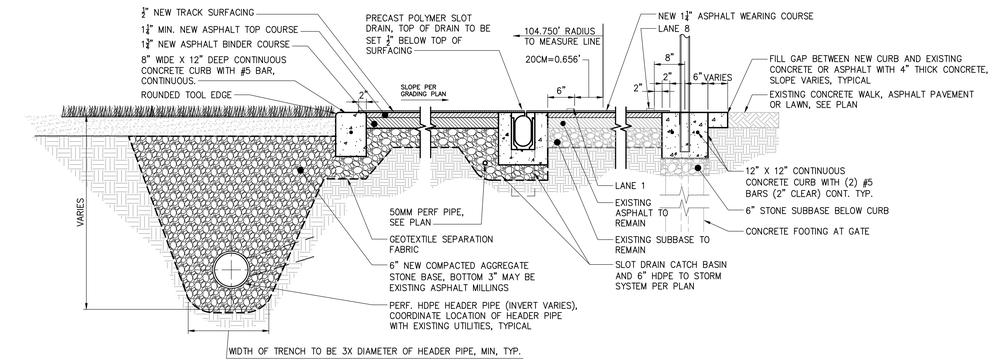

1 TRACK CROSS SECTION AT D-ZONE AND PERIMETER CURB (AYNOR HIGH SCHOOL)
SCALE:

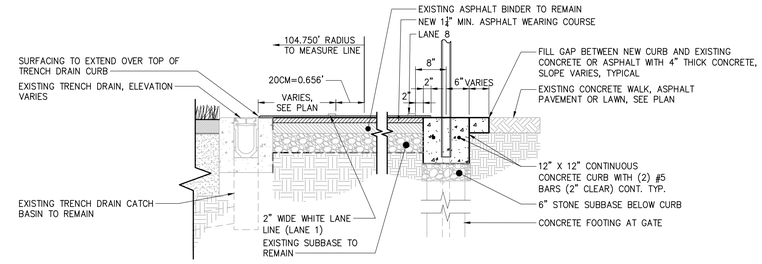

2 TRACK CROSS SECTION AT EXISTING TRENCH DRAIN AND PERIMETER CURB (AYNOR HIGH SCHOOL)
SCALE:

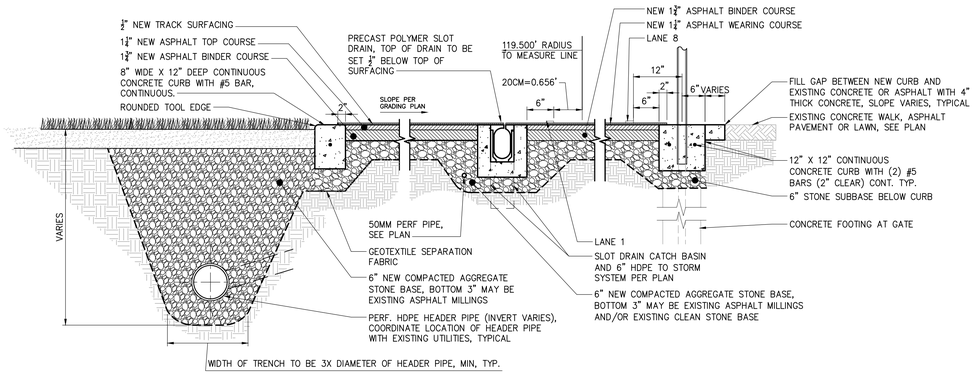

3 TRACK CROSS SECTION AT D-ZONE AND PERIMETER CURB (GREEN SEA FLOYDS HIGH SCHOOL)
SCALE:

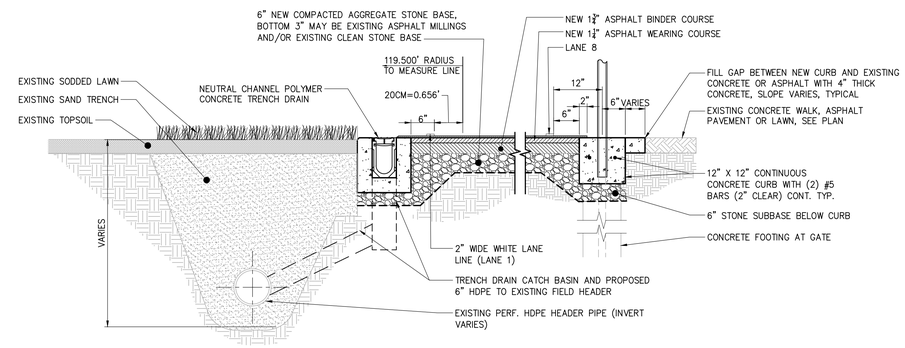

4 TRACK CROSS SECTION AT NEW TRENCH DRAIN AND PERIMETER CURB (GREEN SEA FLOYDS HIGH SCHOOL)
SCALE:

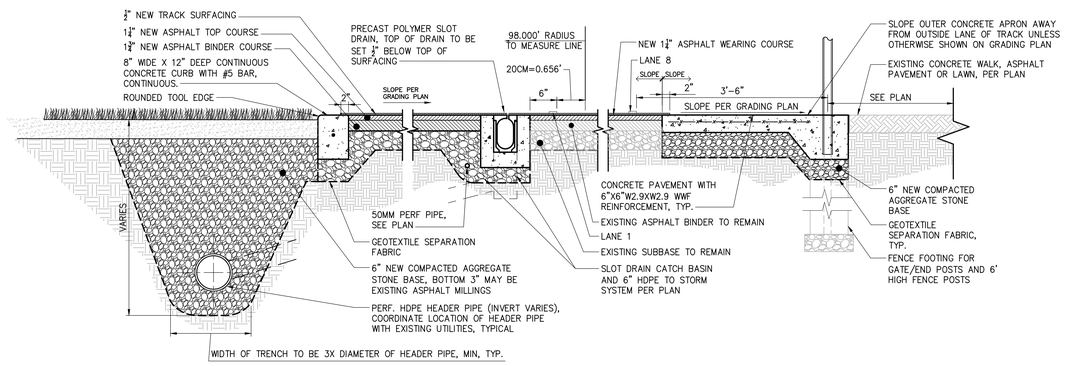

5 TRACK CROSS SECTION AT SOUTH D-ZONE AND PERIMETER CURB (NORTH MYRTLE BEACH HIGH SCHOOL)
SCALE:

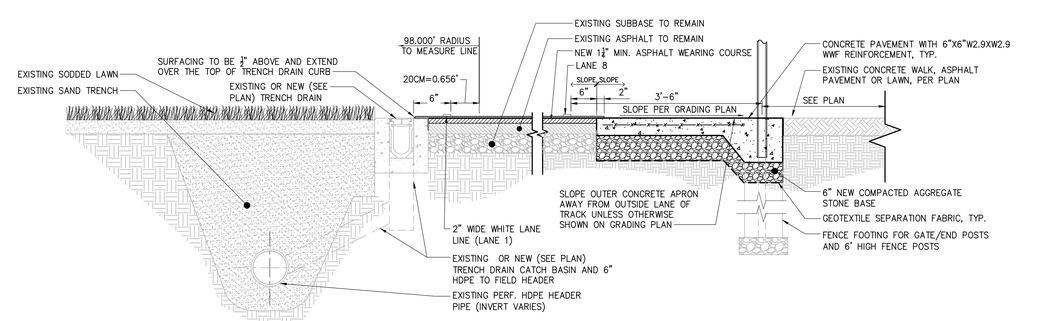

6 TRACK CROSS SECTION AT HOME SIDE TRENCH DRAIN AND PERIMETER CURB (NORTH MYRTLE BEACH HIGH SCHOOL)
SCALE:

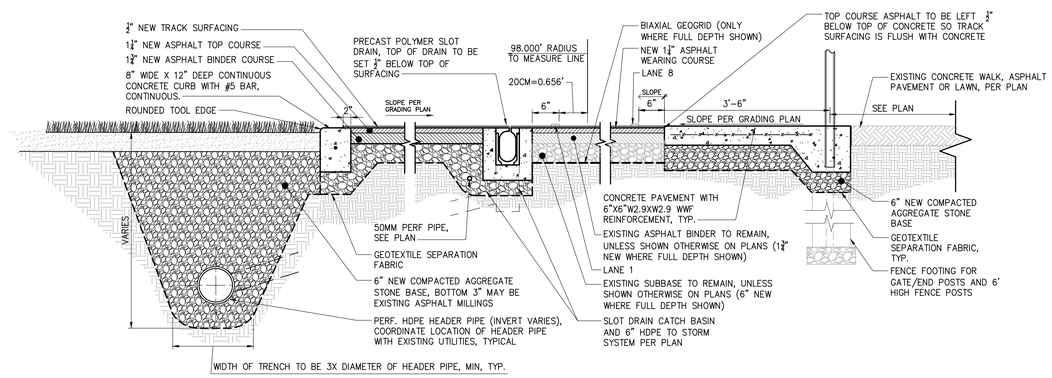

7 TRACK CROSS SECTION AT NORTH D-ZONE AND PERIMETER CURB (NORTH MYRTLE BEACH HIGH SCHOOL)
SCALE:

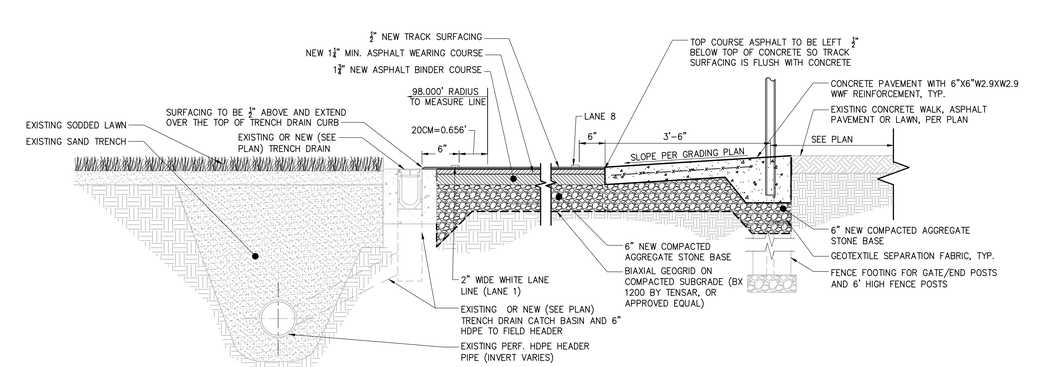

8 TRACK CROSS SECTION AT EXISTING VISITOR'S SIDE TRENCH DRAIN AND PERIMETER CURB (NORTH MYRTLE BEACH HIGH SCHOOL)
SCALE:

CHA
1258 Professional Drive
Myrtle Beach, SC 29577-5896
843.692.3105 x284 • www.chacompanies.com

HCS Horry County Schools

DDC ENGINEERS

HORRY COUNTY SCHOOLS

OFFICE OF FACILITIES
1160 E. HIGHWAY 501
CONWAY, SC 29526

SOUTH CAROLINA CERTIFICATE OF AUTHORIZATION CHA, Inc. No. 3955

SOUTH CAROLINA REGISTERED PROFESSIONAL ENGINEER No. 24401 2-22-2021 PATRICK N. GRAHAM

IT IS A VIOLATION OF LAW FOR ANY PERSON, UNLESS THEY ARE ACTING UNDER THE DIRECTION OF A LICENSED PROFESSIONAL ENGINEER, ARCHITECT, LANDSCAPE ARCHITECT OR LAND SURVEYOR TO ALTER AN ITEM IN ANY WAY. IF AN ITEM BEARING THE STAMP OF A LICENSED PROFESSIONAL IS ALTERED, THE ALTERING ENGINEER, ARCHITECT, LANDSCAPE ARCHITECT OR LAND SURVEYOR SHALL STAMP THE DOCUMENT AND INCLUDE THE NOTATION "ALTERED BY" FOLLOWED BY THEIR SIGNATURE, THE DATE OF SUCH ALTERATION, AND A SPECIFIC DESCRIPTION OF THE ALTERATION.

PHASE 2

AYNOR HS
GREEN SEA FLOYDS HS
NORTH MYRTLE HS

TRACK AND FIELD
ATHLETIC FACILITY
IMPROVEMENTS PROGRAM

No.	Submittal / Revision	App'd.	By	Date

TRACK AND FIELD DETAILS

Designed By:	Drawn By:	Checked By:
JP	CL	PG
Issue Date:	Project No:	Scale:
2/22/2021	36108	AS SHOWN

Drawing No.:
C-600

File: V:\PROJECTS\ANY\K5\36108\CADD_ACAD\C-600_PH2.DWG
Saved: 2/15/2021 8:29:46 AM Plotted: 2/25/2021 2:46:02 PM Current User: Lindsay, Cody LastSaved By: 8170

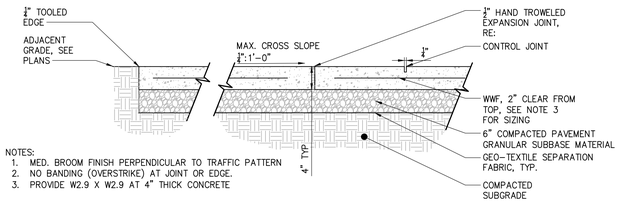

NOTES:
1. MED. BROOM FINISH PERPENDICULAR TO TRAFFIC PATTERN
2. NO BANDING (OVERSTRIKE) AT JOINT OR EDGE.
3. PROVIDE W2.9 X W2.9 AT 4" THICK CONCRETE

1 CONCRETE PAVEMENT
SCALE:

EXPANSION JOINTS TO OCCUR 25' O.C. MAX & AT ALL CURBS, WALLS, & VERT. ELEMENTS, AND AS SHOWN ON PLANS

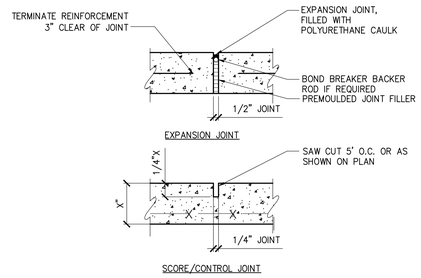

2 CONCRETE PAVEMENT
SCALE:

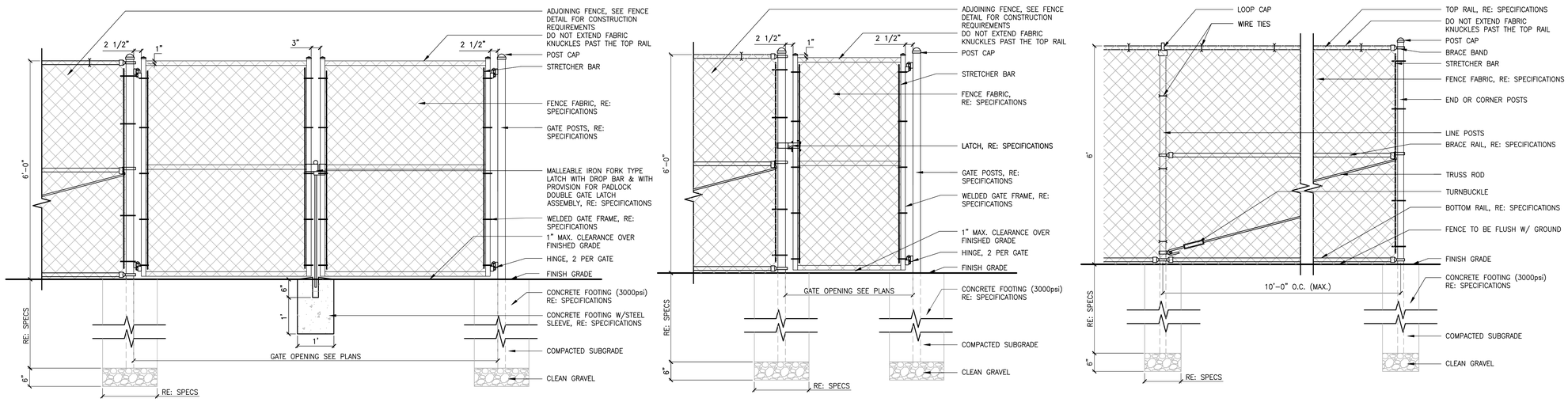

NOTES:
1. SEE SPECIFICATIONS FOR POST AND FENCE FRAME SIZING.
2. ALL POST FOOTINGS SHALL BE PER SPECIFICATIONS.
3. SEE SPECIFICATIONS FOR FENCE FINISH REQUIREMENTS.
4. HOLD DOWN TOP OF FOOTING BELOW WALK (TYP.).
5. ALL CHAIN LINK FENCING SHALL HAVE A CONTINUOUS BOTTOM RAIL, NO TENSION WIRE IS ALLOWED
6. ALL CHAIN LINK FENCING, POST RAILS AND MESH/FABRIC SHALL BE BLACK POLYMER COATED. CHAIN LINK GATE POSTS AND RAILS MAY BE POWDER COATED.

3 6' CHAIN LINK FENCE AND GATES DETAIL
SCALE:

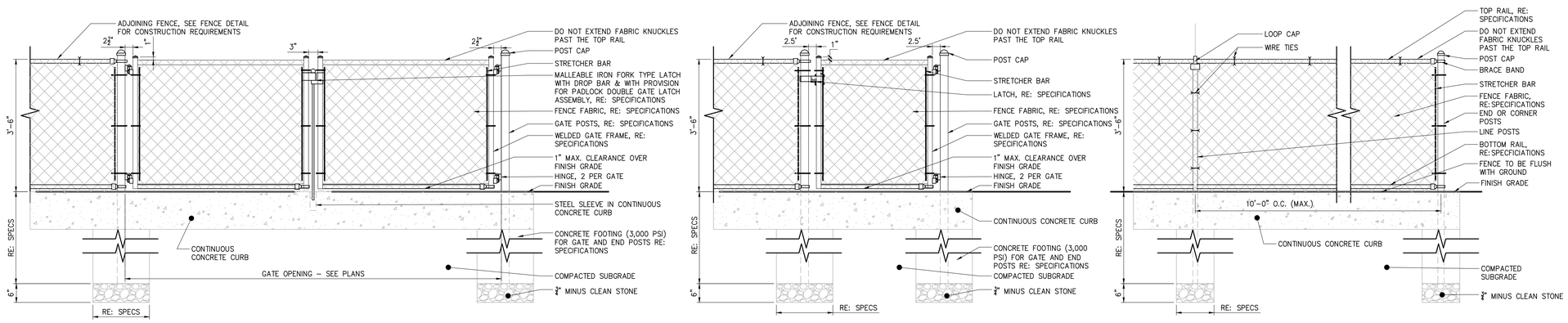

NOTES:
1. SEE SPECIFICATIONS FOR POST AND FENCE FRAMING SIZING.
2. ALL POST FOOTINGS SHALL BE PER SPECIFICATIONS.
3. SEE SPECIFICATIONS FOR FENCE FINISH REQUIREMENTS.
4. HOLD DOWN TOP OF FOOTING BELOW WALK (TYP.).

4 42" HEIGHT CHAIN LINK FENCE AND GATES DETAIL
SCALE:

CHA
1258 Professional Drive
Myrtle Beach, SC 29577-5896
843.692.3105 x284 • www.chacompanies.com

HCS Horry County Schools

DDC ENGINEERS

HORRY COUNTY SCHOOLS

OFFICE OF FACILITIES
1160 E. HIGHWAY 501
CONWAY, SC 29526

SOUTH CAROLINA CERTIFICATE OF AUTHORIZATION CHA, Inc. No. 3955

SOUTH CAROLINA REGISTERED PROFESSIONAL ENGINEER No. 24401 2-22-2021 PATRICK N. GRAHAM

IT IS A VIOLATION OF LAW FOR ANY PERSON, UNLESS THEY ARE ACTING UNDER THE DIRECTION OF A LICENSED PROFESSIONAL ENGINEER, ARCHITECT, LANDSCAPE ARCHITECT OR LAND SURVEYOR TO ALTER AN ITEM IN ANY WAY. IF AN ITEM BEARING THE STAMP OF A LICENSED PROFESSIONAL ENGINEER, ARCHITECT, LANDSCAPE ARCHITECT OR LAND SURVEYOR SHALL STAMP THE DOCUMENT AND INCLUDE THE NOTATION "ALTERED BY" FOLLOWED BY THEIR SIGNATURE, THE DATE OF SUCH ALTERATION, AND A SPECIFIC DESCRIPTION OF THE ALTERATION.

PHASE 2

AYNOR HS
GREEN SEA FLOYDS HS
NORTH MYRTLE HS

TRACK AND FIELD
ATHLETIC FACILITY
IMPROVEMENTS PROGRAM

No.	Submittal / Revision	App'd	By	Date

TRACK AND FIELD DETAILS

Designed By:	Drawn By:	Checked By:
JP	CL	PG
Issue Date:	Project No:	Scale:
2/22/2021	36108	AS SHOWN

Drawing No.:
C-601

File: V:\PROJECTS\ANY\V63\36108\CADD_ACAD\C-600_P42.DWG
Saved: 2/15/2021 9:23:46 AM Plotted: 2/22/2021 2:46:06 PM Current User: Lindsay, Cody LastSavedBy: 6170

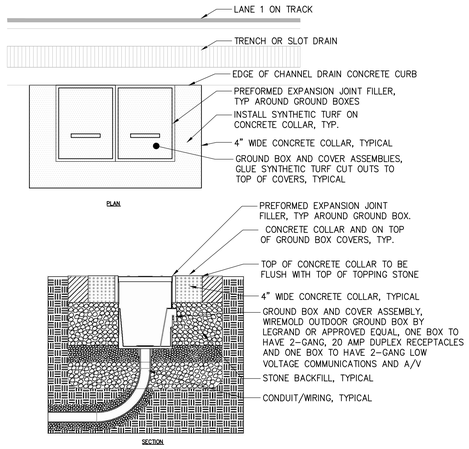

1 JUNCTION BOX – LAWN
SCALE:

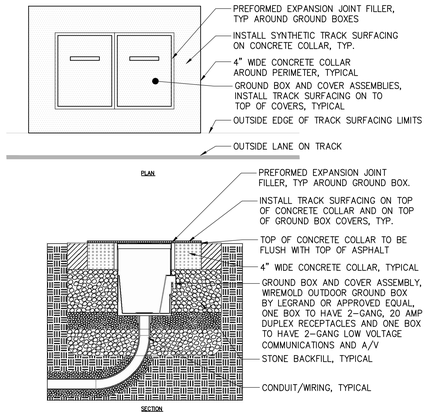

2 JUNCTION BOX – CONCRETE
SCALE:

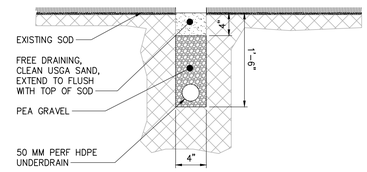

3 SAND SILT DRAINAGE DETAIL
SCALE:

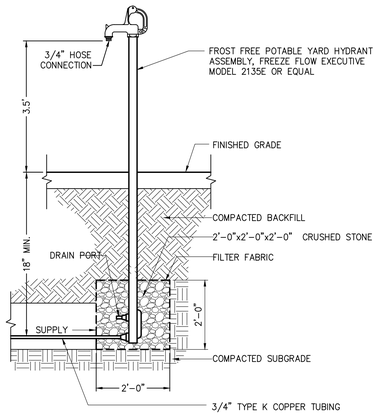

4 FROST FREE POTABLE YARD HYDRANT
SCALE:

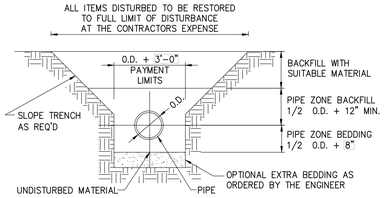

5 TYPICAL STORM TRENCH DETAIL
SCALE:

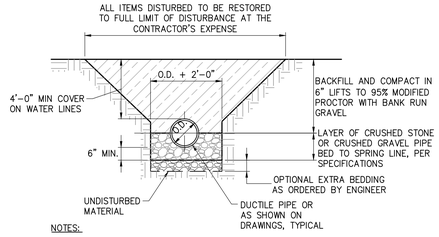

NOTES:

1. ALL BACKFILL MATERIAL COMPACTED IN 6" (MAX.) LIFTS TO 95% STANDARD PROCTOR DENSITY
2. OVEREXCAVATE AT BELLS TO PROVIDE 4" BEDDING BELOW BELLS
3. ALL TRENCH EXCAVATION SHALL MEET OSHA REQUIREMENTS AND ALL STATE AND LOCAL SAFETY REGULATIONS

6 TYPICAL WATER PIPE TRENCH DETAIL
SCALE:

NOTE:
1. PROVIDE LOCATION PINS IN OUTSIDE CONCRETE CURBS AT 4 POINTS OF CURVATURE (PC'S) AND APEX OF BOTH TURNS

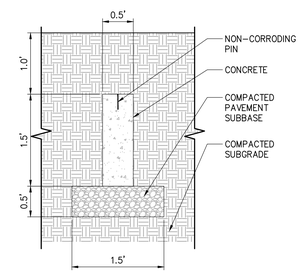

7 TRACK RADIUS MOMUNMENT POINT DETAIL
SCALE:

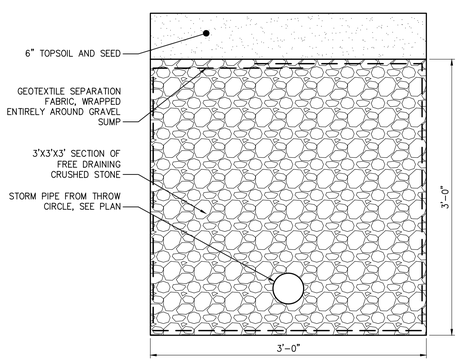

8 GRAVEL SUMP DETAIL
SCALE:

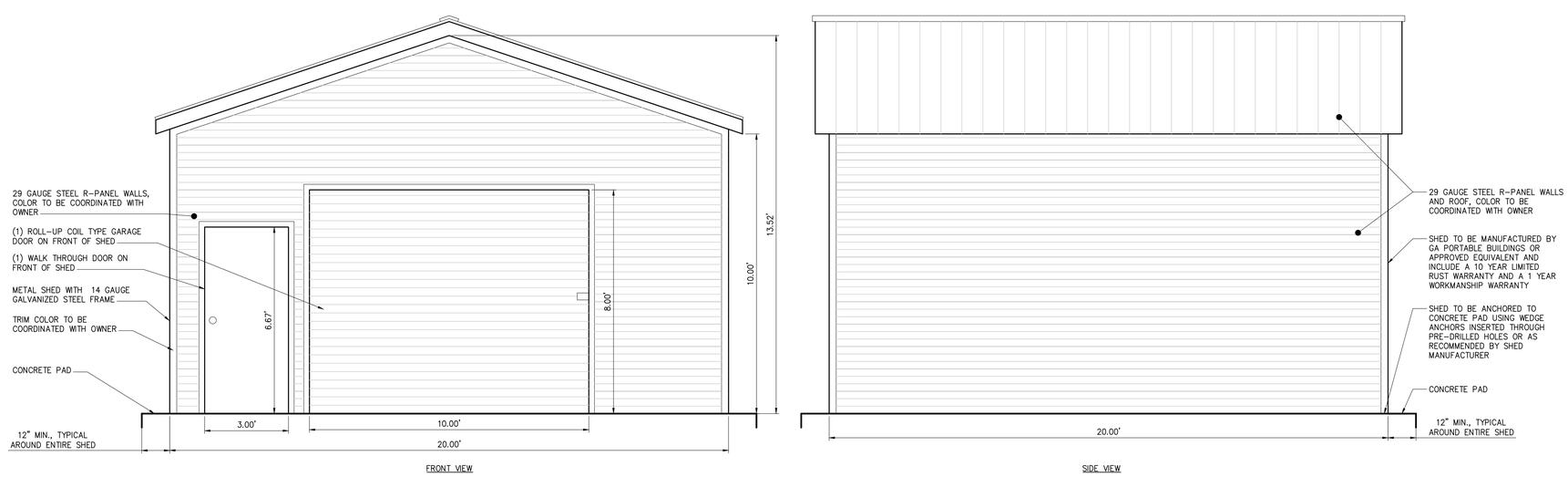

9 METAL SHED DETAIL
SCALE:

CHA
1258 Professional Drive
Myrtle Beach, SC 29577-5896
843.692.3105 x286 • www.chacompanies.com

HCS Horry County Schools

DDC ENGINEERS

HORRY COUNTY SCHOOLS

OFFICE OF FACILITIES
1160 E. HIGHWAY 501
CONWAY, SC 29526

SOUTH CAROLINA CERTIFICATE OF AUTHORIZATION
CHA, Inc.
No. 3955

SOUTH CAROLINA REGISTERED PROFESSIONAL ENGINEER
No. 24401
2-22-2021
PATRICK N. GRAHAM

IT IS A VIOLATION OF LAW FOR ANY PERSON, UNLESS THEY ARE ACTING UNDER THE DIRECTION OF A LICENSED PROFESSIONAL ENGINEER, ARCHITECT, LANDSCAPE ARCHITECT OR LAND SURVEYOR TO ALTER AN ITEM IN ANY WAY. IF AN ITEM BEARING THE STAMP OF A LICENSED PROFESSIONAL ENGINEER, ARCHITECT, LANDSCAPE ARCHITECT OR LAND SURVEYOR SHALL STAMP THE DOCUMENT AND INCLUDE THE NOTATION "ALTERED BY" FOLLOWED BY THEIR SIGNATURE, THE DATE OF SUCH ALTERATION, AND A SPECIFIC DESCRIPTION OF THE ALTERATION.

PHASE 2

AYNOR HS
GREEN SEA FLOYDS HS
NORTH MYRTLE HS

TRACK AND FIELD
ATHLETIC FACILITY
IMPROVEMENTS PROGRAM

No.	Submittal / Revision	App'd	By	Date

TRACK AND FIELD DETAILS

Designed By:	Drawn By:	Checked By:
JP	CL	PG
Issue Date:	Project No:	Scale:
2/22/2021	36108	AS SHOWN

Drawing No.:
C-602

File: V:\PROJECTS\ANY\XS\36108\CADD_ACAD\C-600_PH2.DWG
Saved: 2/15/2021 9:29:46 AM Plotted: 2/26/2021 2:46:09 PM Current User: Lindsay, Cody LastSaveBy: 6170

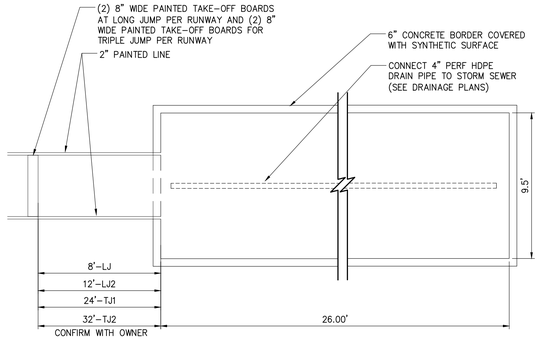

1 LONG/TRIPLE JUMP SAND PIT PLAN
SCALE:

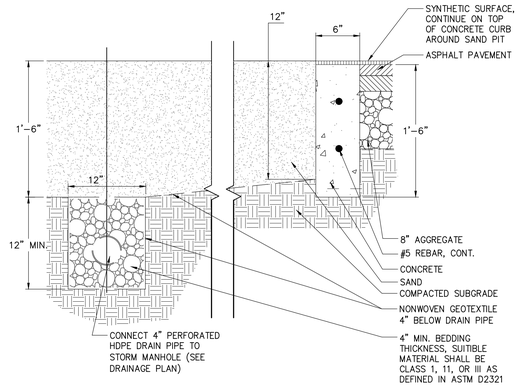

2 LONG/TRIPLE JUMP SAND PIT SECTION
SCALE:

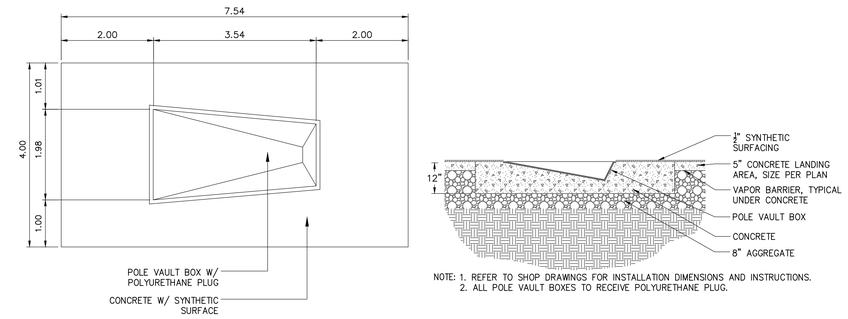

3 POLE VAULT BOX PLAN AND SECTION
SCALE:

NOTE:
1. ALL DRAWINGS DEPICTING IN-GROUND EQUIPMENT ARE FOR INFORMATION ONLY. REFER TO MANUFACTURER SHOP DRAWINGS FOR INSTALLATION DIMENSIONS AND INSTRUCTIONS.
2. CONCRETE TEXTURE IS A LIGHT BROOM FINISH. OWNER'S REPRESENTATIVE TO BE PRESENT UPON CONCRETE INSTALLATION TO VERIFY PROPER TEXTURE.

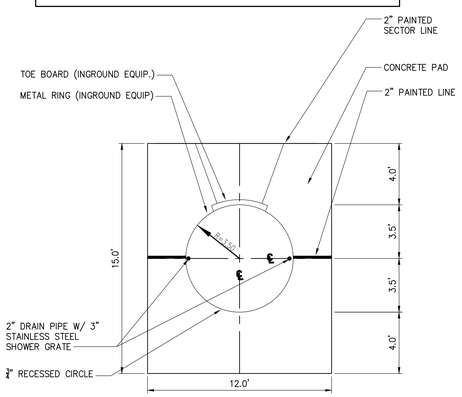

4 SHOT PUT CIRCLE PLAN
SCALE:

NOTE: ALL DRAWINGS DEPICTING IN-GROUND EQUIPMENTS ARE FOR BIDDING ONLY. REFER TO SHOP DRAWINGS FOR INSTALLATION DIMENSIONS AND INSTRUCTIONS.

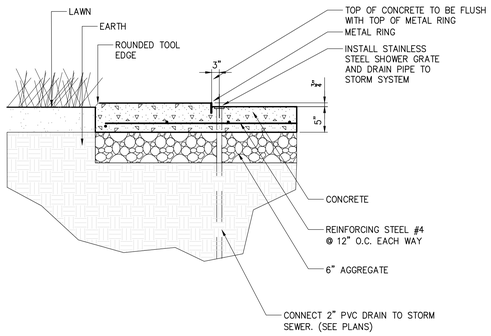

5 SHOT PUT CIRCLE SECTION
SCALE:

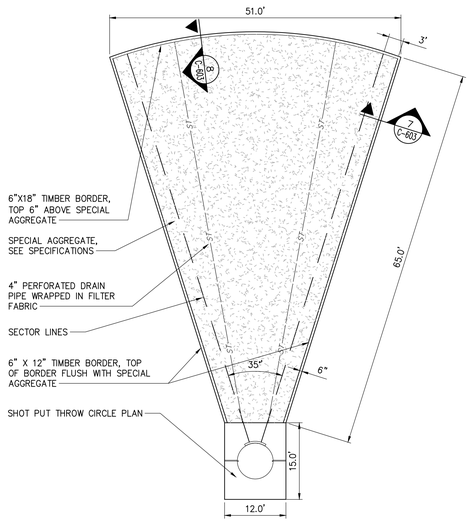

6 SHOT PUT LANDING AREA – PLAN
SCALE:

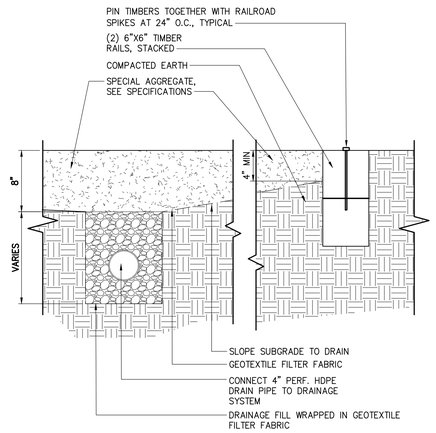

7 SHOT PUT LANDING AREA – SECTION
SCALE:

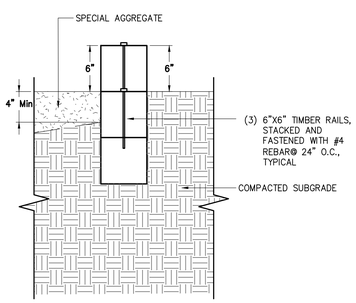

8 SHOT PUT LANDING AREA – END SECTION
SCALE:

CHA
1258 Professional Drive
Myrtle Beach, SC 29577-5896
843.692.3105 x284 • www.chacompanies.com

HCS Horry County Schools

DDC ENGINEERS

HORRY COUNTY SCHOOLS

OFFICE OF FACILITIES
1160 E. HIGHWAY 501
CONWAY, SC 29526

SOUTH CAROLINA CERTIFICATE OF AUTHORIZATION CHA, Inc. No. 3955

SOUTH CAROLINA REGISTERED PROFESSIONAL ENGINEER No. 24401 2-22-2021 PATRICK N. GRAHAM

IT IS A VIOLATION OF LAW FOR ANY PERSON, UNLESS THEY ARE ACTING UNDER THE DIRECTION OF A LICENSED PROFESSIONAL ENGINEER, ARCHITECT, LANDSCAPE ARCHITECT OR LAND SURVEYOR TO ALTER AN ITEM IN ANY WAY. IF AN ITEM BEARING THE STAMP OF A LICENSED PROFESSIONAL IS ALTERED, THE ALTERING ENGINEER, ARCHITECT, LANDSCAPE ARCHITECT OR LAND SURVEYOR SHALL STAMP THE DOCUMENT AND INCLUDE THE NOTATION "ALTERED BY" FOLLOWED BY THEIR SIGNATURE, THE DATE OF SUCH ALTERATION, AND A SPECIFIC DESCRIPTION OF THE ALTERATION.

PHASE 2

AYNOR HS
GREEN SEA FLOYDS HS
NORTH MYRTLE HS

TRACK AND FIELD
ATHLETIC FACILITY
IMPROVEMENTS PROGRAM

No.	Submittal / Revision	App'd.	By	Date

TRACK AND FIELD DETAILS

Designed By:	Drawn By:	Checked By:
JP	CL	PG
Issue Date:	Project No:	Scale:
2/22/2021	36108	AS SHOWN

Drawing No.:
C-603

File: V:\PROJECTS\ANY\K5\36108\CADD_ACAD\C-600_PH2.DWG
Saved: 2/19/2021 9:29:46 AM Plotted: 2/26/2021 2:46:13 PM Current User: Lindsay, Cody LastSaveBy: 6170

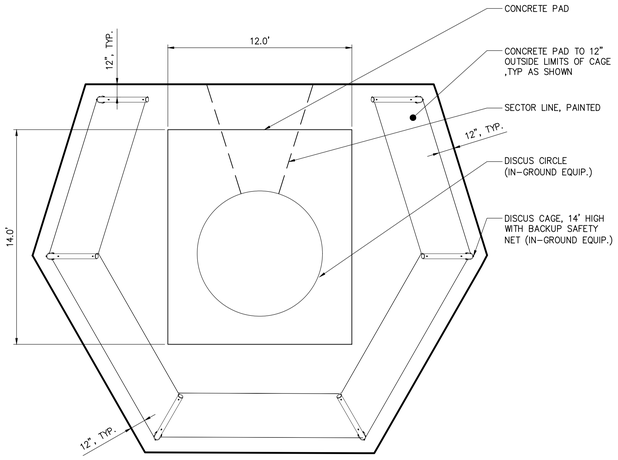

1 DISCUS CAGE PLAN
SCALE:

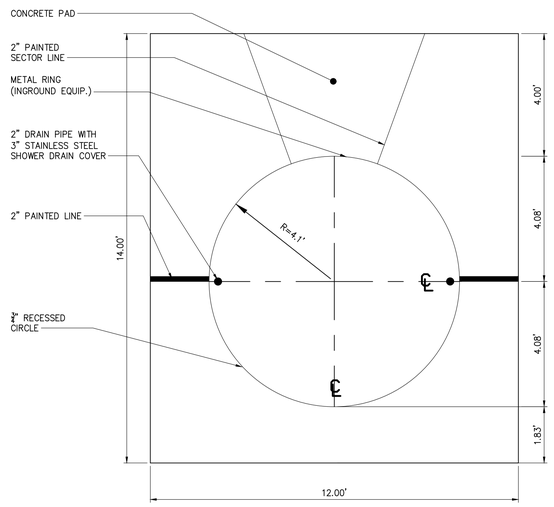

2 DISCUS CIRCLE PLAN
SCALE:

NOTE: ALL DRAWINGS DEPICTING IN-GROUND EQUIPMENTS ARE FOR BIDDING ONLY. REFER TO SHOP DRAWINGS FOR INSTALLATION DIMENSIONS AND INSTRUCTIONS.

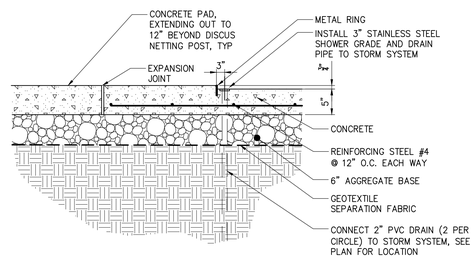

3 DISCUS CIRCLE SECTION
SCALE:

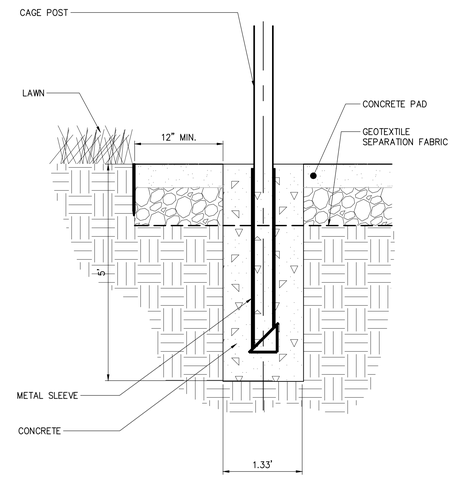

4 DISCUS NETTING SECTION
SCALE:

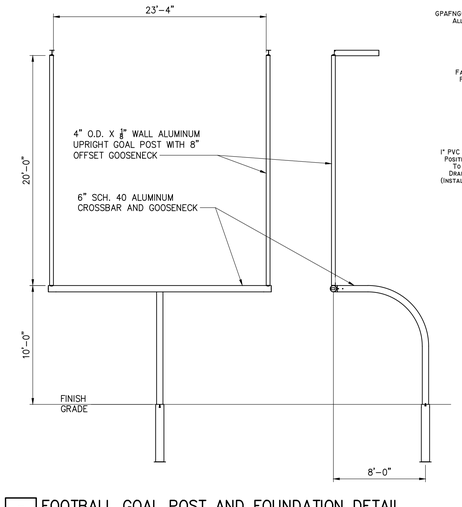

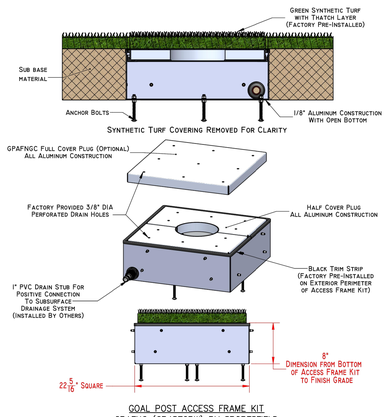

GOAL POST ACCESS FRAME KIT
GPAFNG (GP4570PW) BY SPORTSFIELD SPECIALTIES OR EQUAL

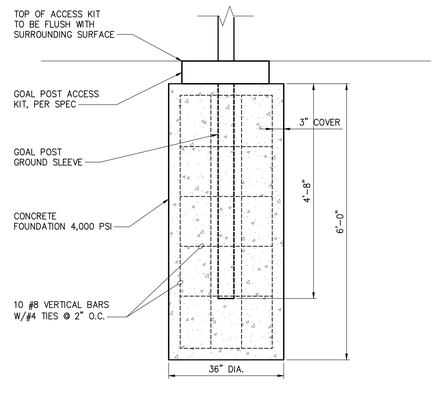

5 FOOTBALL GOAL POST AND FOUNDATION DETAIL
SCALE:

File: V:\PROJECTS\ANY\V5\36108\CADD_ACAD\C-600_PH2.DWG
Saved: 2/15/2021 9:29:46 AM Plotted: 2/26/2021 2:46:16 PM Current User: Lindsay, Cody LastSavedBy: 6170

CHA
1258 Professional Drive
Myrtle Beach, SC 29577-5896
843.692.3105 x284 • www.chacompanies.com

HCS Horry County Schools

DDC ENGINEERS

HORRY COUNTY SCHOOLS

OFFICE OF FACILITIES
1160 E. HIGHWAY 501
CONWAY, SC 29526

SOUTH CAROLINA CERTIFICATE OF AUTHORIZATION CHA, Inc. No. 3955

SOUTH CAROLINA LICENSED PROFESSIONAL ENGINEER No. 24401 2-22-2021 PATRICK N. GRAHAM

IT IS A VIOLATION OF LAW FOR ANY PERSON, UNLESS THEY ARE ACTING UNDER THE DIRECTION OF A LICENSED PROFESSIONAL ENGINEER, ARCHITECT, LANDSCAPE ARCHITECT OR LAND SURVEYOR TO ALTER AN ITEM IN ANY WAY. IF AN ITEM BEARING THE STAMP OF A LICENSED PROFESSIONAL ENGINEER, LANDSCAPE ARCHITECT, ARCHITECT OR LAND SURVEYOR SHALL STAMP THE DOCUMENT AND INCLUDE THE NOTATION "ALTERED BY" FOLLOWED BY THEIR SIGNATURE, THE DATE OF SUCH ALTERATION, AND A SPECIFIC DESCRIPTION OF THE ALTERATION.

PHASE 2

AYNOR HS
GREEN SEA FLOYDS HS
NORTH MYRTLE HS

TRACK AND FIELD
ATHLETIC FACILITY
IMPROVEMENTS PROGRAM

No.	Submittal / Revision	App'd	By	Date

TRACK AND FIELD DETAILS

Designed By:	Drawn By:	Checked By:
JP	CL	PG
Issue Date:	Project No:	Scale:
2/22/2021	36108	AS SHOWN

Drawing No.:
C-604