CITY OF HAVELOCK
Post Office Box 368
Havelock, NC 28532

INVITATION TO BID

Pursuant to North Carolina General Statutes §143-131, the City of Havelock invites informal bids on the following:

Bids must be submitted in accordance with the attached specifications.
Bids can be submitted by mail, email, fax or hand delivered. Cover sheets, envelopes, etc. should be clearly marked with the words:

"City of Havelock,
Pump Station Repairs"

Address Bids to:

Lee Tillman, Director of Finance
City of Havelock
P.O. Box 368
1 Governmental Ave.
Havelock, NC 28532
Fax 252-447-0126
Email: Ltillman@havelocknc.us

Bids will be accepted until **3:00 PM (EST) on Thursday, August 9, 2018** at which time they will be reviewed in the office of the City Finance Director. Quotes are not subject to public inspection until the contract is awarded. The bids are good for 75 days after opening.

Bidders are cautioned not to submit bids until the proposed requirements and specifications have been carefully examined. It will be considered that bidders will have satisfied themselves as to the accuracy of the specifications. No proposal will be considered unless prices are submitted for all items requested in any section. The City reserves the right to change the amount of quantities.

The names of certain brands or makes denote quality standard in the article desired, but do not restrict bidders to the specific brand, make or manufacturer named. They are meant to convey to prospective bidders the general style, type, character and quality of the article desired.

The successful bidder on all construction contracts will be required to conduct the operation in accordance with all Federal, State, and Municipal health and safety rules, regulations and laws applicable to the operation. The successful bidder may be asked to provide the City with a copy of the company's safety plan prior to commencing work. For all projects over $30,000, a general contractor's license must be furnished to the City if applicable.

CITY OF HAVELOCK
Post Office Box 368
Havelock, NC 28532

N.C.G.S. (North Carolina General Statutes), specifically §160A-20.1(b), prohibit the City from entering into contracts with contractors and subcontractors who have not complied with the requirement of Article 2 of Chapter 64. The Contractor shall submit the E-Verify Affidavit, located in the Bid Proposal section, with their bid. Bids that do not include this Affidavit may be considered non-responsive.

N.C.G.S 147-86.55-69 requires certification for bids with a North Carolina Local Government. The certification is required at the time when a bid is submitted. N.C.G.S 147-86.55-69 requires that contractors with a North Carolina Local Government must not utilize any subcontractor found on the State Treasurer's Final Divestment List. The State Treasurer's Final Divestment List can be found on the State Treasurer's website at the address www.nctreasurers.com/Iran and will be updated every 180 days.

The City of Havelock reserves the right to reject any or all proposals and to purchase items from the state contract in the efforts to award the contract to the bidder it deems to be for the best interest of the City.

This institution is an equal opportunity provider, and employer.

Contact person(s) for information on this bid:

For questions in regards to the bid specifications, the City requires and only responds to questions submitted in writing and sent via email to:
Ltillman@havelocknc.us **AND cc:** Asmith@havelocknc.us

Questions must be received by **3:00 PM (EST) on Friday, August 3, 2018**. If questions are received, the City will respond no later than **3:00 PM (EST) on Monday, August 6, 2018**.

Today is July 9, 2018.

CITY OF HAVELOCK

7.9.18

Lee W. Tillman
Finance Director

STATE OF NORTH CAROLINA
AFFIDAVIT
CITY OF HAVELOCK

I, _____ (the individual attesting below), being duly authorized by and on behalf of _____ (the entity hereinafter "Employer") after first being duly sworn hereby swears or affirms as follows:

1. Employer understands that E-Verify is the federal E-Verify program operated by the United States Department of Homeland Security and other federal agencies, or any successor or equivalent program used to verify the work authorization of newly hired employees pursuant to federal law in accordance with NCGS §64-25(5).

2. Employer understands that Employers Must Use E-Verify. Each employer, after hiring an employee to work in the United States, shall verify the work authorization of employee through E-Verify in accordance with NCGS §64-26(a).

3. Employer is a person, business entity, or other organization that transacts business in the State and that employs 25 or more employees in this State. (mark Yes or No)

    a. YES_____, or

    b. NO_____

4. Employer's subcontractors comply with E-Verify, and if Employer is the winning bidder on this project Employer will ensure compliance with E-Verify by any subcontractors subsequently hired by Employer.

This _____ day of _____, 20___.

_____
Signature of Affiant
Print or Type Name:_____

State of North Carolina County of _____

Signed and sworn to (or affirmed) before me, this the
_____ day of _____, 20___.

_____ _____
Signature of Notary Printed Name of Notary

My Commission Expires: _____

(Affix Official/Notarial Seal)

Bid Sheet

Rose Brother Pump Station Base Bid: _____
Weyerhaeuser Pump Station Base Bid: _____
Tarheel Pump Station Base Bid: _____
High School Pump Station Base Bid: _____
Total Base Bid: _____

(1) The Total Base Bid shall include all material and labor for a complete installation as shown, with the exception of materials furnished by the Owner as listed in the Project Scope. Any additional material cost and labor cost related to the installation of items furnished by the Owner shall be included in the Contractor's Bid.

Company Name: _____

Company Address: _____

Contact Person: _____

Telephone Number: _____

NC Contractor's License Type and Number _____

Number of Addendums Acknowledged (circle one): N/A 1 2 3 4

IRAN DIVESTMENT ACT CERTIFICATION
REQUIRED BY N.C.G.S 147-86.55-69
As of the date listed below, the vendor or bidder listed above is not listed on the Final Divestment List created by the State Treasurer pursuant to N.C.G.S. 147-86.55-69.
The undersigned herby certifies that he or she is authorized by the vendor or bidder listed above to make the forgoing statement.

Authorized Signature: _____

Print Name of Authorized Signature: _____

Title: _____

Address Bid to:

Lee Tillman, Director of Finance
City of Havelock
P.O. Drawer 368
1 Governmental Avenue
Havelock, NC 28532

Please indicate the Bid name on the outside of the envelope.

Project Scope

Modifications of Rose Brothers Pump Station, Weyerhaeuser Pump Station, Tarheel Pump Station, and High School Pump Station in accordance with the scopes attached for each pump station.

A submission of a bid for the project shall constitute confirmation that the Contractor has inspected the site and facilities to be demolished, and is familiar with site conditions and scope or work required for project completion as described.

Project Duration

Upon the receipt of Notice to Proceed, the project must be completed within the following durations:

Interim Completion: Ninety (90) consecutive calendar days
Final Completion: One hundred Fifty (150) consecutive calendar days

The scope for the interim completion includes the attached scopes for Rose Brothers Pump Station and Tarheel Pump Station. The contractor agrees to pay the owner $300 per day in liquidated damages for each day beyond the durations described above for interim and final completion.

ATTACHMENT 1

ROSE BROTHERS PUMP STATION REPAIRS
SCOPE OF WORK

NORTH CAROLINA
PROFESSIONAL
SEAL
33116
7/3/2018
ENGINEER
BRIAN Y. PORTER

Havelock, NC
Rose Brothers Pump Station Repairs
Scope of Work

1. Summary of Work

   A. The Rose Brothers Pump Station is located west of the intersection of N. Main Street and Chadwick Avenue. Work at the station shall include replacement of the suction and discharge isolation gate valves, installation of the new check valve for pump 1 (to be provided by the Owner), performing concrete repairs on the wet well and applying a Microbiologically Influenced Corrosion (MIC) coating system to the wet well. Bypass pumping during the work will be required from both upstream manholes and will connect to the existing bypass pumping connection on the force main.
   B. Figure 1 shows the general area and Sheet M1 describes the required work.
2. General Information
   A. The existing pump station consists of a wet pit/dry pit arrangement. The wet well is 8 foot diameter precast concrete manhole approximately 20 feet deep. The dry well is an approximate 6' diameter steel structure with 3' diameter entrance tube. Both structures are confined spaces.
   B. The existing pumps are 10 hp with a capacity of 450 gallons per minute.
   C. The site shall be secured at the end of each work day and when no personnel are onsite.
3. Materials
   A. General
      1. Contractor shall field verify all sizes, diameters, and dimensions of materials to be replaced prior to ordering new materials.
   B. Gate Valves
      1. Gate valves shall be of the non-rising stem design, shall fully comply with the requirements of AWWA C509 for resilient-seated gate valves. Gate valves shall be designed for a minimum working pressure of 250 psi and a test pressure of 500 psi.
      2. Gate valve body and bonnet shall be cast iron conforming to ASTM A126, Class B with resilient seat gate and O-ring seals. The gate shall be cast iron with a vulcanized rubber coating with no metal to metal contact when in the fully closed position and a smooth unobstructed waterway when in the fully opened position.
      3. Valves shall have flanged ends and hand wheel operators.
4. Bypass Pumping
   A. Bypass pumping will be required to allow for valve replacement within the pump station. The upstream manholes to the northeast and southwest, as shown in Figure 1, will both require bypass pumping. Both are located outside of the pump station site and will require protection while the pump station is being bypassed. Each bypass system will require one duty and one standby pump capable of delivering 300 gpm at a total dynamic head of 100 feet. Contractor shall coordinate with the owner prior to installation and startup of the bypass systems.
   B. The Contractor is required to design and furnish all materials, labor, equipment, power, fuel, fuel storage, maintenance, etc. to implement a temporary pumping system for the purpose of diverting the existing flow around the work area on a daily

basis, for the duration of the project. The bypass system shall meet the requirements of all codes and regulatory agencies having jurisdiction. Contractor shall also be responsible for any fines imposed by local, state, and/or federal agencies for failure to maintain flows or contain spills and/or overflows.

C. Continuous bypass pumping is allowed in all project areas. Bypass pumping operation must be manned or be set up with floats and automatic on/off mode at all times that pumps are operating. When possible, bypass system shall be removed from service prior to rain events so that no portion of the bypass system impedes the flow of the sewer.

5. Concrete Repairs
   A. Deterioration of the existing manhole wet well interior surfaces is anticipated to be approximately ½" to ¾" in depth.
   B. Contractor shall maintain dry conditions at all times during the work.
   C. Contractor shall remove all loose, unsound material down to the sound parent concrete prior to cleaning, surface preparation and rebuilding of existing concrete interior surfaces per specification 03732 Concrete Repair. Cure repair work mortar 28 days (or as per approved MIC coating manufacturer) prior to coating installation.
   D. Contractor shall provide and maintain safe working conditions for all employees and subcontractors in accordance with OSHA requirements. Fresh air shall be continuously supplied to confined spaces through the use of existing openings, forced air draft fans and temporary ducts to individual workers. Fumes shall be exhausted to the outside from the lowest level of the confined space. Electrical fan motors shall be explosion proof if in contact with fumes. No smoking or open fires shall be permitted in or near areas where volatile fumes may accumulate.
6. MIC Coating System
   A. Contractor shall install the MIC coating system in accordance with Section 09801 attached.
7. Seeding and Straw
   A. The contractor shall furnish the kinds and amounts of seed to be seeded in all areas disturbed by the construction work. The quality of the seed shall confirm to the following:

Type	Minimum Seed Purity (%)	Minimum Germination (%)	Maximum Weed Seed (%)
Fescue (fungus free)	98	90	1.00
Hybrid Rye	98	85	0.10
Sudan grass	98	85	0.25
Millet	98	85	0.50
Sericea Lespedeza			
Scarified	98	85	0.50
Unscarified	98	85	0.50

   B. Straw used for mulch shall be small grain hay. Hay shall be undamaged, air dry, threshed straw, free of undesirable weed seed. Straw mulch is not required for seeded areas treated with a temporary soil stabilizer.
8. General Construction Sequence
   The following construction sequence is a general overview of the work required and is not intended to encompass all aspects of the work. The Contractor shall perform all work required for a complete installation

A. Coordinate all shut down and startup operations with the Owner.
B. Contractor shall install and maintain the bypass pump systems to divert flows from the existing wet well.
C. Contractor shall perform concrete repairs on the wet well and apply the MIC coating. The coating shall be installed following the approved manufacturer installation procedures without deviation unless approved by the Owner.
D. Remove existing isolation valves and install new valves in the dry well. Contractor shall be responsible for disposal of the valves and containment of any wastewater between the bypass connection and the discharge valves at no cost to the Owner.
E. Remove the bypass pumping systems.
F. Seed and straw disturbed areas.

SECTION 03732

CONCRETE REPAIRS

PART 1 -- GENERAL

1.01 THE REQUIREMENT

A. The Contractor shall furnish all materials, labor, equipment, tools, etc., required for the repair, renovation, and replacement of concrete and/or reinforcing steel as indicated on the Drawings, specified herein, and determined by field survey.

The Contractor, in conjunction with the Engineer, shall determine the extent of cracked or deteriorated concrete to be rehabilitated and/or resurfaced. A summary of the work to be performed shall be submitted to the Engineer for review, and such summary shall be approved by the Engineer prior to commencement of the Work.

B. Concrete repairs include the following:

1. Repair interior concrete surfaces (top slab, bottom slab and walls) of the precast concrete manhole pump station wet well.

1.02 RELATED WORK SPECIFIED ELSEWHERE

A. 09801 – MIC Coating System

1.03 SUBCONTRACTOR/APPLICATOR QUALIFICATIONS

The Contractor shall furnish the name of all subcontractors/applicators which he proposes to use for this work, including necessary evidence and/or experience records to ascertain their qualifications in the application of epoxy, polymer modified and pozzolan enhanced repair mortars. Approved applicator qualifications shall include:

A. A minimum of 5 years experience in applying epoxy, polymer modified and pozzolan enhanced and cement-based compounds similar to those specified in this Section.

B. A letter from the manufacturer of the specified materials, on the manufacturer's letterhead, signed by an officer of the company, stating that the subcontractor/applicator has been trained in the proper techniques for applying the product, including surface preparation and mixing, placing, curing, and caring for the manufacturer's products. This letter shall further state that the subcontractor/applicator is on the manufacturer's approved list of contractors.

060514BR

1.04 SUBMITTALS

A. Material certifications and technical data sheets on all grouts, mortars, epoxy resins, aggregates and repair products specified in this Section.

B. Subcontractor/Applicator qualifications as specified in Section 1.04.

C. Shop Drawings detailing any planned deviation from the proposed construction sequence and/or method of repair.

D. The Contractor, based on their experience in their profession, may submit to the Engineer for approval, alternative materials and/or methods of work to assure the durability and watertight integrity of the repair work performed. Based bid shall be in accordance with materials and methods specified.

1.05 ADDITIONAL GUARANTEE

A. The Contractor shall guarantee all repair work performed under this Contract against defects in workmanship resulting in leakage and/or failure of concrete bond for a period of two years from the date of the Certificate of Substantial Completion.

PART 2 -- MATERIALS

2.01 WATER

A. The water used for mixing concrete repair products shall be clear, potable, and free of deleterious substances.

2.02 AGGREGATE

A. All aggregate shall conform to ASTM C-33. The aggregate supplier shall submit to the Engineer documentation that the proposed aggregates comply with ASTM C-33 and the requirements listed below:

B. Pea Gravel - Pea gravel shall meet the gradation and material requirements of Standard Size 14 as defined by ASTM C-33. Pea gravel shall be clean, non-reactive and free from deleterious matter and shall contain no limestone.

2.03 ANTI-CORROSION REBAR COATING

A. All reinforcing steel cut or exposed during demolition and/or repair operations shall be protected with an anti-corrosive coating. The anti-corrosive coating shall be a two-component, polymer-modified cementitious material such as "Sika Armatec 110 EpoCem " manufactured by Sika Corp., Lyndhurst, NJ, "CR 246" manufactured by Sto Corporation, Atlanta, GA, “Duralprep A.C.” by the Euclid Chemical Company, or “MasterEmaco P 124” by BASF Master Builder Solutions.

2.04 CEMENTITIOUS STRUCTURAL REPAIR MORTAR

A. Cementitious structural repair mortar shall be a one-component, pre-packaged, shrinkage compensated, fiber-reinforced cementitious mortar formulated for trowel or low-pressure

spray application onto vertical or overhead surfaces. Cementitious structural repair mortar shall be "SikaRepair 224" manufactured by Sika Corp., Lyndhurst, NJ, “MasterEmaco S488 CI” by BASF Master Builder Solutions or equal.

2.05 STORAGE OF MATERIALS

A. The Contractor shall provide an area for repair material storage free from exposure to moisture in any form, before, during, and after delivery to the site. Manufactured materials shall be delivered in unbroken containers labeled with the manufacturer's name and product type. All mortar products shall be stored on raised platforms. Materials susceptible to damage by freezing shall be stored in a dry, heated, insulated area. Any material that has hardened, partially set, become caked and/or has been contaminated or deteriorated shall be rejected. All aggregates shall be stored in clean bins, scows or platforms.

PART 3 -- INSTALLATION

3.01 GENERAL REQUIREMENTS

A. No repair work shall be undertaken when ambient temperatures are below manufacturer's safe recommendations. No admixtures, except those required by the manufacturer, shall be used in the repairs specified herein. All products shall be applied in strict accordance with manufacturer's recommendations. The Contractor shall furnish and install safe scaffolding and ladders for the Engineer's prework inspection, the repair work activities, and the Engineer's final inspection

B. Sandblast or waterblast (3000-4000 psi waterjet) deteriorated areas to remove all loose concrete, existing coatings, unsound material, debris, and laitance. All surfaces shall be clean, free of dirt, grease, loose particles, and deleterious substances and shall be prepared according to manufacturer's requirements.

3.02 ANTI-CORROSION REBAR COATING

A. Reinforcing steel cut or exposed during demolition and/or repair operations shall be sandblasted and cleaned prior to coating with an anti-corrosive coating. Anti-corrosive coating shall be applied as soon as the reinforcement is exposed and cleaned. Coating shall thoroughly cover all exposed parts of the steel and shall be applied according to manufacturer's recommendations.

3.03 CEMENTITIOUS STRUCTURAL REPAIR MORTAR

A. Clean concrete surface as indicated in Article 3.01 above. Prepared surface profile shall be 3/8” minimum depth with an exposed aggregate surface roughness (CSP-6). Engineer shall inspect cleaned/prepared surface prior to application of repair mortar. Apply cementitious structural repair mortar to a saturated surface dry substrate per manufacturer recommendations to repair and rebuild the concrete surface. Finish and wet cure repaired surfaces in accordance with manufacturer recommendations.

B. Featheredge application shall not be accepted.

3.04 WORK IN CONFINED SPACES

A. The Contractor shall provide and maintain safe working conditions for all employees and subcontractors. Fresh air shall be supplied continuously to confined spaces through the combined use of existing openings, forced-draft fans and temporary ducts to the outside, or by direct air supply to individual workers. Fumes shall be exhausted to the outside from the lowest level of the confined space. Electrical fan motors shall be explosion-proof if in contact with fumes. No smoking or open fires shall be permitted in or near areas where volatile fumes may accumulate.

- END OF SECTION -

SECTION 09801

MIC COATING SYSTEM

PART 1 -- GENERAL

1.01 THE REQUIREMENTS

A. Furnish and install special coating systems in accordance with the Contract Documents.

B. MIC Coating System

1. Install Microbiologically Influenced Corrosion (MIC) coating system where shown on the drawing for the Rose Brothers Pump Station Repairs.

1.02 RELATED WORK SPECIFIED ELSEWHERE

A. Section 03732 – Concrete Repairs

1.03 REFERENCE SPECFICATIONS, CODES AND STANDARDS

A. Without limiting the generality of these Specifications, the Work shall conform to the applicable requirements of the following documents:

1.	SSPC-SP13/NACE No. 6	Surface Preparation of Concrete
2.	NACE	National Association of Corrosion Engineers
3.	SSPC	The Society of Protective Coatings
4.	ASTM	American Society of Testing and Materials

1.04 SUBMITTALS

A. Shop Drawings including the following items shall be submitted in accordance with Section 01300.

1. Manufacturer's product data and material safety data sheets for each coating product provided. Include manufacturer's color chart for each product supplied.

2. Manufacturer's installation instructions and recommendations specific to environmental conditions, surface preparation, substrate conditions, and application procedures.

3. Complete shop drawings including location and details for all terminations and transitions.

4. Certifications:

121615BR

a. Furnish affidavits from the manufacturer certifying that materials furnished conform to the requirements specified.

b. Certify concrete repair and coating products have been checked for compatibility.

c. Certification from manufacturer stating the applicator and applicator's assigned personnel are certified and have received specific training for the application of the MIC coating system.

d. Certificate from applicator stating the assigned personnel have received specific training for the application of the MIC coating system.

e. Submit manufacturer's representative or independent inspector's NACE or SSPC certification.

5. Submit manufacturer's representative name, address and telephone number who will inspect work.

6. Provide list of at least 10 applications in high H_2S environments in Southeastern States including contact names, address, phone numbers and date of installation for both the coating system and the applicator.

7. Field Data Records and Installation Reports.

8. Product Warranty.

9. Closeout Submittals:

a. As-built drawings which include coating application limits, transitions, and terminations.

b. Photos

c. Quality assurance records, field data records and installation reports

d. Certificate of Surface Preparation

e. Test and evaluation reports including pull-off strength (adhesion) and spark testing.

f. Final Report

g. Final Certified Warranty

1.05 QUALIFICATIONS

A. Products shall be manufactured by company specializing in manufacturing the products specified in this section with a minimum of five continuous years of experience for performance in similar applications in wastewater treatment plants and wastewater collection systems.

B. The Contractor performing the work shall be fully qualified, experienced and equipped to complete this work expeditiously and in a satisfactory manner and shall be an approved installer of the coating system as certified and licensed by the manufacturer. The Contractor shall have successfully installed a minimum of 50,000 square feet of the proposed system and shall have a minimum of five (5) years service for applying the selected lining or coating system as documented by verifiable references. There shall be no exceptions to this experience requirement. The Contractor shall submit the following information to the Engineer for review and approval before any work is performed. The following information is required.

1. The number of years of experience in performing this type of specialized work and in installing the specified coating system.

2. Name of the manufacturer and supplier for this work and previous work listed below.

3. A list of municipal clients that the Contractor has performed this type of work including names, phone numbers, and square feet of material installed.

4. The Contractor shall submit a certified statement from the manufacturer that he/she is a certified and/or licensed installer of the coating.

1.06 QUALITY ASSURANCE

A. The supplier shall be responsible for the provisions of all test requirements specified in the referenced ASTM Standards as applicable. The supplier shall also bear the cost of all tests specified in Paragraph 3.05, Field Testing and Acceptance of MIC Coating System. In addition, all coating products to be installed under this Contract may be inspected at the plant for compliance with these specifications by an independent testing laboratory provided by the Owner. The Contractor shall require the manufacturer's cooperation in these inspections. The cost of plant inspection of all products and materials approved for this Contract shall be borne by the Owner.

B. Inspections of the coating products and materials may also be made by the Engineer or other representatives of the Owner after delivery. The products and materials shall be subject to rejection at any time on account of failure to meet any of the Specification requirements, even though samples may have been accepted as satisfactory at the place of manufacture. Materials rejected after delivery shall be marked for identification and shall be removed from the job at once.

1. Provide adequate time and access for inspections for the following major activities:

a. Pre-surface preparation

b. Monitoring of surface preparation

c. Post-surface preparation

d. Monitoring of repair and resurfacing product application

e. Post repair and resurfacing products

f. Monitoring of coating application

g. Post application inspection and testing

h. Corrective actions and final inspection

C. Pre-installation Meeting

1. At least two weeks prior to beginning work, the Contractor shall conduct a Pre-installation Meeting to discuss coating procedures and submittals. Attendees shall include the Coating Applicator, Owner, Engineer, Manufacturer's Technical Representative, Testing and Inspection Agencies (if applicable), Concrete Repair subcontractor (if applicable) and the Contractor. The minimum agenda includes:

a. Environmental condition requirements

b. Surface temperature requirements

c. Surface pH requirements

d. Surface preparation procedures

e. Cleaning procedures

f. Testing procedures to determine moisture content of concrete

g. Proper procedures to fill substrate

h. Application equipment

i. Proper application of primer

j. Proper application of coating system

k. Proper termination and transition details

l. Inspection of coating during and after application

m. Testing of coating.

n. Repair methods

o. Documentation requirements

p. Approval Procedures

D. Field Data Records

1. Maintain daily Quality Assurance Records including the following:

a. Date

b. Atmospheric Temperature and Humidity

c. Substrate pH

d. Substrate Temperature

e. Dew Point

f. Product Batch Numbers

g. Mixing Time for Each Part and the Combined Parts of a Coating System

h. Pot Life

i. Curing Time of Primer and Finish Layers

j. Holiday Test Results and Repair Data

k. Foreman or Supervisor's Signature

1.07 SERVICES OF MANUFACTURER'S REPRESENTATIVE

A. Provide the services of a qualified manufacturer's technical representative who shall adequately supervise the surface preparation and application of the coating and lining products. The manufacturer's representative shall be available to evaluate the coating at each step through the process and shall supervise the lining or coating application until the installer has shown through the proper surface preparation and application of the lining or coating that the system will be installed in accordance with all manufacturer recommendations.

B. Manufacturer's technical representative or authorized inspector shall be currently certified by NACE or SSPC.

C. A manufacturer's technical representative shall observe the application of the complete system a minimum of two days at the beginning of the application at each structure specified to receive MIC coating system. The manufacturer's technical representative shall provide guidance to ensure proper application of the system.

D. The manufacturer's technical representative shall submit to the Engineer a final report, at the completion of the work, identifying the products used, verifying and certifying that surfaces and lining systems were properly applied, free of pinholes, blisters and other blemishes that will compromise the coating performance and that the coating systems were proper for the exposure and surface. Discrepancies that are found during the final inspection shall be repaired and reinspected until system is completely satisfactory.

1.08 DELIVERY, STORAGE AND HANDLING

A. Care shall be taken in shipping, handling and placing to avoid damaging the products. Extra care may be necessary during cold weather construction. Any product or material damaged in shipment shall be replaced as directed by the Engineer.

B. Products shall be delivered to the site in clearly labeled containers and packaging. While stored, the products shall be adequately packaged and protected. Products shall be stored in a manner as recommended by manufacturer.

C. Any product showing deterioration, or which has been exposed to any other adverse storage condition that may have caused damage, even though no such damage can be seen, shall be marked as rejected and removed at once from the work.

1.09 WARRANTY

A. All lining and coatings installed shall be guaranteed by the Contractor for a period of two years from the date of final acceptance. During this period, all defects discovered in the coating, as determined by the Owner or Owner's Engineer shall be repaired or replaced in a satisfactory manner by the Contractor at no cost to the Owner.

B. The Contractor is responsible for properly preparing the structures for coating prior to the installation of the systems, including stopping all leaks, patching voids, protecting or removing and handling all mechanical equipment such as valves and valve assemblies and weirs, cleaning surfaces, removing rubble, etc.

PART 2 – PRODUCTS

2.01 PRIMER

A. Primer shall be moisture tolerant, suitable for the environmental conditions, and compatible with the MIC coating. Primer shall be as recommended and preferably manufactured by the manufacturer of the MIC Coating System. If approved by manufacturer, MIC Coating System can be self-priming.

B. Primer shall be as recommended by the coating manufacturer to achieve a superior coating system performance. Manufacturer shall select primer based on substrate moisture, environmental conditions and humidity, substrate temperature, pH, and other properties.

2.02 MIC COATING SYSTEM

A. Provide MIC Coating System on surfaces indicated to receive MIC Coatings in this specification and on drawings. MIC Coating System is to be applied only by Factory Trained and Certified Applicators.

B. The MIC Coating shall be an epoxy mortar system such as Raven 405 as manufactured and applied by Raven Lining Systems. Additional approved systems include: Sauereisen Sewergard 210S, Stonhard Stonchem 510, and Sherwin-Williams, Cor Cote FRE. Cor Cote FRE product shall be top coated with Cor Cote SC.

C. The MIC Coating shall be applied in two (2) coats of 40 to 50 mils each for a total DFT of 80 to 100 mils. In addition to MIC Coating, fill bugholes, depressions, and irregularities in surfaces with any dimension greater than 0.0625 inch with epoxy filler recommended by manufacturer and apply primer at 10 mils recommended by manufacturer to achieve superior performance.

D. MIC Coating System shall meet the following minimum characteristics:

1. Total Film Thickness of System including primers shall not be less than 100 mils (unless otherwise noted).

2. Chemical Resistance of 10% of sulfuric acid.

3. Water Vapor Permeance of 0.002 perms per ASTM E96, Method E.

4. Concrete Tensile Pull Strength 350 psi ASTM D4541.

5. Tensile Strength of 2,750 psi ASTM D412.

6. Abrasion Resistance, CS17 Wheel <120mg loss, ASTM D4060, 1000 gm load/1000 cycles.

7. Minimum Shore Hardness D50, ASTM D2240.

8. Resistant to negative water infiltration.

9. 100% solids epoxy mortar system containing aggregate and/or fiber reinforcement.

PART 3 -- EXECUTION

3.01 PROTECTION OF IN-PLACE CONDITIONS

A. Equipment, vehicles, buildings, and other finished items shall be protected from damage and overspray. Sensitive equipment shall be wrapped in plastic and tape.

3.02 SURFACE PREPARATION

A. Surfaces to receive coating shall be clean and free of dirt, oil, grease, and other foreign materials.

B. Concrete and masonry surfaces shall cure for 28 days minimum prior to coating. Moisture content of concrete and masonry surfaces shall conform to manufacturer's recommended limits, and as listed in SSPC-SP13/NACE 6 Section 6 Acceptance Criteria Table 1. Surfaces shall be tested in accordance with ASTM D4263 – Plastic Sheet Test, ASTM F1869 – Calcium Chloride and ASTM F2170 – Relative Humidity Gauge as recommended by the manufacturer.

C. Test surfaces to ensure they are within requirements of the manufacturer. Do not begin coating work until moisture is within manufacturer's recommended range. Any leaks shall be repaired as all surfaces shall be free of visible moisture and floating water.

D. Minimum surface preparation of concrete shall be per Section 09900, SSPC 13, and provide a surface profile as required by the coating manufacturer. Remove all laitance, weak concrete, dirt, and other contaminants. Remove all fins, protrusions, and similar imperfections to allow a uniform surface after surface preparation. Under no circumstance shall surface preparation be less than manufacturer's recommendation to provide the best possible installation. Moisture levels of concrete shall be tested and documented and within acceptable ranges prior to application of coating.

E. Bugholes, depressions, and irregularities in surfaces with any dimension greater than 0.0625 inch shall be filled with epoxy filler recommended by manufacturer.

F. Where the surface deterioration is less than or equal to 1/2 inch (as measured from the final finished surface to the prepared surface to be repaired) skim coats of epoxy modified cementitious mortar shall be applied to restore and smooth surface irregularities to the final finished surface. Epoxy modified mortar system shall be manufactured by same manufacturer of MIC Coating System.

G. Where the surface deterioration is greater than 1/2 inch the surface shall be repaired to final finished surface using Cementitious Structural Repair Mortar, in accordance with Section 03732. Surface material shall be applied in strict accordance with manufacturer's printed instructions and recommendations. Materials shall be cured a minimum of 10-days or as recommended by the repair material manufacturer for the site conditions. Manufacturer of MIC Coating System shall confirm proposed spall repair patching material is compatible with MIC Coating System.

H. Where manufacturer requires additional surface preparation, to provide best possible installation, additional requirements shall be performed.

I. Provided written certification on the coating manufacturer's letterhead, signed by an officer of the company that the surface preparation meets the requirements of the coating manufacturer.

3.03 PRIMER APPLICATION

A. Apply tolerant primer at 10 mils or as recommended by manufacturer to achieve superior performance. Test moisture and pH levels of concrete and document. Apply primer when surface is within acceptable ranges prior to application of primer.

3.04 MIC COATING APPLICATION

A. All methods, procedures of mixing, application and curing of the coating material shall be accomplished in strict accordance with manufacturer's printed instructions and recommendations.

B. Apply MIC Coating in a minimum of two coats in addition to primer and filler. Apply MIC coating in two (2) coats of 40 to 50 mils each for a total DFT of 80 to 100 mils in strict accordance with manufacturer's printed instructions and recommendations.

C. Application shall be by certified and experienced personnel only. Application of coating systems shall take place when the temperature of the concrete is stable or falling to ensure a minimal amount of out gassing by concrete. Use dehumidification units, fans or other means to provide an adequate environment for application and cure when the environment is not adequate for application or cure.

D. Application shall produce at a minimum a totally bonded coating, corrosion proof, free of blisters, pinholes and any and all blemishes that may be precursors to failure. Promptly correct or remove, and repair areas that fail visual inspection or testing. Recoat time between coats shall be documented and shall not exceed manufacturer's requirements. Where recoat times are exceeded the coating shall be prepared in strict accordance with manufacturer's recommendations including scarification to provide sufficient profile.

E. Follow manufacturer's recommendations for terminating coating into a chase and providing 1" radius inside corners, and easing outside corners. Provide a 1-1/2 inch cant cove along the floor/wall transition.

3.05 FIELD TESTING AND ACCEPTANCE OF MIC COATING

A. Field acceptance of the MIC coating system shall be based on the Engineer's evaluation of the appropriate installation of each coat per field inspections, on observation of the measurements of the wet film thickness, and on the observation of spark testing and adhesion testing conducted on the cured liner.

B. Pre-application testing shall be conducted by applying the MIC Coating at 20 mil thickness over a 5 square foot area where directed to demonstrate the coating application to the inspector(s).

C. During application of each layer of the MIC coating, the Contractor shall measure the thickness and uniformity of the coating by the use of a wet film thickness gage meeting the requirements of ASTM D4414. The wet film thickness shall be tested continuously for the Contractors own use. At least three such tests will be observed by the Engineer or Owner for each coat in each 500 square feet.

D. The MIC coating shall provide a continuous monolithic surfacing with uniform thickness throughout and be free of pinholes, slumps and drips.

E. All surfaces shall be inspected via high voltage spark testing when all coating work is complete and the coating is hard to the touch.

1. The structure environment shall be properly vented prior to testing to ensure hazardous conditions do not exist.

2. High voltage spark testing shall be performed in accordance with ASTM D4787. The spark testing equipment shall be initially set at 100 volts per 1 mil of applied film thickness of the coating and then adjusted as necessary per ASTM D 4787.

3. All detected holidays shall be marked and the area of the liner shall be repaired. The surface area around the coating shall first be abraded using an appropriate grit paper or other hand abrasion tool. After abrading and cleaning the area, the area shall be patched by hand application of the coating material. All repair procedures shall follow manufacturer's recommended procedures.

F. The pull-off strength (adhesion) of the liner shall be tested using any one of the five Test Methods (A, B, C, D or E) described in ASTM D-4541. The Contractor shall propose the method and equipment to be used in the tests. The liner adhesion shall be tested in one area for each structure or each 1000 square feet of coated area. At least three replicate pull-off tests shall be performed for each area. The Contractor shall also submit his proposed method for reinstatement of the area of the coating affected by the test. Repair of test areas shall be made by the Contractor at no additional cost to the Owner.

G. There shall be no groundwater infiltration or other leakage through the structure walls after coating. If leakage is found, it shall be eliminated with an appropriate method as recommended by the coating manufacturer and approved by the Engineer at no additional cost to the Owner.

H. All pipe connections shall be open and clear.

I. There shall be no cracks, voids, pinholes, uncured spots, dry spots, lifts, delaminations or other type defects in the lining.

J. If any defective coating is discovered after it has been installed, it shall be repaired or replaced in a satisfactory manner within 72 hours and at no additional cost to the Owner. This requirement shall apply for the entire guarantee period.

- END OF SECTION -

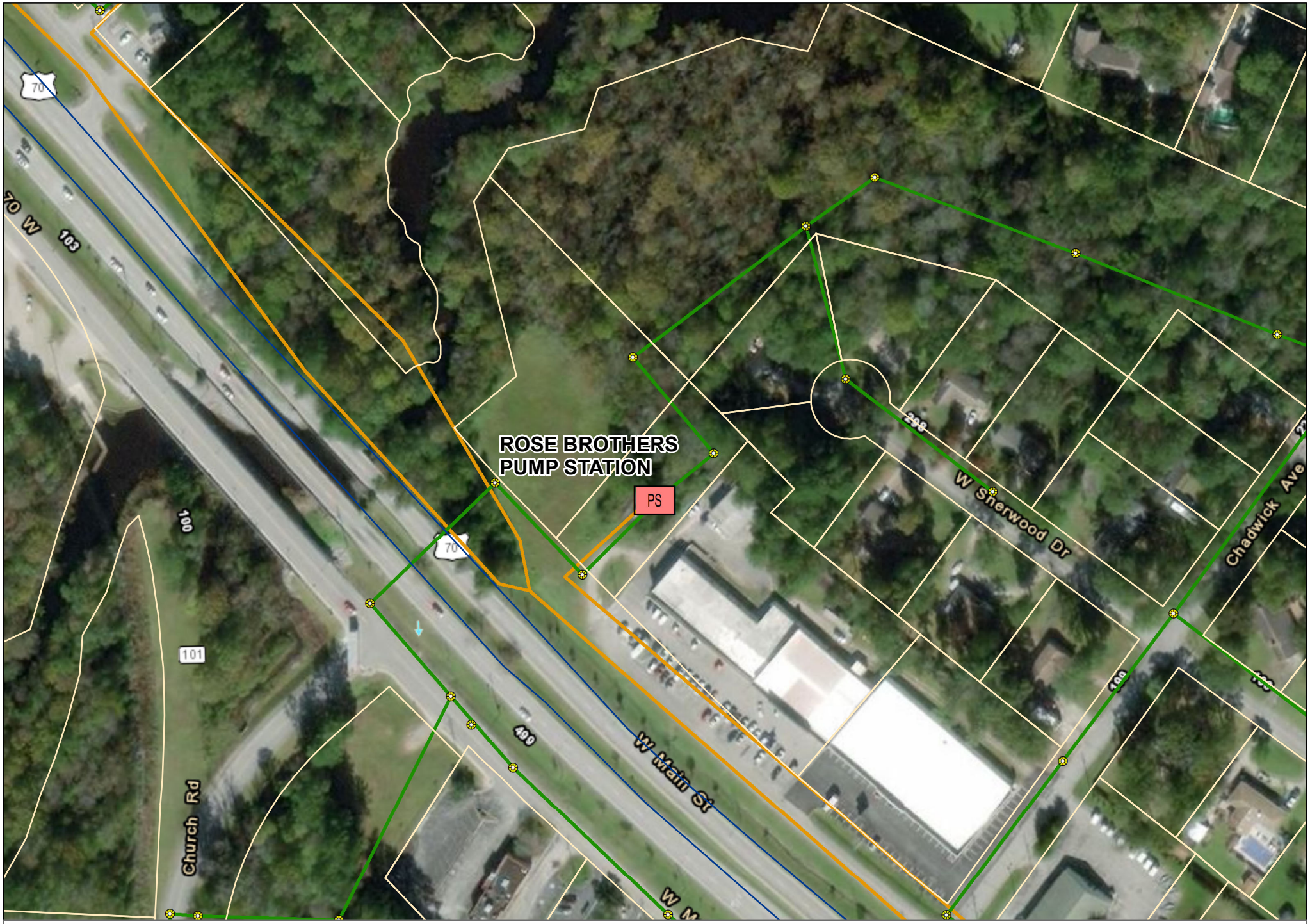

Legend

Force Main

Gravity Sewer

Manhole

Rose Brothers Pump Station Repairs
Location Map
Figure 1

1 inch = 150 feet

N

NOTES:

1. INFLUENT MANHOLES SHALL BE USED FOR PUMP STATION BYPASS. SEE SPECIFICATIONS FOR REQUIREMENTS.
2. CONTRACTOR SHALL CLEAN THE WET WELL DURING BYPASS PUMPING OPERATIONS AND APPLY A MICROBIOLOGICALLY INFLUENCED CORROSION COATING IN ACCORDANCE WITH THE SPECIFICATIONS. COATING SHALL BE APPLIED ON ALL INTERIOR CONCRETE WITHIN WET WELL. ALL DEBRIS SHALL BE REMOVED BY THE CONTRACTOR AT THEIR EXPENSE.

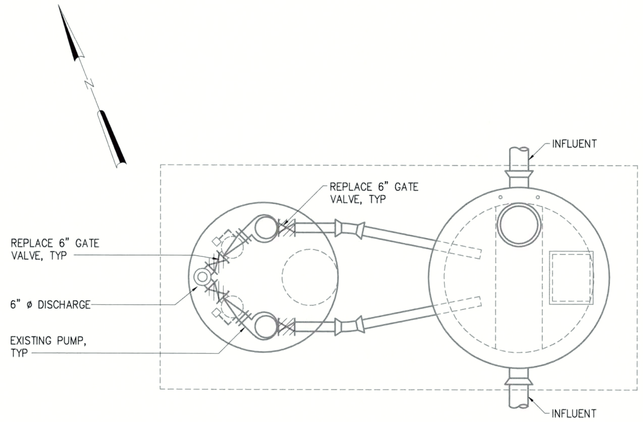

DEMOLITION PLAN

NTS.

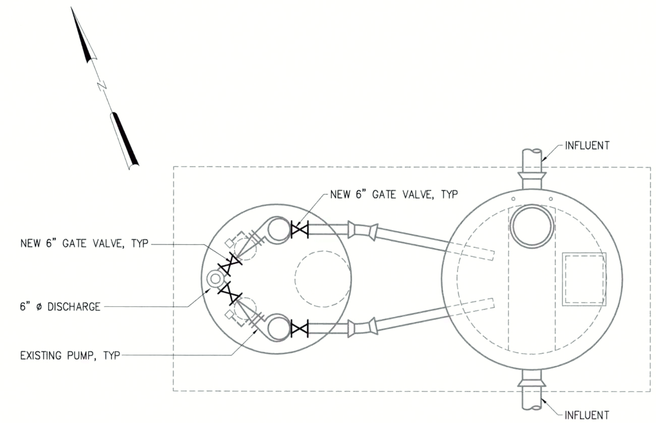

NEW WORK PLAN

NTS.

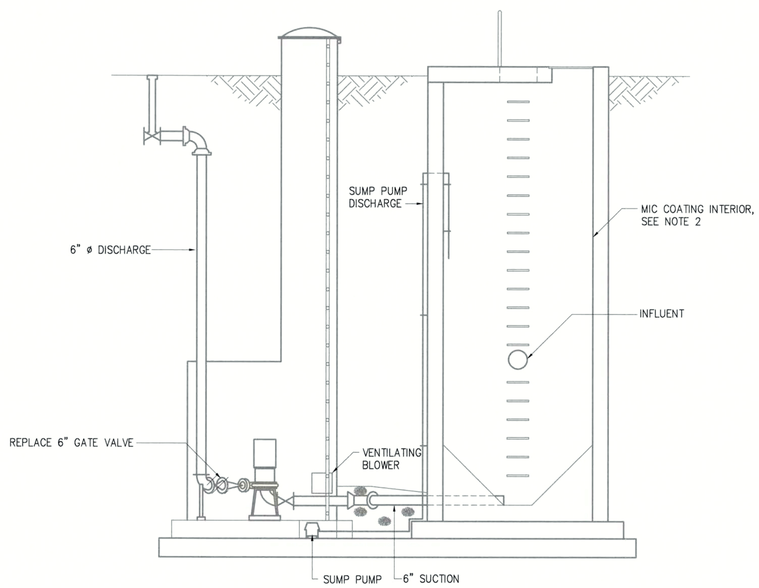

DEMOLITION

SECTION A/M1

NTS.

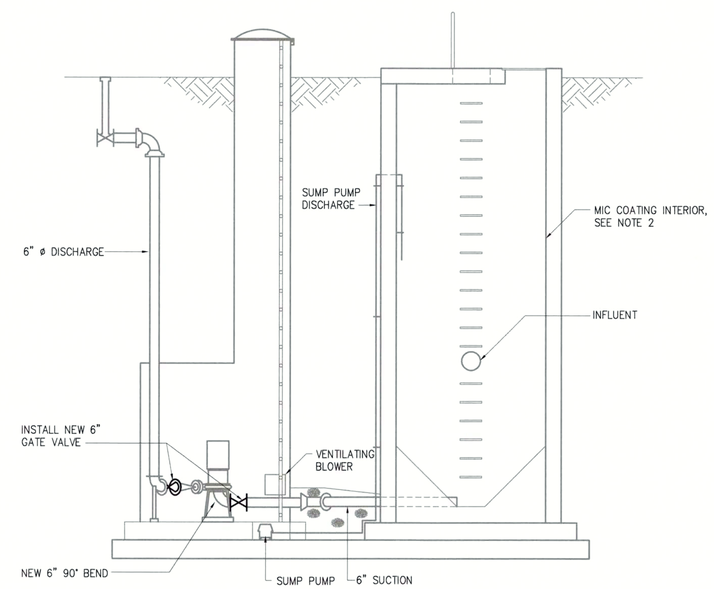

NEW WORK

SECTION A/M1

NTS.

ALL CONSTRUCTION MUST CONFORM TO THE UNDERGROUND UTILITY PROTECTION ACT

BEFORE YOU DIG!
CONTACT ONE-CALL CENTER
CALL 811
OR
1-800-632-4949

REV	ISSUED FOR	DATE	BY
1	ISSUED FOR BIDDING	8/2018	BYP

PROJECT ENGINEER:	B. PORTER
DESIGNED BY:	B. PORTER
DRAWN BY:	B. CAUDLE
CHECKED BY:	H.T. TANT

IF THIS BAR DOES NOT MEASURE 1" THEN DRAWING IS NOT TO FULL SCALE 0 1/2" 1"

NORTH CAROLINA PROFESSIONAL SEAL 033116 ENGINEER BRIAN Y. PORTER 7/3/2018

Hazen

HAZEN AND SAWYER
4011 WESTCHASE BOULEVARD, SUITE 500
RALEIGH, NORTH CAROLINA 27607
LICENSE NO. : C-0381

CITY OF HAVELOCK
HAVELOCK, NORTH CAROLINA

ROSE BROTHERS
PUMP STATION

EXISTING PUMP STATION
MODIFICATION
MECHANICAL
PLANS AND SECTIONS

DATE:	JULY 2018
HAZEN NO.:	30906-006
CONTRACT NO.:	1
DRAWING NUMBER:	M1

PLOT DATE: 2018/07/03 9:31:25 AM BY: JCAUDLE
File: P:\30906\30906-006\CAD\CONTRACT DRAWINGS\M1-PUMP STATION MODIFICATION.dwg

ATTACHMENT 2

WEYERHAEUSER PUMP STATION REPAIRS
SCOPE OF WORK

NORTH CAROLINA
PROFESSIONAL
SEAL
33116
11/3/2018
ENGINEER
BRIAN Y. PORTER

Havelock, NC
Weyerhaeuser Pump Station Repairs
Scope of Work

1. Summary of Work

   A. The Weyerhaeuser Pump Station is located north of the intersection of McCotter Boulevard and Village Court. Work at the station shall include replacement of all ductile iron piping from the discharge of each pump through the wet well to the vault in the yard, replacement of the isolation valves, and piping in the vault and relocation and replacement of the check valves to the valve vault. A 6' by 6' by 6' precast concrete vault shall be installed east of the valve vault to house the new Crispin SL-20 air release valve and 3" bypass connection with male cam lock. Bypass pumping during the work will be required from both upstream manholes and will connect to a temporary bypass connection installed with tee and gate valve on the 6-inch force main north of the pump station.
   B. Figure 2 show the general area and Sheet M2 describes the required work.

2. General Information
   A. The existing pump station consists of a 6 foot diameter precast concrete manhole approximately 22 feet deep.
   B. The existing pumps are 10.4 hp with a capacity of 350 gallons per minute.
   C. The site shall be secured at the end of each work day and when no personnel are onsite.

3. Materials
   A. General
      1. Contractor shall field verify all sizes, diameters, and dimensions of materials to be replaced prior to ordering new materials.
   B. Pump Slide Rails
      1. Guide bars shall be at least standard weight Type 316 stainless steel.
      2. Middle bracket and anchor bolts shall be Type 316 stainless steel and adequately sized for the intended use.
   C. Ductile Iron Pipe and Fittings
      1. Exposed ductile iron pipe in the pump station wet well and the vault shall be flanged fitting and joints. Flanged joints and fittings shall have a minimum pressure rating of 250 psi with 125 lb. American Standard flanges. All flanges and fittings shall conform to the requirements of ANSI B16.1. Flanges shall be ductile iron and shall be of the threaded or screw on type. The face of the flanges shall be machined after installation of the flange to the pipe. No raised surface shall be allowed on flanges. Flanged pipe shall conform to the requirements of ANSI Specification A21.15, (AWWA C115).
      2. Buried ductile iron pipe shall be restrained mechanical joint pipe with a minimum pressure rating of 350 psi. Mechanical joints and fittings shall conform to all requirements of ANSI A21.11, (AWWA C111). Restraint assemblies shall be Mega Lug by EBAA Iron, ONE LOK by Sigma, Grip Ring by Romac, or approved equal

3. All pipe and fittings shall be cement mortar lined. Linings shall conform to American Standard Specifications for Cement Mortar Lining for Cast Iron Pipe and Ductile Iron Pipe and Fittings, ANSI A21.4 (AWWA C104) and shall be standard thickness. The mortar lining shall be protected with the bituminous seal coat. All buried DIP and fittings shall have a bituminous coating on the exterior surfaces in accordance with ANSI A21.51 (AWWA C151).
4. For discharge piping within the wet well, piping shall be coating with two (2) 10 mils thick of Tnemec Series 104 high solids epoxy or equal. All other exposed piping shall 1 coat of epoxy polyamide primer 6 mils thick, 1 coat of epoxy polyamide 6 mils thick and 1 coat of aliphatic polyurethane 5 mils thick.

D. Check Valves
1. Check valves shall be cushioned swing check valves rated for a minimum working pressure of 200 psi and shall be of the "Shockless Swing Check" type as manufactured by G.A. Industries, or equal.
2. Valve closure shall be controlled by an external weighted lever arm, the action of which is cushioned by a hydraulic oil or pneumatic cylinder. Counterweights and cushion cylinders shall be designed so that adjustments can be made in the field to minimize surge, to prevent backflow and minimize hammer during service conditions. The hydraulic oil or pneumatic cushion system shall be completely self-contained.
3. Valve bodies, cover discs, levers, and disc arms shall be constructed of heavy cast iron or cast steel fully conforming to the latest revision of ASTM A 126 Class B or Class WCB, respectively. Valve ends shall be Standard American 125 pound flat faced flanged, in accordance with ANSI B16.1. Each valve disc shall be suspended from a noncorrosive shaft which shall pass through a stuffing box and be connected on the outside of the valve to the cushion and counterweight mechanism.
4. Valve seating shall be rubber to metal designed for drop tight shutoff. The body seat ring shall be made of bronze or stainless steel and the disc seat ring of 80 Durometer rubber. Body and disc seats shall be renewable.
5. With the exception of the valve body and seat, all parts in contact with wastewater shall be manufactured from noncorrosive materials. Internal corrosive surfaces shall be shop painted with two coats of epoxy for corrosion resistance.

E. Gate Valves
1. Gate valves shall be of the non-rising stem design, shall fully comply with the requirements of AWWA C509 for resilient-seated gate valves. Gate valves shall be designed for a minimum working pressure of 250 psi and a test pressure of 500 psi.
2. Gate valve body and bonnet shall be cast iron conforming to ASTM A126, Class B with resilient seat gate and O-ring seals. The gate shall be cast iron with a vulcanized rubber coating with no metal to metal contact when in the fully closed position and a smooth unobstructed waterway when in the fully opened position.
3. Valves shall have flanged ends and hand wheel operators.

4. Concrete
   A. General: Cast-in-place concrete according to ACI 318/318R, ACI 350R, and the following:
      1. Cement: ASTM C 150, Type II.
      2. Fine Aggregate: ASTM C 33, sand.
      3. Coarse Aggregate: ASTM C 33, crushed gravel.
      4. Water: Potable.

   B. Portland Cement Design Mix: 4000 psi minimum, with 0.45 maximum water/cementitious materials ratio.
      1. Reinforcement Fabric: ASTM A 185, steel, welded wire fabric, plain.
      2. Reinforcement Bars: ASTM A 615/A 615M, Grade 60, deformed steel.
5. Precast Concrete
   A. Concrete materials shall be as specified in Section 4.
   B. Minimum compressive strength of concrete at 28 days shall be 5,000 psi. Minimum compressive strength of concrete at transfer of prestressing force shall be 3,500 psi.
6. Bypass Pumping
   A. Bypass pumping will be required to allow for pipe replacement within the pump station. The upstream manholes to the east and west, as shown in Figure 1, will both require bypass pumping. Both are located outside of the pump station site and will require protection while the pump station is being bypassed. The contractor will need to coordinate with the Owner to install a tee and gate valve on the existing 6-inch force main downstream of the pump station during low flow periods to provide the bypass connection. Each bypass system will require one duty and one standby pump capable of delivering 350 gpm at a total dynamic head of 100 feet.
   B. The Contractor is required to design and furnish all materials, labor, equipment, power, fuel, fuel storage, maintenance, etc. to implement a temporary pumping system for the purpose of diverting the existing flow around the work area on a daily basis, for the duration of the project. The bypass system shall meet the requirements of all codes and regulatory agencies having jurisdiction. Contractor shall also be responsible for any fines imposed by local, state, and/or federal agencies for failure to maintain flows or contain spills and/or overflows.
   C. Continuous bypass pumping is allowed in all project areas. Bypass pumping operation must be manned or be set up with floats and automatic on/off mode at all times that pumps are operating. When possible, bypass system shall be removed from service prior to rain events so that no portion of the bypass system impedes the flow of the sewer.
7. Seeding and Straw
   A. The contractor shall furnish the kinds and amounts of seed to be seeded in all areas disturbed by the construction work. The quality of the seed shall confirm to the following:

Type	Minimum Seed Purity (%)	Minimum Germination (%)	Maximum Weed Seed (%)
Fescue (fungus free)	98	90	1.00
Hybrid Rye	98	85	0.10
Sudan grass	98	85	0.25

Millet	98	85	0.50
Sericea Lespedeza			
Scarified	98	85	0.50
Unscarified	98	85	0.50

B. Straw used for mulch shall be small grain hay. Hay shall be undamaged, air dry, threshed straw, free of undesirable weed seed. Straw mulch is not required for seeded areas treated with a temporary soil stabilizer.

8. General Construction Sequence

The following construction sequence is a general overview of the work required and is not intended to encompass all aspects of the work. The Contractor shall perform all work required for a complete installation

A. Coordinate all shut down and startup operations with the Owner.
B. Contractor shall install the temporary bypass connection on the existing force main to provide charge connection for the bypass systems.
C. Contractor shall install and maintain the bypass pump systems to divert flows from the existing wet well.
D. Contractor shall install the new pre-cast valve vault as shown on M1 and replace the piping, valves and other appurtenances.
E. Backfill and compact the excavated area with #57 stone.
F. Remove the bypass pumping systems.
G. Seed and straw disturbed areas.

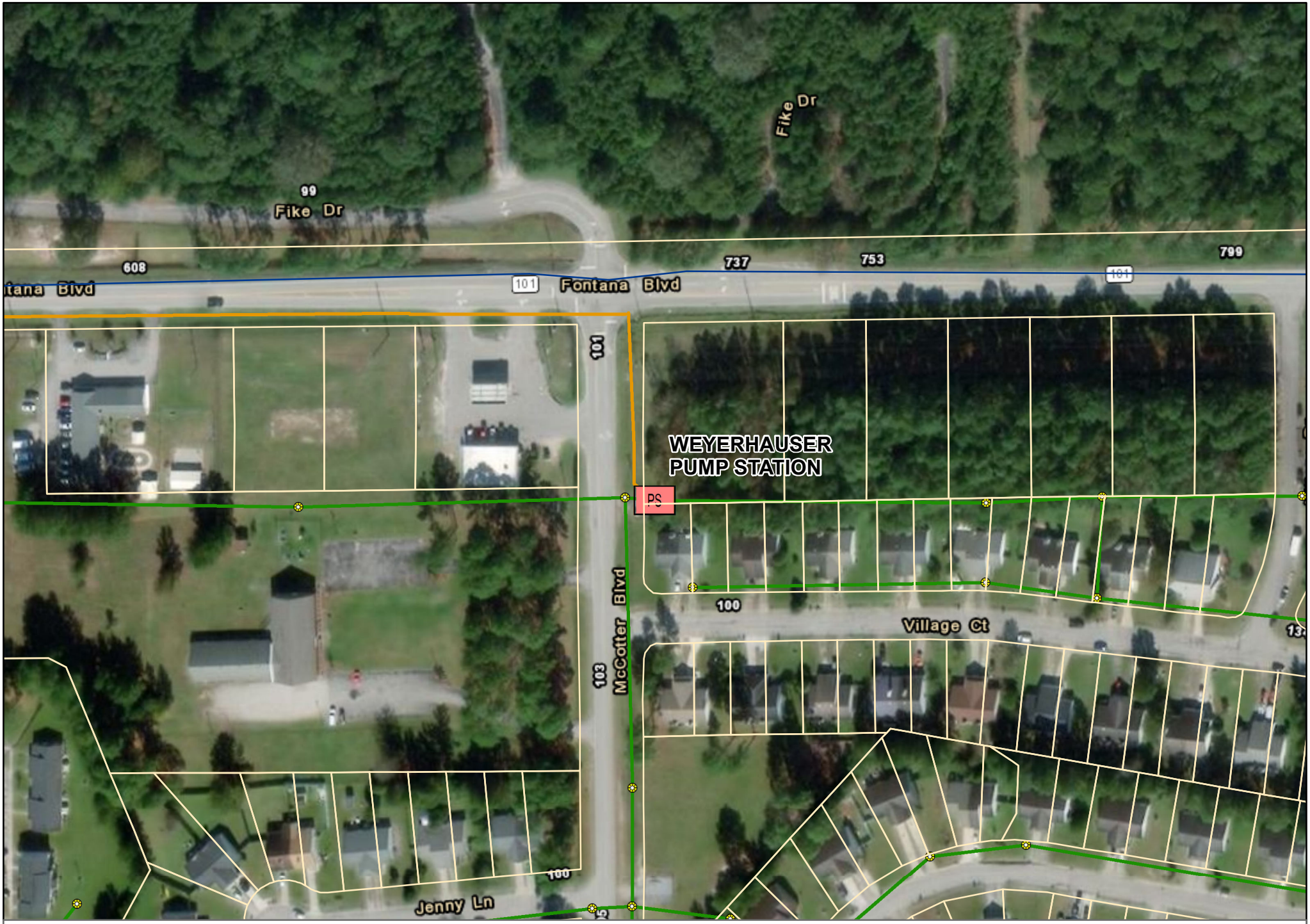

Legend

Force Main

Gravity Sewer

Manhole

Weyerhaeuser Pump Station Repairs
Location Map
Figure 2

1 inch = 150 feet

N

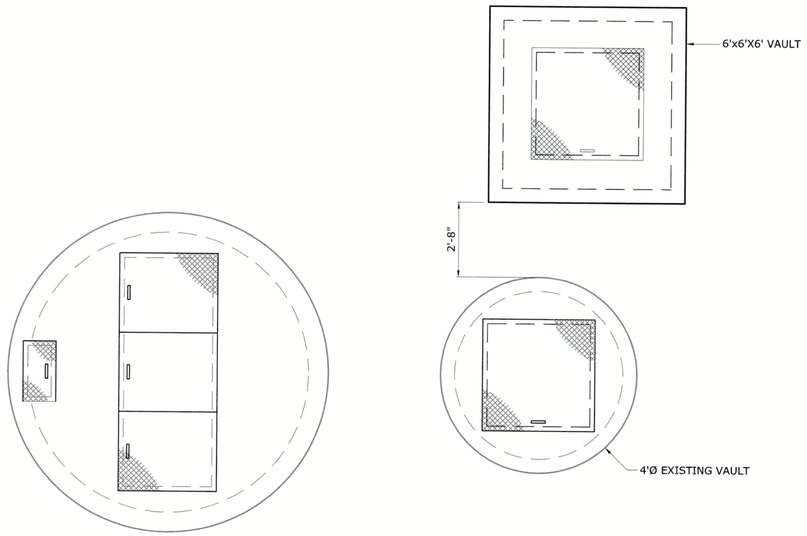

TOP PLAN

N.T.S

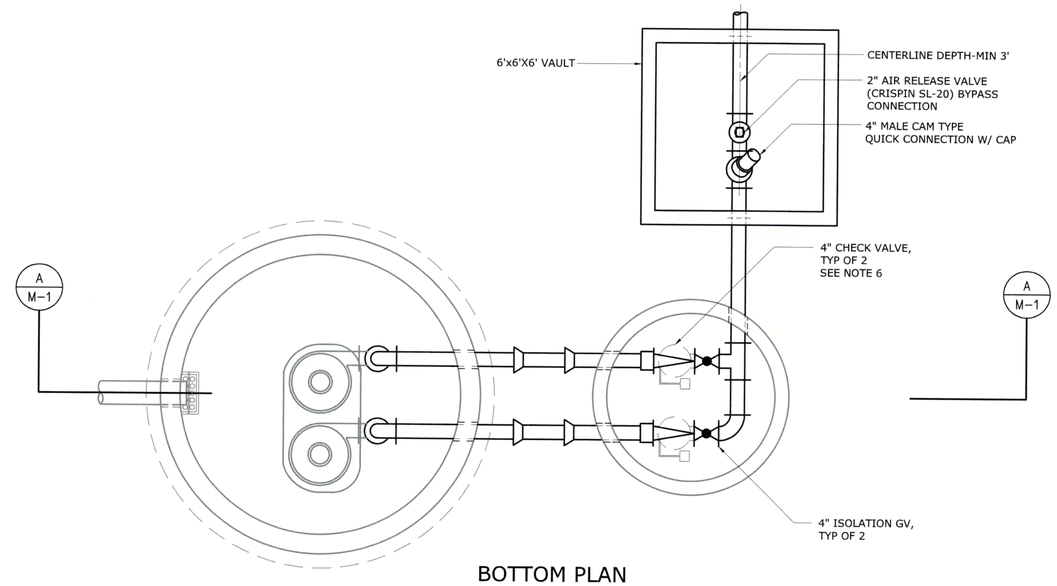

BOTTOM PLAN

N.T.S.

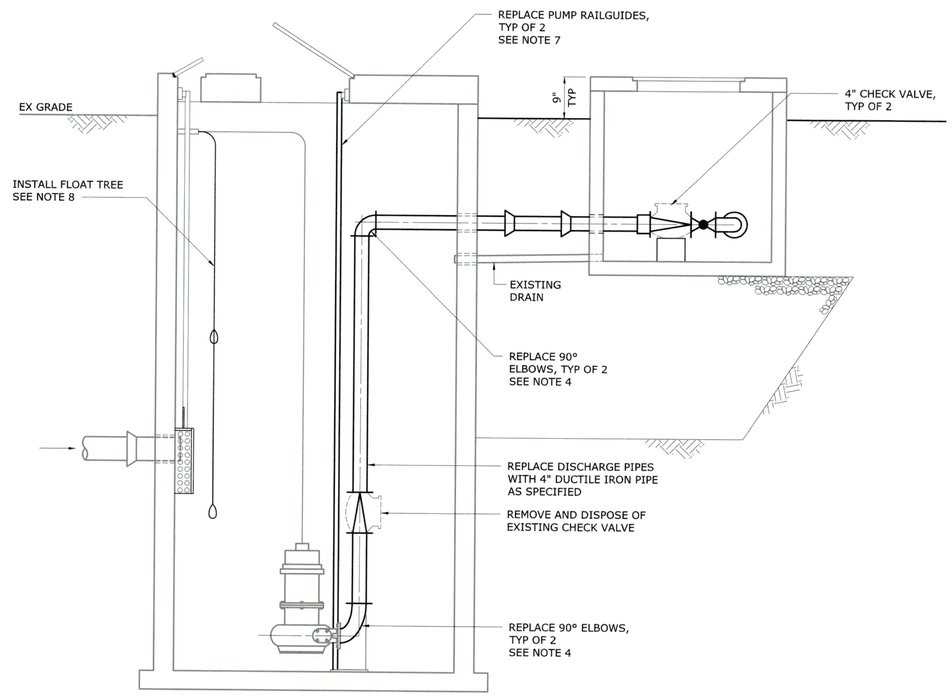

SECTION A / M-1

N.T.S.

NOTES:

1. NEW VAULT SHALL BE LOCATED WEST OF THE EXISTING VALVE VAULT.
2. BYPASS PUMPING AS SPECIFIED.
3. REMOVAL OF ANY SOLID SEWAGE WASTE IN WET WELL SHALL BE ACCOMPLISHED BY THE CONTRACTOR BEFORE AND AFTER PROJECT WORK.
4. ELBOWS SHOULD BE SECURED TO THE TOP/BOTTOM OF WET WELL WITH THUNDER STUDS. REPLACE ANY REMOVED CONCRETE WITH GROUT.
5. CONTRACTOR SHALL UTILIZE 4" VAN STONE FLANGE ADAPTERS FOR DISCHARGE PIPING.
6. NEW CHECK VALVES SHALL BE 4" SWING ARM CHECK VALVES, AS SPECIFIED.
7. PUMP GUIDE RAILS SHALL BE STAINLESS STEEL, PROVIDED IN TWO SECTIONS WITH A MID-POINT BRACKET.
8. NEW FLOAT TREE SHALL BE PROVIDED FOR THE FOUR (4) EXISTING FLOATS WITH ASSOCIATED HOOKS FOR THE TWO PUMP ROPES. CONTRACTOR SHALL SUPPLY A CLEARWATER, STAINLESS STEEL PRODUCT.
9. THE EXISTING PUMP INFORMATION IS PROVIDED BELOW FOR THE ORDERING OF PUMP RAILS, DISCHARGE LINES, FLOAT TREE, ETC.

MAKE: HOMA
MODEL #: AMX444-210/10.4TLC
SERIAL #: 288378
242686
F.L.A.: 20
H.P.: 10.4
VOLTAGE: 230

REV	ISSUED FOR	DATE	BY
1	ISSUED FOR BIDDING	8/2018	BYP

PROJECT ENGINEER:	H.T. TANT
DESIGNED BY:	B. PORTER
DRAWN BY:	P. SELISKER
CHECKED BY:	H.T. TANT
IF THIS BAR DOES NOT MEASURE 1" THEN DRAWING IS NOT TO FULL SCALE	0 1/2" 1"

NORTH CAROLINA PROFESSIONAL SEAL 033116 ENGINEER BRIAN Y. PORTER 9/3/2018

Hazen

HAZEN AND SAWYER
4011 WESTCHASE BOULEVARD, SUITE 500
RALEIGH, NORTH CAROLINA 27607
LICENSE NO. : C-0381

CITY OF HAVELOCK
HAVELOCK, NORTH CAROLINA

WEYERHAEUSER
PUMP STATION

PUMP STATION

MECHANICAL

PLAN, SECTIONS AND DETAILS

DATE:	JULY 2018
HAZEN NO.:	30906-006
CONTRACT NO.:	
DRAWING NUMBER:	M-2

PLOT DATE: 2018/07/03 9:31:42 AM BY: JCAUDLE
File: O:\30906\30906-006\DRAWINGS\WETDHA\USER\M-02_MARK-UP Saved By JCAUDLE Save Date 2018/07/03 9:31 AM

ATTACHMENT 3

TARHEEL PUMP STATION REPAIRS
SCOPE OF WORK

NORTH CAROLINA
PROFESSIONAL
SEAL
33116
7/3/2018
ENGINEER
BRIAN Y. PORTER

Havelock, NC
Tarheel Pump Station Repairs
Scope of Work

1. Summary of Work

   A. The Tarheel Pump Station is located at the intersection of Tarheel Drive and McCotter Boulevard. Work at the station shall include replacement both pump discharge 90 degree bends and guide rails, all piping from the discharge of each pump through the wet well, adding a precast vault in the yard with replacement check valves, isolation valves, and bypass connection, and bypass pumping. Work will also include removal of wooden structure surrounding the pump station and the addition of 120 foot 6-foot high chain link fence as shown on Figure 1. Contractor shall provide 304 stainless steel sunshades on all the existing electrical panels.
   B. Figure 3 shows the general area and Drawing M3 provides the required work.

2. General Information
   A. The existing pump station consists of a 5 foot diameter precast concrete manhole approximately 22 feet deep.
   B. The existing pumps are 5.5 hp with a capacity of 150 gallons per minute.
   C. The site shall be secured at the end of each work day and when no personnel are onsite.

3. Materials
   A. General
      1. Contractor shall field verify all sizes, diameters, and dimensions of materials to be replaced prior to ordering new materials.
   B. Pump Slide Rails
      1. Guide bars shall be at least standard weight Type 316 stainless steel.
      2. Middle bracket and anchor bolts shall be Type 316 stainless steel and adequately sized for the intended use.
   C. Ductile Iron Pipe and Fittings
      1. Exposed ductile iron pipe in the pump station wet well and the vault shall be flanged fitting and joints. Flanged joints and fittings shall have a minimum pressure rating of 250 psi with 125 lb. American Standard flanges. All flanges and fittings shall conform to the requirements of ANSI B16.1. Flanges shall be ductile iron and shall be of the threaded or screw on type. The face of the flanges shall be machined after installation of the flange to the pipe. No raised surface shall be allowed on flanges. Flanged pipe shall conform to the requirements of ANSI Specification A21.15, (AWWA C115).
      2. Buried ductile iron pipe shall be restrained mechanical joint pipe with a minimum pressure rating of 350 psi. Mechanical joints and fittings shall conform to all requirements of ANSI A21.11, (AWWA C111). Restraint assemblies shall be Mega Lug by EBAA Iron, ONE LOK by Sigma, Grip Ring by Romac, or approved equal
      3. All pipe and fittings shall be cement mortar lined. Linings shall conform to American Standard Specifications for Cement Mortar Lining for Cast Iron

Pipe and Ductile Iron Pipe and Fittings, ANSI A21.4 (AWWA C104) and shall be standard thickness. The mortar lining shall be protected with the bituminous seal coat. All buried DIP and fittings shall have a bituminous coating on the exterior surfaces in accordance with ANSI A21.51 (AWWA C151).

4. For discharge piping within the wet well, piping shall be coating with two (2) 10 mils thick of Tnemec Series 104 high solids epoxy or equal. All other exposed piping shall 1 coat of epoxy polyamide primer 6 mils thick, 1 coat of epoxy polyamide 6 mils thick and 1 coat of aliphatic polyurethane 5 mils thick.

D. Check Valves

1. Check valves shall be cushioned swing check valves rated for a minimum working pressure of 200 psi and shall be of the "Shockless Swing Check" type as manufactured by G.A. Industries, or equal.
2. Valve closure shall be controlled by an external weighted lever arm, the action of which is cushioned by a hydraulic oil or pneumatic cylinder. Counterweights and cushion cylinders shall be designed so that adjustments can be made in the field to minimize surge, to prevent backflow and minimize hammer during service conditions. The hydraulic oil or pneumatic cushion system shall be completely self-contained.
3. Valve bodies, cover discs, levers, and disc arms shall be constructed of heavy cast iron or cast steel fully conforming to the latest revision of ASTM A 126 Class B or Class WCB, respectively. Valve ends shall be Standard American 125 pound flat faced flanged, in accordance with ANSI B16.1. Each valve disc shall be suspended from a noncorrosive shaft which shall pass through a stuffing box and be connected on the outside of the valve to the cushion and counterweight mechanism.
4. Valve seating shall be rubber to metal designed for drop tight shutoff. The body seat ring shall be made of bronze or stainless steel and the disc seat ring of 80 Durometer rubber. Body and disc seats shall be renewable.
5. With the exception of the valve body and seat, all parts in contact with wastewater shall be manufactured from noncorrosive materials. Internal corrosive surfaces shall be shop painted with two coats of epoxy for corrosion resistance.

E. Gate Valves

1. Gate valves shall be of the non-rising stem design, shall fully comply with the requirements of AWWA C509 for resilient-seated gate valves. Gate valves shall be designed for a minimum working pressure of 250 psi and a test pressure of 500 psi.
2. Gate valve body and bonnet shall be cast iron conforming to ASTM A126, Class B with resilient seat gate and O-ring seals. The gate shall be cast iron with a vulcanized rubber coating with no metal to metal contact when in the fully closed position and a smooth unobstructed waterway when in the fully opened position.
3. Valves shall have flanged ends and hand wheel operators.

4. Concrete

A. General: Cast-in-place concrete according to ACI 318/318R, ACI 350R, and the following:
    1. Cement: ASTM C 150, Type II.
    2. Fine Aggregate: ASTM C 33, sand.
    3. Coarse Aggregate: ASTM C 33, crushed gravel.
    4. Water: Potable.

B. Portland Cement Design Mix: 4000 psi minimum, with 0.45 maximum water/cementitious materials ratio.
    1. Reinforcement Fabric: ASTM A 185, steel, welded wire fabric, plain.
    2. Reinforcement Bars: ASTM A 615/A 615M, Grade 60, deformed steel.

5. Precast Concrete
    A. Concrete materials shall be as specified in Section 4.
    B. Minimum compressive strength of concrete at 28 days shall be 5,000 psi. Minimum compressive strength of concrete at transfer of prestressing force shall be 3,500 psi.
6. Bypass Pumping
    A. Bypass pumping will be required to allow for pipe replacement and valve vault installation. The manhole directly upstream of the pump station wet well that shall be the suction location for the bypass set up. The manhole is on the east side of McCotter Blvd, adjacent to the pump station. It is not within a fence area and must be protected during the bypass operations. Also adjacent to the pump station there is a 3-inch bypass pump discharge junction box with a camlock coupling.
    B. The Contractor is required to design and furnish all materials, labor, equipment, power, fuel, fuel storage, maintenance, etc. to implement a temporary pumping system for the purpose of diverting the existing flow around the work area on a daily basis, for the duration of the project. The bypass system shall meet the requirements of all codes and regulatory agencies having jurisdiction. Contractor shall also be responsible for any fines imposed by local, state, and/or federal agencies for failure to maintain flows or contain spills and/or overflows.
    C. Continuous bypass pumping is allowed in all project areas. Bypass pumping operation must be manned or be set up with floats and automatic on/off mode at all times that pumps are operating. When possible, bypass system shall be removed from service prior to rain events so that no portion of the bypass system impedes the flow of the sewer.
7. Seeding and Straw
    A. The contractor shall furnish the kinds and amounts of seed to be seeded in all areas disturbed by the construction work. The quality of the seed shall confirm to the following:

Type	Minimum Seed Purity (%)	Minimum Germination (%)	Maximum Weed Seed (%)
Fescue (fungus free)	98	90	1.00
Hybrid Rye	98	85	0.10
Sudan grass	98	85	0.25
Millet	98	85	0.50

Sericea Lespedeza			
Scarified	98	85	0.50
Unscarified	98	85	0.50

B. Straw used for mulch shall be small grain hay. Hay shall be undamaged, air dry, threshed straw, free of undesirable weed seed. Straw mulch is not required for seeded areas treated with a temporary soil stabilizer.

8. General Construction Sequence

The following construction sequence is a general overview of the work required and is not intended to encompass all aspects of the work. The Contractor shall perform all work required for a complete installation

A. Coordinate all shut down and startup operations with the Owner.
B. Contractor shall install and maintain the bypass pump system to divert flows from the existing wet well to the existing bypass connection.
C. Excavate and install new precast valve vault.
D. Replace all existing discharge piping from both existing pumps through the new valve vault in the yard, included pump slide rails. Existing pumps shall remain.
E. Backfill with #57 stone and compact area.
F. Remove the bypass pumping system. Seed and straw disturbed areas.

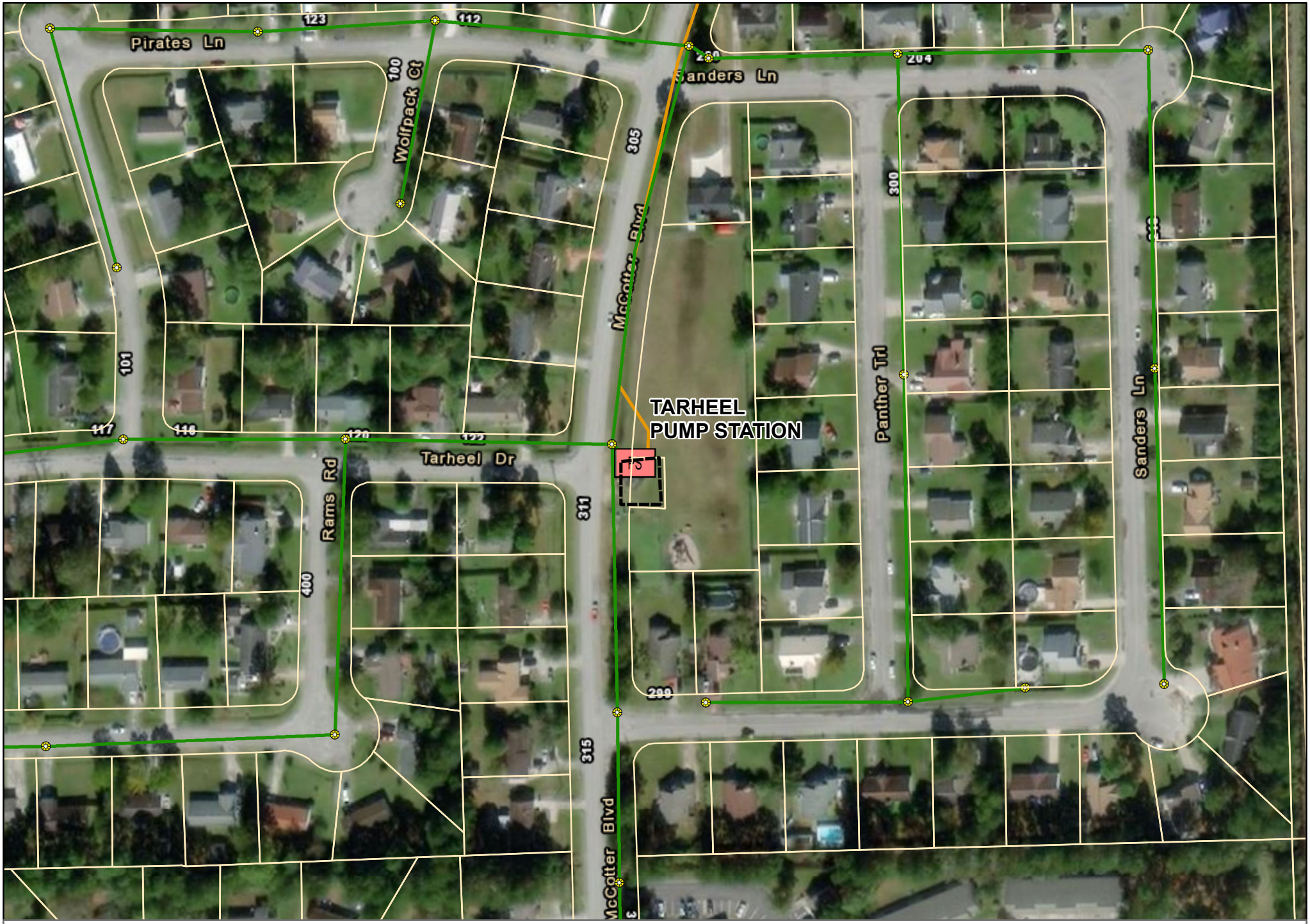

Legend

Force Main

Gravity Sewer

Manhole

Tarheel Pump Station Repairs
Location Map
Figure 3

1 inch = 150 feet

N

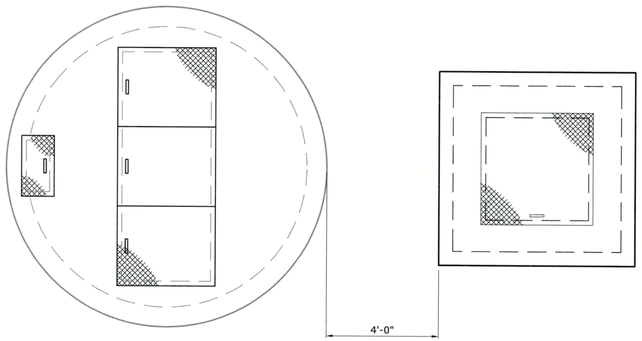

TOP PLAN

N.T.S

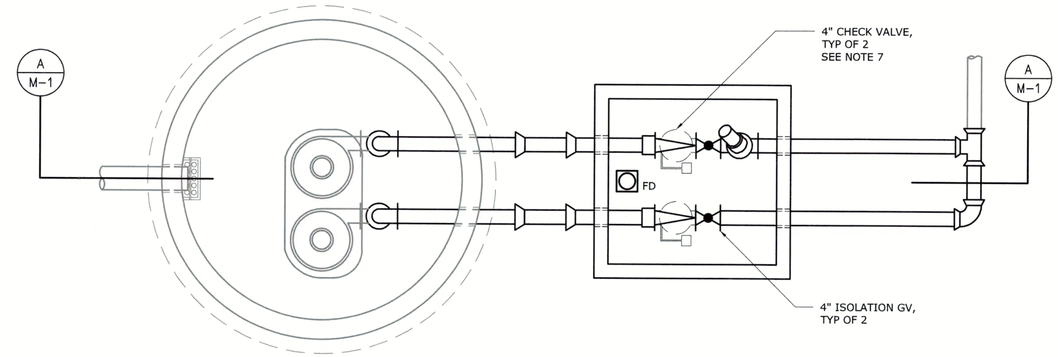

BOTTOM PLAN

N.T.S.

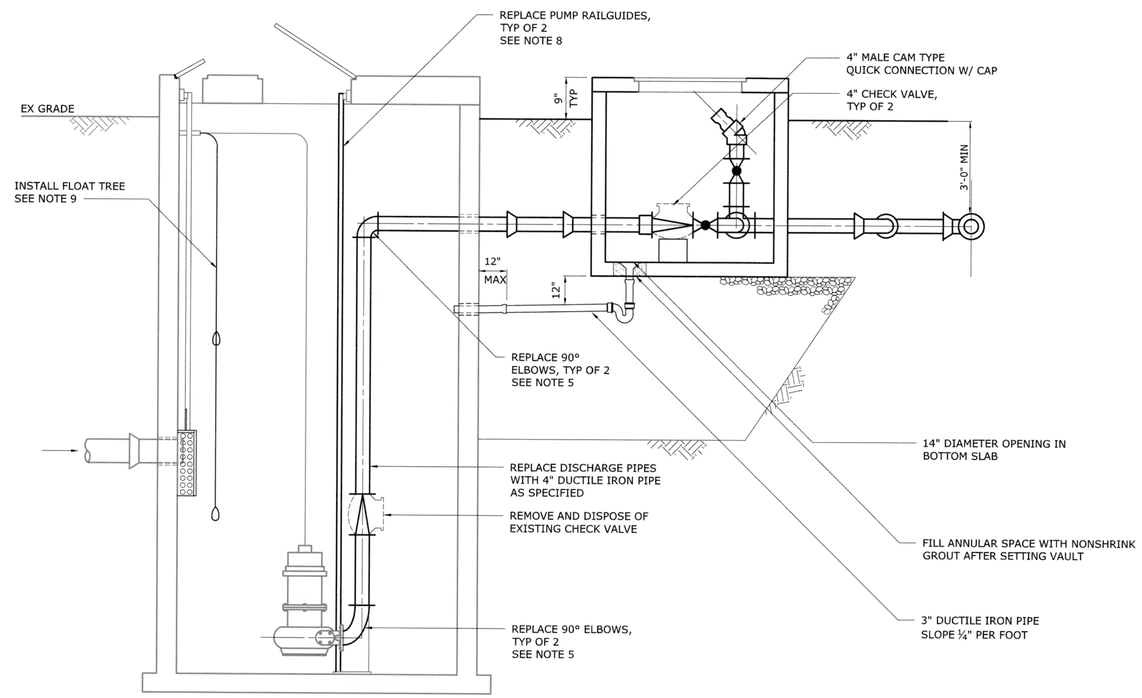

SECTION A / M-1

N.T.S.

NOTES:

1. NEW VAULT SHALL BE LOCATED ABOVE THE ENTRY POINT OF THE EXISTING FORCE MAIN TO LIFT STATION AND EXISTING BYPASS LOCATION.
2. INSTALLATION OF VAULT MAY REQUIRE THE REMOVAL OR MODIFICATION OF A WOODEN STRUCTURE THAT CURRENTLY HOUSES THE LIFT STATION. IF THIS STRUCTURE IS REMOVED, CONTRACTOR SHALL INSTALL CHAIN LINK FENCE WITH BARBED WIRE, AND ASSOCIATED GATE. THE GATE SHALL BE LARGE ENOUGH FOR VEHICULAR ACCESS. SHOULD CONTRACTOR MODIFY THE STRUCTURE, IT SHALL BE RETURNED TO ORIGINAL CONDITION UPON COMPLETION OF WORK.
3. BYPASS PUMPING IS REQUIRED THROUGHOUT DURATION OF THE PROJECT. CONTRACTOR SHALL PROVIDE TWO (2) QUIET RUN PUMPS, ONE PRIMARY AND ONE BACK-UP, WITH A MINIMUM RATED CAPACITY OF 75,000 GPD. CONTRACTOR SHALL PLUG MANHOLE APPROXIMATELY 30' UPSTREAM OF THE PUMP STATION (MH TH68) FOR BYPASS SYSTEM. THIS MANHOLE IS AT THE EDGE OF A ROAD, AND CONTRACTOR IS RESPONSIBLE FOR PROVIDING NECESSARY TRAFFIC CONTROL SIGNAGE, AS APPROPRIATE. ALL MAINTENANCE, FUELING, AND OPERATION OF THE PUMPS SHALL BE THE CONTRACTOR'S RESPONSIBILITY.
4. REMOVAL OF ANY SOLID SEWAGE WASTE IN WET WELL SHALL BE ACCOMPLISHED BY THE CONTRACTOR BEFORE AND AFTER PROJECT WORK.
5. ELBOWS SHOULD BE SECURED TO THE TOP/BOTTOM OF WET WELL WITH THUNDER STUDS. REPLACE ANY REMOVED CONCRETE WITH GROUT.
6. CONTRACTOR SHALL UTILIZE 4" VAN STONE FLANGE ADAPTERS FOR DISCHARGE PIPING.
7. NEW CHECK VALVES SHALL BE 4" SWING ARM CHECK VALVES, AS SPECIFIED.
8. PUMP GUIDE RAILS SHALL BE STAINLESS STEEL, PROVIDED IN TWO SECTIONS WITH A MID-POINT BRACKET.
9. NEW FLOAT TREE SHALL BE PROVIDED FOR THE FOUR (4) EXISTING FLOATS WITH ASSOCIATED HOOKS FOR THE TWO PUMP ROPES. CONTRACTOR SHALL SUPPLY A CLEARWATER, STAINLESS STEEL PRODUCT.
10. THE EXISTING PUMP INFORMATION IS PROVIDED BELOW FOR THE ORDERING OF PUMP RAILS, DISCHARGE LINES, FLOAT TREE, ETC.

MAKE: HOMA
MODEL #: AMX434-193/5.5TC
SERIAL #: 154878
154879
F.L.A.: 14.8
H.P.: 5.5
VOLTAGE: 230

REV	ISSUED FOR	DATE	BY
1	ISSUED FOR BIDDING	8/2018	BYP

PROJECT ENGINEER:	H.T. TANT
DESIGNED BY:	B. PORTER
DRAWN BY:	P. SELISKER
CHECKED BY:	H.T. TANT
IF THIS BAR DOES NOT MEASURE 1" THEN DRAWING IS NOT TO FULL SCALE	0 1/2" 1"

NORTH CAROLINA PROFESSIONAL SEAL 033116 ENGINEER BRIAN Y. PORTER 8/3/2018

Hazen
HAZEN AND SAWYER
4011 WESTCHASE BOULEVARD, SUITE 500
RALEIGH, NORTH CAROLINA 27607
LICENSE NO. : C-0381

CITY OF HAVELOCK
HAVELOCK, NORTH CAROLINA

TARHEEL PUMP STATION

PUMP STATION

MECHANICAL

PLAN, SECTIONS AND DETAILS

DATE:	JULY 2018
HAZEN NO.:	30906-006
CONTRACT NO.:	
DRAWING NUMBER:	M-3

PLOT DATE: 2018/07/03 9:32:09 AM BY: JCAUDLE
File: G:\30906\30906-006\DRAWINGS\TARHEEL PUMP STATION\M-03 Saved By: JCAUDLE Save Date: 2018/07/03 9:31 AM

ATTACHMENT 4

HIGH SCHOOL PUMP STATION REPAIRS
SCOPE OF WORK

NORTH CAROLINA
PROFESSIONAL
SEAL
33116
7/3/2018
ENGINEER
BRIAN Y. PORTER

Havelock, NC
High School Pump Station Repairs
Scope of Work

1. Summary of Work

   A. The High School Pump Station is located at the intersection of Webb Boulevard and High School Drive. Work at the station shall include replacement of all ductile iron piping from the discharge of each pump through the wet well to the vault in the yard, replacement of the check valves, isolation valves, and piping in the vault, new electrical conduit and wire, and bypass pumping.
   B. Figure 4 and the included photos show the general area and required work.

2. General Information
   A. The existing pump station consists of a 6 foot diameter precast concrete manhole approximately 17 feet deep.
   B. The existing pumps are 10 hp with a capacity of 200 gallons per minute.
   C. The site shall be secured at the end of each work day and when no personnel are onsite.

3. Materials
   A. General
      1. Contractor shall field verify all sizes, diameters, and dimensions of materials to be replaced prior to ordering new materials.

   B. Ductile Iron Pipe and Fittings
      1. Exposed ductile iron pipe in the pump station wet well and the vault shall be flanged fitting and joints. Flanged joints and fittings shall have a minimum pressure rating of 250 psi with 125 lb. American Standard flanges. All flanges and fittings shall conform to the requirements of ANSI B16.1. Flanges shall be ductile iron and shall be of the threaded or screw on type. The face of the flanges shall be machined after installation of the flange to the pipe. No raised surface shall be allowed on flanges. Flanged pipe shall conform to the requirements of ANSI Specification A21.15, (AWWA C115).
      2. Buried ductile iron pipe shall be restrained mechanical joint pipe with a minimum pressure rating of 350 psi. Mechanical joints and fittings shall conform to all requirements of ANSI A21.11, (AWWA C111). Restraint assemblies shall be Mega Lug by EBAA Iron, ONE LOK by Sigma, Grip Ring by Romac, or approved equal
      3. All pipe and fittings shall be cement mortar lined. Linings shall conform to American Standard Specifications for Cement Mortar Lining for Cast Iron Pipe and Ductile Iron Pipe and Fittings, ANSI A21.4 (AWWA C104) and shall be standard thickness. The mortar lining shall be protected with the bituminous seal coat. All buried DIP and fittings shall have a bituminous coating on the exterior surfaces in accordance with ANSI A21.51 (AWWA C151).

4. For discharge piping within the wet well, piping shall be coating with two (2) 10 mils thick of Tnemec Series 104 high solids epoxy or equal. All other exposed piping shall 1 coat of epoxy polyamide primer 6 mils thick, 1 coat of epoxy polyamide 6 mils thick and 1 coat of aliphatic polyurethane 5 mils thick.

C. Check Valves
   1. Check valves shall be cushioned swing check valves rated for a minimum working pressure of 200 psi and shall be of the "Shockless Swing Check" type as manufactured by G.A. Industries, or equal.
   2. Valve closure shall be controlled by an external weighted lever arm, the action of which is cushioned by a hydraulic oil or pneumatic cylinder. Counterweights and cushion cylinders shall be designed so that adjustments can be made in the field to minimize surge, to prevent backflow and minimize hammer during service conditions. The hydraulic oil or pneumatic cushion system shall be completely self-contained.
   3. Valve bodies, cover discs, levers, and disc arms shall be constructed of heavy cast iron or cast steel fully conforming to the latest revision of ASTM A 126 Class B or Class WCB, respectively. Valve ends shall be Standard American 125 pound flat faced flanged, in accordance with ANSI B16.1. Each valve disc shall be suspended from a noncorrosive shaft which shall pass through a stuffing box and be connected on the outside of the valve to the cushion and counterweight mechanism.
   4. Valve seating shall be rubber to metal designed for drop tight shutoff. The body seat ring shall be made of bronze or stainless steel and the disc seat ring of 80 Durometer rubber. Body and disc seats shall be renewable.
   5. With the exception of the valve body and seat, all parts in contact with wastewater shall be manufactured from noncorrosive materials. Internal corrosive surfaces shall be shop painted with two coats of epoxy for corrosion resistance.

D. Gate Valves
   1. Gate valves shall be of the non-rising stem design, shall fully comply with the requirements of AWWA C509 for resilient-seated gate valves. Gate valves shall be designed for a minimum working pressure of 250 psi and a test pressure of 500 psi.
   2. Gate valve body and bonnet shall be cast iron conforming to ASTM A126, Class B with resilient seat gate and O-ring seals. The gate shall be cast iron with a vulcanized rubber coating with no metal to metal contact when in the fully closed position and a smooth unobstructed waterway when in the fully opened position.
   3. Valves shall have flanged ends and hand wheel operators.

E. Electrical Components
   1. Conduit, couplings, and fittings shall be Schedule 80 polyvinyl chloride (PVC) construction, manufactured in accordance with NEMA TC-2, UL 651 Listed, and suitable for conductors with 90 degree C insulation.
   2. Conduit shall be suitable for buried installation under the slab of the pump station and exposed installation from the floor to the electrical control panel.

4. Concrete

A. General: Cast-in-place concrete according to ACI 318/318R, ACI 350R, and the following:
   1. Cement: ASTM C 150, Type II.
   2. Fine Aggregate: ASTM C 33, sand.
   3. Coarse Aggregate: ASTM C 33, crushed gravel.
   4. Water: Potable.

B. Portland Cement Design Mix: 4000 psi minimum, with 0.45 maximum water/cementitious materials ratio.
   1. Reinforcement Fabric: ASTM A 185, steel, welded wire fabric, plain.
   2. Reinforcement Bars: ASTM A 615/A 615M, Grade 60, deformed steel.

5. Bypass Pumping
   A. Bypass pumping will be required to allow for pipe replacement within the pump station. The manhole directly upstream of the pump station wet well that shall be the suction location for the bypass set up. The manhole is located within the fenced area of the pump station. Also within the fenced area of the pump station there is a 3-inch bypass pump discharge junction box with a camlock coupling.

   B. The Contractor is required to design and furnish all materials, labor, equipment, power, fuel, fuel storage, maintenance, etc. to implement a temporary pumping system for the purpose of diverting the existing flow around the work area on a daily basis, for the duration of the project. The bypass system shall meet the requirements of all codes and regulatory agencies having jurisdiction. Contractor shall also be responsible for any fines imposed by local, state, and/or federal agencies for failure to maintain flows or contain spills and/or overflows.

   C. Continuous bypass pumping is allowed in all project areas. Bypass pumping operation must be manned or be set up with floats and automatic on/off mode at all times that pumps are operating. When possible, bypass system shall be removed from service prior to rain events so that no portion of the bypass system impedes the flow of the sewer.

6. Seeding and Straw
   A. The contractor shall furnish the kinds and amounts of seed to be seeded in all areas disturbed by the construction work. The quality of the seed shall confirm to the following:

Type	Minimum Seed Purity (%)	Minimum Germination (%)	Maximum Weed Seed (%)
Fescue (fungus free)	98	90	1.00
Hybrid Rye	98	85	0.10
Sudan grass	98	85	0.25
Millet	98	85	0.50
Sericea Lespedeza			
Scarified	98	85	0.50
Unscarified	98	85	0.50

B. Straw used for mulch shall be small grain hay. Hay shall be undamaged, air dry, threshed straw, free of undesirable weed seed. Straw mulch is not required for seeded areas treated with a temporary soil stabilizer.

7. General Construction Sequence

   The following construction sequence is a general overview of the work required and is not intended to encompass all aspects of the work. The Contractor shall perform all work required for a complete installation

   A. Coordinate all shut down and startup operations with the Owner.
   B. Contractor shall install and maintain the bypass pump system to divert flows from the existing wet well.
   C. Saw cut the existing slab inside the building and hand excavate under the building wall to replace all existing DIP discharge piping from both existing pumps through the valve vault in the yard. Existing pumps shall remain.
   D. Remove the existing 4 inch buried conduit from the junction box in the wet well to the wall beneath the electrical control panel and the three conduits from the floor to the control panel. Install two, 2 inch and four, 1 inch conduits from the wet well to the electrical control panel. Remove the junction box from wet well and pull new wire through the new conduit. Reconnect all equipment and instruments. Coordinate with the Owner to test functionality of each component.
   E. Backfill and compact the excavated area with #57 stone and replace concrete slab.
   F. Remove the bypass pumping system. Seed and straw disturbed areas.

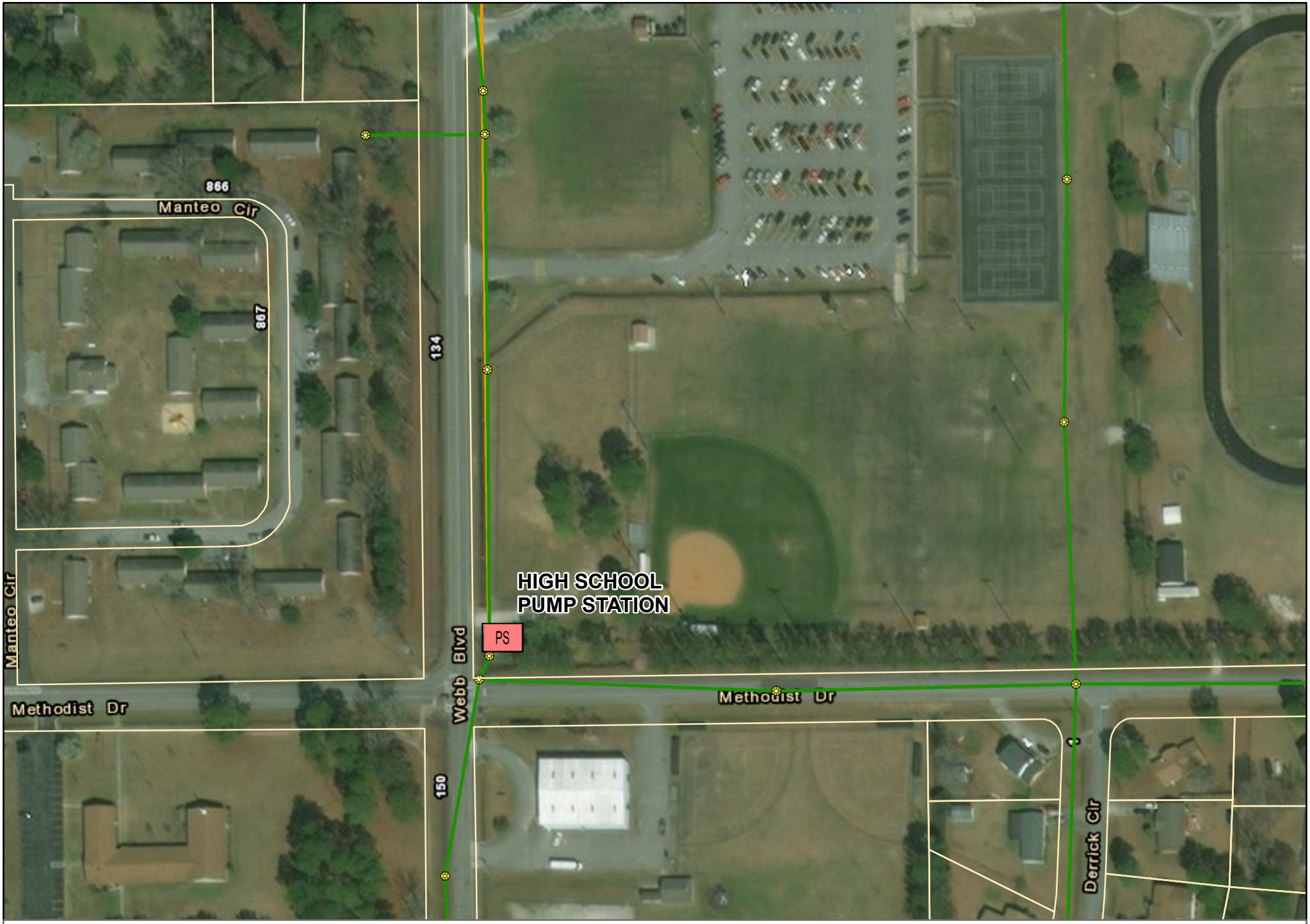

Legend

Force Main

Gravity Sewer

Manhole

High School Pump Station Repairs
Location Map
Figure 1

1 inch = 150 feet

N

Valve Vault and Building Exterior
Photo 1 of 4

Valve Vault
Photo 2 of 4

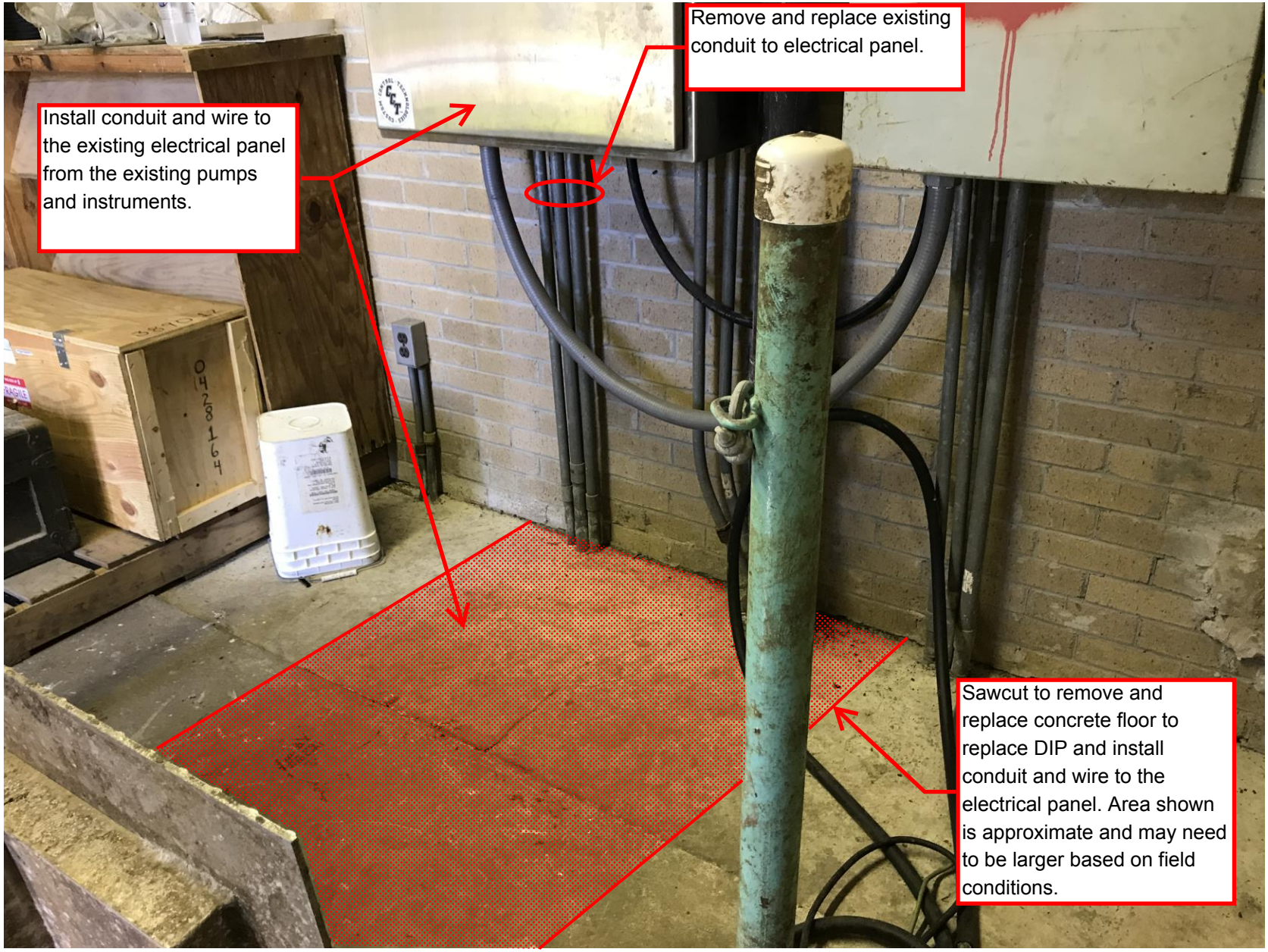

Concrete Floor between Wet Well and Electrical Panel
Photo 3 of 4

Pump Wet Well and Electrical Junction Box
Photo 4 of 4

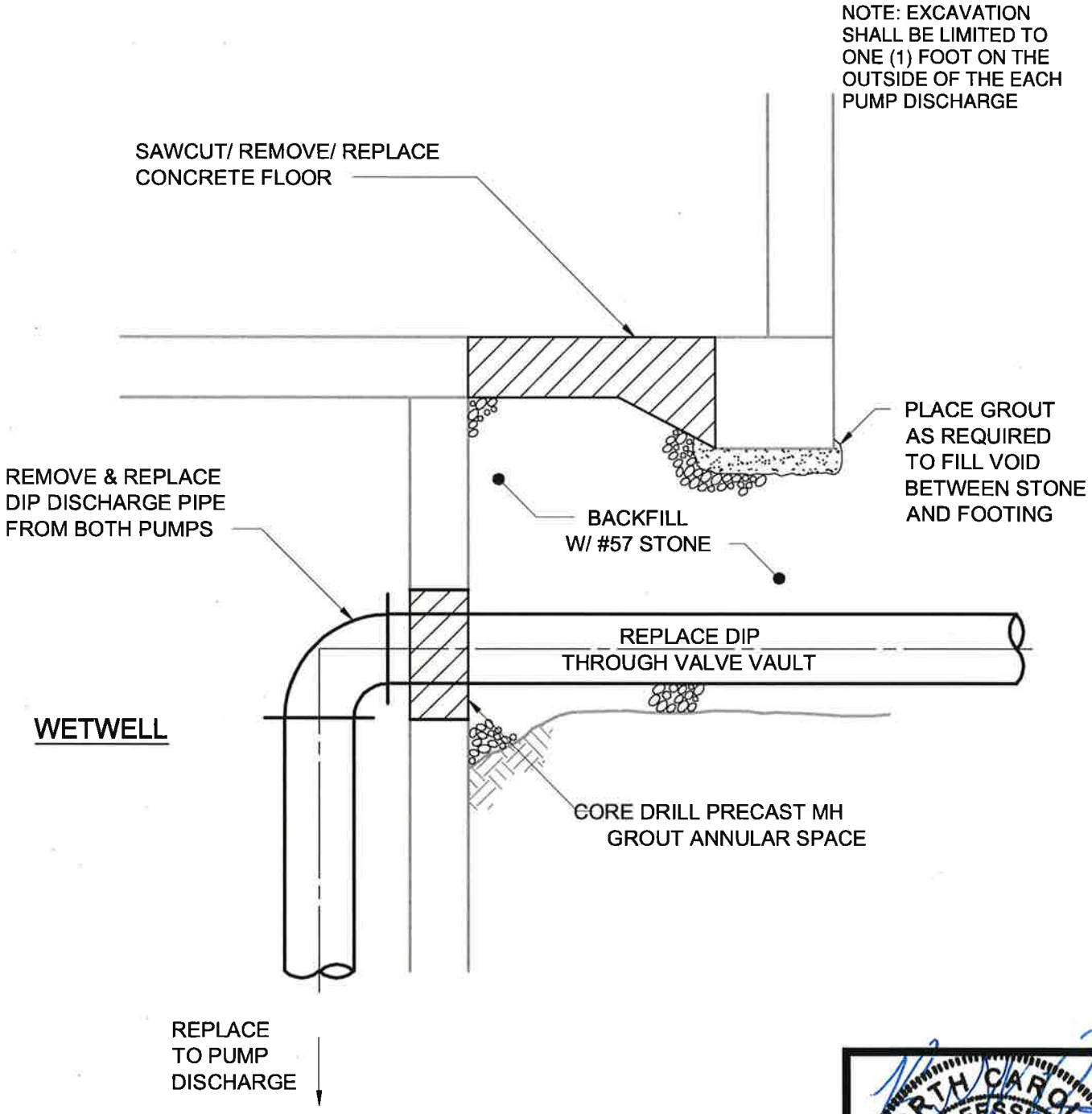

NORTH CAROLINA PROFESSIONAL SEAL 33116 ENGINEER BRIAN Y. PORTER
7/3/2018

Hazen

HAZEN AND SAWYER
4011 WESTCHASE BOULEVARD, SUITE 500
RALEIGH, NORTH CAROLINA 27607
LICENSE NO.: C-0381

CITY OF HAVELOCK
HAVELOCK, NORTH CAROLINA

HIGH SCHOOL PS REPAIRS