TOM GREEN COUNTY
CHRISTOVAL, TEXAS
PUGH PARK IMPROVEMENTS
MAY 13, 2020

THOMAS J. FROMBERGER, P.E.
LICENSED PROFESSIONAL ENGINEER No. 105564
MRB GROUP, P.C.
8834 N. CAPITAL OF TEXAS HWY, SUITE 147
AUSTIN, TEXAS 78759
TBPE FIRM REGISTRATION No. F-10615
PHONE: (512) 436-8571

STATE OF TEXAS
THOMAS J. FROMBERGER
105564
LICENSED
PROFESSIONAL ENGINEER
Thomas Fromberger
5/13/20

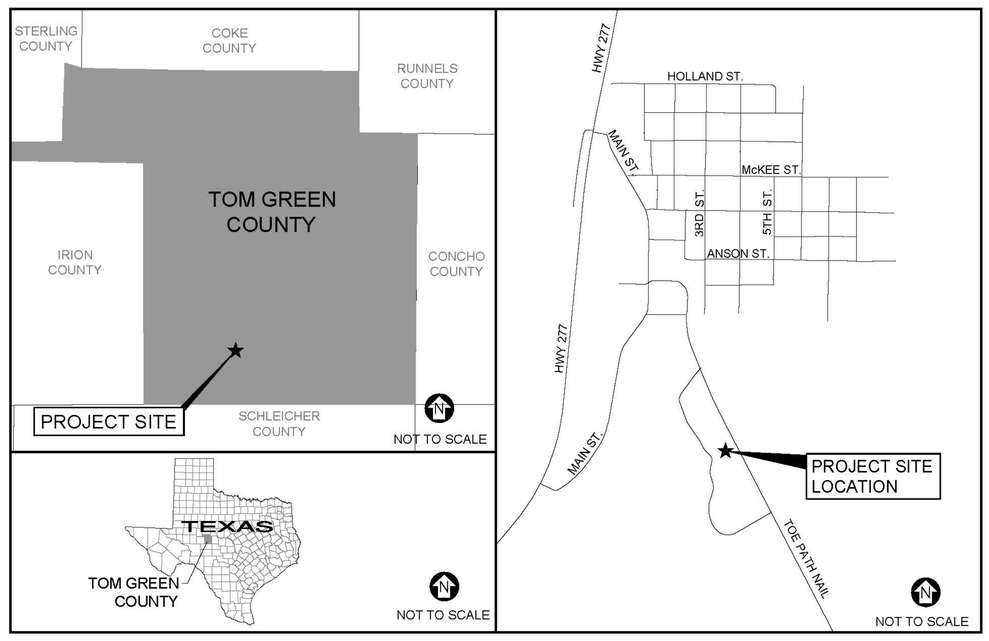

SITE LOCATION MAP
31° 11' 02.42" N 100° 29' 43.01" W

SHEET INDEX

T-1 NOTES, SYMBOLS, & ABBREVIATIONS.
G-1 OVERALL MAP
G-2 PUGH PARK NORTH
G-3 PUGH PARK SOUTH
G-4 IRRIGATION PLAN
D-1 SITE DETAILS
D-2 SITE DETAILS
A1.01 SIGNAGE – TEMPORARY & PERMANENT
A2.01 PLAN & ELEVATION – CONCESSION
A2.02 PLAN & ELEVATION – RESTROOMS
A2.03 PLAN & ELEVATION – PAVILION
A3.01 BUILDING DETAILS
A4.01 INTERIOR DETAILS & SCHEDULES
AS.01 FOUNDATION DETAILS
M1.01 MECHANICAL
P1.01 PLUMBING
E1.0 NOTES, SYMBOLS, & ABBREVIATIONS
E1.1 ELECTRICAL SPECIFICATIONS
E2.0 ELECTRICAL OVERALL SITE PLAN
E2.1 ELECTRICAL BASEBALL & SOFTBALL FILED PLAN
E2.2 ELECTRICAL LITTLE LEAGUE FIELDS SITE PLAN
E2.3 CONCESSION/ RESTROOM/ STORAGE BUILDING FLOOR PLAN
E2.4 ELECTRICAL PAVILION & RESTROOM PLAN
E2.5 ELECTRICAL ENLARDED SITE PLANS
E3.0 ELECTRICAL ONE-LINES
E4.1 ELECTRICAL DETAILS
E4.2 ELECTRICAL DETAILS
E4.3 ELECTRICAL BASEBALL/ SOFTBALL LIGHT POLE DETAILS
E4.4 ELECTRICAL LITTLE LEAGUE LIGHT DETAILS
E5.0 BASEBALL & SOFTBALL ELECTRICAL SCHEDULES
E5.1 LITTLE LEAGUE ELECTRICAL SCHEDULES
E5.2 LITTLE LEAGUE ELECTRICAL SCHEDULES

MRB group
8834 N. Capital of Texas Highway, Suite 147, Austin, Texas 78759 512-436-8571
Corporate Office: The Culver Road Armory, 145 Culver Road, Suite 160,
Rochester, New York 14620 585-381-9250

TBPE Firm Number: F-10615
www.mrbgroup.com

Copyright © 2020 MRB GROUP, P.C. All Rights Reserved

Texas811 Know what's below. Call before you dig.

TEXAS PARKS & WILDLIFE

MRB GROUP PROJECT # 2054.19002

GENERAL CIVIL NOTES:

1. ALL IMPROVEMENTS SHALL BE IN ACCORDANCE WITH THE MOST RECENT STANDARDS AND SPECIFICATIONS OF TOM GREEN COUNTY.
2. THE CONTRACTOR SHALL PROVIDE SURVEY STAKEOUT FOR THE PROPOSED IMPROVEMENTS.
3. THE CONTRACTOR SHALL PROVIDE PUMPS, WELL POINTS OR OTHER METHODS OF DEWATERING EXCAVATIONS SO FIRM BEDDING AND FOUNDATION CONDITIONS CAN BE MAINTAINED.
4. THE CONTRACTOR SHALL BE RESPONSIBLE FOR ANY TESTING SERVICES FOR MATERIALS, BACKFILL COMPACTION, AND DISINFECTION.
5. THE CONTRACTOR SHALL BE RESPONSIBLE TO PROTECT ALL EXISTING SHRUBS AND TREES. ANY SHRUBS OR TREES THAT ARE DAMAGED DURING CONSTRUCTION SHALL BE REPLACED IN KIND OR AS NOTED ON PLANS.
6. UNDERGROUND UTILITIES ARE SHOWN IN THEIR APPROXIMATE LOCATIONS. THE CONTRACTOR SHALL BEAR THE RESPONSIBILITY OF VERIFYING UTILITY LOCATION AND SIZES. THE CONTRACTOR SHALL CALL TEXAS 811 PRIOR TO COMMENCING WORK TO HAVE UTILITIES STAKED IN THE FIELD.
7. THE CONTRACTOR SHALL PERFORM THE WORK IN SUCH A MANNER THAT THE SAFETY OF THE WORKERS IS REASONABLY ASSURED. THIS SHALL INCLUDE PROVISIONS OF THE OCCUPATIONAL SAFETY AND HEALTH ACT (OSHA).
8. ELECTRIC SERVICES TO BE INSTALLED UNDERGROUND.
9. THE CONTRACTOR SHALL SUPPORT GAS MAINS AND SERVICES EXPOSED BY THEIR EXCAVATION. SUPPORT SYSTEMS SHALL BE AS RECOMMENDED BY THE RESPECTIVE UTILITY OWNERS.
10. THE CONTRACTOR SHALL REQUEST TEMPORARY POLE SUPPORT SERVICES PROVIDED BY THE UTILITY OWNERS AT ANY POLE THAT MAY BE UNDERCUT BY TRENCH OPERATIONS. THE CONTRACTOR SHALL PROVIDE THE UTILITY COMPANY(S) WITH A MINIMUM OF THREE (3) WORKING DAYS NOTICE OF THE NEED FOR POLE SUPPORT.
11. PAVEMENT MARKINGS, TRAFFIC SIGNALS AND/OR SIGNS THAT HAVE BEEN DISTURBED BY THE CONSTRUCTION OPERATIONS SHALL BE RESTORED IN A MANNER CONFORMING TO TXDOT SPECIFICATIONS.
12. EROSION CONTROL MEASURES TO BE ESTABLISHED AND MAINTAINED BY THE CONTRACTOR AT LOCATIONS DETERMINED BY THE OWNER OR ENGINEER.
13. ALL PAVEMENT CUTS SHALL BE MADE BY A PAVEMENT SAW TO NEAREST JOINT. SAW CUTS SHALL BE PERPENDICULAR TO THE LENGTH OF DRIVEWAY. SAW CUTTING SHALL BE REQUIRED PRIOR TO ALL WATER WORK.
14. CONTRACTOR WILL PROTECT AND MAINTAIN AT ALL TIMES DRAINAGE SWALES, PIPES, TILES, ETC., PROTECT AND MAINTAIN AT ALL TIMES ALL SEPTIC SYSTEMS/LEACH FIELDS. ALSO PROTECT AND PRESERVE ALL PROPERTY CORNERS, MONUMENTS, MARKERS, ETC., ANY GUIDE RAILING DAMAGED OR DISTURBED BY THE CONTRACTOR SHALL BE REPAIRED OR REPLACED IN KIND.
15. COMPACTED STONE SHALL BE 95% OF MAXIMUM DRY DENSITY IN ACCORDANCE THE MODIFIED PROCTOR TEST (ASTM D1557).
16. CONTRACTOR SHALL COMPLETE FINAL GRADING OR STABILIZATION, TOPSOILING AND SEEDING WITHIN TWO (2) WEEKS OF WATER MAIN INSTALLATION. AT NO TIME SHALL THE INSTALLATION PROCESS BE GREATER THAN 5000' AHEAD OF THE FINAL RESTORATION. ALL DISTURBED AREAS WITHIN THE STATE OR COUNTY ROW SHALL BE TOPSOILED, SEEDED AND MULCHED PRIOR TO CLOSE OF BUSINESS EVERY FRIDAY. IN CASE OF INCLEMENT WEATHER, THE AREA SHALL BE RESTORED BEFORE ANY FURTHER EXCAVATION TAKES PLACE ON THE NEXT BUSINESS DAY.
17. CONTRACTOR SHALL SAFEGUARD AND PRESERVE ALL RIGHT-OF-WAY MONUMENTS AND PROPERTY CORNERS ALONG THE PROJECT ROUTE. ALL PROPERTY CORNERS THAT ARE DISTURBED BY THE CONTRACTOR DURING CONSTRUCTION ARE TO BE REPLACED AND CERTIFIED BY A TEXAS LICENSED LAND SURVEYOR AT THE CONTRACTOR'S EXPENSE.
18. CONTRACTOR SHALL BE RESPONSIBLE FOR RESTORING TO ITS ORIGINAL OR BETTER CONDITION, ANY DAMAGES DONE TO EXISTING FENCES, STREETS, DRIVEWAYS, LANDSCAPING AND STRUCTURES, AND ANY EXITING UTILITIES. COSTS OF RESTORATIONS, IF ANY, SHALL BE THE CONTRACTORS ENTIRE EXPANSE.
19. ANY TREE CLEARING SHALL BE CONSIDERED INCIDENTAL TO PROJECT INCLUDE IN CONTRACTOR'S BID PRICE.

EROSION CONTROL NOTES

1. ALL SWALES AND SEDIMENTATION TRAPS MUST BE CLEANED AND MAINTAINED AT ALL TIMES BY CONTRACTOR TO ALLOW ADEQUATE DRAINAGE.
2. CONTRACTOR MUST PROTECT AT ALL TIMES ADJACENT PROPERTIES AND ROADWAYS FROM SEDIMENTATION, EROSION, RUNOFF, DEBRIS AND/OR ANY OTHER EFFECTS FROM THE SITE CONSTRUCTION.
3. UPON INSTALLATION OF DRAINAGE CULVERTS CONTRACTOR MUST MAINTAIN AND PERIODICALLY FLUSH THOSE CULVERTS TO ALLOW DRAINAGE FLOWS.
4. CONTRACTOR(S) MUST TAKE ALL PRECAUTIONS AS NECESSARY AND/OR AS ORDERED BY ENGINEER FOR DUST CONTROL AND FLYING DEBRIS PROTECTION. (ie. WATER, FENCE, MATTING, COVERS, ETC.)
5. DURING CONSTRUCTION, BEFORE SUFFICIENT SEEDING COVER IS ESTABLISHED ON STEEPER SLOPES, CONTRACTOR MAY BE REQUIRED TO PLACE MATTING, BLANKETS, OR OTHER MEASURES TO PROTECT SLOPES AGAINST EROSION AS NECESSARY AND/OR AS ORDERED BY THE ENGINEER.
6. CONTRACTOR SHALL BE RESPONSIBLE FOR FULL COMPLIANCE WITH THE LOCAL STORMWATER REQUIREMENTS.
7. ALL EROSION CONTROL MEASURES WITHIN TEXAS HIGHWAY BOUNDARY SHALL CONFORM TO TXDOT STANDARD SPECIFICATION.
8. ALL EROSION CONTROL MEASURES SHALL BE ROUTINELY CHECKED, CLEANED AND REPAIRED, PARTICULARLY AFTER STORM EVENTS.
9. SILT FENCE SHALL BE ERECTED AT THE LIMITS OF ALL DISTURBED AREAS WHERE, IN THE JUDGEMENT OF THE ENGINEER, THERE IS THE POTENTIAL FOR FILTRATION OF STREAMS, STORM SEWERS, WETLANDS OR NEIGHBORING PROPERTIES, REGARDLESS OF WHETHER THE SILT FENCE IS INDICATED ON THE DRAWINGS.

CONSTRUCTION SEQUENCE:

1. INSTALL ALL EROSION CONTROL DEVICES AS NESSASRY, PRIOR TO EARTHWORK CONSTRUCTION. BASED ON FIELD PERFORMANCE AND WEATHER CONDITIONS, ADDITIONAL EROSION CONTROL DEVICES MAY BE REQUIRED. DISTURBANCE TO THE SITE TO BE LIMITED.
2. CONTRACTOR SHALL RESTRICT GRADING OPERATIONS TO THE AREAS INDICATED ON THE CONTRACT DRAWINGS, PERFORMING WORK OUTSIDE THE IDENTIFIED LIMITS SHALL NOT BE PERMITTED WITHOUT APPROVAL OF THE ENGINEER.
3. PROTECT EXISTING VEGETATION AND OTHER ENVIRONMENTAL FEATURES TO BE PRESERVED WITH CONSTRUCTION BARRIERS.
4. CONSTRUCTION OF SITE IMPROVEMENTS MAY BEGIN AT THIS TIME. A MAXIMUM OF 5 ACRES OF DISTURBED SOIL IS PERMITTED AT ANY ONE TIME PRIOR TO STABILIZATION.
5. RESTORE EROSION CONTROL MEASURES AS NEEDED FOLLOWING THE UTILITY INSTALLATION. CONTINUE TO MAINTAIN AND REPAIR TEMPORARY EROSION CONTROL DEVICES THROUGHOUT CONSTRUCTION AS NEEDED.
6. COMPLETE FINAL GRADING OF SITE. AREAS TO REMAIN UNDISTURBED FOR GREATER THAN 14 DAYS WILL BE SEEDED/MULCHED. REAPPLY TOPSOIL, INSTALL PERMANENT SEEDING, FERTILIZER AND MULCH.
7. ALL TEMPORARY EROSION CONTROL DEVICES SHALL BE MAINTAINED BY THE CONTRACTOR.
8. EROSION CONTROL DEVICES SHALL REMAIN IN PLACE UNTIL AN APPROVED PERMANENT COVER OF VEGETATION IS ESTABLISHED. REMOVAL OF DEVICES TO BE COORDINATED WITH THE OWNER, LOCAL MUNICIPALITY OR REPRESENTATIVE THEREOF.

GENERAL CONSTRUCTION NOTES:

1. ALL WORK TO BE IN STRICT CONFORMANCE WITH TEXAS STATE UNIFORM FIRE PREVENTION AND BUILDING CODE, NEC, OSHA, NAPHCC, ANSI, NFPA & LOCAL GOVERNING MUNICIPAL AGENCIES AS WELL AS ANY AND ALL BUILDING RULES.
2. THE CONTRACTOR SHALL PERFORM THE WORK IN SUCH A MANNER THAT THE SAFETY OF THE WORKERS IS REASONABLY ASSURED. THIS SHALL INCLUDE PROVISIONS OF THE OCCUPATIONAL SAFETY AND HEALTH ACT (OSHA).
3. THE CONTRACTOR SHALL COMPLY WITH ALL CONTRACTUAL REQUIREMENTS; BE RESPONSIBLE FOR CONTROL OF CONSTRUCTION LOCATIONS, ELEVATIONS, DIMENSIONS, AND QUANTITIES.
4. THE CONTRACTOR IS RESPONSIBLE FOR THE CONSTRUCTION MEANS, METHODS, TECHNIQUES, SEQUENCES OR PROCEDURES, AND FOR SAFETY PRECAUTIONS AND PROGRAMS IN CONNECTION WITH THE CONSTRUCTION WORK; CONTRACTOR WILL BE RESPONSIBLE TO CARRY OUT THE CONSTRUCTION WORK IN ACCORDANCE WITH THE CONTRACT DOCUMENTS.
5. COORDINATE ARCHITECTURAL DRAWINGS WITH STRUCTURAL DRAWINGS. ARCHITECTURAL DRAWINGS SHALL TAKE PRECEDENCE WHERE DRAWINGS CONFLICT. FAILURE TO INCORPORATE OR BUILD TO ARCHITECTURAL DETAILS EVEN IF NOT INDICATED ON STRUCTURAL DRAWINGS DOES NOT OBVIATE CONTRACTORS RESPONSIBILITY. NOTIFY ARCHITECT IMMEDIATELY IF DISCREPANCY IS FOUND.
6. CONTRACTOR TO CONTACT ARCHITECT IF CONDITIONS OTHER THAN THOSE REPRESENTED ON THE DRAWINGS ARE ENCOUNTERED.
7. EXISTING STRUCTURES, EQUIPMENT, AND PIPING ADJACENT TO PROPOSED CONSTRUCTION OR IMPROVEMENTS SHALL BE ADEQUATELY SUPPORTED AND PROTECTED DURING CONSTRUCTION. THE CONTRACTOR SHALL BE RESPONSIBLE FOR REPAIR OR REPLACEMENT OF ANY NEW OR EXISTING STRUCTURES, PIPING, EQUIPMENT, ETC. THAT IS DAMAGED DURING CONSTRUCTION.
8. THE GENERAL CONTRACTOR TO PROVIDE TEMPORARY HEAT, VENTILATION, POWER AND LIGHTING THROUGHOUT COURSE OF JOB WHERE REQUIRED.
9. THE CONTRACTOR SHALL NOT DISTURB ANY AREAS BEYOND THOSE SHOWN ON THE DRAWINGS AND SHALL LIMIT THE EXTENT OF DISTURBANCE FOR EACH AREA OF CONSTRUCTION AS MUCH AS POSSIBLE. THE CONTRACTOR SHALL UTILIZE EVERY EFFORT TO MINIMIZE DISTURBANCE TO THE SURROUNDING AREA.
10. PRIOR TO COMPLETION OF ALL WORK, CLEAN PREMISES FOR OCCUPANCY. WORK AREA SHALL BE MAINTAINED IN ORGANIZED & BROOM CLEAN CONDITION AT ALL TIMES.
11. SPRINKLER & FIRE DETECTION MODIFICATIONS SHALL BE PERFORMED STRICTLY ACCORDING TO CODE. CONTRACTOR SHALL PROVIDE ANY/ALL NECESSARY DESIGN INFORMATION, CALCULATIONS & DRAWINGS AS NECESSARY FOR MUNICIPAL APPROVAL & CODE COMPLIANT INSTALLATION. THESE CONTRACTOR PROVIDED DRAWINGS SHALL BY STAMPED BY LICENSED ENGINEER AS REQUIRED BY MUNICIPALITY.
12. ENSURE ALL INSULATION, FENESTRATION, & ENVELOPE REQUIREMENTS MEET CURRENT CODE, INCLUDING CODE SUPPLEMENTS ADOPTED BY TEXAS STATE AND LOCAL MUNICIPALITIES.
13. ALL REFERENCES TO "THE CONTRACTOR" IN THESE CONTRACT DOCUMENTS REFER TO THE GENERAL CONTRACTOR (GC) UNLESS NOTED OTHERWISE.
14. ALL LOUVERS ARE TO BE PROVIDED BY MEP CONTRACTORS AND TO BE INSTALLED AND SEALED BY THE GC.

GENERAL BIDDING NOTES

1. ATTENTION ALL USERS OF THESE DRAWINGS, GENERAL CONTRACTORS, SUB-CONTRACTORS, MANUFACTURERS, SUPPLIERS: CAREFULLY AND THOROUGHLY REVIEW THESE GENERAL NOTES. IT IS YOUR RESPONSIBILITY TO KNOW AND ADHERE TO THESE REQUIREMENTS.

2. THE DRAWINGS AND SPECIFICATIONS ARE SEPARATED INTO DISCIPLINES FOR THE CONVENIENCE OF THE ARCHITECT AND THE CONTRACTOR. THE SEPARATIONS USED HEREIN ARE USED ONLY FOR THE PURPOSES OF CONVENIENCE AND REFERENCE, AND IN NO WAY DO THEY DEFINE OR LIMIT THE SCOPE OR INTENT OF ANY PART OF THE DRAWINGS, OR OF THE DRAWINGS AND SPECIFICATIONS AS A WHOLE. THE FACT THAT THE DRAWINGS ARE SEPARATED IN NO WAY SUGGESTS THAT THE WORK IS NOT TO BE CONSTRUCTED AS A COMPLETE, INTEGRATED AND UNIFIED WHOLE.

3. EVERY EFFORT HAS BEEN MADE TO MAKE THESE DOCUMENTS CONCISE AND COORDINATED, TO DEFINE WORK IN THE MOST LOGICAL PLACE AND TO ELIMINATE REDUNDANCY. DO NOT PRESUME THAT YOUR SCOPE OF WORK IS SINGULARLY DEFINED. YOUR SCOPE OF WORK IS DEFINED THROUGHOUT THE ENTIRE SET OF DRAWINGS AND SPECIFICATIONS AND IS NOT CONTAINED IN JUST ONE SERIES OF DRAWINGS OR DIVISION OF SPECIFICATIONS. YOU MUST REVIEW THE ENTIRE SET OF CONTRACT DOCUMENTS TO DETERMINE YOUR SCOPE OF WORK.

4. THE DRAWINGS AND SPECIFICATIONS, INCLUDING DRAWINGS PREPARED BY SPECIFIC ENGINEERING DISCIPLINES (SUCH AS CIVIL, STRUCTURAL, MECHANICAL, ELECTRICAL, ETC.) ARE COMPLEMENTARY; ITEMS SHOWN IN ANY ONE LOCATION IN THE DRAWINGS SHALL BE CONSIDERED TO BE REQUIREMENTS OF THE CONTRACT FOR CONSTRUCTION. IN THE EVENT OF AN INCONSISTENCY BETWEEN THE DRAWINGS AND SPECIFICATIONS, OR WITHIN EITHER DOCUMENT, THE CONTRACTOR SHALL SEEK CLARIFICATION OR INTERPRETATION FROM THE ARCHITECT PRIOR TO BIDDING. WHERE INCONSISTENCIES ARE NOT CLARIFIED PRIOR TO BIDDING, AND WHERE THE ACTUAL SOLUTION OR INTENT CANNOT BE REASONABLY INFERRED, THE CONTRACTOR SHALL PROVIDE THE BETTER QUALITY OR GREATER QUANTITY OF WORK.

5. MECHANICAL AND ELECTRICAL DRAWINGS MAY SHOW INFORMATION IN A DIAGRAMMATIC FASHION WITHOUT DIMENSIONING. THE GENERAL CONTRACTOR IS TO COORDINATE THE LOCATIONS OF ALL M.E. EQUIPMENT WITH RESPECT TO THE ARCHITECTURAL AND STRUCTURAL DETAILING OF SHAFTS, CHASES, ETC...

6. THE CONTRACTOR AND ALL SUB-CONTRACTORS SHALL VISIT THE SITE AND BECOME FAMILIAR WITH SITE CONDITIONS AS THEY MAY AFFECT CARRYING OUT THE WORK AS DESCRIBED IN THESE CONTRACT DOCUMENTS. THE CONTRACTOR SHALL INVESTIGATE, VERIFY, AND BE RESPONSIBLE FOR ALL CONDITIONS OF THE PROJECT, AND NOTIFY THE ARCHITECT OF ANY CONDITIONS THAT REQUIRE MODIFICATION BEFORE PROCEEDING WITH THE WORK.

7. THE GENERAL CONTRACTOR SHALL BE RESPONSIBLE FOR LOCATING AND PROTECTING ALL UTILITY LINES. LOCATIONS SHOWN ARE APPROXIMATE. REPAIR ALL DAMAGE TO UTILITY LINES CAUSED BY CONSTRUCTION OPERATIONS AT NO COST TO THE OWNER.

8. ALL PERSONS DIRECTLY OR INDIRECTLY ASSOCIATED WITH THE PROJECT SHALL BE FAMILIAR WITH THE RULES AND REGULATIONS OF THE OCCUPATIONAL SAFETY AND HEALTH ACT, AND IMPLEMENT THOSE RULES AS THEY APPLY TO THIS PROJECT.

DRAWINGS AND DIMENSIONS

1. DO NOT SCALE THE DRAWINGS.

2. ALL DIMENSIONS ON PLANS ARE FINISH TO FINISH UNLESS NOTED OTHERWISE.

3. THE GENERAL CONTRACTOR SHALL BE RESPONSIBLE FOR NOTIFYING THE ARCHITECT IMMEDIATELY SHOULD ANY DISCREPANCIES BE FOUND IN THE DRAWINGS AND SPECIFICATIONS.

4. THE GENERAL CONTRACTOR IS RESPONSIBLE FOR CHECKING ALL FIELD CONDITIONS AND DIMENSIONS AS THEY RELATE TO THIS PROJECT. SHOULD DISCREPANCIES EXIST BETWEEN THE WORK INDICATED AND ACTUAL FIELD CONDITIONS NOTIFY THE ARCHITECT PRIOR TO PROCEEDING WITH THE WORK.

5. ACTUAL CONTRACT LIMITS ARE TO BE DETERMINED BY THE CONTRACTOR AND APPROVED BY THE OWNER BEFORE ACTUAL CONSTRUCTION WORK BEGINS. ANY INDICATION OF PROJECT LIMITS OR LINES OF DEMARCATION ARE SHOWN FOR THE CONVENIENCE OF THE CONTRACTOR, AND ARE NOT TO BE TAKEN LITERALLY.

6. SEE NOTES ON INDIVIDUAL DRAWINGS FOR INFORMATION RELATED TO PLANS AND DETAILS ON THOSE SHEETS.

7. THE TERM "ALIGN" REFERS TO LOCATING DIFFERENT COMPONENTS OF CONSTRUCTION TO PROVIDE A FLUSH FINISH SURFACE.

8. CONTRACTORS AND ALL SUB-CONTRACTORS SHALL FIELD VERIFY ALL DIMENSIONS PRIOR TO FABRICATION AND/OR ORDERING OF MATERIALS.

9. USE OF THE WORD "VERIFY" POINTS OUT A SITUATION WHICH MUST BE CONFIRMED PRIOR TO PROCEEDING WITH THE WORK, FABRICATION OF EQUIPMENT, OR ORDERING MATERIAL. NOTIFY THE ARCHITECT OF ANY DISCREPANCY.

PLAN SYMBOLS:

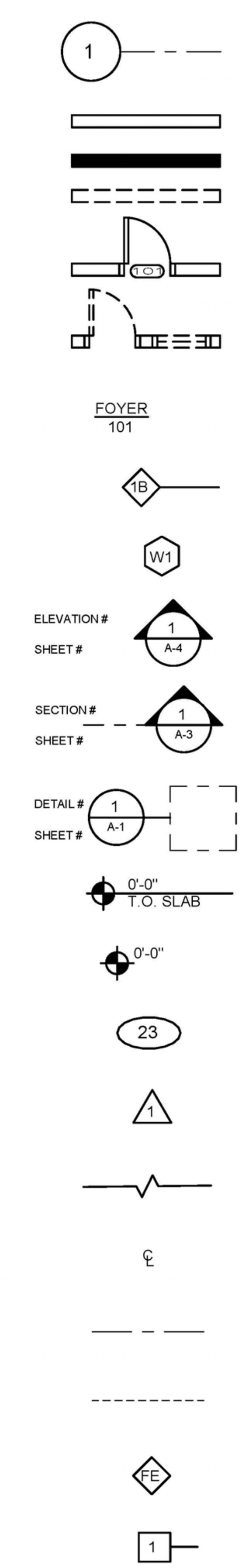

- COLUMN GRID
- EXISTING WALL
- NEW WALL
- WALL TO BE REMOVED
- NEW / RELOCATED DOOR MARKER
- DOOR / WINDOW TO BE REMOVED
- ROOM / SPACE NUMBER
- PARTITION TYPE
- WINDOW TYPE
- ELEVATION INDICATOR, EXTERIOR
- SECTION MARKER
- DETAIL MARKER
- BENCH MARK
- SPOT ELEVATION
- EQUIPMENT TYPE
- REVISION
- BREAK LINE
- CENTER LINE INDICATOR
- CENTER LINE
- ITEMS SHOWN ABOVE OR BELOW
- FIRE EXTINGUISHER CABINET
- KEYNOTE

ABBREVIATIONS:

A.C.T	ACOUSTICAL CEILING TILE
ADJ.	ADJACENT
A.F.F.	ABOVE FINISH FLOOR
ALUM.	ALUMINUM
ALT.	ALTERNATE
ANOD.	ANODIZED
APPROX.	APPROXIMATE
ARCH.	ARCHITECTURAL
ASPH.	ASPHALT
AUTO.	AUTOMATIC
BD.	BOARD
BLDG.	BUILDING
BLK.	BLOCK
BLKG.	BLOCKING
BLT.	BOLT
BM.	BEAM
BOT.	BOTTOM
BRK.	BRICK
BSMNT.	BASEMENT
CAB.	CABINET
CER.	CERAMIC
C.J.	CONTROL JOINT
CLG.	CEILING
CLKG.	CAULKING
CLOS.	CLOSET
CLR.	CLEAR
C.M.U.	CONCRETE MASONRY UNIT
COL.	COLUMN
CONC.	CONCRETE
CONN.	CONNECTION
CONST.	CONSTRUCTION
CONT.	CONTINUED, CONTINUOUS
COORD.	COORDINATE
CORR.	CORRIDOR
CTR.	CENTER
C.L.	CENTERLINE
DBL.	DOUBLE
DEMO.	DEMOLISH
DEPT.	DEPARTMENT
DET.	DETAIL
DIA.	DIAMETER
DIM.	DIMENSION
DIV.	DIVISION
DN.	DOWN
DR.	DOOR
D.S.	DOWN SPOUT
DWG.	DRAWING
DWR.	DRAWER
EA.	EACH
E.J.	EXPANSION JOINT
EL.,ELEV.	ELEVATION
ELEC.	ELECTRICAL
ELEV.	ELEVATOR
ENCL.	ENCLOSURE
ENT.	ENTRANCE
EQ.	EQUAL
EQUIP.	EQUIPMENT
E.W.	EACH WAY
EXIST.	EXISTING
EXP.	EXPANSION
EXPO.	EXPOSED
EXT.	EXTERIOR
F.A.	FIRE ALARM
F.D.	FLOOR DRAIN
FDN.	FOUNDATION
F.E.	FIRE EXTINGUISHER
F.E.C.	FIRE EXTINGUISHER CABINET
FIN.	FINISH
FIXT.	FIXTURE
FLASH.	FLASHING
FLOUR.	FLUORESCENT
F.O.	FACE OF
F.O.C.	FACE OF CONCRETE
F.O.E.W.	FACE OF EXISTING WALL
F.O.F.	FACE OF FINISH
F.O.M.	FACE OF MASONRY
F.O.S.	FACE OF STUDS
F.S.	FULL SIZE
FT.	FOOT, FEET
FTG.	FOOTING
FURR.	FURRING
FUT.	FUTURE
GA.	GAUGE
GALV.	GALVANIZED
G.B.	GRAB BAR
GEN.	GENERAL
GFCMU	GROUND FACE C.M.U.
GL.	GLASS
GLZ.	GLAZING
GND.	GROUND
GR.	GRADE
G.W.B.	GYPSUM WALL BOARD
H.C.	HOLLOW CORE
HD.	HEAD
HDWD.	HARDWOOD
H.M.	HOLLOW METAL
HORIZ.	HORIZONTAL
HR.	HOUR
HT.	HEIGHT
I.D.	INSIDE DIAMETER
IN.	INCH, INCHES
INCL.	INCLUDE(D)
INSUL.	INSULATION
INT.	INTERIOR
J.C.	JANITOR'S CLOSET

JT.	JOINT
KIT.	KITCHEN
LAM.	LAMINATE
LAV.	LAVATORY
LWT.	LIGHT WEIGHT
MAS.	MASONRY
MAT.	MATERIAL
MAX.	MAXIMUM
MECH.	MECHANICAL
MEMB.	MEMBRANE
MET.	METAL
MEZZ.	MEZZANINE
MIN.	MINIMUM
MIR.	MIRROR
MISC.	MISCELLANEOUS
M.O.	MASONRY OPENING
MTD.	MOUNTED
MTG.	MOUNTING
MTL.	METAL
MUL.	MULLION
MW.	MICROWAVE
N	NORTH
N.I.C	NOT IN CONTRACT
NO., #	NUMBER
NOM.	NOMINAL
N.T.S	NOT TO SCALE
O.A.	OVERALL
O.C.	ON CENTER
O.D.	OUTSIDE DIAMETER
OFF.	OFFICE
OH.	OVERHEAD
OPNG.	OPENING
OPP.	OPPOSITE
O.H.	OPPOSITE HAND
OZ	OUNCE
PAV.	PAVING
PL.	PLATE
P.LAM	PLASTIC LAMINATE
PLAS.	PLASTER
PLYWD.	PLYWOOD
PR.	PAIR
PRCST.	PRECAST
PT.	PRESSURE TREATED
PTD.	PAINTED
PART.	PARTITION
RAD.	RADIUS
R.B.	RESILIENT BASE
R.C.P.	REFLECTED CEILING PLAN
R.D.	ROOF DRAIN
REC.	RECESSED
REF.	REFERENCE
REFR.	REFRIGERATOR
REINF.	REINFORCED
REQ.	REQUIRED
RESIL.	RESILIENT
REV.	REVISION
RGTR.	REGISTER
RM.	ROOM
R.O.	ROUGH OPENING
R.W.L.	RAIN WATER LEADER
S	SOUTH
S.C.	SOLID CORE
SCHED.	SCHEDULE
SECT.	SECTION
SHR.	SHOWER
SHT.	SHEET
SIM.	SIMILAR
S.P.	STANDPIPE
SPEC.	SPECIFICATION
SQ.	SQUARE
SS.	STAINLESS STEEL
SK.	SERVICE SINK
STD.	STANDARD
STL.	STEEL
STOR.	STORAGE
STRUCT.	STRUCTURAL
SUSP.	SUSPENDED
SYM.	SYMMETRICAL
TEMP.	TEMPERED
T.G.	TEMPERED GLASS
T.&G.	TONGUE AND GROOVE
TH.	THICK
TLT.	TOILET
T.O.	TOP OF
T.O.W.	TOP OF WALL
TYP.	TYPICAL
U.O.N.	UNLESS OTHERWISE NOTED
VB.	VAPOR BARRIER
V.C.T.	VINYL COMPOSITION TILE
VERT.	VERTICAL
VEST.	VESTIBULE
V.I.F.	VERIFY IN FIELD
VNR.	VENEER
VOL.	VOLUME
W.	WEST
W/	WITH
W.C.	WATER CLOSET
WD.	WOOD
WIN.	WINDOW
WK.	WORK
W/O	WITHOUT
WP.	WATERPROOFING
WT.	WEIGHT

No.	Revisions and Descriptions	By	Date
3	ELECTRICAL PLANS ADDED & UPDATED DETAILS	TJF	5/13/20
2	ADDITIONAL BASEBALL & SOFTBALL DETAILS	TJF	5/4/20
1	REVISED PER COUNTY IRRIGATION & WATER	TJF	4/24/20

Copyright © 2020 MRB Group All Rights Reserved

Project Title: TOM GREEN COUNTY PUGH PARK IMPROVEMENTS CHRISTOVAL, TEXAS

Drawing Title: NOTES, SYMBOLS, & ABBREVIATION

Drawn By: CNC/JPJ/KJM
Checked By: TMR/TJF
Scale: N.T.S
Date: 3/25/20

STATE OF TEXAS
THOMAS J. FROMBERGER
105564
LICENSED PROFESSIONAL ENGINEER
Thomas Fromberger 5/13/20

MRB group
Engineering, Architecture, Surveying, P.C.
5250 S 31st Street, Temple, Texas 76502 Phone: 254-771-2054
8834 N. Capital of Texas Highway, Suite 147, Austin, Texas 78759 Phone: (512) 436-8571
TBPE Firm Number: F-10615
www.mrbgrouptexas.com

Sheet No. T-1 of

Project No. 2054.19002

N:\2054.19002.000\dwg\PUGH PARK\Site\Pugh Park - NT Sheet.dwg, 5/13/2020 9:10:20 PM, tfromberger

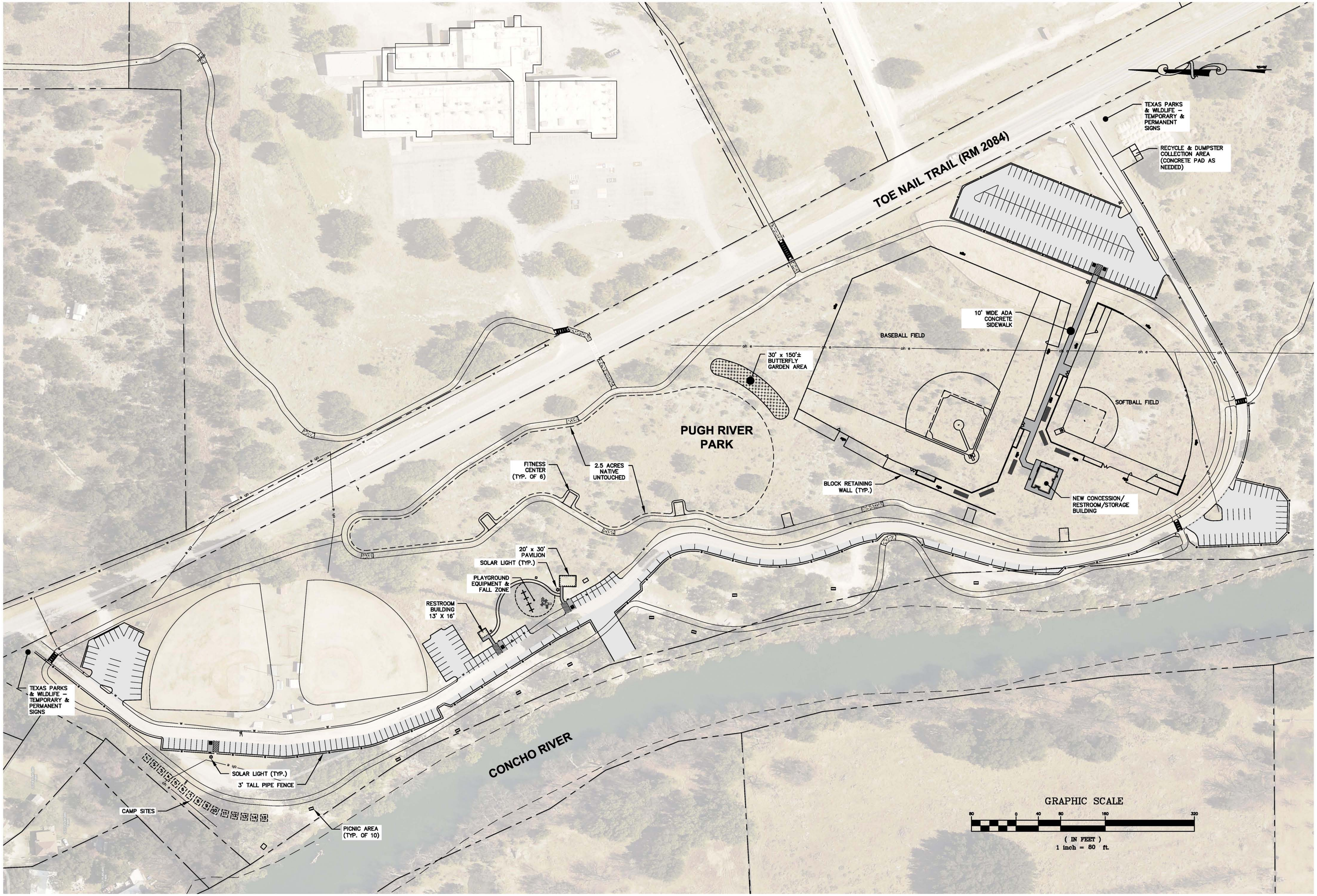

No.	Revisions and Descriptions	By	Date
3	ELECTRICAL PLANS ADDED & UPDATED DETAILS	TJF	5/13/20
2	ADDITIONAL BASEBALL & SOFTBALL DETAILS	TJF	5/4/20
1	REVISED PER COUNTY IRRIGATION & WATER	TJF	4/24/20

Copyright © 2020 MRB Group All Rights Reserved

Project Title:
TOM GREEN COUNTY PUGH PARK IMPROVEMENTS CHRISTOVAL, TEXAS

Drawing Title:
PUGH PARK MAP

Drawn By: JPJ / GNC
Checked By: KJM/ TJF
Scale: 1" = 80'
Date: 3/25/20

STATE OF TEXAS
THOMAS J. FROMBERGER
105564
LICENSED PROFESSIONAL ENGINEER
5/13/20

MRB group
Engineering, Architecture, Surveying, P.C.
5250 S 31st Street, Temple, Texas 76502 Phone: 254-771-2054
8834 N. Capital of Texas Highway, Suite 147, Austin, Texas 78759 Phone: (512) 436-8571
TBPE Firm Number: F-10615
www.mrbgrouptexas.com

Sheet No. **G-1**
of

Project No. **2054.19002**

N:\2054.19002.000\dwg\PUGH PARK\Site\Pugh Park - Site Base.dwg, 5/13/2020 9:10:22 PM, tfromberger

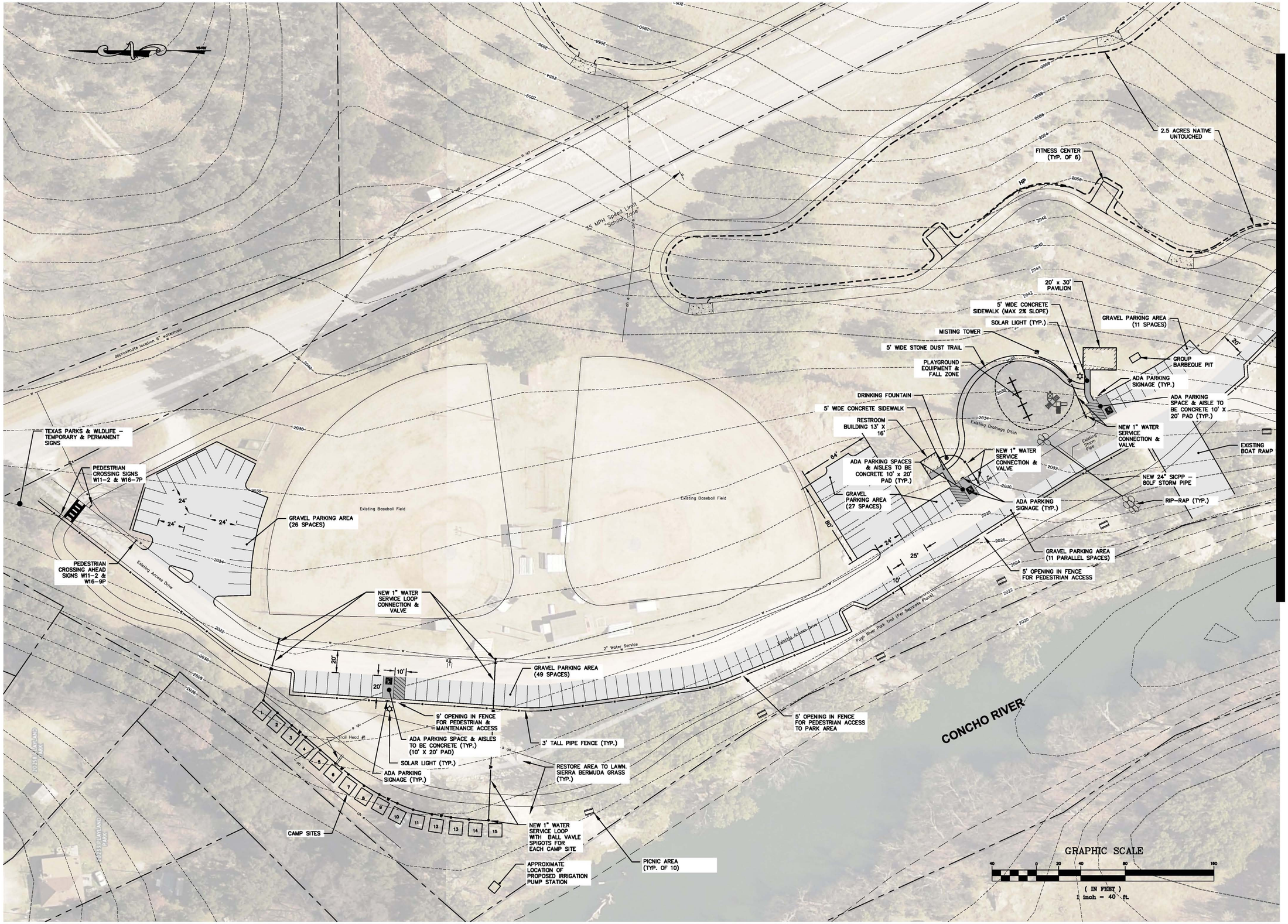

No.	Revisions and Descriptions	By	Date
3	ELECTRICAL PLANS ADDED & UPDATED DETAILS	TJF	5/13/20
2	ADDITIONAL BASEBALL & SOFTBALL DETAILS	TJF	5/4/20
1	REVISED PER COUNTY IRRIGATION & WATER	TJF	4/24/20

Copyright © 2020 MRB Group All Rights Reserved

Project Title:
TOM GREEN COUNTY
PUGH PARK IMPROVEMENTS
CHRISTOVAL, TEXAS

Drawing Title:
PUGH PARK NORTH

Drawn By: JFJ / CNC
Checked By: TJF
Scale: 1" = 40'
Date: 3/25/20

STATE OF TEXAS
THOMAS J. FRUMBERGER
105564
LICENSED PROFESSIONAL ENGINEER
5/13/20

MRB group
Engineering, Architecture, Surveying, P.C.
5250 S 31st Street, Temple, Texas 76502 Phone: 254-771-2054
8834 N. Capital of Texas Highway, Suite 147, Austin, Texas 78759 Phone: (512) 436-8571
TBPE Firm Number: F-10615
www.mrbgroupptx.com

Sheet No. G-2
of
Project No. 2054.19002

N:\2054.19002.000\dwg\PUGH PARK\Site\Pugh Park - Site Base.dwg, 5/13/2020 9:10:31 PM, tfrumberger

MATCH TO G-2

TOE NAIL TRAIL (RM 2084)

PUGH RIVER PARK

3' TALL PIPE FENCE

TEXAS PARKS & WILDLIFE – TEMPORARY & PERMANENT SIGNS

RECYCLE & DUMPSTER COLLECTION AREA (CONCRETE PAD AS NEEDED)

GRAVEL PARKING AREA (112 SPACES)

Existing Access Drive

30' (TYP.)

ADA PARKING SPACES & AISLES TO BE CONCRETE (30' X 20' PAD)

ADA PARKING SIGNAGE (TYP.)

SOLAR POWER LIGHT (TYP.)

Pugh River Park Trail (Per Separate Permit)

3' TALL PIPE FENCE

BULLPEN

BULLPEN

10' WIDE ADA CONCRETE SIDEWALK

3' TALL BLOCK RETAINING WALL

PEDESTRIAN CROSSING AHEAD SIGNS W11-2 & W16-9P

BASEBALL FIELD

30' x 150'± BUTTERFLY GARDEN AREA

DUGOUT

SOFTBALL FIELD

PEDESTRIAN CROSSING SIGNS W11-2 & W16-7P

Trail Head #2

BATTING CAGE

BASEBALL/SOFTBALL FIELD LIGHT POLES AND FIXTURES (TYP.)

BULLPEN

DUGOUT

DUGOUT

DUGOUT

3' TALL BLOCK RETAINING WALL

DRINKING FOUNTAIN

3' TALL BLOCK RETAINING WALL

GRAVEL PARKING AREA (32 SPACES)

NEW CONCESSION/ RESTROOM/STORAGE BUILDING

BATTING CAGE

BULLPEN

BLEACHERS (TYP.)

AREA RESERVED FOR SEPTIC SYSTEM (BY OTHERS)

NEW 2" WATER SERVICE CONNECTION & VALVE

PEDESTRIAN CROSSING AHEAD SIGNS W11-2 & W16-9P

PEDESTRIAN CROSSING SIGNS W11-2 & W16-7P

2" Water Service

GRAVEL PARKING AREA (19 PARALLEL SPACES)

Existing Access Drive

GRAVEL PARKING AREA (10 PARALLEL SPACES)

Existing Access Drive

3' TALL PIPE FENCE

5' OPENING IN FENCE FOR PEDESTRIAN ACCESS TO TRAIL

PICNIC AREA & TABLE (TYP.)

5' OPENING IN FENCE FOR PEDESTRIAN ACCESS TO PARK AREA

3' TALL PIPE FENCE

GRAPHIC SCALE

(IN FEET)
1 inch = 40 ft.

LEGEND

- EXISTING PROPERTY LINE
- PROPOSED DRAINAGE PATH
- 2062 EXISTING CONTOUR
- 2062 PROPOSED CONTOUR
- EXISTING WATERMAIN
- oh e EXISTING OVERHEAD ELECTRIC
- guy UTILITY POLE WITH GUY
- EXISTING SIGN

No.	Revisions and Descriptions	By	Date
3	ELECTRICAL PLANS ADDED & UPDATED DETAILS	TJF	5/13/20
2	ADDITIONAL BASEBALL & SOFTBALL DETAILS	TJF	5/4/20
1	REVISED PER COUNTY IRRIGATION & WATER	TJF	4/24/20

Copyright © 2020 MRB Group All Rights Reserved

Project Title:
TOM GREEN COUNTY
PUGH PARK IMPROVEMENTS
CHRISTOVAL, TEXAS

Drawing Title:
PUGH PARK SOUTH

Drawn By: JPJ / CNC
Checked By: KJM / TJF
Scale: 1" = 40'
Date: 3/25/20

STATE OF TEXAS
THOMAS J. FROMBERGER
105564
LICENSED PROFESSIONAL ENGINEER
5/13/20

MRB group
Engineering, Architecture, Surveying, P.C.
5290 S.31st Street, Temple, Texas 76502 Phone: 254-771-2054
8834 N. Capital of Texas Highway, Suite 147, Austin, Texas 78759 Phone: (512) 436-8571
TBPE Firm Number: F-10615
www.mrbgroupteam.com

Sheet No. G-3
of
Project No. 2054.19002

N:\2054.19002.000\dwg\PUGH PARK\Site\Pugh Park - Site Base.dwg, 5/13/2020 9:10:39 PM, tfromberger

IRRIGATION LAYOUT LONG TRAIL DETAIL

N.T.S.

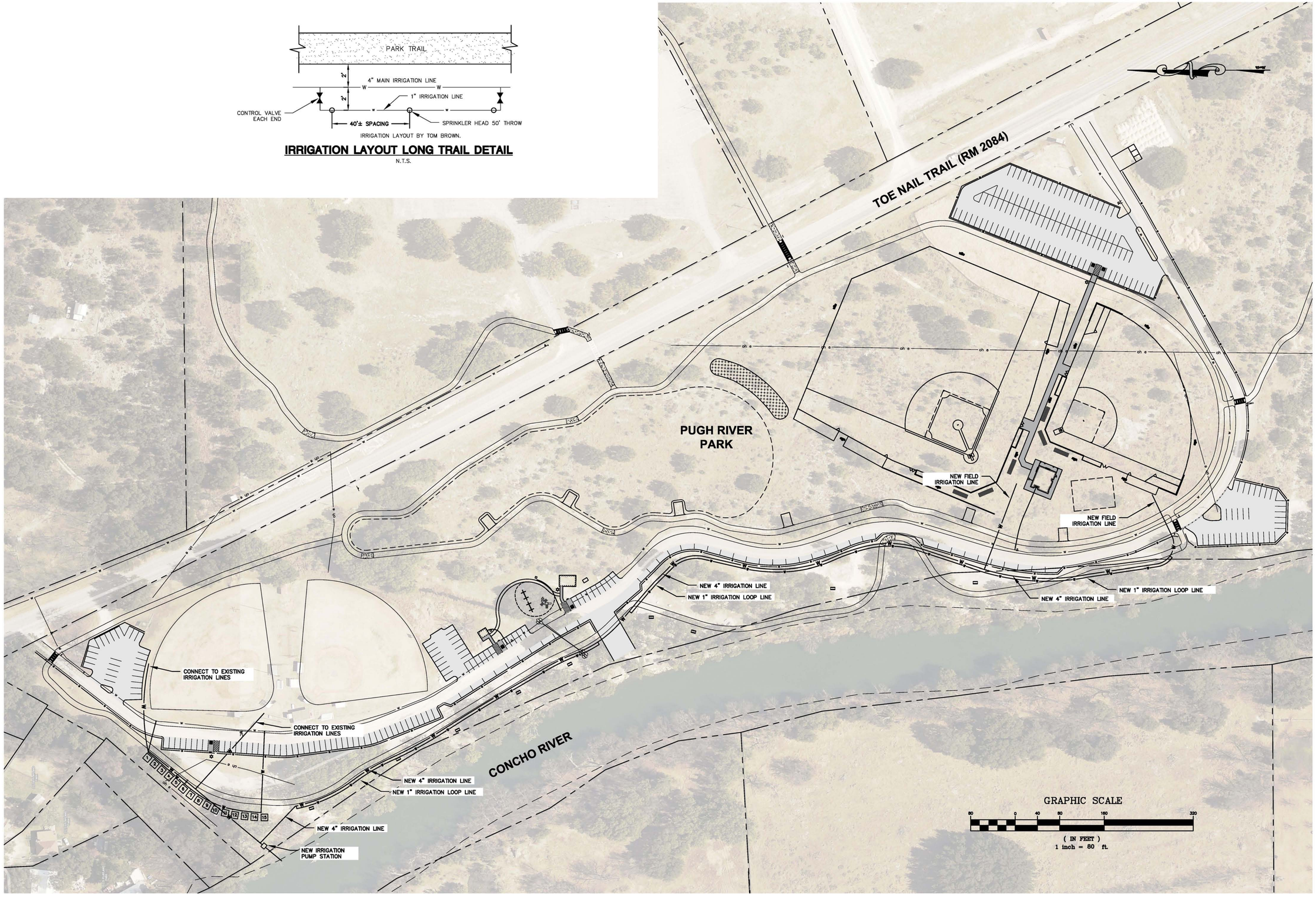

No.	Revisions and Descriptions	By	Date
3	ELECTRICAL PLANS ADDED & UPDATED DETAILS	TJF	5/13/20
2	ADDITIONAL BASEBALL & SOFTBALL DETAILS	TJF	5/4/20
1	REVISED PER COUNTY IRRIGATION & WATER	TJF	4/24/20

Copyright © 2020 MRB Group All Rights Reserved

Project Title:
TOM GREEN COUNTY
PUGH PARK IMPROVEMENTS
CHRISTOVAL, TEXAS

Drawing Title:
IRRIGATION PLAN

Drawn By: JPJ / CNC
Checked By: TJF
Scale: 1" = 80'
Date: 3/25/20

STATE OF TEXAS
THOMAS J. FRUMBERGER
105564
LICENSED
PROFESSIONAL ENGINEER
5/13/20

MRB group
Engineering, Architecture, Surveying, P.C.
5250 S 31st Street, Temple, Texas 76502 Phone: 254-771-2054
8834 N. Capital of Texas Highway, Suite 147, Austin, Texas 78759 Phone: (512) 436-8571
TBPE Firm Number: F-10615
www.mrbgroupcoats.com

Sheet No. G-4
of

Project No. 2054.19002

N:\2054.19002.000\dwg\PUGH PARK\Site\Pugh Park - Site Base.dwg, 5/13/2020 9:10:48 PM, tfromberger

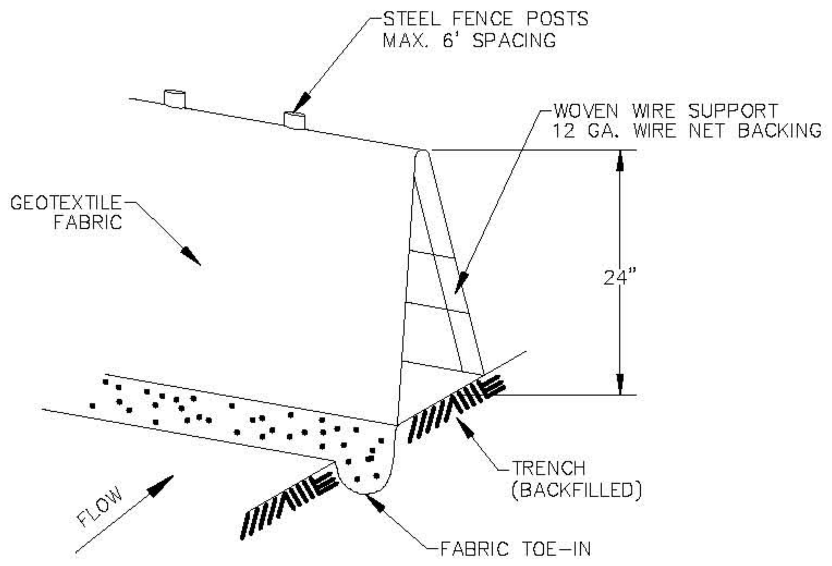

STANDARD SYMBOL FOR
SILT FENCE (SF)

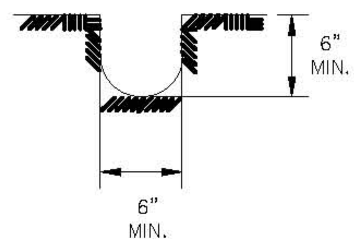

TRENCH CROSS SECTION

NOTES

1. STEEL POSTS WHICH SUPPORT THE SILT FENCE SHALL BE INSTALLED ON A SLIGHT ANGLE TOWARD THE ANTICIPATED RUNOFF SOURCE. POST MUST BE EMBEDDED A MINIMUM OF 18".
2. THE TOE OF THE SILT FENCE SHALL BE TRENCHED IN WITH A SPADE OR MECHANICAL TRENCHER, SO THAT THE DOWNSLOPE FACE OF THE TRENCH IS FLAT AND PERPENDICULAR TO THE LINE OF FLOW. WHERE FENCE CAN NOT BE TRENCHED INTO THE SURFACE (E.G. PAVEMENT), THE FABRIC FLAP SHALL BE WEIGHTED DOWN WITH WASHED GRAVEL ON UPHILL SIDE TO PREVENT FLOW UNDER FENCE.
3. THE TRENCH MUST BE A MINIMUM OF 6" DEEP AND 6" WIDE TO ALLOW FOR THE SILT FENCE FABRIC TO BE LAID IN THE GROUND AND BACKFILLED WITH COMPACTED MATERIAL.
4. SILT FENCE SHOULD BE SECURELY FASTENED TO EACH STEEL SUPPORT POST OR TO WOVEN WIRE, WHICH IS IN TURN ATTACHED TO THE STEEL FENCE POST.
5. INSPECTION SHALL BE MADE WEEKLY OR AFTER EACH RAINFALL EVENT AND REPAIR OR REPLACEMENT SHALL BE MADE PROMPTLY AS NEEDED.
6. SILT FENCE SHALL BE REMOVED WHEN THE SITE IS COMPLETELY STABILIZED SO AS NOT TO BLOCK OR IMPEDE STORM FLOW OR DRAINAGE.
7. ACCUMULATED SILT SHALL BE REMOVED WHEN IT REACHES A DEPTH OF 6". THE SILT SHALL BE DISPOSED OF ON AN APPROVED SITE AND IN SUCH A MANNER THAT WILL NOT CONTRIBUTE TO ADDITIONAL SILTATION.
8. ALL EROSION CONTROL MEASURES MUST CONFORM TO TCEQ REQUIREMENTS FOR NON-POINT SOURCE POLLUTION.

SILT FENCE

N.T.S.

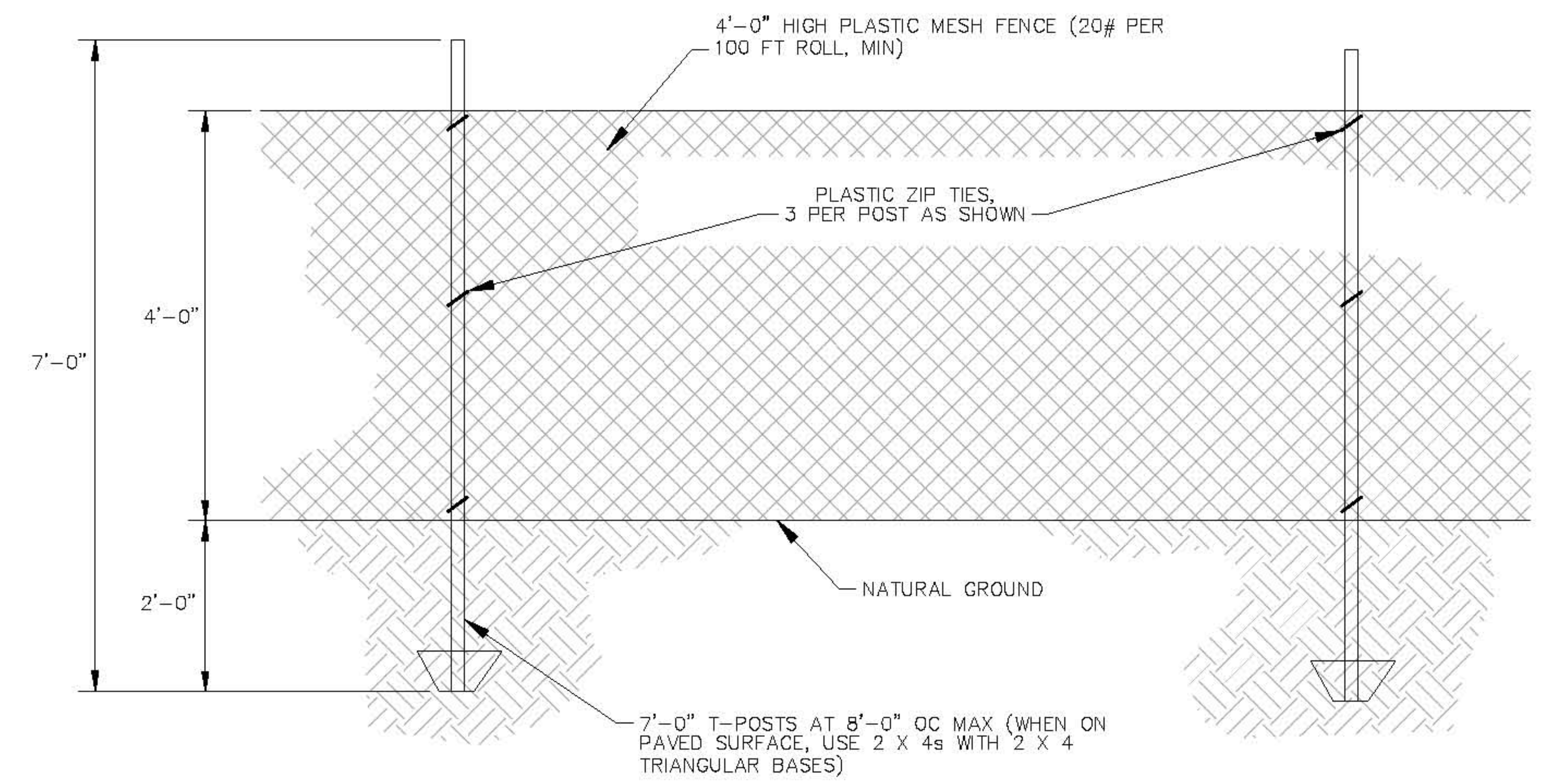

SAFETY FENCE DETAIL

N.T.S.

NOTE:

1. REMOVE AND DISPOSE OF DUFF AND TOP ORGANIC LAYERS DOWN TO MINERAL SOIL
2. COMPACT BACKFILL IN 6" INCH LIFTS UNTIL NO VISUAL DISPLACEMENT.

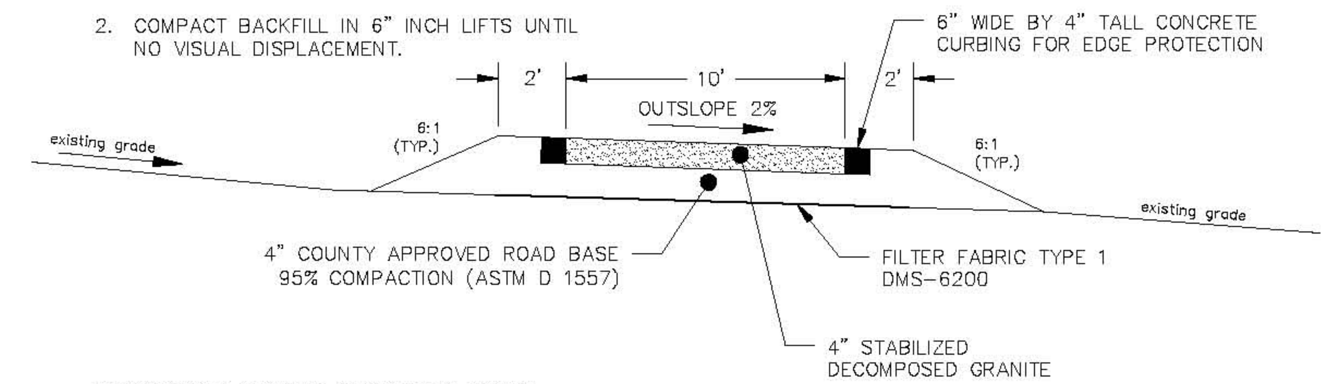

DECOMPOSED GRANITE COMPACTION NOTES:

1. COMPACT STABILIZED AGGREGATE TO 85% RELATIVE COMPACTION BY EQUIPMENT SUCH AS; A 2 TO 5 TON DOUBLE DRUM ROLLER MAKING 3 TO 4 PASSES. DO NOT BEGIN COMPACTION FOR 6 HOURS AFTER PLACEMENT AND UP TO 72 HOURS. DO NOT USE VIBRATORY PLATE COMPACTOR OF VIBRATION FEATURE ON ROLLER, AS VIBRATION SEPARATES LARGE AGGREGATE PARTICLES. IF PUMPING OR PANCAKING OF SURFACE OCCURS, SURFACE IS STILL TOO WET TO ROLL.
2. LIGHTLY SPRAY SURFACE AREA FOLLOWING COMPACTION. DO NOT DISTURB AGGREGATE SURFACE WITH SPRAY ACTION.

DECOMPOSED GRANITE TRAIL

N.T.S.

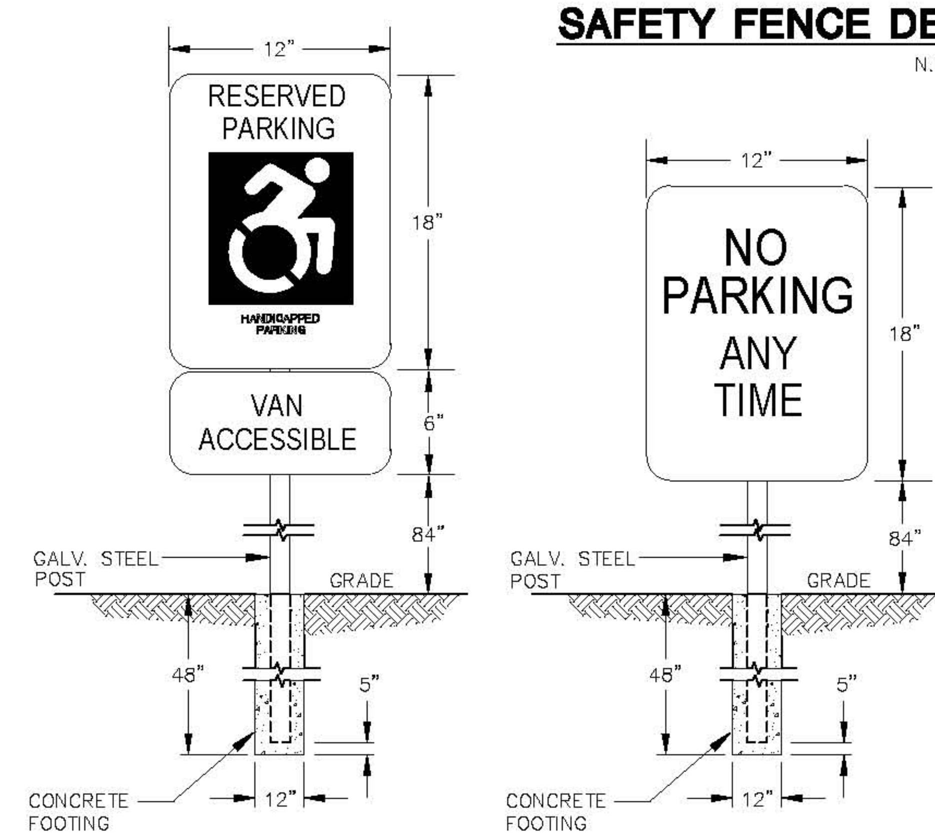

ACCESSIBLE PARKING SIGN DETAILS

N.T.S.

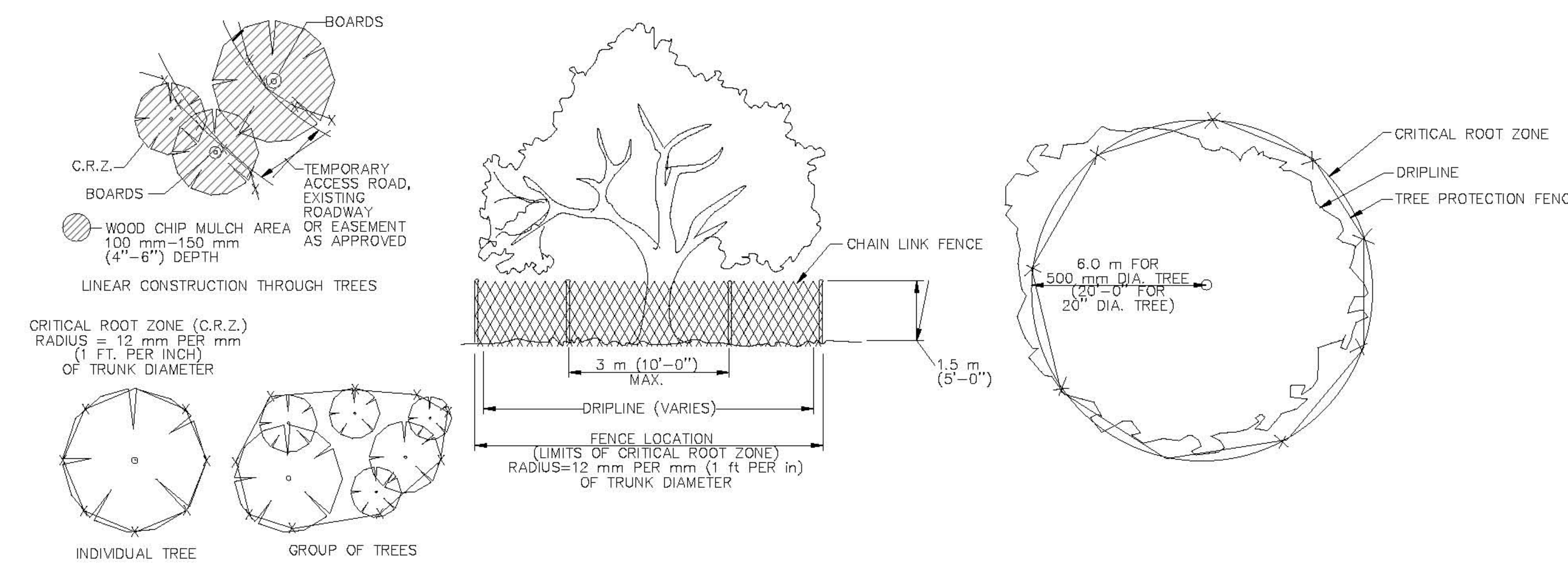

TREE PROTECTION DETAIL

N.T.S.

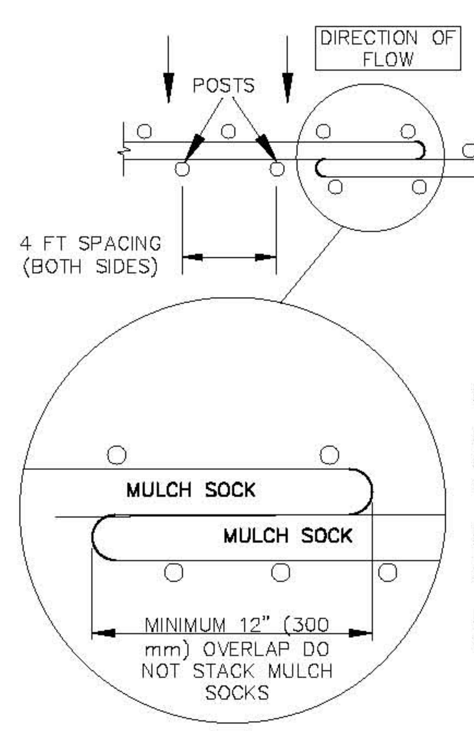

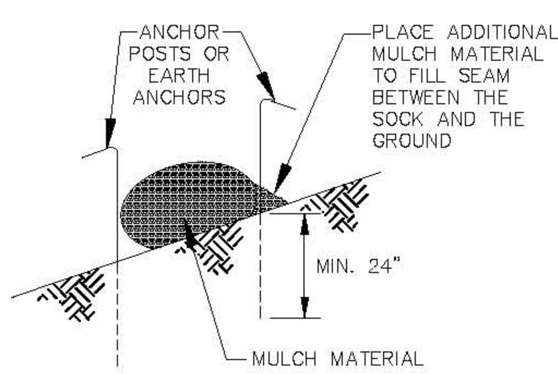

MULCH SOCK MATERIAL

USE UNTREATED WOOD CHIPS PRODUCED FROM A 3 (THREE) INCH MINUS SCREENING PROCESS (EQUIVALENT TO TXDOT ITEM 161, COMPOST, SECTION 1.6.2.B, WOOD CHIP REQUIREMENTS).

MULCH CONSISTS PRIMARILY OF ORGANIC MATERIAL, SEPARATED AT THE POINT OF GENERATION, AND MAY INCLUDE: SHREDDED BARK, STUMP GRINDINGS, OR COMPOSTED BARK.

LARGE PORTIONS OF SILT, CLAYS, OR FINE SANDS ARE NOT ACCEPTABLE IN THE MULCH.

NOTES:

1. STEEL OR WOOD POSTS WHICH SUPPORT THE MULCH SOCK SHALL BE INSTALLED ON A SLIGHT ANGLE TOWARD THE ANTICIPATED RUNOFF SOURCE. POST MUST BE EMBEDDED A MINIMUM OF 600mm (24 inches). IF WOOD POSTS CANNOT ACHIEVE 600mm (24 inches) DEPTH, USE STEEL POSTS. EARTH ANCHORS ARE ALSO ACCEPTABLE.

2. THE TOE OF THE MULCH SOCK SHALL BE PLACED SO THAT THE MULCH SOCK IS FLAT AND PERPENDICULAR TO THE LINE OF FLOW. IN ORDER TO PREVENT WATER FROM FLOWING BETWEEN THE JOINTS OF ADJACENT ENDS OFMULCH SOCKS, LAP THE ENDS OF ADJACENT MULCH SOCKS A MINIMUM OF 300mm (12 inches).

3. MULCH MATERIAL MUST BE FREE OF REFUSE, PHYSICAL CONTAMINANTS, AND MATERIAL TOXIC TO PLANT GROWTH; IT IS NOT ACCEPTABLE FOR THE MULCH MATERIAL TO CONTAIN GROUND CONSTRUCTION DEBRIS, BIOSOLIDS, OR MANURE.

4. SOCK MATERIAL WILL BE 100% BIODEGRADABLE, PHOTODEGRADABLE, OR RECYCLABLE SUCH AS BURLAP, TWINE, UV PHOTOBIODEGRADABLE PLASTIC, POLYESTER, OR ANY OTHER ACCEPTABLE MATERIAL.

5. MULCH SOCKS SHOULD BE USED AT THE BASE OF SLOPES NO STEEPER THAN 2:1 AND SHOULD NOT EXCEED THE MAXIMUM SPACING CRITERIA PROVIDED IN CITY OF AUSTIN ENVIRONMENTAL CRITERIA MANUAL TABLE 1.4.5.F.1 FOR A GIVEN SLOPE CATEGORY.

6. ACCUMULATED SILT SHALL BE REMOVED WHEN IT REACHES A DEPTH OF 150mm (6 inches). THE SILT SHALL BE DISPOSED OF ON AN APPROVED SITE AND IN SUCH A MANNER THAT WILL NOT CONTRIBUTE TO ADDITIONAL SILTATION.

MULCH STOCK

N.T.S.

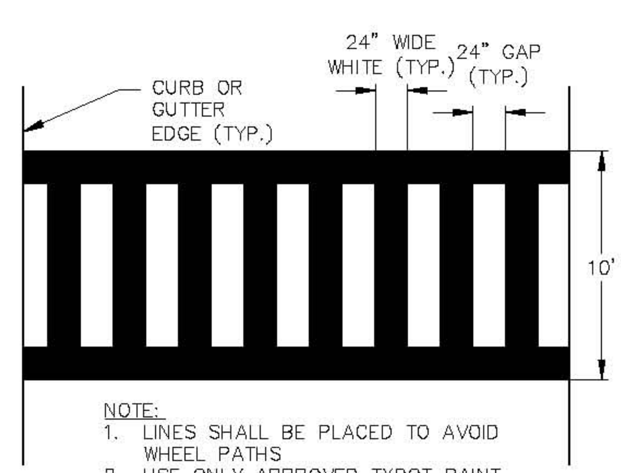

NOTE:
1. LINES SHALL BE PLACED TO AVOID WHEEL PATHS
2. USE ONLY APPROVED TXDOT PAINT.

CONTINENTAL CROSSWALK DETAIL

N.T.S.

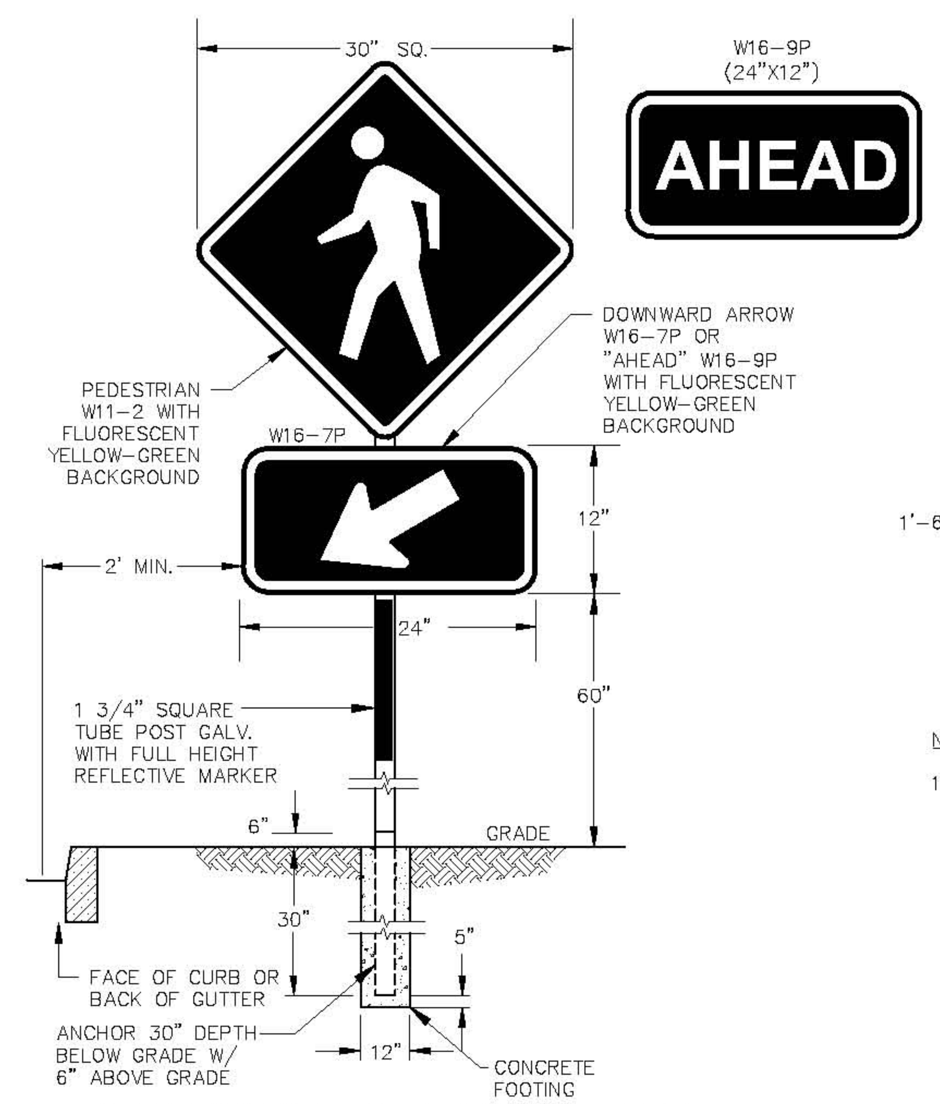

PEDESTRIAN CROSSING SIGN

N.T.S.

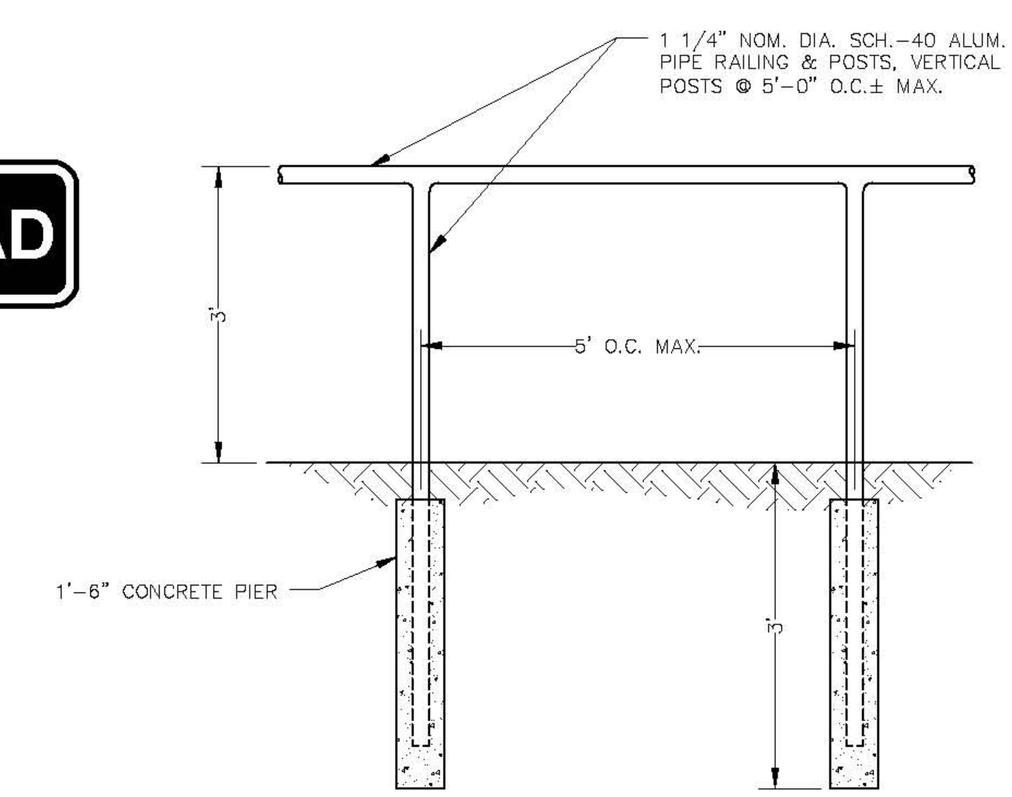

NOTES:

1. FULLY COVER ALUMINUM SURFACES TO BE IN CONTACT WITH CONCRETE WITH A HEAVY ASPHALTIC OR OTHER BITUMASTIC PAINT.

3' TALL PIPE RAIL DETAIL

(N.T.S.)

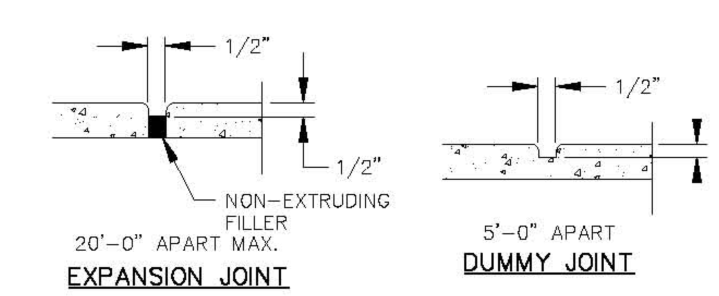

SIDEWALK CONSTRUCTION JOINTS

N.T.S.

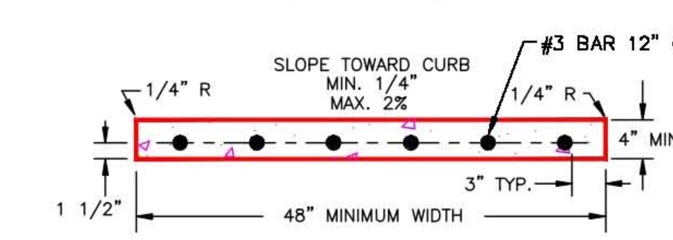

SIDEWALK SECTION DETAIL

(1) EXPANSION JOINT WITH JOINT FILLER
(2) CONTRACTION JOINT

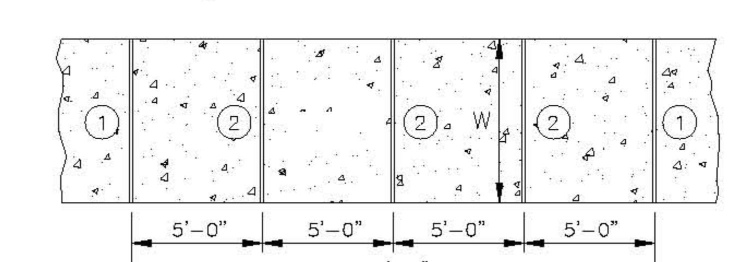

SIDEWALK DETAIL

N.T.S.

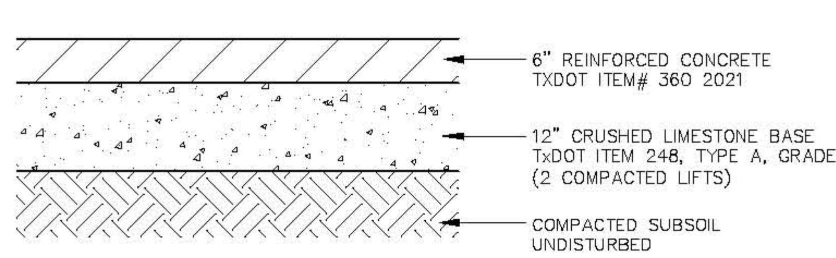

CONCRETE PAVEMENT CROSS SECTION

N.T.S.

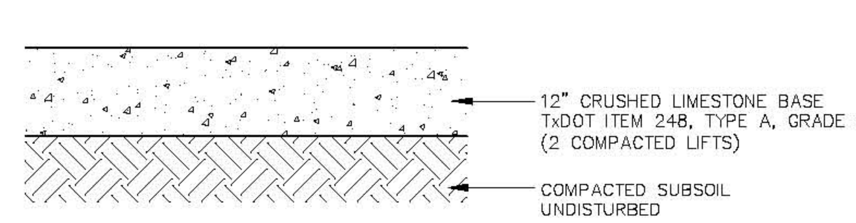

GRAVEL DRIVE CROSS SECTION

N.T.S.

No.	Revisions and Descriptions	By	Date
3	ELECTRICAL PLANS ADDED & UPDATED DETAILS	TJF	5/13/20
2	ADDITIONAL BASEBALL & SOFTBALL DETAILS	TJF	5/4/20
1	REVISED PER COUNTY IRRIGATION & WATER	TJF	4/24/20

Copyright © 2020 MRB Group All Rights Reserved

Project Title:
TOM GREEN COUNTY
PUGH PARK IMPROVEMENTS
CHRISTOVAL, TEXAS

Drawing Title:
DETAILS

Drawn By: JPJ / CNC
Checked By: TJF
Scale: AS SHOWN
Date: 3/25/20

MRB group
Engineering, Architecture, Surveying, P.C.
5250 S 31st Street, Temple, Texas 76502 Phone: 254-771-2054
8834 N. Capital of Texas Highway, Suite 147, Austin, Texas 78759 Phone: (512) 436-8571
TBPE Firm Number: F-10615
www.mrbgrouptexas.com

Sheet No. **D-1**

of

Project No.
2054.19002

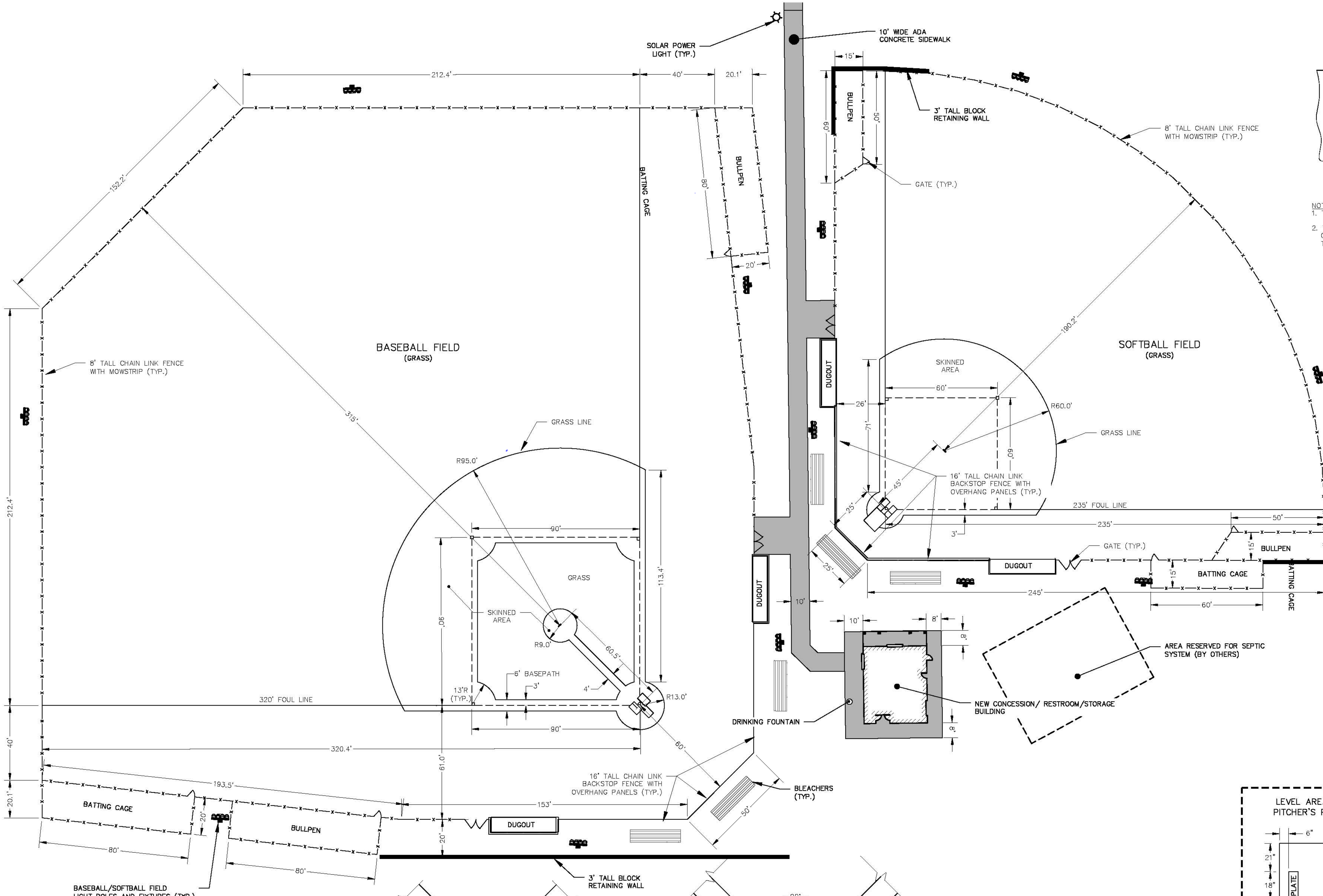

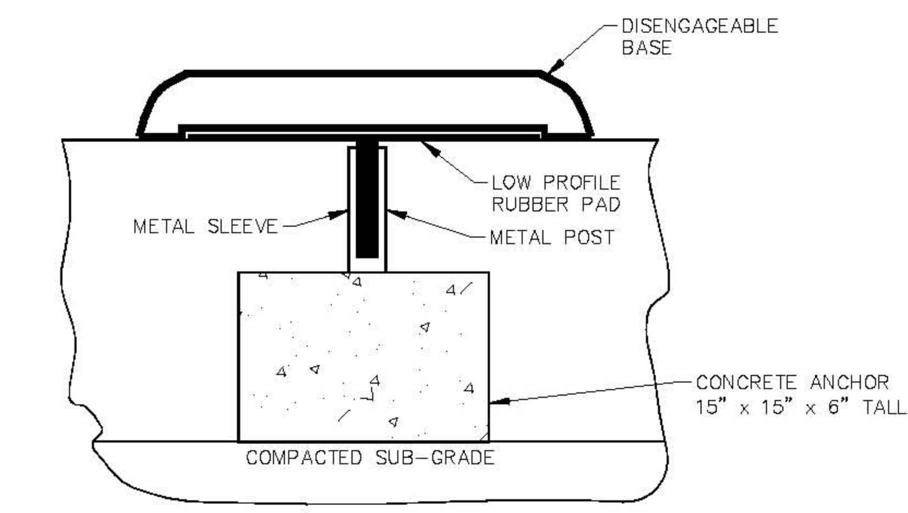

NOTES:
1. THE BASE MUST DISLODGE FROM ITS ANCHOR.

2. THE LOW PROFILE PAD SHALL BE AT GRADE LEVEL SO IT CAN BE LEFT IN PLACE WHEN BASES ARE MOVED BETWEEN THE 46' AND 50' FIELDS.

BASE ANCHOR DETAIL

N.T.S.

NOTE:
USE MAR-CO MOUND CLAY WITH MAR-CO INFIELD MIX OR EQUIVALENT ON PITCHER'S MOUND, BATTER'S BOX AND PITCHER'S BOX, AND TURFACE PRO LEAGUE WITH MAR-CO INFIELD MIX ON HOME PLATE AND INFIELD.

ON MOUND, USE MOUND CLAY WITH 2" LAYER OF INFIELD MIX. ON INFIELD, USE 3" DEPTH OF MAR-CO INFIELD MIX, AND NAIL-DRAG 3 TONS OF TURFACE PRO LEAGUE INTO TOP 1"-1.5" OF INFIELD MIX. USE INFIELD MIX ON BASEPATHS AND 6" AROUND IMMEDIATE BASE AREAS.

INSTALL MAR-CO PITCHING MOUND PLATES AND HOME PLATE, OR EQUIVALENT, PER MANUFACTURER'S REQUIREMENTS.

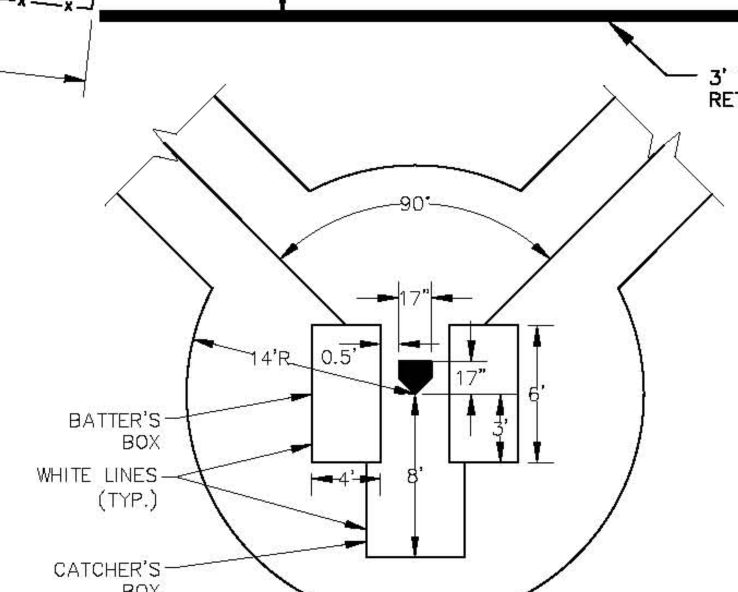

BASEBALL HOME PLATE DETAIL

N.T.S.

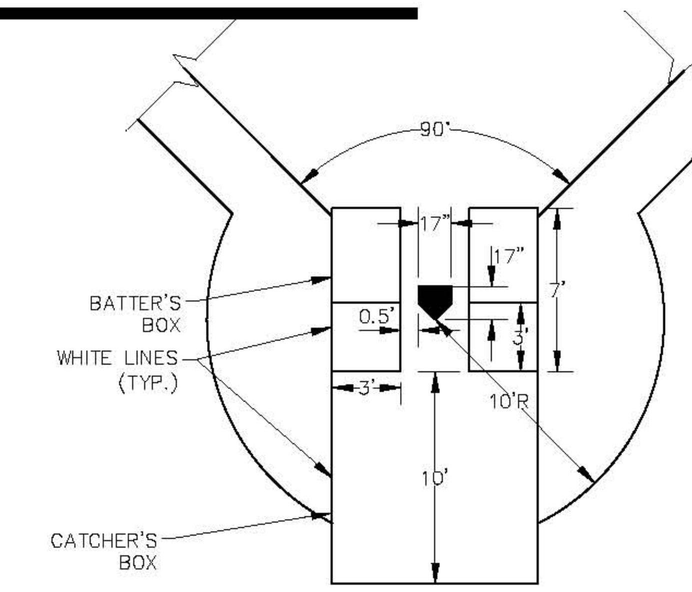

SOFTBALL HOME PLATE DETAIL

N.T.S.

NOTES:
1. CONTOUR MOUND WITH A GRADUAL/EVEN DEGREE OF SLOPE BETWEEN LEVEL AREAS AND FROM LEVEL AREAS TO THE OUTER PERIMETER.

2. THE ELEVATION OF THE PITCHER'S PLATE ABOVE HOME PLATE (10") CAN BE ACCOMPLISHED BY BUILDING UP THE MOUND, BY GRADING FROM HOME PLATE TO THE PITCHER'S PLATE, OR BY A COMBINATION OF THE TWO.

3. A PITCHER'S MOUND IS NOT PROVIDED FOR SOFTBALL (PITCHER'S PLATE IS FLUSH WITH GROUND).

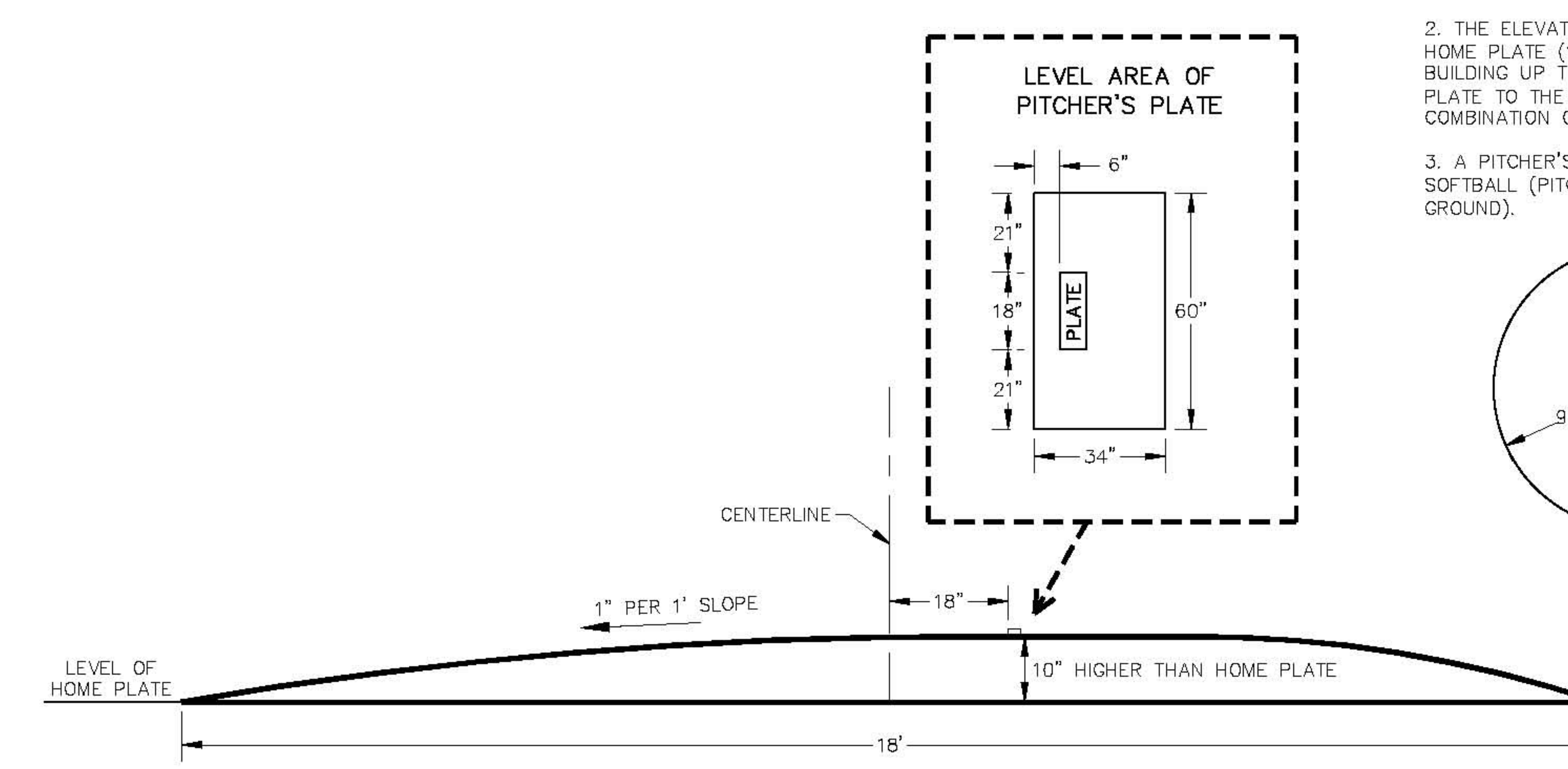

SECTION

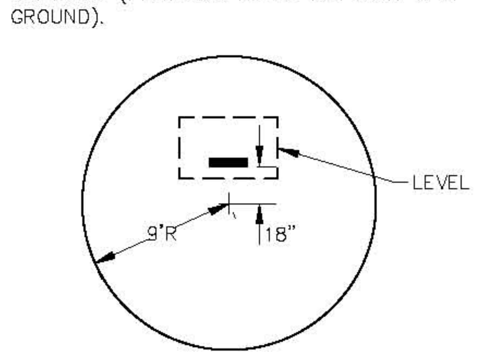

PLAN

BASEBALL PITCHER'S MOUND DETAILS

N.T.S.

No.	Revisions and Descriptions	By	Date
3	ELECTRICAL PLANS ADDED & UPDATED DETAILS	TJF	5/13/20
2	ADDITIONAL BASEBALL & SOFTBALL DETAILS	TJF	5/4/20
1	REVISED PER COUNTY IRRIGATION & WATER	TJF	4/24/20

Copyright © 2020 MRB Group All Rights Reserved

Project Title:
TOM GREEN COUNTY PUGH PARK IMPROVEMENTS CHRISTOVAL, TEXAS

Drawing Title:
DETAILS

Drawn By: JPJ / CNC
Checked By: TJF
Scale: 1" = 30'
Date: 3/25/20

THOMAS J. FROMBERGER 105594 LICENSED PROFESSIONAL ENGINEER — STATE OF TEXAS
5/13/20

MRB group
Engineering, Architecture, Surveying, P.C.
5250 S 31st Street, Temple, Texas 76502 Phone: 254-771-2054
8834 N. Capital of Texas Highway, Suite 147, Austin, Texas 78759 Phone: (512) 436-8571
TBPE Firm Number: F-10615
www.mrbgroupteaxs.com

Sheet No. D-2 of

Project No. 2054.19002

N:\2054.19002.000\dwg\PUGH PARK\Site\Pugh Park - Details.dwg, 5/13/2020 9:58:04 PM, tfromberger

Tom Green County
Pugh Park Project

With Funding Assistance through

LAND AND WATER CONSERVATION FUND

U.S. Department of the Interior, National Park Service

Administered by the Texas State Parks & Wildlife Department

48"

Land and Water Conservation Fund	50%	$500,000
Tom Green County	50%	$500,000
Total Project		$1,000,000

3" Text

2" Text

3" Text

2" Text

2" Text

NOTE: MOUNT SIGN TO PAINTED PLYWOOD ON (2) 4x4 POSTS, LOCATE AT ENTRANCE TO PARK

96"

TEMPORARY SIGNAGE

18"

TEXAS PARKS & WILDLIFE

A LAND AND WATER CONSERVATION FUND PROGRAM PROJECT

Funding Assistance through
U.S. Department of the Interior, National Park Service
Administered by Texas Parks & Wildlife Department

1" TEXT

5/8" TEXT

NOTE: SIGNAGE MATERIALS TBD BY OWNER

24"

PERMANENT SIGNAGE / PLAQUE

No.	Revisions and Descriptions	By	Date

Copyright © 2018 MRB Group All Rights Reserved

Project Title: TOM GREEN COUNTY PUGH PARK IMPROVEMENTS CHRISTOVAL, TEXAS

Drawing Title: SIGNAGE - TEMPORARY & PERMANENT

Drawn By: CNC | Checked By: RS | Scale: 3" = 1'-0" | Date: 02/25/2020

REGISTERED ARCHITECT TANYA L. MIKESKA 16 STATE OF TEXAS 2-25-2020

MRB group
Engineering, Architecture & Surveying
5250 South 31st Street, Temple, Texas 76502 Phone: 254-771-2054
Corporate Office: The Culver Road Armory, 145 Culver Road, Suite 160, Rochester, New York 14620
Phone: 585-381-9250
TBPE Firm Number: F-10615
www.mrbgroup.com

Sheet No. A1.01 of

Project No. 2054.19002

3/26/2020 2:08:06 PM

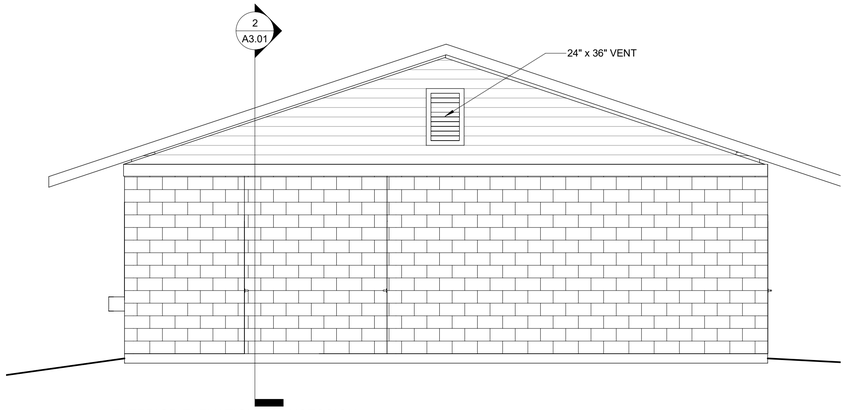

EXTERIOR ELEVATION - CONCESSION (WEST)
3 1/4" = 1'-0"

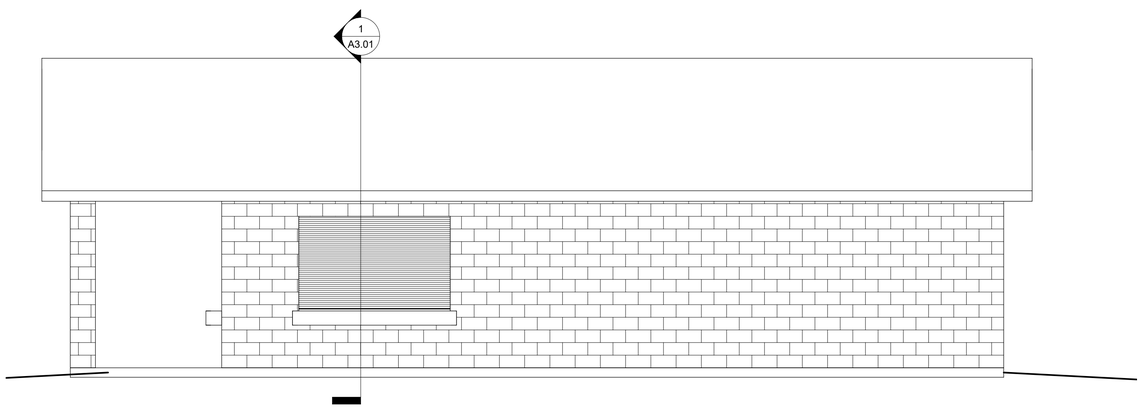

EXTERIOR ELEVATION - CONCESSION (NORTH)
4 1/4" = 1'-0"

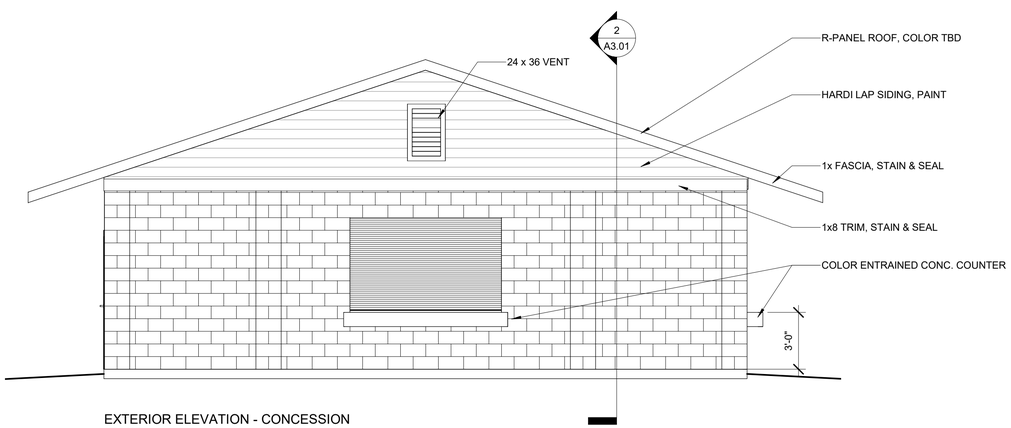

EXTERIOR ELEVATION - CONCESSION (EAST)
2 1/4" = 1'-0"

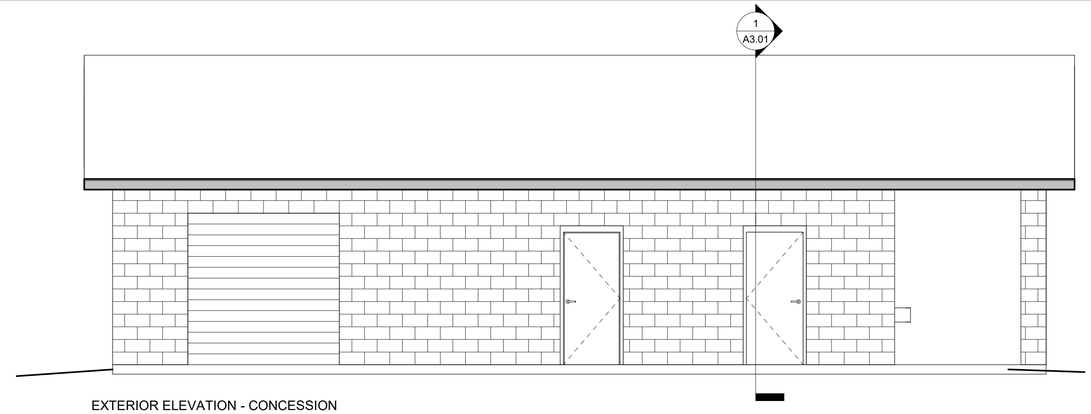

EXTERIOR ELEVATION - CONCESSION (SOUTH)
5 1/4" = 1'-0"

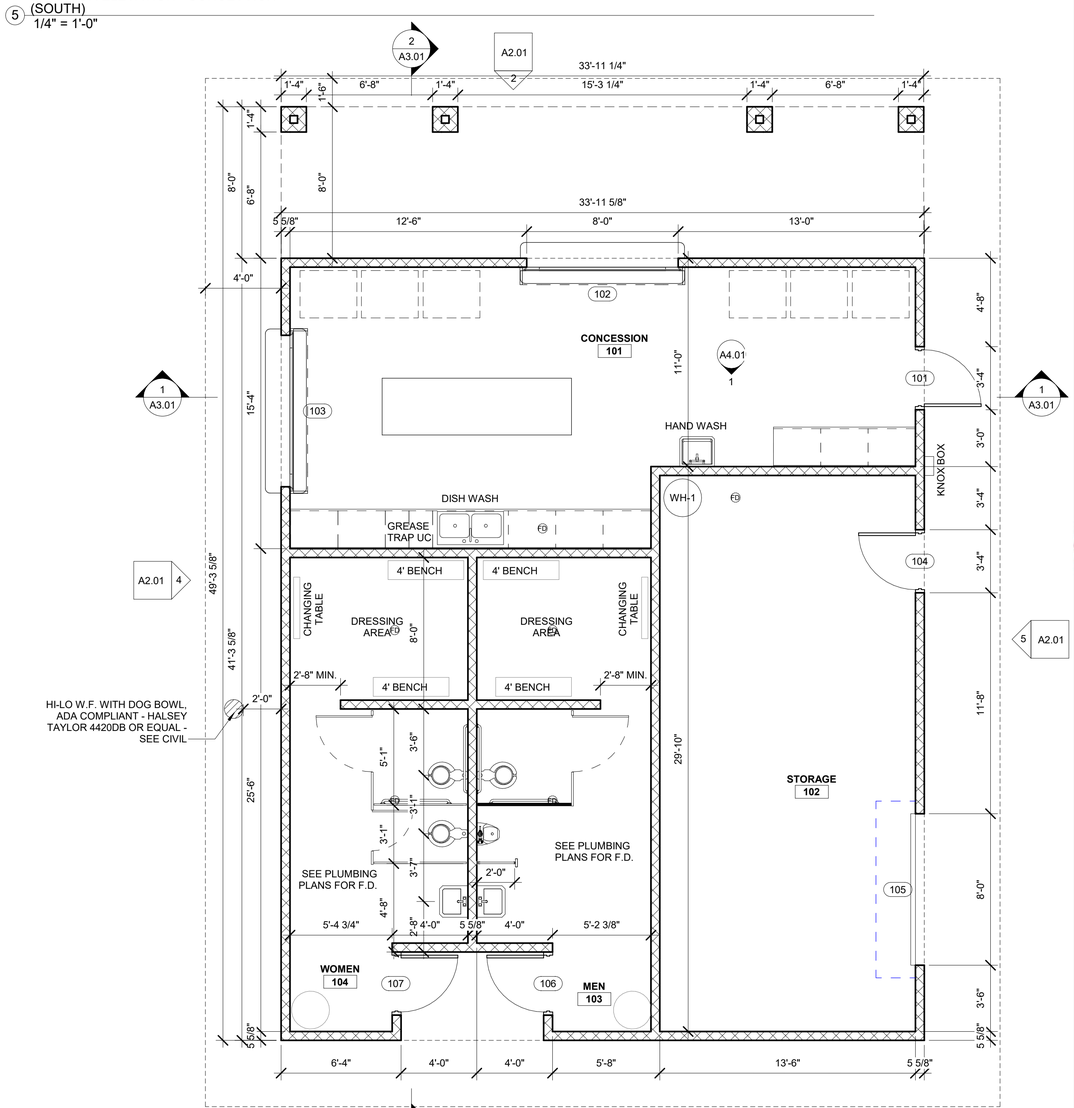

FLOOR PLAN - CONCESSION
1 1/4" = 1'-0"

No.	Revisions and Descriptions	By	Date

Copyright © 2018MRB Group All Rights Reserved

Project Title:
TOM GREEN COUNTY
PUGH PARK IMPROVEMENTS
CHRISTOVAL, TEXAS

Drawing Title:
PLAN & ELEVATIONS - CONCESSION

Drawn By: CNC
Checked By: RS
Scale: 1/4" = 1'-0"
Date: 02/25/2020

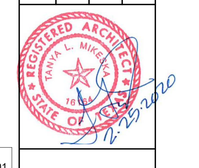

MRB group
Engineering, Architecture & Surveying
5250 South 31st Street, Temple, Texas 76502 Phone: 254.771.2054
Corporate Office: The Culver Road Armory, 145 Culver Road, Suite 160, Rochester, New York 14620
Phone: 585-381-9250
TBPE Firm Number: F-10615
www.mrbgroup.com

Sheet No.
A2.01
of

Project No.
2054.19002

3/26/2020 2:08:07 PM

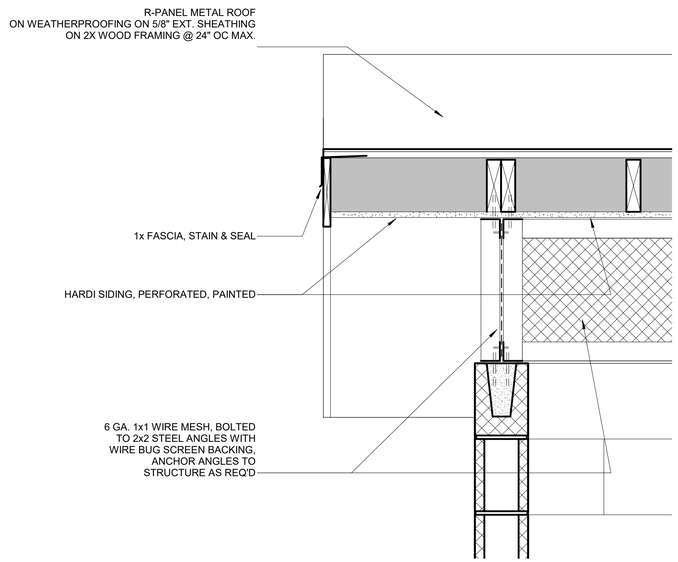

9 BUG SCREEN DETAIL
1 1/2" = 1'-0"

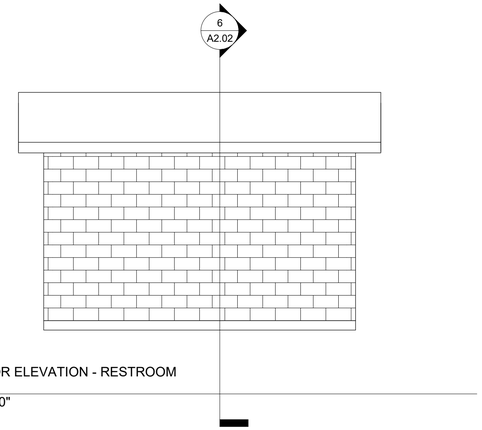

5 EXTERIOR ELEVATION - RESTROOM (WEST)
1/4" = 1'-0"

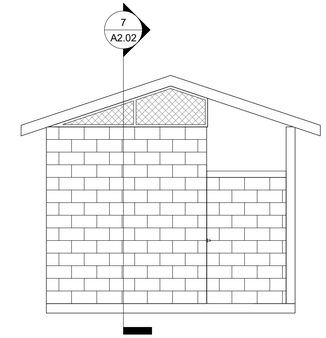

3 EXTERIOR ELEVATION - RESTROOM (SOUTH)
1/4" = 1'-0"

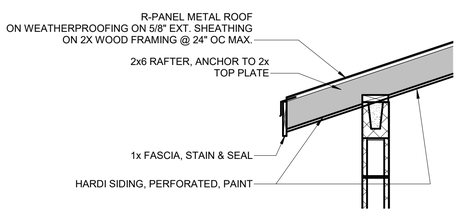

8 WALL DETAIL - RESTROOM
3/4" = 1'-0"

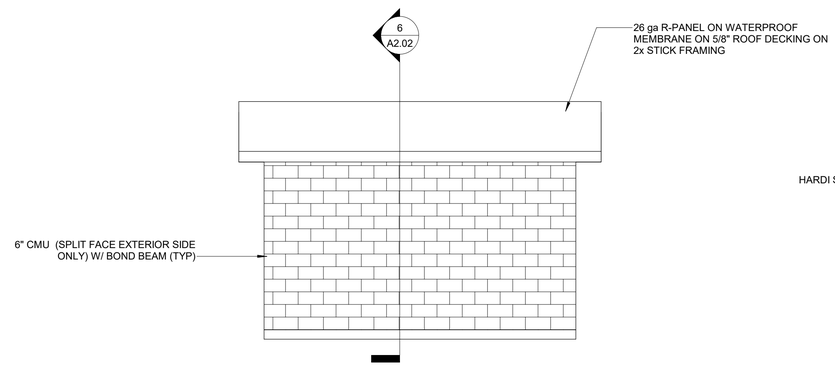

4 EXTERIOR ELEVATION - RESTROOM (EAST)
1/4" = 1'-0"

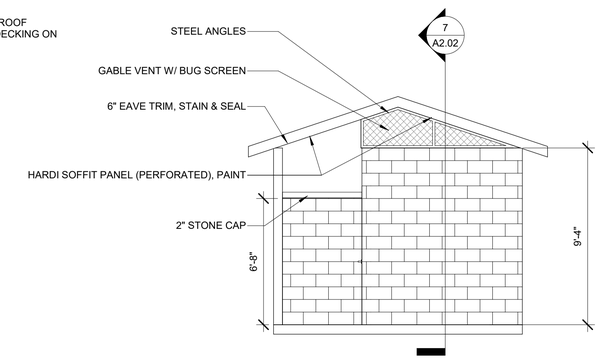

2 EXTERIOR ELEVATION - RESTROOM (NORTH)
1/4" = 1'-0"

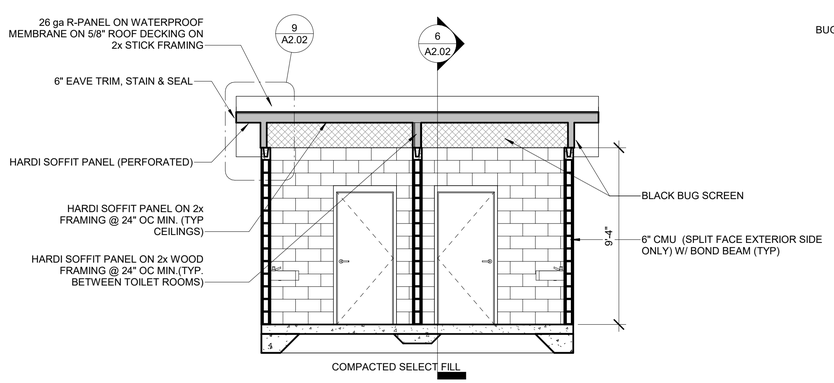

7 BUILDING SECTION - RESTROOM2
1/4" = 1'-0"

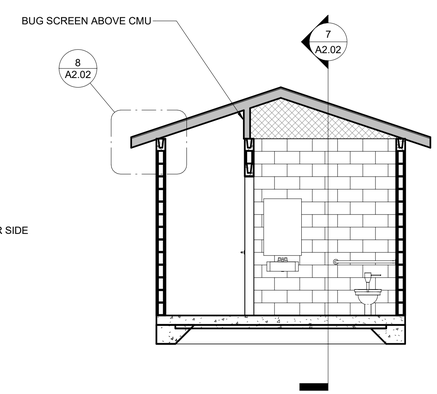

6 BUILDING SECTION - RESTROOM
1/4" = 1'-0"

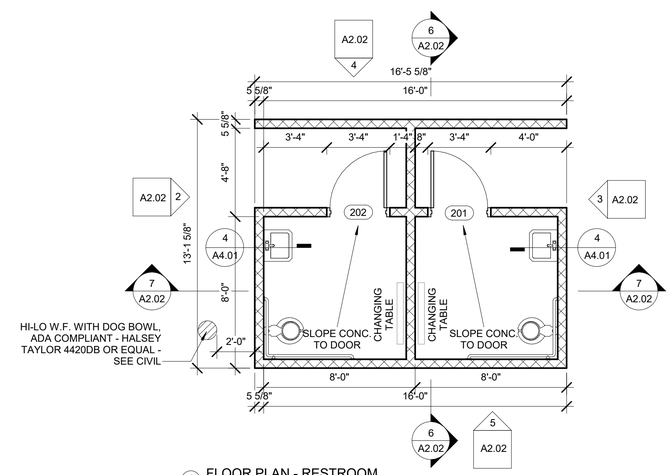

1 FLOOR PLAN - RESTROOM
1/4" = 1'-0"

No.	Revisions and Descriptions	By	Date

Copyright © 2018MRB Group All Rights Reserved

Project Title:
TOM GREEN COUNTY
PUGH PARK IMPROVEMENTS
CHRISTOVAL, TEXAS

Drawing Title:
PLAN & ELEVATIONS - RESTROOMS

Drawn By: CNC
Checked By: RS
Scale: As indicated
Date: 02/25/2020

MRB group
Engineering, Architecture & Surveying
5250 South 31st Street, Temple, Texas 76502 Phone: 254.771.2054
Corporate Office: The Culver Road Armory, 145 Culver Road, Suite 160, Rochester, New York 14620
Phone: 585-381-9250
TBPE Firm Number: F-10615
www.mrbgroup.com

Sheet No.
A2.02
of

Project No.
2054.19002

3/26/2020 2:08:09 PM

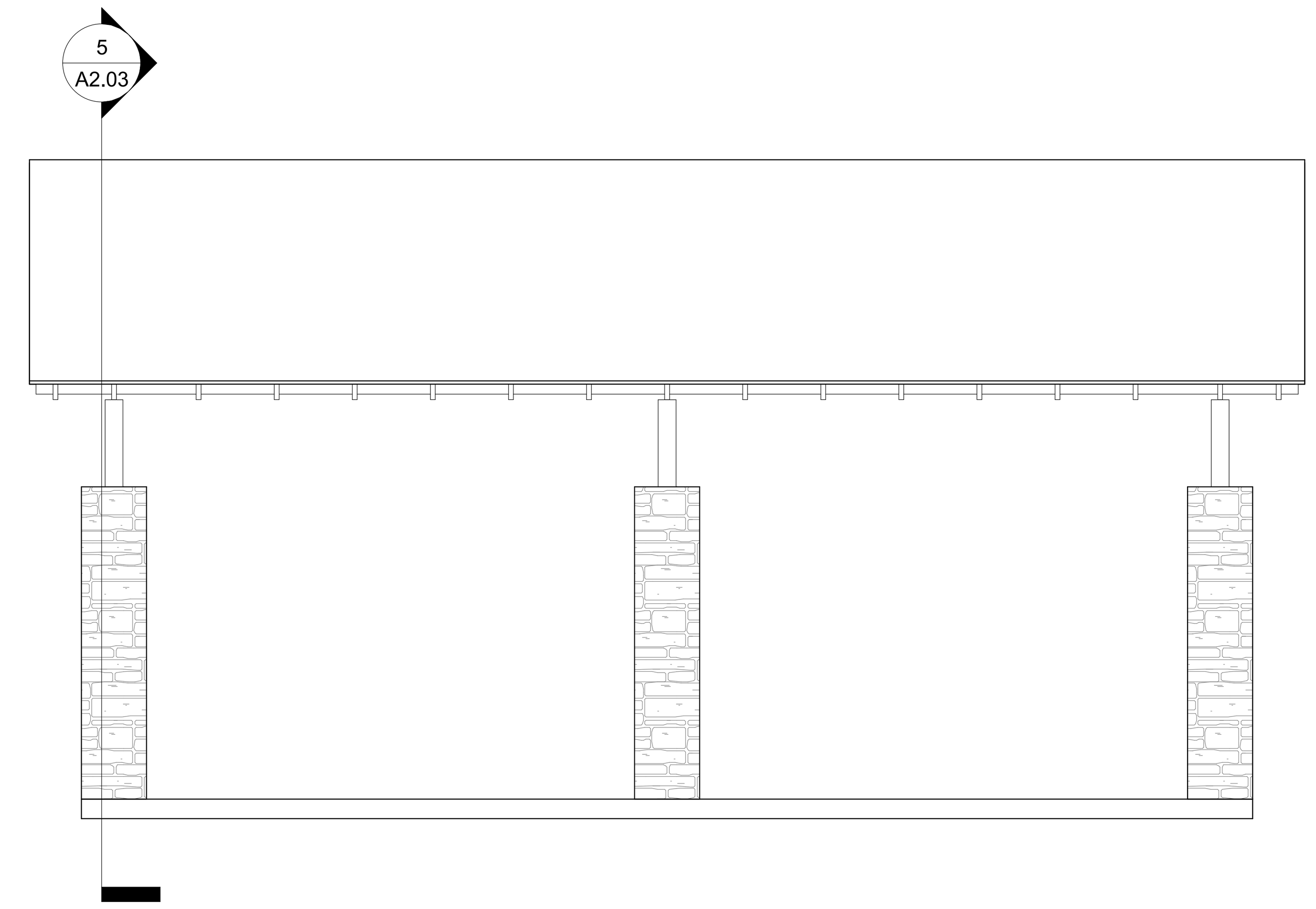

3 EXTERIOR ELEVATION - PAVILION (WEST/EAST)
1/4" = 1'-0"

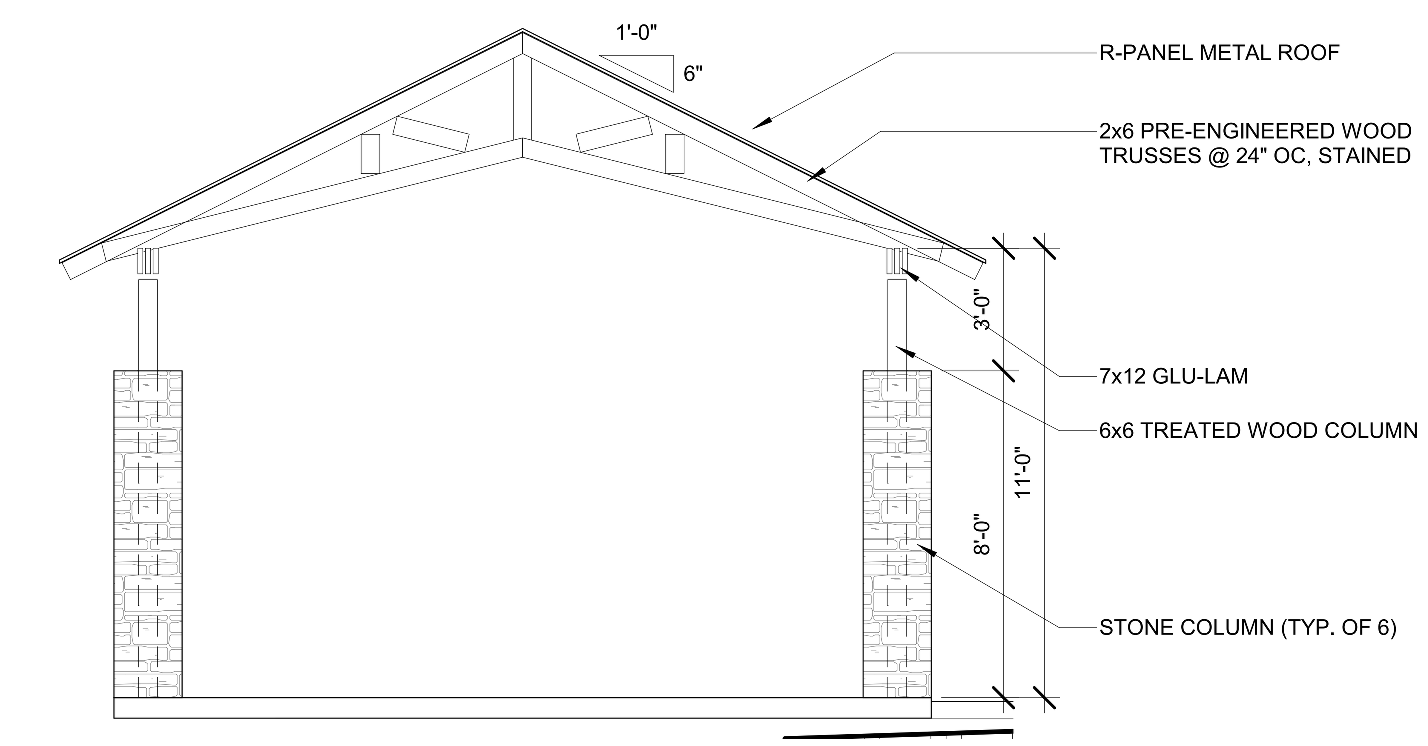

2 EXTERIOR ELEVATION - PAVILION (NORTH/SOUTH)
1/4" = 1'-0"

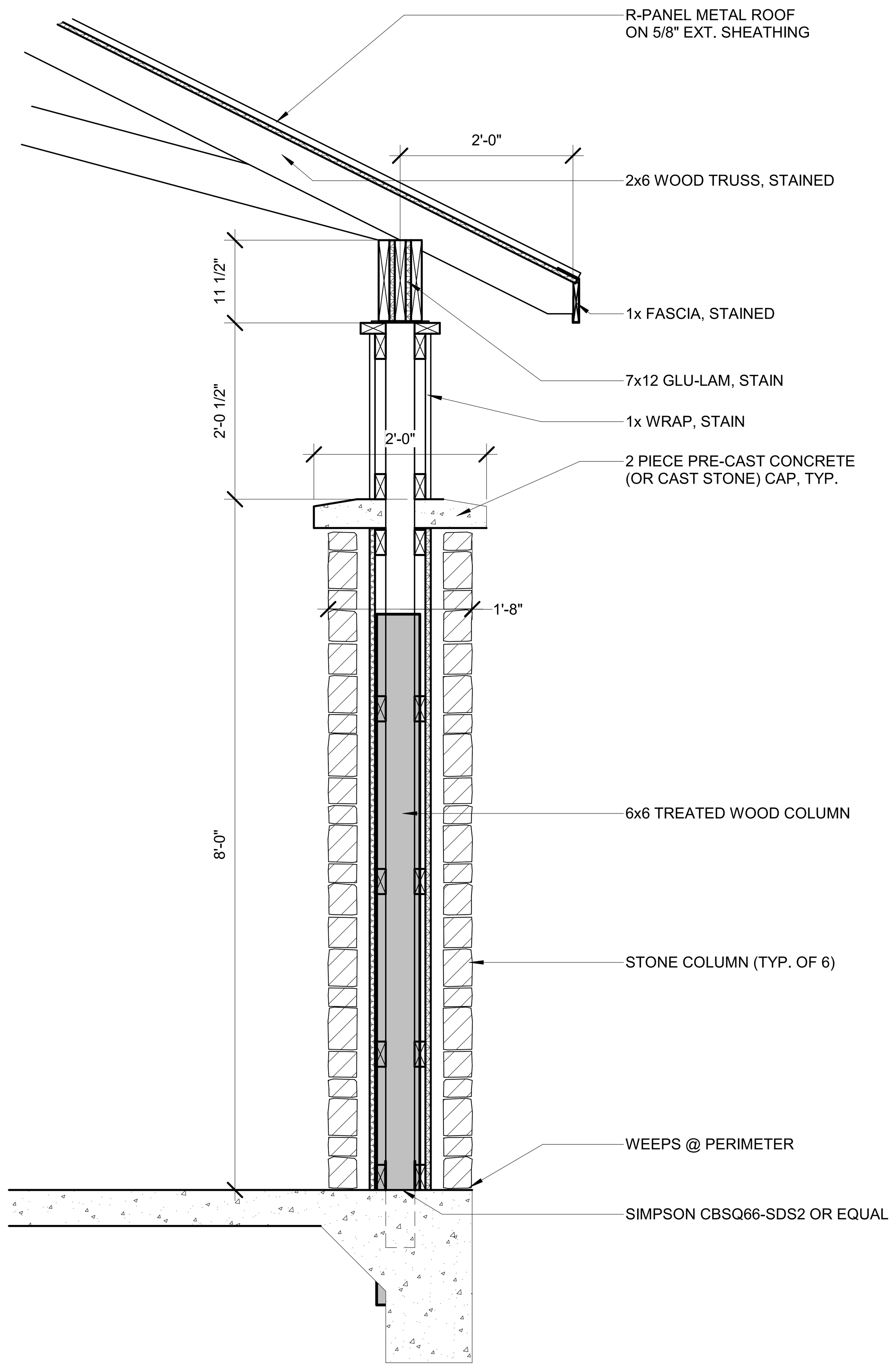

5 PAVILION COLUMN SECTION
3/4" = 1'-0"

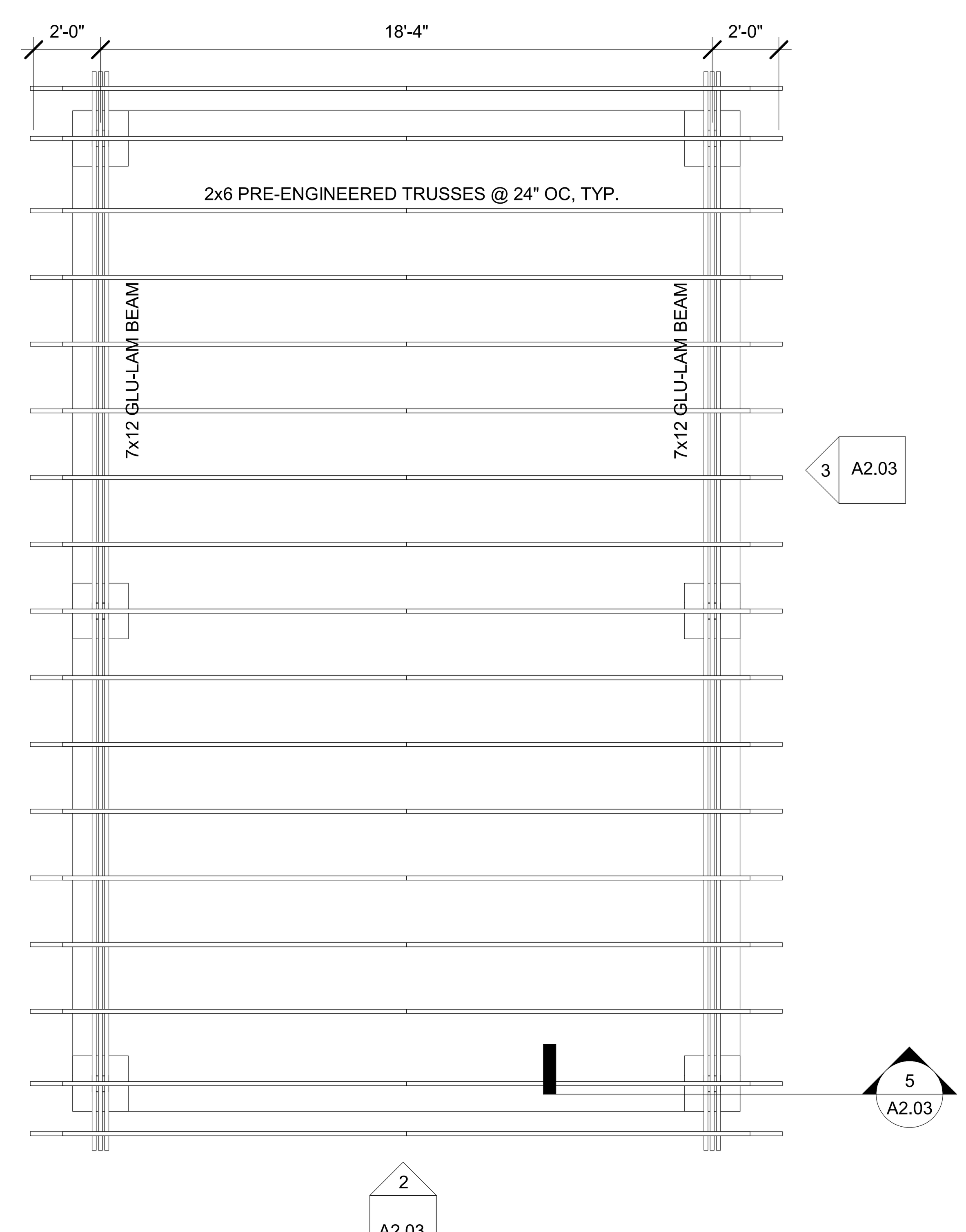

4 PAVILION FRAMING PLAN
1/4" = 1'-0"

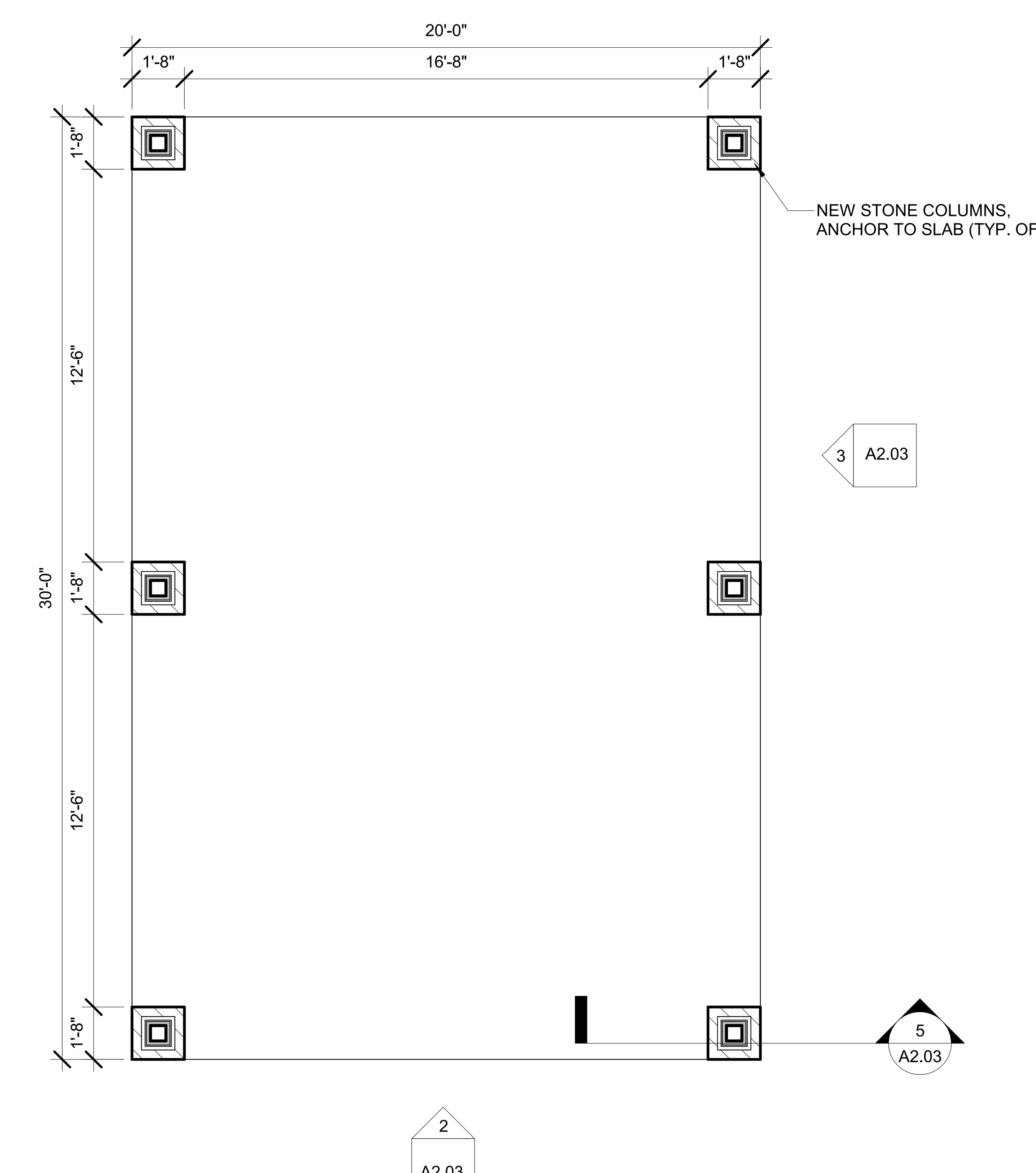

1 FLOOR PLAN - PAVILION
1/4" = 1'-0"

No.	Revisions and Descriptions	By	Date

Copyright © 2018 MRB Group All Rights Reserved

Project Title:
TOM GREEN COUNTY
PUGH PARK IMPROVEMENTS
CHRISTOVAL, TEXAS

Drawing Title:
PLAN & ELEVATIONS - PAVILION

Drawn By: CNC
Checked By: RS
Scale: As indicated
Date: 02/25/2020

MRB group
Engineering, Architecture & Surveying
5250 South 31st Street, Temple, Texas 76502 Phone: 254-771-2054
Corporate Office: The Culver Road Armory, 145 Culver Road, Suite 160, Rochester, New York 14620
Phone: 585-381-9250
TBPE Firm Number: F-10615
www.mrbgroup.com

Sheet No.
A2.03
of

Project No.
2054.19002

3/26/2020 2:08:10 PM

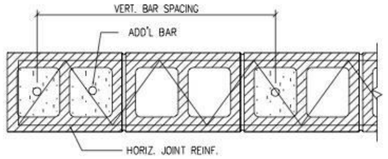

TYP. MASONRY WALL REINFORCING – END OF WALL CONDITION

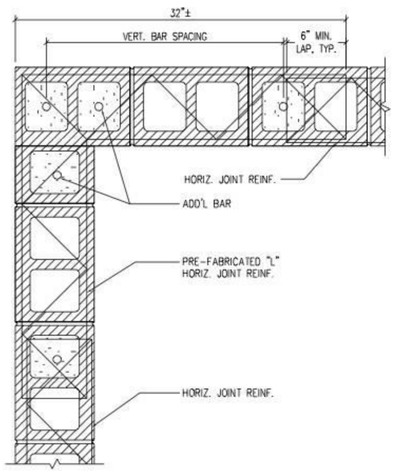

TYP. MASONRY WALL REINFORCING – CORNER CONDITION

TYPICAL BLOCK LINTEL DETAILS

NOTE: PROVIDE BLOCK LINTELS FOR ALL OPENINGS IN INTERIOR BLOCK PARTITIONS AND IN EXTERIOR BLOCK WALLS FOR WHICH STEEL LINTELS ARE NOT SCHEDULED. SEE ARCHITECTURAL DRAWINGS FOR SIZE AND LOCATION OF OPENINGS. PROVIDE 8" MINIMUM BEARING AT EACH END.

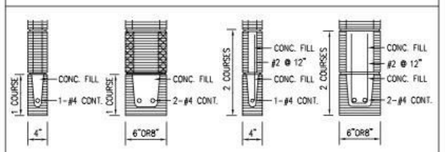

OPENINGS LESS THAN 5'-0" WIDE

OPENINGS 5'-0" WIDE OR GREATER

LOOSE STEEL LINTEL ANGLE SCHEDULE

NOTE: PROVIDE 8" MINIMUM BEARING EACH END FOR STEEL LOOSE LINTELS. ONE ANGLE SHALL BE PROVIDED FOR EACH WYTHE OF BRICK. SEE ARCHITECTURAL DRAWINGS FOR LOCATION.

UNSUPPORTED MASONRY OPENING	SIZE	DETAIL
LESS THAN 4'-0"	L3-1/2X3-1/2X1/4	L
4'-0" BUT LESS THAN 5'-0"	L4X3-1/3X1/4	L
5'-0" BUT LESS THAN 6'-0"	L5X3-1/2X1/4	L
6'-0" BUT LESS THAN 7'-0"	L6X3-1/2X5/16	L

3 MASONRY WALL DETAILS
N.T.S.

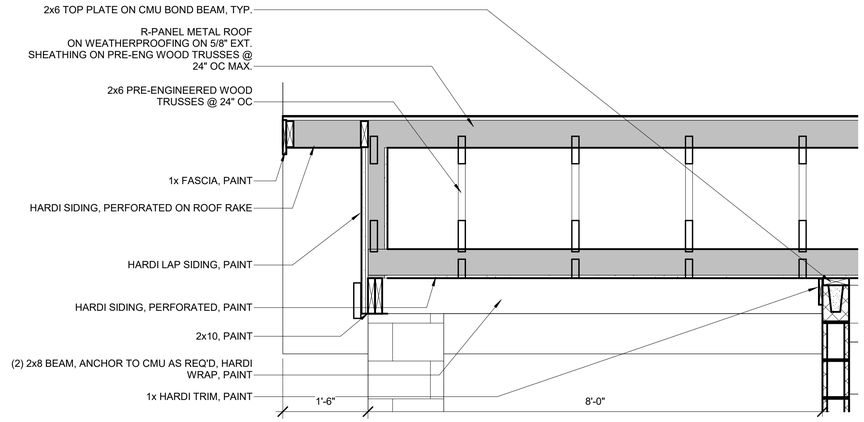

5 GABLE DETAIL - CONCESSION
3/4" = 1'-0"

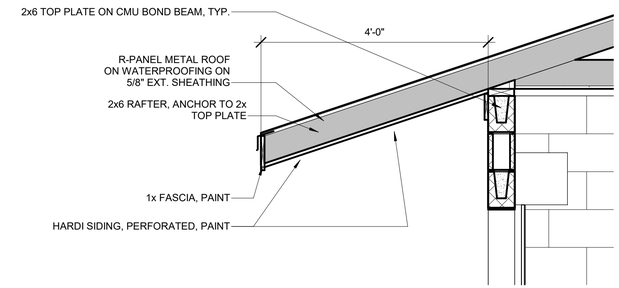

4 WALL DETAIL - CONCESSION
3/4" = 1'-0"

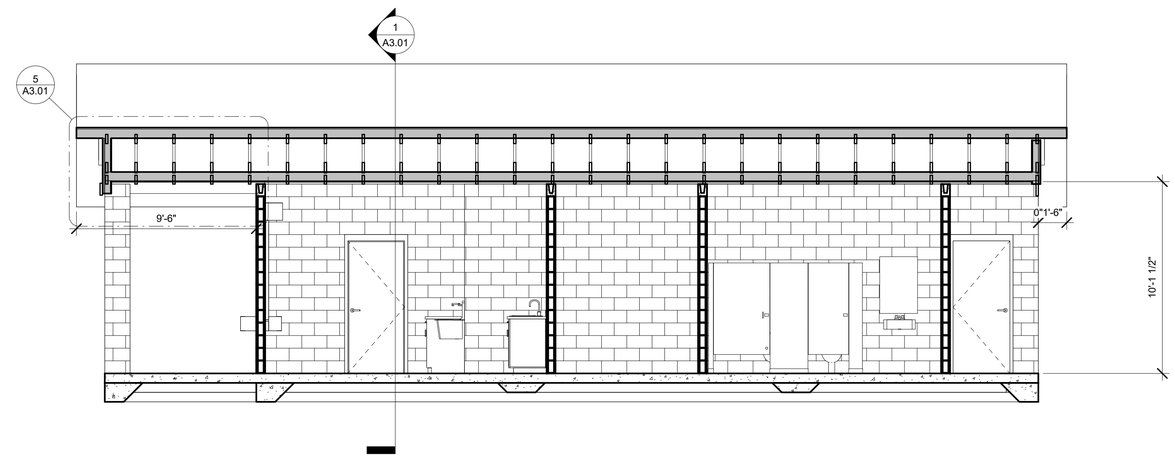

2 BUILDING SECTION - CONCESSION 2
1/4" = 1'-0"

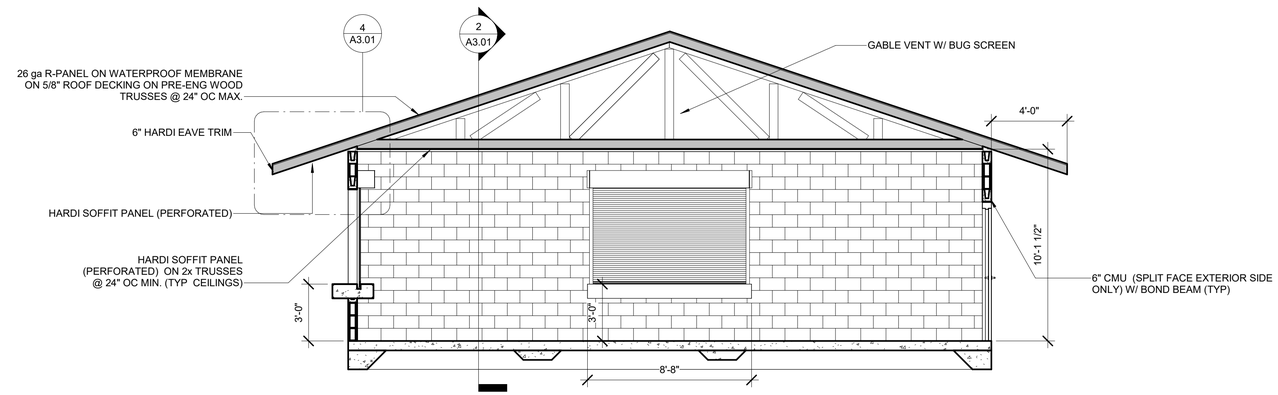

1 BUILDING SECTION - CONCESSION
1/4" = 1'-0"

No.	Revisions and Descriptions	By	Date

Copyright © 2018MRB Group All Rights Reserved

Project Title: TOM GREEN COUNTY PUGH PARK IMPROVEMENTS CHRISTOVAL, TEXAS

Drawing Title: BUILDING DETAILS

Drawn By: CNC
Checked By: RS
Scale: As indicated
Date: 02/25/2020

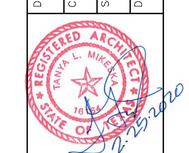

MRB group
Engineering, Architecture & Surveying
5250 South 31st Street, Temple, Texas 76502, Phone: 254-771-2054
Corporate Office: The Culver Road Armory, 145 Culver Road, Suite 160, Rochester, New York 14620
Phone: 585-381-9250
TBPE Firm Number: F-10615
www.mrbgroup.com

Sheet No. A3.01
of

Project No. 2054.19002

3/26/2020 2:08:12 PM

MOUNTING DIMENSIONS FOR PLUMBING FIXTURES AND TOILET ACCESSORIES

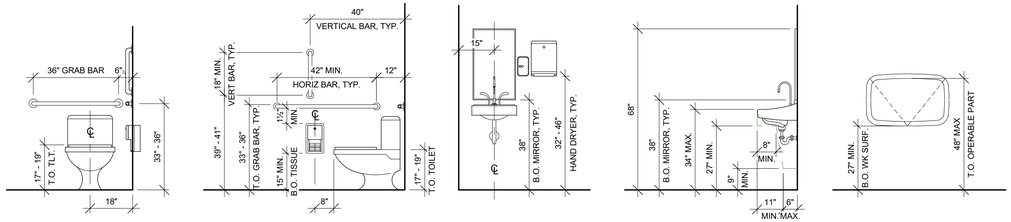

NOTES:
- PROVIDE COVERINGS FOR ALL EXPOSED PIPING BELOW FIXTURES.
- ALL TOILET ROOM ACCESSORIES SHALL BE SELECTED BY OTHERS.
- FINAL LOCATIONS SHALL BE COORDINATED BETWEEN GC & OWNER.

9 MOUNTING HEIGHTS1
3/8" = 1'-0"

TYPICAL TOILET LAYOUT AND CLEARANCES

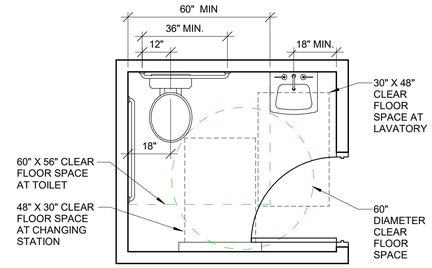

Door Schedule1					
Mark	Width	Height	Finish	Hardware	Comments
101	3'-0"	7'-0"	HM, PAINT	2	
102	8'-0"	5'-2"	PRE-FINISH	BY MANUF.	MANUALLY OPERATED OVERHEAD ROLLING STEEL DOOR
103	8'-0"	5'-2"	PRE-FINISH	BY MANUF.	MANUALLY OPERATED OVERHEAD ROLLING STEEL DOOR
104	3'-0"	7'-0"	HM, PAINT	2	VENT IN DOOR
105	8'-0"	8'-0"	PRE-FINISH	BY MANUF.	MANUALLY OPERATED OVERHEAD ROLLING STEEL DOOR
106	3'-0"	7'-0"	TUBE STEEL, PAINT	1	TUBE STEEL GATE
107	3'-0"	7'-0"	TUBE STEEL, PAINT	1	TUBE STEEL GATE
201	3'-0"	7'-0"	HM, PAINT	3	VENT IN DOOR
202	3'-0"	7'-0"	HM, PAINT	3	VENT IN DOOR

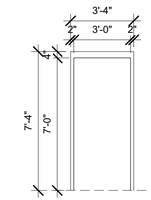

8 DOOR FRAME - HM (TYP.)
1/4" = 1'-0"

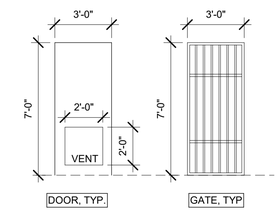

7 DOOR TYPE - HM (TYP.)
1/4" = 1'-0"

DOOR & FRAME SPECIFICATIONS

1. ALL DOOR & FRAMES TO BE HOLLOW METAL, PAINTED
2. ALL HOLLOW METAL DOORS TO BE INSULATED.
3. ALL EXTERIOR FRAMES TO BE WELDED FRAME.

HARDWARE SCHEDULE

HW 1 (REMAIN UNLOCKED & PINNED OPEN DURING USE)

EXTERIOR SINGLE EGRESS:

1-1/2 PR HINGES	1279 - 4-1/2 x 4-1/2	HA
1 CYLINDER	C953 - ICC/7	FA

HW 2

EXTERIOR SINGLE EGRESS:

1-1/2 PR HINGES	1279 - 4-1/2 x 4-1/2	HA
1 PULL	1191G-3	TR
1 PANIC	33A-L-06	VD
1 CORE	C649	FA
1 CLOSER	P1461 - TB	LCN
1 BRACKET	1460-18PA	LCN
1 STOP	1214ES - 2-1/4"	TR
1 THRESHOLD	425	NGP
1 SWEEP	102V	NGP
1 SEAL		BY DOOR SUPPLIER

HW 3

PRIVACY SET :

1-1/2 PR HINGES	1279 - 4-1/2 x 4-1/2	HA
1 PULL	1191G-3	TR
1 CYLINDER	C953 - ICC/7	FA
1 STOP	1211 \ 1270	TR

MANUFACTURERS LISTING:

SEL	SELECT HINGE
HA	HAGER HINGE
VD	VON DUPRIN
FA	FALCON LOCK
LCN	LCN
NGP	NATIONAL GUARD PRODUCTS
TR	TRIMCO MFG

HARDWARE NOTES:

1. ALL HARDWARE FINISHES TO BE 626/US26D.
2. FINAL HARDWARE SCHEDULE TO BE REVIEWED AND APPROVED BY OWNER AND OWNER'S SECURITY VENDOR PRIOR TO ORDERING DEVICES.
3. ALL LOCKSETS SUPPLIED FOR INTERIOR AND EXTERIOR DOORS SHALL BE KEYED TO MASTER KEY.

FINISH SCHEDULE

ALL PAINTS TO BE SHERWIN WILLIAMS UNLESS OTHERWISE NOTED OR APPROVED EQUIVALENT

WALLS

ALL EXPOSED INTERIOR CMU TO BE SEALED WITH FLAT ACRYLIC LATEX FILLER EQUAL TO KILZ PRO-X P50 AND PAINTED WITH (2) COATS MIN. SEMI-GLOSS PRO INDUSTRIAL PRE CATALYZED WATER BASED EPOXY - COLOR BY ARCHITECT

ALL EXPOSED EXTERIOR CMU TO HAVE (2) COATS CLEAR SEALANT

CEILINGS

CEILINGS TO BE PAINTED SOFFIT PANELS

EXTERIOR OVERHANGS AND EAVES TO BE PAINTED SOFFIT PANELS

TRIM

METAL DOORS AND FRAMES TO BE PAINTED WITH GLOSS WATER BASE ACRYLIC LATEX EQUIVALENT TO ONE COAT OF DTM ACRYLIC PRIMER/FINISH B66W1 (2.5 MILS) AND TWO FINISH COATS DTM ACRYLIC S-6, B66W200 (3.0 MILS EA.) - COLOR BY ARCHITECT

FLOORS

CONCESSIONS, STORAGE ROOM, & RESTROOMS TO BE PRIMED AND COATED WITH 2 COATS (MIN 6 MILS) B100 WATER BASED EPOXY FLOORING W/ HI-WEAR ADDITIVE - EPOXY FLOORING TO CONTINUE UP PERIMETER BLOCK WALL 8" AFF MIN.

REMAINING FLOORS TO BE SEALED WITH A MINIMUM OF TWO COATS OF PENETRATING WATERPROOFING SEALER.

BASE

4" FLAT PORCELAIN TILE BASE @ CABINETRY

CASEWORK

P-LAM BASE CABINET AND DOORS WITH PVC EDGE BANDING AND MELAMINE INTERIORS (TYP.).
STAINLESS STEEL COUNTER TOPS

TOILET PARTITIONS

ALL PARTITIONS TO BE FLOOR MOUNTED SOLID PHENOLIC TOILET PARTITIONS - COLOR BY ARCHITECT FROM MANUFACTURER'S FULL RANGE.

SIGNAGE

ALL SIGNAGE TO BE ADA COMPLIANT. STANDARD SIGNAGE @ EACH RESTROOM (MEN & WOMEN)

ACCESSORIES LEGEND

A1	HAND DRYER	INSTALL (1) ADJACENT TO EACH LAVATORY IN RESTROOM AS SHOWN ON PLANS 1. MODEL NUMBER: DYSON AIRBLADE V, NICKEL
A2	TOILET TISSUE DISPENSER	EACH STALL 1. MODEL NUMBER: BOBRICK B-2890
A3	TRASH RECEPTACLE RECESSED	INSTALL AT EACH LAVATORY AS SHOWN ON PLANS 1. MODEL NUMBER: BOBRICK B-3644
A4	SOAP DISPENSER	INSTALL BETWEEN LAVATORIES 1. MODEL NUMBER: GOJO 800 SERIES
A5	SANITARY NAPKIN DISPOSAL	EACH WOMAN AND UNI-SEX STALL 1. MODEL NUMBER: BOBRICK B-270
A6	SINK	STAINLESS WALL MOUNT, ADA COMPLIANT, VANDAL RESISTANT (RESTROOMS), INSULATE HOT WATER & DRAIN LINE PER ADA CODE REQUIREMENTS RE: PLUMBING
A7	WATER CLOSET	STAINLESS FLOOR MOUNT, VANDAL RESISTANT, ADA COMPLIANT HEIGHT IN REQ'D ADA STALLS, RE: PLUMBING
A8	MIRROR	INSTALLED BEVELED FRAME OVER WALL MOUNTED LAVATORY 1. MODEL NUMBER: BOBRICK B-290 24 x 36 2. DESCRIPTION: BEVELED FRAME EDGE GALVANIZED STEEL BACK WITH SLOTS FOR MOUNTING SCREWS AND INTEGRAL SCREW-HEAD LOCK. BACK PROTECTED BY SHOCK-ABSORBING WATER-RESISTANT PADDING 3. INSTALL MIRROR AT 3'-4" AFF TO REFLECTIVE SURFACE
A9	36" x 42" GRAB BAR	INSTALLED IN EACH ACCESSIBLE TOILET AS SHOWN ON PLANS 1. MODEL NUMBER: BOBRICK B-6806 2. DESCRIPTION: 1-1/2" OUTSIDE DIA. X PLAN LENGTH, HORIZONTAL, 1-1/2" WALL CLEARANCE. TYPE 304 MINIMUM 18 GA. STAINLESS STEEL. CONCEALED SCREW ATTACHED MOUNTING AND ANCHORAGE. NO.4 SATIN FINISH. MINIMM 900 POUND SUPPORTING CAPACITY
A10	DOUBLE ROBE HOOK	EACH TOILET STALL/ROOM, (4) EACH DRESSING AREA 1. MODEL NUMBER BOBRICK B-672 2. MOUNT @ 48" AFF MAX. (ADA)
A11	TRASH BIN	EACH RESTROOM AREA
A12	CHANGING TABLE	EACH RESTROOM AREA
A13	BENCH	4' LONG X 18" WIDE BENCH, WALL MOUNT, (2) EACH DRESSING AREA

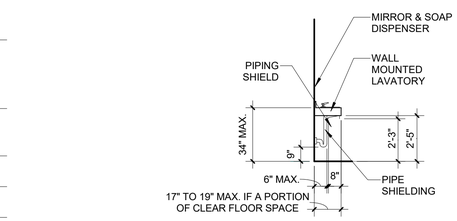

LAVATORY= FIXTURES FOR HAND WASHING IN TOILET OR BATHING FACILITIES

4 TYP. LAV. SECTION
1/4" = 1'-0"

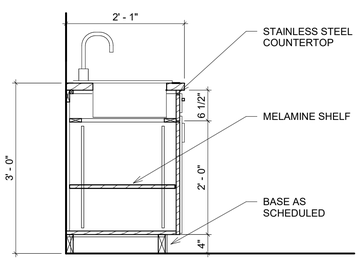

6 CABINET DETAIL - SINK
3/4" = 1'-0"

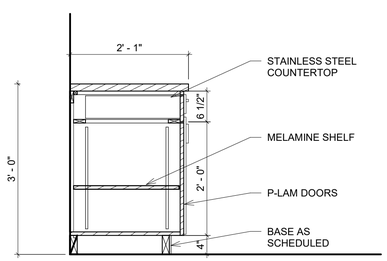

5 CABINET DETAIL, TYP.
3/4" = 1'-0"

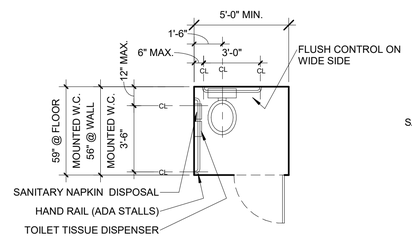

3 TOILET - STALL (ADA)
1/4" = 1'-0"

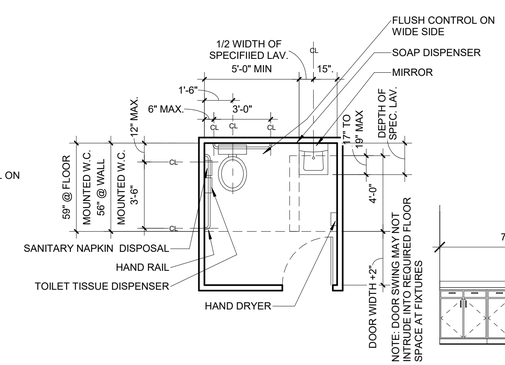

2 TOILET ROOM - SINGLE OCCUPANCY
1/4" = 1'-0"

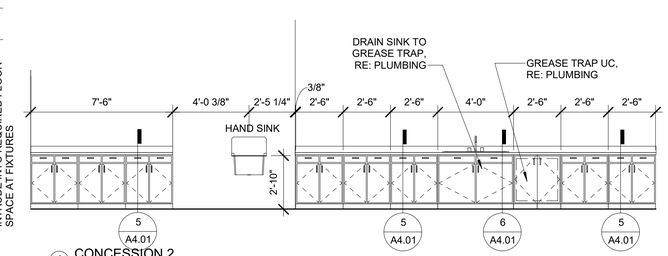

1 CONCESSION 2
1/4" = 1'-0"

No.	Revisions and Descriptions	By	Date

Copyright © 2018MRB Group All Rights Reserved

Project Title: TOM GREEN COUNTY PUGH PARK IMPROVEMENTS CHRISTOVAL, TEXAS

Drawing Title: INTERIOR DETAILS & SCHEDULES

Drawn By: CNC | Checked By: RS | Scale: As indicated | Date: 02/25/2020

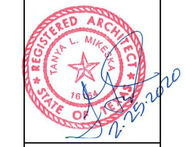

MRB group
Engineering, Architecture & Surveying
5250 South 31st Street, Temple, Texas 76502. Phone: 254-771-2054
Corporate Office: The Culver Road Armory, 145 Culver Road, Suite 160, Rochester, New York 14620
Phone: 585-381-9250
TBPE Firm Number: F-14615
www.mrbgroupp.com

Sheet No. A4.01 of

Project No. 2054.19002

3/26/2020 2:08:13 PM

DESIGN LOADS

1. GRAVITY LOADS
   A. DESIGN UNIFORM LIVE LOADS ARE AS LISTED BELOW. LIVE LOAD REDUCTIONS ARE CALCULATED IN ACCORDANCE WITH THE BUILDLING CODE.
   B. DESIGN UNIFORM SUPERIMPOSED DEAD LOADS ARE IN ADDITION TO THE WEIGHT OF THE BUILDING STRUCTURE.
   C. DESIGN CONCENTRATED LIVE LOADS ARE NOT COMBINED WITH UNIFORM LIVE LOADS.
   D. MECHANICAL ROOMS ARE ESIGNED TO SUPPORT THE EQUIPMENT SHOWN ON THE MECHANICAL DRAWINGS AND SPECIFICATIONS. ANY MODIFICATIONS TO THE SIZE, WEIGHT, OR LOCATION OF EQUIPMENT SHOULD BE SUBMITTED FOR REVIEW OF LOADING PRIOR TO INSTALLATION OF EQUIPMENT.

   UNIFORM LIVE LOADS
   ROOF = 12PSF
   UNIFORM SUPERIMPOSED DEAD LOADS
   ROOF = 3 PSF CEILING & MECH + 7 PSF ROOFING
   CONCENTRATED LIVE LOADS
   ROOF = N/A
   OTHER AREAS = UNIFORM LOAD ONLY
2. WIND LOADS
   A. IN ACCORDANCE WITH I.B.C., BASED ON A WIND SPEED OF 90 MPH AND EXPOSURE CLASS B.
   B. NET ROOF UPLIFT = 20 PSF TYPICAL
   C. = 30 PSF WITHIN 10'-0" OF EDGE OR STEP IN ROOF
3. SEISMIC LOADS
   A. IN ACCORDANCE WITH IBC, ZONE 0

FOUNDATION

1. THESE NOTES APPLY TO ALL FOUNDATIONS AND SLABS ON GRADE DETAILED ON THE STRUCTURAL DRAWINGS, UNLESS NOTED OTHERWISE.
2. FOUNDATION DESIGN IS BASED ON THE SOILS REPORT PREPARED BY XXX PROJECT NO. XXX DATED XXX.
3. SUBGRADE PREPARATION UNDER BUILDING SLAB ON GROUND:
   A. REMOVE THE UPPERMOST 6" OF SOIL AND STOCKPILE FOR USE ONLY AS TOP SOIL FOR FINAL GRADING.
   B. EXCAVATE A MIN. OF 4'-0" FOR PLACEMENT OF SELECT FILL.
   C. PLACE A MINIMUM OF FOUR FEET OF SELECT FILL UNDER AND AROUND EACH BUILDING PAD. THE SELECT FILL SHALL BE LAYER COMPACTED IN 8 INCH MAXIMUM LOOSE THICKENSS TO A DRY DENSITY OF NOT LESS THAN 95% OF STANDARD PROCTOR (ASTM D-96) MAXIMUM DRY DENSITY. THE SOIL MOISTURE AT TIME OF COMPACTION SHALL BE WITHIN 3% OF THE MATERIAL'S OPTIMUM MOISTURE CONTENT. PLACE SELECT FILL AS SOON AS POSSIBLE OVER SUBGRADE TO LIMIT MOISTURE LOSS WITHIN THE UNDERLYING SOILS.
   D. SELECT FILL SHALL BE A UNIFORMLY BLENDED CLAYEY SAND HAVING A LIQUID LIMIT LESS THAN 30 AND A PLASTICITY INDEX (PI) BETWEEN 4 AND 15.
4. UNLESS SPECIFIED OTHERWISE VAPOR BARRIER SHALL CONSIST OF 8 MIL POLYETHYLENE SHEET. TURN DOWN AT GRADE BEAMS AND PIERS. LAP AND SEAL AT ALL JOINTS AND AROUND ALL COLUMNS AND STUB-OUTS. PATCH ALL TEARS PRIOR TO PLACING CONCRETE.

REINFORCED CONCRETE

1. ALL STRUCTURAL CONCRETE SHALL BE OF NORMAL WEIGHT AGGREGATE WITH SPECIFIED PROPERTIES AS FOLLOWS:

	28 DAY STRENGTH	SLUMP	MAX AGG.
GRADE BEAM	4000 PSI	4"	1"
SLABS ON GROUND	3000 PSI	4"	1"

2. REINFORCING STEEL SHALL CONFORM TO ASTM A-615, GRACE 60, U.N.O
3. REINFORCING STEEL, SPECIFICALLY NOTED TO BE SHOP OR FIELD WELDED SHALL CONFORM TO ASTM A-706, GRACE 60. WELDING OF OTHER REINFORCING STEEL IS NOT PERMITTED.
4. ALL REINFORCING SHALL LAP 36 BAR DIAMETERS AT SPLICES UNLESS NOTED OTHERWISE. HOOK CONTINUOUS BARS AT DISCONTINUOUS ENDS.
5. DETAILING OF CONCRETE REINFORCING AND ACCESSORIES SHALL BE IN ACCORDANCE WITH THE LATEST EDITION OF ACI PUBLICATION 315.
6. UNLESS NOTED OTHERWISE, CONCRETE PROTECTION FOR REINFORCING SHALL BE AS FOLLOWS:
   BEAMS AND WALLS ON EARTH = 2" SIDES AND TOP, 3" BOTTOM
   SLABS ON GROUND = CENTER IN SLAB
7. NO HORIZONTAL JOINTS WILL BE PERMITTED IN CONCRETE, EXCEPT WHERE THEY NORMALLY OCCUR OR WHERE NOTED. VERTICAL JOINTS SHALL OCCUR AT O NEAR THE CENTER OF SPANS.

STRUCTURAL STEEL

1. STRUCTURAL SHAPES AND PLATES SHALL CONFORM TO THE FOLLOWING, UNLESS OTHERWISE NOTED ON THE DRAWINGS:
   A. ALL WIDE FLANGE BEAMS AND COLUMNS = ASTM A572, GRADE 50
   B. ALL TUBULAR MEMBERS = ASTM A500, GRADE B
   C. ALL PIP MEMBERS = ASTM A53 (TYPE E OR S) GRADE B
   D. ALL OTHER SHAPES AND PLATES = ASTM A36
2. ALL CONNECTION BOLTS FOR STRUCTURAL STEEL MEMBERS SHALL BE 3/4 IN. DIA. CONFORMING TO ASTM A-325. ALL BOLTS SHALL BE TIGHTENED AS SPECIFIED FOR SLIP-CRITICAL CONNECTIONS. CONNECTIONS DESIGNED AS BEARING-TYPE SHALL BE BASED ON THREADS INCLUDED IN THE SHEAR PLANE.
3. ALL WELDING SHALL BE DONE IN ACCORDANCE WITH A.W.S. CODE, BY CERTIFIED WELDERS. WELDING ELETRODES SHALL BE E70 XX.
4. ALL STRUCTURAL STEEL SHALL HAVE ONE SHOP COAT OF STANDARD IRON OXIDE PRIMER, WITH A MINIMUM DRY FILM THICKNESS OF 1.5 MILS.
5. UNLESS OTHERWISE NOTED ON THE DRAWINGS, ALL BEAM TO BEAM AND BEAM TO COLUMN CONNECTIONS SHALL BE DESIGNED AS "SIMPLE CONNECTIONS", AND SHALL BE SHOP WELDED AND FIELD BOLTED. SHEAR CONNECTIONS SHALL BE DESIGNED FOR HALF OF THE TOTAL LOAD CAPACITY LISTED ON THE TABLE: "ALLOWABLE LOADS ON BEAMS" OF THE AISC MANUAL OF STEEL CONSTRUCTION - ALLOWABLE STRESS DESIGN.
6. SHEAR CONNECTIONS NOT SPECIFICALLY DETAILED ON THE STRUCTURAL DRAWINGS SHALL BE DESIGNED AND DETAILED BY THE STRUCTURAL STEEL FABRICATOR UNDER THE DIRECTSUPERVISION OF A PROFESSIONAL ENGINEER, REGISTERED IN THE STATE OF TEXAS, USING THE DESIGN PARAMETERS INDICATED ON NOTE NO. 5 ABOVE.
7. CONNECTION INDICATED "M.C." ON THE DESIGN DRAWINGS SHALL BE DESIGNED AS MOMENT CONNECTIONS. IF NO DESIGN MOMENT IS NOTED, DESIGN CONNECTION TO RESIST THE FULL MOMENT CAPACITY OF THE MEMBER. SHEAR CONNECTIONS IN MOMENT CONNECTIONS SHALL BE WELDED OR FRICTION-TYPE BOLTED CONNECTIONS ONLY.
8. PROVIDE STIFFENERS AT ALL LOCATIONS SHOWN ON DETAILS WHETHER OR NOT THEY ARE REQUIRED BY CALCULATIONS.
9. ALL COLUMN BASE PLATES SHALL BE GROUTED IMMEDIATELY AFTER THE FRAME ERECTION IS COMPLETED AND PLUMBED, AND PRIOR TO APPLYING DECKING TO ROOF JOISTS.

GENERAL

1. SEE MECHANICAL DRAWINGS FOR EXACT LOCATION AND SIZES OF SMALL MECHANICAL OPENINGS, SLEEVES, ETC. NOT SHOWN ON THE STRUCTURAL DRAWINGS.
2. REFER TO ARCHITECTURAL DRAWINGS FOR ALL FINISHES, DIMENSIONS OF SLAB DROPS, CHAMFERS, ETC.
3. THE USE OF REPRODUCTIONS OF THE DESIGN STRUCTURAL DRAWINGS FOR SHOP DRAWING PURPOSES IS NOT ACCEPTABLE.
4. THE CONTRACTOR SHALL VERIFY, PRIOR TO CONSTRUCTION, THAT THE NEW STUCTURE WILL NOT CONFLICT WITH ANY EXISTING UTILITIES. IF CONFLICTS ARISE, THE CONTRACTOR SHALL NOTIFY THE ARCHITECT AND SHALL STOP THE WORK UNTIL AN APPROPRIATE SOLUTION TO THE CONFLICTS ARE FOUND, AND THE CONTRACTOR IS GIVEN WRITTEN AUTHORIZATION TO PROCEED WITH THE WORK.

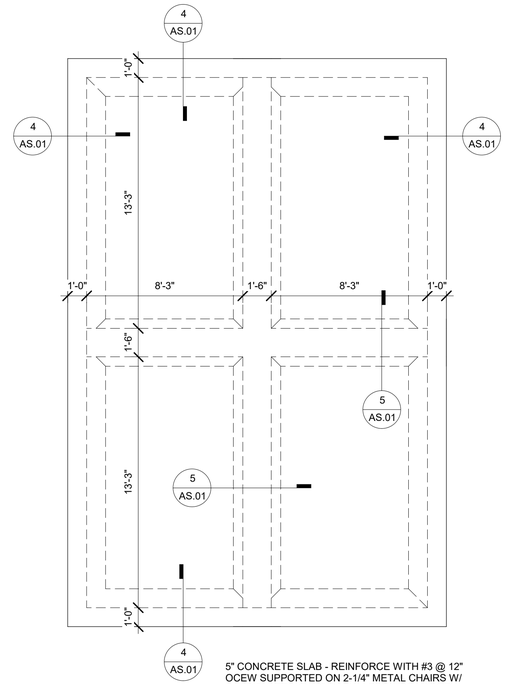

5" CONCRETE SLAB - REINFORCE WITH #3 @ 12" OCEW SUPPORTED ON 2-1/4" METAL CHAIRS W/ SAND PLATES @ 48" OCEW - PROVIDE VAPOR RETARDER (TYP)

3 FOUNDATION PLAN - PAVILION
1/4" = 1'-0"

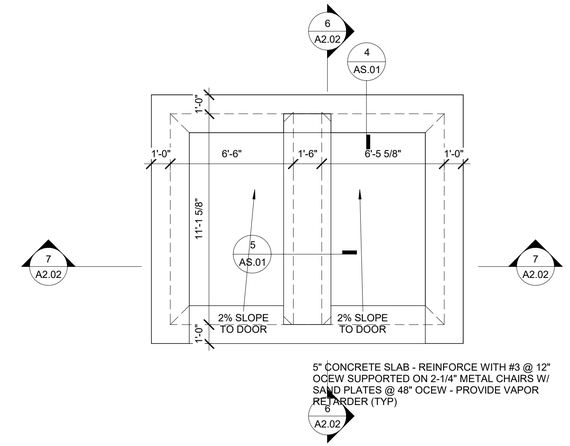

5" CONCRETE SLAB - REINFORCE WITH #3 @ 12" OCEW SUPPORTED ON 2-1/4" METAL CHAIRS W/ SAND PLATES @ 48" OCEW - PROVIDE VAPOR RETARDER (TYP)

2 FOUNDATION PLAN - RESTROOMS
1/4" = 1'-0"

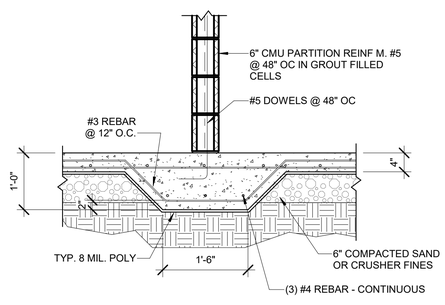

5 THICKENED SLAB @ CMU WALLS
3/4" = 1'-0"

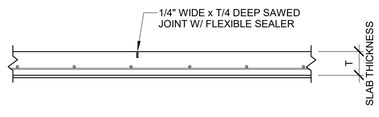

7 SLAB ON GRADE CONTROL JOINT
3/4" = 1'-0"

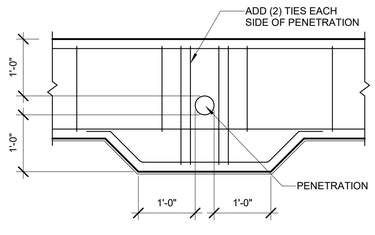

6 GRADE BEAM PENETRATION
3/4" = 1'-0"

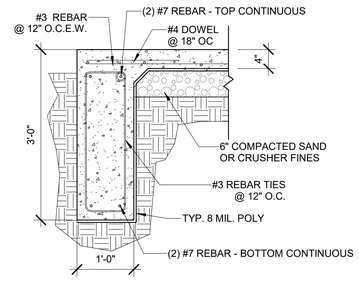

4 PERIMETER GRADE BEAM
3/4" = 1'-0"

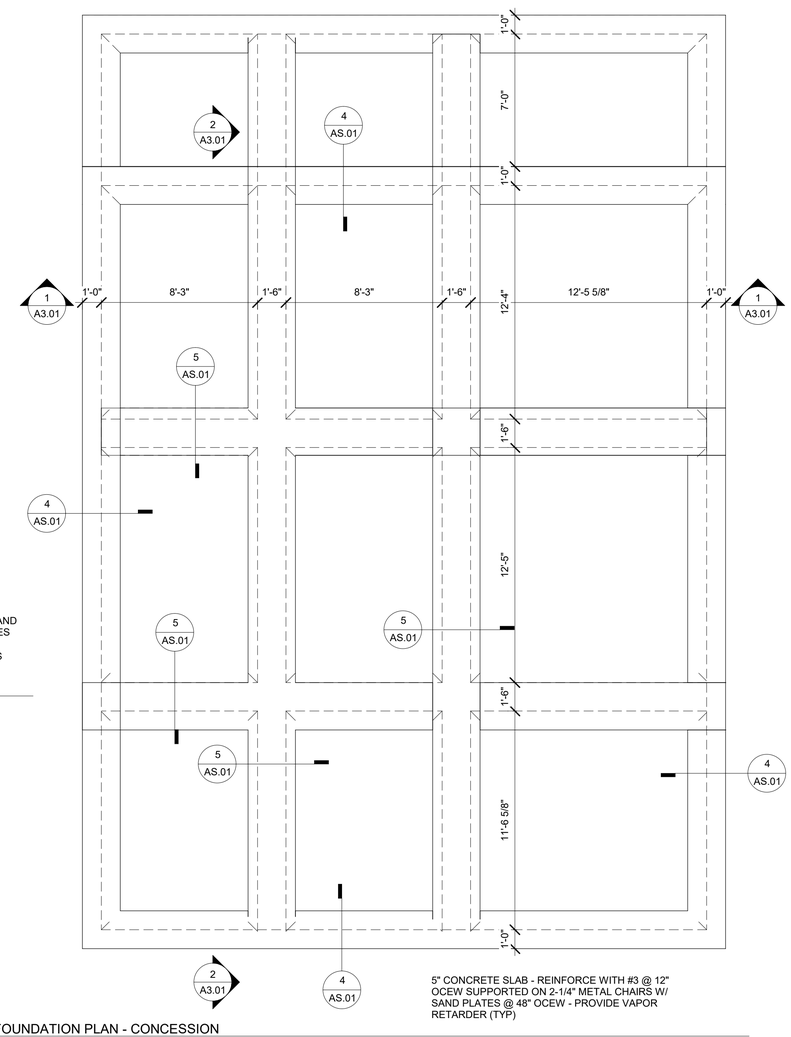

5" CONCRETE SLAB - REINFORCE WITH #3 @ 12" OCEW SUPPORTED ON 2-1/4" METAL CHAIRS W/ SAND PLATES @ 48" OCEW - PROVIDE VAPOR RETARDER (TYP)

1 FOUNDATION PLAN - CONCESSION
1/4" = 1'-0"

No.	Revisions and Descriptions	By	Date

Copyright © 2018MRB Group All Rights Reserved

Project Title: TOM GREEN COUNTY PUGH PARK IMPROVEMENTS CHRISTOVAL, TEXAS

Drawing Title: FOUNDATION DETAILS

Drawn By: CNC
Checked By: RS
Scale: As indicated
Date: 02/25/2020

REGISTERED ARCHITECT TANYA L. MIKENA 16 STATE OF TEXAS
2/25/2020

MRB group
Engineering, Architecture & Surveying
5250 South 31st Street, Temple, Texas 76502 Phone: 254.771.2054
Corporate Office: The Culver Road Armory, 145 Culver Road, Suite 160, Rochester, New York 14620
Phone: 585-381-9250
TBPE Firm Number: F-10615
www.mrbgroup.com

Sheet No.
AS.01
of

Project No.
2054.19002

3/26/2020 2:08:13 PM

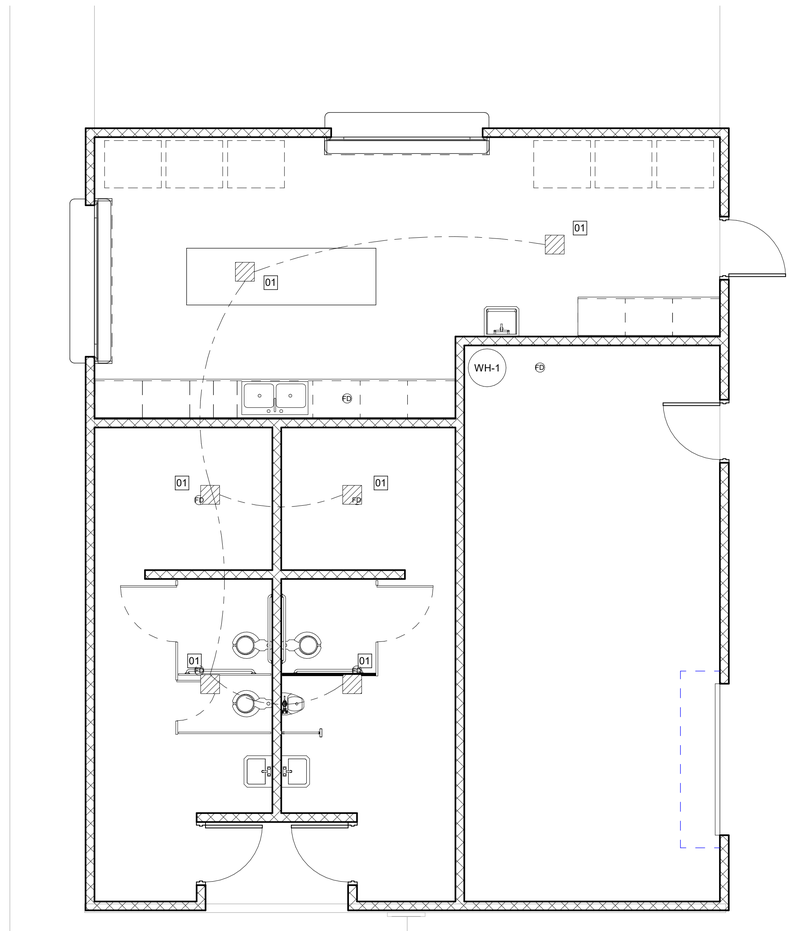

1 MECHANICAL PLAN - CONCESSION
1/4" = 1'-0"

KEYED MECHANICAL NOTES

01 FAN TO BE BROAN L300L IN LINE LOSONE FAN OR APPROVED EQUAL W/ 12X12 WHITE GRILL IN EACH RESTROOM

MECHANICAL NOTES

1. ALL WORK SHALL BE DONE IN ACCORDANCE WITH THE LATEST EDITION OF THE STANDARD BUILDING CODE AND ALL LOCAL CODES.
2. ALL AIR CONDITIONING SUPPLY AND RETURN DUCTWORK SHALL BE CONSTRUCTED OF 1" OR 1-1/2" THICK FIBERGLASS DUCTBOARD. DUCTWORK SHALL BE FABRICATED IN ACCORDANCE WITH ALL LOCAL COES, A.S.H.R.A.E., AND SMACNA STANDARDS. MINIMUM INSULATON VALUES AS FOLLOWS: IN ATTIC SPACES (R-6). BETWEEN FLOORS (R-4).
3. ALLL EXHAUST AND DRYER DUCTWORK SHALL BE CONSTRUCTED OF ZINC COATED GALVANIZED SHEET METAL CONSTRUCTED IN ACCORDANCE WITH LATEST A.S.H.R.A.E. GUIDE AND S.M.A.C.N.A. RECOMMENDATIONS OR TEE FIN METAL FLEXIBLE DUCTWORK.
4. ALL REFRIGERANT PIPING SHALL BE TYPE 'L' COPPER, TOGETHER WITH WROUGHT COPPER, SOLDER FITTINGS. JOINTS SHALL BE MADE WITH SILVER SOLDER OR 'SILFOSS'. LINE SIES AND ACCESSORIES SHALL BE AS DESIGNED BY UNIT MANUFACTURER FOR THIS INSTALLATION.
5. FLAME AND SMOKE RATING: ALL INSULATION PRODUCTS USED INSIDE THE BUILDING SHALL HAVE A MAXIMUM FLAME SPREAD RATING OF 25 AND A MAXIMUM SMOKE GENERATION OF 50 IN ACCORDANCE WITH TESTS OUTLINED IN N.F.P.A. 225.
6. VIBRATION ISOLATION: ALL EQUIPMENT AS PER MANUFACTURER'S RECOMMENDATIONS OR AS SCHEDULED ON DRAWINGS.
7. FLEXIBLE DUCTWORK SHALL BE ROUND DUCTWORK REINFORCED WITH A WIRE HELIX AND INSULATED WITH 1-1/2" THICK (R-6) FIBERGLASS COVERED WITH A VAPOR BARIOR OF ALUMINUM METALIZED POLYESTER FILM LAMINATED TO GLASS MESH. CONNECTION TO DUCT MAINS SHALL BE MADE WITH FITTINGS PROVIDED WITH TWIST RINGS, BUTTERFLY DAMPERS, QUADRANT OPERATORS, EXTRACTOR AND INSULATION GUARD. DUCTWORK SHALL BE CLASS I, U.I. 181 'WIREMOLD' TYPE 'WK' OR APPROVED EQUAL.

No.	Revisions and Descriptions	By	Date

Copyright © 2018MRB Group All Rights Reserved

Project Title:
TOM GREEN COUNTY PUGH PARK IMPROVEMENTS CHRISTOVAL, TEXAS

Drawing Title:
MECHANICAL

Drawn By: CNC
Checked By: RS
Scale: As indicated
Date: 02/25/2020

REGISTERED ARCHITECT TANYA L. MIKENAS 16 STATE OF TEXAS
2-25-2020

MRB group
Engineering, Architecture & Surveying
5250 South 31st Street, Temple, Texas 76502 Phone: 254.771.2054
Corporate Office: The Culver Road Armory, 145 Culver Road, Suite 160, Rochester, New York 14620
Phone: 585-381-9250
TBPE Firm Number: F-10015
www.mrbgroup.com

Sheet No.
M1.01
of

Project No.
2054.19002

3/26/2020 2:08:14 PM

PLUMBING NOTES

1. THE CONTRACTOR IS TO VISIT THE SITE PRIOR TO BID TO VAMILIARIZE HIMSELF WITH ALL CONDITIONS AS THEY EXIST. ALL BIDS SHALL TAKE THE EXISTING CONDITIONS INTO CONSIDERSTAION AND THE LACK OF SPECIFIC INFORMATION ON THE DRAWINGS SHALL NOT RELIEVE THE CONTRACTOR OF ANY RESPONSIBILITY. SUBMISSION OF BID INDICATES THE CONTRACTOR'S UNDERSTANDING OF EXISTING CONDITIONS AND HIS WILLINGNESS TO WORK WITH THESE CONDITIONS. NO ADDITIONAL TIME OR MONEY WILL BE ALLOTTED DUE TO THE LACK OF COORDINATION WITH EXISTING CONDITIONS OR OTHER TRADES.
2. ALL WORK SHALL COMPLY WITH THE APPLICABLE LOCAL AND STATE CODES AND ORDINANCES. FOLLOW RECOMMENDED PRACTICES AS SET DOWN BY ASME, SMACNA, ASHRAE, NFPA, INTERNATIONAL BUILDING CODE, INTERNATIONAL MECHANICAL CODE, INTERNATIONAL PLUMBING CODE, NATIONAL ELECTRICAL CODE, AGA AND OSHA AS THEY APPLY TO THIS PROJECT, EXCEPT IN CASES WHERE STATUTES GOVERN.
3. BEFORE ANY CUTTING OR TRENCHING OPERATIONS BEGIN, VERIFY WITH OWNER'S REPRESENTATIVE, UTILITY COMPANIES, AND OTHER INTERESTED PARTIES THAT ALL AVAILABLE INFORMATION HAS BEEN PROVIDED CONCERNING EXISTING UTILITY LOCATION. VERIFY LOCATIONS GIVEN. CONTACT ARCHITECT IMMEDIATELY UPON UNCOVERING UNKNOWN UTILITIES OFR FURTHER DIRECTION. INDICATE ALL UNCOVERED UTILITIES ON RECORD DRAWINGS.
4. AFTER WASTEWATER PIPING IS TESTED PER CODE, CONTAT OWNER FOR OBSERVATION OF FLOOR DRAINS TO CHECK FOR PROPER DRAINAGE.
5. SEAL AROUND ALL PIPING AT PENETRATIONS THROUGH FIRE WALLS, CEILINGS, AND TUNNELS.
6. ALL PIPING SHALL BE NEW UNLESS NOTED OTHERWISE.
7. INSULATE ALL ABOVE GROUND WATER PIPING.

PLUMBING CALCS (RESTROOM)

FIXTURE	QUANTITY		WATER F.U.		SEWER F.U.	
	NEW	EXISTING	EACH	TOTAL	EACH	TOTAL
WC	2	-	6	12	5	10
LAV (SINGLE)	2	-	1	2	2	4
DF	2	-	.5	1	.5	1
TOTALS	//////////	//////////////////////	//////////	15	//////////	15

PLUMBING CALCS (CONCESSION)

FIXTURE	QUANTITY		WATER F.U.		SEWER F.U.	
	NEW	EXISTING	EACH	TOTAL	EACH	TOTAL
WC	3	-	6	18	5	15
UR	1	-	5	5	4	4
LAV (SINGLE)	2	-	1	2	2	4
HANDWASH	2	-	1.5	3	2	4
SINK (DOUBLE)	2	-	1.5	3	2	4
DF	2	-	.5	1	.5	1
TOTALS	//////////	//////////////////////	//////////	32	//////////	32

SHOCK ARRESTOR SCHEDULE

PDI SYMBOL	FIXTURE UNITS	CHAMBER LENGTH	SWEAT CONNECTION
A	1-11	9-5/8"	1/2"
B	22-32	11-3/4"	3/4"
C	33-60	14-11/16"	1"
D	61-113	12-3/8"	1"
E	114-154	15-3/8"	1"
F	155-330	17-3/8"	1"

FIXTURE UNIT LOADING SCHEDULE

MAXIMUM FIXTURE UNIT LOADING OF WATER, DRAIN, & VENT PIPING

FIXTURE	NOMINAL PIPE SIZE - INCHES								
	1/2	3/4	1	1-1/4	1-1/2	2	2-1/2	3	4
WATER (SERVING FLUSH FALVES)	-	-	5	10	16	45	140	250	-
WATER (NO FLUSH VALVES)	4	10	20	30	50	120	220	-	-
DRAINAGE (VERTICAL)	-	-	-	-	2 *	16 **	32 **	48	256
DRAINAGE (HORIZONTAL)	-	-	-	-	1	8 **	14 **	35	216
VENT	-	-	-	****	8 **	24	48	84	256

NOTE:
1. THIS SCHEDULE SHALL BE USED TO SIZE PIPING NOT SHOWN ON DRAWINGS, REFER ALSO TO LATEST EDITION OF INTERNATIONAL PLUMBING CODE FOR REQUIREMENTS NOT COVERED IN SCHEDULE, ON PLANS, OR IN SPECIFICATIONS. WHERE INTERNATIONAL PLUMBING CODE DIFFERS FROM THE CONTRACT DOCUMENTS, THE MOST STRINGENT REQUIREMENT SHALL GOVERN.

* EXCEPT SINKS, URINALS, & DISHWASHERS

** EXCEPT SIX-UNIT TRAPS OR WATER CLOSETS

**** VERTICAL ONLY

FIXTURE UNIT CHART & CONNECTION SIZE

ABBR	FIXTURE	NOMINAL PIPE SIZE - INCHES			FIXTURE CONNECTIONS *		
		COLD WATER	HOT WATER	DRAIN & VENT	WATER **	DRAINAGE	VENT
WC	WATER CLOSET (FV)	5	-	4	1 ***	4	2
UR	URINAL (FV)	4	-	4	3/4 ***	2	1-1/2
LAV	LAVATORY (IN SETS)	1	1	2	1/2	1-1/2	1-1/2
SK	SINK						
DF	DRINKING FOUNTAIN	1	-	1	1/2	1-1/2	1-1/4

NOTE:
1. THIS SCHEDULE SHALL BE USED TO SIZE BRANCH PIPING NOT SHOWN ON DRAWINGS, REFER ALSO TO LATEST EDITION OF INTERNATIONAL PLUMBING CODE FOR REQUIREMENTS NOT COVERED IN SCHEDULE, ON PLANS, OR IN SPECIFICATIONS. WHERE INTERNATIONAL PLUMBING CODE DIFFERS FROM THE CONTRACT DOCUMENTS, THE MOST STRINGENT REQUIREMENT SHALL GOVERN.

* FIXTURE CONNECTIONS ARE LISTED AS (I.D.) NOMINAL PIPE SIZE - INCHES

** SIZE TO "DROP EAR" ELBOW OR SIMILAR FITTING

*** INCREASE ONE PIPE SIZE IF TOTAL DEVELOPED LENGTH EXCEEDS 12'

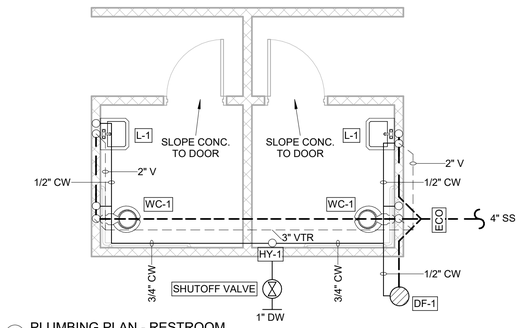

2 PLUMBING PLAN - RESTROOM
1/4" = 1'-0"

PLUMBING LEGEND

WC-1	WATER CLOSET (T.A.S. COMPLIANT FOR ADULTS)	DESCRIPTION: FLOOR MOUNTED, STAINLESS STEEL, ELONGATED SEAT, VANDAL RESISTANT FLUSH TRIP LEVER LOCATED ON THE WIDE SIDE OF THE TOILET PER T.A.S. ROUGH-IN: 4" WASTE, 2" VENT, 1/2" COLD WATER
WC-2	WATER CLOSET	DESCRIPTION: FLOOR MOUNTED, STAINLESS STEEL, ELONGATED SEAT, VANDAL RESISTANT ROUGH-IN: 4" WASTE, 2" VENT, 1/2" COLD WATER
UR-1	URINAL (T.A.S. COMPLIANT FOR ADULTS)	DESCRIPTION: WALL HUNG, STAINLESS STEEL, INTEGRAL TRAP, VANDAL RESISTANT ROUGH-IN: 2" WASTE, 2" VENT, 3/4" COLD WATER
L-1	LAVATORY (T.A.S. COMPLIANT FOR ADULTS)	DESCRIPTION: WALL HUNG, STAINLESS STEEL, VANDAL RESISTANT, MIXING VALVE TO TEMPER HOT WATER SUPPLY TO 120° F MAX. ROUGH-IN: 2" WASTE, 2" VENT, 1/2" COLD WATER
SK-1	SINK (T.A.S. COMPLIANT FOR ADULTS)	DESCRIPTION: COUNTER MOUNTED, SELF-RIMMING, 18 GA. STAINLESS STEEL, 33" x 22" x 11" DEEP, DOUBLE COMPARTMENT ROUGH-IN: 2" WASTE, 2" VENT, 1/2" HOT & COLD WATER
SK-2	HAND SINK (T.A.S. COMPLIANT FOR ADULTS)	DESCRIPTION: WALL HUNG, STAINLESS STEEL W/ REAR SPLASH, MIXING VALVE TO TEMPER HOT WATER SUPPLY TO 120° F MAX. ROUGH-IN: 2" WASTE, 2" VENT, 1/2" HOT & COLD WATER
FS-1	FLOOR SINK	DESCRIPTION: BOTTOM OUTLET, CAST IRON BODY, 12" SQUARE
FD-1	FLOOR DRAIN	DESCRIPTION: BOTTOM OUTLET CAST IRON BODY, ADJUSTABLE 6" DIAMETER STAINLESS STEEL DTRAINER WITH VANDAL PROOF SCREWS
DF-1	DRINKING FOUNTAIN (T.A.S. COMPLIANT FOR ADULTS)	DESCRIPTION: HI-LO WITH DOG BOWL, HALSEY TAYLOR 4420DB OR EQUAL ROUGH-IN: 2" WASTE, 2" VENT, 1/2" COLD WATER
HY-1	WALL HYDRANT	DESCRIPTION: CONCEALED BOX TYPE, NON-FREEZE, 3/4" MALE HOSE THREAD OUTLET, LOCKING HINGE COVER ROUGH-IN: 3/4" COLD WATER, INSTALL W/ BOTTOM OF BOX AT 24" AFF
WCO	WALL CLEAN-OUT	DESCRIPTION: CAST IRON CLEANOUT FERRULE WITH BRONZE RAISED HEAD PLUG AND ROUND STAINLESS STEEL COVER PLATE WITH CENTER SECURING SCREW
FCO	FLOOR CLEAN-OUT	DESCRIPTION: CAST IRON BODY WITH SECONDARY O-RING TEST SEAL AND ADJUSTABLE CONBINED ACCESS COVER/PLUG TOP ASSEMBLY WITH PRIMARY GASKET SEAL, AND ROUND SCORIATED NICKEL BRONZE COVER
ECO	EXTERIOR CLEAN-OUT	DESCRIPTION: CLEANOUT TO GRADE, CAST IRON BODY WITH SECONDARY O-RING TEST SEAL AND ADJUSTABLE COMBINED ACCESS COVER/PLUG TOP ASSEMBLY WITH PRIMARY GASKET SEAL AND ROUND SCORIATED VANDAL RESISTAND DUCTILE IRON TRACTOR TYPE COVER. IF LOCATED IN ASPHALT OR DIRT PROVIDE 18" x 18" x 12" CONCRETE PAD
WH-1	WATER HEATER - ELECTRIC	MANUF. RHEEM, MODEL ELD40, 40 GAL OR EQUAL TANK WATER TEMPERATURE SHALL BE SET AT 140° F
GT-1	GREASE TRAP	ZURN GT2700-25 GREASE TRAP RATED AT 24 GPM, 50LB CAPACITY OR EQUAL
RP-1	BACKFLOW PREVENTER	1" WATTS LF009 BACKFLOW PREVENTOR OR EQUAL ROUTE DRAIN TO FLOOW DRAIN BELOW. INSTALL DEVICE ON WALL PER ACCESSIBILITY CODE

NOTES:
1. REF. ARCHITECTURAL DRAWINGS FOR ALL HEIGHT REQUIREMENTS.
2. CONTRACTOR TO PROVIDE ALL NECESSARY SUPPLIES, FLUSH VALVES, FAUCETS, STRAINERS, P-TRAPS, SEALS, & CARRIERS AS REQUIRED PER PLUMBING FIXTURE. PROVIDE SPEEDWAY STR-1715A OR STCR-1915A STOPS AND 17 GAUGE CHROME PLATED BRASS FIXTURE P-TRAPS FOR ALL SINKS, LAVATORIES, AND DRINKING FOUNTAINS UNLESS NOTED OTHERWISE.
3. ALL LAVATORIES AND SINKS SHALL BE SUPPLIED WITH HOT AND COLD WATER TO FAUCETS AS INDICATED ON PLANS AND FIXTURE SCHEDULE.
4. PROVIDE MCGUIRE PROWRAP INSULATION KITS ON ALL LAVATORIES AND SINKS REQUIRED TO BE T.A.S. COMPLIANT. ALL SUCH FIXTURES AND FINAL INSTALLATIONS SHALL COMPLY WITH THE STATE ACCESSIBILITY STANDARDS REQUIREMENTS.
5. INSERT TRAP GUARDS AFTER FINAL RODDING OF DRAINS. INSTALL TRAP GUARD WITH CLEAR SILICONE CAULK FOR GAS-TIGHT SEAL. FOR DRAIN RODDING AFTER INSTALLATION, INSERT SEWER TAPE THROUGH LIGHTLY GREASED 1 1/2" PVC PIPE TO PROTECT TRAP GUARD.
6. PROVIDE SHOCK ARRESTORS IN WATER PIPING SYSTEM

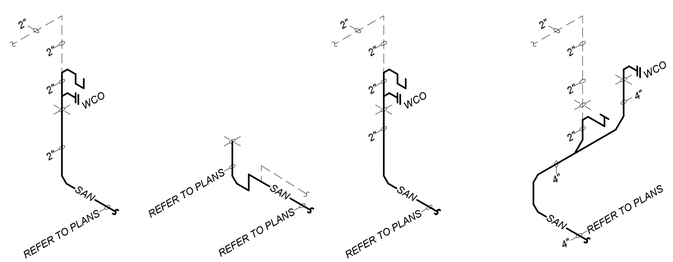

TYP. URINAL | TYP. FLOOR DRAIN/SINK | TYP. SINK/LAV/ DRINKING FOUNTAIN | TYP. WATER CLOSET

TYPICAL WASTE AND VENT RISERS

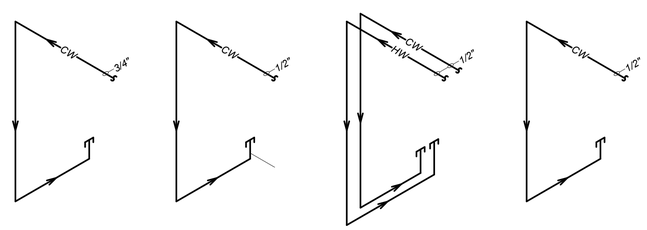

TYP. URINAL | TYP. DRINKING FOUNTAIN | TYP. SINK/LAV | TYP. WATER CLOSET

TYPICAL DOMESTIC WATER RISERS

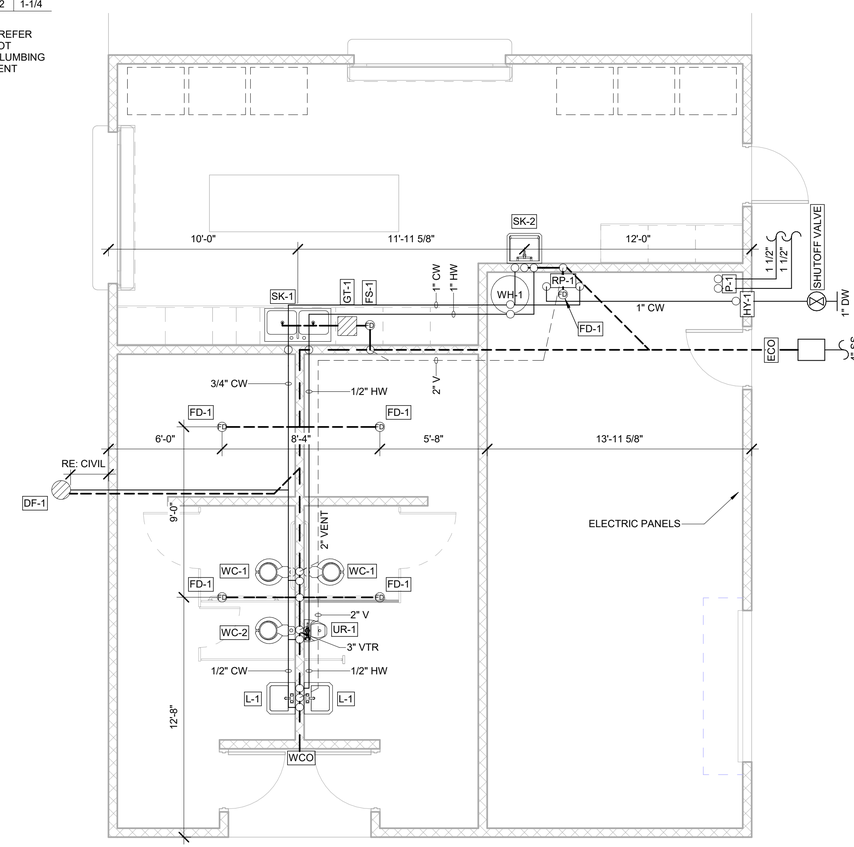

1 PLUMBING PLAN - CONCESSION
1/4" = 1'-0"

No.	Revisions and Descriptions	By	Date

Copyright © 2018MRB Group All Rights Reserved

Project Title: TOM GREEN COUNTY PUGH PARK IMPROVEMENTS CHRISTOVAL, TEXAS

Drawing Title: PLUMBING

Drawn By: Author | Checked By: Checker | Scale: As indicated | Date: 03/04/20

REGISTERED ARCHITECT TANYA L. MIKEska 16 STATE OF TEXAS 3-25-2020

MRB group
Engineering, Architecture & Surveying
5250 South 31st Street, Temple, Texas 76502 Phone: 254.771.2054
Corporate Office: The Culver Road Armory, 145 Culver Road, Suite 160, Rochester, New York 14620
Phone: 585.381.9250
TBPE Firm Number: F-10015
www.mrbgroup.com

Sheet No. P1.01 of

Project No. 2054.19002

3/26/2020 2:08:14 PM

ELECTRICAL SYMBOL LEGEND

NOT ALL SYMBOLS SHOWN MAY BE USED

WIRING DEVICES

SYMBOL	DESCRIPTION
	2 POLE, 3 WIRE, 125V. SINGLE RECEPTACLE
	2 POLE, 3 WIRE, 125V. DUPLEX RECEPTACLE, MOUNT 18" AFF. UON
AF	2 POLE, 3 WIRE, 125V. DUPLEX ARC FAULT RECEPTACLE
IG	2 POLE, 3 WIRE, 125V. ISOLATED GROUND, ORANGE DUPLEX RECEPTACLE
WP	2 POLE, 3 WIRE, 125V. WEATHERPROOF DUPLEX RECEPTACLE
	2 POLE, 3 WIRE, 125V. QUADRUPLEX RECEPTACLE
D	2 POLE, 3 WIRE, 125V. DEDICATED DUPLEX RECEPTACLE
	SINGLE RECEPTACLE: 50A, 250V, 1ø, HUBBELL #9367 NEMA 6-50R
	SINGLE RECEPTACLE: 50A, 120V, 1ø, HUBBELL #9360 NEMA 5-50R
	TWIST LOCK RECEPTACLE: 20A, 120V, 1ø, HUBBELL #2310 NEMA L5-20R
	TWIST LOCK RECEPTACLE: 20A, 120V, 1ø, HUBBELL #2310 NEMA L5-20R
	TWIST LOCK RECEPTACLE: 30A, 250V, 1ø, HUBBELL #2620 NEMA L6-30R
	TWIST LOCK RECEPTACLE: 20A, 250V, 1ø, HUBBELL #2320 NEMA L6-20R
	SPECIAL PURPOSE RECEPTACLE
	SINGLE FLOOR RECEPTACLE
	QUADRUPLEX FLOOR RECEPTACLE
	DUPLEX FLOOR RECEPTACLE
	POWER POLE OR TELEPOWER POLE

CONDUIT & WIRING

SYMBOL	DESCRIPTION
	HOME RUN W/HOT, NEUTRAL AND GROUND
	HOME RUN W/ 2 HOT AND GROUND
	HOME RUN W/ 3 HOT AND GROUND
	HOME RUN W/ 2 HOT, NEUTRAL AND GROUND
	HOME RUN W/ 3 HOT, NEUTRAL AND GROUND
— UG —	UNDERGROUND GROUND
— UE —	UNDERGROUND ELECTRIC
— OE —	OVERHEAD ELECTRIC
— UT —	UNDERGROUND TELEPHONE
●	THERMAL WELD GROUND CONNECTION
■	MECHANICAL GROUND CONNECTION

DISTRIBUTION & CONTROLS

SYMBOL	DESCRIPTION
	PANELBOARD
	TRANSFORMER
J	DISCONNECT SWITCH (AMPERAGE/POLES/FUSE SIZE/NEMA)
J	COMBINATION MAGNETIC STARTER (AMPERAGE/POLES/TRIP/STARTER SIZE/NEMA)
	MAGNETIC STARTER (AMPERAGE/POLES/TRIP/STARTER SIZE/NEMA)
$M	MOTOR RATED SWITCH WITH THERMAL OVERLOADS
J	JUNCTION BOX
J DC	JUNCTION BOX, 28VDC
J 400	JUNCTION BOX, 400HZ
	PUSH-BUTTON
	EQUIPMENT CONNECTION
PC	PHOTO ELECTRIC CONTROL
C	CONTACTOR
TC	TIME CLOCK
MS	MOTION DETECTOR, IR=INFRARED
	CONTROL PANEL
PFC	POWER FACTOR CAPACITOR
VFD	VARIABLE FREQUENCY DRIVE
OS	OCCUPANCY SENSOR

COMMUNICATIONS

SYMBOL	DESCRIPTION
	TELEPHONE OUTLET WALL MOUNTED
	TELEPHONE OUTLET FLOOR MOUNTED
	COMBINATION DATA AND TELEPHONE OUTLET
	DATA OUTLET WALL MOUNTED
	DATA OUTLET FLOOR MOUNTED
S	SPEAKER CEILING MOUNTED
S	SPEAKER WALL MOUNTED
M	MICROPHONE
M	MICROPHONE FLOOR OUTLET
VC	VOLUME CONTROL
IC	INTERCOM OUTLET
	TELEPHONE BACKBOARD

LIGHTING

SYMBOL	DESCRIPTION
	EXISTING 2X4 FIXTURE TO REMAIN AND BE RE-USED
R	REMOVE AND RELOCATE 2X4 FIXTURE, REFER TO LIGHTING PLAN FOR RELOCATED FIXTURES.
	NEW 2X4 LIGHTING FIXTURE
R	RELOCATED 2X4 LIGHTING FIXTURE
	HATCH INDICATES NON SWITCHED/EMERGENCY BATTERY PACK FIXTURE.
	1X4 LIGHTING FIXTURE
	STRIP LIGHT
	SURFACE MOUNTED LIGHTING FIXTURE
	WALL MOUNTED LIGHTING FIXTURE
	RECESSED LIGHTING FIXTURE
	RECESSED WALL WASH LIGHTING FIXTURE
	EMERGENCY LIGHTING FIXTURE W/2 HEADS
	SINGLE FACE CEILING-MOUNTED EXIT SIGN
	SINGLE FACE WALL-MOUNTED EXIT SIGN
	DOUBLE-FACE CEILING-MOUNTED EXIT SIGN ARROWS AS INDICATED ON PLAN
	DOUBLE-FACE WALL-MOUNTED EXIT SIGN ARROWS AS INDICATED ON PLAN
	POLE MOUNTED SITE LIGHT
$	SINGLE POLE, SINGLE THROW SWITCH, MOUNT 48" AFF. UON
$2	DOUBLE POLE, SINGLE THROW SWITCH, MOUNT 48" AFF. UON
$3	SINGLE POLE, DOUBLE THROW 3-WAY SWITCH, MOUNT 48" AFF. UON
$4	DOUBLE POLE, DOUBLE THROW 4-WAY SWITCH, MOUNT 48" AFF. UON
$FS	FAN SPEED CONTROL RHEOSTAT, MOUNT 48" AFF. UON
$K	KEY OPERATED SWITCH, MOUNT 48" AFF. UON
$P	SINGLE POLE, SINGLE THROW SWITCH W/PILOT LIGHT, MOUNT 48" AFF. UON
$T	INTERVAL TIMER SWITCH, MOUNT 48" AFF. UON
$D	DIMMER SWITCH, 6=600W, 10=1000W, 15=1500W, 20=2000W, MOUNT 48" AFF. UON
$OS	OCCUPANCY SENSOR SWITCH, MOUNT 48" AFF. UON
$LV	LOCAL ROOM CONTROL FOR DIMMING AND/OR LIGHTING CONTROL SYSTEM
LC	LIGHTING CONTACTOR

FIRE ALARM

SYMBOL	DESCRIPTION
F	FIRE ALARM PULL STATION
F	FIRE ALARM AUDIO/VISUAL
V	FIRE ALARM VISUAL
F	FIRE ALARM BELL AND FLASHING LIGHT
F C	FIRE ALARM AUDIO/VISUAL CEILING MOUNT
H	FIRE ALARM HORN
SD	SMOKE DETECTOR
SD D	DUCT SMOKE DETECTOR
SD 120V	120V SMOKE DETECTOR
HD	HEAT DETECTOR
FACP	FIRE ALARM CONTROL PANEL
FAA	FIRE ALARM ANNUNCIATOR
MAG	MAGNETIC DOOR HOLDER
FSD	FIRE SMOKE DAMPER
W	SPRINKLER SYSTEM WATER FLOW SWITCH
T	SPRINKLER SYSTEM TAMPER SWITCH

SPECIAL SYSTEMS

SYMBOL	DESCRIPTION
TV	TELEVISION OUTLET
TV	TELEVISION FLOOR OUTLET
M	CAMERA MONITOR OUTLET
C	CLOCK WALL MOUNTED
C	CLOCK RECEPTACLE
CM	MASTER CLOCK AND PROGRAM CONTROL OUTLET
	BELL
	BUZZER
T	THERMOSTAT
PRS	PRESET RECALL STATION
ESD	ELECTROSTATIC DISCHARGE GROUND
KP	ELECTRONIC KEY PAD
DB	ELECTRONIC REMOTE DOOR BELL
CR	ELECTRONIC CARD READER
TV	CLOSED CIRCUIT SECURITY CAMERA
10	MOTOR, 10 HORSEPOWER SHOWN
	DATA OUTLET FURNITURE WHIP
J	JUNCTION BOX FURNITURE WHIP

ABBREVIATIONS

A	AMPERES OR TRIP AMPERES
ABV	ABOVE
AC	ALTERNATING CURRENT
ACT	ABOVE COUNTER TOP
A/C	AIR CONDITIONING
AE	AUSTIN ENERGY
AFF	ABOVE FINISHED FLOOR
AFG	ABOVE FINISHED GRADE
AIC	SYMMETRICAL AMPS INTERRUPTING CAPACITY
AWG	AMERICAN WIRE GAGE
A/R	AS REQUIRED
BAL	BALLAST
BD	BOARD
BLDG	BUILDING
C	CONDUIT
CAB	CABINET
CAP	CAPACITOR
CB	CIRCUIT BREAKER
CKT	CIRCUIT
CL	CURRENT LIMITING
COA	CITY OF AUSTIN
CONN	CONNECT OR CONNECTION
CONT'D	CONTINUED
CONTR	CONTRACTOR
CPT	CONTROL POWER TRANSFORMER
CT	CURRENT TRANSFORMER
CU	COPPER
DBL	DOUBLE
DIM	DIMENSION
DISC SW	DISCONNECT SWITCH
DC	DIRECT CURRENT
EA	EACH
EC	ELECTRICAL CONTRACTOR
EF	EXHAUST FAN
ELEC	ELECTRICAL
EM	EMERGENCY
EMT	ELECTRICAL METALLIC TUBING
ENCL	ENCLOSURE
EQUIP	EQUIPMENT
EWC	ELECTRIC WATER COOLER
FLA	FULL LOAD AMPS
FLEX	FLEXIBLE CONDUIT
FIX	FIXTURE
GC	GENERAL CONTRACTOR
GALV	GALVANIZED
GEN	GENERATOR
GFCI	GROUND FAULT CIRCUIT INTERRUPTER
GFI	GROUND FAULT INTERRUPTER
GND	GROUND
HDG	HOT DIPPED GALVANIZED
HOA	HAND-OFF-AUTO
HP	HORSEPOWER
HPS	HIGH PRESSURE SODIUM
HT	HEIGHT
HTR	HEATER
HZ	HERTZ
IMC	INTERMEDIATE METAL CONDUIT
INST	INSTRUMENT
JB	JUNCTION BOX
KCMIL	THOUSAND CIRCULAR MILLS
KV	KILOVOLTS
KVA	KILOVOLT AMPERES
KW	KILOWATT
KWH	KILOWATT HOURS
LA	LIGHTNING ARRESTOR
L-L	LINE TO LINE
L-N	LINE TO NEUTRAL
LTG	LIGHT OR LIGHTING
MANUF	MANUFACTURER
MC	MECHANICAL CONTRACTOR
MCB	MAIN CIRCUIT BREAKER

ABBREVIATIONS (CONT'D)

MCC	MOTOR CONTROL CENTER
MCP	MOTOR CIRCUIT PROTECTOR
MIN	MINIMUM
MLO	MAIN LUGS ONLY
MSB	MAIN SWITCH BOARD
MTD	MOUNTED
MTG	MOUNTING
MRCT	MULTI-RATIO CURRENT TRANSFORMER
MV	MERCURY VAPOR
N.C.	NORMALLY CLOSED
NEC	NATIONAL ELECTRICAL CODE
NEMA	NATIONAL ELECTRICAL MANUFACTURERS ASSOCIATION
NEUT	NEUTRAL
NIC	NOT IN THIS CONTRACT
N.O.	NORMALLY OPEN
NTS	NOT TO SCALE
OC	ON CENTER
OH	OVERHEAD
OL	OVERLOAD
ø	PHASE
P	POLE
PA	PUBLIC ADDRESS
PC	PHOTOELECTRIC
PEN	PENDANT
PNL	PANELBOARD
PRV	PRESSURE REDUCING VALVE
PVC	POLYVINYL CHLORIDE
R	RELOCATED
RECP	RECEPTACLE
REQ'D	REQUIRED
REQ'MTS	REQUIREMENTS
RGC	RIGID GALVANIZED STEEL CONDUIT
RM	ROOM
RMC	RIGID METALLIC CONDUIT
ROW	RIGHT OF WAY
SCH	SCHEDULE
SE	SERVICE ENTRANCE
SH	SHEET
SM	SURFACE MOUNT
SN	SOLID NEUTRAL
SOV	SOLENOID OPERATED VALVE
SPACE	SPACES(S) ONLY (NO BREAKER OR DEVICE)
SPARE	SPARE BREAKER OR DEVICE
SPD	SURGE PROTECTIVE DEVICE
SPECS	CONTRACT SPECIFICATIONS
SS	STAINLESS STEEL HARDWARE
SWBD	SWITCHBOARD
SW	SWITCH
SWGR	SWITCH GEAR
TB	TELEPHONE BACKBOARD
TTB	TELEPHONE TERMINAL BOARD
TYP	TYPICAL
UG	UNDERGROUND ELECTRIC
UL	UNDERWRITERS LABORATORIES
UON	UNLESS OTHERWISE NOTED
UT	UNDERGROUND TELEPHONE
V	VOLTS
VA	VOLT AMPERES
W	WATTS
W/	WITH
WH	WATER HEATER
WP	WEATHER PROOF
XFMR	TRANSFORMER
XFR SW	TRANSFER SWITCH
XMTR	TRANSMITTER
1/C	SINGLE CONDUCTOR CABLE
3/C	THREE CONDUCTOR CABLE USED WITH A NUMERAL, WHICH INDICATES HEIGHT OF ITEM AFF LEVEL
S.D. BARE CU.	SOFT DRAWN BARE COPPER

GENERAL ELECTRICAL NOTES

1. ALL WORK SHALL BE PERFORMED IN ACCORDANCE WITH THE NATIONAL ELECTRICAL CODE, ALL CITY, COUNTY, AND STATE REGULATIONS, NFPA, ANSI, UL, IEEE, AND THE LOCAL CODE AUTHORITY HAVING JURISDICTION. THE ELECTRICAL CONTRACTOR SHALL BE RESPONSIBLE FOR ALL PERMITS AND INSPECTIONS.
2. ALL ELECTRICIANS SHALL BE LICENSED BY THE APPROPRIATE CITY, STATE, OR LOCAL CODE AUTHORITY HAVING JURISDICTION.
3. THE ELECTRICAL CONTRACTOR SHALL FOLLOW ALL OSHA AND OWNER SAFETY RULES AS REQUIRED TO WORK ON THIS SITE.
4. ALL INSTALLATIONS SHALL BE DONE IN A NEAT AND WORKMAN LIKE MANNER.
5. ALL POWER OUTAGES SHALL BE PERFORMED DURING NON-BUSINESS HOURS. COORDINATE ALL POWER OUTAGES WITH THE OWNER. NOTIFY THE OWNER IN WRITING 10 DAYS PRIOR TO SCHEDULING ANY POWER OUTAGES.
6. THE ELECTRICAL CONTRACTOR SHALL PROVIDE ALL TEMPORARY ELECTRICAL POWER AND LIGHTING REQUIRED FOR THIS PROJECT.
7. THE DEMOLITION DRAWINGS (IF APPLICABLE) ARE DIAGRAMMATIC IN NATURE. THE ELECTRICAL CONTRACTOR SHALL BE THOROUGHLY FAMILIAR WITH THE PROJECT SCOPE OF WORK PRIOR TO SUBMITTING THEIR BID.
8. THE ELECTRICAL CONTRACTOR SHALL VERIFY THE ELECTRICAL REQUIREMENTS OF ALL OWNER PROVIDED EQUIPMENT AND SHALL NOTIFY THE ENGINEER IMMEDIATELY OF ANY DISCREPANCIES.
9. ALL WORK SHOWN ON DRAWINGS IS NEW UNLESS OTHERWISE NOTED.
10. ALL GROUNDING SHALL BE PER NEC AND LOCAL CODES.
11. ALL ELECTRICAL CONSTRUCTION ON THE PROJECT SHALL CONFORM TO THE NEC AND ALL OTHER AUTHORITIES HAVING JURISDICTION. THE CONTRACTOR SHALL OBTAIN ALL PERMITS REQUIRED AND PAY ALL FEES.
12. ALL WIRING SHALL BE FREE OF SHORTS AND GROUNDS. NO CIRCUIT WIRING SHALL BE LOADED BEYOND THE PERMITTED AMPACITIES ALLOWED BY THE NEC. ALL WIRE SIZES ARE FOR COPPER.
13. CONTRACTOR SHALL FIELD VERIFY ALL CONDITIONS AND DIMENSIONS PRIOR TO SUBMITTING BID.
14. ELECTRICAL CONTRACTOR SHALL PROVIDE ALL EQUIPMENT AND MATERIALS NECESSARY TO MAKE A COMPLETE AND WORKABLE JOB INCLUDING FINAL HOOK-UP OF ALL EQUIPMENT.
15. FIRE STOP SHALL BE PROVIDED AT ALL LOCATIONS WHERE ELECTRICAL EQUIPMENT OR SYSTEMS PENETRATE FIRE RATED WALLS. SEE ARCHITECTURAL PLANS FOR RATED WALL LOCATIONS. CONTROL WIRING TO MECHANICAL EQUIPMENT IS NOT SHOWN ON THESE SHEETS.
16. RISER AND ONE-LINE DIAGRAMS ARE MEANT TO SHOW ONLY VERTICAL AND ELECTRICAL RELATIONSHIPS AND THEREFORE MAY NOT INCLUDE ALL REQUIRED EQUIPMENT, DEVICES AND ACCESSORIES.
17. EQUIPMENT INTERRUPTING CAPACITIES SPECIFIED IN THE CONTRACT DOCUMENTS ARE BASED UPON EQUIPMENT CHARACTERISTICS AND IMPEDANCES SHOWN ON THE DRAWINGS. IF ACTUAL INSTALLED EQUIPMENT DEVIATES FROM THESE CHARACTERISTICS OR HAS LOWER IMPEDANCES THE CONTRACTOR SHALL INCREASE THE INTERRUPTING CAPACITIES OF ALL ITEMS ON THE LOAD SIDE OF THE DEVIANT EQUIPMENT IN DIRECT PROPORTION TO THE CHANGED CHARACTERISTICS. INTERRUPTING CAPACITIES SHALL NOT BE REDUCED TO VALUES LESS THAN THOSE REQUIRED BY THE CONTRACT DOCUMENTS.
18. EQUIPMENT SIZES ARE AS DESIGNED. CIRCUIT BREAKERS, CONDUIT, MOTOR STARTERS, DISCONNECT SWITCHES, PLUG-IN'S, ETC., SHALL BE ADJUSTED TO THE EQUIPMENT SUBMITTED AND APPROVED FOR INSTALLATION ON THIS PROJECT.
19. REFER TO ARCHITECTURAL OR CIVIL DRAWINGS FOR SITE INFORMATION.
20. LIGHT FIXTURE MOUNTING HEIGHTS ARE MEASURED BETWEEN THE FLOOR AND THE BOTTOM OF THE FIXTURE.

2 working days Call before you Dig. CALL 811

CONDUIT AND WIRING LEGEND

	NEW
	EXISTING TO BE REMOVED
	EXISTING TO REMAIN
UE	UNDERGROUND ELECTRICAL
UF	UNDERGROUND FIBER OPTIC
UT	UNDERGROUND TELEPHONE
UG	UNDERGROUND GROUNDING
OE	OVERHEAD ELECTRICAL

ELECTRICAL DRAWING INDEX

E1.0 ELECTRICAL NOTES, SYMBOLS AND ABBREVIATIONS
E1.1 ELECTRICAL SPECIFICATIONS
E2.0 ELECTRICAL OVERALL SITE PLAN
E2.1 ELECTRICAL BASEBALL AND SOFTBALL FIELDS SITE PLAN
E2.2 ELECTRICAL LITTLE LEAGUE FIELDS SITE PLAN
E2.3 ELECTRICAL CONCESSION/RESTROOM/STORAGE BUILDING FLOOR PLAN
E2.4 ELECTRICAL PAVILION AND RESTROOM PLANS
E2.5 ELECTRICAL EQUIPMENT RACK PLANS
E3.0 ELECTRICAL ONE-LINES
E4.0 ELECTRICAL DETAILS
E4.1 ELECTRICAL DETAILS
E4.2 ELECTRICAL DETAILS
E4.3 ELECTRICAL BASEBALL AND SOFTBALL LIGHT POLE DETAILS
E4.4 ELECTRICAL LITTLE LEAGUE LIGHT POLE DETAILS
E5.0 ELECTRICAL SCHEDULES
E5.1 ELECTRICAL SCHEDULES
E5.2 ELECTRICAL SCHEDULES

S. Kanetzky Engineering, LLC.
5920 W. William Cannon
Bldg. 7, Suite 200
Austin, Texas 78749
(512) 329-5774.
www.skaneng.com
TBPE Firm No. F-2356
SKE PROJECT # 2320220

No.	Revisions and Descriptions	By	Date

Copyright © 2020 MRB Group. All Rights Reserved

Project Title: TOM GREEN COUNTY PUGH PARK

Drawing Title: ELECTRICAL NOTES, SYMBOLS & ABBREVIATIONS

Drawn By: AH
Checked By: TV
Scale: PER PLAN
Date: 05/14/2020

2320220
STATE OF TEXAS
THOMAS EDWARD VAUGHAN
135335
LICENSED PROFESSIONAL ENGINEER
05.14.2020

MRB group
Engineering, Architecture & Surveying
5250 South 31st Street, Temple, Texas 76502 Phone: 254-771-2054
Corporate Office: 13sc Culver Road Armory, 145 Culver Road, Suite 160, Rochester, New York 14620
Phone: 585-381-9250
TBPE Firm Number F-10015
www.mrbgroup.com

Sheet No. E1.0
of
Project No. 2054.18001

1/9/2020 12:09:49 PM

ELECTRICAL SPECIFICATIONS

PART 1 – GENERAL

1.01 WORK INCLUDED

A. ELECTRICAL SYSTEMS – ALL WORK SHALL BE PERFORMED PER BUILDING SPECIFICATIONS.

1.02 RELATED WORK

A. THE WORK COVERED BY THIS SPECIFICATION CONSISTS OF FURNISHING ALL LABOR, SUPPLIES AND MATERIALS, SHOP DRAWINGS AND A LIST OF MAKE AND CATALOG NUMBERS OF ALL EQUIPMENT AND MATERIALS TO BE INSTALLED AND PERFORMING ALL OPERATIONS, INCLUDING INSTALLATION OF LIGHTING FIXTURES, ELECTRICAL EQUIPMENT, CUTTING AND PATCHING, COORDINATION WITH OTHER TRADES ON THE JOB, ETC., NECESSARY FOR THE INSTALLATION OF COMPLETE ELECTRICAL SYSTEMS AS SHOWN ON THE DRAWINGS AND HEREINAFTER SPECIFIED. THESE SPECIFICATIONS SUPPLEMENT THE GENERAL CONDITIONS AND SPECIFICATIONS.

B. EXAMINATION OF SITE: THE CONTRACTOR SHALL THOROUGHLY EXAMINE SITE AND SATISFY HIMSELF AS TO THE CONDITIONS UNDER WHICH THE WORK IS TO BE PERFORMED. THE CONTRACTOR SHALL VERIFY AT THE SITE ALL MEASUREMENTS AFFECTING HIS WORK AND SHALL BE RESPONSIBLE FOR THE CORRECTNESS OF THE SAME. NO EXTRA COMPENSATION WILL BE ALLOWED TO THE CONTRACTOR FOR EXPENSES DUE TO HIS NEGLECT TO EXAMINE OR FAILURE TO DISCOVER CONDITIONS WHICH AFFECT HIS WORK. NO EXTRA COMPENSATION WILL BE ALLOWED ON ACCOUNT OF DIFFERENCES BETWEEN ACTUAL DIMENSIONS AND THOSE INDICATED ON THE DRAWINGS.

C. THE AGREEMENT FORMS, GENERAL CONDITIONS AND SUPPLEMENTARY CONDITIONS OF THE SPECIFICATIONS SHALL APPLY TO THE WORK SPECIFIED IN DIVISION 26.

1.03 DEFINITION

A. "WIRING": WIRE OR CABLE, INSTALLED IN RACEWAY WITH ALL REQUIRED BOXES, FITTINGS, CONNECTORS AND ACCESSORIES, COMPLETELY INSTALLED.

B. "FEEDER": WIRING TO ANY DEVICE OR EQUIPMENT IN WHICH NUMBER SIX AWG COPPER (#6 CU) OR LARGER CONDUCTORS ARE USED.

C. "POWER WIRING": WIRING TO ANY DEVICE OR EQUIPMENT SERVED BY A MULTI–POLE BREAKER.

1.04 QUALITY ASSURANCE

A. CODES: COMPLY WITH THE LATEST EDITION OF THE NATIONAL ELECTRICAL CODE (NEC) AND ANY OTHER AUTHORITIES HAVING JURISDICTION OVER THE WORK.

B. PERMITS AND INSPECTIONS: PROVIDE ALL PERMITS REQUIRED AND OBTAIN FINAL INSPECTION AND APPROVAL FROM THE INSPECTION DEPARTMENT HAVING JURISDICTION.

C. WHERE DIFFERENT SECTIONS OF ANY APPLICABLE CODES SPECIFY DIFFERENT MATERIALS, METHODS OF CONSTRUCTION, OR OTHER REQUIREMENTS, THE MOST RESTRICTIVE SHALL GOVERN.

D. STANDARDS FOR MATERIAL AND WORKMANSHIP: USE MATERIALS THAT ARE NEW AND LISTED AND LABELED BY UNDERWRITERS LABORATORIES (UL) AS CONFORMING TO ITS STANDARDS, WHERE SUCH A STANDARD HAS BEEN ESTABLISHED FOR THE PARTICULAR TYPE OF MATERIAL IN QUESTION. EXECUTE WORK IN A WORKMAN LIKE MANNER, TO PRESENT A NEAT AND MECHANICAL APPEARANCE WHEN COMPLETED.

1.05 SUBSTITUTION OF MATERIALS

A. NO SUBSTITUTION OF MATERIAL IS ALLOWED WITHOUT WRITTEN PRIOR AUTHORIZATION FROM THE ENGINEER AND OWNER. DETERMINATION OF WHAT IS CONSIDERED EQUAL IS AT THE SOLE DISCRETION OF THE ENGINEER AND OWNER.

B. INCLUDE SUFFICIENT DESCRIPTIVE INFORMATION, INCLUDING MANUFACTURER'S PUBLISHED DATA TO ESTABLISH CONTRACT COMPLIANCE. SUBMIT SAMPLES IF REQUESTED BY ARCHITECT/ENGINEER.

1.06 DRAWINGS AND SPECIFICATIONS

A. THE WIRING LAYOUTS ARE SCHEMATIC AND DO NOT NECESSARILY SHOW THE EXACT LOCATION OF RACEWAYS, OUTLETS, ETC. REFER TO THE ARCHITECTURAL DRAWINGS FOR ACTUAL DIMENSIONS. FIT WORK TO CONFORM TO THE DETAILS OF BUILDING CONSTRUCTION. COORDINATE ALL WORK TO ASSURE PROPER CLEARANCE.

1.07 AS–BUILT DRAWINGS

A. AS WORK PROGRESSES, RECORD ON ONE (1) SET OF ELECTRICAL PRINTS ALL CHANGES AND DEVIATIONS FROM THE CONTRACT DOCUMENTS IN SIZE, LOCATIONS AND TYPES OF ALL MATERIALS AND EQUIPMENT. RECORD FINAL LOCATION OF OUTLETS, SWITCHES, STARTERS, UNDERGROUND AND EXPOSED CONDUITS, ETC. TO INDICATE THE FINAL INSTALLATION. MAKE SUFFICIENT MEASUREMENTS TO LOCATE ALL EQUIPMENT AND CONDUITS. PROVIDE AS–BUILT DRAWINGS.

B. THE CONTRACTOR SHALL PREPARE A TYPED PANEL DIRECTORY FOR EACH PANEL UTILIZED FOR THIS PROJECT. THIS DIRECTORY SHALL IDENTIFY THE CIRCUIT NUMBER, DEVICES SERVED, AND LOCATION OF DEVICES BY ROOM NUMBER. HE SHALL FILE THEM WITH THE BUILDING MANAGER WHEN THE WORK IS COMPLETE.

1.08 MAINTENANCE DATA

A. FURNISH AND DELIVER TO THE ARCHITECT/ENGINEER TWO (2) COMPLETE COPIES OF ALL DATA PREPARED BY MANUFACTURERS, DETAILING OPERATION AND MAINTENANCE INSTRUCTION FOR ALL EQUIPMENT.

1.09 PENETRATIONS, CUTTING, AND PATCHING

A. PERFORM CUTTING AND PATCHING IN ACCORDANCE WITH THE GENERAL AND SUPPLEMENTARY CONDITIONS OF THE CONTRACT.

B. PROVIDE ALL SLEEVES REQUIRED FOR PROPER INSTALLATION OF WORK INCLUDED IN THIS SECTION.

C. MAKE ALL PENETRATIONS THROUGH WALLS AT 90 DEGREE ANGLES. SEAL ALL PENETRATIONS AT FIRE AND SMOKE PARTITIONS WITH FIRE SAFING MATERIAL. SEAL ALL PENETRATIONS AT SOUND WALLS WITH SOUNDPROOFING MATERIAL.

1.10 SUBMITTALS

A. SHOP DRAWINGS AND MATERIAL BROCHURES: FURNISH AN ELECTRONIC SET OF SHOP DRAWINGS AND PRODUCT DATA IN PDF FORMAT TO THE ARCHITECT/ENGINEER ON THE FOLLOWING MATERIALS:

1. LIGHTING FIXTURES
2. DISCONNECT SWITCHES
3. TRANSFORMERS
4. RACEWAYS
5. CONDUCTORS
6. CONTROL PANELS
7. INSTRUMENTATION

1.11 COOPERATION

A. THE CONTRACTOR SHALL SCHEDULE HIS WORK, AND IN EVERY WAY POSSIBLE, COOPERATE WITH ALL OTHER TRADES IN THE JOB TO AVOID DELAYS, INTERFERENCES AND UNNECESSARY WORK. HE SHALL COOPERATE WITH THEM IN PROVIDING FOR THE INSTALLATION OF THIS WORK AND COORDINATE WITH WORK OF OTHER TRADES TO ASSURE PROPER CLEARANCE OF PIPING, DUCTWORK, CONDUIT, ETC. WHEN SUCH IS REQUIRED.

1.12 WIRING WORKMANSHIP

A. RUN WIRING IN ALL BRANCH CIRCUIT PANELBOARDS AND TERMINAL CABINETS PARALLEL OR AT RIGHT ANGLES TO THE SIDES OR TOP OF THE EQUIPMENT HOUSING.

B. GROUP AND HARNESS CONDUCTORS TOGETHER USING LOCKING TYPE CABLE TIES. CABLE TIES: AS MANUFACTURED BY THE PANDUIT CORPORATION OR THOMAS AND BETTS.

1.13 STORAGE MATERIALS

A. KEEP THE BUILDING AND PREMISES CLEAN AND CLEAR OF SCRAP MATERIALS AT ALL TIMES. STORE MATERIALS AND EQUIPMENT IN DESIGNATED STORAGE AREAS.

1.14 ORDERING OF MATERIALS

A. ORDER MATERIALS AND EQUIPMENT SO AS NOT TO JEOPARDIZE PROGRESS OF CONSTRUCTION OR COMPLETION DATE.

1.15 SAFETY PRECAUTIONS AND PROGRAMS

A. IT SHALL BE THE DUTY AND RESPONSIBILITY OF THE CONTRACTOR AND ALL OF ITS SUBCONTRACTORS TO BE FAMILIAR AND COMPLY WITH ALL REQUIREMENTS OF PUBLIC LAW 91–96, 29 U.S.C. SECS. 651 ET. SEQ., THE OCCUPATIONAL SAFETY AND HEALTH ACT OF 1970 (OSHA), AND ALL AMENDMENTS THERETO AND TO ENFORCE AND COMPLY WITH ALL OF THE PROVISIONS OF THIS ACT. IN ADDITION, ON PROJECTS IN WHICH TRENCH EXCAVATION WILL EXCEED A DEPTH OF FIVE FEET (5'), THE CONTRACTOR AND ALL OF ITS SUBCONTRACTORS SHALL COMPLY WITH ALL REQUIREMENTS OF 29 C.F.R., SECS. 1926.652 AND 1926.653, OSHA SAFETY AND HEALTH STANDARDS.

1.16 WARRANTY

A. GUARANTEE ALL WORK UNDER THIS SECTION FOR WORKMANSHIP, LABOR AND MATERIALS FOR A PERIOD OF ONE (1) YEAR FROM THE DATE OF ACCEPTANCE BY THE OWNER OR HIS AUTHORIZED REPRESENTATIVE.

PART 2 – PRODUCTS AND EXECUTION

2.01 CONDUIT

A. EXCEPT AS OTHERWISE NOTED, SPECIFIED OR REQUIRED, INSTALL ALL WIRES USED IN THIS PROJECT IN ELECTRICAL METALLIC TUBING AS HEREINAFTER SPECIFIED. (METAL CLAD CABLE MAY BE INSTALLED IN LIEU OF CONDUIT AS STATED BELOW)

B. INSTALL CONDUITS CONTINUOUS FROM OUTLET TO OUTLET, FROM OUTLET TO CABINET, JUNCTION BOX AND PULL BOX. SECURE CONDUITS TO ALL BOXES, ETC., IN SUCH A MANNER THAT EACH SYSTEM WILL BE ELECTRICALLY CONTINUOUS FROM SERVICE TO ALL OUTLETS. TERMINATE ALL CONDUIT RUNS FROM CABINETS AND JUNCTION BOXES IN APPROVED OUTLET BOXES. INSTALL CONDUITS AS HIGH AS POSSIBLE UP AGAINST STRUCTURE ABOVE. AVOID ROUTING CONFLICTS WITH HVAC EQUIPMENT/DUCTWORK, SANITARY WASTE, VENT PIPING, AND DOMESTIC WATER PIPING.

C. INSTALL A NYLON PULL WIRE (200 LB. TEST) AND TIE ENDS IN ALL CONDUIT LINES LEFT EMPTY FOR FUTURE USE.

D. TRAPPED OR INACCESSIBLE JUNCTION BOXES, OUTLETS, ETC. ARE NOT ALLOWED.

E. GENERALLY, CONCEAL ALL CONDUITS UNLESS OTHERWISE DIRECTED OR INDICATED ON THE DRAWINGS.

F. NO BENDS PERMITTED WITH A RADIUS LESS THAN SIX (6) TIMES THE DIAMETER OF THE CONDUIT.

G. PROVIDE JUNCTION BOXES OR PULL BOXES TO AVOID EXCESSIVE RUNS OR TOO MANY BENDS BETWEEN OUTLETS.

H. INCREASE CONDUIT SIZES SHOWN ON THE PLANS AS REQUIRED FACILITATING PULLING OF CONDUCTORS.

I. RUN ALL CONDUITS PARALLEL TO OR AT RIGHT ANGLES TO THE BUILDING WALLS AND SUPPORT FROM WALLS OR CEILINGS AT INTERVALS REQUIRED BY CODE WITH APPROVED CLAMPS OR HANGERS.

J. INSTALL APPROVED APPLETON, CROUSE HINDS, OR O.Z. MANUFACTURING CO. EXPANSION FITTINGS IN ALL EMT RUNS WHICH PASS THROUGH EXPANSION JOINTS IN THE BUILDING. OTHER METHODS TO PROVIDE FOR THIS EXPANSION MUST BE APPROVED BY THE ARCHITECT/ENGINEER.

K. ALL BELOW GRADE TO BE SCHEDULE 40 PVC.

2.02 WIRING

A. INSTALL WIRING AS FOLLOWS:

1. FEEDERS AND POWER WIRING: CONDUCTORS IN RIGID GALVANIZED STEEL CONDUIT IMC, OR EMT WHEN INSTALLED IN DRY LOCATION ABOVE GRADE. SCHEDULE 40 PVC WHEN INSTALLED BELOW GRADE.

2. BRANCH CIRCUITS: INSTALL CONDUCTORS IN EMT.

3. INSTALL ALL WIRING IN EMT. USE ONLY UL LISTED LUBRICANTS IN PULLING THE CONDUCTORS.

4. INSTALL CONDUCTORS CONTINUOUS FROM OUTLET TO OUTLET AND FROM OUTLET TO JUNCTION BOX OR PULL BOX. INSTALL SPLICES AND JOINTS CAREFULLY AND SECURELY TO BE MECHANICALLY AND ELECTRICALLY SOLID WITH PRESSURE TYPE CONNECTORS. USE 3M "SCOTCHLOCK" OR IDEAL "WING NUT" OR EQUAL TWIST–ON CONNECTORS FOR #10 AND SMALLER CONDUCTORS.

5. CONNECT CONDUCTORS FOR LIGHTING AND RECEPTACLE CIRCUITS TO THE PANEL AS DETAILED WITH COLOR CODED JACKET. COLOR CODE ALL WIRES WITH THE TYPE, SIZE, MAKE AND VOLTAGE MARKED ON IT. COLOR CODE WIRING WITH THE SAME COLOR BEING USED WITH ITS RESPECTIVE PHASE AS FOLLOWS, UNLESS OTHERWISE REQUIRED BY THE LOCAL AUTHORITY HAVING JURISDICTION.

	120/240 VOLT DELTA	120/208 VOLT WYE	480/277 VOLT WYE
PHASE A	RED	RED	BROWN
PHASE B	ORANGE	BLACK	YELLOW
PHASE C	BLACK	BLUE	PURPLE
NEUTRAL	WHITE	WHITE	GRAY
GROUND	GREEN	GREEN	GREEN

6. BRANCH CIRCUIT CONDUCTORS SHALL NOT BE SMALLER THAN NO. 12 AWG. INCREASE THE WIRE SIZES UP ONE (1) SIZE WHEREVER THE RUN DISTANCE EXCEEDS 200 FEET.

7. ALL WIRING AND CABLE INCLUDING FIBER OPTIC, ELECTRICAL, DATA, TELECOMMUNICATIONS, TEMPERATURE CONTROLS, SECURITY, FIRE PROTECTION, ETC. SHALL BE RUN IN ELEC. METALLIC CONDUIT (EMT). WIRING OR CABLES OF ANY TYPE SHALL NOT BE LAID, RUN, DRAPED, OR STRUNG ACROSS CEILING GRID, CEILING TILES, SUSPENSION WIRES, AND SHALL NOT BE INSTALLED WITHIN 12" ABOVE THE SUSPENDED CEILING SYSTEM OR SUPPORT STRUCTURE.

8. ARMORED CABLE/METAL–CLAD CABLE

A. ARMORED CABLE (AC CABLE) AND/OR METAL–CLAD CABLE (MC CABLE) MAY BE INSTALLED IN LIEU OF CONDUIT AND WIRE AS ALLOWED BY THE CODE AND APPROVED BUILDING OWNER STANDARDS FOR:

1. BRANCH CIRCUIT WIRING (#10 AND SMALLER).
2. INTERCONNECTION OF LIGHTING FIXTURE.
3. FLEXIBLE CONNECTION TO VIBRATING EQUIPMENT (SMALL EXHAUST FANS, ETC.)

B. IT SHALL BE INSTALLED IN A NEAT AND WORKMANLIKE MANNER AND ADEQUATELY SUPPORTED PER THE CODE AND AHJ. ALL HOME RUNS FROM PANELS SHALL BE CONDUIT AND WIRE.

2.03 CONDUCTORS

A. COPPER OF 98% CONDUCTIVITY.

B. NO. 10 AND SMALLER: SOLID, TYPE THWN/THHN, EXCEPT AS OTHERWISE NOTED.

C. NO. 8 AND LARGER: STRANDED, TYPE THWN/THHN, EXCEPT AS OTHERWISE NOTED..

D. MINIMUM SIZE CONDUCTORS USED SHALL BE NO. 12 AWG FOR ALL APPLICATIONS EXCEPT WHERE SPECIFICALLY NOTED OTHERWISE (A.C. CONTROLS, ETC.).

E. USE WIRE AND CABLE FROM ONE (1) MANUFACTURER. DELIVER IN THE ORIGINAL WRAPPING BEARING THE UNDERWRITERS LABORATORIES (UL) LABEL.

2.04 OUTLETS

A. USE GALVANIZED STEEL OR CAST TYPE BOXES AT ALL OUTLETS FOR LIGHTING FIXTURES, WALL SWITCHES, WALL RECEPTACLES, ETC.

B. SECURELY ATTACH OUTLET BOXES FOR FIXTURES AND DEVICES TO THE BUILDING CONSTRUCTION WITH EXPANSION BOLTS.

C. FLUSH MOUNT ALL OUTLET BOXES, REGARDLESS OF WALL OR CEILING CONSTRUCTION, UNLESS THEY ARE SPECIFICALLY SHOWN AS BEING USED WITH EXPOSED CONDUIT. IF SURFACE MOUNTED, USE CAST TYPE AS SPECIFIED ABOVE. UTILITY BOXES ARE NOT ALLOWED.

2.05 INSTALLATION

A. INSTALL RACEWAYS EXPOSED. SUPPORT EXPOSED RACEWAYS AT INTERVALS NOT EXCEEDING TEN FEET (10') WITH MACHINE SCREWS FOR METAL CONSTRUCTION AND EXPANSION BOLTS FOR CONCRETE CONSTRUCTION.

B. INSTALL THE EDGES OF ALL OUTLET BOXES FLUSH WITH THE SURFACE IN WHICH THEY ARE RECESSED. SCREW ATTACH INTERNAL DEVICES BEFORE ATTACHING COVERPLATE. DO NOT USE COVERPLATES AS A MEANS OF TIGHTENING THE DEVICES IN PLACE.

2.06 DISCONNECT AND FEEDER SWITCHES

A. FEEDER SWITCHES AND DISCONNECT SWITCHES: HEAVY DUTY, EXCEPT AS OTHERWISE NOTED. IN DAMP LOCATIONS OR EXPOSED TO THE WEATHER, USE NEMA 3R, RAINTIGHT.

B. DISCONNECT SWITCHES: FACTORY INSTALLED PROVISION FOR PADLOCKING IN EITHER THE "ON" OR "OFF" POSITION.

2.07 FUSES

A. FUSES: BUSSMANN OR APPROVED EQUAL.

2.08 LABELING

A. LABEL ALL PANELS, CONTROL POINTS, SWITCHES, AND MOTORS, AS DIRECTED. IDENTIFY PANELS BY PANEL NUMBER. LABEL SWITCHES, INDICATING THE EQUIPMENT WHICH THEY CONTROL. ALL LABELS SHALL BE ENGRAVED. PANEL DIRECTORIES TO BE TYPED. COORDINATE ALL EQUIPMENT NUMBERING WITH MECHANICAL CONTRACTOR.

B. INSTALL ARC FLASH HAZARD LABELS ON ALL NEW SWITCHBOARDS, PANELBOARDS, INDUSTRIAL CONTROL PANELS, METER SOCKET ENCLOSURES AND MOTOR CONTROL CENTERS PER NEC 110.16. PANDUIT #PPS0305W2100 OR EQUAL.

2.09 GROUNDING

A. PROVIDE GROUNDING FOR ELECTRICAL SYSTEM IN ACCORDANCE WITH THE REQUIREMENTS OF THE NATIONAL ELECTRICAL CODE (NEC)

2.10 COVERPLATES

A. WHERE WIRING DEVICES ARE FLUSH MOUNTED, INSTALL COVERPLATES TO MATCH BUILDING STANDARDS OR AS SELECTED BY ARCHITECT. 302 S/S LEVITON 84XXX–40 SERIES, NYLON 807XX–(X), OR APPROVED EQUAL.

B. WHERE WIRING DEVICES ARE SURFACE MOUNTED, INSTALL FORMED STEEL COVERPLATES WITH CADMIUM PLATING.

C. WHERE WEATHERPROOF/WEATHER–RESISTANT COVERPLATES ARE REQUIRED, MEET UL "WET LOCATION COVER CLOSED" REQUIREMENTS. USE COVERPLATES THAT ARE HINGED AND GASKETED WITH SPRING LOADED CLOSER, LEVITON 4970/WHILE–IN–USE LEVITON M5979–(X), OR APPROVED EQUAL.

D. INSTALL FINISHED COVERPLATES ON ALL JUNCTION BOXES, OUTLET BOXES, SECTIONAL SWITCH BOXES, UTILITY BOXES, ETC.

E. WHERE MORE THAN ONE (1) DEVICE IS INDICATED AT A LOCATION, MOUNT DEVICES IN COMBINED SECTION GANG BOXES, COVERED BY A COMMON PLATE.

2.11 RECEPTACLES

A. DUPLEX RECEPTACLES: 20 AMPERE, 125 VOLT, SELF OR AUTOMATIC GROUNDING, COLOR TO MATCH BUILDING STANDARD OR AS SELECTED BY ARCHITECT, LEVITON 5362–(X), LEVITON GFCI 7899–(X), OR APPROVED EQUAL.

B. SPECIAL MOUNTING HEIGHTS ARE NOTED ON THE ARCHITECTURAL DRAWINGS. UNLESS OTHERWISE INDICATED ON THE ELECTRICAL DRAWINGS, MOUNT DEVICES AT THE FOLLOWING HEIGHTS ABOVE FINISHED FLOOR:

1. DUPLEX RECEPTACLE 18"
2. WALL SWITCHES 48"
3. VOICE & VOICE/DATA OUTLETS 18"
4. WALL TELEPHONE OUTLETS 48"

2.12 SWITCHES

A. PROVIDE HEAVY–DUTY, AC, QUIET SWITCHES. THE SWITCHES SHALL BE LEVITON 122X–2(X), 122X–2(X)L, OR APPROVED EQUAL, 120–277 VOLT, 20 AMPERES, SPECIFICATION GRADE. SWITCHES SHALL BE SINGLE POLE, DOUBLE POLE, THREE WAY, FOUR WAY, OR KEY OPERATED AS SCHEDULED ON THE DRAWINGS AND SHALL BE THE SELF GROUNDING TYPE. COLOR SHALL MATCH BUILDING STANDARDS OR BE SELECTED BY ARCHITECT.

B. PROVIDE OCCUPANT–SENSING DEVICES TO CONTROL SWITCHING PER IEC 505.2.1.1 EXCEPTION 2 AS SCHEDULED ON THE DRAWINGS. USE LEVITON MULTI–TECHNOLOGY WALL SWITCH OCCUPANCY SENSOR #OSSMD–MD–(X), OR APPROVED EQUAL. COLOR SHALL MATCH BUILDING STANDARDS OR BE SELECTED BY ARCHITECT.

2.13 LIGHTING FIXTURES

A. PROVIDE ALL LIGHTING FIXTURES, AS SCHEDULED ON DRAWINGS, COMPLETE WITH LAMPS AND HARDWARE. INSTALL COMPLETELY WIRED, CONNECTED AND IN OPERATING ORDER.

B. CONFIRM ALL CEILING CONDITIONS, CLEARANCES AND OPERATING VOLTAGES BEFORE ORDERING LIGHTING FIXTURES.

C. SUBMIT SHOP DRAWINGS.

2.13.1 LAMPS

A. INSTALL SCHEDULED LAMPS MANUFACTURED BY GENERAL ELECTRIC, PHILLIPS, OR APPROVED EQUAL.

2.13.2 FIXTURES

A. PROVIDE LIGHTING FIXTURES WHICH HAVE BEEN TESTED AND CERTIFIED FOR PROPER OPERATION BY THE FIXTURE'S MANUFACTURER.

B. PROVIDE LIGHTING FIXTURES WITH TRIM COMPATIBLE WITH CEILING OR SURFACE ON OR IN WHICH INSTALLED.

C. EACH LUMINAIRE SHALL HAVE TWO SUPPORT WIRES INSTALLED, ONE ON EACH END, AT DIAGONAL CORNERS. LUMINAIRES IN FIRE RATED CEILINGS SHALL BE SUPPORTED ON ALL FOUR CORNERS.

D. SUPPORT AND SECURELY ATTACH WITH GALVANIZED FASTENERS IN A LEVEL POSITION.

E. INSTALL ACCORDING TO MANUFACTURER'S RECOMMENDATIONS.

F. FIRE RATED ASSEMBLIES, COMPLY WITH DETAILS OF LISTED ASSEMBLY.

2.14 TEMPORARY POWER

A. PROVIDE TEMPORARY POWER (SMALL TOOL) AND LIGHTING PER OSHA REQUIREMENTS.

2.15 FIRE ALARM AND SPECIAL SYSTEMS

A. FIRE ALARM CONTRACTOR SHALL PROVIDE COMPLETE SHOP DRAWINGS, ROUTING, BATTERY CALCULATIONS AND ALL OTHER SUBMITTALS TO MEET LOCAL AUTHORITY HAVING JURISDICTION (AHJ) REQUIREMENTS. PROVIDE A COMPLETE CODE COMPLIANT WORKING FIRE ALARM SYSTEM.

2.16 LIGHTING CONTROLS

A. PROVIDE 0–10V LIGHTING CONTROL DEVICES.

B. DEVICES SHALL BE COMPATIBLE WITH SUBMITTED LED DRIVERS.

C. OCCUPANCY SENSORS, PROVIDE INTEGRAL OCCUPANCY SENSORS WITH DUAL TECHNOLOGY WHERE INDICATED ON PLANS.

D. ACCEPTABLE MANUFACTURERS

1. nLIGHT
2. CRESTRON
3. WATT STOPPER
4. LUTRON
5. DOUGLAS

E. WALL–BOX MOUNTED OCCUPANCY SENSORS SHALL PROVIDE INTERNAL CONTACTS FOR AUTOMATIC SWITCHING OF CONNECTED LUMINAIRES AT LINE VOLTAGE, EXCEPT WHERE INDICATED OTHERWISE ON THE PLANS AND ELECTRICAL SCHEMATICS.

F. CEILING–MOUNTED OCCUPANCY SENSORS AND SELECTED WALL–MOUNTED SENSORS SHALL CONTROL LUMINAIRES THROUGH CONTROL UNITS (I.E., SWITCHING POWER SUPPLIES, SWITCH PACKS, POWER PACKS).

G. INSTALL OCCUPANCY SENSORS IN THE CORRECT LOCATION AND AIM AS REQUIRED FOR COMPLETE AND PROPER VOLUMETRIC COVERAGE WITHIN THE RANGE OF COVERAGE OF CONTROLLED AREAS PER THE MANUFACTURER'S RECOMMENDATIONS. ROOMS SHALL HAVE 100 PERCENT COVERAGE OF EACH CONTROLLED AREA TO ACCOMMODATE THE OCCUPANCY HABITS OF SINGLE OR MULTIPLE OCCUPANTS WITHIN THE ROOMS. THE LOCATIONS AND QUANTITIES OF SENSORS SHOWN ON THE DRAWINGS ARE DIAGRAMMATIC AND INDICATE ONLY THE ROOMS WHICH ARE TO BE PROVIDED WITH SENSORS. THE CONTRACTOR SHALL PROVIDE ADDITIONAL SENSORS AS REQUIRED TO PROPERLY AND COMPLETELY COVER THE RESPECTIVE ROOM.

S. Kanetzky Engineering, LLC.
5920 W. William Cannon
Bldg. 7, Suite 200
Austin, Texas 78749
(512) 329-5774.
www.skaneng.com
TBPE Firm No. F-2356
SKE PROJECT # 2320220

No. | Revisions and Descriptions | By | Date

Copyright © 2020 MRB Group All Rights Reserved

Project Title: TOM GREEN COUNTY PUGH PARK

Drawing Title: ELECTRICAL SPECIFICATIONS

Drawn By: AH | Checked By: TV | Scale: PER TITLE | Date: 05/14/2020

2320220 STATE OF TEXAS THOMAS EDWARD VAUGHAN 135335 LICENSED PROFESSIONAL ENGINEER 05.14 2020

MRB group
Engineering, Architecture & Surveying
5250 South 31st Street, Temple, Texas 76502 Phone: 254-771-2054
Corporate Office: The Culver Road Armory, 145 Culver Road, Suite 160, Rochester, New York 14620
Phone: 585-381-9250
TBPE Firm Number: F-10615
www.mrbgroup.com

Sheet No. E1.1
of

Project No. 2054.18001

1/9/2020 12:09:49 PM

K:\Projects\2020\2320220–MRB–Pugh Park\01 Design Phase_CAD\2320220–E11.dwg, 5/18/2020 3:44:40 PM

REFERENCE NOTES

1. REFER TO SHEETS E2.1 AND E2.2 FOR DETAILED INFORMATION.

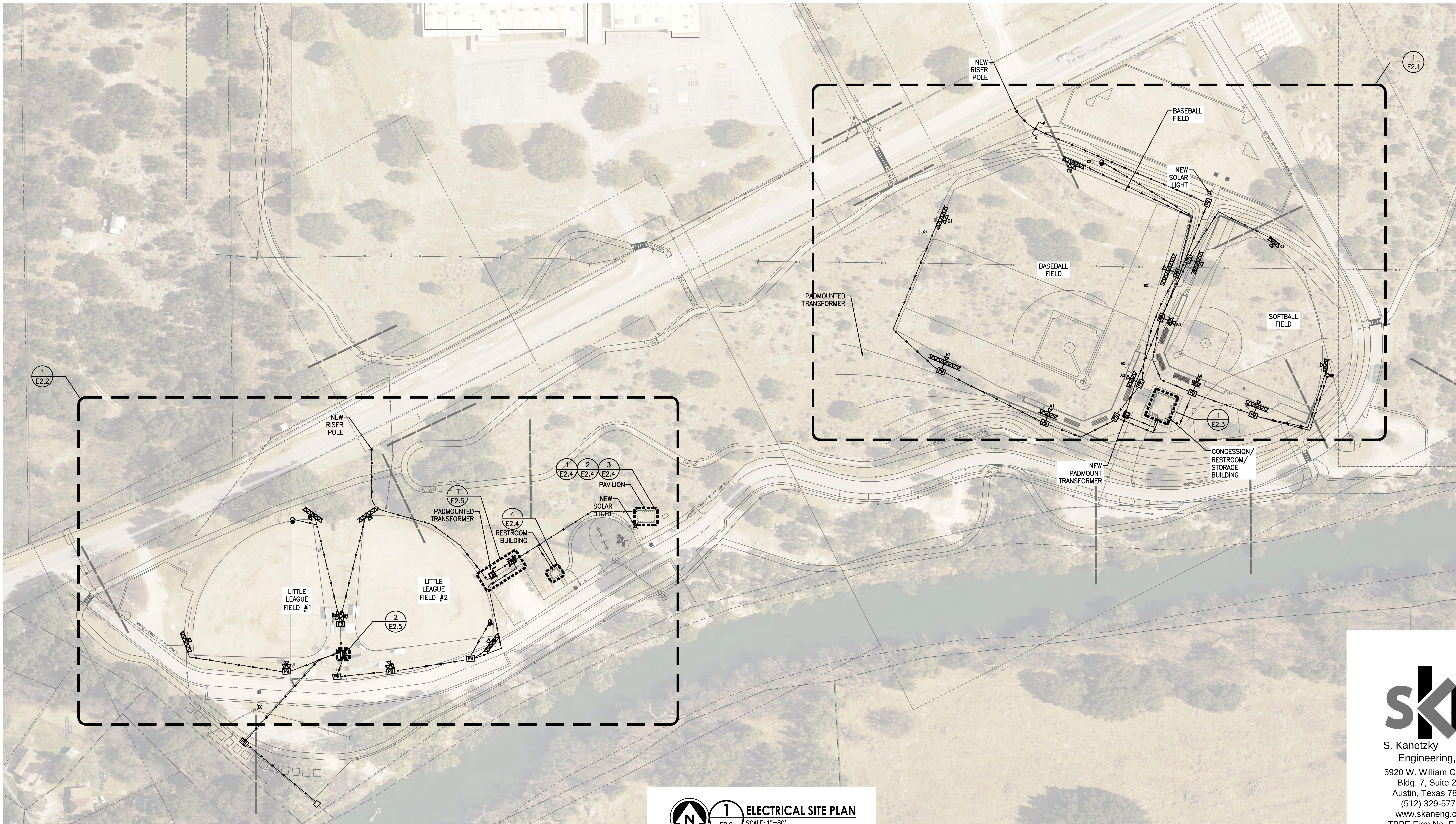

1 E2.0 **ELECTRICAL SITE PLAN**
SCALE: 1"=80'

S. Kanetzky Engineering, LLC.
5920 W. William Cannon
Bldg. 7, Suite 200
Austin, Texas 78749
(512) 329-5774.
www.skaneng.com
TBPE Firm No. F-2356
SKE PROJECT # 2320220

No.	Revisions and Descriptions	By	Date

Copyright © 2020 MRB Group All Rights Reserved

Project Title: **TOM GREEN COUNTY PUGH PARK**

Drawing Title: **ELECTRICAL OVERALL SITE PLAN**

Drawn By: AH
Checked By: TV
Scale: PER TITLE
Date: 05/14/2020

2320220 STATE OF TEXAS THOMAS EDWARD VAUGHAN 135335 LICENSED PROFESSIONAL ENGINEER 05.14 2020

MRB group
Engineering, Architecture & Surveying
5250 South 31st Street, Temple, Texas 76502 Phone: 254-771-2054
Corporate Office: The Culver Road Armory, 145 Culver Road, Suite 160, Rochester, New York 14620
Phone: 585-381-9250
TBPE Firm Number: F-10615
www.mrbgroup.com

Sheet No. E2.0 of

Project No. **2054.18001**

1/9/2020 12:09:49 PM

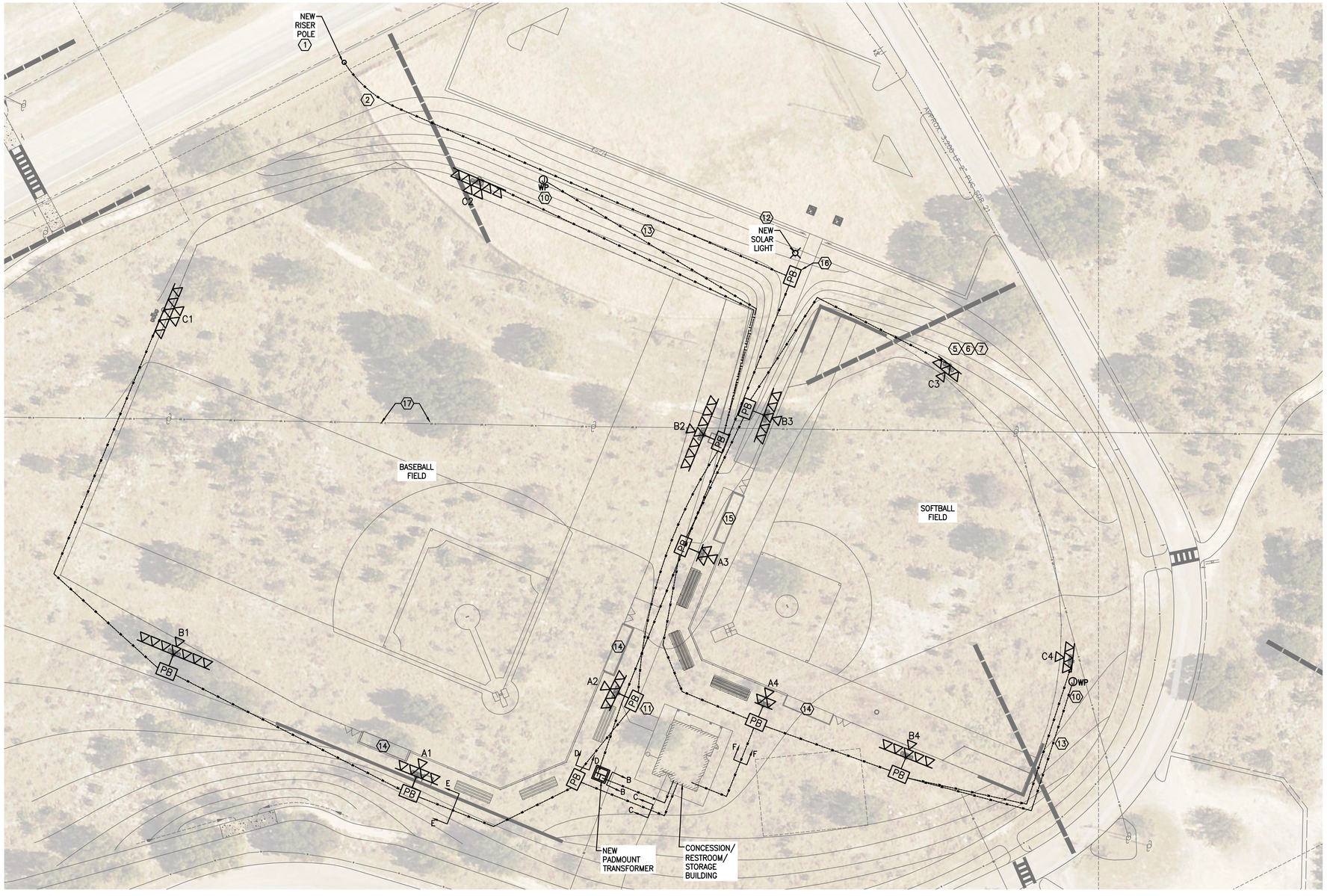

1 E2.1 **ELECTRICAL BASEBALL AND SOFTBALL FIELD PLAN** 15

SCALE: 1"=40'

REFERENCE NOTES

1. NEW OVERHEAD ELECTRICAL SERVICE BY AEP. CONTACT STEVE MARCUM, (325) 657-2869 WITH AEP.
2. NEW PRIMARY CONDUITS AND WIRING PROVIDED AND INSTALLED BY AEP. ALL TRENCHING AND BACKFILL BY CONTRACTOR.
3. NEW CONCRETE TRANSFORMER PAD AND FENCING PROVIDED AND INSTALLED BY CONTRACTOR. INSTALL PER AEP SPECIFICATIONS. REFER TO DETAIL.
4. REFER TO SHEET E4.2 FOR TYPICAL TRENCH DETAILS.
5. TYPICAL POLE LIGHT PROVIDED AND INSTALLED BY CONTRACTOR.
6. CONTRACTOR SHALL PROVIDE AND INSTALL ALL DRILLING AND CONCRETE FOR THE POLE BASE. CONTRACTOR SHALL INSTALL THE CONCRETE PEDESTAL FOR THE POLE LIGHT. TYPICAL.
7. ALL RIGGING AND CRANE TO SET THE POLES SHALL BE BY CONTRACTOR. TYPICAL.
8. ALL TRENCHING AND BACKFILL BY CONTRACTOR. ALL SPOILS REMOVED FROM THE SITE BY CONTRACTOR. TYPICAL.
9. ALL BRANCH CIRCUIT CONDUIT AND WIRING FOR THE POLE LIGHTING PROVIDED AND INSTALLED BY CONTRACTOR. TYPICAL.
10. 120 VOLT CIRCUIT AND CONTROL WIRING FOR SCOREBOARD. COORDINATE FINAL LOCATION WITH TOM GREEN COUNTY. TYPICAL. PROVIDE AND INSTALL NEMA 3R JUNCTION BOX, 8"X8"X6".
11. PROVIDE AND INSTALL NEW 13" X 24" ELECTRICAL PULL BOX, QUAZITE #PD1324BB26, AND COVER #PG1324CA00 WITH LOGO #17. REFER TO DETAIL 3/E4.0. COORDINATE EXACT LOCATION IN THE FIELD WITH TOM GREEN COUNTY PRIOR TO INSTALLATION. TYPICAL.
12. PROVIDE AND INSTALL NEW SOLAR LIGHTS PER SCHEDULE ON SHEET E5.0
13. 1" PVC, 2#6 THWN, 1#10 GND, AND 1" PVC, 1 SHIELDED CONTROL CABLE. TYPICAL FOR ALL SCOREBOARDS. PROVIDED AND INSTALLED BY CONTRACTOR.
14. 1" PVC, 2#10 THHN, 1#10 GND FOR 20A, 120V DUPLEX RECEPTACLE AT EACH DUGOUT. TYPICAL.
15. DUCTBANKS AND PULLBOXES ARE DRAWN FOR CLARITY. PULLBOXES SHOWN LARGER THAN ACTUAL SIZE. CONTRACTOR TO CONFIRM PROPOSED DUCTBANK PATHS WITH ENGINEER BEFORE CONSTRUCTION.
16. AEP PULLBOX, PER AEP REQUIREMENTS.
17. EXISTING OVERHEAD TO BE REMOVED BY AEP.

S. Kanetzky Engineering, LLC.
5920 W. William Cannon
Bldg. 7, Suite 200
Austin, Texas 78749
(512) 329-5774.
www.skaneng.com
TBPE Firm No. F-2356
SKE PROJECT # 2320220

No.	Revisions and Descriptions	By	Date

Copyright © 2020 MRB Group. All Rights Reserved

Project Title: TOM GREEN COUNTY PUGH PARK

Drawing Title: ELECTRICAL BASEBALL AND SOFTBALL FIELD PLAN

Drawn By: AH
Checked By: TV
Scale: PER TITE
Date: 05/4/2020

2320220
STATE OF TEXAS
THOMAS EDWARD VAUGHAN
135335
LICENSED PROFESSIONAL ENGINEER
09-14-2020

MRB group
Engineering, Architecture & Surveying
5250 South 31st Street, Temple, Texas 76502 Phone: 254-771-2054
Corporate Office: The Culver Road Armory, 145 Culver Road, Suite 160, Rochester, New York 14620
Phone: 585-381-9250
TBPE Firm Number: F-1075
TBPLS Firm Number: 10015
www.mbgroup.com

Sheet No. E2.1
of

Project No. 2054.18001

1/9/2020 12:09:49 PM

REFERENCE NOTES

1. NEW ELECTRICAL SERVICE BY AEP. CONTACT STEVE MARCUM, (325) 657-2869 WITH AEP.
2. NEW PRIMARY CONDUITS AND WIRING PROVIDED AND INSTALLED BY AEP. ALL TRENCHING AND BACKFILL BY CONTRACTOR.
3. NEW CONCRETE TRANSFORMER PAD AND FENCING PROVIDED AND INSTALLED BY CONTRACTOR. INSTALL PER AEP SPECIFICATIONS. REFER TO DETAIL.
4. REFER TO SHEET E4.1 FOR TYPICAL TRENCH DETAILS.
5. TYPICAL POLE LIGHT PROVIDED BY CONTRACTOR, INSTALLED BY THE MUSCO ELECTRICAL CONTRACTOR.
6. THE CONTRACTOR SHALL PROVIDE AND INSTALL ALL DRILLING AND CONCRETE FOR THE POLE BASE. THE CONTRACTOR SHALL INSTALL THE CONCRETE PEDESTAL FOR THE POLE LIGHT. TYPICAL.
7. ALL RIGGING AND CRANE TO SET THE POLES SHALL BE BY THE CONTRACTOR. TYPICAL.
8. ALL TRENCHING AND BACKFILL BY CONTRACTOR. ALL SPOILS REMOVED FROM THE SITE BY CONTRACTOR. TYPICAL.
9. ALL BRANCH CIRCUIT CONDUIT AND WIRING FOR THE POLE LIGHTING PROVIDED AND INSTALLED BY CONTRACTOR. TYPICAL.
10. 120 VOLT CIRCUIT AND CONTROL WIRING FOR SCOREBOARD. COORDINATE FINAL LOCATION WITH TOM GREEN COUNTY. TYPICAL.
11. PROVIDE AND INSTALL NEW 13' X 24' ELECTRICAL PULL BOX, QUAZITE #PD1324BB26, AND COVER #PG1324CA00 WITH LOGO #17. REFER TO DETAIL 3/E4.0. COORDINATE EXACT LOCATION IN THE FIELD WITH TOM GREEN COUNTY PRIOR TO INSTALLATION. TYPICAL.
12. PROVIDE TWO (2) SPARE 2"C TO NEW IRRIGATION PUMP STATION. INCLUDE PULLSTRING AND CAP AT BONDS ENDS 6" AFG.
13. PROVIDE AND INSTALL NEW SOLAR LIGHTS PER SCHEDULE ON SHEET E5.0
14. 1" PVC, 2#6 THWN, 1#10 GND, AND 1" PVC, 1 SHIELDED CONTROL CABLE. TYPICAL FOR ALL SCOREBOARDS. PROVIDED AND INSTALLED BY CONTRACTOR.
15. 1" PVC, 2#10 THHN, 1#10 GND FOR 20A, 120V DUPLEX RECEPTACLE AT EACH DUGOUT. TYPICAL.
16. PROVIDE (1) PVC FROM PULL BOX TO POLE LIGHT FOR ALL LIGHTING CIRCUITS.

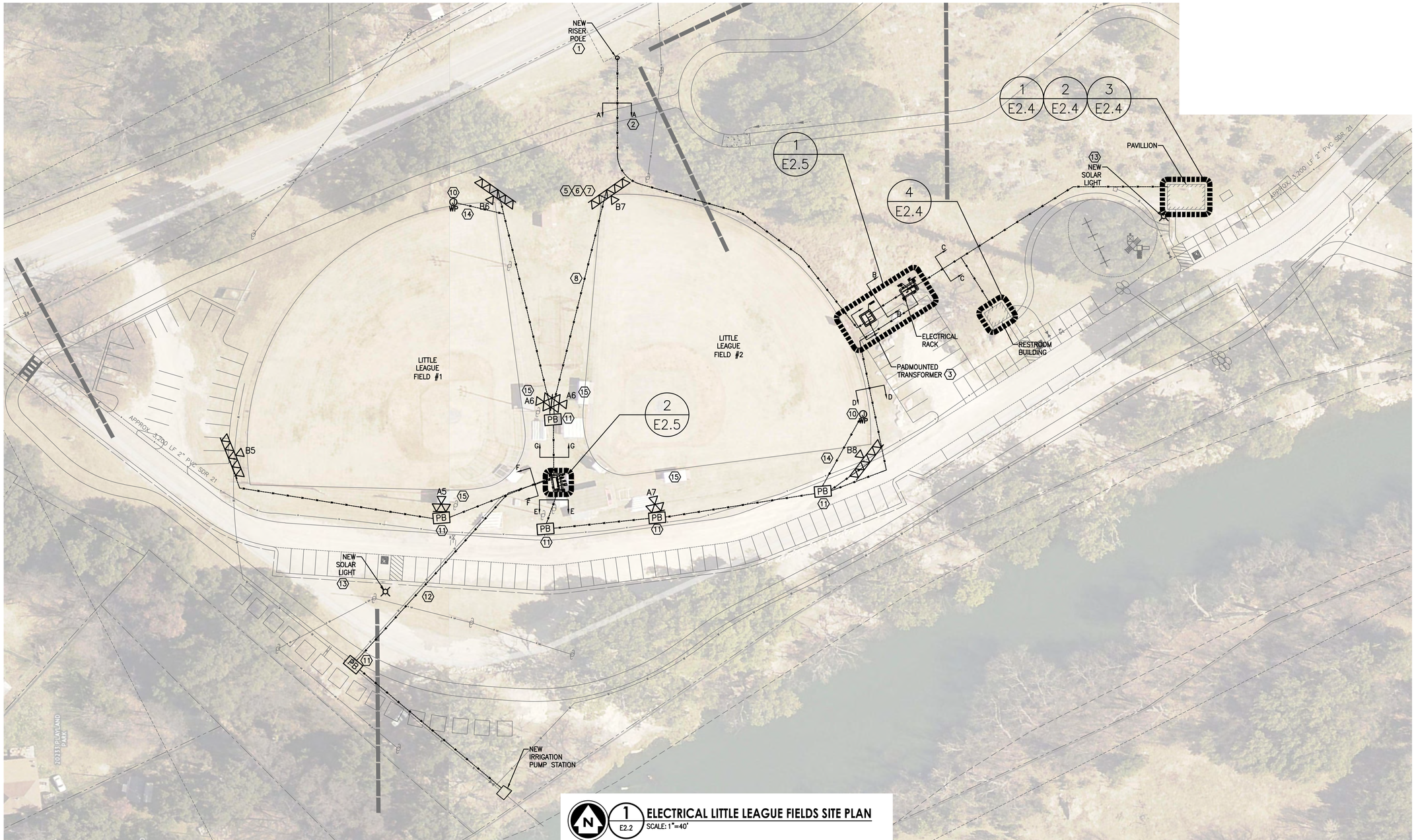

1 ELECTRICAL LITTLE LEAGUE FIELDS SITE PLAN
E2.2
SCALE: 1"=40'

S. Kanetzky Engineering, LLC.
5920 W. William Cannon
Bldg. 7, Suite 200
Austin, Texas 78749
(512) 329-5774.
www.skaneng.com
TBPE Firm No. F-2356
SKE PROJECT # 2320220

No.	Revisions and Descriptions	By	Date

Copyright © 2020 MRB Group. All Rights Reserved

Project Title: TOM GREEN COUNTY PUGH PARK

Drawing Title: ELECTRICAL LITTLE LEAGUE FIELDS SITE PLAN

Drawn By: AH
Checked By: TV
Scale: PER INTS
Date: 05/14/2020

2320220
STATE OF TEXAS
THOMAS EDWARD VAUGHAN
135335
LICENSED PROFESSIONAL ENGINEER
05.14.2020

MRB group
Engineering, Architecture & Surveying
5250 South 31st Street, Temple, Texas 76502 Phone: 254-771-2054
Corporate Office: The Culver Road Armory, 145 Culver Road, Suite 160, Rochester, New York 14620
Phone: 585-381-9250
TBPE Firm Number F-10015
www.mrbgroup.com

Sheet No. E2.2
of

Project No. 2054.18001

1/9/2020 12:09:49 PM

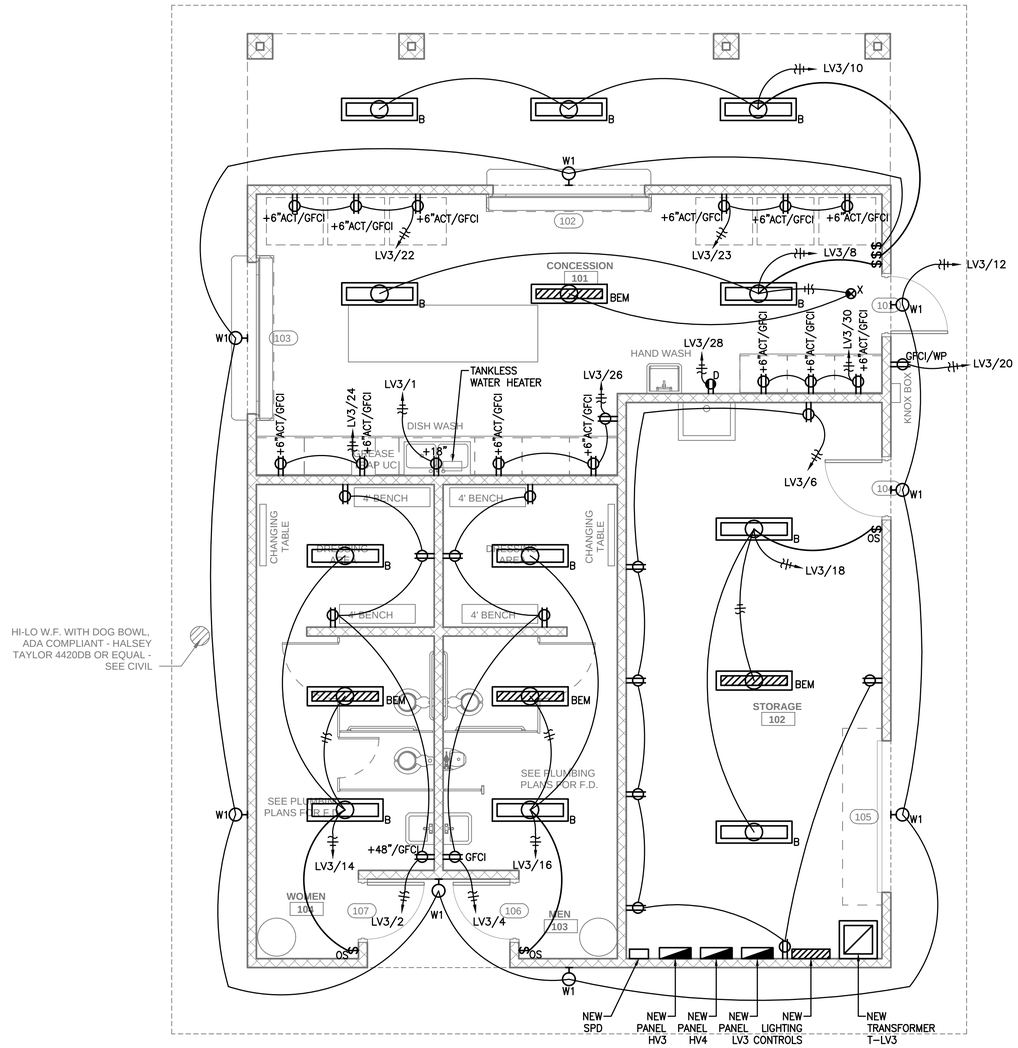

1 ELECTRICAL CONCESSION/RESTROOM/STORAGE - BUILDING FLOOR PLAN

E2.3

SCALE: 1/4" = 1'-0"

S. Kanetzky Engineering, LLC.
5920 W. William Cannon
Bldg. 7, Suite 200
Austin, Texas 78749
(512) 329-5774.
www.skaneng.com
TBPE Firm No. F-2356
SKE PROJECT # 2320220

No.	Revisions and Descriptions	By	Date

Copyright © 2020 MRB Group. All Rights Reserved

Project Title:

TOM GREEN COUNTY PUGH PARK

Drawing Title:

CONCESSION/RESTROOM/STORAGE BUILDING FLOOR PLAN

Drawn By: AH
Checked By: TV
Scale: PER TITLE
Date: 05/14/2020

2320220

STATE OF TEXAS
THOMAS EDWARD VAUGHAN
135335
LICENSED PROFESSIONAL ENGINEER
05-14-2020

MRB group
Engineering, Architecture & Surveying
5250 South 31st Street, Temple, Texas 76502 Phone: 254-771-2054
Corporate Office: The Culver Road Armory, 145 Culver Road, Suite 160, Rochester, New York 14620
Phone: 585-381-9250
TBPE Firm Number F-10465
www.mrbgroup.com

Sheet No.
E2.3
of

Project No.
2054.18001

1/9/2020 12:09:49 PM

REFERENCE NOTES

1. PROVIDE AND INSTALL WEATHER RATED FAN, MONTE CARLO 5CY60BK CYCLONE ENERGY STAR, 60" OUTDOOR CEILING FAN, 5 BLADES, MATTE BLACK OR EQUAL.
2. PROVIDE AND INSTALL 2-HOUR MAX SET TIMER SWITCH CONTROLLING FAN. NSI C SERIES COMMERCIAL STYLE SPINNING WOUND AUTO OFF TIME SWITCH, SPST OR EQUAL.

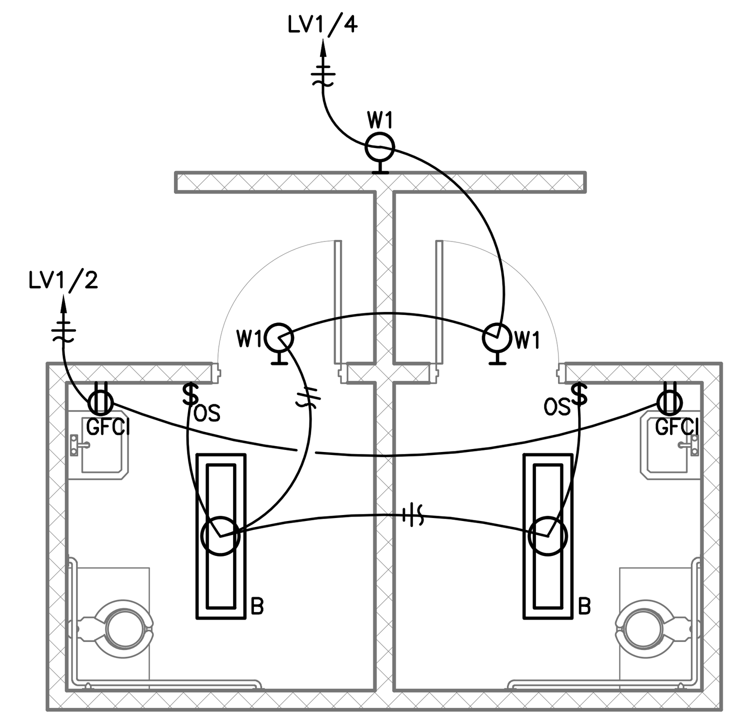

4 ELECTRICAL RESTROOM FLOOR PLAN
E2.4
SCALE: 1/4" = 1'-0"

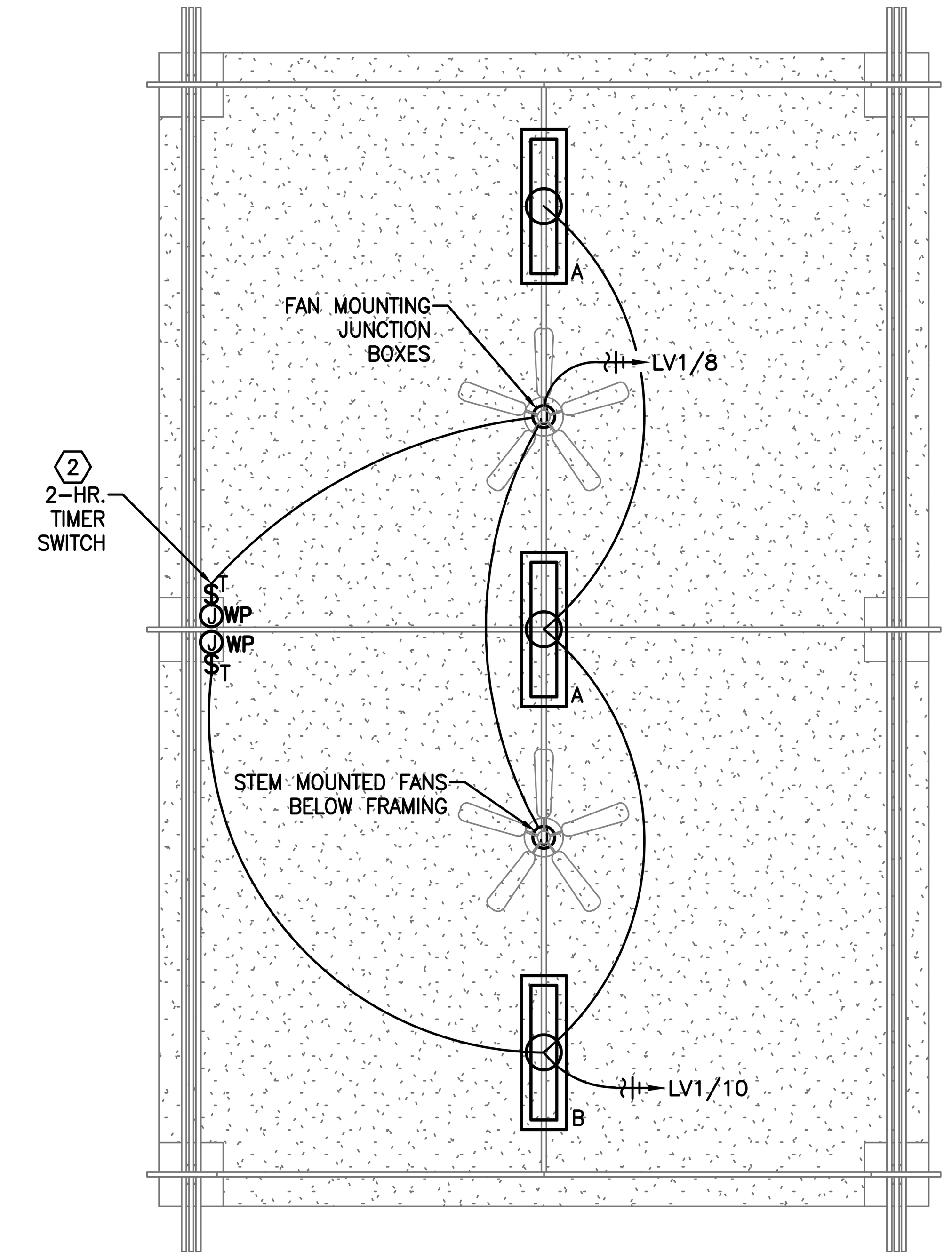

2 PAVILION CEILING
E2.4
SCALE: 1/4" = 1'-0"

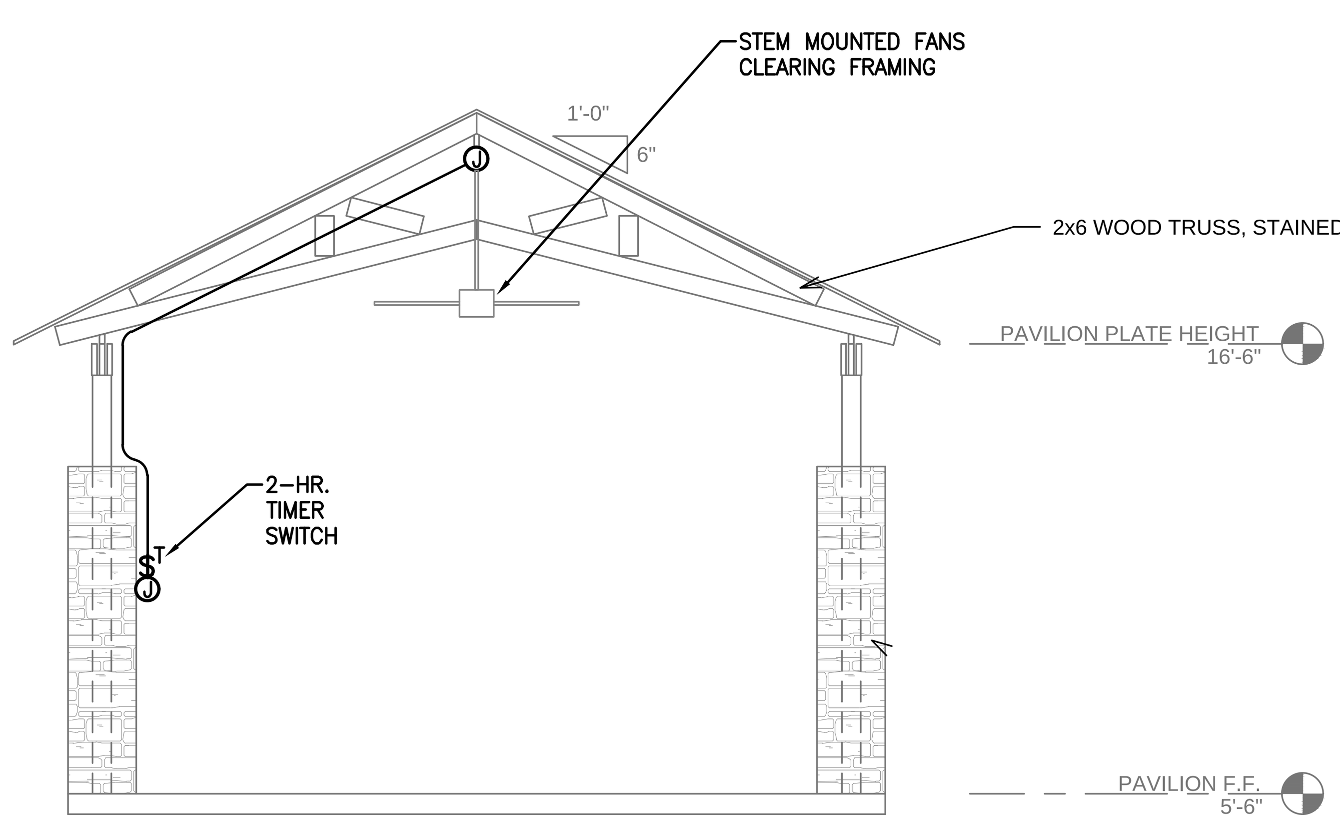

3 EXTERIOR ELEVATION - PAVILION (NORTH/SOUTH)
E2.4
SCALE: 1/4" = 1'-0"

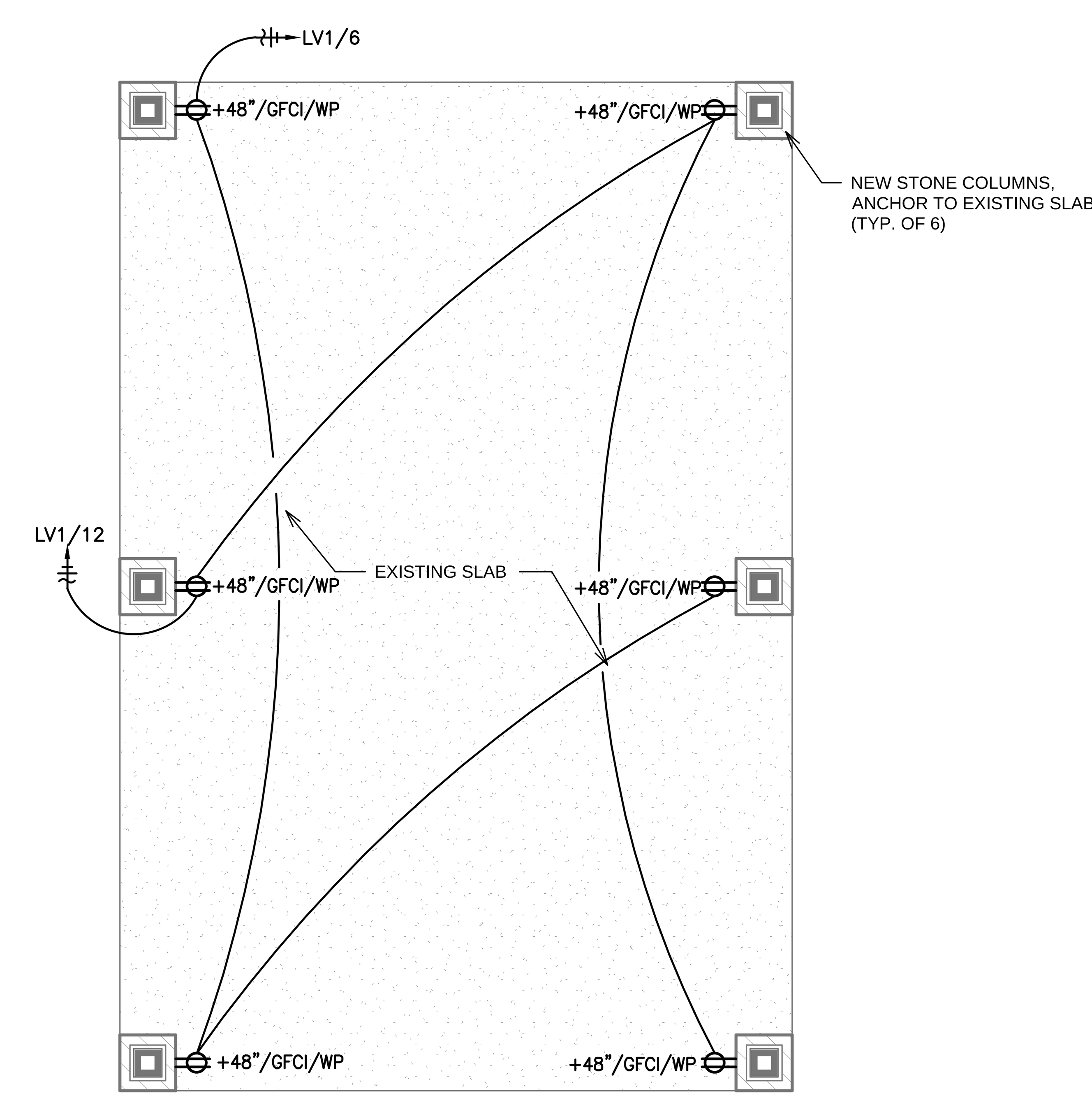

1 PAVILION FLOOR PLAN
E2.4
SCALE: 1/4" = 1'-0"

S. Kanetzky Engineering, LLC.
5920 W. William Cannon
Bldg. 7, Suite 200
Austin, Texas 78749
(512) 329-5774.
www.skaneng.com
TBPE Firm No. F-2356
SKE PROJECT # 2320220

No. | Revisions and Descriptions | By | Date

Copyright © 2020 MRB Group All Rights Reserved

Project Title: TOM GREEN COUNTY PUGH PARK

Drawing Title: ELECTRICAL PAVILION AND RESTROOM PLAN

Drawn By: AH
Checked By: TV
Scale: PER TITLE
Date: 05/14/2020

STATE OF TEXAS
THOMAS EDWARD VAUGHAN
135335
LICENSED PROFESSIONAL ENGINEER
05.14.2020

MRB group
Engineering, Architecture & Surveying
5250 South 31st Street, Temple, Texas 76502 Phone: 254-771-2054
Corporate Office: The Culver Road Armory, 145 Culver Road, Suite 160, Rochester, New York 14620
Phone: 585-381-9250
TBPE Firm Number: F-10615
www.mrbgroup.com

Sheet No. E2.4
of

Project No. 2054.18001

1/9/2020 12:09:49 PM

REFERENCE NOTES

1. PROVIDE AND INSTALL GROUND RODS. REFER TO DETAIL 3/E4.1.
2. PROVIDE AND INSTALL #3/0 BARE COPPER GROUNDING RING. BOND, EQUIPMENT RACKS TO GROUNDING ELECTRODE SYSTEM VIA EXOTHERMIC WELD.

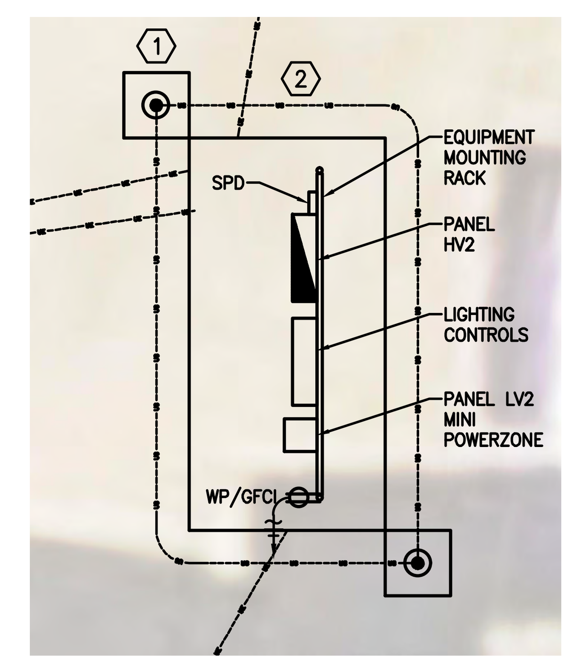

2 E2.5 **ELECTRICAL LITTLE LEAGUE FIELDS ENLARGED SITE PLAN (LIGHTING CONTROLS)**
SCALE: 1"=5'

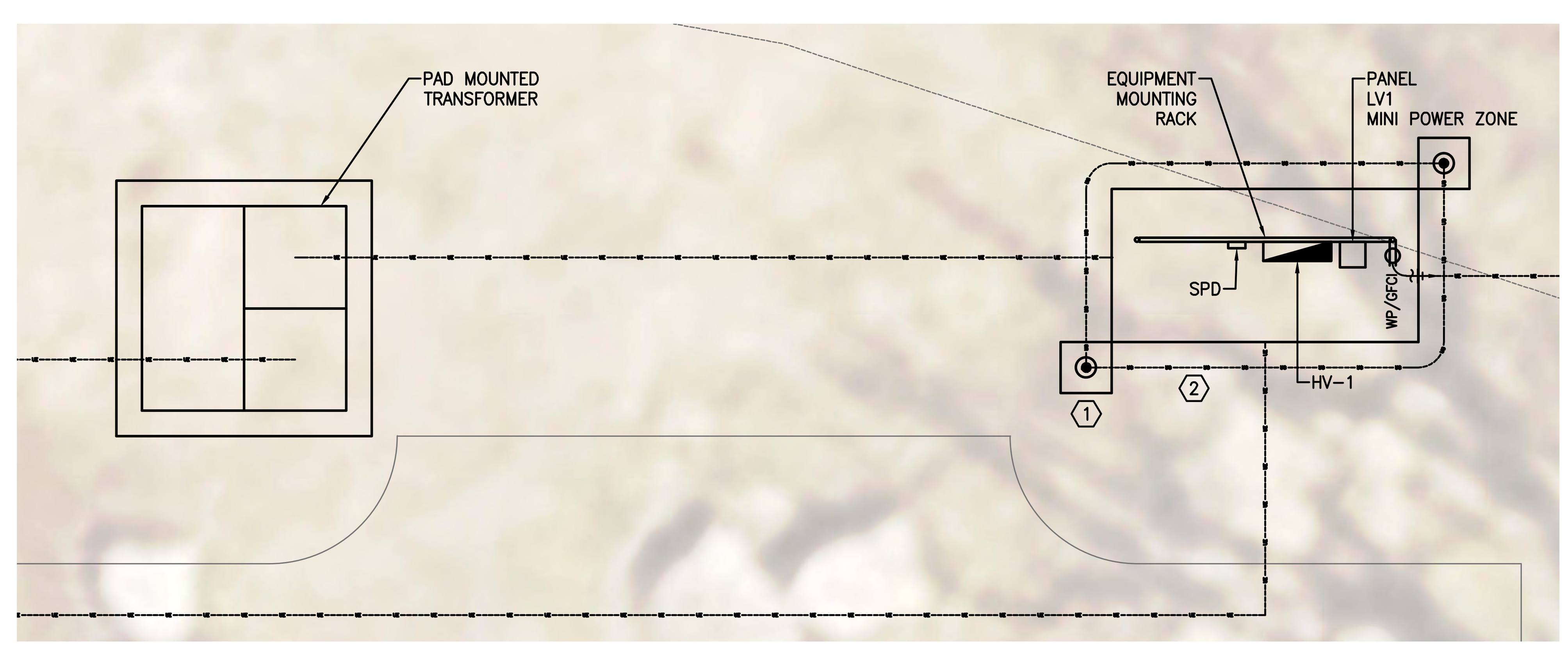

1 E2.5 **ELECTRICAL LITTLE LEAGUE FIELDS ENLARGED SITE PLAN (SERVICE ENTRANCE)**
SCALE: 1"=5'

S. Kanetzky Engineering, LLC.
5920 W. William Cannon
Bldg. 7, Suite 200
Austin, Texas 78749
(512) 329-5774.
www.skaneng.com
TBPE Firm No. F-2356
SKE PROJECT # 2320220

Project Title: TOM GREEN COUNTY PUGH PARK

Drawing Title: ELECTRICAL ENLARGED SITE PLANS

Drawn By: AH | Checked By: TV | Scale: PER TITLE | Date: 05/14/2020

No. | Revisions and Descriptions | By | Date

Copyright © 2020 MRB Group All Rights Reserved

2320220 STATE OF TEXAS THOMAS EDWARD VAUGHAN 135335 LICENSED PROFESSIONAL ENGINEER 05.14 2020

MRB | group
Engineering, Architecture & Surveying
5250 South 31st Street, Temple, Texas 76502 Phone: 254-771-2054
Corporate Office: The Culver Road Armory, 145 Culver Road, Suite 160, Rochester, New York 14620
Phone: 585-381-9250
TBPE Firm Number: F-10615
www.mrbgroup.com

Sheet No. E2.5
of

Project No. 2054.18001

1/9/2020 12:09:49 PM

REFERENCE NOTES

1. BASEBALL/SOFTBALL FIELDS ELECTRICAL EQUIPMENT IS LOCATED WITHIN THE STORAGE ROOM IN THE CONCESSIONS BUILDING.
2. LITTLE LEAGUE FIELDS ELECTRICAL EQUIPMENT IS RACK MOUNTED OUTDOORS.
3. COORDINATE INSTALLATION WITH AMERICAN ELECTRIC POWER (A.E.P) STEVE MARCUM, (325) 657-2869. NEW SERVICE SHALL BE INSTALLED PER A.E.P SPECIFICATIONS WWW.AEPTEXAS.COM. PROVIDE 36" DITCH FROM NEW RISER POLE TO NEW PAD MOUNTED TRANSFORMER. AEP SHALL PROVIDE AND INSTALL NEW PRIMARY CONDUCTORS.
4. PROVIDE AND INSTALL PANELS. REFER TO PANEL SCHEDULES ON SHEETS E5.0 AND E5.1.
5. 3/4" X 10' COPPER CLAD GROUND ROD.
6. PROVIDE AND INSTALL SPD, EATON SPD-200-480Y-3-K OR EQUAL IN A NEMA 1 ENCLOSURE.
7. PROVIDE AND INSTALL SPD, EATON SPD-050-240S-3-K OR EQUAL IN A NEMA 1 ENCLOSURE.
8. PROVIDE AND INSTALL SPD, EATON SPD-050-208Y-3-K OR EQUAL IN A NEMA 4 ENCLOSURE.
9. PROVIDE AND INSTALL SPD, EATON SPD-050-208Y-3-N OR EQUAL IN A NEMA 4 ENCLOSURE.
10. PROVIDE AND INSTALL NEW 15KVA TRANSFORMER, SQUARE D EE15T3HCU, OR EQUAL, COPPER WINDINGS, NEMA 3R WITH WEATHER SHIELD, 480V DELTA PRIMARY, 208Y/120V SECONDARY.
11. PROVIDE AND INSTALL NEW 30KVA TRANSFORMER, SQUARE D EE30T3HCU, OR EQUAL, COPPER WINDINGS, NEMA 3R WITH WEATHER SHIELD, 480V DELTA PRIMARY, 208Y/120V SECONDARY.

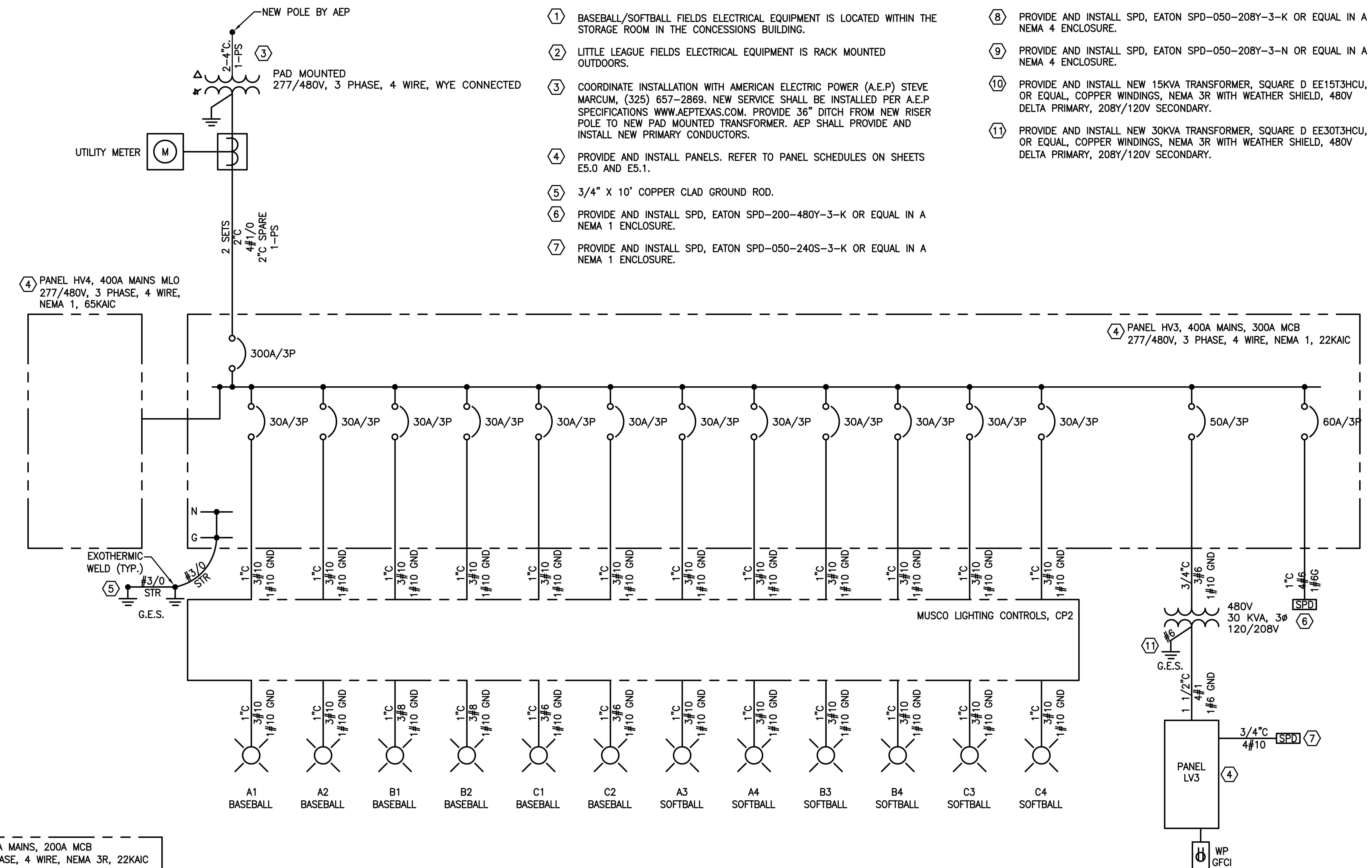

1 / E3.0 ONE-LINE DIAGRAM - BASEBALL & SOFTBALL FIELDS (1)
SCALE: NTS

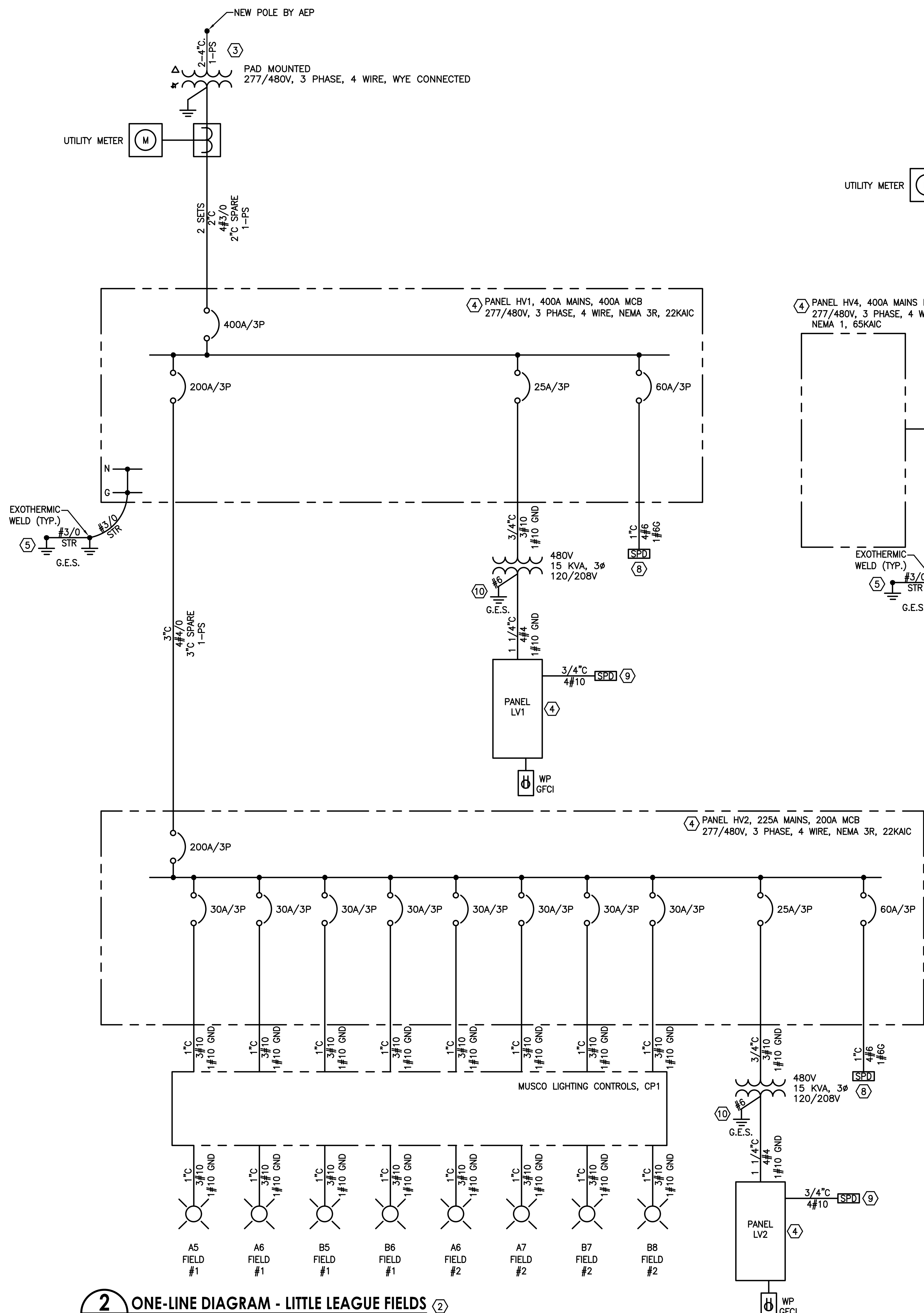

2 / E3.0 ONE-LINE DIAGRAM - LITTLE LEAGUE FIELDS (2)
SCALE: NTS

S. Kanetzky Engineering, LLC.
5920 W. William Cannon
Bldg. 7, Suite 200
Austin, Texas 78749
(512) 329-5774.
www.skaneng.com
TBPE Firm No. F-2356
SKE PROJECT # 2320220

THOMAS EDWARD VAUGHAN 135335 LICENSED PROFESSIONAL ENGINEER, STATE OF TEXAS, 05.14.2020

MRB group
Engineering, Architecture & Surveying

TOM GREEN COUNTY PUGH PARK

ELECTRICAL ONE-LINES

Date: 05/14/2020

Sheet No. E3.0

Project No. 2054.18001

Copyright © 2020 MRB Group All Rights Reserved

1/9/2020 12:09:49 PM

REFERENCE NOTES

(1) BOTTOM OF RACK MOUNTED EQUIPMENT SHALL BE 3'-0" AFG, MIN.

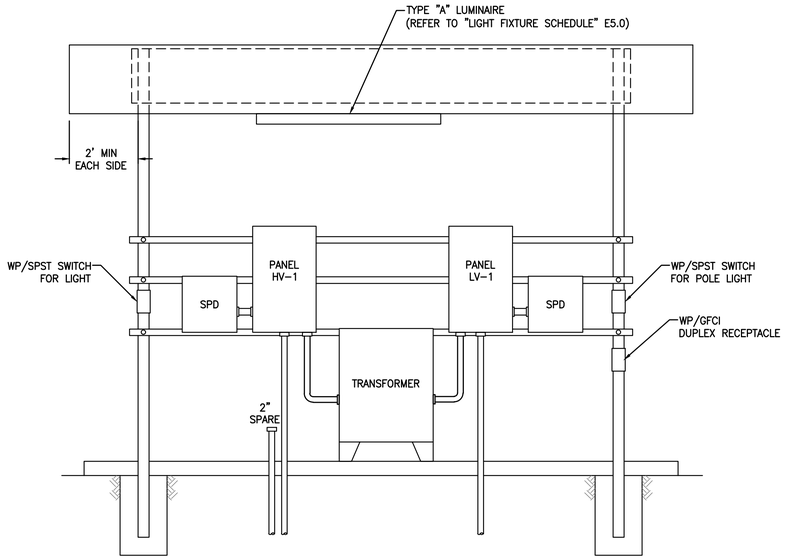

4 E4.0 **DETAIL - ELECTRICAL EQUIPMENT INSTALLATION - SERVICE ENTRANCE AT LITTLE LEAGUE FIELD** (1)
SCALE: NTS

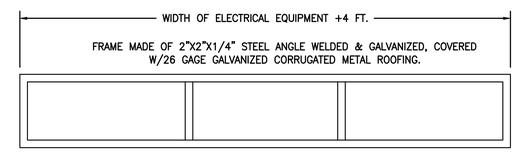

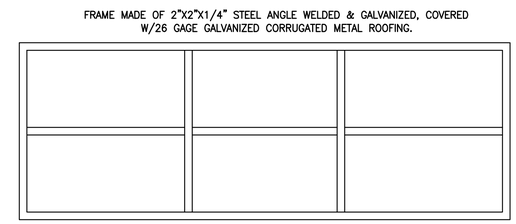

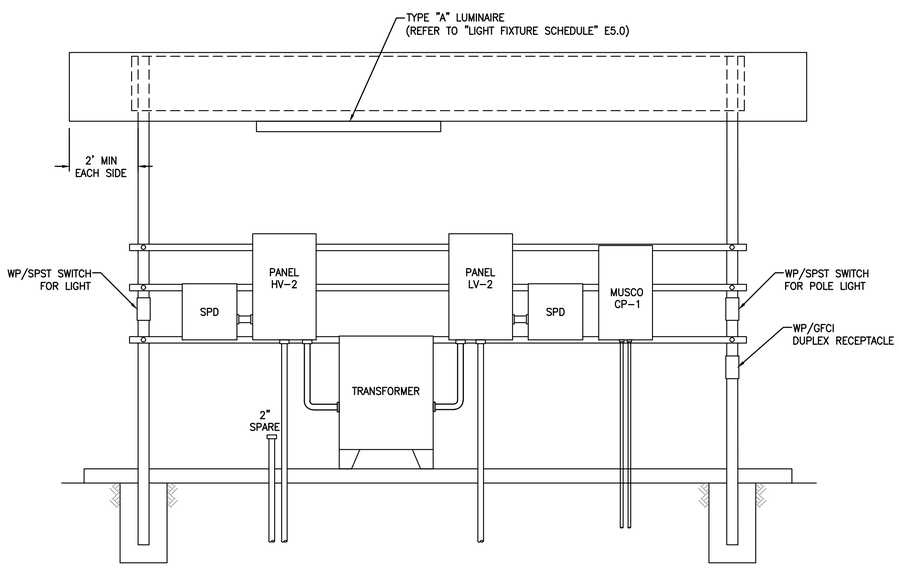

4 E4.0 **DETAIL - ELECTRICAL EQUIPMENT INSTALLATION - LITTLE LEAGUE FIELD** (1)
SCALE: NTS

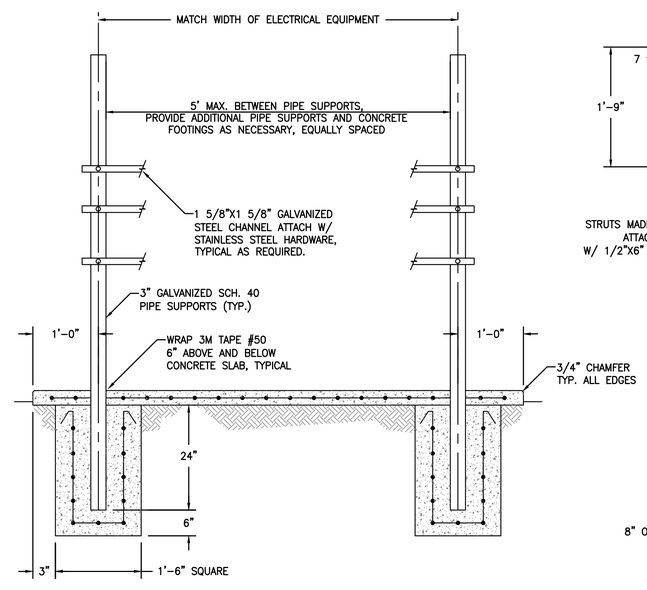

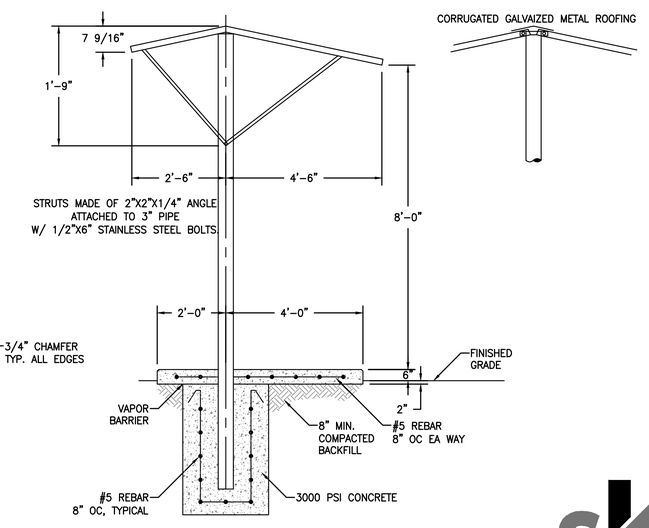

NOTE:
ALL FABRICATED STEEL COMPONENTS SHALL BE HOT DIPPED GALVANIZED AFTER FABRICATION. ALL FASTENERS SHALL BE STAINLESS STEEL.

1 E4.0 **DETAIL - TYPICAL RACK SUPPORT AND ROOFING**
SCALE: NTS

S. Kanetzky
Engineering, LLC.
5920 W. William Cannon
Bldg. 7, Suite 200
Austin, Texas 78749
(512) 329-5774.
www.skaneng.com
TBPE Firm No. F-2356
SKE PROJECT # 2320220

No.	Revisions and Descriptions	By	Date

Copyright © 2020 MRB Group. All Rights Reserved

Project Title: TOM GREEN COUNTY PUGH PARK

Drawing Title: ELECTRICAL DETAILS

Drawn By: AH
Checked By: TV
Scale: PER PLAN
Date: 05/14/2020

2320220
STATE OF TEXAS
THOMAS EDWARD VAUGHAN
135335
LICENSED PROFESSIONAL ENGINEER
05-14-2020

MRB group
Engineering, Architecture & Surveying
5250 South 31st Street, Temple, Texas 76502 Phone: 254-771-2054
Corporate Office: The Calvert Road Armory, 145 Calvert Road, Suite 160, Rochester, New York 14620
Phone: 585-381-9250
TBPE Firm No. F-1046 TBPLS Firm No. F-10015
www.mbgroup.com

Sheet No. E4.0
of
Project No. 2054.18001

1/9/2020 12:09:49 PM

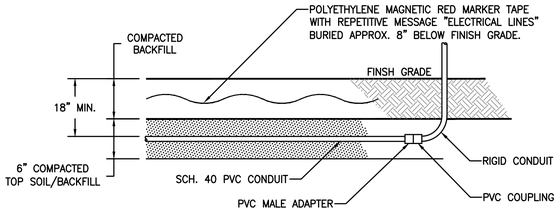

6 DETAIL - TYPICAL UNDERGROUND CONDUIT RUN
E4.1 SCALE: NTS

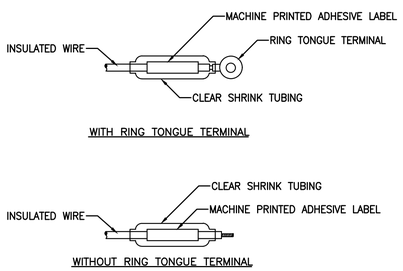

WHERE POSSIBLE RING TERMINALS SHALL BE USED. ONE OF THE ABOVE METHODS MUST BE USED ON ALL WIRE #8 AWG & SMALLER. THE SAME MUST ALSO BE USED ON LARGER WIRE UNLESS AN ALTERNATE METHOD IS SUBMITTED & APPROVED.

5 DETAIL - WIRE TERMINATION AND MARKING
E4.1 SCALE: NTS

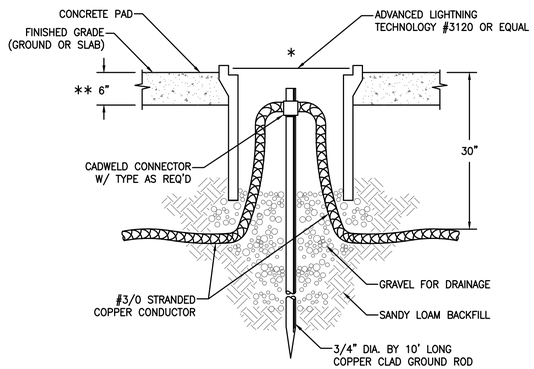

* INSTALL GROUND RODS AWAY FROM HEAVY TRAFFIC AREAS AND SIDEWALKS. COORDINATE EXACT LOCATION WITH CIVIL DRAWINGS.

** INSTALL 2'X2'X6" CONCRETE PAD.

3 DETAIL - 3/4" X 10' GROUND ROD
E4.1 SCALE: NTS

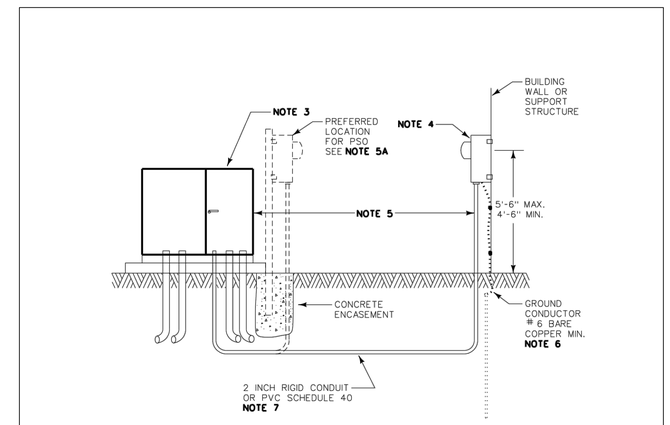

NOTES:

1. INSTRUMENT TRANSFORMERS (CTS) ARE FURNISHED AND INSTALLED BY COMPANY PRIOR TO CONNECTION OF CUSTOMER SERVICE CABLES.
2. CUSTOMER SHALL PROVIDE NEMA TYPE TERMINAL LUGS FOR CUSTOMER OWNED SERVICE CONDUCTORS WHERE REQUIRED. POWER COMPANY TO SECURE CABLE TERMINATIONS. STACKING LUGS MAY BE REQUIRED TO ACCOMMODATE THE NUMBER OF SERVICE CONDUCTORS PER TRANSFORMER BUSHING.
3. THIS STANDARD IS APPLICABLE FOR A SINGLE CUSTOMER PAD-MOUNTED TRANSFORMER.
4. COMPANY PROVIDES METER SOCKET TO BE INSTALLED BY CUSTOMER, OR CONTRACTOR, IN A PLUMB POSITION AT LOCATION, USING REMOVABLE CORROSION RESISTANT FASTENERS. REFER TO FIGURE 14. FOR WORKING DISTANCE CLEARANCES REFER TO FIGURE 20.
5. TRANSFORMER PAD LOCATION AND LOCATION OF CONDUITS FOR CONDUCTOR/METER CONTROL CABLE TO BE SPECIFIED BY AEP. THE METER LOCATION IS TO BE A MINIMUM OF 3 FEET AWAY AND WITHIN 25 FEET OF THE TRANSFORMER PAD LOCATION. WHEN THE BUILDING IS LOCATED AT A DISTANCE GREATER THAN 25 FEET FROM THE TRANSFORMER PAD LOCATION, THE METER IS TO BE MOUNTED ON A SUPPORT STRUCTURE AT A LOCATION WHERE THE DISTANCE FROM THE TRANSFORMER PAD LOCATION IS NOT GREATER THAN 25 FEET. FOR FREE STANDING METERING FACILITIES REQUIREMENTS, REFER TO FIGURE 14.

5A. PSO REQUIRES THE METER LOCATION TO BE SECURED TO THE TRANSFORMER PAD AND ENCASED IN CONCRETE OR LOCATED ON THE BUILDING STRUCTURE, IF WITHIN 25 FEET OF TRANSFORMER PAD LOCATION. REFER TO FIGURE 14.

6. THE METER SOCKET SHALL BE GROUNDED. THE METER SOCKET SHALL BE BONDED THROUGH A SEPARATE EQUIPMENT-GROUNDING CONDUCTOR CONNECTED TO THE GROUNDED SERVICE CONDUCTOR (USUALLY THE NEUTRAL). IN SOME JURISDICTIONS THE GROUNDING OF THE METER SOCKET WILL BE SUPPLEMENTED WITH THE USE OF A DRIVEN GROUND ROD IN ADDITION TO BONDING TO THE GROUNDED SERVICE CONDUCTOR.
7. SCHEDULE 80 RIGID CONDUIT REQUIRED FOR DRIVEWAYS AND PARKING LOTS.
8. THE CUSTOMER WILL BE RESPONSIBLE TO PULL CONTROL CABLE AND EQUIPMENT GROUND IN CONDUIT FROM METER SOCKET TO PAD MOUNT TRANSFORMER. IF CONTROL CABLE IS NOT AVAILABLE, A PULL STRING WILL BE PROVIDED BY THE CUSTOMER.

PAD-MOUNT TRANSFORMER METERING INSTALLATION
FIGURE 13

AUG 23, 2019

1 DETAIL - PADMOUNT TRANSFORMER
E4.1 SCALE: NTS

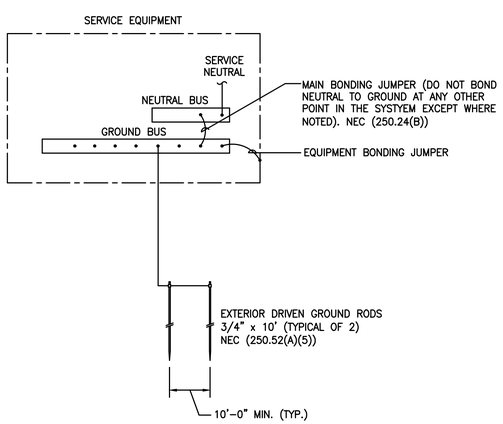

4 GROUNDING ELECTRODE SYSTEM (TYP.)
E4.1 SCALE: NTS

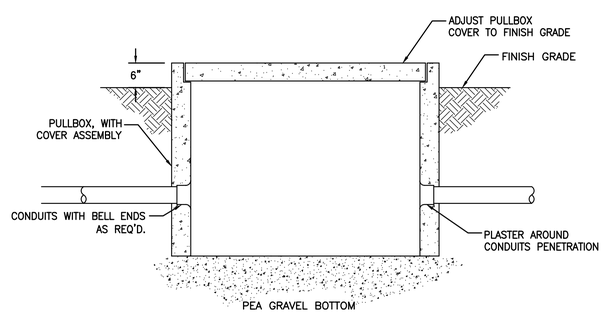

NOTE: ALL CONDUIT ENTERING PULLBOXES MUST DRAIN TO PULL BOXES

2 DETAIL - PULLBOX-POWER
E4.1 SCALE: NTS

S. Kanetzky Engineering, LLC.
5920 W. William Cannon
Bldg. 7, Suite 200
Austin, Texas 78749
(512) 329-5774.
www.skaneng.com
TBPE Firm No. F-2356
SKE PROJECT # 2320220

No.	Revisions and Descriptions	By	Date

Copyright © 2020 MRB Group. All Rights Reserved

Project Title: TOM GREEN COUNTY PUGH PARK

Drawing Title: ELECTRICAL DETAILS

Drawn By: AH
Checked By: TV
Scale: PSR NTS
Date: 05/14/2020

2320220
STATE OF TEXAS
THOMAS EDWARD VAUGHAN
135335
LICENSED PROFESSIONAL ENGINEER
05-14-2020

MRB group
Engineering, Architecture & Surveying
5250 South 31st Street, Temple, Texas 76502 Phone: 254-771-2034
Corporate Office: The Calvez Road Armory, 145 Calvez Road, Suite 160, Rochester, New York 14620
Phone: 585-381-9250
TBPE Firm Number F-10086615
www.mrbgroup.com

Sheet No. E4.1
of
Project No. 2054.18001

1/9/2020 12:09:49 PM

LITTLE LEAGUE

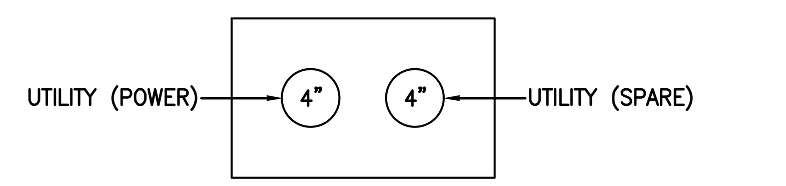

1 DETAIL - TRENCH SECTION A-A (2)
E4.2
SCALE: NTS

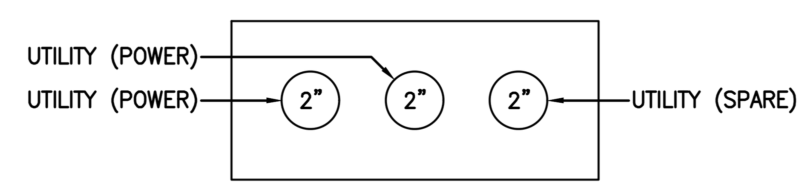

2 DETAIL - TRENCH SECTION B-B (2)
E4.2
SCALE: NTS

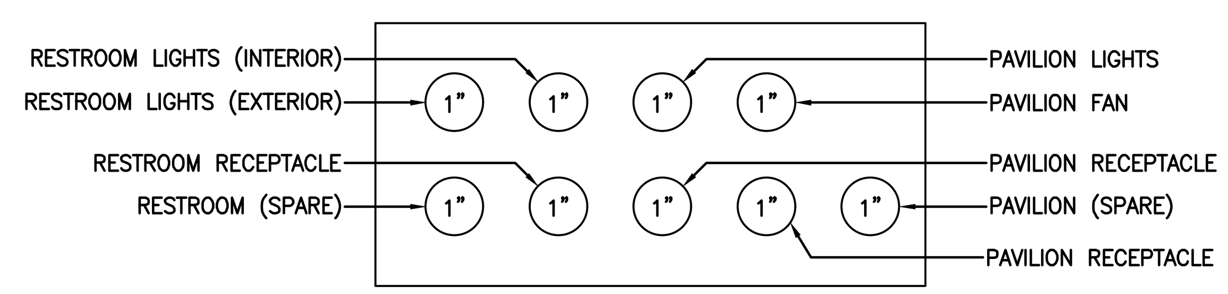

3 DETAIL - TRENCH SECTION C-C (1)
E4.2
SCALE: NTS

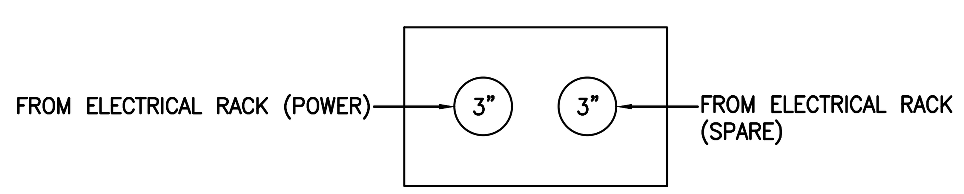

4 DETAIL - TRENCH SECTION D-D
E4.2
SCALE: NTS

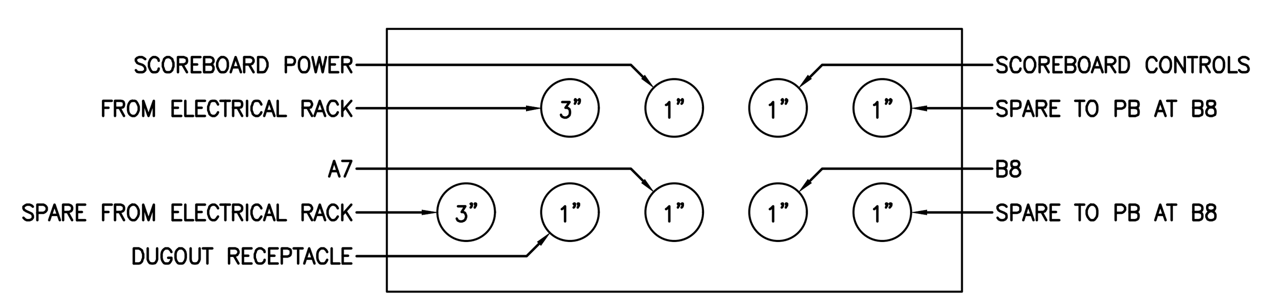

5 DETAIL - TRENCH SECTION E-E (1)
E4.2
SCALE: NTS

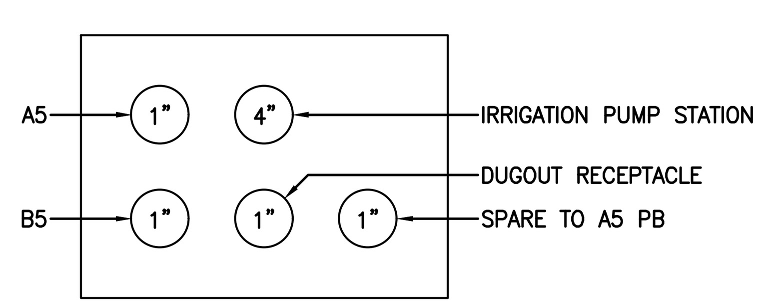

6 DETAIL - TRENCH SECTION F-F (1)
E4.2
SCALE: NTS

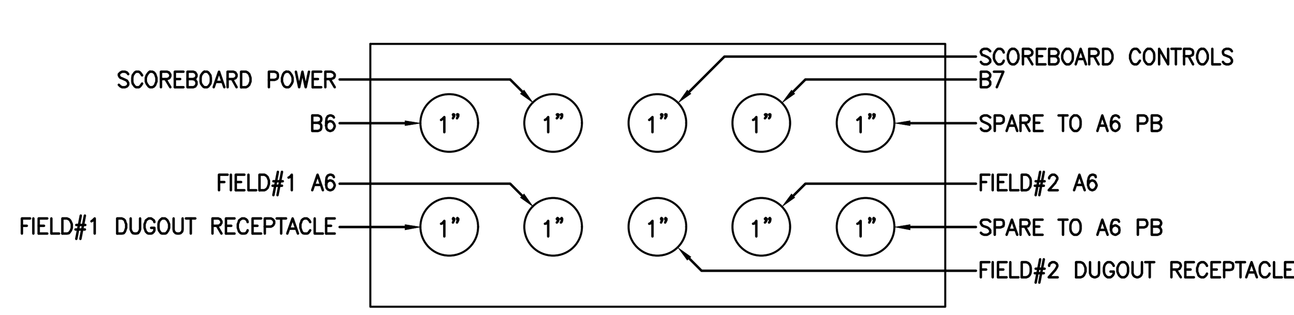

7 DETAIL - TRENCH SECTION G-G (1)
E4.2
SCALE: NTS

BASEBALL/SOFTBALL

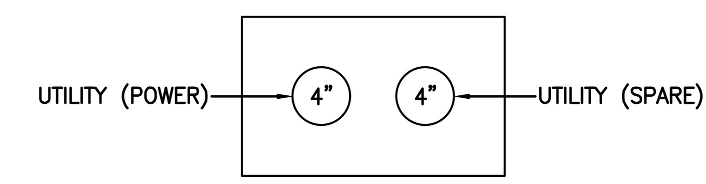

8 DETAIL - TRENCH SECTION A-A (2)
E4.2
SCALE: NTS

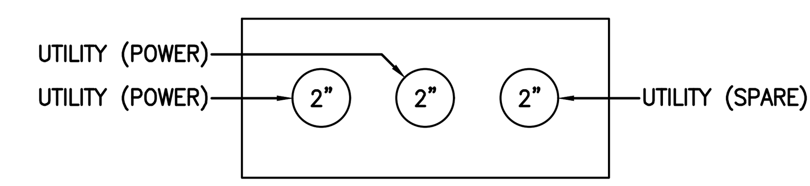

9 DETAIL - TRENCH SECTION B-B (2)
E4.2
SCALE: NTS

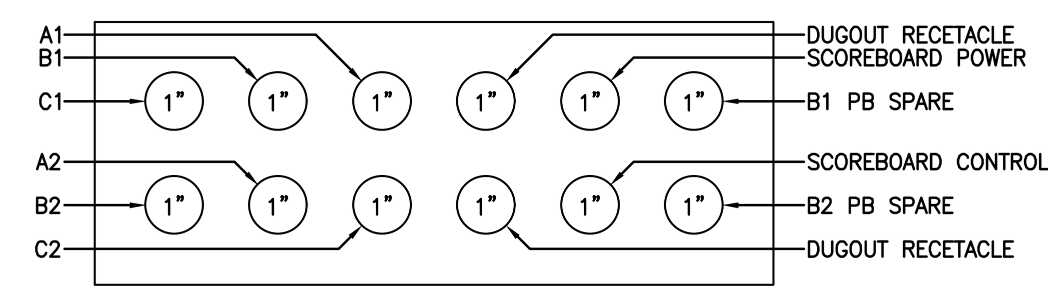

10 DETAIL - TRENCH SECTION C-C (1)
E4.2
SCALE: NTS

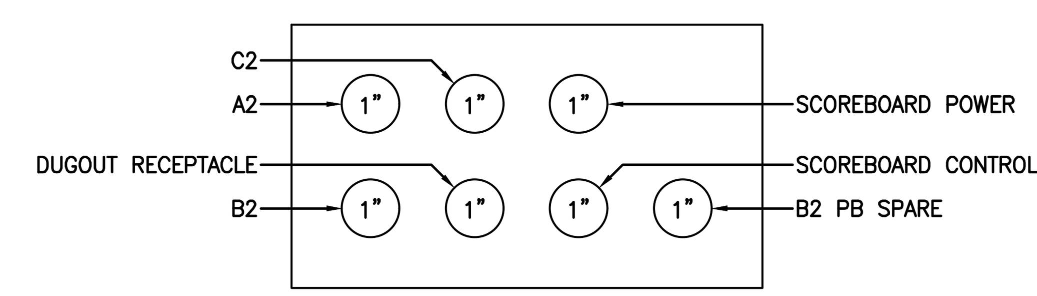

11 DETAIL - TRENCH SECTION D-D (1)
E4.2
SCALE: NTS

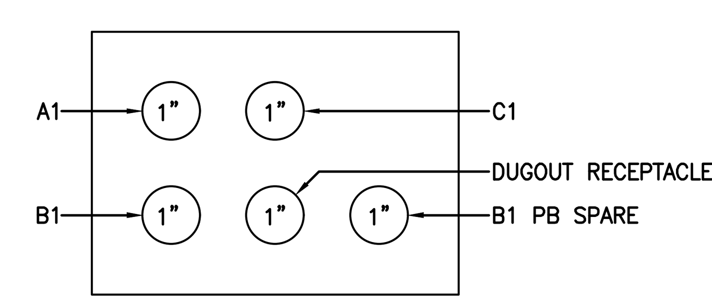

12 DETAIL - TRENCH SECTION E-E (1)
E4.2
SCALE: NTS

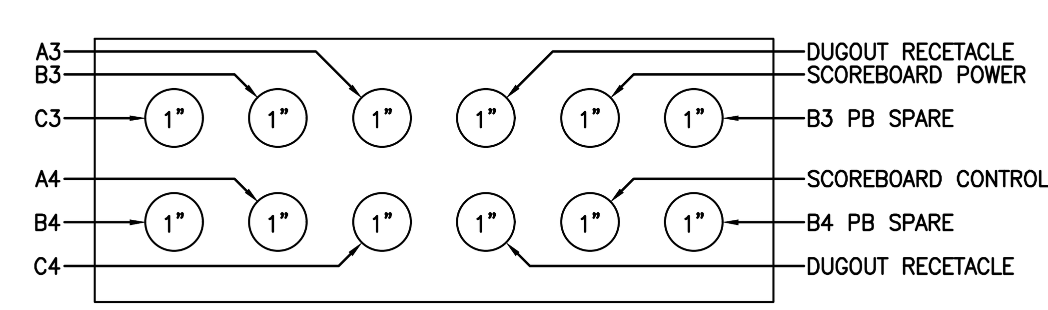

13 DETAIL - TRENCH SECTION F-F (1)
E4.2
SCALE: NTS

REFERENCE NOTES

1. SEE DETAIL 14/E4.2 FOR TYPICAL TRENCH DETAIL. TYPICAL.
2. SEE DETAIL 15/E4.2 FOR TYPICAL TRENCH DETAIL. TYPICAL.

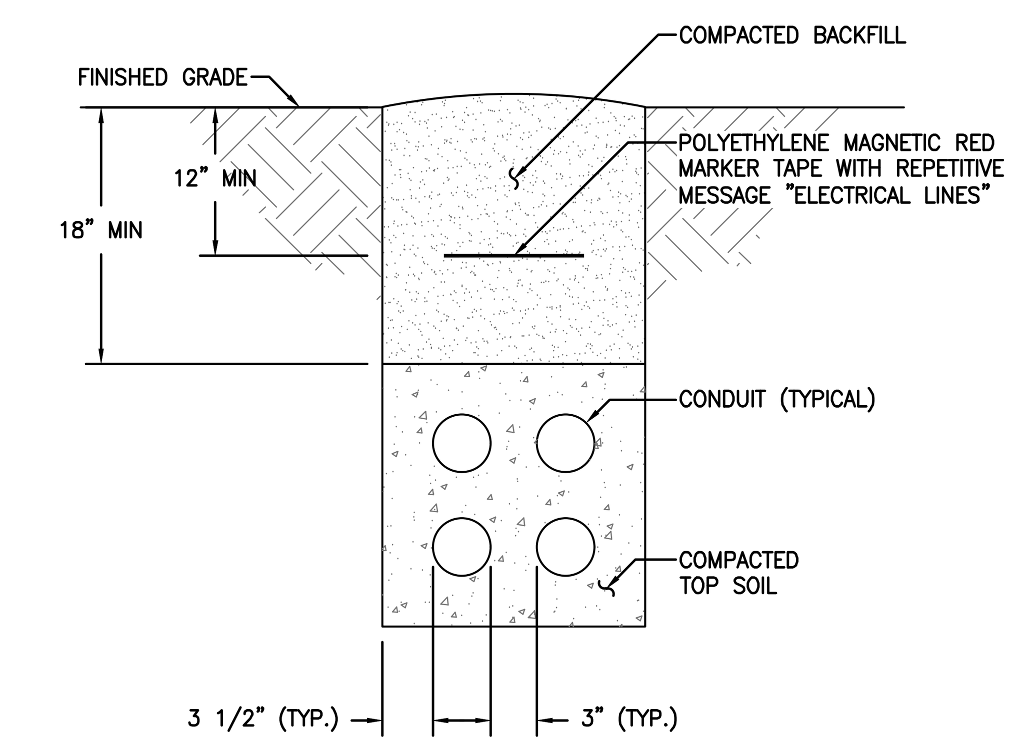

14 DETAIL - TRENCH SECTION CONSTRUCTION (TYPICAL)
E4.2
SCALE: NTS

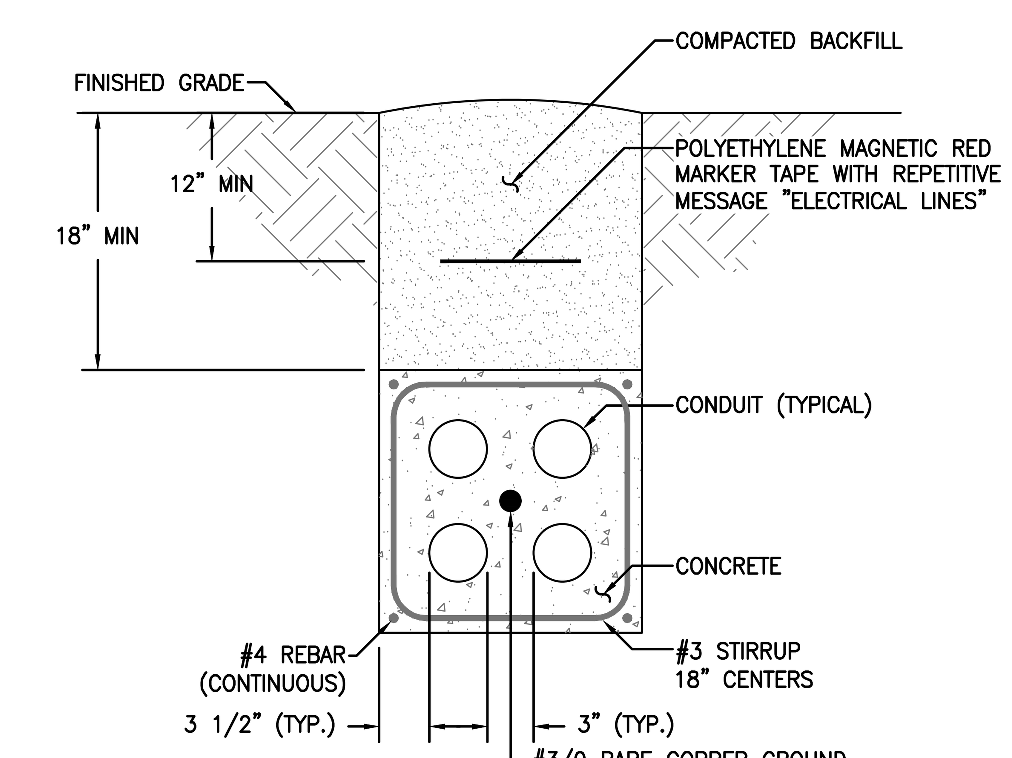

15 DETAIL - DUCT BANK SECTION CONSTRUCTION (TYPICAL)
E4.2
SCALE: NTS

S. Kanetzky Engineering, LLC.
5920 W. William Cannon
Bldg. 7, Suite 200
Austin, Texas 78749
(512) 329-5774.
www.skaneng.com
TBPE Firm No. F-2356
SKE PROJECT # 2320220

No. | Revisions and Descriptions | By | Date

Copyright © 2020 MRB Group All Rights Reserved

Project Title: TOM GREEN COUNTY PUGH PARK

Drawing Title: ELECTRICAL DETAILS

Drawn By: AH | Checked By: TV | Scale: PER TITLE | Date: 05/14/2020

STATE OF TEXAS — THOMAS EDWARD VAUGHAN — 135335 — LICENSED PROFESSIONAL ENGINEER — 05.14.2020 — 2320220

MRB group
Engineering, Architecture & Surveying
5250 South 31st Street, Temple, Texas 76502 Phone: 254-771-2054
Corporate Office: The Culver Road Armory, 145 Culver Road, Suite 160, Rochester, New York 14620
Phone: 585-381-9250
TBPE Firm Number: F-10615
www.mrbgroup.com

Sheet No.: E4.2

of

Project No.: 2054.18001

1/9/2020 12:09:49 PM

PRELIMINARY FOUNDATION AND POLE ASSEMBLY DRAWING

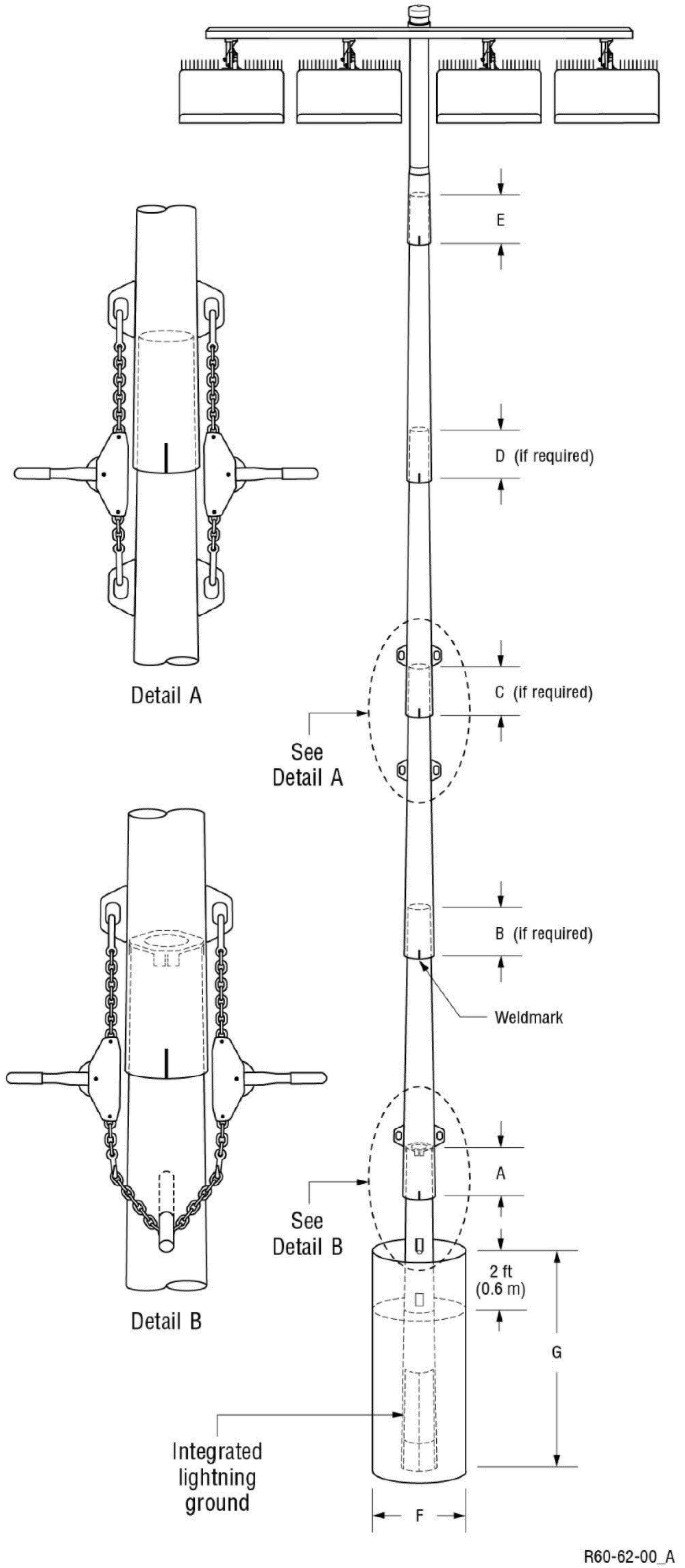

TABLE 1: POLE ASSEMBLY

POLE ID	POLE HEIGHT ft (m)	# OF LUMINAIRES	ASSEMBLED POLE WEIGHT [3] lb (kg)
A1	60 (18.3)	2	873 (396)
A2	60 (18.3)	2	873 (396)
B1	60 (18.3)	5	1141 (518)
B2	60 (18.3)	5	1141 (518)
C1	60 (18.3)	5	1142 (518)
C2	60 (18.3)	5	1142 (518)
2-A1	70 (21.3)	5	1440 (653)
2-A2	70 (21.3)	5	1440 (653)
2-B1	80 (24.4)	7	3329 (1510)
2-B2	80 (24.4)	7	3329 (1510)
2-C1	70 (21.3)	8	2469 (1120)
2-C2	70 (21.3)	8	2469 (1120)

Pole Assembly Notes:

1. Steel pole should overlap concrete base and be seated tight with 1 1/2 ton come-alongs (contractor provided).
2. Align weldmarks on steel sections before assembling.
3. Assembled pole weight includes steel sections, crossarms, luminaires, and electrical components enclosures.
4. Section overlap must be pulled together until tight. Overlap measurement should be +/- 6 in (150 mm).
5. This document is not intended for use as an assembly instruction. See *Installation Instructions: Light-Structure System™ Lighting System* for complete assembly procedure.

TABLE 2: FOUNDATION DETAILS

POLE ID	CONCRETE BASE WEIGHT lb(kg)	BURIAL INFORMATION [3,4] F in (mm)	G ft (m)	CONCRETE BACKFILL [1,2] yd^3 (m^3)	CUT BASE	LIGHTNING GROUND [5] TYPE	SUPPLEMENTAL INSTRUCTION
A1	1870 (848)	30 (762)	10 (3.0)	1.2 (0.9)	NO	INTEGRATED [6]	N/A
A2	1870 (848)	30 (762)	10 (3.0)	1.2 (0.9)	NO	INTEGRATED [6]	N/A
B1	1870 (848)	30 (762)	10 (3.0)	1.2 (0.9)	NO	INTEGRATED [6]	N/A
B2	1870 (848)	30 (762)	10 (3.0)	1.2 (0.9)	NO	INTEGRATED [6]	N/A
C1	1870 (848)	30 (762)	10 (3.0)	1.2 (0.9)	NO	INTEGRATED [6]	N/A
C2	1870 (848)	30 (762)	10 (3.0)	1.2 (0.9)	NO	INTEGRATED [6]	N/A
2-A1	1880 (853)	30 (762)	10 (3.0)	1.2 (0.9)	NO	INTEGRATED [6]	N/A
2-A2	1880 (853)	30 (762)	10 (3.0)	1.2 (0.9)	NO	INTEGRATED [6]	N/A
2-B1	5300 (2404)	30 (762)	16 (4.9)	1.6 (1.2)	NO	INTEGRATED [6]	N/A
2-B2	5300 (2404)	30 (762)	16 (4.9)	1.6 (1.2)	NO	INTEGRATED [6]	N/A
2-C1	3780 (1715)	30 (762)	14 (4.3)	1.6 (1.2)	NO	INTEGRATED [6]	N/A
2-C2	3780 (1715)	30 (762)	14 (4.3)	1.6 (1.2)	NO	INTEGRATED [6]	N/A

Foundation Notes:

1. Concrete backfill is calculated to 2 ft (0.6m) below grade (no overage included). Top 2 ft (0.6m) to be class 5 soil compacted to 95% density of surrounding undisturbed soil unless otherwise specified in stamped structural design.
2. Concrete backfill required 3000 lb/in² (20 MPa) minimum.
3. Foundation design per 2012 IBC, 115 mph, exposure category C, variation STD (Risk Category II).
4. Assumes IBC class 5 soils.
5. Standard bases include integrated lightning protection. If bases are cut, supplemental lightning protection is required. Contact Musco for materials and instruction.
6. Lightning protection is a manufacturer installed concrete encased electrode and connector. Ground connection is made when concrete base is installed and footing is poured. No additional steps required.

M-1441-enUS-1 • Copyright 2017 Musco Sports Lighting, LLC. Not to be reproduced in whole or part without the written consent of Musco Sports Lighting, LLC.

Pugh Park Baseball & Softball - Christoval, TX, USA

Date:	05/18/2020	Scale: N/A	
Rep:	Tim Oordt	Page: 1 of 1	
Project:	198435	Preliminary	

S. Kanetzky Engineering, LLC.
5926 W. William Cannon Bldg 7, Suite 200
Austin, Texas 78749
(512) ...374.
www.skaneng.com
TBPE Firm No. F-2356
SKE PROJECT # 2320220

STATE OF TEXAS
THOMAS EDWARD VAUGHAN
135335
LICENSED PROFESSIONAL ENGINEER
05-14-2020

Project Title: TOM GREEN COUNTY PUGH PARK

Drawing Title: ELECTRICAL BASEBALL/ SOFTBALL LIGHT POLE DETAILS

Drawn By: AH | Checked By: TV | Scale: PER TITLE | Date: 05/14/2020

MRB group
Engineering, Architecture & Surveying

Sheet No. E4.3

Project No. 2054.18001

1/9/2020 12:09:49 PM

PRELIMINARY FOUNDATION AND POLE ASSEMBLY DRAWING

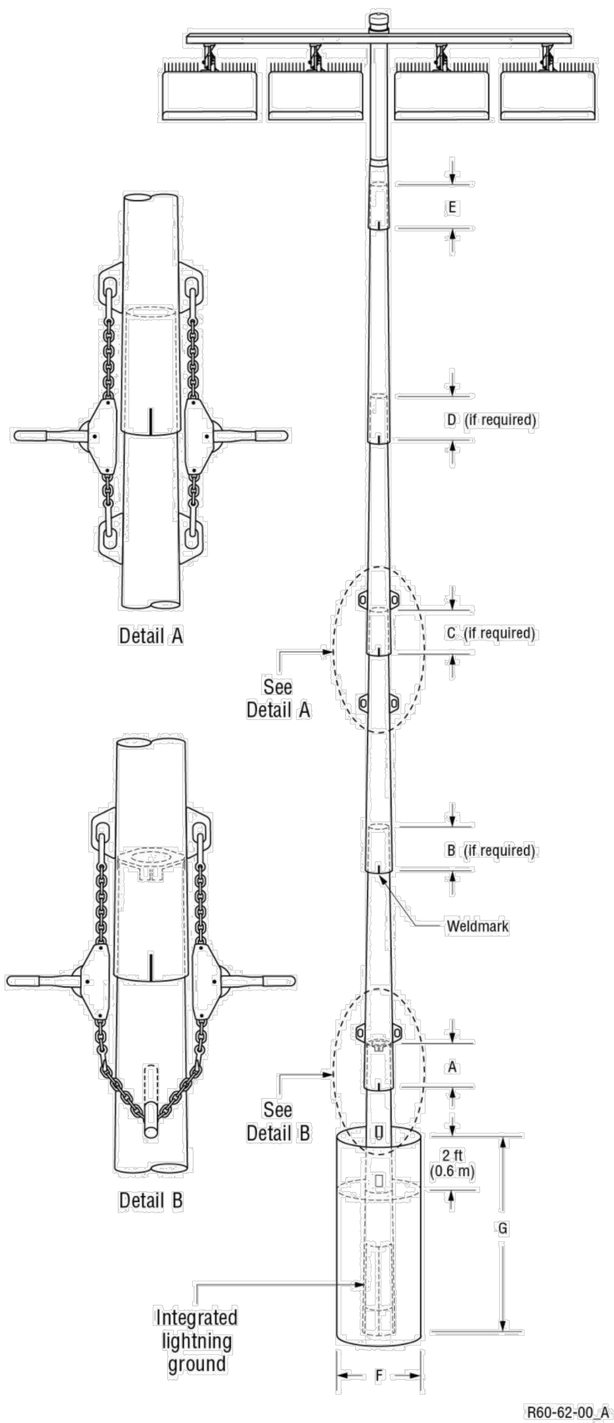

TABLE 1: POLE ASSEMBLY			
POLE ID	POLE HEIGHT ft (m)	# OF LUMINAIRES	ASSEMBLED POLE WEIGHT [3] lb (kg)
A1	60 (18.3)	4	1047 (475)
A2	60 (18.3)	8	1751 (794)
B1	70 (21.3)	5	1650 (748)
B2	70 (21.3)	5	1650 (748)
2-A2	60 (18.3)	4	1047 (475)
2-B1	70 (21.3)	5	1650 (748)
2-B2	70 (21.3)	5	1650 (748)

Pole Assembly Notes:

1. Steel pole should overlap concrete base and be seated tight with 1 1/2 ton come-alongs (contractor provided).
2. Align weldmarks on steel sections before assembling.
3. Assembled pole weight includes steel sections, crossarms, luminaires, and electrical components enclosures.
4. Section overlap must be pulled together until tight. Overlap measurement should be +/- 6 in (150 mm).
5. This document is not intended for use as an assembly instruction. See *Installation Instructions: Light-Structure System™ Lighting System* for complete assembly procedure.

TABLE 2: FOUNDATION DETAILS							
POLE ID	CONCRETE BASE WEIGHT lb(kg)	BURIAL INFORMATION [3,4] F in (mm)	G ft (m)	CONCRETE BACKFILL [1,2] yd³ (m³)	CUT BASE	LIGHTNING GROUND [5] TYPE	SUPPLEMENTAL INSTRUCTION
A1	1870 (848)	30 (762)	10 (3.0)	1.2 (0.9)	NO	INTEGRATED [6]	N/A
A2	2710 (1229)	30 (762)	12 (3.7)	1.5 (1.1)	NO	INTEGRATED [6]	N/A
B1	2720 (1234)	30 (762)	12 (3.7)	1.5 (1.1)	NO	INTEGRATED [6]	N/A
B2	2720 (1234)	30 (762)	12 (3.7)	1.5 (1.1)	NO	INTEGRATED [6]	N/A
2-A2	1870 (848)	30 (762)	10 (3.0)	1.2 (0.9)	NO	INTEGRATED [6]	N/A
2-B1	2720 (1234)	30 (762)	12 (3.7)	1.5 (1.1)	NO	INTEGRATED [6]	N/A
2-B2	2720 (1234)	30 (762)	12 (3.7)	1.5 (1.1)	NO	INTEGRATED [6]	N/A

Foundation Notes:

1. Concrete backfill is calculated to 2 ft (0.6m) below grade (no overage included). Top 2 ft (0.6m) to be class 5 soil compacted to 95% density of surrounding undisturbed soil unless otherwise specified in stamped structural design.
2. Concrete backfill required 3000 lb/in^2 (20 MPa) minimum.
3. Foundation design per 2012 IBC, 115 mph, exposure category C, variation STD (Risk Category II).
4. Assumes IBC class 5 soils.
5. Standard bases include integrated lightning protection. If bases are cut, supplemental lightning protection is required. Contact Musco for materials and instruction.
6. Lightning protection is a manufacturer installed concrete encased electrode and connector. Ground connection is made when concrete base is installed and footing is poured. No additional steps required.

M-1441-enUS-1 • Copyright 2017 Musco Sports Lighting, LLC. Not to be reproduced in whole or part without the written consent of Musco Sports Lighting, LLC.

Pugh Park Baseball & Softball - Christoval, TX, USA			
Date: 05/18/2020	Scale: N/A		
Rep: Tim Oordt	Page: 1 of 1		
Project: 198435	Preliminary		

S. Kanetzky
Engineering, LLC.
5926 W. William Cannon
Bldg. 7, Suite 200
Austin, TX 78749
(512) 288-6774.
www.skaneng.com
TBPE Firm No. F-2356
SKE PROJECT # 2320220

No.	Revisions and Descriptions	By	Date

Copyright © 2020 MRB Group. All Rights Reserved

Project Title: TOM GREEN COUNTY PUGH PARK

Drawing Title: ELECTRICAL LITTLE LEAGUE LIGHT POLE DETAILS

Drawn By: AH
Checked By: TV
Scale: PER NTE
Date: 05/14/2020

2320220 STATE OF TEXAS THOMAS EDWARD VAUGHAN 135335 LICENSED PROFESSIONAL ENGINEER 05-14-2020

MRB group
Engineering, Architecture & Surveying
5250 South 31st Street, Temple, Texas 76502 Phone: 254-771-2054
Corporate Office: The Culver Road Armory, 145 Culver Road, Suite 160, Rochester, New York 14620
Phone: 585-381-9250
TBPE Firm Number F-11015
www.mrbgroup.com

Sheet No. E4.4
of

Project No. 2054.18001

1/9/2020 12:09:49 PM

Lighting System

Pole / Fixture Summary

Pole ID	Pole Height	Mtg Height	Fixture Qty	Luminaire Type	Load	Circuit
A1-A2	70'	70'	4	TLC-LED-1200	4.68 kW	A
		16'	1	TLC-BT-575	0.58 kW	A
A3-A4	60'	60'	2	TLC-LED-900	1.78 kW	B
		16'	1	TLC-BT-575	0.58 kW	B
B1-B2	80'	80'	7	TLC-LED-1500	10.01 kW	A
		16'	1	TLC-BT-575	0.58 kW	A
B3-B4	60'	60'	5	TLC-LED-1200	5.85 kW	B
		16'	1	TLC-BT-575	0.58 kW	B
C1-C2	70'	70'	5	TLC-LED-1500	7.15 kW	A
		16'	2	TLC-BT-575	1.15 kW	A
C3-C4	60'	60'	3	TLC-LED-1200	3.51 kW	B
		16'	1	TLC-BT-575	0.58 kW	B
12			***66***		***74.01 kW***	

Circuit Summary

Circuit	Description	Load	Fixture Qty
A	Baseball	48.28 kW	40
B	Softball	25.73 kW	26

Fixture Type Summary

Type	Source	Wattage	Lumens	L90	L80	L70	Quantity
TLC-LED-1200	LED 5700K - 75 CRI	1170W	136,000	>120,000	>120,000	>120,000	24
TLC-LED-900	LED 5700K - 75 CRI	890W	89,600	>120,000	>120,000	>120,000	4
TLC-LED-1500	LED 5700K - 75 CRI	1430W	160,000	>120,000	>120,000	>120,000	24
TLC-BT-575	LED 5700K - 75 CRI	575W	52,000	>120,000	>120,000	>120,000	14

Light Level Summary

Calculation Grid Summary

Grid Name	Calculation Metric	Illumination					Circuits	Fixture Qty
		Ave	Min	Max	Max/Min	Ave/Min		
Baseball Spill	Horizontal Illuminance	0.05	0.01	0.22	44.49	5.26	A	40
Baseball Spill	Max Candela Metric	3587	913	8406	9.20	3.93	A	40
Baseball Spill	Max Vertical Illuminance Metric	0.13	0.02	0.42	20.16	6.52	A	40
Baseball (Infield)	Horizontal Illuminance	50.4	33	61	1.84	1.53	A	40
Baseball (Outfield)	Horizontal Illuminance	30.3	18	42	2.29	1.68	A	40
Softball Spill	Horizontal Illuminance	0.01	0	0.03	118.51		B	26
Softball Spill	Max Candela Metric	764	65	2109	32.44	11.76	B	26
Softball Spill	Max Vertical Illuminance Metric	0.03	0	0.09	64.72		B	26
Softball (Infield)	Horizontal Illuminance	51.4	34	63	1.82	1.51	B	26
Softball (Outfield)	Horizontal Illuminance	33.4	20	43	2.10	1.67	B	26

ELECTRICAL LOAD ANALYSIS

LOAD	S.F	MIN. WATT/S.F.	KVA	AMP	DEMAND FACTOR	ESTIMATED DEMAND	AMP	NEC
1. LIGHTING LOAD								
A. FIELD LIGHTING			102		1.25	128		220.12
2. GENERAL POWER/RECEPTACLE LOAD:								
A. RECEPTACLE LOAD:			25		1.00	25		220.14,220.44
4. TOTAL CONNECTED LOAD:			127			153		
5. TOTAL AMP LOAD AT 480/277 VOLT, 3PHASE				153			184	

PANEL "LV3"

AMPS: 100 MAINS, 100A MCB
VOLTAGE: 120/208/3PH/4W
LOCATION: BASEBALL/SOFTBALL FIELDS (STORAGE ROOM)
FED FROM: PANEL "HV3"

PHASE: 3
WIRE: 4

MOUNTING: SURFACE
MINIMUM AIC RATING: 10 KAIC
BUSSING: COPPER
NEMA: 1

CKT. NO.	SERVICE DESCRIPTION	WIRE	BKR	POLES	KVA	A	B	C	KVA	POLES	BKR	WIRE	SERVICE DESCRIPTION	CKT. NO.
1	WATER HEATER	10	20	1	0.5	1.0			0.5	1	20	12	WOMEN RECEPT	2
3	DUGOUT RECEPTACLE	10	20	1	0.5		1.0		0.5	1	20	12	MEN RECEPT	4
5	DUGOUT RECEPTACLE	10	20	1	0.5			0.6	0.1	1	20	12	STORAGE RECEPT	6
7	DUGOUT RECEPTACLE	10	20	1	0.5	0.6			0.1	1	20	12	CONCESSION LIGHTS	8
9	DUGOUT RECEPTACLE	10	20	1	0.5		0.6		0.1	1	20	12	CONCESSION EXTERIOR LIGHTS	10
11	SCOREBOARD	10	20	1	0.5			0.6	0.1	1	20	12	EXTERIOR LIGHTS	12
13	SCOREBOARD	10	20	1	0.5	0.6			0.1	1	20	12	WOMEN LIGHTS	14
15	MUSCO CONTROL POWER (CP2)	12	20	1	0.5		0.6		0.1	1	20	12	MEN LIGHTS	16
17	SPARE		20	1	0.0			0.1	0.1	1	20	12	STORAGE LIGHTS	18
19	SPARE		20	1	0.0	0.5			0.5	1	20	12	OUTDOOR RECEPT	20
21	SPARE		20	1	0.0		0.5		0.5	1	20	12	CONCESSIONS RECEPT	22
23	CONCESSIONS RECEPT	12	20	1	0.5			1.0	0.5	1	20	12	CONCESSIONS RECEPT	24
25	SPARE		20	1	0.0	0.5			0.5	1	20	12	CONCESSIONS RECEPT	26
27	SPARE		20	1	0.0		1.0		1.0	1	20	12	REFRIGERATOR RECEPT	28
29	SPARE		20	1	0.0	0.5			0.5	1	20	12	CONCESSIONS RECEPT	30
31	SPARE		20	1	0.0		0.0		0.0	1	20		SPARE	32
33	SPARE		20	1	0.0		0.0		0.0	1	20		SPARE	34
35	SPARE		20	1	0.0		0.0		0.0	1	20		SPARE	36
37	SPD		60	3	0.0		0.0		0.0	1	20		SPARE	38
39	|				0.0		0.0		0.0	1	20		SPARE	40
41	|				0.0			0.0	0.0	1	20		SPARE	42
				PHASE LOAD IN KVA:		3.7	3.7	2.3						
				PHASE LOAD IN AMPS:		31	31	19						

NOTE: SQUARE D NQ

PANEL "HV-3"

AMPS: 400 MAINS 300A MCB
VOLTAGE: 480/277
LOCATION: BASEBALL/SOFTBALL FIELDS (STORAGE ROOM)
FED FROM: AEP TRANSFORMER

PHASE: 3
WIRE: 4

MOUNTING: SURFACE
MINIMUM AIC RATING: 22 KAIC
BUSSING: COPPER
NEMA: 1

CKT. NO.	SERVICE DESCRIPTION	WIRE	BKR	POLES	KVA	A	B	C	KVA	POLES	BKR	WIRE	SERVICE DESCRIPTION	CKT. NO.
1	POLE A1 LIGHTS (BASEBALL)	10	30	3	2.5	3.6			1.1	3	30	10	POLE A3 LIGHTS (SOFTBALL)	2
3	|				2.5		3.6		1.1				|	4
5	|				2.5			3.6	1.1				|	6
7	POLE A2 LIGHTS (BASEBALL)	10	30	3	2.5	3.6			1.1	3	30	10	POLE A4 LIGHTS (SOFTBALL)	8
9	|				2.5		3.6		1.1				|	10
11	|				2.5			3.6	1.1				|	12
13	POLE B1 LIGHTS (BASEBALL)	8	30	3	4.8	7.7			2.9	3	30	10	POLE B3 LIGHTS (SOFTBALL)	14
15	|				4.8		7.7		2.9				|	16
17	|				4.8			7.7	2.9				|	18
19	POLE B2 LIGHTS (BASEBALL)	8	30	3	4.8	7.7			2.9	3	30	10	POLE B4 LIGHTS (SOFTBALL)	20
21	|				4.8		7.7		2.9				|	22
23	|				4.8			7.7	2.9				|	24
25	POLE C1 LIGHTS (BASEBALL)	6	30	3	3.9	5.7			1.8	3	30	10	POLE C3 LIGHTS (SOFTBALL)	26
27	|				3.9		5.7		1.8				|	28
29	|				3.9			5.7	1.8				|	30
31	POLE C2 LIGHTS (BASEBALL)	6	30	3	3.9	5.7			1.8	3	30	10	POLE C4 LIGHTS (SOFTBALL)	32
33	|				3.9		5.7		1.8				|	34
35	|				3.9			5.7	1.8				|	36
37	LV3	6	50	3	10.0	10.0			0.0	3	60	6	SPD	38
39	|				10.0		10.0		0.0				|	40
41	|				10.0			10.0	0.0				|	42
				PHASE LOAD IN KVA:		44.0	44.0	44.0						
				PHASE LOAD IN AMPS:		159	159	159						

NOTE:
1. SQUARE D NF WITH FEED THRU LUGS
2. FOR POLE LIGHTING CIRCUITS PROVIDE CONTROL CIRCUIT LOCK-ON DEVICE TO PREVENT UNAUTHERIZED POWER INTERRUPTION TO CONTROL POWER. REFER TO MUSCO SUBMITTALS.

PANEL "HV-4"

AMPS: 400 MAINS MLO
VOLTAGE: 480/277
LOCATION: BASEBALL/SOFTBALL FIELDS (STORAGE ROOM)
FED FROM: HV-3

PHASE: 3
WIRE: 4

MOUNTING: SURFACE
MINIMUM AIC RATING: 22 KAIC
BUSSING: COPPER
NEMA: 1

CKT. NO.	SERVICE DESCRIPTION	WIRE	BKR	POLES	KVA	A	B	C	KVA	POLES	BKR	WIRE	SERVICE DESCRIPTION	CKT. NO.
1	SPACE					0.0							SPACE	2
3	SPACE						0.0						SPACE	4
5	SPACE							0.0					SPACE	6
7	SPACE					0.0							SPACE	8
9	SPACE						0.0						SPACE	10
11	SPACE							0.0					SPACE	12
13	SPACE					0.0							SPACE	14
15	SPACE						0.0						SPACE	16
17	SPACE							0.0					SPACE	18
19	SPACE					0.0							SPACE	20
21	SPACE						0.0						SPACE	22
23	SPACE							0.0					SPACE	24
25	SPACE					0.0							SPACE	26
27	SPACE						0.0						SPACE	28
29	SPACE							0.0					SPACE	30
31	SPACE					0.0							SPACE	32
33	SPACE						0.0						SPACE	34
35	SPACE							0.0					SPACE	36
37	SPACE					0.0							SPACE	38
39	SPACE						0.0						SPACE	40
41	SPACE							0.0					SPACE	42
				PHASE LOAD IN KVA:		0.0	0.0	0.0						
				PHASE LOAD IN AMPS:		0	0	0						

NOTE: 1. SQUARE D NF

LIGHTING FIXTURE SCHEDULE

TYPE	MANUFACTURER	CATALOG NO.	LAMP QTY	LAMP TYPE	LAMP WATTS	FIX. WATTS	VOLTS	MOUNTING	REMARKS
A	LITHONIA	FEM L48 4000LM IMAFD MD 120 40K		LED		31	120	CEILING	1X4 LED STRIP
AEM	LITHONIA	FEM L48 4000LM IMAFD MD 120 40K		LED		31	120	CEILING	1X4 LED STRIP WITH BATTERY
W1	LUMARK	XTOR 4B-W		LED		38	120	WALL	LED FULL CUTOFF, 4000K, MOUNT 9' AFF
X	LITHONIA	LQM S W 3 R 120/277 EL N		LED		0.92	120	WALL	EXIT LIGHT WITH BATTERY PACK
P	SELUX	DSCLS-R5-1-L65-50 SOLAR		LED		65	12	POLE	BRONZE FINISH, COORDINATE BATTERIES, PANEL, & OPERATION PROFILE WITH OW #ST747 (16' ROUND STEEL POLE)

S. Kanetzky Engineering, LLC.
5920 W. William Cannon
Bldg. 7, Suite 200
Austin, Texas 78749
(512) 329-5774.
www.skaneng.com
TBPE Firm No. F-2356
SKE PROJECT # 2320220

No.	Revisions and Descriptions	By	Date

Copyright © 2020 MRB Group. All Rights Reserved.

Project Title: TOM GREEN COUNTY PUGH PARK

Drawing Title: BASEBALL & SOFTBALL ELECTRICAL SCHEDULES

Drawn By: AH
Checked By: TV
Scale: PER NTS
Date: 05/14/2020

2320220
STATE OF TEXAS
THOMAS EDWARD VAUGHAN
135335
LICENSED PROFESSIONAL ENGINEER
05-14-2020

MRB group
Engineering, Architecture & Surveying
5250 South 31st Street, Temple, Texas 76502 Phone: 254-771-2034
Corporate Office: The Calvez Road Armory, 145 Calvez Road, Suite 160, Rochester, New York 14620
Phone: 585-381-9250
TBPE Firm Number: F-10086615
www.mrbgroup.com

Sheet No: E5.0
of
Project No: 2054.18001

1/9/2020 12:09:49 PM

Lighting System

Pole / Fixture Summary

Pole ID	Pole Height	Mtg Height	Fixture Qty	Luminaire Type	Load	Circuit
A5	60'	60'	2	TLC-LED-1200	2.34 kW	A
		16'	1	TLC-BT-575	0.58 kW	A
A6	60'	60'	2	TLC-LED-1200	2.34 kW	A
		60'	2	TLC-LED-1200	2.34 kW	B
		16'	1	TLC-BT-575	0.58 kW	A
		16'	1	TLC-BT-575	0.58 kW	B
A7	60'	60'	2	TLC-LED-1200	2.34 kW	B
		16'	1	TLC-BT-575	0.58 kW	B
B5-B6	70'	70'	5	TLC-LED-1500	7.15 kW	A
		16'	1	TLC-BT-575	0.58 kW	A
B7-B8	70'	70'	5	TLC-LED-1500	7.15 kW	B
		16'	1	TLC-BT-575	0.58 kW	B
7			***36***		***42.56 kW***	

Circuit Summary

Circuit	Description	Load	Fixture Qty
A	Little League 1	21.28 kW	18
B	Little League 2	21.28 kW	18

Fixture Type Summary

Type	Source	Wattage	Lumens	L90	L80	L70	Quantity
TLC-LED-1200	LED 5700K - 75 CRI	1170W	136,000	>120,000	>120,000	>120,000	8
TLC-LED-1500	LED 5700K - 75 CRI	1430W	160,000	>120,000	>120,000	>120,000	20
TLC-BT-575	LED 5700K - 75 CRI	575W	52,000	>120,000	>120,000	>120,000	8

Light Level Summary

Calculation Grid Summary

Grid Name	Calculation Metric	Illumination					Circuits	Fixture Qty
		Ave	Min	Max	Max/Min	Ave/Min		
Little League 1 Spill	Horizontal Illuminance	0.04	0	0.10	0.00		A	18
Little League 1 Spill	Max Candela Metric	3912	23.8	14323	602.61	164.57	A	18
Little League 1 Spill	Max Vertical Illuminance Metric	0.11	0	0.27	1720.23		A	18
Little League 1 (Infield)	Horizontal Illuminance	51.1	35	62	1.76	1.46	A	18
Little League 1 (Outfield)	Horizontal Illuminance	34.1	21	42	2.00	1.63	A	18
Little League 2 Spill	Horizontal Illuminance	0.05	0	0.11	782.74		B	18
Little League 2 Spill	Max Candela Metric	6661	140	14819	106.03	47.66	B	18
Little League 2 Spill	Max Vertical Illuminance Metric	0.15	0	0.33	341.15		B	18
Little League 2 (Infield)	Horizontal Illuminance	50.7	35	62	1.80	1.45	B	18
Little League 2 (Outfield)	Horizontal Illuminance	32.8	21	43	2.03	1.56	B	18

ELECTRICAL LOAD ANALYSIS

LOAD	S.F	MIN. WATT/S.F.	KVA	AMP	DEMAND FACTOR	ESTIMATED DEMAND	AMP	NEC
1. LIGHTING LOAD								
A. FIELD LIGHTING			60		1.25	75		220.12
2. GENERAL POWER/RECEPTACLE LOAD:								
A. RECEPTACLE LOAD:			30		1.00	30		220.14,220.44
4. TOTAL CONNECTED LOAD:			90			105		
5. TOTAL AMP LOAD AT 480/277 VOLT, 3PHASE				108			126	

PANEL "HV-1"

AMPS: 400 MAINS 400A MCB
VOLTAGE: 480/277
LOCATION: SERVICE ENTRANCE EQUIPMENT RACK
FED FROM: AEP TRANSFORMER

PHASE: 3
WIRE: 4

MOUNTING: SURFACE
MINIMUM AIC RATING: 22 KAIC
BUSSING: COPPER
NEMA: 3R

CKT. NO.	SERVICE DESCRIPTION	WIRE	BKR	POLES	KVA	A	B	C	KVA	POLES	BKR	WIRE	SERVICE DESCRIPTION	CKT. NO.
1	HV-2	#4/0	200	3	44.0	49.0			5.0	3	25	10	LV1	2
3	|				44.0		49.0		5.0				|	4
5	|				44.0			49.0	5.0				|	6
7	SPACE					0.0							SPACE	8
9	SPACE						0.0						SPACE	10
11	SPACE							0.0					SPACE	12
13	SPACE					0.0							SPACE	14
15	SPACE						0.0						SPACE	16
17	SPACE							0.0					SPACE	18
19	SPACE					0.0							SPACE	20
21	SPACE						0.0						SPACE	22
23	SPACE							0.0					SPACE	24
25	SPACE					0.0							SPACE	26
27	SPACE						0.0						SPACE	28
29	SPACE							0.0					SPACE	30
31	SPACE					0.0							SPACE	32
33	SPACE						0.0						SPACE	34
35	SPACE							0.0					SPACE	36
37	SPACE					0.0							SPACE	38
39	SPACE						0.0						SPACE	40
41	SPACE							0.0					SPACE	42
					PHASE LOAD IN KVA:	49.0	49.0	49.0						
					PHASE LOAD IN AMPS:	177	177	177						

NOTE: 1. SQUARE D NF

PANEL "LV1"

AMPS: 100 MAINS, 60A MCB
VOLTAGE: 120/208/3PH/4W
LOCATION: SERVICE ENTRANCE EQUIPMENT RACK
FED FROM: PANEL "HV1"

PHASE: 3
WIRE: 4

MOUNTING: SURFACE
MINIMUM AIC RATING: 10 KAIC
BUSSING: COPPER
NEMA: 3R

CKT. NO.	SERVICE DESCRIPTION	WIRE	BKR	POLES	KVA	A	B	C	KVA	POLES	BKR	WIRE	SERVICE DESCRIPTION	CKT. NO.
1	CANOPY LIGHTS	12	20	1	0.1	0.6			0.5	1	20	12	RESTROOM RECEPT	2
3	CANOPY RECEPT	12	20	1	0.5		1.0		0.5	1	20	12	RESTROOM LIGHTS	4
5	SPARE		20	1	0.0			0.1	0.1	1	20	12	PAVILION RECEPT	6
7	SPARE		20	1	0.0	0.1			0.1	1	20	12	PAVILION FANS	8
9	SPARE		20	1	0.0		0.1		0.1	1	20	12	PAVILION LIGHTS	10
11	SPARE		20	1	0.0			0.1	0.1	1	20	12	PAVILION RECEPT	12
13	SPARE		20	1	0.0	0.0			0.0	1	20		SPARE	14
15	SPARE		20	1	0.0		0.0		0.0	1	20		SPARE	16
17	SPARE		20	1	0.0			0.0	0.0	1	20		SPARE	18
19	SPARE		20	1	0.0	0.0			0.0	1	20		SPARE	20
21	SPARE		20	1	0.0		0.0		0.0	1	20		SPARE	22
23	SPARE		20	1	0.0			0.0	0.0	1	20		SPARE	24
25	SPARE		20	1	0.0	0.0			0.0	1	20		SPARE	26
27	SPARE		20	1	0.0		0.0		0.0	1	20		SPARE	28
29	SPARE		20	1	0.0	0.0			0.0	1	20		SPARE	30
31	SPARE		20	1	0.0		0.0		0.0	1	20		SPARE	32
33	SPARE		20	1	0.0		0.0		0.0	1	20		SPARE	34
35	SPARE		20	1	0.0		0.0		0.0	1	20		SPARE	36
37	SPD		60	3	0.0		0.0		0.0	1	20		SPARE	38
39	|				0.0		0.0		0.0	1	20		SPARE	40
41	|				0.0			0.0	0.0	1	20		SPARE	42
					PHASE LOAD IN KVA:	0.7	1.1	0.2						
					PHASE LOAD IN AMPS:	6	9	2						

NOTE: SQUARE D NQ

S. Kanetzky
Engineering, LLC.
5920 W. William Cannon
Bldg. 7, Suite 200
Austin, Texas 78749
(512) 329-5774.
www.skaneng.com
TBPE Firm No. F-2356
SKE PROJECT # 2320220

No.	Revisions and Descriptions	By	Date

Copyright © 2020 MRB Group. All Rights Reserved.

Project Title: TOM GREEN COUNTY PUGH PARK

Drawing Title: LITTLE LEAGUE ELECTRICAL SCHEDULES

Drawn By: AH
Checked By: TV
Scale: PER PLAN
Date: 05/14/2020

2320220
STATE OF TEXAS
THOMAS EDWARD VAUGHAN
135335
LICENSED PROFESSIONAL ENGINEER
05-14-2020

MRB group
Engineering, Architecture & Surveying
5250 South 31st Street, Temple, Texas 76502 Phone: 254-771-2054
Corporate Office: The Culver Road Armory, 145 Culver Road, Suite 160, Rochester, New York 14620
Phone: 585-381-9250
TBPE Firm Number: F-10015
www.mrbgroup.com

Sheet No.
E5.1
of

Project No.
2054.18001

1/9/2020 12:09:49 PM

PANEL "HV-2"

AMPS: 225 MAINS 200A MCB | PHASE: 3 | MOUNTING: SURFACE
VOLTAGE: 480/277 | WIRE: 4 | MINIMUM AIC RATING: 22 KAIC
LOCATION: LITTLE LEAGUE EQUIPMENT RACK | BUSSING: COPPER
FED FROM: HV-1 | NEMA: 3R

CKT. NO.	SERVICE DESCRIPTION	WIRE	BKR	POLES	KVA	A	B	C	KVA	POLES	BKR	WIRE	SERVICE DESCRIPTION	CKT. NO.
1	POLE A5 LIGHTS (LITTLE LEAGUE FIELD 1)	10	30	3	1.5	3.0			1.5	3	30	10	POLE A6 LIGHTS (LITTLE LEAGUE FIELD 2)	2
3	|				1.5		3.0		1.5				|	4
5	|				1.5			3.0	1.5				|	6
7	POLE A6 LIGHTS (LITTLE LEAGUE FIELD 1)	10	30	3	1.5	3.0			1.5	3	30	10	POLE A7 LIGHTS (LITTLE LEAGUE FIELD 2)	8
9	|				1.5		3.0		1.5				|	10
11	|				1.5			3.0	1.5				|	12
13	POLE B5 LIGHTS (LITTLE LEAGUE FIELD 1)	10	30	3	3.5	7.0			3.5	3	30	10	POLE B7 LIGHTS (LITTLE LEAGUE FIELD 2)	14
15	|				3.5		7.0		3.5				|	16
17	|				3.5			7.0	3.5				|	18
19	POLE B5 LIGHTS (LITTLE LEAGUE FIELD 1)	10	30	3	3.5	7.0			3.5	3	30	10	POLE B8 LIGHTS (LITTLE LEAGUE FIELD 2)	20
21	|				3.5		7.0		3.5				|	22
23	|				3.5			7.0	3.5				|	24
25	SPACE				0.0	1.8			1.8				SPACE	26
27	SPACE				0.0		1.8		1.8				SPACE	28
29	SPACE				0.0			1.8	1.8				SPACE	30
31	SPACE				0.0	1.8			1.8				SPACE	32
33	SPACE				0.0		1.8		1.8				SPACE	34
35	SPACE				0.0			1.8	1.8				SPACE	36
37	LV2	8	40	2	7.5	7.5			0.0	3	60	6	SPD	38
39	|				7.5		7.5		0.0				|	40
41	SPACE				0.0			0.0	0.0				|	42
					PHASE LOAD IN KVA:	31.1	31.1	23.6						
					PHASE LOAD IN AMPS:	112	112	85						

NOTE: 1. SQUARE D NF
2. FOR POLE LIGHTING CIRCUITS PROVIDE CONTROL CIRCUIT LOCK-ON DEVICE TO PREVENT UNAUTHERIZED POWER INTERRUPTION TO CONTROL POWER. REFER TO MUSCO SUBMITTALS.

PANEL "LV2"

AMPS: 100 MAINS, 60A MCB | PHASE: 3 | MOUNTING: SURFACE
VOLTAGE: 120/208/3PH/4W | WIRE: 4 | MINIMUM AIC RATING: 10 KAIC
LOCATION: LITTLE LEAGUE EQUIPMENT RACK | BUSSING: COPPER
FED FROM: PANEL "HV2" | NEMA: 3R

CKT. NO.	SERVICE DESCRIPTION	WIRE	BKR	POLES	KVA	A	B	C	KVA	POLES	BKR	WIRE	SERVICE DESCRIPTION	CKT. NO.
1	SPARE		20	1	0.0	0.5			0.5	1	20	12	CANOPY LIGHT	2
3	DUGOUT RECEPTACLE	10	20	1	0.5		1.0		0.5	1	20	12	CANOPY RECEPT	4
5	DUGOUT RECEPTACLE	10	20	1	0.5			0.5	0.0	1	20		SPARE	6
7	DUGOUT RECEPTACLE	10	20	1	0.5	0.5			0.0	1	20		SPARE	8
9	DUGOUT RECEPTACLE	10	20	1	0.5		0.5		0.0	1	20		SPARE	10
11	SCOREBOARD	10	20	1	0.5			0.5	0.0	1	20		SPARE	12
13	SCOREBOARD	10	20	1	0.5	0.5			0.0	1	20		SPARE	14
15	MUSCO CONTROL POWER (CP1)	12	20	1	0.5		0.5		0.0	1	20		SPARE	16
17	SPARE		20	1	0.0			0.0	0.0	1	20		SPARE	18
19	SPARE		20	1	0.0	0.0			0.0	1	20		SPARE	20
21	SPARE		20	1	0.0		0.0		0.0	1	20		SPARE	22
23	SPARE		20	1	0.0			0.0	0.0	1	20		SPARE	24
25	SPARE		20	1	0.0	0.0			0.0	1	20		SPARE	26
27	SPARE		20	1	0.0		0.0		0.0	1	20		SPARE	28
29	SPARE		20	1	0.0	0.0			0.0	1	20		SPARE	30
31	SPARE		20	1	0.0		0.0		0.0	1	20		SPARE	32
33	SPARE		20	1	0.0		0.0		0.0	1	20		SPARE	34
35	SPARE		20	1	0.0		0.0		0.0	1	20		SPARE	36
37	SPD		60	3	0.0		0.0		0.0	1	20		SPARE	38
39	|				0.0		0.0		0.0	1	20		SPARE	40
41	|				0.0			0.0	0.0	1	20		SPARE	42
					PHASE LOAD IN KVA:	1.5	2.0	1.0						
					PHASE LOAD IN AMPS:	13	17	8						

NOTE: SQUARE D NQ

No. | Revisions and Descriptions | By | Date

Copyright © 2020 MRB Group All Rights Reserved

Project Title: TOM GREEN COUNTY PUGH PARK

Drawing Title: LITTLE LEAGUE ELECTRICAL SCHEDULES

Drawn By: AH
Checked By: TV
Scale: PER TITLE
Date: 05/14/2020

2320220
STATE OF TEXAS
THOMAS EDWARD VAUGHAN
135335
LICENSED PROFESSIONAL ENGINEER
05.14 2020

S. Kanetzky Engineering, LLC.
5920 W. William Cannon
Bldg. 7, Suite 200
Austin, Texas 78749
(512) 329-5774.
www.skaneng.com
TBPE Firm No. F-2356
SKE PROJECT # 2320220

MRB group
Engineering, Architecture & Surveying
5250 South 31st Street, Temple, Texas 76502 Phone: 254-771-2054
Corporate Office: The Culver Road Armory, 145 Culver Road, Suite 160, Rochester, New York 14620
Phone: 585-381-9250
TBPE Firm Number: F-10615
www.mrbgroup.com

Sheet No. E5.2 of

Project No. 2054.18001

1/9/2020 12:09:49 PM