ENGINEER IS NOT RESPONSIBLE FOR ON-SITE OR OFF-SITE DAMAGES TO EXISTING STRUCTURES DUE TO CONSTRUCTION ACTIVITIES.

WIND LOAD INFO:
V_{asd} = 124 mph
V_{ult} = 160 mph (3 sec. GUST)
RISK CATEGORY I
Exposure D

DUNE WALKOVER CONSTRUCTION

ATLANTIC OCEAN FRONTAGE
570 OCEAN DRIVE
TOWN OF JUNO BEACH
PALM BEACH COUNTY, FLORIDA

LOADS:
THE DUNE WALKOVER SUPER STRUCTURE (INCLUDING BENTS, STRINGERS, AND DECKING) HAS BEEN DESIGNED FOR A VERTICAL LIVE LOAD OF 100 PSF, DEAD LOADS ASSOCIATED WITH THE STRUCTURE ITSELF, AND WIND LOADS PER CODE. THE STRUCTURE HAS NOT BEEN DESIGNED FOR SCOUR, OR HYDRODYNAMIC LOADS (INCLUDING BUT NOT LIMITED TO WAVE LOADS, CURRENT LOADS, ETC.).

ENGINEER MAKES NO WARRANTY OR CERTIFICATION REGARDING EXISTING STRUCTURES (INCLUDING EXISTING PILES) ONSITE.

CLIENT:
TOWN OF JUNO BEACH

NOVEMBER 2019

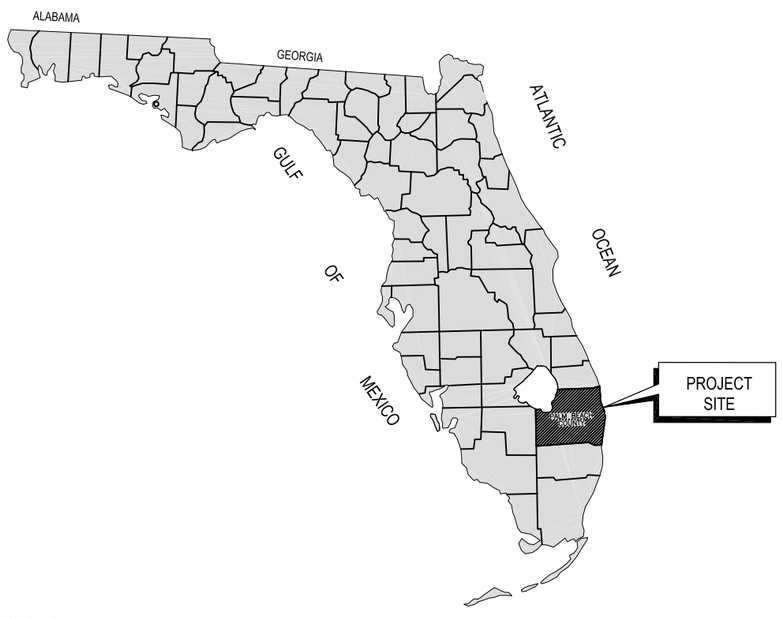

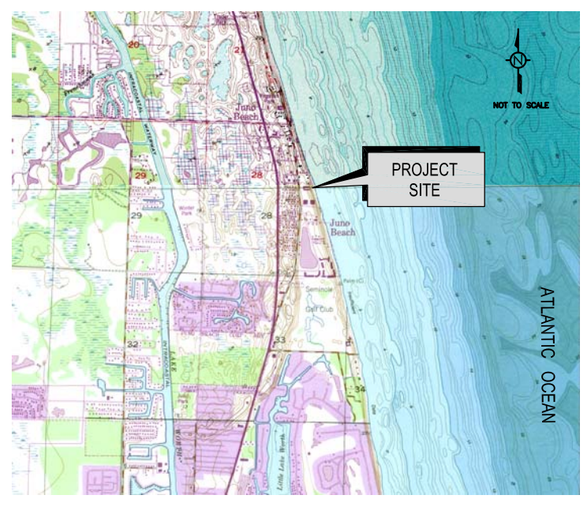

INDEX TO DRAWINGS

SHEET NUMBER	TITLE
1	VICINITY MAP & TITLE SHEET
2	DEMOLITION PLAN
3	SITE PLAN
4	FRAMING PLAN
5	SOUTH ELEVATION
6	BENCH AND PLATFORM DETAILS
7	DETAILS

APPLICABLE PROVISION(S):

THE DUNE WALKOVER HAS BEEN DESIGNED IN ACCORDANCE WITH THE APPLICABLE SECTIONS OF THE 2017 FLORIDA BUILDING CODE.

NOTE:
THESE PLANS MUST BE USED IN CONJUNCTION WITH THE ATTACHED TECHNICAL SPECIFICATIONS.

This item has been electronically signed and sealed by Mark A. Powell, P.E. on November 18, 2019 using a Digital Signature.
Printed copies of this document are not considered signed and sealed and the signature must be verified on any electronic copies.

FOR BID PURPOSES ONLY. NOT FOR CONSTRUCTION.

MARK A. POWELL
LICENSE
No. 65673
STATE OF
FLORIDA
PROFESSIONAL ENGINEER

REV	1	11/19	CLARIFY PAGE NUMBERING

VICINITY MAP & TITLE SHEET

ISIMINGER & STUBBS ENGINEERING, INC.
COASTAL • ENVIRONMENTAL • MARINE
REGISTRY NUMBER : 8114
P.O. BOX 14702 - NORTH PALM BEACH, FL. 33408 - 561-881-0003

DUNE WALKOVER CONSTRUCTION
ATLANTIC OCEAN FRONTAGE
570 OCEAN DRIVE
TOWN OF JUNO BEACH, PALM BEACH COUNTY, FL
CLIENT: TOWN OF JUNO BEACH

DATE	11/19	DRAWN	PJK	CHKD	KDB	APPRVD	MAP
DWG NO.	19123A1					SHEET	1
COMPUTER FILE NO.	19123A					OF 7	

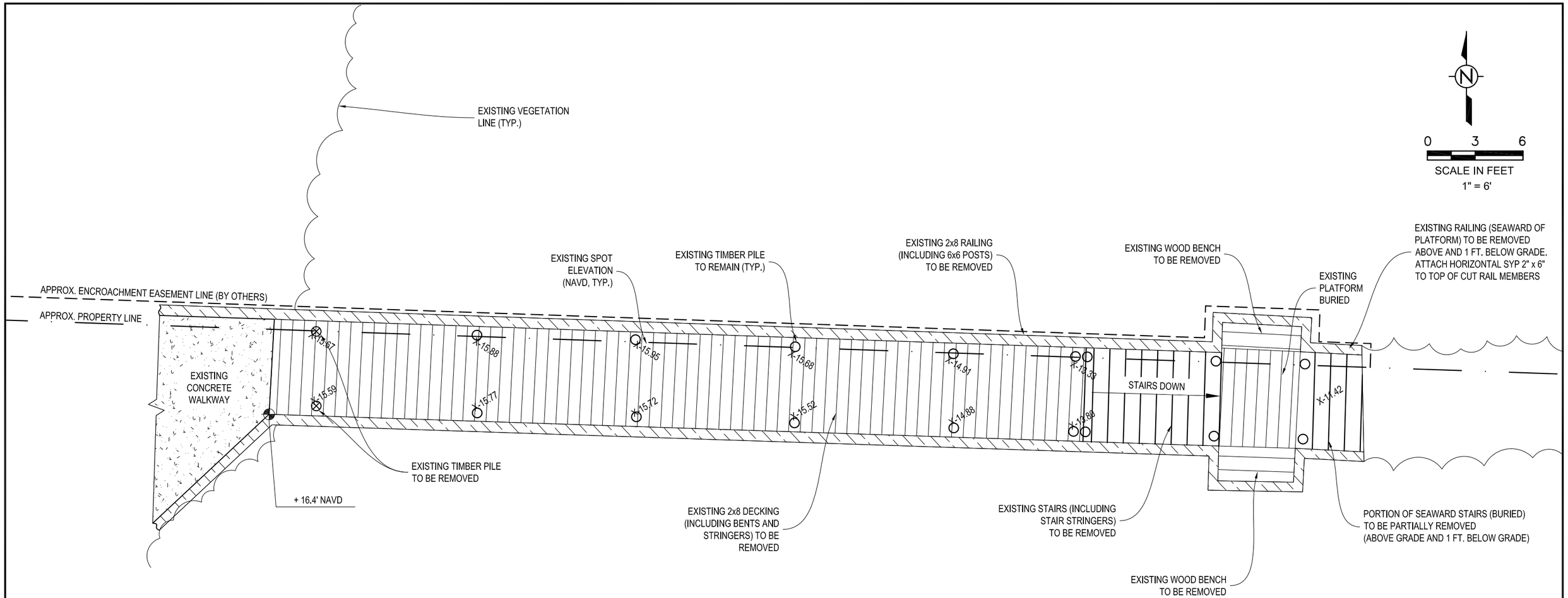

811 Know what's below. Call 811 before you dig.

NOTES:

1. DATUM IS NAVD.
2. EXISTING CONDITIONS ARE APPROXIMATE BASED ON SURVEY BY MILLER LAND SURVEYING (REV. 10/24/19) AND ON-SITE OBSERVATIONS.
3. CONTRACTOR SHALL TAKE ALL STEPS NECESSARY TO PROTECT ALL EXISTING STRUCTURES ON-SITE AND ON NEIGHBORING PROPERTIES FROM DAMAGE. CONTRACTOR SHALL BE RESPONSIBLE FOR ALL REPAIRS TO EXISTING STRUCTURES AND VEGETATION SHOULD ANY DAMAGE OCCUR.

This item has been electronically signed and sealed by Mark A. Powell, P.E. on November 18, 2019 using a Digital Signature.
Printed copies of this document are not considered signed and sealed and the signature must be verified on any electronic copies.

FOR BID PURPOSES ONLY. NOT FOR CONSTRUCTION.

MARK A. POWELL
LICENSE
No. 65673
STATE OF
FLORIDA
PROFESSIONAL ENGINEER

DEMOLITION PLAN

ISIMINGER & STUBBS ENGINEERING, INC.
COASTAL • ENVIRONMENTAL • MARINE
REGISTRY NUMBER : 8114
P.O. BOX 14702 - NORTH PALM BEACH, FL. 33408 - 561-881-0003

DUNE WALKOVER CONSTRUCTION
ATLANTIC OCEAN FRONTAGE
570 OCEAN DRIVE
TOWN OF JUNO BEACH, PALM BEACH COUNTY, FL
CLIENT: TOWN OF JUNO BEACH

DATE	11/19	DRAWN	PJK	CHKD	KDB	APPRVD	MAP
DWG NO.	19123A2				SHEET	OF 7	2
COMPUTER FILE NO.	19123A						

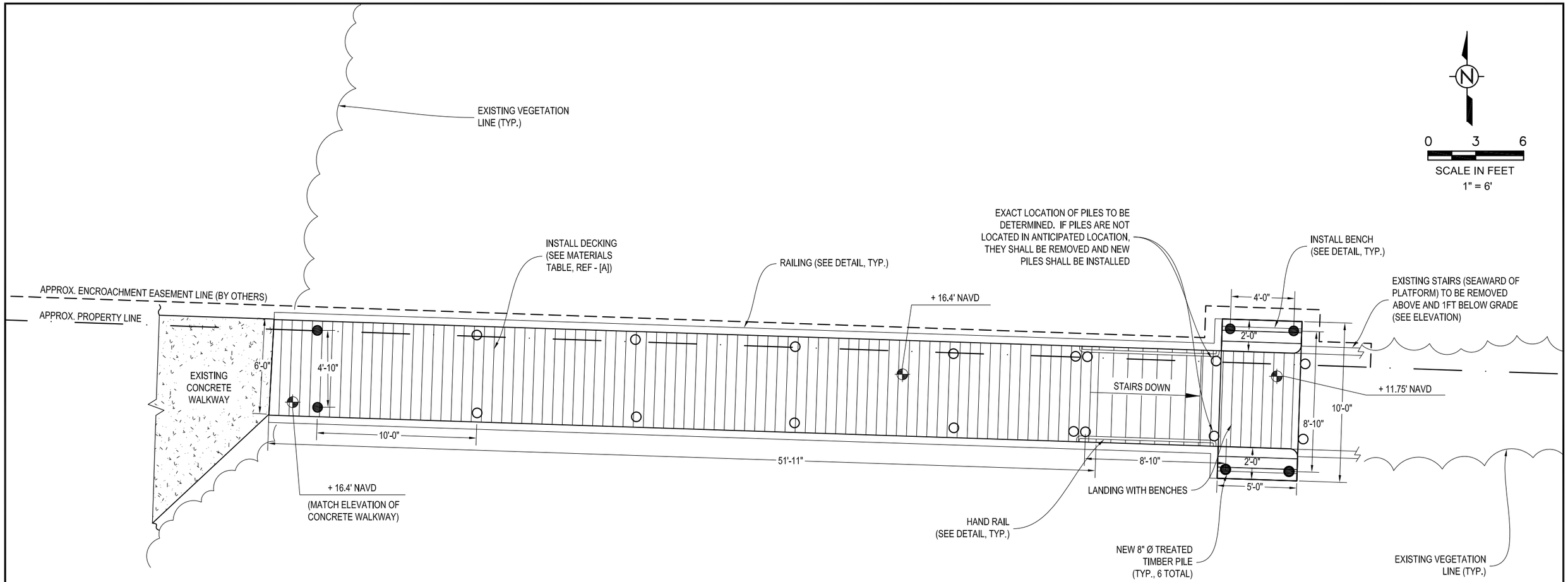

NOTES:

1. DATUM IS NAVD.
2. EXISTING CONDITIONS ARE APPROXIMATE BASED ON SURVEY BY MILLER LAND SURVEYING (REV. 10/24/19) AND ON-SITE OBSERVATIONS.
3. CONTRACTOR SHALL TAKE ALL STEPS NECESSARY TO PROTECT ALL EXISTING STRUCTURES ON-SITE AND ON NEIGHBORING PROPERTIES FROM DAMAGE. CONTRACTOR SHALL BE RESPONSIBLE FOR ALL REPAIRS TO EXISTING STRUCTURES AND VEGETATION SHOULD ANY DAMAGE OCCUR.
4. SOME TRIM ELEMENTS NOT SHOWN. CONTRACTOR TO CONFIRM DETAILING OF TRIM ELEMENTS PRIOR TO COMMENCEMENT OF CONSTRUCTION.

This item has been electronically signed and sealed by Mark A. Powell, P.E. on November 18, 2019 using a Digital Signature.
Printed copies of this document are not considered signed and sealed and the signature must be verified on any electronic copies.

FOR BID PURPOSES ONLY. NOT FOR CONSTRUCTION.

MARK A. POWELL
LICENSE
No. 65673
STATE OF
FLORIDA
PROFESSIONAL ENGINEER

SITE PLAN

ISIMINGER & STUBBS ENGINEERING, INC.
COASTAL • ENVIRONMENTAL • MARINE
REGISTRY NUMBER : 8114
P.O. BOX 14702 - NORTH PALM BEACH, FL. 33408 - 561-881-0003

DUNE WALKOVER CONSTRUCTION
ATLANTIC OCEAN FRONTAGE
570 OCEAN DRIVE
TOWN OF JUNO BEACH, PALM BEACH COUNTY, FL
CLIENT: TOWN OF JUNO BEACH

DATE	11/19	DRAWN	PJK	CHKD	KDB	APPRVD	MAP
DWG NO.	19123A3				SHEET	3	
COMPUTER FILE NO.	19123A				OF	7	

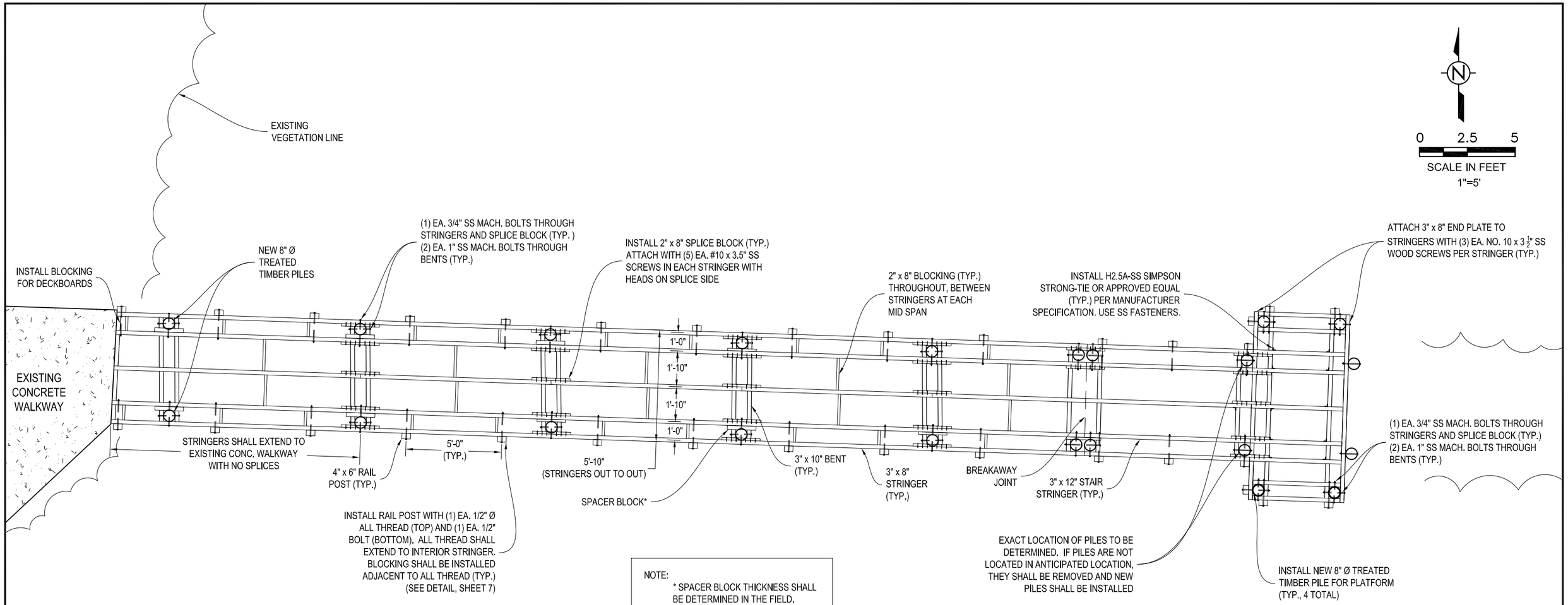

NOTE:
* SPACER BLOCK THICKNESS SHALL BE DETERMINED IN THE FIELD.

PRODUCT NOTES:

WOOD:

ALL STRUCTURAL MEMBERS SHALL BE PRESSURE TREATED ("GROUND CONTACT", AWPA CATEGORY UC4B MINIMUM EQUIVALENT) NO. 1 SOUTHERN YELLOW PINE OR BETTER.

HARDWARE:

ALL BOLTS, WASHERS, NUTS, SCREWS, NAILS, AND OTHER HARDWARE ITEMS SHALL BE 316 STAINLESS. THREADED ROD MAY BE USED IN PLACE OF HEX HEAD BOLTS FOR BOLTS LONGER THAN 7".

DECKING OPTIONS:

PINE: DECKING SHALL CONSIST OF 2" x 6" SUNBELT FOREST PRODUCTS (SEE PLAN SHEET 7) DECKING. END-TO-END JOINTS ARE NOT ALLOWED. DECKING SHALL BE INSTALLED WITH (2) EA. #10 X 3 1/2" DECK SCREWS PER STRINGER CROSSING. GAP BOARDS 1/8" SIDE TO SIDE AND BETWEEN THE BOARDS AND OTHER SURFACES. THE TOP OF SCREWS ARE FLUSH WITH OR NO LOWER THAN $\frac{1}{32}$" BELOW THE TOP OF DECKING.

COMPOSITE: DECKING SHALL CONSIST OF 2" x 6" EVERGRAIN® DECKING (COLOR: CAPE COD GREY). END-TO-END JOINTS ARE NOT ALLOWED. DECKING SHALL BE INSTALLED WITH (2) EA. #10 X 3 1/2" DECK SCREWS PER STRINGER CROSSING. GAP BOARDS 1/8" SIDE TO SIDE AND BETWEEN THE BOARDS AND OTHER SURFACES. PRE-DRILLING/COUNTERSINKING IS REQUIRED SUCH THAT THE TOP OF SCREWS ARE FLUSH WITH OR NO LOWER THAN $\frac{1}{32}$" BELOW THE TOP OF DECKING. ALL OTHER MANUFACTURER INSTALLATION REQUIREMENTS (INCLUDING BOARD EDGE SPACING) SHALL BE FOLLOWED.

IPE: DECKING SHALL CONSIST OF 5/4" x 6" IPE DECKING. END-TO-END JOINTS ARE NOT ALLOWED. DECKING SHALL BE INSTALLED WITH (2) EA. #10 X 3 1/2" DECK SCREWS PER STRINGER CROSSING. GAP BOARDS 1/8" SIDE TO SIDE AND BETWEEN THE BOARDS AND OTHER SURFACES. PRE-DRILLING/COUNTERSINKING IS REQUIRED SUCH THAT THE TOP OF SCREWS ARE FLUSH WITH OR NO LOWER THAN $\frac{1}{32}$" BELOW THE TOP OF DECKING. ALL OTHER MANUFACTURER INSTALLATION REQUIREMENTS (INCLUDING BOARD EDGE SPACING) SHALL BE FOLLOWED.

NOTES:

1. DATUM IS NAVD.
2. EXISTING CONDITIONS ARE APPROXIMATE BASED ON SURVEY BY MILLER LAND SURVEYING (REV. 10/24/19) AND ON-SITE OBSERVATIONS.
3. SOME TRIM ELEMENTS NOT SHOWN. CONTRACTOR TO CONFIRM DETAILING OF TRIM ELEMENTS PRIOR TO COMMENCEMENT OF CONSTRUCTION.

FOR BID PURPOSES ONLY. NOT FOR CONSTRUCTION.

This item has been electronically signed and sealed by Mark A. Powell, P.E. on November 18, 2019 using a Digital Signature.
Printed copies of this document are not considered signed and sealed and the signature must be verified on any electronic copies.

MARK A. POWELL
LICENSE
No. 65673
STATE OF
FLORIDA
PROFESSIONAL ENGINEER

FRAMING PLAN

ISIMINGER & STUBBS ENGINEERING, INC.
COASTAL • ENVIRONMENTAL • MARINE
REGISTRY NUMBER : 8114
P.O. BOX 14702 - NORTH PALM BEACH, FL. 33408 - 561-881-0003

DUNE WALKOVER CONSTRUCTION
ATLANTIC OCEAN FRONTAGE
570 OCEAN DRIVE
TOWN OF JUNO BEACH, PALM BEACH COUNTY, FL
CLIENT: TOWN OF JUNO BEACH

DATE	11/19	DRAWN	PJK	CHKD	KDB	APPRVD	MAP
DWG NO.	19123A4					SHEET	4
COMPUTER FILE NO.	19123A					OF 7	

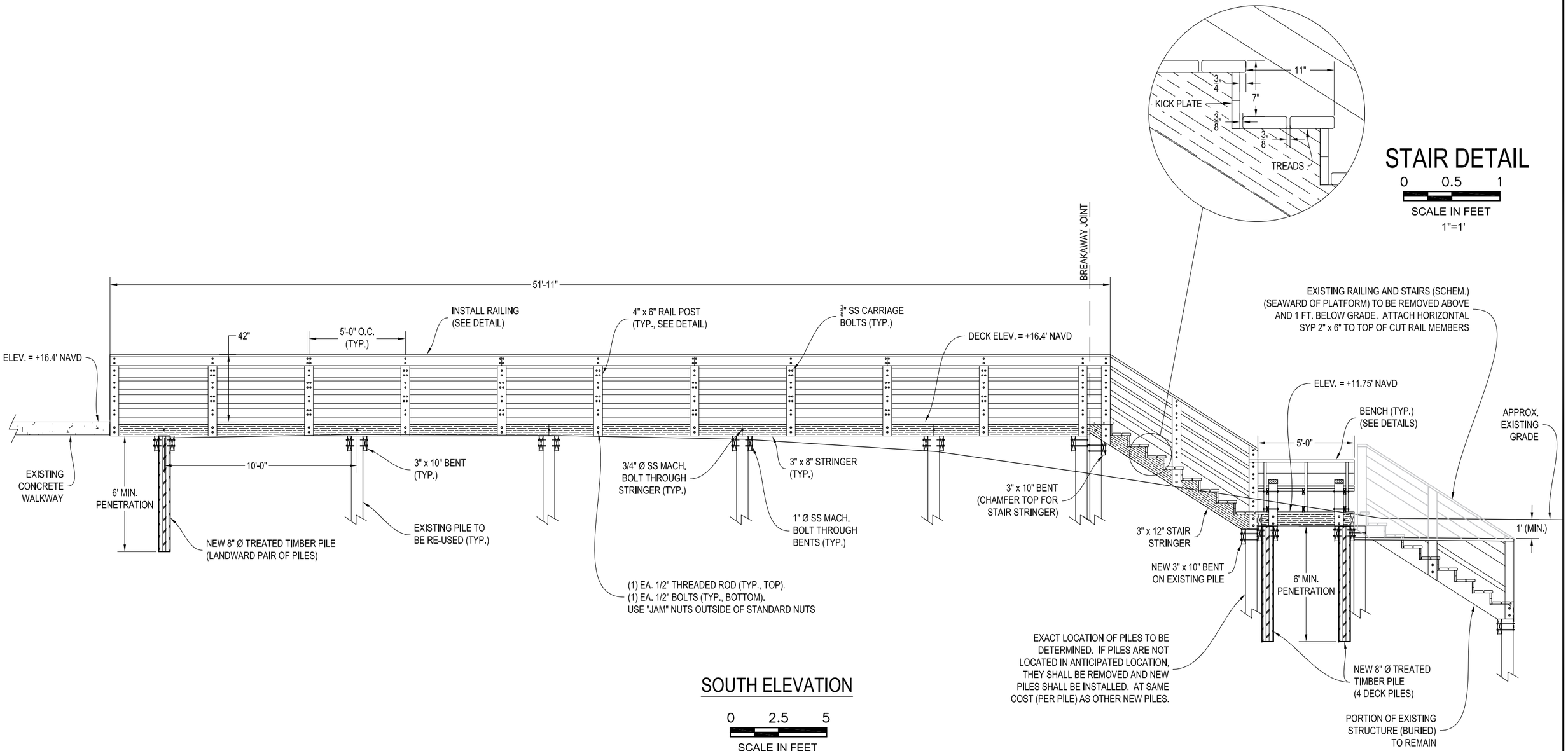

STAIR DETAIL

0 0.5 1

SCALE IN FEET
1"=1'

SOUTH ELEVATION

0 2.5 5

SCALE IN FEET
1"=5'

NOTES:

1. DATUM IS NAVD.
2. EXISTING CONDITIONS ARE APPROXIMATE BASED ON SURVEY BY MILLER LAND SURVEYING (REV. 10/24/19) AND ON-SITE OBSERVATIONS.
3. ALL STRUCTURAL MEMBERS SHALL BE PRESSURE TREATED ("GROUND CONTACT", AWPA CATEGORY UC4B MINIMUM EQUIVALENT) NO. 1 SOUTHERN YELLOW PINE OR BETTER.
4. ALL BOLTS, WASHERS, NUTS, SCREWS, NAILS, AND OTHER HARDWARE ITEMS SHALL BE 316 STAINLESS STEEL UNLESS SPECIFIED OTHERWISE. ALL BOLTS SHALL HAVE POLISHED FINISH. THREADED ROAD MAY BE SUBSTITUTED FOR BOLTS LONGER THAN 7".
5. SOME TRIM ELEMENTS NOT SHOWN. CONTRACTOR TO CONFIRM DETAILING OF TRIM ELEMENTS PRIOR TO COMMENCEMENT OF CONSTRUCTION.

This item has been electronically signed and sealed by Mark A. Powell, P.E. on November 18, 2019 using a Digital Signature.
Printed copies of this document are not considered signed and sealed and the signature must be verified on any electronic copies.

FOR BID PURPOSES ONLY. NOT FOR CONSTRUCTION.

MARK A. POWELL
LICENSE
No. 65673
STATE OF
FLORIDA
PROFESSIONAL ENGINEER

SOUTH ELEVATION

ISIMINGER & STUBBS ENGINEERING, INC.
COASTAL • ENVIRONMENTAL • MARINE
REGISTRY NUMBER : 8114
P.O. BOX 14702 - NORTH PALM BEACH, FL. 33408 - 561-881-0003

DUNE WALKOVER CONSTRUCTION
ATLANTIC OCEAN FRONTAGE
570 OCEAN DRIVE
TOWN OF JUNO BEACH, PALM BEACH COUNTY, FL
CLIENT: TOWN OF JUNO BEACH

DATE	11/19	DRAWN	PJK	CHKD	KDB	APPRVD	MAP
DWG NO.	19123A5				SHEET	OF 7	5
COMPUTER FILE NO.	19123A						

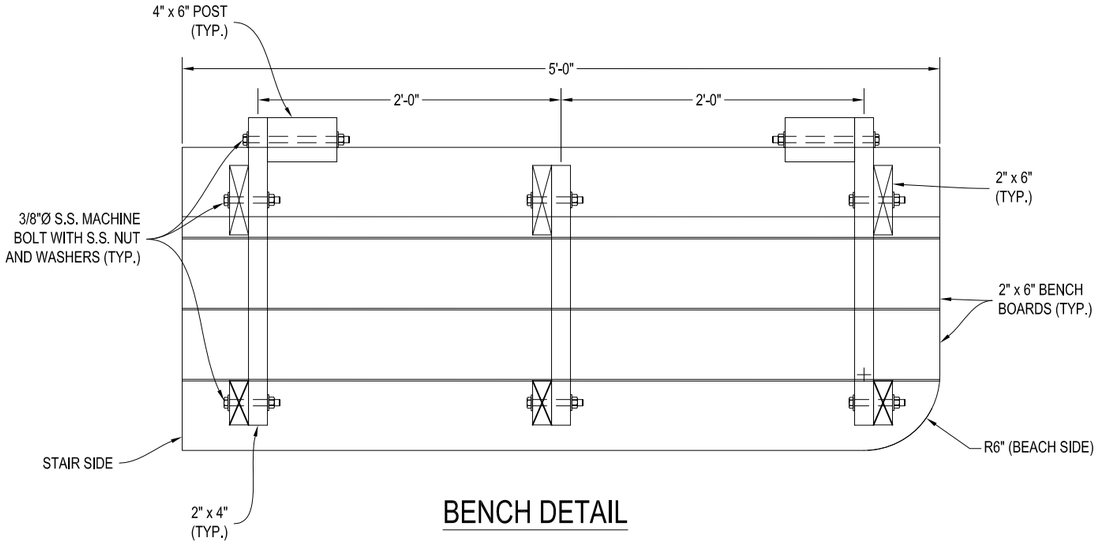

BENCH DETAIL

0 0.5 1
SCALE IN FEET
1"=1'

NOTE: INFILL RAILING BETWEEN BENCH AND STAIRS TO BE FIELD COORDINATED.

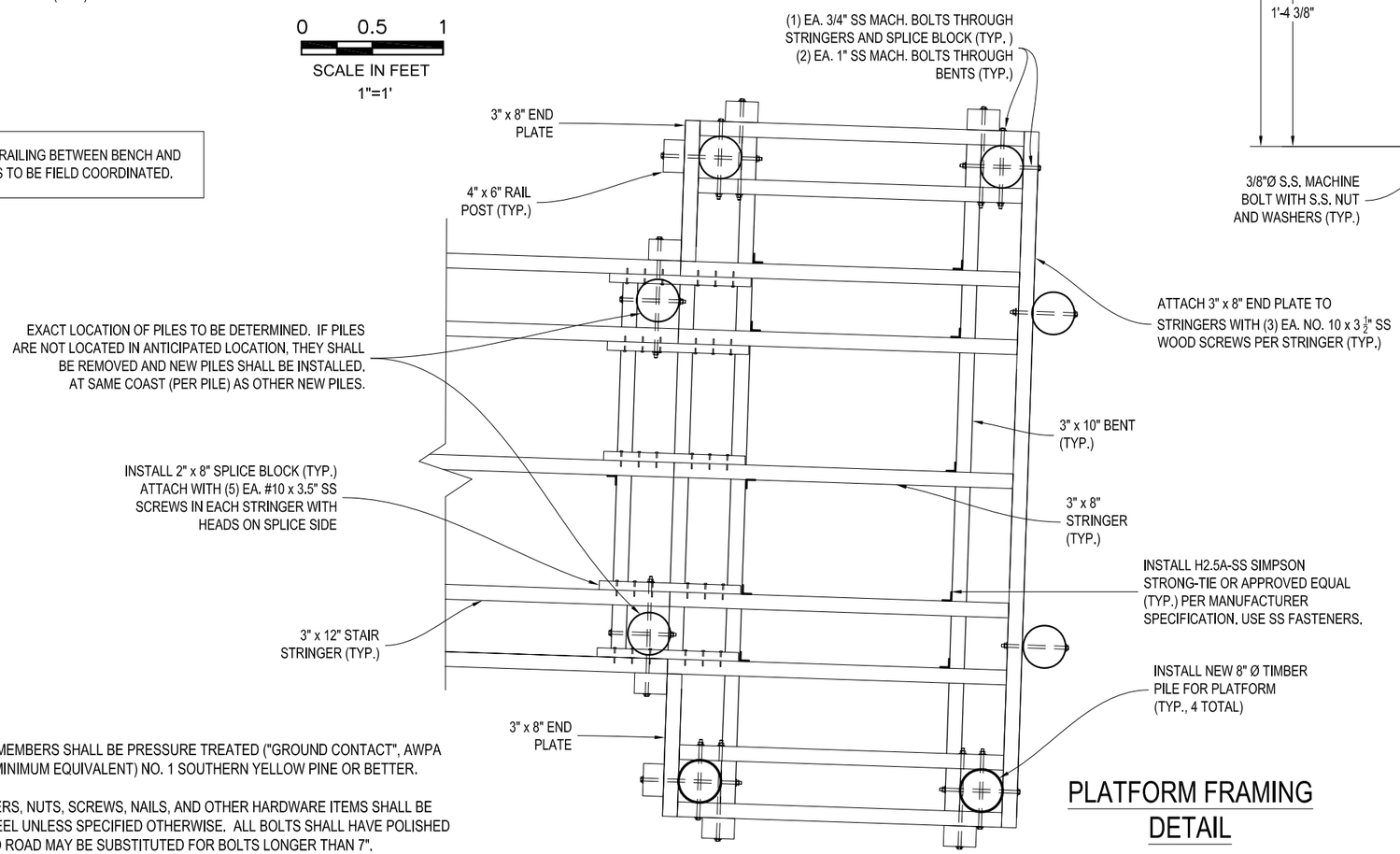

PLATFORM FRAMING DETAIL

0 1 2
SCALE IN FEET
1"=2'

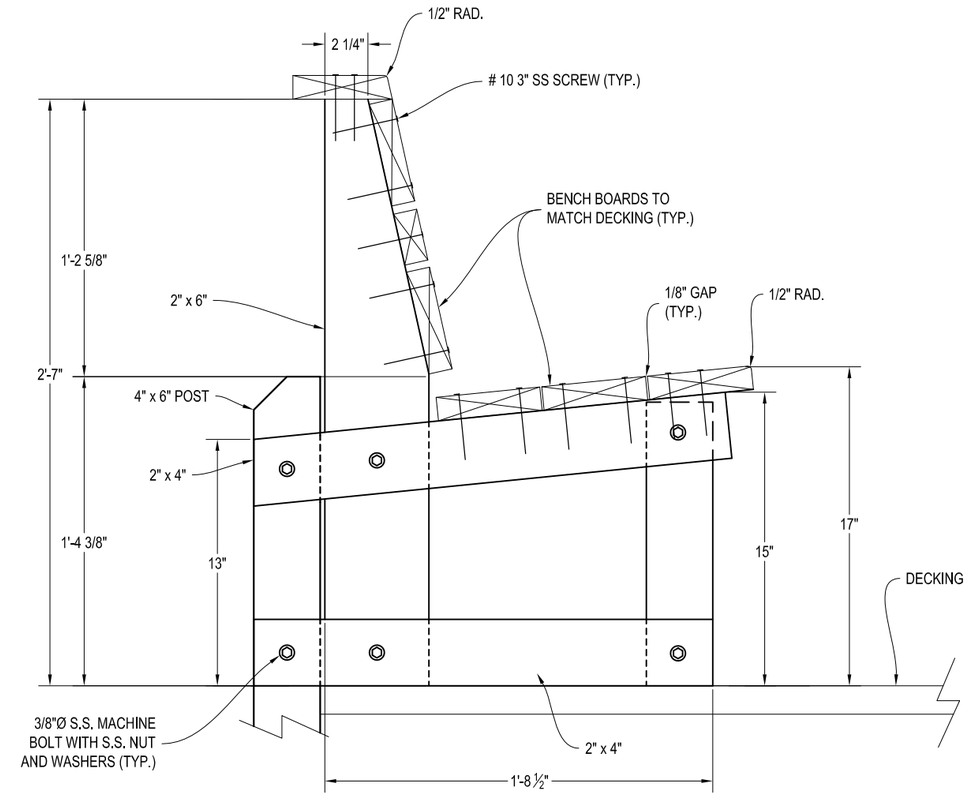

BENCH SECTION

NOT TO SCALE

This item has been electronically signed and sealed by Mark A. Powell, P.E. on November 18, 2019 using a Digital Signature.
Printed copies of this document are not considered signed and sealed and the signature must be verified on any electronic copies.

NOTES:

1. DATUM IS NAVD.
2. ALL STRUCTURAL MEMBERS SHALL BE PRESSURE TREATED ("GROUND CONTACT", AWPA CATEGORY UC4B MINIMUM EQUIVALENT) NO. 1 SOUTHERN YELLOW PINE OR BETTER.
3. ALL BOLTS, WASHERS, NUTS, SCREWS, NAILS, AND OTHER HARDWARE ITEMS SHALL BE 316 STAINLESS STEEL UNLESS SPECIFIED OTHERWISE. ALL BOLTS SHALL HAVE POLISHED FINISH. THREADED ROAD MAY BE SUBSTITUTED FOR BOLTS LONGER THAN 7".
4. SOME TRIM ELEMENTS NOT SHOWN. CONTRACTOR TO CONFIRM DETAILING OF TRIM ELEMENTS PRIOR TO COMMENCEMENT OF CONSTRUCTION.

FOR BID PURPOSES ONLY. NOT FOR CONSTRUCTION.

MARK A. POWELL
LICENSE
No. 65673
STATE OF
FLORIDA
PROFESSIONAL ENGINEER

BENCH AND PLATFOM DETAILS

ISIMINGER & STUBBS ENGINEERING, INC.
COASTAL • ENVIRONMENTAL • MARINE
REGISTRY NUMBER : 8114
P.O. BOX 14702 - NORTH PALM BEACH, FL. 33408 - 561-881-0003

DUNE WALKOVER CONSTRUCTION
ATLANTIC OCEAN FRONTAGE
570 OCEAN DRIVE
TOWN OF JUNO BEACH, PALM BEACH COUNTY, FL
CLIENT: TOWN OF JUNO BEACH

DATE	11/19	DRAWN	PJK	CHKD	KDB	APPRVD	MAP
DWG NO.	19123A6					SHEET	6
COMPUTER FILE NO.	19123A					OF 7	

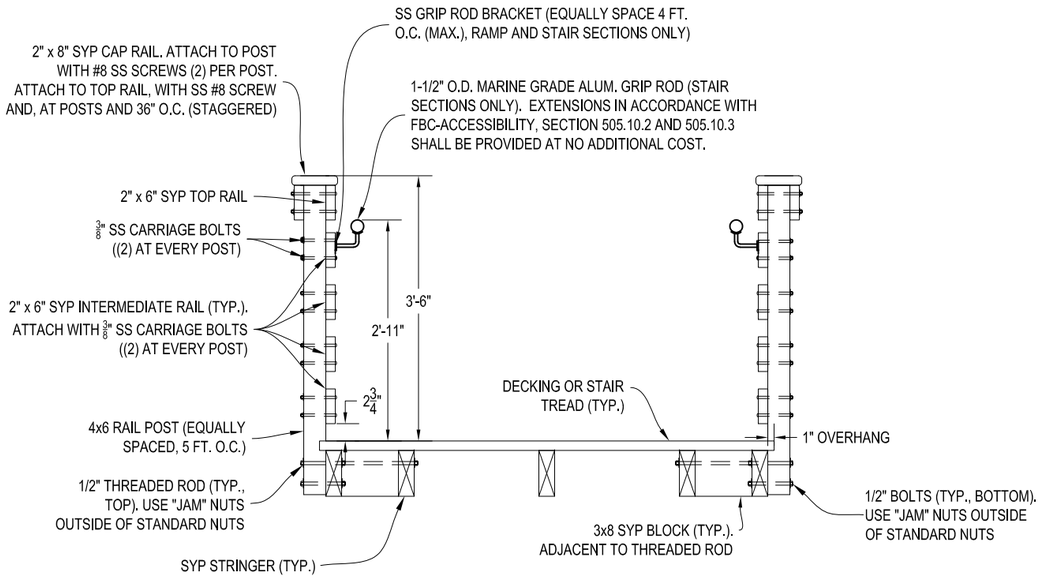

RAILING DETAIL

0 1 2

SCALE IN FEET

1"=2'-0"

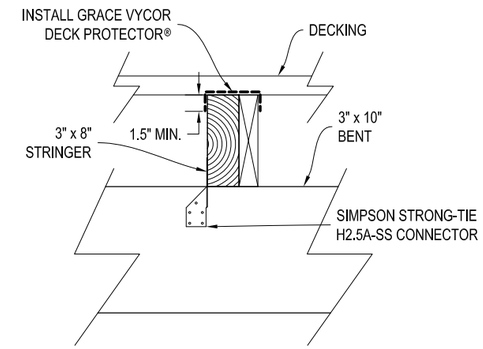

GRACE VYCOR DETAIL

0 0.5 1

SCALE IN FEET

1"=1'-0"

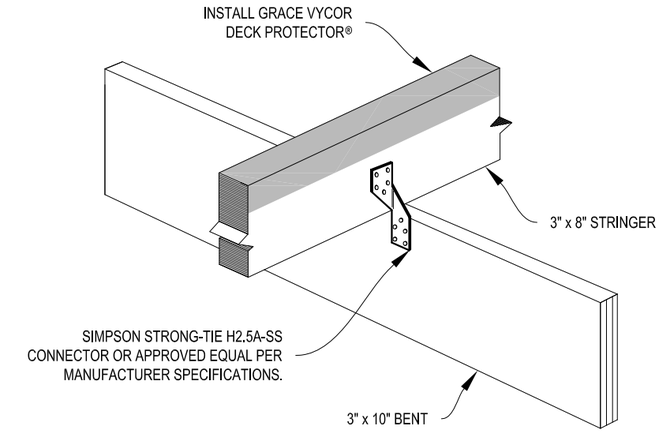

STRINGER/BENT DETAIL

NOT TO SCALE

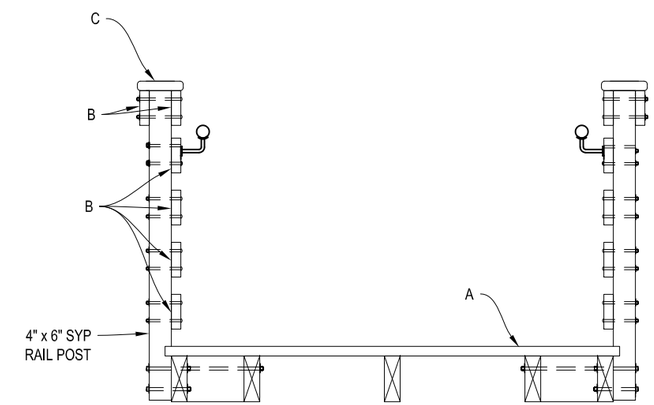

MATERIALS DETAIL

0 1 2

SCALE IN FEET

1"=2'-0"

MATERIALS TABLE

ITEM	BASE BID	ALT. 1	ALT. 2
A	2" x 6" SYP *	5/4" x 6" IPE	2" x 6" EVERGRAIN COMPOSITE **
B	2" x 6" SYP *	5/4" x 6" IPE	2" x 6" SYP *
C	2" x 8" LUMBEROCK COMPOSITE **	2" x 6" IPE	2" x 8" LUMBEROCK COMPOSITE **

* SYP DECKING SHALL CONSIST OF 2" x 6" SUNBELT FOREST PRODUCTS SYP " TROPICAL PRESERVE PLUS" DECKING.

** CLIENT SHALL SELECT COLOR OF COMPOSITE AT NO ADDITIONAL COST.

1

NOTES:

1. DATUM IS NAVD.
2. ALL STRUCTURAL MEMBERS SHALL BE PRESSURE TREATED ("GROUND CONTACT", AWPA CATEGORY UC4B MINIMUM EQUIVALENT) NO. 1 SOUTHERN YELLOW PINE OR BETTER.
3. ALL BOLTS, WASHERS, NUTS, SCREWS, NAILS, AND OTHER HARDWARE ITEMS SHALL BE 316 STAINLESS STEEL UNLESS SPECIFIED OTHERWISE. ALL BOLTS SHALL HAVE POLISHED FINISH. THREADED ROAD MAY BE SUBSTITUTED FOR BOLTS LONGER THAN 7". ALUMINUM HANDRAILS SHALL BE ALLOY 6061. CONTRACTOR TO PROVIDE CONNECTION DETAILS TO ENGINEER PRIOR TO ORDERING AND INSTALLING.
4. SOME TRIM ELEMENTS NOT SHOWN. CONTRACTOR TO CONFIRM DETAILING OF TRIM ELEMENTS PRIOR TO COMMENCEMENT OF CONSTRUCTION.

This item has been electronically signed and sealed by Mark A. Powell, P.E. on November 18, 2019 using a Digital Signature.
Printed copies of this document are not considered signed and sealed and the signature must be verified on any electronic copies.

FOR BID PURPOSES ONLY. NOT FOR CONSTRUCTION.

MARK A. POWELL
LICENSE
No. 65673
STATE OF
FLORIDA
PROFESSIONAL ENGINEER

REV	1	11/19	REVISE MATERIALS TABLE

DETAILS

ISIMINGER & STUBBS ENGINEERING, INC.
COASTAL • ENVIRONMENTAL • MARINE
CERTIFICATE OF AUTHORIZATION NUMBER : 8114
P.O. BOX 14702 - NORTH PALM BEACH, FL. 33408 - 561-881-0003

DUNE WALKOVER CONSTRUCTION
ATLANTIC OCEAN FRONTAGE
570 OCEAN DRIVE
TOWN OF JUNO BEACH, PALM BEACH COUNTY, FL
CLIENT: TOWN OF JUNO BEACH

DATE	11/19	DRAWN	PJK	CHKD	KDB	APPRVD	MAP
DWG NO.	19123A7				SHEET	OF 7	7
COMPUTER FILE NO.	19123Ar1						