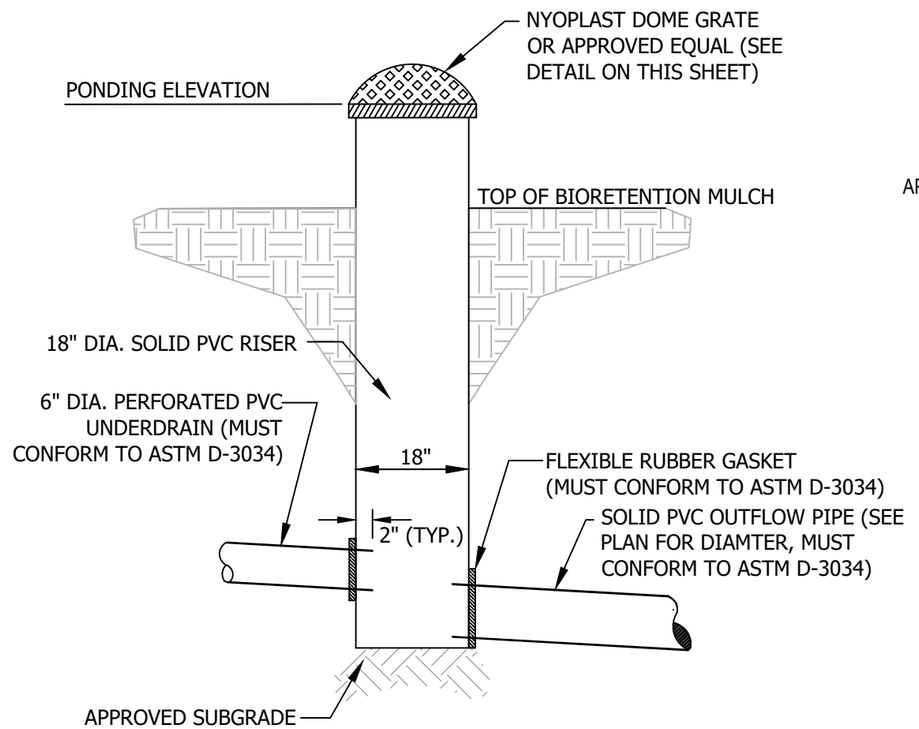

1899CGD

APPROX. DRAIN AREA = 175.59 SQ IN
APPROX. WEIGHT = 32.00 LBS

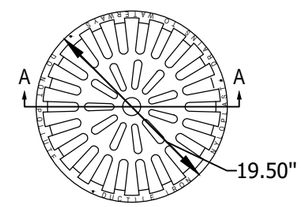

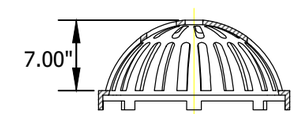

SECTION A-A

DIMENSIONS ARE FOR REFERENCE ONLY
ACTUAL DIMENSIONS MAY VARY
DIMENSIONS ARE IN INCHES
QUALITY: MATERIALS SHALL CONFORM TO ASTM A536 GRADE 70-50-05
PAINT: CASTINGS ARE FURNISHED WITH A BLACK PAINT
GRATE SHALL BE BY NYLOPLAST OR APPROVED EQUAL

RISER STRUCTURE WITH DOME TYPE GRATE

N.T.S.

ATTACHMENT F