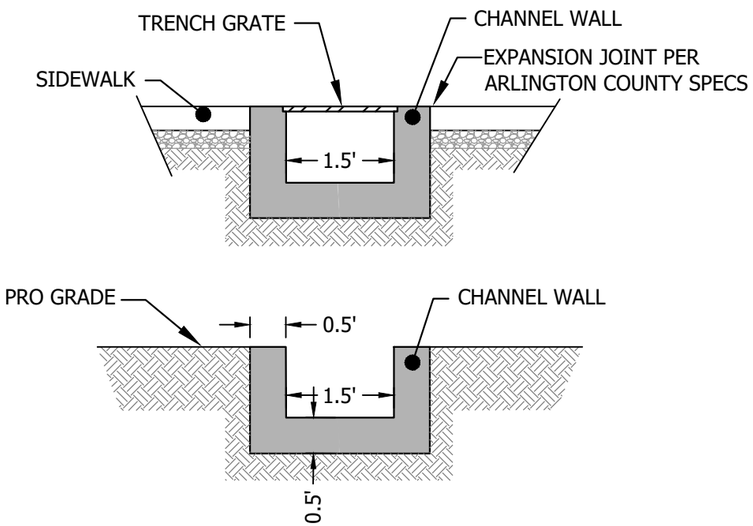

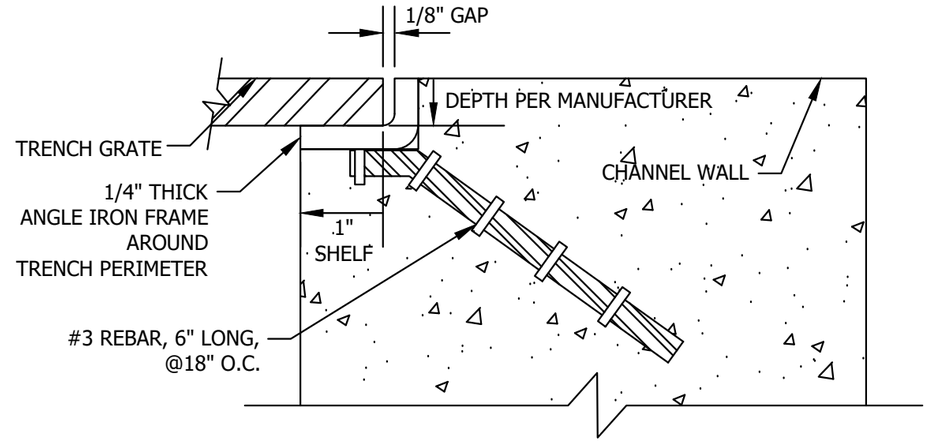

METAL INLET ASSEMBLY CONSTRUCTION NOTES:

1. HEADED CONCRETE ANCHORS SHALL MEET THE REQUIREMENTS OF ASTM A-108.
2. HSS 6 X 2 X 1/8 TUBE SHALL MEET THE REQUIREMENTS OF ASTM A-500 GRADE B.
3. END PLATES SHALL MEET THE REQUIREMENTS OF ASTM A-36.
4. ENTIRE ASSEMBLY SHALL BE HOT-DIP GALVANIZED IN ACCORDANCE WITH ASTM A-123.

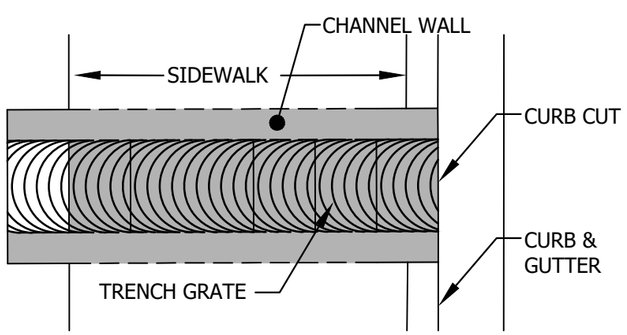

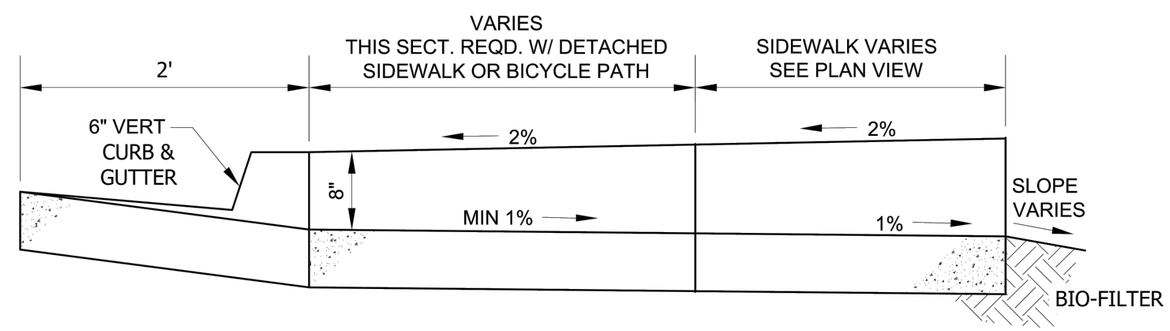

FLOW FROM GUTTER

TRENCH DRAIN AND GRATE DETAIL

N.T.S.

ATTACHMENT J