CONSTRUCTION PLANS FOR
SOUTH OSLO ROAD WTP ATS REPLACEMENT

PREPARED FOR

INDIAN RIVER COUNTY UTILITIES DEPARTMENT
NOVEMBER 2020

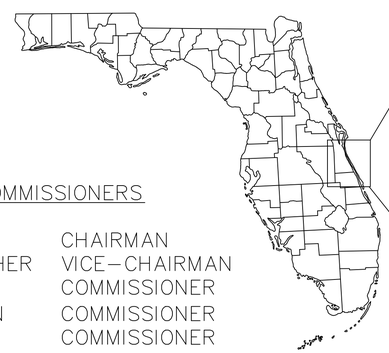

BOARD of COUNTY COMMISSIONERS

DISTRICT 1	SUSAN ADAMS	CHAIRMAN
DISTRICT 2	JOSEPH FLESCHER	VICE-CHAIRMAN
DISTRICT 3	TIM ZORC	COMMISSIONER
DISTRICT 4	PETER O'BRYAN	COMMISSIONER
DISTRICT 5	BOB SOLARI	COMMISSIONER

VINCENT BURKE, P.E. – DIRECTOR OF UTILITIES

PROJECT SITE
OSLO ROWTP
1550 SW 9TH STREET
VERO BEACH, FL 32962

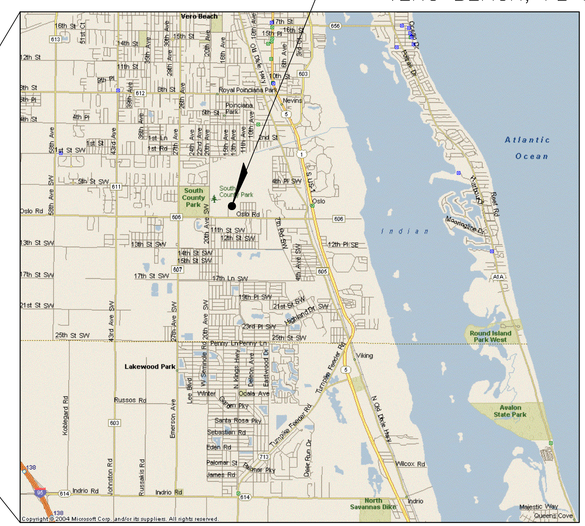

N

N.T.S.

LOCATION MAP

N.T.S.

INDEX OF SHEETS

SHEET #	DESCRIPTION
G-1	COVER SHEET
E-1	ELECTRICAL NOTES & LEGENDS
E-2	ELECTRICAL ROOM PLAN
E-3	POWER ONELINE DIAGRAM
E-4	ATS NETWORK DIAGRAM
E-5	ATS DETAILS
E-6	ELECTRICAL DETAILS

GENERAL NOTE:

PROPOSED IMPROVEMENTS REQUIRE CONTRACTOR TO COORDINATE WITH FLORIDA POWER & LIGHT (FPL) FOR SHUTDOWN OF THE WTP ELECTRICAL SERVICE TRANSFORMER. AS OF OCTOBER 2020, FP&L CONTACTS FOR THIS WORK INCLUDE THE FOLLOWING INDIVIDUALS:

JIM ALBURY, SR. CUSTOMER ADVISOR, W.J.ALBURY@FPL.COM, (O) 772-223-4227, (C) 772-285-1783

EMELY PLOWER, FP&L PROJECT MANAGER, EMELY.PLOWER@FPL.COM, (O) 772-489-6212

BID SUBMITTAL

No.	REVISIONS	DATE	BY

Kimley»Horn

© 2020 KIMLEY-HORN AND ASSOCIATES, INC.
1920 WEKIVA WAY SUITE 200, WEST PALM BEACH, FL 33411
PHONE: 561-845-0665 FAX: 561-863-8175
WWW.KIMLEY-HORN.COM CA 00000696

KHA PROJECT 044572063
DATE NOV. 2020
SCALE AS SHOWN
DESIGNED BY NPOB
DRAWN BY BSK
CHECKED BY MDM

SOUTH R.O. WTP ATS REPLACEMENT
PREPARED FOR
INDIAN RIVER COUNTY UTILITIES
INDIAN RIVER COUNTY, FLORIDA

LICENSED PROFESSIONAL
MICHAEL A. GUIDA, P.E.
FLORIDA LICENSE NUMBER 60755
DATE: ____

COVER SHEET

SHEET NUMBER
G-1

Plotted By:Black, Nick Sheet Set:SOUTH OSLO ROAD WTP ATS REPLACEMENT Layout:G-1 COVER SHEET November 12, 2020 05:46:15pm K:\WPB_Civil\044572063 - Oslo ATS Replacement\CAD\Plansheets\G-1 COVER SHEET.dwg
This document, together with the concepts and designs presented herein, as an instrument of service, is intended only for the specific purpose and client for which it was prepared. Reuse of and improper reliance on this document without written authorization and adaptation by Kimley-Horn and Associates, Inc. shall be without liability to Kimley-Horn and Associates, Inc.

GENERAL ELECTRICAL NOTES

1. READ THE SPECIFICATIONS
   REFER TO THE SPECIFICATIONS FOR ADDITIONAL REQUIREMENTS. THERE ARE REQUIREMENTS NOTED IN THE SPECIFICATIONS WHICH ARE NOT INDICATED ON THE DRAWINGS.
2. SCHEMATIC NATURE
   PLAN VIEWS ARE SCHEMATIC IN NATURE AND MEANT TO SHOW THE SCHEMATIC ARRANGEMENT OF EQUIPMENT AND CONDUIT.
3. APPROVED SHOP DRAWINGS
   USE APPROVED SHOP DRAWINGS FOR LAY OUT OF EQUIPMENT. THE CONTRACT DOCUMENTS WILL VARY FROM THE SHOP DRAWINGS. INFORM THE ENGINEER IMMEDIATELY IF THERE ARE LAY OUT ISSUES OR INADEQUATE SPACE FOR EQUIPMENT OR CLEARANCES. LAND CONDUITS IN OPENINGS OF ENCLOSURES PER THE APPROVED SHOP DRAWINGS, DO NOT USE THE CONTRACT DRAWINGS.
4. CLEARANCES
   IT SHALL BE THE CONTRACTOR'S RESPONSIBILITY TO MEET N.E.C. CLEARANCES ABOUT EQUIPMENT.
5. ROUTING
   CONDUIT ROUTING IS SCHEMATIC IN NATURE. CONDUIT ROUTING IS SHOWN FOR CLARITY ON THE CONTRACT DRAWINGS. ROUTE CONDUITS AS MAY BE REQUIRED.
6. FUTURES FACILITIES
   WHERE FUTURE FACILITIES ARE INDICATED. CONDUIT ROUTING SHALL ACCOUNT FOR SUCH FACILITIES.
7. RESPONSIBILITIES
   BIDDERS, SUPPLIERS, EQUIPMENT VENDORS, GENERAL CONTRACTOR, SUB CONTRACTORS AND OTHER SIMILAR ENTITIES ARE REQUIRED TO READ ALL THE CONTRACT DOCUMENTS INCLUDING DRAWINGS AND SPECIFICATIONS.
8. HOMERUNS
   CONTRACTOR SHALL COORDINATE HOME RUNS BETWEEN PLAN VIEWS. WHERE ANY CONDUIT IS SHOWN IN ANY PLAN VIEW IT SHALL BE INSTALLED THE ENTIRE LENGTH AS MAY BE REQUIRED.

ELECTRICAL ABBREVIATIONS

37C	37 CONDUCTOR CABLE
ATB	ANALOG TERMINAL BOX
AXS	AUTO TRANSFORMER STARTER
CR	CONTROL RELAY
CP	CONTROL PANEL
CPB	CONTROL PULL BOX
CS	CONTROL STATION
CTB	CONTROL TERM. BOX
DISC	DISCONNECT SWITCH
DMM	DIGITAL MULTIMETER
DS	DOOR SWITCH
DTB	DISCRETE TERMINAL BOX
EN	ETHERNET
ETM	ELAPSED TIME METER
F	FUSE
FCP	FLYGT CONTROL PANEL
FO	FIBER OPTIC
FO-E-CBL	FIBER OPTIC ETHERNET CABLE
FSA	FIELD SURGE ARRESTOR
GFI	GROUND FAULT INTERRUPTER
HOA	HAND-OFF-AUTO
HOR	HAND-OFF-REMOTE
IPB	INST. PULL BOX
ITB	INST. TERMINAL BOX
LA	LIGHTNING ARRESTER
LOR	LOCAL-OFF-REMOTE
M	MOTOR STARTER
MB+	MODBUS PLUS
MCC	MOTOR CONTROL CENTER
MLO	MAIN LUG ONLY
NF	NON FUSED
OHC	OPEN-HOLD-CLOSE
OHU	OVER HEAD ELEC UTILITIES
OL	OVER LOAD RELAY
PB	PUSH BUTTON
PDP	POWER DIST. PANEL
PM	POWER MONITOR
PNLBD	PANELBOARD
PPB	POWER PULL BOX
PSA	PANEL SURGE ARRESTOR
PSCP	PUMP STATION CONTROL PANEL
PTB	POWER TERMINAL BOX
R-I/O CBL	REMOTE I/O CABLE
R,G,A	RED, GREEN, AMBER PILOT LIGHT
RGS	RIGID GALV. STEEL
RO	READ OUT
SA	SURGE ARRESTER
SS	SELECTOR SWITCH OR 316 STAINLESS STEEL
SWBD	SWITCH BOARD
STB	SIGNAL TERMINAL BOX
TC	TIME CLOCK
TOT	TOTALIZER
TS	TEST SWITCH
VCP	VENDOR CP
VFD	VARIABLE FREQUENCY DRIVE
WP	WEATHER PROOF
WW	WIRE WAY
WWCP	WET WELL CONTROL PANEL
ZSL	POSITION SWITCH CLOSED
ZSO	POSTION SWITCH OPEN

ELECTRICAL LEGEND

- RACEWAY EXPOSED
- LIGHTING RACEWAY CONCEALED
- RACEWAY CONCEALED
- RACEWAY TURNED UP/DOWN
- (5) MOTOR
- TRANSFORMER
- FUSE
- CIRCUIT BREAKER
- CAPACITOR
- LIGHTNING ARRESTER
- SAFETY DISCONNECT SWITCH, HP RATED
- GROUND
- DUPLEX, 14" AFF
- SIMPLEX, 14" AFF
- NORMALLY OPEN CONTACT
- NORMALLY CLOSED CONTACT
- LEVEL SWITCH, FLOAT SWITCH
- PRESSURE SWITCH
- LIMIT SWITCH
- THERMAL SWITCH
- HEATER
- (G) PILOT LIGHT
- (C01) (C02) DENOTES SEPARATE CONDUITS WITH SEPARATE WIRE
- (A-3) DENOTES PANELBOARD A, CIRCUIT 3
- (ETM) ELAPSED TIME METER
- SELECTOR SWITCH
- PUSH BUTTON ON-OFF SWITCH
- $ SWITCH 48"AFF,
- $3 SWITCH 48"AFF, 3-WAY
- ENCLOSED COMBINATION STARTER
- (J) JUNCTION BOX
- PANELBOARD, ELECTRICAL EQUIP. ENCL
- //// CROSS HATCH DENOTES DELETION
- (MS) MANUAL MOTOR STARTER
- RED, MAINTAINED PUSH BUTTON
- TIMING CONTACT
- FLOW SWITCH
- CONTROL RELAY, MOTOR STARTER, ETC.
- (C01) DENOTES CONDUIT TAG 01

MATERIAL SCHEDULE

LOCATION	CONDUIT	ENCLOSURE MATERIALS	ENCLOSURE NEMA RATING	FASTENERS, STRUT, THREADED ROD, ETC.
INTERIOR				
EXPOSED IN AIR CONDITIONED EQUIPMENT ROOMS	PVC SCHED 80	PAINTED STEEL	1	GALV. STEEL
EXPOSED IN PUMP ROOMS, EQUIPMENT ROOMS, ETC. (NOT AIR CONDITIONED)	PVC SCHED 80	316 SS	1A GASKETED	316 SS
EXPOSED IN CHEMICAL ROOMS ETC.	PVC SCHED. 80	316 SS	4X	316 SS
CONCEALED IN BLOCK WALLS, POURED CONCRETE WALLS, ETC.	PVC SCHED. 40	N/A	N/A	GALV. STEEL
EXTERIOR				
BELOW GRADE	PVC SCHED. 40	CONCRETE BOXES	N/A	316 SS
ABOVE GRADE	PVC SCHED. 80	316 SS	4X	316 SS

GENERAL NOTES

1. THE FOLLOWING SHALL ESTABLISH THE MINIMUM LEVEL OF QUALITY FOR MATERIALS.
2. THE FOLLOWING SHALL APPLY UNLESS OTHERWISE INDICATED BY DRAWINGS
3. THE FOLLOWING SHALL NOT APPLY TO POWER TRANSFORMERS, LIGHT FIXTURES AND LIGHT POLES, THOSE ELEMENTS ARE NOTED OR INDICATED ELSEWHERE

LEGEND

N/A	NOT APPLICABLE
316 SS	316 STAINLESS STEEL
EMT	ELECTRICAL METALLIC TUBING, GALV. STEEL
ALUMINUM	ALUMINUM RIGID CONDUIT 6063 ALLOY, NOT ALUMINUM EMT

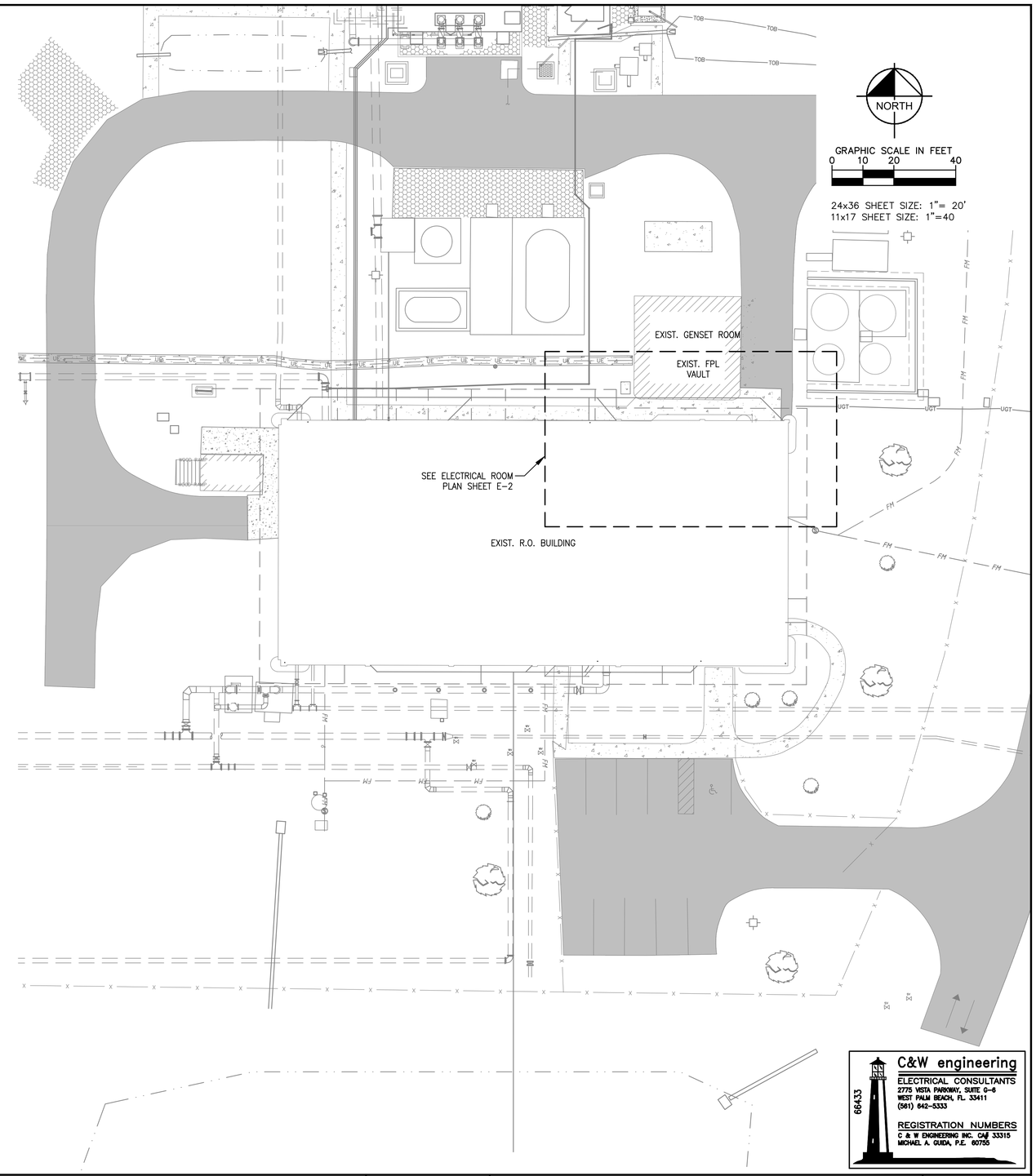

C&W engineering
ELECTRICAL CONSULTANTS
2775 VISTA PARKWAY, SUITE G-6
WEST PALM BEACH, FL 33411
(561) 642-5333
REGISTRATION NUMBERS
C & W ENGINEERING INC. CA# 33315
MICHAEL A. GUIDA, P.E. 60755
66433

No.	REVISIONS	DATE	BY

Kimley»Horn
© 2020 KIMLEY-HORN AND ASSOCIATES, INC.
1920 WEKIVA WAY SUITE 200, WEST PALM BEACH, FL 33411
PHONE: 561-845-0665 FAX: 561-863-8175
WWW.KIMLEY-HORN.COM CA 00000696

KHA PROJECT 044572063
DATE NOV. 2020
SCALE AS SHOWN
DESIGNED BY JLR
DRAWN BY AOD
CHECKED BY MAG

SOUTH R.O. WTP ATS REPLACEMENT
PREPARED FOR
INDIAN RIVER COUNTY UTILITIES
INDIAN RIVER COUNTY, FLORIDA

LICENSED PROFESSIONAL
MICHAEL A. GUIDA, P.E.
FLORIDA LICENSE NUMBER 60755
DATE: ____

ELECTRICAL NOTES & LEGENDS

SHEET NUMBER
E-1

Plotted By:Joser Sheet Set:SOUTH R.O. WTP ATS REPLACEMENT Layout:SITE PLAN November 13, 2020 04:12:51pm \\NEWSERVER-PC\Dropbox\JOBS\66-KH\66433 IRC OSLO WTP ATS REPLACEMENT\DRAWINGS\01 Electrical Site Plans.dwg
This document, together with the concepts and designs presented herein, as an instrument of service, is intended only for the specific purpose and client for which it was prepared. Reuse of and improper reliance on this document without written authorization and adaptation by Kimley-Horn and Associates, Inc. shall be without liability to Kimley-Horn and Associates, Inc.

SPECIFIC ELECTRICAL NOTES

1. COORDINATE ALL WORK WITH SWITCHGEAR TECHNICIAN, INCLUDING TEMPORARY CONTROLS OF RENTAL ATS TO EXIST. CUMMINS GENERATOR.
2. CONTRACTOR TO COORDINATE WITH FPL TO PROVIDE TEMPORARY OPENING TO TOP OF VAULT FENCING FOR TEMPORARY CABLES.
3. PROVIDE TEMP POWER, LIGHITNG & COOLING FANS/TEMP HVAC DURING COMPLETE SHUTDOWNS

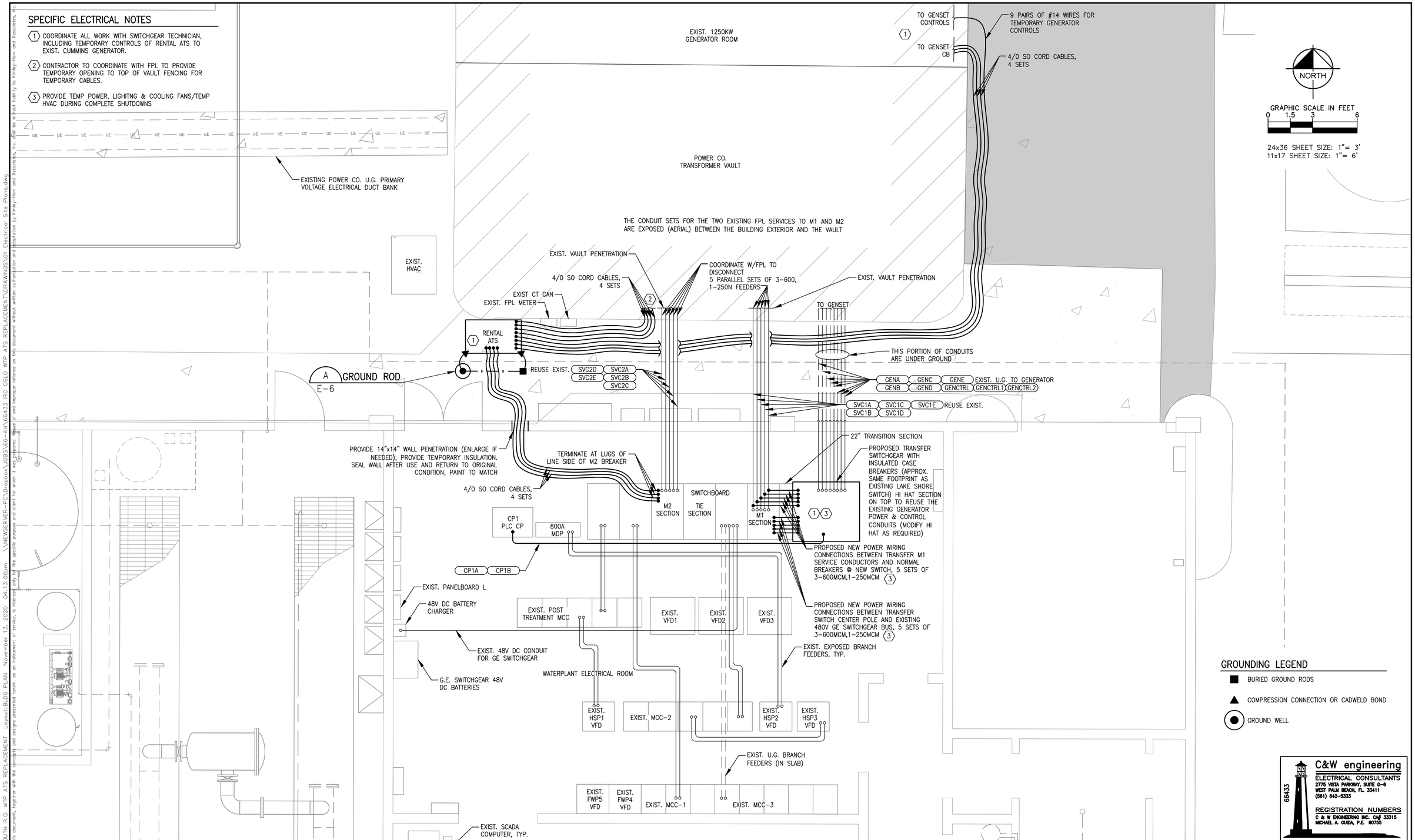

GROUNDING LEGEND

- ■ BURIED GROUND RODS
- ▲ COMPRESSION CONNECTION OR CADWELD BOND
- ● GROUND WELL

C&W engineering
ELECTRICAL CONSULTANTS
2775 VISTA PARKWAY, SUITE 9-6
WEST PALM BEACH, FL 33411
(561) 642-5333
REGISTRATION NUMBERS
C & W ENGINEERING INC. CA# 33315
MICHAEL A. GUIDA, P.E. 60755
66433

No.	REVISIONS	DATE	BY

Kimley»Horn
© 2020 KIMLEY-HORN AND ASSOCIATES, INC.
1920 WEKIVA WAY SUITE 200, WEST PALM BEACH, FL 33411
PHONE: 561-845-0665 FAX: 561-863-8175
WWW.KIMLEY-HORN.COM CA 00000696

KHA PROJECT	044572063
DATE	NOV. 2020
SCALE	AS SHOWN
DESIGNED BY	JLR
DRAWN BY	AOD
CHECKED BY	MAG

SOUTH R.O. WTP ATS REPLACEMENT

PREPARED FOR

INDIAN RIVER COUNTY UTILITIES

INDIAN RIVER COUNTY, FLORIDA

LICENSED PROFESSIONAL

MICHAEL A. GUIDA, P.E.

FLORIDA LICENSE NUMBER 60755

DATE: ____

ELECTRICAL ROOM PLAN

SHEET NUMBER

E-2

Plotted By:Joser Sheet Set:SOUTH R.O. WTP ATS REPLACEMENT Layout:BLDG PLAN November 13, 2020 04:13:00pm \\NEWSERVER-PC\Dropbox\JOBS\66-KH\66433 IRC OSLO WTP ATS REPLACEMENT\DRAWINGS\01 Electrical Site Plans.dwg
This document, together with the concepts and designs presented herein, as an instrument of service, is intended only for the specific purpose and client for which it was prepared. Reuse of and improper reliance on this document without written authorization and adaptation by Kimley-Horn and Associates, Inc. shall be without liability to Kimley-Horn and Associates, Inc.

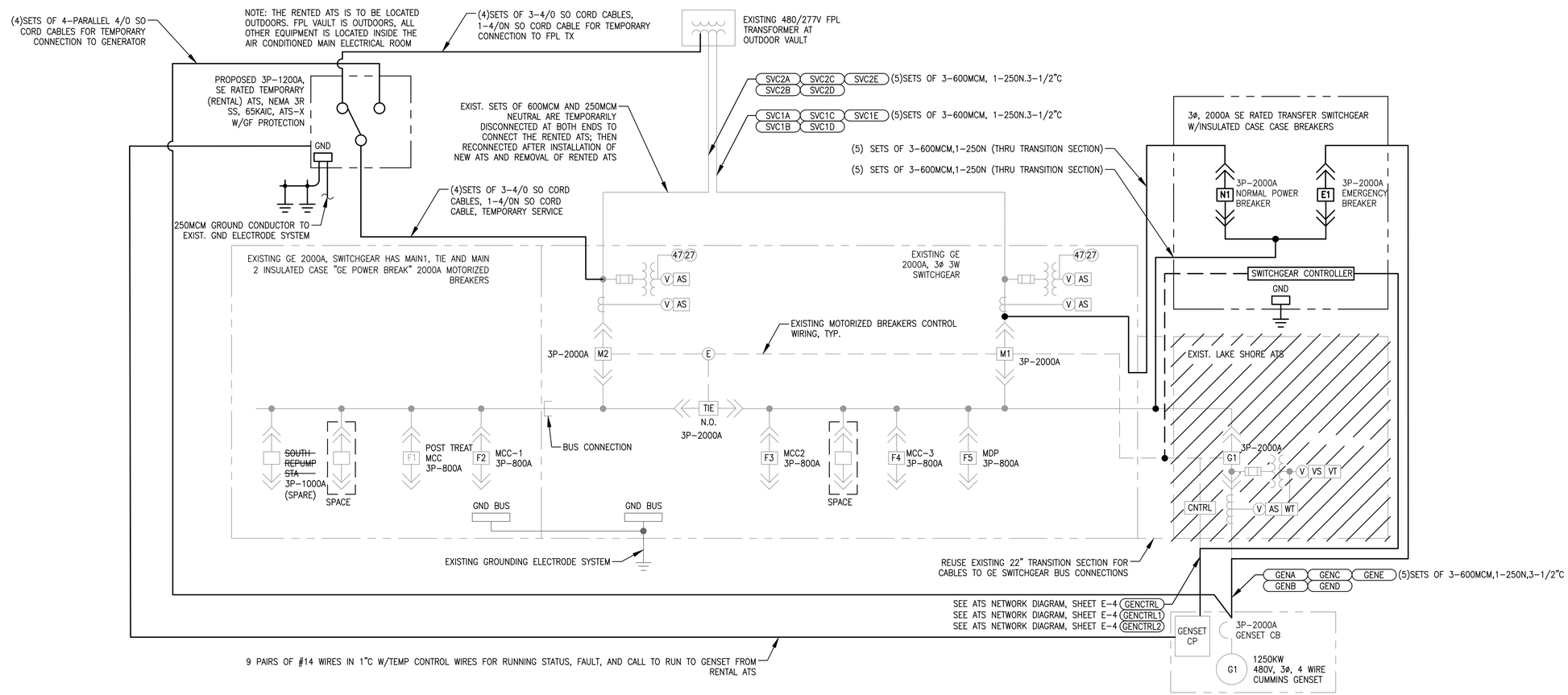

NOTE: PROPOSED CHANGE FROM EXISTING TRANSFER SWITCH TO REPLACEMENT SWITCH DOES NOT CHANGE THE CONFIGURATION OF THIS EMERGENCY SYSTEM, THIS IS NOT A SEPARATELY DERIVED SYSTEM, NEUTRALS ARE NOT BEING SWITCHED.

PLANT LOAD NOTE: FPL 12 MONTH PLANT KWD PEAK LOAD IS 852KW DEMAND; APPROX 1282 AMPS.

PLANT LOAD UNDER TEMP RENTAL ATS WILL BE CONTROLLED MANUALLY SO NOT ALL HIGH SERVICE PUMPS AND RO TRAINS ARE OPERATING AT SAME TIME DURING A PERIOD OF EMERGENCY POWER WHILE THE RENTAL ATS EQUIPMENT IS CONNECTED.

THE CONTRACTOR SHALL ALSO DIAL DOWN TEMPORARILY THE ADJUSTABLE BREAKER AT THE GENERATOR TO APPROX. 1200A DURING THE TIME THE RENTAL ATS REMAINS CONNECTED TO THE EXISTING GENERATOR. AFTER THE REMOVAL OF THE RENTAL ATS SWITCH, THE GENERATOR BREAKER SHALL BE PLACED BACK AT THE SAME SETTING AS BEFORE. DOCUMENT ALL BREAKER SETTINGS PRIOR TO ADJUSTMENT WITH PICTURES AND PROVIDE WRITTEN LOG OF SETTINGS FOR M1, M2, TIE BREAKER, AND EXISTING GENERATOR BREAKER.

AVERAGE FPL 12 MONTH KWD LOAD IS 745KW DEMAND; APPROX 1,121 AMPS – PROPOSED TEMPORARY ATS SWITCH MEETS AVERAGE LOAD.

DESCRIPTION OF EQUIPMENT NOTE:

RENTED ATS: THIS IS A TYPICAL ATS SWITCH WITH A NORMAL, EMERGENCY AND LOAD LUGS; ITS IS RATED FOR OUTDOORS.

EXISTING ATS: THIS IS A LAKE SHORE LOW VOLTAGE SWITCHGEAR WITH A 3P–2000A MOLDED CASE, 65KAIC MOTORIZED BREAKER.

NEW ATS: THIS IS A 480V, 2000A RATED TRANSFER SWITCHGEAR WITH TWO 3P–2000A RATED MOLDED CASE, 65KAIC MOTORIZED BREAKERS.

GE SWITCHGEAR: M1, M2, AND TIE BREAKERS ARE GE 3P–2000A RATED MOLDED CASE, 65KAIC MOTORIZED BREAKERS

DURING SHUT DOWNS BE AWARE OF 48VDC POWER FROM BATTERY BANK FOR M1, M2, TIE BREAKERS IN GE SWITCHGEAR, AND DC POWER FROM THE GENERATOR FOR LAKE SHORE SWITCH BREAKER

IRC SOUTH OSLO ATS REPLACEMENT

PROCEDURE TO INSTALL TEMPORARY ATS, REMOVAL OF EXISTING TRANSFER SWITCH, INSTALL OF NEW TRANSFER SWITCHGEAR AND PLANNED OUTAGES AND TEMPORARY LOADS.

PROPOSED SEQUENCE OF CONSTRUCTION LISTED BELOW, IT ASSUMES THAT PROPER STEPS AND SAFETY MEASURES ARE TAKING PLACE:

- INCLUDE SUMMARY OF ALL STEPS FOR REVIEW AND APPROVAL IN PREPARATION FOR EACH PHASE/STEP.
- PLANNED ALL SCHEDULED FPL OUTAGES AND INTERNAL PLANT EQUIPMENT OUTAGES WITH WTP PERSONNEL AND ENGINEER.
- PROCEDURES FOR TAG AND LOCK OUT BREAKERS AND SWITCHES DURING EACH OF THE STEPS
- PROCEDURES FOR CHECKING PROPER TORQUE OF LUGS WHEN LANDING TEMPORARY OR PERMANENT WIRES.
- AFTER COMPLETING EACH STEP PROPER CHECKING PROCEDURES ARE IN PLACE BEFORE PROCEEDING TO THE NEXT STEP.
- ALL OSHA REQUIREMENTS INCLUDING PERSONNEL WEARING PROPER PPE PROTECTIVE GEAR.
- PROCEDURE TO MAKE REMOVED WIRE ENDS THAT ARE DISCONNECTED BE MADE SAFE WITH PROPER TEMPORARY INSULATION.
- PROCEDURES TO LAY TEMPORARY CABLES AWAY FROM HEAVY TRAFFIC AREAS AND PROPERLY SECURED.

CONTRACTOR SHALL PLACE IN CLOSE PROXIMITY TO NORTHERN EXTERIOR WALL OF ELECTRICAL ROOM THE RENTED 1200A, 480V 3 PHASE ATS SWITCH.

CONTRACTOR SHALL INSTALL PARALLEL SO CORD CABLES AT THE RENTED ATS EMERGENCY AND NORMAL BREAKER LUGS.

CONTRACTOR SHALL ALSO PROVIDE #12 CONTROL WIRING PAIRS BETWEEN RENTED ATS AND THE GENERATOR CONTROLS.

CONTRACTOR SHALL HAVE COORDINATED WITH FPL PERSONNEL AND WTP PERSONNEL TO THEN CARRY ON A SCHEDULED SHUT DOWN OF THE FPL SERVICE TRANSFORMER.

IN PREPARATION OF SUCH A POWER SHUT DOWN THE EXISTING GE SWITCHGEAR SHALL BE PLACED ON GENERATOR POWER. M1 AND M2 SERVICE BREAKERS SHALL BE OPEN DURING THE PLANNED POWER OUTAGE. PLANT WILL REMAIN ON GENERATOR POWER FOR THE MAJORITY OF THE TIME OF THE SCHEDULED SHUTDOWN.

1st FPL SHUT DOWN OF THE 480V SERVICE:

BY FPL CREWS: DISCONNECT EXISTING M1 AND M2 SERVICE WIRES; 5 SETS OF PARALLEL 600MCM, 250MCM NEUTRAL WIRES FROM SERVICE 1 & SERVICE 2.

THEN CONNECT THE THREE SETS OF PARALLEL SO CORD CABLES FROM THE RENTED ATS.

BY CONTRACTOR: DISCONNECTED AND MAKE SAFE M1 AND M2 5 SETS OF PARALLEL 600MCM WIRES AND ONE SET OF 250MCM WIRES FOR EACH SERVICE

THEN PROCEED TO TERMINATE THE 4/0 SO CORD CABLES FROM THE RENTED ATS TO M2 BREAKER LINE SIDE.

WHEN THIS IS COMPLETED THEN FPL MAY ENERGIZE THE 480V TRANSFORMER. GE SWITCHGEAR WILL BE READY TO GO BACK TO NORMAL POWER VIA THE RENTED ATS AND M2 SERVICE.

ENTIRE GE SWITCHGEAR WILL GO BACK ON NORMAL FPL POWER VIA THE M2 AND TIE BREAKER BEING CLOSED AND FEEDING THE RIGHT SIDE BUS (FORMERLY FED FROM M1 BREAKER)

IN ORDER TO REMOVE THE LAKE SHORE EMERGENCY BREAKER SWITCHGEAR ALL CONTROLS, AC AND DC POWER AND CONTROL CIRCUITS FROM GE SWITCHBOARD AND CUMMINS GENERATOR MUST BE DISCONNECTED.

NEXT A PARTIAL PLANT SHUT DOWN WILL BE NEEDED IN ORDER TO DISABLE THE RIGHT BUS (MCC2 AND MCC3 AND MDP) OF GE SWITCHGEAR AND REMOVE THE CONNECTIONS TO THE LAKESHORE TRANSFER BREAKER

CONTRACTOR SHALL PROVIDE TEMPORARY SO CORD CABLES TO RE–FEED 800A MDP FROM RIGHT SIDE OF GE SWITCHBOARD TO LEFT SIDE OF SWITCHBOARD (THIS IS TO MINIMIZE DOWN TIME ON CRITICAL EQUIPMENT)

USE SPARE 1000A BREAKER ALONG LEFT SIDE OF SWITCHBOARD.

REMOVE THE LAKE SHORE TRANSFER BREAKER SWITCHGEAR AND REPLACE THIS WITH NEW DUAL BREAKERS TRANSFER SWITCHBOARD.

CONTRACTOR SHALL EXTEND VIA INSULATED POLARIS TAPS THE 5 PARALLEL SETS OF 600MCM WIRES AND 1 SET OF 250MCM SERVICE WIRES (FORMERLY GOING TO M1 BREAKER) TO THE NORMAL BREAKER INSIDE THE NEW TRANSFER SWITCHGEAR.

CONNECT DC BATTERY AND CONTROL WIRING FROM GE SWITCHGEAR AND CUMMINS CONTROLLER, EXTEND AS REQUIRED.

ALSO CONNECTION FROM CENTER POLE OF NEW TRANSFER SWITCHGEAR TO THE RIGHT BUSS.

AT THIS TIME WE CAN RE–ENERGIZE THE ENTIRE 480V BUSS AND PREPARE FOR 2ND FPL OUTAGE TO DISCONNECT RENTED ATS AND CONNECT GENERATOR POWER TO NEW SWITCH
THIS PLANNED 2ND FPL SHUT DOWN WILL NOT HAVE GENERATOR BACKUP TO EXISTING SWITCHBOARD, SO COMPLETE PLANT SHUTDOWN WITH NO POWER (MAX OF 8 HOURS) WILL BE NEEDED.

CONTRACTOR SHALL PROVIDE EMERGENCY POWER TO HAVE INSIDE ELECTRICAL ROOM SOME LIGHTING AND PROVIDE SOME PORTABLE FANS FOR COOLING

2ND FPL SHUTDOWN OF 480V SERVICE:

BY FPL CREW: SHUT DOWN TRANSFORMER POWER AND DISCONNECT TEMPORARY PARALLEL SO CORDS FROM RENTED ATS.

NOW CONNECT THE TWO SERVICES M1 AND M2, EACH WITH 5 SETS OF 600MCM AND 250MCM NEUTRAL WIRES

BY CONTRACTOR: AT THE M2 BREAKER LINE SIDE DISCONNECT THE TEMPORARY SO CORD CABLES AND RE–CONNECT THE 5 SETS OF 600 MCM AND 1 250A MCM CABLES.

AT THE NEW DUAL BREAKER TRANSFER SWITCHGEAR CONNECT THE PARALLEL 600MCM CABLES AND 250MCM NEUTRAL FROM THE GENERATOR TO THE EMERGENCY BREAKER LINE SIDE.

COMPLETE DC AND AC CONTROL WIRING FROM CUMMINS GENERATOR/CONTROLLER AND FROM GE SWITCHGEAR.

WE HAVE NOW COMPLETED ALL POWER, CONTROL AND DC POWER CONNECTIONS TO SWITCHGEAR AND BREAKERS.

PROVIDE DISCRETE AND COMMUNICATIONS AND ETHERNET CAT 6 CABLES FROM THE SWITCHGEAR CONTROLLER TO THE EXISTING PLC 1 FOR SCADA SIGNALS FROM THE NEW TRANSFER SWITCHGEAR

PROVIDE PROGRAMMING AND CONFIGURATION OF THE TWO BREAKER TRANSFER SWITCHGEAR AND THE EXISTING TIE AND M2 BREAKER.

PROVIDE LABEL AT M1 BREAKER "SPARE BREAKER FOR M2"

C&W engineering
ELECTRICAL CONSULTANTS
2775 VISTA PARKWAY, SUITE G–6
WEST PALM BEACH, FL 33411
(561) 642–5333
REGISTRATION NUMBERS
C & W ENGINEERING INC. CA# 33315
MICHAEL A. GUIDA, P.E. 60755
66433

No.	REVISIONS	DATE	BY

Kimley»Horn
© 2020 KIMLEY–HORN AND ASSOCIATES, INC.
1920 WEKIVA WAY SUITE 200, WEST PALM BEACH, FL 33411
PHONE: 561–845–0665 FAX: 561–863–8175
WWW.KIMLEY–HORN.COM CA 00000696

KHA PROJECT 044572063
DATE NOV. 2020
SCALE AS SHOWN
DESIGNED BY JLR
DRAWN BY AOD
CHECKED BY MAG

SOUTH R.O. WTP ATS REPLACEMENT

PREPARED FOR

INDIAN RIVER COUNTY UTILITIES

INDIAN RIVER COUNTY, FLORIDA

LICENSED PROFESSIONAL
MICHAEL A. GUIDA, P.E.
FLORIDA LICENSE NUMBER 60755
DATE: ____

POWER ONELINE DIAGRAM

SHEET NUMBER
E-3

Plotted By:Joser Sheet Set:SOUTH R.O WTP ATS REPLACEMENT Layout:ONELINE November 13, 2020 04:13:03pm \\NEWSERVER-PC\Dropbox\JOBS\66-KH\66433 IRC OSLO WTP ATS REPLACEMENT\DRAWINGS\02 Electrical Details.dwg
This document, together with the concepts and designs presented herein, as an instrument of service, is intended only for the specific purpose and client for which it was prepared. Reuse of and improper reliance on this document without written authorization and adaptation by Kimley-Horn and Associates, Inc. shall be without liability to Kimley-Horn and Associates, Inc.

GENERAL ELECTRICAL NOTES

1. CONTRACTOR SHALL COORDINATE SIGNALS W/TRANSFER BREAKER SWITCHGEAR SHOP DRAWINGS.
2. PROVIDE ALL MODBUS COMM CABLES, EQUIPMENT REQUIRED INCLUDING MODULES, ADAPTERS, SIGNAL CONVERTERS, BELDEN TWISTED SHIELDED PAIRS FOR THE COMMUNICATIONS TO EXISTING PLC VIA MODBUS RTU485, FROM SWITCHGEAR CONTROLLER TO PROVIDE TRANSFER BREAKER SWITCHGEAR STATUS OF BREAKER POSITIONS, NORMAL AND EMERGENCY SOURCE AVAILABLE STATUS, INCLUDING VOLTAGE, CURRENT, HERTZ, KW ENERGY READINGS.
3. CONTRACTOR SHALL BE RESPONSIBLE TO CONFIRMING THE EXACT REQUIREMENTS FOR ALL COMMUNICATIONS CABLING WITH THE GENERATOR AND TRANSFER SWITCHGEAR MANUFACTURER PRIOR TO PROVIDING SHOP DRAWINGS AND INSTALLATION.

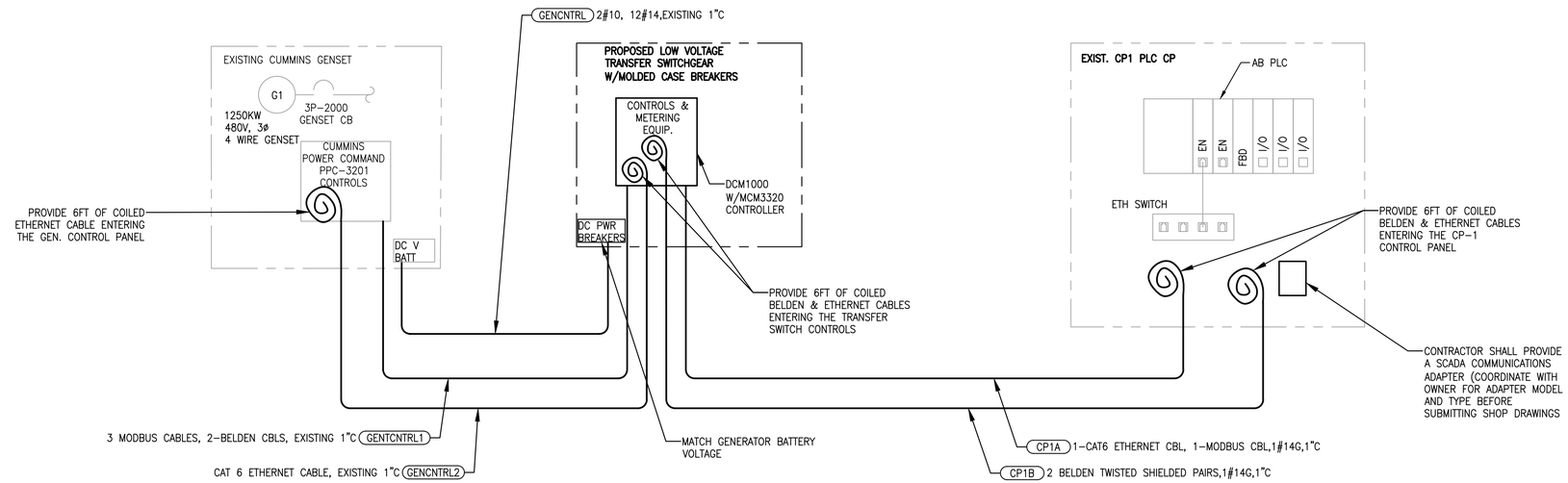

NOTES: 1. REUSE EXISTING CONDUITS BETWEEN EXISTING LAKE SHORE SWITCHGEAR SWITCH AND CUMMINS GENERATOR PPC-3201 CONTROLLER FOR DC POWER SUPPLY, DISCRETE CONTROLS, BELDEN AND MODBUS CABLES BETWEEN GENERATOR CONTROLLER AND PROPOSED NEW LOW VOLTAGE TRANSFER SWITCHGEAR CONTROLLER AND EXISTING PLC-1 CONTROL PANEL. COORDINATE WITH OWNER & ENGINEER.

2. ALL CABLES ROUTED UNDERGROUND SHALL BE UNDERGROUND WET RATED.

DUAL BREAKER PAIR TRANSFER SWITCHGEAR NETWORK DIAGRAM

NTS

C&W engineering
ELECTRICAL CONSULTANTS
2775 VISTA PARKWAY, SUITE G-6
WEST PALM BEACH, FL 33411
(561) 642-5333
REGISTRATION NUMBERS
C & W ENGINEERING INC. CA# 33315
MICHAEL A. GUIDA, P.E. 60755
66433

No.	REVISIONS	DATE	BY

Kimley»Horn
© 2020 KIMLEY-HORN AND ASSOCIATES, INC.
1920 WEKIVA WAY SUITE 200, WEST PALM BEACH, FL 33411
PHONE: 561-845-0665 FAX: 561-863-8175
WWW.KIMLEY-HORN.COM CA 00000696

KHA PROJECT 044572063
DATE NOV. 2020
SCALE AS SHOWN
DESIGNED BY JLR
DRAWN BY AOD
CHECKED BY MAG

SOUTH R.O. WTP ATS REPLACEMENT

PREPARED FOR

INDIAN RIVER COUNTY UTILITIES

INDIAN RIVER COUNTY, FLORIDA

LICENSED PROFESSIONAL

MICHAEL A. GUIDA, P.E.

FLORIDA LICENSE NUMBER 60755

DATE: ____

ATS NETWORK DIAGRAM

SHEET NUMBER

E-4

Plotted By:Joser Sheet Set:SOUTH R.O. WTP ATS REPLACEMENT Layout:NETWORK November 13, 2020 04:13:03pm \\NEWSERVER-PC\Dropbox\JOBS\66-KH\66433 IRC OSLO WTP ATS REPLACEMENT\DRAWINGS\02 Electrical Details.dwg
This document, together with the concepts and designs presented herein, as an instrument of service, is intended only for the specific purpose and client for which it was prepared. Reuse of and improper reliance on this document without written authorization and adaptation by Kimley-Horn and Associates, Inc. shall be without liability to Kimley-Horn and Associates, Inc.

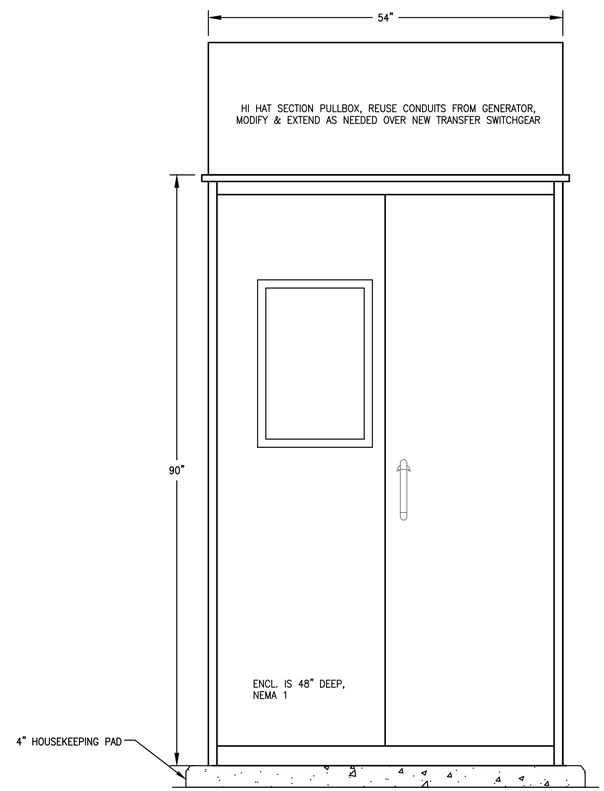

FRONT DOOR

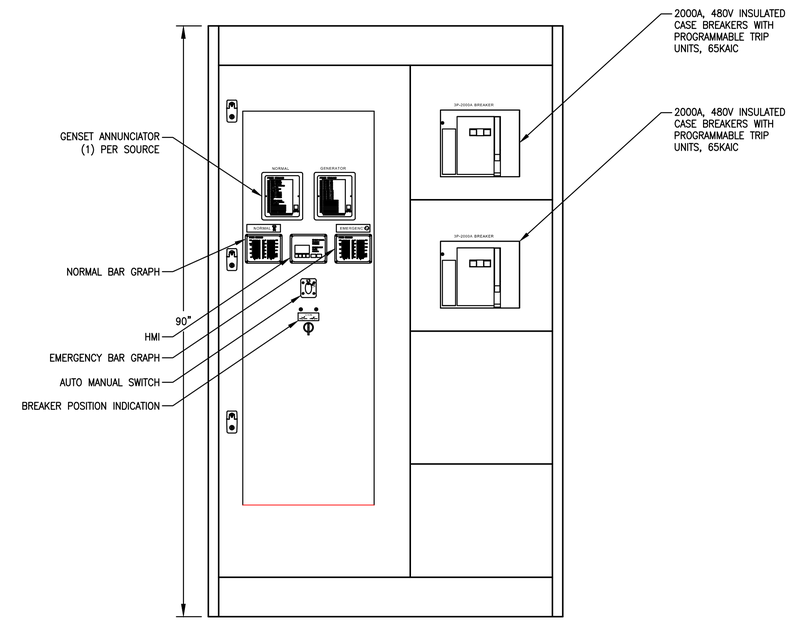

DEADFRONT

LOW VOLTAGE TRANSFER SWITCHGEAR WITH DUAL MOLDED CASE BREAKERS

NTS

Plotted By:loser Sheet Set:SOUTH R.O. WTP ATS REPLACEMENT Layout:ATS DETAILS November 13, 2020 04:13:08pm \\NEWSERVER-PC\Dropbox\JOBS\66-KH\66433 IRC OSLO WTP ATS REPLACEMENT\DRAWINGS\02 Electrical Details.dwg
This document, together with the concepts and designs presented herein, as an instrument of service, is intended only for the specific purpose and client for which it was prepared. Reuse of and improper reliance on this document without written authorization and adaptation by Kimley-Horn and Associates, Inc. shall be without liability to Kimley-Horn and Associates, Inc.

C&W engineering
ELECTRICAL CONSULTANTS
2775 VISTA PARKWAY, SUITE G-6
WEST PALM BEACH, FL 33411
(561) 642-5333
REGISTRATION NUMBERS
C & W ENGINEERING INC. CA# 33315
MICHAEL A. GUIDA, P.E. 60755
66433

No.	REVISIONS	DATE	BY

Kimley»Horn

© 2020 KIMLEY-HORN AND ASSOCIATES, INC.
1920 WEKIVA WAY SUITE 200, WEST PALM BEACH, FL 33411
PHONE: 561-845-0665 FAX: 561-863-8175
WWW.KIMLEY-HORN.COM CA 00000696

KHA PROJECT	044572063
DATE	NOV. 2020
SCALE	AS SHOWN
DESIGNED BY	JLR
DRAWN BY	AOD
CHECKED BY	MAG

SOUTH R.O. WTP ATS REPLACEMENT
PREPARED FOR
INDIAN RIVER COUNTY UTILITIES
INDIAN RIVER COUNTY, FLORIDA

LICENSED PROFESSIONAL
MICHAEL A. GUIDA, P.E.
FLORIDA LICENSE NUMBER 60755
DATE: ____

ATS DETAILS

SHEET NUMBER
E-5

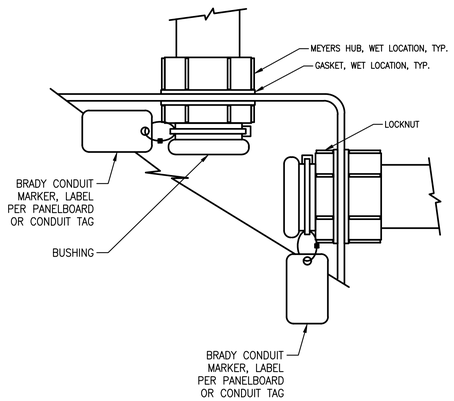

CONDUIT TERMINATION DETAIL

NTS

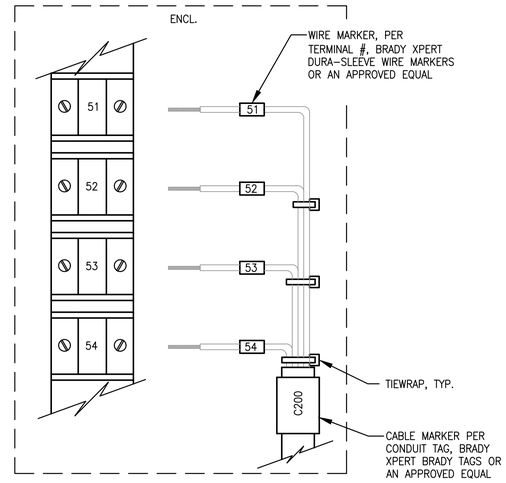

TERMINATION EXAMPLE DETAIL

NTS

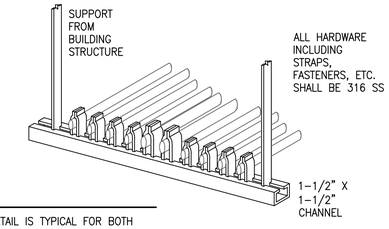

NOTES:

1. THIS DETAIL IS TYPICAL FOR BOTH VERTICAL AND HORIZONTAL MOUNTING
2. CHANNEL AND ALL SUPPORT DEVICES TO BE FIELD COATED TO MATCH.
3. CHANNELS TO BE SPACES 5' MAXIMUM.
4. ALL MATERIALS SHALL BE 316 SS

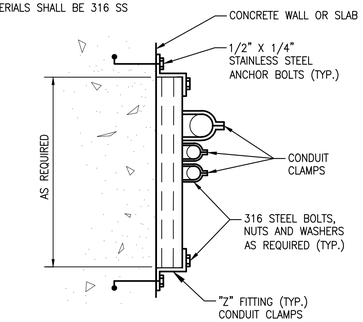

INSTALLATION DETAIL

NTS

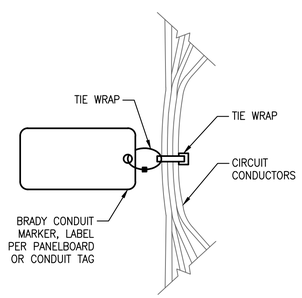

CIRCUIT MARKER DETAIL

NTS

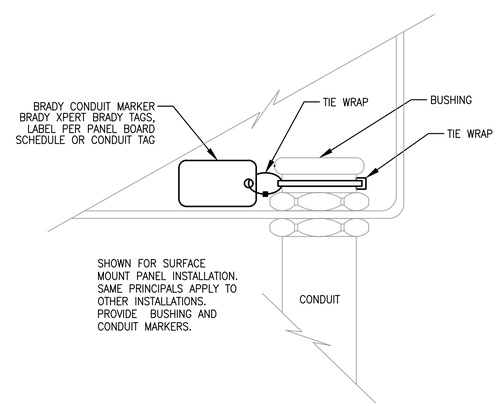

CONDUIT DETAIL

NTS

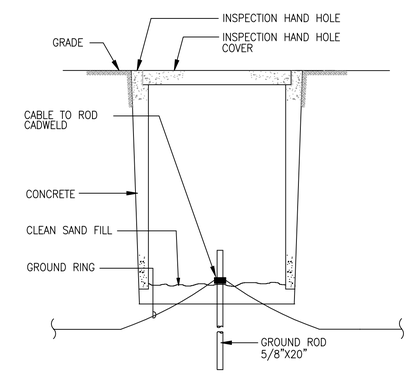

GROUND WELL DETAIL

NTS

A

C&W engineering
ELECTRICAL CONSULTANTS
2775 VISTA PARKWAY, SUITE G-6
WEST PALM BEACH, FL 33411
(561) 642-5333
REGISTRATION NUMBERS
C & W ENGINEERING INC. CA# 33315
MICHAEL A. GUIDA, P.E. 60755
66433

No.	REVISIONS	DATE	BY

Kimley»Horn

© 2020 KIMLEY-HORN AND ASSOCIATES, INC.
1920 WEKIVA WAY SUITE 200, WEST PALM BEACH, FL 33411
PHONE: 561-845-0665 FAX: 561-863-8175
WWW.KIMLEY-HORN.COM CA 00000696

KHA PROJECT 044572063
DATE NOV. 2020
SCALE AS SHOWN
DESIGNED BY JLR
DRAWN BY AOD
CHECKED BY MAG

SOUTH R.O. WTP ATS REPLACEMENT
PREPARED FOR
INDIAN RIVER COUNTY UTILITIES
INDIAN RIVER COUNTY, FLORIDA

LICENSED PROFESSIONAL
MICHAEL A. GUIDA, P.E.
FLORIDA LICENSE NUMBER 60755
DATE: ____

ELECTRICAL DETAILS

SHEET NUMBER
E-6

Plotted By:Joser Sheet Set:SOUTH R.O. WTP ATS REPLACEMENT Layout:DETS November 13, 2020 04:13:10pm \\NEWSERVER-PC\Dropbox\JOBS\66-KH\66433 IRC OSLO WTP ATS REPLACEMENT\DRAWINGS\02 Electrical Details.dwg
This document, together with the concepts and designs presented herein, as an instrument of service, is intended only for the specific purpose and client for which it was prepared. Reuse of and improper reliance on this document without written authorization and adaptation by Kimley-Horn and Associates, Inc. shall be without liability to Kimley-Horn and Associates, Inc.