HIGHLANDS PARK ESTATES CLUBHOUSE

HIGHLANDS PARK ESTATES

91 DEERGLEN BLVD.

LAKE PLACID, FL

N

VICINITY MAP

NO SCALE

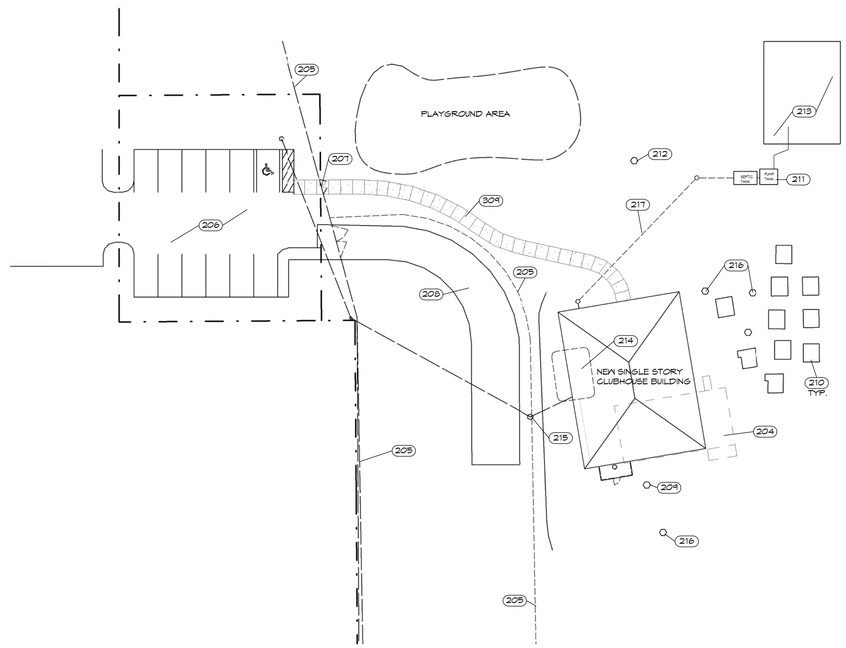

N

ARCHITECTURAL SITE PLAN

1" = 30'-0"

GOVR Sheet Notes / Numbers May Not Be Consecutive.

204	Existing structure to be removed in its entirety. Completely remove associated foundations and exterior concrete slabs.
205	Existing fence to remain.
206	Existing asphalt paving to receive new additions/ resurfacing/ etc. Refer to Civil drawings.
207	New 6 ft. wide double leaf chain link gate to accommodate new concrete sidewalk.
208	New stabilized driveway. See Civil drawings.
209	Existing domestic water well with submersible pump. See Electrical drawings for new power requirements and connection.
210	Existing concrete picnic tables to remain.
211	New sewer pump. Refer to electrical and civil drawings for details and electrical connection requirements.
212	Existing artesian well to remain.
213	New septic drain field. Refer to Civil drawings.
214	Existing septic tank; drain field and all associated piping to be removed. Verify location. Backfill with clean fill as necessary.
215	Existing and/ or new power pole with overhead line. Verify exact location. Provide underground power feed as shown on Electrical drawings.
216	Existing tree. Protect from damage.
217	Sewer drain piping. See Civil drawings.
309	4 in. thick x 6 ft. wide poured concrete sidewalk with 6x6xW1.4xW1.4 WWF. Broom finish. Provide control joints at 20 ft. o.c. and saun expansion joints at 5 ft. o.c.

LIST OF DRAWINGS

SYMBOL LEGEND

	DRAWING NOTE
A / A101	WALL SECTION DRAWING REFERENCE
AA / A501	BUILDING SECTION DRAWING REFERENCE
1 / A101	DETAIL DRAWING REFERENCE
℄	CENTERLINE
101	DOOR NUMBER
A	WINDOW NUMBER
M1	MILLWORK SYMBOL
Room name 101	ROOM NAME / NUMBER
FX	FRAME NUMBER
UNO	UNLESS NOTED OTHERWISE

DO NOT SCALE THESE DRAWINGS

BUILDING DESIGN CRITERIA

CODE CONFORMANCE

FLORIDA BUILDING CODE (FBC)	2014 5th EDITION
ASCE	7-10
FBC-MECHANICAL	2014 5th EDITION
FBC-PLUMBING	2014 5th EDITION
FBC-FUEL GAS	2014 5th EDITION
NATIONAL ELECTRIC CODE (NEC)	2011 NFPA 70
FLORIDA FIRE PREVENTION CODE (FFPC)	2010 (5th EDITION)
NFPA 1	2012
NFPA 101	2012

DESIGN WIND SPEED: 140 MPH
DESIGN LOAD FOR COMPONENTS & CLADDING: SEE STRUCTURAL DRAWINGS

DESIGN DATA

	FBC	FFPC
OCCUPANCY GROUP	A2 - ASSEMBLY	ASSEMBLY
CONSTRUCTION TYPE	TYPE III-B, UNPROTECTED	

BUILDING DATA

	ALLOWABLE	ACTUAL
BUILDING AREAS (GROSS)	9,500 SF	1,960 SF
NO. OF STORIES	2	1
BUILDING HEIGHT	55'-0"	14'-6"

COMPLIANCE STATEMENT

TO THE BEST OF THE ARCHITECT'S KNOWLEDGE, THESE DRAWINGS AND THE PROJECT SPECIFICATIONS ARE COMPLETE AND COMPLY WITH THE REFERENCED CODES.

KCMH architects

KIRK CURTIS MUNDY HUNNICUTT ASSOCIATES ARCHITECTS INC.

JONATHAN A. KIRK, AIA, LEED AP
JOHN R. CURTIS, AIA
BENJAMIN F. MUNDY, JR., AIA, LEED AP
C. KEITH HUNNICUTT, AIA
NEIL G. MELBY, AIA, LEED AP

1036 SOUTH FLORIDA AVENUE | LAKELAND, FLORIDA | 33803-1118
TELEPHONE 863.688.8861 | FAX 863.688.8361 | LICENSE NO. AA C000772 | kcmharch.com

ARC011121

C. KEITH HUNNICUTT

HIGHLANDS PARK ESTATES CLUBHOUSE
HIGHLANDS PARK ESTATES
91 DEERGLEN BLVD.
LAKE PLACID, FL

COVER SHEET

REVISIONS

CONSTRUCTION 8/19/17

APPROVAL 7/21/17

REVIEW

CHECKED BY

COVR

16031

7/24/2017 8:25:10 AM C:\16031\16031_Jeff.rvt

STRUCTURAL GENERAL NOTES

DESIGN CRITERIA

D1 ALL WORK AND DESIGNS SHALL CONFORM TO AT LEAST THE MINIMUM STANDARDS OF THE 2014 FLORIDA BUILDING CODE 5th EDITION AND THE LIFE SAFETY CODES. WIND DESIGN SHALL BE BASED ON A WIND SPEED OF 150 MPH WIND IMPORTANCE FACTOR OF 1.0; EXPOSURE C.

D2 TO THE BEST OF THE ENGINEER'S KNOWLEDGE, THE STRUCTURAL PLANS AND SPECIFICATIONS HAVE BEEN DESIGNED IN ACCORDANCE WITH THE BUILDING CODE.

D3 EVERY REASONABLE EFFORT HAS BEEN MADE TO ENSURE COORDINATION BETWEEN THESE DRAWINGS AND THE STRUCTURAL SPECIFICATIONS. SHOULD THERE BE ANY DISCREPANCIES, THE CONTRACTOR SHALL REQUEST A CLARIFICATION IN WRITING.

GENERAL

G1 THE GENERAL CONTRACTOR (GC) SHALL REVIEW AND DETERMINE THAT DIMENSIONS ARE COORDINATED BETWEEN ARCHITECTURAL AND STRUCTURAL DRAWINGS PRIOR TO FABRICATION OR START OF CONSTRUCTION.

G2 THE GENERAL CONTRACTOR SHALL PROVIDE ALL MEASURES NECESSARY TO PROTECT THE STRUCTURE, THE WORK PERSONS AND OTHER PEOPLE DURING CONSTRUCTION. HE SHALL SUPERVISE AND DIRECT THE WORK AND BE RESPONSIBLE FOR ALL CONSTRUCTION.

G3 NO STRUCTURAL MEMBER (NEW or EXISTING) SHALL BE CUT, NOTCHED OR OTHERWISE REDUCED IN STRENGTH, UNLESS INDICATED OTHERWISE ON DRAWINGS.

G4 THE GENERAL CONTRACTOR SHALL COORDINATE ARCHITECTURAL, MECHANICAL AND ELECTRICAL DRAWINGS FOR ANCHORED, EMBEDDED AND SUPPORTED ITEMS WHICH AFFECT THE STRUCTURAL DRAWINGS AND NOTIFY THE ARCHITECT/ENGINEER OF ANY DISCREPANCIES.

G5 ALL SUBMITTAL SETS SHALL CONSIST OF (1) ORIGINAL AND (3) COPIES. ANY ADDITIONAL COPIES WILL BE DISCARDED.

G6 ANY SUBMITTALS RECEIVED BY ARCHITECT/ENGINEER THAT HAVE NOT BEEN CHECKED BY THE GC AND HIS SUBCONTRACTOR SHALL BE RETURNED WITHOUT REVIEW.

G7 ALL SECTIONS AND DETAILS SHALL BE CONSTRUED TO BE TYPICAL OR SIMILAR UNLESS ANOTHER SECTION OR DETAIL IS NOTED.

G8 ANY CONFLICTS BETWEEN THE SPECIFICATIONS AND DESIGN DRAWINGS SHALL BE IMMEDIATELY BROUGHT TO THE ATTENTION OF THE ARCHITECT. THE MORE STRINGENT REQUIREMENTS SHALL GOVERN UNLESS DETERMINED OTHERWISE BY THE ARCHITECT.

G9 GENERAL CONTRACTOR SHALL SUPPLY ALL SUB-CONTRACTORS WITH THE STRUCTURAL GENERAL NOTE SHEETS AS WELL AS THE STRUCTURAL DRAWINGS.

FOUNDATIONS

F1 A CERTIFIED TESTING AGENCY SHALL BE ENGAGED BY OWNER TO PERFORM INDUSTRY-STANDARD SOIL DENSITY TESTS TO ENSURE CONFORMANCE WITH PROJECT SPECIFICATIONS. SUBMIT REPORTS TO ARCHITECT, ENGINEER, OWNER AND CONTRACTOR.

F2 CONTRACTOR, IN CONJUNCTION WITH GEOTECHNICAL FIELD REPRESENTATIVE, SHALL DETERMINE IF ANY UNSUITABLE CONDITIONS ARE DISCOVERED DURING EXCAVATION WHICH WOULD PREVENT ATTAINMENT OF THE DESIGN SOIL DENSITY.

F3 CONTRACTOR SHALL PROVIDE MINIMUM SOIL BEARING OF 2,000 PSF. REFER TO SOILS REPORT FOR REQUIREMENTS.

SLAB ON GRADE

SOG1 UNLESS NOTED OTHERWISE, COMPACT INTERIOR FILL TO 98 PERCENT OF STANDARD PROCTOR MAXIMUM DRY DENSITY (ASTM 698). SOIL COMPACTION SHALL BE FIELD-CONTROLLED BY A REPRESENTATIVE TECHNICIAN OF A QUALIFIED LABORATORY. EACH LAYER OF FILL SHALL NOT EXCEED 12" THICK AND SHALL BE COMPACTED PRIOR TO PLACEMENT OF NEXT LAYER.

SOG2 MAXIMUM SPACING OF CONTROL JOINTS (i.e. SAWCUT JOINT OR CONSTRUCTION JOINT) SHALL BE AS SET IN THE TABLE BELOW, OR AS NOTED ON PLANS. PATTERNS SHALL BE APPROXIMATELY SQUARE WITH A RATIO OF LONG SIDE TO SHORT SIDE NOT EXCEEDING 1.5 TO 1.

SLAB THICKNESS (IN)	CONTROL JOINT SPACING (FT)
4	12
5	13
6	14
7 AND GREATER	15

SAWCUT SLAB AS SOON AS AGGREGATE DOES NOT DISLODGE (MUST BE WITHIN 12 HOURS OF CONCRETE PLACEMENT).

SOG3 GENERAL CONTRACTOR SHALL COORDINATE EXACT LOCATION OF SJ'S AND CJ'S WITH ARCHITECTURAL FLOOR FINISHES TO ENSURE SLAB JOINTS DO NOT READ THROUGH.

SOG4 SUPPORT ALL WWF ON CHAIRS AT MAX 3'-0" OC EACH WAY.

CONCRETE AND REINFORCING

C1 A CERTIFIED TESTING AGENCY SHALL BE ENGAGED TO PERFORM INDUSTRY STANDARD TESTING INCLUDING SLUMP TESTS AND CYLINDER BREAKS TO ENSURE CONFORMANCE WITH PLANS AND SPECIFICATIONS. SUBMIT REPORTS TO ARCHITECT, ENGINEER, OWNER AND CONTRACTOR.

C2 CONCRETE WORK SHALL CONFORM TO ACI 318-05 BUILDING CODE REQUIREMENTS FOR STRUCTURAL CONCRETE.

C3 ALL CONCRETE SHALL HAVE THE FOLLOWING PROPERTIES:

LOCATION	28 DAY STRENGTH	SLUMP	COARSE AGGREGATE(S)
FOUNDATIONS	3000 PSI	4" +/- 1"	3/4" - 1"
SLAB-ON-GRADE: FOOT TRAFFIC	3000 PSI	4" +/- 1"	3/4" - 1"
TIE BEAMS (MAX 50' BETWEEN COLD JOINTS)	3000 PSI	5" +/- 1"	3/8"
FILLED CELL, MASONRY LINTELS & BOND BEAM GROUT (ASTM C476)	3000 PSI	8" TO 11"	3/8"

NOTES:
1. SLUMP FOR RAMPS AND SLOPING SURFACES SHALL NOT EXCEED 4".

C4 CONCRETE MIX DESIGN SUBMITTALS:

1. EACH MIX DESIGN SHALL BE LABELED TO INDICATE THE AREA IN WHICH THE CONCRETE IS TO BE PLACED (I.E. FOUNDATIONS, SLAB- ON-GRADE, COLUMNS, ETC.).
2. PROPOSED MIX DESIGN SHALL BE IN ACCORDANCE WITH METHOD 1 OR METHOD 2 OF ACI 301. PROVIDE SUPPORTING DATA IN TABULAR FORM FOR EACH SEPARATE PROPOSED MIX.
3. SUBMIT CONCRETE MIX DESIGN FOR EACH PROPOSED CLASS OF CONCRETE.

C5 REBAR SHALL CONFORM TO ASTM-615 GRADE 60. WELDED WIRE FABRIC SHALL CONFORM TO ASTM A-185 AND SHALL BE LAPPED MINIMUM ONE MESH + 2" WHERE SPLICED. ALL REINFORCING SHALL BE DOMESTICALLY PRODUCED.

C6 SPLICES AND ANCHORAGE OF REINFORCING SHALL BE AS FOLLOWS (UNLESS OTHERWISE NOTED):

WELDED WIRE FABRIC: 8"
ALL OTHER: 48 DIA (12" MIN)

C7 REINFORCEMENT IN WALLS, FOOTINGS AND BEAMS SHALL BE CONTINUOUS AND LAPPED 48 BAR DIA AT SPLICE UNLESS OTHERWISE NOTED. HOOK AND LAP ALL CORNER AND INTERSECTING BARS. (SEE REINF DEVELOPMENT DETAIL).

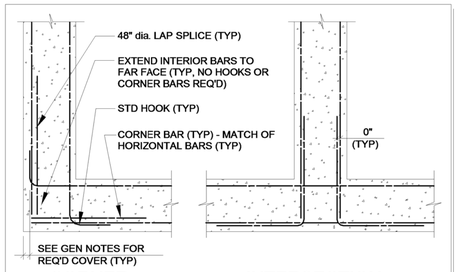

CORNER INTERSECTION

REINF DEVELOPMENT DETAIL

C8 COVER FOR REINFORCING SHALL BE AS FOLLOWS:

CONCRETE CAST AGAINST AND PERMANENTLY EXPOSED TO EARTH:	3"
CONCRETE EXPOSED TO EARTH OR WEATHER:	
#6 THRU #18 BARS:	2"
#5 BAR, W31 OR D31 WIRE AND SMALLER:	1 1/2"
CONCRETE NOT EXPOSED TO EARTH OR WEATHER:	
SLABS, WALLS, JOISTS:	
#14 AND #18 BARS:	1 1/2"
#11 BAR AND SMALLER:	3/4"
BEAMS, COLUMNS:	
PRIMARY REINF, TIES, STIRRUPS, SPIRALS:	1 1/2"

C9 CONTINUOUS TOP BARS SHALL BE SPLICED AT MID-SPAN. CONTINUOUS BOTTOM BARS SHALL BE SPLICED AT CENTER-LINE OF SUPPORTS (OR AS SHOWN ON TYPICAL DETAILS).

C10 FOOTING PENETRATION DETAILS:

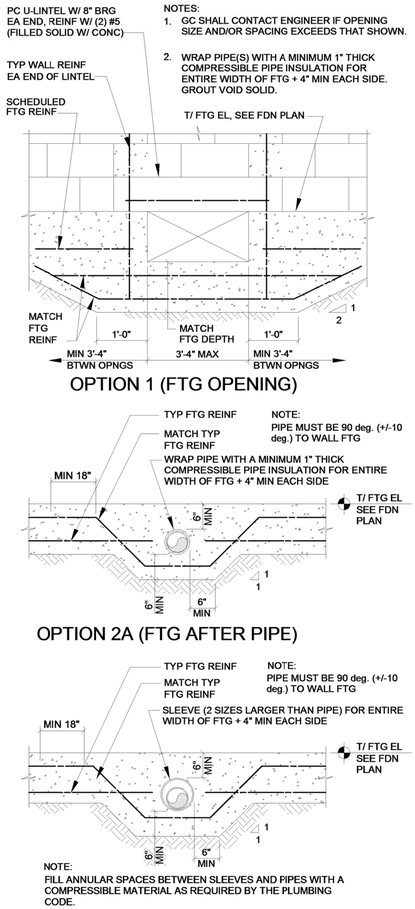

DETAIL - FOOTING PENETRATIONS

MECHANICAL FASTENERS

MF1 EXPANSION ANCHORS SHALL BE "POWER-STUD" BY RAWL OR "TRUBOLT" BY ITW RAMSET/REDHEAD OR ENGINEER-APPROVED EQUAL.

MF2 ADHESIVE ANCHORS SHALL BE THE HILTI HIT-RE 500 ADHESIVE ANCHORING SYSTEM OR STRUCTURAL ENGINEER APPROVED ALTERNATE PRODUCT CONSIDERING SUITABILITY, LOAD RESISTANCE, IN-SERVICE AND INSTALLATION TEMPERATURE, AVAILABILITY OF COMPREHENSIVE INSTALLATION INSTRUCTIONS, AND CREEP. INSTALLERS MUST BE TRAINED BY THE MANUFACTURER. EACH CERTIFIED INSTALLER WILL BE ISSUED A CERTIFICATION CARD TO VERIFY THEIR TRAINING AND SHALL BE REQUIRED TO CARRY THEIR CERTIFICATION CARD ON THEIR PERSON. CERTIFIED INSTALLERS SHALL PROVIDE WRITTEN DOCUMENTATION THAT ALL ANCHORS HAVE BEEN INSTALLED PER THE MANUFACTURER'S INSTRUCTIONS.

MF3 MASONRY SCREWS SHALL BE "TAPPERS" BY RAWL OR "TAPCON" BY ITW RAMSET/REDHEAD OR ENGINEER-APPROVED EQUAL.

MF4 POWDER-ACTUATED FASTENERS (PAF) SHALL BE BY ITW RAMSET/REDHEAD, HILTI OR ENGINEER-APPROVED EQUAL.

MF5 REFER TO LIGHT GAUGE FRAMING NOTES (IF APPLICABLE) FOR ADDITIONAL INFORMATION.

MF6 CARBON-STEEL EXPANSION ANCHORS SHALL HAVE A ONE-PIECE ANCHOR BODY WITH A LENGTH IDENTIFICATION CODE. THE ANCHORS SHALL HAVE AN EXPANSION MECHANISM WHICH CONSISTS OF A PAIR OF INTERLOCKING INDEPENDENT WEDGES. CARBON STEEL COMPONENTS SHALL BE PLATED ACCORDING TO ASTM SPECIFICATION B 6.33. EXPANSION ANCHORS MUST MEET THE DESCRIPTION IN FEDERAL SPECIFICATION FF-8-325 FOR CONCRETE EXPANSION ANCHORS.

MF7 ALL FASTENERS SHALL BE INSTALLED PER THE MANUFACTURER'S RECOMMENDATIONS. REFER TO LIGHT GAUGE METAL FRAMING NOTES (IF APPLICABLE) FOR ADDITIONAL INFORMATION.

KCMH architects
KIRK CURTIS MUNDY HUNNICUTT ASSOCIATES ARCHITECTS INC.
JONATHAN A. KIRK, AIA, LEED AP
JOHN R. CURTIS, AIA
BENJAMIN F. MUNDY, JR., AIA, LEED AP
C. KEITH HUNNICUTT, AIA
NEIL G. MELBY, AIA, LEED AP
1036 SOUTH FLORIDA AVENUE | LAKELAND, FLORIDA | 33803-1118
TELEPHONE 863.688.8862 | FAX 863.688.8361 | LICENSE NO. AA C000772 | kcmharch.com

AR0011121

C. KEITH HUNNICUTT

HIGHLANDS PARK ESTATES CLUBHOUSE
HIGHLANDS PARK ESTATES
91 DEERGLEN BLVD.
LAKE PLACID, FL

STRUCTURAL NOTES

REVISIONS

CONSTRUCTION 6/19/17
APPROVAL 7/21/17
REVIEW
CHECKED BY

S001

16031

STRUCTURAL GENERAL NOTES

MASONRY

M1 MASONRY CONSTRUCTION MATERIALS AND INSPECTIONS SHALL CONFORM TO THE LATEST EDITION OF THE ACI BUILDING CODE REQUIREMENTS FOR CONCRETE MASONRY STRUCTURES (ACI 530-05/ASCE 5/TMS 402-05), SPECIFICATIONS FOR MASONRY STRUCTURES (ACI 530.1/ASCE 6/TMS 602-05) ASTM C476, ASTM C1019 AND NCMA TEK 107.

M2 CONCRETE BLOCKS SHALL CONFORM TO ASTM C-90. (f'm = 1500 PSI) (1900 PSI ON THE NET AREA).

M3 MORTAR SHALL COMPLY WITH ASTM C270, TYPE 'S' OR 'N' (COMPRESSIVE STRENGTH = 1800 PSI AND 750 PSI, RESPECTIVELY). TYPE 'S' TO BE USED WITH CONCRETE MASONRY, TYPE 'N' WITH BRICK VENEER AS SPECIFIED.

M4 BLOCK SHALL NOT BE MOISTENED BEFORE GROUTING.

M5 ALL MASONRY CROSS WEBS SHALL BE FULLY BEDDED IN MORTAR AROUND CELLS TO BE GROUTED.

M6 REINFORCE SINGLE WYTHE WALLS WITH LADDER TYPE (ASTM A-153, #9 GAGE WIRE) DEFORMED REINFORCEMENT EQUAL TO DUR-O-WAL IN BED JOINTS AT 16" OC UNO, MEASURED VERTICALLY. PLACE PER MFR'S INSTRUCTIONS. LAP ALL HORIZONTAL JOINT REINFORCING 6" MIN.

M7 VERTICAL REINFORCING MUST HAVE A MINIMUM CLEARANCE OF 1/2" TO INSIDE FACE. VERTICAL REINFORCEMENT IN WALLS SHALL BE PLACED AND LATERALLY SUPPORTED (AS REQUIRED) TO MAINTAIN POSITION AT CENTER OF REINFORCED CELL UNLESS DETAILED OTHERWISE.

M8 GROUT PLACEMENT STOPPED FOR (1) HOUR OR MORE SHOULD BE STOPPED 1 1/2" BELOW THE TOP OF THE MASONRY UNIT TO PROVIDE A KEY FOR SUBSEQUENT GROUTING.

M9 TYPICAL VERTICAL REINFORCING SIZE AND SPACING SHALL BE ABOVE AND BELOW ALL WALL OPENINGS.

M10 TEMPORARY BRACING AND SHORING OF WALLS TO PROVIDE STABILITY DURING CONSTRUCTION SHALL BE THE RESPONSIBILITY OF THE CONTRACTOR.

M11 PROVIDE FILLED PRECAST U-LINTELS AS MANUFACTURED BY CAST- CRETE OR APPROVED EQUAL WITH (1) #5 CONT AT ALL OPENINGS WHERE BEAMS ARE NOT SHOWN, SCHEDULED OR NOTED. LINTELS SHALL HAVE MINIMUM UNFILLED CAPACITY OF 400 lb/LF AND BEAR NOMINAL 8" (MIN 8") EACH END ON A GROUT FILLED CELL. PROVIDE PRE-CAST LINTEL SUBMITTALS SIGNED AND SEALED BY A SPECIALTY ENGINEER WHO IS REGISTERED IN THE STATE OF FLORIDA.

M12 STOPPING AND RESUMING WORK: RACK BACK 1/2-UNIT LENGTH IN EACH COURSE. DO NOT TOOTH. CLEAN EXPOSED SURFACES OF SET MASONRY. REMOVE LOOSE MASONRY UNITS AND MORTAR PRIOR TO LAYING FRESH MASONRY.

M13 REINFORCE MASONRY OPENINGS GREATER THAN 1'-0" WIDE, WITH HORIZ JOINT REINF PLACED IN (2) HORIZONTAL JOINTS APPROXIMATELY 8" APART, IMMEDIATELY ABOVE THE LINTEL AND IMMEDIATELY BELOW THE SILL. EXTEND REINFORCING A MINIMUM OF 2'-0" BEYOND JAMBS OF THE OPENING EXCEPT AT CONTROL JOINTS. SEE PLAN FOR ADDITIONAL REQUIREMENTS.

M14 DO NOT APPLY UNIFORM LOADS TO MASONRY WALLS FOR (3) DAYS.

M15 DO NOT APPLY CONCENTRATED LOADS TO MASONRY WALLS FOR (7) DAYS.

M16 EXTEND ALL VERTICAL WALL REINFORCEMENT TO WITHIN 2" OF TOP OF WALL OR BEAM UNLESS NOTED OTHERWISE. TERMINATE REINFORCING WITH STANDARD ACI 90 DEGREE HOOK AT ALL EXTERIOR WALLS AND INTERIOR BEARING WALLS. NO HOOK IS REQUIRED AT NON-LOADING BEARING WALLS.

M17 GROUT FOR FILLED CELLS SHALL BE PLACED IN CONFORMANCE WITH ACI 530.1-05 AND AS INDICATED BELOW:

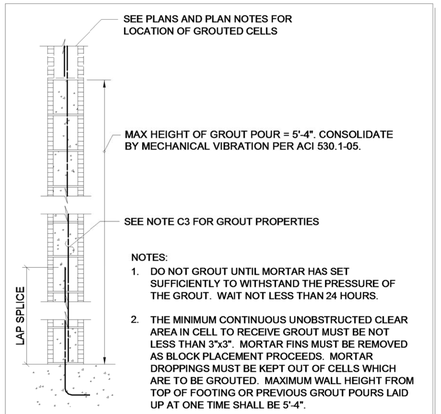

NOTES:
1. DO NOT GROUT UNTIL MORTAR HAS SET SUFFICIENTLY TO WITHSTAND THE PRESSURE OF THE GROUT. WAIT NOT LESS THAN 24 HOURS.
2. THE MINIMUM CONTINUOUS UNOBSTRUCTED CLEAR AREA IN CELL TO RECEIVE GROUT MUST BE NOT LESS THAN 3"x3". MORTAR FINS MUST BE REMOVED AS BLOCK PLACEMENT PROCEEDS. MORTAR DROPPINGS MUST BE KEPT OUT OF CELLS WHICH ARE TO BE GROUTED. MAXIMUM WALL HEIGHT FROM TOP OF FOOTING OR PREVIOUS GROUT POURS LAID UP AT ONE TIME SHALL BE 5'-4".

GROUTING DETAIL

M18 TYPICAL MASONRY DETAILS:

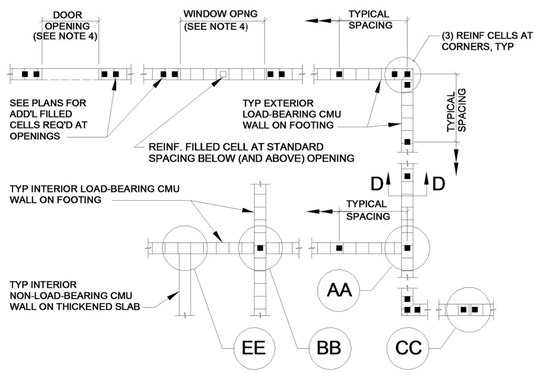

NOTES:
1. SEE ARCH'L AND STRUCTURAL PLANS FOR LOCATING MASONRY CONTROL JOINTS.
2. SEE ARCHITECTURAL DRAWINGS FOR OPENING SIZES AND LOCATIONS.
3. SEE FDN PLAN NOTES FOR REINFORCED FILLED CELL SIZE & SPACING.
4. MULTIPLE FILLED CELLS MAY BE REQUIRED AT JAMBS. ADDITIONAL BARS WILL BE SHOWN ON PLAN(S). IF NONE ARE SHOWN, THEN A SINGLE TYPICAL REINFORCED JAMB CELL IS SUFFICIENT.
5. SEE MASONRY NOTES ON GENERAL NOTE SHEETS FOR HORIZONTAL JOINT REINFORCING AND OTHER ADDITIONAL INFORMATION.

ILLUSTRATIVE PLAN OF VARIOUS CMU WALL CONDITIONS NTS

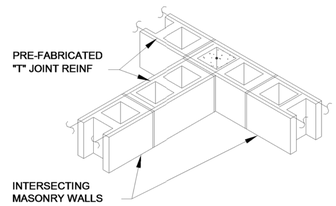

AA WALL INTERSECTION

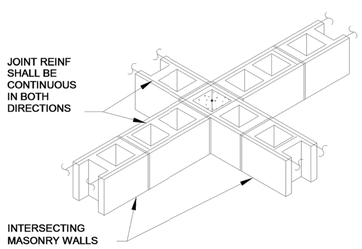

BB WALL INTERSECTION

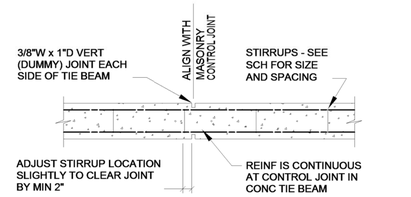

MCJ @ TIE BEAM

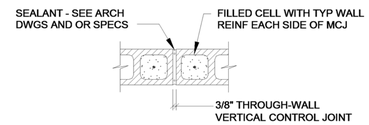

CC MAS CONTROL JOINT (MCJ)

NOTES:
1. THROUGH-WALL JOINT SHALL BE CONTINUOUS WITHOUT INTERRUPTION FROM FOUNDATION TO TOP OF WALL.
2. TERMINATE TYPICAL HORIZONTAL JOINT REINFORCING 2" FROM JOINT.

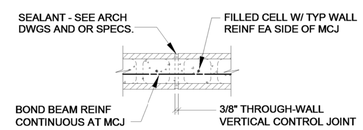

MCJ @ BOND BEAM

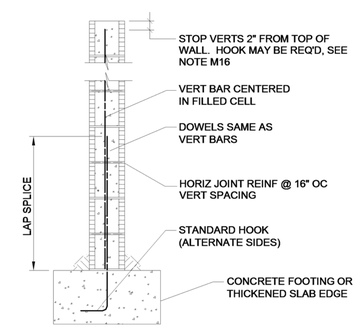

DD TYPICAL FILLED CELL DETAILS

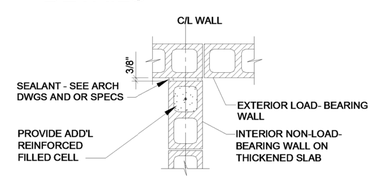

EE INTERSECTION OF LOAD-BRG & NON-LOAD-BRG WALLS

M19 REFER TO ARCHITECTURAL DRAWINGS FOR WATERPROOFING DETAILS AT MASONRY CONTROL JOINTS.

M20 JOB SITE MIXING OF GROUT SHALL NOT BE PERMITTED. SEE SCHEDULE UNDER CONCRETE NOTES FOR COMPRESSIVE STRENGTH AND SLUMP REQUIREMENTS.

M21 MINIMUM LAP SPLICES FOR REINFORCED CMU PER 2010 FBC FOR LRFD DESIGNS.

CMU WALLS WITH CENTERED VERTICAL REINFORCING						
#4	#5	#6	#7	#8	#9 (NOTE 1)	#10 (NOTE 2)
24"	30"	36"	48"	72"	82"	

CMU WALLS WITH EACH FACE VERTICAL REINFORCING						
#4	#5	#6	#7	#8	#9 (NOTE 1)	#10 (NOTE 2)
34"	45"	54"	63"	72"	82"	

NOTES:
1. #9 BARS ARE NOT ALLOWED IN 8" CMU BUT ACCEPTABLE FOR 10" AND 12" CMU. MAXIMUM BAR DIAMETER SHALL NOT EXCEED ONE-EIGHTH OF THE NOMINAL WALL THICKNESS.
2. #10 BARS SHALL BE SPLICED USING MECHANICAL CONNECTORS AND SHALL ONLY BE ALLOWED IN 12" CMU.
3. EPOXY COATED BARS SHALL NOT BE USED.

PRE-FABRICATED METAL PLATE CONNECTED WOOD TRUSSES

WT1 THE ENGINEERED DRAWINGS FOR THE WOOD COMPONENTS ON THE REFERENCED PROJECT SHALL BE REVIEWED FOR COMPATIBILITY WITH THE DESIGN INTENT OF THE STRUCTURE PRIOR TO FABRICATION.

WT2 WOOD TRUSSES SHALL BE DESIGNED, SIGNED, AND SEALED BY A PROFESSIONAL ENGINEER REGISTERED IN THE STATE OF FLORIDA AND FABRICATED IN CONFORMANCE WITH THE "QUALITY CONTROL MANUAL" BY TRUSS PLATE INSTITUTE.

WT3 DESIGN, HANDLING, ERECTION, AND TEMPORARY AND PERMANENT BRACING OF METAL PLATE CONNECTED WOOD TRUSSES SHALL BE IN ACCORDANCE WITH THE FOLLOWING DOCUMENTS:
A. FLORIDA BUILDING CODE 2010, WITH APPLICABLE REVISIONS.
B. NATIONAL FOREST PRODUCTS ASSOCIATION (NFPA): NATIONAL DESIGN SPECIFICATION FOR WOOD CONSTRUCTION (NDS) LATEST EDITION.
C. TRUSS PLATE INSTITUTE (TPI): HIB-91 "HANDLING INSTALLING AND BRACING OF METAL PLATE CONNECTED WOOD TRUSSES", DSB-89 "TEMPORARY BRACING OF METAL PLATE CONNECTED WOOD TRUSSES", ANSI/TPI 1-1995 "NATIONAL DESIGN STANDARD FOR METAL PLATE CONNECTED WOOD TRUSS CONSTRUCTION".

WT4 TRUSS REPAIRS REQUIRED DURING THE PROGRESS OF WORK ARE TO BE DESIGNED BY THE TRUSS ENGINEER WITH REQUIRED MATERIALS AND HARDWARE TO BE PROVIDED BY THE TRUSS MANUFACTURER. FIELD REPAIRS MADE TO TRUSSES ARE TO BE SUPERVISED AND INSPECTED BY THE TRUSS MANUFACTURER'S REPRESENTATIVE. WRITTEN (SIGNED AND SEALED) CONFIRMATION OF REPAIR ACCEPTANCE BY THE TRUSS MANUFACTURER IS REQUIRED ON ALL REPAIRS AND MUST BE SUBMITTED TO ARCHITECT/OWNER FOR ACCEPTANCE. NAIL-ON TYPE TRUSS REPAIR PLATES WILL NOT BE ALLOWED IN THE BOTTOM CHORD TENSION SPLICE.

WT5 SHOP DRAWINGS SHALL BE SUBMITTED WHICH INDICATE DESIGN LOADS, DURATION FACTOR, TRUSS LAYOUT, TRUSS CONFIGURATIONS AND TRUSS-TO-TRUSS CONNECTIONS (USE OF NAIL-ON TYPE TRUSS PLATES FOR FIELD SPLICES IN TENSION MUST BE APPROVED BY ENGINEER OF RECORD). SHOP DRAWINGS SHALL SHOW PIECE MARKS, MEMBER SIZES, GRADES AND CONNECTION DETAILS. PERMANENT BRACING SHALL BE INDICATED IN THE TRUSS LAYOUT DRAWINGS AND SHALL BE SUPPLIED AND INSTALLED BY THE FRAMING CONTRACTOR.

WT6 REVIEW ARCHITECTURAL REFLECTED CEILING PLANS AND SECTIONS FOR SPECIAL CEILING CONDITIONS INCLUDING CEILING TROFFERS, COFFERS, TRAYS, STEPS AND OTHER SPECIAL FEATURES.

WT7 REVIEW MECHANICAL PLANS FOR ROOF TRUSS SUPPORTED EQUIPMENT AND OTHER LOADS SUSPENDED OR SUPPORTED BY TRUSSES FOR LOCATION, LOADS AND PHYSICAL SIZE. TRUSS GIRDER AND MULTI-PLY TRUSS CONFIGURATIONS TO ACCOMMODATE OPENINGS AND SPECIAL LOADING SHALL BE PROVIDED BY THE TRUSS MANUFACTURER, UNLESS NOTED OTHERWISE ON PLANS.

WT8 TRUSSES SHALL BE DESIGNED FOR THE LOADS AS INDICATED ON THE FRAMING PLANS. ALLOWABLE STRESS INCREASES SHALL BE AS IDENTIFIED IN NFPA NDS LATEST EDITION UNLESS SUPERSEDED BY REQUIREMENTS OF THE FLORIDA BUILDING CODE. PRE-FABRICATED WOOD TRUSSES SHALL BE FABRICATED FROM SOUTHERN PINE KILN DRIED #2 GRADE OR BETTER FOR CHORDS AND #3 GRADE OR BETTER FOR WEBS. NO WANE, KNOTS, SKIPS OR OTHER DEFECTS SHALL OCCUR IN THE PLATE CONTACT AREA OR SCARFED AREA OF WEB MEMBERS. PLATES SHALL BE CENTERED ON JOINTS WITH ONE REQUIRED EACH SIDE OF TRUSS.

WT9 BEARING LOCATIONS MUST BE MARKED ON TRUSSES BY FABRICATOR TO ENSURE PROPER INSTALLATION. TRUSS ENGINEER TO UTILIZE ONLY LOAD BEARING WALLS INDICATED ON PLAN FOR BEARING AND TIE-DOWN.

WT10 BOTTOM CHORD BRACING: PROVIDE PERMANENT 2x4 x12' (MIN. LENGTH) LATERAL BRACES AT EACH PANEL POINT OR AS SHOWN, UNLESS CLOSER SPACING IS REQUIRED BY TRUSS ENGINEER'S ANALYSIS. STAGGER SPLICES MIN. 4'-0" AND ATTACH WITH (2) 12d NAILS AT EACH TRUSS. TERMINATE BRACING RUNS AT WALLS, OR WITH DIAGONAL CROSS BRACE EACH END. CONFORM TO TRUSS PLATE INSTITUTE (TPI) HIB-91, "HANDLING, INSTALLING AND BRACING OF METAL PLATE CONNECTED WOOD TRUSSES". SEE FRAMING PLAN FOR ADDITIONAL PERMANENT BRACING OF TRUSSES.

TRUSS DESIGN BASIS

LIVE LOAD (PSF) ON TOP CHORD				DEAD LOAD (PSF)		LATERAL DESIGN BASIS
MEMBER / ROOF SLOPE	TRIBUTARY AREA (SQ FT) 0-200	201-600	OVER 600	TOP CHORD	BOT CHORD	
RISE LESS THAN 4:12	20	16	12	20	6 SEE NOTE #4	WIND VELOCITY: 150 MPH ULTIMATE
RISE 4:12 TO LESS THAN 12:12	20	18	12			IMPORTANCE / USE FACTOR: 1.0
						EXPOSURE: C
						BUILDING CODE: FBC 2014

NOTES:
1. SEE ROOF FRAMING PLAN FOR CONCENTRATED AND/OR SPECIAL LOADS.
2. TRUSSES SUPPORTING OVERFRAMING SHALL HAVE 5 PSF ADDED TO TOP CHORD DEAD LOAD.
3. AVAILABLE DEAD LOAD TO RESIST WIND UPLIFT FORCES: 5 PSF.
4. ADD BOTTOM CHORD LIVE LOAD = 10 psf.

KIRK CURTIS MUNDY HUNNICUTT ASSOCIATES ARCHITECTS INC.
KCMH architects
JONATHAN A. KIRK, AIA, LEED AP
JOHN R. CURTIS, AIA
BENJAMIN F. MUNDY, JR., AIA, LEED AP
C. KEITH HUNNICUTT, AIA
NEIL G. MELBY, AIA, LEED AP
1036 SOUTH FLORIDA AVENUE | LAKELAND, FLORIDA | 33803-1118
TELEPHONE 863.688.8882 | FAX 863.688.8361 | LICENSE NO. AA C000772 | kcmharch.com

AR0011121

C. KEITH HUNNICUTT

HIGHLANDS PARK ESTATES CLUBHOUSE
HIGHLANDS PARK ESTATES
91 DEERGLEN BLVD.
LAKE PLACID, FL

STRUCTURAL NOTES

REVISIONS

CONSTRUCTION 6/19/17

APPROVAL 7/21/17

REVIEW

CHECKED BY

S002

16031

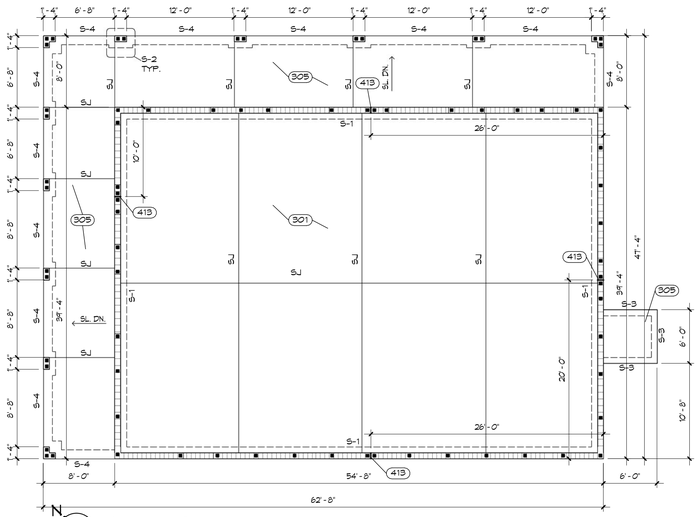

FOUNDATION PLAN
1/8" = 1'-0"

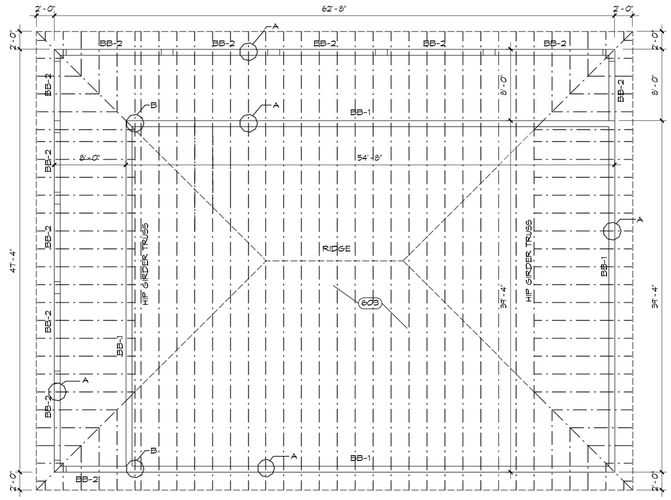

ROOF FRAMING PLAN
1/8" = 1'-0"

PRE-ENGINEERED TRUSS NOTES

A. All trusses shall be designed and certified by truss manufacturer's Florida registered engineer. All truss to truss connections shall be designed and specified by the truss manufacturer.
B. Truss manufacturer shall verify all dimensions and submit shop drawings to Architect for review.
C. See Architectural Building Sections, Structural Framing Plans for roof pitches (typ).
D. See Architectural Building Sections, Wall Sections and Structural Framing Plans for bearing heights.
E. Truss spacing shall be 24" o.c.
F. Secure each truss at each bearing point with anchors that meet or exceed the reactions found in the truss manufacturer's calculations.
G. Refer to Architectural Drawings for framed down ceilings, volume ceilings and other interior treatments.
H. Roof sheathing shall be 5/8" thick oriented strand board (OSB) with 32/16 span rating connected to wood trusses w/8d ring shank nails at 6" o.c. typ. all locations (UNO).
I. Provide equal to Simpson Strong-Tie, PSCL (panel sheathing clips) at all unsupported butted sheathing panels at mid span between support framing, but no more than 12" o.c.
J. Truss manufacturer shall design all temporary and permanent bracing for truss system.

S101 Sheet Notes / Numbers May Not Be Consecutive.

201	Finished grade - typical. Slope down from interior slab.
202	6 ft. high chain link fence.
301	4 in. concrete slab with 6 x 6 x W1.4 x W1.4 WWF reinf. over continuous vapor barrier on termite treated well compacted fill.
305	4 in. thick poured concrete slab. Reinforce with 6x6xW1.4xW1.4WWF over continuous vapor barrier on termite treated and well compacted subgrade. Broom finish. Slope down from interior slab.
306	Typical turn down slab thickened edge. Reinforce with 1-#5 cont.
308	Poured concrete footing. Reinforce with 2 #5 dia. - continuous.
310	5 ft. x 6 ft. x 4 in. thick poured concrete stoop. Reinforce with 6 x 6 x W1.4 x W1.4 WWF. Broom finish. Slope away from door threshold. Provide 8 in. thickened edge with 1-#5 diameter; three sides.
401	8x8x16 CMU with horizontal joint reinforcement at 16 in. o.c.
409	8 in. CMU knockout lintel block. Reinforce with 1-#5 and fill with concrete.
410	8 in. precast concrete lintel. Reinforce with #5 rebar and fill with concrete. See Structural Drawings.
412	Control joint in stucco to align with masonry control joint.
413	Control joint thru masonry wall.
502	#5 horizontal rebar in grout filled tie beam.
503	#5 vertical at filled cell. Overlap 48 bar diameters with vertical rebar and overlap 6 in. hook at horizontal rebar.
504	#5 vertical rebar in each grout filled cell.
603	Pre-engineered wood trusses at 2 ft. o.c.
616	Cement board fascia. Paint.
701	Fiberglass shingle roof over 30 lb. felt.
711	Extend roof framing; shingles; soffit and fascia materials over exterior door.
801	Aluminum single hung window - typical.
906	1/2 in. thick stucco over CMU. Sand finish and paint.

HURRICANE ANCHOR SCHEDULE

MARK	DESCRIPTION	LOCATION
A	SIMPSON- HETAL 16	TYPICAL TRUSS BEARING
B	SIMPSON- HETAL 16	HIP GIRDER TRUSS BEARING

SEE SPECIFICATION SECTION 01230 - ALTERNATES
FOR DESCRIPTION OF REQUIRED ALTERNATE WORK

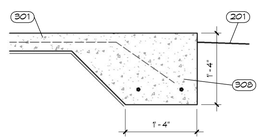

S-1 FOOTING DETAIL
3/4" = 1'-0"

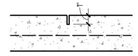

SJ- SAWN JOINT

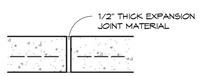

EJ- EXPANSION JOINT

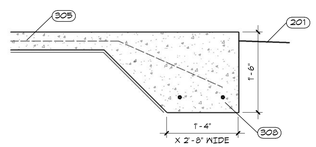

S-2 FOOTING DETAIL
3/4" = 1'-0"

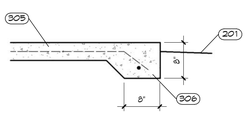

S-3 FOOTING DETAIL
3/4" = 1'-0"

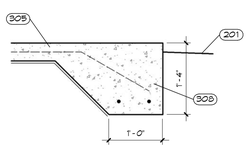

S-4 FOOTING DETAIL
3/4" = 1'-0"

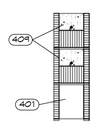

SECTION VIEW
BB-1 BEAM
3/4" = 1'-0"

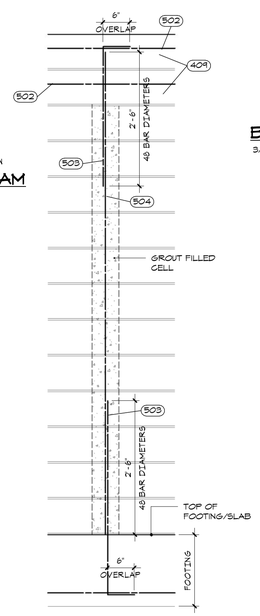

ELEVATION VIEW OF TYPICAL FILLED VERTICAL CMU CELL

BB-2 BEAM
3/4" = 1'-0"

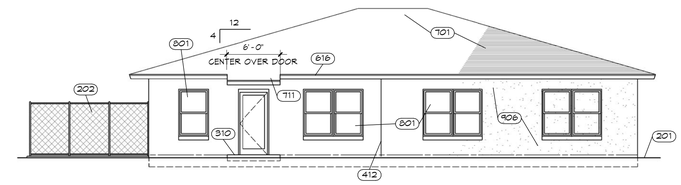

ALTERNATE EAST ELEVATION
1/8" = 1'-0"

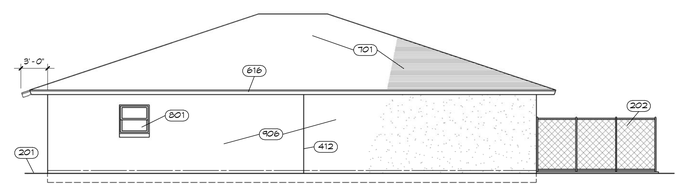

ALTERNATE WEST ELEVATION
1/8" = 1'-0"

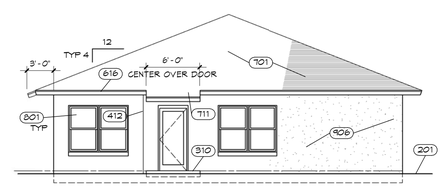

ALTERNATE NORTH ELEVATION
1/8" = 1'-0"

ALTERNATE SOUTH ELEVATION
1/8" = 1'-0"

KIRK CURTIS MUNDY HUNNICUTT ASSOCIATES ARCHITECTS INC.
1036 SOUTH FLORIDA AVENUE | LAKELAND, FLORIDA | 33803-1118
TELEPHONE 863.688.8882 | FAX 863.688.8361 | LICENSE NO. AA C000772 | kcmharch.com
KCMH architects
JONATHAN A. KIRK, AIA, LEED AP
JOHN R. CURTIS, AIA
BENJAMIN F. MUNDY, JR., AIA, LEED AP
C. KEITH HUNNICUTT, AIA
NEIL G. MELBY, AIA, LEED AP

AR0011121
C. KEITH HUNNICUTT

HIGHLANDS PARK ESTATES CLUBHOUSE
HIGHLANDS PARK ESTATES
91 DEERGLEN BLVD.
LAKE PLACID, FL
FOUNDATION AND ROOF FRAMING PLANS

REVISIONS

CONSTRUCTION 8/19/17
APPROVAL 7/21/17
REVIEW
CHECKED BY

S101

16031

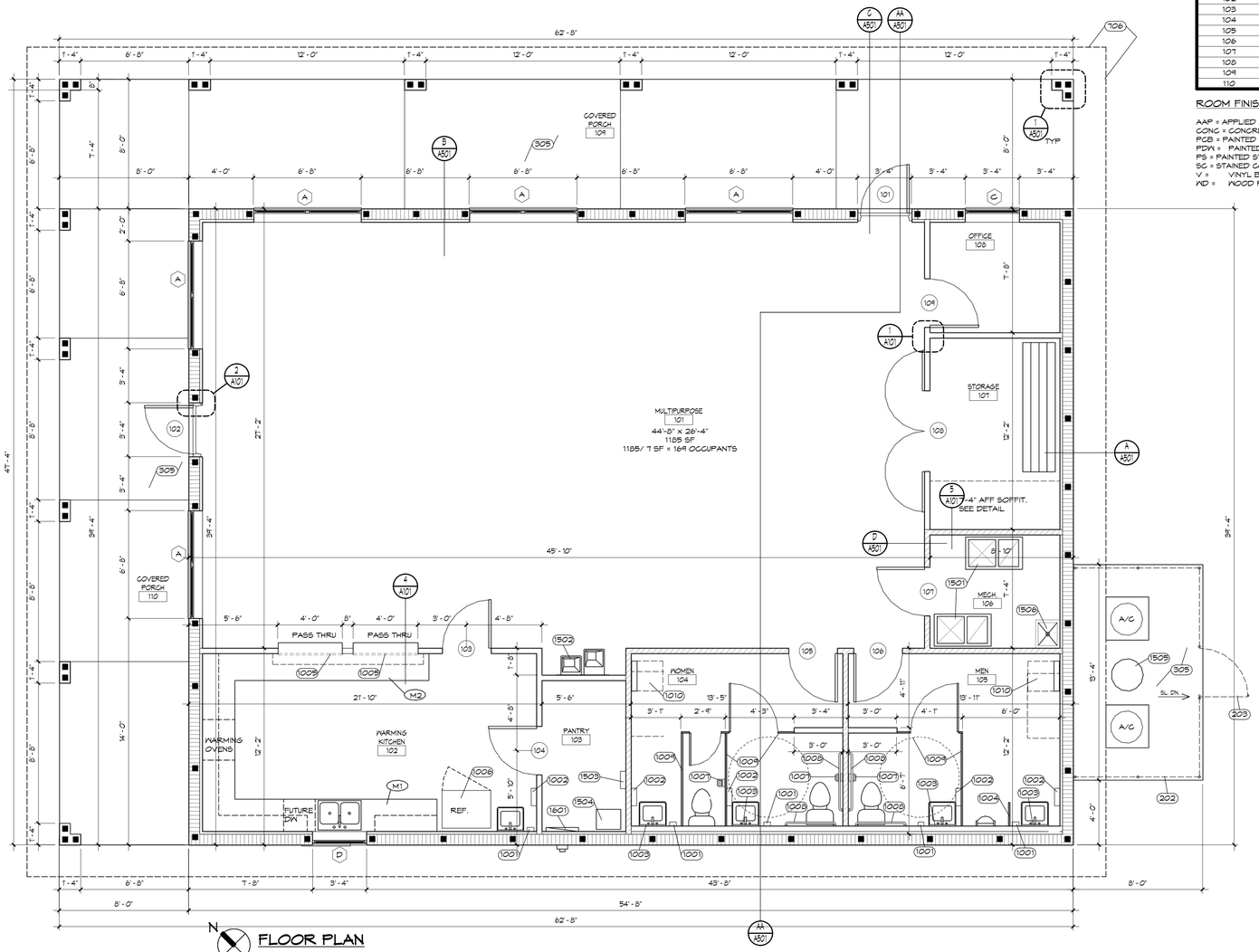

FLOOR PLAN

1/4" = 1'-0"

Room Finish Schedule						
Room Number	Room Name	Floor	Base	Wall	Ceiling	Remarks
101	MULTIPURPOSE	SC	V	PDW	PDW/AAP	
102	WARMING KITCHEN	SC	V	PDW	PDW	
103	PANTRY	SC	V	PDW	PDW	
104	WOMEN	SC	V	PDW	PDW	
105	MEN	SC	V	PDW	PDW	
106	MECH.	SC	V	PDW	PDW	
107	STORAGE	SC	V	PDW	PDW	
108	OFFICE	SC	V	PDW	PDW	
109	COVERED PORCH	CONC	-	PS	PCB	
110	COVERED PORCH	CONC	-	PS	PCB	

ROOM FINISH SCHEDULE ABBREVIATIONS

AAP = APPLIED ACOUSTICAL PANEL
CONC = CONCRETE
PCB = PAINTED CEMENT BOARD
PDW = PAINTED DRYWALL
PS = PAINTED STUCCO
SC = STAINED CONCRETE
V = VINYL BASE
WD = WOOD PAINTED

A101 Sheet Notes / Numbers May Not Be Consecutive.

202 6 ft. high chain link fence.
203 3 ft. wide x 6ft. high chain link gate with lockable hasp.
305 4 in. thick poured concrete slab. Reinforce with 6x6xW1.4xW1.4WWF over continuous vapor barrier on termite treated and well compacted subgrade. Broom finish. Slope down from interior slab.
603 Pre-engineered wood trusses at 2 ft. o.c.
604 2x4.
608 Upper wall cabinet. Construct of 3/4 in. plywood. 12 in. deep with 2 adjustable shelves. Cover with laminated plastic.
609 Drawer. Construct with 1/2 in. solid stock and 1/4 in. hardboard bottom. Provide full depth of cabinet. Cover 3/4 in. plywood face with laminated plastic.
611 3/4 in. plywood back and side splash. Cover with laminated plastic.
612 24 in. deep base cabinet with one adjustable shelf. Construct of 3/4 in. plywood. Cover with laminated plastic.
613 3/4 in. plywood support panel/ end panel at 3 ft. O in. o.c. max.
614 3/4 in. plywood countertop and 4 in. high backsplash. Cover with laminated plastic.
621 2-2x8 beam.
622 2 layers 3/4 in. thick plywood countertop. Cover with laminated plastic.
623 Continuous solid stock wood edge. Cover with laminated plastic.
624 6 in. deep drawer. Construct of solid stock wood.
625 3/4 in. thick plywood drawer front and/or door front. Cover with laminated plastic.
626 4 in. high x 1 1/2 in. p.t. wood base.
627 3/4 in. thick plywood cabinet construction-typ.
628 3/4 in. thick adjustable plywood shelf.
705 1 in. thick rigid insulation.
706 Line of roof overhang.
709 Caulk.
804 Solid core wood door in hollow metal frame.
805 Hollow metal door and frame.
806 Roll up counter shutter.
901 5/8 in. drywall on 1x2 p.t. wd. furring 16 in. o.c.
902 5/8 in. drywall on 1x2 p.t. wd. furring 16 in. o.c.
903 Continuous vinyl base.
906 1/2 in. thick stucco over CMU. Sand finish and paint.
907 2x4's - 16 in. o.c. wood stud partition with 5/8 in. gypsum drywall both sides. Provide continuous 2x4 top sill and continuous p.t. 2x4 bottom sill. Terminate partition at underside of roof trusses. Typical.
911 Vinyl base over millwork base.
914 5/8" drywall finished on 2x4 wood framing 16in. O.C.
1001 Wall mounted soap dispenser with bottom at 42 in. AFF - typical at each lavatory. Set 4 in. clear from adjacent mirror (as applicable).
1002 Wall mounted paper towel dispenser with bottom at 42 in. AFF - typical at each lavatory.
1003 Framed 24 in. x 36 in. mirror centered over lavatory - typical. Mount with bottom of frame at 39 in. AFF.
1004 LP finish urinal screen. Use standard toilet compartment (55 in. high) panel as screen.
1005 Roll up counter shutter.
1006 Refrigerator / freezer with ice maker by Owner (NIC).
1007 Wall mounted toilet tissue dispenser - typical at each water closet. Mount with centerline at 24 in. AFF and 26 in. (max.) from fixture wall.
1008 Provide pair of horizontal grab bars adjacent to water closet - typical in each H/C toilet stall. Provide 42 in. long grab bar on side wall located 12 in. from rear wall; and 36 in. bar on rear wall set 6 in. out of corner of room. Mount both at 34 in. AFF to centerline.
1009 LP finished toilet partition assembly - typical.
1010 Wall mounted baby changing table.
1501 HVAC air handler. See Mechanical Drawings.
1502 Electric water cooler. See Plumbing Drawings.
1503 Instant hot water heater.
1504 Water softener.
1505 Domestic water storage tank.
1506 Janitors sink. See plumbing drawings.
1508 A/C duct. See mechanical drawings.
1601 Electrical power panel. See Electrical Drawings.

WALL LEGEND

8x8x16 CMU WITH HORIZONTAL JOINT REINFORCEMENT AT 16" O.C. PROVIDE VERTICAL REINFORCED CELLS AS SHOWN. REFER TO DETAILS AND SCHEDULES FOR FINISHES.

INTERIOR WALL FRAMING- 2x4 STUDS AT 16" O.C. WITH 5/8" THICK DRYWALL BOTH SIDES.

WALLS TO RECEIVE ACOUSTICAL BATT INSULATION FROM FLOOR TO CELING

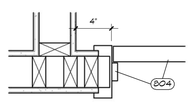

1 A101 JAMB AT INTERIOR DOOR

1 1/2" = 1'-0"

Door Schedule													
Door No.	Ext.	Int.	Frame Material	Frame Type	Hdw. Group	U.L Rating	No. in Frame	Door Type	Mat.	Height	Width	Thickness	Comments
101	X		HM	F1	1	-	1	FG	HM	84"	36"	1 3/4"	
102	X		HM	F1	1	-	1	FG	HM	84"	36"	1 3/4"	
103		X	HM	F2	2	-	1	F	WD	80"	36"	1 3/4"	
104		X	HM	F2	2	-	1	F	WD	80"	36"	1 3/4"	
105		X	HM	F2	3	-	1	F	WD	80"	36"	1 3/4"	
106		X	HM	F2	3	-	1	F	WD	80"	36"	1 3/4"	
107		X	HM	F2	2	-	1	F	WD	80"	36"	1 3/4"	
108		X	HM	F2	2	-	2	F	WD	80"	30"	1 3/4"	
109		X	HM	F2	2	-	1	F	WD	80"	36"	1 3/4"	

DOOR SCHEDULE ABBREVIATIONS

HM = HOLLOW METAL
STL = STEEL
WD = WOOD

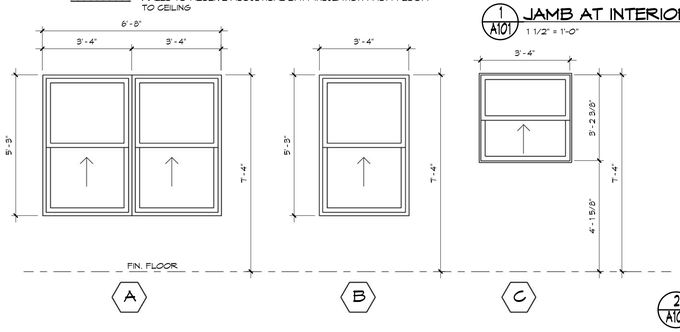

WINDOW ELEVATIONS

3/8" = 1'-0"

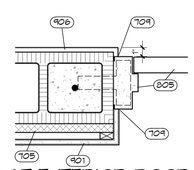

2 A101 JAMB AT EXTERIOR DOOR

1 1/2" = 1'-0"

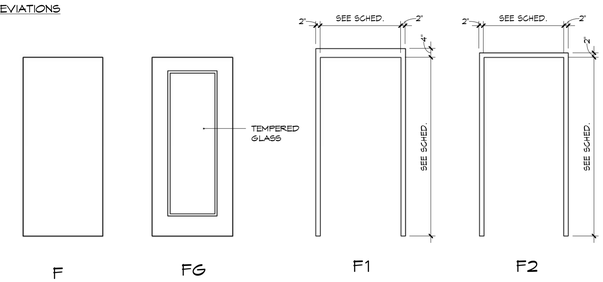

DOOR AND FRAME ELEVATIONS

3/8" = 1'-0"

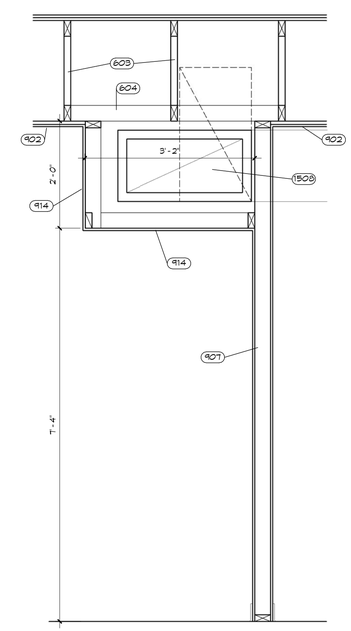

5 A101 SECTION THRU SOFFIT

3/4" = 1'-0"

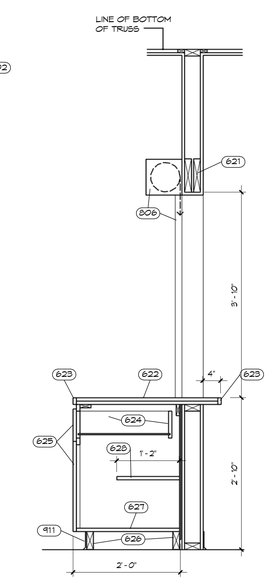

4 A101 SECTION THRU ROLL UP SHUTTER

3/4" = 1'-0"

KCMH architects
KIRK CURTIS MUNDY HUNNICUTT ASSOCIATES ARCHITECTS INC.
JONATHAN A. KIRK, AIA, LEED AP
JOHN R. CURTIS, AIA
BENJAMIN F. MUNDY, JR., AIA, LEED AP
C. KEITH HUNNICUTT, AIA
NEIL G. MELBY, AIA, LEED AP
1036 SOUTH FLORIDA AVENUE | LAKELAND, FLORIDA | 33803-1118
TELEPHONE 863.688.8861 | FAX 863.688.8361 | LICENSE NO. AA C000772 | kcmharch.com

ARC0111121

C. KEITH HUNNICUTT

HIGHLANDS PARK ESTATES CLUBHOUSE
HIGHLANDS PARK ESTATES
91 DEERGLEN BLVD.
LAKE PLACID, FL

FLOOR PLAN/ SCHED/LIES/ MILLWORK ELEVATIONS

REVISIONS

CONSTRUCTION 6/19/17
APPROVAL 7/21/17
REVIEW
CHECKED BY

A101

16031

7/24/2017 8:28:09 AM C:\16031\16031_Jeff.rvt

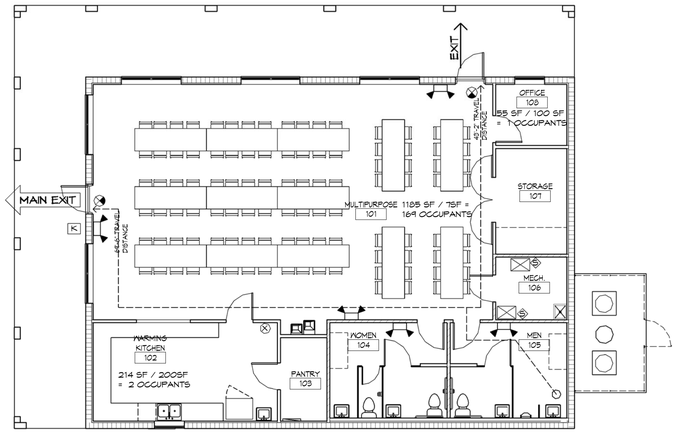

LIFE SAFETY PLAN

1/8" = 1'-0"

NOTE: A FIRE ALARM SYSTEM IS NOT REQUIRED FOR THIS PROJECT PER NFPA 101, 12.3.4.

NOTE: A FIRE SPRINKLER SYSTEM IS NOT REQUIRED FOR THIS PROJECT PER NFPA 101, 12.3.5.1.

LIFE SAFETY LEGEND

(THIS LEGEND APPLIES TO ALL LIFE SAFETY PLANS)

- MAIN EXIT — MAIN BUILDING EXIT
- EXIT — ROOM OR AREA EXIT
- FIRE EXTINGUISHER (Wall bracket mounted)
- FIRE EXTINGUISHER IN SEMI-RECESSED CABINET
- SMOKE DETECTOR
- HEAT DETECTOR
- KNOX-BOX
- SURFACE MTD. EMERGENCY LIGHT
- EXIT LIGHT

EGRESS REQUIREMENTS	FBC REQUIREMENTS	REFERENCE
OCCUPANCY GROUP = A2 - ASSEMBLY (NON-SPRINKLED) 169 + 2 + 1 = 172 OCCUPANTS	172 OCCUPANTS	TABLE 1004.1.2
EXITS REQUIRED PER FLOOR	2	1015.1
MAX. EXIT ACCESS TRAVEL DISTANCE	200 FEET	TABLE 1016.2
MAX. DEAD END CORRIDOR	20 FEET	1018.4
MAX. COMMON PATH OF TRAVEL	75 FEET	TABLE 1014.3
MINIMUM EGRESS DOOR CLEAR WIDTH	32 INCHES	1008.1.1
MINIMUM AISLE WIDTH	42 INCHES	1028.9.1
MINIMUM CORRIDOR WIDTH	44 INCHES	TABLE 1018.2
MINIMUM STAIR WIDTH	54 INCHES	1005.3.1
EGRESS WIDTH PER PERSON (HORIZONTAL EGRESS) .2" x 172 OCCUPANTS = 35" REQUIRED EGRESS WIDTH 72" EGRESS WIDTH PROVIDED	.2"/OCCUPANT	1005.3.2
EGRESS WIDTH PER PERSON (VERTICAL EGRESS)	.3"/OCCUPANT	1005.3.1

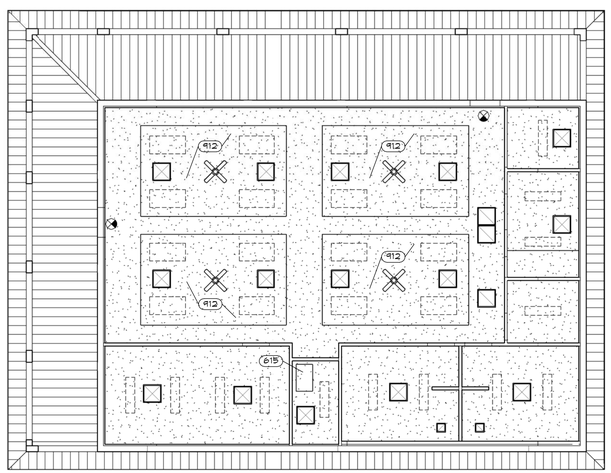

REFLECTED CEILING PLAN

1/8" = 1'-0"

CEILING HEIGHT IS 9'-3" (NOMINAL) AFF UNLESS NOTED OTHERWISE.

REFLECTED CEILING PLAN LEGEND

(THIS LEGEND APPLIES TO ALL CEILING PLANS)

- GYPSUM BOARD CEILING
- CEMENT BOARD SOFFIT
- SURFACE MOUNTED CEILING LIGHT FIXTURE
- SURFACE MOUNTED EXIT LIGHT
- SMOKE DETECTOR
- HEAT DETECTOR
- EXHAUST AIR DEVICE
- A/C SUPPLY DIFFUSER
- A/C RETURN GRILLE/ EXHAUST
- PARTITIONS TERMINATING AT BOTTOM OF TRUSSES
- CEILING FAN

NORTH ELEVATION

1/8" = 1'-0"

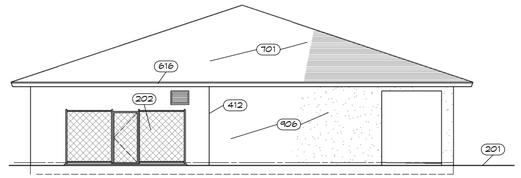

SOUTH ELEVATION

1/8" = 1'-0"

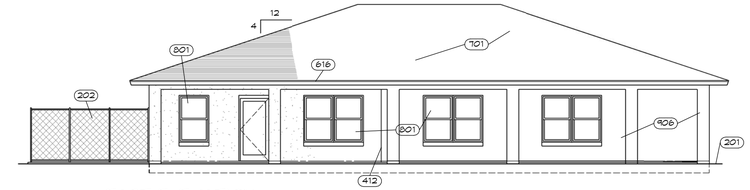

EAST ELEVATION

1/8" = 1'-0"

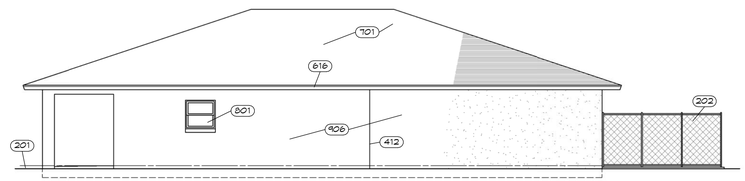

WEST ELEVATION

1/8" = 1'-0"

A201 Sheet Notes/ Numbers May Not Be Consecutive.

201	Finished grade - typical. Slope down from interior slab.
202	6 ft. high chain link fence.
404	CMU column finish with 1/2 in. thick stucco. Sand finish and paint.
412	Control joint in stucco to align with masonry control joint.
608	Upper wall cabinet. Construct of 3/4 in. plywood. 12 in. deep with 2 adjustable shelves. Cover with laminated plastic.
614	3/4 in. plywood countertop and 4 in. high backsplash. Cover with laminated plastic.
615	22 in. x 36 in. 3/4 in. thick plywood attic access panel.
616	Cement board fascia. Paint.
619	24 in. deep base cabinet with one adjustable shelf and drawer. Construct of 3/4 in. thick plywood. Cover all exposed surfaces with laminated plastic.
620	24 in. deep base cabinet with three full depth drawers. Construct of 3/4 in. thick plywood. Cover all exposed surfaces with laminated plastic.
630	Construct base cabinet to allow easy removal ATA future time to accommodatea dishwasher.
701	Fiberglass shingle roof over 30 lb. felt.
707	Continuous roof ridge vent.
801	Aluminum single hung window - typical.
804	Solid core wood door in hollow metal frame.
903	Continuous vinyl base.
906	1/2 in. thick stucco over CMU. Sand finish and paint.
911	Vinyl base over millwork base.
912	Acoustical panel. Attach directly to drywall ceiling.
1005	Roll up counter shutter.
1101	Refrigerator with ice maker.
1102	Built-in wall oven. Verify dimensions.
1103	Countertop microwave oven.
1507	Handwash sink. see Plumbing Drawings.
1602	Electric outlet. See Electrical Drawings.

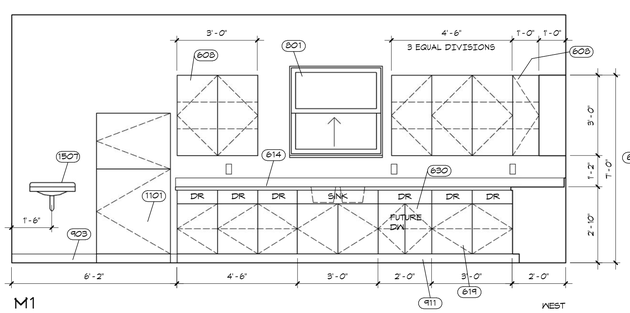

M1 WEST

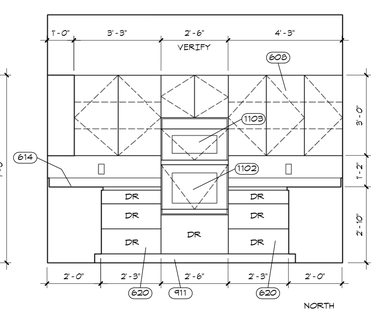

NORTH

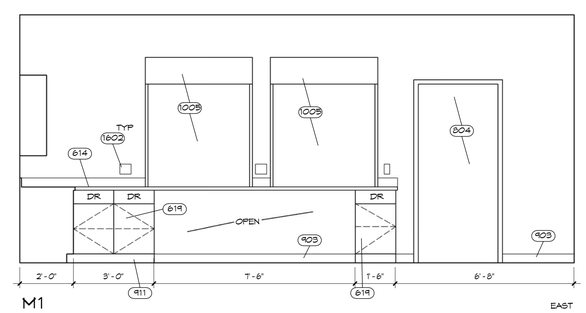

M1 EAST

MILLWORK ELEVATIONS

3/8" = 1'-0"

7/24/2017 8:28:47 AM C:\16031\16031_Jeff.rvt

KCMH architects

KIRK CURTIS MUNDY HUNNICUTT
ASSOCIATES ARCHITECTS INC.

JONATHAN A. KIRK, AIA, LEED AP
JOHN R. CURTIS, AIA
BENJAMIN F. MUNDY, JR., AIA, LEED AP
C. KEITH HUNNICUTT, AIA
NEIL G. MELBY, AIA, LEED AP

1036 SOUTH FLORIDA AVENUE | LAKELAND, FLORIDA | 33803-1118
TELEPHONE 863.688.8861 | FAX 863.688.8361 | LICENSE NO. AA C000772 | kcmharch.com

AR0011121

C. KEITH HUNNICUTT

HIGHLANDS PARK ESTATES CLUBHOUSE
HIGHLANDS PARK ESTATES
91 DEERGLEN BLVD.
LAKE PLACID, FL

REFLECTED CEILING/ LIFE SAFETY/ ROOF PLANS

REVISIONS

CONSTRUCTION 6/19/17

APPROVAL 7/21/17

REVIEW

CHECKED BY

A201

16031

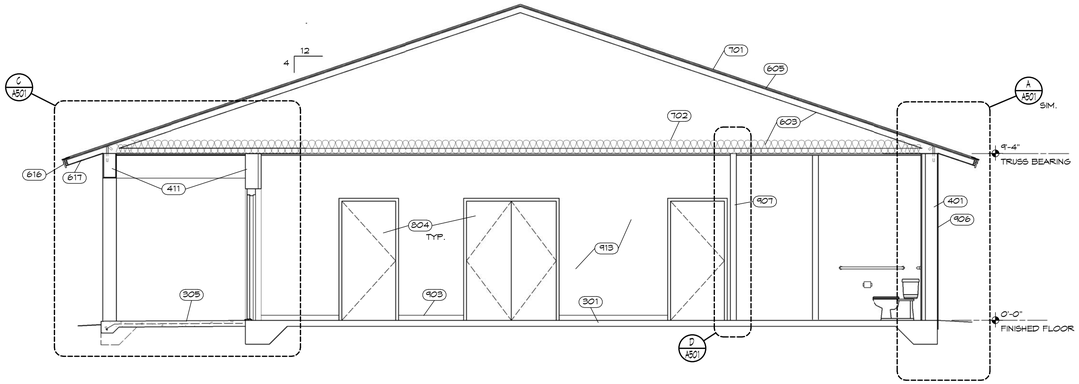

AA A501 BUILDING SECTION
1/4" = 1'-0"

A501 Sheet Notes/ Numbers May Not Be Consecutive.

201 Finished grade - typical. Slope down from interior slab.
202 Finished grade - typical. Slope down from building slab.
301 4 in. concrete slab with 6 x 6 x W1.4 x W1.4 WWF reinf. over continuous vapor barrier on termite treated well compacted fill.
302 1/2 in. thick stucco. Sand finish and paint.
304 Precast concrete window sill. Cover with 1/2 in. thick stucco and paint.
305 4 in. thick poured concrete slab. Reinforce with 6x6xW1.4xW1.4WWF over continuous vapor barrier on termite treated and well compacted subgrade. Broom finish. Slope down from interior slab.
321 Continuous poured concrete thickened edge footing. Reinforce with 4-#6 dia. top and bottom.
401 8x8x16 CMU with horizontal joint reinforcement at 16 in. o.c.
402 2 course bond beam fill w/ concrete w/ 1#5 cont. ea. course.
403 Precast lintel fill w/ concrete w/ 1#5 cont. See Structural Drawings.
404 CMU column finish with 1/2 in. thick stucco. Sand finish and paint.
405 Vertical cmu cell. Reinforce with 1-#5 and fill with concrete grout. See Structural Drawings.
406 Precast concrete sill - typical.
407 8 in. knockout CMU block -typical at sill of window openings. Cut as needed to accommodate window height. Fill solid with concrete and reinf. per Structural Dwgs.
411 CMU beam. See Structural Details.
509 Metal wall girt by PEMB.
510 Pre-engineered metal building frame.
512 Soffit and fascia framing: 3 5/8 in. 25 gauge galvanized metal studs 16 in. o.c. with 1/2 in. gypsum board finish.
531 3 5/8 in x 16 ga galvanized metal studs 16 in. o.c.
603 Pre-engineered wood trusses at 2 ft. o.c.
605 5/8 in. plywood roof deck. Fasten to roof trusses with 8d ring shank nails at 6 in. o.c. along perimeter edges and 12 in. o.c. at intermediate supports. See Structural Drawings.
606 1x4 PT wood furring; continuous.
607 Hurricane strap at each truss bearing. See Structural Drawings.
616 Cement board fascia. Paint.
617 Ventilated cement board soffit.
618 Solid cement board soffit on 1x2 16 in. o.c. Paint.
619 Raised platform. See Details.
629 1.65 in. x .75 in. fiber cement trim. Paint.
701 Fiberglass shingle roof over 30 lb. felt.
702 R-30 batt insulation.
705 1 in. thick rigid insulation.
708 Insulation hold back - typical. Maintain 1 in. clear (min.) below roof sheathing.
710 Continuous prefinished aluminum drip flashing. Color as selected.
717 Prefinished metal gutter and downspout system by PEMB.
718 Prefinished metal roof panel by PEMB.
719 Fiberglass batt roof insulation by PEMB.
726 Continuous prefinished metal eave trim by PEMB.
731 4 in. (nominal) thick acoustical batt insulation surrounding mechanical mezzanine including floor.
801 Aluminum single hung window - typical.
802 Aluminum threshold as scheduled.
804 Solid core wood door in hollow metal frame.
805 Hollow metal door and frame.
901 5/8 in. drywall on 1x2 p.t. wd. furring 16 in. o.c.
902 5/8 in. drywall on 1x2 p.t. wd. furring 16 in. o.c.
903 Continuous vinyl base.
906 1/2 in. thick stucco over CMU. Sand finish and paint.
907 2x4's - 16 in. o.c. wood stud partition with 5/8 in. gypsum drywall both sides. Provide continuous 2x4 top sill and continuous p.t. 2x4 bottom sill. Terminate partition at underside of roof trusses. Typical.
909 Provide continuous stucco stop and caulk window or door frame.
910 Marble sill - typical.
911 Drywall clad cloud hung from structure above.
912 Continuous vinyl base.
913 Drywall Finish. Paint.
1506 Continuous HVAC ductwork. Verify dimensions.
1507 Electric water cooler. See Plumbing Drawings.
1605 Platform light fixture as selected by owner.

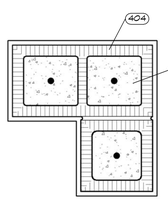

1 A501 SECTION THRU CORNER COLUMN
1 1/2" = 1'-0"

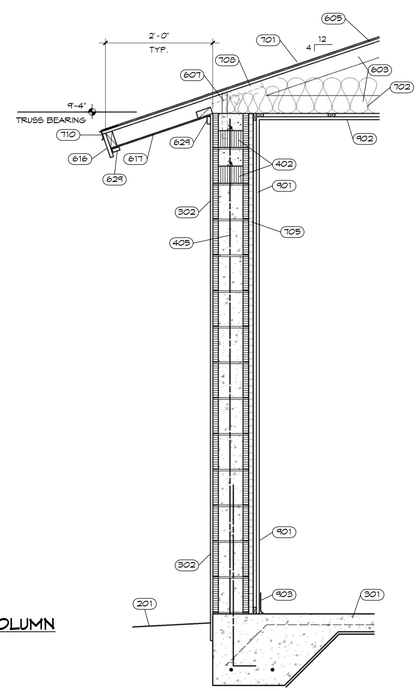

A A501

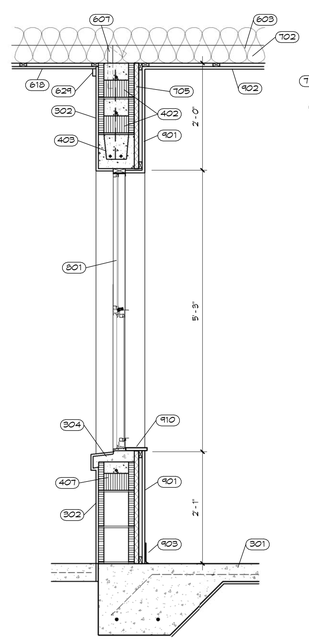

B A501

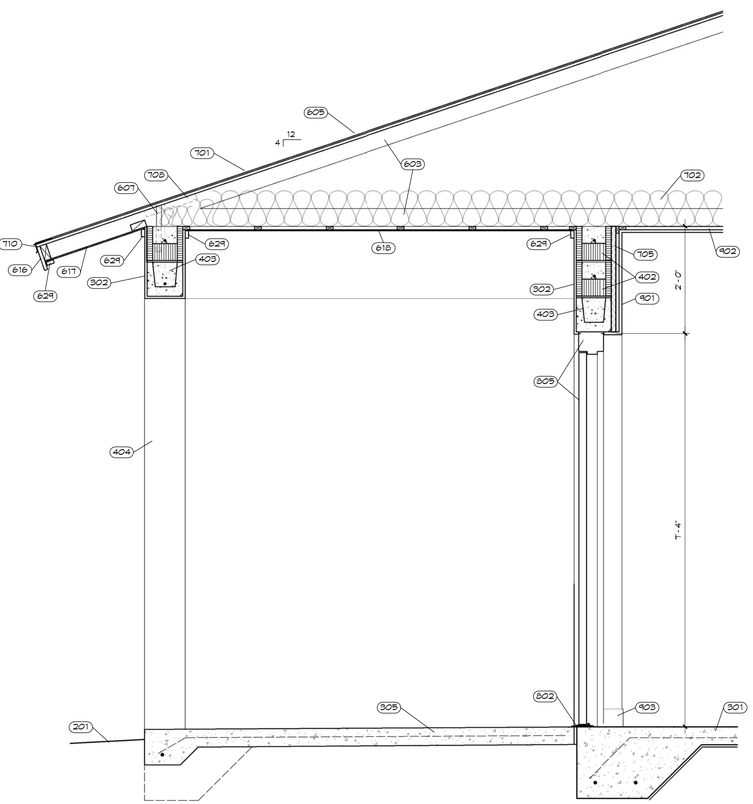

C A501

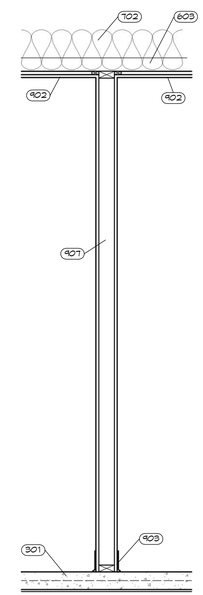

D A501

7/24/2017 8:29:55 AM C:\16031\16031_Jeff.rvt

KCMH architects
KIRK CURTIS MUNDY HUNNICUTT
ASSOCIATES ARCHITECTS INC.
JONATHAN A. KIRK, AIA, LEED AP
JOHN R. CURTIS, AIA
BENJAMIN F. MUNDY, JR., AIA, LEED AP
C. KEITH HUNNICUTT, AIA
NEIL G. MELBY, AIA, LEED AP
1036 SOUTH FLORIDA AVENUE | LAKELAND, FLORIDA | 33803-1118
TELEPHONE 863.688.8861 | FAX 863.688.8361 | LICENSE NO. AA C000772 | kcmharch.com
AR0011121
C. KEITH HUNNICUTT

HIGHLANDS PARK ESTATES CLUBHOUSE
HIGHLANDS PARK ESTATES
91 DEERGLEN BLVD.
LAKE PLACID, FL
WALL SECTIONS

REVISIONS

CONSTRUCTION 8/19/17
APPROVAL 7/21/17
REVIEW
CHECKED BY

A501

16031

MECHANICAL GENERAL NOTES:

1. IN GENERAL, PLANS AND DIAGRAMS ARE SCHEMATIC ONLY AND SHOULD NOT BE SCALED.

2. THE INTENT OF THE MECHANICAL NOTES ON THESE DRAWINGS IS TO CLARIFY THE SCOPE OF WORK AND ALERT THE CONTRACTOR OF EXISTING CONDITIONS. CONTRACTOR TO VISIT SITE AND VERIFY ALL CLEARANCES BEFORE FABRICATION OF DUCTWORK AND PROVIDE ADDITIONAL OFFSET AND/OR CHANGES IN DUCT SIZES TO MEET FIELD CONDITIONS AND COORDINATE WITH ELECTRICAL, PLUMBING AND FIRE PROTECTION SUBCONTRACTOR BEFORE ANY CONSTRUCTION WORK.

3. BIDDERS SHALL VISIT THE SITE AND FAMILIARIZE THEMSELVES WITH ALL CONDITIONS INVOLVING THE WORK.

4. SHOULD ANY CONFLICTS ARISE, THE CONTRACTOR SHALL NOTIFY THE ENGINEER OF THE CONFLICT BEFORE ANY CHANGES ARE MADE. THE CONTRACTOR SHALL OBTAIN WRITTEN APPROVAL BEFORE PROCEEDING WITH ANY CHANGES.

4A. DEVIATIONS FROM THE CONTRACT DOCUMENTS MAY REQUIRED AS–BUILT DRAWINGS. IF REQUIRED, DURING FIELD INSPECTIONS AS–BUILT DRAWINGS PRODUCED BY OUR OFFICE WILL BE BILLED HOURLY.

5. THE GENERAL CONTRACTOR IS RESPONSIBLE FOR ALL TRADES INSTALLATION SCHEDULES. FIXED WORK SUCH AS DUCTWORK AND PLUMBING SHALL BE INSTALLED PRIOR TO ANY TRADE WORK THAT CAN BE EASILY RELOCATED OR OFFSET SUCH AS ELECTRICAL CONDUITS, SMALL WATER AND GAS LINES ETC.

6. ALL AIR CONDITIONING WORK SHALL NOT INTERFERE WITH CLEARANCES REQUIRED FOR GENERAL AND MECHANICAL CONSTRUCTION. SHOULD AIR CONDITIONING WORK BE INSTALLED WHICH INTERFERES WITH THE WORK OF OTHER CONTRACTORS. SUCH WORK SHALL BE CHANGED AT NO ADDITIONAL COST.

7. ALL WORK COVERED IN THIS SECTION SHALL BE CONSTRUCTED IN ACCORDANCE WITH THE LATEST PUBLISHED STANDARDS OF ASHRAE, AND NFPA.

8. ALL MECHANICAL WORK SHALL MEET ALL THE REQUIREMENTS OF THE "FLORIDA BUILDING CODE 2014, 5TH EDITION.

9. IN THE EVENT THAT THERE IS A CONFLICT BETWEEN THE CONTRACT DOCUMENTS AND THE CODE, THE CODE SHALL TAKE PRECEDENCE. THE MECHANICAL CONTRACTOR SHALL STUDY THE CONTRACT DOCUMENTS AND SUBMIT A BID BASED ON WORK WHICH COMPLIES WITH ALL CODE REQUIREMENTS. ANY CONFLICTS BETWEEN THE CONTRACTOR DOCUMENTS AND THE CODE SHALL BE BROUGHT TO THE ATTENTION OF THE ARCHITECT PRIOR TO BID. THE COST OF ANY WORK WHICH ARISES OUT OF ANY CHANGES DUE TO CODE REQUIREMENTS SHALL BE PAID BY THE MECHANICAL CONTRACTOR.

10. THE MECHANICAL CONTRACTOR SHALL CHECK ALL EQUIPMENT FOR CORRECT VOLTAGE RATING BEFORE INSTALLATION.

11. IT SHALL BE THE RESPONSIBILITY OF THE MECHANICAL CONTRACTOR FOR THE ADVANCE ORDERING OF LONG LEAD ITEMS SO AS NOT TO DELAY OTHER TRADES RESULTING IN ANY DOWN OR LAG TIME.

12. THE MECHANICAL CONTRACTOR SHALL FURNISH AND INSTALL ALL MINOR ITEMS WHICH ARE OBVIOUSLY AND REASONABLY NECESSARY TO COMPLETE THE INSTALLATION WHETHER OR NOT SPECIFIED AS SHOWN ON THE PLANS.

13. ALL STRUCTURAL CUTTING AND PATCHING SHALL BE DONE BY THE GENERAL CONTRACTOR.

14. THE MECHANICAL CONTRACTOR SHALL THOROUGHLY CLEAN ALL AIR CONDITIONING EQUIPMENT.

15. MECHANICAL CONTRACTOR SHALL ARRANGE TO PAY FOR ALL NECESSARY PERMITS, LICENSES AND INSPECTIONS AS REQUIRED BY THE AUTHORITY HAVING JURISDICTION.

16. ALL NEW MECHANICAL EQUIPMENT, MATERIALS AND WORKMANSHIP SHALL BE GUARANTEED FOR A PERIOD OF ONE (1) YEAR FROM THE DATE OF ACCEPTANCE.

17. TO THE BEST OF THE ARCHITECT'S OR ENGINEER'S KNOWLEDGE, THE PLANS AND SPECIFICATIONS COMPLY WITH THE MINIMUM BUILDING CODES.

18. TURNING VANES SHALL BE PROVIDED IN ALL SUPPLY AND RETURN DUCT RECTANGULAR ELBOWS WITH ANGLES BETWEEN 15 DEGREES AND LESS THAN 90 DEGREES PER FIG. 2–5 OF THE SMACNA MANUAL.

19. DUCT DIMENSIONS SHOWN ON DRAWINGS ARE CLEAR INSIDE DIMENSIONS.

20. DUCTWORK, DIFFUSERS, REGISTERS, GRILLES, AND OTHER ITEMS OF THE AIR HANDLING SYSTEM SHALL NOT BE SUPPORTED BY THE CEILING OR CEILING SUSPENSION SYSTEM.

21. ALL SUPPLY AND RETURN DUCTWORK SHALL BE EXTERNALLY INSULATED SHEET METAL CONSTRUCTION IN ACCORDANCE WITH LATEST SMACNA STANDARDS. ALL JOINTS & SEAMS SHALL BE DURABOND CMC–10–104.

22. UNLESS OTHERWISE NOTED, INSTALL DUCTWORK AS HIGH AS POSSIBLE, TIGHT TO BOTTOM OF STRUCTURE. COORDINATE DUCT ELEVATION WITH RAIN LEADERS, WATER PIPING, SANITARY DRAINS AND MAJOR ELECTRICAL CONDUITS.

23. PROVIDE AND INSTALL AUTOMATIC DAMPERS IN ALL OUTSIDE AIR DUCTS.

24. MAXIMUM LENGTH OF FLEXIBLE DUCT SHALL BE 8'–0".

25. VOLUME DAMPERS WITH LOCKING QUADRANTS SHALL BE INSTALLED IN ALL DUCT BRANCHES.

26. ALL INSULATION SHALL HAVE A MINIMUM FLAME SPREAD/SMOKE DEVELOPED RATING OF 25/50.

27. DUCT WRAP INSULATION SHALL BE 2.2" THICK FLEXIBLE FIBERGLASS, .75 PCF DENSITY.

28. FLEXIBLE DUCTWORK SHALL BE LOW PRESSURE FACTORY FABRICATED CONSISTING OF A ZINC–COATED SPRING STEEL HELIX, NON–PERFORATED INNER LINER AND 1" THICK FIBERGLASS R–6 INSULATION WITH METALIZED VAPOR BARRIER.

29. COORDINATE AIR DEVICE LOCATIONS WITH LIGHTING FIXTURES AND FIRE SPRINKLER HEADS. FINAL LOCATION SUBJECT TO THE APPROVAL OF THE ENGINEER OR HIS REPRESENTATIVE IN THE FIELD.

30. ALL SUPPLY AIR DIFFUSERS SHALL BE 4–WAY THROW UNLESS OTHERWISE NOTED.

31. INSULATE BACK PANS OF ALL DIFFUSERS.

32. ALL WALL MOUNTED THERMOSTATS AND/OR TEMPERATURE SENSORS SHALL BE INSTALLED AT AN ELEVATION OF 54" ABOVE FINISHED FLOOR TO THE TOP UNLESS OTHERWISE NOTED ON DRAWINGS. LOCATION OF THE WALL MOUNTED THERMOSTAT SHALL BE COORDINATED WITH OTHER TRADES FOR A NEAT APPEARANCE. FINAL LOCATION OF THERMOSTAT SHALL BE SUBJECT TO THE APPROVAL OF THE ENGINEER OR HIS REPRESENTATIVE IN THE FIELD.

33. CONTRACTOR SHALL PROVIDE ALL SUPPLEMENTARY STEEL REQUIRED TO SUSPEND MECHANICAL EQUIPMENT AND MATERIALS.

34. AT THE CONCLUSION OF THE INSTALLATION THE CONTRACTOR SHALL SUBMIT TO THE ENGINEER FOR APPROVAL A COMPLETE CERTIFIED TEST AND BALANCE REPORT FROM AN AGENCY HAVING A MINIMUM OF THREE YEARS EXPERIENCE. REPORT SHALL ITEMIZE THE PERFORMANCE OF EACH AIR DEVICE AND A/C UNIT WITH REGARD TO CFM, STATIC PRESSURE AND TEMPERATURE.

35. PROVIDE A 4" HIGH CONCRETE HOUSEKEEPING PAD UNDER ALL EXTERIOR MECHANICAL EQUIPMENT, UNLESS OTHERWISE NOTED. PADS SHALL BE 4" LARGER THAN THE EQUIPMENT ON ALL SIDES.

36. LOCATIONS OF DUCT MOUNTED SMOKE DETECTORS SHOWN ON THE DRAWINGS ARE REFERENCE LOCATIONS ONLY. THE FINAL PLACEMENT OF THE DETECTORS IN THE DUCTWORK SHALL MEET THE REQUIREMENTS OF THE MANUFACTURER'S INSTALLATION INSTRUCTIONS. PROVIDE READILY ACCESSIBLE DUCT ACCESS DOOR FOR INSPECTING AND SERVICING THE DETECTOR. DIVISION 16 CONTRACTOR SHALL PROVIDE DETECTOR AND WIRE. DIVISION 15 CONTRACTOR SHALL INSTALL IN DUCTWORK.

37. REFRIGERANT PIPING SHALL BE ACR TYPE – L, SOFT ANNEALED, TEMPERED FITTINGS. SOLDERING MATERIALS SHALL BE SILVER–LEAD SOLDER. INSULATE REFRIGERANT SUCTION PIPING WITH CLOSED CELL INSULATION. PROTECT EXTERIOR INSULATION WITH U.V. PROTECTANT PAINT.

38. MAINTAIN AS–BUILT DRAWINGS, DAILY. SUBMIT TO ARCHITECT/OWNER AFTER COMPLETION OF ALL WORK.

39. ALL EQUIPMENT SUBMITTED FOR APPROVAL SHALL BE SUBMITTED IN A NUMERICAL SEQUENCE CONSISTENT WITH THE CONTRACT DRAWINGS (IE... AHU–1 IS FOLLOWED BY AHU–2, ETC...). SHOP DRAWINGS (SUBMITTALS) NOT SUBMITTED IN THIS MANNER WILL BE REJECTED WITHOUT REVIEW.

40. SHOP DRAWINGS SHALL BE SUBMITTED TO THE GENERAL CONTRACTOR, ARCHITECT, OWNER & ENGINEER FOR COORDINATION/REVIEW. THESE SHOP DRAWINGS SHALL BE REVIEWED PRIOR TO ORDERING EQUIPMENT AND INSTALLATION.

41. MECHANICAL CONTRACTOR SHALL VERIFY POWER REQUIREMENTS OF EQUIPMENT WITH ELECTRICAL CONTRACTOR PRIOR TO PLACING ORDER. ANY CHANGES TO SWITCHGEAR OR WIRE SHALL BE AT THE MECHANICAL CONTRACTOR'S EXPENSE.

42. PLAN REVISIONS PROCESSED AFTER SIGNED & SEALED DRAWINGS HAVE BEEN SUBMITTED FOR PERMIT SHALL BE SUBJECT TO ADDITIONAL DESIGN FEES. ADDITIONAL SERVICES WILL BE BILLED AT OUR STANDARD HOURLY RATES.

43. IT IS THE RESPONSIBILITY OF ALL CONTRACTORS TO COORDINATE THEIR WORK. THIS TASK NOT ONLY INCLUDES THE INSTALLATION OF EQUIPMENT BUT THE PROCESSING OF THE SHOP DRAWINGS FOR REVIEW, COORDINATION OF DEVICES IN THE CEILING, VERIFICATION OF EXISTING CONDITIONS & THE COORDINATION OF ALL PLAN REVISIONS.

FAN SCHEDULE

MARK	–	EF–1
SERVICE	–	EXHAUST
AREA SERVED	–	GROUP TOILETS
AIR QUANTITY	CFM	400
EXT. STATIC PRESS.	IN. H_2O	0.50
FAN TYPE	–	PRV
DRIVE	–	DIRECT
SONES	–	7.4
MOTOR	H.P.	1/15
MOTOR SPEED	RPM	1500
ELECTRICAL	V/ø/HZ	120/1/60
CONTROL	–	INTERLOCK W/LIGHTS
MANUFACTURER	–	GREENHECK
MODEL	–	G–090
NOTES	#	1 2

1 PROVIDE AND INSTALL WITH DISCONNECT, BACKDRAFT DAMPER, INSULATED ROOF CURB AND BIRD SCREEN.

2 PROVIDE AND INSTALL SOLID STATE SPEED CONTROL AT FAN FOR BALANCING. INSTALL ON WALL OF MECHANICAL ROOM.

* APPROVED EQUALS SHALL BE COOK AND PENN.

AIR DEVICE SCHEDULE

MARK	TYPE	MATERIAL	FINISH	MANUFACTURER AND MODEL	REMARKS
AD–1	CEILING SUPPLY	ALUMINUM	WHITE BAKED ENAMEL	TITUS TDC–AA	1
AD–2	CEILING RET./EXH.	ALUMINUM	WHITE BAKED ENAMEL	TITUS 350FL	2
AD–3	CEILING EXHAUST	ALUMINUM	WHITE BAKED ENAMEL	TITUS 350FL	3

1 PROVIDE 24x24 MODULE WITH 18x18 FACE AND ROUND NECK TRANSITION. SEE PLANS FOR NECK SIZES.

2 PROVIDE 24x24 MODULE, WITH 22x22 NECK.

3 PROVIDE WITH 18X18 NECK

* APPROVED EQUALS SHALL BE METALAIRE, PRICE, KRUEGER AND NAILOR.

MECHANICAL LEGEND

SYMBOL	DESCRIPTION
	NEW DUCTWORK, PIPING, OR EQUIPMENT
	FLEXIBLE DUCT
	SUPPLY OR OUTSIDE AIR DUCT SECTION
	RETURN DUCT SECTION
	EXHAUST DUCT SECTION
	DUCTWORK TRANSITION
	MANUAL AIR VOLUME CONTROL DAMPER
	MOTORIZED DAMPER/MOTORIZED ZONE DAMPER
	SUPPLY AIR DEVICE. CLEAR TRIANGLE SIDES INDICATE AIR FLOW PATTERN
	RETURN AIR DEVICE
	EXHAUST AIR DEVICE
	UNDERCUT DOOR 3/4"
#	MECHANICAL NOTE – NUMBER
T	WALL MOUNTED THERMOSTAT
STAT R	DUCT DETECTOR – RETURN

SPLIT SYSTEM A/C SCHEDULE

AIR HANDLING UNIT DATA			
MARK	–	AHU–1	AHU–2
AREA SERVED	–	CLUBHOUSE	MULTI–PURPOSE
TOTAL CAPACITY	BTUH	59,400	57,600
SENSIBLE CAPACITY	BTUH	45,900	43,900
SUPPLY AIR	CFM	1930	1800
OUTSIDE AIR	CFM	290	325
ENTERING AIR TEMP DB/WB	°F/°F	78.0/65.5	78.6/66.1
EXT. STATIC PRESSURE	IN. H_2O	0.75	0.75
MOTOR	H.P.	3/4	3/4
ELECTRICAL	V/ø/Hz	240/1/60	240/1/60
HEATER	KW/STAGES	7.7/1	7.7/1
FILTER TYPE	–	1"–MERV 8	1"–MERV 8
WEIGHT	LBS.	145	145
MANUFACTURER	–	TRANE	TRANE
MODEL NO.	–	TEM4A0660	TEM4A0660
CONDENSING UNIT DATA			
MARK	–	CU–1	CU–2
OUTDOOR TEMP.	°F	95	95
LIQUID LINE (SIZE)	IN. O.D.	3	3
SUCTION LINE (SIZE)	IN. O.D.	3	3
ELECTRICAL	V/ø/Hz	240/1/60	240/1/60
SEER	–	13.2	13.2
M.C.A.	–/A	35	35
WEIGHT	LBS.	226	226
MANUFACTURER	–	TRANE	TRANE
MODEL NO.	–	4TTB3060	4TTB3060
NOTES	#	1 2	1 2

1 PROVIDE AND INSTALL IN VERTICAL CONFIGURATION.

2 PROVIDE WITH FACTORY INSTALLED ELECTRIC HEATER, SINGLE POINT POWER CONNECTION AND FACTORY/HONEYWELL FOCUS PRO MODEL TH5220D THERMOSTAT. DUAL POINT POWER CONNECTION WILL NOT BE ACCEPTED.

3 VERIFY WITH UNIT MANUFACTURER.

* APPROVED EQUALS SHALL BE CARRIER, LENNOX AND JCI/YORK.

PYRAMID ENGINEERING
CONSULTING ENGINEERS
5596 Rio Vista Drive
Clearwater, Florida 33760
(727) 531–2989 * Reg. No. EB6890
pyramid@pyramidengineering.org

KCMH architects
JONATHAN A. KIRK AIA, LEED AP
JOHN A. CURTIS AIA
BENJAMIN F. MUNDY, JR. AIA, LEED AP
C. KEITH HUNNICUTT AIA
NEIL Q. MELBY AIA, LEED AP
KIRK CURTIS MUNDY HUNNICUTT
ASSOCIATES ARCHITECTS INC.
1036 SOUTH FLORIDA AVENUE | LAKELAND, FLORIDA | 33803–1118
TELEPHONE 863/688–8861 | FAX 863/688–8361 | LICENSE NO. AA C000772 | kcmharch.com
FL–45646
MICHAEL GURKAN

HIGHLANDS PARK ESTATES CLUBHOUSE
HIGHLANDS PARK ESTATES
91 DEERGLEN BLVD.
LAKE PLACID, FL
MECHANICAL NOTES, SCHEDULES AND LEGEND

REVISIONS

CONSTRUCTION 6/19/2017
APPROVAL 7/21/17
REVIEW
CHECKED BY MG

M101

16031

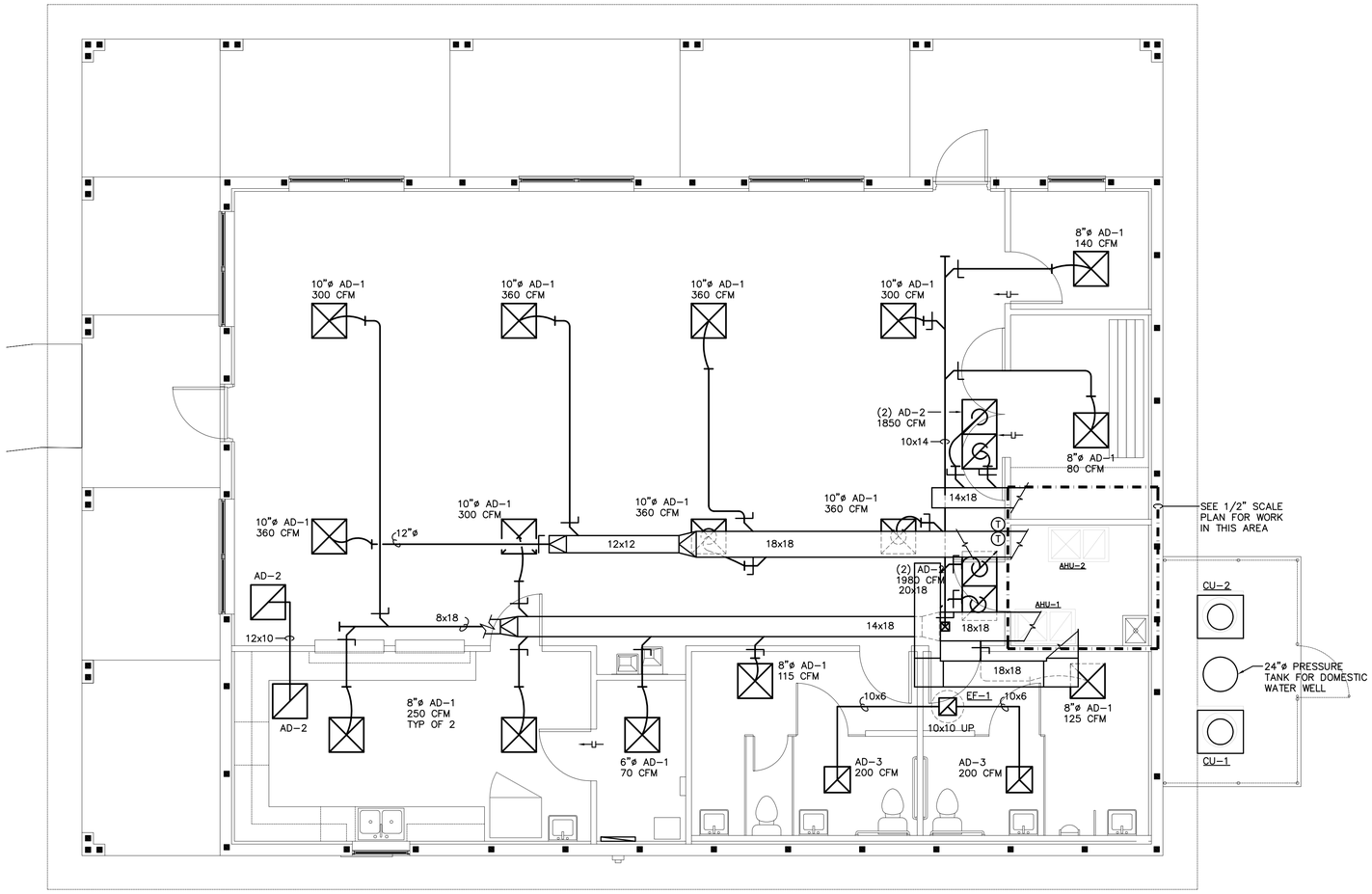

FLOOR PLAN – MECHANICAL

SCALE: 1/4"=1'-0" /3958-M201

MECHANICAL NOTES

1. NEW 24x18 INTAKE LOUVER. PROVIDE LOUVER WITH 12" DEEP FULL SIZE PLENUM AND BIRD SCREEN. VERIFY LOUVER COLOR WITH PROJECT ARCHITECT. LOUVER SHALL BE GREENHECK MODEL ESD-635X OR APPROVED EQUAL.
2. ROUTE CONDENSATE TO BUILDING EXTERIOR AND DRAIN TO DRYWELL.

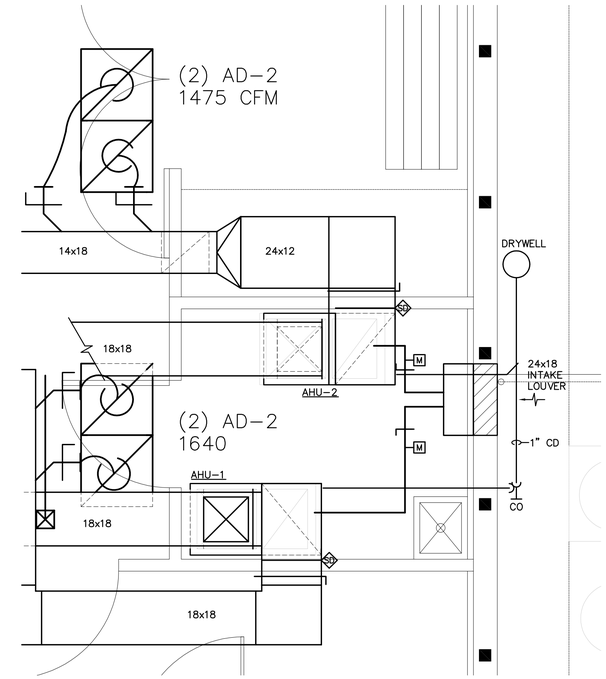

FLOOR PLAN – MECHANICAL ROOM

SCALE: 1/2"=1'-0" /3958-M201

PYRAMID ENGINEERING
CONSULTING ENGINEERS
5596 Rio Vista Drive
Clearwater, Florida 33760
(727) 531-2989 * Reg. No. EB6890
pyramid@pyramidengineering.org

KCMH architects
KIRK CURTIS MUNDY HUNNICUTT ASSOCIATES ARCHITECTS INC.
JONATHAN A. KIRK, AIA, LEED AP
JOHN A. CURTIS, AIA
BENJAMIN F. MUNDY, JR., AIA, LEED AP
C. KEITH HUNNICUTT, AIA
NEIL C. MELBY, AIA, LEED AP
1036 SOUTH FLORIDA AVENUE | LAKELAND, FLORIDA | 33803-1118
TELEPHONE 863.688-8861 | FAX 863.688-8361 | LICENSE NO. AA C000772 | kcmharch.com

FL/45546

MCAHE, C.CRCAN

HIGHLANDS PARK ESTATES CLUBHOUSE
HIGHLANDS PARK ESTATES
91 DEERGLEN BLVD.
LAKE PLACID, FL
MECHANICAL FLOOR PLAN

REVISIONS

CONSTRUCTION 6/19/2017

APPROVAL 7/21/17

REVIEW

CHECKED BY MC

M201

16031

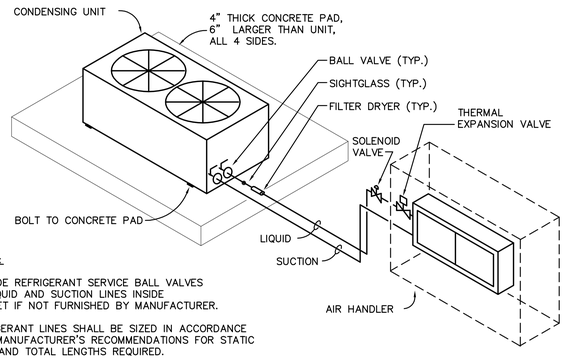

NOTES:

1. PROVIDE REFRIGERANT SERVICE BALL VALVES ON LIQUID AND SUCTION LINES INSIDE CABINET IF NOT FURNISHED BY MANUFACTURER.
2. REFRIGERANT LINES SHALL BE SIZED IN ACCORDANCE WITH MANUFACTURER'S RECOMMENDATIONS FOR STATIC LIFTS AND TOTAL LENGTHS REQUIRED.

REFRIGERANT PIPING ISOMETRIC

NOT TO SCALE

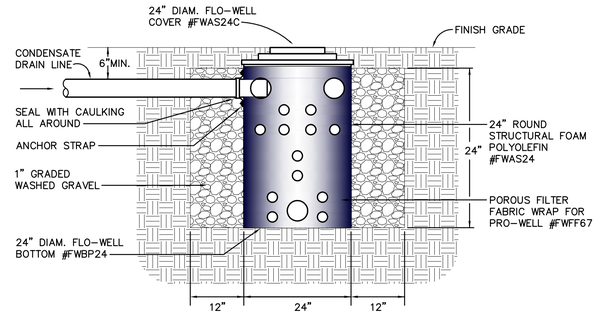

DRYWELL DETAIL

NOT TO SCALE

NOTE: LID SHALL HAVE HOLE IN TOP FOR VENTING & ACCESS PURPOSES. SOLID COVER WILL NOT BE ACCEPTABLE.

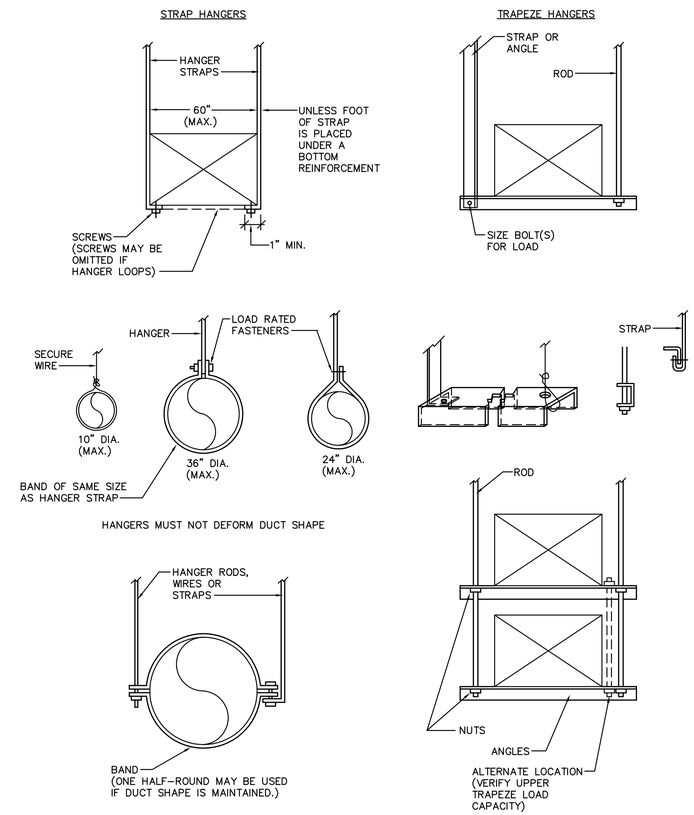

REINFORCEMENT MAY BE USED FOR ATTACHMENT IF IT QUALIFIES FOR BOTH DUTIES.

DO NOT EXCEED ALLOWABLE LOAD LIMITS.

NOTE:
REFER TO SMACNA HVAC DUCT CONSTRUCTION STANDARDS MANUAL, CHAPTER 4.

LOWER HANGER ATTACHMENTS

NOT TO SCALE

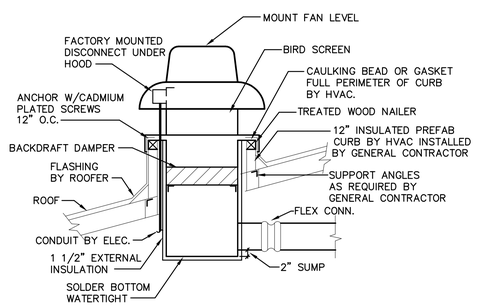

ROOF EXHAUST FAN DETAIL

NOT TO SCALE

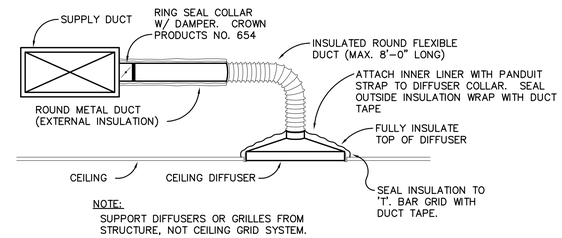

NOTE:
SUPPORT DIFFUSERS OR GRILLES FROM STRUCTURE, NOT CEILING GRID SYSTEM.

CEILING DIFFUSER RUNOUT DETAIL

NOT TO SCALE

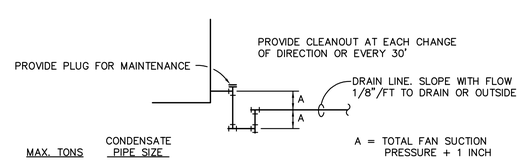

MAX. TONS	CONDENSATE PIPE SIZE
2	3/4"
5	1"
30	1 1/4"
50	1 1/2"

CONDENSATE DRAIN TRAP DETAIL

NOT TO SCALE

PYRAMID ENGINEERING
CONSULTING ENGINEERS
5596 Rio Vista Drive
Clearwater, Florida 33760
(727) 531-2989 * Reg. No. EB6890
pyramid@pyramidengineering.org

KCMH architects
JONATHAN A. KIRK, AIA, LEED AP
JOHN A. CURTIS, AIA
BENJAMIN F. MUNDY, JR., AIA, LEED AP
C. KEITH HUNNICUTT, AIA
NEIL G. MELBY, AIA, LEED AP
KIRK CURTIS MUNDY HUNNICUTT ASSOCIATES ARCHITECTS INC.
1036 SOUTH FLORIDA AVENUE | LAKELAND, FLORIDA | 33803-1118
TELEPHONE 863.688-8861 | FAX 863.688-8361 | LICENSE NO. AA C000772 | kcmharch.com
FL/48546
MICHAEL CARAGAN

HIGHLANDS PARK ESTATES CLUBHOUSE
HIGHLANDS PARK ESTATES
91 DEERGLEN BLVD.
LAKE PLACID, FL
MECHANICAL DETAILS

REVISIONS

CONSTRUCTION 6/19/2017
APPROVAL 7/21/17
REVIEW
CHECKED BY MC

M301

16031

PLUMBING FIXTURE AND PIPE SIZING SCHEDULE

MARK	FIXTURE	TRAP	VENT	COLD	HOT	DESCRIPTION	APPROVED MANUFACTURERS
P-1	WATER CLOSET BARRIER FREE	INTEGRAL	AS SHOWN ON PLANS	1/2"	---	**WATER CLOSET:** FLOOR MOUNTED, GRAVITY FLUSH TANK, ELONGATED, WHITE VITREOUS CHINA, SIPHON ACTION CLOSE-COUPLED BOLT CAPS, 1.28 GPF 16 1/2" HIGH. PROVIDE TANK WITH TRIP LEVER TO WIDE SIDE OF TOILET AREA. **SEAT:** FINISH WHITE, EXTRA HEAVY DUTY PLASTIC FOR ELONGATED BOWL, OPEN FRONT LESS COVER, SELF-SUSTAINING STAINLESS STEEL CHECK HINGE. TOP OF SEAT 17 1/2" AFF	**AMERICAN STANDARD** CADET 3 NO. 270AA.101 **KOHLER** HIGHLINE NO. K-3658 **OLSONITE** NO. 95SSCT **BENEKE** NO. 527SS
P-2	WATER CLOSET	INTEGRAL		1/2"	---	**WATER CLOSET:** FLOOR MOUNTED, GRAVITY FLUSH TANK, ELONGATED, WHITE VITREOUS CHINA, SIPHON ACTION CLOSE-COUPLED BOLT CAPS, 1.28 GPF, 15" HIGH **SEAT:** FINISH WHITE, EXTRA HEAVY DUTY PLASTIC FOR ELONGATED BOWL, OPEN FRONT LESS COVER, SELF-SUSTAINING STAINLESS STEEL CHECK HINGE. TOP OF SEAT 16" AFF	**AMERICAN STANDARD** CADET 3 NO. 3379.128ST **KOHLER** WELLWORTH NO. K-3575 **OLSONITE** NO. 95SSCT **BENEKE** NO. 527SS
P-3	URINAL BARRIER FREE	INTEGRAL		3/4"		**URINAL:** WALL MOUNTED, WHITE VITREOUS CHINA, SIPHON JET WITH FLUSHING RIM, 0.5 GPF, 3/4" INLET SPUD, RIM 17" AFF **FLUSH VALVE:** NON-HOLD OPEN HANDLE, EXPOSED DIAPHRAGM, 3/4" IPS SCREWDRIVER ANGLE STOP WITH PROTECTIVE CAP, VACUUM BREAKER FLUSH CONN., ADJUSTABLE TAILPIECE, 3/4" TOP SPUD, SWEAT SOLDER ADAPTER **CARRIER:** DURA-COATED RECTANGULAR STEEL UPRIGHTS WITH WELDED FEET, ADJUSTABLE SUPPORT PLATES AND MOUNTING FASTENERS	**AMERICAN STANDARD** ALLBROOK NO. 6550.001 **KOHLER** DEXTER NO. K-5016-ET **SLOAN-ROYAL** NO. 186-0.5 **ZURN** AQUAVANTAGE NO. Z6003AV-EWS **ZURN** NO. Z-1222 **WATTS** NO. CA-321
P-4 P-4A	LAVATORY BARRIER FREE HAND SINK BARRIER FREE	1 1/4"		1/2"	1/2"	**LAVATORY/HAND SINK:** WALL HUNG, 20x18, WHITE VITREOUS CHINA, FRONT OVERFLOW AND HOLES ON 8" CENTERS, RIM 34" AFF **TRIM:** LAVATORY FAUCET, WITH 8" CENTERS, 5"+ GOOSENECK SPOUT, 4" WRIST BLADE HANDLES, PERFORATED GRID DRAIN w/OFFSET 1 1/4" TAIL PIECE. PROVIDE STOPS, SUPPLIES, TRAP, ETC. TO MAKE A COMPLETE INSTALLATION. PROVIDE WITH 0.5 FLOW CONTROL AERATOR. **CARRIER:** DURA-COATED RECTANGULAR STEEL UPRIGHTS WITH WELDED FEET, ADJUSTABLE TOP SUPPORT PLATE, MOUNTING FASTENERS, CONCEALED ARMS, STEEL SLEEVES & ALIGNMENT TRUSS	**AMERICAN STANDARD** LUCERNE NO. 0356.015 **KOHLER** KINGSTON NO. K-2006 **DELTA** NO. 3579LF-WFHDF **CHICAGO** NO. 786-E3CP **ZURN** NO. Z-1231 **WATTS** NO. TCA-411 **J. R. SMITH** NO. 700
P-5	SERVICE SINK	3"		1/2"	1/2"	**SERVICE SINK:** FLOOR MOUNTED, SQUARE 24"x24"x12" WITH 6" DROP FRONT, PEARL GREY MARBLE CHIPS AND WHITE PORTLAND CEMENT GROUND SMOOTH, 20 GAUGE STAINLESS STEEL SPLASH GUARD & CAP ON THRESHOLD, PROVIDE 36" RUBBER HOSE, SILICONE SEALANT. **TRIM:** SINK FAUCET WITH VACUUM BREAKER, INTEGRAL STOPS AND ROUGH CHROME FINISH, SEAL WALL WITH SILICONE SEALANT. INSTALL FAUCET 36" AFF	**STERN-WILLIAMS** NO. HL-1800 **FIAT** NO. TSB-3010 **DELTA** NO. 28T9 **CHICAGO** NO. 897-RCF
P-6	SINK	1 1/2"		1/2"	1/2"	**SINK:** COUNTER MOUNTED, DOUBLE COMPARTMENT 18 GAUGE TYPE 304 STAINLESS STEEL, 33"x22"x10 1/2" SELF-RIMMING, 3 HOLES ON 4" CENTERS W/4TH HOLE FOR SPRAYER **TRIM:** SINK FAUCET, 5" BEND RIGID/SWIVEL GOOSENECK SPOUT, 4" BLADE HANDLES, WITH SIDE SPRAYER INSTALL STAINLESS STEEL DRAINS DRAIN WITH REMOVABLE CRUMB CUP STRAINERS. PROVIDE STOPS, SUPPLIES, TRAP, ETC. TO MAKE A COMPLETE INSTALLATION. **DISHWASHER CONNECTION:** PLUMBING CONTRACTOR TO INSTALL AND CAP PIPING CONNECTIONS TO ACCOMMODATE FUTURE DISHWASHER	**JUST** NO. DLXN-2233-A-GR **ELKAY** NO. DLR332210-4 **CHICAGO** NO. 786-E35-319ABCP **SIOUX CHIEF** DISHWASHER AIR GAP NO. 249 DISHWASHER TAILPIECE NO. 200-062
P-7	ELECTRIC WATER COOLER BARRIER FREE	1 1/4"		1/2"	---	**EWC:** 8.0 GPH - BASED ON 80° INLET AND 50° DRINKING WATER TEMP. 1/6 HP COMPRESSOR @ 120V. LIGHT TOUCH PRESSBAR, OPERABLE FROM BOTH SIDES OR FRONT, 'WATERSENTRY' FILTER, FLEXI-GUARD SAFETY BUBBLER WITH STAINLESS STEEL CABINET PANELS PROVIDE TRAP, DRAIN, SUPPLIES ETC. TO MAKE A COMPLETE INSTALLATION **CARRIER:** DURA-COATED RECTANGULAR STEEL UPRIGHTS WITH WELDED FEET, ADJUSTABLE SUPPORT PLATES, MOUNTING FASTENERS, AND BI-LEVEL CONFIGURATION	**ELKAY** NO. LZSTL8SC **ZURN** NO. Z-1225-BL
P-8	HOSE BIBB	---		1/2"	---	**HOSE BIBB:** OUTSIDE SILL FAUCET, VACUUM BREAKER, 3/4" HOSE OUTLET, LOCK SHIELD CAP, REMOVABLE T-HANDLE, 1/2" FLANGED FEMALE INLET, ROUGH CHROME FINISH AND DRAIN PLUG	**WOODFORD** NO. 24

PLUMBING ACCESSORY SCHEDULE

MARK	FIXTURE	DESCRIPTION	APPROVED MANUFACTURERS
FD	FLOOR DRAIN	**FLOOR DRAIN:** 5" SQUARE STRAINER, C.I. BODY, CAST IRON COLLAR, ADJUSTABLE NICKEL BRONZE TOP, PROVIDE TRAP PRIMER (SEE DETAIL)	**WATTS** NO. FD15-5S2-4PT **ZURN-LC** NO. FD2290-P04-S5
FCO	FLOOR CLEANOUT	**FLOOR CLEANOUT:** 6" ROUND TOP, PVC BODY, WITH NICKEL BRONZE SCORIATED COVER & FRAME, ADJUSTABLE GAS AND WATERTIGHT ABS THREAD PLUG	**WATTS** NO. C026-PVC-NB **ZURN-LC** NO. C02455-PV4
ECO	EXTERIOR CLEANOUT	**EXTERIOR CLEANOUT:** HEAVY DUTY DURA-COATED CAST IRON BODY WITH ROUND CAST IRON SCORIATED TOP & NEOPRENE GASKET	**WATTS** NO. C05-2-NH **ZURN-LC** NO. C02510-P04-VP

WATER HEATER SCHEDULE

MARK	FIXTURE	COLD	HOT	DESCRIPTION	APPROVED MANUFACTURERS
WH-1	INSTANTANEOUS WATER HEATER	3/4"	3/4"	**INSTANTANEOUS WATER HEATER:** THERMOSTATIC, SINGLE MODULE WATER HEATER, 9.5 KW, 240V-1ø, FACTORY SET @ 105°F WITH MULTI-LAV OPTION (ML) 0.5 GPM TURN ON	**BRADFORD-WHITE** KWICK SHOT NO. EFT-9500-4-S-10-ML

* INSTALL WATER HEATER AS PER MANUFACTURER'S RECOMMENDATIONS.

PLUMBING FIXTURE NOTES:

1. MOUNTING HEIGHT AS PER ARCHITECT.
2. TRAPS, SUPPLIES AND ALL OTHER EXPOSED PIPING SHALL BE CAST BRASS WITH A POLISHED CHROME FINISH. ACCEPTABLE MANUFACTURERS INCLUDE McGUIRE OR APPROVED EQUAL.
3. ALL EXPOSED PIPING BELOW BARRIER FREE FIXTURES SHALL BE INSTALLED WITH ADA COMPLIANT PIPE WRAP KIT. SYSTEM SHALL BE PVC RESIN SEAMLESS CONSTRUCTION MFG BY PRO-WRAP OR APPROVED EQUAL.
4. CONTRACTOR SHALL USE ONE MANUFACTURER FOR EACH TYPE OF FIXTURE. (EXAMPLE: AMERICAN STANDARD FOR VITREOUS CHINA, ELKAY FOR STAINLESS STEEL, DELTA FOR FAUCETS, ETC...)
5. LAVATORIES, SINKS, WATER COOLERS AND URINALS SHALL BE INSTALLED WITH FLOOR MOUNTED CARRIERS AT STUD WALLS OR ATTACHED DIRECTLY TO BLOCK WALLS.
6. PROVIDE FLUSH CONTROLS ON THE WIDE SIDE OF TOILETS.
7. FLOOR DRAINS SHALL BE INSTALLED WITH TRAP PRIMERS, UNLESS OTHERWISE NOTED ON PLANS. TRAP PRIMER SHALL BE INSTALLED IN AN ACCESSIBLE LOCATION. WATER SAVER TRAP PRIMER SHALL BE ZURN MODEL NUMBER 1021 OR APPROVED EQUAL.

PLUMBING GENERAL NOTES:

- CONTRACTOR SHALL PROVIDE COMPLETE PLUMBING SYSTEMS AS DETAILED. WORK CONSISTS OF FURNISHING ALL MATERIALS, EQUIPMENT, AND SERVICES REQUIRED FOR COMPLETE SYSTEMS.
- CONTRACTOR SHALL COORDINATE ALL PIPING LOCATIONS AND INVERT ELEVATIONS WITH FOOTINGS AND FOUNDATIONS BEFORE INSTALLING AND ADJUST AS REQUIRED.
- ARCHITECTURAL DRAWINGS TAKE PRECEDENCE OVER PLUMBING DRAWINGS WITH REFERENCE TO BUILDING CONSTRUCTION. PLUMBING DRAWINGS (PLANS, DIAGRAMS, ETC.) ARE DIAGRAMMATIC AND SHOULD NOT BE SCALED. THE CONTRACTOR SHALL COORDINATE ALL WORK UNDER THIS CONTRACT.
- IF ANY DISCREPANCIES SHOULD EXIST THE CONTRACTOR SHALL NOTIFY THE ARCHITECT PRIOR TO BIDDING.
- COORDINATE WORK WITH OTHER TRADES TO AVOID CONFLICTS.
- NECESSARY REQUIRED PLUMBING ITEMS THAT ARE NOT SHOWN ON THE DRAWINGS DOES NOT RELIEVE THE CONTRACTOR FROM HIS RESPONSIBILITY TO INSTALL A COMPLETE OPERATING PLUMBING SYSTEM.
- ALL NEW PLUMBING EQUIPMENT, MATERIALS, AND WORKMANSHIP SHALL BE GUARANTEED FOR A PERIOD OF ONE (1) YEAR FROM DATE OF ACCEPTANCE.
- WATER PIPING BELOW GRADE SHALL BE: TYPE-K COPPER WITH SOLDERED FITTINGS AND JOINTS, OR CROSS-LINKED POLYETHYLENE "PEX" WITH MECHANICALLY FORMED FITTINGS AND JOINTS.
- WATER PIPING ABOVE GRADE SHALL BE: CHLORINATED POLYVINYL CHLORIDE (CPVC), SDR 11, ASTM D-2846, RATED AT A CONTINUOUS WORKING PRESSURE OF 100 PSI AT 180°F. FITTING SHALL BE SOLVENT WELDED WITH AN ASTM APPROVED SOLVENT SYSTEM. DO NOT BEND PIPE WITH OVER A 45° ANGLE.
- COPPER PIPING INSTALLED WITHIN BLOCK WALLS OR IN CONTACT WITH CONCRETE SHALL BE INSTALLED WITH 4 MIL POLYETHYLENE PIPE GUARD. BLUE FOR COLD WATER AND RED FOR HOT WATER.
- UNLESS OTHERWISE NOTED ALL PIPING SHALL BE RUN IN CONCEALED SPACES.
- INSULATE ALL HOT WATER PIPING WITH 1" THICK HIGH DENSITY FIBERGLASS INSULATION WITH, FACTORY APPLIED VAPOR BARRIER ALL SERVICE JACKET.
- ALL WATER PIPING UNDERGROUND SHALL BE A MINIMUM OF 3 FEET BELOW GRADE UNLESS OTHERWISE NOTED.
- FINAL WATER PIPING ROUTING SHALL BE COORDINATED WITH THE GENERAL CONTRACTOR.
- ALL SOIL, WASTE, STORM AND VENT PIPING SHALL BE SCHEDULE 40 PVC.
- ALL HORIZONTAL SOIL AND WASTE PIPING 2 1/2" IN DIAMETER AND LESS SHALL HAVE A SLOPE OF 1/4" PER ONE FOOT LENGTH OF PIPE. ALL PIPING 3" IN DIAMETER AND LARGER SHALL HAVE A SLOPE OF 1/8" PER ONE FOOT LENGTH OF PIPE.
- CHROME PLATED ESCUTCHEONS AND NIPPLES ARE REQUIRED AT ALL FLOOR AND WALL PENETRATIONS.
- PENETRATIONS THROUGH FIRE-RATED ASSEMBLIES SHALL BE SEALED IN AN APPROVED MANNER WHICH MAINTAINS THE REQUIRED FIRE RATING OF THE ASSEMBLY.
  - A. WHERE HOLES ARE CIRCULAR, THE PENETRATION SHALL BE PROTECTED WITH FIRE-SEAL SMOKE AND FIRE STOP FITTINGS MANUFACTURED BY O.Z. GEDNEY, LINK SEAL BY THUNDER LINE OR APPROVED EQUAL.
  - B. WHERE HOLES ARE RECTANGULAR, THE PENETRATION SHALL BE PROTECTED WITH DOW CORNING 3-6548, SILICONE RTV FOAM, 3M FIRE BARRIER PENETRATION SEAL SYSTEM, OR APPROVED EQUAL.
- ALL FIXTURES AND EQUIPMENT SHALL HAVE SHUT-OFF VALVES AT OR NEAR EQUIPMENT.
- GATE VALVES SHALL BE #125 BRONZE WITH UNION BONNET.
- PROVIDE AND INSTALL HAMMER ARRESTORS AT FIXTURE GROUPS. INSTALL AIR CHAMBERS AT INDIVIDUAL FIXTURES.
- PROVIDE TRAP PRIMERS WHERE REQUIRED BY CODE.
- MAINTAIN AS-BUILT DRAWINGS, DAILY. SUBMIT TO ARCHITECT/OWNER AFTER COMPLETION OF ALL WORK.
- PLUMBING CONTRACTOR SHALL ARRANGE TO PAY FOR ALL NECESSARY PERMITS, LICENSES, AND INSPECTIONS AS REQUIRED BY THE CITY.
- ALL WORK SHALL COMPLY WITH ALL LOCAL AND STATE CODES.

PLUMBING LEGEND

DESCRIPTION	ABBREV.	SYMBOL
SANITARY PIPING	SS	
VENT PIPING	V	
COLD WATER PIPING	CW	
HOT WATER PIPING	HW	
WATER HAMMER ARRESTOR (LETTER DENOTES SIZE, SEE SCHEDULE)		B
VENT THRU ROOF	VTR	
TRAP PRIMER PIPING	TPP	
FLOOR/EXTERIOR CLEAN OUT	FCO/ECO	1-WAY 2-WAY
FLOOR DRAIN	FD	
SHUT-OFF VALVE	–	
CHECK VALVE	CV	
UNION		

PYRAMID ENGINEERING
CONSULTING ENGINEERS
5596 Rio Vista Drive
Clearwater, Florida 33760
(727) 531-2989 * Reg. No. EB6890
pyramid@pyramidengineering.org

KCMH architects
KIRK CURTIS MUNDY HUNNICUTT ASSOCIATES ARCHITECTS INC.
JONATHAN A. KIRK AIA, LEED AP
JOHN A. CURTIS AIA
BENJAMIN F. MUNDY, JR. AIA, LEED AP
C. KEITH HUNNICUTT AIA
NEIL G. MELBY AIA, LEED AP
1036 SOUTH FLORIDA AVENUE | LAKELAND, FLORIDA | 33803-1118
TELEPHONE 863/688-8861 | FAX 863/688-8361 | LICENSE NO. AA C000772 | kcmharch.com

FL/45246
MICHAEL CURCAN

HIGHLANDS PARK ESTATES CLUBHOUSE
HIGHLANDS PARK ESTATES
91 DEERGLEN BLVD.
LAKE PLACID, FL

PLUMBING NOTES, SCHEDULES AND LEGEND

REVISIONS

CONSTRUCTION 6/19/2017
APPROVAL 7/21/17
REVIEW
CHECKED BY MC

P101

16031

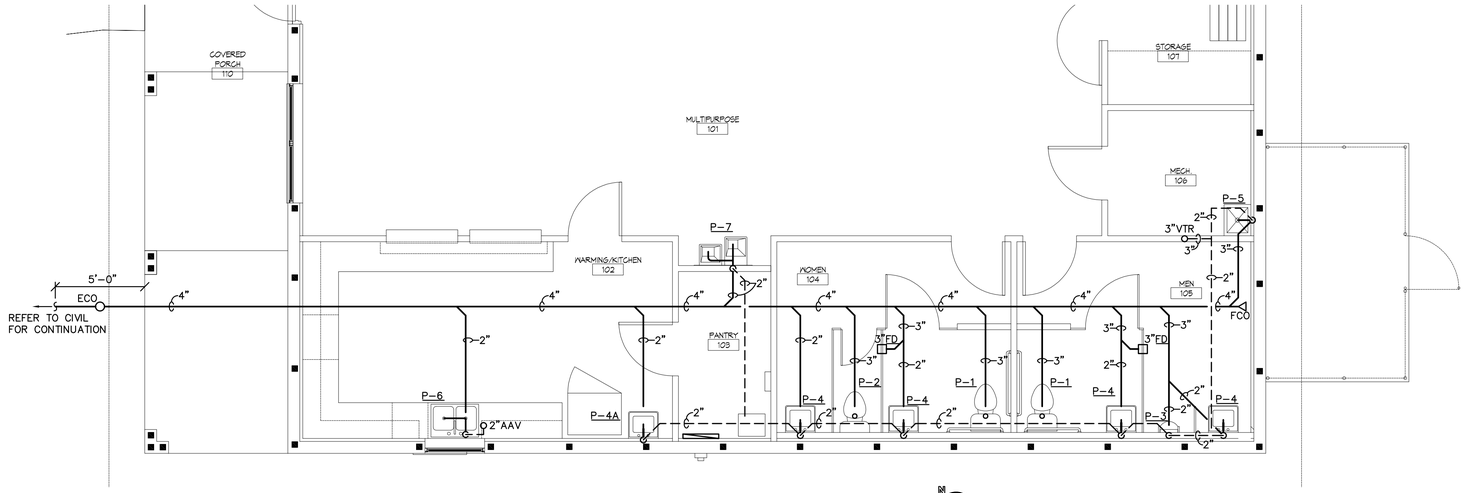

FLOOR PLAN – SANITARY

SCALE: 1/4"=1'-0" /3958-P201

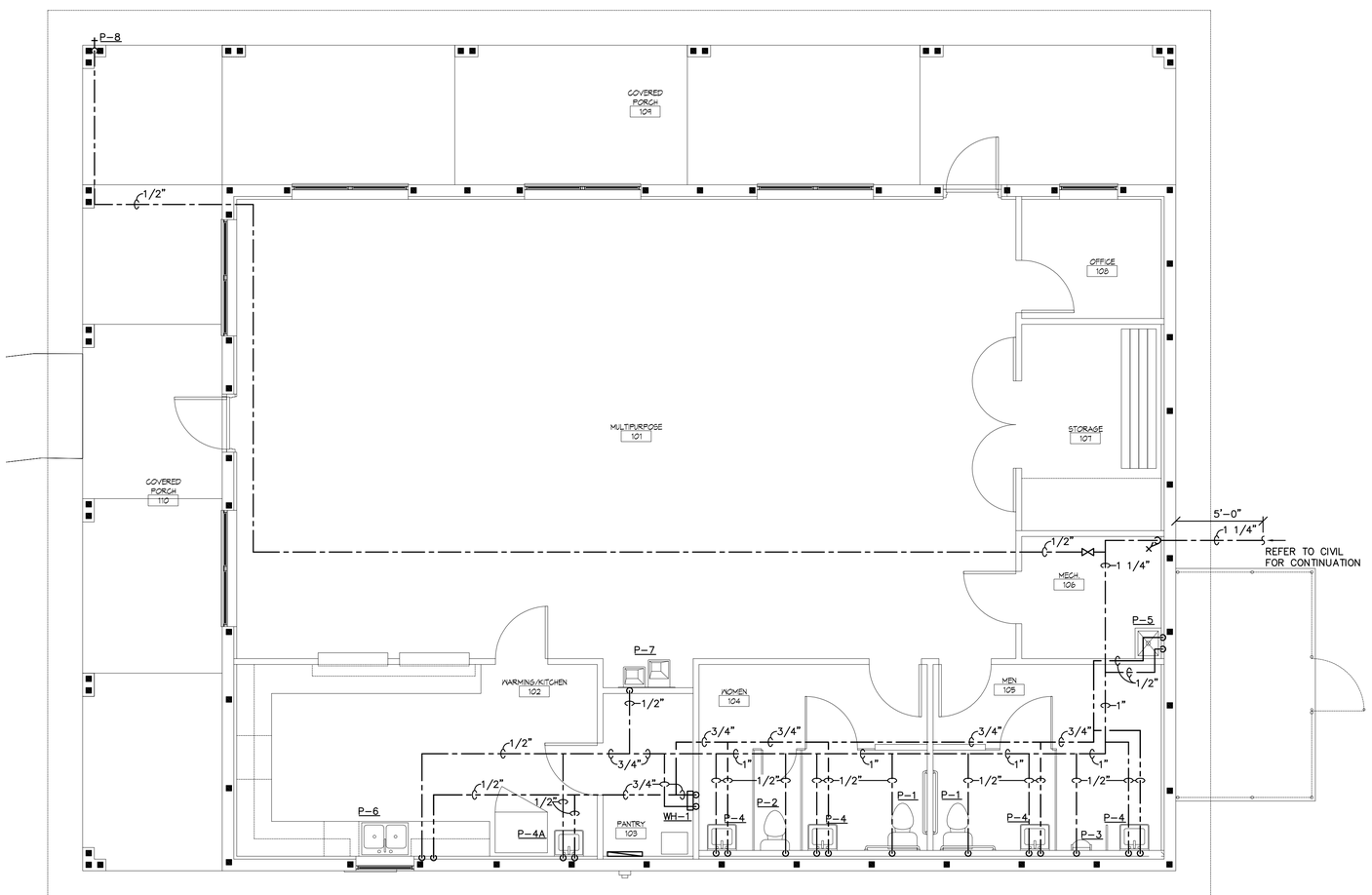

FLOOR PLAN – WATER

SCALE: 1/4"=1'-0" /3958-P201

PYRAMID ENGINEERING
CONSULTING ENGINEERS
5596 Rio Vista Drive
Clearwater, Florida 33760
(727) 531-2989 * Reg. No. EB6890
pyramid@pyramidengineering.org

KCMH architects
KIRK CURTIS MUNDY HUNNICUTT ASSOCIATES ARCHITECTS INC.
1036 SOUTH FLORIDA AVENUE | LAKELAND, FLORIDA | 33803-1118
TELEPHONE 863.688-8861 | FAX 863.688-8841 | LICENSE NO. AA C000772 | kcmharch.com
JONATHAN A. KIRK, AIA, LEED AP
JOHN S. CURTIS, AIA
BENJAMIN F. MUNDY, JR., AIA, LEED AP
C. KEITH HUNNICUTT, AIA
NEIL G. MELBY, AIA, LEED AP
FL.48546
MICHAEL CURCAN

HIGHLANDS PARK ESTATES CLUBHOUSE
HIGHLANDS PARK ESTATES
91 DEERGLEN BLVD.
LAKE PLACID, FL
PLUMBING FLOOR PLAN

REVISIONS

CONSTRUCTION 6/19/2017
APPROVAL 7/21/17
REVIEW
CHECKED BY MC

P201

16031

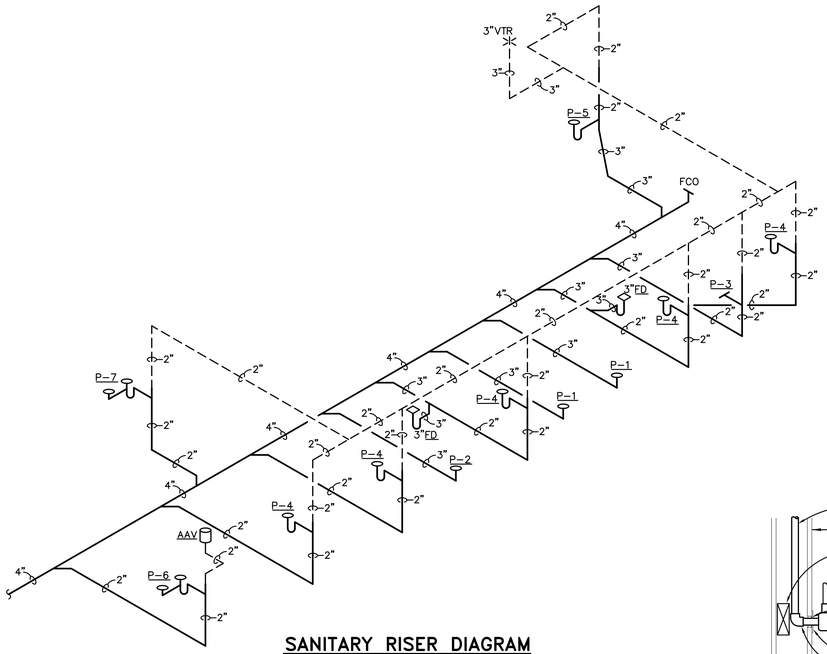

SANITARY RISER DIAGRAM
NOT TO SCALE

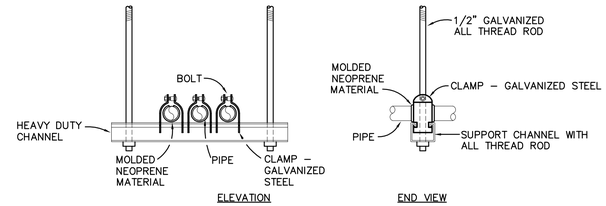

PIPE HANGER DETAIL
NOT TO SCALE

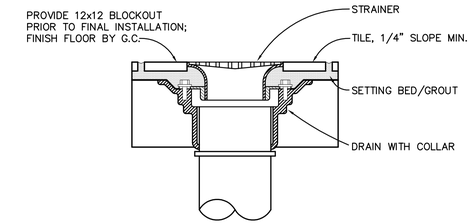

FLOOR DRAIN DETAIL
NOT TO SCALE

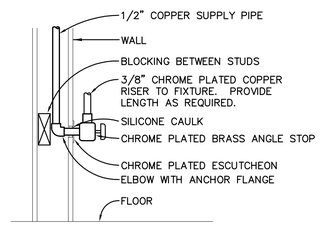

NOTE: THE ENTIRE SUPPLY ASSEMBLY SHALL HAVE A CHROME PLATED FINISH. (McGUIRE #2165 OR APPROVED EQUAL)

SHUT-OFF VALVE DETAIL
NOT TO SCALE

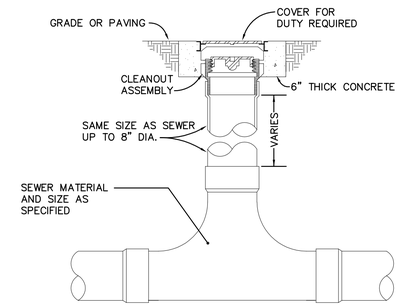

2-WAY CLEANOUT DETAIL
NOT TO SCALE

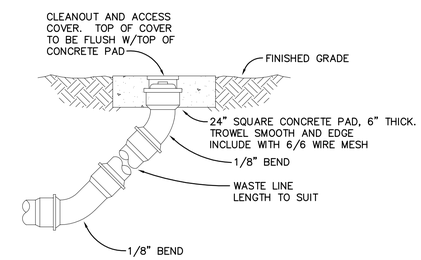

EXTERIOR CLEANOUT TO GRADE (ECO)

1-WAY CLEANOUT DETAIL
NOT TO SCALE

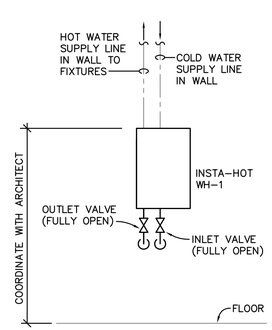

INSTANTANEOUS WATER HEATER
NOT TO SCALE (WH-1)

NOTE: FOLLOW MANUFACTURER'S INSTALLATION RECOMMENDATIONS

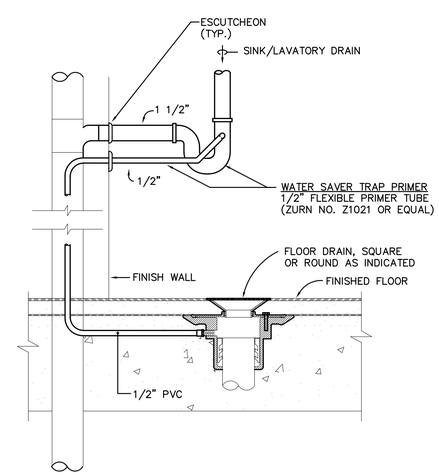

TRAP PRIMER CONNECTION DETAIL
NOT TO SCALE

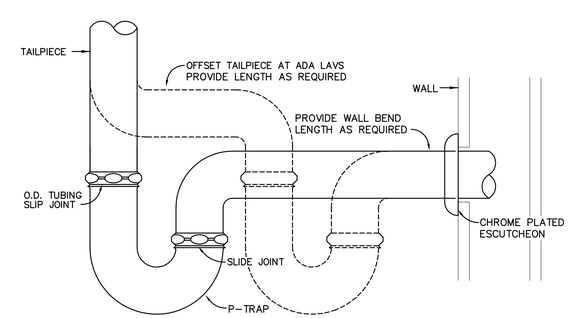

NOTE:

1. THE ENTIRE P-TRAP ASSEMBLY, INCLUDING SLIP JOINT NUTS, SHALL BE 17 GAUGE, HEAVY CAST BRASS WITH A POLISHED CHROME PLATED FINISH. (McGUIRE #8902 1 1/4" x 1 1/2"-17 GA. OR APPROVED EQUAL)

'P'-TRAP DETAIL
NOT TO SCALE

PYRAMID ENGINEERING
CONSULTING ENGINEERS
5596 Rio Vista Drive
Clearwater, Florida 33760
(727) 531-2989 * Reg. No. EB6890
pyramid@pyramidengineering.org

KCMH architects
KIRK CURTIS MUNDY HUNNICUTT ASSOCIATES ARCHITECTS INC.
JONATHAN A. KIRK AIA, LEED AP
JOHN S. CURTIS AIA
BENJAMIN F. MUNDY, JR. AIA, LEED AP
C. KEITH HUNNICUTT AIA
NEIL C. MELBY AIA, LEED AP
1036 SOUTH FLORIDA AVENUE | LAKELAND, FLORIDA | 33803-1118
TELEPHONE 863.688-8882 | FAX 863.688-8361 | LICENSE NO. AA C000772 | kcmharch.com

FL/45246
MICHAEL CURCAN

HIGHLANDS PARK ESTATES CLUBHOUSE
HIGHLANDS PARK ESTATES
91 DEERGLEN BLVD.
LAKE PLACID, FL
PLUMBING DETAILS

REVISIONS

CONSTRUCTION 6/19/2017
APPROVAL 7/21/17
REVIEW
CHECKED BY MC

P301

16031

GENERAL NOTES:

1. ALL WORK SHALL BE IN ACCORDANCE WITH THE 2014 FLORIDA BUILDING CODE AND THE 2011 NATIONAL ELECTRICAL CODE. WORK SHALL ALSO COMPLY WITH ALL APPLICABLE RULES AND REGULATIONS OF LOCAL LAWS AND ORDINANCES.
2. CONTRACTOR SHALL MAKE A THOROUGH EXAMINATION OF THE SITE AND THE CONTRACT DOCUMENTS. NO CLAIM FOR EXTRA COMPENSATION WILL BE RECOGNIZED IF DIFFICULTIES ARE ENCOUNTERED WHICH AN EXAMINATION OF SITE CONDITIONS AND CONTRACT DOCUMENTS PRIOR TO EXECUTING CONTRACT WOULD HAVE REVEALED.
3. ELECTRICAL CONTRACTOR SHALL ARRANGE FOR ALL NECESSARY PERMITS, LICENSES, UTILITY COORDINATION, AND INSPECTIONS AS REQUIRED BY THE CITY OR UTILITY COMPANY. CONTRACTOR IS RESPONSIBLE FOR ALL EQUIPMENT REQUIRED BY UTILITY COMPANY AND SHOULD INCLUDE NECESSARY COSTS IN BID.
4. CONTRACTOR SHALL LEGIBLY MARK-UP A SET OF 24"x36" DRAWINGS TO REFLECT AS-BUILT CONDITIONS, AND TURN OVER TO ARCHITECT.

WIRE/RACEWAY:

1. ALL CONDUCTORS SHALL BE COPPER, CONDUCTOR INSULATION SHALL BE DUAL TYPE THHN/THWN 75°C. (167°F) FOR DRY, DAMP, AND WET LOCATIONS. CONDUCTOR INSULATION WITH SINGLE TYPE MARKING THHN 90°C (194°F) MAY BE USED FOR DRY LOCATIONS ONLY. ALL CONDUCTORS SHALL BE COLOR CODED AS REQUIRED BY NEC AND FURTHER IDENTIFIED AND CODED AS SPECIFIED HEREINAFTER. COLOR CODING SHALL BE BY MEANS OF COLORED INSULATING MATERIAL, COLORED BRAID OR JACKET OVER THE INSULATION OR BY MEANS OF SUITABLE COLORED, PERMANENT, NON-AGING, INSULATING TAPE APPLIED TO CONDUCTORS AT EACH CABINET OR JUNCTION POINT. THE COLOR CODING SHALL BE ACCOMPLISHED AS THE CONDUCTORS ARE INSTALLED. THE FOLLOWING SYSTEMS OF COLOR CODING SHALL BE STRICTLY ADHERED TO:

   A) GROUND LEADS: GREEN
   B) 120/240 VOLT UNGROUNDED PHASE WIRES:
      PHASE A: BLACK
      PHASE B: RED
      NEUTRAL: WHITE

   THE COLOR CODE ASSIGNED TO EACH PHASE WIRE SHALL BE CONSISTENTLY CONSISTENTLY FOLLOWED THROUGHOUT.
2. BRANCH CIRCUIT CONDUCTORS ARE SIZED FOR A MAXIMUM VOLTAGE DROP OF 3% AT DESIGN LOAD PER FBC C405.7.3.2. FEEDER & SERVICE CONDUCTORS ARE SIZED FOR A MAXIMUM VOLTAGE DROP OF 2% AT DESIGN LOAD PER FBC C405.7.3.1.
3. ALL INTERIOR BUILDING CONDUCTORS SHALL BE RUN IN THIN WALL CONDUIT AND THIN WALL CONDUIT SHALL BE UNDERWRITERS' APPROVED GALVANIZED ELECTRICAL METALLIC TUBING. COUPLINGS AND CONNECTORS SHALL BE STEEL COMPRESSION TYPE, ZINC OR CADMIUM PLATED. BELOW GRADE CONDUITS SHALL BE SCHEDULE 40 PVC WITH RIGID METAL ELBOWS AND RISERS. RIGID METAL CONDUIT BELOW GRADE OR IN CONCRETE SHALL BE COATED WITH BITUMASTIC OR OR SLEEVED WITH 10 MIL POLYETHYLENE. SITE CONDUITS SHALL BE ROUTED AT 24" BELOW GRADE AND CONDUITS ROUTED BELOW BUILDINGS SHALL BE AT 36". EXTERIOR CONDUITS SHALL BE RIGID GALVANIZED STEEL.

   PENDING OWNER APPROVAL METAL CLAD CABLE (TYPE MC) IS ACCEPTABLE PROVIDED CABLE IS SUPPLIED WITH AN INSULATED GREEN EQUIPMENT GROUND CONDUCTOR AND MAY ONLY BE USED UNDER THE FOLLOWING CONDITIONS:

   A) SHORT RUNS IN WALLS.
   B) BETWEEN OUTLET BOXES IN HUNG OR FURRED CEILINGS, AND FLUSH TYPE LIGHTING FIXTURES AND TROUGH UNITS.
   C) CONNECTION TO EQUIPMENT IN SHELVING AND SHALL NOT BE USED FOR ANY CIRCUIT WITH OVER A 20 AMP CIRCUIT BREAKER.
   D) HOME-RUNS OF MULTI-CONDUCTOR CABLE WILL BE ALLOWED. CABLING MUST BE PROPERLY SUPPORTED AND COMPLY WITH ALL NEC CODES. MAXIMUM OF 9 CIRCUITS OR 13 CONDUCTORS IN A HOME-RUN.
   E) SHALL BE APPROVED FOR BRANCH CIRCUIT WIRING (20 AMPS & UNDER ONLY) IN CEILING SPACES AND WITHIN WALLS.

   METAL CLAD CABLE IS NOT ACCEPTABLE UNDER THE FOLLOWING CONDITIONS:

   A) BRANCH CIRCUITS OVER 20 AMPS.
   B) WHERE CABLING WILL BE EMBEDED IN CONCRETE.
   C) WHERE CABLING WILL BE EXPOSED TO MOISTURE.
   D) WHERE PROHIBITED BY LOCAL CODE.
4. COMBINING OF CIRCUITS IN SAME RACEWAY, OTHER THAN THOSE INDICATED ON DRAWINGS, WILL NOT BE PERMITTED.
5. ALL RACEWAYS SHALL BE PROPERLY ALIGNED, GROUPED, AND SUPPORTED BY MECHANICAL TYPE 'CADDY' CLIPS AT INTERVALS NOT EXCEEDING 8 FEET.
6. ALL RACEWAYS WITH NO. 10 OR 12 AWG PHASE CONDUCTORS FOR RECEPTACLES, LIGHTING FIXTURES AND SIMILAR CIRCUITS SHALL BE PROVIDED WITH A PARITY SIZED GREEN EQUIPMENT GROUND CONDUCTOR. GROUND CONDUCTOR SHALL BE INSTALLED IN ENTIRE RACEWAY SYSTEM INCLUDING WALL SWITCHES AND FLEXIBLE CONDUIT TO LIGHT FIXTURES. EQUIPMENT GROUND CONDUCTOR SIZES FOR CIRCUITS WITH PHASE CONDUCTORS LARGER THAN NO. 12 AWG ARE INDICATED ON DRAWINGS. GROUND CONDUCTORS SHALL BE CONNECTED TO GROUND BUSS IN PANELBOARDS.
7. RACEWAY PENETRATIONS OF FIRE RATED WALLS AND/OR FLOORS SHALL BE SEALED TO MAINTAIN INTEGRITY OF CONSTRUCTION. ALL PRODUCTS, MATERIALS AND METHODS OF INSTALLATION SHALL BE UL APPROVED AND MEET NFPA.

GROUNDING:

1. THE ENTIRE ELECTRICAL SYSTEM SHALL BE COMPLETELY AND EFFECTIVELY GROUNDED AS REQUIRED BY NATIONAL ELECTRICAL CODE. ALL METALLIC RACEWAYS SHALL BE MECHANICALLY AND ELECTRICALLY SECURE AT ALL JOINTS AND AT ALL BOXES, CABINETS, FITTINGS AND EQUIPMENT.
2. THE GROUNDING SYSTEM SHALL BE TESTED BY THE CONTRACTOR. THE RESISTANCE TO GROUND SHALL BE NO MORE THAN FIVE (5) OHMS. SUBMIT TEST RESULTS TO ENGINEER. CONTRACTOR SHALL MAKE UPGRADES AND ADDITIONS TO GROUNDING SYSTEM AS REQUIRED TO ACHIEVE THE (5) OHM REQUIREMENT.
3. PROVIDE NO. 6 AWG GROUND CONDUCTOR AT TELEPHONE BOARD AND CONNECTION TO THE MAIN SERVICE ENTRANCE GROUND. PROVIDE 10FT. OF SLACK AT BOARD.

OUTLET BOXES/DEVICES:

1. COORDINATE DEVICE AND COVER PLATE COLORS WITH ARCHITECT.
2. ALL OUTLET BOXES SHALL BE RIGIDLY MOUNTED AND SHALL BE EQUIPPED WITH SUITABLE SCREW FASTENED COVERS. OPEN KNOCKOUTS OR HOLES IN BOXES SHALL BE PLUGGED WITH SUITABLE BLANKING DEVICE.
3. OUTLET BOXES SHALL BE 4 INCH SQUARE x 2-1/8" DEEP. OUTLET BOXES LOCATED ABOVE THE CEILING SHALL BE LEGIBLY IDENTIFIED WITH BRANCH CIRCUIT NUMBER OF CIRCUIT TERMINATED WITHIN BY MEANS OF BLACK PERMANENT MARKER.
4. RECEPTACLES WITHIN (6) FEET OF A SINK SHALL HAVE GFCI PROTECTION.

SWITCHGEAR:

1. PANELBOARDS SHALL BE MANUFACTURED BY SQUARE 'D' COMPANY, TYPE AS SHOWN ON DRAWINGS OR APPROVED EQUALS: EATON & SIEMENS. FURNISH WITH COPPER BUS BARS, COPPER EQUIPMENT GROUND BUS AND BOLT-ON CIRCUIT BREAKERS.
2. DISCONNECT SWITCHES SHALL BE HEAVY-DUTY TYPE AND MANUFACTURED MANUFACTURED BY SQUARE 'D' COMPANY OR APPROVED EQUAL: EATON OR SIEMENS. FUSES SHALL BE DUAL ELEMENT, CARTRIDGE TYPE. FUSES SHALL BE BY ONE MANUFACTURER: BUSSMAN "FUSETRON" OR CHASE-SHAWMUT "TRIONIC.
3. INSTALL ENGRAVED PLASTIC-LAMINATE LABELS ON EACH MAJOR UNIT OF ELECTRICAL EQUIPMENT IDENTIFYING PANELBOARD NAME OR EQUIPMENT SERVING. EXAMPLES ARE, PANELBOARDS, DISCONNECT SWITCHES, AND MOTOR STARTERS, I.E. LABELS SHALL BE 1/16" THICK BLACK PLASTIC LAMINATE WITH 3/8" WHITE CORE PLIE LETTERS.
4. PANELBOARD DIRECTORY CARDS SHALL BE TYPEWRITTEN WITH ACCURATE AND CURRENT INFORMATION BY THE CONTRACTOR AT THE END OF CONSTRUCTION.
5. ALL MULTI-WIRE BRANCH CIRCUIT BREAKERS ARE TO BE TIED TOGETHER BY AN IDENTIFIED HANDLE-TIE OR BY A COMMON TRIP CIRCUIT BREAKER PER 2011 NEC SECTION 210.4(B).

LIGHTING FIXTURES:

1. THE CONTRACTOR SHALL FURNISH AND INSTALL COMPLETE IN ALL RESPECTS ALL LIGHTING FIXTURES LISTED IN THE FIXTURE SCHEDULE.
2. THE CONTRACTOR SHALL SUBMIT CATALOG CUTS OF ALL THE FIXTURES TO THE ARCHITECT. THESE CUTS SHALL BE SUBMITTED IMMEDIATELY AFTER THE CONTRACTOR HAS RECEIVED AN APPROVED MATERIAL LIST FROM THE ARCHITECT.
3. BALLASTS FOR FLUORESCENT LAMPS SHALL BE ELECTRONIC RAPID START WITH <10% TOTAL HARMONIC DISTORTION MANUFACTURED BY "OSRAM SYLVANIA". ALL BALLASTS FOR FLUORESCENT FIXTURES SHALL BE INDIVIDUALLY FUSED. FUSES SHALL BE INSTALLED ON THE LINE SIDE OF THE BALLAST.
4. FLUORESCENT LAMPS SHALL BE RAPID START, T8/32 WATT, 3500K. ALL LAMPS SHALL BE AS MANUFACTURED BY SYLVANIA.
5. ALL FIXTURES SHALL BE PROPERLY AND CAREFULLY SUPPORTED AND ALIGNED, AND THE CONTRACTOR SHALL FURNISH AND INSTALL ALL NECESSARY STEEL SHAPES, ETC., FOR SUPPORT OF FIXTURES AS REQUIRED AND DETAILED ON THE DRAWINGS. PROVIDE JUNCTION BOX STEM MOUNTED FROM DECK TO SUPPORT ALL CEILING MOUNTED EXIT LIGHTS.
6. LIGHTING FIXTURES SHALL BE CLEAN AND LAMPED WITH NEW LAMPS AT THE TIME OF FINAL INSPECTION.
7. COORDINATE ALL LOCATIONS OF LIGHTING FIXTURES WITH ARCHITECTURAL DRAWINGS.
8. ALL FLUORESCENT FIXTURES SHALL HAVE A DISCONNECTING MEANS EITHER INTERNAL OR EXTERNAL IN ACCORDANCE WITH 2011 NEC ARTICLE 410.130(G)(1).

OCCUPANCY SENSORS:

1. CONTRACTOR SHALL SUBMIT SHOP DRAWINGS SHOWING LOCATIONS OF ALL UNITS AND CUT SHEETS FOR ALL DEVICES.

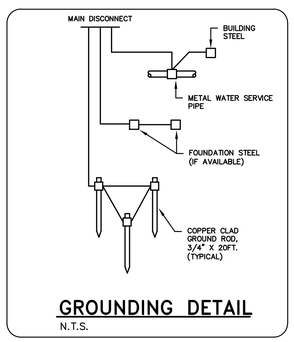

GROUNDING DETAIL

N.T.S.

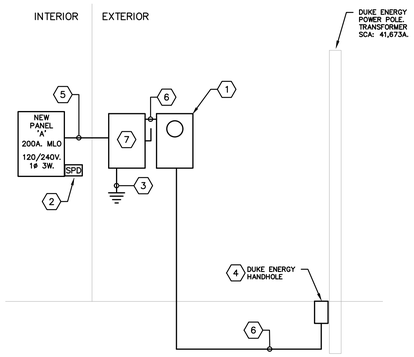

POWER RISER DIAGRAM

N.T.S.

POWER RISER DIAGRAM NOTES:

1. 200 AMP METER CAN AND GROUNDING PER DUKE ENERGY SPECIFICATIONS.
2. SURGE PROTECTION DEVICE, PQ PROTECTION #PQC80.
3. NO. 4 COPPER GROUNDING ELECTRODE CONDUCTOR CONNECTED TO BUILDING STEEL, METAL WATER SERVICE ENTRANCE PIPE, FOOTER STEEL AT (2) LOCATIONS AND (3) 3/4" X 20'-0" DRIVEN GROUND RODS (10FT. APART). PLACE EACH GROUND ROD IN CONCRETE TESTING WELL WITH STEEL COVER PLATE. SEE DETAIL THIS SHEET.
4. COORDINATE CONNECTION AND ALL CONTRACTOR RESPONSIBILITIES WITH DUKE ENERGY PRIOR TO BID.
5. 3 NO. 3/0 AND 1 NO. 6 E.G. – 2"C.
6. 3 NO. 3/0 – 2"C.
7. NEMA 3R SERVICE ENTRANCE RATED 200A.–3P. DISCONNECT FUSED AT 200 AMPS (DUAL ELEMENT).

FAULT STUDY

XFMR AFC	13889	
VOLTAGE	240	
	MAIN	A
I_{SCA}	13889	9267
length	60	3
wire size	3/0	3/0
C VALUE	13923	12844
sets	1	1
f	0.4988	0.018037
M	0.6672	0.9823
FAULT	**9267**	**9103**

ELECTRICAL SYMBOL LEGEND

SYMBOL	DESCRIPTION	MOUNTING
	2'x4' FIXTURE	SEE FIXTURE SCHEDULE
	4FT. LINEAR FIXTURE	SEE FIXTURE SCHEDULE
	WALLPACK FIXTURE WITH EMERGENCY DRIVER	SEE FIXTURE SCHEDULE
	EMERGENCY LIGHTING WALL PACK	SEE FIXTURE SCHEDULE
	EXIT LIGHT WITH EMERGENCY LIGHTING WALL PACK	SEE FIXTURE SCHEDULE
S	SINGLE POLE SWITCH (20 AMP) '3' 3-WAY, '4' 4-WAY	FLUSH IN WALL M.H. 48" TO CENTERLINE
SF	FAN SPEED CONTROL	FLUSH IN WALL M.H. 48" TO CENTERLINE
SOC	WALL MOUNTED SINGLE RELAY OCCUPANCY SENSOR, WATTSTOPPER #DW-100	FLUSH IN WALL M.H. 48" TO CENTERLINE
OC	CEILING MOUNTED LINE VOLTAGE OCCUPANCY SENSOR, MANUFACTURER: WATTSTOPPER.	CEILING SURFACE
	QUAD RECEPTACLE (20A., 125V.)	M.H. 18" TO CENTERLINE
	QUAD RECEPTACLE (20A., 125V.)	MOUNT ABOVE COUNTERTOP, M.H. NOTED TO CENTERLINE
	DUPLEX RECEPTACLE (20A., 125V.)	M.H. 18" TO CENTERLINE
	DUPLEX RECEPTACLE (20A., 125V.)	MOUNT ABOVE COUNTERTOP, M.H. NOTED TO CENTERLINE
▽	DENOTES TELEPHONE/DATA 4" SQ. RECESSED OUTLET BOX WITH (1) 3/4" CONDUIT STUBBED UP ABOVE CEILING AND TERMINATED WITH INSULATING BUSHING U.O.N.	M.H. 18" TO CENTERLINE, M.H. NOTED TO CENTERLINE
GFI	DENOTES GROUND FAULT INTERRUPTER TYPE RECEPTACLE	
WR	DENOTES WEATHER-RESISTANT RECEPTACLE	
WP	DENOTES RECEPTACLE WITH DIECAST ALUMINUM 'IN-USE' COVER.	
J / J	JUNCTION BOX OR OUTLET BOX, 4" SQUARE BOX UNLESS OTHERWISE NOTED	ABOVE CEILING / WALL
	120/240V. POWER PANELBOARD	6'-0" TO TOP
	RACEWAY CONCEALED IN WALL OR CEILINGS	SEE GENERAL NOTES
	RACEWAY CONCEALED UNDER FLOOR OR BENEATH GRADE	SEE GENERAL NOTES
	RACEWAY SURFACE MOUNTED ON WALL OR CEILING	SEE GENERAL NOTES
L1-1,3	HOMERUN TO PANEL, LETTERS INDICATE PANEL, NUMBERS INDICATE CIRCUIT. NOTE: ANY CIRCUIT WITHOUT FURTHER DESIGNATION INDICATES A TWO WIRE & EQUIP. GROUND CIRCUIT. A GREATER NUMBER OF WIRES IS INDICATED AS SHOWN: (3 WIRES & EQUIPMENT GROUND), (4 WIRES & EQUIPMENT GROUND), ETC.	AS NOTED

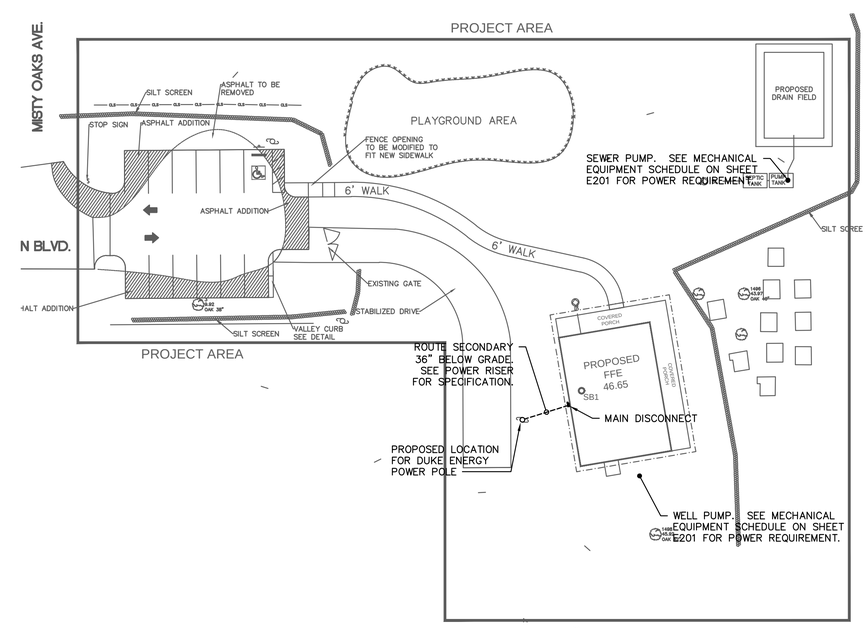

ELECTRICAL SITE PLAN

SCALE: 1" = 30'-0"

NEWPOWER consulting, inc
15520 HIGH BELL PL, BRADENTON FL 34212
PH: 813.489.8950, COA#32011
ENGINEERING

KIRK CURTIS MUNDY HUNNICUTT ASSOCIATES ARCHITECTS INC.
KCMH architects
JONATHAN A. KIRK, AIA, LEED AP
DAVID A. CURTIS, AIA
BENJAMIN F. MUNDY, JR., AIA, LEED AP
C. KEITH HUNNICUTT, AIA
NEIL G. MELBY, AIA, LEED AP
1036 SOUTH FLORIDA AVENUE | LAKELAND, FLORIDA | 33803-1118
TELEPHONE 863.688-8861 | FAX 863.688-8861 | LICENSE NO. AA C000172 | kcmharch.com
No. 82387
Donald J. Newman

HIGHLANDS PARK ESTATES CLUBHOUSE
HIGHLANDS PARK ESTATES
91 DEERGLEN BLVD.
LAKE PLACID, FL
GENERAL NOTES, POWER RISER & LEGEND

REVISIONS

CONSTRUCTION 06/19/17
APPROVAL 7/21/17
REVIEW 04/10/17
CHECKED BY

E101

16031

LIGHTING FIXTURE SCHEDULE

TYPE	MANUFACTURER	CATALOG NO.	MOUNTING	VOLT	LAMP	REMARKS
A	TRULY GREEN SOLUTIONS	882450-35-SK-L-F	SURFACE	120	50W LED	2'X4' LED ECO PANEL
B	TRULY GREEN SOLUTIONS	881430-35-SK-L-F	SURFACE	120	30W LED	1'X4' LED ECO PANEL
C	LUMINAIRE	YWP610-15W-3500K-120-CP	WALL MOUNT AT 7'-6" TO BOTTOM AFF	120	15W LED	VANDAL RESISTANT EXTERIOR RATED WALL PACK
CE	LUMINAIRE	YWP610-15W-3500K-120-CP-EMB20R	WALL MOUNT AT 7'-6" TO BOTTOM AFF	120	15W LED	VANDAL RESISTANT EXTERIOR RATED WALL PACK WITH EMERGENCY DRIVER
EM	BEGHELLI	XLP-LED1	SURFACE WALL, 7'-6" TO BOTTOM	120	LED	2 HEAD EMERGENCY LIGHT WITH BATTERY BACKUP
F	HUNTER	59248	SURFACE	120	66W FAN	DEMPSEY LOW PROFILE
XEM	BEGHELLI	PCH-R-AD	SURFACE WALL, 7'-6" TO BOTTOM	120	LED	EXIT SIGN/2 HEAD EMERGENCY LIGHT WITH BATTERY BACKUP

NEW
PANEL A VOLTAGE 120 / 240 V SIZE 200A MLO CABINET SURFACE NEMA-1
SQD NQOD OR EQUAL PHASE 1 PH 3 W 200A BUS RATING 10,000 AIC RATED

NOTES	REMARKS	CKT.BKR. AMPS	P	VA PHASE LOAD A	VA PHASE LOAD B	CKT #	BUS A	BUS B	CKT #	VA PHASE LOAD A	VA PHASE LOAD B	CKT.BKR. AMPS	P	REMARKS	NOTES
	EWC RECEPS.	20	1	800		1	X		2	720		20	1	RECEPTICLES	
	TELEPHONE B	20	1		400	3		X	4		540	20	1	RECEPTICLES	
	DISHWASHER	20	1	1000		5	X		6	900		20	1	RECEPTICLES	
	RANGE	50	2		4000	7		X	8		900	20	1	RECEPTICLES	
				4000		9	X		10	720		20	1	RECEPTICLES	
	INTERIOR LIGHTS	20	1		1144	11		X	12		540	20	1	RECEPTICLES	
	EXTERIOR LTS.	20	1	120		13	X		14	720		20	1	RECEPTICLES	
	ROOM LIGHTS	20	1		600	15		X	16		720	20	1	RECEPTICLES	
	SPACE					17	X		18	1200		20	1	REFRIDGERATOR	
	AHU-1	50	2		4608	19		X	20		4608	50	2	AHU-2	
				4608		21	X		22	4608					
	CU-1	60	2		3360	23		X	24		3360	60	2	CU-2	
				3360		25	X		26	3360					
	SPACE					27		X	28		4750	40	2	WH-1	
	SPACE					29	X		30	4750					
	SEWER PUMP	20	1		1130	31		X	32		200	20	1	DUCT DETECT.	
	SPACE					33	X		34					SPACE	
	SPACE					35		X	36		500	20	2	WELL PUMP	
	SPACE					37	X		38	500					
	SPACE					39		X	40			30	2	SURGE PROTECTION	
	SPACE					41	X		42						
	TOTAL			13888	15242					17478	16118	TOTAL			

TABULATION	TOTAL LOAD	DEMAND FACTOR	DEMAND LOAD
MEASURED			
LIGHTING	1864	1.25	2330
COOLING	13440		
HEATING	18432	1.00	18432
RECEPTACLE	15260	0.83	12630
MISCELLANEOUS	13730	1.00	13730
LARGEST MOTOR			
TOTAL DEMAND LOAD	47122 VA		
TOTAL DEMAND AMPS	196.3 A		

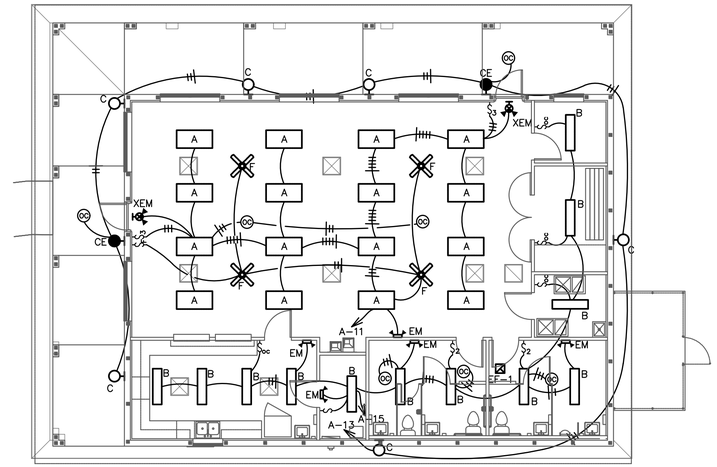

LIGHTING FLOOR PLAN

SCALE: 1/8" = 1'-0"

GENERAL NOTES:

1. CONNECT EMERGENCY LIGHTING BATTERY PACKS AND EXIT LIGHTS TO UNSWITCHED LEG OF LIGHTING CIRCUIT.
2. ALL WALL MOUNTED OCCUPANCY SENSORS REQUIRE NEUTRAL WIRE CONNECTION.
3. SWITCHES AND DIMMERS SHOWN SHALL OVERRIDE "OFF" OCCUPANCY SENSOR CONTROL.
4. ALL GFI RECEPTACLES SHALL BE MOUNTED IN ACCESSIBLE LOCATION.

DRAWING NOTES:

1. 2' X 2' X 3/4" PAINTED (FIRE RETARDANT) DATA BACKBOARD . INSTALL GROUND BAR AND #6 CU EQUIPMENT GROUND CONNECTION TO SERVICE ENTRANCE GROUNDING SYSTEM. ROUTE (1) 2" CONDUIT TO TO PROPERTY LINE FOR TELEPHONE SERVICE.
2. SEE MECHANICAL EQUIPMENT SCHEDULE THIS SHEET FOR POWER REQUIREMENTS.
3. 240V.–1ø, 50 AMP RANGE RECEPTACLE. CIRCUIT: 2 NO. 6 AND 1 NO. 10 E.G. – 1"C.

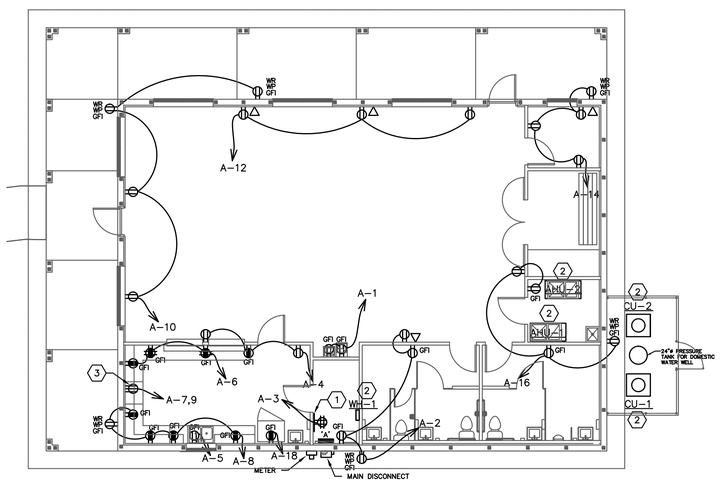

POWER & SYSTEMS FLOOR PLAN

SCALE: 1/8" = 1'-0"

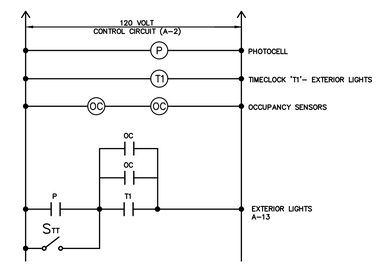

EXTERIOR LIGHTING CONTROL DIAGRAM

NOT TO SCALE

STT = 0–2HR. TWIST–TIMER FOR PHOTOCELL OVERRIDE. LABEL "PHOTOCELL OVERRIDE".
P = 120V PHOTOCELL, TORK OR INTERMATIC. MOUNT ON EXISTING/NEW POST. AIM NORTH.
T1 = ASTRONOMICAL, 120V TIMECLOCK. TORK OR INTERMATIC.
OC = 120V OCCUPANCY SENSOR

LIGHTING CONTROL GENERAL NOTES:

1. LIGHT CONTROL SHALL BE PHOTOCELL "ON", TIMECLOCK "OFF".

MECHANICAL EQUIPMENT

DESCRIPTION	ELECTRICAL CHARACTERISTICS VOLTS	PHASE	KW	HP	MCA	CIRCUIT DESIGNATION	BREAKER AMPS	POLES	FEEDER	EQUIP. GROUND	CONDUIT	DISCONNECT SWITCH	REMARKS
AHU-1	240	1	7.7	.75	48.0	A-19,21	50	2	(2)#8	#10	1/2"	60A/2P/NF/NEMA-1	
AHU-2	240	1	7.7	.75	48.0	A-20,22	50	2	(2)#8	#10	1/2"	60A/2P/NF/NEMA-1	
CU-1	240	1			35.0	A-23,25	60	2	(2)#6	#8	3/4"	60A/2P/F/NEMA-3R	NOTE #1
CU-2	240	1			35.0	A-24,26	60	2	(2)#6	#8	3/4"	60A/2P/F/NEMA-3R	NOTE #1
EF-1	120	1		1/15		NOTE#2			(2)#12	#12	1/2"	TOGGLE SWITCH	
SEWER PUMP	120	1		1/2		A-31	20	1	(2)#10	#10	3/4"	W.P. TOGGLE SWITCH	
WELL PUMP	240	1		1		A-36	20	2	(2)#12	#12	1/2"	30A/2P/NF/NEMA-3R	
WH-1	240	1	9.5			A-28,30	40	2	(2)#8	#10		PANEL BREAKER	

NOTES:
1. FUSED DISCONNECT PER UNIT NAMEPLATE MFS OR MOCP
2. CONNECT TO SWITCHED LEG OF ROOM LIGHTING CIRCUIT

NEWPOWER consulting, inc
15520 HIGH BELL PL, BRADENTON FL 34212
PH: 813.489.8950, COA#32011
ENGINEERING

KCMH architects
KIRK CURTIS MUNDY HUNNICUTT ASSOCIATES ARCHITECTS INC.
JONATHAN A. KIRK, AIA, LEED AP
JOHN A. CURTIS, AIA
BENJAMIN F. MUNDY, JR., AIA, LEED AP
C. KEITH HUNNICUTT, AIA
NEIL G. MELBY, AIA, LEED AP
1036 SOUTH FLORIDA AVENUE | LAKELAND, FLORIDA | 33803-1118
TELEPHONE 863.688-8862 | FAX 863.688-8861 | LICENSE NO. AA C000772 | kcmharch.com

No. 82387
Donald J. Newman

HIGHLANDS PARK ESTATES CLUBHOUSE
HIGHLANDS PARK ESTATES
91 DEERGLEN BLVD.
LAKE PLACID, FL
LIGHTING AND POWER & SYSTEMS FLOOR PLANS

REVISIONS

CONSTRUCTION 06/19/17
APPROVAL 7/21/17
REVIEW 04/10/17
CHECKED BY

E201

16031