DINWIDDIE COUNTY

PAMPLIN ADMIN. BLDG. ROOF REPLACEMENT

14016 Boydton Plank Road
Dinwiddie, VA 23841

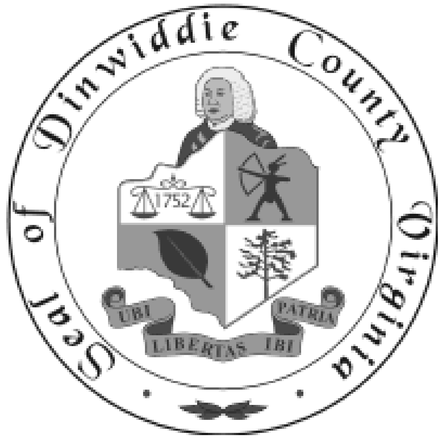

WIND PRESSURES - COMPONENTS & CLADDING - FLAT ROOFS (< 7 DEG.)

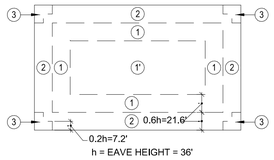

GENERIC ROOF PLAN

	ROOF SURFACE PRESSURE (PSF)			
AREA	10 FT²	20 FT²	50 FT²	100 FT²
1'	12.5, -28.1	11.7, -28.1	10.7, -28.1	9.9, -28.1
1	12.5, -48.9	11.7, -45.6	10.7, -41.4	9.9, -35.0
2	12.5, -64.5	11.7, -60.3	10.7, -54.9	9.9, -50.7
3	12.5, -87.9	11.7, -79.6	10.7, -68.6	9.9, -60.3

CONTACTS

CLIENT

DINWIDDIE COUNTY
10817 WHEELERS POND RD.
PO DRAWER 70
DINWIDDIE, VA 23841

GENE JONES
DIRECTOR OF PUBLIC UTILITIES
804-469-4545
804-704-4010 (CELL)
gjones@dinwiddieva.us

ENGINEERS/ARCHITECTS

DJG, INC.
449 McLAWS CIRCLE
WILLIAMSBURG, VA 23185

DARREN CURTIS, PLA, LEED AP
PROJECT MANAGER
757-253-0673
757-220-0911 (CELL)
darrenc@djginc.com

VICINITY MAP

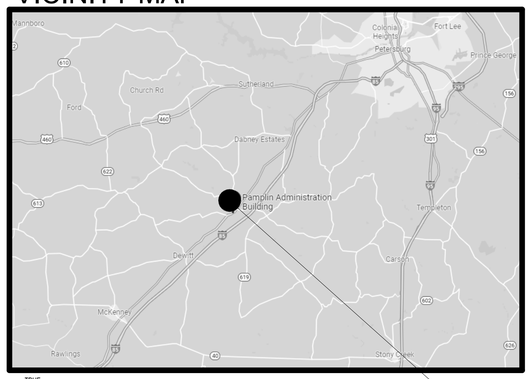

TRUE NORTH

PROJECT LOCATION
14016 Boydton Plank Road
Dinwiddie, VA 23841

LOCATION MAP

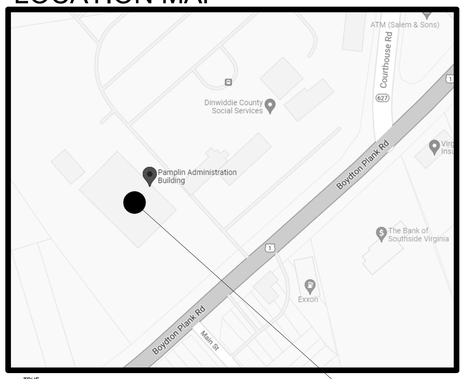

TRUE NORTH

PROJECT LOCATION
14016 Boydton Plank Road
Dinwiddie, VA 23841

DJG INC.
ENGINEERS
ARCHITECTS
PLANNERS
449 McLaws Circle - Williamsburg, VA 23185
Voice: 757-253-0673
Fax: 757-253-2319
www.djginc.com

DINWIDDIE COUNTY

PAMPLIN ADMIN. BLDG. ROOF REPLACEMENT
PROJECT CODE

14016 Boydton Plank Road
Dinwiddie, VA 23841

MARK	DATE	DESCRIPTION

COMMISION NUMBER
2220180

SCALE:	1/8" = 1'-0"
DESIGNED:	Steven Lowe, AIA, NCARB
DRAWN:	Steven Lowe, AIA, NCARB
CHECKED:	Donald Booth, AIA
DATE:	12/22/2021

COMMONWEALTH OF VIRGINIA
DONALD FRANKLIN BOOTH JR.
No. 011728
12/22/2021
ARCHITECT

SHEET TITLE

COVER SHEET

SHEET NUMBER
G-001

SHEET 1 OF 6

12/22/2021 9:33:56 AM C:\Users\kelly\n\Documents\DJG-V2021_2220180-A-CENTRAL_khart.BG4C.rvt

ABBREVIATIONS

AB	ANCHOR BOLT, AUGER BORING
ABS	AIR BREAK SWITCH
AC	AIR CONDITIONING, ASBESTOS CEMENT, ACRES
A/C	ASPHALTIC CONCRETE
ACB	AIR CIRCUIT BREAKER
ACSR	ALUMINUM CONDUCTOR STEEL REINFORCED
ACST	ACOUSTIC
ACT	ACOUSTIC CEILING TILE
AD	AREA DRAIN, ACCESS DOOR
ADJ	ADJUSTABLE
AFF	ABOVE FINISHED FLOOR
AHU	AIR HANDLING UNIT
ALT	ALTERNATE
AL	ALUMINUM
AM	ACOUSTIC MATERIAL
AMP,A	AMPERE
AP	ACCESS PANEL, APPROX APPROXIMATE
ARCH	ARCHITECTURAL
ARR	ARRESTOR
ASPH	ASPHALT
B	BASELINE
BD	BOARD
BEJ	BRICK EXPANSION JOINT
BEL	BELOW
BET	BETWEEN
BFG	BELOW FINISHED GRADE
BIT	BITUMINOUS
BLDG	BUILDING
BLK	BLOCK
BLKG	BLOCKING
BM	BEAM
BOT	BOTTOM
BOS	BOTTOM OF SLAB
BRG	BEARING
BS	BOTH SIDES
BSMT	BASEMENT
BR	BOTTOM REGISTER
BUR	BUILT-UP ROOFING
BW	BOTH WAYS
C	CELSIUS, CENTERLINE, CARPET
C&G	CURB AND GUTTER
CAB	CABINET
CAP	CAPACITY
CB	CIRCUIT BREAKER
CD	CEILING DIFFUSER
CEM	CEMENT
CER	CERAMIC
CF	CUBIC FOOT
CFCI	CONTRACTOR-FURNISHED CONTRACTOR INSTALLED
CG	CORNER GUARD
CH	CHILLER
CI	CAST IRON, COURTYARD INLET
CIP	CAST IRON PIPE, CAST IN PLACE
CIR	CIRCULATING
CJ	CONTROL JOINT
CKT	CIRCUIT
CLG	CEILING
CLR	CLEAR
CMP	CORRUGATED METAL PIPE
CMPA	CORRUGATED METAL PIPE ARCH
CMU	CONCRETE MASONRY UNITS
CND,C	CONDUIT
CNDS	CONDENSATE
CO	CLEANOUT
CODP	CLEANOUT W/ DECK PLUG
COL	COLUMN
COMM	COMMUNICATION
CONC	CONCRETE, SEALED CONCRETE
COND	CONDUCTOR, CONDITION
CONN	CONNECTION
CONST	CONSTRUCTION
CONT	CONTINUOUS, CONTINUE
CONTR	CONTRACTION
CONV	CONVERTER
COP,CU	COPPER
CP	NON-REINFORCED CONCRETE PIPE
CPT	CARPET
CR	CHAIR, CRASH RAIL
CRS	COURSE(S)
CS	CONCRETE SEALER/SURFACE
CSK	COUNTERSUNK
CT	CERAMIC TILE, CURRENT TRANSFORMER, COOLING TOWER
CTR	CENTER, COOLING TOWER RETURN
CTS	COOLING TOWER SUPPLY
CW	COLD WATER
CWB	CAPILLARY WATER BARRIER
D	DEPTH, DEEP, DEGREE OF CURVATURE
DB	DRY BULB, DECIBEL, DIRECT BURIAL
DD	DIVERSION DIKE
DEMO	DEMOLITION, DEMOLISH
DET	DETAIL
DF	DRINKING FOUNTAIN
DH	DRILL HOLE, DOUBLE HUNG
DI	DUCTILE IRON, DROP INLET
DIA	DIAMETER
DIAG	DIAGONAL
DIM	DIMENSION
DIP	DUCTILE IRON PIPE
DIST	DISTANCE
DL	DEAD LOAD
DMPR	DAMPER
DN	DOWN
DP	DISTRIBUTION PANEL
DS	DOWNSPOUT, STORM DRAINAGE STRUCTURE
DW	DOMESTIC WATER
DWD	DRINKING WATER DISPENSER
DWG	DRAWING
DWR	DRAWER
(E)	EXISTING
E	EAST
E/P	EDGE OF PAVEMENT
EA	EACH
EAN	EXCEPT AS NOTED
EAT	ENTERING AIR TEMPERATURE
EC	EMPTY CONDUIT
EF	EACH FACE, EXHAUST FAN
EG	EXHAUST GRILLE
EJ	EXPANSION JOINT
EL	ELEVATION
ELEC	ELECTRIC(AL)
ELEV	ELEVATOR, ELEVATION
EOS	EDGE OF SLAB
EPB	ELECTRICAL PANEL BOARD
EMT	ELECTRICAL METALLIC TUBING
EMER	EMERGENCY
EQ	EQUAL
EQPT	EQUIPMENT
ER	EXHAUST REGISTER
EVAP	EVAPORATIVE
EW	EACH WAY
EWC	ELECTRIC WATER COOLER
EXH	EXHAUST
EXIST	EXISTING
EXP	EXPANSION, EXPOSED
EXT	EXTERIOR
F	FIRE, FUSE, FILTER
FA	FIRE ALARM FABX FIRE ALARM BOX
FBO	FURNISHED BY OTHERS
FD	FLOOR DRAIN, FIRE DAMPER
FDN	FOUNDATION
FDR	FEEDER
FE	FIRE EXTINGUISHER
FEC	FIRE EXTINGUISHER CABINET
FFE	FINISHED FLOOR ELEVATION
FH	FIRE HYDRANT
FHC	FIRE HOSE CABINET
FHMS	FLAT-HEAD MACHINE SCREW
FHWS	FLAT-HEAD WOOD SCREW
FIG	FIGURE
FIN	FINISH(ED)
FJ	FELT JOINT, FINGER JOINT, FLOOR JOIST
FL	FLASHING, FLOW LINE
FLR	FLOOR
FLUOR	FLUORESCENT
FNDN	FOUNDATION
FOC	FACE OF CONCRETE
FOF	FACE OF FINISH
FOM	FACE OF MASONRY
FOS	FACE OF STUD
FRT	FIRE-RETARDANT TREATED
4 WAY	FOUR WAY
FPH	FROST PROOF HYDRANT
FR	FRAME
FS	FULL SIZE, FLOOR SINK
FTG	FOOTING
FW	FIRE WATER
FXTR	FIXTURE
G	GROUND, GAS LINE,GRAM
GA	GAGE, GAUGE
GALV	GALVANIZED
GC	GLAZED COATING, GENERAL CONTRACTOR
GL	GLASS, GLAZING
GR	GRADE
GFS	GROSS SQUARE FEET
GFCI	GROUND FAULT CURRENT INTERRUPT
GFMU	GROUND FACE MASONRY UNIT
GL	GLASS
GR	GRADE
GRD	GROUND
GSU	GLAZED STRUCTURAL UNIT
GW	GROUND WATER
GWB	GYPSUM WALL BOARD
GYP	GYPSUM
H	HEIGHT
HB	HOSE BIBB
HC	HANDICAPPED, HOLLOW CORE
HD	HARD DRAWN
HDR	HEADER
HDW	HARDWARE
HGSW	HORN GAP SWITCH
HID	HIGH INTENSITY DISCHARGE
HM	HOLLOW METAL
HOR	HORIZONTAL
HP	HIGH POINT
HPS	HIGH PRESSURE SODIUM
HR	HOUR
HS	HIGH STRENGTH
HW	HOT WATER, HEADWALL
HWL	HIGH WATER LEVEL
HVY	HEAVY
HYD	HYDRANT
HZ	HERTZ
ID	INSIDE DIAMETER, INSIDE DIMENSION
IE	INVERT ELEVATION
IMC	INTERMEDIATE METAL CONDUIT
INCL	INCLUDE
INSUL	INSULATION, INSULATED
INT	INTERIOR, INTERMEDIATE
INTX	INTERSECTION
INV	INVERT
IP	INLET PROTECTION
IRBF	INDUSTRIAL RESIN BASE FLOORING
JB	JUNCTION BOX
JC	JANITOR CLOSET
JCT	JUNCTION
JT	JOINT
JST	JOIST
K	KILO
KIAC	THOUSAND AMP INTERRUPT CAPACITY
KCP	KEENE'S CEMENT PLASTER
KG	KILOGRAM
KIT	KITCHEN
KN	KILONEWTON
KO	KNOCK OUT
KV	KILOVOLT
KVA	KILOVOLT-AMPERE
KW	KILOWATT
L/S	LITERS PER SECOND
L	LOUVER, LENGTH, LENGTH OF CURVE
LA	LIGHTNING ARRESTOR
LAV	LAVATORY
LC	LEAD COVERED
LL	LIVE LOAD
LLH	LONG LEG HORIZONTAL
LLV	LONG LEG VERTICAL
LT	LIGHT
LTG	LIGHTING
LAV	LAVATORY VERTICAL
LVC	LENGTH OF VERTICAL CURVE
LVT	LUXURY VINYL TILE
M/S	METERS PER SECOND
M	METER, MEGA
MACH	MACHINE
MAS	MASONRY
MATL	MATERIAL
MAX	MAXIMUM
MCJ	MASONRY CONTROL JOINT
MDF	MEDIUM-DENSITY FIBERBOARD
MDO	MEDIUM-DENSITY OVERLAY
MECH	MECHANICAL
MET	METAL
MFR	MANUFACTURER
MH	MANHOLE, METAL-HALIDE
MIN	MINIMUM, MINUTE
MISC	MISCELLANEOUS
MLO	MAIN LUG ONLY
MM,mm	MILLIMETER
MO	MOTOR OPERATED, MASONRY OPENING
MP	MEDIUM PRESSURE
MR GWB	COATED GLASS MAT WATER-RESISTANT GYPSUM BACKER BOARD
MT	MOUNT
MTD	MOUNTED
MTG	MOUNTING
MTL	MATERIAL
MMP	MEMBRANE WATERPROOFING
MULL	MULLION
(N)	NEW
N	NORTH
NA	NOT APPLICABLE
NC	NON CORROSIVE
NE	NORTHEAST
NDC	NOSE DOWN CURB
NEC	NATIONAL ELECTRIC CODE
NEUT	NEUTRAL
NIC	NOT IN CONTRACT
NLB	NON LOAD BEARING
NO	NUMBER
NOM	NOMINAL
NPS	NOMINAL PIPE SIZE
NTS	NOT TO SCALE
NW	NORTHWEST
OA	OUTSIDE AIR
OC	ON CENTER
OCB	OIL CIRCUIT BREAKER
OD	OUTSIDE DIAMETER
OFCI	OWNER-FURNISHED CONTRACTOR-INSTALLED
OFOI	OWNER-FURNISHED OWNER-INSTALLED
OFRD	OVERFLOW ROOF DRAIN
OH	OVERHEAD
OPNG	OPENING
OPP	OPPOSITE (HAND)
OSB	ORIENTED STRAND BOARD
OSD	OPEN SITE DRAIN
Pa	PASCALES
P	PIPE, POLE, PAINT
PB	PULL BOX
PEJ	PERIMETER EXPANSION JOINT
PL	PLASTIC LAMINATE
PI	POINT OF INTERSECTION
PIV	POST INDICATOR VALVE
PJF	PREFORMED JOINT FILLER
PL	PLATE, PROPERTY LINE
P,LAM	PLASTIC LAMINATE
PLAS	PLASTER
PLF	POUNDS PER LINEAR FOOT
PLNJ	PAPER AND LEAD NEOPRENE JACKET
PLYWD	PLYWOOD
PNL	PANEL
PNT	PAINT
PRELIM	PRELIMINARY
PRESS	PRESSURE
PRIM	PRIMARY
PRV	PRESSURE RELIEF VALVE
PS	PULL SWITCH
PSF	POUNDS PER SQUARE FOOT
PSI	POUNDS PER SQUARE INCH
PT	POINT, POINT OF TANGENT
PTN	PARTITION
PVC	POINT OF VERTICAL CURVE, POLY VINYL CHLORIDE .
PVI	POINT OF VERTICAL INTERSECTION
PVT	POINT OF VERTICAL TANGENT PVMT PAVEMENT
QT	QUARRY TILE
R	RADIUS, RISER, RUBBER SHEATH
RA	RETURN AIR
RAD	RADIUS
RB	RESILIENT VINYL BASE, RUBBER BASE
RBTR	RUBBER TREAD/RISER COMBINATION
RCP	REINFORCED CONCRETE PIPE, REFELECTED CEILING PLAN
RD	ROOF DRAIN, ROAD
RECP	RECEPTACLE
RED	REDUCING
REG	REGULATOR, REGISTER
REINF	REINFORCEMENT
REQ'D	REQUIRED
REV	REVISION
RF	ROOF, RETURN FAN
RGS	RIGID GALVANIZED STEEL
RHC	REHEAT COIL
RI	RUBBER INSULATED
RM	ROOM
RO	ROUGH OPENING
ROW	RIGHT OF WAY
RM	ROOM
RPM	REVOLUTIONS PER MINUTE
RVT	RESILIENT VINYL TILE
RWL	RAINWATER LEADER
S	SECOND, SOUTH, SANITARY, SEWER, STRUCTURE
SAN	SANITARY SEWER
SATC	SUSPENDED ACOUSTICAL TILE CEILING
SC	SOLID CORE
SCC	STAMPED CONCRETE
SCH	SCHEDULE
SD	SPLITTER DAMPER, STORM DRAIN
SDT	STATIC DISSIPATIVE TILE
SE	SOUTHEAST
SECT	SECTION SERV SERVICE SF SILT FENCE
SF	SQUARE FOOT
SG	SUPPLY GRILLE
SH	SHELF, SHELVING
SHT	SHEET
SIM	SIMILAR
SKCP	SUSPENDED KEENE'S CEMENT PLASTER
SL	SLOPE
SMH	SANITARY MODULE
SMS	SHEET METAL SCREW
SP	STATIC PRESSURE, SINGLE POLE
SPC	SUSPENDED PLASTER CEILING
SPD	SPEED
SPDT	SINGLE POLE, DOUBLE THROW
SPEC	SPECIFICATION
SPST	SINGLE POLE, SINGLE THROW
SQ	SQUARE
SR	SUPPLY REGISTER
S/S	SANITARY SEWER
SS	SOLID SURFACING
ST	STEAM, SINGLE THROW, STREET
STA	STATION STD STANDARD
STD	STANDARD
STL	STEEL
STR	STRUCTURAL
SUP	SUPPORT
SUSP	SUSPENDED
SV	SHEET VINYL
SW	SWITCH, SIDEWALK
SWBD	SWITCHBOARD SWGR SWITCHGEAR
T	TILE,TOP,TANGENT, TREAD
T&B	TOP AND BOTTOM
TC	TOP OF CURB, TOP OF CURVE
TEL	TELEPHONE
TEMP	TEMPERATURE, TEMPORARY
TERM	TERMINAL
3/C	THREE CONDUCTOR
3/P	THREE POLE
3 WAY	THREE WAY
TH	TOTAL HEAD (PUMPS)
THRSLD	THRESHOLD
TO	TOP OF
TOF	TOP OF FOOTING
TOS	TOP OF SLAB
TOW	TOP OF WALL
TP	TEST PIT
TR	TOP REGISTER
TRANS	TRANSITION
TS	TOP OF STEEL, TOP OF STONE
TV	TELEVISION
TW	TOP OF WALL
TYP	TYPICAL
U	URINAL
UG	UNDERGROUND
UCR	UNDER COUNTER REFRIGERATOR
UGE	UNDERGROUND ELECTRIC
UGT	UNDERGROUND TELEPHONE
UH	UNIT HEATER
UNO	UNLESS NOTED OTHERWISE
V	VENT,VOLT,VALVE
VA	VOLT AMPRE
VAC	VACUUM
VASB	VINYL ASBESTOS
VB	VAPOR BARRIER
VC	VARNISH CAMBRIC, VITRIFIED CLAY
VCP	VITRIFIED CLAY PIPE
VCT	VINYL COMPOSITION TILE
VDOT	VIRGINIA DEPARTMENT OF TRANSPORTATION
VENT	VENTILATING
VERT	VERTICAL
VEST	VESTIBULE
VPI	VERTICAL POINT OF INTERSECTION
VPOC	VERTICAL POINT OF CURVE
VPOT	VERTICAL POINT OF TANGENT
VS	VENT STACK
VTR	VENT THRU ROOF
VWC	VINYL WALL COVERING
W	WIDTH,WASTE,WATER,WATT,WEST
W	WIRE, WATER LINE STRUCTURE
WA	WATT
W/	WITH
W/O	WITHOUT
WB	WET BULB
WC	WATER CLOSET
WD	WIDTH, WINDOW DIMENSION, WOOD
WH	WATER HEATER
WL	WATER LEVEL, WATER LINE
WM	WATER METER
WO	WHERE OCCURS
WOM	WALK OFF MATT
WP	WATERPROOF, WEATHERPROOF
WS	WASTE STACK, WATER SURFACE, WATERSTOP
WT	WEIGHT
WWF	WELDED WIRE FABRIC
XFMR	TRANSFORMER
X-STR	UNIT HEATER
2:1 SL	2 HORIZONTAL TO 1 VERTICAL SLOPE
1 ON 2	1 VERTICAL ON 2 HORIZONTAL SLOPE
△	DEFLECTION ANGLE
Ø	DIAMETER, PHASE

GENERAL SYMBOL LEGEND

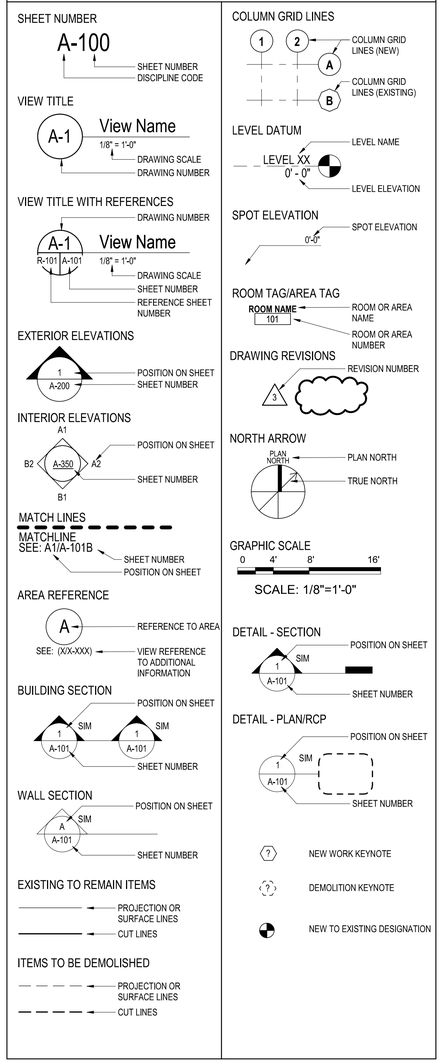

GENERAL NOTES

1. DRAWINGS & SPECIFICATIONS ARE COMPLIMENTARY COMPONENTS OF THE CONTRACT DOCUMENTS, REVIEW ALL DRAWINGS AND SPECIFICATIONS FOR THE COMPLETE SCOPE OF WORK. NOTIFY ARCHITECT IMMEDIATELY FOR CLARIFICATION IF INCONSISTENCIES, CONTRADICTIONS OR OMISSIONS ARE DISCOVERED.
2. DO NOT SCALE DRAWINGS, IF DIMENSIONAL INFORMATION IS REQUIRED & NOT FOUND, NOTIFY ARCHITECT IMMEDIATELY FOR CLARIFICATION.
3. ALL DIMENSIONS ARE TO COLUMN CENTERLINES OR FACE OF FINISHED WALLS OR SURFACES UNLESS NOTED OTHERWISE.
4. REFER TO DEMOLITION DRAWINGS, IF ANY, FOR WORK REQUIRED IN ADVANCE OF CONSTRUCTION AND COORDINATE ACCORDINGLY.
5. CONTRACTOR TO REMOVE AND DISPOSE OF (E) ONE WAY ROOF VENTS, TYPICAL OF 10.

SHEET INDEX

G-001 - COVER SHEET
G-002 - GENERAL INFORMATION
S-100 - STRUCTURAL FRAMING, PLANS SECTIONS AND NOTES
A-101 - ARCHITECTURAL ROOF PLAN
A-102 - ROOF DETAILS
A-501 - DETAILS-EXTERIOR

PROJECT SUMMARY

The project is located at the Pamplin Administration Building at 14016 Boydton Plank Rd.,Dinwiddie, Virginia. The scope of work includes the roof replacement of the total 19,500 SF roof area. Demolition work includes the removal of the existing low-slope, gravel-surfaced, built-up roof system including insulation, wood blocking, and edge metal, down to the existing roof deck. New work includes the installation of a single-ply TPO membrane roof system. The new system includes the installation of wood blocking, poly-isocyanurate rigid board insulation, a gypsum cover board, edge metal, flashings, primary roof drains, and overflow drains.

NOTE:
SYMBOLS AND ABBREVIATION ARE SHOWN FOR REFERENCE ONLY AND DO NOT CONSTITUTE A CHECK LIST REQUIRED BY THE CONTRACT

DJG INC.
ENGINEERS
ARCHITECTS
PLANNERS
449 McLaws Circle - Williamsburg,
VA 23185
757-253-0673
757-253-2319
www.djginc.com

DINWIDDIE COUNTY

PAMPLIN ADMIN. BLDG.
ROOF REPLACEMENT
14016 Boydton Plank Road
Dinwiddie, VA 23841

MARK	DATE	DESCRIPTION

COMMISION NUMBER
2220180

SCALE:	As indicated
DESIGNED:	Steven Lowe, AIA, NCARB
DRAWN:	Steven Lowe, AIA, NCARB
CHECKED:	John Ozmore, AIA
DATE:	12/22/2021

COMMONWEALTH OF VIRGINIA
DONALD FRANKLIN BOOTH JR.
No. 011728
12/22/2021
ARCHITECT

SHEET TITLE
GENERAL INFORMATION

SHEET NUMBER
G-002
SHEET 2 OF 6

12/22/2021 9:33:59 AM C:\Users\kellyh\Documents\DJG-V2021_2220180-A-CENTRAL_khamLBG4C.rvt

GENERAL NOTES

1. WORK PERFORMED SHALL COMPLY WITH THE FOLLOWING:
   A. THE VIRGINIA UNIFORM STATEWIDE BUILDING CODE (VUSBC); 2018 EDITION
   B. THE INTERNATIONAL BUILDING CODE (IBC); 2018 EDITION AS AMENDED BY THE VUSBC.
   C. ALL APPLICABLE STATE AND LOCAL CODES, ORDINANCES AND REGULATIONS.

2. DESIGN LOADS:
   A. BUILDING RISK CATEGORY_____II
   B. GROUND SNOW, Pg_____20 PSF
      FLAT ROOF SNOW LOAD, Pf_____13 PSF
      SNOW EXPOSURE FACTOR, Ce_____0.9
      SNOW THERMAL FACTOR, Ct_____1.0
      SNOW IMPORTANCE FACTOR, I_____1.0
   C. ULTIMATE DESIGN WIND SPEED_____115 MPH
      EXPOSURE_____B

   D. LIVE LOADS:

	UNIFORM
ROOF	20 PSF

   E. SEISMIC DESIGN:
      SEISMIC IMPORTANCE FACTOR, I_____1.0
      MAPPED SPECTRAL RESPONSE ACCELERATION Ss_0.165
      MAPPED SPECTRAL RESPONSE ACCELERATION S1__0.0
      SITE SOIL CLASS_____D
      SPECTRAL COEFFICIENT, Sds_____0.176
      SPECTRAL COEFFICIENT, Sd1_____0.08
      SEISMIC DESIGN CATEGORY_____B

3. THE CONTRACTOR SHALL VERIFY DIMENSIONS IN FIELD PRIOR TO FABRICATION OF MEMBERS AND COMMENCING WORK.

4. PROVIDE TEMPORARY BRACING AS REQUIRED TO RESIST WIND AND OTHER LOADS DURING CONSTRUCTION.

5. FOR SHOP DRAWING SUBMITTALS, CONTRACTOR SHALL SUBMIT ONE (1) ELECTRONIC (PDF) SET OF SHOP DRAWINGS & PRODUCT SUBMITTALS. REPRODUCTIONS OF CONTRACT DRAWINGS ARE NOT TO BE SUBMITTED AS SHOP DRAWINGS.

6. THE CONTRACTOR SHALL PROTECT EXISTING STRUCTURES, EQUIPMENT, ADJACENT GROUNDS AND PLANTS DURING ALL PHASES OF CONSTRUCTION. THE CONTRACTOR SHALL REPAIR AND/OR REPLACE, AT NO ADDITIONAL COSTS TO THE OWNER, ANY ITEMS DAMAGED DURING THE CONSTRUCTION.

DEMOLITION

7. UNTIL PROPERLY SHORED, DO NOT CUT EXISTING STRUCTURAL MEMBER IN A MANNER RESULTING IN A REDUCTION OF LOAD-CARRYING CAPACITY. DO NOT EXCEED THE CAPACITY OF THE EXISTING STRUCTURE WITH SUPERIMPOSED LOADS.

8. IN GENERAL, SELECTIVE STRUCTURAL DEMOLITION IS TO BE PERFORMED WITH PHYSICAL CUTTING ACTION (SAWING AND GRINDING INSTEAD OF HAMMERING AND CHOPPING). DO NOT USE JACKHAMMERS ON STRUCTURALLY SUPPORTED MEMBERS.

9. CONTRACTOR SHALL VERIFY THAT EXISTING CONSTRUCTION CORRESPONDS TO THAT SHOWN ON THE DRAWINGS. DISCREPANCIES SHALL BE IMMEDIATELY BROUGHT TO THE ATTENTION OF THE ARCHITECT/ENGINEER.

STRUCTURAL STEEL:

10. ALL STRUCTURAL STEEL FRAMING SHALL BE IN ACCORDANCE WITH THE LATEST EDITION OF A.I.S.C. "MANUAL OF STEEL CONSTRUCTION". ALL STRUCTURAL STEEL BEAM SHAPES SHALL BE ASTM A-992. ALL STEEL ANGLES, CHANNELS, AND PLATES SHALL BE ASTM A-36. ALL STRUCTURAL STEEL TUBES SHALL BE ASTM A500 GRADE B.

11. CONTRACTOR TO SUBMIT STRUCTURAL STEEL SHOP DRAWINGS FOR REVIEW BY THE STRUCTURAL ENGINEER OF RECORD (SER).

12. ALL STRUCTURAL STEEL SHOP WORK TO BE WELDED WITH E70XXX ELECTRODES. UNLESS NOTED OTHERWISE, FIELD WORK CONNECTIONS TO BE BOLTED WITH 3/4" HIGH STRENGTH A325X BOLTS OR WELDED WITH E70XXX ELECTRODES. PRE-DRILL HOLES IN STEEL MEMBERS AS REQUIRED FOR FASTENING, BLOCKING, ETC.

13. ALL POSTS SHALL BE FURNISHED WITH CAP PLATES AND BASE PLATES OF SIZES CALLED FOR AND SHALL BE SHOP WELDED. POST BASE PLATES SHALL BEAR ON LEVELING NUTS SET IN 1" THICKNESS OF APPROVED SHRINK RESISTANT GROUT EXCEPT WHEN SHOWN OTHERWISE, AND ANCHORED WITH FOUR (4) 3/4" DIAMETER 12" HEADED BOLTS. SHIM UNDER BASE PLATES AS REQUIRED.

14. ALL STRUCTURAL STEEL FRAMING AND JOISTS TO HAVE ONE (1) SHOP COAT OF RUST INHIBITIVE PAINT AFTER FABRICATION, AND ONE (1) FINISH COAT OF APPROVED PAINT, UNLESS NOTED OTHERWISE. ALL EXPOSED STEEL TO HAVE TWO (2) COATS OF APPROVED COLOR SELECTED BY OWNER.

ABBREVIATIONS

ARCH.	ARCHITECTURAL	TEMP.	TEMPORARY
℄	CENTERLINE	TYP.	TYPICAL
DIA.	DIAMETER	V.I.F.	VERIFY IN FIELD
EX.	EXISTING	W	WITH

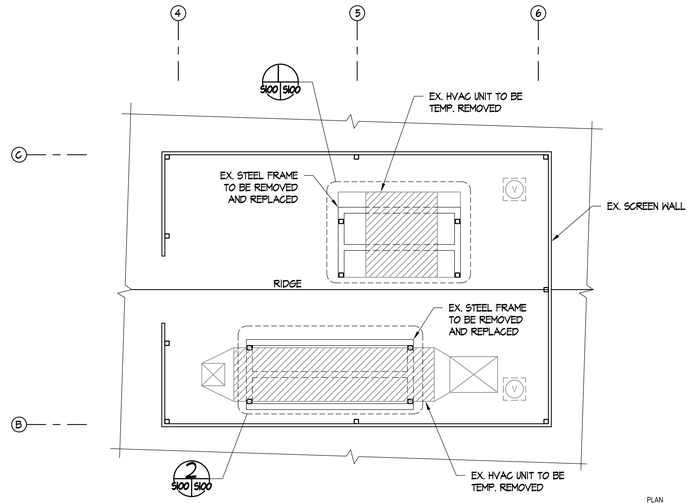

PARTIAL EX. ROOF FRAMING PLAN

SCALE: 1/8" = 1'-0"

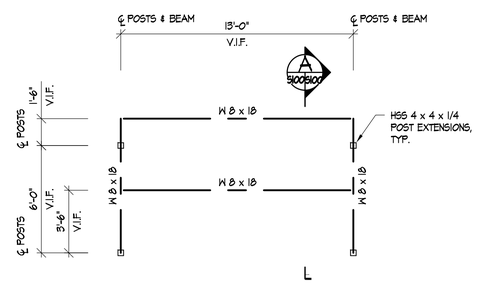

HVAC SUPPORT FRAMING PLAN

SCALE: 1/4" = 1'-0"

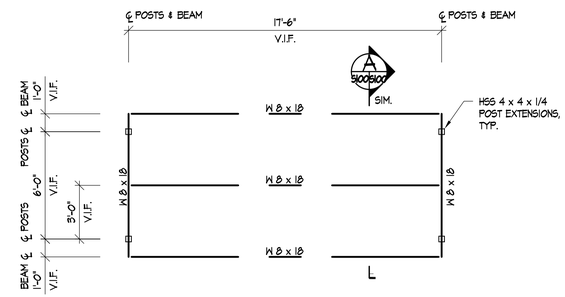

HVAC SUPPORT FRAMING PLAN

SCALE: 1/4" = 1'-0"

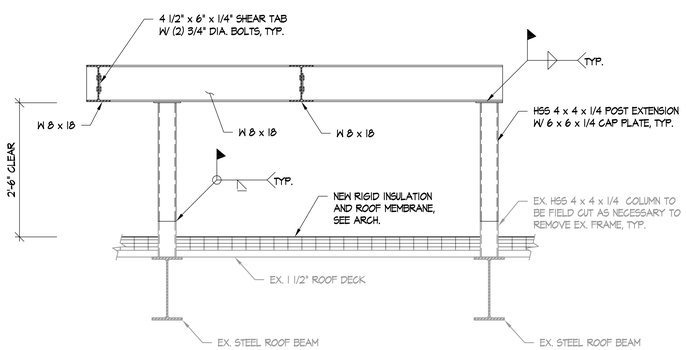

SECTION

SCALE: 3/4" = 1'-0"

DJG INC.
ENGINEERS ARCHITECTS PLANNERS
449 McLaws Circle - Williamsburg, VA 23185
757-253-0673
757-253-2319
www.djginc.com

The Structures Group, Inc.
1200 Old Colony Lane
Williamsburg, VA 23185
(757) 220-0465
www.thestructuresgroup.com

DINWIDDIE COUNTY

PAMPLIN ADMIN. BLDG.
ROOF REPLACEMENT
14016 Boydton Plank Road
Dinwiddie, VA 23841

MARK	DATE	DESCRIPTION

COMMISION NUMBER
2220180

SCALE:	AS NOTED
DESIGNED:	CMT
DRAWN:	JBA
CHECKED:	MAM
DATE:	12/22/21

COMMONWEALTH OF VIRGINIA
CHARLES M. THOMAS, JR.
Lic. No. 046588
12/22/21
PROFESSIONAL ENGINEER

SHEET TITLE
STRUCTURAL FRAMING PLANS, SECTIONS, AND NOTES

SHEET NUMBER
S-100
SHEET 3 OF 6

© 2021 DJG, INC.
11/17/2021 1:30:41 PM C:\Users\slowe\Documents\DJG-V2021_2220180-A-CENTRAL_slowe\WYAS.rvt

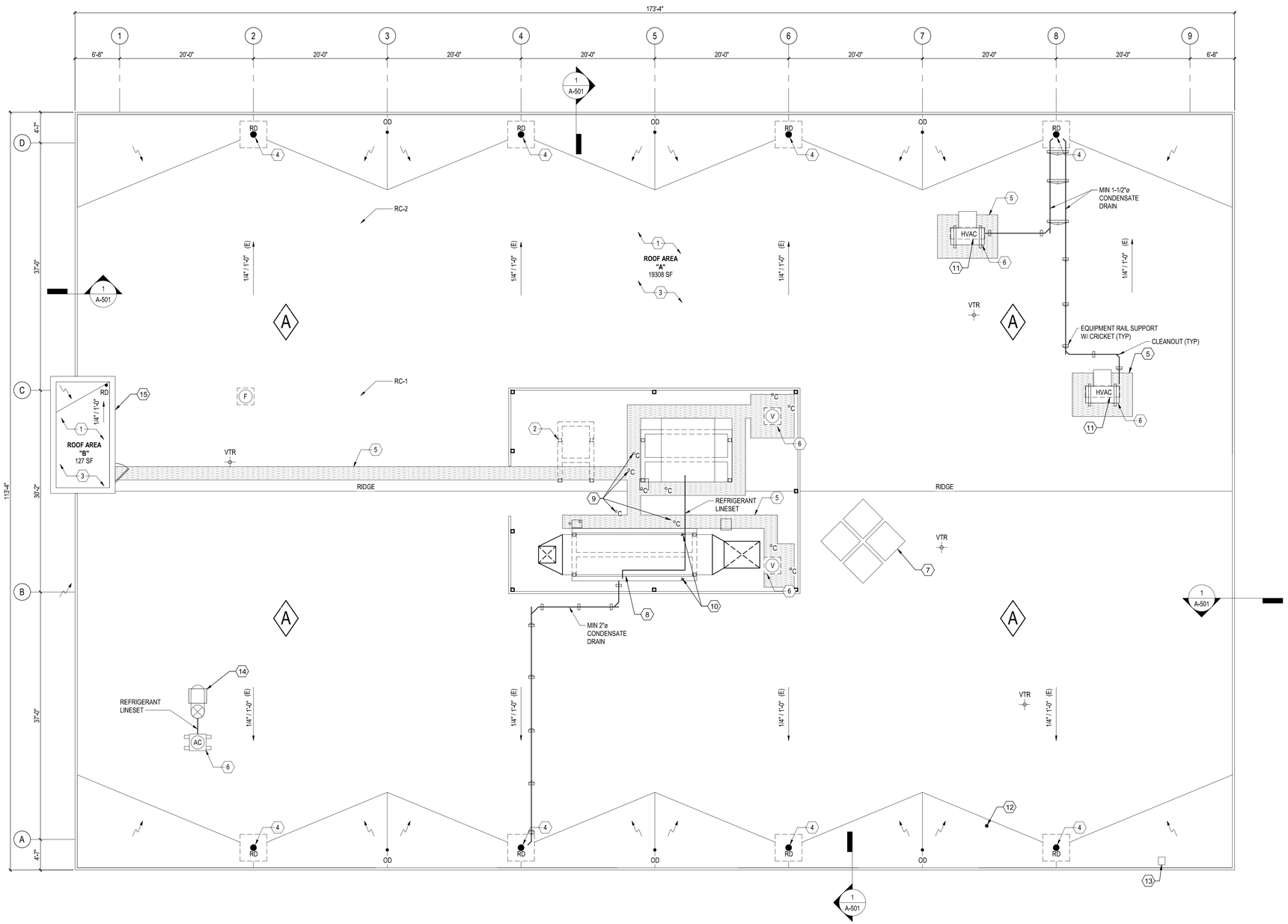

ROOF PLAN KEYED NOTES:

1. REMOVE AND DISPOSE OF ALL EXISTING LAYERS OF GRAVEL AND ROOFING INCLUDING INSULATION DOWN TO THE EXISTING METAL DECK. CLEAN ALL FLUTES IN EXISTING METAL DECKING PRIOR TO NEW ROOF INSTALLATION. INSPECT EXISITING METAL ROOF DECK FOR DAMAGE / DETERIORATION. CONTRACTOR SHALL PRIME RUSTED AREAS OF EXISTING METAL DECK.
2. REMOVE AND DISPOSE OF ABANDONED EQUIPMENT SUPPORT FRAMING AND UNNECCESARY ROOF PENETRATIONS.
3. NEW REINFORCED 0.060" SINGLE PLY TPO MEMBRANE, FULLY ADHERED TO 1/2" COVER BOARD OVER TWO LAYERS OF 2-1/2" POLYISO. WITH JOINTS STAGGERED MIN. 6".
4. (N) CAST IRON ROOF DRAIN W/ CAST IRON DOME STRAINER AND UNDERDECK CLAMPING RING, DIAMETER TO MATCH EXISTING DRAIN. TYP. UNLESS OTHERWISE NOTED.
5. WALKPAD BY ROOFING MANUFACTURER. HEAT-WELD AND SPACE PER MANUFACTUERES RECOMMENDATIONS. WALKPADS SHALL NOT IMPEDE DRAINAGE.
6. EXISTING MECHANICAL EQUIPMENT; SIZE VARIES. DISCONNECT, RAISE, AND RECONNECT AS REQUIRED TO OBTAIN MINIMUM 10" FLASHING HEIGHT. PROVIDE EQUIPMENT SUPPORT CURBS PER DETAIL 7/A-501. PROVIDE NEW DUCTWORK, CONDENSATE DRAIN, AND REFRIGERANT PIPING AS INDICATED.
7. RAISE AND RESET EXISTING SKYLIGHT DOMES ON NEW RAISED ROOF CURBS. SEE DETAIL 3/A-501.
8. CONTRACTOR TO DISCONNECT, RAISE AND RESET EXISTING ROOFTOP UNIT ON NEW STEEL FRAME TO PROVIDE CLEARANCE BETWEEN BOTTOM OF UNIT AND (N) ROOF SYSTEM. CONTRACTOR SHALL EXTEND ALL DUCTWORK, PIPING AND POWER AS REQUIRED TO ALIGN WITH NEW ELEVATION OF RTU.
9. ABANDONED, TO BE REMOVED.
10. CONTRACTOR TO REMOVE EXISTING STEEL SUPPORT ANGLE TO BELOW (E) ROOF DECK, TYPICAL OF 2.
11. INFILL (E) OPENING IN METAL DECK IN ACCORDANCE WITH DETAIL 2/A-102.
12. (E) COAXIAL CABLE PENETRATION TO BE REMOVED PRIOR TO ROOF REPLACEMENT BY OWNER. COORDINATE ROOF SCHEDULE WITH OWNER.
13. OWNER TO REMOVE ROOFTOP SATELLITE. COORDINATE ROOF SCHEDULE WITH OWNER.
14. (N) PIPING DOGHOUSE, SEE DETAIL 1/A-102
15. PROVIDE BRONZE LAMB'S TONGUE AT ROOF DRAIN OUTLET, TYP OF 1.

MECHANICAL GENERAL NOTES

1. ALL DUCTWORK IS TO BE G90 GALVANIZED STEEL AND CONSTRUCTED IN ACCORDANCE WITH SMACNA. ALL DUCTWORK ABOVE THE ROOF LINE SHALL BE REPLACED. SUBMIT DUCT CONSTRUCTION FOR REVIEW.
2. ALL DUCT INSULATION SHALL BE 2" THICK 3.0 PCF RIGID FIBERGLASS AND PROVIDED WITH AN 0.040" THICK STUCCO ALUMINUM JACKET. INSULATION ON TOP OF DUCTS SHALL BE PROVIDED AS SLOPED TO PREVENT WATER ACCUMULATION. SEE ARCHITECTURAL DETAILS FOR FLASHING REQUIREMENTS. SUBMIT INSULATION AND JACKETING FOR REVIEW.
3. ALL REFRIGERANT PIPING SHALL BE VACUUMED AND REPLACED WITH TYPE ACR SOLDERED COPPER LINESETS. LINESETS SHALL BE INSULATED WITH ELASTOMERIC INSULATION AND PROVIDED WITH A PVC JACKET. REFRIGERANT PIPING SHALL BE PRESSURE TESTED AND RECHARGED IN ACCORDANCE WITH MANUFACTURER'S INSTRUCTIONS. SUBMIT TEST RESULTS FOR REVIEW.
4. ALL CONDENSATE DRAIN PIPING SHALL BE REPLACED WITH TYPE DWV COPPER PIPING WITH PRESS-FIT CONNECTIONS. ALL DRAIN PIPING SHALL BE TRAPPED AS DETAILED AND ROUTED TO THE NEAREST ROOF DRAIN. SUBMIT PIPING AND FITTINGS FOR REVIEW
5. ALL EQUIPMENT, PIPING, AND DUCTWORK SHALL BE SUPPORTED IN ACCORDANCE WITH THE VIRGINIA MECHANICAL CODE AND SUPPORTED BY RIGID STRUCTURAL SUPPORTS OR ROOF CURB EQUIPMENT RAILS. THE USE OF RUBBER ROOF SUPPORT BLOCKS IS PROHIBITED.

ROOF LEGEND

X" / 1'-0"	ROOF SLOPE (BUILT INTO EXISTING STRUCTURE)
	ROOF CRICKET SLOPE DIRECTION (1/2" PER FOOT SLOPE U.O.N.)
VTR	VENT THROUGH ROOF, SEE DETAIL 4/ SHEET A-501
RD	ROOF DRAIN, SEE DETAIL 2/ SHEET A-501
°C	ELECTRICAL CONDUIT, SEE DETAIL 5/ SHEET A-501
A	ROOF TYPE, SEE DETAIL A, SHEET A-501

ROOF CORE SCHEDULE

RC-1:
1/4" MODIFIED BITUMEN
1/2" COVER BOARD
3/4" GRAVEL SURFACED BUILT-UP ROOF
3" RIGID FIBERGLASS INSULATION
1/2" PERLITE
5" TOTAL THICKNESS

RC-2:
1/4" BITUMEN
1/2" COVER BOARD
3/4" GRAVEL SURFACED BUILT-UP ROOF
3" RIGID FIBERGLASS INSULATION
1/2" PERLITE
5-1/2" TOTAL THICKNESS

0 4' 8' 16'
SCALE: 1/8"=1'-0"

PLAN NORTH

01-A-ROOF PLAN
1/8" = 1'-0"

DJG INC.
ENGINEERS
ARCHITECTS
PLANNERS
449 McLaws Circle - Williamsburg,
VA 23185
757-253-0673
757-253-2319
www.djginc.com

DINWIDDIE COUNTY

PAMPLIN ADMIN. BLDG.
ROOF REPLACEMENT
14016 Boydton Plank Road
Dinwiddie, VA 23841

MARK	DATE	DESCRIPTION

COMMISION NUMBER
2220180

SCALE:	As indicated
DESIGNED:	Steven Lowe, AIA, NCARB
DRAWN:	Steven Lowe, AIA, NCARB
CHECKED:	Donald Booth, AIA
DATE:	12/22/2021

COMMONWEALTH OF VIRGINIA
DONALD FRANKLIN BOOTH JR.
No. 011728
12/22/2021
ARCHITECT

SHEET TITLE
ARCHITECTURAL ROOF PLAN

SHEET NUMBER
A-101
SHEET 4 OF 6

12/22/2021 9:33:52 AM C:\Users\kelly\Documents\DJG-V2021_2220180-A-CENTRAL_khan1.BG4Cr.rvt

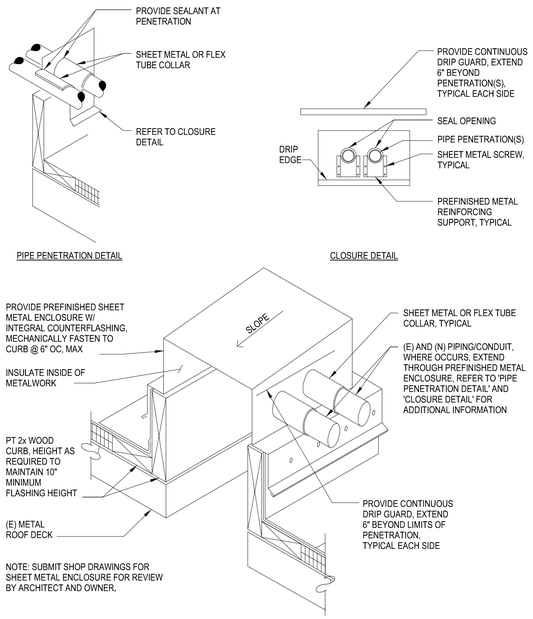

1 A-102 DOGHOUSE DETAIL
1 1/2" = 1'-0"

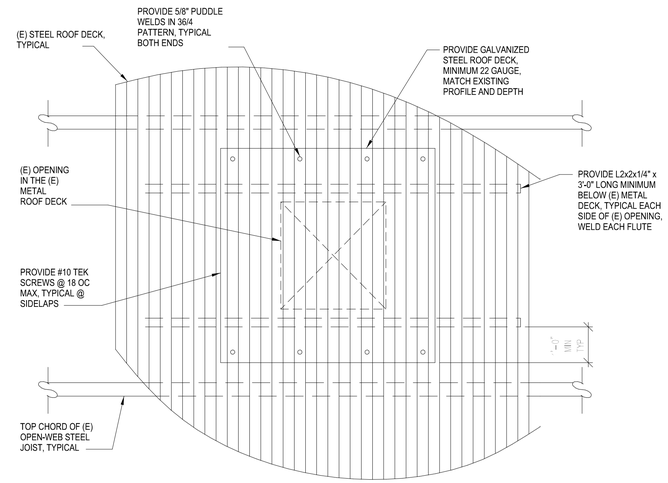

2 A-102 INFILL @ (E) OPENING
1 1/2" = 1'-0"

PLAN NORTH

DJG INC.

ENGINEERS
ARCHITECTS
PLANNERS

449 McLaws Circle - Williamsburg,
VA 23185
757-253-0673
757-253-2319
www.djginc.com

DINWIDDIE COUNTY

PAMPLIN ADMIN. BLDG.
ROOF REPLACEMENT
14016 Boydton Plank Road
Dinwiddie, VA 23841

MARK	DATE	DESCRIPTION

COMMISION NUMBER
2220180

SCALE:	1 1/2" = 1'-0"
DESIGNED:	Steven Lowe, AIA, NCARB
DRAWN:	Steven Lowe, AIA, NCARB
CHECKED:	Donald Booth, AIA
DATE:	12/22/21

COMMONWEALTH OF VIRGINIA
DONALD FRANKLIN BOOTH JR.
No. 011728
12/22/2021
ARCHITECT

SHEET TITLE

ROOF DETAILS

SHEET NUMBER
A-102

12/22/2021 9:33:53 AM C:\Users\kelly\n\Documents\DJG-V2021_2220180-A-CENTRAL_kfaerl.BG4C.rvt

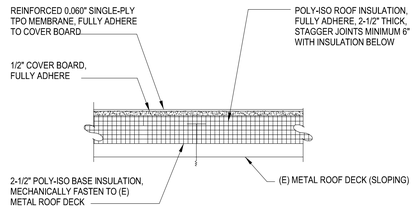

DEMO NOTE: REMOVE AND DISPOSE OF (E) TWO LAYERS OF GRAVEL-SURFACED BUILT-UP ROOF SYSTEM INCLUDING (E) RIGID BOARD INSULATION AND FIBERGLASS BOARD DOWN TO THE (E) METAL ROOF DECK. CLEAN ALL FLUTES IN (E) METAL ROOF DECK PRIOR TO (N) ROOF INSTALLATION. INSPECT (E) METAL ROOF DECK FOR DAMAGE/DETERIORATION. CONTRACTOR SHALL PRIME RUSTED AREAS OF THE (E) METAL ROOF DECK (WHERE OCCURS). CONTRACTOR SHALL INCLUDE 1,500 SF OF PRIMING OF (E) METAL ROOF DECK USING A RUST-INHIBITIVE COATING IN THE BASE BID. FASTEN (E) ROOF DECK TO (E) STEEL JOISTS WITH SDS @ 12" OC MAX, TYPICAL. REFER TO ROOF CORE LOG FOR DEMOLISHED SECTION ON SHEET A-101.

A FULLY ADHERED TPO ROOFING SYSTEM
NTS

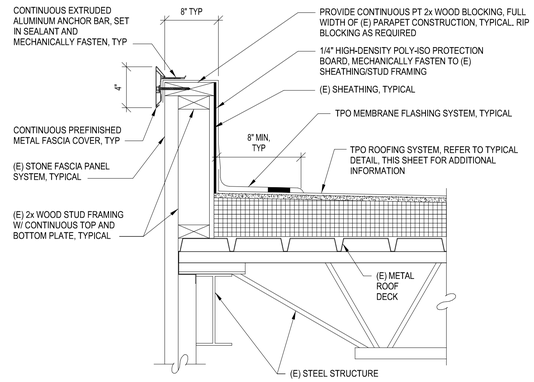

1 EDGE CONDITION
A-101 A-501 1 1/2" = 1'-0"

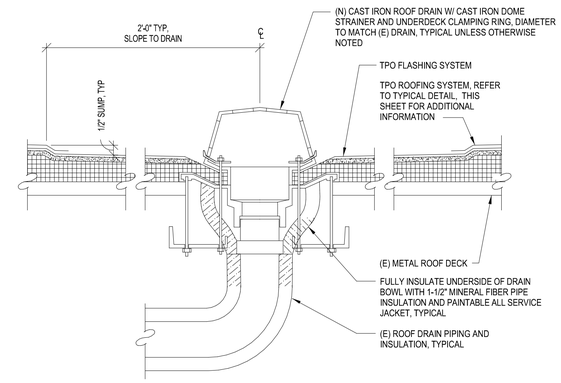

2 ROOF DRAIN DETAIL
A-501 1 1/2" = 1'-0"

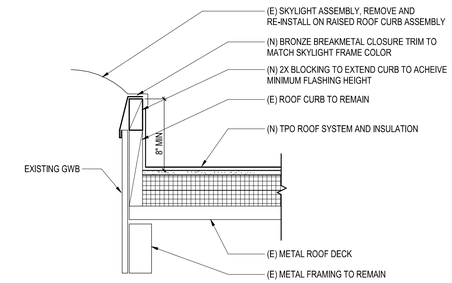

3 SKYLIGHT CURB FLASHING
A-501 1 1/2" = 1'-0"

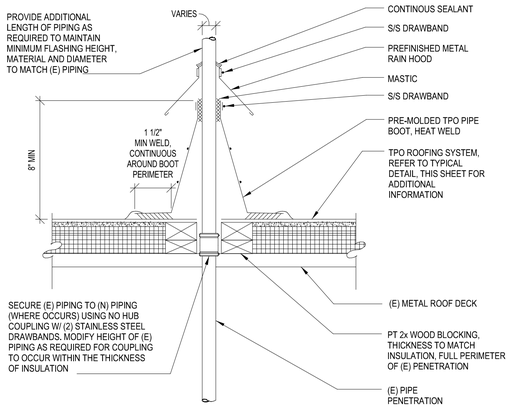

4 VTR DETAIL
A-501 1 1/2" = 1'-0"

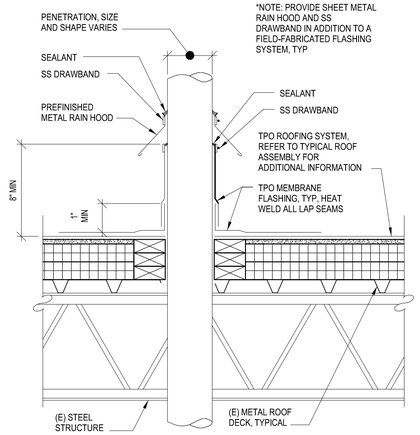

5 CONDUIT AND PIPE PENETRATIONS
A-501 1 1/2" = 1'-0"

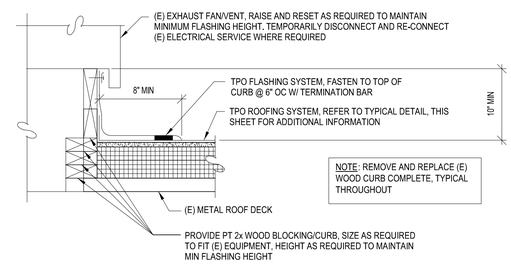

6 VENT, FAN, HOOD
A-501 1 1/2" = 1'-0"

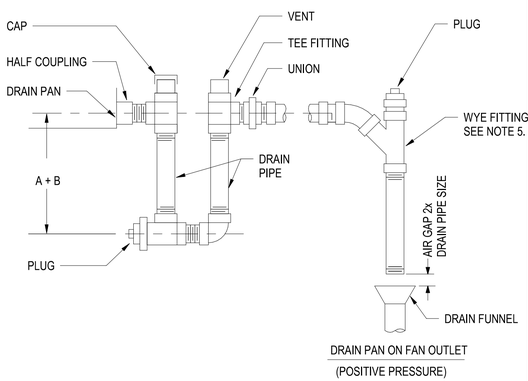

DRAIN PAN ON FAN OUTLET
(POSITIVE PRESSURE)

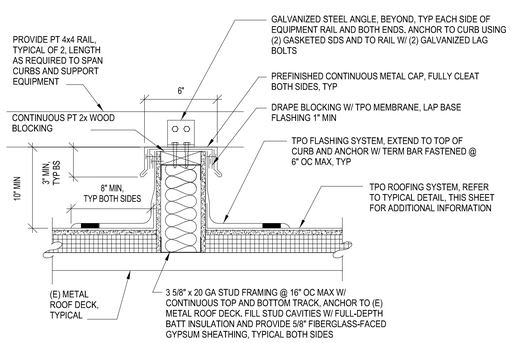

7 EQUIPMENT SUPPORT CURB
A-501 1 1/2" = 1'-0"

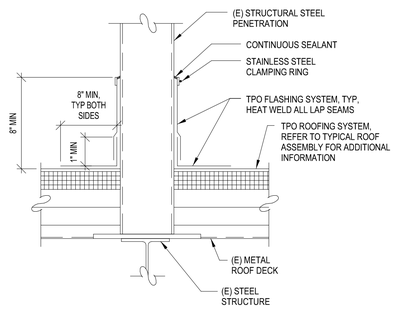

8 STRUCTURAL STEEL PENETRATION
A-501 1 1/2" = 1'-0"

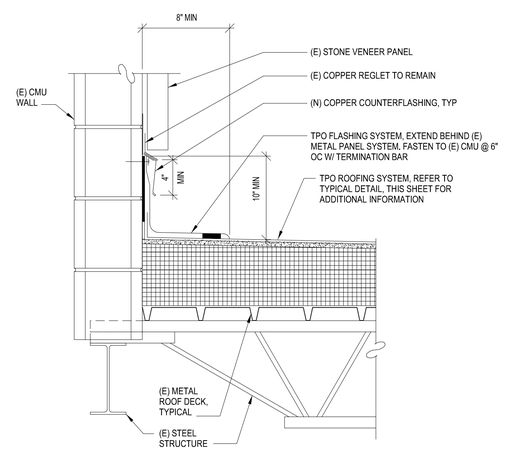

9 COUNTERFLASHING @ WALL
A-501 1 1/2" = 1'-0"

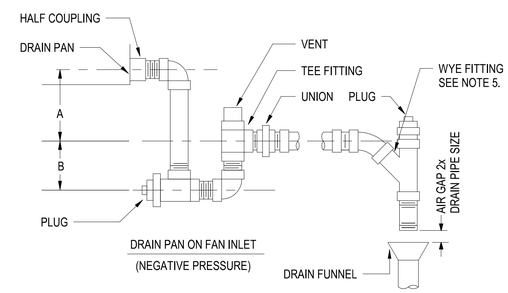

DRAIN PAN ON FAN INLET
(NEGATIVE PRESSURE)

NOTES:
1. DRAIN PIPE TO BE SAME SIZE AS UNIT OUTLET, BUT NO LESS THAN 1-1/4" PIPE SIZE.
2. "A" = SYSTEM STATIC PRESSURE IN INCHES AT DRAIN POINT.
3. "B" = 1/2 SYSTEM STATIC PRESSURE IN INCHES AT DRAIN POINT.
4. TRAP TO BE INSTALLED PARALLEL TO AIR HANDLING UNIT BASE.
5. ALL CONDENSATE FITTINGS TO BE DWV (DRAIN WASTE VENT) FITTINGS.
6. INSTALL CLEAN OUT AT EVERY CHANGE IN DIRECTION, MAX. 20'-0" BETWEEN CLEANOUTS.

10 AHU DRAIN DETAIL
A-501 12" = 1'-0"

DJG INC.
ENGINEERS
ARCHITECTS
PLANNERS
449 McLaws Circle - Williamsburg,
VA 23185
757-253-0673
757-253-2319
www.djginc.com

DINWIDDIE COUNTY

PAMPLIN ADMIN. BLDG.
ROOF REPLACEMENT
14016 Boydton Plank Road
Dinwiddie, VA 23841

MARK	DATE	DESCRIPTION

COMMISION NUMBER
2220180

SCALE:	As indicated
DESIGNED:	Steven Lowe, AIA, NCARB
DRAWN:	Steven Lowe, AIA, NCARB
CHECKED:	Donald Booth, AIA
DATE:	12/22/2021

COMMONWEALTH OF VIRGINIA
DONALD FRANKLIN BOOTH JR.
No. 011728
12/22/2021
ARCHITECT

SHEET TITLE
DETAILS - EXTERIOR

SHEET NUMBER
A-501
SHEET 6 OF 6

12/22/2021 9:33:56 AM C:\Users\kelly\h\Documents\DJG-V2021_2220180-A-CENTRAL_khart.BG4Cr.rvt