NEW PEDESTRIAN BRIDGE
AT
CORAL REEF PARK
AT THE
THE VILLAGE OF PALMETTO BAY

SHEET INDEX

SANTIAGO ARANEGUI P.E.
PE 0048106
6431 S.W. 145 STREET
CORAL GABLES, FL. 33158
(305) 431-6747

NEW PEDESTRAN BRIDGE FOR:
VILLAGE OF PALMETTO BAY

CORAL REEF PARK
Miami, Florida

JOB NUMBER
2009-0001

FILE No. :

DRAWN : S.A.A.
REVIEWED: S.A.A.
CHECKED : S.A.A.

Santiago Aranegui
Reg. No.: PE 0048106

DATE : 09/28/09

ISSUE

REVISIONS

SHEET TITLE

BRIDGE COVER SHEET

SHEET NUMBER

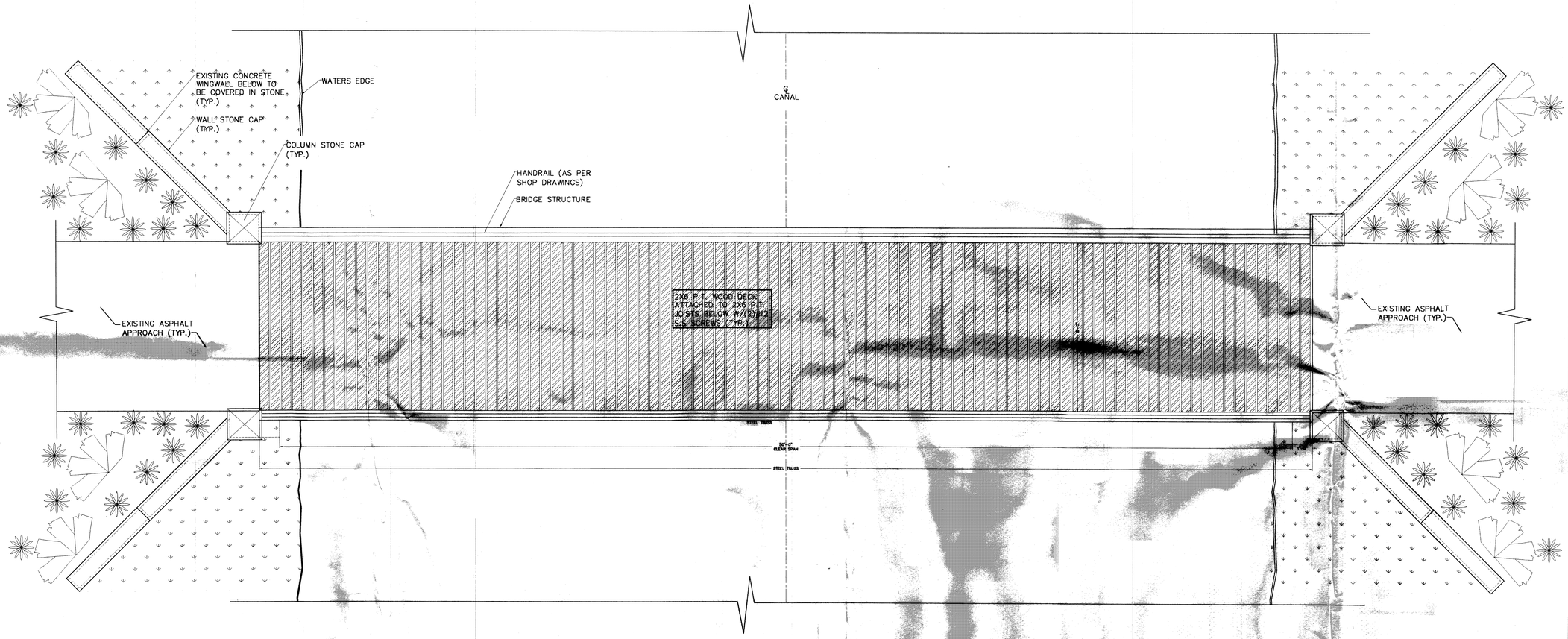

BRIDGE PLAN

SCALE: 3/8" = 1'-0"

NEW PEDESTRAN BRIDGE FOR:

VILLAGE OF PALMETTO BAY

CORAL REEF PARK
Miami, Florida

SANTIAGO ARANEGUI P.E.
PE 0048106
6431 S.W. 145 STREET
CORAL GABLES, FL. 33158
(305) 431-6747

JOB NUMBER
2009-0001

FILE No :

DRAWN :
REVIEWED :
CHECKED :

Santiago Aranegui
Reg. No.: PE 0048106

DATE : 09/28/09

ISSUE

REVISIONS

SHEET TITLE

BRIDGE PLAN

SHEET NUMBER

A-1

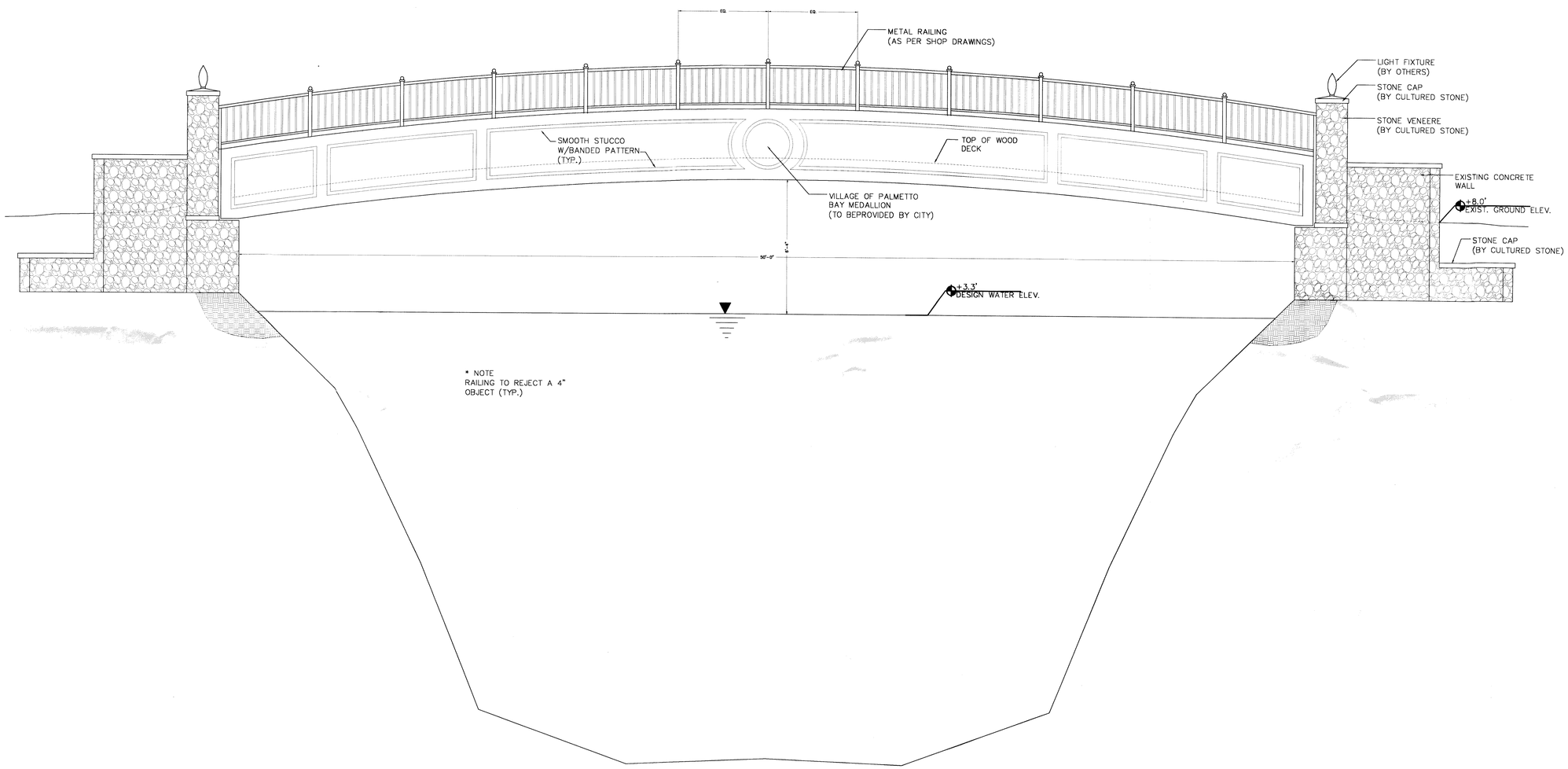

* NOTE
RAILING TO REJECT A 4"
OBJECT (TYP.)

BRIDGE ELEVATION
SCALE: N.T.S.

SANTIAGO ARANEGUI P.E.
PE 0048106
6431 S.W. 145 STREET
CORAL GABLES, FL. 33158
(305) 431-6747

NEW PEDESTRAN BRIDGE FOR:
VILLAGE OF PALMETTO BAY

CORAL REEF PARK
Miami, Florida

JOB NUMBER
2009-0001

FILE No. :

DRAWN : SAA
REVIEWED: SAA
CHECKED : SAA

Santiago Aranegui
Reg. No.: PE 0048106

DATE : 09/28/09

ISSUE

REVISIONS

SHEET TITLE

BRIDGE ELEVATION

SHEET NUMBER

A-2

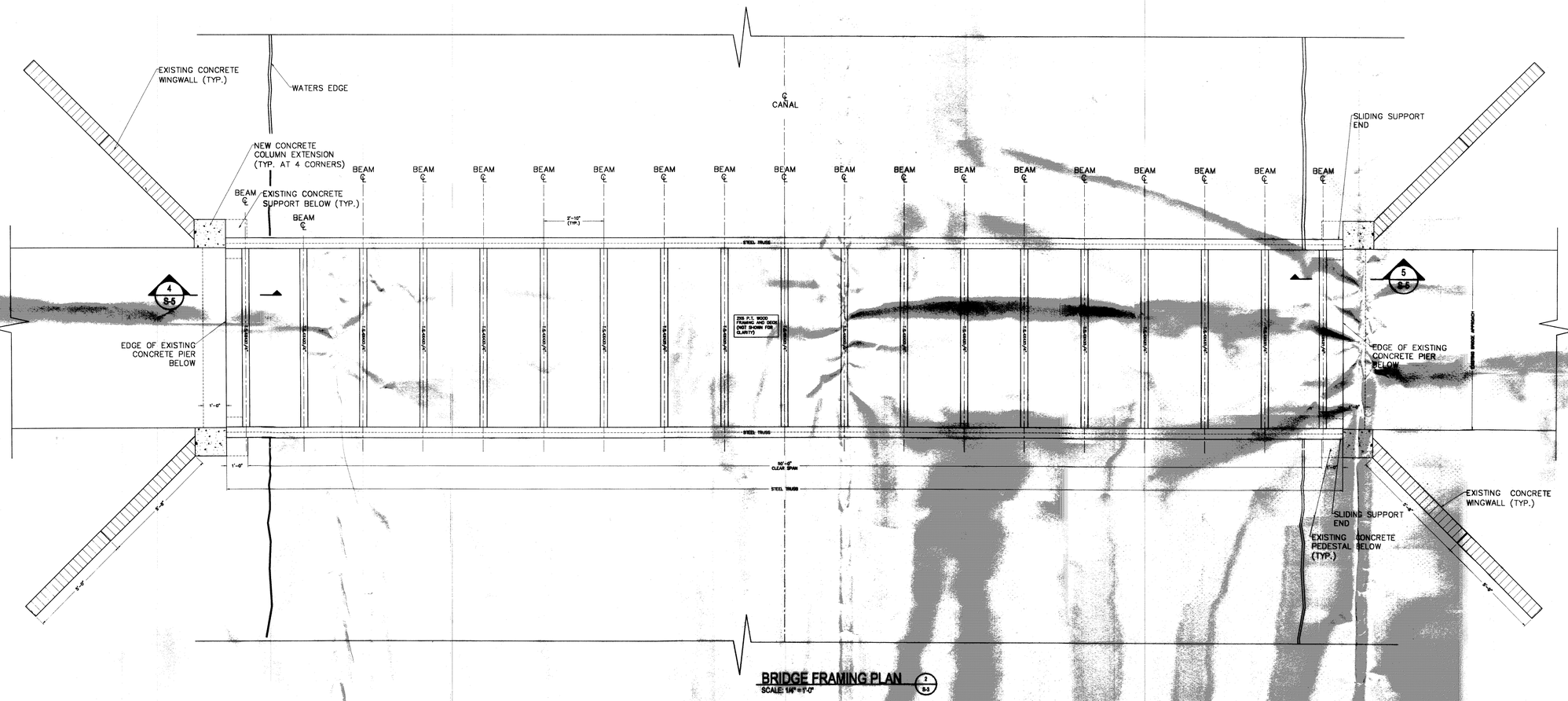

BRIDGE FRAMING PLAN (2 / S-3)

SCALE: 1/4" = 1'-0"

NEW PEDESTRAN BRIDGE FOR:

VILLAGE OF PALMETTO BAY

CORAL REEF PARK
Miami, Florida

SANTIAGO ARANEGUI P.E.
PE 0048106
6431 S.W. 145 STREET
CORAL GABLES, FL. 33158
(305) 431-6747

JOB NUMBER
2009-0001

FILE No. :

DRAWN : SA
REVIEWED : SA
CHECKED : SA

Santiago Aranegui
Reg. No.: PE 0048106

DATE : 09/28/09

ISSUE

REVISIONS

SHEET TITLE

BRIDGE FRAMING PLAN

SHEET NUMBER

S-1

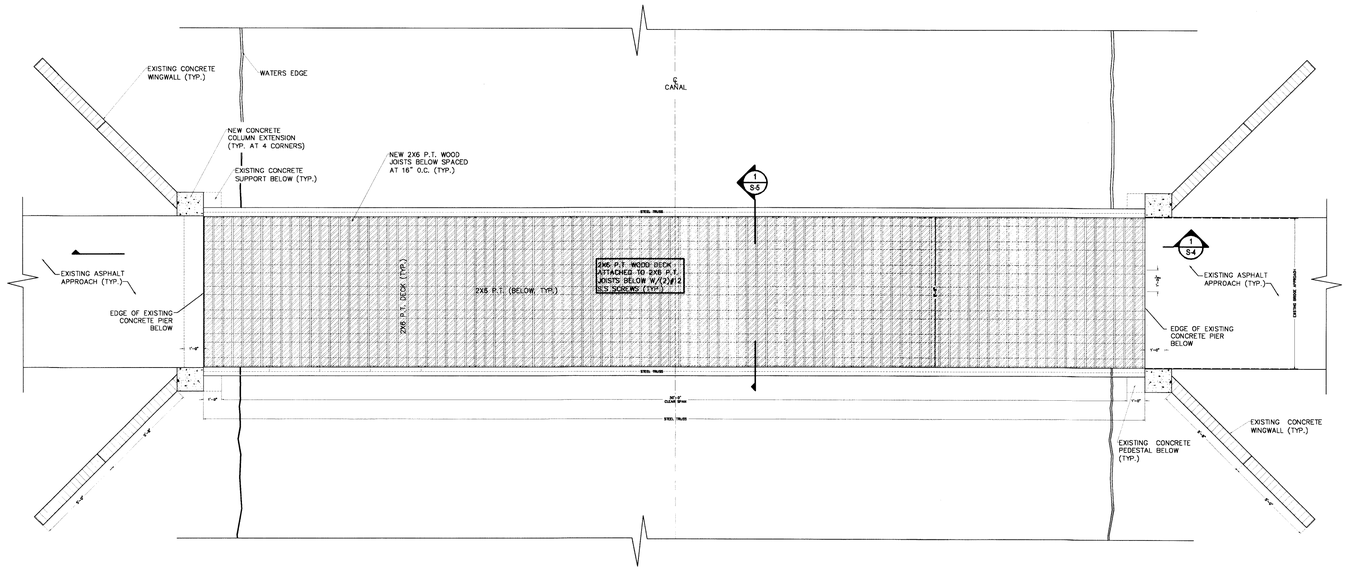

BRIDGE PLAN (W/ WOOD DECK) 1/S-2
SCALE: 1/4" = 1'-0"

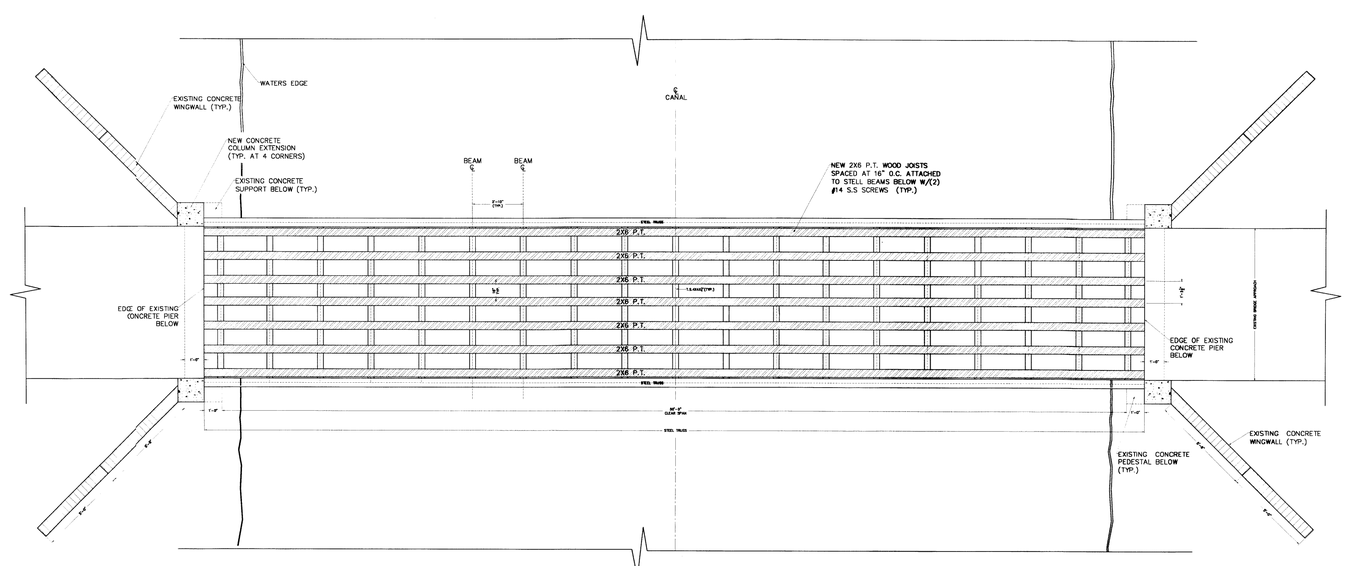

BRIDGE PLAN (EXCLUDING DECK) 1/S-2
SCALE: 1/4" = 1'-0"

SANTIAGO ARANEGUI P.E.
PE 0048106
6431 S.W. 145 STREET
CORAL GABLES, FL. 33158
(305) 431-6747

NEW PEDESTRAN BRIDGE FOR:
VILLAGE OF PALMETTO BAY

CORAL REEF PARK
Miami, Florida

JOB NUMBER
2009-0001

FILE No:

DRAWN : SAA
REVIEWED: SAA
CHECKED: SAA

Santiago Aranegui
Reg. No.: PE 0048106

DATE 09/28/09

ISSUE

REVISIONS

SHEET TITLE

BRIDGE PLAN

SHEET NUMBER

S-2

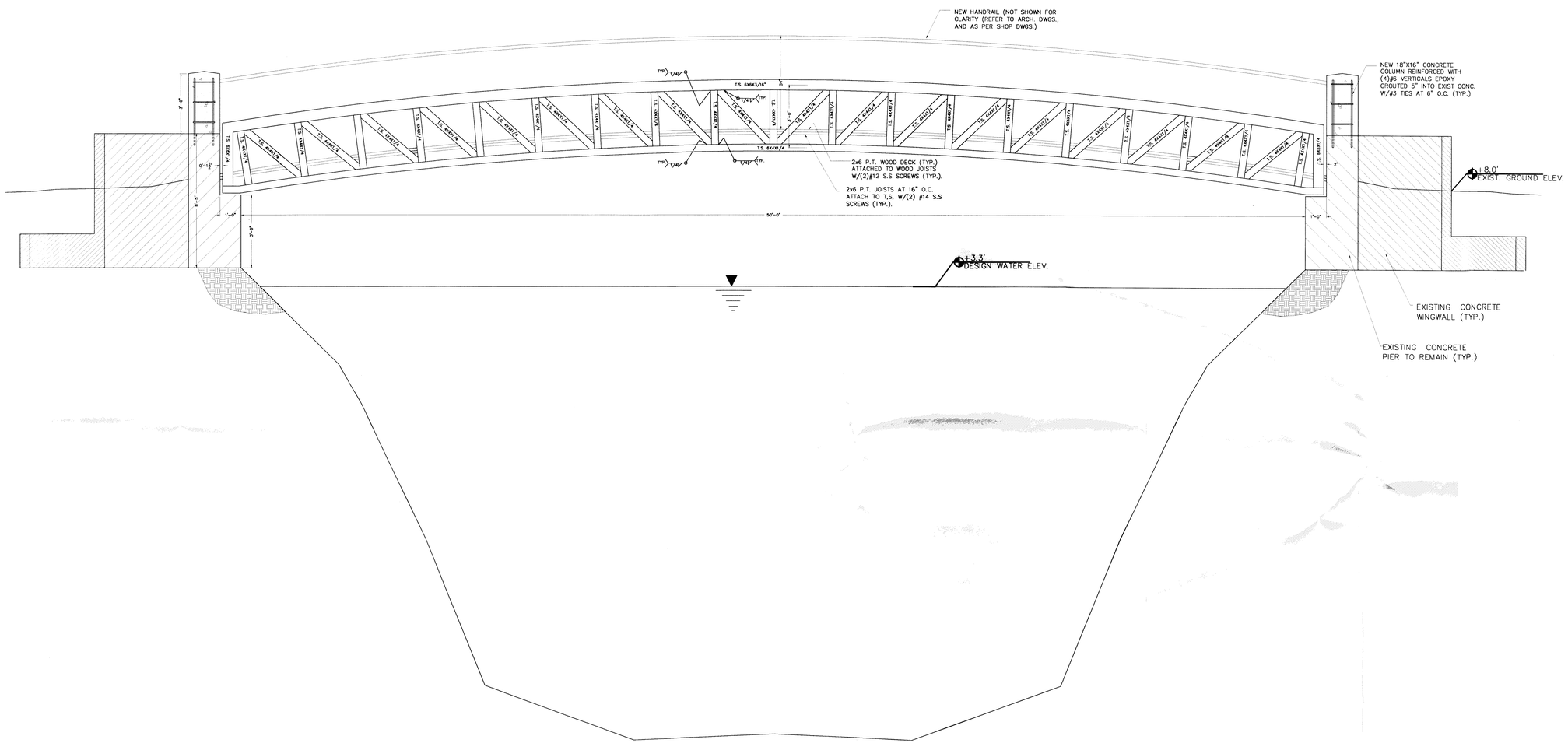

BRIDGE ELEVATION (1 / S-2)
SCALE: N.T.S.

SANTIAGO ARANEGUI P.E.
PE 0048106
6431 S.W. 145 STREET
CORAL GABLES, FL. 33158
(305) 431-6747

NEW PEDESTRAN BRIDGE FOR:
VILLAGE OF PALMETTO BAY

CORAL REEF PARK
Miami, Florida

JOB NUMBER
2009-0001

FILE No.:
DRAWN: SAA
REVIEWED: SAA
CHECKED: SAA

Santiago Aranegui
Reg. No.: PE 0048106

DATE: 09/28/09

ISSUE

REVISIONS

SHEET TITLE
BRIDGE SECTION

SHEET NUMBER
S-3

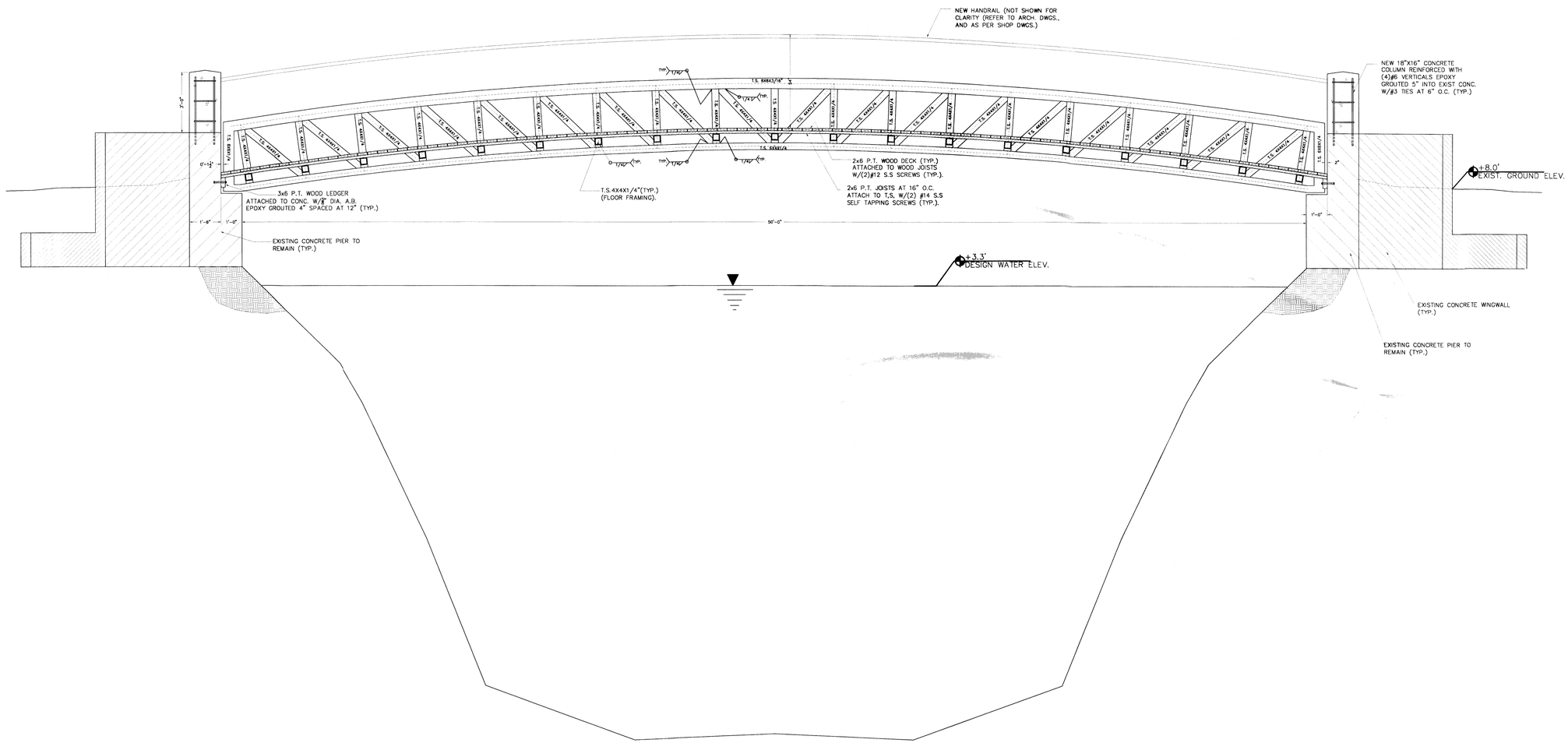

BRIDGE SECTION (1 / S-3)
SCALE: N.T.S.

SANTIAGO ARANEGUI P.E.
PE 0048106
6431 S.W. 145 STREET
CORAL GABLES, FL. 33158
(305) 431-6747

NEW PEDESTRAN BRIDGE FOR:
VILLAGE OF PALMETTO BAY

CORAL REEF PARK
Miami, Florida

JOB NUMBER
2009-0001

FILE No. :

DRAWN: SAA
REVIEWED: SAA
CHECKED: SAA

9/28/09

Santiago Aranegui
Reg. No.: PE 0048106

DATE 09/28/09

ISSUE

REVISIONS

SHEET TITLE
BRIDGE SECTION

SHEET NUMBER
S-4

GENERAL NOTES

1. ALL CONSTRUCTION SHALL COMPLY WITH THE 2007 FLORIDA BUILDING CODE.

2. CONTRACTOR TO VERIFY ALL DIMENSIONS PRIOR TO CONSTRUCTION. ANY DISCREPANCIES SHALL BE REPORTED TO THE ENGINEER/ARCHITECT BEFORE PROCEEDING.

3. CONTRACTOR SHALL SUBMIT SHOP DRAWINGS. APPROVAL OF SHOP DRAWINGS BY THE ENGINEER/ARCHITECT IS FOR DESIGN AND LAYOUT ONLY, AND IS NOT FOR THE PURPOSE OF AUTHORIZING CHANGES TO THE CONTRACT DRAWINGS FOR APPROVING SUBSTITUTIONS.

4. ALL ELEVATIONS SHOWN ON THESE DRAWINGS ARE MEASURED WITH RESPECT TO THE NGVD.

5. ALL MISCELLANEOUS STRUCTURAL STEEL SHALL CONFORM TO ASTM A36, UNLESS OTHERWISE NOTED.

6. ALL STRUCTURAL TUBING SHALL TO ASTM A500.

7. ALL BOLTING SHALL BE PERFORMED WITH HIGH STRENGTH BOLTS INCLUDING SUITABLE NUTS AND PLAIN HARDENED WASHERS CONFORMING TO ASTM A325.

8. ALL WELDS TO BE PERFORMED WITH E70XX ELECTRODES AND IN ACCORDANCE WITH AWS D1.1.

9. ALL REINFORCING BARS SHALL BE GRADE 60 CONFORMING TO ASTM A615.

10. ALL CONCRETE CONSTRUCTION SHALL COMPLY WITH ACI 318. ALL CONCRETE USED SHALL HAVE A 28 DAY MINIMUM COMPRESSIVE STRENGTH OF 3000 P.S.I. AND A MAXIMUM SLUMP OF 6".

11. EPOXY DOWELLING SHALL BE PERFORMED USING HILTI HYT 150 AND SHALL BE INSTALLED IN ACCORDANCE WITH THE MANUFACTURERS INSTRUCTIONS.

12. MINIMUM CONCRETE COVER FOR REINFORCEMENT SHALL BE PROVIDED IN ACCORDANCE WITH ACI 318 SECTION 7.7.1.

13. MASONRY CONSTRUCTION SHALL COMPLY WITH THE BUILDING CODE AND SPECIFICATIONS FOR CONCRETE MASONRY STRUCTURES ACI 530 AND ACI 530.1.

14. CONCRETE MASONRY SHALL HAVE A NET AREA COMPRESSIVE STRENGTH f'm=2000 P.S.I. AND SHALL COMPLY WITH ASTM C90. CONCRETE MASONRY UNITS SHALL HAVE A MINIMUM NET AREA COMPRESSIVE STRENGTH OF 2800 P.S.I.

15. MASONRY MORTAR SHALL BE TYPE M OR S AND SHALL COMPLY WITH ASTM C270.

16. GROUT FOR GROUTING CELLS SHALL HAVE A MINIMUM COMPRESSIVE STRENGTH OF 2000 P.S.I. OR THE BLOCK STRENGTH, WHICH EVER IS GREATER AND SHALL BE IN ACCORDANCE WITH WITH ASTM C476-91. GROUT TO HAVE A SLUMP BETWEEN 8" TO 11".

17. A SPECIAL INSPECTOR, RETAINED BY THE OWNER, SHALL INSPECT AND SUPERVISE THE CONSTRUCTION OF REINFORCED MASONRY PER ACI 530.1.

18. EXPANSION ANCHOR BOLTS SHALL BE INSTALLED IN ACCORDANCE TO MANUFACTURER'S INSTRUCTIONS.

19. PLYWOOD SHEATHING SHALL BE PRESSURE TREATED PLYWOOD AND SHALL BE PLACED WITH FACE GRAIN PERPENDICULAR TO SUPPORTS.

20. PLYWOOD PANELS SHALL BE NAILED TO SUPPORTS WITH 8d COMMON NAILS. NAIL SPACING SHALL BE 6" O.C. AT PANEL EDGES AND AT INTERMEDIATE SUPPORTS.

21. ALL LUMBER FOR JOISTS, RAFTERS AND BEAM SHALL BE PRESSURE TREATED HAVE A MINIMUM EXTREME FIBER STRESS IN BENDING OF Fb=1200 P.S.I. (E=1760000 P.S.I.)

22. ALL DETAILS AND SECTIONS SHOWN ON THE DRAWINGS ARE INTENDED TO BE TYPICAL AND SHALL BE CONSTRUED TO APPLY TO ANY SIMILAR SITUATIONS AT OTHER LOCATIONS THAN THAT SPECIFICALLY INDICATED.

CONSTRUCTION NOTES

1. THE CONTRACTOR SHALL FIELD VERIFY THAT ALL DIMENSIONS PRIOR TO THE CONSTRUCTION OF THE BRIDGE STRUCTURE. THE CONTRACTOR SHALL ALSO VERIFY THAT THE NEW BRIDGE STRUCTURE POSSESSES THE SAME CURVATURE AND CLEARANCE AS THE EXISTING BRIDGE STRUCTURE AND THAT THE NEW BRIDGE STRUCTURE MAINTAINS THE SAME FUNCTIONAL WIDTH AS THE EXISTING. ANY DISCREPANCIES SHALL BE RELAYED TO THE ENGINEER OF RECORD PRIOR TO THE FABRICATION OF THE NEW BRIDGE STRUCTURE.

2. ALL. STRUCTURAL STEEL AND WELDS SHALL BE SHOP PRIMED AND FINISH COATED WITH CORROSION INHIBITING PAINT.

3. THE CONTRACTOR SHALL EXAMINE THE CONDITON OF THE EXISTING END BENT FOR THE PURPOSE OF ACCOMODATING THE NEW BRIDGE STRUCTURE. ANY OBSERVED DETERIORATION, DAMAGE, CRACKING OR SPALLING OF THE CONCRETE, SHALL BE RELAYED TO THE ENGINEER OF RECORD PRIOR TO SUPPORTING THE NEW BRIDGE STRUCTURE.

4. ALL FIELD WELDING SHALL BE FIELD PRIMED AND FINISH COATED WITH CORROSION INHIBITING PAINT.

5. ALL ANCHOR BOLT CONNECTIONS SHALL BE PERFORMED WITH GALVANIZED ANCHOR BOLTS. ALL SCREW CONNECTIONS ARE TO BE PERFORMED WITH STAINLESS STEEL SCREWS.

6. SCREW CONNECTIONS TO TUBE STEEL SHALL BE ACCOMPLISHED BY DRILLING AND TAPPING THE STEEL TO ACCOMODATE THE SCREW.

7. THE FACING STONE IS TO BE FURNISHED BY CULTERED STONE INC. OR EQUAL AND SHALL BE INSTALLED IN ACCORDANCE WITH MANUFACTURER'S SPECIFICATIONS.

SPECIAL NOTES

THE DESIGN OF THE NEW BRIDGE SUPPORT IS BASED ON THE ASSUMPTION THAT THE EXSITING END BENT IS IN GOOD CONDITION AND CAPABLE OF SUPPORTING THE NEW BRIDGE WEIGHT AND ITS LIVE LOADS. THE WEIGHT OF THE NEW BRIDGE IS BELOW THE WEIGHT OF THE EXISTING BRIDGE TO BE REPLACED. THEREFORE BY COMPARITIVE ANALYSIS THE EXISTING CONCRETE BENT WILL NOT EXPERIENCE ANY ADDITIONAL LOADS TO WHAT HAS EXPERIENCED IN THE PAST. THE EXISTING BRIDGE CONCRETE END BENT HAS BEEN TIME TESTED AND THEREFORE CAPABLE OF SUPPORTING THE LOADS IMPOSED BY THE NEW BRIDGE.

FINISH NOTES

1. THE FACING STONE IS TO BE FURNISHED BY CULTERED STONE INC. OR EQUAL AND SHALL BE INSTALLED IN ACCORDANCE WITH MANUFACTURER'S SPECIFICATIONS.

2. THE BRIDGE AND RAILING COLOR SCHEME AND COLOR OF DECORATIVE STONE SHALL BE DETERMINED BY THE VILLAGE OF PALMETTO BAY

LOADS

DESIGN CRITERIA: FBC 2007

BRIDGE SUPERIMPOSED LIVE LOADS= 90 (PSF)
(PEDESTRIAN LOADS ONLY)

BRIDGE STRUCTURE SELF WEIGHT (D.L.)=40 PSF
(NO SUPERIMPOSED D.L. ONLY BRIDGE S.W.)

WIND LOADS: ASCE 7-05
CAT. II - EXP. C - V= 146 MPH - I=1.00

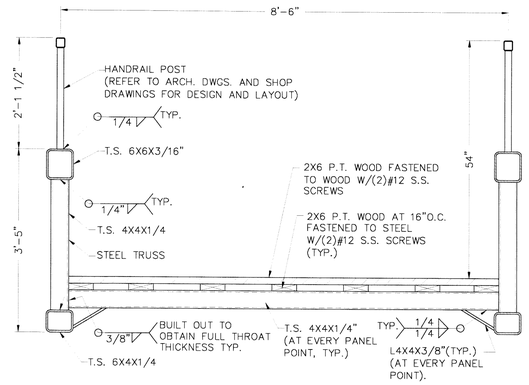

BRIDGE FRAMING SECTION (1 / S-5)
SCALE: N.T.S.

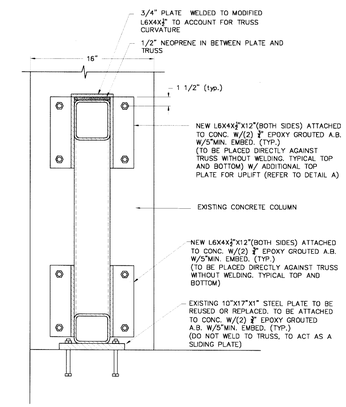

TRUSS END SUPPORT DETAIL (SLIDING SUPPORT) (2 / S-5)
SCALE: N.T.S.

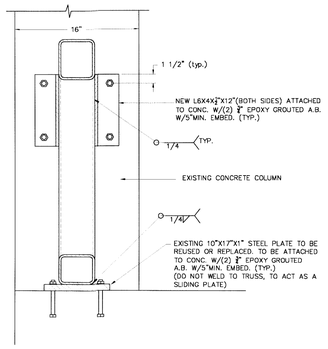

TRUSS END SUPPORT DETAIL (RESTRAINED SUPPORT) (3 / S-5)
SCALE: N.T.S.

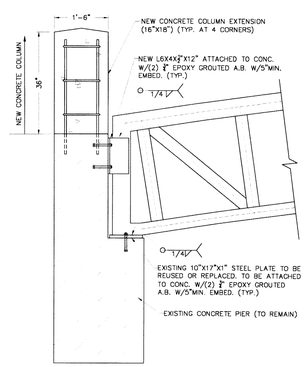

TRUSS END SUPPORT DETAIL (4 / S-5)
SCALE: N.T.S.

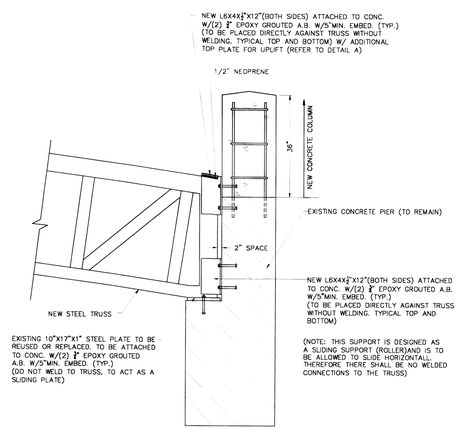

TRUSS END SUPPORT DETAIL (SLIDING SUPPORT) (5 / S-5)
SCALE: N.T.S.

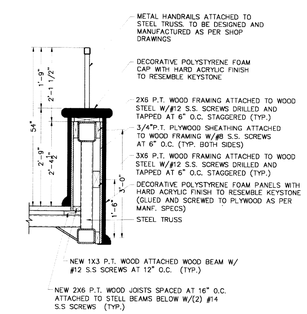

BRIDGE CLADDING DETAIL (6 / S-5)
SCALE: 1"= 1'-0"

SANTIAGO ARANEGUI P.E.
PE 0048106
6431 S.W. 145 STREET
CORAL GABLES, FL. 33158
(305) 431-6747

NEW PEDESTRAN BRIDGE FOR:
VILLAGE OF PALMETTO BAY
CORAL REEF PARK
Miami, Florida

JOB NUMBER
2009-0001
FILE No.
DRAWN: SAA
REVIEWED: SAA
CHECKED: SAA

Santiago Aranegui
Reg. No.: PE 0048106

DATE: 05/4/10
ISSUE
REVISIONS
SHEET TITLE
BRIDGE DETAILS AND NOTES
SHEET NUMBER
S-5

GENERAL NOTES

1. ALL CONSTRUCTION SHALL COMPLY WITH THE 2007 FLORIDA BUILDING CODE.

2. CONTRACTOR TO VERIFY ALL DIMENSIONS PRIOR TO CONSTRUCTION. ANY DISCREPANCIES SHALL BE REPORTED TO THE ENGINEER/ARCHITECT BEFORE PROCEEDING.

3. CONTRACTOR SHALL SUBMIT SHOP DRAWINGS. APPROVAL OF SHOP DRAWINGS BY THE ENGINEER/ARCHITECT IS FOR DESIGN AND LAYOUT ONLY, AND IS NOT FOR THE PURPOSE OF AUTHORIZING CHANGES TO THE CONTRACT DRAWINGS FOR APPROVING SUBSTITUTIONS.

4. ALL ELEVATIONS SHOWN ON THESE DRAWINGS ARE MEASURED WITH RESPECT TO THE NGVD.

5. ALL MISCELLANEOUS STRUCTURAL STEEL SHALL CONFORM TO ASTM A36, UNLESS OTHERWISE NOTED.

6. ALL STRUCTURAL TUBING SHALL TO ASTM A500.

7. ALL BOLTING SHALL BE PERFORMED WITH HIGH STRENGTH BOLTS INCLUDING SUITABLE NUTS AND PLAIN HARDENED WASHERS CONFORMING TO ASTM A325.

8. ALL WELDS TO BE PERFORMED WITH E70XX ELECTRODES AND IN ACCORDANCE WITH AWS D1.1.

9. ALL REINFORCING BARS SHALL BE GRADE 60 CONFORMING TO ASTM A615.

10. ALL CONCRETE CONSTRUCTION SHALL COMPLY WITH ACI 318. ALL CONCRETE USED SHALL HAVE A 28 DAY MINIMUM COMPRESSIVE STRENGTH OF 3000 P.S.I. AND A MAXIMUM SLUMP OF 6".

11. EPOXY DOWELLING SHALL BE PERFORMED USING HILTI HYT 150 AND SHALL BE INSTALLED IN ACCORDANCE WITH THE MANUFACTURERS INSTRUCTIONS.

12. MINIMUM CONCRETE COVER FOR REINFORCEMENT SHALL BE PROVIDED IN ACCORDANCE WITH ACI 318 SECTION 7.7.1.

13. MASONRY CONSTRUCTION SHALL COMPLY WITH THE BUILDING CODE AND SPECIFICATIONS FOR CONCRETE MASONRY STRUCTURES ACI 530 AND ACI 530.1.

14. CONCRETE MASONRY SHALL HAVE A NET AREA COMPRESSIVE STRENGTH f'm=2000 P.S.I. AND SHALL COMPLY WITH ASTM C90. CONCRETE MASONRY UNITS SHALL HAVE A MINIMUM NET AREA COMPRESSIVE STRENGTH OF 2800 P.S.I.

15. MASONRY MORTAR SHALL BE TYPE M OR S AND SHALL COMPLY WITH ASTM C270.

16. GROUT FOR GROUTING CELLS SHALL HAVE A MINIMUM COMPRESSIVE STRENGTH OF 2000 P.S.I. OR THE BLOCK STRENGTH, WHICH EVER IS GREATER AND SHALL BE IN ACCORDANCE WITH WITH ASTM C476-91. GROUT TO HAVE A SLUMP BETWEEN 8" TO 11".

17. A SPECIAL INSPECTOR, RETAINED BY THE OWNER, SHALL INSPECT AND SUPERVISE THE CONSTRUCTION OF REINFORCED MASONRY PER ACI 530.1.

18. EXPANSION ANCHOR BOLTS SHALL BE INSTALLED IN ACCORDANCE TO MANUFACTURER'S INSTRUCTIONS.

19. PLYWOOD SHEATHING SHALL BE PRESSURE TREATED PLYWOOD AND SHALL BE PLACED WITH FACE GRAIN PERPENDICULAR TO SUPPORTS.

20. PLYWOOD PANELS SHALL BE NAILED TO SUPPORTS WITH 8d COMMON NAILS. NAIL SPACING SHALL BE 6" O.C. AT PANEL EDGES AND AT INTERMEDIATE SUPPORTS.

21. ALL LUMBER FOR JOISTS, RAFTERS AND BEAM SHALL BE PRESSURE TREATED HAVE A MINIMUM EXTREME FIBER STRESS IN BENDING OF Fb=1200 P.S.I. (E=1760000 P.S.I.)

22. ALL DETAILS AND SECTIONS SHOWN ON THE DRAWINGS ARE INTENDED TO BE TYPICAL AND SHALL BE CONSTRUED TO APPLY TO ANY SIMILAR SITUATIONS AT OTHER LOCATIONS THAN THAT SPECIFICALLY INDICATED.

CONSTRUCTION NOTES

1. THE CONTRACTOR SHALL FIELD VERIFY THAT ALL DIMENSIONS PRIOR TO THE CONSTRUCTION OF THE BRIDGE STRUCTURE. THE CONTRACTOR SHALL ALSO VERIFY THAT THE NEW BRIDGE STRUCTURE POSSESSES THE SAME CURVATURE AND CLEARANCE AS THE EXISTING BRIDGE STRUCTURE AND THAT THE NEW BRIDGE STRUCTURE MAINTAINS THE SAME FUNCTIONAL WIDTH AS THE EXISTING. ANY DISCREPANCIES SHALL BE RELAYED TO THE ENGINEER OF RECORD PRIOR TO THE FABRICATION OF THE NEW BRIDGE STRUCTURE.

2. ALL STRUCTURAL STEEL AND WELDS SHALL BE SHOP PRIMED AND FINISH COATED WITH CORROSION INHIBITING PAINT.

3. THE CONTRACTOR SHALL EXAMINE THE CONDITION OF THE EXISTING END BENT FOR THE PURPOSE OF ACCOMODATING THE NEW BRIDGE STRUCTURE. ANY OBSERVED DETERIORATION, DAMAGE, CRACKING OR SPALLING OF THE CONCRETE, SHALL BE RELAYED TO THE ENGINEER OF RECORD PRIOR TO SUPPORTING THE NEW BRIDGE STRUCTURE.

4. ALL FIELD WELDING SHALL BE FIELD PRIMED AND FINISH COATED WITH CORROSION INHIBITING PAINT.

5. ALL ANCHOR BOLT CONNECTIONS SHALL BE PERFORMED WITH GALVANIZED ANCHOR BOLTS. ALL SCREW CONNECTIONS ARE TO BE PERFORMED WITH STAINLESS STEEL SCREWS.

6. SCREW CONNECTIONS TO TUBE STEEL SHALL BE ACCOMPLISHED BY DRILLING AND TAPPING THE STEEL TO ACCOMODATE THE SCREW.

7. THE FACING STONE IS TO BE FURNISHED BY CULTERED STONE INC. OR EQUAL AND SHALL BE INSTALLED IN ACCORDANCE WITH MANUFACTURER'S SPECIFICATIONS.

SPECIAL NOTES

THE DESIGN OF THE NEW BRIDGE SUPPORT IS BASED ON THE ASSUMPTION THAT THE EXSITING END BENT IS IN GOOD CONDITION AND CAPABLE OF SUPPORTING THE NEW BRIDGE WEIGHT AND ITS LIVE LOADS. THE WEIGHT OF THE NEW BRIDGE IS BELOW THE WEIGHT OF THE EXISTING BRIDGE TO BE REPLACED. THEREFORE BY COMPARITIVE ANALYSIS THE EXISTING CONCRETE BENT WILL NOT EXPERIENCE ANY ADDITIONAL LOADS TO WHAT HAS EXPERIENCED IN THE PAST. THE EXISTING BRIDGE CONCRETE END BENT HAS BEEN TIME TESTED AND THEREFORE CAPABLE OF SUPPORTING THE LOADS IMPOSED BY THE NEW BRIDGE.

FINISH NOTES

1. THE FACING STONE IS TO BE FURNISHED BY CULTERED STONE INC. OR EQUAL AND SHALL BE INSTALLED IN ACCORDANCE WITH MANUFACTURER'S SPECIFICATIONS.

2. THE BRIDGE AND RAILING COLOR SCHEME AND COLOR OF DECORATIVE STONE SHALL BE DETERMINED BY THE VILLAGE OF PALMETTO BAY

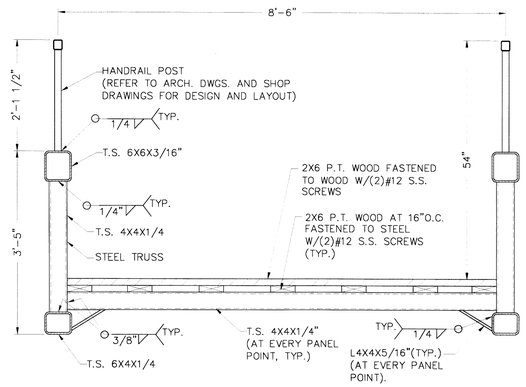

BRIDGE FRAMING SECTION (1 / S-5)
SCALE: N.T.S.

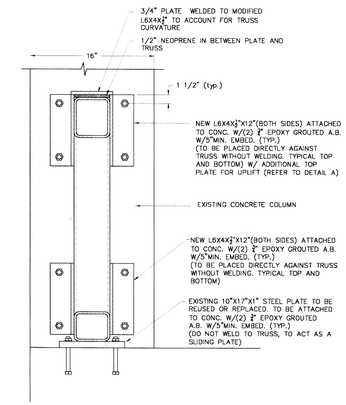

TRUSS END SUPPORT DETAIL (SLIDING SUPPORT)
SCALE: N.T.S. (2 / S-5)

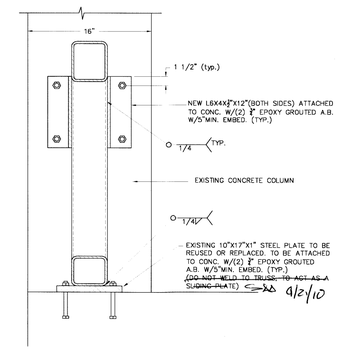

TRUSS END SUPPORT DETAIL (RESTRAINED SUPPORT)
SCALE: N.T.S. (3 / S-5)

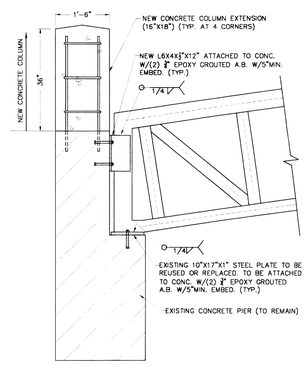

TRUSS END SUPPORT DETAIL
SCALE: N.T.S. (4 / S-5)

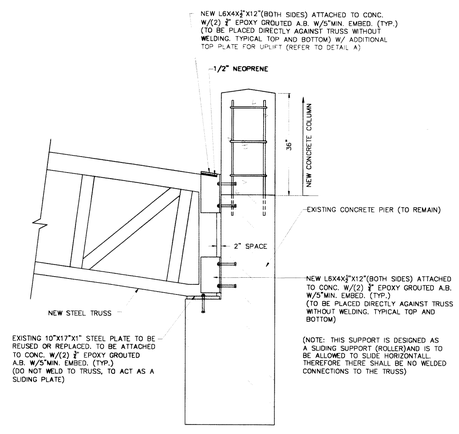

TRUSS END SUPPORT DETAIL (SLIDING SUPPORT)
SCALE: N.T.S. (5 / S-5)

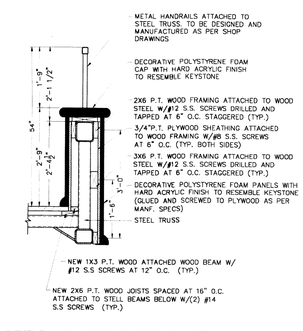

BRIDGE CLADDING DETAIL (5 / S-5)
SCALE: 1"=1'-0"

SANTIAGO ARANEGUI P.E.
PE 0048106
6431 S.W. 145 STREET
CORAL GABLES, FL. 33158
(305) 431-6747

NEW PEDESTRAN BRIDGE FOR:
VILLAGE OF PALMETTO BAY
CORAL REEF PARK
Miami, Florida

JOB NUMBER
2009-0001

FILE NO.:
DRAWN: SAA
REVIEWED: SAA
CHECKED: SAA

4/2/10
Santiago Aranegui
Reg. No.: PE 0048106

DATE: 09/28/09

ISSUE

REVISIONS

VOID

SHEET TITLE
BRIDGE DETAILS

SHEET NUMBER
S-5

GENERAL NOTES

1. ALL CONSTRUCTION SHALL COMPLY WITH THE 2007 FLORIDA BUILDING CODE.

2. CONTRACTOR TO VERIFY ALL DIMENSIONS PRIOR TO CONSTRUCTION. ANY DISCREPANCIES SHALL BE REPORTED TO THE ENGINEER/ARCHITECT BEFORE PROCEEDING.

3. CONTRACTOR SHALL SUBMIT SHOP DRAWINGS, APPROVAL OF SHOP DRAWINGS BY THE ENGINEER/ARCHITECT IS FOR DESIGN AND LAYOUT ONLY, AND IS NOT FOR THE PURPOSE OF AUTHORIZING CHANGES TO THE CONTRACT DRAWINGS FOR APPROVING SUBSTITUTIONS.

4. ALL ELEVATIONS SHOWN ON THESE DRAWINGS ARE MEASURED WITH RESPECT TO THE NGVD.

5. ALL MISCELLANEOUS STRUCTURAL STEEL SHALL CONFORM TO ASTM A36, UNLESS OTHERWISE NOTED.

6. ALL STRUCTURAL TUBING SHALL TO ASTM A500.

7. ALL BOLTING SHALL BE PERFORMED WITH HIGH STRENGTH BOLTS INCLUDING SUITABLE NUTS AND PLAIN HARDENED WASHERS CONFORMING TO ASTM A325.

8. ALL WELDS TO BE PERFORMED WITH E70XX ELECTRODES AND IN ACCORDANCE WITH AWS D1.1.

9. ALL REINFORCING BARS SHALL BE GRADE 60 CONFORMING TO ASTM A615.

10. ALL CONCRETE CONSTRUCTION SHALL COMPLY WITH ACI 318. ALL CONCRETE USED SHALL HAVE A 28 DAY MINIMUM COMPRESSIVE STRENGTH OF 3000 P.S.I. AND A MAXIMUM SLUMP OF 6".

11. EPOXY DOWELLING SHALL BE PERFORMED USING HILTI HYT 150 AND SHALL BE INSTALLED IN ACCORDANCE WITH THE MANUFACTURERS INSTRUCTIONS.

12. MINIMUM CONCRETE COVER FOR REINFORCEMENT SHALL BE PROVIDED IN ACCORDANCE WITH ACI 318 SECTION 7.7.1.

13. MASONRY CONSTRUCTION SHALL COMPLY WITH THE BUILDING CODE AND SPECIFICATIONS FOR CONCRETE MASONRY STRUCTURES ACI 530 AND ACI 530.1.

14. CONCRETE MASONRY SHALL HAVE A NET AREA COMPRESSIVE STRENGTH $f'm$=2000 P.S.I. AND SHALL COMPLY WITH ASTM C90. CONCRETE MASONRY UNITS SHALL HAVE A MINIMUM NET AREA COMPRESSIVE STRENGTH OF 2800 P.S.I.

15. MASONRY MORTAR SHALL BE TYPE M OR S AND SHALL COMPLY WITH ASTM C270.

16. GROUT FOR GROUTING CELLS SHALL HAVE A MINIMUM COMPRESSIVE STRENGTH OF 2000 P.S.I. OR THE BLOCK STRENGTH, WHICH EVER IS GREATER AND SHALL BE IN ACCORDANCE WITH WITH ASTM C476-91. GROUT TO HAVE A SLUMP BETWEEN 8" TO 11".

17. A SPECIAL INSPECTOR, RETAINED BY THE OWNER, SHALL INSPECT AND SUPERVISE THE CONSTRUCTION OF REINFORCED MASONRY PER ACI 530.1.

18. EXPANSION ANCHOR BOLTS SHALL BE INSTALLED IN ACCORDANCE TO MANUFACTURER'S INSTRUCTIONS.

19. PLYWOOD SHEATHING SHALL BE PRESSURE TREATED PLYWOOD AND SHALL BE PLACED WITH FACE GRAIN PERPENDICULAR TO SUPPORTS.

20. PLYWOOD PANELS SHALL BE NAILED TO SUPPORTS WITH 8d COMMON NAILS. NAIL SPACING SHALL BE 6" O.C. AT PANEL EDGES AND AT INTERMEDIATE SUPPORTS.

21. ALL LUMBER FOR JOISTS, RAFTERS AND BEAM SHALL BE PRESSURE TREATED HAVE A MINIMUM EXTREME FIBER STRESS IN BENDING OF Fb=1200 P.S.I. (E=1760000 P.S.I.)

22. ALL DETAILS AND SECTIONS SHOWN ON THE DRAWINGS ARE INTENDED TO BE TYPICAL AND SHALL BE CONSTRUED TO APPLY TO ANY SIMILAR SITUATIONS AT OTHER LOCATIONS THAN THAT SPECIFICALLY INDICATED.

CONSTRUCTION NOTES

1. THE CONTRACTOR SHALL FIELD VERIFY THAT ALL DIMENSIONS PRIOR TO THE CONSTRUCTION OF THE BRIDGE STRUCTURE. THE CONTRACTOR SHALL ALSO VERIFY THAT THE NEW BRIDGE STRUCTURE POSSESSES THE SAME CURVATURE AND CLEARANCE AS THE EXISTING BRIDGE STRUCTURE AND THAT THE NEW BRIDGE STRUCTURE MAINTAINS THE SAME FUNCTIONAL WIDTH AS THE EXISTING. ANY DISCREPANCIES SHALL BE RELAYED TO THE ENGINEER OF RECORD PRIOR TO THE FABRICATION OF THE NEW BRIDGE STRUCTURE.

2. ALL STRUCTURAL STEEL AND WELDS SHALL BE SHOP PRIMED AND FINISH COATED WITH CORROSION INHIBITING PAINT.

3. THE CONTRACTOR SHALL EXAMINE THE CONDITION OF THE EXISTING END BENT FOR THE PURPOSE OF ACCOMODATING THE NEW BRIDGE STRUCTURE. ANY OBSERVED DETERIORATION, DAMAGE, CRACKING OR SPALLING OF THE CONCRETE, SHALL BE RELAYED TO THE ENGINEER OF RECORD PRIOR TO SUPPORTING THE NEW BRIDGE STRUCTURE.

4. ALL FIELD WELDING SHALL BE FIELD PRIMED AND FINISH COATED WITH CORROSION INHIBITING PAIN".

5. ALL ANCHOR BOLT CONNECTIONS SHALL BE PERFORMED WITH GALVANIZED ANCHOR BOLTS. ALL SCREW CONNECTIONS ARE TO BE PERFORMED WITH STAINLESS STEEL SCREWS.

6. SCREW CONNECTIONS TO TUBE STEEL SHALL BE ACCOMPLISHED BY DRILLING AND TAPPING THE STEEL TO ACCOMODATE THE SCREW.

7. THE FACING STONE IS TO BE FURNISHED BY CULTERED STONE INC. OR EQUAL AND SHALL BE INSTALLED IN ACCORDANCE WITH MANUFACTURER'S SPECIFICATIONS.

SPECIAL NOTES

THE DESIGN OF THE NEW BRIDGE SUPPORT IS BASED ON THE ASSUMPTION THAT THE EXSITING END BENT IS IN GOOD CONDITION AND CAPABLE OF SUPPORTING THE NEW BRIDGE WEIGHT AND ITS LIVE LOADS. THE WEIGHT OF THE NEW BRIDGE IS BELOW THE WEIGHT OF THE EXISTING BRIDGE TO BE REPLACED. THEREFORE BY COMPARITIVE ANALYSIS THE EXISTING CONCRETE BENT WILL NOT EXPERIENCE ANY ADDITIONAL LOADS TO WHAT HAS EXPERIENCED IN THE PAST. THE EXISTING BRIDGE CONCRETE END BENT HAS BEEN TIME TESTED AND THEREFORE CAPABLE OF SUPPORTING THE LOADS IMPOSED BY THE NEW BRIDGE.

FINISH NOTES

1. THE FACING STONE IS TO BE FURNISHED BY CULTERED STONE INC. OR EQUAL AND SHALL BE INSTALLED IN ACCORDANCE WITH MANUFACTURER'S SPECIFICATIONS.

2. THE BRIDGE AND RAILING COLOR SCHEME AND COLOR OF DECORATIVE STONE SHALL BE DETERMINED BY THE VILLAGE OF PALMETTO BAY

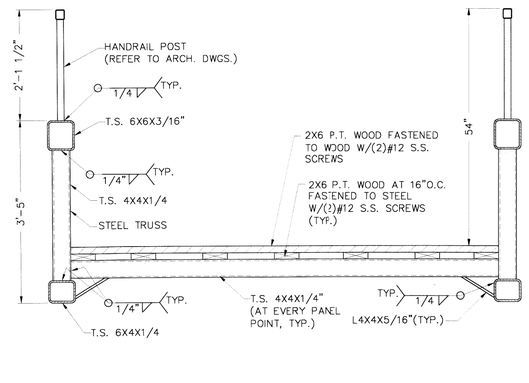

BRIDGE FRAMING SECTION (1 / S-5)
SCALE: N.T.S.

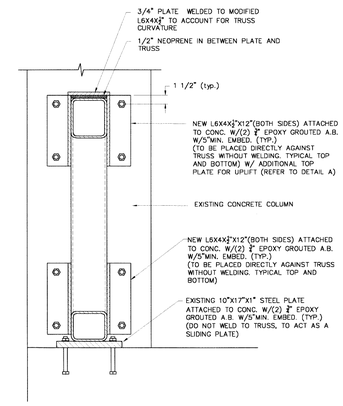

TRUSS END SUPPORT DETAIL (SLIDING SUPPORT) (2 / S-5)
SCALE: N.T.S.

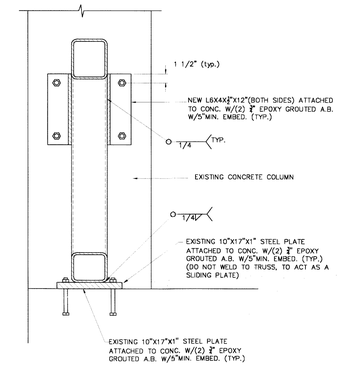

TRUSS END SUPPORT DETAIL (RESTRAINED SUPPORT) (3 / S-5)
SCALE: N.T.S.

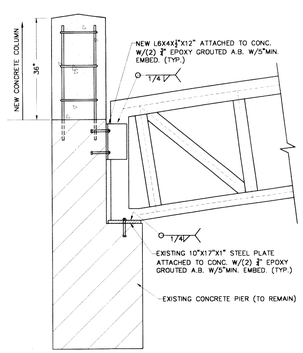

TRUSS END SUPPORT DETAIL (4 / S-5)
SCALE: N.T.S.

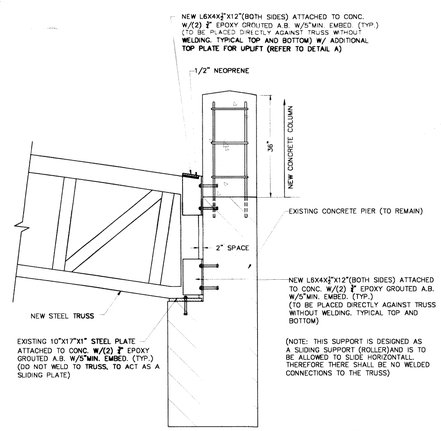

TRUSS END SUPPORT DETAIL (SLIDING SUPPORT) (5 / S-5)
SCALE: N.T.S.

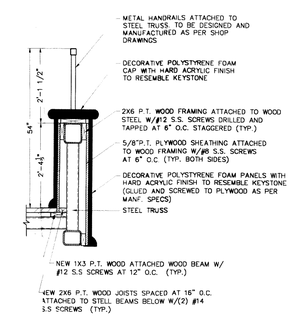

BRIDGE CLADDING DETAIL (6 / S-5)
SCALE: 1"=1'

SANTIAGO ARANEGUI P.E.
PE 0048106
6431 S.W. 145 STREET
CORAL GABLES, FL. 33158
(305) 431-6747

NEW PEDESTRAN BRIDGE FOR:
VILLAGE OF PALMETTO BAY

CORAL REEF PARK
Miami, Florida

JOB NUMBER
2009-0001
FILE No.
DRAWN : SAA
REVIEWED : SAA
CHECKED : SAA

9/28/09
Santiago Aranegui
Reg. No.: PE 0048106

DATE 09/28/09
ISSUE
REVISIONS
VOID

SHEET TITLE
BRIDGE DETAILS

SHEET NUMBER
S-5

BLD 2010-0714

B-2010-8458

7895 SW 152 St

OFFICE COPY

4/20/10
Bldg S-54 Struc Calcs
Submitted

VILLAGE OF PALMETTO BAY				
THIS COPY OF PLAN MUST BE AVAILABLE ON BUILDING SITE OR NO INSPECTION WILL BE GIVEN				
	APPROVED		DISAPPROVED	
SECTION	BY	DATE	BY	DATE
ZONING	LM	5/3/10		
LANDSCAPING				
PUBLIC WORKS				
BUILDING	AL	4/26/10	AL	5/14/10
UTILITIES				
HANDICAP				
STRUCTURAL	LM	5/4/10	LM	5/5/10
ELECTRICAL				
PLUMBING				
MECHANICAL				
ENERGY				
FIRE				
BUILDING OFFICIAL				

LM 4/29/10

VOID