Istokpoga Marsh Watershed Improvement District Above Ground Impoundment and Ancillary Facilities

Technical Specifications

July 2016

SECTION	DESCRIPTION
DIVISION 0:	**BIDDING REQUIREMENTS, CONTRACT FORMS, AND CONDITIONS OF THE CONTRACT**
00010	INVITATION TO BID
00100	INSTRUCTION TO BIDDERS
00150	LOCAL PREFERENCE
00250	GENERAL TERMS AND CONDITIONS FOR CONSTRUCTION PROJECTS
00300	BID FORM
00410	BID BOND
00500	CONSTRUCTION CONTRACT
00600	PUBLIC CONSTRUCTION BOND
00700	EJCDC STANDARD GENERAL CONDITIONS OF THE CONSTRUCTION CONTRACT
00800	SUPPLEMENTARY CONDITIONS
DIVISION 1:	**GENERAL REQUIREMENTS**
01010	SUMMARY OF WORK
01050	FIELD ENGINEERING AND SURVEYING
01270	MEASUREMENT AND PAYMENT
01340	SUBMITTALS
01510	TEMPORARY UTILITES AND HAUL AND ACCESS ROADS
01560	ENVIRONMENTAL PROTECTION AND SPECIAL CONDITIONS
01640	PRODUCT SUBSTITUTIONS
DIVISION 2:	**SITE WORK**
02072	DEMOLITION
02110	SITE CLEARING
02200	EARTHWORK
02205	IMPACTED SOILS FILL PLACEMENT PROCESS
02221	TRENCHING, BACKFILLING, AND COMPACTING FOR UTILITIES
02233	SHELLROCK AND SHELLROCK BASE
02260	TOPSOILING AND FINISHED GRADING
02270	SOIL EROSION AND SEDIMENT CONTROL
02271	STONE REVETMENT (RIP RAP)

DIVISION 2: SITE WORK (CONTINUED)

02277 ARTICULATED CONCRETE BLOCK MATTRESS SYSTEM

02778 GEOTEXTILES

02930 SEEDING AND SODDING

DIVISION 3: CONCRETE

03002 CONCRETE

DIVISION 5: METALS

05500 METAL FABRICATIONS

05522 ALUMINUM RAILINGS

DIVISION 11: EQUIPMENT

11060 PUMPING EQUIPMENT

DIVISION 13: SPECIAL CONSTRUCTION

13125 PRECAST CONCRETE UTILITY STRUCTURES

13300 PRE-ENGINEERED SHELTERS

13446 CONTROL AUXILIARIES

13448 CONTROL PANELS AND ENCLOSURES

DIVISION 15: MECHANICAL

15060 PIPE AND PIPE FITTINGS: BASIC REQUIREMENTS

15061 PIPE: STEEL

15067 PIPE: HDPE

15116 FABRICATED STAINLESS STEEL SLIDE GATES

DIVISION 16: ELECTRICAL

16010 ELECTRICAL: BASIC REQUIREMENTS

16060 GROUNDING

16120 WIRE AND CABLE: 600 VOLT AND BELOW

16130 RACEWAYS AND BOXES

16135 ELECTRICAL: EXTERIOR UNDERGROUND

16410 SAFETY SWITCHES

DIVISION 16: ELECTRICAL (CONTINUED)

16441 PANELBOARDS

16442 MOTOR CONTROL EQUIPMENT

16490 OVERCURRENT AND SHORT CIRCUIT PROTECTIVE DEVICES

16491 LOW VOLTAGE SURGE PROTECTION DEVICES (SPD)

HIGHLANDS COUNTY BOARD OF COUNTY COMMISSIONERS

Purchasing Department

SECTION 00010
INVITATION TO BID ("ITB")
ITB 16-021

The Board of County Commissioners ("Board") of Highlands County, Florida ("County") will receive sealed Bids in the Highlands County Purchasing Department ("Purchasing Department") for:

ITB NO. 16-021 ISTOKPOGA ABOVE GROUND IMPOUNDMENT PROJECT

Specifications may be obtained by downloading from our website: www.hcbcc.net, or by contacting: Danielle Gilbert, Purchasing Manager; 4320 George Blvd., Sebring, Florida 33875-5803, Phone: 863-402-6524; or E Mail: dgilbert@hcbcc.org.

A **MANDATORY PRE-BID** meeting will be held at **10:00 A.M. on WEDNESDAY; July 13th, 2016** at the Engineering Training Room; 505 S. Commerce Ave., Sebring, FL 33870, immediately followed by a Mandatory Site Visit. The County will only accept Bid submittals from those companies which are represented in both of these meetings, and are listed on the sign-in sheet as primary Bidders. The Public is invited to attend this meeting.

Each submittal shall include one (1) original, one (1) exact paper copy and one (1) exact electronic copy (CD or thumb drive) of the Bid submission packet.

BIDS MUST BE DELIVERED to the Purchasing Department, 4320 George Blvd., Sebring, FL. 33875-5803 so as to reach said office no later than **2:00 P.M., Wednesday; August 3rd, 2016**, at which time they will be opened. The Public is invited to attend this meeting. Bid envelopes must be sealed and marked with the ITB number and name so as to identify the enclosed Bid. Bids received later than the date and time as specified will be rejected. The County will not be responsible for the late deliveries of Bids that are incorrectly addressed, delivered in person, by mail or any other type of delivery service. One or more County Commissioners may be in attendance at the Pre-Bid meeting.

The Board's Local Preference Policy ("Local Preference Policy") will apply to the award of this ITB.

The County reserves the right to accept or reject any or all Bids or any parts thereof, and the determination of this Award, if an Award is made, will be made to the most responsive and responsible Bidder whose Bid and qualifications indicate that the Award will be in the best interest of Highlands County. The County reserves the right to waive irregularities in the Bid.

A Bidder must submit a Bid on all Work to receive consideration. A Bid Bond or Cashier's Check in an amount of five percent (5%) of the Bid must be included on Bids over one hundred thousand dollars ($100,000.00). If the successful Bid is greater than two hundred thousand dollars ($200,000.00), a Public Construction Bond will be required. The Bidder must be a Licensed General Contractor in the State of Florida. The Bid must be accompanied by evidence of Bidder's qualifications to do business in the State of Florida, in accordance with Chapter 489, Florida Statutes.

The principal features of the Project are:

2.9 miles of six (6) foot high embankment construction, primary discharge structure consisting of concrete box with slide gate and 42-inch diameter discharge pipe, articulated concrete block mattress overflow spillway with riprap chute, main pump station with two (2) 15,000 gallons per minute (gpm) pumps and one (1) 5,000 gpm pump, seepage pump station with one (1) 1,500 gpm pump and a dry 24-inch steel pipe for future use, and general canal clearing.

The Board, does not discriminate upon the basis of any individual's disability status. This non-discrimination policy involves every aspect of the Board's functions, including one's access to, participation, employment or treatment in its programs or activities. Anyone requiring reasonable accommodation as provided for in the Americans with Disabilities Act or Section 286.26, Florida Statutes, should contact Mrs. Amanda Tyner, ADA Coordinator at: 863-402-6509 (Voice), or via Florida Relay Service 711, or by e-mail: atyner@hcbcc.org. Requests for CART or interpreter services should be made at least 24 hours in advance to permit coordination of the service.

Board of County Commissioners, Highlands County, FL **www.hcbcc.net**

G:\COUNTY\ENGINEERING DEPT\ITB 16-021\SECTION 00010 - INVITATION TO BID - 061716.docx

SECTION 00100
INSTRUCTIONS TO BIDDERS
ITB 16-021

Article 1 - Defined Terms

1.01 Terms used in these Instructions to Bidder have the meanings indicated below and in Section 00700 of this ITB which are applicable to both the singular and plural thereof:

A. Award – The selection by the County of the lowest responsible and responsive Bidder to perform the Work.

B. Bid – The Bid Form and other documents submitted by a Bidder in response to this ITB.

C. Bidder - The individual or entity who submits a Bid directly to the County.

D. Bid Form – Section 00300 of this ITB, which shall be used to submit a Bid.

E. Bidding Documents – This ITB, all Addenda to this ITB, and the Construction Documents.

F. Board – County's Board of County Commissioners.

G. County Attorney – The County's County Attorney.

H. Construction Documents – The construction drawings and specifications for the ABOVE GROUND IMPOUNDMENT AND ANCILLARY FACILITIES, MAIN PUMP STATION, AND COMMERCIAL GRADE, IMPROVED ACCESS DRIVEWAY AT ISTOKPOGA MARSH WATERSHED DISTRICT prepared by HDR. dated 3/18/16.

I. County Engineer – The County's County Engineer.

J. County or Owner –Highlands County, a political subdivision of the State of Florida.

K. Engineer – The Engineer of Record.

L. Purchasing Department - The County's Purchasing Department, which issues Bidding Documents and administers the bidding procedures.

M. Site – The Site described and depicted in the Construction Documents.

N. Work – The Work described and depicted in the Construction Documents.

Article 2 - Copies of Bidding Documents

2.01 Complete sets of the Bidding Documents in the number and for the deposit sum, if any, stated in the Advertisement or ITB may be obtained from the Purchasing Department.

2.02 Complete sets of Bidding Documents must be used in preparing Bids; neither Owner nor Engineer assume any responsibility for errors or misinterpretations resulting from the use of incomplete sets of Bidding Documents.

2.03 Owner and Engineer in making copies of Bidding Documents available on the above terms do so only for the purpose of obtaining Bids for the Work and do not confer a license or grant for any other use.

Article 3 - Qualifications of Bidders

3.01 To demonstrate Bidder's qualifications to perform the Work, Bidder shall submit detailed written evidence with the Bid Form as follows:

A. A list of a minimum of five (5) jobs that the Bidder has performed within the past three (3) years which are of equal magnitude and complexity as the type of work to be done for the Owner. The list should include the name of the entity, complete address, name, phone number, fax, and email of a responsible individual qualified to respond to questions concerning the Bidder's abilities, costs, schedules, etc. Prior successful, on-time accomplishment of such equal work will be a consideration in determining whether the Bidder is qualified to perform the Work.

B. Supervisory and staffing capabilities with resumes of supervisory personnel planned for the Work and the number and classification of personnel required per shift.

C. List of equipment available for use on this Project. Identify if equipment is owned or leased.

D. A minimum of five (5) references of clients for whom similar work has been performed.

3.02 Each Bid must contain evidence of Bidder's qualification to do business in the State, in accordance with Chapter 489, Florida Statutes.

3.03 In addition, to demonstrate Bidder's qualifications to perform the Work, within ten (10) days and prior to Notice of Award, Bidder shall submit detailed written evidence such as financial data (note if financial data is considered confidential it must be marked as such) and other such data as may be called for below:

A. A listing of all Subcontractors where the subcontract value exceeds ten percent (10%) of the total contract amount. Provide experience statements for these Subcontractors.

B. List of present commitments (workload), including name of project, location, and value of contract.

3.04 Each Bid must contain proof of enrollment in E-Verify.

Article 4 - Examination of Bidding Documents, Other Related Data, and Site

4.01 Subsurface and Physical Conditions known to Owner are shown in the Construction Documents.

4.02 Underground Facilities known to Owner are shown in the Construction Documents.

4.03 Soils impacted by agrochemicals legally used at the time they were applied, are located within the project limits, however, these impacted soils do not pose an applicable human health risk. Impacted soils may potentially pose an unacceptable risk to the ecosystem. These areas are

shown on the Construction Documents. No other Hazardous Environmental Condition has been identified at the Site.

4.04 Provisions concerning responsibilities for the adequacy of data furnished to prospective Bidders with respect to subsurface conditions, other physical conditions and Underground Facilities, and possible changes in the Contract Documents due to differing or unanticipated conditions appear in Paragraphs 5.03, 5.04, and 5.05 of Section 00700 Standard General Conditions of the Construction Contract as modified in Section 00800 Supplementary Conditions of the Contract Documents. Provisions concerning responsibilities for the adequacy of data furnished to prospective Bidders with respect to Hazardous Environmental Conditions at the Site, if any, and possible changes in the Contract Documents due to Hazardous Environmental Conditions uncovered or revealed at the Site which were not shown or indicated in the Drawings or Specifications or identified in the Contract Documents to be within the scope of the Work appear in Paragraph 5.06 of Section 00700 Standard General Conditions of the Construction Contract as modified in Section 00800 Supplementary Conditions of the Contract Documents.

4.05 On request, the Purchasing Department will provide Bidder access to Site to conduct such examinations, investigations, explorations, tests, and studies, as Bidder deems necessary for submission of a Bid. Bidder shall fill all holes and clean up and restore the Site to its former conditions upon completion of such explorations, investigations, tests, and studies.

4.06 On request, the Purchasing Department will provide to each Bidder for examination access to or copies of Contract Documents (other than portions thereof related to price) for such other work.

4.07 It is the responsibility of each Bidder before submitting a Bid to:

A. Examine and carefully study the Bidding Documents, including any Addenda and the other related data identified in the Bidding Documents;

B. Visit the Site and become familiar with and satisfy Bidder as to the general, local, and Site conditions that may affect cost, progress, and performance of the Work;

C. Become familiar with and satisfy Bidder as to all federal, state, and local Laws and Regulations that may affect cost, progress, or performance of the Work;

D. Carefully study all drawings of physical conditions in or relating to existing surface or subsurface structures at or contiguous to the Site;

E. Obtain and carefully study (or assume responsibility for doing so) all additional or supplementary examinations, investigations, explorations, test, studies, and data concerning conditions (surface, subsurface, and Underground Facilities) at or contiguous to the Site which may affect cost, progress, or performance of the Work or which relate to any aspect of the means, methods, techniques, sequences, and procedures of construction to be employed by Bidder, including any specific means, methods, techniques, sequences, and procedures of construction expressly required by the Bidding Documents, and safety precautions and programs incident thereto;

F. Agree at the time of submitting its Bid that no further examinations, investigations, explorations, tests, studies, or data are necessary for the determination of its Bid for performance of the Work at the price bid and within the times and in accordance with the other terms and conditions of the Bidding Document;

G. Become aware of the general nature of the Work to be performed by Owner and others at the Site that relates to the Work as indicated in the Bidding Document;

H. Correlate the information known to Bidder, information and observations obtained from visits to the Site, reports and drawings identified in the Bidding Documents, and all additional examinations, investigations, explorations, tests, studies, and data with the Bidding Documents;

I. Promptly give Engineer and the Purchasing Department written notice of all conflicts, errors, ambiguities, or discrepancies that Bidder discovers in the Bidding Documents and confirm that the written resolution thereof by Engineer and the Purchasing Department is acceptable to Bidder; and

J. Determine that the Bidding Documents are generally sufficient to indicate and convey understanding of all terms and conditions for the performance of the Work.

4.08 The submission of a Bid will constitute an incontrovertible representation by Bidder that Bidder has complied with every requirement of this Article 4, that without exception the Bid is premised upon performing and furnishing the Work required by the Bidding Documents and applying any specific means, methods, techniques, sequences, and procedures of construction that may be shown or indicated or expressly required by the Bidding Documents, that Bidder has given Engineer and the Purchasing Department written notice of all conflicts, errors, ambiguities, and discrepancies that Bidder has discovered in the Bidding Documents and the written resolutions thereof by Engineer and the Purchasing Department are acceptable to Bidder, and that the Bidding Documents are generally sufficient to indicate and convey understanding of all terms and conditions for performing and furnishing the Work.

Article 5 - Pre-Bid Conference

There will be a **MANDATORY** Pre-Bid Meeting as specified in the Invitation to Bid, Section 00010, in the Engineering Training Room at the office of the Highlands County Engineer at 505 South Commerce Avenue, Sebring, Florida.

Article 6 - Site and Other Areas

The Site is identified in the Bidding Documents. All additional lands and access thereto required for temporary construction facilities, construction equipment, or storage of materials and equipment to be incorporated in the Work is to be obtained and paid for by the Contractor. Easements for permanent structures or permanent changes in existing facilities are to be obtained and paid for by Owner unless otherwise provided in the Bidding Documents.

Article 7 - Interpretation and Addenda

7.01 All questions about the meaning or intent of the Bidding Documents are to be directed to the Purchasing Department. Interpretations or clarifications considered necessary by the Purchasing Department and Engineer in response to such questions will be issued by Addenda and will be mailed, emailed, or delivered to all parties recorded by the Purchasing Department as having received the Bidding Documents. (RFI) Request for Information received after a set date may not be answered. Only RFI answered by formal written Addenda will be binding. Oral and other interpretations or clarifications will be without legal effect.

7.02 Addenda may be issued to clarify, correct, or change the Bidding Documents as deemed advisable by Owner, Engineer or the Purchasing Department.

Article 8 - Bid Security

8.01 A “Bid Bond” or Cashier’s Check, in the amount of five percent (5%) of the Bid, must be included on each Bid over one hundred thousand dollars ($100,000.00). If the successful Bid is greater than two hundred thousand dollars ($200,000.00) a “Public Construction Bond” of not less than one hundred percent (100%) of the Awarded Bid amount will be required. All Bonds must be in a form acceptable to Owner and County Attorney.

8.02 Within thirty (30) days after the Award, Owner will return the bid securities to all Bidders whose Bids are not to be further considered in awarding the Contract. Retained bid securities will be held until the Agreement has been finally executed, after which all bid securities, other than Bidder’s bond and any guarantees which have been forfeited, will be returned to the respective Bidders whose Bids they accompanied.

Article 9 - Contract Times

The number of days within which, or the dates by which, the Work is to be (a) Substantially Completed and, (b) also completed and ready for final payment are set forth in the Bid Form.

Article 10 - Liquidated Damages

Provisions for liquidated damages, if any, are set forth in the Agreement.

Article 11 - Substitute or "Or-Equal" Items

The Contract, if awarded, will be on the basis of materials and equipment described in the Bidding Documents with consideration of possible substitute or "or-equal" items if allowed within the Bidding Documents. Whenever it is specified or described in the Bidding Documents that a substitute or "or-equal" item of material or equipment may be furnished or used by Contractor if acceptable to Engineer, application for such acceptance will be considered by Engineer during the allotted time frame for (RFI) Request for Information.

Article 12 - Subcontractors, Suppliers and Others

12.01 The apparent Successful Bidder, and any other Bidder so requested, shall within five (5) days after Bid opening, submit to Owner a list of all such Subcontractors, Suppliers, individuals, or entities proposed for those portions of the Work for which such identifications are required. Such list shall be accompanied by an experience statement with pertinent information regarding similar projects and other evidence of qualification for each Subcontractor, Supplier, individual, or entity if requested by Owner. If Owner, Engineer or the Purchasing Department after due investigation, has reasonable objection to any proposed Subcontractor, Supplier, individual, or entity, Owner may, before the Notice of Award is given, request apparent Successful Bidder to submit a substitute, without an increase in the Bid.

12.02 If apparent Successful Bidder declines to make any such substitution, Owner may Award the Contract to the next lowest Bidder that proposes to use acceptable Subcontractors, Suppliers, individuals, or entities. Declining to make requested substitutions will not constitute grounds for forfeiture of the bid security of any Bidder. Any Subcontractor, Supplier, individual, or entity so listed and against which Owner, Engineer or the Purchasing Department makes no written

objection prior to giving of the Notice of Award will be deemed acceptable to all indicated parties subject to revocation of such acceptance after the Effective Date of the Contract as provided in Paragraph 7.06 of Section 00700 Standard General Conditions of the Construction Contract as modified in Section 00800 Supplementary Conditions of the Contract Documents.

12.03 Contractor shall not be required to employ any Subcontractor, Supplier, individual, or entity against whom Contractor has reasonable objection.

12.04 It is the responsibility of the Contractor to insure that all Subcontractors comply with all insurance requirements.

Article 13 - Bid Form

13.01 Bidder shall use and/or make necessary copies of Section 00300 “Bid Form” of this ITB for their Submittal Document(s).

13.02 All blanks on the Bid Form shall be completed by printing in black ink or by typewriter and the Bid Form shall be signed. A Bid Price shall be indicated for each unit price item listed therein, if applicable, or the words “No Bid”, “No Change”, or “Not Applicable” entered. All names shall be typed or printed below the signature line with all signatures in blue ink.

13.03 A Bid by a corporation shall be executed in the corporate name by the president or a vice-president or other corporate officer accompanied by evidence of authority to sign. The corporate seal shall be affixed and attested by the secretary or an assistant secretary. The corporate address and state of incorporation shall be shown below the signature.

13.04 A Bid by a partnership shall be executed in the partnership name and signed by a partner (whose title must appear under the signature), accompanied by evidence of authority to sign. The official address of the partnership and state of organization and type of partnership shall be shown below the signature.

13.05 A Bid by a limited liability company shall be executed in the name of the firm by a member and accompanied by evidence of authority to sign. The state of formation of the firm and the official address of the firm must be shown below the signature.

13.06 A Bid by an individual shall show the Bidder’s name and official address, phone, fax, and email address.

13.07 A Bid by a joint venture shall be executed by each joint venture in the manner indicated on the Bid Form. The official address of the joint venture must be shown below the signature.

13.08 The Bid shall contain an acknowledgment of receipt of all Addenda, the numbers of which shall be filled in on the Bid Form.

13.09 All Bid Forms shall have the name, address, telephone number, and email address for communications regarding the Bid.

13.10 Attachments to the Bid Form shall include the following:

A. Documentation as required in Article 3 of this Section including a copy of Contractors License.

B. All insurances from both Contractor and Subcontractor (if applicable) required to fulfill the obligations of this project.

Article 14 - Basis of Bid; Evaluation of Bids

14.01 Bidders shall submit a Bid on a Lump Sum and Unit Price basis as noted on the Bid Form for the Work listed in these Bid Documents.

14.02 The Bid price shall include such amounts as the Bidder deems proper for overhead and profit on account of cash allowances.

Article 15 - Submittal of Bid

15.01 Each prospective Bidder is furnished one copy of the Bidding Documents and if required, the Bid Bond Section 00410 of this ITB. An unbound copy of the Bid Form is to be completed and submitted with the bid security and the following data:

A. A current copy of Bidders' Certificate of Insurance and a statement of their ability to acquire the insurance limits and requirements stated in Paragraphs 6.2 and 6.3 of Section 00700 Standard General Conditions of the Construction Contract as modified in Section 00800 Supplementary Conditions of the Contract Documents.

B. An executed Statement of Indemnification.

C. Acknowledgement of Addenda (if applicable).

D. All documentation from Subcontractors (if applicable) including their ability to acquire the insurance limits and requirements stated in Paragraphs 6.2 and 6.3 of Section 00700 Standard General Conditions of the Construction Contract as modified in Section 00800 Supplementary Conditions of the Contract Documents.

15.02 A Bid shall be submitted no later than the date and time prescribed and at the place indicated in the advertisement or Invitation to Bid and shall be enclosed in an opaque sealed envelope plainly marked with the Bid / Project Title (and, if applicable, the designated portion of the Project for which the Bid is submitted), the name and address of Bidder, and shall be accompanied by the bid security and other required documents. If a Bid is sent by mail or other delivery system, the sealed envelope containing the Bid shall be enclosed in a separate envelope plainly marked on the outside with the notation **BID ENCLOSED -** ITB 16-021 – Highlands County/IMWID Above Ground Impoundment and Ancillary Facilities. A mailed Bid shall be addressed to the Highlands County BCC; Attn: Purchasing Department, 4320 George Boulevard, Sebring, FL 33875-5803.

Article 16 - Modification and Withdrawal of Bids

A Bid may be modified or withdrawn by an appropriate document duly executed in the manner that a Bid must be executed and delivered to the place where Bids are to be submitted prior to the date and time for the opening of Bids.

Article 17 - Opening of Bids

Bids will be opened at the time and place indicated in the advertisement or Invitation to Bid, Section 00010 and, unless obviously non-responsive, read aloud publicly. An abstract of the amounts of

the base Bids and major alternates, if any, will be made available to Bidders after the opening of Bids by means of a copy of the "Bid Opening Sheet."

Article 18 - Bids to Remain Subject to Acceptance

All Bids will remain subject to acceptance for the period of time stated in the Bid Form and as allowed by Section 119.071, Florida Statutes, but Owner may, in its sole discretion, release any Bid and return the bid security prior to the end of this period.

Article 19 - Award of Contract

19.01 Owner reserves the right to reject any or all Bids, including without limitation, non-conforming, non-responsive, unbalanced, or conditional Bids. Owner further reserves the right to reject the Bid of any Bidder that it finds, after reasonable inquiry and evaluation, to be non-responsible. Owner may also reject the Bid of any Bidder if Owner believes that it would not be in the best interest of the Project to make an Award to that Bidder. Owner also reserves the right to waive all informalities not involving price, time, or changes in the Work and to negotiate contract terms with the Successful Bidder.

19.02 More than one Bid for the same Work from an individual or entity under the same or different names will not be considered. Reasonable grounds for believing that any Bidder has an interest in more than one Bid for the Work may be cause of disqualification of that Bidder and the rejection of all Bids in which that Bidder has an interest.

19.03 In evaluating Bids, Owner will consider whether or not the Bids comply with the prescribed requirements, and such alternates, unit prices and other data, as may be requested in the Bid Form or prior to the Notice of Award.

19.04 In evaluating Bidders, Owner will consider the qualifications of Bidders and may consider the qualifications and experience of Subcontractors, Suppliers, and other individuals or the entities proposed for those portions of the Work for which the identity of Subcontractors, Suppliers, and other individuals or entities must be submitted as required by Article 12 of this Section 00100.

19.05 Owner may conduct such investigations as Owner deems necessary to establish the responsibility, qualifications, and financial ability of Bidders, proposed Subcontractors, Suppliers, individuals, or entities to perform the Work in accordance with the Contract Documents.

19.06 If the Contract is to be awarded, Owner will Award the Contract to the Bidder whose Bid is determined to be the most advantageous to Owner, taking into consideration those Bids in compliance with the requirements as set forth in this ITB.

19.07 Within thirty-five (35) days after the opening of Bids, unless otherwise stated in the Invitation to Bid of this ITB, Owner will accept one of the Bids or will act in accordance with these Instructions to Bidders or the Section 00250 General Terms and Conditions for Construction Projects. The acceptance of the Bid will be by written Notice of Intent of Award with an attached copy of the signed Bid tabulation, emailed, mailed or delivered to the office designated in the Bid, with a copy to all other Bidders. In the event of failure of the lowest responsible qualified Bidder to sign and return the Agreement, as prescribed herein, Owner may Award to the next lowest responsible and responsive qualified Bidder. Such Award, if made, will be made within ninety (90) days after opening Bids.

Article 20 - Insurance

When the Successful Bidder delivers the executed Agreement to Owner, it must be accompanied by the required Certificate of Insurance.

Article 21 - Signing of Agreement

When Owner gives a Notice of Award to the Successful Bidder, it shall be accompanied by the required number of unsigned counterparts of the Agreement with the other Contract Documents, which are identified in the Agreement attached thereto. Within fifteen (15) days thereafter, Successful Bidder shall sign and deliver the required number of counterparts of the Agreement and attached Contract Documents to Owner. Within thirty (30) days thereafter, Owner shall deliver one fully signed counterpart to Successful Bidder.

Article 22 - Retainage

Provisions concerning retainage are set forth in the Contract Documents.

Article 23 – Designated Contacts and Request for Information (RFI) deadline

All questions regarding this ITB must be submitted in writing to:

Ms. Danielle Gilbert, CPPB
HCBCC Purchasing Manager
4320 George Boulevard
Sebring, Florida 33875-5803
Phone: (863) 402-6524; Email: dgilbert@hcbcc.org

The deadline to submit questions is **5 P.M. on Monday; July 25th, 2016**. The County will release responses in the form of an Addendum to all Mandatory Pre-Bid Attendees via email. This Addendum will be posted to the County's website: www.hcbcc.net.

Article 24 – Direct Material Purchase Procedure

The Owner and the Contractor will utilize the Direct Material Purchase Procedure of Paragraph 7.09 of Section 00700 Standard General Conditions of the Construction Contract as modified in Section 00800 Supplementary Conditions of the Contract Documents.

END OF SECTION

G:\COUNTY\ENGINEERING DEPT\ITB 16-021\SECTION 00100 - INSTRUCTIONS TO BIDDERS - 062016.docx

SECTION 00150

LOCAL PREFERENCE
ITB 16-021

150.10 Intent and Purpose

The intent and purpose of the Highlands County Local Preference in Purchasing is to establish a written policy that allows the authorized purchasing authority of the County to give a preference to local businesses.

150.20 Acknowledgements

Any type of procurement done by the County staff to which the provisions of this subsection are being applied will contain a statement that a local preference will be used in the evaluation and award of that purchase.

150.30 Preference in Bidding

In purchasing, or contracting for procurement of, tangible personal property, materials, contractual services, and construction of improvements to real property or existing structures, the authorized purchasing authority of the County will give a preference to local businesses in making such purchases or awarding such contracts, in an amount of five (5) percent of the total purchase price under $250,000.00; four (4) percent from $250,000.00 to less than $1,000,000.00; three (3) percent from $1,000,000.00 to less than $2,000,000.00; and two (2) percent for purchases $2,000,000.00 and over with a maximum cost differential that shall not exceed $80,000.00. For purposes of this subsection "total purchase price" shall include the base bid and all alternatives or options to the base bid which are being awarded by the authorized purchasing authority of the County.

150.40 Preference in (RFP) Requests for Proposals

In purchasing, or contracting for procurement of, tangible personal property, materials, contractual services, and construction of improvements to real property or existing structures for which a request for proposals is developed with evaluation criteria, a local preference of not more than five (5) percent of the total score will be assigned for a local preference. Based upon analysis of the market place for each project, staff shall make a determination for inclusion of a local preference in the criteria for consideration for each request for proposal.

150.50 Notice

All procurement documents including but not limited to bid documents and request for proposal documents shall include a notice to vendors of the County's Local Preference Policy.

150.60 Local Business Definition

For purposes of this subsection, "local business" shall mean a business which:

(1) Has had a fixed office or distribution point located in and having a street address within Highlands County for at least twelve (12) months immediately prior to the issuance of the request for quotations, competitive bids or request for proposals by the County; and
(2) Holds any business license required by the County, and/or, if applicable, the Municipalities; and
(3) Employs at least one full-time employee, or two part-time employees whose primary residence is in Highlands County, or, if the business has no employees, the business shall be at least fifty (50) percent owned by one or more persons whose primary residence is in Highlands County.

150.65 Certification

Any vendor claiming to be a local business as defined by Section 2.110.60 of the Highlands County Board of County Commissioners Purchasing Manual, shall deliver a written certification to the County Purchasing Department. The certification shall certify that the business is a "local business" as that term is defined in Section 2.110.60 of the Highlands County Board of County Commissioners Purchasing Manual, shall provide all necessary information establishing that fact, and shall be signed under penalties of perjury. It is also the responsibility of any vendor claiming to be a local business, as defined by Section 2.110.60 of the Highlands County Board of County

Commissioners Purchasing Manual to include a copy of its certification in its bid or proposal. The Purchasing Department shall be required to verify the accuracy of any such certifications when determining whether a vendor meets the definition of a "local business."

150.70 Exceptions to Local Preference Policy

(a) The procurement preference set forth in this policy shall not apply to any of the following purchases or contracts:

(1) Goods or services provided under a cooperative purchasing agreement or interlocal agreement;

(2) Contracts for professional services procurement of which is subject to the (CCNA) Consultants' Competitive Negotiation Act or subject to any competitive consultant selection policy or procedure adopted by or utilized by the Board of County Commissioners;

(3) Purchases or contracts which are funded, in whole or part, by a governmental entity and the laws, regulations, or policies governing such funding prohibit application of that preference;

(4) Purchases made or contracts let under emergency or noncompetitive situations or for litigation related legal services.

(b) Application of local preference to a particular purchase, contract, or category of contracts for which the Board of County Commissioners is the awarding authority may be waived upon written justification and recommendation by the County Administrator, Assistant County Administrator or General Services Purchasing Director.

(c) The local preference established in this policy does not prohibit or lessen the right of the Board of County Commissioners and General Services Purchasing staff to compare quality or fitness for use of supplies, materials, equipment, and services proposed for purchase and to compare qualifications, character, responsibility, and fitness of all persons and entities submitting quotations, bids or proposals. (d) The local preference established in this policy does not prohibit the Board of County Commissioners from giving any other preference permitted by law, in addition to the local preference authorized in this policy.

150.75 Application and Enforcement of Preference Policy

(a) The local preference established in this policy shall apply to new quotations, contracts and procurements solicited after the effective date of this policy.

(b) This policy shall be implemented in a fashion consistent with otherwise applicable County purchasing policies and procedures.

150.80 Promulgation of Rules

(a) The County Administrator, Assistant County Administrator, or General Services Purchasing Director are hereby authorized to adopt administrative rules supplemental to the provisions of this policy as deemed necessary and appropriate to implement the provisions of this policy.

(b) The provisions of this policy and the rules adopted by the County Administrator, Assistant County Administrator, or General Services Purchasing Director shall be provided to potential bidders, vendors, and contractors to the widest extent practicable.

SECTION 00250
GENERAL TERMS AND CONDITIONS
FOR CONSTRUCTION PROJECTS
ITB 16-021

A. All responses shall become the property of the County.

B. Compliance with Florida Statutes Section 287.087, on Drug Free Work Place, Section 287.133(2)(a), on Public Entity Crimes, Section 287.134, on Discrimination, and Section 287.135, Prohibiting contracting with scrutinized companies is required.

FLORIDA STATUTES

Section 287.087, Florida Statutes. Preference to businesses with drug free workplace programs:

In order to have a drug free workplace program, a business shall:

1. Publish a statement notifying employees that the unlawful manufacture, distribution, dispensing, possession, or use of a controlled substance is prohibited in the workplace and specifying the actions that will be taken against employees for violations of such prohibition.

2. Inform employees about the dangers of drug abuse in the workplace, the business's policy of maintaining a drug free workplace, any available drug counseling, rehabilitation, and employee assistance programs, and the penalties that may be imposed upon employees for drug abuse violations.

3. Give each employee engaged in providing the commodities or contractual services that are under bid a copy of the statement specified in subsection (1).

4. In the statement specified in subsection (1), notify the employees that, as a condition of working on the commodities or contractual services that are under bid, the employee will abide by the terms of the statement and will notify the employer of any conviction of, or plea of guilty or nolo contendere to, any violation of Chapter 893, Florida Statutes, or of any controlled substance law of the United States or any state, for a violation occurring in the workplace no later than five (5) days after such conviction.

5. Impose a sanction on, or require the satisfactory participation in a drug abuse assistance or rehabilitation program if such is available in the employee's community by, any employee who is so convicted.

6. Make a good faith effort to continue to maintain a drug-free workplace through implementation of this section.

NOTE: PLEASE INCLUDE YOUR “DRUG FREE” STATUS AS PART OF THE GENERAL COMMENTS IN YOUR PROPOSAL OR WHERE INDICATED ON THE BID FORM.

Section 287.133, Florida Statutes. Public entity crime; denial or revocation of the right to transact business with public entities:

(2)(a) A person or affiliate who has been placed on the convicted vendor list following a conviction for a public entity crime may not submit a bid, proposal, or reply on a contract to provide any goods or services to a public entity; may not submit a bid, proposal, or reply on a contract with a public entity for the construction or repair of a public building or public work; may not submit bids,

proposals, or replies on leases of real property to a public entity; may not be awarded or perform work as a contractor, supplier, subcontractor, or consultant under a contract with any public entity; and may not transact business with any public entity in excess of the threshold amount provided in Section 287.017, Florida Statutes, for CATEGORY TWO for a period of 36 months following the date of being placed on the convicted vendor list.

Section 287.134, Florida Statutes. Discrimination; denial or revocation of the right to transact business with public entities:

(2)(a) An entity or affiliate who has been placed on the discriminatory vendor list may not submit a bid, proposal, or reply on a contract to provide any goods or services to a public entity; may not submit a bid, proposal, or reply on a contract with a public entity for the construction or repair of a public building or public work; may not submit bids, proposals, or replies on leases of real property to a public entity; may not be awarded or perform work as a contractor, supplier, subcontractor, or consultant under a contract with any public entity; and may not transact business with any public entity.

Section 287.135, Florida Statutes. Prohibition against contracting with scrutinized companies:

(2) A company is ineligible to, and may not, bid on, submit a proposal for, or enter into or renew a contract with an agency or local governmental entity for goods or services of $1 million or more if at the time of bidding or submitting a proposal for a new contract or renewal of an existing contract, the company:

(a) Is on the Scrutinized Companies that Boycott Israel List, created pursuant to Section 215.4725, Florida Statutes, or is engaged in a boycott of Israel;

(b) Is on the Scrutinized Companies with Activities in Sudan List or the Scrutinized Companies with Activities in the Iran Petroleum Energy Sector List, created pursuant to Section 215.473, Florida Statutes.

(c) Is engaged in business operations in Cuba or Syria.

(5) At the time a company submits a bid or proposal for a contract or before the company enters into or renews a contract with an agency or governmental entity for goods or services of $1 million or more, the company must certify that the company is not participating in a boycott of Israel, on the Scrutinized Companies with Activities in Sudan List or the Scrutinized Companies with Activities in the Iran Petroleum Energy Sector List, or that it does not have business operations in Cuba or Syria.

C. Bids are due and must be received in accordance with the instructions given in the Section 0010 of this ITB.

D. Owner will not reimburse Bidder(s) for any costs associated with the preparation and submittal of any Bid.

E. Bidders, their agents and associates shall NOT solicit any County official. Bidders, their agents and associates shall NOT contact any County official other than the individual(s) listed in Article 23 of Section 00100 of this ITB for additional information and clarification.

F. Due care and diligence has been exercised in the preparation of this ITB and all information contained herein is believed to be substantially correct; however, the responsibility for determining the full extent of the service required rests solely with those making response. Neither Owner nor its representatives shall be responsible for any error or omission in the Bids submitted, nor for the failure on the part of the Bidders to determine the full extent of the exposures.

G. All timely responses meeting the specifications set forth in this ITB will be considered. However, Bidders are cautioned to clearly indicate any deviations from these specifications. The terms and conditions contained herein are those desired by Owner and preference will be given to those Bids in full or substantially full compliance with them.

H. Each Bidder is responsible for full and complete compliance with all laws, rules and regulations including those of the Federal Government, the State of Florida and the County of Highlands. Failure or inability on the part of the Bidder to have complete knowledge and intent to comply with such laws, rules and regulations shall not relieve the Bidder from its obligation to honor its Bid and to perform completely in accordance with its Bid.

I. County, at its discretion, reserves the right to waive minor informalities or irregularities in any Bids, to reject any and all Bids in whole or in part, with or without cause, and to accept that Bid, if any, which in its judgment will be in its best interest.

J. Award will be made to the Bidder whose Bid is determined to be the most advantageous to Owner, taking into consideration those Bids in compliance with the requirements as set forth in this ITB. The Board reserves the right to reject any and all Bids for any reason or make no Award whatsoever or request clarification of information from the Bidders.

K. Any interpretation, clarification, correction or change to this ITB will be made by written addendum issued by the Purchasing Department. Any oral or other type of communication concerning this ITB shall not be binding.

L. Bids must be signed by an individual of the Bidder's organization legally authorized to commit the Bidder to the performance of the product(s) and/or service(s) contemplated by this ITB.

M. The insurance requirements of Paragraphs 6.02, 6.03, and 6.06 of the Standard General Conditions, as amended by the Supplementary Conditions, found in Sections 00700 and 00800 of this ITB must be satisfied before delivery of goods and performance of services.

N. If submitting a Bid for more than one ITB, each Bid must be in a separate envelope and correctly marked. Only one (1) Bid per project shall be accepted from any person, corporation or firm. Modifications will not be accepted or acknowledged.

O. If the successful Bid is greater than two hundred thousand dollars ($200,000.00), a Public Construction Bond will be required. **Awarded Bidder must record Public Construction Bond at the Clerk's Recording Department and comply with Section 255.05, Florida Statutes.** All Bonds must be in a form acceptable to Owner and County Attorney.

P. Each Bid must contain proof of enrollment in E-Verify.

Q. Board policy prohibits any County employee or members of their family from receiving any gift, benefit, and/or profit resulting from any contract or purchase. Board policy also prohibits acceptance of gifts of any kind other than advertising novelties valued less than ten dollars ($10.00).

R. Construction Projects that are awarded for less than two hundred thousand dollars ($200,000) and without a Public Construction Bond require the following:

1. At any time prior to final completion of the Contract, Owner will not authorize or make payment to the Contractor in excess of ninety percent (90%) of the amount due on the Contract on the basis of the Work suitably completed.

2. In case of the default by the Contractor, the laborers, materialmen, and Subcontractors, as defined in Section 713.01, Florida Statutes, making claims for unpaid bills, may be paid from the ten percent (10%) retainage.

3. The final payment of retainage shall not be made until: (1) the Project has been inspected by the Engineer or other person designated by the County for the purpose; (2) Engineer or other designated person has issued a written certificate that the Project has been constructed in accordance with the approved Construction Documents and approved Change Orders; (3) the County has accepted the Project; and (4) the Contractor has supplied the County with signed and dated statements from all laborers, materialmen, and subcontractors as defined in Section 713.01, Florida Statutes, and identified under subparagraph (d) of this paragraph 2, that they have no claims against the Contractor for the Work under the Contract. Said statements shall identify the Project by name and Project number.

4. The Contractor, before beginning Work or within two (2) workdays thereafter, shall post in a conspicuous place on the Site the following notice.

   "Notice is hereby made to all those concerned and affected that __[Contractor's name]_ is performing the Istokpoga Above Ground Impoundment Project __[Project Number]___

   All parties furnishing labor and/or materials to said project must, within twenty (20) days of first providing such labor and/or materials, deliver notice of such in writing, by certified mail, returned receipt requested, to:

   CLELL FORD, LAKES MANAGER
   HIGHLANDS COUNTY PARKS AND NATURAL RESOURCES
   HIGHLANDS COUNTY BOARD OF COUNTY COMMISSIONERS
   4344 GEORGE BLVD., SEBRING, FLORIDA 33875

5. The Contractor shall provide a certified list of all Subcontractors, laborers, and material suppliers to the Owner or Designee within thirty (30) days of receiving the Notice to Proceed with the Work. This list shall be updated thereafter each month with a certified statement that the list and its updates include the names and address of all of those Subcontractors, laborers, and material suppliers furnishing labor and/or material for the Project.

6. The Contractor shall provide a written statement with each pay request to the Engineer which indicates how each payment will be distributed. This pay request breakdown shall define the disbursement intended for all the funds requested. When the Contractor receives any payment it shall pay such moneys received to each Subcontractor and material supplier as set forth in that written statement.

7. The Contractor shall provide a written statement with all but the first payment request from each of the Subcontractors, laborers, and material suppliers indicated in paragraph 5 of this Section R that they have in fact received payment as indicated in paragraph 6 of this Section R. In the event a payment is not made as indicated on a prior written statement provided, pursuant to paragraph 5 of this Section R, the Contractor shall furnish an explanation as to the reasons for such deviation and shall request approval from the Engineer.

S. Late Bids will not be accepted under any circumstances. If Bids received after the scheduled time of the Bid Opening Meeting, the Bidder will be contacted for disposition. The Purchasing Department, at the Bidder's expense, can return the unopened envelope, or, at the Bidder's request, in writing, can destroy it.

T. Electronically submitted Bids and faxed Bids will not be accepted. Any blank spaces on the required Bid Form or the absence of required submittals or signatures may cause the Bid to be declared non-responsive.

U. The County is not responsible for correcting any errors or typos made on the Bid response. Incorrect calculations may cause the Bid to be declared non-responsive.

V. Minority Owned and Women owned businesses must submit a copy of the certificate to receive credit.

W. The Bidder shall comply with the Florida Sales and Use Tax Law as it may apply to this Contract. The quoted amount(s) shall include any and all Florida Sales and Use Tax payment obligations required by Florida Law of the successful Bidder and/or its Subcontractors or material suppliers.

X. Public Records: Any material submitted in response to this ITB will become Public Record pursuant to Section 119(1)(b) and (c), Florida Statutes.

ADDITIONAL TERMS AND CONDITIONS

All pages included in or attached by reference to this ITB shall be called and constitute the Invitation to Bid.

Vendors who will not be bidding on this ITB are requested to notify the County and indicate why they are not bidding. Vendors who fail to respond to two (2) or more consecutive announcements may be removed from the County's Bid notification mailing list.

- END OF SECTION -

G:\COUNTY\ENGINEERING DEPT\ITB 16-021\SECTION 00250 - GENERAL TERMS AND CONDITIONS - 061716.doc

SECTION 00300
BID FORM
ITB 16-021

PROJECT IDENTIFICATION: ISTOKPOGA ABOVE GROUND IMPOUNDMENT
ITB No. 16-021

THIS BID IS SUBMITTED TO: Highlands County BCC
Att: Purchasing Department
4320 George Boulevard
Sebring, FL 33875-5803

BID SUBMITTED BY: _____
[Bidder's Name]

_____
[Bidder's Address]

_____
[Print Contact Person's name for this Bid]

_____
[Contact Person's e-mail address]

_____
[Contact Person's phone number]

1. The Bidder proposes and agrees, if this Bid is accepted, to furnish all labor, materials, and equipment to construct and complete the Work according to and as specified or indicated in ITB 16-021 and the Bidding Documents for the Bid Price and within the time periods stated in this Bid and in accordance with the other terms and conditions of the Contract Documents.

2. Bidder accepts all of the terms and conditions of the Advertisement or Invitation to Bid and Instructions to Bidders, including without limitation those dealing with the disposition of Bid security. This Bid will remain subject to acceptance for thirty (30) days after the day of Bid opening. Bidder will sign and deliver the required number of the other documents required by this ITB within fifteen (15) days after the date of County's Notice of Award.

3. In submitting this Bid, Bidder represents that:

   (a) Bidder has examined and carefully studied the Bidding Documents, including the following Addenda, receipt of all of which is hereby acknowledged:

Date	*Number*	*Date*	*Number*
_____	_____	_____	_____
_____	_____	_____	_____

(b) Bidder has visited the Site and become familiar with and is satisfied as to the general, local, and Site conditions that may affect cost, progress, performance, and furnishing of the Work;

(c) Bidder is familiar with and is satisfied as to all Laws and Regulations that may affect cost, progress, performance, and furnishing of the Work.

(d) Bidder acknowledges that County and Engineer do not assume responsibility for the accuracy or completeness of information and data shown or indicated in the Bidding Documents with respect to Underground Facilities at or contiguous to the Site. Bidder has obtained and carefully studied (or assumes responsibility for having done so) all such additional or supplementary examinations, investigations, explorations, tests, studies, and data concerning conditions (surface, subsurface, and Underground Facilities) at or contiguous to the Site or otherwise which may affect cost progress, performance or furnishing of the Work or which relate to any aspect of the means, methods, techniques, sequences, and procedures of construction to be employed by Bidder and safety precautions and programs incident thereto. Bidder does not consider that any additional examinations, investigations, explorations, tests, studies or data are necessary for the determination of this Bid for performance and furnishing of the Work in accordance with the times, price, and other terms and conditions of the Contract Documents.

(e) Bidder is aware of the general nature of the Work to be performed by County and others at the Site that relates to the Work.

(f) Bidder has correlated information known to Bidder, information and observations obtained from visits to the Site, and all additional examinations, investigations, explorations, tests, studies, and data with the Contract Documents.

(g) Bidder has given Engineer written notice of all conflicts, errors, ambiguities or discrepancies that Bidder has discovered in the Bidding Documents and the written resolution thereof by Engineer is acceptable to Bidder, and the Bidding Documents are generally sufficient to indicate and convey understanding of all terms and conditions for performing and furnishing the Work.

(h) This Bid is genuine and not made in the interest of or on behalf of any undisclosed person, firm or corporation and is not submitted in conformity with any agreement or

rules of any group, association, organization or corporation. Bidder has not directly or indirectly induced or solicited any other Bidder to submit a false or sham Bid. Bidder has not solicited or induced any person, firm or corporation to refrain from Bidding, and Bidder has not sought by collusion to obtain for itself any advantage over any other Bidder or over County.

4. Documentation included with Bid packet

	YES	NO
One (1) original (signed in blue ink), one (1) exact paper copy, and one (1) exact electronic copy (CD or thumb drive) of the submitted Bid.		
Acknowledgment of the Addenda (if applicable)		
Statement of compliance with Section 287.087, Florida Statutes, as a "Drug Free Workplace"		
Statement of compliance with Section 287.133, Florida Statutes, as a "Public Entity Crime"		
Statement of compliance with Section 287.134, Florida Statutes, as a "Discrimination"		
Statement of compliance with Section 287.135, Florida Statutes, as a "Contracting with scrutinized companies"		
Any document from the Dept. of Homeland Security's website showing the Bidder's Company ID # for E-Verify ID #		
Woman or Minority Owned Business **(Include a copy of your certificate if applicable)**		
Required Bidder's Qualification Statement with supporting data included		
A list of a minimum of (5) five jobs similar in scope and size included		
A minimum of five (5) references of clients for whom similar work has been performed included		
A tabulation of Subcontractors included		
Acord Insurance Certificate Included		

5. Pricing

This is a Lump Sum and Unit Price Bid. Bidder will complete the Work in accordance with the Contract Documents for the following Lump Sum and Unit Price Bid items. **AWARD will be based on the Total Lump Sum Bid Price, sum of Unit Price items, and requirements of Bidder. All work for this ITB will be awarded to one (1) Bidder.**

TABULATION OF QUANTITIES

[INSERT TABULATION]

LS = Lump Sum, CY = Cubic Yard

(a) **BASE BID:**

Item	Quantity	Unit	Unit Price	Bid Price
Embankment Excavation (BASE BID)	312,795	CY		
Select Fill	326,457	CY		
Above Ground Impoundment Appurtenances	1	LS		

BASE BID TOTAL = $_____ BID PRICE

_____

_____

(Words)

(b) **ALTERNATE BIDS:**

Alt. Bid #	Item	Quantity	Unit	Unit Price	Bid Price
1	Impacted Soil Area #1	1	LS		
2	Embankment Excavation (ALTERNATIVE BID)	312,795	CY		
3	Dry Pipeline Site	1	LS		

ALTERNATE BID TOTAL = $_____ BID PRICE

_____

_____

(Words)

6. (a) Bidder agrees that the Work will be substantially completed within (_____) days and ready for final payment within (_____)days after the date specified in, and being after, the Notice to Proceed issued by the County.

(b) Bidder shall coordinate with the County Engineer in order to comply with all applicable quality control testing in accordance with the Contract Documents.

Communications concerning this Bid have been addressed only to the contacts listed in Article 23 of Section 00100 of ITB 16-021.

SUBMITTED on _____, 2016

State Contractor License No._____

If Bidder is:

An Individual

By: _____(SEAL)

(Individual's Name)

doing business as_____

Business Address:_____

_____

Phone No.:_____

A Partnership

_____(SEAL)

(Partnership Name)

_____

(State in Which Organized and Type of Partnership)

By:_____

(Name of General Partner)

Business Address:_____

Phone No.:_____

A Corporation

_____(SEAL)

(Corporation Name)

_____ (State of incorporation)

By:_____

(name of person authorized to sign)

_____
(title)

Attest:_____
(secretary)

Business Address:_____

_____

Phone No.:_____

Date of Qualification to do business is_____

A Joint Venture

By:_____
(name) (seal)

_____
(address)

By:_____
(name) (seal)

_____
(address)

Phone Number and Address for receipt of official communications:

_____

(Each joint venturer must sign. The manner of signing for each individual, partnership, and corporation that is a party to the joint venture should be in the manner indicated above for an individual or the appropriate form of entity.)

G:\COUNTY\ENGINEERING DEPT\ITB 16-021\SECTION 00300 - BID FORM - 060216.doc

SECTION 00410
BID BOND
ITB 16-021

STATE OF FLORIDA
COUNTY OF HIGHLANDS

KNOW ALL MEN BY THESE PRESENTS, that we

_____

(hereinafter called "Principal"), and _____as Surety, (hereinafter called "Surety"), are held and firmly bound unto the Highlands County, a political subdivision of the State of Florida (hereinafter called "Owner"), in the sum of___Dollars ($_____), lawful money of the United States of America, for the payment of which sum well and truly to be made, we bind ourselves, our heirs, executors, administrators and successors, jointly and severally, firmly by these presents:

WHEREAS, the "Principal" contemplates submitting or has submitted to bid to the said "Owner" for Bid No. ITB 16-021.

ITB NO. 16-021 ISTOKPOGA ABOVE GROUND IMPOUNDMENT PROJECT

WHEREAS, it was a condition precedent to the submission of said bid that a certified check or bid bond in the amount of not less than five percent (5%) of the amount of bid be submitted with said bid as a guarantee that the Bidder would, if awarded the contract, enter into a written contract with the "Owner" within fifteen (15) consecutive calendar days after having been given notice of award of the contract.

NOW, THEREFORE, THE CONDITIONS OF THIS OBLIGATION ARE SUCH, that if the bid of the "Principal" herein be accepted and said "Principal", within fifteen (15) consecutive calendar days after notice being given of such acceptance, enter into a written contract with the "Owner", then this obligation shall be void; otherwise, the sum herein stated shall be due and payable to the "Owner", and the "Surety" herein agrees to pay said sum immediately upon

demand of said “Owner”, in good and lawful money of the United States of America; as liquidated damages for failure thereof said “Principal”.

IN WITNESS WHEREOF, the said _____, as “Principal” herein, has caused these presents to be signed in its name by its _____and attested by its ___ _____ under its corporate seal, and the said _____ as “Surety” herein, has caused these presents to be signed in its_____and attested by its _____ under its corporate seal, this_____day of_____, A.D. 2016.

ATTEST:

_____

Title:_____

CONTRACTOR, AS PRINCIPAL:

_____

By:_____(Seal)

Title: _____

ATTEST:

_____

Title:_____

AS SURETY:

_____

By:_____(Seal)

Title: _____

- END OF SECTION -

G:\COUNTY\ENGINEERING DEPT\ITB 16-021\SECTION 00410 - BID BOND - 060216.docx

SECTION 00500
AGREEMENT
ITB 16-021

THIS AGREEMENT made this ____ day of _____, 2016, by and between Highlands County, a political subdivision of the State of Florida, 600 South Commerce Avenue, Sebring, Florida 33870, hereinafter called "Owner" and _____, hereinafter called "Contractor". Owner and Contractor, in consideration of the mutual covenants hereinafter set forth, agree as follows:

Article 1. WORK

Contractor shall provide all labor, materials, and equipment to construct the ISTOKPOGA ABOVE GROUND IMPOUNDMENT PROJECT. Contractor shall complete the Work as specified or indicated in the Contract Documents. The Work is generally described as follows:

The Work consists of 2.9 miles of six (6) foot high embankment construction, primary discharge structure consisting of concrete box with slide gate and 42-inch diameter discharge pipe, articulated concrete block mattress overflow spillway with riprap chute, main pump station with two (2) 15,000 gallons per minute (gpm) pumps and one (1) 5,000 gpm pump, seepage pump station with one (1) 1,500 gpm pump and a dry 24-inch steel pipe for future use, and general canal clearing.

The principal features, as defined above, are not intended to cover every aspect of the Project details. Contractor shall be responsible for reviewing the Contract Documents to determine the full scope of the Work and specific requirements of the Project, which include familiarity and compliance with all Laws and Regulations.

Article 2. ENGINEER

The Engineer of Record (hereinafter called "Engineer") will be HDR Engineering, Inc., a Nebraska corporation registered to transact business in the State of Florida.

Article 3. CONTRACT TIMES

3.1 Contractor agrees that the Work will be substantially complete within ____ days and completed and ready for final payment within ____ days after the date when the Contract Times commence to run. The Contract Times will commence to run on the thirteenth (13th) day after the Effective Date of this Agreement or, if a Notice to Proceed is given, on the day indicated in the Notice to Proceed. A Notice to Proceed may be given at any time within thirty (30) days after the Effective Date of this Agreement.

3.2 Liquidated Damages:

3.2.1 Owner and Contractor recognize that time is of the essence of this Agreement and that Owner will suffer financial loss if the Work is not completed within the times specified in paragraph 3.1 of this Article. In agreeing upon the daily liquidated damages amount stated in this paragraph, Owner and Contractor have considered the original Contract Price stated in Article 4 of this Agreement, the average construction, engineering, and inspection costs experienced by Owner, and anticipated costs of project-related delays and inconveniences to Owner and the public. Owner and Contractor also recognize the delays, expense, and difficulties involved in proving the actual loss suffered by Owner if the Work is not

completed on time. Accordingly, instead of requiring any such proof, Owner and Contractor agree that as liquidated damages for delay (and not as a penalty) Contractor shall pay Owner Five Hundred Dollars ($500.00) for each day that expires after the time specified in paragraph 3.1 of this Article until the Work is completed and ready for final payment. Liquidated damages shall be deducted by Owner from any balance due Contractor or, if the balance due Contractor is less than the amount of liquidated damages, Contractor shall pay to Owner the remaining unpaid liquidated damages within thirty (30) days after Owner's invoice is sent to Contractor.

3.2.2 Owner does not waive its right to liquidated damages due under this Agreement by allowing Contractor to continue and to finish the Work, or any part of it, after the expiration of the Contract Time including granted time extensions.

3.2.3 In the case of a default of this Agreement and the completion of the Work by Owner, Contractor and Contractor's surety are liable for the liquidated damages under this Agreement, but Owner will not charge liquidated damages for any delay in the final completion of Owner's performance of the Work due to any unreasonable action or delay on the part of Owner.

Article 4. CONTRACT PRICE

Owner shall pay Contractor for completion of the Work in accordance with the Contract Documents an amount in current funds equal to the amount determined pursuant to paragraph 4.1 below:

4.1 For all Work, other than that priced per cubic yard, as listed on the Bid Form and described in the Drawings and Specifications attached hereto and included herein by this reference, a Lump Sum of:

_____	**$** _____
(USE WORDS)	**(USE FIGURES)**

and in addition thereto, an amount equal to the number of cubic yards of material excavated and cubic yards of fill multiplied by the applicable Unit Price listed on the Bid Form and described in the Construction Documents attached hereto and included herein by this reference. The total of the Lump Sum amount plus the calculated amount for work performed at the Unit Prices constitutes the Contract Price.

Contractor has included all costs in the Contract Price and shall cause the Work to be completed for the Contract Price. The Contract Price shall be reduced in the manner described in Article 12 of this Agreement.

Article 5. PAYMENT PROCEDURES

5.1 Deliverables must be received and accepted in writing by the Engineer prior to reimbursements. Supporting documentation with the invoices must establish that the deliverables were received and accepted in writing by the Engineer. Contractor may receive progress payments for deliverables based on the Contractor's Schedule of Values and on a percentage of services that have been completed, approved, and accepted to the satisfaction of Owner when properly supported by detailed invoices and acceptable evidence of payment. All costs charged to the Project by Contractor shall be supported by detailed invoices, proof of payments, contracts or vouchers evidencing in proper detail the nature and propriety of the charges.

5.2 Progress Payments; Retainage: Contractor shall deliver Contractor's Applications for Payment to Engineer on or before the third (3rd) day of each month. Owner shall make progress payments on account of the Contract Price on the basis of Contractor's Applications for Payment as recommended by Engineer, on or about the twenty-sixth (26th) day of each month during construction as provided in paragraphs 5.2.1 and 5.2.2 below.

5.2.1 Prior to Substantial Completion, progress payments will be made in an amount equal to the percentage indicated below, but in each case, less the aggregate of payments previously made and less such amounts as Engineer shall determine, or Owner may withhold. Owner will withhold ten percent (10%) of each application for progress payment until the completion of the Work.

_90_% of the Work completed.

_0_% of materials and equipment not incorporated in the Work (but delivered, suitably stored, and accompanied by documentation satisfactory to the Owner).

5.2.2 Upon Substantial Completion, in an amount sufficient to increase total payments to Contractor to ninety percent (90%) of the Contract Price (with the balance being retainage), less such amounts as Engineer shall determine, or Owner may withhold.

5.3 Final Payment: Upon completion of the Work, Contractor shall notify Owner in writing of the completion. The certification shall state that the Work has been completed in compliance with the Drawings and Specifications. If any deviations are noted from the approved Drawings and Specifications, the certification shall include a list of all deviations along with an explanation that justifies the reason to accept each deviation. After Contractor has, in the opinion of Engineer, satisfactorily completed all corrections identified during the final inspection and deviations not accepted by Owner and has delivered to Owner, in accordance with the Contract Documents, schedules, guarantees, Bonds, certificates or other evidence of insurance, certificates of inspection, permits, marked-up record documents, paper final as-built Drawings and Specifications, signed, sealed, and certified by a Professional Surveyor, registered in the State of Florida, and all applicable permits, final releases from Contractor and all Subcontractors and suppliers at every level, all warranties, and all other documents reasonably required by Owner pertaining to the Work, Contractor may make application for final payment.

Article 6. CONTRACTOR'S REPRESENTATIONS

In order to induce Owner to enter into this Agreement, Contractor makes the following representations:

6.1 Contractor has examined and carefully studied the Contract Documents (including any Addenda) and the other related data identified in the ITB No. 16-021 Documents, including "technical data."

6.2 Contractor has visited the Site and become familiar with and is satisfied as to the general, local and Site conditions that may affect cost, progress, performance or furnishing of the Work.

6.3 Contractor is familiar with and is satisfied as to all Laws and Regulations that may affect cost, progress, performance and furnishing of the Work.

6.4 Contractor has carefully studied all reports of explorations and tests of subsurface conditions at or contiguous to the Site and all drawings of physical conditions in or relating to existing surface or subsurface structures at or contiguous to the Site (except Underground Facilities) Contractor acknowledges that such reports and drawings are not Contract Documents and may not be complete for Contractor's purposes. Contractor acknowledges that Owner and Engineer do not assume responsibility for the accuracy or completeness of information and data shown or indicated in the Contract Documents with respect to Underground Facilities at or contiguous to the Site. Contractor has obtained and carefully studied (or assumes responsibility for having done so) all such additional supplementary examinations, investigations, explorations, tests, studies and data concerning conditions (surface, subsurface and Underground Facilities) at or contiguous to the Site or otherwise which may affect cost, progress, performance or furnishing of the Work or which relate to any aspect of the means, methods, techniques, sequences and procedures of construction to be employed by Contractor and safety precautions and programs incident thereto. Contractor does not consider that any additional examinations, investigations, explorations, tests, studies or data are necessary for the performance and furnishing of the Work at the Contract Price, within the Contract Times and in accordance with the other terms and conditions of the Contract Documents.

6.5 Contractor is aware of the general nature of work to be performed by Owner and others at the Site that relates to the Work as indicated in the Contract Documents.

6.6 Contractor has correlated the information known to Contractor, information and observations obtained from visits to the Site, reports, Drawings and Specifications identified in the Contract Documents and all additional examinations, investigations, explorations, tests, studies and data with the Contract Documents.

6.7 Contractor has not given Engineer written notice of any conflicts, errors, ambiguities or discrepancies that Contractor has discovered in the Contract Documents, and Contractor agrees that the Contract Documents are generally sufficient to indicate and convey understanding of all terms and conditions for performance and furnishing of the Work.

6.8 Contractor certifies by signing this Agreement that no Commissioner or employee of the Highlands County Board of County Commissioners has solicited or accepted gratuities, favors, or anything of monetary value from Contractor or parties to subcontracts. Contractor and Subcontractors shall not pay any gratuities, favors, or anything of monetary value to any Commissioner or employee of the Highlands County Board of County Commissioners.

Article 7. CONTRACT DOCUMENTS

The Contract Documents which comprise the entire Contract between Owner and Contractor concerning the Work consists of the following:

7.1 This Agreement (pages 00500-1 to 00500-9, inclusive).

7.2 The Standard General Conditions of the Construction Contract, EJCDC C-700 (2013 Edition).

7.3 ITB 16-021 Section 00800 Supplementary Conditions to EJCDC C-700 (2013 Edition).

7.4 Completed Bid Form submitted by ___[Contractor's name]_____, pages 00300-1 to 00300-6.

7.5 Drawings as listed in the Drawing Index on the Drawing Index Sheet attached as Exhibit A.

7.6 Technical Specifications as listed in the Table of Contents attached as Exhibit B.

7.7 Geotechnical Reports by Ardaman & Associates dated May 1, 2012 and Radise International Dated March 25, 2016 attached as Exhibit C.

7.8 Addenda Nos. _____ dated _____ (pages_____).

7.9 Except as expressly otherwise noted in this paragraph and paragraph 7.10 of this Article, there are no Contract Documents other than those listed in paragraphs 7.1 through 7.8 of this Article. In the event of a conflict the provisions of the order of precedence shall be this Agreement, followed by the Supplementary Conditions, followed by EJCDC C-700 (2013 Edition). The Contract Documents may only be amended to provide for additions, deletions, and revisions in the Work or to modify the terms and conditions thereof in one or more of the following ways:

(a) Written Amendment signed by both parties
(b) Change Order signed by both parties
(c) Work Change Directive signed by both parties

7.10 The requirements of the Contract Documents may be supplemented and minor variations and deviations in the Work may be authorized, by one or more of the following ways:

(a) A Field Order issued by the Engineer
(b) Engineer's approval of a Shop Drawing
(c) Engineer's written interpretation or clarification

Article 8. MISCELLANEOUS

8.1 No assignment by a party hereto of any rights under or interests in the Contract Documents will be binding on another party hereto without the written consent of the party sought to be bound; and specifically but without limitation, moneys that may become due and moneys that are due may not be assigned without such consent (except to the extent that the effect of this restriction may be limited by Laws and Regulations), and unless specifically stated to the contrary in any written consent of an assignment no assignment will release or discharge the assignor from any duty or responsibility under the Contract Documents.

8.2 Owner and Contractor each binds itself, its partners, successors, assigns and legal representatives to the other party hereto, its partners, successors, assigns and legal representatives in respect to all covenants, agreements and obligations contained in the Contract Documents.

8.3 Any provision or part of the Contract Documents held to be void or unenforceable under any Law or Regulation shall be deemed stricken, and all remaining provisions shall continue to be valid and binding upon Owner and Contractor, who agree that the Contract Documents shall be reformed to replace such stricken provision or part thereof with a valid and enforceable provision that comes as close as possible to expressing the intention of the stricken provision.

8.4 Upon the occurrence of any event of default, all obligations on the part of Owner to make any further payments of funds pursuant to this Agreement shall, if Owner so elects, terminate but

Owner may make any payments or parts of payments after the happening of any event of default without thereby waiving the right to exercise any remedy which it may have and without becoming liable to make any further payment.

8.5 Contractor certifies by signing this Agreement that no Commissioner or employee of the Highlands County Board of County Commissioners has solicited or accepted gratuities, favors or anything of monetary value from Contractor or parties to subcontracts. Contractor, Subcontractors, and Suppliers shall not pay any gratuities, favors, or anything of monetary value to any Commissioner or employee of the Highlands County Board of County Commissioners.

8.6 No funds received pursuant to this Agreement may be expended for lobbying the Legislature, the judicial branch, any state agency, Owner or Owner's elected officials, employees or agents.

8.7 By entering into this Agreement, Contractor agrees and promises that, during and after a public emergency, disaster, hurricane, flood, or acts of God, Owner shall be given "first priority" for all goods and services under this Agreement. Contractor agrees to provide all goods and services to Owner during and after the emergency at the terms, conditions, and prices as provided in this Agreement on a "first priority" basis. Contractor shall furnish a twenty-four (24) hour phone number to Owner in the event of such an emergency. Failure to provide the stated priority during and after an emergency shall constitute a breach of Contract and make Contractor subject to sanctions from doing further business with Owner. For purposes of this paragraph, the term "first priority" means priority over all other contracts and agreements between Contractor and any person or entity other than Owner and requires Contractor to deliver the goods and services described in this Agreement to Owner prior to providing those goods and services to any other person or entity during and after the emergency.

8.8 Owner shall not be obligated or liable hereunder to any person, organization or entity other than Contractor. No provision in this Agreement is intended to, or shall be construed to, create any third party beneficiary or to provide any rights to any person, organization or entity not a party to this Agreement, including, but not limited to, any citizen or employees of the Owner and/or Contractor.

8.9 In no event shall the making by Owner of any payment to Contractor constitute or be construed as a waiver by Owner of any breach of covenant or any default which may then exist, on the part of Contractor, and the making of such payment by Owner while any such breach or default exists shall in no way impair or prejudice any right or remedy available to Owner with respect to such breach or default.

8.10 No waiver by either Contractor or Owner with respect to any breach or default of or with respect to any provisions or conditions of this Agreement shall be deemed to constitute a continuing waiver of any other breach or default of or with respect to the same or any other provision or condition of this Agreement. No claim or right arising out of a breach of this Agreement can be discharged in whole or in part by a waiver or renunciation of the claim or right unless the waiver or renunciation is supported by consideration and is in writing signed by the aggrieved party.

8.11 This Agreement, including exhibits and amendments, and all matters relating to the validity, interpretation, and performance of this Agreement (whether in contract, statute, tort, or otherwise) shall be governed and construed in accordance with the laws of the State of Florida, without giving effect to principles of conflict of laws. Venue for any legal action shall lie in Highlands County, Florida, and any proceedings to enforce or interpret any provision of the Contract Documents shall be brought exclusively in a court of competent jurisdiction in Highlands County, Florida.

8.12 Owner is an Equal Employment Opportunity ("EEO") employer and as such encourages Contractor to voluntarily comply with EEO regulations with regards to gender, age, race, veteran status, country of origin, and creed. In addition, Contractor or anyone under its employ shall comply with all applicable Laws and Regulations thereby pertaining to the avoidance or appearance of sexual harassment or on the job discrimination. Contractor shall maintain a work environment free of discrimination or unwelcome action of a personal nature. Any subcontracts entered into shall make deference to this clause with the same degree of application being encouraged. When applicable, Contractor shall comply with all new EEO Laws and Regulations.

8.13 Contractor may only subcontract a portion of the Work to a Subcontractor or Subcontractors approved in advance, in writing by Engineer.

8.14 This Agreement shall be effective upon execution by both parties and shall continue in effect and be binding on the parties until the Project is completed and accepted and payment made by Owner or terminated in accordance with Article 16 of Section 00700 Standard General Conditions of the Construction Contract as modified in Section 00800 Supplementary Conditions of the Contract Documents.

8.15 Contractor shall be responsible for all quality control testing requirements.

8.16 In the event there is a discrepancy between the language of another section of this Agreement and the Contract Documents, the requirements this Agreement shall govern.

Article 9. EMPLOYMENT ELIGIBILITY VERIFICATION

9.1 Definitions. As used in this Article:

9.1.1 Employee assigned to this Agreement means an employee who was hired after November 6, 1986, who is directly performing work, in the United States, under this Agreement. An employee is not considered to be directly performing work under this Agreement if the employee

(a) Normally performs support work, such as indirect or overhead functions; and
(b) Does not perform any substantial duties applicable to the Agreement.

9.1.2 Subcontract means any contract entered into by a Subcontractor to furnish supplies or services for performance of this Agreement or a subcontract under this Agreement. It includes but is not limited to purchase orders, and changes and modifications to purchase orders.

9.1.3 Subcontractor means any supplier, distributor, vendor, or firm that furnishes supplies or services to or for Contractor or another subcontractor.

9.1.4 United States, as defined in 8 U.S.C. 1101(a)(38), means the 50 States, the District of Columbia, Puerto Rico, Guam, and the U.S. Virgin Islands.

9.2 Enrollment and verification requirements.

9.2.1 Contractor must be enrolled in E-Verify at time of Contract award, and Contractor shall use E-Verify to initiate verification of employment eligibility of

(a) All new employees.

(1) Enrolled thirty (30) days or more. Contractor shall initiate verification of employment eligibility of all new hires of Contractor, who are working in the State of Florida, whether or not assigned to this Agreement, within three (3) workdays after the date of hire; or

(2) Enrolled less than thirty (30) days. Within thirty (30) days after enrollment in E-Verify, Contractor shall initiate verification of employment eligibility of all new hires of Contractor who are working in the State of Florida, whether or not assigned to this Agreement, within three (3) workdays after the date of hire; or

(b) Employees assigned to this Agreement. For each employee assigned to this Agreement, Contractor shall initiate verification of employment eligibility, to the extent allowed by the E-Verify program, within thirty (30) days after date of Contract award or within thirty (30) days after assignment to this Agreement, whichever date is later.

9.2.2 Contractor shall comply, for the period of performance of this Agreement, with the requirements of the E-Verify program MOU. Termination of Contractor's MOU and denial access to the E-Verify system by the Department of Homeland Security or the Social Security Administration or the U.S. Citizenship and Immigration Service is an event of default under this Agreement.

9.3 Website. Information on registration for and use of the E-Verify program can be obtained via the Internet at the U.S. Citizenship and Immigration Service's Web site: http://www.uscis.gov.

9.4 Individuals previously verified. Contractor is not required by this paragraph to perform additional employment verification using E-Verify for any employee whose employment eligibility was previously verified by Contractor through the E- Verify program.

9.5 Subcontracts. Contractor shall include, and shall require the inclusion of, the requirements of this Article, including this paragraph (9.5) (appropriately modified for identification of the parties), in each subcontract that includes work performed in the United States under this Agreement.

(THIS AREA INTENTIONALLY LEFT BLANK)

IN WITNESS WHEREOF, the parties of these presents have executed this Agreement in three (3) counterparts, each of which shall be deemed an original, but all of which constitute the same Agreement, in the year and day first shown and mentioned.

OWNER: **HIGHLANDS COUNTY, A POLITICAL SUBDIVISION OF THE STATE OF FLORIDA, BY ITS BOARD OF COUNTY COMMISSIONERS**

_____
James L. Brooks, Chairman

Address for giving notices:
505 S. Commerce Avenue
Sebring, Florida 33870-3869

ATTEST:

_____
Robert W. Germaine, Clerk

[SEAL]

CONTRACTOR:

_____
_____

_____
Print Name: _____
Print Title: _____

Address for giving notices:

_____
_____

ATTEST:

By:_____
Print Name:_____
Print Title: _____

[CORPORATE SEAL]

APPROVED AS TO ADMINISTRATIVE POLICY

_____
June M. Fisher, County Administrator

APPROVED AS TO FORM AND LEGAL SUFFICIENCY

_____
J. Ross Macbeth, County Attorney

AVAILABILITY OF FUNDS

_____
Timothy R. Mechling, OMB Senior Manager

APPROVED AS TO TECHNICALPROVISIONS

_____
Elius F. Nortelus, P.E., Assistant County Engineer

APPROVED AS TO PURCHASING POLICIES

_____
Danielle K. Gilbert, Purchasing Manager

APPROVED AS TO RISK MANAGEMENT

_____
Sherri L. Bennett, Risk Mgmt. Coordinator

APPROVED AS TO PROJECT REQUIREMENTS

_____
Clell Ford, Lakes Manager

END OF SECTION

SECTION 00600
PUBLIC CONSTRUCTION BOND
(Section 255.05(3), Florida Statutes)
ITB 16-021

Bond No. _____

BY THIS BOND, we, _____, a Florida corporation, whose principal business address and phone number are _____, as Principal and _____, a _____, whose principal business address and phone number are _____, as Surety, are bound to Highlands County, a political subdivision of the State of Florida, herein called Owner, whose principal business address and telephone number are 600 South Commerce Avenue, Sebring, Florida 33870 (863-402-6500), in the sum of _____ Dollars ($0.00), for payment of which we bind ourselves, our heirs, personal representatives, successors, and assigns, jointly and severally.

THE CONDITION OF THIS BOND is that if Principal:

1. Performs the Contract dated _____, 2016, between Principal and Owner for Istokpoga Above Ground Impoundment (Highlands County ITB No. 16-021, Highlands County Project Number 14032), that Contract being made a part of this bond by reference, at the times and in the manner prescribed in that Contract; and

2. Promptly makes payments to all claimants, as defined in Section 255.05(1), Florida Statutes, supplying Principal with labor, services, materials, or supplies, used directly or indirectly by Principal in the prosecution of the work provided for in that Contract; and

3. Pays Owner all losses, damages, expenses, costs, and attorney's fees, including appellate proceedings, that Owner sustains because of a default by Principal under that Contract; and

4. Performs the guarantee of all work and materials furnished under that Contract for the time specified in that Contract, then this bond is void; otherwise it remains in full force.

Any action instituted by a claimant under this bond for payment must be in accordance with the notice and time limitation provisions in Section 255.05(2) and (10), Florida Statutes.

Any changes in or under the Contract documents and compliance or noncompliance with any formalities connected with that Contract or the changes does not affect Surety's obligation under this bond.

Dated _____, 2016.

AS SURETY:

_____,
a _____

By: _____
(As Attorney in Fact)

CONTRACTOR, AS PRINCIPAL:

_____, a _____

By: _____

Title: _____

INSTRUCTIONS FOR PUBLIC CONSTRUCTION BOND

1. A good and sufficient Public Construction Bond, in the penal sum of not less than one hundred (100%) percent of the contract amount, with a surety company satisfactory to OWNER, will be required of CONTRACTOR guaranteeing that the contract, including the various guarantee periods thereunder will be faithfully performed; and that CONTRACTOR will promptly make payment to all persons supplying CONTRACTOR labor, materials, supplies and services used directly or indirectly by CONTRACTOR in the prosecution of the work provided for in the Contract.

2. The Surety Company furnishing this bond shall be authorized to do business in the State of Florida, shall be in compliance with the provisions of the Florida insurance code, shall have twice the minimum surplus and capital required by the Florida Insurance code, and shall hold a currently valid certificate of authority issued by the United States Department of Treasury pursuant to Title 31, Sections 9304-9308, of the United States Code. Surety company must have a rating of not less than “A-X” by the latest edition of the KEY RATING GUIDE as published by A.M. Best company, A.M. Best Road, Oldwick, NJ 08858.

3. The Attorney-in-Fact (Resident Agent) who executes the Public Construction Bond on behalf of the Surety Company must attach a notarized copy of his power-of-attorney as evidence of his authority to bind the surety on the date of execution of the bonds. All signatures must be original. No copied or facsimile signatures will be accepted. All Contracts, Public Construction Bond, and respective powers-of-attorney will have the same date.

4. In the event the Surety Company becomes unsatisfactory to OWNER, OWNER may at its discretion, require from CONTRACTOR an additional or new bond in the same or lessor penal sum, satisfactory to OWNER, and to be conditioned as above required. Upon CONTRACTOR’s failure to furnish such additional or new bond within ten (10) days from the date of written notice to do so, all payments under the Contract will be withheld until such additional bond is furnished.

This document has important legal consequences; consultation with an attorney is encouraged with respect to its use or modification. This document should be adapted to the particular circumstances of the contemplated Project and the controlling Laws and Regulations.

STANDARD GENERAL CONDITIONS OF THE CONSTRUCTION CONTRACT

Prepared by

EJCDC®
ENGINEERS JOINT CONTRACT DOCUMENTS COMMITTEE

Issued and Published Jointly by

ACEC
AMERICAN COUNCIL OF ENGINEERING COMPANIES

ASCE
AMERICAN SOCIETY OF CIVIL ENGINEERS

National Society of Professional Engineers®

These General Conditions have been prepared for use with the Agreement Between Owner and Contractor for Construction Contract (EJCDC® C-520, Stipulated Sum, or C-525, Cost-Plus, 2013 Editions). Their provisions are interrelated and a change in one may necessitate a change in the other.

To prepare supplementary conditions that are coordinated with the General Conditions, use EJCDC's Guide to the Preparation of Supplementary Conditions (EJCDC® C-800, 2013 Edition). The full EJCDC Construction series of documents is discussed in the Commentary on the 2013 EJCDC Construction Documents (EJCDC® C-001, 2013 Edition).

National Society of Professional Engineers

1420 King Street, Alexandria, VA 22314-2794

(703) 684-2882

www.nspe.org

American Council of Engineering Companies

1015 15th Street N.W., Washington, DC 20005

(202) 347-7474

www.acec.org

American Society of Civil Engineers

1801 Alexander Bell Drive, Reston, VA 20191-4400

(800) 548-2723

www.asce.org

NOTE: EJCDC publications may be purchased at www.ejcdc.org, or from any of the sponsoring organizations above.

STANDARD GENERAL CONDITIONS OF THE CONSTRUCTION CONTRACT

TABLE OF CONTENTS

Page

Article 1 – Definitions and Terminology 1

1.01 Defined Terms 1

1.02 Terminology 5

Article 2 – Preliminary Matters 6

2.01 Delivery of Bonds and Evidence of Insurance 6

2.02 Copies of Documents 6

2.03 Before Starting Construction 6

2.04 Preconstruction Conference; Designation of Authorized Representatives 7

2.05 Initial Acceptance of Schedules 7

2.06 Electronic Transmittals 7

Article 3 – Documents: Intent, Requirements, Reuse 8

3.01 Intent 8

3.02 Reference Standards 8

3.03 Reporting and Resolving Discrepancies 8

3.04 Requirements of the Contract Documents 9

3.05 Reuse of Documents 10

Article 4 – Commencement and Progress of the Work 10

4.01 Commencement of Contract Times; Notice to Proceed 10

4.02 Starting the Work 10

4.03 Reference Points 10

4.04 Progress Schedule 10

4.05 Delays in Contractor's Progress 11

Article 5 – Availability of Lands; Subsurface and Physical Conditions; Hazardous Environmental Conditions 12

5.01 Availability of Lands 12

5.02 Use of Site and Other Areas 12

5.03 Subsurface and Physical Conditions 13

5.04 Differing Subsurface or Physical Conditions 14

5.05 Underground Facilities 15

5.06 Hazardous Environmental Conditions at Site 17
Article 6 – Bonds and Insurance 19
6.01 Performance, Payment, and Other Bonds 19
6.02 Insurance—General Provisions 19
6.03 Contractor's Insurance 20
6.04 Owner's Liability Insurance 23
6.05 Property Insurance 23
6.06 Waiver of Rights 25
6.07 Receipt and Application of Property Insurance Proceeds 25
Article 7 – Contractor's Responsibilities 26
7.01 Supervision and Superintendence 26
7.02 Labor; Working Hours 26
7.03 Services, Materials, and Equipment 26
7.04 "Or Equals" 27
7.05 Substitutes 28
7.06 Concerning Subcontractors, Suppliers, and Others 29
7.07 Patent Fees and Royalties 31
7.08 Permits 31
7.09 Taxes 32
7.10 Laws and Regulations 32
7.11 Record Documents 32
7.12 Safety and Protection 32
7.13 Safety Representative 33
7.14 Hazard Communication Programs 33
7.15 Emergencies 34
7.16 Shop Drawings, Samples, and Other Submittals 34
7.17 Contractor's General Warranty and Guarantee 36
7.18 Indemnification 37
7.19 Delegation of Professional Design Services 37
Article 8 – Other Work at the Site 38
8.01 Other Work 38
8.02 Coordination 39
8.03 Legal Relationships 39

Article 9 – Owner's Responsibilities 40
9.01 Communications to Contractor 40
9.02 Replacement of Engineer 40
9.03 Furnish Data 40
9.04 Pay When Due 40
9.05 Lands and Easements; Reports, Tests, and Drawings 40
9.06 Insurance 40
9.07 Change Orders 40
9.08 Inspections, Tests, and Approvals 41
9.09 Limitations on Owner's Responsibilities 41
9.10 Undisclosed Hazardous Environmental Condition 41
9.11 Evidence of Financial Arrangements 41
9.12 Safety Programs 41
Article 10 – Engineer's Status During Construction 41
10.01 Owner's Representative 41
10.02 Visits to Site 41
10.03 Project Representative 42
10.04 Rejecting Defective Work 42
10.05 Shop Drawings, Change Orders and Payments 42
10.06 Determinations for Unit Price Work 42
10.07 Decisions on Requirements of Contract Documents and Acceptability of Work 42
10.08 Limitations on Engineer's Authority and Responsibilities 42
10.09 Compliance with Safety Program 43
Article 11 – Amending the Contract Documents; Changes in the Work 43
11.01 Amending and Supplementing Contract Documents 43
11.02 Owner-Authorized Changes in the Work 44
11.03 Unauthorized Changes in the Work 44
11.04 Change of Contract Price 44
11.05 Change of Contract Times 45
11.06 Change Proposals 45
11.07 Execution of Change Orders 46
11.08 Notification to Surety 47
Article 12 – Claims 47

12.01 Claims 47
Article 13 – Cost of the Work; Allowances; Unit Price Work 48
13.01 Cost of the Work 48
13.02 Allowances 50
13.03 Unit Price Work 51
Article 14 – Tests and Inspections; Correction, Removal or Acceptance of Defective Work 52
14.01 Access to Work 52
14.02 Tests, Inspections, and Approvals 52
14.03 Defective Work 53
14.04 Acceptance of Defective Work 53
14.05 Uncovering Work 53
14.06 Owner May Stop the Work 54
14.07 Owner May Correct Defective Work 54
Article 15 – Payments to Contractor; Set-Offs; Completion; Correction Period 55
15.01 Progress Payments 55
15.02 Contractor's Warranty of Title 58
15.03 Substantial Completion 58
15.04 Partial Use or Occupancy 59
15.05 Final Inspection 59
15.06 Final Payment 59
15.07 Waiver of Claims 61
15.08 Correction Period 61
Article 16 – Suspension of Work and Termination 62
16.01 Owner May Suspend Work 62
16.02 Owner May Terminate for Cause 62
16.03 Owner May Terminate For Convenience 63
16.04 Contractor May Stop Work or Terminate 63
Article 17 – Final Resolution of Disputes 64
17.01 Methods and Procedures 64
Article 18 – Miscellaneous 64
18.01 Giving Notice 64
18.02 Computation of Times 64
18.03 Cumulative Remedies 64

18.04 Limitation of Damages 65
18.05 No Waiver 65
18.06 Survival of Obligations 65
18.07 Controlling Law 65
18.08 Headings 65

ARTICLE 1 – DEFINITIONS AND TERMINOLOGY

1.01 *Defined Terms*

A. Wherever used in the Bidding Requirements or Contract Documents, a term printed with initial capital letters, including the term's singular and plural forms, will have the meaning indicated in the definitions below. In addition to terms specifically defined, terms with initial capital letters in the Contract Documents include references to identified articles and paragraphs, and the titles of other documents or forms.

1. *Addenda*—Written or graphic instruments issued prior to the opening of Bids which clarify, correct, or change the Bidding Requirements or the proposed Contract Documents.

2. *Agreement*—The written instrument, executed by Owner and Contractor, that sets forth the Contract Price and Contract Times, identifies the parties and the Engineer, and designates the specific items that are Contract Documents.

3. *Application for Payment*—The form acceptable to Engineer which is to be used by Contractor during the course of the Work in requesting progress or final payments and which is to be accompanied by such supporting documentation as is required by the Contract Documents.

4. *Bid*—The offer of a Bidder submitted on the prescribed form setting forth the prices for the Work to be performed.

5. *Bidder*—An individual or entity that submits a Bid to Owner.

6. *Bidding Documents*—The Bidding Requirements, the proposed Contract Documents, and all Addenda.

7. *Bidding Requirements*—The advertisement or invitation to bid, Instructions to Bidders, Bid Bond or other Bid security, if any, the Bid Form, and the Bid with any attachments.

8. *Change Order*—A document which is signed by Contractor and Owner and authorizes an addition, deletion, or revision in the Work or an adjustment in the Contract Price or the Contract Times, or other revision to the Contract, issued on or after the Effective Date of the Contract.

9. *Change Proposal*—A written request by Contractor, duly submitted in compliance with the procedural requirements set forth herein, seeking an adjustment in Contract Price or Contract Times, or both; contesting an initial decision by Engineer concerning the requirements of the Contract Documents or the acceptability of Work under the Contract Documents; challenging a set-off against payments due; or seeking other relief with respect to the terms of the Contract.

10. *Claim*—(a) A demand or assertion by Owner directly to Contractor, duly submitted in compliance with the procedural requirements set forth herein: seeking an adjustment of Contract Price or Contract Times, or both; contesting an initial decision by Engineer concerning the requirements of the Contract Documents or the acceptability of Work under the Contract Documents; contesting Engineer's decision regarding a Change Proposal; seeking resolution of a contractual issue that Engineer has declined to address; or seeking other relief with respect to the terms of the Contract; or (b) a demand or assertion by Contractor directly to Owner, duly submitted in compliance with the procedural requirements set forth herein, contesting Engineer's decision regarding a Change Proposal; or seeking resolution of a contractual issue that Engineer

has declined to address. A demand for money or services by a third party is not a Claim.

11. *Constituent of Concern*—Asbestos, petroleum, radioactive materials, polychlorinated biphenyls (PCBs), hazardous waste, and any substance, product, waste, or other material of any nature whatsoever that is or becomes listed, regulated, or addressed pursuant to (a) the Comprehensive Environmental Response, Compensation and Liability Act, 42 U.S.C. §§9601 et seq. ("CERCLA"); (b) the Hazardous Materials Transportation Act, 49 U.S.C. §§5501 et seq.; (c) the Resource Conservation and Recovery Act, 42 U.S.C. §§6901 et seq. ("RCRA"); (d) the Toxic Substances Control Act, 15 U.S.C. §§2601 et seq.; (e) the Clean Water Act, 33 U.S.C. §§1251 et seq.; (f) the Clean Air Act, 42 U.S.C. §§7401 et seq.; or (g) any other federal, state, or local statute, law, rule, regulation, ordinance, resolution, code, order, or decree regulating, relating to, or imposing liability or standards of conduct concerning, any hazardous, toxic, or dangerous waste, substance, or material.

12. *Contract*—The entire and integrated written contract between the Owner and Contractor concerning the Work.

13. *Contract Documents*—Those items so designated in the Agreement, and which together comprise the Contract.

14. *Contract Price*—The money that Owner has agreed to pay Contractor for completion of the Work in accordance with the Contract Documents. .

15. *Contract Times*—The number of days or the dates by which Contractor shall: (a) achieve Milestones, if any; (b) achieve Substantial Completion; and (c) complete the Work.

16. *Contractor*—The individual or entity with which Owner has contracted for performance of the Work.

17. *Cost of the Work*—See Paragraph 13.01 for definition.

18. *Drawings*—The part of the Contract that graphically shows the scope, extent, and character of the Work to be performed by Contractor.

19. *Effective Date of the Contract*—The date, indicated in the Agreement, on which the Contract becomes effective.

20. *Engineer*—The individual or entity named as such in the Agreement.

21. *Field Order*—A written order issued by Engineer which requires minor changes in the Work but does not change the Contract Price or the Contract Times.

22. *Hazardous Environmental Condition*—The presence at the Site of Constituents of Concern in such quantities or circumstances that may present a danger to persons or property exposed thereto. The presence at the Site of materials that are necessary for the execution of the Work, or that are to be incorporated in the Work, and that are controlled and contained pursuant to industry practices, Laws and Regulations, and the requirements of the Contract, does not establish a Hazardous Environmental Condition.

23. *Laws and Regulations; Laws or Regulations*—Any and all applicable laws, statutes, rules, regulations, ordinances, codes, and orders of any and all governmental bodies, agencies, authorities, and courts having jurisdiction.

24. *Liens*—Charges, security interests, or encumbrances upon Contract-related funds, real property, or personal property.

25. *Milestone*—A principal event in the performance of the Work that the Contract requires Contractor to achieve by an intermediate completion date or by a time prior to Substantial Completion of all the Work.

26. *Notice of Award*—The written notice by Owner to a Bidder of Owner's acceptance of the Bid.

27. *Notice to Proceed*—A written notice by Owner to Contractor fixing the date on which the Contract Times will commence to run and on which Contractor shall start to perform the Work.

28. *Owner*—The individual or entity with which Contractor has contracted regarding the Work, and which has agreed to pay Contractor for the performance of the Work, pursuant to the terms of the Contract.

29. *Progress Schedule*—A schedule, prepared and maintained by Contractor, describing the sequence and duration of the activities comprising the Contractor's plan to accomplish the Work within the Contract Times.

30. *Project*—The total undertaking to be accomplished for Owner by engineers, contractors, and others, including planning, study, design, construction, testing, commissioning, and start-up, and of which the Work to be performed under the Contract Documents is a part.

31. *Project Manual*—The written documents prepared for, or made available for, procuring and constructing the Work, including but not limited to the Bidding Documents or other construction procurement documents, geotechnical and existing conditions information, the Agreement, bond forms, General Conditions, Supplementary Conditions, and Specifications. The contents of the Project Manual may be bound in one or more volumes.

32. *Resident Project Representative*—The authorized representative of Engineer assigned to assist Engineer at the Site. As used herein, the term Resident Project Representative or "RPR" includes any assistants or field staff of Resident Project Representative.

33. *Samples*—Physical examples of materials, equipment, or workmanship that are representative of some portion of the Work and that establish the standards by which such portion of the Work will be judged.

34. *Schedule of Submittals*—A schedule, prepared and maintained by Contractor, of required submittals and the time requirements for Engineer's review of the submittals and the performance of related construction activities.

35. *Schedule of Values*—A schedule, prepared and maintained by Contractor, allocating portions of the Contract Price to various portions of the Work and used as the basis for reviewing Contractor's Applications for Payment.

36. *Shop Drawings*—All drawings, diagrams, illustrations, schedules, and other data or information that are specifically prepared or assembled by or for Contractor and submitted by Contractor to illustrate some portion of the Work. Shop Drawings, whether approved or not, are not Drawings and are not Contract Documents.

37. *Site*—Lands or areas indicated in the Contract Documents as being furnished by Owner upon which the Work is to be performed, including rights-of-way and easements, and such other lands furnished by Owner which are designated for the use of Contractor.

38. *Specifications*—The part of the Contract that consists of written requirements for materials, equipment, systems, standards, and workmanship as applied to the Work, and certain administrative requirements and procedural matters applicable to the Work.

39. *Subcontractor*—An individual or entity having a direct contract with Contractor or with any other Subcontractor for the performance of a part of the Work.

40. *Substantial Completion*—The time at which the Work (or a specified part thereof) has progressed to the point where, in the opinion of Engineer, the Work (or a specified part thereof) is sufficiently complete, in accordance with the Contract Documents, so that the Work (or a specified part thereof) can be utilized for the purposes for which it is intended. The terms "substantially complete" and "substantially completed" as applied to all or part of the Work refer to Substantial Completion thereof.

41. *Successful Bidder*—The Bidder whose Bid the Owner accepts, and to which the Owner makes an award of contract, subject to stated conditions.

42. *Supplementary Conditions*—The part of the Contract that amends or supplements these General Conditions.

43. *Supplier*—A manufacturer, fabricator, supplier, distributor, materialman, or vendor having a direct contract with Contractor or with any Subcontractor to furnish materials or equipment to be incorporated in the Work by Contractor or a Subcontractor.

44. *Technical Data*—Those items expressly identified as Technical Data in the Supplementary Conditions, with respect to either (a) subsurface conditions at the Site, or physical conditions relating to existing surface or subsurface structures at the Site (except Underground Facilities) or (b) Hazardous Environmental Conditions at the Site. If no such express identifications of Technical Data have been made with respect to conditions at the Site, then the data contained in boring logs, recorded measurements of subsurface water levels, laboratory test results, and other factual, objective information regarding conditions at the Site that are set forth in any geotechnical or environmental report prepared for the Project and made available to Contractor are hereby defined as Technical Data with respect to conditions at the Site under Paragraphs 5.03, 5.04, and 5.06.

45. *Underground Facilities*—All underground pipelines, conduits, ducts, cables, wires, manholes, vaults, tanks, tunnels, or other such facilities or attachments, and any encasements containing such facilities, including but not limited to those that convey electricity, gases, steam, liquid petroleum products, telephone or other communications, fiber optic transmissions, cable television, water, wastewater, storm water, other liquids or chemicals, or traffic or other control systems.

46. *Unit Price Work*—Work to be paid for on the basis of unit prices.

47. *Work*—The entire construction or the various separately identifiable parts thereof required to be provided under the Contract Documents. Work includes and is the result of performing or providing all labor, services, and documentation necessary to produce such construction; furnishing, installing, and incorporating all materials and equipment into such construction; and may include related services such as testing, start-up, and commissioning, all as required by the Contract Documents.

48. *Work Change Directive*—A written directive to Contractor issued on or after the Effective Date of the Contract, signed by Owner and recommended by Engineer, ordering an addition, deletion, or revision in the Work.

1.02 *Terminology*

A. The words and terms discussed in the following paragraphs are not defined but, when used in the Bidding Requirements or Contract Documents, have the indicated meaning.

B. *Intent of Certain Terms or Adjectives*:

1. The Contract Documents include the terms "as allowed," "as approved," "as ordered," "as directed" or terms of like effect or import to authorize an exercise of professional judgment by Engineer. In addition, the adjectives "reasonable," "suitable," "acceptable," "proper," "satisfactory," or adjectives of like effect or import are used to describe an action or determination of Engineer as to the Work. It is intended that such exercise of professional judgment, action, or determination will be solely to evaluate, in general, the Work for compliance with the information in the Contract Documents and with the design concept of the Project as a functioning whole as shown or indicated in the Contract Documents (unless there is a specific statement indicating otherwise). The use of any such term or adjective is not intended to and shall not be effective to assign to Engineer any duty or authority to supervise or direct the performance of the Work, or any duty or authority to undertake responsibility contrary to the provisions of Article 10 or any other provision of the Contract Documents.

C. *Day*:

1. The word "day" means a calendar day of 24 hours measured from midnight to the next midnight.

D. *Defective*:

1. The word "defective," when modifying the word "Work," refers to Work that is unsatisfactory, faulty, or deficient in that it:

a. does not conform to the Contract Documents; or

b. does not meet the requirements of any applicable inspection, reference standard, test, or approval referred to in the Contract Documents; or

c. has been damaged prior to Engineer's recommendation of final payment (unless responsibility for the protection thereof has been assumed by Owner at Substantial Completion in accordance with Paragraph 15.03 or 15.04).

E. *Furnish, Install, Perform, Provide*:

1. The word "furnish," when used in connection with services, materials, or equipment, shall mean to supply and deliver said services, materials, or equipment to the Site (or some other specified location) ready for use or installation and in usable or operable condition.

2. The word "install," when used in connection with services, materials, or equipment, shall mean to put into use or place in final position said services, materials, or equipment complete and ready for intended use.

3. The words “perform” or “provide,” when used in connection with services, materials, or equipment, shall mean to furnish and install said services, materials, or equipment complete and ready for intended use.

4. If the Contract Documents establish an obligation of Contractor with respect to specific services, materials, or equipment, but do not expressly use any of the four words “furnish,” “install,” “perform,” or “provide,” then Contractor shall furnish and install said services, materials, or equipment complete and ready for intended use.

F. Unless stated otherwise in the Contract Documents, words or phrases that have a well-known technical or construction industry or trade meaning are used in the Contract Documents in accordance with such recognized meaning.

ARTICLE 2 – PRELIMINARY MATTERS

2.01 *Delivery of Bonds and Evidence of Insurance*

A. *Bonds*: When Contractor delivers the executed counterparts of the Agreement to Owner, Contractor shall also deliver to Owner such bonds as Contractor may be required to furnish.

B. *Evidence of Contractor’s Insurance*: When Contractor delivers the executed counterparts of the Agreement to Owner, Contractor shall also deliver to Owner, with copies to each named insured and additional insured (as identified in the Supplementary Conditions or elsewhere in the Contract), the certificates and other evidence of insurance required to be provided by Contractor in accordance with Article 6.

C. *Evidence of Owner’s Insurance*: After receipt of the executed counterparts of the Agreement and all required bonds and insurance documentation, Owner shall promptly deliver to Contractor, with copies to each named insured and additional insured (as identified in the Supplementary Conditions or otherwise), the certificates and other evidence of insurance required to be provided by Owner under Article 6.

2.02 *Copies of Documents*

A. Owner shall furnish to Contractor four printed copies of the Contract (including one fully executed counterpart of the Agreement), and one copy in electronic portable document format (PDF). Additional printed copies will be furnished upon request at the cost of reproduction.

B. Owner shall maintain and safeguard at least one original printed record version of the Contract, including Drawings and Specifications signed and sealed by Engineer and other design professionals. Owner shall make such original printed record version of the Contract available to Contractor for review. Owner may delegate the responsibilities under this provision to Engineer.

2.03 *Before Starting Construction*

A. *Preliminary Schedules*: Within 10 days after the Effective Date of the Contract (or as otherwise specifically required by the Contract Documents), Contractor shall submit to Engineer for timely review:

1. a preliminary Progress Schedule indicating the times (numbers of days or dates) for starting and completing the various stages of the Work, including any Milestones specified in the Contract;

2. a preliminary Schedule of Submittals; and

3. a preliminary Schedule of Values for all of the Work which includes quantities and prices of items which when added together equal the Contract Price and subdivides the Work into component parts in sufficient detail to serve as the basis for progress payments during performance of the Work. Such prices will include an appropriate amount of overhead and profit applicable to each item of Work.

2.04 *Preconstruction Conference; Designation of Authorized Representatives*

A. Before any Work at the Site is started, a conference attended by Owner, Contractor, Engineer, and others as appropriate will be held to establish a working understanding among the parties as to the Work and to discuss the schedules referred to in Paragraph 2.03.A, procedures for handling Shop Drawings, Samples, and other submittals, processing Applications for Payment, electronic or digital transmittals, and maintaining required records.

B. At this conference Owner and Contractor each shall designate, in writing, a specific individual to act as its authorized representative with respect to the services and responsibilities under the Contract. Such individuals shall have the authority to transmit and receive information, render decisions relative to the Contract, and otherwise act on behalf of each respective party.

2.05 *Initial Acceptance of Schedules*

A. At least 10 days before submission of the first Application for Payment a conference, attended by Contractor, Engineer, and others as appropriate, will be held to review for acceptability to Engineer as provided below the schedules submitted in accordance with Paragraph 2.03.A. Contractor shall have an additional 10 days to make corrections and adjustments and to complete and resubmit the schedules. No progress payment shall be made to Contractor until acceptable schedules are submitted to Engineer.

1. The Progress Schedule will be acceptable to Engineer if it provides an orderly progression of the Work to completion within the Contract Times. Such acceptance will not impose on Engineer responsibility for the Progress Schedule, for sequencing, scheduling, or progress of the Work, nor interfere with or relieve Contractor from Contractor's full responsibility therefor.

2. Contractor's Schedule of Submittals will be acceptable to Engineer if it provides a workable arrangement for reviewing and processing the required submittals.

3. Contractor's Schedule of Values will be acceptable to Engineer as to form and substance if it provides a reasonable allocation of the Contract Price to the component parts of the Work.

2.06 *Electronic Transmittals*

A. Except as otherwise stated elsewhere in the Contract, the Owner, Engineer, and Contractor may transmit, and shall accept, Project-related correspondence, text, data, documents, drawings, information, and graphics, including but not limited to Shop Drawings and other submittals, in electronic media or digital format, either directly, or through access to a secure Project website.

B. If the Contract does not establish protocols for electronic or digital transmittals, then Owner, Engineer, and Contractor shall jointly develop such protocols.

C. When transmitting items in electronic media or digital format, the transmitting party makes no representations as to long term compatibility, usability, or readability of the items resulting from the recipient's use of software application packages, operating systems, or

computer hardware differing from those used in the drafting or transmittal of the items, or from those established in applicable transmittal protocols.

ARTICLE 3 – DOCUMENTS: INTENT, REQUIREMENTS, REUSE

3.01 *Intent*

A. The Contract Documents are complementary; what is required by one is as binding as if required by all.

B. It is the intent of the Contract Documents to describe a functionally complete project (or part thereof) to be constructed in accordance with the Contract Documents.

C. Unless otherwise stated in the Contract Documents, if there is a discrepancy between the electronic or digital versions of the Contract Documents (including any printed copies derived from such electronic or digital versions) and the printed record version, the printed record version shall govern.

D. The Contract supersedes prior negotiations, representations, and agreements, whether written or oral.

E. Engineer will issue clarifications and interpretations of the Contract Documents as provided herein.

3.02 *Reference Standards*

A. Standards Specifications, Codes, Laws and Regulations

1. Reference in the Contract Documents to standard specifications, manuals, reference standards, or codes of any technical society, organization, or association, or to Laws or Regulations, whether such reference be specific or by implication, shall mean the standard specification, manual, reference standard, code, or Laws or Regulations in effect at the time of opening of Bids (or on the Effective Date of the Contract if there were no Bids), except as may be otherwise specifically stated in the Contract Documents.

2. No provision of any such standard specification, manual, reference standard, or code, or any instruction of a Supplier, shall be effective to change the duties or responsibilities of Owner, Contractor, or Engineer, or any of their subcontractors, consultants, agents, or employees, from those set forth in the part of the Contract Documents prepared by or for Engineer. No such provision or instruction shall be effective to assign to Owner, Engineer, or any of their officers, directors, members, partners, employees, agents, consultants, or subcontractors, any duty or authority to supervise or direct the performance of the Work or any duty or authority to undertake responsibility inconsistent with the provisions of the part of the Contract Documents prepared by or for Engineer.

3.03 *Reporting and Resolving Discrepancies*

A. *Reporting Discrepancies*:

1. *Contractor's Verification of Figures and Field Measurements*: Before undertaking each part of the Work, Contractor shall carefully study the Contract Documents, and check and verify pertinent figures and dimensions therein, particularly with respect to applicable field measurements. Contractor shall promptly report in writing to Engineer any conflict, error, ambiguity, or discrepancy that Contractor discovers, or has actual knowledge of, and shall not proceed with any Work affected thereby until the conflict,

error, ambiguity, or discrepancy is resolved, by a clarification or interpretation by Engineer, or by an amendment or supplement to the Contract Documents issued pursuant to Paragraph 11.01.

2. *Contractor's Review of Contract Documents*: If, before or during the performance of the Work, Contractor discovers any conflict, error, ambiguity, or discrepancy within the Contract Documents, or between the Contract Documents and (a) any applicable Law or Regulation, (b) actual field conditions, (c) any standard specification, manual, reference standard, or code, or (d) any instruction of any Supplier, then Contractor shall promptly report it to Engineer in writing. Contractor shall not proceed with the Work affected thereby (except in an emergency as required by Paragraph 7.15) until the conflict, error, ambiguity, or discrepancy is resolved, by a clarification or interpretation by Engineer, or by an amendment or supplement to the Contract Documents issued pursuant to Paragraph 11.01.

3. Contractor shall not be liable to Owner or Engineer for failure to report any conflict, error, ambiguity, or discrepancy in the Contract Documents unless Contractor had actual knowledge thereof.

B. *Resolving Discrepancies*:

1. Except as may be otherwise specifically stated in the Contract Documents, the provisions of the part of the Contract Documents prepared by or for Engineer shall take precedence in resolving any conflict, error, ambiguity, or discrepancy between such provisions of the Contract Documents and:

   a. the provisions of any standard specification, manual, reference standard, or code, or the instruction of any Supplier (whether or not specifically incorporated by reference as a Contract Document); or

   b. the provisions of any Laws or Regulations applicable to the performance of the Work (unless such an interpretation of the provisions of the Contract Documents would result in violation of such Law or Regulation).

3.04 *Requirements of the Contract Documents*

A. During the performance of the Work and until final payment, Contractor and Owner shall submit to the Engineer all matters in question concerning the requirements of the Contract Documents (sometimes referred to as requests for information or interpretation—RFIs), or relating to the acceptability of the Work under the Contract Documents, as soon as possible after such matters arise. Engineer will be the initial interpreter of the requirements of the Contract Documents, and judge of the acceptability of the Work thereunder.

B. Engineer will, with reasonable promptness, render a written clarification, interpretation, or decision on the issue submitted, or initiate an amendment or supplement to the Contract Documents. Engineer's written clarification, interpretation, or decision will be final and binding on Contractor, unless it appeals by submitting a Change Proposal, and on Owner, unless it appeals by filing a Claim.

C. If a submitted matter in question concerns terms and conditions of the Contract Documents that do not involve (1) the performance or acceptability of the Work under the Contract Documents, (2) the design (as set forth in the Drawings, Specifications, or otherwise), or (3) other engineering or technical matters, then Engineer will promptly give written notice to Owner and Contractor that Engineer is unable to provide a decision or interpretation. If Owner and Contractor are unable to agree on resolution of such a matter in question, either party may pursue resolution as provided in Article 12.

3.05 *Reuse of Documents*

A. Contractor and its Subcontractors and Suppliers shall not:

1. have or acquire any title to or ownership rights in any of the Drawings, Specifications, or other documents (or copies of any thereof) prepared by or bearing the seal of Engineer or its consultants, including electronic media editions, or reuse any such Drawings, Specifications, other documents, or copies thereof on extensions of the Project or any other project without written consent of Owner and Engineer and specific written verification or adaptation by Engineer; or

2. have or acquire any title or ownership rights in any other Contract Documents, reuse any such Contract Documents for any purpose without Owner's express written consent, or violate any copyrights pertaining to such Contract Documents.

B. The prohibitions of this Paragraph 3.05 will survive final payment, or termination of the Contract. Nothing herein shall preclude Contractor from retaining copies of the Contract Documents for record purposes.

ARTICLE 4 – COMMENCEMENT AND PROGRESS OF THE WORK

4.01 *Commencement of Contract Times; Notice to Proceed*

A. The Contract Times will commence to run on the thirtieth day after the Effective Date of the Contract or, if a Notice to Proceed is given, on the day indicated in the Notice to Proceed. A Notice to Proceed may be given at any time within 30 days after the Effective Date of the Contract. In no event will the Contract Times commence to run later than the sixtieth day after the day of Bid opening or the thirtieth day after the Effective Date of the Contract, whichever date is earlier.

4.02 *Starting the Work*

A. Contractor shall start to perform the Work on the date when the Contract Times commence to run. No Work shall be done at the Site prior to such date.

4.03 *Reference Points*

A. Owner shall provide engineering surveys to establish reference points for construction which in Engineer's judgment are necessary to enable Contractor to proceed with the Work. Contractor shall be responsible for laying out the Work, shall protect and preserve the established reference points and property monuments, and shall make no changes or relocations without the prior written approval of Owner. Contractor shall report to Engineer whenever any reference point or property monument is lost or destroyed or requires relocation because of necessary changes in grades or locations, and shall be responsible for the accurate replacement or relocation of such reference points or property monuments by professionally qualified personnel.

4.04 *Progress Schedule*

A. Contractor shall adhere to the Progress Schedule established in accordance with Paragraph 2.05 as it may be adjusted from time to time as provided below.

1. Contractor shall submit to Engineer for acceptance (to the extent indicated in Paragraph 2.05) proposed adjustments in the Progress Schedule that will not result in changing the Contract Times.

2. Proposed adjustments in the Progress Schedule that will change the Contract Times shall be submitted in accordance with the requirements of Article 11.

B. Contractor shall carry on the Work and adhere to the Progress Schedule during all disputes or disagreements with Owner. No Work shall be delayed or postponed pending resolution of any disputes or disagreements, or during any appeal process, except as permitted by Paragraph 16.04, or as Owner and Contractor may otherwise agree in writing.

4.05 *Delays in Contractor's Progress*

A. If Owner, Engineer, or anyone for whom Owner is responsible, delays, disrupts, or interferes with the performance or progress of the Work, then Contractor shall be entitled to an equitable adjustment in the Contract Times and Contract Price. Contractor's entitlement to an adjustment of the Contract Times is conditioned on such adjustment being essential to Contractor's ability to complete the Work within the Contract Times.

B. Contractor shall not be entitled to an adjustment in Contract Price or Contract Times for delay, disruption, or interference caused by or within the control of Contractor. Delay, disruption, and interference attributable to and within the control of a Subcontractor or Supplier shall be deemed to be within the control of Contractor.

C. If Contractor's performance or progress is delayed, disrupted, or interfered with by unanticipated causes not the fault of and beyond the control of Owner, Contractor, and those for which they are responsible, then Contractor shall be entitled to an equitable adjustment in Contract Times. Contractor's entitlement to an adjustment of the Contract Times is conditioned on such adjustment being essential to Contractor's ability to complete the Work within the Contract Times. Such an adjustment shall be Contractor's sole and exclusive remedy for the delays, disruption, and interference described in this paragraph. Causes of delay, disruption, or interference that may give rise to an adjustment in Contract Times under this paragraph include but are not limited to the following:

1. severe and unavoidable natural catastrophes such as fires, floods, epidemics, and earthquakes;

2. abnormal weather conditions;

3. acts or failures to act of utility owners (other than those performing other work at or adjacent to the Site by arrangement with the Owner, as contemplated in Article 8); and

4. acts of war or terrorism.

D. Delays, disruption, and interference to the performance or progress of the Work resulting from the existence of a differing subsurface or physical condition, an Underground Facility that was not shown or indicated by the Contract Documents, or not shown or indicated with reasonable accuracy, and those resulting from Hazardous Environmental Conditions, are governed by Article 5.

E. Paragraph 8.03 governs delays, disruption, and interference to the performance or progress of the Work resulting from the performance of certain other work at or adjacent to the Site.

F. Contractor shall not be entitled to an adjustment in Contract Price or Contract Times for any delay, disruption, or interference if such delay is concurrent with a delay, disruption, or interference caused by or within the control of Contractor.

G. Contractor must submit any Change Proposal seeking an adjustment in Contract Price or Contract Times under this paragraph within 30 days of the commencement of the delaying, disrupting, or interfering event.

ARTICLE 5 – AVAILABILITY OF LANDS; SUBSURFACE AND PHYSICAL CONDITIONS; HAZARDOUS ENVIRONMENTAL CONDITIONS

5.01 *Availability of Lands*

A. Owner shall furnish the Site. Owner shall notify Contractor of any encumbrances or restrictions not of general application but specifically related to use of the Site with which Contractor must comply in performing the Work.

B. Upon reasonable written request, Owner shall furnish Contractor with a current statement of record legal title and legal description of the lands upon which permanent improvements are to be made and Owner's interest therein as necessary for giving notice of or filing a mechanic's or construction lien against such lands in accordance with applicable Laws and Regulations.

C. Contractor shall provide for all additional lands and access thereto that may be required for temporary construction facilities or storage of materials and equipment.

5.02 *Use of Site and Other Areas*

A. *Limitation on Use of Site and Other Areas*:

1. Contractor shall confine construction equipment, temporary construction facilities, the storage of materials and equipment, and the operations of workers to the Site, adjacent areas that Contractor has arranged to use through construction easements or otherwise, and other adjacent areas permitted by Laws and Regulations, and shall not unreasonably encumber the Site and such other adjacent areas with construction equipment or other materials or equipment. Contractor shall assume full responsibility for (a) damage to the Site; (b) damage to any such other adjacent areas used for Contractor's operations; (c) damage to any other adjacent land or areas; and (d) for injuries and losses sustained by the owners or occupants of any such land or areas; provided that such damage or injuries result from the performance of the Work or from other actions or conduct of the Contractor or those for which Contractor is responsible.

2. If a damage or injury claim is made by the owner or occupant of any such land or area because of the performance of the Work, or because of other actions or conduct of the Contractor or those for which Contractor is responsible, Contractor shall (a) take immediate corrective or remedial action as required by Paragraph 7.12, or otherwise; (b) promptly attempt to settle the claim as to all parties through negotiations with such owner or occupant, or otherwise resolve the claim by arbitration or other dispute resolution proceeding, or at law; and (c) to the fullest extent permitted by Laws and Regulations, indemnify and hold harmless Owner and Engineer, and the officers, directors, members, partners, employees, agents, consultants and subcontractors of each and any of them from and against any such claim, and against all costs, losses, and damages (including but not limited to all fees and charges of engineers, architects, attorneys, and other professionals and all court or arbitration or other dispute resolution costs) arising out of or relating to any claim or action, legal or equitable, brought by any such owner or occupant against Owner, Engineer, or any other party indemnified hereunder to the extent caused directly or indirectly, in whole or in part

by, or based upon, Contractor's performance of the Work, or because of other actions or conduct of the Contractor or those for which Contractor is responsible.

B. *Removal of Debris During Performance of the Work*: During the progress of the Work the Contractor shall keep the Site and other adjacent areas free from accumulations of waste materials, rubbish, and other debris. Removal and disposal of such waste materials, rubbish, and other debris shall conform to applicable Laws and Regulations.

C. *Cleaning*: Prior to Substantial Completion of the Work Contractor shall clean the Site and the Work and make it ready for utilization by Owner. At the completion of the Work Contractor shall remove from the Site and adjacent areas all tools, appliances, construction equipment and machinery, and surplus materials and shall restore to original condition all property not designated for alteration by the Contract Documents.

D. *Loading of Structures*: Contractor shall not load nor permit any part of any structure to be loaded in any manner that will endanger the structure, nor shall Contractor subject any part of the Work or adjacent structures or land to stresses or pressures that will endanger them.

5.03 *Subsurface and Physical Conditions*

A. *Reports and Drawings*: The Supplementary Conditions identify:

1. those reports known to Owner of explorations and tests of subsurface conditions at or adjacent to the Site;

2. those drawings known to Owner of physical conditions relating to existing surface or subsurface structures at the Site (except Underground Facilities); and

3. Technical Data contained in such reports and drawings.

B. *Reliance by Contractor on Technical Data Authorized*: Contractor may rely upon the accuracy of the Technical Data expressly identified in the Supplementary Conditions with respect to such reports and drawings, but such reports and drawings are not Contract Documents. If no such express identification has been made, then Contractor may rely upon the accuracy of the Technical Data (as defined in Article 1) contained in any geotechnical or environmental report prepared for the Project and made available to Contractor. Except for such reliance on Technical Data, Contractor may not rely upon or make any claim against Owner or Engineer, or any of their officers, directors, members, partners, employees, agents, consultants, or subcontractors, with respect to:

1. the completeness of such reports and drawings for Contractor's purposes, including, but not limited to, any aspects of the means, methods, techniques, sequences, and procedures of construction to be employed by Contractor, and safety precautions and programs incident thereto; or

2. other data, interpretations, opinions, and information contained in such reports or shown or indicated in such drawings; or

3. any Contractor interpretation of or conclusion drawn from any Technical Data or any such other data, interpretations, opinions, or information.

5.04 *Differing Subsurface or Physical Conditions*

A. *Notice by Contractor*: If Contractor believes that any subsurface or physical condition that is uncovered or revealed at the Site either:

1. is of such a nature as to establish that any Technical Data on which Contractor is entitled to rely as provided in Paragraph 5.03 is materially inaccurate; or

2. is of such a nature as to require a change in the Drawings or Specifications; or

3. differs materially from that shown or indicated in the Contract Documents; or

4. is of an unusual nature, and differs materially from conditions ordinarily encountered and generally recognized as inherent in work of the character provided for in the Contract Documents;

then Contractor shall, promptly after becoming aware thereof and before further disturbing the subsurface or physical conditions or performing any Work in connection therewith (except in an emergency as required by Paragraph 7.15), notify Owner and Engineer in writing about such condition. Contractor shall not further disturb such condition or perform any Work in connection therewith (except with respect to an emergency) until receipt of a written statement permitting Contractor to do so.

B. *Engineer's Review*: After receipt of written notice as required by the preceding paragraph, Engineer will promptly review the subsurface or physical condition in question; determine the necessity of Owner's obtaining additional exploration or tests with respect to the condition; conclude whether the condition falls within any one or more of the differing site condition categories in Paragraph 5.04.A above; obtain any pertinent cost or schedule information from Contractor; prepare recommendations to Owner regarding the Contractor's resumption of Work in connection with the subsurface or physical condition in question and the need for any change in the Drawings or Specifications; and advise Owner in writing of Engineer's findings, conclusions, and recommendations.

C. *Owner's Statement to Contractor Regarding Site Condition*: After receipt of Engineer's written findings, conclusions, and recommendations, Owner shall issue a written statement to Contractor (with a copy to Engineer) regarding the subsurface or physical condition in question, addressing the resumption of Work in connection with such condition, indicating whether any change in the Drawings or Specifications will be made, and adopting or rejecting Engineer's written findings, conclusions, and recommendations, in whole or in part.

D. *Possible Price and Times Adjustments*:

1. Contractor shall be entitled to an equitable adjustment in Contract Price or Contract Times, or both, to the extent that the existence of a differing subsurface or physical condition, or any related delay, disruption, or interference, causes an increase or decrease in Contractor's cost of, or time required for, performance of the Work; subject, however, to the following:

a. such condition must fall within any one or more of the categories described in Paragraph 5.04.A;

b. with respect to Work that is paid for on a unit price basis, any adjustment in Contract Price will be subject to the provisions of Paragraph 13.03; and,

c. Contractor's entitlement to an adjustment of the Contract Times is conditioned on such adjustment being essential to Contractor's ability to complete the Work within the Contract Times.

2. Contractor shall not be entitled to any adjustment in the Contract Price or Contract Times with respect to a subsurface or physical condition if:

a. Contractor knew of the existence of such condition at the time Contractor made a commitment to Owner with respect to Contract Price and Contract Times by the submission of a Bid or becoming bound under a negotiated contract, or otherwise; or

b. the existence of such condition reasonably could have been discovered or revealed as a result of any examination, investigation, exploration, test, or study of the Site and contiguous areas expressly required by the Bidding Requirements or Contract Documents to be conducted by or for Contractor prior to Contractor's making such commitment; or

c. Contractor failed to give the written notice as required by Paragraph 5.04.A.

3. If Owner and Contractor agree regarding Contractor's entitlement to and the amount or extent of any adjustment in the Contract Price or Contract Times, or both, then any such adjustment shall be set forth in a Change Order.

4. Contractor may submit a Change Proposal regarding its entitlement to or the amount or extent of any adjustment in the Contract Price or Contract Times, or both, no later than 30 days after Owner's issuance of the Owner's written statement to Contractor regarding the subsurface or physical condition in question.

5.05 *Underground Facilities*

A. *Contractor's Responsibilities*: The information and data shown or indicated in the Contract Documents with respect to existing Underground Facilities at or adjacent to the Site is based on information and data furnished to Owner or Engineer by the owners of such Underground Facilities, including Owner, or by others. Unless it is otherwise expressly provided in the Supplementary Conditions:

1. Owner and Engineer do not warrant or guarantee the accuracy or completeness of any such information or data provided by others; and

2. the cost of all of the following will be included in the Contract Price, and Contractor shall have full responsibility for:

a. reviewing and checking all information and data regarding existing Underground Facilities at the Site;

b. locating all Underground Facilities shown or indicated in the Contract Documents as being at the Site;

c. coordination of the Work with the owners (including Owner) of such Underground Facilities, during construction; and

d. the safety and protection of all existing Underground Facilities at the Site, and repairing any damage thereto resulting from the Work.

B. *Notice by Contractor*: If Contractor believes that an Underground Facility that is uncovered or revealed at the Site was not shown or indicated in the Contract Documents, or was not shown or indicated with reasonable accuracy, then Contractor shall, promptly after

becoming aware thereof and before further disturbing conditions affected thereby or performing any Work in connection therewith (except in an emergency as required by Paragraph 7.15), identify the owner of such Underground Facility and give written notice to that owner and to Owner and Engineer.

C. *Engineer's Review*: Engineer will promptly review the Underground Facility and conclude whether such Underground Facility was not shown or indicated in the Contract Documents, or was not shown or indicated with reasonable accuracy; obtain any pertinent cost or schedule information from Contractor; prepare recommendations to Owner regarding the Contractor's resumption of Work in connection with the Underground Facility in question; determine the extent, if any, to which a change is required in the Drawings or Specifications to reflect and document the consequences of the existence or location of the Underground Facility; and advise Owner in writing of Engineer's findings, conclusions, and recommendations. During such time, Contractor shall be responsible for the safety and protection of such Underground Facility.

D. *Owner's Statement to Contractor Regarding Underground Facility*: After receipt of Engineer's written findings, conclusions, and recommendations, Owner shall issue a written statement to Contractor (with a copy to Engineer) regarding the Underground Facility in question, addressing the resumption of Work in connection with such Underground Facility, indicating whether any change in the Drawings or Specifications will be made, and adopting or rejecting Engineer's written findings, conclusions, and recommendations in whole or in part.

E. *Possible Price and Times Adjustments*:

1. Contractor shall be entitled to an equitable adjustment in the Contract Price or Contract Times, or both, to the extent that any existing Underground Facility at the Site that was not shown or indicated in the Contract Documents, or was not shown or indicated with reasonable accuracy, or any related delay, disruption, or interference, causes an increase or decrease in Contractor's cost of, or time required for, performance of the Work; subject, however, to the following:

    a. Contractor did not know of and could not reasonably have been expected to be aware of or to have anticipated the existence or actual location of the Underground Facility in question;

    b. With respect to Work that is paid for on a unit price basis, any adjustment in Contract Price will be subject to the provisions of Paragraph 13.03;

    c. Contractor's entitlement to an adjustment of the Contract Times is conditioned on such adjustment being essential to Contractor's ability to complete the Work within the Contract Times; and

    d. Contractor gave the notice required in Paragraph 5.05.B.

2. If Owner and Contractor agree regarding Contractor's entitlement to and the amount or extent of any adjustment in the Contract Price or Contract Times, or both, then any such adjustment shall be set forth in a Change Order.

3. Contractor may submit a Change Proposal regarding its entitlement to or the amount or extent of any adjustment in the Contract Price or Contract Times, or both, no later than 30 days after Owner's issuance of the Owner's written statement to Contractor regarding the Underground Facility in question.

5.06 *Hazardous Environmental Conditions at Site*

A. *Reports and Drawings*: The Supplementary Conditions identify:

1. those reports and drawings known to Owner relating to Hazardous Environmental Conditions that have been identified at or adjacent to the Site; and

2. Technical Data contained in such reports and drawings.

B. *Reliance by Contractor on Technical Data Authorized*: Contractor may rely upon the accuracy of the Technical Data expressly identified in the Supplementary Conditions with respect to such reports and drawings, but such reports and drawings are not Contract Documents. If no such express identification has been made, then Contractor may rely on the accuracy of the Technical Data (as defined in Article 1) contained in any geotechnical or environmental report prepared for the Project and made available to Contractor. Except for such reliance on Technical Data, Contractor may not rely upon or make any claim against Owner or Engineer, or any of their officers, directors, members, partners, employees, agents, consultants, or subcontractors with respect to:

1. the completeness of such reports and drawings for Contractor's purposes, including, but not limited to, any aspects of the means, methods, techniques, sequences and procedures of construction to be employed by Contractor and safety precautions and programs incident thereto; or

2. other data, interpretations, opinions and information contained in such reports or shown or indicated in such drawings; or

3. any Contractor interpretation of or conclusion drawn from any Technical Data or any such other data, interpretations, opinions or information.

C. Contractor shall not be responsible for removing or remediating any Hazardous Environmental Condition encountered, uncovered, or revealed at the Site unless such removal or remediation is expressly identified in the Contract Documents to be within the scope of the Work.

D. Contractor shall be responsible for controlling, containing, and duly removing all Constituents of Concern brought to the Site by Contractor, Subcontractors, Suppliers, or anyone else for whom Contractor is responsible, and for any associated costs; and for the costs of removing and remediating any Hazardous Environmental Condition created by the presence of any such Constituents of Concern.

E. If Contractor encounters, uncovers, or reveals a Hazardous Environmental Condition whose removal or remediation is not expressly identified in the Contract Documents as being within the scope of the Work, or if Contractor or anyone for whom Contractor is responsible creates a Hazardous Environmental Condition, then Contractor shall immediately: (1) secure or otherwise isolate such condition; (2) stop all Work in connection with such condition and in any area affected thereby (except in an emergency as required by Paragraph 7.15); and (3) notify Owner and Engineer (and promptly thereafter confirm such notice in writing). Owner shall promptly consult with Engineer concerning the necessity for Owner to retain a qualified expert to evaluate such condition or take corrective action, if any. Promptly after consulting with Engineer, Owner shall take such actions as are necessary to permit Owner to timely obtain required permits and provide Contractor the written notice required by Paragraph 5.06.F. If Contractor or anyone for whom Contractor is responsible created the Hazardous Environmental Condition in question, then Owner may remove and remediate the Hazardous Environmental Condition, and impose a set-off against payments to account for the associated costs.

F. Contractor shall not resume Work in connection with such Hazardous Environmental Condition or in any affected area until after Owner has obtained any required permits related thereto, and delivered written notice to Contractor either (1) specifying that such condition and any affected area is or has been rendered safe for the resumption of Work, or (2) specifying any special conditions under which such Work may be resumed safely.

G. If Owner and Contractor cannot agree as to entitlement to or on the amount or extent, if any, of any adjustment in Contract Price or Contract Times, or both, as a result of such Work stoppage or such special conditions under which Work is agreed to be resumed by Contractor, then within 30 days of Owner's written notice regarding the resumption of Work, Contractor may submit a Change Proposal, or Owner may impose a set-off.

H. If after receipt of such written notice Contractor does not agree to resume such Work based on a reasonable belief it is unsafe, or does not agree to resume such Work under such special conditions, then Owner may order the portion of the Work that is in the area affected by such condition to be deleted from the Work, following the contractual change procedures in Article 11. Owner may have such deleted portion of the Work performed by Owner's own forces or others in accordance with Article 8.

I. To the fullest extent permitted by Laws and Regulations, Owner shall indemnify and hold harmless Contractor, Subcontractors, and Engineer, and the officers, directors, members, partners, employees, agents, consultants, and subcontractors of each and any of them from and against all claims, costs, losses, and damages (including but not limited to all fees and charges of engineers, architects, attorneys, and other professionals and all court or arbitration or other dispute resolution costs) arising out of or relating to a Hazardous Environmental Condition, provided that such Hazardous Environmental Condition (1) was not shown or indicated in the Drawings, Specifications, or other Contract Documents, identified as Technical Data entitled to limited reliance pursuant to Paragraph 5.06.B, or identified in the Contract Documents to be included within the scope of the Work, and (2) was not created by Contractor or by anyone for whom Contractor is responsible. Nothing in this Paragraph 5.06.H shall obligate Owner to indemnify any individual or entity from and against the consequences of that individual's or entity's own negligence.

J. To the fullest extent permitted by Laws and Regulations, Contractor shall indemnify and hold harmless Owner and Engineer, and the officers, directors, members, partners, employees, agents, consultants, and subcontractors of each and any of them from and against all claims, costs, losses, and damages (including but not limited to all fees and charges of engineers, architects, attorneys, and other professionals and all court or arbitration or other dispute resolution costs) arising out of or relating to the failure to control, contain, or remove a Constituent of Concern brought to the Site by Contractor or by anyone for whom Contractor is responsible, or to a Hazardous Environmental Condition created by Contractor or by anyone for whom Contractor is responsible. Nothing in this Paragraph 5.06.J shall obligate Contractor to indemnify any individual or entity from and against the consequences of that individual's or entity's own negligence.

K. The provisions of Paragraphs 5.03, 5.04, and 5.05 do not apply to the presence of Constituents of Concern or to a Hazardous Environmental Condition uncovered or revealed at the Site.

ARTICLE 6 – BONDS AND INSURANCE

6.01 *Performance, Payment, and Other Bonds*

A. Contractor shall furnish a performance bond and a payment bond, each in an amount at least equal to the Contract Price, as security for the faithful performance and payment of all of Contractor's obligations under the Contract. These bonds shall remain in effect until one year after the date when final payment becomes due or until completion of the correction period specified in Paragraph 15.08, whichever is later, except as provided otherwise by Laws or Regulations, the Supplementary Conditions, or other specific provisions of the Contract. Contractor shall also furnish such other bonds as are required by the Supplementary Conditions or other specific provisions of the Contract.

B. All bonds shall be in the form prescribed by the Contract except as provided otherwise by Laws or Regulations, and shall be executed by such sureties as are named in "Companies Holding Certificates of Authority as Acceptable Sureties on Federal Bonds and as Acceptable Reinsuring Companies" as published in Circular 570 (as amended and supplemented) by the Financial Management Service, Surety Bond Branch, U.S. Department of the Treasury. A bond signed by an agent or attorney-in-fact must be accompanied by a certified copy of that individual's authority to bind the surety. The evidence of authority shall show that it is effective on the date the agent or attorney-in-fact signed the accompanying bond.

C. Contractor shall obtain the required bonds from surety companies that are duly licensed or authorized in the jurisdiction in which the Project is located to issue bonds in the required amounts.

D. If the surety on a bond furnished by Contractor is declared bankrupt or becomes insolvent, or its right to do business is terminated in any state or jurisdiction where any part of the Project is located, or the surety ceases to meet the requirements above, then Contractor shall promptly notify Owner and Engineer and shall, within 20 days after the event giving rise to such notification, provide another bond and surety, both of which shall comply with the bond and surety requirements above.

E. If Contractor has failed to obtain a required bond, Owner may exclude the Contractor from the Site and exercise Owner's termination rights under Article 16.

F. Upon request, Owner shall provide a copy of the payment bond to any Subcontractor, Supplier, or other person or entity claiming to have furnished labor or materials used in the performance of the Work.

6.02 *Insurance—General Provisions*

A. Owner and Contractor shall obtain and maintain insurance as required in this Article and in the Supplementary Conditions.

B. All insurance required by the Contract to be purchased and maintained by Owner or Contractor shall be obtained from insurance companies that are duly licensed or authorized, in the state or jurisdiction in which the Project is located, to issue insurance policies for the required limits and coverages. Unless a different standard is indicated in the Supplementary Conditions, all companies that provide insurance policies required under this Contract shall have an A.M. Best rating of A-VII or better.

C. Contractor shall deliver to Owner, with copies to each named insured and additional insured (as identified in this Article, in the Supplementary Conditions, or elsewhere in the Contract), certificates of insurance establishing that Contractor has obtained and is

maintaining the policies, coverages, and endorsements required by the Contract. Upon request by Owner or any other insured, Contractor shall also furnish other evidence of such required insurance, including but not limited to copies of policies and endorsements, and documentation of applicable self-insured retentions and deductibles. Contractor may block out (redact) any confidential premium or pricing information contained in any policy or endorsement furnished under this provision.

D. Owner shall deliver to Contractor, with copies to each named insured and additional insured (as identified in this Article, the Supplementary Conditions, or elsewhere in the Contract), certificates of insurance establishing that Owner has obtained and is maintaining the policies, coverages, and endorsements required of Owner by the Contract (if any). Upon request by Contractor or any other insured, Owner shall also provide other evidence of such required insurance (if any), including but not limited to copies of policies and endorsements, and documentation of applicable self-insured retentions and deductibles. Owner may block out (redact) any confidential premium or pricing information contained in any policy or endorsement furnished under this provision.

E. Failure of Owner or Contractor to demand such certificates or other evidence of the other party's full compliance with these insurance requirements, or failure of Owner or Contractor to identify a deficiency in compliance from the evidence provided, shall not be construed as a waiver of the other party's obligation to obtain and maintain such insurance.

F. If either party does not purchase or maintain all of the insurance required of such party by the Contract, such party shall notify the other party in writing of such failure to purchase prior to the start of the Work, or of such failure to maintain prior to any change in the required coverage.

G. If Contractor has failed to obtain and maintain required insurance, Owner may exclude the Contractor from the Site, impose an appropriate set-off against payment, and exercise Owner's termination rights under Article 16.

H. Without prejudice to any other right or remedy, if a party has failed to obtain required insurance, the other party may elect to obtain equivalent insurance to protect such other party's interests at the expense of the party who was required to provide such coverage, and the Contract Price shall be adjusted accordingly.

I. Owner does not represent that insurance coverage and limits established in this Contract necessarily will be adequate to protect Contractor or Contractor's interests.

J. The insurance and insurance limits required herein shall not be deemed as a limitation on Contractor's liability under the indemnities granted to Owner and other individuals and entities in the Contract.

6.03 *Contractor's Insurance*

A. *Workers' Compensation*: Contractor shall purchase and maintain workers' compensation and employer's liability insurance for:

1. claims under workers' compensation, disability benefits, and other similar employee benefit acts.

2. United States Longshoreman and Harbor Workers' Compensation Act and Jones Act coverage (if applicable).

3. claims for damages because of bodily injury, occupational sickness or disease, or death of Contractor's employees (by stop-gap endorsement in monopolist worker's compensation states).

4. Foreign voluntary worker compensation (if applicable).

B. *Commercial General Liability—Claims Covered*: Contractor shall purchase and maintain commercial general liability insurance, covering all operations by or on behalf of Contractor, on an occurrence basis, against:

1. claims for damages because of bodily injury, sickness or disease, or death of any person other than Contractor's employees.

2. claims for damages insured by reasonably available personal injury liability coverage.

3. claims for damages, other than to the Work itself, because of injury to or destruction of tangible property wherever located, including loss of use resulting therefrom.

C. *Commercial General Liability—Form and Content*: Contractor's commercial liability policy shall be written on a 1996 (or later) ISO commercial general liability form (occurrence form) and include the following coverages and endorsements:

1. Products and completed operations coverage:

   a. Such insurance shall be maintained for three years after final payment.

   b. Contractor shall furnish Owner and each other additional insured (as identified in the Supplementary Conditions or elsewhere in the Contract) evidence of continuation of such insurance at final payment and three years thereafter.

2. Blanket contractual liability coverage, to the extent permitted by law, including but not limited to coverage of Contractor's contractual indemnity obligations in Paragraph 7.18.

3. Broad form property damage coverage.

4. Severability of interest.

5. Underground, explosion, and collapse coverage.

6. Personal injury coverage.

7. Additional insured endorsements that include both ongoing operations and products and completed operations coverage through ISO Endorsements CG 20 10 10 01 and CG 20 37 10 01 (together); or CG 20 10 07 04 and CG 20 37 07 04 (together); or their equivalent.

8. For design professional additional insureds, ISO Endorsement CG 20 32 07 04, "Additional Insured—Engineers, Architects or Surveyors Not Engaged by the Named Insured" or its equivalent.

D. *Automobile liability*: Contractor shall purchase and maintain automobile liability insurance against claims for damages because of bodily injury or death of any person or property damage arising out of the ownership, maintenance, or use of any motor vehicle. The automobile liability policy shall be written on an occurrence basis.

E. *Umbrella or excess liability*: Contractor shall purchase and maintain umbrella or excess liability insurance written over the underlying employer's liability, commercial general liability, and automobile liability insurance described in the paragraphs above. Subject to industry-standard exclusions, the coverage afforded shall follow form as to each and every one of the underlying policies.

F. *Contractor's pollution liability insurance*: Contractor shall purchase and maintain a policy covering third-party injury and property damage claims, including clean-up costs, as a result

of pollution conditions arising from Contractor's operations and completed operations. This insurance shall be maintained for no less than three years after final completion.

G. *Additional insureds*: The Contractor's commercial general liability, automobile liability, umbrella or excess, and pollution liability policies shall include and list as additional insureds Owner and Engineer, and any individuals or entities identified in the Supplementary Conditions; include coverage for the respective officers, directors, members, partners, employees, agents, consultants, and subcontractors of each and any of all such additional insureds; and the insurance afforded to these additional insureds shall provide primary coverage for all claims covered thereby (including as applicable those arising from both ongoing and completed operations) on a non-contributory basis. Contractor shall obtain all necessary endorsements to support these requirements.

H. *Contractor's professional liability insurance*: If Contractor will provide or furnish professional services under this Contract, through a delegation of professional design services or otherwise, then Contractor shall be responsible for purchasing and maintaining applicable professional liability insurance. This insurance shall provide protection against claims arising out of performance of professional design or related services, and caused by a negligent error, omission, or act for which the insured party is legally liable. It shall be maintained throughout the duration of the Contract and for a minimum of two years after Substantial Completion. If such professional design services are performed by a Subcontractor, and not by Contractor itself, then the requirements of this paragraph may be satisfied through the purchasing and maintenance of such insurance by such Subcontractor.

I. *General provisions*: The policies of insurance required by this Paragraph 6.03 shall:

1. include at least the specific coverages provided in this Article.
2. be written for not less than the limits of liability provided in this Article and in the Supplementary Conditions, or required by Laws or Regulations, whichever is greater.
3. contain a provision or endorsement that the coverage afforded will not be canceled, materially changed, or renewal refused until at least 10 days prior written notice has been given to Contractor. Within three days of receipt of any such written notice, Contractor shall provide a copy of the notice to Owner, Engineer, and each other insured under the policy.
4. remain in effect at least until final payment (and longer if expressly required in this Article) and at all times thereafter when Contractor may be correcting, removing, or replacing defective Work as a warranty or correction obligation, or otherwise, or returning to the Site to conduct other tasks arising from the Contract Documents.
5. be appropriate for the Work being performed and provide protection from claims that may arise out of or result from Contractor's performance of the Work and Contractor's other obligations under the Contract Documents, whether it is to be performed by Contractor, any Subcontractor or Supplier, or by anyone directly or indirectly employed by any of them to perform any of the Work, or by anyone for whose acts any of them may be liable.

J. The coverage requirements for specific policies of insurance must be met by such policies, and not by reference to excess or umbrella insurance provided in other policies.

6.04 *Owner's Liability Insurance*

A. In addition to the insurance required to be provided by Contractor under Paragraph 6.03, Owner, at Owner's option, may purchase and maintain at Owner's expense Owner's own liability insurance as will protect Owner against claims which may arise from operations under the Contract Documents.

B. Owner's liability policies, if any, operate separately and independently from policies required to be provided by Contractor, and Contractor cannot rely upon Owner's liability policies for any of Contractor's obligations to the Owner, Engineer, or third parties.

6.05 *Property Insurance*

A. *Builder's Risk*: Unless otherwise provided in the Supplementary Conditions, Contractor shall purchase and maintain builder's risk insurance upon the Work on a completed value basis, in the amount of the full insurable replacement cost thereof (subject to such deductible amounts as may be provided in the Supplementary Conditions or required by Laws and Regulations). This insurance shall:

1. include the Owner and Contractor as named insureds, and all Subcontractors, and any individuals or entities required by the Supplementary Conditions to be insured under such builder's risk policy, as insureds or named insureds. For purposes of the remainder of this Paragraph 6.05, Paragraphs 6.06 and 6.07, and any corresponding Supplementary Conditions, the parties required to be insured shall collectively be referred to as "insureds."

2. be written on a builder's risk "all risk" policy form that shall at least include insurance for physical loss or damage to the Work, temporary buildings, falsework, and materials and equipment in transit, and shall insure against at least the following perils or causes of loss: fire; lightning; windstorm; riot; civil commotion; terrorism; vehicle impact; aircraft; smoke; theft; vandalism and malicious mischief; mechanical breakdown, boiler explosion, and artificially generated electric current; earthquake; volcanic activity, and other earth movement; flood; collapse; explosion; debris removal; demolition occasioned by enforcement of Laws and Regulations; water damage (other than that caused by flood); and such other perils or causes of loss as may be specifically required by the Supplementary Conditions. If insurance against mechanical breakdown, boiler explosion, and artificially generated electric current; earthquake; volcanic activity, and other earth movement; or flood, are not commercially available under builder's risk policies, by endorsement or otherwise, such insurance may be provided through other insurance policies acceptable to Owner and Contractor.

3. cover, as insured property, at least the following: (a) the Work and all materials, supplies, machinery, apparatus, equipment, fixtures, and other property of a similar nature that are to be incorporated into or used in the preparation, fabrication, construction, erection, or completion of the Work, including Owner-furnished or assigned property; (b) spare parts inventory required within the scope of the Contract; and (c) temporary works which are not intended to form part of the permanent constructed Work but which are intended to provide working access to the Site, or to the Work under construction, or which are intended to provide temporary support for the Work under construction, including scaffolding, form work, fences, shoring, falsework, and temporary structures.

4. cover expenses incurred in the repair or replacement of any insured property (including but not limited to fees and charges of engineers and architects).

5. extend to cover damage or loss to insured property while in temporary storage at the Site or in a storage location outside the Site (but not including property stored at the premises of a manufacturer or Supplier).
6. extend to cover damage or loss to insured property while in transit.
7. allow for partial occupation or use of the Work by Owner, such that those portions of the Work that are not yet occupied or used by Owner shall remain covered by the builder's risk insurance.
8. allow for the waiver of the insurer's subrogation rights, as set forth below.
9. provide primary coverage for all losses and damages caused by the perils or causes of loss covered.
10. not include a co-insurance clause.
11. include an exception for ensuing losses from physical damage or loss with respect to any defective workmanship, design, or materials exclusions.
12. include performance/hot testing and start-up.
13. be maintained in effect, subject to the provisions herein regarding Substantial Completion and partial occupancy or use of the Work by Owner, until the Work is complete.

B. *Notice of Cancellation or Change*: All the policies of insurance (and the certificates or other evidence thereof) required to be purchased and maintained in accordance with this Paragraph 6.05 will contain a provision or endorsement that the coverage afforded will not be canceled or materially changed or renewal refused until at least 10 days prior written notice has been given to the purchasing policyholder. Within three days of receipt of any such written notice, the purchasing policyholder shall provide a copy of the notice to each other insured.

C. *Deductibles*: The purchaser of any required builder's risk or property insurance shall pay for costs not covered because of the application of a policy deductible.

D. *Partial Occupancy or Use by Owner*: If Owner will occupy or use a portion or portions of the Work prior to Substantial Completion of all the Work as provided in Paragraph 15.04, then Owner (directly, if it is the purchaser of the builder's risk policy, or through Contractor) will provide notice of such occupancy or use to the builder's risk insurer. The builder's risk insurance shall not be canceled or permitted to lapse on account of any such partial use or occupancy; rather, those portions of the Work that are occupied or used by Owner may come off the builder's risk policy, while those portions of the Work not yet occupied or used by Owner shall remain covered by the builder's risk insurance.

E. *Additional Insurance*: If Contractor elects to obtain other special insurance to be included in or supplement the builder's risk or property insurance policies provided under this Paragraph 6.05, it may do so at Contractor's expense.

F. *Insurance of Other Property*: If the express insurance provisions of the Contract do not require or address the insurance of a property item or interest, such as tools, construction equipment, or other personal property owned by Contractor, a Subcontractor, or an employee of Contractor or a Subcontractor, then the entity or individual owning such property item will be responsible for deciding whether to insure it, and if so in what amount.

6.06 *Waiver of Rights*

A. All policies purchased in accordance with Paragraph 6.05, expressly including the builder's risk policy, shall contain provisions to the effect that in the event of payment of any loss or damage the insurers will have no rights of recovery against any insureds thereunder, or against Engineer or its consultants, or their officers, directors, members, partners, employees, agents, consultants, or subcontractors. Owner and Contractor waive all rights against each other and the respective officers, directors, members, partners, employees, agents, consultants, and subcontractors of each and any of them, for all losses and damages caused by, arising out of, or resulting from any of the perils or causes of loss covered by such policies and any other property insurance applicable to the Work; and, in addition, waive all such rights against Engineer, its consultants, all Subcontractors, all individuals or entities identified in the Supplementary Conditions as insureds, and the officers, directors, members, partners, employees, agents, consultants, and subcontractors of each and any of them, under such policies for losses and damages so caused. None of the above waivers shall extend to the rights that any party making such waiver may have to the proceeds of insurance held by Owner or Contractor as trustee or fiduciary, or otherwise payable under any policy so issued.

B. Owner waives all rights against Contractor, Subcontractors, and Engineer, and the officers, directors, members, partners, employees, agents, consultants and subcontractors of each and any of them, for:

1. loss due to business interruption, loss of use, or other consequential loss extending beyond direct physical loss or damage to Owner's property or the Work caused by, arising out of, or resulting from fire or other perils whether or not insured by Owner; and

2. loss or damage to the completed Project or part thereof caused by, arising out of, or resulting from fire or other insured peril or cause of loss covered by any property insurance maintained on the completed Project or part thereof by Owner during partial occupancy or use pursuant to Paragraph 15.04, after Substantial Completion pursuant to Paragraph 15.03, or after final payment pursuant to Paragraph 15.06.

C. Any insurance policy maintained by Owner covering any loss, damage or consequential loss referred to in Paragraph 6.06.B shall contain provisions to the effect that in the event of payment of any such loss, damage, or consequential loss, the insurers will have no rights of recovery against Contractor, Subcontractors, or Engineer, or the officers, directors, members, partners, employees, agents, consultants, or subcontractors of each and any of them.

D. Contractor shall be responsible for assuring that the agreement under which a Subcontractor performs a portion of the Work contains provisions whereby the Subcontractor waives all rights against Owner, Contractor, all individuals or entities identified in the Supplementary Conditions as insureds, the Engineer and its consultants, and the officers, directors, members, partners, employees, agents, consultants, and subcontractors of each and any of them, for all losses and damages caused by, arising out of, relating to, or resulting from any of the perils or causes of loss covered by builder's risk insurance and any other property insurance applicable to the Work.

6.07 *Receipt and Application of Property Insurance Proceeds*

A. Any insured loss under the builder's risk and other policies of insurance required by Paragraph 6.05 will be adjusted and settled with the named insured that purchased the

policy. Such named insured shall act as fiduciary for the other insureds, and give notice to such other insureds that adjustment and settlement of a claim is in progress. Any other insured may state its position regarding a claim for insured loss in writing within 15 days after notice of such claim.

B. Proceeds for such insured losses may be made payable by the insurer either jointly to multiple insureds, or to the named insured that purchased the policy in its own right and as fiduciary for other insureds, subject to the requirements of any applicable mortgage clause. A named insured receiving insurance proceeds under the builder's risk and other policies of insurance required by Paragraph 6.05 shall distribute such proceeds in accordance with such agreement as the parties in interest may reach, or as otherwise required under the dispute resolution provisions of this Contract or applicable Laws and Regulations.

C. If no other special agreement is reached, the damaged Work shall be repaired or replaced, the money so received applied on account thereof, and the Work and the cost thereof covered by Change Order, if needed.

ARTICLE 7 – CONTRACTOR'S RESPONSIBILITIES

7.01 *Supervision and Superintendence*

A. Contractor shall supervise, inspect, and direct the Work competently and efficiently, devoting such attention thereto and applying such skills and expertise as may be necessary to perform the Work in accordance with the Contract Documents. Contractor shall be solely responsible for the means, methods, techniques, sequences, and procedures of construction.

B. At all times during the progress of the Work, Contractor shall assign a competent resident superintendent who shall not be replaced without written notice to Owner and Engineer except under extraordinary circumstances.

7.02 *Labor; Working Hours*

A. Contractor shall provide competent, suitably qualified personnel to survey and lay out the Work and perform construction as required by the Contract Documents. Contractor shall at all times maintain good discipline and order at the Site.

B. Except as otherwise required for the safety or protection of persons or the Work or property at the Site or adjacent thereto, and except as otherwise stated in the Contract Documents, all Work at the Site shall be performed during regular working hours, Monday through Friday. Contractor will not perform Work on a Saturday, Sunday, or any legal holiday. Contractor may perform Work outside regular working hours or on Saturdays, Sundays, or legal holidays only with Owner's written consent, which will not be unreasonably withheld.

7.03 *Services, Materials, and Equipment*

A. Unless otherwise specified in the Contract Documents, Contractor shall provide and assume full responsibility for all services, materials, equipment, labor, transportation, construction equipment and machinery, tools, appliances, fuel, power, light, heat, telephone, water, sanitary facilities, temporary facilities, and all other facilities and incidentals necessary for the performance, testing, start up, and completion of the Work, whether or not such items are specifically called for in the Contract Documents.

B. All materials and equipment incorporated into the Work shall be of good quality and new, except as otherwise provided in the Contract Documents. All special warranties and

guarantees required by the Specifications shall expressly run to the benefit of Owner. If required by Engineer, Contractor shall furnish satisfactory evidence (including reports of required tests) as to the source, kind, and quality of materials and equipment.

C. All materials and equipment shall be stored, applied, installed, connected, erected, protected, used, cleaned, and conditioned in accordance with instructions of the applicable Supplier, except as otherwise may be provided in the Contract Documents.

7.04 *"Or Equals"*

A. Whenever an item of material or equipment is specified or described in the Contract Documents by using the name of a proprietary item or the name of a particular Supplier, the Contract Price has been based upon Contractor furnishing such item as specified. The specification or description of such an item is intended to establish the type, function, appearance, and quality required. Unless the specification or description contains or is followed by words reading that no like, equivalent, or "or equal" item is permitted, Contractor may request that Engineer authorize the use of other items of material or equipment, or items from other proposed suppliers under the circumstances described below.

1. If Engineer in its sole discretion determines that an item of material or equipment proposed by Contractor is functionally equal to that named and sufficiently similar so that no change in related Work will be required, Engineer shall deem it an "or equal" item. For the purposes of this paragraph, a proposed item of material or equipment will be considered functionally equal to an item so named if:

a. in the exercise of reasonable judgment Engineer determines that:

1) it is at least equal in materials of construction, quality, durability, appearance, strength, and design characteristics;

2) it will reliably perform at least equally well the function and achieve the results imposed by the design concept of the completed Project as a functioning whole;

3) it has a proven record of performance and availability of responsive service; and

4) it is not objectionable to Owner.

b. Contractor certifies that, if approved and incorporated into the Work:

1) there will be no increase in cost to the Owner or increase in Contract Times; and

2) it will conform substantially to the detailed requirements of the item named in the Contract Documents.

B. *Contractor's Expense*: Contractor shall provide all data in support of any proposed "or equal" item at Contractor's expense.

C. *Engineer's Evaluation and Determination*: Engineer will be allowed a reasonable time to evaluate each "or-equal" request. Engineer may require Contractor to furnish additional data about the proposed "or-equal" item. Engineer will be the sole judge of acceptability. No "or-equal" item will be ordered, furnished, installed, or utilized until Engineer's review is complete and Engineer determines that the proposed item is an "or-equal", which will be evidenced by an approved Shop Drawing or other written communication. Engineer will advise Contractor in writing of any negative determination.

D. *Effect of Engineer's Determination*: Neither approval nor denial of an "or-equal" request shall result in any change in Contract Price. The Engineer's denial of an "or-equal" request shall be final and binding, and may not be reversed through an appeal under any provision of the Contract Documents.

E. *Treatment as a Substitution Request*: If Engineer determines that an item of material or equipment proposed by Contractor does not qualify as an "or-equal" item, Contractor may request that Engineer considered the proposed item as a substitute pursuant to Paragraph 7.05.

7.05 *Substitutes*

A. Unless the specification or description of an item of material or equipment required to be furnished under the Contract Documents contains or is followed by words reading that no substitution is permitted, Contractor may request that Engineer authorize the use of other items of material or equipment under the circumstances described below. To the extent possible such requests shall be made before commencement of related construction at the Site.

1. Contractor shall submit sufficient information as provided below to allow Engineer to determine if the item of material or equipment proposed is functionally equivalent to that named and an acceptable substitute therefor. Engineer will not accept requests for review of proposed substitute items of material or equipment from anyone other than Contractor.

2. The requirements for review by Engineer will be as set forth in Paragraph 7.05.B, as supplemented by the Specifications, and as Engineer may decide is appropriate under the circumstances.

3. Contractor shall make written application to Engineer for review of a proposed substitute item of material or equipment that Contractor seeks to furnish or use. The application:

a. shall certify that the proposed substitute item will:

1) perform adequately the functions and achieve the results called for by the general design,

2) be similar in substance to that specified, and

3) be suited to the same use as that specified.

b. will state:

1) the extent, if any, to which the use of the proposed substitute item will necessitate a change in Contract Times,

2) whether use of the proposed substitute item in the Work will require a change in any of the Contract Documents (or in the provisions of any other direct contract with Owner for other work on the Project) to adapt the design to the proposed substitute item, and

3) whether incorporation or use of the proposed substitute item in connection with the Work is subject to payment of any license fee or royalty.

c. will identify:

1) all variations of the proposed substitute item from that specified, and

2) available engineering, sales, maintenance, repair, and replacement services.

d. shall contain an itemized estimate of all costs or credits that will result directly or indirectly from use of such substitute item, including but not limited to changes in Contract Price, shared savings, costs of redesign, and claims of other contractors affected by any resulting change.

B. *Engineer's Evaluation and Determination*: Engineer will be allowed a reasonable time to evaluate each substitute request, and to obtain comments and direction from Owner. Engineer may require Contractor to furnish additional data about the proposed substitute item. Engineer will be the sole judge of acceptability. No substitute will be ordered, furnished, installed, or utilized until Engineer's review is complete and Engineer determines that the proposed item is an acceptable substitute. Engineer's determination will be evidenced by a Field Order or a proposed Change Order accounting for the substitution itself and all related impacts, including changes in Contract Price or Contract Times. Engineer will advise Contractor in writing of any negative determination.

C. *Special Guarantee*: Owner may require Contractor to furnish at Contractor's expense a special performance guarantee or other surety with respect to any substitute.

D. *Reimbursement of Engineer's Cost*: Engineer will record Engineer's costs in evaluating a substitute proposed or submitted by Contractor. Whether or not Engineer approves a substitute so proposed or submitted by Contractor, Contractor shall reimburse Owner for the reasonable charges of Engineer for evaluating each such proposed substitute. Contractor shall also reimburse Owner for the reasonable charges of Engineer for making changes in the Contract Documents (or in the provisions of any other direct contract with Owner) resulting from the acceptance of each proposed substitute.

E. *Contractor's Expense*: Contractor shall provide all data in support of any proposed substitute at Contractor's expense.

F. *Effect of Engineer's Determination*: If Engineer approves the substitution request, Contractor shall execute the proposed Change Order and proceed with the substitution. The Engineer's denial of a substitution request shall be final and binding, and may not be reversed through an appeal under any provision of the Contract Documents. Contractor may challenge the scope of reimbursement costs imposed under Paragraph 7.05.D, by timely submittal of a Change Proposal.

7.06 *Concerning Subcontractors, Suppliers, and Others*

A. Contractor may retain Subcontractors and Suppliers for the performance of parts of the Work. Such Subcontractors and Suppliers must be acceptable to Owner.

B. Contractor shall retain specific Subcontractors, Suppliers, or other individuals or entities for the performance of designated parts of the Work if required by the Contract to do so.

C. Subsequent to the submittal of Contractor's Bid or final negotiation of the terms of the Contract, Owner may not require Contractor to retain any Subcontractor, Supplier, or other individual or entity to furnish or perform any of the Work against which Contractor has reasonable objection.

D. Prior to entry into any binding subcontract or purchase order, Contractor shall submit to Owner the identity of the proposed Subcontractor or Supplier (unless Owner has already deemed such proposed Subcontractor or Supplier acceptable, during the bidding process or otherwise). Such proposed Subcontractor or Supplier shall be deemed acceptable to Owner unless Owner raises a substantive, reasonable objection within five days.

E. Owner may require the replacement of any Subcontractor, Supplier, or other individual or entity retained by Contractor to perform any part of the Work. Owner also may require Contractor to retain specific replacements; provided, however, that Owner may not require a replacement to which Contractor has a reasonable objection. If Contractor has submitted the identity of certain Subcontractors, Suppliers, or other individuals or entities for acceptance by Owner, and Owner has accepted it (either in writing or by failing to make written objection thereto), then Owner may subsequently revoke the acceptance of any such Subcontractor, Supplier, or other individual or entity so identified solely on the basis of substantive, reasonable objection after due investigation. Contractor shall submit an acceptable replacement for the rejected Subcontractor, Supplier, or other individual or entity.

F. If Owner requires the replacement of any Subcontractor, Supplier, or other individual or entity retained by Contractor to perform any part of the Work, then Contractor shall be entitled to an adjustment in Contract Price or Contract Times, or both, with respect to the replacement; and Contractor shall initiate a Change Proposal for such adjustment within 30 days of Owner's requirement of replacement.

G. No acceptance by Owner of any such Subcontractor, Supplier, or other individual or entity, whether initially or as a replacement, shall constitute a waiver of the right of Owner to the completion of the Work in accordance with the Contract Documents.

H. On a monthly basis Contractor shall submit to Engineer a complete list of all Subcontractors and Suppliers having a direct contract with Contractor, and of all other Subcontractors and Suppliers known to Contractor at the time of submittal.

I. Contractor shall be fully responsible to Owner and Engineer for all acts and omissions of the Subcontractors, Suppliers, and other individuals or entities performing or furnishing any of the Work just as Contractor is responsible for Contractor's own acts and omissions.

J. Contractor shall be solely responsible for scheduling and coordinating the work of Subcontractors, Suppliers, and all other individuals or entities performing or furnishing any of the Work.

K. Contractor shall restrict all Subcontractors, Suppliers, and such other individuals or entities performing or furnishing any of the Work from communicating with Engineer or Owner, except through Contractor or in case of an emergency, or as otherwise expressly allowed herein.

L. The divisions and sections of the Specifications and the identifications of any Drawings shall not control Contractor in dividing the Work among Subcontractors or Suppliers or delineating the Work to be performed by any specific trade.

M. All Work performed for Contractor by a Subcontractor or Supplier shall be pursuant to an appropriate contractual agreement that specifically binds the Subcontractor or Supplier to the applicable terms and conditions of the Contract Documents for the benefit of Owner and Engineer.

N. Owner may furnish to any Subcontractor or Supplier, to the extent practicable, information about amounts paid to Contractor on account of Work performed for Contractor by the particular Subcontractor or Supplier.

O. Nothing in the Contract Documents:

1. shall create for the benefit of any such Subcontractor, Supplier, or other individual or entity any contractual relationship between Owner or Engineer and any such Subcontractor, Supplier, or other individual or entity; nor

2. shall create any obligation on the part of Owner or Engineer to pay or to see to the payment of any money due any such Subcontractor, Supplier, or other individual or entity except as may otherwise be required by Laws and Regulations.

7.07 *Patent Fees and Royalties*

A. Contractor shall pay all license fees and royalties and assume all costs incident to the use in the performance of the Work or the incorporation in the Work of any invention, design, process, product, or device which is the subject of patent rights or copyrights held by others. If a particular invention, design, process, product, or device is specified in the Contract Documents for use in the performance of the Work and if, to the actual knowledge of Owner or Engineer, its use is subject to patent rights or copyrights calling for the payment of any license fee or royalty to others, the existence of such rights shall be disclosed by Owner in the Contract Documents.

B. To the fullest extent permitted by Laws and Regulations, Owner shall indemnify and hold harmless Contractor, and its officers, directors, members, partners, employees, agents, consultants, and subcontractors from and against all claims, costs, losses, and damages (including but not limited to all fees and charges of engineers, architects, attorneys, and other professionals, and all court or arbitration or other dispute resolution costs) arising out of or relating to any infringement of patent rights or copyrights incident to the use in the performance of the Work or resulting from the incorporation in the Work of any invention, design, process, product, or device specified in the Contract Documents, but not identified as being subject to payment of any license fee or royalty to others required by patent rights or copyrights.

C. To the fullest extent permitted by Laws and Regulations, Contractor shall indemnify and hold harmless Owner and Engineer, and the officers, directors, members, partners, employees, agents, consultants and subcontractors of each and any of them from and against all claims, costs, losses, and damages (including but not limited to all fees and charges of engineers, architects, attorneys, and other professionals and all court or arbitration or other dispute resolution costs) arising out of or relating to any infringement of patent rights or copyrights incident to the use in the performance of the Work or resulting from the incorporation in the Work of any invention, design, process, product, or device not specified in the Contract Documents.

7.08 *Permits*

A. Unless otherwise provided in the Contract Documents, Contractor shall obtain and pay for all construction permits and licenses. Owner shall assist Contractor, when necessary, in obtaining such permits and licenses. Contractor shall pay all governmental charges and inspection fees necessary for the prosecution of the Work which are applicable at the time of the submission of Contractor's Bid (or when Contractor became bound under a negotiated contract). Owner shall pay all charges of utility owners for connections for providing permanent service to the Work

7.09 *Taxes*

A. Contractor shall pay all sales, consumer, use, and other similar taxes required to be paid by Contractor in accordance with the Laws and Regulations of the place of the Project which are applicable during the performance of the Work.

7.10 *Laws and Regulations*

A. Contractor shall give all notices required by and shall comply with all Laws and Regulations applicable to the performance of the Work. Except where otherwise expressly required by applicable Laws and Regulations, neither Owner nor Engineer shall be responsible for monitoring Contractor's compliance with any Laws or Regulations.

B. If Contractor performs any Work or takes any other action knowing or having reason to know that it is contrary to Laws or Regulations, Contractor shall bear all resulting costs and losses, and shall indemnify and hold harmless Owner and Engineer, and the officers, directors, members, partners, employees, agents, consultants, and subcontractors of each and any of them from and against all claims, costs, losses, and damages (including but not limited to all fees and charges of engineers, architects, attorneys, and other professionals and all court or arbitration or other dispute resolution costs) arising out of or relating to such Work or other action. It shall not be Contractor's responsibility to make certain that the Work described in the Contract Documents is in accordance with Laws and Regulations, but this shall not relieve Contractor of Contractor's obligations under Paragraph 3.03.

C. Owner or Contractor may give notice to the other party of any changes after the submission of Contractor's Bid (or after the date when Contractor became bound under a negotiated contract) in Laws or Regulations having an effect on the cost or time of performance of the Work, including but not limited to changes in Laws or Regulations having an effect on procuring permits and on sales, use, value-added, consumption, and other similar taxes. If Owner and Contractor are unable to agree on entitlement to or on the amount or extent, if any, of any adjustment in Contract Price or Contract Times resulting from such changes, then within 30 days of such notice Contractor may submit a Change Proposal, or Owner may initiate a Claim.

7.11 *Record Documents*

A. Contractor shall maintain in a safe place at the Site one printed record copy of all Drawings, Specifications, Addenda, Change Orders, Work Change Directives, Field Orders, written interpretations and clarifications, and approved Shop Drawings. Contractor shall keep such record documents in good order and annotate them to show changes made during construction. These record documents, together with all approved Samples, will be available to Engineer for reference. Upon completion of the Work, Contractor shall deliver these record documents to Engineer.

7.12 *Safety and Protection*

A. Contractor shall be solely responsible for initiating, maintaining, and supervising all safety precautions and programs in connection with the Work. Such responsibility does not relieve Subcontractors of their responsibility for the safety of persons or property in the performance of their work, nor for compliance with applicable safety Laws and Regulations. Contractor shall take all necessary precautions for the safety of, and shall provide the necessary protection to prevent damage, injury, or loss to:

1. all persons on the Site or who may be affected by the Work;

2. all the Work and materials and equipment to be incorporated therein, whether in storage on or off the Site; and

3. other property at the Site or adjacent thereto, including trees, shrubs, lawns, walks, pavements, roadways, structures, other work in progress, utilities, and Underground Facilities not designated for removal, relocation, or replacement in the course of construction.

B. Contractor shall comply with all applicable Laws and Regulations relating to the safety of persons or property, or to the protection of persons or property from damage, injury, or loss; and shall erect and maintain all necessary safeguards for such safety and protection. Contractor shall notify Owner; the owners of adjacent property, Underground Facilities, and other utilities; and other contractors and utility owners performing work at or adjacent to the Site, when prosecution of the Work may affect them, and shall cooperate with them in the protection, removal, relocation, and replacement of their property or work in progress.

C. Contractor shall comply with the applicable requirements of Owner's safety programs, if any. The Supplementary Conditions identify any Owner's safety programs that are applicable to the Work.

D. Contractor shall inform Owner and Engineer of the specific requirements of Contractor's safety program with which Owner's and Engineer's employees and representatives must comply while at the Site.

E. All damage, injury, or loss to any property referred to in Paragraph 7.12.A.2 or 7.12.A.3 caused, directly or indirectly, in whole or in part, by Contractor, any Subcontractor, Supplier, or any other individual or entity directly or indirectly employed by any of them to perform any of the Work, or anyone for whose acts any of them may be liable, shall be remedied by Contractor at its expense (except damage or loss attributable to the fault of Drawings or Specifications or to the acts or omissions of Owner or Engineer or anyone employed by any of them, or anyone for whose acts any of them may be liable, and not attributable, directly or indirectly, in whole or in part, to the fault or negligence of Contractor or any Subcontractor, Supplier, or other individual or entity directly or indirectly employed by any of them).

F. Contractor's duties and responsibilities for safety and protection shall continue until such time as all the Work is completed and Engineer has issued a notice to Owner and Contractor in accordance with Paragraph 15.06.B that the Work is acceptable (except as otherwise expressly provided in connection with Substantial Completion).

G. Contractor's duties and responsibilities for safety and protection shall resume whenever Contractor or any Subcontractor or Supplier returns to the Site to fulfill warranty or correction obligations, or to conduct other tasks arising from the Contract Documents.

7.13 *Safety Representative*

A. Contractor shall designate a qualified and experienced safety representative at the Site whose duties and responsibilities shall be the prevention of accidents and the maintaining and supervising of safety precautions and programs.

7.14 *Hazard Communication Programs*

A. Contractor shall be responsible for coordinating any exchange of material safety data sheets or other hazard communication information required to be made available to or

exchanged between or among employers at the Site in accordance with Laws or Regulations.

7.15 *Emergencies*

A. In emergencies affecting the safety or protection of persons or the Work or property at the Site or adjacent thereto, Contractor is obligated to act to prevent threatened damage, injury, or loss. Contractor shall give Engineer prompt written notice if Contractor believes that any significant changes in the Work or variations from the Contract Documents have been caused thereby or are required as a result thereof. If Engineer determines that a change in the Contract Documents is required because of the action taken by Contractor in response to such an emergency, a Work Change Directive or Change Order will be issued.

7.16 *Shop Drawings, Samples, and Other Submittals*

A. *Shop Drawing and Sample Submittal Requirements*:

1. Before submitting a Shop Drawing or Sample, Contractor shall have:

a. reviewed and coordinated the Shop Drawing or Sample with other Shop Drawings and Samples and with the requirements of the Work and the Contract Documents;

b. determined and verified all field measurements, quantities, dimensions, specified performance and design criteria, installation requirements, materials, catalog numbers, and similar information with respect thereto;

c. determined and verified the suitability of all materials and equipment offered with respect to the indicated application, fabrication, shipping, handling, storage, assembly, and installation pertaining to the performance of the Work; and

d. determined and verified all information relative to Contractor's responsibilities for means, methods, techniques, sequences, and procedures of construction, and safety precautions and programs incident thereto.

2. Each submittal shall bear a stamp or specific written certification that Contractor has satisfied Contractor's obligations under the Contract Documents with respect to Contractor's review of that submittal, and that Contractor approves the submittal.

3. With each submittal, Contractor shall give Engineer specific written notice of any variations that the Shop Drawing or Sample may have from the requirements of the Contract Documents. This notice shall be set forth in a written communication separate from the Shop Drawings or Sample submittal; and, in addition, in the case of Shop Drawings by a specific notation made on each Shop Drawing submitted to Engineer for review and approval of each such variation.

B. *Submittal Procedures for Shop Drawings and Samples*: Contractor shall submit Shop Drawings and Samples to Engineer for review and approval in accordance with the accepted Schedule of Submittals. Each submittal will be identified as Engineer may require.

1. *Shop Drawings*:

a. Contractor shall submit the number of copies required in the Specifications.

b. Data shown on the Shop Drawings will be complete with respect to quantities, dimensions, specified performance and design criteria, materials, and similar data to show Engineer the services, materials, and equipment Contractor proposes to

provide and to enable Engineer to review the information for the limited purposes required by Paragraph 7.16.D.

2. *Samples*:

   a. Contractor shall submit the number of Samples required in the Specifications.

   b. Contractor shall clearly identify each Sample as to material, Supplier, pertinent data such as catalog numbers, the use for which intended and other data as Engineer may require to enable Engineer to review the submittal for the limited purposes required by Paragraph 7.16.D.

3. Where a Shop Drawing or Sample is required by the Contract Documents or the Schedule of Submittals, any related Work performed prior to Engineer's review and approval of the pertinent submittal will be at the sole expense and responsibility of Contractor.

C. *Other Submittals*: Contractor shall submit other submittals to Engineer in accordance with the accepted Schedule of Submittals, and pursuant to the applicable terms of the Specifications.

D. *Engineer's Review*:

1. Engineer will provide timely review of Shop Drawings and Samples in accordance with the Schedule of Submittals acceptable to Engineer. Engineer's review and approval will be only to determine if the items covered by the submittals will, after installation or incorporation in the Work, conform to the information given in the Contract Documents and be compatible with the design concept of the completed Project as a functioning whole as indicated by the Contract Documents.

2. Engineer's review and approval will not extend to means, methods, techniques, sequences, or procedures of construction or to safety precautions or programs incident thereto.

3. Engineer's review and approval of a separate item as such will not indicate approval of the assembly in which the item functions.

4. Engineer's review and approval of a Shop Drawing or Sample shall not relieve Contractor from responsibility for any variation from the requirements of the Contract Documents unless Contractor has complied with the requirements of Paragraph 7.16.A.3 and Engineer has given written approval of each such variation by specific written notation thereof incorporated in or accompanying the Shop Drawing or Sample. Engineer will document any such approved variation from the requirements of the Contract Documents in a Field Order.

5. Engineer's review and approval of a Shop Drawing or Sample shall not relieve Contractor from responsibility for complying with the requirements of Paragraph 7.16.A and B.

6. Engineer's review and approval of a Shop Drawing or Sample, or of a variation from the requirements of the Contract Documents, shall not, under any circumstances, change the Contract Times or Contract Price, unless such changes are included in a Change Order.

7. Neither Engineer's receipt, review, acceptance or approval of a Shop Drawing, Sample, or other submittal shall result in such item becoming a Contract Document.

8. Contractor shall perform the Work in compliance with the requirements and commitments set forth in approved Shop Drawings and Samples, subject to the provisions of Paragraph 7.16.D.4.

E. *Resubmittal Procedures*:

1. Contractor shall make corrections required by Engineer and shall return the required number of corrected copies of Shop Drawings and submit, as required, new Samples for review and approval. Contractor shall direct specific attention in writing to revisions other than the corrections called for by Engineer on previous submittals.

2. Contractor shall furnish required submittals with sufficient information and accuracy to obtain required approval of an item with no more than three submittals. Engineer will record Engineer's time for reviewing a fourth or subsequent submittal of a Shop Drawings, sample, or other item requiring approval, and Contractor shall be responsible for Engineer's charges to Owner for such time. Owner may impose a set-off against payments due to Contractor to secure reimbursement for such charges.

3. If Contractor requests a change of a previously approved submittal item, Contractor shall be responsible for Engineer's charges to Owner for its review time, and Owner may impose a set-off against payments due to Contractor to secure reimbursement for such charges, unless the need for such change is beyond the control of Contractor.

7.17 *Contractor's General Warranty and Guarantee*

A. Contractor warrants and guarantees to Owner that all Work will be in accordance with the Contract Documents and will not be defective. Engineer and its officers, directors, members, partners, employees, agents, consultants, and subcontractors shall be entitled to rely on Contractor's warranty and guarantee.

B. Contractor's warranty and guarantee hereunder excludes defects or damage caused by:

1. abuse, modification, or improper maintenance or operation by persons other than Contractor, Subcontractors, Suppliers, or any other individual or entity for whom Contractor is responsible; or

2. normal wear and tear under normal usage.

C. Contractor's obligation to perform and complete the Work in accordance with the Contract Documents shall be absolute. None of the following will constitute an acceptance of Work that is not in accordance with the Contract Documents or a release of Contractor's obligation to perform the Work in accordance with the Contract Documents:

1. observations by Engineer;

2. recommendation by Engineer or payment by Owner of any progress or final payment;

3. the issuance of a certificate of Substantial Completion by Engineer or any payment related thereto by Owner;

4. use or occupancy of the Work or any part thereof by Owner;

5. any review and approval of a Shop Drawing or Sample submittal;

6. the issuance of a notice of acceptability by Engineer;

7. any inspection, test, or approval by others; or

8. any correction of defective Work by Owner.

D. If the Contract requires the Contractor to accept the assignment of a contract entered into by Owner, then the specific warranties, guarantees, and correction obligations contained in the assigned contract shall govern with respect to Contractor's performance obligations to Owner for the Work described in the assigned contract.

7.18 *Indemnification*

A. To the fullest extent permitted by Laws and Regulations, and in addition to any other obligations of Contractor under the Contract or otherwise, Contractor shall indemnify and hold harmless Owner and Engineer, and the officers, directors, members, partners, employees, agents, consultants and subcontractors of each and any of them from and against all claims, costs, losses, and damages (including but not limited to all fees and charges of engineers, architects, attorneys, and other professionals and all court or arbitration or other dispute resolution costs) arising out of or relating to the performance of the Work, provided that any such claim, cost, loss, or damage is attributable to bodily injury, sickness, disease, or death, or to injury to or destruction of tangible property (other than the Work itself), including the loss of use resulting therefrom but only to the extent caused by any negligent act or omission of Contractor, any Subcontractor, any Supplier, or any individual or entity directly or indirectly employed by any of them to perform any of the Work or anyone for whose acts any of them may be liable.

B. In any and all claims against Owner or Engineer or any of their officers, directors, members, partners, employees, agents, consultants, or subcontractors by any employee (or the survivor or personal representative of such employee) of Contractor, any Subcontractor, any Supplier, or any individual or entity directly or indirectly employed by any of them to perform any of the Work, or anyone for whose acts any of them may be liable, the indemnification obligation under Paragraph 7.18.A shall not be limited in any way by any limitation on the amount or type of damages, compensation, or benefits payable by or for Contractor or any such Subcontractor, Supplier, or other individual or entity under workers' compensation acts, disability benefit acts, or other employee benefit acts.

C. The indemnification obligations of Contractor under Paragraph 7.18.A shall not extend to the liability of Engineer and Engineer's officers, directors, members, partners, employees, agents, consultants and subcontractors arising out of:

1. the preparation or approval of, or the failure to prepare or approve maps, Drawings, opinions, reports, surveys, Change Orders, designs, or Specifications; or

2. giving directions or instructions, or failing to give them, if that is the primary cause of the injury or damage.

7.19 *Delegation of Professional Design Services*

A. Contractor will not be required to provide professional design services unless such services are specifically required by the Contract Documents for a portion of the Work or unless such services are required to carry out Contractor's responsibilities for construction means, methods, techniques, sequences and procedures. Contractor shall not be required to provide professional services in violation of applicable Laws and Regulations.

B. If professional design services or certifications by a design professional related to systems, materials, or equipment are specifically required of Contractor by the Contract Documents, Owner and Engineer will specify all performance and design criteria that such services must satisfy. Contractor shall cause such services or certifications to be provided by a properly licensed professional, whose signature and seal shall appear on all drawings, calculations, specifications, certifications, and other submittals prepared by such professional. Shop

Drawings and other submittals related to the Work designed or certified by such professional, if prepared by others, shall bear such professional's written approval when submitted to Engineer.

C. Owner and Engineer shall be entitled to rely upon the adequacy, accuracy, and completeness of the services, certifications, or approvals performed by such design professionals, provided Owner and Engineer have specified to Contractor all performance and design criteria that such services must satisfy.

D. Pursuant to this paragraph, Engineer's review and approval of design calculations and design drawings will be only for the limited purpose of checking for conformance with performance and design criteria given and the design concept expressed in the Contract Documents. Engineer's review and approval of Shop Drawings and other submittals (except design calculations and design drawings) will be only for the purpose stated in Paragraph 7.16.D.1.

E. Contractor shall not be responsible for the adequacy of the performance or design criteria specified by Owner or Engineer.

ARTICLE 8 – OTHER WORK AT THE SITE

8.01 *Other Work*

A. In addition to and apart from the Work under the Contract Documents, the Owner may perform other work at or adjacent to the Site. Such other work may be performed by Owner's employees, or through contracts between the Owner and third parties. Owner may also arrange to have third-party utility owners perform work on their utilities and facilities at or adjacent to the Site.

B. If Owner performs other work at or adjacent to the Site with Owner's employees, or through contracts for such other work, then Owner shall give Contractor written notice thereof prior to starting any such other work. If Owner has advance information regarding the start of any utility work at or adjacent to the Site, Owner shall provide such information to Contractor.

C. Contractor shall afford each other contractor that performs such other work, each utility owner performing other work, and Owner, if Owner is performing other work with Owner's employees, proper and safe access to the Site, and provide a reasonable opportunity for the introduction and storage of materials and equipment and the execution of such other work. Contractor shall do all cutting, fitting, and patching of the Work that may be required to properly connect or otherwise make its several parts come together and properly integrate with such other work. Contractor shall not endanger any work of others by cutting, excavating, or otherwise altering such work; provided, however, that Contractor may cut or alter others' work with the written consent of Engineer and the others whose work will be affected.

D. If the proper execution or results of any part of Contractor's Work depends upon work performed by others under this Article 8, Contractor shall inspect such other work and promptly report to Engineer in writing any delays, defects, or deficiencies in such other work that render it unavailable or unsuitable for the proper execution and results of Contractor's Work. Contractor's failure to so report will constitute an acceptance of such other work as fit and proper for integration with Contractor's Work except for latent defects and deficiencies in such other work.

8.02 *Coordination*

A. If Owner intends to contract with others for the performance of other work at or adjacent to the Site, to perform other work at or adjacent to the Site with Owner's employees, or to arrange to have utility owners perform work at or adjacent to the Site, the following will be set forth in the Supplementary Conditions or provided to Contractor prior to the start of any such other work:

1. the identity of the individual or entity that will have authority and responsibility for coordination of the activities among the various contractors;
2. an itemization of the specific matters to be covered by such authority and responsibility; and
3. the extent of such authority and responsibilities.

B. Unless otherwise provided in the Supplementary Conditions, Owner shall have sole authority and responsibility for such coordination.

8.03 *Legal Relationships*

A. If, in the course of performing other work at or adjacent to the Site for Owner, the Owner's employees, any other contractor working for Owner, or any utility owner causes damage to the Work or to the property of Contractor or its Subcontractors, or delays, disrupts, interferes with, or increases the scope or cost of the performance of the Work, through actions or inaction, then Contractor shall be entitled to an equitable adjustment in the Contract Price or the Contract Times, or both. Contractor must submit any Change Proposal seeking an equitable adjustment in the Contract Price or the Contract Times under this paragraph within 30 days of the damaging, delaying, disrupting, or interfering event. The entitlement to, and extent of, any such equitable adjustment shall take into account information (if any) regarding such other work that was provided to Contractor in the Contract Documents prior to the submittal of the Bid or the final negotiation of the terms of the Contract. When applicable, any such equitable adjustment in Contract Price shall be conditioned on Contractor assigning to Owner all Contractor's rights against such other contractor or utility owner with respect to the damage, delay, disruption, or interference that is the subject of the adjustment. Contractor's entitlement to an adjustment of the Contract Times is conditioned on such adjustment being essential to Contractor's ability to complete the Work within the Contract Times.

B. Contractor shall take reasonable and customary measures to avoid damaging, delaying, disrupting, or interfering with the work of Owner, any other contractor, or any utility owner performing other work at or adjacent to the Site. If Contractor fails to take such measures and as a result damages, delays, disrupts, or interferes with the work of any such other contractor or utility owner, then Owner may impose a set-off against payments due to Contractor, and assign to such other contractor or utility owner the Owner's contractual rights against Contractor with respect to the breach of the obligations set forth in this paragraph.

C. When Owner is performing other work at or adjacent to the Site with Owner's employees, Contractor shall be liable to Owner for damage to such other work, and for the reasonable direct delay, disruption, and interference costs incurred by Owner as a result of Contractor's failure to take reasonable and customary measures with respect to Owner's other work. In response to such damage, delay, disruption, or interference, Owner may impose a set-off against payments due to Contractor.

D. If Contractor damages, delays, disrupts, or interferes with the work of any other contractor, or any utility owner performing other work at or adjacent to the Site, through Contractor's failure to take reasonable and customary measures to avoid such impacts, or if any claim arising out of Contractor's actions, inactions, or negligence in performance of the Work at or adjacent to the Site is made by any such other contractor or utility owner against Contractor, Owner, or Engineer, then Contractor shall (1) promptly attempt to settle the claim as to all parties through negotiations with such other contractor or utility owner, or otherwise resolve the claim by arbitration or other dispute resolution proceeding or at law, and (2) indemnify and hold harmless Owner and Engineer, and the officers, directors, members, partners, employees, agents, consultants and subcontractors of each and any of them from and against any such claims, and against all costs, losses, and damages (including but not limited to all fees and charges of engineers, architects, attorneys, and other professionals and all court or arbitration or other dispute resolution costs) arising out of or relating to such damage, delay, disruption, or interference.

ARTICLE 9 – OWNER'S RESPONSIBILITIES

9.01 *Communications to Contractor*

A. Except as otherwise provided in these General Conditions, Owner shall issue all communications to Contractor through Engineer.

9.02 *Replacement of Engineer*

A. Owner may at its discretion appoint an engineer to replace Engineer, provided Contractor makes no reasonable objection to the replacement engineer. The replacement engineer's status under the Contract Documents shall be that of the former Engineer.

9.03 *Furnish Data*

A. Owner shall promptly furnish the data required of Owner under the Contract Documents.

9.04 *Pay When Due*

A. Owner shall make payments to Contractor when they are due as provided in the Agreement.

9.05 *Lands and Easements; Reports, Tests, and Drawings*

A. Owner's duties with respect to providing lands and easements are set forth in Paragraph 5.01.

B. Owner's duties with respect to providing engineering surveys to establish reference points are set forth in Paragraph 4.03.

C. Article 5 refers to Owner's identifying and making available to Contractor copies of reports of explorations and tests of conditions at the Site, and drawings of physical conditions relating to existing surface or subsurface structures at the Site.

9.06 *Insurance*

A. Owner's responsibilities, if any, with respect to purchasing and maintaining liability and property insurance are set forth in Article 6.

9.07 *Change Orders*

A. Owner's responsibilities with respect to Change Orders are set forth in Article 11.

9.08 *Inspections, Tests, and Approvals*

A. Owner's responsibility with respect to certain inspections, tests, and approvals is set forth in Paragraph 14.02.B.

9.09 *Limitations on Owner's Responsibilities*

A. The Owner shall not supervise, direct, or have control or authority over, nor be responsible for, Contractor's means, methods, techniques, sequences, or procedures of construction, or the safety precautions and programs incident thereto, or for any failure of Contractor to comply with Laws and Regulations applicable to the performance of the Work. Owner will not be responsible for Contractor's failure to perform the Work in accordance with the Contract Documents.

9.10 *Undisclosed Hazardous Environmental Condition*

A. Owner's responsibility in respect to an undisclosed Hazardous Environmental Condition is set forth in Paragraph 5.06.

9.11 *Evidence of Financial Arrangements*

A. Upon request of Contractor, Owner shall furnish Contractor reasonable evidence that financial arrangements have been made to satisfy Owner's obligations under the Contract Documents (including obligations under proposed changes in the Work).

9.12 *Safety Programs*

A. While at the Site, Owner's employees and representatives shall comply with the specific applicable requirements of Contractor's safety programs of which Owner has been informed.

B. Owner shall furnish copies of any applicable Owner safety programs to Contractor.

ARTICLE 10 – ENGINEER'S STATUS DURING CONSTRUCTION

10.01 *Owner's Representative*

A. Engineer will be Owner's representative during the construction period. The duties and responsibilities and the limitations of authority of Engineer as Owner's representative during construction are set forth in the Contract.

10.02 *Visits to Site*

A. Engineer will make visits to the Site at intervals appropriate to the various stages of construction as Engineer deems necessary in order to observe as an experienced and qualified design professional the progress that has been made and the quality of the various aspects of Contractor's executed Work. Based on information obtained during such visits and observations, Engineer, for the benefit of Owner, will determine, in general, if the Work is proceeding in accordance with the Contract Documents. Engineer will not be required to make exhaustive or continuous inspections on the Site to check the quality or quantity of the Work. Engineer's efforts will be directed toward providing for Owner a greater degree of confidence that the completed Work will conform generally to the Contract Documents. On the basis of such visits and observations, Engineer will keep Owner informed of the progress of the Work and will endeavor to guard Owner against defective Work.

B. Engineer's visits and observations are subject to all the limitations on Engineer's authority and responsibility set forth in Paragraph 10.08. Particularly, but without limitation, during

or as a result of Engineer's visits or observations of Contractor's Work, Engineer will not supervise, direct, control, or have authority over or be responsible for Contractor's means, methods, techniques, sequences, or procedures of construction, or the safety precautions and programs incident thereto, or for any failure of Contractor to comply with Laws and Regulations applicable to the performance of the Work.

10.03 *Project Representative*

A. If Owner and Engineer have agreed that Engineer will furnish a Resident Project Representative to represent Engineer at the Site and assist Engineer in observing the progress and quality of the Work, then the authority and responsibilities of any such Resident Project Representative will be as provided in the Supplementary Conditions, and limitations on the responsibilities thereof will be as provided in Paragraph 10.08. If Owner designates another representative or agent to represent Owner at the Site who is not Engineer's consultant, agent, or employee, the responsibilities and authority and limitations thereon of such other individual or entity will be as provided in the Supplementary Conditions.

10.04 *Rejecting Defective Work*

A. Engineer has the authority to reject Work in accordance with Article 14.

10.05 *Shop Drawings, Change Orders and Payments*

A. Engineer's authority, and limitations thereof, as to Shop Drawings and Samples, are set forth in Paragraph 7.16.

B. Engineer's authority, and limitations thereof, as to design calculations and design drawings submitted in response to a delegation of professional design services, if any, are set forth in Paragraph 7.19.

C. Engineer's authority as to Change Orders is set forth in Article 11.

D. Engineer's authority as to Applications for Payment is set forth in Article 15.

10.06 *Determinations for Unit Price Work*

A. Engineer will determine the actual quantities and classifications of Unit Price Work performed by Contractor as set forth in Paragraph 13.03.

10.07 *Decisions on Requirements of Contract Documents and Acceptability of Work*

A. Engineer will render decisions regarding the requirements of the Contract Documents, and judge the acceptability of the Work, pursuant to the specific procedures set forth herein for initial interpretations, Change Proposals, and acceptance of the Work. In rendering such decisions and judgments, Engineer will not show partiality to Owner or Contractor, and will not be liable to Owner, Contractor, or others in connection with any proceedings, interpretations, decisions, or judgments conducted or rendered in good faith.

10.08 *Limitations on Engineer's Authority and Responsibilities*

A. Neither Engineer's authority or responsibility under this Article 10 or under any other provision of the Contract, nor any decision made by Engineer in good faith either to exercise or not exercise such authority or responsibility or the undertaking, exercise, or performance of any authority or responsibility by Engineer, shall create, impose, or give rise to any duty in contract, tort, or otherwise owed by Engineer to Contractor, any Subcontractor, any Supplier, any other individual or entity, or to any surety for or employee or agent of any of them.

B. Engineer will not supervise, direct, control, or have authority over or be responsible for Contractor's means, methods, techniques, sequences, or procedures of construction, or the safety precautions and programs incident thereto, or for any failure of Contractor to comply with Laws and Regulations applicable to the performance of the Work. Engineer will not be responsible for Contractor's failure to perform the Work in accordance with the Contract Documents.

C. Engineer will not be responsible for the acts or omissions of Contractor or of any Subcontractor, any Supplier, or of any other individual or entity performing any of the Work.

D. Engineer's review of the final Application for Payment and accompanying documentation and all maintenance and operating instructions, schedules, guarantees, bonds, certificates of inspection, tests and approvals, and other documentation required to be delivered by Paragraph 15.06.A will only be to determine generally that their content complies with the requirements of, and in the case of certificates of inspections, tests, and approvals, that the results certified indicate compliance with the Contract Documents.

E. The limitations upon authority and responsibility set forth in this Paragraph 10.08 shall also apply to the Resident Project Representative, if any.

10.09 *Compliance with Safety Program*

A. While at the Site, Engineer's employees and representatives will comply with the specific applicable requirements of Owner's and Contractor's safety programs (if any) of which Engineer has been informed.

ARTICLE 11 – AMENDING THE CONTRACT DOCUMENTS; CHANGES IN THE WORK

11.01 *Amending and Supplementing Contract Documents*

A. The Contract Documents may be amended or supplemented by a Change Order, a Work Change Directive, or a Field Order.

1. *Change Orders*:

a. If an amendment or supplement to the Contract Documents includes a change in the Contract Price or the Contract Times, such amendment or supplement must be set forth in a Change Order. A Change Order also may be used to establish amendments and supplements of the Contract Documents that do not affect the Contract Price or Contract Times.

b. Owner and Contractor may amend those terms and conditions of the Contract Documents that do not involve (1) the performance or acceptability of the Work, (2) the design (as set forth in the Drawings, Specifications, or otherwise), or (3) other engineering or technical matters, without the recommendation of the Engineer. Such an amendment shall be set forth in a Change Order.

2. *Work Change Directives*: A Work Change Directive will not change the Contract Price or the Contract Times but is evidence that the parties expect that the modification ordered or documented by a Work Change Directive will be incorporated in a subsequently issued Change Order, following negotiations by the parties as to the Work Change Directive's effect, if any, on the Contract Price and Contract Times; or, if negotiations are unsuccessful, by a determination under the terms of the Contract Documents governing adjustments, expressly including Paragraph 11.04 regarding change of Contract Price. Contractor must submit any Change Proposal seeking an

adjustment of the Contract Price or the Contract Times, or both, no later than 30 days after the completion of the Work set out in the Work Change Directive. Owner must submit any Claim seeking an adjustment of the Contract Price or the Contract Times, or both, no later than 60 days after issuance of the Work Change Directive.

3. *Field Orders*: Engineer may authorize minor changes in the Work if the changes do not involve an adjustment in the Contract Price or the Contract Times and are compatible with the design concept of the completed Project as a functioning whole as indicated by the Contract Documents. Such changes will be accomplished by a Field Order and will be binding on Owner and also on Contractor, which shall perform the Work involved promptly. If Contractor believes that a Field Order justifies an adjustment in the Contract Price or Contract Times, or both, then before proceeding with the Work at issue, Contractor shall submit a Change Proposal as provided herein.

11.02 *Owner-Authorized Changes in the Work*

A. Without invalidating the Contract and without notice to any surety, Owner may, at any time or from time to time, order additions, deletions, or revisions in the Work. Such changes shall be supported by Engineer's recommendation, to the extent the change involves the design (as set forth in the Drawings, Specifications, or otherwise), or other engineering or technical matters. Such changes may be accomplished by a Change Order, if Owner and Contractor have agreed as to the effect, if any, of the changes on Contract Times or Contract Price; or by a Work Change Directive. Upon receipt of any such document, Contractor shall promptly proceed with the Work involved; or, in the case of a deletion in the Work, promptly cease construction activities with respect to such deleted Work. Added or revised Work shall be performed under the applicable conditions of the Contract Documents. Nothing in this paragraph shall obligate Contractor to undertake work that Contractor reasonably concludes cannot be performed in a manner consistent with Contractor's safety obligations under the Contract Documents or Laws and Regulations.

11.03 *Unauthorized Changes in the Work*

A. Contractor shall not be entitled to an increase in the Contract Price or an extension of the Contract Times with respect to any work performed that is not required by the Contract Documents, as amended, modified, or supplemented, except in the case of an emergency as provided in Paragraph 7.15 or in the case of uncovering Work as provided in Paragraph 14.05.

11.04 *Change of Contract Price*

A. The Contract Price may only be changed by a Change Order. Any Change Proposal for an adjustment in the Contract Price shall comply with the provisions of Paragraph 11.06. Any Claim for an adjustment of Contract Price shall comply with the provisions of Article 12.

B. An adjustment in the Contract Price will be determined as follows:

1. where the Work involved is covered by unit prices contained in the Contract Documents, then by application of such unit prices to the quantities of the items involved (subject to the provisions of Paragraph 13.03); or

2. where the Work involved is not covered by unit prices contained in the Contract Documents, then by a mutually agreed lump sum (which may include an allowance for overhead and profit not necessarily in accordance with Paragraph 11.04.C.2); or

3. where the Work involved is not covered by unit prices contained in the Contract Documents and the parties do not reach mutual agreement to a lump sum, then on

the basis of the Cost of the Work (determined as provided in Paragraph 13.01) plus a Contractor's fee for overhead and profit (determined as provided in Paragraph 11.04.C).

C. *Contractor's Fee*: When applicable, the Contractor's fee for overhead and profit shall be determined as follows:

1. a mutually acceptable fixed fee; or

2. if a fixed fee is not agreed upon, then a fee based on the following percentages of the various portions of the Cost of the Work:

a. for costs incurred under Paragraphs 13.01.B.1 and 13.01.B.2, the Contractor's fee shall be 15 percent;

b. for costs incurred under Paragraph 13.01.B.3, the Contractor's fee shall be five percent;

c. where one or more tiers of subcontracts are on the basis of Cost of the Work plus a fee and no fixed fee is agreed upon, the intent of Paragraphs 11.01.C.2.a and 11.01.C.2.b is that the Contractor's fee shall be based on: (1) a fee of 15 percent of the costs incurred under Paragraphs 13.01.A.1 and 13.01.A.2 by the Subcontractor that actually performs the Work, at whatever tier, and (2) with respect to Contractor itself and to any Subcontractors of a tier higher than that of the Subcontractor that actually performs the Work, a fee of five percent of the amount (fee plus underlying costs incurred) attributable to the next lower tier Subcontractor; provided, however, that for any such subcontracted work the maximum total fee to be paid by Owner shall be no greater than 27 percent of the costs incurred by the Subcontractor that actually performs the work;

d. no fee shall be payable on the basis of costs itemized under Paragraphs 13.01.B.4, 13.01.B.5, and 13.01.C;

e. the amount of credit to be allowed by Contractor to Owner for any change which results in a net decrease in cost will be the amount of the actual net decrease in cost plus a deduction in Contractor's fee by an amount equal to five percent of such net decrease; and

f. when both additions and credits are involved in any one change, the adjustment in Contractor's fee shall be computed on the basis of the net change in accordance with Paragraphs 11.04.C.2.a through 11.04.C.2.e, inclusive.

11.05 *Change of Contract Times*

A. The Contract Times may only be changed by a Change Order. Any Change Proposal for an adjustment in the Contract Times shall comply with the provisions of Paragraph 11.06. Any Claim for an adjustment in the Contract Times shall comply with the provisions of Article 12.

B. An adjustment of the Contract Times shall be subject to the limitations set forth in Paragraph 4.05, concerning delays in Contractor's progress.

11.06 *Change Proposals*

A. Contractor shall submit a Change Proposal to Engineer to request an adjustment in the Contract Times or Contract Price; appeal an initial decision by Engineer concerning the requirements of the Contract Documents or relating to the acceptability of the Work under the Contract Documents; contest a set-off against payment due; or seek other relief under

the Contract. The Change Proposal shall specify any proposed change in Contract Times or Contract Price, or both, or other proposed relief, and explain the reason for the proposed change, with citations to any governing or applicable provisions of the Contract Documents.

1. *Procedures*: Contractor shall submit each Change Proposal to Engineer promptly (but in no event later than 30 days) after the start of the event giving rise thereto, or after such initial decision. The Contractor shall submit supporting data, including the proposed change in Contract Price or Contract Time (if any), to the Engineer and Owner within 15 days after the submittal of the Change Proposal. The supporting data shall be accompanied by a written statement that the supporting data are accurate and complete, and that any requested time or price adjustment is the entire adjustment to which Contractor believes it is entitled as a result of said event. Engineer will advise Owner regarding the Change Proposal, and consider any comments or response from Owner regarding the Change Proposal.

2. *Engineer's Action*: Engineer will review each Change Proposal and, within 30 days after receipt of the Contractor's supporting data, either deny the Change Proposal in whole, approve it in whole, or deny it in part and approve it in part. Such actions shall be in writing, with a copy provided to Owner and Contractor. If Engineer does not take action on the Change Proposal within 30 days, then either Owner or Contractor may at any time thereafter submit a letter to the other party indicating that as a result of Engineer's inaction the Change Proposal is deemed denied, thereby commencing the time for appeal of the denial under Article 12.

3. *Binding Decision*: Engineer's decision will be final and binding upon Owner and Contractor, unless Owner or Contractor appeals the decision by filing a Claim under Article 12.

B. *Resolution of Certain Change Proposals*: If the Change Proposal does not involve the design (as set forth in the Drawings, Specifications, or otherwise), the acceptability of the Work, or other engineering or technical matters, then Engineer will notify the parties that the Engineer is unable to resolve the Change Proposal. For purposes of further resolution of such a Change Proposal, such notice shall be deemed a denial, and Contractor may choose to seek resolution under the terms of Article 12.

11.07 *Execution of Change Orders*

A. Owner and Contractor shall execute appropriate Change Orders covering:

1. changes in the Contract Price or Contract Times which are agreed to by the parties, including any undisputed sum or amount of time for Work actually performed in accordance with a Work Change Directive;

2. changes in Contract Price resulting from an Owner set-off, unless Contractor has duly contested such set-off;

3. changes in the Work which are: (a) ordered by Owner pursuant to Paragraph 11.02, (b) required because of Owner's acceptance of defective Work under Paragraph 14.04 or Owner's correction of defective Work under Paragraph 14.07, or (c) agreed to by the parties, subject to the need for Engineer's recommendation if the change in the Work involves the design (as set forth in the Drawings, Specifications, or otherwise), or other engineering or technical matters; and

4. changes in the Contract Price or Contract Times, or other changes, which embody the substance of any final and binding results under Paragraph 11.06, or Article 12.

B. If Owner or Contractor refuses to execute a Change Order that is required to be executed under the terms of this Paragraph 11.07, it shall be deemed to be of full force and effect, as if fully executed.

11.08 *Notification to Surety*

A. If the provisions of any bond require notice to be given to a surety of any change affecting the general scope of the Work or the provisions of the Contract Documents (including, but not limited to, Contract Price or Contract Times), the giving of any such notice will be Contractor's responsibility. The amount of each applicable bond will be adjusted to reflect the effect of any such change.

ARTICLE 12 – CLAIMS

12.01 *Claims*

A. *Claims Process*: The following disputes between Owner and Contractor shall be submitted to the Claims process set forth in this Article:

1. Appeals by Owner or Contractor of Engineer's decisions regarding Change Proposals;

2. Owner demands for adjustments in the Contract Price or Contract Times, or other relief under the Contract Documents; and

3. Disputes that Engineer has been unable to address because they do not involve the design (as set forth in the Drawings, Specifications, or otherwise), the acceptability of the Work, or other engineering or technical matters.

B. *Submittal of Claim*: The party submitting a Claim shall deliver it directly to the other party to the Contract promptly (but in no event later than 30 days) after the start of the event giving rise thereto; in the case of appeals regarding Change Proposals within 30 days of the decision under appeal. The party submitting the Claim shall also furnish a copy to the Engineer, for its information only. The responsibility to substantiate a Claim shall rest with the party making the Claim. In the case of a Claim by Contractor seeking an increase in the Contract Times or Contract Price, or both, Contractor shall certify that the Claim is made in good faith, that the supporting data are accurate and complete, and that to the best of Contractor's knowledge and belief the amount of time or money requested accurately reflects the full amount to which Contractor is entitled.

C. *Review and Resolution*: The party receiving a Claim shall review it thoroughly, giving full consideration to its merits. The two parties shall seek to resolve the Claim through the exchange of information and direct negotiations. The parties may extend the time for resolving the Claim by mutual agreement. All actions taken on a Claim shall be stated in writing and submitted to the other party, with a copy to Engineer.

D. *Mediation*:

1. At any time after initiation of a Claim, Owner and Contractor may mutually agree to mediation of the underlying dispute. The agreement to mediate shall stay the Claim submittal and response process.

2. If Owner and Contractor agree to mediation, then after 60 days from such agreement, either Owner or Contractor may unilaterally terminate the mediation process, and the Claim submittal and decision process shall resume as of the date of the termination. If the mediation proceeds but is unsuccessful in resolving the dispute, the Claim

submittal and decision process shall resume as of the date of the conclusion of the mediation, as determined by the mediator.

3. Owner and Contractor shall each pay one-half of the mediator's fees and costs.

E. *Partial Approval*: If the party receiving a Claim approves the Claim in part and denies it in part, such action shall be final and binding unless within 30 days of such action the other party invokes the procedure set forth in Article 17 for final resolution of disputes.

F. *Denial of Claim*: If efforts to resolve a Claim are not successful, the party receiving the Claim may deny it by giving written notice of denial to the other party. If the receiving party does not take action on the Claim within 90 days, then either Owner or Contractor may at any time thereafter submit a letter to the other party indicating that as a result of the inaction, the Claim is deemed denied, thereby commencing the time for appeal of the denial. A denial of the Claim shall be final and binding unless within 30 days of the denial the other party invokes the procedure set forth in Article 17 for the final resolution of disputes.

G. *Final and Binding Results*: If the parties reach a mutual agreement regarding a Claim, whether through approval of the Claim, direct negotiations, mediation, or otherwise; or if a Claim is approved in part and denied in part, or denied in full, and such actions become final and binding; then the results of the agreement or action on the Claim shall be incorporated in a Change Order to the extent they affect the Contract, including the Work, the Contract Times, or the Contract Price.

ARTICLE 13 – COST OF THE WORK; ALLOWANCES; UNIT PRICE WORK

13.01 *Cost of the Work*

A. *Purposes for Determination of Cost of the Work*: The term Cost of the Work means the sum of all costs necessary for the proper performance of the Work at issue, as further defined below. The provisions of this Paragraph 13.01 are used for two distinct purposes:

1. To determine Cost of the Work when Cost of the Work is a component of the Contract Price, under cost-plus-fee, time-and-materials, or other cost-based terms; or

2. To determine the value of a Change Order, Change Proposal, Claim, set-off, or other adjustment in Contract Price. When the value of any such adjustment is determined on the basis of Cost of the Work, Contractor is entitled only to those additional or incremental costs required because of the change in the Work or because of the event giving rise to the adjustment.

B. *Costs Included*: Except as otherwise may be agreed to in writing by Owner, costs included in the Cost of the Work shall be in amounts no higher than those prevailing in the locality of the Project, shall not include any of the costs itemized in Paragraph 13.01.C, and shall include only the following items:

1. Payroll costs for employees in the direct employ of Contractor in the performance of the Work under schedules of job classifications agreed upon by Owner and Contractor. Such employees shall include, without limitation, superintendents, foremen, and other personnel employed full time on the Work. Payroll costs for employees not employed full time on the Work shall be apportioned on the basis of their time spent on the Work. Payroll costs shall include, but not be limited to, salaries and wages plus the cost of fringe benefits, which shall include social security contributions, unemployment, excise, and payroll taxes, workers' compensation, health and retirement benefits, bonuses, sick leave, and vacation and holiday pay applicable

thereto. The expenses of performing Work outside of regular working hours, on Saturday, Sunday, or legal holidays, shall be included in the above to the extent authorized by Owner.

2. Cost of all materials and equipment furnished and incorporated in the Work, including costs of transportation and storage thereof, and Suppliers' field services required in connection therewith. All cash discounts shall accrue to Contractor unless Owner deposits funds with Contractor with which to make payments, in which case the cash discounts shall accrue to Owner. All trade discounts, rebates, and refunds and returns from sale of surplus materials and equipment shall accrue to Owner, and Contractor shall make provisions so that they may be obtained.

3. Payments made by Contractor to Subcontractors for Work performed by Subcontractors. If required by Owner, Contractor shall obtain competitive bids from subcontractors acceptable to Owner and Contractor and shall deliver such bids to Owner, who will then determine, with the advice of Engineer, which bids, if any, will be acceptable. If any subcontract provides that the Subcontractor is to be paid on the basis of Cost of the Work plus a fee, the Subcontractor's Cost of the Work and fee shall be determined in the same manner as Contractor's Cost of the Work and fee as provided in this Paragraph 13.01.

4. Costs of special consultants (including but not limited to engineers, architects, testing laboratories, surveyors, attorneys, and accountants) employed for services specifically related to the Work.

5. Supplemental costs including the following:

    a. The proportion of necessary transportation, travel, and subsistence expenses of Contractor's employees incurred in discharge of duties connected with the Work.

    b. Cost, including transportation and maintenance, of all materials, supplies, equipment, machinery, appliances, office, and temporary facilities at the Site, and hand tools not owned by the workers, which are consumed in the performance of the Work, and cost, less market value, of such items used but not consumed which remain the property of Contractor.

    c. Rentals of all construction equipment and machinery, and the parts thereof, whether rented from Contractor or others in accordance with rental agreements approved by Owner with the advice of Engineer, and the costs of transportation, loading, unloading, assembly, dismantling, and removal thereof. All such costs shall be in accordance with the terms of said rental agreements. The rental of any such equipment, machinery, or parts shall cease when the use thereof is no longer necessary for the Work.

    d. Sales, consumer, use, and other similar taxes related to the Work, and for which Contractor is liable, as imposed by Laws and Regulations.

    e. Deposits lost for causes other than negligence of Contractor, any Subcontractor, or anyone directly or indirectly employed by any of them or for whose acts any of them may be liable, and royalty payments and fees for permits and licenses.

    f. Losses and damages (and related expenses) caused by damage to the Work, not compensated by insurance or otherwise, sustained by Contractor in connection with the performance of the Work (except losses and damages within the deductible amounts of property insurance established in accordance with Paragraph 6.05), provided such losses and damages have resulted from causes

other than the negligence of Contractor, any Subcontractor, or anyone directly or indirectly employed by any of them or for whose acts any of them may be liable. Such losses shall include settlements made with the written consent and approval of Owner. No such losses, damages, and expenses shall be included in the Cost of the Work for the purpose of determining Contractor's fee.

g. The cost of utilities, fuel, and sanitary facilities at the Site.

h. Minor expenses such as communication service at the Site, express and courier services, and similar petty cash items in connection with the Work.

i. The costs of premiums for all bonds and insurance that Contractor is required by the Contract Documents to purchase and maintain.

C. *Costs Excluded*: The term Cost of the Work shall not include any of the following items:

1. Payroll costs and other compensation of Contractor's officers, executives, principals (of partnerships and sole proprietorships), general managers, safety managers, engineers, architects, estimators, attorneys, auditors, accountants, purchasing and contracting agents, expediters, timekeepers, clerks, and other personnel employed by Contractor, whether at the Site or in Contractor's principal or branch office for general administration of the Work and not specifically included in the agreed upon schedule of job classifications referred to in Paragraph 13.01.B.1 or specifically covered by Paragraph 13.01.B.4. The payroll costs and other compensation excluded here are to be considered administrative costs covered by the Contractor's fee.

2. Expenses of Contractor's principal and branch offices other than Contractor's office at the Site.

3. Any part of Contractor's capital expenses, including interest on Contractor's capital employed for the Work and charges against Contractor for delinquent payments.

4. Costs due to the negligence of Contractor, any Subcontractor, or anyone directly or indirectly employed by any of them or for whose acts any of them may be liable, including but not limited to, the correction of defective Work, disposal of materials or equipment wrongly supplied, and making good any damage to property.

5. Other overhead or general expense costs of any kind and the costs of any item not specifically and expressly included in Paragraph 13.01.B.

D. *Contractor's Fee*: When the Work as a whole is performed on the basis of cost-plus, Contractor's fee shall be determined as set forth in the Agreement. When the value of any Work covered by a Change Order, Change Proposal, Claim, set-off, or other adjustment in Contract Price is determined on the basis of Cost of the Work, Contractor's fee shall be determined as set forth in Paragraph 11.04.C.

E. *Documentation*: Whenever the Cost of the Work for any purpose is to be determined pursuant to this Article 13, Contractor will establish and maintain records thereof in accordance with generally accepted accounting practices and submit in a form acceptable to Engineer an itemized cost breakdown together with supporting data.

13.02 *Allowances*

A. It is understood that Contractor has included in the Contract Price all allowances so named in the Contract Documents and shall cause the Work so covered to be performed for such sums and by such persons or entities as may be acceptable to Owner and Engineer.

B. *Cash Allowances*: Contractor agrees that:

1. the cash allowances include the cost to Contractor (less any applicable trade discounts) of materials and equipment required by the allowances to be delivered at the Site, and all applicable taxes; and

2. Contractor's costs for unloading and handling on the Site, labor, installation, overhead, profit, and other expenses contemplated for the cash allowances have been included in the Contract Price and not in the allowances, and no demand for additional payment on account of any of the foregoing will be valid.

C. *Contingency Allowance*: Contractor agrees that a contingency allowance, if any, is for the sole use of Owner to cover unanticipated costs.

D. Prior to final payment, an appropriate Change Order will be issued as recommended by Engineer to reflect actual amounts due Contractor on account of Work covered by allowances, and the Contract Price shall be correspondingly adjusted.

13.03 *Unit Price Work*

A. Where the Contract Documents provide that all or part of the Work is to be Unit Price Work, initially the Contract Price will be deemed to include for all Unit Price Work an amount equal to the sum of the unit price for each separately identified item of Unit Price Work times the estimated quantity of each item as indicated in the Agreement.

B. The estimated quantities of items of Unit Price Work are not guaranteed and are solely for the purpose of comparison of Bids and determining an initial Contract Price. Payments to Contractor for Unit Price Work will be based on actual quantities.

C. Each unit price will be deemed to include an amount considered by Contractor to be adequate to cover Contractor's overhead and profit for each separately identified item.

D. Engineer will determine the actual quantities and classifications of Unit Price Work performed by Contractor. Engineer will review with Contractor the Engineer's preliminary determinations on such matters before rendering a written decision thereon (by recommendation of an Application for Payment or otherwise). Engineer's written decision thereon will be final and binding (except as modified by Engineer to reflect changed factual conditions or more accurate data) upon Owner and Contractor, subject to the provisions of the following paragraph.

E. Within 30 days of Engineer's written decision under the preceding paragraph, Contractor may submit a Change Proposal, or Owner may file a Claim, seeking an adjustment in the Contract Price if:

1. the quantity of any item of Unit Price Work performed by Contractor differs materially and significantly from the estimated quantity of such item indicated in the Agreement;

2. there is no corresponding adjustment with respect to any other item of Work; and

3. Contractor believes that it is entitled to an increase in Contract Price as a result of having incurred additional expense or Owner believes that Owner is entitled to a decrease in Contract Price, and the parties are unable to agree as to the amount of any such increase or decrease.

ARTICLE 14 – TESTS AND INSPECTIONS; CORRECTION, REMOVAL OR ACCEPTANCE OF DEFECTIVE WORK

14.01 *Access to Work*

A. Owner, Engineer, their consultants and other representatives and personnel of Owner, independent testing laboratories, and authorities having jurisdiction will have access to the Site and the Work at reasonable times for their observation, inspection, and testing. Contractor shall provide them proper and safe conditions for such access and advise them of Contractor's safety procedures and programs so that they may comply therewith as applicable.

14.02 *Tests, Inspections, and Approvals*

A. Contractor shall give Engineer timely notice of readiness of the Work (or specific parts thereof) for all required inspections and tests, and shall cooperate with inspection and testing personnel to facilitate required inspections and tests.

B. Owner shall retain and pay for the services of an independent inspector, testing laboratory, or other qualified individual or entity to perform all inspections and tests expressly required by the Contract Documents to be furnished and paid for by Owner, except that costs incurred in connection with tests or inspections of covered Work shall be governed by the provisions of Paragraph 14.05.

C. If Laws or Regulations of any public body having jurisdiction require any Work (or part thereof) specifically to be inspected, tested, or approved by an employee or other representative of such public body, Contractor shall assume full responsibility for arranging and obtaining such inspections, tests, or approvals, pay all costs in connection therewith, and furnish Engineer the required certificates of inspection or approval.

D. Contractor shall be responsible for arranging, obtaining, and paying for all inspections and tests required:

1. by the Contract Documents, unless the Contract Documents expressly allocate responsibility for a specific inspection or test to Owner;

2. to attain Owner's and Engineer's acceptance of materials or equipment to be incorporated in the Work;

3. by manufacturers of equipment furnished under the Contract Documents;

4. for testing, adjusting, and balancing of mechanical, electrical, and other equipment to be incorporated into the Work; and

5. for acceptance of materials, mix designs, or equipment submitted for approval prior to Contractor's purchase thereof for incorporation in the Work.

Such inspections and tests shall be performed by independent inspectors, testing laboratories, or other qualified individuals or entities acceptable to Owner and Engineer.

E. If the Contract Documents require the Work (or part thereof) to be approved by Owner, Engineer, or another designated individual or entity, then Contractor shall assume full responsibility for arranging and obtaining such approvals.

F. If any Work (or the work of others) that is to be inspected, tested, or approved is covered by Contractor without written concurrence of Engineer, Contractor shall, if requested by Engineer, uncover such Work for observation. Such uncovering shall be at Contractor's expense unless Contractor had given Engineer timely notice of Contractor's intention to

cover the same and Engineer had not acted with reasonable promptness in response to such notice.

14.03 *Defective Work*

A. *Contractor's Obligation*: It is Contractor's obligation to assure that the Work is not defective.

B. *Engineer's Authority*: Engineer has the authority to determine whether Work is defective, and to reject defective Work.

C. *Notice of Defects*: Prompt notice of all defective Work of which Owner or Engineer has actual knowledge will be given to Contractor.

D. *Correction, or Removal and Replacement*: Promptly after receipt of written notice of defective Work, Contractor shall correct all such defective Work, whether or not fabricated, installed, or completed, or, if Engineer has rejected the defective Work, remove it from the Project and replace it with Work that is not defective.

E. *Preservation of Warranties*: When correcting defective Work, Contractor shall take no action that would void or otherwise impair Owner's special warranty and guarantee, if any, on said Work.

F. *Costs and Damages*: In addition to its correction, removal, and replacement obligations with respect to defective Work, Contractor shall pay all claims, costs, losses, and damages arising out of or relating to defective Work, including but not limited to the cost of the inspection, testing, correction, removal, replacement, or reconstruction of such defective Work, fines levied against Owner by governmental authorities because the Work is defective, and the costs of repair or replacement of work of others resulting from defective Work. Prior to final payment, if Owner and Contractor are unable to agree as to the measure of such claims, costs, losses, and damages resulting from defective Work, then Owner may impose a reasonable set-off against payments due under Article 15.

14.04 *Acceptance of Defective Work*

A. If, instead of requiring correction or removal and replacement of defective Work, Owner prefers to accept it, Owner may do so (subject, if such acceptance occurs prior to final payment, to Engineer's confirmation that such acceptance is in general accord with the design intent and applicable engineering principles, and will not endanger public safety). Contractor shall pay all claims, costs, losses, and damages attributable to Owner's evaluation of and determination to accept such defective Work (such costs to be approved by Engineer as to reasonableness), and for the diminished value of the Work to the extent not otherwise paid by Contractor. If any such acceptance occurs prior to final payment, the necessary revisions in the Contract Documents with respect to the Work shall be incorporated in a Change Order. If the parties are unable to agree as to the decrease in the Contract Price, reflecting the diminished value of Work so accepted, then Owner may impose a reasonable set-off against payments due under Article 15. If the acceptance of defective Work occurs after final payment, Contractor shall pay an appropriate amount to Owner.

14.05 *Uncovering Work*

A. Engineer has the authority to require special inspection or testing of the Work, whether or not the Work is fabricated, installed, or completed.

B. If any Work is covered contrary to the written request of Engineer, then Contractor shall, if requested by Engineer, uncover such Work for Engineer's observation, and then replace the covering, all at Contractor's expense.

C. If Engineer considers it necessary or advisable that covered Work be observed by Engineer or inspected or tested by others, then Contractor, at Engineer's request, shall uncover, expose, or otherwise make available for observation, inspection, or testing as Engineer may require, that portion of the Work in question, and provide all necessary labor, material, and equipment.

1. If it is found that the uncovered Work is defective, Contractor shall be responsible for all claims, costs, losses, and damages arising out of or relating to such uncovering, exposure, observation, inspection, and testing, and of satisfactory replacement or reconstruction (including but not limited to all costs of repair or replacement of work of others); and pending Contractor's full discharge of this responsibility the Owner shall be entitled to impose a reasonable set-off against payments due under Article 15.

2. If the uncovered Work is not found to be defective, Contractor shall be allowed an increase in the Contract Price or an extension of the Contract Times, or both, directly attributable to such uncovering, exposure, observation, inspection, testing, replacement, and reconstruction. If the parties are unable to agree as to the amount or extent thereof, then Contractor may submit a Change Proposal within 30 days of the determination that the Work is not defective.

14.06 *Owner May Stop the Work*

A. If the Work is defective, or Contractor fails to supply sufficient skilled workers or suitable materials or equipment, or fails to perform the Work in such a way that the completed Work will conform to the Contract Documents, then Owner may order Contractor to stop the Work, or any portion thereof, until the cause for such order has been eliminated; however, this right of Owner to stop the Work shall not give rise to any duty on the part of Owner to exercise this right for the benefit of Contractor, any Subcontractor, any Supplier, any other individual or entity, or any surety for, or employee or agent of any of them.

14.07 *Owner May Correct Defective Work*

A. If Contractor fails within a reasonable time after written notice from Engineer to correct defective Work, or to remove and replace rejected Work as required by Engineer, or if Contractor fails to perform the Work in accordance with the Contract Documents, or if Contractor fails to comply with any other provision of the Contract Documents, then Owner may, after seven days written notice to Contractor, correct or remedy any such deficiency.

B. In exercising the rights and remedies under this Paragraph 14.07, Owner shall proceed expeditiously. In connection with such corrective or remedial action, Owner may exclude Contractor from all or part of the Site, take possession of all or part of the Work and suspend Contractor's services related thereto, and incorporate in the Work all materials and equipment stored at the Site or for which Owner has paid Contractor but which are stored elsewhere. Contractor shall allow Owner, Owner's representatives, agents and employees, Owner's other contractors, and Engineer and Engineer's consultants access to the Site to enable Owner to exercise the rights and remedies under this paragraph.

C. All claims, costs, losses, and damages incurred or sustained by Owner in exercising the rights and remedies under this Paragraph 14.07 will be charged against Contractor as set-offs against payments due under Article 15. Such claims, costs, losses and damages will

include but not be limited to all costs of repair, or replacement of work of others destroyed or damaged by correction, removal, or replacement of Contractor's defective Work.

D. Contractor shall not be allowed an extension of the Contract Times because of any delay in the performance of the Work attributable to the exercise by Owner of Owner's rights and remedies under this Paragraph 14.07.

ARTICLE 15 – PAYMENTS TO CONTRACTOR; SET-OFFS; COMPLETION; CORRECTION PERIOD

15.01 *Progress Payments*

A. *Basis for Progress Payments*: The Schedule of Values established as provided in Article 2 will serve as the basis for progress payments and will be incorporated into a form of Application for Payment acceptable to Engineer. Progress payments on account of Unit Price Work will be based on the number of units completed during the pay period, as determined under the provisions of Paragraph 13.03. Progress payments for cost-based Work will be based on Cost of the Work completed by Contractor during the pay period.

B. *Applications for Payments*:

1. At least 20 days before the date established in the Agreement for each progress payment (but not more often than once a month), Contractor shall submit to Engineer for review an Application for Payment filled out and signed by Contractor covering the Work completed as of the date of the Application and accompanied by such supporting documentation as is required by the Contract Documents. If payment is requested on the basis of materials and equipment not incorporated in the Work but delivered and suitably stored at the Site or at another location agreed to in writing, the Application for Payment shall also be accompanied by a bill of sale, invoice, or other documentation warranting that Owner has received the materials and equipment free and clear of all Liens, and evidence that the materials and equipment are covered by appropriate property insurance, a warehouse bond, or other arrangements to protect Owner's interest therein, all of which must be satisfactory to Owner.

2. Beginning with the second Application for Payment, each Application shall include an affidavit of Contractor stating that all previous progress payments received on account of the Work have been applied on account to discharge Contractor's legitimate obligations associated with prior Applications for Payment.

3. The amount of retainage with respect to progress payments will be as stipulated in the Agreement.

C. *Review of Applications*:

1. Engineer will, within 10 days after receipt of each Application for Payment, including each resubmittal, either indicate in writing a recommendation of payment and present the Application to Owner, or return the Application to Contractor indicating in writing Engineer's reasons for refusing to recommend payment. In the latter case, Contractor may make the necessary corrections and resubmit the Application.

2. Engineer's recommendation of any payment requested in an Application for Payment will constitute a representation by Engineer to Owner, based on Engineer's observations of the executed Work as an experienced and qualified design professional, and on Engineer's review of the Application for Payment and the accompanying data and schedules, that to the best of Engineer's knowledge, information and belief:

a. the Work has progressed to the point indicated;

b. the quality of the Work is generally in accordance with the Contract Documents (subject to an evaluation of the Work as a functioning whole prior to or upon Substantial Completion, the results of any subsequent tests called for in the Contract Documents, a final determination of quantities and classifications for Unit Price Work under Paragraph 13.03, and any other qualifications stated in the recommendation); and

c. the conditions precedent to Contractor's being entitled to such payment appear to have been fulfilled in so far as it is Engineer's responsibility to observe the Work.

3. By recommending any such payment Engineer will not thereby be deemed to have represented that:

a. inspections made to check the quality or the quantity of the Work as it has been performed have been exhaustive, extended to every aspect of the Work in progress, or involved detailed inspections of the Work beyond the responsibilities specifically assigned to Engineer in the Contract; or

b. there may not be other matters or issues between the parties that might entitle Contractor to be paid additionally by Owner or entitle Owner to withhold payment to Contractor.

4. Neither Engineer's review of Contractor's Work for the purposes of recommending payments nor Engineer's recommendation of any payment, including final payment, will impose responsibility on Engineer:

a. to supervise, direct, or control the Work, or

b. for the means, methods, techniques, sequences, or procedures of construction, or the safety precautions and programs incident thereto, or

c. for Contractor's failure to comply with Laws and Regulations applicable to Contractor's performance of the Work, or

d. to make any examination to ascertain how or for what purposes Contractor has used the money paid on account of the Contract Price, or

e. to determine that title to any of the Work, materials, or equipment has passed to Owner free and clear of any Liens.

5. Engineer may refuse to recommend the whole or any part of any payment if, in Engineer's opinion, it would be incorrect to make the representations to Owner stated in Paragraph 15.01.C.2.

6. Engineer will recommend reductions in payment (set-offs) necessary in Engineer's opinion to protect Owner from loss because:

a. the Work is defective, requiring correction or replacement;

b. the Contract Price has been reduced by Change Orders;

c. Owner has been required to correct defective Work in accordance with Paragraph 14.07, or has accepted defective Work pursuant to Paragraph 14.04;

d. Owner has been required to remove or remediate a Hazardous Environmental Condition for which Contractor is responsible; or

e. Engineer has actual knowledge of the occurrence of any of the events that would constitute a default by Contractor and therefore justify termination for cause under the Contract Documents.

D. *Payment Becomes Due*:

1. Ten days after presentation of the Application for Payment to Owner with Engineer's recommendation, the amount recommended (subject to any Owner set-offs) will become due, and when due will be paid by Owner to Contractor.

E. *Reductions in Payment by Owner*:

1. In addition to any reductions in payment (set-offs) recommended by Engineer, Owner is entitled to impose a set-off against payment based on any of the following:

a. claims have been made against Owner on account of Contractor's conduct in the performance or furnishing of the Work, or Owner has incurred costs, losses, or damages on account of Contractor's conduct in the performance or furnishing of the Work, including but not limited to claims, costs, losses, or damages from workplace injuries, adjacent property damage, non-compliance with Laws and Regulations, and patent infringement;

b. Contractor has failed to take reasonable and customary measures to avoid damage, delay, disruption, and interference with other work at or adjacent to the Site;

c. Contractor has failed to provide and maintain required bonds or insurance;

d. Owner has been required to remove or remediate a Hazardous Environmental Condition for which Contractor is responsible;

e. Owner has incurred extra charges or engineering costs related to submittal reviews, evaluations of proposed substitutes, tests and inspections, or return visits to manufacturing or assembly facilities;

f. the Work is defective, requiring correction or replacement;

g. Owner has been required to correct defective Work in accordance with Paragraph 14.07, or has accepted defective Work pursuant to Paragraph 14.04;

h. the Contract Price has been reduced by Change Orders;

i. an event that would constitute a default by Contractor and therefore justify a termination for cause has occurred;

j. liquidated damages have accrued as a result of Contractor's failure to achieve Milestones, Substantial Completion, or final completion of the Work;

k. Liens have been filed in connection with the Work, except where Contractor has delivered a specific bond satisfactory to Owner to secure the satisfaction and discharge of such Liens;

l. there are other items entitling Owner to a set off against the amount recommended.

2. If Owner imposes any set-off against payment, whether based on its own knowledge or on the written recommendations of Engineer, Owner will give Contractor immediate written notice (with a copy to Engineer) stating the reasons for such action and the specific amount of the reduction, and promptly pay Contractor any amount

remaining after deduction of the amount so withheld. Owner shall promptly pay Contractor the amount so withheld, or any adjustment thereto agreed to by Owner and Contractor, if Contractor remedies the reasons for such action. The reduction imposed shall be binding on Contractor unless it duly submits a Change Proposal contesting the reduction.

3. Upon a subsequent determination that Owner's refusal of payment was not justified, the amount wrongfully withheld shall be treated as an amount due as determined by Paragraph 15.01.C.1 and subject to interest as provided in the Agreement.

15.02 *Contractor's Warranty of Title*

A. Contractor warrants and guarantees that title to all Work, materials, and equipment furnished under the Contract will pass to Owner free and clear of (1) all Liens and other title defects, and (2) all patent, licensing, copyright, or royalty obligations, no later than seven days after the time of payment by Owner.

15.03 *Substantial Completion*

A. When Contractor considers the entire Work ready for its intended use Contractor shall notify Owner and Engineer in writing that the entire Work is substantially complete and request that Engineer issue a certificate of Substantial Completion. Contractor shall at the same time submit to Owner and Engineer an initial draft of punch list items to be completed or corrected before final payment.

B. Promptly after Contractor's notification, Owner, Contractor, and Engineer shall make an inspection of the Work to determine the status of completion. If Engineer does not consider the Work substantially complete, Engineer will notify Contractor in writing giving the reasons therefor.

C. If Engineer considers the Work substantially complete, Engineer will deliver to Owner a preliminary certificate of Substantial Completion which shall fix the date of Substantial Completion. Engineer shall attach to the certificate a punch list of items to be completed or corrected before final payment. Owner shall have seven days after receipt of the preliminary certificate during which to make written objection to Engineer as to any provisions of the certificate or attached punch list. If, after considering the objections to the provisions of the preliminary certificate, Engineer concludes that the Work is not substantially complete, Engineer will, within 14 days after submission of the preliminary certificate to Owner, notify Contractor in writing that the Work is not substantially complete, stating the reasons therefor. If Owner does not object to the provisions of the certificate, or if despite consideration of Owner's objections Engineer concludes that the Work is substantially complete, then Engineer will, within said 14 days, execute and deliver to Owner and Contractor a final certificate of Substantial Completion (with a revised punch list of items to be completed or corrected) reflecting such changes from the preliminary certificate as Engineer believes justified after consideration of any objections from Owner.

D. At the time of receipt of the preliminary certificate of Substantial Completion, Owner and Contractor will confer regarding Owner's use or occupancy of the Work following Substantial Completion, review the builder's risk insurance policy with respect to the end of the builder's risk coverage, and confirm the transition to coverage of the Work under a permanent property insurance policy held by Owner. Unless Owner and Contractor agree otherwise in writing, Owner shall bear responsibility for security, operation, protection of the Work, property insurance, maintenance, heat, and utilities upon Owner's use or occupancy of the Work.

E. After Substantial Completion the Contractor shall promptly begin work on the punch list of items to be completed or corrected prior to final payment. In appropriate cases Contractor may submit monthly Applications for Payment for completed punch list items, following the progress payment procedures set forth above.

F. Owner shall have the right to exclude Contractor from the Site after the date of Substantial Completion subject to allowing Contractor reasonable access to remove its property and complete or correct items on the punch list.

15.04 *Partial Use or Occupancy*

A. Prior to Substantial Completion of all the Work, Owner may use or occupy any substantially completed part of the Work which has specifically been identified in the Contract Documents, or which Owner, Engineer, and Contractor agree constitutes a separately functioning and usable part of the Work that can be used by Owner for its intended purpose without significant interference with Contractor's performance of the remainder of the Work, subject to the following conditions:

1. At any time Owner may request in writing that Contractor permit Owner to use or occupy any such part of the Work that Owner believes to be substantially complete. If and when Contractor agrees that such part of the Work is substantially complete, Contractor, Owner, and Engineer will follow the procedures of Paragraph 15.03.A through E for that part of the Work.

2. At any time Contractor may notify Owner and Engineer in writing that Contractor considers any such part of the Work substantially complete and request Engineer to issue a certificate of Substantial Completion for that part of the Work.

3. Within a reasonable time after either such request, Owner, Contractor, and Engineer shall make an inspection of that part of the Work to determine its status of completion. If Engineer does not consider that part of the Work to be substantially complete, Engineer will notify Owner and Contractor in writing giving the reasons therefor. If Engineer considers that part of the Work to be substantially complete, the provisions of Paragraph 15.03 will apply with respect to certification of Substantial Completion of that part of the Work and the division of responsibility in respect thereof and access thereto.

4. No use or occupancy or separate operation of part of the Work may occur prior to compliance with the requirements of Paragraph 6.05 regarding builder's risk or other property insurance.

15.05 *Final Inspection*

A. Upon written notice from Contractor that the entire Work or an agreed portion thereof is complete, Engineer will promptly make a final inspection with Owner and Contractor and will notify Contractor in writing of all particulars in which this inspection reveals that the Work, or agreed portion thereof, is incomplete or defective. Contractor shall immediately take such measures as are necessary to complete such Work or remedy such deficiencies.

15.06 *Final Payment*

A. *Application for Payment*:

1. After Contractor has, in the opinion of Engineer, satisfactorily completed all corrections identified during the final inspection and has delivered, in accordance with the Contract Documents, all maintenance and operating instructions, schedules, guarantees, bonds, certificates or other evidence of insurance, certificates of

inspection, annotated record documents (as provided in Paragraph 7.11), and other documents, Contractor may make application for final payment.

2. The final Application for Payment shall be accompanied (except as previously delivered) by:

   a. all documentation called for in the Contract Documents;

   b. consent of the surety, if any, to final payment;

   c. satisfactory evidence that all title issues have been resolved such that title to all Work, materials, and equipment has passed to Owner free and clear of any Liens or other title defects, or will so pass upon final payment.

   d. a list of all disputes that Contractor believes are unsettled; and

   e. complete and legally effective releases or waivers (satisfactory to Owner) of all Lien rights arising out of the Work, and of Liens filed in connection with the Work.

3. In lieu of the releases or waivers of Liens specified in Paragraph 15.06.A.2 and as approved by Owner, Contractor may furnish receipts or releases in full and an affidavit of Contractor that: (a) the releases and receipts include all labor, services, material, and equipment for which a Lien could be filed; and (b) all payrolls, material and equipment bills, and other indebtedness connected with the Work for which Owner might in any way be responsible, or which might in any way result in liens or other burdens on Owner's property, have been paid or otherwise satisfied. If any Subcontractor or Supplier fails to furnish such a release or receipt in full, Contractor may furnish a bond or other collateral satisfactory to Owner to indemnify Owner against any Lien, or Owner at its option may issue joint checks payable to Contractor and specified Subcontractors and Suppliers.

B. *Engineer's Review of Application and Acceptance*:

1. If, on the basis of Engineer's observation of the Work during construction and final inspection, and Engineer's review of the final Application for Payment and accompanying documentation as required by the Contract Documents, Engineer is satisfied that the Work has been completed and Contractor's other obligations under the Contract have been fulfilled, Engineer will, within ten days after receipt of the final Application for Payment, indicate in writing Engineer's recommendation of final payment and present the Application for Payment to Owner for payment. Such recommendation shall account for any set-offs against payment that are necessary in Engineer's opinion to protect Owner from loss for the reasons stated above with respect to progress payments. At the same time Engineer will also give written notice to Owner and Contractor that the Work is acceptable, subject to the provisions of Paragraph 15.07. Otherwise, Engineer will return the Application for Payment to Contractor, indicating in writing the reasons for refusing to recommend final payment, in which case Contractor shall make the necessary corrections and resubmit the Application for Payment.

C. *Completion of Work*: The Work is complete (subject to surviving obligations) when it is ready for final payment as established by the Engineer's written recommendation of final payment.

D. *Payment Becomes Due*: Thirty days after the presentation to Owner of the final Application for Payment and accompanying documentation, the amount recommended by Engineer (less any further sum Owner is entitled to set off against Engineer's recommendation,

including but not limited to set-offs for liquidated damages and set-offs allowed under the provisions above with respect to progress payments) will become due and shall be paid by Owner to Contractor.

15.07 *Waiver of Claims*

A. The making of final payment will not constitute a waiver by Owner of claims or rights against Contractor. Owner expressly reserves claims and rights arising from unsettled Liens, from defective Work appearing after final inspection pursuant to Paragraph 15.05, from Contractor's failure to comply with the Contract Documents or the terms of any special guarantees specified therein, from outstanding Claims by Owner, or from Contractor's continuing obligations under the Contract Documents.

B. The acceptance of final payment by Contractor will constitute a waiver by Contractor of all claims and rights against Owner other than those pending matters that have been duly submitted or appealed under the provisions of Article 17.

15.08 *Correction Period*

A. If within one year after the date of Substantial Completion (or such longer period of time as may be prescribed by the terms of any applicable special guarantee required by the Contract Documents, or by any specific provision of the Contract Documents), any Work is found to be defective, or if the repair of any damages to the Site, adjacent areas that Contractor has arranged to use through construction easements or otherwise, and other adjacent areas used by Contractor as permitted by Laws and Regulations, is found to be defective, then Contractor shall promptly, without cost to Owner and in accordance with Owner's written instructions:

1. correct the defective repairs to the Site or such other adjacent areas;
2. correct such defective Work;
3. if the defective Work has been rejected by Owner, remove it from the Project and replace it with Work that is not defective, and
4. satisfactorily correct or repair or remove and replace any damage to other Work, to the work of others, or to other land or areas resulting therefrom.

B. If Contractor does not promptly comply with the terms of Owner's written instructions, or in an emergency where delay would cause serious risk of loss or damage, Owner may have the defective Work corrected or repaired or may have the rejected Work removed and replaced. Contractor shall pay all claims, costs, losses, and damages (including but not limited to all fees and charges of engineers, architects, attorneys, and other professionals and all court or arbitration or other dispute resolution costs) arising out of or relating to such correction or repair or such removal and replacement (including but not limited to all costs of repair or replacement of work of others).

C. In special circumstances where a particular item of equipment is placed in continuous service before Substantial Completion of all the Work, the correction period for that item may start to run from an earlier date if so provided in the Specifications.

D. Where defective Work (and damage to other Work resulting therefrom) has been corrected or removed and replaced under this paragraph, the correction period hereunder with respect to such Work will be extended for an additional period of one year after such correction or removal and replacement has been satisfactorily completed.

E. Contractor's obligations under this paragraph are in addition to all other obligations and warranties. The provisions of this paragraph shall not be construed as a substitute for, or a waiver of, the provisions of any applicable statute of limitation or repose.

ARTICLE 16 – SUSPENSION OF WORK AND TERMINATION

16.01 *Owner May Suspend Work*

A. At any time and without cause, Owner may suspend the Work or any portion thereof for a period of not more than 90 consecutive days by written notice to Contractor and Engineer. Such notice will fix the date on which Work will be resumed. Contractor shall resume the Work on the date so fixed. Contractor shall be entitled to an adjustment in the Contract Price or an extension of the Contract Times, or both, directly attributable to any such suspension. Any Change Proposal seeking such adjustments shall be submitted no later than 30 days after the date fixed for resumption of Work.

16.02 *Owner May Terminate for Cause*

A. The occurrence of any one or more of the following events will constitute a default by Contractor and justify termination for cause:

1. Contractor's persistent failure to perform the Work in accordance with the Contract Documents (including, but not limited to, failure to supply sufficient skilled workers or suitable materials or equipment or failure to adhere to the Progress Schedule);

2. Failure of Contractor to perform or otherwise to comply with a material term of the Contract Documents;

3. Contractor's disregard of Laws or Regulations of any public body having jurisdiction; or

4. Contractor's repeated disregard of the authority of Owner or Engineer.

B. If one or more of the events identified in Paragraph 16.02.A occurs, then after giving Contractor (and any surety) ten days written notice that Owner is considering a declaration that Contractor is in default and termination of the contract, Owner may proceed to:

1. declare Contractor to be in default, and give Contractor (and any surety) notice that the Contract is terminated; and

2. enforce the rights available to Owner under any applicable performance bond.

C. Subject to the terms and operation of any applicable performance bond, if Owner has terminated the Contract for cause, Owner may exclude Contractor from the Site, take possession of the Work, incorporate in the Work all materials and equipment stored at the Site or for which Owner has paid Contractor but which are stored elsewhere, and complete the Work as Owner may deem expedient.

D. Owner may not proceed with termination of the Contract under Paragraph 16.02.B if Contractor within seven days of receipt of notice of intent to terminate begins to correct its failure to perform and proceeds diligently to cure such failure.

E. If Owner proceeds as provided in Paragraph 16.02.B, Contractor shall not be entitled to receive any further payment until the Work is completed. If the unpaid balance of the Contract Price exceeds the cost to complete the Work, including all related claims, costs, losses, and damages (including but not limited to all fees and charges of engineers, architects, attorneys, and other professionals) sustained by Owner, such excess will be paid to Contractor. If the cost to complete the Work including such related claims, costs, losses,

and damages exceeds such unpaid balance, Contractor shall pay the difference to Owner. Such claims, costs, losses, and damages incurred by Owner will be reviewed by Engineer as to their reasonableness and, when so approved by Engineer, incorporated in a Change Order. When exercising any rights or remedies under this paragraph, Owner shall not be required to obtain the lowest price for the Work performed.

F. Where Contractor's services have been so terminated by Owner, the termination will not affect any rights or remedies of Owner against Contractor then existing or which may thereafter accrue, or any rights or remedies of Owner against Contractor or any surety under any payment bond or performance bond. Any retention or payment of money due Contractor by Owner will not release Contractor from liability.

G. If and to the extent that Contractor has provided a performance bond under the provisions of Paragraph 6.01.A, the provisions of that bond shall govern over any inconsistent provisions of Paragraphs 16.02.B and 16.02.D.

16.03 *Owner May Terminate For Convenience*

A. Upon seven days written notice to Contractor and Engineer, Owner may, without cause and without prejudice to any other right or remedy of Owner, terminate the Contract. In such case, Contractor shall be paid for (without duplication of any items):

1. completed and acceptable Work executed in accordance with the Contract Documents prior to the effective date of termination, including fair and reasonable sums for overhead and profit on such Work;

2. expenses sustained prior to the effective date of termination in performing services and furnishing labor, materials, or equipment as required by the Contract Documents in connection with uncompleted Work, plus fair and reasonable sums for overhead and profit on such expenses; and

3. other reasonable expenses directly attributable to termination, including costs incurred to prepare a termination for convenience cost proposal.

B. Contractor shall not be paid on account of loss of anticipated overhead, profits, or revenue, or other economic loss arising out of or resulting from such termination.

16.04 *Contractor May Stop Work or Terminate*

A. If, through no act or fault of Contractor, (1) the Work is suspended for more than 90 consecutive days by Owner or under an order of court or other public authority, or (2) Engineer fails to act on any Application for Payment within 30 days after it is submitted, or (3) Owner fails for 30 days to pay Contractor any sum finally determined to be due, then Contractor may, upon seven days written notice to Owner and Engineer, and provided Owner or Engineer do not remedy such suspension or failure within that time, terminate the contract and recover from Owner payment on the same terms as provided in Paragraph 16.03.

B. In lieu of terminating the Contract and without prejudice to any other right or remedy, if Engineer has failed to act on an Application for Payment within 30 days after it is submitted, or Owner has failed for 30 days to pay Contractor any sum finally determined to be due, Contractor may, seven days after written notice to Owner and Engineer, stop the Work until payment is made of all such amounts due Contractor, including interest thereon. The provisions of this paragraph are not intended to preclude Contractor from submitting a Change Proposal for an adjustment in Contract Price or Contract Times or otherwise for

expenses or damage directly attributable to Contractor's stopping the Work as permitted by this paragraph.

ARTICLE 17 – FINAL RESOLUTION OF DISPUTES

17.01 *Methods and Procedures*

A. *Disputes Subject to Final Resolution*: The following disputed matters are subject to final resolution under the provisions of this Article:

1. A timely appeal of an approval in part and denial in part of a Claim, or of a denial in full; and

2. Disputes between Owner and Contractor concerning the Work or obligations under the Contract Documents, and arising after final payment has been made.

B. *Final Resolution of Disputes*: For any dispute subject to resolution under this Article, Owner or Contractor may:

1. elect in writing to invoke the dispute resolution process provided for in the Supplementary Conditions; or

2. agree with the other party to submit the dispute to another dispute resolution process; or

3. if no dispute resolution process is provided for in the Supplementary Conditions or mutually agreed to, give written notice to the other party of the intent to submit the dispute to a court of competent jurisdiction.

ARTICLE 18 – MISCELLANEOUS

18.01 *Giving Notice*

A. Whenever any provision of the Contract Documents requires the giving of written notice, it will be deemed to have been validly given if:

1. delivered in person, by a commercial courier service or otherwise, to the individual or to a member of the firm or to an officer of the corporation for which it is intended; or

2. delivered at or sent by registered or certified mail, postage prepaid, to the last business address known to the sender of the notice.

18.02 *Computation of Times*

A. When any period of time is referred to in the Contract by days, it will be computed to exclude the first and include the last day of such period. If the last day of any such period falls on a Saturday or Sunday or on a day made a legal holiday by the law of the applicable jurisdiction, such day will be omitted from the computation.

18.03 *Cumulative Remedies*

A. The duties and obligations imposed by these General Conditions and the rights and remedies available hereunder to the parties hereto are in addition to, and are not to be construed in any way as a limitation of, any rights and remedies available to any or all of them which are otherwise imposed or available by Laws or Regulations, by special warranty or guarantee, or by other provisions of the Contract. The provisions of this paragraph will be as effective as if repeated specifically in the Contract Documents in connection with each particular duty, obligation, right, and remedy to which they apply.

18.04 *Limitation of Damages*

A. With respect to any and all Change Proposals, Claims, disputes subject to final resolution, and other matters at issue, neither Owner nor Engineer, nor any of their officers, directors, members, partners, employees, agents, consultants, or subcontractors, shall be liable to Contractor for any claims, costs, losses, or damages sustained by Contractor on or in connection with any other project or anticipated project.

18.05 *No Waiver*

A. A party's non-enforcement of any provision shall not constitute a waiver of that provision, nor shall it affect the enforceability of that provision or of the remainder of this Contract.

18.06 *Survival of Obligations*

A. All representations, indemnifications, warranties, and guarantees made in, required by, or given in accordance with the Contract, as well as all continuing obligations indicated in the Contract, will survive final payment, completion, and acceptance of the Work or termination or completion of the Contract or termination of the services of Contractor.

18.07 *Controlling Law*

A. This Contract is to be governed by the law of the state in which the Project is located.

18.08 *Headings*

A. Article and paragraph headings are inserted for convenience only and do not constitute parts of these General Conditions.

SECTION 00800
SUPPLEMENTARY CONDITIONS
ITB 16-021

These Supplementary Conditions amend or supplement the Standard General Conditions of the Construction Contract, EJCDC C-700 (2013 Edition) and other provisions of the Contract Documents as indicated below. All references in these Supplementary Conditions to the Standard General Conditions are to the Standard General Conditions of the Construction Contract, EJCDC C-700 (2013 Edition). All provisions which are not so amended or supplemented remain in full force and effect.

The terms used in these Supplementary Conditions will have the meanings stated in those Standard General Conditions. Additional terms used in these Supplementary Conditions have the meanings indicated below, which are applicable to both the singular and plural thereof.

The address system used in these Supplementary Conditions is the same as the address system used in the Standard General Conditions of the Construction Contract EJCDC C-700 (2013 Edition), with the prefix "SC" added thereto.

SC-1.01 *Defined Terms*

Delete the definition of the term Liens in Paragraph 1.01.A.24. and insert in its place the following:

24. *Liens* – Charges, security, interests, or encumbrances upon Contract – related funds, real property, or personal property and claims delivered to Owner by laborers, Subcontractors, and Suppliers who have not been paid by Contractor.

SC-2.01 *Delivery of Bonds and Evidence of Insurance*

Delete Paragraph 2.01.A. in its entirety and insert the following in its place:

A. When Contractor delivers the executed counterparts of the Agreement to Owner, Contractor shall also deliver to Owner unexecuted copies of the bonds and related powers of attorney that Contractor will be required to furnish. Within 10 days after execution of the Agreement by Owner, Contractor shall deliver to Owner fully executed bonds, accompanied by a certified copy of the signing individual's authority to bind the surety establishing that it is effective on the date the agent or attorney-in-fact signed the accompanying bond, as provided in Paragraph 5.06.B. of the Standard General Conditions.

SC-2.02 *Copies of Documents*

Delete Paragraph 2.02.A. in its entirety and insert the following in its place:

A. Owner shall furnish Contractor with 1 printed copy of the fully executed Contract Documents. Additional copies will be furnished upon request at the cost of reproduction.

SC-2.04 *Preconstruction Conference; Designation of Authorized Representatives*

Add the following to the end of Paragraph 2.04.A.:

Contractor shall be ready, willing, and able to attend this conference within 10 calendar days after the date of the notice to proceed. The date, time, and place of this conference will be set by Engineer.

SC-4.01 *Commencement of Contract Times; Notice to Proceed*

Delete Paragraph 4.01.A. in its entirety and insert the following in its place:

A. The Contract Times will commence to run on the day indicated in a Notice to Proceed.

SC-4.02 *Starting the Work*

Add the following new Paragraph to Paragraph 4.02:

B. Contractor, before beginning the Work or within 2 workdays thereafter, shall post in a conspicuous place on the Site the following notice.

Notice is hereby made to all those concerned and affected that _____ _____ is performing the "Istokpoga Above Ground Impoundment Project". All parties furnishing labor and/or materials to that project must, within twenty (20) days of first providing such labor and/or materials, deliver notice of such in writing, by certified mail, return receipt requested, to:

HIGHLANDS COUNTY PARKS AND NATURAL RESOURCES
HIGHLANDS COUNTY BOARD OF COUNTY COMMISSIONERS
ATTN: CLELL FORD, LAKES MANAGER
4344 GEORGE BLVD., SEBRING, FLORIDA 33875

SC-5.01 *Availability of Lands*

Delete the following from Paragraph 5.01.B.:

as necessary for giving notice of or filing a mechanic's or construction Lien against such lands in accordance with applicable Laws and Regulations

SC-5.02 *Use of Site and Other Areas*

Add the following new paragraph to Paragraph 5.02:

E. Contractor shall at all times control dust and keep the Site free from accumulation of waste materials or rubbish caused by Contractor's employees or subcontractors, and at the completion of the Work, Contractor shall remove all Contractor's rubbish from and about the Site and all Contractor's tools and surplus materials and shall leave Contractor's Site and any other Work area clean. Owner may remove the rubbish and charge the cost to Contractor as the Engineer may determine to be just. In the event that Contractor does not keep the Site and any other Work area free of rubbish or accumulations of waste materials and control dust, Owner will withhold an additional 5% from any pay request, above and beyond the standard 10% retainage.

SC-5.03 *Subsurface and Physical Conditions*

Add the following new paragraphs immediately after Paragraph 5.03.B:

C. *Subsurface Conditions Known to Owner*: The subsurface conditions at or contiguous to the Site known to Owner are shown on the Drawings and Specifications that are Exhibits "A", "B", and "C" of the Contract Documents. Contractor is not entitled to rely upon any other information and data known to or identified by Owner or Engineer.

D. *Unforeseen Physical Conditions:* Contractor shall notify Engineer in writing of any subsurface or latent physical condition at the Site differing materially from those indicated in the Contract Documents. Engineer shall promptly investigate those conditions and advise Owner in writing if additional information shall be required. Owner shall then obtain such information, and if deemed necessary, shall issue written orders to perform necessary revisions.

SC 5.05 *Underground Facilities*

Add the following new Paragraph to Paragraph 5.05:

F. *Protection of Underground Facilities*.

1. Existing utilities and other facilities such as drainage structures have been indicated on the Drawings and Specifications only to the extent that such information was made available to Owner. There is no guarantee as to the accuracy or completeness of this information, and Owner will not be responsible for such accuracy or completeness.

2. Contractor shall be responsible for protecting all such utilities indicated in the manner determined necessary by the owner of such utilities. Any utilities not

indicated on the Drawings and Specifications, which do not require relocation, shall be protected by Contractor. The Work shall be performed at the original Contract Price. All visible surface facilities or underground utilities shown on the Drawings and Specifications, whether or not shown to be relocated, shall be protected or relocated by Contractor at its expense.

3. Utility relocations are not anticipated for this Project. However, existing utilities which are found during construction and determined necessary to be relocated will be considered an unknown condition. Contractor will cooperate with the appropriate authority in identifying and protecting the utility during relocation.

4. Abandoned utilities, when encountered, shall be severed and plugged at Contractor's expense.

5. Contractor shall be responsible for discovery of existing underground installations, in advance of excavating or trenching, by contacting all local utilities and by prospecting and pot holing. Any damage to facilities not shown shall be solely the responsibility of Contractor.

SC-5.06 *Hazardous Environmental Conditions at Site*

Delete Paragraphs 5.06.A. and 5.06B. in their entirety and insert the following:

A. No reports or drawings related to Hazardous Environmental Conditions at the Site are known to Owner.

B. Portions of the existing Site contain copper impacted soils. While these soils are not considered a Hazardous Environmental Condition, they do pose a potential risk to the ecosystem, particularly the Everglades Snail Kite. These areas and the remediation thereof are detailed on the Contract Documents.

Delete Paragraph 5.06.I. in its entirety.

SC-6.01 *Performance, Payment, and Other Bonds*

Delete Paragraph 6.01.A. in its entirety and insert the following in its place:

A. Contractor shall furnish a payment and performance bond in an amount at least equal to the Contract Price, in complete satisfaction of the provisions of Section 255.05, Florida Statutes, as security for the faithful performance and payment of all of Contractor's obligations under the Contract. The form of the payment and performance bond shall be in the form of the Pubic Construction Bond provided by Owner in Section 00600 of the ITB issued by Owner for construction of the Work. These bonds shall remain in effect until one year after the date when final payment becomes due or until completion of the correction period specified in Paragraph 15.08, whichever is later, except as provided otherwise by Laws and Regulations, the Supplementary

Conditions, or other specific provisions of the Contract. Contractor shall also furnish such other bonds as are required by the Supplementary Conditions or other specific provisions of the Contract. Contractor shall record that bond in the Public Records of Highlands County, Florida, as required by Section 255.05(1), Florida Statutes.

SC-6.03 *Contractor's Insurance*

Delete Paragraph 6.03.I.3. in its entirety and insert the following in its place:

3. contain a provision or endorsement that the coverage afforded will not be canceled, materially changed or renewal refused until at least 10 days, or such longer time period as is required by Laws and Regulations, prior written notice has been given to Contractor.

Add the following new Paragraphs to Paragraph 6.03:

K. Contractor shall have and maintain in full force and effect the following insurance during the Term of this Contract and shall furnish to County Certificates of Insurance documenting that insurance coverage has been obtained which meets the following requirements:

1. Workers' Compensation. Contractor shall have and maintain workers' compensation insurance for all employees for statutory limits in compliance with Laws and Regulations. This insurance policy must include Employer's Liability with a limit of $100,000 each accident, $500,000 disease (policy Limit), and $100,000 disease (each employee).

2. Commercial General Liability. Occurrence Form Required: Contractor shall have and maintain commercial general liability (CGL) insurance with a limit of not less than $3,000,000 each occurrence. If such CGL insurance contains a general aggregate limit, it shall apply separately to this project in the amount of $3,000,000. Products and completed operations aggregate shall be $3,000,000. CGL insurance shall be written on an occurrence form and shall include bodily injury and property damage liability for premises, operations, independent contractors, products and completed operations, contractual liability, broad form property damage and property damage resulting from explosion, collapse or underground (x, c, u) exposures, personal injury, and advertising injury. Fire damage liability shall be included at $100,000.

3. Commercial Auto Liability Insurance. Contractor shall have and maintain commercial automobile liability insurance with a limit of not less than $3,000,000 combined single limit per occurrence for bodily injury and property damage liability. That insurance shall cover liability arising out of any auto (including owned, hired, and non-owned

autos). The policy shall be endorsed to provide contractual liability coverage.

4. Umbrella Excess Liability - Contractor may satisfy the required minimum liability limits with an Umbrella or Excess Liability policy. Contractor agrees to endorse Owner and its elected officials, agents, employees, and volunteers, in the manner required by Paragraph 6.03.K.7, as Additional Insureds unless the Umbrella provides "follow form" provisions of the underlying policies. This must be confirmed in writing on the Certificate of Insurance.

5. Deductibles/Retentions - Contractor is responsible for any expenses or costs below deductibles applicable to any policies.

6. Formal Certificates of Insurance shall be delivered by Contractor to Owner upon execution of the Agreement. Certificates of Insurance shall be signed by a person authorized by that insurer to bind coverage on its behalf. All Certificates of Insurance must be on file with and approved by Owner before commencement of any Work activities.

7. The formal insurance certificates shall name "Highlands County, a political subdivision of the State of Florida and its elected officials, agents, employees and volunteers" as "Additional Insureds" on all policies except Workers' Compensation. Additional Insureds status for Completed Operations must be provided without time limitation or for a minimum of 5 years following completion of the Project.

8. These are minimum requirements which are subject to modification in response to high hazard operations. Owner reserves the right to require Contractor to provide and pay for any other insurance coverage Owner deems necessary, depending upon the possible exposure to liability.

9. The policies of insurance shall be written on forms acceptable to Owner and placed with insurance carriers authorized by the Insurance Department in the State of Florida and meet a minimum financial AM Best company rating of no less than "A- Excellent: FSC VII.

10. All policies must include Waiver of Subrogation and any liability aggregate limits shall apply "Per Jobsite"/Per Job Aggregate. All liability insurance shall be Primary and Non-Contributory. Each Certificate of Insurance shall confirm in writing that these provisions apply.

L. Contractor shall require each Subcontractor to have and maintain the insurance required by Paragraph 6.03.K. This requirement may be modified by Owner by written instrument on a case by case basis, in its sole

discretion. It is the responsibility of the Contractor to ensure that all Subcontractors comply with all insurance requirements.

M. Contractor shall provide notification to Owner and Engineer by overnight delivery return receipt requested, hand delivery or confirmed facsimile 30 days prior to giving and within 3 days after receiving notice of cancellation, modification, non-renewal, or any other lapse in coverage of any required insurance policies.

SC-6.05 *Property Insurance*

Delete Paragraph 6.05.B. in its entirety and insert the following Paragraph in its place:

B *Notice of Cancellation or Change*: All the policies of insurance (and the certificates or other evidence thereof) required to be purchased and maintained in accordance with this Paragraph 6.05 will contain a provision or endorsement that the coverage afforded will not be canceled or materially changed or renewal refused until at least 10 days, or such longer time period as is required by Laws and Regulations, prior written notice has been given to the purchasing policyholder. Contractor shall provide notification to Owner and Engineer by overnight delivery return receipt requested, hand delivery or confirmed facsimile 30 days prior to giving and within 3 days after receiving notice of cancellation, modification, non-renewal, or any other lapse in coverage of any required insurance policies.

SC-6.06 *Waiver of Rights*

Delete Paragraphs 6.06.B. and C. in their entirety.

SC-7.01 *Supervision and Superintendence*

Add the following to the end of Paragraph 7.01.B.:

The superintendent will be Contractor's representative at the Site and shall have authority to act on behalf of Contractor. All communications given to or received from the superintendent shall be binding on Contractor.

SC-7.02 *Labor; Working Hours*

Add the following new Paragraphs immediately after Paragraph 7.02.B.:

C. In all cases, local labor shall be given preference when available.

D. Whenever Owner shall notify Contractor that any man on the Work is, in his opinion, incompetent, unfaithful, or disorderly, or who uses threatening or abusive language to any person representing Owner when on the Work, such man shall be immediately discharged from the Work and shall not be re-employed thereon except with the consent of Owner.

SC-7.03 *Services, Materials, and Equipment*

Add the following new Paragraph immediately after Paragraph 7.03.C.:

D. The responsibility for the protection and safekeeping of equipment and materials on or near the Site will be entirely that of Contractor and that no Claim shall be made against Owner by reason of any act of an employee or trespasser. Should an occasion arise necessitating access to the sites occupied by the stored materials and equipment, Contractor shall immediately move same. No materials or equipment may be placed upon the property of Owner until Owner has approved the location contemplated by Contractor to be used for storage.

SC-7.04 *"Or Equals"*

Delete the word "considered" from Paragraph 7.04.E. and insert the word "consider" in its place.

SC-7.06 *Concerning Subcontractors, Suppliers, and Others*

Delete Paragraph 7.06.H. in its entirety and insert the following in its place:

H. Prior to submitting the first Application for Payment and within 3 workdays after any change, Contractor shall submit to Engineer a complete list of all Subcontractors and Suppliers having a direct contract with Contractor, and of all other Subcontractors and Suppliers known to Contractor at the time of submittal.

SC-7.07 *Patent Fees and Royalties*

Delete Paragraph 7.07.B. in its entirety.

SC-7.08 *Permits*

Delete Paragraph 7.08.A. in its entirety and insert the following in its place:

A. Unless otherwise provided in the Contract Documents or Section 218.80, Florida Statutes, Contractor shall obtain and pay for all construction permits and licenses. Owner shall assist Contractor, when necessary, in obtaining such permits and licenses. Contractor shall pay all governmental charges and inspection fees necessary for the prosecution of the Work which are applicable at the time of the submission of Contractor's Bid (or when Contractor became bound under a negotiated contract). Owner shall pay all charges of utility owners for connections for providing permanent service to the Work.

SC-7.09 *Taxes and Direct Material Purchase Procedure*

Add the following new Paragraphs immediately after Paragraph 7.09.A.:

B. Owner is exempt from payment of sales and compensating use taxes of the State of Florida and of cities and counties thereof on all materials to be incorporated into the Work.

C. Contractor shall provide assistance to Owner for Direct Purchases to enable Owner to purchase tangible personal property needed for this Project which Owner intends to purchase in order to realize savings of sales tax on all tangible personal property needed for this Project. Contractor will recommend direct purchases for items where those direct purchases will result in significant tax savings to Owner. Owner will either accept or reject Contractor's recommendations, and purchases will be made according to Owner's decision. Owner retains the absolute right, with or without Contractor's recommendation, to purchase any or all tangible personal property needed for this Project.

D. Contractor will provide detailed scoping and pricing for purchase orders with a minimum value of Five Thousand Dollars ($5,000.00), in harmony with the Subcontractors to Owner for the incorporation in Owner's purchase orders.

E. Owner will issue purchase orders within three (3) workdays from the date of receipt of requisition, directly to the vendors and provide a copy of each purchase order to Contractor.

F. Contractor will be responsible for the materials until they are incorporated into the Project and will purchase and/or have ample Builder's Risk insurance for the direct purchased materials.

G. Contractor will issue a deductive subcontract adjustment to the Subcontractor which will account for the value of the material and the sales tax as it pertains to that Subcontractor's contract. All subcontracts shall include a clause incorporating, by reference, the provisions of this Paragraph 7.09.

H. As the material is delivered to the jobsite, the Subcontractor will sign off on the delivery receipt/invoice for the material delivered, store and secure the material adequately at the Site, and forward the invoice to Contractor who will review, approve and forward the invoice to Owner's Representative for approval and processing.

I. Owner will draft a check for the approved invoice amount and mail that check directly to the vendor. A list of the check numbers with related dates of issue, names of vendors, amounts paid, and paid invoice numbers will be forwarded to Contractor in order that Contractor can accurately track payment.

J. Contractor and Owner are encouraged to take advantage of all discounts available.

K. Owner will issue to Contractor a deductive Change Order in the amount of the direct purchased materials. The amount equal to the sales tax which would have been paid if those materials had been purchased by Contractor will be credited to Owner through a Contingency line item on the pay application's schedule of values, and the Contract Price specified in Article 4 of the Agreement shall be reduced by an amount equal to the amounts paid directly by Owner for direct purchases made pursuant to this Article, plus an amount equal to the sales tax that would have been paid if those materials had been purchased by Contractor.

SC-7.10 *Laws and Regulations*

Delete Paragraph 7.10.B. in its entirety and insert the following in its place:

B. It shall be Contractor's responsibility to make certain that the Work described in the Contract Documents is in accordance with Laws and Regulations. Contractor shall bear all costs and losses, and shall indemnify and hold harmless Owner and Owner's officers and employees from and against all liabilities, damages, losses, and costs, including, but not limited to, reasonable attorney's fees arising out of or relating to Work or other action that is contrary to Laws or Regulations.

SC-7.11 *Record Documents*

Delete the word "Engineer" at the end of Paragraph 7.11.A. and insert the word "Owner" in its place.

SC-7.12 *Safety and Protection*

Add the following new Paragraph to Paragraph 7.12:

H. Contractor shall pay for all damages to private property, public property, and any public utilities.

SC-7.17 *Contractor's General Warranty and Guarantee*

Add the following new Paragraph to paragraph 7.17:

E. All materials incorporated in the Work shall comply with the requirements of the Construction Documents. Any Defective Work which develop within 1 year after the date of final acceptance shall be promptly repaired by or replaced to "as new" condition by Contractor without any additional expense to Owner.

SC-7.18 *Indemnification*

Delete Paragraph 7.18 in its entirety and insert the following in its place.

A. To the fullest extent permitted by Laws and Regulations, and in addition to any other obligations of Contractor under the Contract or otherwise, Contractor shall

indemnify and hold harmless Owner and Owner's officers and employees from and against all liabilities, damages, losses, and costs, including, but not limited to, reasonable attorney's fees to the extent caused by the negligence, recklessness, or intentional wrongful misconduct of Contractor and persons employed or utilized by Contractor in the performance of any of the Work.

B. In any and all claims against Owner or any of its officers or employees by any employee (or the survivor or personal representative of such employee) of Contractor, any Subcontractor, any Supplier, or any individual or entity directly or indirectly utilized by any of them to perform any of the Work, or anyone for whose acts any of them may be liable, the indemnification obligation under Paragraph 7.18.A shall not be limited in any way by any limitation on the amount or type of damages, compensation, or benefits payable by or for Contractor or any such Subcontractor, Supplier, or other individual or entity under workers' compensation acts, disability benefit acts, or other employee benefit acts.

C. The indemnification obligations of Contractor under Paragraph 7.18.A shall be limited to $1,000,000 per occurrence.

SC-7.19 *Delegation of Professional Design Services*

Add the following new Paragraph immediately after Paragraph 7.19.E.:

F. If Contractor provides professional design services as a design professional, as that term is defined in Section 725.08(4), Florida Statutes, Contractor shall indemnify and hold harmless Owner and Owner's officers and employees, from liabilities, damages, losses, and costs, including, but not limited to reasonable attorneys' fees, to the extent caused by the negligence, recklessness, or intentionally wrongful conduct of Contractor providing professional design services as a design professional and other persons employed or utilized by Contractor in the performance of the professional design services.

SC-7.20-7.29

Add the following new Paragraphs immediately after new Paragraph 7.19.F.:

SC-7.20 *Erosion and Drainage Control*

A. Contractor shall implement Best Management Practices (BMP's) to provide for drainage of storm water and such water as may be applied or discharged on the Site in performance of the Work. Drainage facilities shall be adequate to prevent damage to the Work, the Site and adjacent property.

B. Contractor shall prevent the pollution of drains and watercourses by sanitary wastes, sediment, debris or other substances resulting from this work. Contractor shall clean up and isolate such materials on a continuing basis to prevent risk of washing into such drainage ways.

C. Contractor shall determine if a Stormwater Discharge Permit or a Construction Dewatering Discharge Permit applies to the Work. Contractor shall obtain required permit(s) if necessary for completion of the Work.

SC-7.21 *Protection of Trees and Natural Conditions*

A. No trees or shrubs shall be damaged or removed beyond delineated limits of disturbance except those flagged by Owner. No areas shall be disturbed beyond the designated limits indicated by Owner. Contractor shall install orange safety fence to delineate limits of disturbance, and Contractor shall be responsible for damage mitigation beyond these limits.

SC-7.22 *Dewatering*

A. If dewatering is required at the Site, Contractor shall comply with all dewatering requirements of governmental agencies.

SC-7.23 *Protection of Public and Private Property*

A. Contractor shall protect, shore, brace, support and maintain all underground pipes, conduits, drains, and other underground or above ground structures uncovered or otherwise affected by the construction of the Work performed by Contractor. All pavement, surfacing, driveways, curbs, walks, buildings, utility poles, guy wires, fences, guard posts, and other surface structures affected by construction operations, together with all trees, sod and shrubs in yards and parking lots removed or damaged, shall be restored to their original condition or replaced as determined and approved by Owner, whether within or outside Owner's right-of-way. All replacements shall be made with new materials.

B. Contractor shall be responsible for all damages to streets, roads, highways, shoulders, ditches, embankments, culverts, facilities and utilities, bridges, property corners and monuments and other public or private property, regardless of location or character, which may be caused by construction of the Work or by transporting equipment, materials or men to or from the Work or any part or site thereof, whether by Contractor or Contractor's Subcontractors. Contractor shall make satisfactory and acceptable arrangements with the owner of, or the agency or authority having jurisdiction over, the damaged property concerning its repair or replacement or payment of costs incurred in connection with the damage.

C. All fire hydrants and water control valves shall be kept free from obstruction and for use at all times.

D. Contractor shall be responsible for any damage to existing structures during the course of the Work.

SC-7.24 *Maintenance of Traffic*

A. Contractor shall provide traffic control plans as required by the controlling highway, street or road authority. Contractor shall perform the Work so as to interfere as little as possible with public travel, whether vehicular or pedestrian. Whenever necessary to cross, use, obstruct or close roads, driveways and walks, whether public or private, Contractor shall, at its own expense, provide and maintain suitable and safe bridges, detours or other temporary expedients, for the accommodation of public and private travel, and shall give reasonable notice to owners of private drives before interfering with them. Such maintenance of traffic will not be required when Contractor has obtained permission from the owner and tenant of private property, or from the authority having jurisdiction over the public property involved, to obstruct traffic at the designated point. Obstructions, such as material piles and equipment, shall be provided with appropriate warning signs and lights.

B. After completion, the roadway shall be restored to original condition, and disturbed areas shall be restored to original condition.

SC-7.25 *Testing*

A. Contractor shall be responsible for all testing required for sampling and testing of materials to prove compliance with the Contract Documents. This shall include, but not be limited to mix design approvals for concrete and asphalt, pipe bedding gradations and Proctor tests and gradations for imported granular fill materials. Specific requirements shall be included in the applicable specification sections.

B. Tests required to monitor control performance of the Work in accordance with the Contract Documents such as concrete cylinder tests and compaction tests shall be ordered and paid for by Contractor. Any retesting required as a result of the first test failure will be at Contractor's expense. Contractor will assist in providing locations and allowing the tests to be conducted without obstructions and in accordance with all Laws and Regulations. Contractor shall correct or modify its operations where indicated necessary by the test results.

SC-7.26 *Unfavorable Construction Conditions*

A. During unfavorable weather, wet ground or other unsuitable construction conditions, Contractor shall confine its operations to work which will not be affected adversely by such conditions. No portion of the Work shall be constructed under conditions which affect adversely the quality or efficiency thereof, unless special means or precautions are taken by Contractor to perform the Work in a proper and satisfactory manner.

SC-7.27 *Notices to Owners and Authorities*

A. Contractor shall notify owners of adjacent property and utilities when prosecution of Work may affect them.

B. Utilities and other concerned agencies shall be contracted at least 48 hours prior to cutting or closing streets or other traffic areas or excavating near Underground Facilities or pole lines.

SC-7.28 *Storage of Fuel or Hazardous Materials*

A. No fuel or other hazardous materials shall be stored on the Site. Extreme care and compliance with all regulations shall be required when handling all such materials.

SC-11.01 *Amending and Supplementing Contract Documents*

Delete the first sentence of Paragraph 11.01.A. and insert the following in its place:

> The Contract Documents may be amended or supplemented by a Change Order, a Work Change Directive, or a Field Order if approved, in writing, by Owner.

SC-14.02 *Tests, Inspections, and Approvals*

Delete Paragraph 14.02.B. in its entirety and insert the following in its place:

B. Owner shall retain and Contractor shall pay for the services of an independent inspector, testing laboratory, or other qualified individual or entity to perform all inspections and tests expressly required by the Contract Documents to be furnished by Owner, except that costs incurred in connection with tests or inspections of covered Work shall be governed by the provisions of Paragraph 14.05.

SC-15 **ARTICLE 15 – PAYMENTS TO CONTRACTOR; SET-OFFS; COMPLETION; CORRECTION PERIOD.**

Add the following to the end of 15.01.B.1.:

> If the payment and performance of the Work is not secured by a payment and performance bond, all applications for payment shall include a written statement that indicates how the payment will be distributed. Contractor shall disburse the payment as provided in that written statement.

Add the following new Paragraph to Paragraph 15.01.B.:

4. *If Requested by Owner:*

   a. Contractor shall deliver a certified list of all Subcontractors, laborers, and material suppliers to Owner within 30 days of receiving the request. This list shall be updated by Contractor thereafter each month with a certified statement by Contractor that the list and its updates include the names and address of all of Subcontractors, laborers, and Suppliers furnishing labor and/or material for the Project.

   b. Contractor shall provide a written statement with each pay request to the Owner which indicates how each payment will be distributed. This pay request breakdown shall define the disbursement of all the funds requested.

   c. When Contractor receives any payment pursuant to this Contract, Contractor shall pay laborers and each Subcontractor and Supplier the amounts stated in Contractor's written statement delivered to Owner for that pay request.

   d. Contractor shall provide a written statement with all but the first payment request from each of the Subcontractors, laborers, and Suppliers identified in Paragraph 15.01.B.4.b., that they have in fact received payment as provided in Paragraph 15.01.B.4.c. In the event a payment will not made as stated on a prior written statement delivered pursuant to Paragraph 15.01B.4.b., Contractor shall furnish an explanation as to the reasons for such deviation and shall request approval from the Engineer.

Add the following new Paragraphs immediately after Paragraph 15.08.E.:

<u>SC-15.09</u> *Local Government Prompt Payment Act*

A. If the total cost of the construction services purchased by Owner pursuant to this Contract exceeds $200,000, the provisions of this Article are subject to the provisions of the Local Government Prompt Payment Act, Sections 218.70 through 218.79, inclusive, Florida Statutes, except to the extent provided therein and in that event provisions of this Article are modified and amended to the extent required to be consistent with the Local Government Prompt Payment Act.

<u>SC-15.10</u> *Interest*

A. All moneys not paid when due as provided in Paragraph 15 shall bear interest at the maximum rate of 6 percent per annum, simple.

SC-16.02 *Owner May Terminate for Cause*

Delete Paragraph 16.02 in its entirety and insert the following in its place:

16.02 *Owner May Terminate for Cause*

A. The occurrence of any one or more of the following events will constitute a default by Contractor and justify termination for cause:

   1. Contractor's persistent failure to perform the Work in accordance with the Contract Documents (including, but not limited to, failure to supply sufficient skilled workers or suitable materials or equipment or failure to adhere to the Progress Schedule);

   2. Failure of Contractor to perform or otherwise to comply with a material term of the Contract Documents;

   3. Contractor's disregard of Laws or Regulations of any public body having jurisdiction;

   4. Contractor's repeated disregard of the authority of Owner or Engineer; or

   5. Contractor becomes involved as a debtor in a bankruptcy proceeding, or becomes involved in a reorganization, dissolution, or liquidation proceeding, or if a trustee or receiver is appointed over all or a substantial portion of the property of Contractor under federal bankruptcy law or any state insolvency law.

B. If one or more of the events identified in Paragraph 16.02.A occurs, then after giving Contractor (and any surety) ten days written notice that Owner is considering a declaration that Contractor is in default and termination of the Contract, Owner may proceed to:

   1. declare Contractor to be in default, give Contractor (and any surety) notice that the Contract is terminated, and enforce the rights available to Owner under any applicable payment and performance bond; or

   2. notify Contractor of the deficiency with a requirement that the deficiency be corrected within a specified time, otherwise the Contract will be terminated at the end of such time; or

   3. take whatever action is deemed appropriate by Owner.

C. Subject to the terms and operation of any applicable performance bond, if Owner has terminated the Contract for cause, Owner may exclude Contractor from the Site, take possession of the Work, incorporate in the Work all materials and

equipment stored at the Site or for which Owner has paid Contractor but which are stored elsewhere, and complete the Work as Owner may deem expedient.

D. If Owner proceeds as provided in Paragraph 16.02.B, Contractor shall not be entitled to receive any further payment until the Work is completed. If the unpaid balance of the Contract Price exceeds the cost to complete the Work, including all related claims, costs, losses, and damages (including but not limited to all fees and charges of engineers, architects, attorneys, and other professionals) sustained by Owner, such excess will be paid to Contractor. If the cost to complete the Work including such related claims, costs, losses, and damages exceeds such unpaid balance, Contractor shall pay the difference to Owner. Such claims, costs, losses, and damages incurred by Owner will be reviewed by Engineer as to their reasonableness and, when so approved by Engineer, incorporated in a Change Order. When exercising any rights or remedies under this paragraph, Owner shall not be required to obtain the lowest price for the Work performed.

E. Where Contractor's services have been so terminated by Owner, the termination will not affect any rights or remedies of Owner against Contractor then existing or which may thereafter accrue, or any rights or remedies of Owner against Contractor or any surety under any payment bond or performance bond. Any retention or payment of money due Contractor by Owner will not release Contractor from liability.

F. If and to the extent that Contractor has provided a performance bond under the provisions of Paragraph 6.01.A, the provisions of that bond shall govern over any inconsistent provisions of Paragraph 16.02.B.

- END OF SECTION –

G:\COUNTY\ENGINEERING DEPT\ITB 16-021\SECTION 00800 - SUPPLEMENTARY CONDITIONS - 062116.doc

SECTION 01010
SUMMARY OF WORK

PART 1 - GENERAL

1.1 DESCRIPTION

A. General:
1. This Section summarizes the Work of the Project as covered in detail in the complete Contract Documents.
2. This is a general summary and is not intended to be complete and all inclusive of the required Work items. Furnish all labor, materials, tools, equipment and services as indicated in accord with provisions of Contract Documents.

1.2 WORK COVERED BY CONTRACT

A. The Work of this Contract under the Base Bid generally includes the following:

Base Bid:
The Contractor shall provide labor, materials, equipment, and required permits for the construction of approximately 2.9 miles of earthen embankment for an above ground surface water impoundment as shown in the Contract Documents, along with ancillary facilities to control water flow into and out of the impoundment. These ancillary facilities include:

1. Main pump station with two (2) 15,000 gpm pumps with 30-inch steel discharge pipe, one (1) 5,000 gpm pump with 16-inch steel discharge pipe, intake canal and pre-engineered shelter
2. Primary discharge structure with a concrete box, manually operated slide gate, aluminum walkway and 42-inch HDPE discharge pipe
3. Overflow spillway structure with an articulated concrete block mattress weir and riprap spillway
4. Seepage pump station with one (1) 7.5 hp pump with 8-inch steel discharge pipe and one (1) dry 24-inch steel pipeline with blind flange, and pre-engineered shelter
5. Project access road rehabilitation and construction of a commercial grade access driveway at CR621
6. Optional Muck training berm (as a way to dispose of muck)

The Work under the Base Bid also includes construction activities necessary to facilitate construction of the impoundment and ancillary facilities including but not limited to, demolition and removal of the existing irrigation system, concrete pads, culverts, and other man-made remnants from former agricultural operations, remediation of residual agrochemical impacted soils as shown on the Contract Documents, with the exception of Impacted Soil Area #1 as noted in the Contract Documents and paragraph 1.2(B) of this Section, clearing and grubbing, excavation of the impoundment bottom as shown on the Contract Documents, grassing of slopes, construction of shellrock roads, installation of electrical systems, construction of pipe supports, and installation of riprap, bollards, and handrails.

Refer to Specification Section 00300 – Bid Form for bid items related to the base bid.

B. The Work of this Contract under the Alternate Bid generally includes the following:

Alternate Bid:

Upon clearing, grubbing, and testing of Impacted Soil Area #1 (as shown on the Drawings) by SFWMD, if the area is found to have impacted soils as determined by SFWMD and the County, then Impacted Soil Area #1 shall be remediated by the Contractor as specified in the Contract Documents.

Refer to Specification Section 00300 – Bid Form for bid items related to the alternate bid

1.3 WORK BY OTHERS

A. Work perfomed by Duke Energy
   1. Duke Energy, prior to construction, will construct and install utility poles with 3 phase power along the project access road on the east side of the project from CR621 to an access crossing to the impoundment embankment shown on the Drawings. At the access crossing, a meter will also be installed by Duke Energy to provide power to the main pump station. The Contractor is responsible for coordination with Duke Energy to install the meter to facilitate construction, testing, and placing into service, the main pump station
   2. Duke Energy will replace a service pole and install a meter along Caladium Drive on the west side of the project by the Contractor. The Contractor is responsible for coordination with Duke Energy to install the meter to facilitate construction, testing, and placing into service, the seepage pump station.
   3. The Contractor is responsible for all other materials and efforts to provide operational electrical service for the Project on the Project side of both meters.

1.4 CONTRACTOR'S USE OF PREMISES

A. Restricted Access
   1. The Contractor shall not have access Caladium Drive for the life of the Project unless prior approval in writing from the County and Property Owner is provided.

B. Site Access
   1. The Contractor may access the site along the existing project access road on the east side of the project. This access road is located on the south side of CR621, just east of Caladium Drive and south west of Driggers Road as shown in the Drawings.
   2. During construction, the Contractor shall be responsible for maintaining all access roads utilized by the Contractor in good condition at all times during the Contract period, including grading and drainage.

C. General Site Use
   1. The Contractor shall re-vegetate to stabilize embankments after excavation and to stabilize embankments after berm construction. Re-vegetation shall not be greater than 1500 LF behind the active excavation and berm construction efforts. If an area is not under active construction, the Contractor shall re-vegetate the area immediately.

1.5 WORK SEQUENCE

A. The Contractor shall organize and plan the construction activities to assure the safety and reliability of and to minimize the interruption to the existing drainage system(s) used by adjacent land owners.

B. The proposed Work sequence shall be submitted to the County in the Schedule of Construction.

1.6 GATES

A. All existing gates affected by the Work shall be maintained by the Contractor until completion of the Work. Gates removed or disturbed by the construction shall be restored by the Contractor to their original or better condition and to their original location.

PART 2 - PRODUCTS - (NOT APPLICABLE TO THIS SPECIFICATION SECTION)

PART 3 - EXECUTION - (NOT APPLICABLE TO THIS SPECIFICATION SECTION)

END OF SECTION

SECTION 01050

FIELD ENGINEERING AND SURVEYING

PART 1 - GENERAL

1.1 **SUMMARY:**

A. Section Includes:

1. Professional Engineering for project Work.
2. Surveying.
3. Records and record drawings.

B. Related Work Specified Elsewhere:

1. Section 01340 Submittals
2. Section 01510 Temporary Utilities and Facilities and Haul and Access Roads
3. Section 01700 Contract Closeout
4. Section 02200 Earthwork

C. Summary of Work:

1. The Contractor shall engage a Professional Engineer of the discipline required, registered in the State of Florida, to perform engineering services for temporary facilities including the design of shoring systems, shores, earth and water retaining systems, forms, temporary erection supports, and similar items provided by the Contractor as part of its means and methods of construction.
2. The Contractor shall engage a Professional Surveyor and Mapper registered in the State of Florida to perform the necessary layout, survey control and monumentation.
3. The Contractor shall provide As-Built Drawings depicting all elevations both NAVD 88 (North American Vertical Datum 88) and NGVD 29 (National Geodetic Vertical Datum 29). The NGVD 29 elevation shall be italicized, bracketed, and underscored. Refer to 2.03.A.6 for datum offset requirements.

1.2 **SUBMITTALS:**

A. See Specification Section 01340 for requirements for the mechanics and administration of the submittal process.

B. Prior to commencement of work, the Contractor shall check and verify control points by a Florida Registered Land Surveyor and submit a letter with a survey report and field notes. The letter shall acknowledge the Contractor's acceptance of the correctness of the control point information and provide details of the control point information, including secondary control, that the Contractor will utilize.

C. Prior to commencement of work, the Contractor shall field verify existing features that will adjoin features to be constructed as part of the work. If the Contractor believes the existing feature is substantially different from those shown on the drawings and any other supplemental information provided by the County the Contractor shall notify the County immediately and provide any relevant documentation to the County for review and direction.

PART 2 - PRODUCTS (NOT APPLICABLE TO THIS SPECIFICATION SECTION)

PART 3 - CONTRACTOR CONSTRUCTION STAKING

1.3 **DESCRIPTION:** In connection with this work, Contractor shall:

A. Perform all construction layout and reference staking necessary for the proper control and satisfactory completion of the work.

B. Run a level circuit between vertical control points indicated to check plan benchmarks and establish new benchmarks where necessary.

C. All leveling shall be completed under the supervision of a Florida Registered Land Surveyor. Level runs shall meet or exceed the National Geodetic Survey Standard for Third Order Leveling.

1.4 CONSTRUCTION REQUIREMENTS:

A. The Contractor's personnel performing the construction staking shall Work under the direct supervision of a Florida registered Professional Engineer or Florida registered Professional Surveyor and Mapper.

B. The Contractor shall be solely and completely responsible for the accuracy of the line and grade of all features of the Work. Any errors or apparent discrepancies found in previous surveys, plans, or specifications shall be called to the attention of the County by the Contractor for correction or interpretation prior to proceeding with the work.

C. Field notes shall be kept in standard, bound field notebooks in a clear, orderly, and neat manner consistent with standard engineering practices.

D. The Contractor shall be responsible for the placement and preservation of adequate ties and reference to all control points, whether established by him or found on the Project, necessary for the accurate reestablishment of all base lines or centerlines shown on the Drawings. All land ties (i.e. section corners, fractional section corners, and similar items) that may be lost or destroyed during construction shall be carefully referenced and replaced by the Contractor.

E. The supervision of the Contractor's construction engineering personnel shall be the responsibility of the Contractor; any deficient engineering layout or construction work which may be the result of inaccuracies in his staking operations or of his failure to report inaccuracies found in work previously done by the Engineer of Record shall be corrected at the expense of the Contractor.

F. Station Identification: On linear elements of construction (such as berms, roads, and similar items) the Contractor shall place temporary identifying signs at intervals no greater than 500 feet shall identifying the station at that location.

G. The Contractor will provide the County with a compliance survey plan for review and approval before initiation of work that outlines the number and schedule of topographic survey(s) to verify that the work is being constructed as shown on the Drawings.

1.5 SURVEYING STANDARDS

A. Standards apply to all canals, ditches, berms, impoundment bottoms, and cross sections. Standards apply to the Compliance Survey specified in Technical Specification Section 02200 Earth Work unless Section 02200 has more stringent requirements.

1. All vertical elevations shall commence from a minimum of two (2) National Geodetic Survey (NGS) second order or better published benchmarks.
2. All elevations shall be established to NGS third order standards and certified to those standards by a Professional Surveyor and Mapper registered in the State of Florida.
3. All level runs shall be double run (forward and back) or looped into two (2) NGS second order or better published benchmarks.
4. A Site benchmark shall be set. The benchmark shall consist of a minimum of two (2) 80-pound bags of concrete mix, a ferrous piece of material able to be located with a magnetic locator, and a survey cap (supplied by the County) stamped with the Site designation or County approved alternative.
5. All elevations shall be established in NAVD 88.
6. State Plane Coordinates (NAD 83/2011) shall be established at benchmark locations with a positional accuracy of +/- three (3) feet.

7. If there are no second order or better published benchmarks within six miles of the site, contact the County Surveying & Mapping Section representative at (561) 682-6688 prior to commencement.

B. A permanent mark shall be established identifying the elevation measuring point on the top of the primary discharge structure and overflow spillway weir.

C. AS BUILT:

1. Datum:

a. Horizontal: NAD 83/2011 (Florida East Zone)

b. Vertical: NAVD 88

1.6 **RECORDS AND SUBMITTALS:**

A. Submittal:

1. Provide County a copy of the designs described in Paragraph 1.1 signed and sealed by the Florida registered Professional Engineer as necessary.

2. Provide County the data as required in Paragraph 2.2 G. and 2.3.

3. Provide County one (1) copy of the Preliminary Surveyor's Report (MS Word 2007), and two (2) copies of the final signed, sealed and certified Surveyor's Report to the County.

a. At a minimum, the report shall include: an overall Project description, location sketches, field notes, equipment used, pictures and an NAD 83/2011 state plane coordinate (RTK) on each new bench mark (if applicable).

b. A CD containing: Surveyor's name and logo, Surveyor's Report, digital pictures, benchmark description sheets and any other associated data.

B. Records: At the end of the Project, submit to the County a certified Site survey showing coordinates and elevations of the completed work. The Contractor shall maintain detailed survey records including a description of the work performed on each shift, the methods utilized, and the control points used. The record shall be adequate to allow the survey to be reproduced and provide to the County upon request. These are part of the record documents required in Section 01700.

C. Cross-sections: Canal and berm cross-sections shall be submitted as specified in Section 02200.

D. Cross-sections: Road cross-sections shall be submitted as specified in Section 01510.

E. All surveys shall be provided in both hardcopy format and electronic AutoCAD format.

END OF SECTION

SECTION 01270
MEASUREMENT AND PAYMENT

PART 1 - GENERAL

1.1 SUMMARY

A. Section Includes:
   1. Provisions describing methods of measurement and terms for payment of work completed.
   2. In the case of conflict between this Section and the measurement methods specified in the individual Technical Specification Sections, the measurement methods in Technical Specification Sections shall govern.

B. Related Specification Sections include but are not necessarily limited to:
   1. Division 00 - Bidding Requirements, Contract Forms, and Conditions of the Contract.
   2. Division 01 - General Requirements.

1.2 APPLICATIONS FOR PAYMENT COMPENSATION

A. Payment provided for in the contract shall constitute full compensation for furnishing all materials and for performing all work under the contract in a complete and acceptable manner. The contract work shall include providing equipment, tools, supplies, labor, supervision, incidental materials, quality control, environmental protection, meeting safety requirements, and for performing all work required for which separate payment is not otherwise provided.

B. Compensation for all work shown, specified, or essential to completion of the project (whether or not the specific material or operation is indicated) shall be included on the bid schedule. The payment provided for in the contract includes compensation for all risk, loss, damage, and expense arising out of the nature of the work or its prosecution, subject to conditions of the contract. Payment for each contract line item will constitute full compensation for furnishing the materials and constructing the work complete in place as specified.

C. This contract includes unit price, lump sum, and alternate bid items. The unit price, lump sum, and alternate work items are intended to include all work required in order to complete the project as described in the plans and technical specifications. In the event that a specific item of work or task is not explicitly described in this Section, the work will be assumed to be associated with the most closely related unit price item in the contract.

D. Progress payments for items in the Bid Schedule will be based on estimated quantities installed paid at the unit bid price, less retainage as defined in the Construction Contract (Specification Section 00500). An estimate on percent complete is to be provided by the Contractor for County's review with each payment request. Percent complete shall be for work completed in accordance with requirements in the Contract Documents and as accepted by the Engineer and Owner. The quantities of work performed can be adjusted for corrections to previous calculations, incomplete elements or components if agreed to in advance and in writing by the Engineer.

E. The groundwater and surface water within adjacent canals or ditches may be elevated during construction. The Contractor's bid prices shall include care of water and any special work elements or methods required for working in a wet environment.

1.3 UNIT PRICE ITEMS

A. Quantity and measurement estimates stated in the Bid Form are estimates for bidding purposes only. Payments will be based on quantities installed in accordance with contract requirements and as measured, verified, and accepted by the Owner and the Engineer.

B. Bid unit prices shall be in effect throughout the contract duration. When the variance between the estimated quantities and the installed quantities is more than 25 percent (%), the Contractor may request to negotiate a change to the Unit Price in accordance with the Change Order process as defined in the Contract Documents.

C. Except as defined above, the Contractor shall make no claim, nor receive any compensation, for anticipated profits, loss of profit, damages, or any extra payment due to any difference between the amounts of work completed, or materials or equipment furnished, and the estimated quantities.

D. The Owner can pay for quantities that exceed the estimated quantities if the total payments to the Contractor do not exceed the Contract Price. If the added quantities will result in payments that exceed the Contract Price, a Change Order will need to be executed before payment can be made for the added quantities.

E. Contractor shall provide equipment, workers, and survey personnel as required to measure quantities at no additional cost.

F. Unless stated in the Contract Documents, measured quantities shall be rounded to the nearest whole integer.

G. Unit Price Item Descriptions:
   1. Unclassified Excavation
      a. Description:
         1) This unit price represents work associated with excavating the intake canal and any other excavation required to construct the project other than muck/peat removal. This unit price item does not include excavations related to impacted soils remediation or borrow for select fill.
      b. Measurement:
         1) The unit of measurement for unclassified excavation will be the cubic yard (CY), computed by the average end area method from surveyed cross sections taken after topsoil stripping, and before and after the excavation operations. Consecutive cross sections measured for payment shall not be more than 200 linear feet (LF) from the previous surveyed cross section. The measurement will not include the volume of the subgrade material or other material that is scarified or plowed and reused in-place, and will not include the volume excavated without authorization, for the convenience of the Contractor including the setup of all construction staging and operating areas and access roadways, that may be required due to erosion or other damage associated with storm water management or the construction operations of the Contractor, or the volume of any material used for purposes other than directed. The volume of topsoil, excavation required for construction stormwater drainage provisions and for development of construction borrow including borrow pits, will not be measured for payment. The measurement will not include the volume of any excavation performed prior to the taking of elevations and measurements of the undisturbed grade.
      c. Payment:

1) Unclassified excavation will be paid for at the contract unit price per cubic yard for unclassified excavation. The unit price for unclassified excavation shall include all costs required for excavation of the intake canal to complete the project to the lines and grades shown on the Drawings and all other project features requiring excavation prior to placing select fill, with the exception of muck and peat excavation. This unit price shall include equipment, labor, materials, dewatering, temporary shoring systems, hauling/transportation, stockpiling, disposal, dewatering, sediment control, and other measures required for adherence to permitting requirements. Clearing and grubbing, and stripping will be paid under a separate lump sum item (Above Ground Impoundment Ancillary Facilities). Excavation and disposal of muck and peat (except as part of the intake canal excavation) will be paid under separate line items. No separate payment will be made for associated environmental permitting compliance activities, pumping of water or gravity draining of water through ditches from ponded areas within the limits of work. In the event that intake canal reshaping or additional excavation is required during the Contract period, as a result of settlement, erosion, seepage, or other causes prior to Substantial Completion, this work shall be conducted at no additional cost.

2. Muck/Peat Excavation
   a. Description:
      1) This unit price represents work associated with excavation of the muck and peat material within the footprint of the impoundment embankment and other project features including the main pump station, seepage pump area, primary discharge structure, and overflow spillway. This unit price item does not include remediation of impacted soils which is covered under a separate lump sum item (Above Ground Impoundment Ancillary Facilities).
   b. Measurement:
      1) The unit of measurement for muck excavation will be the cubic yard (CY), computed by the average end area method from surveyed cross sections taken after topsoil stripping, and before and after the excavation operations. Consecutive cross sections measured for payment shall not be more than 200 LF from the previous surveyed cross section. The measurement will not include the volume of the subgrade material or other material that is scarified or plowed and reused in-place, and will not include the volume excavated without authorization, for the convenience of the Contractor that may be required due to erosion or other damage associated with storm water management or the construction operations of the Contractor, or the volume of any material used for purposes other than directed. The measurement will not include the volume of any excavation performed prior to the taking of elevations and measurements of the undisturbed grade.
   c. Payment:
      1) Muck excavation will be paid for at the contract unit price per cubic yard for muck excavation. The unit price for muck excavation shall include excavation of muck and peat to facilitate construction of the embankment, main pump station, seepage pump area, primary discharge structure, and overflow spillway. The unit price shall include all equipment, labor, materials, dewatering, temporary shoring systems, hauling/transportation, stockpiling and or disposal of muck/peat and testing. The unit price will also include excavation of muck/peat material in the previously remediated impacted soils area shown on the Drawings, but will not include the remediation of those soils impacted soils. Impacted Soils remediation, Clearing and grubbing, and stripping will be paid under a separate lump sum item (Above Ground Impoundment Ancillary Facilities). No separate payment will be made for associated environmental permitting compliance activities, pumping of water or gravity draining of water through ditches from ponded areas within the limits of work.
3. Select Fill
   a. Description:

1) This unit price represents work associated with backfilling or filling of the impoundment embankment, main pump station, seepage pump station, primary discharge structure, overflow spillway and the project access road.

b. Measurement:

1) The unit of measure for select fill will be in cubic yards (CY) from the neatline of the completed foundation excavation or muck removal to the neatlines of the outer slopes and crest of the embankment or project features on the Drawings including overbuild of the embankment and filling of the existing ditches and canals where specified. The volume of select fill will be computed by the average end area method from cross sections taken before and after the placement of the fill materials. Consecutive cross sections measured for payment shall not be more than 200 LF from the previous surveyed cross section. Any filter media or other materials, such as shellrock, included in each cross section will be subtracted from the volume calculations.

c. Payment:

1) The Contractor shall include all costs associated with development of the select fill such as equipment, materials, labor, borrow, excavation, dewatering, temporary shoring, loading, hauling, stockpiling, placement, moisture conditioning, compaction, shrinkage/swell, foundation settlement, disposal of unsuitable soils, quality control testing, and all other work required to meet these specification requirements in the unit price bid for select fill material.

1.4 LUMP SUM ITEMS

A. Lump Sum Item Description:

1. Above Ground Impoundment Ancillary Facilities

a. Payment includes all costs associated with work not covered by the unit price items identified in paragraph 1.3 of this Section required to complete the work shown on the construction plans and specifications. This item will include, but not be limited to: mobilization, shellrock, concrete, pumps, pre-engineered shelters, metal slide gates, pipes, sod, articulated concrete block mattress, riprap, bedding stone, geotextile fabric, bollards, utility poles, access walkways, electrical appurtenances, weed barriers, maintenance of traffic, erosion and sedimentation controls, permits, remediation of impacted soils (other than that in the Alternate Bid Item), and any other labor, materials and equipment thereof to complete the project as shown on the construction plans and specifications.

1.5 ALTERNATE BID ITEMS

A. Perform clearing and grubbing of Impacted Soil Area #1. The SFWMD will perform testing of Impacted Soil Area #1 to determine if remediation is required. If the area is found to have impacted soils as determined by SFWMD and the Owner, perform remediation of the area.

B. Payment will only be made after written notice to the Contractor that the alternate bid item will be used and work is completed.

C. Payment for the alternate bid item will be made for remediation of the impacted soils in Impacted Soil Area #1 only, as noted in the Drawings and in Specification Section 02205 – Impacted Soils Fill Placement Process. This includes all labor, equipment, and materials for earthwork associated with impacted soils remediation including excavation, transporting, stockpiling, backfilling, disposal, inverting and covering with non-impacted soils, care of water, and erosion and sediment control. Also included in this lump sum item is performance of all compliance surveys required by the remedial methods chosen by the Contractor. For those impacted soils to be remediated using Remedial Method A, not including the unsuitable fill (strippings) from those areas, the unit price item for select fill shall be used for payment.

1.6 APPLICATION FOR PAYMENT

A. Provide Summary Sheets and breakdown sheets equivalent to those of Contractor's Application for Payment forms.

PART 2 - PRODUCTS - (NOT APPLICABLE TO THIS SPECIFICATION SECTION)

PART 3 - EXECUTION - (NOT APPLICABLE TO THIS SPECIFICATION SECTION)

END OF SECTION

SECTION 01340
SUBMITTALS

PART 1 - GENERAL

1.1 SUMMARY

A. Section Includes:
   1. Mechanics and administration of the submittal process for:
      a. Shop Drawings.
      b. Samples.
      c. Informational submittals.
   2. General content requirements for Shop Drawings.

B. Related Specification Sections include but are not necessarily limited to:
   1. Division 00 - Bidding Requirements, Contract Forms, and Conditions of the Contract.
   2. Division 01 - General Requirements.
   3. Technical Specification Sections identifying required submittals.

1.2 DEFINITIONS

A. Shop Drawings:
   1. See General Conditions.
   2. Product data and samples are Shop Drawing information.

B. Informational Submittals:
   1. Submittals other than Shop Drawings and samples required by the Contract Documents that do not require review and/or approval by the Engineer.
   2. Representative types of informational submittal items include but are not limited to:
      a. Concrete compressive strength and in-place moisture density soil test reports.
      b. Installed equipment and systems performance test reports.
      c. Manufacturer's installation certification letters.
      d. Warranties.
      e. Construction photographs.
      f. Survey data.
      g. Health and safety plans.
      h. Work plans.
      i. Delegated designs per performance specification requirements
   3. For-Information-Only submittals upon which the Engineer is not expected to conduct review or take responsive action may be so identified in the Contract Documents.

1.3 SUBMITTAL SCHEDULE

A. Schedule of Shop Drawings:
   1. Submitted and approved within twenty (20) days of receipt of Notice to Proceed (NTP).

B. Shop Drawings: Submittal and approval prior to thirty (30) percent completion of project.

C. Informational Submittals:
   1. Reports and installation certifications submitted within five (5) working days of conducting testing or examination.

D. The submittal schedule shall include the following columns as a minimum:

Submittal Section	Submittal Description	Planned Submittal Date	Submittal Need Date	Actual Submittal Date	Actual Return Date	Disposition

1.4 PREPARATION OF SUBMITTALS

A. General:
   1. All submittals and all pages of all copies of a submittal shall be completely legible.
   2. Submittals which, in the Engineer's sole opinion, are illegible will be returned without review.
   3. Minimize extraneous information for equipment and products not relevant to the submittal.
   4. Contractors or vendors written comments on the submittal drawings shall be in green

B. Shop Drawings, Product Data, and Samples:
   1. Scope of any submittal and letter of transmittal:
      a. Limited to one (1) Specification Section.
      b. Submittals with more than one Specification section included under one letter of transmittal will be rejected.
      c. Do not submit under any Specification Section entitled (in part) "Basic Requirements" unless the product or material submitted is specified, in total, in a "Basic Requirements" Specification Section.
   2. Numbering letter of transmittal:
      a. Include as a prefix the Specification Section number followed by a series number, "-xx", beginning with "01" and increasing sequentially with each additional transmittal for that Specification Section.
      b. If more than one (1) submittal letter of transmittal is provided under any Specification Section, assign consecutive series numbers to subsequent transmittal letters.
   3. Describing transmittal contents:
      a. Provide listing of each component or item in submittal capable of receiving an independent review action.
      b. Identify for each item:
         1) Manufacturer and Manufacturer's Drawing or data number.
         2) Contract Document drawing section /detail or specification paragraph number(s).
         3) Unique page numbers for each page of each separate item.
      c. When submitting "or-equal" items that are not the products of named manufacturers, include the words "or-equal" in the item description.
   4. Contractor certification of review and approval:
      a. Contractor shall execute Exhibit AA, Contractor's Submittal Certification form, to indicate Contractor has reviewed and approved the submittal contents.
         1) Clearly identify the person who reviewed the submittal and the date it was reviewed."
      b. Submittals containing multiple independent items shall be prepared with each item listed on the letter of transmittal or on an index sheet for all items listing the discrete page numbers for each page of each item, which shall be stamped with the Contractor's review and approval stamp.
         1) Each independent item shall have a cover sheet with the transmittal number and item number recorded.
            a) Provide clear space of 3 IN SQ for Engineer stamping.
         2) Individual pages or sheets of independent items shall be numbered in a manner that permits the entire contents of a particular item to be readily recognized and associated with Contractor's certification.
   5. Resubmittals:
      a. Number with original Specification Section and series number with a suffix letter starting with "A" on a (new) duplicate transmittal form.
      b. Do not increase the scope of any prior transmittal.
      c. Provide cover letter indicating how each "B", "C", or "D" Action from previous submittal was addressed and where the correction is found in the resubmittal.
      d. Account for all components of prior transmittal.

1) If items in prior transmittal received "A" or "B" Action code, list them and indicate "A" or "B" as appropriate.
    a) Do not include submittal information for items listed with prior "A" or "B" Action in resubmittal.
2) Indicate "Outstanding-To Be Resubmitted At a Later Date" for any prior "C" or "D" Action item not included in resubmittal.
    a) Obtain Engineer's approval to exclude items.

6. Contractor shall not use red color for marks on transmittals.
    a. Duplicate all marks on all copies transmitted, and ensure marks are photocopy reproducible.
    b. Engineer will use red marks or enclose marks in a cloud.
7. Transmittal contents:
    a. Coordinate and identify Shop Drawing contents so that all items can be easily verified by the Engineer.
    b. Provide submittal information or marks defining specific equipment or materials utilized on the Project.
        1) Generalized product information, not clearly defining specific equipment or materials to be provided, will be rejected.
    c. Identify equipment or material project use, tag number, Drawing detail reference, weight, and other Project specific information.
    d. Provide sufficient information together with technical cuts and technical data to allow an evaluation to be made to determine that the item submitted is in compliance with the Contract Documents.
    e. Do not modify the manufacturer's documentation or data except as specified herein.
    f. Submit items such as equipment brochures, cuts of fixtures, product data sheets or catalog sheets not exceeding 11 x 17 IN pages.
        1) Indicate exact item or model and all options proposed by arrow and leader.
    g. When a Shop Drawing submittal is called for in any Specification Section, include as appropriate, scaled details, sizes, dimensions, performance characteristics, capacities, test data, anchoring details, installation instructions, storage and handling instructions, color charts, layout Drawings, rough-in diagrams, wiring diagrams, controls, weights and other pertinent data in addition to information specifically stipulated in the Specification Section.
        1) Arrange data and performance information in format similar to that provided in Contract Documents.
        2) Provide, at minimum, the detail specified in the Contract Documents.
    h. If proposed equipment or materials deviate from the Contract Drawings or Specifications in any way, clearly note the deviation and justify the said deviation in detail in a separate letter immediately following transmittal sheet. Any deviation from plans or specifications not depicted in the submittal or included but not clearly noted by the Contractor may not have been reviewed. Review by the Engineer shall not serve to relieve the Contractor of the contractual responsibility for any error or deviation from contract requirements.
8. Samples:
    a. Identification:
        1) Identify sample as to transmittal number, manufacturer, item, use, type, project designation, tag number, Specification Section or Drawing detail reference, color, range, texture, finish and other pertinent data.
        2) If identifying information cannot be marked directly on sample without defacing or adversely altering samples, provide a durable tag with identifying information securely attached to the sample.
    b. Include application specific brochures, and installation instructions.
    c. Provide Contractor's review and approval certification stamp or Contractor's Submittal Certification form as indication of Contractor's checking and verification of dimensions and coordination with interrelated work.
    d. Resubmit revised samples of rejected items.

C. Informational Submittals:
   1. Prepare in the format and detail specified in Specification requiring the informational submittal.

1.5 TRANSMITTAL OF SUBMITTALS

A. Shop Drawings and Samples:
   1. Transmit all submittals to:

      Clell Ford, Lakes Manager
      Highlands County Parks and Natural Resources
      Highlands County Board of County Commissioners
      4344 George Blvd.
      Sebring, FL 33875

   2. Utilize two (2) copies of attached Exhibit A to transmit all Shop Drawings and samples.
   3. All submittals must be from Contractor.
      a. Submittals will not be received from or returned to subcontractors.

B. Informational Submittals:
   1. Transmit under Contractor's standard letter of transmittal or letterhead.
   2. Submit in triplicate or as specified in individual Specification Section.
   3. Transmit to:

      Clell Ford, Lakes Manager
      Highlands County Parks and Natural Resources
      Highlands County Board of County Commissioners
      4344 George Blvd.
      Sebring, FL 33875

C. Electronic Transmission of Submittals:
   1. Transmittals shall be made electronically.
      a. Use email.
      b. Protocols and processes will be determined at the Pre-Construction Conference.
   2. Provide documents in Adobe Acrobat Portable Document Format (PDF), latest version.
   3. Create one (1) PDF file for each equipment Operation and Maintenance Manual.
   4. Do not password protect or lock the PDF document.
   5. Drawings or other graphics must be converted to PDF file format from the original drawing file format and made part of the PDF document.
      a. Scanning of drawings is to be used only where actual file conversion is not possible and drawings must be scanned at a resolution of 300 dpi or greater.
      b. Required signatures may be applied prior to scanning for transmittal.
   6. Electronic drawings shall be formatted to be at full-scale (or half-scale when printed to 11x17).
      a. Do not reduce drawings by more than 50% in size.
      b. Reduced drawings shall be clearly marked "HALF-SIZE" and shall scale accurately at that size.
   7. Rotate sheets that are normally viewed in landscape mode so that when the PDF file is opened the sheet is in the appropriate position for viewing.
   8. Create bookmarks in the bookmarks panel for the Operation and Maintenance Manual cover, the Table of Contents and each major section of the Table of Contents.
   9. Using Adobe Acrobat Standard or Adobe Acrobat Professional, set the PDF document properties, initial view as follows:
      a. Select File →Properties→Initial View.
      b. Select the Navigation tab: Bookmarks Panel and Page.
      c. Select the Page layout: Single Page.
      d. Select the Magnification: Fit Page.
      e. Select Open to page: 1.

f. Set the file to open to the cover page with bookmarks to the left, and the first bookmark linked to the cover page.

10. Set the PDF file "Fast Web View" option to open the first several pages of the document while the rest of the document continues to load.
    a. To do this:
        1) Select Edit→Preferences→ Documents→Save Settings.
        2) Check the Save As optimizes for Fast Web View box.
11. File naming conventions:
    a. File names shall use a "ten dot three" convention (XXXXXX-YY-Z.PDF) where XXXXXX is the Specification Section number, YY is the Shop Drawing Root number and Z is an ID number used to designate the associated volume.
12. Labeling:
    a. As a minimum, include the following labeling on all CD-ROM discs and jewel cases:
        1) Project Name.
        2) Equipment Name and Project Tag (Section/Detail) Number.
        3) Project Specification Section.
        4) Manufacturer Name.
        5) Vendor Name.
13. Binding:
    a. Include labeled CD(s) in labeled jewel case(s).
        1) Bind jewel cases in standard three-ring binder Jewel Case Page(s), inserted at the front of the Final paper copy submittal.
        2) Jewel Case Page(s) to have means for securing Jewel Case(s) to prevent loss (e.g., flap and strap).

1.6 ENGINEER'S REVIEW ACTION

A. Shop Drawings and Samples:
1. Items within transmittals will be reviewed for overall design intent and will receive one (1) of the following actions:
    a. A - FURNISH AS SUBMITTED.
    b. B - FURNISH AS NOTED (BY ENGINEER).
    c. C - REVISE AND RESUBMIT.
    d. D - REJECTED.
    e. E - ENGINEER'S REVIEW NOT REQUIRED.
2. Submittals received will be initially reviewed to ascertain inclusion of Contractor's approval stamp.
    a. Submittals not stamped by the Contractor, stamped with a stamp containing language other than that specified herein, or the Contractor’s Submittal Certification Form will not be reviewed for technical content and will be returned rejected.
3. In relying on the representation on the Contractor’s review and approval stamp, Owner and Engineer reserve the right to review and process poorly organized and poorly described submittals as follows:
    a. Submittals transmitted with a description identifying a single item and found to contain multiple independent items:
        1) Review and approval will be limited to the single item described on the transmittal letter.
        2) Other items identified in the submittal will:
            a) Not be logged as received by the Engineer.
            b) Be removed from the submittal package and returned without review and comment to the Contractor for coordination, description and stamping.
            c) Be submitted by the Contractor as a new series number, not as a re-submittal number.
    b. Engineer, at Engineer’s discretion, may revise the transmittal letter item list and descriptions, and conduct review.

1) Unless Contractor notifies Engineer in writing that the Engineer's revision of the transmittal letter item list and descriptions was in error, Contractor's review and approval stamp will be deemed to have applied to the entire contents of the submittal package.

4. Submittals returned with Action "A" or "B" are considered ready for fabrication and installation.
   a. If for any reason a submittal that has an "A" or "B" Action is resubmitted, it must be accompanied by a letter defining the changes that have been made and the reason for the resubmittal.
   b. Destroy or conspicuously mark "SUPERSEDED" all documents having previously received "A" or "B" Action that are superseded by a resubmittal.
5. Submittals with Action "A" or "B" combined with Action "C" (Revise and Resubmit) or "D" (Rejected) will be individually analyzed giving consideration as follows:
   a. The portion of the submittal given "C" or "D" will not be distributed (unless previously agreed to otherwise at the Preconstruction Conference).
      1) One (1) copy or the one (1) transparency of the "C" or "D" Drawings will be marked up and returned to the Contractor.
         a) Correct and resubmit items so marked.
   b. Items marked "A" or "B" will be fully distributed.
   c. If a portion of the items or system proposed are acceptable, however, the major part of the individual Drawings or documents are incomplete or require revision, the entire submittal may be given "C" or "D" Action.
      1) This is at the sole discretion of the Engineer.
      2) In this case, some Drawings may contain relatively few or no comments or the statement, "Resubmit to maintain a complete package."
      3) Distribution to the Owner and field will not be made (unless previously agreed to otherwise).
6. Failure to include any specific information specified under the submittal paragraphs of the Specifications will result in the submittal being returned to the Contractor with "C" or "D" Action.
7. Calculations required in individual Specification Sections will be received for information purposes only, as evidence calculations have been stamped by the professional as defined in the specifications and for limited purpose of checking conformance with given performance and design criteria. The Engineer is not responsible for checking the accuracy of the calculations and the calculations will be returned stamped "E. Engineer's Review Not Required" to acknowledge receipt.
8. Contractor shall furnish required submittals with sufficient information and accuracy to obtain required approval of an item with no more than three submittals. Engineer will record Engineer's time for reviewing a fourth or subsequent submittal of a Shop Drawings, sample, or other item requiring approval, and Contractor shall be responsible for Engineer's charges to Owner for such time. Owner may impose a set-off against payments due to Contractor to secure reimbursement for such charges.
9. Transmittals of submittals which the Engineer considers as "Not Required" submittal information, which is supplemental to but not essential to prior submitted information, or items of information in a transmittal which have been reviewed and received "A" or "B" action in a prior submittal, will be returned with action "E. Engineer's Review Not Required."
10. Samples may be retained for comparison purposes.
    a. Remove samples when directed.
    b. Include in bid all costs of furnishing and removing samples.
11. Approved samples submitted or constructed, constitute criteria for judging completed work.
    a. Finished work or items not equal to samples will be rejected.

PART 2 - PRODUCTS - (NOT APPLICABLE TO THIS SPECIFICATION SECTION)

PART 3 - EXECUTION - (NOT APPLICABLE TO THIS SPECIFICATION SECTION)

END OF SECTION

EXHIBIT A

Shop Drawing Transmittal No.

_____ - _____

(Spec Section) (Series)

Project Name:		Date Received:	
Project Owner:		Checked By:	
Contractor:	HDR Engineering, Inc.	Log Page:	
Address:	Address:	HDR No.:	
		Spec Section:	
		Drawing/Detail No.:	
Attn:	Attn:	1st. Sub	ReSub.
Date Transmitted:	Previous Transmittal Date:		

Item No.	No. Copies	Description	Manufacturer	Mfr/Vendor Dwg or Data No.	Action Taken*

Remarks:

* The Action designated above is in accordance with the following legend:

A - Furnish as Submitted

B - Furnish as Noted

C - Revise and Submit
1. Not enough information for review.
2. No reproducibles submitted.
3. Copies illegible.
4. Not enough copies submitted.
5. Wrong sequence number.
6. Wrong resubmittal number.
7. Wrong spec. section.
8. Wrong form used.
9. See comments.

D - Rejected

E - Engineer's review not required
1. Submittal not required.
2. Supplemental Information. Submittal retained for informational purposes only.
3. Information reviewed and approved on prior submittal.
4. See comments.
5. Delegated Design - Submittal received as requested by the Contract Documents. The Engineer did not review the engineering or technical content of the submittal.

Engineer's review and approval will be only to determine if the items covered by the submittals will, after installation or incorporation in the Work, conform to the information given in the Contract Documents and be compatible with the design concept of the completed Project as a functioning whole as indicated by the Contract Documents. Any deviation from plans or specifications not depicted in the submittal or included but not clearly noted by the Contractor may not have been reviewed. Review by the Engineer shall not serve to relieve the Contractor of the contractual responsibility for any error or deviation from contract requirements.

Comments:

By Date

Distribution: Contractor | File | Field | Owner | Other

1

1

EXHIBIT AA

Contractor's Submittal Certification

Shop Drawing Transmittal No.: _____

Contract/Project Name: _____

_____

Company Name: _____

has

1. reviewed and coordinated this Shop Drawing or Sample with other Shop Drawings and Samples and with the requirements of the Work and the Contract Documents;

2. determined and verified all field measurements, quantities, dimensions, specified performance and design criteria, installation requirements, materials, catalog numbers, and similar information with respect thereto;

3. determined and verified the suitability of all materials offered with respect to the indicated application, fabrication, shipping, handling, storage, assembly, and installation pertaining to the performance of the Work; and

4. determined and verified all information relative to Contractor's responsibilities for means, methods, techniques, sequences, and procedures of construction, and safety precautions and programs incident thereto.

☐ This Submittal **does not** contain any variations from the requirements of the Contract Documents.

☐ This Submittal **does** contain variations from the requirements of the Contract Documents. A separate description of said variations and a justification for them is provided in an attachment hereto identified as:

"Shop Drawing Transmittal No. _____Variation and Justification Documentation"

Insert picture file or electronic signature of Authorized Representative

_____ _____

Authorized Representative Date

Revision Log

2

SECTION 01510
TEMPORARY UTILITIES AND HAUL AND ACCESS ROADS

PART 1 - GENERAL

1.1 SUMMARY:

A. This SECTION includes requirements of a temporary nature not normally incorporated into final WORK. It includes the following:
   1. Utility services
   2. Construction and support facilities
   3. Construction aids

B. Related Work Specified Elsewhere:
   1. SECTION 01050 Field Engineering and Surveying
   2. SECTION 01340 Submittals

1.2 APPLICABLE STANDARDS AND PUBLICATIONS:

A. Standards or Codes: The edition of the publications of the organizations listed below in effect at the time of the advertisement for bids form a part of this specification to the extent referenced. See the various paragraphs for the specified standard. In the case of a conflict between the requirements of this SECTION and those of the listed document, the requirements of this SECTION shall prevail.
   1. American National Standards Association (ANSI):
      a. A10 Series - Safety Requirements for Construction and Demolition
      b. ANSI/ASME PTC 19.1-1998 Test Uncertainty, Instrument and Apparatus
   2. National Electrical Contractors Association (NECA):
      a. Electrical Design Library - Temporary Electrical Facilities
   3. National Fire Protection Association (NFPA):
      a. NFPA 10 - Portable Fire Extinguishers
      b. NFPA 70 - National Electrical Code
      c. NFPA 241 - Safeguarding Construction, Alterations, and Demolition Operations
   4. National Electrical Manufacturers Association (NEMA)
   5. Underwriters Laboratories (UL)
   6. Florida Department of Transportation Standard Specifications for Road and Bridge Construction
   7. Florida Trench Safety Act (90-96, Laws of Florida)

1.3 SUBMITTALS:

A. Submit in accordance with SECTION 01340.

B. Access Road Survey in accordance with SECTION 01050.

C. Site Plan: Submit to the County for review and approval, a Site Plan indicating Contractor's facilities including:
   1. Trailers
   2. Equipment Yard
   3. Parking
   4. Traffic Control

1.4 QUALITY ASSURANCE:

A. Regulations: Comply with industry standards and applicable laws and regulations of authorities having jurisdiction, including but not limited to:
   1. Building Code requirements
   2. Utility company regulations
   3. Environmental protection regulations

B. Standards:
   1. Comply with NFPA 10 and 241, and ANSI A10 Series standards "Temporary Electrical Facilities."
   2. Comply with NEMA, NECA, and UL standards and regulations for temporary electric service. Install service in compliance with NFPA 70.

C. Inspections: Arrange for authorities having jurisdiction to inspect and test each temporary utility before use. Obtain required certifications and permits and submit copies to the County.

PART 2 - PRODUCTS

2.1 MATERIALS AND EQUIPMENT:

A. Provide new materials and equipment. If acceptable to the County, undamaged previously used materials and equipment in serviceable condition may be used. Provide materials and equipment suitable for the use intended, of capacity for required usage, and meeting applicable codes and standards. Comply with requirements of Divisions 2 through 16.

B. Electrical Power Cords: Provide grounded extension cords. Use hard-service cords where exposed to abrasion and traffic. Provide waterproof connectors to connect separate lengths of electric cords if single lengths will not reach areas where construction activities are in progress. Do not exceed safe length-voltage ratio.

C. Lamps and Light Fixtures: Provide general service incandescent lamps of wattage required for adequate illumination. Provide guard cages or tempered-glass enclosures where exposed to breakage. Provide exterior fixtures where exposed to moisture.

D. Fire Extinguishers: Provide hand-carried, portable, UL-rated, Class A fire extinguishers for temporary offices and similar spaces. In other locations, provide hand-carried, portable, UL-rated, Class ABC, dry-chemical extinguishers or a combination of extinguishers of NFPA-recommended classes for the exposures. Comply with NFPA 10 and NFPA 241 for classification, extinguishing agent, and size required by location and class of fire exposure.

PART 3 - EXECUTION

2.1 TEMPORARY UTILITIES:

A. General:
   1. Engage the appropriate local utility company to continue existing temporary electric service to the Project area from nearby existing utilities.
   2. Provide adequate utility capacity at each stage of construction. Prior to availability of temporary utilities at the Site, or in remote areas without services, provide trucked-in services as required for start-up and construction operations.
   3. Maintain temporary utilities required for adequate construction, safety and security. Modify, relocate and extend systems as work progresses. Repair damage caused by installation or use of temporary facilities. Grade the areas of Site affected by temporary installations to required elevations and grades, and clean the area. Remove on completion of work or until service or facilities are no longer needed or are replaced by authorized use of completed permanent facilities.
   4. The types of temporary construction utilities and facilities required include, but are not limited to, drainage, dewatering equipment, enclosure of work, ventilation, electrical power, lighting, hoisting facilities, stairs, ladders, and roads.
   5. Inspect and test each service before placing temporary utilities in use. Arrange for required inspections and tests by governing authorities, and obtain required certifications and permits for use.
   6. Materials used for temporary service shall not be used in the permanent system unless so specified or acceptable to the County.

3.2 TEMPORARY ELECTRICITY AND LIGHTING:

A. New Service:
   1. Arrange with utility company to extend existing electric service to Contractor's temporary office trailers as necessary.
   2. Connect temporary service in a manner directed by utility company officials. Provide separate meter for metering of power used by all entities authorized to be at or perform work at the Project Site.
   3. The electric service shall be of sufficient capacity and characteristics for the various construction tools, machinery, lights, heating and air conditioning, pumps, and other tools required by Contractor and his Subcontractors. In areas of the Project where permanent or temporary power service from the local utility is not available, the Contractor shall supply and maintain engine-driven, power-generator sets.
   4. Provide weatherproof, grounded, power distribution system sufficient to accommodate construction operations requiring power, use of power tools, electrical heating and lighting. Provide overload protection. Supply power for electric welding, if any, from engine-driven, power-generator sets.
   5. Provide adequate artificial lighting for all areas of work when natural light is not adequate for work.
   6. Sufficient light shall be provided for general construction areas, with additional sufficient lighting for specific tasks and to meet safety requirements.

B. Use of Permanent System:
   1. Prior to use of permanent system installed by the power company for construction purposes, obtain written permission of the County.
   2. Maintain permanent system as specified for temporary facilities.

C. Costs of Installation and Operation:
   1. Pay fees and charges for permits and applications.
   2. Pay costs of installation, maintenance, removal of temporary services, and restoration of any permanent facilities used.
   3. Pay costs of electrical power used (if applicable).
   4. Pay costs of furnishing, operating, and maintaining engine-driven power-generator sets, where applicable.

3.3 TEMPORARY HEAT AND VENTILATION:

A. General:
   1. Provide temporary heat, ventilation and cooling as required to maintain adequate environmental conditions in the Contractor's temporary office trailers and storage sheds, if any, and to facilitate progress of the work, to meet specified minimum conditions for the installation of materials, and to protect materials and finishes from damage. Protect from adverse affects of low temperatures or high humidity, and prevent hazardous accumulations of dust, fumes, vapors, or gases.
   2. Methods of heating and fuel shall be suitable for particular purposes. Portable heaters shall be standard approved units with controls.

B. Costs of Installation and Operation:
   1. Pay fees and charges for applications, permits, and inspections.
   2. Pay costs of installation, operation, maintenance, removal of equipment, and restoration of existing or permanent facilities if used.
   3. Pay cost of power and fuel used.

3.4 TEMPORARY TELEPHONE SERVICE:

A. General:
   1. If required by the Contractor, arrange with the local telephone service company to provide direct line telephone service to the Contractor's field office site for the use of the construction personnel and employees.

2. Telephone Service: Local Provider.
3. Minimum Service Required:
   a. As required by the Contractor.
4. Contractor shall arrange with a cellular/mobile telephone service company to provide mobile telephone service for use by Contractor and so Contractor can be reached throughout the entire Project area during normal working hours.

B. Costs of Installation and Operation:
   1. Pay all costs for installation, maintenance and removal, and service charges for all calls.

3.5 TEMPORARY SANITARY FACILITIES:

A. CONTRACTOR-Furnished Facilities:
   1. Furnish, install and maintain temporary sanitary facilities for use through construction period. Remove on completion of work.
   2. Provide temporary sanitary facilities for all construction workers under this Contract and representatives at the Site.
   3. Toilet facilities shall be of the chemical-aerated recirculation or combustion type, properly vented and fully enclosed with a glass- fiber-reinforced polyester shell or similar nonabsorbent material.

3.6 TEMPORARY CONSTRUCTION AIDS:

A. General:
   1. Provide construction aids and equipment required by personnel, available for County observers' use, and to facilitate the execution of the work; scaffolds, staging, ladders, stairs, ramps, runways, platforms, railings, hoists, cranes, chutes, and other such facilities and equipment.
   2. Materials may be new or used, must be suitable for the intended purpose and meet the requirements of applicable codes, regulations and standards.
   3. When platform stair framing is in place, provide temporary treads, platforms, and railings for use by construction personnel.

3.7 HAUL AND ACCESS ROADS:

A. Access Roads are roads used to get to the Project site and include ingress and egress of the initial delivery and removal of equipment and materials. Haul Roads are internal to the project boundary as constructed by the Contractor and are utilized for the movement of equipment and material once received onsite.

B. The Contractor shall, at its own expense, construct access and haul roads necessary for proper prosecution of the work under this Contract. Haul roads shall be constructed with suitable grades and widths; sharp curves, blind corners, and dangerous cross traffic shall be avoided. The Contractor shall provide necessary lighting, signs, barricades, and distinctive markings for the safe movement of traffic. The method of dust control shall be adequate to ensure safe operation at all times. Locations, grade, width, and alignment of construction access and hauling roads shall be subject to approval by the County. Lighting shall be adequate to assure full and clear visibility for full width of haul road and work areas during any night work operations. Upon completion of the work and as directed by the County, remove and dispose of portions of any Contractor constructed access and haul roads that do not meet the lines and grades of the Contract Drawings. The County will require removal of road segments which, in their determination, impede proper function or maintenance of the permanent project features; adversely impact local stormwater drainage; or adversely impact environmentally sensitive areas. The access and haul road portions removed shall be graded to approximately match the lines and grades of the Contract Drawings.

C. Whenever practical, one-way haul roads shall be used on this Contract. Haul roads built and maintained for this work shall comply with the following:

1. One-way haul roads for off-the-road equipment; e.g., belly dumps, scrapers, and off-the-road trucks shall have a minimum usable width or twenty-five (25) feet.
2. One-way haul roads for over-the-road haulage equipment only (e.g., dump trucks, etc.) may be reduced to a usable width or fifteen (15) feet provided a positive means of traffic control is implemented. Such positive means shall be signs, signals, and/or signalman and an effective means of speed control.

D. Two-way haul roads for off-the-road haulage equipment shall have a usable width of sixty (60) feet. Two-way haul roads for over-the-road haulage equipment only may be reduced to a usable width of thirty (30) feet.

E. Haul roads shall be upgraded and otherwise maintained to keep the surface free from potholes, ruts, and similar conditions that could result in unsafe operation.

F. Grades and curves shall allow a minimum sight distance of two hundred (200) feet for one-way roads and three hundred (300) feet for two-way roads. Sight distance defined as the centerline distance an equipment operator (4.5 feet above the road surface) can see an object 4.5 feet above the road surface. When conditions make it impractical to obtain the required sight distance (e.g., ramps over levees), a positive means of traffic control, indicated above, shall be implemented.

G. Dust abatement shall permit observation of objects on the roadway at a minimum distance of three hundred (300) feet.

H. Haul roads shall have the edges of the usable portion marked with posts at intervals of fifty (50) feet on curves and two hundred (200) feet maximum elsewhere. Such marker shall extend six (6) feet above the road surface, and for nighttime haulage, when applicable, be provided with reflectors in both directions.

I. An access road survey is required by the Contractor prior to using any road in the project (pre-construction activity survey). Equally the Contractor shall provide an access road survey before project completion.
   1. The pre and post construction activity access road survey is for the purpose of verifying that each road is maintained at all times in the same or better condition than it was prior to the Contractor being allowed to utilize each road and that each road is returned to the County or appropriate property owner in the same or better condition than it was prior to the Contractor being allowed to utilize each road.
      a. The Contractor shall provide the following pre- and post-construction surveys by a licensed surveyor:
         1) Cross sections every 500 feet for the entire length of that roadway.
      b. The Contractor shall provide photographs along the full length of the road in accordance with specification 01340, Submittals.
      c. Any fill added to the dirt road to return the road to pre-construction conditions shall match the existing road materials as determined by the owner.

J. All roads on site shall be maintained in a drivable condition for a maximum speed of 25 miles per hour. The objective of grading the roads is to maintain roads to the proper shape and surface condition to promote rideability, good drainage, and low future maintenance costs. When grading the roads, maintain the crown and drainage and rock or debris will not be pushed off the roadway. All equipment must be properly maintained, adjusted and operated in order to achieve a smooth road surface. Any equipment left on the roadway unattended shall be parked as far from the waters' edge as possible without blocking the roadway. All equipment will be secured in a manner that will prevent its movement by unauthorized personnel.
   1. The grader must have a minimum blade width of 14 feet; and a minimum horse power of 155 @ 2180 rpm. The grader blades must be well maintained to ensure a smooth grading surface. All grading equipment shall be provided with safety appurtenances.

2. The Contractor shall use the proper blade and pitch settings for the grader to prevent loss of aggregate road material. The Contractor shall maintain a safe, effective speed so that the grader does not bounce causing the blade to move up and down and creating a "washboard" surface.

3.8 INSTALLATION AND REMOVAL:

A. Relocation: Relocate construction aids as required by progress of construction, by storage or work requirements, and to accommodate requirements of County and other contractors at the Site.

B. Removal: Remove temporary materials, equipment and services when construction needs can be met and allowed by use of permanent construction, or at completion of the Project.

C. Repair: Clean and repair damage caused by installation or by use of temporary facilities.
   1. Remove foundations and underground installations for construction aids.
   2. Grade and stabilize the areas of the Site affected by temporary installations to required elevations and clean the area.

END OF SECTION

SECTION 01560
ENVIRONMENTAL PROTECTION AND SPECIAL CONTROLS

PART 1 - GENERAL

1.1 SUMMARY

A. Section Includes:
   1. Minimizing the pollution of air, water, or land; control of noise, the disposal of solid waste materials, and protection of deposits of historical or archaeological interest.

B. Related Specification Sections include but are not necessarily limited to:
   1. Division 00 - Bidding Requirements, Contract Forms, and Conditions of the Contract.
   2. Division 01 - General Requirements.

1.2 SUBMITTALS

A. Shop Drawings:
   1. See Specification Section 01340 for requirements for the mechanics and administration of the submittal process.
   2. Prior to the start of any construction activities submit:
      a. A detailed proposal of all methods of control and preventive measures to be utilized for environmental protection.
      b. A drawing of the work area, haul routes, storage areas, access routes and current land conditions including trees and vegetation.
      c. A copy of the NPDES permit for storm water discharges from construction activities.
      d. A copy of the approved pollution prevention plan.

PART 2 - PRODUCTS - (NOT APPLICABLE TO THIS SPECIFICATION SECTION)

PART 3 - EXECUTION

3.1 INSTALLATION

A. Employ and utilize environmental protection methods, obtain all necessary permits, and fully observe all local, state, and federal regulations.

B. Land Protection:
   1. Except for any work or storage area and access routes specifically assigned for the use of the Contractor, the land areas outside the limits of construction shall be preserved in their present condition.
      a. Contractor shall confine his construction activities to areas defined for work within the Contract Documents.
   2. Manage and control all borrow areas, work or storage areas, access routes and embankments to prevent sediment from entering nearby water or land adjacent to the work site.
   3. Restore all disturbed areas including borrow and haul areas and establish permanent type of locally adaptable vegetative cover.
   4. Unless earthwork is immediately paved or surfaced, protect all side slopes and backslopes immediately upon completion of final grading.
   5. Plan and execute earthwork in a manner to minimize duration of exposure of unprotected soils.
   6. Except for areas designated by the Contract Documents to be cleared and grubbed, the Contractor shall not deface, injure or destroy trees and vegetation, nor remove, cut, or disturb them without approval of the Engineer.
      a. Any damage caused by the Contractor's equipment or operations shall be restored as nearly as possible to its original condition at the Contractor's expense.

C. Surface Water Protection:
   1. Utilize, as necessary, erosion control methods to protect side and backslopes, minimize and the discharge of sediment to the surface water leaving the construction site as soon as rough grading is complete.
      a. These controls shall be maintained until the site is ready for final grading and landscaping or until they are no longer warranted and concurrence is received from the Engineer.
      b. Physically retard the rate and volume of run-on and runoff by:
         1) Implementing structural practices such as diversion swales, terraces, straw bales, silt fences, berms, storm drain inlet protection, rocked outlet protection, sediment traps and temporary basins.
         2) Implementing vegetative practices such as temporary seeding, permanent seeding, mulching, sod stabilization, vegetative buffers, hydroseeding, anchored erosion control blankets, sodding, vegetated swales or a combination of these methods.
         3) Providing Construction sites with graveled or rocked access entrance and exit drives and parking areas to reduce the tracking of sediment onto public or private roads.
   2. Discharges from the construction site shall not contain pollutants at concentrations that produce objectionable films, colors, turbidity, deposits or noxious odors in the receiving stream or waterway.

D. Solid Waste Disposal:
   1. Collect solid waste on a daily basis.
   2. Provide disposal of degradable solid waste to an approved solid waste disposal site.
   3. Provide disposal of nondegradable solid waste to an approved solid waste disposal site or in an alternate manner approved by Engineer and regulatory agencies.
   4. No building materials wastes or unused building materials shall be buried, dumped, or disposed of on the site.

E. Fuel and Chemical Handling:
   1. Store and dispose of chemical wastes in a manner approved by regulatory agencies.
   2. Take special measures to prevent chemicals, fuels, oils, greases, herbicides, and insecticides from entering drainage ways.
   3. Do not allow water used in onsite material processing, concrete curing, cleanup, and other waste waters to enter a drainage way(s) or stream.
   4. The Contractor shall provide containment around fueling and chemical storage areas to ensure that spills in these areas do not reach waters of the state.

F. Control of Dust:
   1. The control of dust shall mean that no construction activity shall take place without applying all such reasonable measures as may be required to prevent particulate matter from becoming airborne so that it remains visible beyond the limits of construction.
      a. Reasonable measures may include paving, frequent road cleaning, planting vegetative groundcover, application of water or application of chemical dust suppressants.
      b. The use of chemical agents such as calcium chloride must be approved by the FDEP and/or FDOT.
   2. Utilize methods and practices of construction to eliminate dust in full observance of agency regulations.
   3. The Engineer will determine the effectiveness of the dust control program and may request the Contractor to provide additional measures, at no additional cost to Owner.

G. Burning:
   1. Burning, if approved by the County per the Contract Documents, shall conform to all agency and County regulations.

H. Control of Noise:
   1. Control noise by fitting equipment with appropriate mufflers.

I. Completion of Work:
   1. Upon completion of work, leave area in a clean, natural looking condition.
   2. Ensure all signs of temporary construction and activities incidental to construction of required permanent work are removed.

J. Historical Protection:
   1. If during the course of construction, evidence of deposits of historical or archaeological interests is found, cease work affecting find and notify Engineer.
      a. Do not disturb deposits until written notice from Engineer is given to proceed.
   2. The Contractor will be compensated for lost time or changes in construction to avoid the find based upon normal change order procedures.

END OF SECTION

SECTION 01640
PRODUCT SUBSTITUTIONS

PART 1 - GENERAL

1.1 SUMMARY

A. Section Includes:
   1. The procedure for requesting the approval of substitution of a product that is not equivalent to a product which is specified by descriptive or performance criteria or defined by reference to one or more of the following:
      a. Name of manufacturer.
      b. Name of vendor.
      c. Trade name.
      d. Catalog number.
   2. Substitutions are not "or-equals."
   3. This Specification Section does not address substitutions for major equipment.

B. Related Specification Sections include but are not necessarily limited to:
   1. Division 00 - Bidding Requirements, Contract Forms, and Conditions of the Contract.
   2. Division 01 - General Requirements.

C. Request for Substitution - General:
   1. Base all bids on materials, equipment, and procedures specified.
   2. Certain types of equipment and kinds of material are described in specifications by means of references to names of manufacturers and vendors, trade names, or catalog numbers.
      a. When this method of specifying is used, it is not intended to exclude from consideration other products bearing other manufacturer's or vendor's names, trade names, or catalog numbers, provided said products are "or-equals," as determined by Engineer.
   3. Other types of equipment and kinds of material may be acceptable substitutions under the following conditions:
      a. Or-equals are unavailable due to strike, discontinued production of products meeting specified requirements, or other factors beyond control of Contractor; or,
      b. Contractor proposes a cost and/or time reduction incentive to the Owner.

1.2 QUALITY ASSURANCE

A. In making requests for substitutions or in using an approved product, Contractor represents they:
   1. Have investigated proposed product, and have determined that it is adequate or superior in all respects to that specified, and that it will perform function for which it is intended.
   2. Will provide same guarantee for substitute item as for product specified.
   3. Will coordinate installation of accepted substitution into Work, to include building modifications if necessary, making such changes as may be required for Work to be complete in all respects.
   4. Waives all claims for additional costs related to substitution which subsequently arise.

1.3 DEFINITIONS

A. Product: Manufactured material or equipment.

1.4 PROCEDURE FOR REQUESTING SUBSTITUTION

A. Substitution shall be considered only:
   1. After Award of Contract.
   2. Under the conditions stated herein.

B. Written request through Contractor only.

C. Transmittal Mechanics:

1. Follow the transmittal mechanics prescribed for Shop Drawings in Specification Section 01340.
    a. Product substitution will be treated in a manner similar to "deviations," as described in Specification Section 01340.
    b. List the letter describing the deviation and justifications on the transmittal form in the space provided under the column with the heading DESCRIPTION.
        1) Include in the transmittal letter, either directly or as a clearly marked attachment, the items listed in Paragraph D below.

D. Transmittal Contents:
1. Product identification:
    a. Manufacturer's name.
    b. Telephone number and representative contact name.
    c. Specification Section or Drawing reference of originally specified product, including discrete name or tag number assigned to original product in the Contract Documents.
2. Manufacturer's literature clearly marked to show compliance of proposed product with Contract Documents.
3. Itemized comparison of original and proposed product addressing product characteristics including but not necessarily limited to:
    a. Size.
    b. Composition or materials of construction.
    c. Weight.
    d. Electrical or mechanical requirements.
    e. Engineering Properties.
4. Product experience:
    a. Location of past projects utilizing product.
    b. Name and telephone number of persons associated with referenced projects knowledgeable concerning proposed product.
    c. Available field data and reports associated with proposed product.
5. Data relating to changes in construction schedule.
6. Data relating to changes in cost.
7. Samples:
    a. At request of Engineer.
    b. Full size if requested by Engineer.
    c. Held until substantial completion.
    d. Engineer not responsible for loss or damage to samples.

1.5 APPROVAL OR REJECTION

A. Written approval or rejection of substitution will be given by the Engineer.

B. In the event the substitution is approved, the resulting cost and/or time reduction will be documented by Change Order in accordance with the General Conditions.

C. Substitution will be rejected if:
1. Submittal is not through the Contractor with his stamp of approval.
2. Request is not made in accordance with this Specification Section.
3. In the Engineer's opinion, acceptance will require substantial revision of the original design.
4. In the Engineer's opinion, substitution will not perform adequately the function consistent with the design intent.

D. Contractor shall reimburse Owner for the cost of Engineer's evaluation whether or not substitution is approved.

PART 2 - PRODUCTS - (NOT APPLICABLE TO THIS SPECIFICATION SECTION)

PART 3 - EXECUTION - (NOT APPLICABLE TO THIS SPECIFICATION SECTION)

END OF SECTION

EXHIBIT A

Substitution Request Form
(One Item per each Form)

Project:		Date:
Substitution Requestor:		
Contractor:		
Specification Section No:	Paragraph No. (i.e. 2.1.A.1.c):	Specified Item:
Proposed Substitution:		

Provide Product Data Sheets, Manufacturer's written installation instructions, drawings, diagrams, or any other information as an attached to this Form that will demonstrate the proposed substitution is an Approved Equal.

In the lines provided state differences between proposed substitutions and specified item. Differences include but are not limited to interrelationship with other items; materials, equipment, function, utility, life cycle costs, applied finished, appearances, and quality.

_____
_____
_____

In the lines provided demonstrate how the proposed substitution is compatible with or modifies other systems, parts, equipment or components of the Project and Work under the Contract
:

_____
_____
_____

In the lines provided, describe what effect the proposed substitution has on dimensions indicated on the Drawings and previously reviewed Shop Drawings?

_____
_____
_____

In the lines provided, describe what effect the proposed substitution has on the Construction Schedule and Contract Time.

_____
_____
_____

In the lines provided, describe what effect the proposed substitution has on the Contract Price. This includes all direct, indirect, impact and delay costs.

_____
_____
_____

Manufacturer's guarantees of the proposed and specified items are:

☐ Same ☐ Different (explain on attachment)

The undersigned state that the function, utility, life cycle costs, applied finishes, appearance and quality of the proposed substitution are equal or superior to those of the specified item.

For use by Project Representative:

☐ Accepted ☐ Accepted as Noted

☐ Not Accepted ☐ Received Too Late

_____ *(Contractor's Signature)*

_____ *(Contractor's Firm)*

_____ *(Date)*

_____ *(Firms Address)*

_____ *(Telephone)*

Comments:

_____
_____
_____

1

SECTION 02072
DEMOLITION

PART 1 - GENERAL

1.1 SUMMARY

A. Section Includes:
   1. Demolition where shown on Drawings, as required to accommodate new work shown or specified.
   2. Removal and protection of items identified to be saved or reused.

B. Related Specification Sections include but are not necessarily limited to:
   1. Division 00 - Bidding Requirements, Contract Forms, and Conditions of the Contract.
   2. Division 01 - General Requirements.
   3. Section 02200 - Earthwork.
   4. Section 02221 - Trenching, Backfilling, and Compacting for Utilities.

1.2 SUBMITTALS

A. Shop Drawings:
   1. See Specification Section 01340 for requirements for the mechanics and administration of the submittal process.
   2. The Contractor shall be responsible for securing appropriate necessary permits for the work. Copies of the permits shall be submitted to the County prior to commencement of demolition.
   3. Provide documentation of demolition and removal. Indicate limits and sequencing to be used. Show and identify any items to be kept for Owner reuse or retention.

1.3 PROJECT CONDITIONS

A. Perform preliminary investigations as required to ascertain extent of work.

1.4 SEQUENCING AND SCHEDULING

A. Coordinate and reschedule work as required to preclude interference with other operations.

PART 2 - PRODUCTS (NOT APPLICABLE TO THIS SPECIFICATION SECTION)

PART 3 - EXECUTION

3.1 DEMOLITION

A. The Contractor shall remove all structure foundations designated for demolition to one (1) foot below the proposed sub-grade.

B. Existing irrigation piping and appurtenances encountered during construction and excavation activities shall be removed. Ends of irrigation piping left in place will be capped or plugged. Irrigation piping shall be removed a minimum of 100 feet from the extent of any earthwork performed on the project site.

C. The Contractor shall cut and remove portions of existing construction as required to allow proper installation of new construction.

D. The Contractor shall completely backfill below-grade areas and voids resulting from demolition work. The Contractor shall provide fill consisting of approved soil, gravel or sand (free of trash and debris) as defined in Section 02200 and compact fill to approximate density of surrounding native soil.

E. The Contractor shall perform all necessary coordination to locate, disconnect, relocate, and/or protect as needed all existing underground, aboveground, and overhead utilities within the limits of demolition prior to commencement of demolition operations. All expenses incurred for the coordination with utility companies and agencies, shall be at no cost to the County.

F. The Contractor shall promptly repair damages to existing utilities that are to remain, at no cost to the County.

G. The Contractor shall conduct operations to prevent damage and injury to adjacent structures, other facilities, and any persons.

H. The Contractor shall provide services for effective air and water pollution controls as required by authorities having jurisdiction.

I. The Contractor shall remove debris, rubbish, and other materials resulting from demolition operations.

J. The Contractor shall transport materials removed from demolished structures and properly dispose of them at an approved site according to the State, Federal, and local regulations.

K. If hazardous materials are encountered during demolition operations, the Contractor shall comply with all applicable regulations, laws, and ordinances concerning removal, handling, and protection against exposure or environmental pollution.

L. The Contractor shall repair demolition performed in excess of that required and return structures and surfaces to conditions existing prior to commencement of demolition work. The Contractor shall repair adjacent construction or surfaces soiled or damaged by demolition work to the satisfaction of the County.

M. Upon completion of demolition work, the Contractor shall remove all tools, equipment, and demolished materials from site.

END OF SECTION

SECTION 02110
SITE CLEARING

PART 1 - GENERAL

1.1 SUMMARY

A. Section Includes:
   1. Site clearing, grubbing, tree protection, stripping topsoil and demolition.
   2. Removal and disposal of trees, snags, logs, brush, stumps, shrubs, and rubbish from the designated work areas.

B. Related Specification Sections include but are not necessarily limited to:
   1. Division 00 - Bidding Requirements, Contract Forms, and Conditions of the Contract.
   2. Division 01 - General Requirements.
   3. Section 02072 – Demolition.
   4. Section 02200 - Earthwork.
   5. Section 02270 - Soil Erosion and Sediment Control.
   6. Section 02260 - Topsoiling and Finished Grading.

PART 2 - PRODUCTS - (NOT APPLICABLE TO THIS SPECIFICATION SECTION)

PART 3 - EXECUTION

3.1 PREPARATION

A. The Contractor shall have all erosion and sediment control measures in place prior to the beginning of any construction.

B. Prevent damage to existing trees and other vegetation beyond work limits or within areas on the plans indicated to be protected.
   1. In the event that trees or vegetation beyond the work limits or in areas indicated in the plans to be protected are damaged, the trees or vegetation shall be repaired or replaced at contractor's expense.

3.2 SITE CLEARING

A. Clearing and Grubbing:
   1. Clear and grub in areas indicated in the plans and in other areas within work limits as required to facilitate contractor operations (such as for borrow or sedimentation basin areas).
   2. Clearing and grubbing shall include shrubs, brush, snags, logs, stumps, downed timber, rotten wood, heavy growth of grass and weeds, vines, rubbish, structures and debris within the western and eastern seepage canals, Canal B and other areas indicated in the plans.
   3. All stumps, roots, and root clusters that have a diameter of 1 inch or larger shall be grubbed out to a depth of at least 1 foot below the bottom of topsoil/muck/peat removal excavated grade.
   4. Structures, piles of rubble, and other man-made items not designated on the plans to remain shall be removed in conformance with Specification Section 02072.
   5. Remove any garbage or other waste debris recovered during clearing.
   6. On completion of the clearing, remove all sticks, rubbish and other extraneous material.
   7. Clearing and land preparation shall proceed sufficiently ahead of earthwork activities to minimize disruption and allow time for determination of the adequacy of the clearing procedure.

B. Topsoil/Muck/Peat Removal:

1. Strip topsoil to a depth of six (6) inches or to a sufficient depth to remove excess roots in heavy vegetation or brush areas in areas where earthwork or other construction operations are to be performed as shown on the Drawings. For areas where muck/peat will be excavated for project features, topsoil stripping will not be required.
   a. Remove heavy growths of grass before excavation.
   b. Separate from underlying subsoil or objectionable material.
2. Stockpile topsoil/muck/peat within the borrow area indicated in the plans.
   a. Construct storage piles to freely drain surface water.
   b. Seed or cover storage piles to prevent erosion.

C. Clearing, Repairing and Maintenance of Existing Canals
1. Canals adjacent to the impoundment embankment as shown on the Drawings (Western Seepage Canal, Eastern Seepage Canal, and Canal B) shall be cleared of all woody vegetation, heavy grasses and debris in accordance with the Site Clearing paragraph of this Specification Section.
2. Existing side slopes of cleared canals shall be smoothed such that no slopes are steeper than 1H:1V and all slope deformities, roots, grade stakes, stones or other irregularities are regraded or removed. All holes, "pockmarks," grooves, depressions or other voids greater than four (4) inches in depth normal to the slope face and exceeding 1.0 feet in any direction shall be brought to grade by placing compacted homogenous material. The slope and slope face of these repairs shall be uniformly compacted in accordance with Specification Section 02200.
3. Immediately after clearing and repairing canals, canal side slopes shall be stabilized by seeding or sodding as necessary. Contractor is responsible for maintaining the adjacent canals during the life of the project from Notice to Proceed to Substantial Completion.

D. Access:
1. Do not obstruct access roads or other occupied or used facilities without permission from the County. If obstruction is allowed, the Contractor shall provide alternate routes around closed or obstructed traffic ways.

E. Disposal of Waste Materials:
1. Dispose of unsuitable materials by the following means:
   a. Dispose of impacted soils in accordance with Specification Section 02205.
   b. Unsuitable materials may be disposed on site in conformance with the lines and grades shown on the plans.
   c. Contractual arrangements between the Contractor and the adjacent or local landowner(s) for acceptance of unsuitable or disposal material is permissible. Impacted soils disposal offsite shall be in conformance with Specification Section 02205 and any hazardous materials disposed of site shall be in accordance with Florida Department of Environmental Protection (FDEP) and other State and local regulations.
   d. Dispose off-site in accordance with FDEP and other State and local regulations.
2. Organic matter may be buried within the borrow area.
3. The Contractor may burn combustible products of the clearing and grubbing operations on the site with the written approval of the County and with permission of the local authorities. The Contractor shall comply with all local ordinances or regulations for burn locations and methods, including methods for preventing uncontrolled spread of the burn. The Contractor shall provide the County with copies of permits prior to burning. NO BURNING SHALL BE ALLOWED WITHIN 50 FEET OF THE IMWID RIGHT OF WAY LINES INDICATED ON THE PLANS.
4. The Contractor shall limit burning to days when groundwater levels are adequate to prevent ignition of peat soils located throughout the project areas.
5. Non-combustible materials may be disposed of on site if in accordance with State and local ordinances.

6. The Contractor shall haul all organic materials and residues left from burning operations, from the previous on-site agricultural activities, on the site to an approved landfill or disposal site not including those residues from burning existing vegetation within the interior impoundment bottom. Impoundment interior non-man-made residue may be incorporated into the interior impoundment bottom per the lines and grades shown in the plans.

END OF SECTION

SECTION 02200
EARTHWORK

PART 1 - GENERAL

1.1 SUMMARY

A. Section Includes:
   1. Earthwork.

B. Related Specification Sections include but are not necessarily limited to:
   1. Division 00 - Bidding Requirements, Contract Forms, and Conditions of the Contract.
   2. Division 01 - General Requirements.
   3. Section 02205 – Impacted Soils Fill Placement Process
   4. Section 02778 - Geotextiles

1.2 QUALITY ASSURANCE

A. Referenced Standards:
   1. ASTM International (ASTM):
      a. C33, Standard Specification for Concrete Aggregates.
      b. D1557, Standard Test Methods or Laboratory Compaction Characteristics of Sol Using Modified Effort (56,000 ft-lbf/ ft^3).
      c. D4253, Standard Test Methods for Maximum Index Density and Unit Weight of Soils Using a Vibratory Table.
      d. D4254, Standard Test Methods for Minimum Index Density and Unit Weight of Soils and Calculation of Relative Density.

1.3 SUBMITTALS

A. See Specification Section 01340 for requirements for the mechanics and administration of the submittal process.

B. Prior to the start of construction, the Contractor shall prepare and submit an Earthwork Plan that includes the following:
   1. Drawing(s) indicating borrow sources and phasing of work
   2. Schedule
   3. Dewatering Plan with approach

C. If during the course of the work, the Earthwork Plan changes from the submitted plan, the updated Earthwork Plan shall be submitted to the County.

D. Test reports for borrow areas and other imported materials:
      a. Certifications
      b. Soil classifications
      c. Soil gradations
      d. Proctor Curves

E. The Contractor shall submit field measured cross-sections at each design cross-section for record purposes for embankments as described in this Section. The submittal of the field measured cross-sections shall be signed and sealed by a State of Florida licensed land surveyor.

PART 2 - PRODUCTS

2.1 MATERIALS

A. Select Fill: Select fill shall be clean, granular material free from debris, cinders, combustibles, peat, roots, wood, seeds of nuisance or exotic species, organic material, clods, and stones with a diameter greater than 2 inches in any direction. Select fill shall have an average organic content of not more than 5% of the total volume. Select fill shall meet the Unified Soil Classification System (ASTM D2487) designations of SW, SP, SM and SP-SM. Clayey soils may be blended with other soils to meet the requirements and definitions of select fill. Select fill shall be placed where indicated on the drawings. Select fill is required where higher control of materials and placement is needed. Unless otherwise specified, select fill includes embankment, structural and roadway fill or other required fill material to complete the WORK. Select fill may be material excavated on-site or may be imported from off-site. Maximum loose lift thickness shall be no more than 12 inches. In heavy areas where equipment cannot be operated for compaction, fill should be placed in 6-inch thick level lose lifts and compacted per this Section.

B. Unclassified Fill: Unclassified fill may be material used to bring areas to grade where there is no potential for slope erosion and the fill will not support a structure of any kind. Unclassified fill (backfill) shall be placed in areas where select fill is not indicated to be used on the drawings. Unclassified fill shall be free from seeds of nuisance or exotic species and will be composed of material excavated on-site. Maximum loose lift thickness shall be no more than 12 inches. In heavy areas where equipment cannot be operated for compaction, fill should be placed in 6-inch thick level lose lifts and compacted per this Section.

C. Granular Fill Under electrical equipment pads and structures: Clean, crushed, nonporous rock, crushed or uncrushed gravel complying with ASTM C33 gradation size No. 67, 3/4 IN to No. 4.

PART 3 - EXECUTION

3.1 PROTECTION

A. Protect existing surface and subsurface features on-site and adjacent to site as follows:
   1. Provide barricades, coverings, or other types of protection necessary to prevent damage to existing items indicated to remain in place.
   2. Protect and maintain bench marks, monuments or other established reference points and property corners.
      a. If disturbed or destroyed, replace at own expense to full satisfaction of Owner and controlling agency.
   3. Verify location of utilities.
      a. Omission or inclusion of utility items does not constitute nonexistence or definite location.
      b. Secure and examine local utility records for location data.
      c. Take necessary precautions to protect existing utilities from damage due to any construction activity.
      d. Repair damages to utility items at own expense.
      e. In case of damage, notify Engineer at once so required protective measures may be taken.
   4. Maintain free of damage structures, pavement, or other items not indicated to be removed.
      a. Any item known or unknown or not properly located that is inadvertently damaged shall be repaired to original condition.
      b. All repairs to be made and paid for by CONTRACTOR.
   5. Provide full access to public and private premises as well as other points as designated by Owner to prevent interruption of travel.
   6. Maintain stockpiles and excavations in such a manner to prevent inconvenience or damage to structures on-site or on adjoining property.
   7. Avoid surcharge or excavation procedures which can result in heaving, caving, or slides.

3.2 SITE EXCAVATION AND GRADING

A. The work includes all operations in connection with excavation, borrow, construction of fills and embankments, rough grading, and disposal of excess materials in connection with the preparation of the site for construction of the proposed facilities.

B. Excavation and Grading:
   1. Perform as required by the Contract Drawings.
   2. Contract Drawings may indicate both existing grade and finished grade required for construction of Project.
      a. Stake all embankments, structures, piping, roads, ramps, foundations, and other items shown in the plans and establish their elevations.
      b. Replace property corner markers to original location if disturbed or destroyed.
   3. Preparation of ground surface for embankments or fills:
      a. For grades flatter than 3H:1V scarify to a minimum depth of 6 IN in all proposed embankment and fill areas
      b. Where ground surface is steeper than 3H:1V, bench slope surfaces prior to placement and compaction of fill. Bench height shall not exceed 12 IN.
   4. In locations where embankment crosses an existing ditch or canal pull back fill slope flatter than 3H:1V or bench slopes prior to placement and compaction of fill. Bench height shall not exceed 12 IN.
   5. Protection of finished grade:
      a. Shape embankments and excavations to drain. .
      b. Maintain ditches and drains to provide drainage at all times.

C. Borrow:
   1. No off-site borrow is anticipated. Any off-site sources of borrow shall be approved by the County prior to use as fill on the project site.
   2. Fill material to be approved by the Engineer prior to placement.
   3. Provide approved fill compacted to density equal to or exceeding that indicated in this Specification.
   4. Include cost of all borrow material in original proposal.
   5. On-site fill material must come only from locations identified in the plans.

D. Demucking:
   1. The Contractor shall remove all organic soils from areas below the earthen impoundment, structures, piping and road subgrades to the lines and grades as shown in the drawings. Materials excavated shall not be used for backfill of structures, pipe or embankments, but may be used in the top layer of the final dressing of the embankment and/or within the impoundment bottom.

E. Construct embankments and fills as required by the Contract Drawings:
   1. Construct embankments and fills at locations and to lines of grade indicated.
      a. Completed fill shall correspond to shape of typical cross section or contour indicated regardless of method used to show shape, size, and extent of line and grade of completed work.
   2. Provide approved fill material which is free from roots, organic matter, trash, frozen material, and stones having maximum dimension greater than 2 IN.
      a. Do not place material in layers greater than 12 IN loose thickness.
      b. Place layers horizontally and compact each layer prior to placing additional fill.
   3. Compact by sheepsfoot, pneumatic rollers, vibrators, or by other equipment as required to obtain specified density.
      a. Control moisture for each layer necessary to meet requirements of compaction.
   4. Sides of sloped excavations steeper than 2H:1V shall be stair-stepped prior to backfill and compaction. Steps shall not exceed 12” in height.

3.3 USE OF EXPLOSIVES

A. Blasting with any type of explosive is prohibited.

3.4 FIELD QUALITY CONTROL

A. Include in bid price the cost of inspection services indicated herein as being performed by the Engineer.

B. Moisture density relations, to be established by the Engineer required for all materials to be compacted.

C. Extent of compaction testing will be as necessary to assure compliance with specifications.

D. Give minimum of 24 hour advance notice to Engineer when ready for compaction or subgrade testing and inspection.

E. Should any compaction density test or subgrade inspection fail to meet specification requirements, perform corrective work as necessary.

F. Pay for all costs associated with corrective work and retesting resulting from failing compaction density tests.

3.5 COMPACTION DENSITY REQUIREMENTS

A. Obtain approval from the Engineer with regard to suitability of soils and acceptable subgrade prior to subsequent operations.

B. Provide dewatering system necessary to successfully complete compaction and construction requirements.

C. Remove frozen, loose, wet, or soft material and replace with approved material as directed by Engineer.

D. For pipe bedding and beneath structures, stabilize subgrade with well graded granular materials as directed by Engineer.

E. Assure by results of testing that compaction densities comply with the following requirements:

CATEGORY	LOCATION	DENSITY % OF MAX.	COMPACTION STANDARD
Site Work	General Embankment Fill	95%	ASTM D1557
	Toe Inspection Road	95%	ASTM D1557
Structures	Under slabs-on-grade	95%	ASTM D1557
Outlet Pipe	Thru Earthen Impoundment	95%	ASTM D1557

F. Muck backfill as shown on the drawings shall be compacted by track walking the backfill sufficiently to provide subgrade and surface grade with bearing capacity for construction equipment and prevent against erosion, rills, sloughing and excessive settlement.

3.6 EXCAVATION, FILLING, AND BACKFILLING FOR STRUCTURES

A. General:
   1. In general, work includes, but is not necessarily limited to, excavation for structures, removal of underground obstructions and undesirable material, fill, backfill, and subgrade compaction.
   2. Obtain fill and backfill material necessary to produce grades required.
      a. Materials and sources to be approved by Engineer.
      b. Excavated material approved by Engineer may also be used for fill and backfill.
   3. In this Specification Section, the word "foundations" includes footings, base slabs, mat foundations, piers and any other support placed directly on soil.

B. Excavation Requirements for Structures:
   1. General:
      a. Do not commence excavation for foundations for structures until the Engineer approves:

1) The removal of topsoil and other unsuitable and undesirable material from existing subgrade.
2) Density and moisture content of site area compacted fill material meets requirements of specifications.

2. Dimensions:
   a. Excavate to elevations and dimensions indicated or specified.
   b. Allow additional space as required for construction operations and inspection of foundations.
3. Removal of obstructions and undesirable materials in excavation includes, but is not necessarily limited to, removal of old foundations, existing construction, unsuitable subgrade soils, expansive type soils, and any other materials which may be concealed beneath present grade, as required to execute work indicated on Contract Drawings.
   a. If undesirable material and obstructions are encountered during excavation, remove material and replace as directed by Engineer.
4. Level off bottoms of excavations to receive foundations, floor slabs, equipment support pads, or compacted fill.
   a. Remove loose materials and bring excavations into approved condition to receive concrete or fill material.
   b. Where compacted fill material must be placed to bring subgrade elevation up to underside of construction, scarify existing subgrade upon which fill material is to be placed to a depth of 6 IN and then compact to density stated in this Specification Section before fill material can be placed thereon.
   c. Do not excavate lower than shown for foundations except as directed by
   d. Engineer or Engineer.
   e. If any part of excavations is below the required depth without authorization, maintain excavation and start foundation from excavated level with concrete of same strength as required for superimposed foundation, and no extra compensation will be made to Contractor therefore.
5. Make excavations large enough for working space, forms, dampproofing, waterproofing, and inspection.
6. Notify County as soon as excavation is completed in order that subgrades may be inspected.
   a. Do not commence further construction until subgrade under compacted fill material, under foundations, under floor slabs-on-grade, under equipment support pads has been inspected and approved by the Engineer as being free of undesirable material, being of compaction density required by this specification, and being capable of supporting the allowable foundation design bearing pressures and superimposed foundation, fill, and above grade loads to be placed thereon.
   b. Engineer shall be given the opportunity to inspect subgrade below fill material both prior to and after subgrade compaction.
   c. Place fill material, foundations, slabs-on-grade, and equipment support pads as soon as weather conditions permit after excavation is completed, inspected, and approved and after forms and reinforcing are inspected and approved.
   d. Before concrete or fill material is placed, protect approved subgrade from becoming loose, wet, frozen, or soft due to weather, construction operations, or other reasons.
7. Dewatering:
   a. Where groundwater is or is expected to be encountered during excavation, install a dewatering system to prevent softening and disturbance of subgrade below foundations and fill material, to allow foundations and fill material to be placed in the dry, and to maintain a stable excavation side slope.
   b. Groundwater shall be maintained at least 2 FT below the bottom of any excavation, unless noted otherwise on Drawings or more stringently by other Specification Sections.
   c. Review soils investigation before beginning excavation and determine where groundwater is likely to be encountered during excavation.
   d. Employ dewatering specialist for selecting and operating dewatering system.
   e. Keep dewatering system in operation until dead load of structure exceeds possible buoyant uplift force on structure.

f. Dispose of groundwater to an area which will not interfere with construction operations or damage existing construction in conformance with National Pollution Discharge Elimination System (NPDES) permitting requirements.
   1) Install groundwater monitoring wells as necessary.
g. Shut off dewatering system at such a rate to prevent a quick upsurge of water that might weaken the subgrade.

8. Subgrade stabilization:
   a. If subgrade under foundations, fill material, floor slabs-on-grade, or equipment support pads is in a frozen, loose, wet, or soft condition before construction is placed thereon, remove frozen, loose, wet, or soft material and replace with approved compacted material as directed by the Engineer.
   b. Provide compaction density of replacement material as stated in this Specification Section.
   c. Method of stabilization shall be performed as directed by the Engineer.
   d. Do not place further construction on the repaired subgrades, until the subgrades have been approved by the the Engineer.
9. Do not place floor slabs-on-grade including equipment support pads until subgrade below has been approved, piping has been tested and approved, reinforcement placement has been approved, and Contractor receives approval to commence slab construction.
   a. Do not place building floor slabs-on-grade including equipment support pads when temperature of air surrounding the slab and pads is or is expected to be below 40 DegF before structure is completed and heated to a temperature of at least 50 DegF.
10. Protection of structures:
   a. Prevent new and existing structures from becoming damaged due to construction operations or other reasons.
   b. Prevent subgrade under new and existing foundations from becoming wet and undermined during construction due to presence of surface or subsurface water or due to construction operations.
11. Shoring:
   a. Shore, sheet pile, slope, or brace excavations as required to prevent them from collapsing and in accordance with OSHA regulations.
   b. Remove shoring as backfilling progresses but only when banks are stable and safe from caving or collapse.
12. Drainage:
   a. Control grading around structures so that ground is pitched to prevent water from running into excavated areas or damaging structures.
   b. Maintain excavations where foundations, floor slabs, equipment support pads or fill material are to be placed free of water.
   c. Provide pumping required keeping excavated spaces clear of water during construction.
   d. Provide free discharge of water by trenches, pumps, wells, well points, or other means as necessary and drain to point of disposal that will not damage existing or new construction or interfere with construction operations.

C. Fill and Backfill Below Slabs and Piping Support Foundations:
1. General:
   a. Subgrade to receive fill or backfill shall be free of undesirable material as determined by Engineer and scarified to a depth of 6 IN and compacted to density specified herein.
   b. Surface may be stepped by not more than 12 IN per step or may be sloped at not more than 2 percent.
   c. Do not place any fill or backfill material until subgrade under fill or backfill has been inspected and approved by the Engineer as being free of undesirable material and compacted to specified density.
2. Obtain approval of fill and backfill material and source from the Engineer prior to placing the material.
3. Granular fill under floor slabs-on-grade: Place all floor slabs-on-grade on a minimum of 6 IN of granular fill unless otherwise indicated.

4. Fill and backfill placement:
   a. Prior to placing fill and backfill material, optimum moisture and maximum density properties for proposed material shall be obtained from the Engineer.
   b. Place fill and backfill material in thin lifts not exceeding 8 IN in depth, and as necessary to obtain required compaction density.
   c. Compact material by means of equipment of sufficient size and proper type to obtain specified density.
   d. Use hand operated equipment for filling and backfilling when constrained to small work areas.
   e. Use vibratory equipment to compact granular material; do not use water to facilitate compaction.

END OF SECTION

SECTION 02205

IMPACTED SOILS FILL PLACEMENT PROCESS

PART 1 - GENERAL

1.1 SCOPE:

A. Summary of Work:

1. The Contractor shall furnish all labor, materials, equipment and perform all Work in strict accordance with the Specifications, Contract, and applicable requirements for the tracking of the fill placement process of soils that are impacted by residual agricultural chemicals on the Project Site as shown on the Drawings and as specified within this Section.

B. Related Sections include but are not necessarily limited to:

1. DIVISION 1 GENERAL REQUIREMENTS
2. Section 01340 Submittals
3. Section 01560 Environmental Protection and Special Controls
4. Section 02110 Clearing and Land Preparation
5. Section 02200 Earthwork

C. Soils impacted by Residual Agricultural Chemicals that pose an ecological risk, also known as impacted soils, are not allowed within the first 1.0 FT of soil contacting standing water, except for temporary localized ponding due to rainfall, anywhere on the Project Site, either during construction or after construction is complete, unless otherwise noted. Areas of permanent inundation that require remediation include the interior of the impoundment, ditches and canals that contain impacted soils as shown on the Drawings.

D. The locations of the impacted soils are identified on the Drawings. All impacted soils shall remain within the Construction Limits and shall be incorporated into the construction of the Project or transferred to local landowners to be reused on agricultural farms as specified in this Section.

E. A large portion of the site south of the existing palm tree cultivation area previously contained impacted soils that South Florida Water Management District (SFWMD) remediated via soil inversion to a depth of approximately 30-inches beneath the top surface. Although this area is no longer considered an impacted soil area, if any soil excavation is performed within the boundaries of this remediated area, the top 30-inches are required to be remediated per the specifications in this Section.

F. Soils within the Project site include:

1. Soils with elevated levels of copper and, to a lesser degree, organochlorine pesticides were identified in various areas across the Project site.
2. Soils with elevated levels of dieldrin were detected at the former Maintenance Shed, Chemical Shed, Pump Station, and former Vegetable Packing Warehouse however, based on the Phase II Environmental Site Assessment Report (PSI, 2009) the concentrations measured aren't likely to present a significant ecological concern. Elevated levels of dieldrin were also detected in the agricultural areas and will be remediated with the collocated copper impacted soils.
3. Soils with elevated levels of other metals such as arsenic, chromium and mercury were detected. These metals, however, were either already remediated as part of the demolition activities prior to construction, or do not present a significant ecological concern.

1.2 APPLICABLE PUBLICATIONS: (Not Used)

1.3 DEFINITIONS:

Definitions in this Section apply to this Section only. All other definitions in these Specifications apply unless otherwise noted.

A. Impacted Soils:

1. Impacted soils are soils with elevated levels of metals or organochlorine and DDE pesticides which pose a potential unacceptable risk to the ecosystem, in particular the Everglades Snail Kite. These Residual Agricultural Chemicals resulted from the legal use of those chemicals during the previous agricultural production activities on the Project Site. These soils do not exceed existing applicable standards for human contact or other regulatory requirements. By this definition, impacted soils include soil strippings in impacted soil areas and do not include the vegetation grouping in those impacted soil areas. If impacted soils are stockpiled or blended with non-impacted soils, the maximum horizontal and vertical extents of the stockpile or blend shall be considered impacted soil.

A. Impacted Soil Areas:

1. The impacted soil area is the horizontal and vertical extent of impacted soils as defined in the Drawings.

B. Non-impacted soils:

1. Non-impacted soils are all soils both at and below surface level on the Project Site in areas not identified as impacted soils on the Drawings. These soils do not have elevated levels of Residual Agricultural Chemicals that pose a potential ecological risk and also do not exceed existing standards for human contact or other regulatory requirements. By this definition, non-impacted soils include soil strippings not identified as impacted soils and soils below the vertical extent of the defined impacted soil areas.

C. Remedial Method Types:

1. Remedial Method Types are the different method types used by the Contractor to move and/or cover and track impacted soils as presented in Part 3 of this Section.

D. Project Features

1. A Project Feature is any component of the Project presented in the Drawings that require fill from on-site borrow and required the borrow to be placed and compacted as fill in specified lifts per Section 02200 Earthwork and the Drawings. By this definition, the bottom of the impoundment is not considered a Project Feature.

E. Placement Area

1. The placement Area is the spatial extent of the proposed location to receive impacted soils that have been excavated. This area will be cleared, grubbed, mowed, compacted, and/or completed as necessary per the Specifications to receive fill or unsuitable fill prior to compliance surveys or placement of impacted soils.

F. Survey Accuracy

1. Survey accuracy is the required precision of the survey equipment to record data points relative to their horizontal and/or vertical location within the area being surveyed. The accuracy is applied separately to the horizontal and vertical measurements.

G. Survey Tolerance

1. Survey tolerance is the allowance of horizontal variation between survey points taken at the same location. Determination of whether survey tolerance has been achieved is applied to the base survey measurement with no survey accuracy applied.

H. Field Quality Control Survey

1. A field quality control (QC) survey is a topographic survey conducted by the County of a random selection determined by the County of at least twenty (20) percent of the surveyed

points in each Compliance Survey to determine if those points of the Compliance Survey meet the required survey tolerance and to verify that the required depths of excavated impacted soils and that the required depths of non-impacted soils cover has been achieved.

I. Temporary Localized Ponding Due to Rainfall

1. Temporary localized ponding due to direct rainfall on impacted soil areas is ponding from direct rainfall that remains on the land surface for no more than fourteen (14) calendar days.

1.4 SUBMITTALS:

A. Prior to beginning the Work the Contractor shall submit an Impacted Soil Management Plan that identifies the proposed Remedial Methods and required compliance information for remediating the impacted soils identified on the project site as well as a plan for how the work will be performed. The Plan shall contain all applicable information including, but not be limited to, information such as Remedial Method Type(s), schedule for the proposed impacted soils work, schedule for the survey staking, fill placement process, unsuitable fill placement process, survey verification process, required compliance surveys, proposed survey grid for each compliance survey, required confirmatory sampling, soil inversion equipment and process, proposed location of all remediated impacted soils, and offsite impacted soil reuse information. Offsite impacted soil reuse information shall include the name and contact information of the land owner accepting the impacted soils, location map of the land that impacted soils will be reused, travel distance from the project site to the reuse location, land use classification and type of agricultural product or operations of the reuse location, transportation method from the project site to the reuse location and proposed chain of custody documentation for the transfer of impacted soils from the Contractor to the accepting location and owner. This Soil Management Plan must be received and accepted by the County and SFWMD in conformance with Section 01340 Submittals prior to begging the Work. Additionally, if the Soil Management Plan is modified during construction, the Contractor must submit and receive acceptance for the modification to the Plan in conformance with Section 01340 Submittals prior to performing the Work.

B. Contractor must submit an Impacted Soil Management Implementation and Compliance Report within fifteen (15) calendar days after completion of the fill placement process. The Report shall document the final location of all impacted soils within the Project Site including impacted soils that were not moved by the Contractor as well as those transported to areas on or off-site. Where impacted soils are used in Project Features the Report shall include the identification of the Project Feature, the spatial extent with northings and eastings, and the vertical extent with top and bottom elevations of the final location of all impacted soils. If impacted soils were stockpiled or blended with non-impacted soils, the maximum horizontal and vertical extents of the blended material will be used. If the impacted soil was not moved and was inverted by the Contractor, then the Report shall contain the same information that is in the Drawings for these locations with a notation added that the impacted soils were inverted. For those impacted soils that have been covered the Report shall include the general location and spatial extent with northings and eastings of the top and bottom plane as well as the vertical extent with top and bottom elevations of the final location of non-impacted soil cover. The Report shall include all of the Compliance Surveys and chain of custody documentation, if applicable. All survey information, including Compliance Surveys, staking, northings, eastings, and elevations, shall be performed and signed and sealed by a licensed surveyor registered the State of Florida in accordance with this Section. The Report shall be submitted in conformance with Section 01340 Submittals.

1.5 QUALIFICATIONS: (Not Used)

1.6 RESPONSIBILITIES:

A. The Contractor is responsible for performing all Work in accordance with all applicable regulations, ordinances and code requirements from the appropriate local, state and/or federal jurisdiction for the Project, and all other appropriate Specifications whether referenced or not.

B. Wildlife Protection

1. The Contractor will implement wildlife protection as presented in Section 01560.

1.7 CERTIFICATIONS AND TRACKING:

A. The Contractor shall provide compliance surveys in conformance with Section 01340 Summary of Work prior to and after excavation of impacted soils as well as prior to and after final placement of both impacted soils and non-impacted soil cover, where necessary. Compliance surveys shall be performed in accordance with the corresponding Remedial Method Type per this Section. Each Remedial Method Type, as presented in Part 3 of this Section, shall have a sequence of compliance surveys defined as the following:

1. Compliance Survey1: Prior to stripping impacted soils that will be excavated the Contractor shall survey the impacted soil area by performing a grid of field survey points at a spacing of 200 FT in any direction longer than 1,000 FT. If any side is 1,000 FT or less, the Contractor shall provide five (5) equally spaced points for that side.

2. Compliance Survey 2: After excavating impacted soils, the CONTRACOR shall survey the excavated area, utilizing the same field survey points from Compliance Survey 1, with a horizontal tolerance of ± 0.1 FT. For this SECITON there is no compliance survey requirement after stripping and prior to excavation. However, this does not negate any other survey requirements per any other Specifications and the Drawings.

3. Compliance Survey 3: Prior to placement of excavated impacted soils, as fill or unsuitable fill, the Contractor shall survey the prepared placement area by performing a grid of field survey points at a spacing of 200 FT in any direction longer than 1,000 FT. If any side is 1,000 FT or less, the Contractor shall provide five (5) equally spaced points for that side.

4. Compliance Survey 4: After placing excavated impacted soil as fill or unsuitable fill, the CONTRACOR shall survey the placement area utilizing the same field survey points from Compliance Survey 3, with a horizontal tolerance of ± 0.1 FT.

5. Compliance Survey 5: After placing non-impacted soil cover over impacted soils that were excavated and moved, the CONTRACOR shall survey the completed placement area utilizing the same field survey points from Compliance Survey 3 with a horizontal tolerance of ± 0.1 FT. For Remedial Method Type A, Compliance Survey 3 will be performed for the completed Project Feature with all fill material in place in conformance with the applicable Sections.

B. Survey Accuracy, Tolerance and Delivery

1. The survey data shall be performed to a vertical and horizontal accuracy of ± 0.2 FT, unless otherwise specified.

2. The survey data shall be performed to a horizontal tolerance of ± 0.1 FT, unless otherwise specified.

3. The Compliance Survey submittal shall include survey data delivered electronically in ASCII file format, excel spreadsheet format, pdf format, MicroStation format and AutoCAD format.

4. For the Compliance Surveys, only submit the required survey points as specified in this Section. Do not include other survey data collected for other Contract purposes with the compliance surveys.

5. Compliance Surveys are utilized only for the determination of soil depths and spatial extent, they are not utilized to determine soil volumes. Other survey data collected for other Contract purposes will be utilized to determine soil volume.

6. Once a Compliance Survey is submitted, the County will have seven (7) calendar days to review and accept the Compliance Survey.

7. The Contractor cannot proceed with any Work in the area of Compliance Survey until that survey has been accepted and returned to the Contractor, except as otherwise provided for in Remedial Method A in paragraph 3.02(A) of this Section.

1.8 INSPECTION COORDINATION:

A. Access to the Work and New Work

1. The Contractor shall provide access to the Work for the County as requested for inspection. The County will retain the option to have inspectors on site during any Work activities associated with impacted soils. In addition, the County will conduct field QC surveys concurrent with the Contractor's Compliance Survey effort.

2. The Contractor shall provide a ninety-six (96) hour notice to the County of its intention to begin new Work activities related to impacted soils. If new Work activities do not begin at the end of the ninety-six (96) hour notice, the Contractor shall provide another ninety-six (96) hour notice of its intention to begin new Work activities.

B. Staking Notification

1. The Contractor shall provide a ninety-six (96) hour notice to the County prior to beginning the staking of each impacted soil area. If staking does not begin at the end of the ninety-six (96) hour notice, the Contractor shall provide another ninety-six (96) hour notice of the beginning of the staking.

C. Compliance Survey Notification

1. The Contractor shall provide a ninety-six (96) hour notice to the County prior to beginning each Compliance Survey. If Compliance Survey does not being at the end of the ninety-six (96) hour notice, the Contractor shall provide another ninety-six (96) hour notice of the beginning of the Compliance Survey.

1.9 WARRANTY:

A. The Contractor shall warranty the Work against defects for two years from the date of Substantial Completion and as described in Section 00250 General Terms and Conditions.

PART 2 - PRODUCTS (NOT APPLICABLE)

PART 3 - EXECUTION

3.1 GENERAL:

A. It is the responsibility of the Contractor to ensure a minimum of 1.0 FT of non-impacted soil cover over impacted soils in areas of permanent inundation within the Project Site.

B. In the area south of the palm tree cultivation area where impacted soils were previously remediated by SFWMD, the Contractor shall remediate the top 30-inches of any excavation of soil in this area as specified in this Section. This previously remediated area is identified on the Drawings.

C. Prior to initiating Work in a certain area, the Contractor must stake all impacted soil areas. This includes areas in the previously remediated area identified on the Drawings. For the previously remediated area, the proposed earthwork areas shall be staked within 500 FT of the active work area.

D. Contractor shall clear, grub, and/or mow, as applicable, all portions of impacted soil areas to be surveyed in accordance with these Specifications prior to beginning the Work. Compliance Survey 1 shall be performed within seven (7) days after mowing.

E. Each impacted soil area, once disturbed, shall be remediated in its entirety prior to completion of that related Work effort. Partial remediation of an impacted soil area will not be allowed. The previously remediated area is not considered an impacted soil area and is therefore exempt from this requirement, as remediation is not required unless the area is excavated.

F. Strippings from impacted soil areas are by definition impacted soils and are required to be tracked and placed in accordance with this Section and the Drawings.

G. If impacted soils are being moved to an area that is not a Project Feature and has not been stripped, then the prepared placement area must be staked prior to performing Compliance Survey 3 and prior to placing the impacted soils. Compliance Survey 3 shall be performed within seven (7) days after mowing.

H. Impacted soils which are excavated to the depths specified in the Drawings must be excavated to that minimum depth. Therefore, the minimum depth excavated is determined after the worse case survey accuracy has been applied to the Compliance Survey measurements.

I. At the completion of construction, all impacted soils shall be covered with a minimum of 1.0 FT of non-impacted soil. Therefore, the minimum cover depth is determined after the worse case survey accuracy has been applied to the Compliance Surrey measurements.

J. No Work efforts are required by the Contractor relative to impacted soils if those soils will not be contacting standing water, except for temporary localized ponding due to direct rainfall, anywhere on the Project Site, either during construction or after construction is complete per the Contract.

K. Removal of impacted soils from the project site is permitted with prior approval, in writing, by SFWMD, FDEP, FWS, and the County.

L. Cover for impacted soils not utilized within Project Features may be non-impacted soil strippings where permissible per the specifications. The cover of impacted soils not utilized within Project Features is one of the acceptable onsite disposal methods for strippings from non-impacted soil areas resulting from other construction per the Drawings and Specifications. The minimum cover depth is determined after the worst case survey accuracy has been applied to the Compliance Survey measurements.

M. All cover for impacted soils not utilized within Project Features shall receive the appropriate erosion protection for disturbed areas as defined in Section 01560 Environmental Protection and Special Controls.

N. Except for temporary localized ponding due to direct rainfall, the impacted soil areas may not contact standing water unless otherwise specified in this Section. Ponding of direct rainfall on impacted soil areas shall not exceed fourteen (14) calendar days and must be addressed by the Contractor on or prior to the fourteenth (14th) calendar day in accordance with the Contract Documents and all applicable permits.

3.2 IMPACTED SOIL REMEDIATION:

A. Remedial Method Types:

1. Impacted soil areas may be remediated by one of the following method types. For any given impacted soils area it is acceptable to utilize separate Remedial Method Types for both fill and unsuitable fill, including strippings, provided the fill or unsuitable fill meets all applicable requirements for the particular use.

   a. Remedial Method Type A

      Areas where the impacted soils will be moved and placed into the Project Features and will be covered with a minimum of two (2) 1.0 FT lifts of non-impacted soils. Soils used in the construction of Project Features must meet the requirements for the particular project use per Section 02200 Earthwork. Remedial Method Type A requires performance of Compliance Survey 1, Compliance Survey 2, Compliance Survey 3, Compliance Survey 4, and Compliance Survey 5. For this Remedial Method Type only, work can proceed after Compliance Survey 3 and Compliance Survey 4 with only field QC survey acceptance. The compliance surveys are to be submitted within seven (7) days.

b. Remedial Method Type B

Areas where the impacted soils will be moved to another location within the Project Site, not within Project Features, and covered with a minimum of 1.0 FT of non-impacted soil or non-impacted soil strippings. This includes the impacted soils such as the strippings that are not suitable for the construction of Project Features. Impacted soils may be used to fill existing ditches, borrow areas, or other areas within the Construction Limits, provided the impacted soil and cover placement is not within or impeding Project Features, meets the lines and grades shown on the Drawings, is not outside the Project Limits, is covered by a minimum of 1.0 FT of non-impacted soil or non-impacted soil strippings, is no higher than EL 30.0 (including non-impacted soil cover) and meets the slope and drainage requirements. Remedial Method Type B requires performance of Compliance Survey 1, Compliance Survey 2, Compliance Survey 3, Compliance Survey 4, and Compliance Survey 5.

c. Remedial Method Type C

Areas where the impacted soils will be moved to another location off of the Project Site to be reused for agricultural purposes. This method must be identified in the Impacted Soil Management plan and approved in conformance with this Section. Remedial Method Type C requires performance of Compliance Survey 1 and Compliance Survey 2.

d. Remedial Method D

Areas where the impacted soils will remain in place and be inverted. Soil inversion shall be to a minimum depth of 24-inches, mechanically inverting the soil in a direction parallel to planting rows. The inversion area shall be disked, plowed, harrowed, and compacted. Plows shall consist of steel contoured blades or concave disks bolted to a metal frame that can be hitched to a trailer. Remedial Method Type D requires performance of Compliance Survey 1 along with confirmatory sampling to be performed by SFWMD. If confirmatory sampling determines that the inverted impacted soil area contains copper concentrations greater than or equal to 85 mg/kg, the Contractor shall perform additional remediation of the area at a depth equal to the inverted depth using the Remedial Methods specified in this Section, including further soil inversion.

2. Additional Remediation Requirements

a. Contractor shall maintain drainage within the Project site during and after construction in accordance with the lines and grades shown on the Drawings and in the Specifications.

b. Permanent inundation of ditches, swales and canals within impacted soil areas shall not be higher than the top of bank. The Contractor is responsible for controlling the water elevations within these ditches, swales and canals within impacted soil areas to the top of the banks during construction. Note that if the surrounding land surface has temporary localized ponding, this is acceptable as long as the ponding is due to direct rainfall and the ponding is for no more than fourteen (14) calendar days per paragraph 1.03(J) of this Section. It is not acceptable to inundate the surrounding impacted soil areas with drainage water, dewatering water, or any other water except for direct rainfall.

c. Areas where impacted soils were remediated using the soil inversion method, upon confirmation from SFWMD that confirmatory samples indicate that the area contains less than 85 mg/kg copper concentration, the remediated area shall remain undisturbed from earthwork operations other than filling for the duration of construction.

3.3 MATERIAL PLACEMENT:

A. For material placement specifications, see Section 02200 Earthwork.

3.4 COMPACTION:

A. For compaction Specifications, see Section 02200 Earthwork.

END OF SECTION

SECTION 02221

TRENCHING, BACKFILLING, AND COMPACTING FOR UTILITIES

PART 1 - GENERAL

1.1 SUMMARY

A. Section Includes:
   1. Excavation, trenching, backfilling and compacting for all underground utilities and pipelines.
   2. Specifications in this Section refer to earthwork around underground utilities and pipelines only. For general earthwork specifications, refer to Section 02200

B. Related Specification Sections include but are not necessarily limited to:
   1. Division 00 - Bidding Requirements, Contract Forms, and Conditions of the Contract.
   2. Division 01 - General Requirements.
   3. Section 02200 - Earthwork.

1.2 QUALITY ASSURANCE

A. Referenced Standards:
   1. ASTM International (ASTM):
      a. C33, Standard Specification for Concrete Aggregates.
      b. D1557, Standard Test Methods for Laboratory Compaction Characteristics of Soil Using Modified Effort (56,000 ft-lbf/ft^3 (600 kN-m/m^3)).
      c. D2321, Standard Practice for Underground Installation of Thermoplastic Pipe for Sewers and Other Gravity-Flow Applications.
      d. D4253, Standard Test Methods for Maximum Index Density and Unit Weight of Soils Using a Vibratory Table.
      e. D4254, Standard Test Methods for Minimum Index Density and Unit Weight of Soils and Calculation of Relative Density.

B. Qualifications: Hire an independent soils laboratory to conduct in-place moisture-density tests for backfilling to assure that all work complies with this Specification Section.

1.3 DEFINITIONS

A. Excavation: All excavation will be defined as unclassified unless otherwise stated in the Contract Documents.

1.4 SUBMITTALS

A. Shop Drawings:
   1. See Specification Section 01340 for requirements for the mechanics and administration of the submittal process.
   2. Product technical data including:
      a. Acknowledgement that products submitted meet requirements of standards referenced.
      b. Manufacturer's installation instructions.
   3. Submit respective pipe or conduit manufacturer's data regarding bedding methods of installation and general recommendations.
   4. Submit sieve analysis reports on all granular materials.

B. Informational Submittals:
   1. See Specification Section 01340 for requirements for the mechanics and administration of the submittal process.
   2. Trench shield (trench box) certification if employed:
      a. Specific to Project conditions.
      b. Re-certified if members become distressed.

c. Certification by registered professional structural engineer, registered in the state where the Project is located.
d. Engineer is not responsible to, and will not review and approve.

1.5 SITE CONDITIONS

A. Avoid overloading or surcharging a sufficient distance back from edge of excavation to prevent slides or caving.
   1. Maintain and trim excavated materials in such manner to be as little inconvenience as possible to public and adjoining property owners.

B. Provide full access to public and private premises and other points as designated by County to prevent serious interruption of travel.

C. Protect and maintain bench marks, monuments or other established points and reference points and if disturbed or destroyed, replace items to full satisfaction of County and controlling agency.

D. Verify location of existing underground utilities.

PART 2 - PRODUCTS

2.1 MATERIALS

A. Backfill and Bedding Material:
   1. As approved by Engineer and shown on the Contract Drawings.
      a. Free of rock cobbles, roots, sod or other organic matter.
      b. Moisture content at time of placement: 3 percent plus/minus of optimum moisture content as specified in accordance with ASTM D1557.

PART 3 - EXECUTION

3.1 GENERAL

A. Remove and dispose of unsuitable materials in conformance with Specification Section 02200.

3.2 EXCAVATION

A. Unclassified Excavation: Remove rock excavation, clay, silt, gravel, hard pan, loose shale, and loose stone as directed by Soils Engineer.

B. Excavation for Appurtenances:
   1. 12 IN (minimum) clear distance between outer surface and embankment.
   2. See Specification Section 02200 for applicable requirements.

C. Groundwater Dewatering:
   1. Where groundwater is, or is expected to be, encountered during excavation, install a dewatering system to prevent softening and disturbance of subgrade to allow subgrade stabilization, pipe, bedding and backfill material to be placed in the dry, and to maintain a stable trench wall or side slope.
   2. Groundwater shall be drawn down and maintained at least 2 FT below the bottom of any pipe trench or structure excavation prior to excavation.
   3. Review soils investigation before beginning excavation and determine where groundwater is likely to be encountered during excavation.
      a. Employ dewatering specialist for selecting and operating dewatering system.
   4. Keep dewatering system in operation until dead load of pipe, structure and backfill exceeds possible buoyant uplift force on pipe or structure.
   5. Dispose of groundwater to an area which will not interfere with construction operations or damage existing construction.
   6. Install groundwater monitoring wells as necessary.
   7. Shut off dewatering system at such a rate to prevent a quick upsurge of water that might weaken the subgrade.

8. Cost of groundwater dewatering shall be included in the contract bid price.

D. Trench Excavation:
1. Excavate trenches by open cut method to depth shown on Drawings and necessary to accommodate work.
   a. Support existing utility lines where proposed work crosses at a lower elevation.
      1) Stabilize excavation to prevent undermining of existing utility.
2. Open trench outside buildings, units, and structures:
   a. No more than the distance between two structures or 300 LF, whichever is less.
   b. Field adjust limitations as weather conditions dictate.
3. Any trench or portion of trench, which is opened and remains idle for seven (7) calendar days, or longer, as determined by the County, may be directed to be immediately refilled, without completion of work, at no additional cost to County.
   a. Said trench may not be reopened until County is satisfied that work associated with trench will be prosecuted with dispatch.
4. Observe following trenching criteria:
   a. Trench size:
      1) Excavate width to accommodate free working space.
      2) Maximum trench width at top of pipe or conduit may not exceed outside diameter of utility service by more than the following dimensions:

OVERALL DIAMETER OF UTILITY SERVICE	EXCESS DIMENSION
33 IN and less	18 IN
more than 33 IN	24 IN

      3) Cut trench walls vertically from bottom of trench to 1 FT above top of pipe, conduit, or utility service.
      4) Keep trenches free of surface water runoff.
         a) Include cost in Bid.
         b) No separate payment for surface water runoff pumping will be made.

E. Trenching for Electrical Installations:
1. Observe the preceding Trench Excavation paragraph in PART 3 of this Specification Section.
2. Modify for electrical installations as follows:
   a. Open no more than 600 LF of trench in exterior locations for trenches more than 12 IN but not more than 30 IN wide.
   b. Any length of trench may be opened in exterior locations for trenches which are 12 IN wide or less.
   c. Do not over excavate trench.
   d. Cut trenches for electrical runs with minimum 30 IN cover, unless otherwise specified or shown on Drawings.
   e. See Division 16 for additional requirements.

3.3 PREPARATION OF FOUNDATION FOR PIPE LAYING

A. Over-Excavation:
1. Backfill and compact to 95 percent of maximum dry density per ASTM D1557.
2. Backfill with granular bedding material as option.

B. Subgrade Stabilization:
1. Stabilize the subgrade when directed by the Engineer.
2. Observe the following requirements when unstable trench bottom materials are encountered.
   a. Notify Engineer when unstable materials are encountered.
      1) Define by drawing station locations and limits.
   b. Remove unstable trench bottom caused by Contractor failure to dewater, rainfall, or Contractor operations.

1) Replace with subgrade stabilization with no additional compensation.

3.4 BACKFILLING METHODS

A. Do not backfill until tests to be performed on system show system is in full compliance with specified requirements.

B. Carefully Compacted Backfill:
   1. Furnish where indicated on Drawings, specified for trench embedment conditions and for compacted backfill conditions up to 12 IN above top of pipe or conduit.
   2. Comply with the following:
      a. Place backfill in lifts not exceeding 8 IN (loose thickness).
      b. Hand place, shovel slice, and pneumatically tamp all carefully compacted backfill.
      c. Observe specific manufacturer's recommendations regarding backfilling and compaction.
      d. Compact each lift to specified requirements.

C. Water flushing for consolidation is not permitted.

D. Backfilling for Electrical Installations:
   1. Observe the preceding Carefully Compacted Backfill paragraph or Common Trench Backfill paragraph in PART 3 of this Specification Section or when approved by the Engineer.
   2. Modify for electrical installation as follows:
      a. Observe notes and details on electrical drawings for fill in immediate vicinity of direct burial cables.

3.5 COMPACTION

A. General:
   1. Place and assure bedding, backfill, and fill materials achieve an equal or higher degree of compaction than undisturbed materials adjacent to the work.
   2. In no case shall degree of compaction below minimum compactions specified be accepted.

B. Compaction Requirements:
   1. Unless noted otherwise on Drawings or more stringently by other Specification Sections, comply with following minimum trench compaction criteria.
      a. Bedding material:

LOCATION	SOIL TYPE	COMPACTION DENSITY
All locations	Cohesionless soils	75 percent relative density by ASTM D4253 and ASTM D4254

      b. Carefully compacted backfill:

LOCATION	SOIL TYPE	COMPACTION DENSITY
All applicable areas	Cohesive soils	95 percent of maximum dry density by ASTM D1557
	Cohesionless soils	75 percent relative density by ASTM D4253 and ASTM D4254

3.6 FIELD QUALITY CONTROL

A. Testing:
   1. Perform in-place moisture-density tests as directed by the Engineer.
   2. Perform tests through recognized testing laboratory approved by Engineer.
   3. Costs of tests shall be paid by the Contractor.
   4. Perform additional tests as directed until compaction meets or exceeds requirements.

5. Reference to Engineer in this Specification Section will imply the Engineer when employed by County or QA/QC testing entity and directed by Engineer to undertake necessary inspections as approvals as necessary.
6. Assure County and Engineer has immediate access for testing of all soils related work.
7. Ensure excavations are safe for testing personnel.

END OF SECTION

SECTION 02233
SHELLROCK AND SHELLROCK BASE

PART 1 GENERAL

1.1 SUMMARY

A. Section Includes:
   1. Shellrock
   2. Shellrock Base

B. Related Specification Sections include but are not necessarily limited to:
   1. Division 00 – Bidding Requirements, Contract Forms, and Conditions of the Contract.
   2. Division 01-General Requirements.

1.2 QUALITY ASSURANCE

A. Referenced Standards:
   1. Florida Department of Transportation
   2. Standard Specifications for Road and Bridge Construction, latest edition, (FDOT)

C. American Society of Testing Materials, (ASTM)
   1. ASTM D1557, Standard Test Methods for Laboratory Compaction Characteristics of Soil Using the Modified Effort (56,000 ft-lb/ft^3 (2,700 kN-m/m^3))
   2. ASTM D2922, Standard Test Methods for Density of Soil and Soil-Aggregate in Place by the Nuclear Methods (Shallow Depth)

1.3 SUBMITTALS

A. Shop Drawings:
   1. See Specification Section 01340 for requirements for the mechanics and administration of the submittal process.
   2. Test Reports
      a. Certifications
      b. Gradation
      c. Proctor Curves

PART 2 PRODUCTS

2.1 MATERIALS

A. Provide shellrock and shellrock-stabilized base materials in accordance with FDOT Standard Specifications for Road and Bridge Construction Section 913A. The minimum in-place density of the shellrock shall be 129 lbs./cu. ft. Acceptance of the material will be in accordance with FDOT Standard Specifications for Road and Bridge Construction Section 200-7.

PART 3 EXECUTION

3.1 BUILD SHELLROCK ROAD SURFACES IN THE FOLLOWING SEQUENCE:

A. Complete the area to be stabilized to the lines and to a grade parallel to the finished elevation of the stabilized base before adding stabilizing material.

B. Place and spread to a uniform loose depth of 6 inches or as directed by the County. Mix the shellrock with the soil using a rotary tiller or other County approved equipment. Repeated as required to distribute the shellrock uniformly throughout the soil for the depth and width indicated in the drawings.

C. Mix in accordance with FDOT Standard Specifications for Road and Bridge Construction Section 230-5.5.

D. Shape the surface so that after being compacted it will conform to the lines and grades indicated in the drawings.

E. Compact the mixed soil/shellrock base by rolling with either the grid-type roller or the sheepsfoot roller. Maintain moisture within plus or minus 2 percent of optimum moisture content during compaction.

F. Perform final compaction with traffic rollers.

G. Protect and maintain shellrock areas during construction. Construction traffic that results in tracking of materials or rutting will require reprocessing and recompaction of the shellrock base at the Contractor's expense.

3.2 FIELD QUALITY CONTROL

A. Include in bid price the cost of inspection services indicated herein as being performed by the Engineer.

B. Moisture density relations are to be established by the Engineer required for all materials to be compacted.

C. Extent of compaction testing will be as necessary to assure compliance with specifications.

D. Give minimum of 24 HR advance notice to Engineer when ready for compaction or subgrade testing and inspection.

E. Should any compaction density test or subgrade inspection fail to meet specification requirements, perform corrective work as necessary? Corrective work and retesting resulting from failing compaction density tests is at Contractor's expense.

3.3 COMPACTION DENSITY REQUIREMENTS

A. Provide 48 hours advance notice to County of shellrock placement activities.

B. Obtain approval from the Engineer with regard to suitability of shellrock materials and acceptable subgrade prior to subsequent operations.

C. Perform the following tests at locations requested by the County:

1. ASTM D2922, Test for Density of Soil and Soil-Aggregate in Place by the Nuclear Method at the frequency and locations requested by the Owner.
2. ASTM D1557 Standard Test Methods for Laboratory compaction Characteristics of Soil Using the Modified Effort (56,000 ft-lbf/cu.ft.).

D. Compact the base to a density equal to or exceeding 98.0 percent of the maximum density as determined by ASTM D1557, using FM 1-T180 Method D, and in accordance with FDOT Standard Specifications for Road and Bridge Construction Section 200-6.

E. Provide access to the County as requested for inspection. Make the site available for testing and cooperate fully to allow tests to be performed. Reprocess, recompact, and retest non-passing test areas as directed by the County and at no additional expense.

END OF SECTION

SECTION 02260
TOPSOILING AND FINISHED GRADING

PART 1 - GENERAL

1.1 SUMMARY

A. Section Includes:
   1. Topsoiling and finished grading.

B. Related Specification Sections include but are not necessarily limited to:
   1. Division 00 - Bidding Requirements, Contract Forms, and Conditions of the Contract.
   2. Division 01 - General Requirements.
   3. Section 02110 - Site Clearing.
   4. Section 02200 - Earthwork.
   5. Section 02270 - Soil Erosion and Sediment Control.
   6. Section 02930 – Seeding and Sodding.

C. Location of Work: All areas within limits of grading and all areas outside limits of grading which are disturbed in the course of the work.

1.2 SUBMITTALS

NOT USED

1.3 SITE CONDITIONS

A. Acquire topsoil from stripping of borrow areas, stripping of areas underneath the proposed embankment, and removal of unsuitable soils underneath the proposed embankment

PART 2 - PRODUCTS

2.1 MATERIALS

A. Topsoil:
   1. Original surface soil typical of the area.
   2. Existing topsoil stockpiled under Specification Section 02110.
   3. Capable of supporting native plant growth.

2.2 TOLERANCES

A. Finish Grading Tolerance: 0.1 FT plus/minus from required elevations.

PART 3 - EXECUTION

3.1 PREPARATION

A. Correct, adjust and/or repair rough graded areas.
   1. Cut off mounds and ridges.
   2. Fill gullies and depressions.
   3. Perform other necessary repairs.
   4. Bring all sub-grades to specified contours, even and properly compacted.

B. Loosen surface to depth of 2 IN, minimum.

C. Remove all stones and debris over 2 IN in any dimension.

3.2 ROUGH GRADE REVIEW

A. Reviewed by Engineer in Specification Section 02110.

3.3 PLACING TOPSOIL

A. Do not place when subgrade is wet enough to cause clodding.

B. Spread to compacted depth of 4 IN for all disturbed earth areas.

C. Provide finished surface free of stones, sticks, or other material 1 IN or more in any dimension.

D. Provide finished surface smooth and true to required grades.

E. Restore stockpile area to condition of rest of finished work.

3.4 ACCEPTANCE

A. Upon completion of topsoiling, obtain Engineer's acceptance of grade and surface.

B. Make test holes where directed to verify proper placement and thickness of topsoil.

END OF SECTION

SECTION 02270
SOIL EROSION AND SEDIMENT CONTROL

PART 1 - GENERAL

1.1 SUMMARY

A. Section Includes:
   1. Soil erosion and sediment control.

B. Related Specification Sections include but are not necessarily limited to:
   1. Division 00 - Bidding Requirements, Contract Forms, and Conditions of the Contract.
   2. Division 01 - General Requirements.

1.2 QUALITY ASSURANCE

A. Referenced Standards:
   1. Erosion control standards:
      a. Erosion and Sediment Control Designer and Reviewer Manual, July 2013, State of Florida, State Erosion and Sediment Control Task Force

B. The Contractor shall provide a Qualified Stormwater Management Inspector with current certifications by the FDEP.

C. The Contractor is responsible for all turbidity control, monitoring, NPDES permits, permitting fees, and Stormwater Pollution Prevention Plan (SWPPP) for the project.

PART 2 - PRODUCTS

2.1 MATERIALS

A. Refer to Erosion and Sediment Control Designer and Reviewer Manual, July 2013.

EXECUTION

2.2 PREPARATION

A. All soil and erosion control measures shall comply with State and local ordinances.

B. Prior to General Stripping Topsoil and Excavating:
   1. Install turbidity barrier in downstream channel within work limits.
   2. Install silt fence, perimeter dikes, and swales where required.
   3. Excavate and shape sediment basins and traps if required.
   4. Construct pipe spillways and install stone filter where required.
   5. Machine compact all berms, dikes and embankments for basins and traps.
   6. Construction of sedimentation basins in copper-impacted areas or areas mitigated for copper is not permissible.
   7. Design sedimentation basins, if used, so that water discharged from storage piles will not directly enter perimeter ditches through surface flow or piping.

C. Provide temporary seeding on embankments, topsoil/muck/peat stockpiles, and within borrow area.

2.3 DURING CONSTRUCTION PERIOD

A. Maintain sedimentation basins, dikes, traps, stone filters, silt fences, straw bales, and other erosion control measures:
   1. Inspect regularly especially after rainstorms.
   2. Repair or replace damaged or missing items.

B. After rough grading, sow temporary grass cover over all exposed earth areas not draining into sediment basin or trap.

C. Provide necessary swales and dikes to direct all water towards and into sediment basins and traps.

D. Do not disturb existing vegetation (grass and trees) except as required.

E. Excavate sediment out of basins and traps when capacity has been reduced by 50 percent.
   1. Remove sediment from behind bales or silt fences to prevent overtopping.

F. Topsoil and Fine Grade Slopes and Swales, etc.: Seed and mulch as soon as areas become ready.

2.4 NEAR COMPLETION OF CONSTRUCTION

A. Eliminate basins, dikes, traps, etc.

B. Grade to finished or existing grades.

C. Fine grade all remaining earth areas, then seed and mulch.

END OF SECTION

SECTION 02271
STONE REVETMENT (RIP RAP)

PART 1 - GENERAL

1.1 SUMMARY

A. Section Includes:
1. Stone revetment (rip rap) for protection against erosion.
   a. Pipe outlets.
   b. Gated inlets Spillway
   c. Other areas indicated and shown on the Drawings.

B. Related Specification Sections include but are not necessarily limited to:
1. Division 00 - Bidding Requirements, Contract Forms, and Conditions of the Contract.
2. Division 01 - General Requirements.
3. Section 02200 - Earthwork.
4. Section 02778 - Geotextiles

1.2 QUALITY ASSURANCE

A. Referenced Standards:
1. American Association of State Highway and Transportation Officials (AASHTO):
   a. T85, Standard Method of Test for Specific Gravity and Absorption of Coarse Aggregate.
2. ASTM International (ASTM):
   a. C88, Standard Test Method for Soundness of Aggregates by Use of Sodium Sulfate or Magnesium Sulfate.
   b. C127, Standard Test Method for Density, Relative Density (Specific Gravity), and Absorption of Coarse Aggregate.
   c. C295, Petrographic Examination of Aggregates for Concrete
   d. C535, Standard Test Method for Resistance to Degradation of Large-Size Coarse Aggregate by Abrasion and Impact in the Los Angeles Machine
   e. D5313, Evaluation of Durability of Rock for Erosion Control Under Wetting and Drying Conditions
   f. D5519, Particle Size Analysis of Natural and Man-Made Riprap Materials

1.3 SUBMITTALS

A. Shop Drawings:
1. See Specification Section 01340 for requirements for the mechanics and administration of the submittal process.
2. Product technical data including:
   a. Acknowledgement that products submitted meet requirements of standards referenced.

3. Stone gradation shall be based on ASTM D5519 Test Method A: Size-Mass Grading. A representative sample shall be tested to achieve a minimum 2 percent accuracy based on the largest individual piece mass. A cumulative plot of percent lighter (by weight) versus stone weight in pounds shall be submitted.
4. Test reports and certifications: Provide reports and testing certificates from a qualified testing agency to verify the conformity to the requirements of the contract documents. These must be submitted prior to acceptance of the rock source and delivery of rock to the job site,
5. Submit all tests and certification in a single coordinated submittal.
   a. Partial submittals will not be accepted.

PART 2 - PRODUCTS

2.1 MATERIALS

A. Riprap Stone: The Contractor shall furnish stone for riprap that is sound, durable and angular in shape. Riprap shall weigh not less than 140 pounds per cubic foot (pcf) saturated surface dry. No more than ten (10) percent of the stone for any gradation shall have an elongation (ratio of greatest dimension to least dimension) greater than 3:1, and no stone shall have an elongation greater than 4:1. Riprap material shall conform to the following additional requirements:

1. Material shall be free from cracks, seams, non-mineralized or other defects that would tend to increase its deterioration from natural causes. Riprap shall consist of dense, natural rock fragments. Stones shall be resistant to weathering and to water action; free from overburden, spoil, shale and organic material; and shall meet the gradation requirements below. Shale and stones with shale seams are not acceptable.
2. Stone for riprap shall have the following properties:

Type A (6-inch Average Size)	
DIAMETER	**PERCENTAGE PASSING**
12-inch	95-100
6-inch	25-75
3-inch	0-10

Type B (12-inch Average Size)	
DIAMETER	**PERCENTAGE PASSING**
18-inch	95-100
12-inch	25-75
6-inch	0-10

a. Bulk specific gravity (saturated surface-dry basis) not less than 2.38 when tested by ASTM C127 for all gradations.
b. The minimum apparent specific gravity of the stones shall be 2.5 as determined by ASTM C127 and AASHTO T85.
c. Absoprtion of not more than 5.0% when tested by ASTM C127.
d. Soundness: Soundness of stone shall be determined in accordance with ASTM C88, modified as specified herin. Weight loss in five (5) cycles shall be not more than 10% when sodium sulfate is used or 15% when magnesium sulfate is used.
e. Stones shall have a wear not greater than 40% when tested per ASTM C535.
f. Stone gradation based on a representative sample of not less than 2.0 cubic yards (CY). Each stone in the sample shall be individually weighted, and a cumulative plot of percent lighter (by weight) versus stone weight in pounds shall be submitted.

3. Control of gradation shall be by visual inspection. The CONTRACTOR shall furnish a sample of the proposed gradation of at least 10% of the total riprap weight require for the project. If approved, the sample may be incorporated into the finished riprap at a location where it can be used as a frequent reference for judging the gradation of the remainer of riprap. Any difference of opinion between the COUNTY and the CONTRACTOR shall be resolved by dumping and checking the gradation of two (2) random truckloads of stones. Arranging for and cost of mechanical equipment, a sorting site, and labor needed in hecking gradation shall be the CONTRACTOR's responsibility.
4. The acceptability of the stones will be determined by the COUNTY prior to placement.

B. Bedding Stone: The CONTRACTOR shall place a layer of bedding material beneath the riprap materials to the lines and grades shown on the drawings. Bedding stone shall weigh not less than 135 pounds per cubic foot (pcf) saturated surface dry. The material shall be composed of tough, durable particles, shall be reasonably free from thin, flat and elongated pieces, and shall contain neither organic matter nor soft, friable particles in quantities considered objectionable by the COUNTY.

1. Bedding stone shall be reasonably well gradded and conform to the size and gradation as follows:

Bedding Stone	
DIAMETER	**PERCENTAGE PASSING**
3 inch	100
1 1/2 inch	65-95
3/4 inch	50-80
No. 4	30-55
No. 20	13-20
No. 40	5-20
No. 80	0-5

2.2 SOURCE QUALITY CONTROL

A. Source Tests:
1. Supply certified tests and service records to determine acceptability and application of stone materials.
2. In event suitable test reports or a service record that is satisfactory are not available, as in case of newly operated sources or waste stone found on site, subject material to tests necessary to determine its acceptability for use.
3. Test results for riprap shall document compliance with the above definitons for riprap and bedding stone.

PART 3 - EXECUTION

3.1 PREPARATION

A. Trim and dress all areas to required cross sections.

B. Bring areas that are below allowable minus tolerance limit to grade by filling with material similar to adjacent material.

C. Compact to density specified for backfill in accordance with Specification Section 02200.

D. Do not place any stone material on prepared base prior to inspection by Engineer.

E. For channels, swales, outlet protection or other drainage protection areas, top of material at design edges shall match adjoining grade. Top of stone shall match final design grades. Set grades to channel stormwater and not create a barrier to overland flow.

F. Place geotextile in accordance with Section 02778.

G. Place a crushed stone bedding layer over the geotextile prior to placing riprap.

3.2 PLACING

A. Place stone revetment material on bedding layer within limits indicated.

B. Place on prepared base to produce a well-graded mass of stone with minimum percentage of voids.

C. Place to required thickness and grades.

D. Place to full thickness in a single operation to avoid displacing the underlying material.

E. Distribute entire mass to conform to gradation specified.
   1. Do not place stone by dumping into chutes or by similar method likely to cause segregation.

F. Keep finished stone revetment free from objectionable pockets of small stones or clusters of larger stone.
   1. Hand place as necessary to obtain a well-graded distribution.

G. Place stone revetment in conjunction with embankment construction to prevent mixture of embankment and stone revetment materials.

H. A tolerance of plus 6 inches and minus 3 inches from the slope lines and grades shown on the contract drawings will be allowed in the finished surface of the riprap

I. Protect and maintain stone revetment until accepted.

J. Replace any displaced material, at no additional expense, to lines and grades shown in drawings.

END OF SECTION

SECTION 02277
ARTICULATED CONCRETE BLOCK MATTRESS SYSTEM

PART 1 - GENERAL

1.1 SUMMARY

A. This Section covers the requirements for the construction of an articulated and interlocked concrete block revetment system. The articulated concrete block (ACB) revetment system shall include the erosion control geotextile, concrete block units, cable stayed, and anchoring system (as necessary).

B. Related Sections include but are not necessarily limited to:
   1. Division 01 – General Requirements
   2. Section 03002 – Concrete
   3. Section 02200 – Earthwork
   4. Section 02778 – Geotextile

1.2 QUALITY ASSURANCE

A. Referenced Standards
   1. Florida Department of Transportation:
      a. FDOT Standard Specifications for Road and Bridge Construction, latest Edition
   2. American Society for Testing and Materials, (ASTM):
      a. A36/A36M-01 Standard Specification for Carbon Structural Steel
      b. A123/A123M-01a Standard Specification for Zinc (Hot-Dip Galvanized) Coatings on Iron and Steel Products
      c. C207 Standard Specification for Hydrated Lime for Masonry Purposes
      d. C150 Standard Specification for Portland Cement
      e. C595 Standard Specification for Blended Hydraulic Elements
      f. C618 Standard Specification for Coal Fly Ash and Raw or Calcined Natural Pozzolan for Use in Concrete
      g. D4873 Identification, Storage, and Handling of Geosynthetic Rolls and Samples
      h. D6684 Standard Specification for Materials and Manufacture of Articulating Concrete Block (ACB) Revetment Systems
      i. D6884 Standard Practice for Installation of Articulating Concrete Block (ACB) Revetment Systems

B. Qualifications
   1. Each manufacturing, fabricating firm shall demonstrate five (5) years continuous experience manufacturing articulated block systems.

1.3 DEFINITIONS: (NOT USED)

1.4 SUBMITTALS

A. The Contractor shall submit the following:
   1. Product data showing the type of concrete block, cables, cable fittings, geotextile (including a sample), and anchoring system (as necessary) proposed for use.
   2. Shop Drawing showing the details of the method of installation of the articulated block system, including the block layout patterns in relation to the feature alignment, anticipated locations of cast-in-place concrete joints, soil anchors (if necessary), and void filling materials.
   3. Certificates: The Contractor shall submit in accordance with Section 01340 certification prepared by a qualified independent testing laboratory indicating the following for each aggregate source or gradation proposed for use:

a. Gradation: FDOT Section 901

1.5 WARRANTY:

A. The manufacturer shall warrant the equipment, materials and products specified in this section against defective materials and workmanship with the manufacturer's standard warranty, but for no less than one year from the date of Substantial Completion.

B. The Contractor shall warrant the work against defects for one year from the date of Substantial Completion.

1.6 DELIVERY, STORAGE, AND HANDLING

A. Check products upon delivery to assure that the proper material has been received and is undamaged. For geosynthetics, the guidelines presented in ASTM D4872 and Specification Section 02778 shall be followed.

1. Blocks
   a. Provide blocks which are sound and free of defects that would interfere with proper placement or that would impair the strength or longevity of the installation. Discard blocks with the following defects (these properties shall be deemed grounds for rejection):
      1) Broken appendages.
      2) Chips larger than 0.25 inches in any dimension or weight loss exceeding 10% of the average weight of the blocks.
      3) Cracks wider than 0.25 inches and/or 1.0 inch in depth.
   b. Store blocks in a suitable location away from mud, paint, wet cement, and other contamination or disturbance.
   c. Blocks rejected prior to delivery from the point of manufacture shall be replaced at the manufacturer's expense. Blocks rejected at the job site shall be repaired with structural grout at the expense of the Contractor.

PART 2 - PRODUCTS

2.1 CONCRETE BLOCK MATS

A. All cellular concrete mats shall be premanufactured as an assembly of concrete blocks, with specific hydraulic capacities, bound into mats by the use of revetment cables.

B. Individual blocks in the cellular mats shall be staggered and interlocked for enhanced stability. The open cell units shall have two (2) vertical openings of rectangular cross section with sufficient wall thickness to resist breakage during shipping and installation. The mats shall be constructed of open cell blocks as shown on the contract drawings. Parallel strands of cable shall extend through two (2) ducts in each block in a manner which provides for longitudinal binding of the blocks within the mats. Each row of blocks shall be laterally offset by one-half block width from the adjacent row so that any given block is cabled to four other blocks (two in the row above and two in the row below).

C. The gross area of each individual block in direct contact with the protected subgrade shall be no less than one square foot. Each block shall incorporate interlocking surfaces that prevent lateral displacement of the blocks within the mats when they are lifted by the longitudinal revetment cables. The interlocking surfaces must not protrude beyond the perimeter of the blocks to such an extent that they reduce the flexibility or articulation capability of the cellular mats or become damaged or broken when the mats are lifted during shipment or placement. Once the mats are in place, the interlocking surfaces shall prevent the lateral displacement of the blocks even if the cables should become damaged or removed. The mats must be able to flex a minimum of 18 degrees between any given row or column of blocks in the uplift direction and a minimum of 45 degrees in the downward direction.

D. The cellular concrete mats shall be placed on a geotextile as specified herein. Under no circumstances shall the geotextile be affixed (i.e. chemically bonded to the blocks) to the mattress in a manner in which would jeopardize the functionality of the geotextile. Specifically, the geotextile shall be independent of the block system.

E. The cables shall be inserted into the mats in such a manner to form lifting loops at one end of the mat with the corresponding cable ends spliced together to form a lifting loop at the other end of the mat with sleeves approved by the engineer. The cables shall be inserted after sufficient time has been allowed for the concrete to complete the curing process.

2.2 CONCRETE BLOCKS

A. The following materials shall be used for the manufacturing of the concrete blocks:
   1. Cementitious Materials - Materials shall conform to the following applicable ASTM specifications:
      a. Portland Cements - Specification C150, for Portland Cement.
      b. Blended Cements - Specification C595, for Blended Hydraulic Cements.
      c. Hydrated Lime Types - Specification C207, for Hydrated Lime Types.
      d. Pozzolans - Specification C618, for Fly Ash and Raw or Calcined Natural Pozzolans for use in Portland Cement Concrete

B. Aggregates shall conform to the following ASTM specifications, except that grading requirements shall not necessarily apply:
   1. Normal Weight - Specification C33, for Concrete Aggregates.

C. Physical Requirements:
   1. At the time of delivery to the work site, the units shall conform to the physical requirements prescribed in Table 1 below.

TABLE 1. PHYSICAL REQUIREMENTS			
Compressive Strength Net Area Min. psi		**Water Absorption Max., lb/ft^3**	
Avg. of 3 units	Individual Unit	Avg. of 3 units	Individual Unit
4,000	3,500	10	12

   2. The concrete blocks shall have the following nominal characteristics:

TABLE 2. CONCRETE BLOCKS NOMINAL CHARACTERISTICS						
TYPE	**BLOCK WEIGHT**		**BLOCK SIZE**			**OPEN AREA %**
	Lbs/block	Lbs./Sq.ft.	Length inches	Width inches	Height inches	
1	75-85	40-50	17.4	15.5	6.0	20

D. Visual Inspection:
   1. All units shall be visually inspected after installation. If any of the blocks exhibit cracks, chipping or damage deemed as grounds for rejection as listed in the Delivery, Storage, and Handling paragraph of this Section shall be repaired or replaced as required herein.

2.3 REVETMENT CABLES

A. Revetment cable shall be as recommended by the Articulated Block Manufacturer. The cables shall be made from individual wires and strands that have been formed during the manufacture into the shape they have in finished cable.

B. The revetment cable shall have the following physical properties:

Nominal Cable Diam.	Approx. Avg. Strength Lbs.	(kN)	lbs./100 ft (kg/m) Min. Lbs.	(kg)	Max Lbs.	(kg)
3/16”	3,700	(16.4)	6.2	(.09)	6.5	(.10)
1/4”	6,100	(27.1)	10.6	(.16)	11.0	(.16)
5/16”	9,800	(43.6)	16.8	(.22)	18.0	(.26)
3/8”	13,300	(59.2)	23.6	(.35)	25.0	(.36)

C. The revetment cable shall exhibit good resistance to mild concentrations of acids, alkalis, and solvents. Fittings such as sleeves and stops shall be aluminum, washers shall be galvanized steel. Furthermore, depending on material availability, the cable type can be interchanged while always ensuring the required factor of safety for the cable.

D. Selection of cable and fittings shall be made in a manner that insures a safe design factor for mats being lifted from both ends, thereby forming a catenary. Consideration shall be taken for the bending of the cables around hooks or pins during lifting. Revetment cable splicing fittings shall be selected so that the resultant splice shall provide a minimum of 75% of the minimum rated cable strength.

2.4 GEOTEXTILE

A. The geotextile filter shall meet the requirements for Geotextile listed in Section 02778.

PART 3 - EXECUTION

3.1 FOUNDATION PREPARATION:

A. Areas on which geotextile and cellular concrete blocks are to be placed shall be constructed to the lines and grades shown on the Drawings and to the tolerances specified in the Contract Documents, and approved by the Engineer.

B. The slope shall be graded to a smooth plane surface to ensure that intimate contact is achieved between the slope face and the geotextile, and between the geotextile and the entire bottom surface of the cellular concrete blocks. All slope deformities, roots, grade stakes, and stones which project normal to the local slope face must be regraded or removed. No holes, "pockmarks", slope board teeth marks, footprints, or other voids greater than 0.5 inch in depth normal to the local slope face shall be permitted. No grooves or depressions greater than 0.5 inches in depth normal to the local slope face with a dimension exceeding 1.0 foot in any direction shall be permitted. Where such areas are evident, they shall be brought to grade by placing compacted homogeneous material. The slope and slope face shall be uniformly compacted, and the depth of layers, homogeneity of soil, and amount of compaction shall be as required in Section 02200.

C. Excavation and preparation for anchoring trenches, side trenches, and toe trenches or aprons shall be done in accordance to the lines, grades and dimensions shown in the Contract Drawings. The anchor trench hinge-point at the top of the slope shall be uniformly graded so that no dips or bumps greater than 0.5 inches over or under the local grade occur. The width of the anchor trench hinge-point shall also be graded uniformly to assure intimate contact between all cellular concrete blocks and the underlying grade at the hinge-point.

3.2 GEOTEXTILE INSTALLATION

A. The Contractor shall install the woven geotextile in accordance with the manufacturer's recommendations and Section 02778.

3.3 CONCRETE BLOCK PLACEMENT

A. The cellular concrete blocks shall be placed on the geotextile in such a manner as to produce a smooth plane surface in intimate contact with the geotextile. No individual block within the plane of placed cellular concrete blocks shall protrude more than one-half inch or as otherwise specified by the Engineer. To ensure that the cellular concrete blocks are flush and develop intimate contact with the subgrade, the blocks shall be "seated" with a roller or other means as approved by the Engineer.

B. If assembled and placed as large mattresses, the cellular concrete mats shall be attached to a spreader bar or other approved device to aid in the lifting and placing of the mats in their proper position by the use of a crane or other approved equipment. The equipment used should have adequate capacity to place the mats without bumping, dragging, tearing or otherwise damaging the underlying fabric. The mats shall be placed side by side and/or end to end, so that the mats abut each other. Mat seams or openings between mats greater than two (2) inches shall be filled with grout. Whether placed by hand or in large mattresses, distinct changes in grade that results in a discontinuous revetment surface in the direction of flow shall require a grout seam at the grade change location so as to produce a continuous surface.

C. Anchor trenches and side trenches shall be backfilled and compacted flush with the top of the blocks. The integrity of a soil trench backfill must be maintained so as to ensure a surface that is flush with the top surface of the cellular concrete blocks for its entire service life. Toe trenches shall be backfilled as shown on the Contract Drawings. Backfilling and compaction of trenches shall be completed in a timely fashion. No more than 500 lineal feet of placed cellular concrete blocks with non-completed anchor and/or toe trenches shall be permitted at any time.

D. The cells or openings in the cellular concrete blocks shall be backfilled and compacted immediately with unclassified backfill material to assure that there are not voids and so that compacted material extends from the geotextile to one-inch above the surface of the cellular concrete block. Backfilling and compaction shall be completed in a timely manner such that no more than 500 feet of exposed mats exist at any time. After backfilling, voids shall be seeded to promote vegetation growth.

E. The manufacturer of the cellular concrete blocks/mats shall provide design and construction advice during the design and initial installation phases of the project, when required.

END OF SECTION

SECTION 02778
GEOTEXTILES

PART 1 - GENERAL

1.1 SUMMARY

A. Section Includes:
   1. Nonwoven geotextile material.

B. Related Specification Sections include but are not necessarily limited to:
   1. Division 00 - Bidding Requirements, Contract Forms, and Conditions of the Contract.
   2. Division 01 - General Requirements.
   3. Section 02200 -Earthwork.
   4. Section 02271 – Stone Revetment (Riprap)

1.2 QUALITY ASSURANCE

A. Referenced Standards:
   1. American Association of State Highway Transportation Officials (AASHTO):
      a. M288, Standard Specification for Geotextile Specification for Highway Applications.
   2. ASTM International (ASTM):
      a. D3786, Standard Test Method for Bursting Strength of Textile Fabrics-Diaphragm Bursting Strength Tester Method.
      b. D4355, Standard Test Method for Deterioration of Geotextiles by Exposure to Light, Moisture and Heat in a Xenon Arc Type Apparatus.
      c. D4491, Standard Test Methods for Water Permeability of Geotextiles by Permittivity.
      d. D4533, Standard Test Method for Trapezoid Tearing Strength of Geotextiles.
      e. D4632, Standard Test Method for Grab Breaking Load and Elongation of Geotextiles.
      f. D4751, Standard Test Method for Determining Apparent Opening Size of a Geotextile.
      g. D4759, Standard Practice for Determining the Specification Conformance of Geosynthetics.
      h. D4833, Standard Test Method for Index Puncture Resistance of Geomembranes and Related Products.
      i. D4873, Standard Guide for Identification, Storage, and Handling of Geosynthetic Rolls and Samples.
      j. D5261, Standard Test Method for Measuring Mass per Unit Area of Geotextiles.

B. Qualifications:
   1. Each manufacturing, fabricating firm shall demonstrate five (5) years continuous experience, including a minimum of 10,000,000 SF of geotextile installation in the past three (3) years.
   2. Installing firm shall demonstrate that the site Superintendent or Foreman has had responsible charge for installation of a minimum of 1,000,000 SF of geotextile.
   3. Installer shall attend pre-installation conference.

1.3 DEFINITIONS

A. Manufacturer: Manufacturer producing geotextile sheets from resin and additives.

B. Installer: The Installers are the individuals actually performing the hands-on work in the field.

1.4 SUBMITTALS

A. Shop Drawings:
   1. See Specification Section 01340 for requirements for the mechanics and administration of the submittal process.
   2. Manufacturer's documentation that raw materials and roll materials comply with required geotextile physical properties.

3. Manufacturer and Installer quality control manuals.
4. Original test results for resins, roll material and factory seam tests at frequency specified in respective quality control manuals.
   a. Results shall include or bracket the rolls delivered for use in the Work.
5. Geotextile layout plan with proposed size, number, position and sequencing of geotextile rolls and direction of all field seams.
6. Proposed details of anchoring and overlapping if different than included in Contract Documents.

B. Informational Submittals:
   1. See Specification Section 01340 for requirements for the mechanics and administration of the submittal process.
   2. For needle punched geotextiles, the manufacturer shall certify that the geotextile has been continuously inspected using permanent on-line full-width metal detectors and does not contain any needles which could damage other geosynthetic layers.
   3. Qualification documentation specified in the QUALITY ASSURANCE Article in PART 1 of this Specification Section.

1.5 DELIVERY, STORAGE AND HANDLING

A. Label, handle, and store geotextiles in accordance with ASTM D4873 and as specified herein.

B. Wrap each roll in an opaque and waterproof layer of plastic during shipment and storage.
   1. Do not remove the plastic wrapping until deployment.

C. Label each roll with the manufacturer's name, geotextile type, lot number, roll number, and roll dimensions (length, width, gross weight).

D. Repair or replace geotextile or plastic wrapping damaged as a result of storage or handling, as directed.

E. Do not expose geotextile to temperatures in excess of 71 DegC (160 DegF) or less than 0 DegC (32 DegF).

F. Do not use hooks, tongs or other sharp instruments for handling geotextile.
   1. Do not lift rolls lifted by use of cables or chains in contact with the geotextile.
   2. Do not drag geotextile along the ground.

PART 2 - PRODUCTS

2.1 ACCEPTABLE MANUFACTURERS

A. Subject to compliance with the Contract Documents, the following manufacturers are acceptable:
   1. GSE Lining Technology.
   2. Propex Geosynthetics.
   3. SKAPS Industries.
   4. TenCate Mirafi.
   5. Tenax.

B. Submit request for substitution in accordance with Specification Section 01640.

2.2 MATERIALS AND MANUFACTURE

A. Geotextile:
   1. Nonwoven pervious sheet of polymeric material.
   2. Geotextile fibers:
      a. Long-chain synthetic polymer composed of at least 85 percent by weight polyolefins, polyesters, or polyamides.
      b. Filaments resistant to deterioration by ultraviolet light, oxidation, and heat exposure.
      c. Do not as reclaimed or recycled fibers or polymer to the formulation.

3. Form geotextile into a network such that the filaments or yarns retain dimensional stability relative to each other, including the selvages.
4. The geotextile physical properties shall meet the requirements listed below.
   a. Values shown are for the weaker principal direction and are the minimum average roll value, with the exception of apparent opening size (AOS), which is the maximum average roll value.
   b. Acceptance of geotextile shall be in accordance with ASTM D4759.

   c. Geotextile: For use in the spillway, at culvert outlets, at pump discharge pipe outlets, gate structure, and other areas shown on the Drawings.

PROPERTY	TEST METHOD	MINIMUM AVERAGE ROLL VALUE
Mass per Unit Area, OZ/SY	ASTM D5261	=12
AOS, U.S. Standard Sieve	ASTM D4751	100
Permittivity, SEC-1	ASTM D4491	≥0.8
Puncture, LBS	ASTM D4833	≥800
Grab Tensile, LBS	ASTM D4632	≥300
Trapezoidal Tear, LBS	ASTM D4533	>115
Ultraviolet Degradation % retained @ 500 HRS	ASTM D4355	>70
Sewn Seam Strength, LBS	ASTM D4632	>270

B. Thread:
   1. High-strength polyester, nylon, or other approved thread type.
   2. Equivalent chemical compatibility and ultraviolet light stability as the geotextile.
   3. Contrasting color with the geotextile.

PART 3 - EXECUTION

3.1 PREPARATION

A. Construct the surface underlying the geotextiles smooth and free of ruts or protrusions which could damage the geotextiles.

3.2 INSTALLATION

A. Install geotextiles in accordance with manufacturer's written recommendations.

B. Hand place geotextile.
   1. No equipment will be permitted to traffic in direct contact with the geotextile.

C. Prior to placement of geotextile fabrics, the slopes and surfaces to receive geotextile shall be approved by the Engineer.

D. Lay geotextile smooth so as to be free of tensile stresses, folds, and wrinkles.

E. Seam Construction:
   1. Broom clean existing geotextile and cut off to provide a clean area for seaming with the new geotextile.
   2. Sew seams continuously using an SSA flat seam with one (1) row of a two-thread 401 chain stitch unless otherwise recommended by the manufacturer.
   3. Minimum distance from the geotextile edge to the stitch line nearest to that edge: 2 IN unless otherwise recommended by the manufacturer.
   4. Test seams at the frequency specified in the FIELD QUALITY CONTROL Article in PART 3 of this Specification Section.

5. Tie off thread at the end of each seam to prevent unraveling.
6. Construct seams on the top side of the geotextile to allow inspection.
7. Sew skipped stitches or discontinuities with an extra line of stitching with 18 IN of overlap.
8. Geotextile seams may be sewn or overlapped.
    a. Construct overlapped seams in accordance with manufacturer's recommendations or as shown on Drawings.

F. Backfill anchor trenches and place cover soil in accordance with Specification Section 02200.

G. Place bedding stone in accordance with Specification Section 02200.

H. Protect geotextiles from clogging, tears, and other damage during installation.

I. Geotextile Repair:
1. Place a patch of the same type of geotextile which extends a minimum of 12 IN beyond the edge of the damage or defect.
2. Fasten patches continuously using a sewn seam or other approved method.
3. Align machine direction of the patch with the machine direction of the geotextile being repaired.
4. Replace geotextile which cannot be repaired.

J. Use adequate ballast (e.g., sand bags) to prevent uplift by wind.

K. Do not use staples or pins to hold the geotextile in place.

L. Do not leave geotextile uncovered for more than 14 days.

3.3 FIELD QUALITY CONTROL

A. Conduct destructive seam testing at locations identified by Owner.
1. Minimum testing will be at a frequency of one (1) test per 2,000 linear feet of seam.

B. Provide as-constructed drawing showing roll number; layout; joint locations; and destructive sample repair, and patch locations.

END OF SECTION

SECTION 02782
FLOATING WEED BARRIER

PART 1 - GENERAL

1.1 SCOPE:

A. Summary of Work: The Contractor shall furnish equipment, labor and materials for the installation of floating weed barriers as required for the work.

B. Related Work Specified Elsewhere:

1. Section 01340 Submittals

1.2 APPLICABLE STANDARDS AND PUBLICATIONS:

A. Standards or Codes: The edition of the standards of the organizations listed below in effect at the time of the advertisement for bids form a part of this specification to the extent referenced. See the various paragraphs for the specified standard. In the case of a conflict between the requirements of this Section and those of the listed document, the requirements of this Section shall prevail.

1. American Society for Testing and Materials (ASTM):

a. A325 - Standard Specification for Structural Bolts, Steel, Heat Treated, 120/105 ksi Minimum Tensile Strength

b. A572 - Standard Specification for High-Strength Low-Alloy Columbium-Vanadium Structural Steel

c. A653 - Standard Specification for Steel Sheet, Zinc-Coated (Galvanized) or Zinc-Iron Alloy Coated (Galvannealed) by the Hot-Dip Process

d. C272 - Standard Test Method for Water Absorption of Core Materials for Structural Sandwich Constructions

e. C578 - Standard Specification for Rigid, Cellular Polystyrene Thermal Insulation

f. D1505 - Standard Test Method for Density of Plastics by the Density-Gradient Technique

g. D25 – Standard Specification for Round Timber Piles

h. F593 – Standard Specification for Stainless Steel Bolts, Hex Cap Screws, and Studs

i. F594 - Standard Specification for Stainless Steel Nuts

2. American Welding Society, (AWS):

a. D1.1/D1.1M - Structural Welding Code-Steel

3. American Wood Preservative Association (AWPA):

a. Standard M2 - Standard for Inspection of Treated Wood Products

b. Standard T1 - Processing and Treatment Standard

c. Standard U1 -User Specification for Treated Wood

4. Federal Specifications

a. FF-B-575 - Bolts, Hexagonal and Square-Notice 1 Inactivation for New Design

b. FF-B-836 - Nut: Square, Hexagonal, Cap, Slotted, Castle, Knurled, Welded, and Single

c. RR-W-410 - Wire Rope and Strand

d. TT-W-572B - Wood Preservative, Water Repellent

1.3 DEFINITIONS: (NOT USED)

1.4 SUBMITTALS:

A. The Contractor shall provide submittals as specified in Section 01340 Submittals.

B. The Contractor's submittals shall include:

1. Manufacturer's Shop Drawing showing the general arrangement, full dimensions, assembly of materials and connections, and specifications of the booms and accessory products.

   a. Catalog cut sheets on all wire cable and attachment hardware.

2. Manufacturer shall provide a testing certificate attesting to the load capacity of the connection shackles.

1.5 QUALIFICATIONS:

A. Manufacture shall be by a company in the business of designing and manufacturing the specified type or similar structure for at least five (5) years.

1.6 WARRANTY:

A. The Manufacturer shall warrant the equipment, materials and products specified in this Section against defective materials and workmanship with the Manufacturer's standard warranty, but for no less than two years from the date of Substantial Completion, and as described in Specification Section 00500.

B. The Contractor shall warrant the work against defects for two years from the date of Substantial Completion and as described in Specification Section 00500.

PART 2 - PRODUCTS

2.1 GENERAL:

A. The Contractor shall furnish "Tuffboom" floating barrier system as manufactured by Worthington Products, or County approved equal, and shall include the following Manufacturer's accessory items:

1. Provide deflector plates to close the gaps between booms.

2. The individual barrier sections shall be factory assembled.

3. The number of floating barriers provided for each barrier system shall consist of the number required to span the barrier length shown on the Drawings (which includes slack length for deflection) in accordance with the Manufacturer's standard length for connected barriers. In no case shall less than four (4) barriers be provided per barrier system. The length shall include four (4) foot of cable on each end.

2.2 DESIGN REQUIREMENTS: THE CONTRACTOR SHALL FURNISH FLOATING BARRIERS CAPABLE OF COMPLYING WITH THE FOLLOWING PERFORMANCE CONDITIONS.

A. Waves: The floating barrier system shall be designed to withstand storm conditions of up to one-foot waves on a periodic, but not continual, basis.

B. Currents: Design for currents up to six (6) feet per second.

2.3 MATERIAL DATA: THE CONTRACTOR SHALL FURNISH FLOATING BARRIERS COMPLYING WITH THE FOLLOWING MATERIAL REQUIREMENTS.

A. Floating Logs/Devices:

1. Floatation logs shall have a minimum nominal diameter of sixteen (16) inches and consist of an external encasement, internal foam fill and internal galvanized structural steel channel. Each floatation log shall maintain its original buoyancy even if structurally damaged or punctured or supplied with hanging debris skirt attachments.

2. The external encasement shall be manufactured of polyethylene and have a minimum density of 0.935 g/cm^3, per ASTM D1505, be UV stabilized and have a nominal wall thickness of 0.170 inch.

3. The standard encasement color shall be international safety orange.

4. The internal foam shall be polystyrene meeting the requirements of ASTM C578 and shall have a minimum in-place density of 0.9 pounds per cubic foot and a maximum in-place density of 1.2 pounds per cubic foot.

5. The internal structural steel channel shall meet ASTM A572 grade 50 structural steel, with a four (4) inch external channel width, a minimum ultimate tensile strength of 57,000 pounds (lbs) and shall not weigh less than 5.4 pounds per foot.

6. All internal structural steel channels shall be hot dipped galvanized.

7. Provide one (1), three (3) inch wide by twelve (12) inch long, horizontal piece of silver/white reflective tape at the end of each boom.

B. Inter-boom Connection Hardware:

1. Connecting hardware between floatation units shall consist of bottom steel connector plates, load-rated galvanized safety shackles and load-rated galvanized welded lines.

2. All load bearing connections between floatation logs shall be designed such that the load is distributed through the channel.

3. Bottom steel connector plates shall be fabricated from 5/8 inch thick x three (3) inch wide steel plate, ASTM A572, grade 50 and shall be hot dipped galvanized.

4. Connection shackles shall have a minimum pin diameter of 3/4 inch, be of a safety type, have a working load limit (WLL) of not less than 4 - 3/4 tons stamped on the body of each shackle, and shall be hot dipped galvanized. The minimum average tensile breaking strength of each shackle shall be 60,000 lbs and be certified to be proof tested to 57,000 lbs working capacity.

5. Weldless links shall be 3/4 inch, hot dipped galvanized, and have a WLL of not less than 4 – 3/4 tons. The minimum average tensile breaking strength of each link shall be 60,000 lbs and certified to be proof tested to 57,000 lbs working capacity.

6. Connection opening between barrier sections shall not exceed fifteen (15) inches.

7. Bolts shall be galvanized structural steel and shall meet ASTM A325.

C. Deflector Plates:

1. Provide deflector plate, galvanized hex bolts, lock washers and fender washers by Worthington Products or County approved equal at each boom interconnection point.

D. Cable and Cable Clamps:

1. Provide all cable, thimbles, connection clamps and accessories necessary for attaching the floating barrier system to the pile anchor system.

2. All cable shall be 1/2 inch diameter stainless steel wire rope. Stainless steel wire rope shall conform to FS RR-W-410, Type I, Class 1 or 2. Core shall be wire strand or IWRC.

3. Cable clamps, fasteners, shackles, thimbles and accessories shall be able to resist maximum channel water velocities of six (6) feet per second.

4. All cable, thimbles, clamps and accessory items for attachment purposes shall be stainless steel.

5. Bolts and Nuts: Bolts shall conform to ASTM F593. Nuts shall conform to ASTM F594. Bolts and nuts shall be stainless steel and of the type, size, and dimensions shown on the Contract Drawings.

6. Washers: Plain or cut washers shall conform to the requirements of ANSI B27.2 heavy series, and lock washers shall conform to the requirements of ANSI B18 21.1 heavy series. Washers shall be provided for applications specified on the Contract Drawings. Washers shall be of the same material as the nut and bolt with which they are used.

7. The Contractor shall provide nails, staples, and cable clamps that are commercial grade, stainless steel, and of the size indicated on the Contract Drawings.

E. Treated Timber Piles: The Contractor shall provide piles conforming to the requirements of ASTM D25 with minimum butt diameters of 12 inches. Treated piles shall be clean peeled and pressure treated in accordance with Federal Specification TT-W-572B, with minimum retention indicated for the environment and for the type of wood being treated.

1. Use Category Requirements:

a. Timber piles used to anchor floating weed barriers shall be treated in accordance with AWPA Standard U1 to the requirements of UC4B.

2. Preservative Requirements:

a. Preservative: The following pressure treated wood formulations are acceptable:

i. Alkaline Copper Quaternary Type C (ACQ-C) and Type D (ACQ-D with carbonate)

ii. Copper Azole Type B (CA-B)

b. The method of treatment for all timber materials shall be in accordance with Fed. Spec. TT-W-572B. Use of Chromated Copper Arsenate (CCA) treated timber shall only be permitted for marine (salt water) applications assigned in the Use Category 5 (UC5), as specified under Sub-Section 6 of the AWPA Standard U1.

c. Pressure Treatment: Pressure treatment shall be in accordance with the requirements of American Wood Preserves Association (AWPA) Standard U1 and T1. Each piece of pressure preservative treated lumber shall bear the AWPA stamp, indicating point of treatment, preservative symbol, symbol of standard, date of treatment, and moisture content after treatment.

d. Preservative Retention Rates: The minimum requirements for preservative retention shall be calculated as pounds of any preservative system per cubic feet

(lbs/ft^3) of wood as indicated in the AWPA Commodity Specifications in Standard T1.

e. Preservative Penetration Depths: The minimum requirements for preservative penetration shall not be less than the predetermined values in AWPA Standard U1.

3. Treated piles shall be carefully handled with no sudden dropping, breaking of outer fibers, bruising, or penetrating the surface with tools. Peaveys, cant hooks, pile, hooks, and other pointed tools shall not be used in handling treated piles. Cut or damaged surfaces of piles, including the tops of all piles after heading, and bolt holes shall be given after-treatment care as required by FS TT-W-572B, using one (1) application of a concentrated solution of the preservative used in the treatment.

4. The Contractor shall furnish and install steel plate pile shoes on the tips of the piles. Shoes shall fit the piles snugly and shall be of the conical, box, or pyramid type with extended lugs to permit spiking to the pile. The County shall approve the design of the shoes.

PART 3 - EXECUTION

3.1 INSTALLATION: THE CONTRACTOR SHALL INSTALL FLOATING BARRIERS AS REQUIRED FOR THE WORK AND IN ACCORDANCE WITH THE FOLLOWING.

A. Field measure distances between anchor points to assure proper fit-up.

B. Install barrier according to Manufacturer's printed instructions.

C. The County will inspect the treated timber piles at the Site of the work. Facilities shall be made available to the County for proper inspection of each pile throughout its length. Piles damaged after inspection may be subsequently rejected if damage is deemed sufficient for rejection by the County. All rejected piles shall be removed as directed. Treatment of piles will be inspected in accordance with AWPA Standard M2.

D. The Contractor shall provide treated timber piles of sufficient length to allow for "Heading" and cutting off square after driving. The Contractor shall furnish piles in lengths at least one foot greater than the lengths specified to be below the cut-off elevations.

E. The Contractor shall bore bolt holes the same diameter as the bolt. Holes bored into piles shall be treated as specified in paragraph 2.3(e) and, when not used for bolts, shall be tightly closed by a treated plug. Holes shall not be bored or spikes driven into piles to support scaffolding. As soon as practicable after "Heading", the Contractor shall treat the tops of all piles as specified in paragraph 2.3(e).

F. The Contractor shall cap the tops of all piles as shown on the Contract Drawings with stainless steel sheet metal formed in the field to the shape of pile head with no sharp or protruding edges. Fasten caps to timber pile with stainless steel 6D nails around perimeter of pile head at two (2) inches centers.

3.2 DRIVING PILES: THE CONTRACTOR SHALL ADHERE TO THE FOLLOWING REGARDING DRIVING OF PILES.

A. General:

1. No piles shall be driven until the excavation or fill in the area, which they are to occupy, has been completed to elevation of grade indicated on the Contract Drawings,

nor within 100 feet of concrete less than seven (7) days old, unless authorized by the County.

2. The Contractor shall carefully locate all piles to the lines and spacing shown on the Contract Drawings and shall drive piles either to the vertical or batter lines indicated recommended by the manufacturer.

3. The maximum permissible deviation for piles out of plumb or off batter shall be two (2) percent of the pile length.

4. The maximum permissible deviation from indicated locations shall be three (3) inches for each pile.

5. The Contractor, when working in difficult alignment areas such as sloped surfaces, shall use appropriate means than may consist of templates or pilot holes to properly align piles.

B. Driving Equipment:

1. Free-swinging leads will not be permitted.

2. Pile drivers shall have fixed leads at the top and bottom, extending to the lowest point the hammer must reach.

3. Pile-driving hammers shall be of a size and type able to deliver consistently effective dynamic energy suitable for the type and capacity of the piles to be driven and the material into which they are to be driven.

4. Equipment for driving shall be in first class condition and shall be at all times maintained and operated at the efficiency and capacity required herein and as directed by the County.

C. Driving:

1. Punching or drilling holes will be allowed where necessary to permit piles to pass through those strata and reach required penetration.

2. Blasting of holes for the piles will not be permitted.

3. The Contractor shall drive all piles continuously and without voluntary interruption. After driving and back-driving the Contractor shall cut piles at the cutoff grade line, and the surplus material shall be removed from the Site of the work.

4. Any piles, requiring excessive bending in order to frame properly, shall be withdrawn and re-driven to the proper batter. Driving batter piles vertically and then pulling them into position will not be permitted.

D. Special Precautions:

1. Long Piles: When handling and driving long piles of a high slenderness ratio, the Contractor shall take special precautions to ensure against overstress or leading away from a plumb or true position when driving.

2. Water Jets:

a. Water jets may be used in driving only when specifically requested by the CONTRACTOR and authorized in writing by the County. The County may require water jets where satisfactory penetration cannot be obtained otherwise.

b. Where jetting is allowed by the County, at least two (2) jets shall be used. All jetted piles shall be driven for the final five feet of penetration, unless otherwise directed by the County.

E. Record of Driving: An accurate record of the driving of each pile shall be kept by the Contractor and given to the County. This record shall show the number of piles, the date and the time of driving, the size and length of the pile, the type and capacity of the hammer used, the number of blows per minute, and the number of blows for each foot or each part of a foot of penetration of the pile.

3.3 ADJUST AND CLEAN: THE CONTRACTOR SHALL ADJUST AND CLEAN THE FLOATING BARRIERS AS REQUIRED TO ENSURE THEIR PROPER FUNCTION AND IN ACCORDANCE WITH THE FOLLOWING.

A. Ensure that connections have been properly installed to accommodate water level fluctuations.

B. Make adjustments as required and as permitted by the Manufacturer.

C. Clean abraded areas of shop coating, and touch-up damaged areas with same type coating as used for shop coating.

END OF SECTION

SECTION 02930
SEEDING AND SODDING

PART 1 - GENERAL

1.1 SUMMARY

A. Section Includes:
   1. Seeding, sodding and landscape planting:
      a. Soil preparation.

B. Related Specification Sections include but are not necessarily limited to:
   1. Division 00 - Bidding Requirements, Contract Forms, and Conditions of the Contract.
   2. Division 01 - General Requirements.
   3. Section 02260 - Topsoiling and Finished Grading.

1.2 QUALITY ASSURANCE

A. Referenced Standards:
   1. American Nursery and Landscape Association/American National Standards Institute (ANLA/ANSI):
      a. Z60.1, American Standard for Nursery Stock.
   2. AOAC International (AOAC).
   3. ASTM International (ASTM):
      a. D2028, Standard Specification for Cutback Asphalt (Rapid-Curing Type).
      b. D5276, Standard Test Method for Drop Test of Loaded Containers by Free Fall.

B. Quality Control:
   1. Fertilizer:
      a. If Engineer determines fertilizer requires sampling and testing to verify quality, testing will be done at Contractor's expense, in accordance with current methods of the AOAC.
      b. Upon completion of Project, a final check of total quantities of fertilizer used will be made against total area seeded.
      c. If minimum rates of application have not been met, Contractor will be required to distribute additional quantities to make up minimum application specified.

1.3 SUBMITTALS

A. Shop Drawings:
   1. See Specification Section 01340 for requirements for the mechanics and administration of the submittal process.
   2. Product technical data including:
      a. Acknowledgement that products submitted meet requirements of standards referenced.
      b. Manufacturer's installation instructions.
      c. Signed copies of vendor's statement for seed mixture required, stating botanical and common name, place of origin, strain, percentage of purity, percentage of germination, and amount of Pure Live Seed (PLS) per bag.
      d. Type of herbicide to be used during first growing season to contain annual weeds and application rate.
      e. Source and location of sod.
   3. Certification that each container of seed delivered will be labeled in accordance with Federal and State Seed Laws and equals or exceeds Specification requirements.

B. Informational Submittals:
   1. See Specification Section 01340 for requirements for the mechanics and administration of the submittal process.
   2. Copies of invoices for fertilizer used on Project showing grade furnished, along with certification of quality and warranty.

1.4 SEQUENCING AND SCHEDULING

A. Installation Schedule:
   1. Provide schedule showing when groundcovers are anticipated to be planted.
   2. Show schedule of when grass areas are anticipated to be planted.
   3. Indicate planting schedules in relation to schedule for irrigation system installation, finish grading and topsoiling.
   4. Indicate anticipated dates Engineer will be required to review installation for initial acceptance and final acceptance.

PART 2 - PRODUCTS

2.1 ACCEPTABLE MANUFACTURERS AND SUPPLIERS

A. Subject to compliance with the Contract Documents, the manufacturers and suppliers listed in the applicable Articles below are acceptable.

B. Submit request for substitution in accordance with Specification Section 01640.

2.2 MATERIALS

A. Native Grass Seeding:
   1. Certified seed of locally adapted strains.
   2. Bahia
   3. Sod from a local sod farm (to be approved by the County)

B. Water:
   1. Water free from substances harmful to grass or sod growth.
   2. Provide water from ditches adjacent to project.
   3. Water shall be clean, fresh, and free of substances or matter which could inhibit vigorous growth of grass.

C. Fertilizer (if used)
   1. Commercial fertilizer shall be Ammonium Sulfate (21-0-0-24S) containing twenty-one (21) percent nitrogen and twenty-four (24 percent sulfur or Ammonium Nitrate (34-0-0).
      a. Fertilizer containing phosphorus is not acceptable

PART 3 - EXECUTION

3.1 SOIL PREPARATION

A. Seeding, Sprigging, Plugging or Sodding:
   1. Loosen surface to minimum depth of 4 IN.
   2. Remove stones over 1 IN in any dimension and sticks, roots, rubbish, and other extraneous matter.
   3. Prior to applying fertilizer, loosen areas to be seeded with a double disc or other suitable device if the soil has become hard or compacted.
   4. Correct any surface irregularities in order to prevent pocket or low areas which will allow water to stand.
   5. Remove stones or other substances from surface which will interfere with turf development or subsequent mowing operations.
   6. Grade areas to a smooth, even surface with a loose, uniformly fine texture.
      a. Roll and rake, remove ridges and fill depressions, as required to meet finish grades.
      b. Limit fine grading to areas which can be planted soon after preparation.
   7. Restore seeded or sodded areas to specified condition if eroded or otherwise disturbed after fine grading and before planting.

3.2 FERTILIZING

A. The use of fertilizer shall be at the option of the Contractor. If used, fertilizer shall be in conformance with this Section.
   1. Apply fertilize in accordance with Manufacturer's instructions.
   2. Apply after smooth raking of topsoil and prior to installation of sod.
   3. Apply fertilizer no more than 48 hours before laying sod.
   4. Mix thoroughly in upper two (2) inches of topsoil.
   5. Lightly water to aid the dissipation of fertilizer.

3.3 INSTALLATION

A. Seeding:
   1. Do not use seed which is wet, moldy, or otherwise damaged.
   2. Employ satisfactory methods of sowing using mechanical power-driven drills or seeders, or mechanical hand seeders, or other approved equipment.
   3. Distribute seed evenly over entire area at rate of application not less than 4 LBS (PLS) of seed per 1000 SF, 50 percent sown in one direction, remainder at right angles to first sowing.
   4. Stop work when work extends beyond most favorable planting season for species designated, or when satisfactory results cannot be obtained because of drought, high winds excessive moisture, or other factors.
      a. Resume work only when favorable conditions develop.
   5. Lightly rake seed into soil followed by light rolling or cultipacking.
   6. Immediately protect seeded areas against erosion by mulching.
      a. Spread mulch in continuous blanket using 1-1/2 tons per acre to a depth of 4 or 5 straws.
   7. Protect seeded slopes against erosion with erosion netting or other methods approved by Engineer.
      a. Protect seeded areas against traffic or other use by erecting barricades and placing warning signs.
   8. Immediately following spreading mulch, anchor mulch using a rolling coulter or a wheatland land packer having wheels with V-shaped edges to force mulch into soil surface, or apply evenly distributed emulsified asphalt at rate of 10-13 GAL/1000 SF.
      a. SS-1 emulsion in accordance with ASTM D5276 or RC-1 cutback asphalt in accordance with ASTM D2028 are acceptable.
      b. If mulch and asphalt are applied in one treatment, use SS-1 emulsion with penetration test range between 150-200.
      c. Use appropriate shields to protect adjacent site improvements.

3.4 MAINTENANCE AND REPLACEMENT

A. General:
   1. Begin maintenance of planted areas immediately after each portion is planted and continue until final acceptance or for a specific time period as stated below, whichever is the longer.
   2. Provide and maintain temporary piping, hoses, and watering equipment as required to convey water from water sources and to keep planted areas uniformly moist as required for proper growth.
   3. Protection of new materials:
      a. Provide barricades, coverings or other types of protection necessary to prevent damage to existing improvements indicated to remain.
      b. Repair and pay for all damaged items.
   4. Replace unacceptable materials with materials and methods identical to the original specifications unless otherwise approved by the Engineer.

B. Seeded or Sodded Areas:
   1. Maintain seeded areas: 90 days, minimum, after installation and review of entire project area to be planted.

2. Maintenance period begins at completion of planting or installation of entire area to be seeded or sodded.
3. Engineer will review seeded or sodded area after installation for initial acceptance.
4. Maintain seeded or sodded areas by watering, fertilizing, weeding, mowing, trimming, and other operations such as rolling, regrading, and replanting as required to establish a smooth, uniform seeded or sodded area, free of weeds and eroded or bare areas.
5. Lay out temporary watering system and arrange watering schedule to avoid walking over muddy and newly seeded areas.
    a. Use equipment and water to prevent puddling and water erosion and displacement of seed or mulch.
6. Mow seeded or sodded areas as soon as there is enough top growth to cut with mower set at recommended height for principal species planted.
    a. Repeat mowing as required to maintain height.
    b. Do not delay mowing until grass blades bend over and become matted.
    c. Do not mow when grass is wet.
    d. Time initial and subsequent mowings as required to maintain a height of 1-1/2 to 2 IN.
    e. Do not mow lower than 1-1/2 IN.
7. Remulch with new mulch in areas where mulch has been disturbed by wind or maintenance operations sufficiently to nullify its purpose.
    a. Anchor as required to prevent displacement.
8. Unacceptable plantings are those areas that do not meet the quality of the specified material, produce the specified results, or were not installed to the specified methods.
9. Replant bare areas using same materials specified.
10. Engineer will review final acceptability of installed areas at end of maintenance period.
11. Maintain repaired areas until remainder of maintenance period or approved by Engineer, whichever is the longer period.

END OF SECTION

SECTION 03002
CONCRETE

PART 1 - GENERAL

1.1 SUMMARY

A. Section Includes:
   1. Cast-in-place concrete and grout.

B. Related Specification Sections include but are not necessarily limited to:
   1. Division 0 - Bidding Requirements, Contract Forms, and Conditions of the Contract.
   2. Division 01 - General Requirements.
   3. Section 13125 - Precast Concrete Utility Structures

1.2 QUALITY ASSURANCE

A. Referenced Standards:
   1. American Concrete Institute (ACI):
      a. 117, Specification for Tolerances for Concrete Construction and Materials.
      b. 211.1, Standard Practice for Selecting Proportions for Normal, Heavyweight and Mass Concrete.
      c. 212.3R, Chemical Admixtures for Concrete.
      d. 304R, Guide for Measuring, Mixing, Transporting, and Placing Concrete.
      e. 304.2R, Placing Concrete by Pumping Methods.
      f. 305.1, Hot Weather Concreting.
      g. 306.1, Cold Weather Concreting.
      h. 318, Building Code Requirements for Structural Concrete.
      i. 347, Guide to Formwork for Concrete.
      j. CT-13, Concrete Terminology.
   2. ASTM International (ASTM):
      a. A82, Standard Specification for Steel Wire, Plain, for Concrete Reinforcement.
      b. A185, Standard Specification for Steel Welded Wire Reinforcement, Plain, for Concrete.
      c. A615, Standard Specification for Deformed and Plain Carbon-Steel Bars for Concrete Reinforcement.
      d. A1064, Standard Specification for Steel Wire and Welded Wire Replacement, Plain and Deformed, for Concrete.
      e. C31, Standard Practice for Making and Curing Concrete Test Specimens in the Field.
      f. C33, Standard Specification for Concrete Aggregates.
      g. C39, Standard Test Method for Compressive Strength of Cylindrical Concrete Specimens.
      h. C94/C94M, Standard Specification for Ready-Mixed Concrete.
      i. C138, Standard Method of Test for Density (Unit Weight), Yield, and Air Content (Gravimetric) of Concrete.
      j. C143, Standard Test Method for Slump of Hydraulic Cement Concrete.
      k. C150, Standard Specification for Portland Cement.
      l. C172, Standard Practice for Sampling Freshly Mixed Concrete.
      m. C173, Standard Test Method for Air Content of Freshly Mixed Concrete by the Volumetric Method.
      n. C231, Standard Test Method for Air Content of Freshly Mixed Concrete by the Pressure Method.
      o. C260, Standard Specification for Air-Entraining Admixtures for Concrete.
      p. C289, Standard Test Method for Potential Alkali-Silica Reactivity of Aggregates (Chemical Method).

q. C309, Standard Specification for Liquid Membrane-Forming Compounds for Curing Concrete.
r. C494, Standard Specification for Chemical Admixtures for Concrete.
s. C618, Standard Specification for Coal Fly Ash and Raw or Calcined Natural Pozzolan for Use in Concrete.
t. C1315, Standard Specification for Liquid Membrane-Forming Compounds Having Special Properties for Curing and Sealing Concrete.
u. D882, Standard Test Method for Tensile Properties of Thin Plastic Sheeting.
v. D994, Standard Specification for Preformed Expansion Joint Filler for Concrete (Bituminous Type).
w. D1056, Standard Specification for Flexible Cellular Materials-Sponge or Expanded Rubber.
x. D1709, Standard Test Methods for Impact Resistance of Plastic Film by the Free-Falling Dart Method.
y. D1751, Standard Specification for Preformed Expansion Joint Filler for Concrete Paving and Structural Construction (Nonextruding and Resilient Bituminous Types).
z. E96, Standard Test Methods for Water Vapor Transmission of Materials.
aa. E329, Standard Specification for Agencies Engaged in Construction Inspection and/or Testing.

3. Corps of Engineers (COE):
   a. CRD-C621, Standard Specification for Packaged, Dry, Hydraulic-Cement Grout (Nonshrink).
4. National Ready Mixed Concrete Association (NRMCA).

B. Quality Control:
1. Concrete testing agency:
   a. Contractor to employ and pay for services of a testing laboratory to:
      1) Perform materials evaluation.
      2) Design concrete mixes.
   b. Concrete testing agency to meet requirements of ASTM E329.
2. Do not begin concrete production until proposed concrete mix design has been approved by Engineer.
   a. Approval of concrete mix design by Engineer does not relieve Contractor of his responsibility to provide concrete that meets the requirements of this Specification.
3. Adjust concrete mix designs when material characteristics, job conditions, weather, strength test results or other circumstances warrant.
   a. Do not use revised concrete mixes until submitted to and approved by Engineer.
4. Perform structural calculations as required to prove that all portions of the structure in combination with remaining forming and shoring system has sufficient strength to safely support its own weight plus the loads placed thereon.

C. Qualifications:
1. Ready mixed concrete batch plant certified by NRMCA.
2. Formwork, shoring and reshoring for slabs and beams except where cast on ground to be designed by a professional engineer currently registered in the state where the Project is located.

1.3 DEFINITIONS

A. Per ACI CT-13 except as modified herein:
1. Concrete fill: Non-structural concrete.
2. Concrete Testing Agency: Testing agency employed to perform materials evaluation, design of concrete mixes or testing of concrete placed during construction.
3. Exposed concrete: Exposed to view after construction is complete.
4. Indicated: Indicated by Contract Documents.
5. Nonexposed concrete: Not exposed to view after construction is complete.
6. Required: Required by Contract Documents.

7. Specified strength: Specified compressive strength at 28 days.
8. Submitted: Submitted to Engineer.

1.4 SUBMITTALS

A. Shop Drawings:
1. See Specification Section 01340 for requirements for the mechanics and administration of the submittal process.
2. Concrete mix designs proposed for use.
   a. Concrete mix design submittal to include the following information:
      1) Sieve analysis and source of fine and coarse aggregates.
      2) Test for aggregate organic impurities.
      3) Test for deleterious aggregate per ASTM C289.
      4) Proportioning of all materials.
      5) Type of cement with mill certificate for cement.
      6) Type of fly ash with certificate of conformance to specification requirements.
      7) Slump.
      8) Air content.
      9) Brand, type, ASTM designation, and quantity of each admixture proposed for use.
      10) 28-day cylinder compressive test results of trial mixes per ACI 318 and as indicated herein.
3. Product technical data including:
   a. Acknowledgement that products submitted meet requirements of standards referenced.
   b. Manufacturer's installation instructions.
   c. Manufacturers and types:
      1) Joint fillers.
      2) Curing agents.
      3) Chemical sealer.
      4) Bonding and patching mortar.
      5) Construction joint bonding adhesive.
      6) Nonshrink grout with cure/seal compound.
4. Reinforcing steel:
   a. Show grade, sizes, number, configuration, spacing, location and all fabrication and placement details.
   b. In sufficient detail to permit installation of reinforcing without having to make reference to Contract Drawings.
   c. Obtain approval of Shop Drawings by Engineer before fabrication.
   d. Mill certificates.
5. Scaled (minimum 1/8 IN per foot) drawings showing proposed locations of construction joints, control joints, expansion joints (as applicable) and joint dimensions.
6. Strength test results of in place concrete including slump, air content and concrete temperature.
7. Certifications:
   a. Certification of standard deviation value in psi for ready mix plant supplying the concrete.
   b. Certification that the material and sources submitted in the mix design will be used in the concrete for this project.
8. Test reports:
   a. Cement mill reports for all cement to be supplied.

1.5 DELIVERY, STORAGE, AND HANDLING

A. Storage of Material:
1. Cement and pozzolan:
   a. Store in moistureproof, weathertight enclosures.
   b. Do not use if caked or lumpy.
2. Aggregate:

a. Store to prevent segregation and contamination with other sizes or foreign materials.
b. Obtain samples for testing from aggregates at point of batching.
c. Do not use frozen or partially frozen aggregates.
d. Do not use bottom 6 IN of stockpiles in contact with ground.
e. Allow sand to drain until moisture content is uniform prior to use.

3. Admixtures:
   a. Protect from contamination, evaporation, freezing, or damage.
   b. Maintain within temperature range recommended by manufacturer.
   c. Completely mix solutions and suspensions prior to use.
4. Reinforcing steel: Support and store all rebars above ground.

B. Delivery:
1. Concrete:
   a. Prepare a delivery ticket for each load for ready-mixed concrete.
   b. Truck operator shall hand ticket to Owner's Representative at the time of delivery.
   c. Ticket to show:
      1) Mix identification mark.
      2) Quantity delivered.
      3) Amount of each material in batch.
      4) Outdoor temp in the shade.
      5) Time at which cement was added.
      6) Numerical sequence of the delivery.
      7) Amount of water added.
2. Reinforcing steel:
   a. Ship to jobsite with attached plastic or metal tags with permanent mark numbers.
   b. Mark numbers to match Shop Drawing mark number.

PART 2 - PRODUCTS

2.1 ACCEPTABLE MANUFACTURERS

A. Subject to compliance with the Contract Documents, the following products and manufacturers are acceptable:
1. Nonshrink, nonmetallic grout:
   a. Sika "SikaGrout 212."
   b. Euclid Chemial "NS Grout."
   c. BASF Admixtures, Inc. "Masterflow 713."
2. Expansion joint fillers:
   a. Permaglaze Co.
   b. Rubatex Corp.
   c. Williams Products, Inc.
3. Waterstops, Preformed - Strip-Type:
   a. Greenstreak (Hydrotite).
   b. Adeka Ultra Seal (2010MN).
   c. DeNeef (Swellseal Plus).
4. Form coating:
   a. Richmond "Rich Cote."
   b. Industrial Lubricants "Nox-Crete Form Coating."
   c. Euclid Chemical "Kurez DR VOX."
5. Cementitious Concrete Coating:
   a. Aquafin International.
   b. BASF Building Systems.
   c. Euclid Chemical Company.
6. Chemical sealer:
   a. L&M Construction Chemicals, Inc.
   b. Euclid Chemical Company.

c. Dayton Superior.

B. Submit request for substitution in accordance with Specification Section 01640.

2.2 MATERIALS

A. Portland Cement: Conform to ASTM C150 Type I/II.

B. Fly Ash:
1. ASTM C618, Class F or Class C.
2. Nonstaining.
   a. Hardened concrete containing fly ash to be uniform light gray color.
3. Maximum loss on ignition: 6 percent.
4. Compatible with other concrete ingredients.
5. Obtain proposed fly ash from a source approved by the State Highway Department in the state where the Project is located for use in concrete for bridges.

C. Admixtures:
1. Air entraining admixtures: ASTM C260.
2. Water reducing, retarding, and accelerating admixtures:
   a. ASTM C494 Type A through E.
   b. Conform to provisions of ACI 212.3R.
   c. Do not use retarding or accelerating admixtures unless specifically approved in writing by Engineer and at no cost to Owner.
   d. Follow manufacturer's instructions.
   e. Use chloride free admixtures only.
3. Maximum total water soluble chloride ion content contributed from all ingredients of concrete including water, aggregates, cementitious materials and admixtures by weight percent of cement:
   a. 0.10 all concrete.
4. Do not use calcium chloride.
5. Pozzolanic admixtures: ASTM C618.
6. Provide admixtures of same type, manufacturer and quantity as used in establishing required concrete proportions in the mix design.

D. Water: Potable, clean, free of oils, acids and organic matter.

E. Aggregates:
1. Normal weight concrete: ASTM C33, except as modified below.
2. Fine aggregate:
   a. Clean natural sand.
   b. No manufactured or artificial sand.
3. Coarse aggregate:
   a. Crushed rock, natural gravel, or other inert granular material.
   b. Maximum amount of clay or shale particles: 1 percent.
4. Gradation of coarse aggregate:
   a. Lean concrete and concrete topping: Size #7.
   b. All other concrete: Size #57 or #67.

F. Concrete Grout:
1. Nonshrink, nonmetallic grout:
   a. Nonmetallic, noncorrosive, nonstaining, premixed with only water to be added.
   b. Grout to produce a positive but controlled expansion.
   c. Mass expansion not to be created by gas liberation.
   d. Minimum compressive strength of nonshrink grout at 28 days: 6500 psi.
   e. In accordance with COE CRD-C621.
2. Epoxy grout:
   a. 3-component epoxy resin system.
      1) Two liquid epoxy components.

2) One inert aggregate filler component.
b. Each component packaged separately for mixing at jobsite.

G. Reinforcing Steel:
1. Reinforcing bars: ASTM A615, Grade 60.
2. Welded wire reinforcement:
a. ASTM A185 or ASTM A1064.
b. Minimum yield strength: 60,000 psi.
3. Column spirals: ASTM A82 or ASTM A1064.

H. Forms:
1. Prefabricated or job built.
2. Wood forms:
a. 5/8 or 3/4 IN 5-ply structural plywood of concrete form grade.
b. Built-in-place or prefabricated type panel.
3. Metal forms:
a. Metal forms may be used except for aluminum in contact with concrete..
b. Forms to be tight to prevent leakage, free of rust and straight without dents to provide members of uniform thickness.
4. Chamfer strips: Clear white pine, surface against concrete planed.

I. Form Ties:
1. Commercially fabricated for use in form construction.
a. Field fabricated ties are unacceptable.
2. Constructed so that ends or end fasteners can be removed without causing spalling at surfaces of the concrete.
3. 3/4 IN minimum diameter cones on both ends.
4. Embedded portion of ties to be not less than 1-1/2 IN from face of concrete after ends have been removed.
5. Cone size:
a. 3/4 IN minimum diameter cones on both ends.
b. Depth of cone not to exceed the concrete reinforcing cover.
6. Form release: Nonstaining and shall not prevent bonding of future finishes to concrete surface.

J. Chairs, Runners, Bolsters, Spacers, and Hangers:
1. Stainless steel, epoxy coated, or plastic coated metal.
a. Plastic coated: Rebar support tips in contact with the forms only.

K. Cementitious Concrete Coating:
1. Polymer modified Portland cement based coating for concrete and masonry.
a. Waterproof.
b. Resistant to both positive and negative hydrostatic pressure.
c. Breathable.
2. BASF " Masterseal 581 Thoroseal".
a. Color:
1) Interior surfaces: Standard gray.
2) Exterior surfaces: Custom color to match concrete surface.
3) Texture: Fine.

L. Membrane Curing Compound:
1. ASTM C309, Type II-B.
2. Resin based, dissipates upon exposure to UV light.
3. Curing compound shall not prevent bonding of any future coverings, coatings or finishes.

M. Expansion Joint Filler:
1. In contact with water or sewage:
a. Closed cell neoprene.

b. ASTM D1056, Class SC (oil resistant and medium swell) of 2 to 5 psi compression deflection (Grade SCE41).

2. Exterior driveways, curbs and sidewalks:
   a. Asphalt expansion joint filler.
   b. ASTM D994.
3. Other use:
   a. Fiber expansion joint filler.
   b. ASTM D1751.

2.3 CONCRETE MIXES

A. General:
1. All concrete to be ready mixed concrete conforming to ASTM C94/C94M.
2. Provide concrete of specified quality capable of being placed without segregation and, when cured, of developing all properties required.
3. All concrete to be normal weight concrete.
4. Provide pozzolan content for all cast-in-place construction.

B. Strength:
1. Provide specified strength and type of concrete for each use in structure(s) as follows:

TYPE	WEIGHT	SPECIFIED STRENGTH*
Concrete fill	Normal weight	3000 psi
Precast concrete	Normal weight and lightweight	4500 psi
All other general use concrete	Normal weight	4000 psi

* Minimum 28-day compressive strength.

C. Air Entrainment:
1. Provide air entrainment in all concrete resulting in a total air content percent by volume as follows:

MAX AGGREGATE SIZE	TOTAL AIR CONTENT PERCENT
1 IN or 3/4 IN	6 ±1-1/2
<3/4 IN	6-1/2 ±1-1/2

2. Air content to be measured in accordance with ASTM C231, ASTM C173, or ASTM C138.

D. Slump - 4 IN maximum, 1 IN minimum:
1. Measured at point of discharge of the concrete into the concrete construction member.
2. 8 IN maximum after addition of superplasticizer (if used).
3. Concrete of lower than minimum slump may be used provided it can be properly placed and consolidated.
4. Pumped concrete:
   a. Provide additional water at batch plant to allow for slump loss due to pumping.
   b. Provide only enough additional water so that slump of concrete at discharge end of pump hose does not exceed maximum slump specified above.
5. Determine slump per ASTM C143.

E. Selection of Proportions:
1. General:
   a. Proportion ingredients to:
      1) Produce proper workability, durability, strength, and other required properties.
      2) Prevent segregation and collection of excessive free water on surface.
2. Minimum cement contents and maximum water cement ratios for concrete to be as follows:

SPECIFIED STRENGTH	MINIMUM CEMENT, MAXIMUM AGGREGATE SIZE			MAXIMUM WATER CEMENT RATIO BY WEIGHT
	1/2 IN	3/4 IN	1 IN	
3000	---	517	517	0.50
4000	564	564	564	0.45
4500	611	611	611	0.42

3. Fly ash:
   a. For cast-in-pace concrete only, a maximum of 25 percent by weight of Portland cement content per cubic yard may be replaced with fly ash at rate of 1 LB fly ash for 1 LB of cement.
   b. When fly ash is used, the water to cementitious materials ratio shall not exceed the maximum value specified herein.
4. Concrete mix proportioning methods for normal weight concrete:
   a. Proportion mixture to provide desired characteristics using one of methods described below:
      1) Method 1 (Trial Mix):
         a) Per ACI 318, Chapter 5, except as modified herein.
         b) Air content within range specified above.
         c) Record and report temperature of trial mixes.
         d) Proportion trial mixes per ACI 211.1.
      2) Method 2 (Field Experience):
         a) Per ACI 318, Chapter 5, except as modified herein:
         b) Field test records must be acceptable to Engineer to use this method.
         c) Test records shall represent materials, proportions and conditions similar to those specified.
5. Required average strength to exceed the specified 28-day compressive strength by the amount determined or calculated in accordance with the requirements of Chapter 5 of ACI 318 using the standard deviation of the proposed concrete production facility.

PART 3 - EXECUTION

3.1 FORMING AND PLACING CONCRETE

A. Formwork:
   1. Contractor is responsible for design and erection of formwork.
   2. Construct formwork so that concrete members and structures are of correct size, shape, alignment, elevation and position.
      a. Allowable tolerances: As recommended in ACI 347.
   3. Provide slabs and beams of minimum indicated depth when sloping foundation base slabs or elevated floor slabs to drains.
      a. For slabs on grade, slope top of subgrade to provide floor slabs of minimum uniform indicated depth.
      b. Do not place floor drains through beams.
   4. Openings:
      a. Provide openings in formwork to accommodate work of other trades.
      b. Accurately place and securely support items built into forms.
   5. Chamfer strips: Place 3/4 IN chamfer strips in forms to produce 3/4 IN wide beveled edges on permanently exposed corners of members.
   6. Clean and adjust forms prior to concrete placement.
   7. Tighten forms to prevent mortar leakage.
   8. Coat form surfaces with form release agents prior to placing reinforcing bars in forms.

B. Reinforcement:
   1. Position, support and secure reinforcement against displacement.

2. Locate and support with chairs, runners, bolsters, spacers and hangers, as required.
3. Set wire ties so ends do not touch forms and are directed into concrete, not toward exposed concrete surfaces.
4. Lap splice lengths: ACI 318 Class B top bar tension splices unless indicated otherwise on the Drawings.
5. Extend reinforcement to within 2 IN of concrete perimeter edges.
   a. If perimeter edge is earth formed, extend reinforcement to within 3 IN of the edge.
6. Minimum concrete protective covering for reinforcement: Unless otherwise indicated, provide minimum concrete cover as follows:
   a. Concrete deposited against earth: 3 IN.
   b. Formed surfaces exposed to weather or in contact with earth: 2 IN.
7. Do not weld reinforcing bars.
8. Welded wire reinforcement:
   a. Install welded wire reinforcement in maximum practical sizes.
   b. Splice sides and ends with a splice lap length measured between outermost cross wires of each fabric sheet not less than:
      1) One spacing of cross wires plus 2 IN.
      2) 1.5 x development length.
      3) 6 IN.
   c. Development length: ACI 318 basic development length for the specified fabric yield strength.

C. Construction, Expansion, and Contraction Joints:
1. Locate joints as indicated on Contract Drawings or as shown on approved Shop Drawings.
   a. Where construction joint spacing shown on Drawings exceeds the joint spacing indicated in Paragraph below, submit proposed construction joint location in conformance with this Specification Section.
2. Unplanned construction joints will not be allowed.
3. Locate wall vertical construction joints at 50 FT maximum.
4. Locate construction joints in floor slabs and foundation base slabs so that concrete placements are approximately square and do not exceed 4000 SF.
5. Locate construction joints in columns and walls:
   a. At the underside of beams, girders, haunches, drop panels, column capitals, and at floor panels.
   b. Haunches, drop panels, and column capitals are considered part of the supported floor or roof and shall be placed monolithically therewith.
   c. Column based need not be placed monolithically with the floor below.
6. Install construction joints perpendicular to main reinforcement with all reinforcement continued across construction joints.
7. At least 48 HRS shall elapse between placing of adjoining concrete construction.
8. Thoroughly clean and remove all laitance and loose and foreign particles from construction joints.
9. Before new concrete is placed, dampen concrete surfaces.

D. Embedments:
1. Set and build in anchorage devices and other embedded items required for other work that is attached to, or supported by concrete.
2. Anchorage to Concrete:
   a. Mechanical Anchors: Kwik Bolt, by Hilti, Power Stud+ by Powers Fasteners, Strong Bolt by Simpson Strong-Tie.
   b. Adhesive Concrete Anchors: HY 200 by Hilti, PE1000+ by Powers Fasteners, SET XP by Simpson Strong-Tie.
   c. Screw Concrete Anchors: Kwik HUS-EZ Screw by Hilti, Wedge Bolt+ by Powers Fasteners, Titen HD by Simpson Strong-Tie.
3. Use setting diagrams, templates and instructions for locating and setting.

E. Waterstops - Preformed StripType:

1. Install in a bed of swelling sealant on a smooth surface of hardened concrete by use of nails, screws or other means as recommended by manufacturer to prevent movement of waterstop during placement of new concrete.
2. Roughened joints shall be specially prepared during concrete placement to provide smooth surface for proper waterstop installation.
3. Unless otherwise noted, use in joints against existing concrete and where indicated on Drawings.

F. Placing Concrete:
1. Concrete shall not be used if more than 90 minutes has elapsed from batching to time concrete was discharged into the forms.
2. Place concrete in compliance with ACI 304R and ACI 304.2R.
3. Place in a continuous operation within planned joints or sections.
4. Begin placement when work of other trades affecting concrete is completed.
5. Place concrete by methods which prevent aggregate segregation.
6. Do not allow concrete to free fall more than 4 FT.
7. Where free fall of concrete will exceed 4 FT, place concrete by means of tremie pipe or chute.

G. Consolidation: Consolidate all concrete using mechanical vibrators supplemented with hand rodding and tamping, so that concrete is worked around reinforcement and embedded items into all parts of forms.

H. Protection:
1. Protect concrete from physical damage or reduced strength due to weather extremes.
2. In cold weather comply with ACI 306.1 except as modified herein.
   a. Do not place concrete on frozen ground or in contact with forms or reinforcing bars coated with frost, ice or snow.
   b. Do not place heated concrete that is warmer than 80 DegF.
   c. If freezing temperatures are expected during curing, maintain the concrete temperature at or above 50 DegF for 7 days or 70 DegF for 3 days.
   d. Do not allow concrete to cool suddenly.
3. In hot weather comply with ACI 305.1 except as modified herein.
   a. At air temperature of 90 DegF and above, keep concrete as cool as possible during placement and curing.
   b. Do not allow concrete temperature to exceed 90 DegF at placement.
   c. Prevent plastic shrinkage cracking due to rapid evaporation of moisture.
   d. Do not place concrete when the actual or anticipated evaporation rate equals or exceeds 0.2 LBS/SF/HR as determined from ACI 305.1, Figure 2.1.5.

I. Curing:
1. Begin curing concrete as soon as free water has disappeared from exposed surfaces.
2. Cure concrete by use of moisture retaining cover, burlap kept continuously wet or by membrane curing compound.
3. Provide protection as required to prevent damage to concrete and to prevent moisture loss from concrete during curing period.
4. Provide curing for minimum of 7 days.
5. Form materials left in place may be considered as curing materials for surfaces in contact with the form materials except in periods of hot weather.
6. In hot weather follow curing procedures outlined in ACI 305.1.
7. In cold weather follow curing procedures outlined in ACI 306.1.
8. Curing vertical surfaces with a curing compound:
   a. Cover vertical surfaces with a minimum of two coats of the curing compound.
   b. Allow the preceding coat to completely dry prior to applying the next coat.
   c. Apply the first coat of curing compound immediately after form removal.
   d. Vertical surface at the time of receiving the first coat shall be damp with no free water on the surface.

e. A vertical surface is defined as any surface steeper than 1 vertical to 4 horizontal.

J. Form Removal:
1. Remove forms after concrete has hardened sufficiently to resist damage from removal operations or lack of support.
2. Where no reshoring is planned, leave forms and shoring used to support concrete until it has reached its specified 28-day compressive strength.

3.2 CONCRETE FINISHES

A. Tolerances:
1. Class A: 1/8 IN in 10 FT.
2. Class B: 1/4 IN in 10 FT.

B. Surfaces Exposed to View:
1. Provide a smooth finish for exposed concrete surfaces and surfaces that are:
   a. To be covered with a coating or covering material applied directly to concrete.
   b. Scheduled for grout cleaned finish.
2. Remove fins and projections, and patch voids, air pockets, and honeycomb areas with cement grout.
3. Cementitious concrete coating:
   a. Form facing material shall produce a smooth, hard, uniform texture.
      1) Use forms specified for surfaces exposed to view.
   b. Prepare the surface in accordance with manufactures printed installation instructions.
   c. Brush on coating to entire surface.
      1) As a mixing liquid for the coating, use bonding agent and water mixture as recommended by the manufacture.
      2) Apply two (2) coats at 2 LB/SQ YD per coat.
   d. When second coat is set, float to a uniform texture with a sponge coat.
   e. Provide this finish at the following locations:
      1) Walls, columns, exposed to view.

C. Surfaces Not Exposed to View:
1. Patch voids, air pockets and honeycomb areas with cement grout.
2. Fill tie holes with nonshrink, nonmetallic grout.

D. Slab Float Finish:
1. After concrete has been placed, consolidated, struck off, and leveled, do no further work until ready for floating.
2. Do not use water to aid in finishing.
3. Begin floating when water sheen has disappeared and surface has stiffened sufficiently to permit operation.
4. During or after first floating, check planeness of entire surface with a 10 FT straightedge applied at not less than two different angles.
5. Cut down all high spots and fill all low spots during this procedure to produce a surface within Class B tolerance throughout.
6. Refloat slab immediately to a uniform sandy texture.

E. Troweled Finish:
1. Float finish surface.
2. Next power trowel, and finally hand trowel.
3. Do not use water to aid in finishing.
4. Produce a smooth surface which is relatively free of defects with first hand troweling.
5. Perform additional trowelings by hand after surface has hardened sufficiently.
6. Final trowel when a ringing sound is produced as trowel is moved over surface.
7. Thoroughly consolidate surface by hand troweling.
8. Leave finished surface essentially free of trowel marks, uniform in texture and appearance and plane to a Class A tolerance.

9. On surfaces intended to support floor coverings remove any defects of sufficient magnitude that would show through floor covering by grinding.

F. Broom Finish: Immediately after concrete has received a float finish as specified, give it a transverse scored texture by drawing a broom across surface.

3.3 GROUT

A. Preparation:
   1. Nonshrinking, nonmetallic grout:
      a. Clean concrete surface to receive grout.
      b. Saturate concrete with water for 24 HRS prior to grouting.

B. Application:
   1. Nonshrinking, nonmetallic grout:
      a. Mix in a mechanical mixer.
      b. Use no more water than necessary to produce flowable grout.
      c. Place in accordance with manufacturer's instructions.
      d. Completely fill all spaces and cavities below the bottom of baseplates.
      e. Provide forms where baseplates and bedplates do not confine grout.
      f. Where exposed to view, finish grout edges smooth.
      g. Except where a slope is indicated on Drawings, finish edges flush at the baseplate, bedplate, member, or piece of equipment.
      h. Protect against rapid moisture loss by covering with wet rags or polyethylene sheets.
      i. Wet cure grout for seven (7) days, minimum.

3.4 FIELD QUALITY CONTROL

A. Contactor will employ and pay for services of a concrete testing laboratory to perform testing of concrete placed during construction.

B. Tests During Construction:
   1. Strength test:
      a. For each strength test, mold and cure cylinders from each sample in accordance with ASTM C31.
         1) Cylinder size: Per ASTM C31.
            a) 4 IN cylinders may not be used for concrete mixes with concrete aggregate size larger than 1 IN.
         2) Quantity:
            a) 6 IN DIA by 12 IN high: Four (4) cylinders.
            b) 4 IN DIA by 8 IN high: Six (6) cylinders.
      b. Field cure one (1) cylinder for the seven (7) day test.
         1) Laboratory cure the remaining.
      c. Test cylinders in accordance with ASTM C39.
         1) 6 IN DIA cylinders:
            a) Test two (2) cylinders at 28 days for strength test result and the one (1) field cured sample at seven (7) days for information.
            b) Hold remaining cylinder in reserve.
         2) 4 IN DIA cylinders:
            a) Test three (3) cylinders at 28 days for strength test result and the one (1) field cured cylinder at seven (7) days for information.
            b) Hold remaining cylinders in reserve.
      d. Strength test result:
         1) Average of strengths of two (2) 6 IN DIA cylinders or three (3) 4 IN DIA cylinders from the same sample tested at 28 days.
         2) If one (1) cylinder in a test manifests evidence of improper sampling, molding, handling, curing, or testing, discard and test reserve cylinder(s); average strength of remaining cylinders shall be considered strength test result.
         3) Should all cylinders in any test show any of above defects, discard entire test.

e. Frequency of tests:
   1) All other concrete:
      a) One (1) strength test to be taken not less than once a day, nor less than once for each 60 CU YD or fraction thereof placed in any one (1) day.
      b) If total volume of concrete on Project is such that frequency of testing required in above paragraph will provide less than five (5) strength tests for each concrete mix, tests shall then be made from at least five (5) randomly selected batches or from each batch if fewer than five (5) batches are provided.

2. Slump test:
   a. Per ASTM C143.
   b. Determined for each strength test sample.
   c. Additional slump tests may be taken.
3. Air content:
   a. Per ASTM C231, ASTM C173, and ASTM C138.
   b. Determined for each strength test sample.
4. Temperature: Determined for each strength test sample.

C. Evaluation of Tests:
   1. Strength test results:
      a. Average of 28-day strength of two cylinders from each sample.
         1) If one cylinder manifests evidence of improper sampling, molding, handling, curing or testing, strength of remaining cylinder will be test result.
         2) If both cylinders show any of above defects, test will be discarded.

D. Acceptance of Concrete:
   1. Strength level of each type of concrete shall be considered satisfactory if both of the following requirements are met:
      a. Average of all sets of three consecutive strength tests equals or exceeds the required specified 28-day compressive strength.
      b. No individual strength test falls below the required specified 28-day compressive strength by more than 500 psi.
   2. If tests fail to indicate satisfactory strength level, perform additional tests and/or corrective measures as directed by Engineer.
      a. Perform additional tests and/or corrective measures at no additional cost to Owner.

E. Concrete tolerances per ACI 117.

3.5 SCHEDULES

A. Form Types:
   1. Surfaces exposed to view:
      a. Prefabricated or job-built wood forms.
      b. Laid out in a regular and uniform pattern with long dimensions vertical and joints aligned.
      c. Produce finished surfaces free from offsets, ridges, waves, and concave or convex areas.
      d. Construct forms sufficiently tight to prevent leakage of mortar.
   2. Surfaces normally submerged or not normally exposed to view: Wood or steel forms sufficiently tight to prevent leakage of mortar.
   3. Other types of forms may be used:
      a. For surfaces not restricted to plywood or lined forms.
      b. As backing for form lining.

B. Grout:
   1. Nonshrinking, nonmetallic grout: General use.

C. Concrete:
   1. Precast concrete: Where indicated on Drawings.
   2. Concrete fill: Where indicated on Drawings.

3. Normal weight concrete: All concrete, unless noted otherwise.

D. Concrete Finishes:
   1. Slab finishes:
      a. Use following finishes as applicable, unless otherwise indicated:
         1) Floated finish: Surfaces intended to receive roofing, concrete topping, lean concrete, concrete fill and waterproofing.
         2) Troweled finish: Interior floor slabs, exposed roof slabs and base slabs of structures, equipment bases, and column bases.
         3) Broom finish: Sidewalks, docks, concrete stairs, and ramps.

END OF SECTION

SECTION 05500
METAL FABRICATIONS

PART 1 - GENERAL

1.1 SUMMARY

A. Section Includes:
   1. Custom fabricated metal items and certain manufactured units not otherwise indicated to be supplied under work of other Specification Sections.
   2. Design of all temporary bracing not indicated on Drawings.
   3. Design of systems and components, including but not limited to:
      a. Landings.

B. Related Specification Sections include but are not necessarily limited to:
   1. Division 00 - Bidding Requirements, Contract Forms, and Conditions of the Contract.
   2. Division 01 - General Requirements.
   3. Section 03002 - Concrete.
   4. Section 05522 - Aluminum Railings.

1.2 QUALITY ASSURANCE

A. Referenced Standards:
   1. Aluminum Association (AA):
      a. ADM 1, Aluminum Design Manual.
   2. American Association of State Highway and Transportation Officials (AASHTO):
      a. HB, Standard Specifications for Highway Bridges.
   3. American Institute of Steel Construction (AISC):
      a. 325, Manual of Steel Construction.
      b. 360, Specifications for Structural Steel Buildings (referred to herein as AISC Specification).
   4. American National Standards Institute (ANSI):
      a. A14.3, Ladders - Fixed - Safety Requirements.
   5. American Society of Civil Engineers (ASCE):
      a. 7, Minimum Design Loads for Buildings and Other Structures.
   6. ASTM International (ASTM):
      a. A6, Standard Specification for General Requirements for Rolled Structural Steel Bars, Plates, Shapes, and Sheet Piling.
      b. A36, Standard Specification for Carbon Structural Steel.
      c. A47, Standard Specification for Ferritic Malleable Iron Castings.
      d. A48, Standard Specification for Gray Iron Castings.
      e. A53, Standard Specification for Pipe, Steel, Black and Hot-Dipped, Zinc-Coated, Welded and Seamless.
      f. A108, Standard Specification for Steel Bar, Carbon and Alloy, Cold Finished.
      g. A123/A123M, Standard Specification for Zinc (Hot-Dip Galvanized) Coatings on Iron and Steel Products.
      h. A153/A153M, Standard Specification for Zinc Coating (Hot-Dip) on Iron and Steel Hardware.
      i. A197, Standard Specification for Cupola Malleable Iron.
      j. A269, Standard Specification for Seamless and Welded Austenitic Stainless Steel Tubing for General Service.
      k. A276, Standard Specification for Stainless Steel Bars and Shapes.
      l. A307, Standard Specification for Carbon Steel Bolts and Studs, 60,000 PSI Tensile Strength.
      m. A312, Standard Specification for Seamless, Welded, and Heavily Cold Worked Austenitic Stainless Steel Pipes.

n. A325, Standard Specification for Structural Bolts, Steel, Heat Treated, 120/105 ksi Minimum Tensile Strength.
o. A380, Standard Practice for Cleaning, Descaling, and Passivation of Stainless Steel Parts, Equipment, and Systems.
p. A500, Standard Specification for Cold-Formed Welded and Seamless Carbon Steel Structural Tubing in Rounds and Shapes.
q. A501, Standard Specification for Hot-Formed Welded and Seamless Carbon Steel Structural Tubing.
r. A536, Standard Specification for Ductile Iron Castings.
s. A554, Standard Specification for Welded Stainless Steel Mechanical Tubing.
t. A572, Standard Specification for High-Strength Low-Alloy Columbium-Vanadium Structural Steel.
u. A666, Standard Specification for Annealed or Cold-Worked Austenitic Stainless Steel Sheet, Strip, Plate, and Flat Bar.
v. A668, Standard Specification for Steel Forgings, Carbon and Alloy, for General Industrial Use.
w. A780, Standard Practice for Repair of Damaged and Uncoated Areas of Hot-Dip Galvanized Coatings.
x. A786, Standard Specification for Hot-Rolled Carbon, Low-Alloy, High-Strength Low-Alloy, and Alloy Steel Floor Plates.
y. A992, Standard Specification for Steel for Structural Shapes.
z. A1064, Standard Specification for Steel Wire and Welded Wire Reinforcement, Plain and Deformed, for Concrete.
aa. A1011, Standard Specification for Steel, Sheet and Strip, Hot-Rolled, Carbon, Structural, High-Strength Low-Alloy, High-Strength Low-Alloy with Improved Formability, and Ultra-High Strength.
bb. B26, Standard Specification for Aluminum-Alloy Sand Castings.
cc. B209, Standard Specification for Aluminum and Aluminum-Alloy Sheet and Plate.
dd. B221, Standard Specification for Aluminum and Aluminum-Alloy Extruded Bars, Rods, Wire, Profiles, and Tubes.
ee. B308, Standard Specification for Aluminum-Alloy 6061-T6 Standard Structural Profiles.
ff. B429, Standard Specification for Aluminum-Alloy Extruded Structural Pipe and Tube.
gg. B632, Standard Specification for Aluminum-Alloy Rolled Tread Plate.
hh. F467, Standard Specification for Nonferrous Nuts for General Use.
ii. F468, Standard Specification for Nonferrous Bolts, Hex Cap Screws, and Studs for General Use.
jj. F593, Standard Specification for Stainless Steel Bolts, Hex Cap Screws, and Studs.
kk. F835, Standard Specification for Alloy Steel Socket Button and Flat Countersunk Head Cap Screws.
ll. F879, Standard Specification for Stainless Steel Socket Button and Flat Countersunk Head Cap Screws.
mm. F1789, Standard Terminology for F16 Mechanical Fasteners.

7. American Welding Society (AWS):
   a. A5.1/A5.1M, Specification for Carbon Steel Electrodes for Shielded Metal Arc Welding.
   b. D1.1, Structural Welding Code - Steel.
   c. D1.2, Structural Welding Code - Aluminum.
   d. D1.6/D1.6M, Structural Welding Code - Stainless Steel.
8. National Association of Architectural Metal Manufacturers (NAAMM):
   a. AMP 510, Metal Stairs Manual.
   b. AMP 555, Code of Standard Practice for the Architectural Metal Industry (Including Miscellaneous Iron).
   c. MBG 531, Metal Bar Grating Manual.
9. NACE International (NACE).
10. Nickel Development Institute (NiDI):

a. Publication 11 007, Guidelines for the welded fabrication of nickel-containing stainless steels for corrosion resistant services.

11. Occupational Safety and Health Administration (OSHA):
    a. 29 CFR 1910, Occupational Safety and Health Standards, referred to herein as OSHA Standards.
12. Building code:
    a. International Code Council (ICC):
        1) Florida Building Code and associated standards, 2014 Edition including all amendments, referred to herein as Building Code.

B. Qualifications:
1. Qualify welding procedures and welding operators in accordance with AWS.
2. Fabricator shall have minimum of 10 years experience in fabrication of metal items specified.
3. Engineer for contractor-designed systems and components: Professional structural engineer licensed in the State of Florida.

1.3 DEFINITIONS

A. Fasteners: As defined in ASTM F1789.

B. Galvanizing: Hot-dip galvanizing per ASTM A123/A123M or ASTM A153/A153M with minimum coating of 2.0 OZ of zinc per square foot of metal (average of specimens) unless noted otherwise or dictated by standard.

C. Hardware: As defined in ASTM A153/A153M.

D. Installer or Applicator:
1. Installer or applicator is the person actually installing or applying the product in the field at the Project site.
2. Installer and applicator are synonymous.

1.4 SUBMITTALS

A. Shop Drawings:
1. See Specification Section 01340 for requirements for the mechanics and administration of the submittal process.
2. Fabrication and/or layout drawings and details:
    a. Submit drawings for all fabrications and assemblies.
        1) Include erection drawings, plans, sections, details and connection details.
    b. Identify materials of construction, shop coatings and third party accessories.
3. Product technical data including:
    a. Acknowledgement that products submitted meet requirements of standards referenced.
    b. Manufacturer's installation instructions.
    c. Provide manufacturer's standard allowable load tables for the following:
        1) Grating and checkered plate.
        2) Castings, trench covers and accessories.
4. Provide ICC report on the following:
    a. Mechanical anchor bolts.
    b. Adhesive anchor bolts.
5. Contractor designed systems and components:
    a. Certification that manufactured units meet all design loads specified.
    b. Shop Drawings and engineering design calculations:
        1) Indicate design live loads.
        2) Sealed by a licensed professional engineer, registered in the State of Florida.
        3) Engineer will review for general compliance with Contract Documents.
    c. Contractor designed systems and components include the following:
        1) Ladders.
        2) Gates.

B. Informational Submittals:
   1. See Specification Section 01340 for requirements for the mechanics and administration of the submittal process.
   2. Certification of welders and welding processes.
      a. Indicate compliance with AWS.
   3. NACE inspector qualifications.
   4. NACE certification of surface preparation.
   5. NACE certification of paint application.

1.5 DELIVERY, STORAGE, AND HANDLING

A. Deliver and handle fabrications to avoid damage.

B. Store above ground on skids or other supports to keep items free of dirt and other foreign debris and to protect against corrosion.

PART 2 - PRODUCTS

2.1 ACCEPTABLE MANUFACTURERS

A. Subject to compliance with the Contract Documents, the following manufacturers are acceptable:
   1. Abrasive stair nosings (embedded in concrete stairs):
      a. American Safety Tread.
      b. Balco.
   2. Headed studs and deformed bar anchors:
      a. Nelson Stud Welding Div., TRW Inc.
      b. Stud Welding Products, Inc.
   3. Mechanical anchor bolts:
      a. See Section 03002.
   4. Epoxy adhesive anchor bolts:
      a. See Section 03002.
   5. Self-tapping concrete anchors:
      a. See Section 03002.
   6. Castings, trench covers and accessories:
      a. Neenah Foundry Co.
      b. Deeter Foundry Co.
      c. Barry Craft Construction Casting Co.
      d. McKinley Iron Works.
   7. Aluminum ladders:
      a. Any manufacturer capable of meeting the requirements of this Specification Section.
   8. Galvanizing repair paint:
      a. Clearco Products Co., Inc.
      b. ZRC Products.
   9. Ladder safety extension post:
      a. Bilco.

B. Submit request for substitution in accordance with Specification Section 01 25 13.

2.2 MATERIALS

A. Steel:
   1. Structural:
      a. W-shapes and WT-shapes: ASTM A992, Grade 50.
      b. All other plates and rolled sections: ASTM A36.
   2. Pipe: ASTM A53, Types E or S, Grade B or ASTM A501.
   3. Structural tubing:
      a. ASTM A500, Grade B (46 ksi minimum yield).
   4. Bolts, nuts and washers, high strength:

    a. ASTM A325.
    b. Provide two (2) washers with all bolts.
5. Bolts and nuts:
    a. ASTM A307, Grade A.
6. Welding electrodes: AWS D1.1, E70 Series.
7. Steel forgings: ASTM A668.

B. Iron:
1. Ductile iron: ASTM A536.
2. Gray cast iron: ASTM A48 (minimum 30,000 psi tensile strength).
3. Malleable iron: ASTM A47, ASTM A197.

C. Stainless Steel:
1. Stainless steel in welded applications: Low carbon 'L' type.
2. Minimum yield strength of 30,000 psi and minimum tensile strength of 75,000 psi.
    a. Bars, shapes: ASTM A276, Type 304.
    b. Tubing and pipe: ASTM A269, ASTM A312 or ASTM A554, Type 304 or 316.
    c. Strip, plate and flat bars: ASTM A666, Type 304 or 316.
    d. Bolts and nuts: ASTM F593, Type 304 or 316.
3. Minimum yield strength of 25,000 psi and minimum tensile strength of 70,000 psi.
    a. Strip, plate and flat bar for welded connections, ASTM A666, Type 304L or 316L.
4. Welding electrodes: In accordance with AWS for metal alloy being welded.

D. Aluminum:
1. Alloy 6061-T6, 32,000 psi tensile yield strength minimum.
    a. ASTM B221 and ASTM B308 for shapes including beams, channels, angles, tees and zees.
    b. Weir plates, baffles and deflector plates, ASTM B209.
2. Alloy 6063-T5 or T6, 15,000 psi tensile yield strength minimum.
    a. ASTM B221 and ASTM B429 for bars, rods, wires, pipes and tubes.
3. ASTM B26 for castings.
4. ASTM F468, alloy 2024 T4 for bolts.
5. ASTM F467, alloy 2024 T4 for nuts.
6. Electrodes for welding aluminum: AWS D1.2, filler alloy 4043 or 5356.

E. Washers: Same material and alloy as found in accompanying bolts and nuts.

F. Embedded Anchor Bolts:
1. Stainless steel with matching nut and washer.
2. Submerged application: ASTM F593, Type 316.
3. Non-submerged application: ASTM F593, Type 304 or Type 316

G. Mechanical Anchor Bolts and Adhesive Anchor Bolts:
1. See Specification Section 03002.

H. Headed Studs: ASTM A108 with a minimum yield strength of 50,000 psi and a minimum tensile strength of 60,000 psi.

I. Deformed Bar Anchors: ASTM A1064 with a minimum yield strength of 70,000 psi and a minimum tensile strength of 80,000 psi.

J. Iron and Steel Hardware: Galvanized in accordance with ASTM A153/A153M when required to be galvanized.

K. Galvanizing Repair Paint:
1. High zinc dust content paint for regalvanizing welds and abrasions.
2. ASTM A780.
3. Zinc content: Minimum 92 percent in dry film.
4. ZRC "ZRC Cold Galvanizing" or Clearco "High Performance Zinc Spray."

L. Dissimilar Materials Protection: See Drawings.

2.3 MANUFACTURED UNITS

A. Ladders:
   1. General:
      a. Fully welded type.
         1) All welds to be full penetration welds, unless otherwise specified.
      b. All ladders of a particular material shall have consistent construction and material shapes and sizes unless noted otherwise on the Drawings.
      c. Design ladder in accordance with OSHA Standards, ANSI A14.3, ASCE 7 and applicable Building Codes.
      d. Ladders shall be designed to support a minimum concentrated live load of 300 LBS at any point to produce the maximum stress in the member being designed.
         1) Apply additional 300 LB loads for each section of ladder exceeding 10 FT.
      e. Maximum allowable stresses per AA ADM 1.
      f. Maximum lateral deflection: Side rail span/240 when lateral load of 100 LBS is applied at any location.
   2. Material:
      a. Aluminum.
      b. Finish:
         1) Mill.
   3. Rails:
      a. Round pipe or rectangular tubing:
         1) Round pipe:
            a) 1-1/2 IN nominal diameter.
            b) Schedule 80.
         2) Rectangular tubing:
            a) Cross-section: 3 by 2 IN maximum.
            b) Thickness: 0.125 IN minimum.
      b. Spacing:
         1) Minimum clear distance between rails to be 18 IN.
         2) Step-through ladder extensions: 24 IN, centerline to centerline.
      c. Provide cap at exposed top and bottom of side rails.
         1) Provide weep holes as necessary to prevent the accumulation of moisture within hollow members.
      d. Extend side rails of step-through ladders a minimum of 42 IN above the landing.
   4. Rungs:
      a. Minimum 1 IN DIA or 1 IN square solid bar.
         1) Integral non-slip finish on all sides.
            a) Non-slip finish: Coarse knurling or extruded serrations.
            b) Shop or field-applied grit tape and cap type non-slip finishes are not acceptable.
      b. Rungs shall penetrate inside wall of side rails.
         1) Do not extend rungs beyond the outside face of the side rail.
         2) Provide fillet weld all around rung at inside face of side rail and plug weld at outside face of side rail.
      c. Rung spacing:
         1) Uniform, 12 IN.
         2) Top rung shall be level with landing or platform.
            a) Where top of ladder terminates at grating cover, floor access door, roof hatch or similar condition; locate top rung as close as practicable to, but not more than 6 IN below, adjacent walking surface.
         3) Spacing of bottom rung from grade or platform may vary but shall not exceed 14 IN.
   5. Brackets:
      a. Angle or bent plate brackets welded to side rails:
         1) 3/8 IN by 2-1/2 IN by length required.

2) Provide punched holes for 3/4 IN bolts or anchors.
3) Minimum distance from centerline of rung to wall or any obstruction: 7 IN.
4) Maximum spacing: 4 FT OC.

b. For floor supported ladders, provide 3/8 by 2-1/2 by 4 IN rectangular bracket or 3/8 by 6 by 6 IN square plate welded to rails with punched holes for 3/4 IN bolts.
1) Provide wall brackets on floor supported units if vertical run is over 4 FT.

c. Grating:
1) Per this Specification Section.

d. Structural support: Channel or tubular sections with bracing, plates, angles, etc., to support guardrail and grating and to support landing from the side of the structure.
1) Weld or bolt all connections using stainless steel bolts, nuts and washers.

e. Guardrails:
1) Match ladder side rails.
a) Space intermediate rails equally between top rail and top of kickplate.
2) Provide 4 IN high x 3/8 IN thick toeboard each side of landing.

6. Gates:
a. Constructed of same material and sizes as the railing system.
b. Hinges:
1) Stainless steel.
2) Heavy-duty, self-closing.
c. Gate stop:
1) Aluminum.

7. Ladder safety extension post:
a. Telescoping tubular aluminum section that automatically locks into place when fully extended.
b. Non-ferrous corrosion-resistant spring and hardware.
c. Factory assembled with all hardware necessary for mounting to ladder.
d. Bilco "LadderUp" safety post.

B. Bollards:
1. 8 IN DIA extra strength steel pipe, ASTM A53.
a. Galvanized.
b. See Specification Section 09 96 00 for painting requirements.

C. Abrasive Stair Nosings:
1. Two (2) component consisting of an embedded subchannel, installed with the concrete pour, and an abrasive tread plate to be installed later.
2. 6063-T5 extruded aluminum, mill finished and heat treated.
3. Complete with concrete anchors and tread plate securing screws.
4. Tread plate:
a. Extruded aluminum.
b. Solid epoxy abrasive filler.
1) Color: Safety yellow.
5. Balco "DXH-330."
6. Handrails and guardrails: Refer to Specification Section 05522.

D. Aluminum Checkered Plate:
1. Conform to ASTM B632.
a. Diamond pattern: Use one (1) pattern throughout Project.
b. Material: Type 6061-T6.
2.
3. Design live load:
a. 100 psf, uniform load.
b. 300 LBS concentrated load on 4 IN square area.
c. All components to be adequate for the uniform load or the concentrated load, whichever requires the stronger component.
d. Maximum deflection: 1/300 of span under a superimposed live load of 50 psf.

4. Reinforce as necessary with aluminum angles.
5. Plate sections:
   a. Maximum 3 FT wide.
   b. Minimum 1/4 IN thick.
   c. Maximum 100 LBS per section if required to be removable.
6. Provide joints at center of all openings unless shown otherwise.
   a. Reinforce joints and openings with additional angles to provide required load carrying capacity.
7. Unless shown otherwise, frame for openings with aluminum checkered plate cover:
   a. Aluminum support angles:
      1) 3 by 2 by 1/4 IN minimum size with long leg vertical.
      2) 5/8 IN DIA adhesive anchor bolts spaced at maximum of 24 IN OC along each side with not less than two (2) anchor bolts per side.
   b. Aluminum concrete insert seats:
      1) 2 by 2 by 1/4 IN minimum size.
      2) Auto-welded studs or strap anchors at 18 IN OC with not less than two (2) studs or anchored per side.
   c. Drill and tap frame to receive 3/8 IN DIA fasteners at not more than 24 IN OC with not less than two (2) fasteners per side.
      1) Fasteners: Stainless steel flat countersunk cap screws: ASTM F879.

E. Aluminum Grating:
1. NAAMM MBG 531.
2. Bearing bars: Rectangular, 1-1/2 by 3/16 IN at 1-3/16 IN OC spacing OR I-bar, 1-1/2 IN deep with minimum 1/16 IN thick bar and minimum 1/4 IN flange width at 1-3/16 IN OC spacing (unless noted otherwise on Drawings).
3. Cross bars:
   a. Welded, swaged or pressure locked to bearing bars:
   b. Maximum 4 IN/OC spacing.
4. Top edges of bars: Grooved or serrated.
5. Finish: Mill, standard.
6. Clips and bolts: Stainless steel.
7. Seat angles: Aluminum or stainless steel

F. Heavy-Duty Castings, Trench Covers, and Accessories:
1. Prefabricated, cast iron ASTM A48 or cast aluminum ASTM B26.
2. Design load: AASHTO HS-20 wheel loading for indicated span.
3. Machine horizontal mating surfaces.

G. Access Cover:
1. Tank type manhole frame and solid lid: ASTM A48 or ASTM A536, cast iron.
2. Unless shown otherwise, design of cover shall be such that top of frame extends several inches above slab to prevent surface water from entering tank.
3. Equip lid with four (4) stainless steel screws to secure lid to frame.

2.4 FABRICATION

A. Verify field conditions and dimensions prior to fabrication.

B. Form materials to shapes indicated with straight lines, true angles, and smooth curves.
1. Grind smooth all rough welds and sharp edges.
   a. Round all corners to approximately 1/32 - 1/16 IN nominal radius.

C. Provide drilled or punched holes with smooth edges.
1. Punch or drill for field connections and for attachment of work by other trades.

D. Weld Shop Connections:
1. Welds to be continuous fillet type unless indicated otherwise.
2. Full penetration butt weld at bends in stair stringers and ladder side rails.

3. Weld structural steel in accordance with AWS D1.1 using Series E70 electrodes conforming to AWS A5.1/A5.1M.
4. Weld aluminum in accordance with AWS D1.2.
5. Weld stainless steel in accordance with AWS D1.6.
   a. Treat all welded areas in accordance with ASTM A380.
6. All headed studs to be welded using automatically timed stud welding equipment.
7. Grind smooth welds that will be exposed.

E. Passivate stainless steel items and stainless steel welds after they have been ground smooth.
   1. ASTM A380.

F. Conceal fastenings where practicable.

G. Fabricate work in shop in as large assemblies as is practicable.

H. Tolerances:
   1. Rolling:
      a. ASTM A6.
      b. When material received from the mill does not satisfy ASTM A6 tolerances for camber, profile, flatness, or sweep, the Contractor is permitted to perform corrective work by the use of controlled heating and mechanical straightening, subject to the limitations of the AISC Specification.
   2. Fabrication tolerance:
      a. Member length:
         1) Both ends finished for contact bearing: 1/32 IN.
         2) Framed members:
            a) 30 FT or less: 1/16 IN.
            b) Over 30 FT: 1/8 IN.
      b. Member straightness:
         1) Compression members: 1/1000 of axial length between points laterally supported.
         2) Non-compression members: ASTM A6 tolerance for wide flange shapes.
      c. Specified member camber (except compression members):
         1) 50 FT or less: Minus 0/plus 1/2 IN.
         2) Over 50 FT: Minus 0/plus 1/2 IN (plus 1/8 IN per 10 FT over 50 FT).
         3) Members received from mill with 75 percent of specified camber require no further cambering.
         4) Beams/trusses without specified camber shall be fabricated so after erection, camber is upward.
         5) Camber shall be measured in fabrication shop in unstressed condition.
      d. At bolted splices, depth deviation shall be taken up by filler plates.
         1) At welded joints, adjust weld profile to conform to variation in depth.
         2) Slope weld surface per AWS requirements.
      e. Finished members shall be free from twists, bends and open joints.
         1) Sharp kinks, bends and deviation from above tolerances are cause for rejection of material.

I. Fabricate grating, checkered plate, stairs, ladders and accessories using aluminum unless shown otherwise on Drawings.
   1. Finish:
      a. Mill, unless noted otherwise.
      b. Coat surfaces in contact with dissimilar materials.
         1) See Drawings.

J. Fabricate grating in accordance with NAAMM MBG 531.
   1. Maximum tolerance for difference in depth between grating depth and seat or support angle depth: 1/8 IN.
   2. Distance between edge of grating and face of embedded seat angle or face of wall or other structural member: 1/4 IN.
      a. Tolerance: NAAMM MBG 531.

3. Removable sections: Not wider than 3 FT and not heavier than 100 LBS.
4. Ends and perimeter edges: Banded, with alternate bearing bars welded to band.
   a. Provide full depth banding unless noted otherwise.
   b. Banding at trenches and sumps to be 1/4 IN less than grating depth to allow for drainage.
5. Openings through grating: Reinforced to provide required load carrying capacity and banded with 4 IN high toe plate.
6. Provide joints at openings between individual grating sections.
7. Fabricate grating so that bearing bars and cross bars in adjacent sections are aligned.

K. Fabricate checkered plate and miscellaneous metals in accordance with NAAMM AMP 555.
   1. Workmanship: Class 2 unless noted otherwise.

L. Coat surfaces in contact with dissimilar material.
   1. Tnemec Series L69.
   2. 5 mils DFT.

2.5 SOURCE QUALITY CONTROL

A. Surface Preparation:
   1. All miscellaneous metal fabrication item surfaces shall be inspected and approved by NACE certified coatings inspector prior to application of shop-applied paint coating.
      a. Inspection shall be performed to determine depth of blast profile and cleanliness of surface.
      b. Fabricator shall reblast and or re-clean surfaces as required until acceptable.

B. Shop Applied Paint Coating Application:
   1. After surface has been accepted in writing by NACE certified coatings inspector, fabricator may proceed with application of paint coatings.
   2. Application of paint coatings shall be observed and certified by NACE certified coatings inspector.

C. Shop Inspection and Testing:
   1. Employ and pay for the services of a qualified independent testing agency to inspect and test all structural steel work for compliance with Contract Documents.
   2. Contractor responsible for testing to qualify shop and field welders and as needed for Contractor's own quality control to ensure compliance with Contract Documents.
   3. Independent testing agency shall have a minimum of five (5) years performing similar work and shall be subject to Owner's approval.

D. Responsibilities of Testing Agency:
   1. Inspect shop and field welding in accordance with AWS Code including the following non-destructive testing:
      a. Visually inspect all welds.
   2. Inspect high-strength bolting in accordance with the RCSC Specification for Structural Joints Using High-Strength Bolts, Section 9.
      a. Verify direct tension indicator gaps, if applicable.
   3. Inspect structural steel which has been erected.
   4. Inspect stud welding in accordance with AWS Code.
   5. Prepare and submit inspection and test reports to Engineer.
      a. Assist Engineer to determine corrective measures necessary for defective work.

PART 3 - EXECUTION

3.1 PREPARATION

A. Provide items to be built into other construction in time to allow their installation.
   1. If such items are not provided in time for installation, cut in and install.

B. Prior to installation, inspect and verify condition of substrate.

C. Correct surface defects or conditions which may interfere with or prevent a satisfactory installation.
   1. Field welding aluminum is not permitted unless approved in writing by Engineer.

3.2 INSTALLATION

A. Set metal work level, true to line, plumb.
   1. Shim and grout as necessary.

B. Contractor is solely responsible for safety.
   1. Construction means and methods and sequencing of work is the prerogative of the Contractor.
   2. Take into consideration that full structural capacity of many structural members is not realized until structural assembly is complete; e.g., until slabs, decks, and diagonal bracing or rigid connections are installed.
   3. Partially complete structural members shall not be loaded without an investigation by the Contractor.
   4. Until all elements of the permanent structure and lateral bracing system are complete, temporary bracing for the partially complete structure will be required.

C. Adequate temporary bracing to provide safety, stability and to resist all loads to which the partially complete structure may be subjected, including construction activities and operation of equipment is the responsibility of the Contractor.
   1. Plumb, align, and set structural steel members to specified tolerances.
   2. Use temporary guys, braces, shoring, connections, etc., necessary to maintain the structural framing plumb and in proper alignment until permanent connections are made, the succeeding work is in place, and temporary work is no longer necessary.
   3. Use temporary guys, bracing, shoring, and other work to prevent injury or damage to adjacent work or construction from stresses due to erection procedures and operation of erection equipment, construction loads, and wind.
   4. Contractor shall be responsible for the design of the temporary bracing system and must consider the sequence and schedule of placement of such elements and effects of loads imposed on the structural steel members by partially or completely installed work, including work of all other trades.
      a. If not obvious from experience or from the Drawings, the Contractor shall confer with the Engineer to identify those structural steel elements that must be complete before the temporary bracing system is removed.
   5. Remove and dispose of all temporary work and facilities off-site.

D. Examine work-in-place on which specified work is in any way dependent to ensure that conditions are satisfactory for the installation of the work.
   1. Report defects in work-in-place which may influence satisfactory completion of the work.
   2. Absence of such notification will be construed as acceptance of work-in-place.

E. Field Measurement:
   1. Take field measurements as necessary to verify or supplement dimensions indicated on the Drawings.
   2. Contractor responsible for the accurate fit of the work.

F. Check the elevations of all finished footings or foundations and the location and alignment of all anchor bolts before starting erection.
   1. Use surveyor's level.
   2. Notify Engineer of any errors or deviations found by such checking.

G. Framing member location tolerances after erection shall not exceed the frame tolerances listed in the FIELD QUALITY CONTROL Article in PART 3 of this Specification Section.

H. Erect plumb and level; introduce temporary bracing required to support erection loads.

I. Use light drifting necessary to draw holes together.
   1. Drifting to match unfair holes is not allowed.

J. Welding:
   1. Conform to AWS D1.1 and requirements of the FABRICATION Article in PART 2 of this Specification Section.
   2. When joining two (2) sections of steel of different ASTM designations, welding techniques shall be in accordance with a qualified AWS D1.1 procedure.

K. Shore existing members when unbolting of common connections is required.
   1. Use new bolts for rebolting connections.

L. Clean stored material of all foreign matter accumulated prior to the completion of erection.

M. Bolt Field Connections: Where practicable, conceal fastenings.

N. Field Welding:
   1. Follow AWS procedures.
   2. Grind welds smooth where field welding is required.

O. Field cutting grating or checkered plate to correct fabrication errors is not acceptable.
   1. Replace entire section.

P. Remove all burrs and radius all sharp edges and corners of miscellaneous plates, angles, framing system elements, etc.

Q. Unless noted or specified otherwise:
   1. Connect steel members to steel members with 3/4 IN DIA ASTM A325 high strength bolts.
   2. Connect aluminum to aluminum with 3/4 IN DIA stainless bolts.
   3. Connect aluminum to structural steel using 3/4 IN DIA stainless steel bolts.
      a. Provide dissimilar metals protection.
   4. Connect aluminum and steel members to concrete and masonry using stainless steel mechanical anchor bolts or adhesive anchor bolts unless shown otherwise.
      a. Provide dissimilar materials protection.
   5. Provide washers for all bolted connections.
   6. Where exposed, bolts shall extend a maximum of 3/4 IN and a minimum of 1/2 IN above the top of installed nut.
      a. If bolts are cut off to required maximum height, threads must be dressed to allow nuts to be removed without damage to the bolt or the nuts.

R. Install and tighten ASTM A325 high-strength bolts in accordance with the AISC 325, Allowable Stress Design (ASD).
   1. Provide hardened washers for all ASTM A325 bolts.
      a. Provide the hardened washer under the element (nut or bolt head) turned in tightening.

S. After bolts are tightened, upset threads of ASTM A307 bolts or anchor bolts to prevent nuts from backing off.

T. Secure metal to wood with lag screws of adequate size with appropriate washers.

U. Do not field splice fabricated items unless said items exceed standard shipping length or change of direction requires splicing.
   1. Provide full penetration welded splices where continuity is required.

V. Provide each fabricated item complete with attachment devices as indicated or required to install.

W. Anchor such that work will not be distorted nor fasteners overstressed from expansion and contraction.

X. Set beam and column base plates accurately on nonshrink grout as indicated on Drawings.
   1. See Division 03 Specification Sections for non-shrink grout and anchorage.
   2. Set and anchor each base plate to proper line and elevation.
      a. Use metal wedges, shims, or setting nuts for leveling and plumbing columns and beams.
         1) Wedges, shims and setting nuts to be of same metal as base plate they support.

2) Tighten nuts on anchor bolts.
b. Fill space between bearing surface and bottom of base plate with nonshrink grout.
1) Fill space until voids are completely filled and base plates are fully bedded on wedges, shims, and grout.
c. Do not remove wedges or shims.
1) Where they protrude, cut off flush with edge of base plate.
d. Fill sleeves around anchor bolts solid with non-shrink grout.

Y. Tie anchor bolts in position to embedded reinforcing steel using wire.
1. Tack welding prohibited.
a. Coat projecting bolt threads and nuts with heavy coat of clean grease.
2. Anchor bolt location tolerance:
a. 1/16 IN.
b. Provide steel templates for all column and machine anchor bolts.

Z. Install bollards in concrete as detailed.
1. 48 IN projection above ground.
2. 48 IN embedment in concrete, unless detailed otherwise on Drawings.
3. Fill pipe with concrete and round off at top.

AA. Provide abrasive stair nosings in each tread and landing of all concrete stairs and at each concrete stair landing having metal stair structure attaching to the concrete landing.
1. Center stair nosings in stair width.
2. Coordinate nosings with railing vertical posts.
a. Maintain 2 IN clear between end of nosing and edge of railing base plate.

BB. Accurately locate and place frames for openings before casting into floor slab so top of plate is flush with surface of finished floor.
1. Keep screw holes clean and ready to receive screws.

CC. Attach grating to end and intermediate supports with grating saddle clips and bolts.
1. Maximum spacing: 2 FT OC with minimum of two (2) per side.
2. Attach individual units of aluminum grating together with clips at 2 FT OC maximum with a minimum of two (2) clips per side.

DD. Coat aluminum surfaces in contact with dissimilar materials in accordance with this section.

EE. Repair damaged galvanized surfaces in accordance with ASTM A780.
1. Prepare damaged surfaces by abrasive blasting or power sanding.
2. Apply galvanizing repair paint to minimum 6 mils DFT in accordance with manufacturer's instructions.

FF. Anchor ladder to concrete structure with minimum 3/4 IN stainless steel anchor bolts with minimum 6 IN embedment.

GG. Anchor ladder to masonry structure with minimum 3/4 IN stainless steel anchor bolts with minimum 6 IN embedment.
1. When anchoring into masonry, fill masonry cores with grout at anchor locations and each masonry core within 8 IN of anchor
2. When anchoring into cavity wall construction, provide minimum 6 IN embedment into concrete or masonry back-up wall.
a. At each anchor location, provide sleeve between back face of veneer and cavity face of concrete or masonry back-up wall.
b. Cut cavity insulation as required and seal around sleeve.
1) Sleeve to be 1 IN DIA schedule 40 stainless steel tubing, TP-304L, ASTM A269.
a) Minimum wall thickness to be .065 IN.
2) Continuously weld 4 by 4 by 1/4 IN Type 304 stainless steel, ASTM A666 flange onto each end of pipe.
a) Drill 1 IN hole in flange to match pipe.

b) Attach sleeve to concrete or masonry back-up with 1/4 IN self-tapping concrete anchors.

3) Grout solid, area around bolt where bolt penetrates veneer.

4) Accurately locate sleeves to align with bolt locations on ladder.

HH. Anchor ladder to metal stud walls using minimum 1/2 IN stainless steel bolts, nuts and washers.

1. Verify that stud wall has been provided with adequate backing to accept ladder anchors.

II. Install ladder safety extension post in accordance with manufacturer's instructions.

1. Mount device opposite the climbing side.
2. Provide ladder safety extension device for all ladders unless noted otherwise.

3.3 FIELD QUALITY CONTROL

A. Tolerances (unless otherwise noted on the Drawings):

1. Frame placement, after assembly and before welding or tightening.
   a. Deviation from plumb, level and alignment: 1 in 500, maximum.
   b. Displacement of centerlines of columns: 1/2 IN maximum, each side of centerline location shown on Drawings.
   c. Displacement of centerlines of columns: 1/2 IN maximum, each side of centerline location shown on Drawings.

B. OWNER Pays for Field Inspection and Testing:

1. Owner will employ and pay for services of an independent testing agency to inspect and test structural steel shop and field work for compliance with this Specification Section.
2. Contractor provides sufficient notification and access so inspection and testing can be accomplished.
3. Contractor pays for retesting of failed tests and for additional testing required when defects are discovered.

3.4 CLEANING

A. After fabrication, erection, installation or application, clean all miscellaneous metal fabrication surfaces of all dirt, weld slag and other foreign matter.

B. All stainless steel products in addition to Paragraph A. above:

1. Remove all heat tint, rusting, discoloration by passivation, ASTM A380, or other acceptable means as listed in NiDI 11 007 as approved by the Engineer.

END OF SECTION

SECTION 05522
ALUMINUM RAILINGS

PART 1 - GENERAL

1.1 SUMMARY

A. Section Includes:
   1. Aluminum handrail, stair rail and guardrail.
   2. Aluminum guardrail gates.

B. Related Specification Sections include but are not necessarily limited to:
   1. Division 00 - Bidding Requirements, Contract Forms, and Conditions of the Contract.
   2. Division 01 - General Requirements.
   3. Section 05500 - Metal Fabrications.
   4. Section 09961 - High Performance Industrial Coatings.

1.2 QUALITY ASSURANCE

A. Referenced Standards:
   1. Aluminum Association (AA):
      a. ADM 1, Aluminum Design Manual.
   2. American Society of Mechanical Engineers (ASME):
      a. Section IX, Qualification Standard for Welding and Brazing Procedures, Welders, Brazers, and Welding and Brazing Operators.
   3. ASTM International (ASTM):
      a. B108, Standard Specification for Aluminum-Alloy Permanent Mold Castings.
      b. B209, Standard Specification for Aluminum and Aluminum-Alloy Sheet and Plate.
      c. B221, Standard Specification for Aluminum and Aluminum-Alloy Extruded Bars, Rods, Wire, Profiles, and Tubes.
      d. B247, Standard Specification for Aluminum and Aluminum-Alloy Die Forgings, Hand Forgings, and Rolled Ring Forgings.
      e. B308, Standard Specification for Aluminum-Alloy 6061-T6 Standard Structural Profiles.
      f. B429, Standard Specification for Aluminum-Alloy Extruded Structural Pipe and Tube.
   4. American Welding Society (AWS):
      a. C5.5, Recommended Practices for Gas Tungsten Arc Welding.
      b. D1.2, Structural Welding Code - Aluminum.
   5. National Association of Architectural Metal Manufacturers (NAAMM):
      a. AMP 521, Pipe Railing Systems Manual.
   6. U.S. Department of Justice, Architectural and Transportation Barriers Compliance Board (Access Board):
      a. Americans with Disabilities Act (ADA):
         1) Accessibility Guidelines for Buildings and Facilities (ADAAG).
   7. Occupational Safety and Health Administration (OSHA):
      a. 29 CFR 1910, Occupational Safety and Health Standards, referred to herein as OSHA Standards.
   8. Building code:
      a. International Code Council (ICC):
         1) Florida Building Code and associated standards, 2014 Edition including all amendments, referred to herein as Building Code.

B. Qualifications:
   1. Qualify welding procedures and welding operators in accordance with AWS and ASME Section IX.

1.3 DEFINITIONS

A. Guardrail: A system of building components located near the open sides of elevated walking surfaces for the purpose of minimizing the possibility of an accidental fall from the walking surface to the lower level.

B. Handrail: A railing provided for grasping with the hand for support.

C. Railing: A generic term referring to guardrail, handrail and/or stair rails.

D. Stair Rail: A guardrail, installed at the open side of stairways with either a handrail mounted to the inside face of the guardrail, or where allowed by applicable codes, with the top rail mounted at handrail height and serving the function of a handrail.

1.4 SUBMITTALS

A. Shop Drawings:
   1. See Specification Section 01340 for requirements for the mechanics and administration of the submittal process.
   2. Fabrication and/or layout drawings:
      a. Drawings showing profile, location, sections and fabrication details including all welding information of each railing.
      b. Type and details of anchorage.
      c. Location and type of expansion joints.
      d. Materials of construction, shop coatings and all third-party accessories.
   3. Product technical data including:
      a. Acknowledgement that products submitted meet requirements of standards referenced.
      b. Manufacturer's installation details.
   4. Certification that railings have been designed and fabricated to meet the loading requirements specified.
   5. Calculations for all proposed deviations from the Specification.
      a. Calculations shall be performed, sealed, signed and dated by a registered professional structural engineer licensed in the State of Florida.
      b. Calculations shall be specific to this Project and shall include all assumptions, references and design interpretations used to achieve the results obtained by the Engineer.
      c. Reduction in load criteria is not acceptable as reason for deviation from sizes indicated in the Specification.

B. Informational Submittals:
   1. See Specification Section 01340 for requirements for the mechanics and administration of the submittal process.
   2. Certification of welders and welding procedures indicating compliance with AWS requirements.

1.5 DELIVERY, STORAGE AND HANDLING

A. Deliver and handle railings to preclude damage.

B. Store railings on skids, keep free of dirt and other foreign matter which will damage railings or finish and protect against corrosion.

PART 2 - PRODUCTS

2.1 ACCEPTABLE MANUFACTURERS

A. Subject to compliance with the Contract Documents, the following manufacturers are acceptable:
   1. Welded railing systems:
      a. Any manufacturer meeting this Specification Section.

B. Submit request for substitution in accordance with Specification Section 01640.

2.2 MATERIALS

A. Alloy 6061-T6, 32,000 psi tensile yield strength minimum.
   1. ASTM B209 for sheets and plates.
   2. ASTM B221 and ASTM B308 for shapes - beams, channels, angles, tees, and zees.
   3. ASTM B247 for forgings.

B. Alloy 6063-T5 or T6, 15,000 psi tensile yield strength minimum.
   1. ASTM B221 and ASTM B429 for bars, rods, wires, pipes and tubes.

C. Cast Fittings: Aluminum, ASTM B108.

D. Shims: Aluminum of same alloy as component being shimmed.

E. Fasteners: See Specification Section 05500.

F. Expansion and Adhesive Anchors: See Specification Section 05500.

G. Electrodes for Welding:
   1. Aluminum: AWS D1.2.
   2. Filler alloy 5356 or 4043.

2.3 FABRICATION

A. General:
   1. Verify field conditions and dimensions prior to fabrication.
   2. For fabrication of items which will be exposed to view, use only materials which are smooth and free of surface blemishes including pitting, seam marks, roller marks, rolled trade names and roughness.
      a. Remove blemishes by grinding and buffing or by welding and grinding, prior to cleaning, treating and application of surface finishes.
   3. Form exposed work with smooth, short radius bends, accurate angles and straight edges.
      a. Ease exposed edges to a radius of approximately 1/32 IN.
      b. Form bent-metal corners to smallest radius possible without causing grain separation or otherwise impairing work.
      c. Drill or punch holes with smooth edges.
   4. Form exposed connections with flush, smooth, hairline joints, using stainless steel or aluminum splice locks to splice sections together or by welding.
      a. Ease the edges of top rail splices and expansion joints and remove all burrs left from cutting.
   5. Provide for anchorage of type indicated on Drawings or as required by field conditions.
      a. Drill or punch holes with smooth edges.
   6. Design railings and anchorage system in accordance with NAAMM AMP 521 to resist loading as required by Building Code.
      a. Maximum allowable stresses per AA ADM 1.
   7. Design railings in accordance with accessibility requirements per the Building Code and ADAAG.

B. Custom fabricate railings to dimensions and profiles indicated.
   1. Guardrails:
      a. Schedule 40 pipe.
      b. Top rails: 2 IN nominal diameter.
      c. Intermediate rails: 1-1/2 IN nominal diameter.
      d. Vertical posts:
         1) 2 IN nominal diameter.
         2) Vertical posts that are to be side-bracket mounted to a vertical concrete surface or metal structure shall use Alloy 6063-T6.
   2. Handrail mounted to wall or to guardrail vertical posts: 1-1/4 IN nominal diameter Schedule 40 pipe.

3. Where details are not indicated, space intermediate rails to requirements of the Building Code or OSHA Standards, whichever requires the more restrictive design.
4. Space vertical posts as required by loading requirements but not more than 4 FT on center.
   a. Avoid locating vertical posts at changes in direction of railing.
   b. Hold vertical post back from corner and provide radiused corners.
5. Space handrail brackets as required by loading requirements but not more than 4 FT on center.
6. Base plate for vertical guardrail posts mounted to top of concrete surface:
   a. 3/8 x 6 x 6 IN square plate.
   b. Predrilled to accept four (4) anchors.
   c. Provide a 2 IN DIA x 8 IN long solid aluminum rod welded to the base plate.
   d. Fit the vertical post over the solid rod and weld the post to the base plate.
7. Base plate for vertical guardrail post mounted to flange of metal structure:
   a. 3/8 x 3 x 8 IN plate.
   b. Predrilled to accept two (2) fasteners.
   c. Provide a 2 IN DIA x 8 IN long solid aluminum rod welded to the base plate.
   d. Fit the vertical post over the solid rod and weld the post to the base plate.
8. Mounting bracket for vertical guardrail post mounted to vertical concrete surface or web of metal structural member:
   a. Pair of 3/8 IN angles or bent plates.
   b. Predrilled to accept two (2) fasteners each.
   c. Weld angles or bent plates to vertical posts.
   d. Provide toeboards on walkway side of all elevated walkways, platforms and stair landings, and where indicated on the Drawings or required by OSHA Standards.
      1) 4 IN high extruded toeboard with stiffener ribs and angled toe.
         a) Similar to Wagner, Model "IR94102."
   e. Guardrail gates:
      1) Constructed of same material and sizes as the guardrail system.
      2) Width of gate as shown on Drawings.
      3) Hinges:
         a) Cast aluminum.
         b) Self-closing.
            (1) Stainless steel torsion spring.
         c) Similar to Wagner, Model "IR100."
      4) Gate latch and stop:
         a) Cast aluminum.
         b) Spring-loaded pin latch.
            (1) Stainless steel spring.
         c) Similar to Wagner, Model "IR101."

C. Railing Fabrication:
   1. All railings are to be welded systems.
   2. Use wire welding for all joints.
   3. All welding to be continuous in accordance with AWS C5.5 and AWS D1.2.
      a. All welded railing joints shall have full penetration welds unless noted otherwise.
   4. All exposed welds to be ground smooth and flush to match and blend with adjoining surfaces.
      a. NAAMM AMP 521, Type 2.
   5. No ragged edges, surface defects, or undercutting of adjoining surfaces will be accepted.
   6. Finishing joints with filler is not acceptable.
   7. Provide flush weld fittings using locking weld connectors or coped drive-on connectors.
   8. Fit exposed ends of guardrails and handrails with solid terminations.
      a. Return ends of handrail to wall, but do not attach to wall.
      b. Where guardrail terminates at a wall, provide a vertical post or end-loop 4 IN off the wall to center of vertical member.

9. Preassemble items in shop to greatest extent possible to minimize field splicing and assembly of units at project site.
10. Install weeps to drain water from hollow sections of railing at exterior and high humidity conditions.
    a. Drill 1/4 IN weep hole in railings closed at bottom:
        1) 1 IN above walkway surface at bottom of posts set in concrete.
        2) 1 IN above solid aluminum rod at posts having base plate.
        3) At low point of intermediate rails.
    b. Do not drill weep holes:
        1) In bottom of base plate.
11. Expansion joints:
    a. Joints to be designed to allow expansion and contraction of railing and still meet design loads required.
        1) Top rail splices and expansion joints shall be located within 8 IN of post or other support.
        2) Where railings span precast structure to walkway expansion joints; provide a railing expansion joint in the span crossing the precast structure to walkway expansion joint.
    b. Provide expansion joints in any continuous run exceeding 20 FT in length.
        1) Space expansion joints at not more than 40 FT on center.
    c. Provide minimum 0.10 IN of expansion joint for each 20 FT length of top rail for each 25 DegF differential between installation temperature and maximum design temperature.
        1) Maximum expansion joint width at time of installation shall not exceed 3/8 IN.
            a) Provide additional expansion joints as required to limit expansion joint width.
    d. Provide slip-joint with internal sleeve.
        1) Extend slip joint min 2 IN beyond joint at maximum design width.
        2) Fasten internal sleeve securely to one side
            a) Provide allen-head set screw located in bottom of rail.
            b) Rivets or exposed screw heads are not acceptable.

D. Finish: Mill.

PART 3 - EXECUTION

3.1 PREPARATION

A. Prior to installation, inspect and verify condition of substrate.

B. Correct surface defects or conditions which may interfere with or prevent a satisfactory installation.
    1. Field welding aluminum is not permitted unless approved in writing by Engineer.

3.2 INSTALLATION

A. Install handrails and guardrails to meet loading requirements of the Building Code.

B. Install products in accordance with manufacturer's instructions.

C. Set work accurately in location, alignment and elevation; plumb, level and true.
    1. Measure from established lines and items which are to be built into concrete, masonry or similar construction.

D. Align railings prior to securing in place to assure proper matching at butting and expansion joints and correct alignment throughout their length.
    1. Provide shims as required.

E. Install proper sized expansion joints based on temperature at time of installation and differential coefficient of expansion of materials in all railings as recommended by manufacturer.
    1. Lubricate expansion joint splice bar for smooth movement of railing sections.

F. Provide removable railing sections where indicated on Drawings.

G. Attach handrails to walls or guardrail with brackets designed for condition:
   1. Provide brackets which provide a minimum 1-1/2 IN clearance between handrail and nearest obstruction.
      a. Handrails shall not project more than 4-1/2 IN into required stairway width.
   2. Anchor handrail brackets to concrete or masonry walls with 1/2 IN stainless steel adhesive anchors with stainless steel hex head bolts.

H. Anchor railings to concrete with minimum 1/2 IN stainless steel adhesive anchors with stainless steel bolts, nuts and washers unless noted otherwise in the Contract Documents.
   1. Where exposed, bolts shall extend minimum 1/2 IN and maximum 3/4 IN above the top nut.
      a. If bolts are cut off to required height, threads must be dressed to allow nuts to be removed without damage to the bolt or the nut.
      b. Bevel the top of the bolt after cutting to provide a smooth surface.

I. Anchor railings to metal structure with minimum 3/4 IN stainless steel bolts, nuts and washers.

J. Install toeboards to fit tight to the walking surface.
   1. Attach to railing vertical post with manufacturer's standard mounting clamp:
      a. Adjustable.
      b. Designed to engage in extruded slot on back of toeboard.
   2. Provide splice bars, corner splices and brackets:
      a. Manufacturer's standard items as required for a complete installation.
   3. Notch toeboards at base plates or other obstructions.
   4. Bottom of toeboard shall not exceed 1/4 IN above walking surface.

K. Coat aluminum in contact with dissimilar metal or concrete in accordance with the Drawings.

L. Provide railings as required for stair construction identified in Specification Section 05500.

M. Install guardrail gate plumb and level in location shown on Drawings.
   1. Center gate in opening.
   2. Top of gate to match top of guardrail.
   3. Fasten hinges to gate and jamb post:
      a. Minimum three (3) 1/4 IN stainless steel countersunk machine screws per leaf.
      b. Drill and tap into railing and gate vertical posts.
   4. Provide not less than two (2) hinges per gate.
   5. Install gate latch and stop on strike side of opening.
      a. Fasten to gate with 1/4 IN stainless steel countersunk machine screws.
      b. Drill and tap into gate vertical post.
      c. Drill hole in railing vertical post to receive latch pin.
   6. Adjust to provide smooth operation:
      a. Self-closing and self-latching.

END OF SECTION

SECTION 11060
PUMPING EQUIPMENT

PART 1 - GENERAL

1.1 SUMMARY

A. Section Includes:
   1. Pumping equipment.

B. Related Specification Sections include but are not necessarily limited to:
   1. Division 00 - Bidding Requirements, Contract Forms, and Conditions of the Contract.
   2. Division 01 - General Requirements.

1.2 QUALITY ASSURANCE

A. Referenced Standards:
   1. Hydraulic Institute (HI):
      a. 9.6.4, Rotodynamic Pumps for Vibration Measurements and Allowable Values.
      b. 14.6, Rotodynamic Pumps for Hydraulic Performance Acceptance Tests.

1.3 DEFINITIONS

A. The abbreviations are defined as follows:
   1. IPS: Iron Pipe Size.
   2. NPSHR: Net Positive Suction Head Required.
   3. TDH: Total Dynamic Head.

B. Pump Service Category: Pump or pumps having identical names (not tag numbers) used for specific pumping service.

1.4 SUBMITTALS

A. Shop Drawings:
   1. See Specification Section 01340 for requirements for the mechanics and administration of the submittal process.
   2. Product technical data including:
      a. Performance data and curves with flow (gpm), head (FT), horsepower, efficiency, NPSH requirements, submergence requirement.
      b. Pump accessory data.
      c. Bearing supports, shafting details and lubrication provisions.
         1) Bearing life calculations.
         2) Critical speed calculations.
      d. Solids passage information.
      e. Mechanical details showing entire pump assembly, reduction gear, drive shaft, and couplings.
      f. Layout, dimensional and cross section drawings of the pump assembly.
      g. Materials of construction
      h. Coating system data
      i. Nameplate data
      j. Motor technical data
   3. Certifications:
      a. Certified pump performance curves as described in the SOURCE QUALITY CONTROL Article.
   4. Test reports:
      a. Factory hydrostatic tests
      b. Post-Installation performance tests

B. Post-Installation performance test plan

C. Contract Closeout Information:
   1. Operation and Maintenance Data:
      a. See Specification Section 01340 for requirements for the mechanics, administration, and the content of Operation and Maintenance Manual submittals.

D. Informational Submittals:
   1. Certifications:
      a. Provide a written statement that manufacturer's equipment has been installed properly, started up and is ready for operation by Owner's personnel.

PART 2 - PRODUCTS

2.1 ACCEPTABLE MANUFACTURERS

A. Subject to compliance with the Contract Documents, the following pump manufacturers are acceptable:
   1. Tru-Flo Corporation
   2. Moving Water Industries (MWI)
   3. Creel Pump, Inc

B. Any request for substitution shall be submitted in accordance with Specification Section 01640.

2.2 AXIAL FLOW PUMP DESIGN

A. Provide units with increasing head characteristics from the end run out portion of the curve to shut-off condition.

B. All pumps of the same type and designation shall be dimensionally interchangeable and shall have the same head capacity curves.

2.3 MATERIALS

A. Materials not specifically described shall conform to the latest approved industry standard(s) covering appropriate class and/or types of materials.

B. Pump Column
   1. The pump discharge and intake column shall conform to specification section 15061; PIPE: STEEL.
   2. The discharge elbow shall be of long radius, with the centerline radius not less than one time the nominal pipe diameter.

C. Lineshaft Enclosure Tube
   1. Schedule 80 ASTM A53 Steel
   2. The enclosure shall be oil filled and sealed to prevent oil fro escaping and water and foreign materials from entering the tube during normal operations.

D. Pump Impeller
   1. Carbon Steel or as an option 316L Stainless Steel or Bronze.
   2. The impeller blades shall be ground and polished for maximum hydraulic efficiency.
   3. The periphery of the blades shall be machined for a close running fit with the impeller bowl.
   4. The complete impeller shall be properly balanced after manufacturing.

E. Pump Shaft
   1. Cold Rolled Steel conforming to ASTM A108, A1018 or better.

F. Intake Bell
   1. The Intake Bell shall be made with the same type steel as the pump column and shalbe flanged for connecting to the pump bowl. The intake bell diameter shall be no less than 1.5 times the impeller diameter and shall be supported entirely by the impeller casing. The intake cone shall have centering guide vanes and an end shaft guide hub containing a water lubricated, cutless rubber, tail bearing, all designed to minimize entrance head losses.

G. Pump Bowl
   1. The Pump Bowl (or pump column section surrounding the impeller) shall be fabricated from the same type steel as the pump column. The pump bowl shall be a circular section with mitered reducers to provide a tight fit with the impeller. The pump bowl shall enclose the impeller, have an upper impeller hub, straightening vanes, and a lower bearing housing containing the lower bearing and multiple lip seals.

H. Bearings
   1. Bronze Sleeve
   2. The thrust bearing housing shall have a means to grease lubricate the thrust bearing from the exterior and vent excess or waste grease. The housing top shall be removable to allow access and replacement of the thrust bearing without removal of the pump shaft.

I. Nameplate
   1. A corrosion resistant, metal nameplate shall be furnished stating, at a minimum:
      a. Manufacturer's name and address
      b. Pump serial number
      c. Pump size
      d. Pump speed
      e. Impeller diameter,
      f. Rated gallons per minute capacity
   2. The nameplate shall be located in a readily visible location and suitably attached to the pump.

J. Miscellaneous Hardware
   1. All bolts, nuts, screws, etc. used in the pump assembly and to fasten flanges shall be a corrosion resistant material suggested by the manufacturer.
   2. All fasteners shall be of the hex head type. Hardware or parts requiring special tools or wrenches shall not be used.

2.4 ACCESSORIES

A. Each Unit:
   1. Lifting eye bolts or lugs to facilitate handling. Shall be designed and arranged to allow safe handling of pump components singly or collectively as required during shipping, installation and maintenance.
   2. Plugged gage cock connection at suction and discharge nozzles.
   3. Tapped and plugged openings for casing and bearing housing vents and drains.
   4. Fittings for properly adding flushing lubricant.
   5. Pressure relief fittings for grease lubrication.
   6. Level sensors with rod and adjustable collars
   7. Trash guard or strainer to prevent debris from damaging the impeller or any other portion of the pump.

B. Packing Seal:
   1. Provide packing unless mechanical seal is specified in narrow-scope pump sections.
   2. Minimum of five (5) rings graphite impregnated synthetic packing.
   3. Provide minimum 1/4 IN DIA supply tap and 1/2 IN DIA minimum drain tap.

2.5 FABRICATION

A. Pump Support:
   1. Design intake pipe (pump column) to support weight of drive, shafting and pump.
   2. Comply with HI vibration limitations.
   3. Fabricate to withstand all operating loads transmitted from the pump and drive.
   4. All sleeve bearings will be lubricated with process liquid being pumped.
   5. Pump and pipe welding shall be continuous and full penetration inside and out. All slag shall be removed and undercutting shall not exceed 15% of the material thickness.

2.6 COATING

A. Pump interiors and exteriors shall be painted and coated with the manufacturers coating system. At a minimum, the pump and piping shall be coated with bitumastic enamel (minimum 6 mils), or as an option sand blasted to coating manufacturer's specifications and coated with two (2) coats (minimum 6 mils) of a high solids epoxy coating system.

2.7 SOURCE QUALITY CONTROL

A. Factory hydrostatic test all pumps at 150 percent of shut-off head for a minimum of 5 minutes.

B. Provide the following factory tests for each pump:
   1. Shut-off head and design condition in accordance with HI: Positive unilateral performance tolerance meeting Grade 1U per HI 14.6 for Rotodynamic Pumps.
   2. Head (FT) versus flow (gpm) pump curves:
      1) Efficiencies along curve.
      2) Brake horsepower along each curve.
   3. Results shall be certified by a registered professional engineer.

C. Statically and dynamically balance each pump per HI standards.
   1. If specifically required by the manufacturer, field vibration test pumps:
      a. To meet requirements of HI 9.6.4 for Rotodynamic Pumps at any point on the pumps and motor.

2.8 POST-INSTALLATION PERFORMANCE TEST

A. Each pump shall be tested after installation under normal operating conditions. This test shall be conducted under the guidance of a Florida licensed professional engineer. A written detailed testing plan shall be submitted and accepted by the County prior to performance of the test. The Contractor shall provide four (4) signed and sealed reports detailing the results of the post-installation performance test including capacity (gpm) vs head (FT) and performance curves.

2.9 PERFORMANCE DATA

A. Pump #1
   1. Design Condition: 5,000 gpm at 9 FT TDH
   2. Minimum Motor Horsepower: 25 HP
   3. Minimum Discharge Size: 16 IN
   4. Liquid Pumped: Surface Water

B. Pump #2
   1. Design Condition: 15,000 gpm at 7 FT TDH
   2. Minimum Motor Horsepower: 75 HP
   3. Minimum Discharge Size: 30 IN
   4. Liquid Pumped: Surface Water

C. Pump #3
   1. Design Condition: 15,000 gpm at 7 FT TDH
   2. Minimum Motor Horsepower: 75 HP
   3. Minimum Discharge Size: 30 IN
   4. Liquid Pumped: Surface Water

D. Pump #4
   1. Design Condition: 1,300 gpm at 16 FT TDH
   2. Maximum Motor Horsepower: 7.5 HP
   3. Minimum Discharge Size: 8 IN
   4. Liquid Pumped: Surface Water

2.10 MOTOR

A. Provide the manufacturer's standard motor associated with the type pump. The motor shall be suitable for the application and environment.

B. Motor shall be equipped with safety features including moisture sensor, winding thermal protection, condensate heater, and additional features recommended by the manufacturer for operation specific to the application and installed conditions.

C. General Requirements:
   1. Stator wingdings: copper.
   2. Rotor Cage: Aluminum or copper.
   3. Terminal box for motors leads. Grounding lug suitable to terminate ground wire in the terminal box.
   4. An embossed or engraved stainless steel nameplate, with the required NFPA 70 and NEMA data, to be permanently attached to the motor.
   5. Maximum motor loading shall not exceed motor nameplate horsepower rating, exclusive of service factor.
   6. All motors shall be sized to carry continuously all loads, which may be imposed through their full range of operation.
   7. Motor leads shall be non-wicking with permanent identifiers.
   8. Totally enclosed motor to have one-way breather drains.
   9. Terminal box:
      a. Gasketed.
      b. Diagonally split.
      c. Field adjustable in 90-degree increments.
      d. Oversized to accept the required conductors and conduits.
      e. Located on "F1" side unless specifically indicated to be on the "F2" side.
      f. Separate terminal box with terminal blocks for winding thermal protection devices (RTD and thermocouples).
   10. Bearings:
      a. Greater than 5 HP:
         1) Relubricatable.
         2) Antifriction.
         3) Minimum rated ABMA L-10 life of 10 years or 100,000 HRS.

D. Space Heaters:
   1. Silicone rubber strip type, 120 V rated.
   2. Provided on all motors 10 HP and larger mounted outdoors.

E. Thermal Protection:
   1. Thermostats:
      a. Snap action, bi-metallic, temperature-actuated switch type.
      b. Normally closed, wired in series.
      c. Automatic reset.
      d. Switch point shall be pre-calibrated by the manufacturer.

PART 3 - EXECUTION

3.1 INSTALLATION

A. Installation shall conform to manufacturer's instructions and recommendations.

B. All equipment furnished and installed under this contract shall fit the space allotted to it as shown on the plans and leave reasonable access space for proper servicing and repair.

C. Assure no unnecessary stresses are transmitted to equipment flanges.

D. Tighten flange bolts at uniform rate and manufacturer's recommended torque for uniform gasket compression.

E. Support and match flange faces to uniform contact over entire face area prior to bolting pipe flange and equipment.

3.2 FIELD QUALITY CONTROL

A. Provide services of equipment manufacturer's field service representative(s) to:
   1. Inspect equipment covered by this Specification Section.
   2. Supervise pre-start adjustments and installation checks.
   3. Conduct initial start-up of equipment and perform operational checks.
   4. Instruct Owner's personnel for a minimum of 4 hours and a maximum of 16 hours on pump operating and maintenance procedures.

END OF SECTION

SECTION 13125
PRECAST CONCRETE UTILITY STRUCTURES

PART 1 - GENERAL

1.1 SUMMARY

A. Section Includes:
   1. Precast concrete utility structures, non-circular in plan, and appurtenant items.
      a. Valve and meter vaults.
   2. Design and fabrication of precast concrete utility structures.

B. Related Specification Sections include but are not necessarily limited to:
   1. Division 00 - Bidding Requirements, Contract Forms, and Conditions of the Contract.
   2. Division 01 - General Requirements.
   3. Section 03002– Concrete.
   4. Section 05500 - Metal Fabrications.
   5. Section 15116 - Fabricated Stainless Steel Slide Gates
   6. Section 02200 - Earthwork.
   7. Section 02221 - Trenching Backfilling, and Compacing for Utilities

1.2 QUALITY ASSURANCE

A. Referenced Standards:
   1. ASTM International (ASTM):
      a. C857, Standard Practice for Minimum Design Loading for Underground Precast Concrete Utility Structures.
      b. C858, Standard Specification for Underground Precast Concrete Utility Structures.
      c. C890, Standard Practice for Minimum Structural Design Loading for Monolithic or Sectional Precast Concrete Water and Wastewater Structures
      d. C923, Standard Specification for Joints for Concrete Pipe, Manholes, and Precast Box Sections Using Preformed Flexible Joint Sealants.
      e. C990, Standard Specification for Joints for Concrete Pipe, Manholes, and Precast Box Sections Using Preformed Flexible Joint Sealants
      f. C1619 - Standard Specification for Elastomeric Seals for Joining Concrete Structures
      g. D1227, Standard Specification for Emulsified Asphalt Used as a Protective Coating for Roofing.

1.3 SUBMITTALS

A. Shop Drawings:
   1. See Specification Section 01340 for requirements for the mechanics and administration of the submittal process.
   2. Product technical data including:
      a. Acknowledgement that products submitted meet requirements of standards referenced.
      b. Manufacturer's installation instructions.
   3. Concrete mix design(s)
      a. Include submittal information defined in Section 01340.
      b. Certification in accordance with ASTM C858 Section 12.
   4. Fabrication and/or layout drawings:
      a. Include detailed diagrams of utility structures showing typical components and dimensions, reinforcement, and other details.
      b. Itemize, on separate schedule, elevations or sectional breakdown of each utility structure with all components and refer to drawing identification number or notation.

c. Indicate required penetration details for all piping entering each structure.
d. Indicate reinforcement around opening for slide gate and anchorage requirements.
e. Include details of anchorage of aluminum walkway shown on the Drawings, Contractor shall coordinate loads from walkway with precast structure.

B. Drawings and Calculations:
1. All Drawings, including layout drawings, certifications and calculations shall be sealed by a Professional Engineer registered in the state where the project is located.
a. Provide certification stating that calculations provided have been prepared specifically for this Project and that they match and pertain to the Shop Drawings provided.
b. Provide a summary document as part of the above certification listing the design criteria used for precast design including:
1) Codes and standards.
2) Soil and surcharge loads.
3) Exterior groundwater load.
4) Live loads.
5) Other loads.

C. Submit all design information and products from this Specification Section in one complete submittal package. Include all calculations, products, and accessories together.

D. Test Reports:
1. Copies of source quality control tests, including compressive strength and air content, for units provided.

1.4 SITE CONDITIONS

A. Design groundwater elevation for precast structure design shall be the 100-year flood elevation shown on the Contract Documents.
1. If the 100-year flood elevation is not shown on the Contract Documents, the design groundwater elevation shall be equal to the ground surface elevation at the structure.

PART 2 - PRODUCTS

2.1 ACCEPTABLE MANUFACTURERS

A. Subject to compliance with the Contract Documents, the following manufacturers are acceptable:
1. Grating:
a. Conform to requirements of Section 05500.
2. Premolded joint sealant:
a. NPC Bidco, Inc., C-56
b. Ram-Nek, Henry Co.
c. EZ-Stik, Press-Seal Gasket Corp.
d. CS-102, Conseal.
3. Elastomeric joint seals:
a. Kent Seal.
4. External joint wrap.
a. NPC, Bidco, Inc.
b. EZ-Wrap, Press-Seal Gasket Corp.
c. RUBR-Nek, Henry Co.
5. Emulsified fibrated asphalt compound:
a. Sonneborn Hydrocide 700B Semi-Mastic.

B. Submit request for substitution in accordance with Specification Section 01640.

2.2 PRECAST UTILITY STRUCTURE COMPONENTS

A. Provide utility structures with interior dimensions as shown on the Drawings.

B. Provide the following components for each utility structure:
   1. Precast base section with integral or cast in place base slab.
   2. Precast wall section(s).
   3. Grating on top with cast in supports for grating.
      a. Proivide support for grating size shown on Drawings.

C. Provide openings and appurtenances as shown on Drawings.
   1. Access doors:
      a. Cast access doors into top slab.
      b. Where access door frames have drainage channels, cast PVC drain lines in top slab to drain location shown on Drawings. If no drain location is shown, drain frames to outer edge of top slab.
      c. Protect doors and frames from damage during concrete placement and shipping.
   2. Wall rungs.

D. Concrete:
   1. Conform to requirements of Section 03002
   2. Conform to requirements of ASTM C858, where stricter than Section 03002.
      a. Minimum 28-day compressive strength 4500 PSI.
      b. All portions of precast utility structure are considered to be exposed to freeze-thaw cycles.

E. Joints:
   1. Joints of precast riser and top sections:
      a. Preformed flexible joint sealants: ASTM C990.
      b. Exterior joint wrap.
   2. Pipe and conduit entry for utility structures.
      a. Resilient O-ring gaskets manufactured from natural or synthetic materials complying with ASTM C923, of suitable cross section and size to meet specified infiltration or exfiltration requirements.

F. Coatings:
   1. Vertical wall surfaces:
      a. Emulsified fibrated asphalt compound meeting ASTM D1227 Type I for all vertical wall exterior surfaces.

2.3 DESIGN

A. General Design Requirements:
   1. Design precast units and appurtenances in accordance with ASTM C858.
      a. Notify Engineer and furnish cast-in-place structures if sizes of precast utility structures shown on Drawings can not be designed or fabricated.

B. Design loads:
   1. Design precast units for all loads and load cases described in ASTM C857, with the following values and selections:
      a. Minimum uniform live load for exposed grated roof slab shall be 100 PSF.
      b. Unit weight of soil W shall be taken as no less than 120 LB/CU FT
      c. Minimum lateral soil pressure coefficient (K0), 0.50.
      d. Minimum vertical surcharge load shall be 250 psf.
      e. Minimum equivalent submerged lateral soil pressure shall be 95 LB/CU FT.

C. Specific Design Requirements:
   1. Out-of-plane shear:
      a. Out-of-plane shear shall be shown in the calculations.
      b. Wall thickness shall be determined based on meeting design requirements for out-of-plane shear resulting from soil and groundwater loads.

c. Wall sections shall be designed as one-way spans between corners for calculation of out-of-plane shear. Transfer of shear or bending load shall not be considered to be transferred across joints between precast units or between walls and slabs, unless unit as integrally cast together.
d. Use of shear steel reinforcement to increase out-of-plane shear capacity shall be prohibited.

2. The distribution of moments in adjacent walls of different lengths in rectangular structures shall be considered.
3. Design precast units taking into account reduced cross section at openings and penetrations.
4. Structure shall be checked for buoyancy.
   a. The minimum factor of safety for uplift with the design groundwater elevation at the existing grade surface shall be 1.20, unless a larger factor of safety is required by the local governing body or Building Code.
   b. If the buoyant weight of soil above base slab extensions beyond the external dimensions of the structure is used to resist uplift, the volume of soil considered to resist uplift shall be limited to soil within the vertical projection of the edge of the base slab extensions.

PART 3 - EXECUTION

3.1 PRECAST UTILITY STRUCTURE CONSTRUCTION

A. General:
   1. Prepare subgrade for base as required by Section 02221.
      a. For precast base slabs, place and compact 6 IN of Granular Fill or Bedding Material as indicated in the Specification or Drawings.
      b. For cast-in-place concrete base slabs, support base section and prepare bottom joint with preformed strip-type hydrophilic waterstop in accordance with Section 03002.
      c. Confirm that base is level and fully supported by stable material.
   2. Ensure accurate vertical placement and leveling prior to placement of interior grout.
      a. Provide vertical alignment tolerance of maximum 1 IN horizontal to 10 FT vertical.

B. Build each structure to dimensions shown on plans and at such elevation that pipe sections built into wall of structure will be true line of pipe extensions.

C. For all horizontal mating surfaces between precast concrete units, apply premolded flexible joint sealant to clean mating surfaces in accordance with sealant manufacturer's written instructions. Apply sufficient pressure to each concrete unit to seat unit in sealant.

D. Seal all pipe penetrations in manhole.
   1. Where post-installed seals are permitted, form pipe openings smooth and well shaped.
   2. After installation, seal exterior of penetration with non-shrink grout.
   3. After grout cures, wire brush smooth and apply two coats emulsified fibrated asphalt compound to minimum wet thickness of 1/8 IN to ensure complete seal.

E. Set top slab level to elevation shown on Drawings.

F. Field Quality Control:
   1. Any proposed repairs of precast components or structures shall be submitted to Engineer for approval.
   2. Structures shall be observed for signs of leakage during periods of high groundwater.
   3. No leakage that includes visible flow through joints between precast concrete sections or through pipe penetrations shall be permitted.
   4. Damp spots on interior wall surfaces shall be considered leakage and shall not be permitted.
      a. Damp spots shall be defined as spots where moisture from a source outside the structure can be picked up on a dry hand.
      b. Locate the source of water movement through the wall and permanently seal.
   5. Dampness on the top of the base slab will not be construed as leakage.

END OF SECTION

SECTION 13300
PRE-ENGINEERED SHELTERS

PART 1 - GENERAL

1.1 SUMMARY

A. Furnish labor, materials, tools, equipment, and services for Pre-Engineered Shelters, as indicated, in accordance with provisions of Contract Documents.

1.2 SUBMITTALS

A. Shop Drawings:
   1. Provide anchorage details.

B. Product Data:
   1. Manufacturers product literature representing specified products and systems including, but not limited to:
      a. Wind load
      b. Materials
      c. Foundation requirements
      d. Warranty

PART 2 - PRODUCTS

2.1 ACCEPTABLE MANUFACTURERS

A. Modular Shelters:
   1. Natural Structures.
   2. RCP Shelters, Inc.
   3. Or Equal.

2.2 MATERIALS

A. Open Shelter:
   1. Preservative Treated Lumber and Plywood:
      a. Natural wood products treated to add decay and termite resistance.
      b. Preservatives:
         1) Compatible with direct exposure to precipitation, sunlight and effects of weather.
         2) Authenticate by factory marking each piece with manufacturer's mark and applicable standards.
         3) Acceptable treatments:
            a) Alkaline Copper Quaternary (ACQ).
            b) Copper Boron Azole (CBA).
            c) Borate based (BORON).
      c. Lumber Species:
         1) Southern Pine.
         2) Mixed Southern Pine.
         3) Other species meeting requirements.
      d. Moisture content:
         1) Lumber: 19 percent.
         2) Plywood 18 percent.
         3) Kiln dried after treatment, (KDAT).
   2. Fasteners:
      a. General:
         1) Provide fasteners of size and type indicated that comply with requirements specified for material and manufacture.

2) Where rough carpentry is exposed to weather, in contact with earth, pressure-preservative treated, or in area of high relative humidity:
   a) Use fasteners with hot dip zinc coating complying with ASTM A153.
   b) Use fasteners of Type 304 stainless steel.

b. Nails, Brads, and Staples: ASTM F1667.
c. Power-Driven Fasteners: NES NER-272.
d. Wood Screws: ASME B18.6.1.
e. Lag Bolts: ASME B18.2.1.
f. Bolts: ASTM A307, Grade A steel bolts with ASTM A563 hex nuts and washers.
g. Expansion Anchors:
   1) Tested in accordance with ASTM E488.
   2) Anchor bolt and sleeve assembly:
   3) Masonry assemblies: Sustain load equal to 6 times load imposed when installed in unit.
   4) Concrete assemblies: Sustain load equal to 4 times load imposed when installed in unit.
h. Exterior and wet applications:
   1) Stainless Steel components, ASTM F593 and ASTM F594 Alloy Group 1 or 2.

3. Roof System:
   a. Manufacturer’s standard Durasteel flat insulated roofing system with EDPM membrane roofing.
4. Lighting:
   a. UL-Listed 110V, LED lamp, four foot, enclosed and gasketed, damp location fixtures with fiberglass housing, length as required.

PART 3 - EXECUTION

3.1 PREPARATION

A. Verify suitability of site to accept installation.

B. Installation signifies responsibility for performance.

3.2 INSTALLATION

A. Install in accordance with manufacturer's recommendations.

B. Complete mechanical and electrical connections as indicated.

C. Prior to occupancy, adjust mechanical, electrical and hardware for proper operation.

END OF SECTION

SECTION 13446
CONTROL AUXILIARIES

PART 1 - GENERAL

1.1 SUMMARY

A. Section Includes:
   1. Pilot devices:
      a. Selector switches.
      b. Pushbuttons.
      c. Indicating lights.
      d. Combination selector switch/indicator light.
      e. Potentiometer
   2. Relays/timers:
      a. Control relay.
      b. Time delay relays.
   3. Termination equipment:
      a. Terminal blocks.
      b. Fuse holders.
   4. Power supplies:
      a. DC power supplies.
      b. Isolation transformers.
   5. Voltage surge protection devices.

B. Related Specification Sections include but are not necessarily limited to:
   1. Division 00 - Bidding Requirements, Contract Forms, and Conditions of the Contract.
   2. Division 200 - Project Requirements.

1.2 QUALITY ASSURANCE

A. Referenced Standards:
   1. The Instrumentation, Systems, and Automation Society (ISA):
      a. S18.1, Annunciator Sequences and Specifications.
   2. National Electrical Manufacturers Association (NEMA):
      a. 250, Enclosures for Electrical Equipment (1000 Volts Maximum).
      b. ICS 2, Industrial Control and Systems: Controllers, Contactors, and Overload Relays Rated 600 Volts.
   3. Underwriters Laboratories, Inc. (UL).

B. Miscellaneous:
   1. Assure units comply with electrical area classifications and NEMA enclosure type shown on Drawings.

1.3 SUBMITTALS

A. Shop Drawings:
   1. See Section 01340 for requirements for the mechanics and administration of the submittal process.

B. Operation and Maintenance Manuals:
   1. See Specification Section 01340 for requirements for:
      a. The mechanics and administration of the submittal process.
      b. The content of Operation and Maintenance Manuals.

PART 2 - PRODUCTS

2.1 ACCEPTABLE MANUFACTURERS

A. Subject to compliance with the Contract Documents, the manufacturers listed in the applicable Articles below are acceptable.

B. Provide similar components from the same manufacturer for uniformity of appearance, operations, and maintenance.

C. Submit request for substitution in accordance with Specification Section 01640.

2.2 PILOT DEVICES

A. Selector Switches:
   1. Acceptable manufacturers:
      a. Eaton (Cutler Hammer)
      b. Allen-Bradley
   2. Design and fabrication:
      a. Heavy-duty type
      b. NEMA 4X rated
      c. Rotary cam units conforming to NEMA ICS 2-216.22.
      d. 30.5 mm size
      e. Supply switches having number of positions required with contact blocks to fulfill functions shown and specified.
      f. UL listed.
      g. Maintained contact type.
      h. Black colored operators.
      i. Designed with cam and contact block with approximate area of 2 IN SQ.
      j. Engraved legend plate per Contract Documents.
      k. Contact block requirements:
         1) Hermetically sealed contact blocks.

B. Pushbuttons:
   1. Acceptable manufacturers:
      a. Eaton (Cutler Hammer)
      b. Allen-Bradley
   2. Materials:
      a. Backing diaphragm: Buna-N.
   3. Design and fabrication:
      a. Heavy-duty type
      b. NEMA 4X rated
      c. Conforming to NEMA ICS 2-216.22.
      d. 30.5 mm size
      e. Diaphragm backed.
      f. UL listed.
      g. Emergency stop pushbuttons to have mushroom head operator and maintained contact.
      h. Non-illuminated type:
         1) Momentary contact with necessary contact blocks.
         2) Molded, solid color melamine buttons.
         3) Standard flush operators
         4) Black colored buttons for START or ON and black colored for STOP or OFF.
         5) Appropriate contact blocks to fulfill functions shown or specified.
      i. Contact block requirements:
         1) Wet or outside locations: Hermetically sealed contact blocks.
         2) Engraved legend plate per Contract Documents

C. Indicating Lights:
   1. Acceptable manufacturers:

a. Eaton (Cutler Hammer)
b. Allen-Bradley

2. Design and fabrication:
   a. Heavy duty type
   b. NEMA 4X rated
   c. Type allowing replacement of bulb without removal from control panel
   d. LED type. Incandescent lights shall not be acceptable.
   e. UL listed.
   f. 24 V lamp.
   g. Legends marked per Contract Documents.
   h. Nominal 2 IN SQ face.
   i. 30.5 mm size
   j. Push-to-test (PTT) type
   k. Glass lens
   l. Color code lights as follows:
      1) Green: OFF or stopped; valve closed
      2) Amber: Fault
      3) Red: ON or running; valve open
   m. Legend plate engraved for each light.

D. Potentiometer:
   1. Acceptable manufacturers:
      a. Eaton.
      b. Allen-Bradley.
   2. Design and fabrication:
      a. Heavy-duty, NEMA type.
      b. Mounting hole: 30.5 mm.
      c. UL listed.
      d. Linear adjustment through 0-1000 ohms with 1 percent resolution.
      e. 3-wire interface.
      f. Dial plate with 0-100 percent scale.
      g. Panel mounted.
      h. One-turn adjustment knob.

2.3 RELAYS/TIMERS

A. Control Relays:
   1. Acceptable manufacturers:
      a. Cutler-Hammer (Eaton)
      b. Allen-Bradley
   2. Design and fabrication:
      a. Plug-in general purpose relay
      b. Switching capacity: 10 A
      c. Contact material: Silver cadmium oxide.
      d. Provide relays with a minimum of 3 SPDT contacts.
      e. Coil voltage: 120 Vac or 24 Vdc.
      f. Relay sockets are DIN rail mounted.
      g. Internal neon or LED indicator is lit when coil is energized.
      h. Clear polycarbonate dust cover with clip fastener.
      i. Check button.
      j. Temperature rise:
         1) Coil: 85 DegF max.
         2) Contact: 65 DegF max.
      k. Insulation resistance: 100 Meg min.
      l. Frequency response: 1800 operations/hour.
      m. Operating temperature: -20 to +150 DegF.
      n. Life expectancy:

1) Electrical: 500,000 operations or more.
2) Mechanical: 50,000,000 operations or more.

o. UL listed or recognized.

B. Time Delay Relays:
1. Acceptable manufacturers:
a. Allen Bradley
b. Cutler Hammer (Eaton)
2. Design and fabrication:
a. Melt design test and performance requirements of NEMA ICS 2-218.
b. Heavy-duty.
c. Solid-state construction.
d. External adjusting dial.
e. Auxiliary relays as required to perform functions specified or shown on Drawings.
f. Operates on 117 Vac (±10 percent) power source.
g. Contact rating: A150 per NEMA ICS 2-125.
h. Furnish with "on" and "timing out" indicators.

2.4 TERMINATION EQUIPMENT

A. Terminal Blocks:
1. Acceptable manufacturers:
a. Phoenix Contact
b. Allen-Bradley
2. Design and fabrication:
a. Modular type with screw compression clamp.
b. Screws: Stainless steel.
c. Current bar: Nickel-plated copper allow.
d. Thermoplastic insulation rated for -40 to +90 DegC.
e. Wire insertion area: Funnel-shaped to guide all conductor strands into terminal.
f. Install end sections and end stops at each end of terminal strip.
g. Install machine-printed terminal markers on both sides of block.
h. Spacing: 6 mm.
i. Wire size: 22-12 AWG.
j. Rated voltage: 600 V.
k. Din rail mounting.
l. UL listed.
3. Standard-type block:
a. Rated current: 30 A.
b. Color: Gray body.
4. Bladed-type block:
a. Terminal block with knife blade disconnect which connects or isolated the two (2) sides of the block.
b. Rated current: 10 A.
c. Color:
1) Panel control voltage leaves enclosure - normal: Gray body, orange switch.
2) Foreign voltage entering enclosure: Orange body, orange switch.
5. Grounded-type block:
a. Electrically grounded to mounting rail.
b. Use to terminal ground wires and analog cable shields.
c. Color: Green and yellow body.

B. Fuse Holders:
1. Acceptable manufacturers:
a. Phoenix Contact.
b. Allen-Bradley.
2. Design and fabrication:
a. Modular-type with screw compression clamp.

b. Screws: Stainless steel.
c. Current bar: Nickel-plated copper alloy.
d. Thermoplastic insulation rated for -40 to +105 DegC.
e. Wire insertion area: Funnel-shaped to guide all conductor strands into terminal.
f. Blocks can be ganged for multi-pole operation.
g. Install end sections and end stops at each end of terminal strip.
h. Install machine-printed terminal markers on both sides of block.
i. Spacing: 9.1 mm.
j. Wire size: 30-12 AWG.
k. Rated voltage: 300 V.
l. Rated current: 12 A.
m. Fuse size: 1/4 x 1-1/4.
n. Blown fuse indication.
o. DIN rail mounting.
p. UL listed.

2.5 POWER SUPPLIES

A. DC Power Supplies:
1. Acceptable manufacturers:
a. Sola Hevi-Duty
b. Phoenix Contact
2. Design and fabrication:
a. DC power supplies shall be redundant and provided with a redundancy module.
b. Converts 120 Vac input to DC power at required voltage.
c. DIN rail mount with enclosure (i.e., not open frame).
d. Switching type.
e. AC input: 120 Vac +/-15 percent, nominal 60 Hz.
f. Efficiency: Minimum 86 percent.
g. Rated mean time between failure (MTBF): 500,000 HRS.
h. Voltage regulation:
1) Static: Less than 1.0 percent V_{out}.
2) Dynamic: +/-2 percent V_{out} overall.
i. Output ripple/noise: Less than 100 mV peak to peak (20 MHz).
j. Overload, short circuit and open circuit protection.
k. Temperature rating: 0 to 60 DegC full rated, derated linearly to 50 percent at 70 DegC.
l. Humidity rating: Up to 90 percent, non-condensing.
m. LED status indication for DC power.

B. Isolation Transformers:
1. Acceptable manufacturers:
a. Topaz Noise Suppressor Noise Isolator.
b. MGE UPS Systems, Topaz T1.
2. Design and fabrication:
a. Protects sensitive electronic equipment from electrical noise.
b. Common-mode noise attenuation: 146 dB at 0.0005 pF coupling capacitance.
c. Normal-mode attenuation: 60 dB.
d. Input voltage range: ±10 percent of rated.
e. Regulation: 3.5 percent or less from full-load to no-load.
f. Dielectric strength: 2,500 Vac minimum.
g. Harmonic distortion: 1 percent maximum.
h. Electromagnetic interference: 0-1 gauss maximum at 18 IN.
i. UL listed.

2.6 VOLTAGE SURGE PROTECTION DEVICES

A. See Specification Section 16491.

PART 3 - EXECUTION

3.1 INSTALLATION

A. Install products in accordance with manufacturer's instructions.

END OF SECTION

SECTION 13448
CONTROL PANELS AND ENCLOSURES

PART 1 - GENERAL

1.1 SUMMARY

A. Section Includes:
   1. Requirements for control panels and enclosures utilized as follows:
      a. Unless noted otherwise, all control panels and enclosures housing control components that are specified in Specification Section 13446.

B. This Specification Section is only applicable to panels furnished with Division 11 equipment packages when so stated in the applicable Division 11 Specification Section.

C. This Section is only applicable to panels housing Division 16 specified equipment (e.g., motor starters, lighting controls, etc.) when so stated in the applicable Division 16 Specification Section.

D. Related Sections include but are not necessarily limited to:
   1. Division 0 - Bidding Requirements, Contract Forms, and Conditions of the Contract.
   2. Division 11 - Equipment.
   3. Section 13446 - Control Auxiliaries.
   4. Division 16 - Electrical.

1.2 QUALITY ASSURANCE

A. Referenced Standards:
   1. American National Standards Institute (ANSI).
   2. ASTM International (ASTM):
      a. B75, Standard Specification for Seamless Copper Tube.
   3. National Electrical Manufacturers Association (NEMA):
      a. 250, Enclosures for Electrical Equipment (1000 Volts Maximum).
      b. ICS 4, Industrial Control and Systems: Terminal Blocks.
   4. National Fire Protection Association (NFPA):
      a. 70, National Electrical Code (NEC):
         1) Article 409, Industrial Control Panels.
   5. Underwriters Laboratories, Inc. (UL):
      a. 508A, Standard for Safety Industrial Control Panels.

B. Miscellaneous:
   1. Approved supplier of Industrial Control Panels under provisions of UL 508A.
      a. Entire assembly shall be affixed with a UL 508A label "Listed Enclosed Industrial Control Panel" prior to shipment to the jobsite.
      b. Control panel(s) without an affixed UL 508A label shall be rejected and sent back to the Contractor’s factory.

1.3 DEFINITIONS

A. The term "panel" refers to control panels or enclosures listed in the schedule included in this Specification Section.

B. Foreign Voltages: Voltages that may be present in circuits when the panel main power is disconnected.

C. Intrinsically Safe:
   1. A device, instrument or component that will not produce sparks or thermal effects under normal or abnormal conditions that will ignite a specified gas mixture.

2. Designed such that electrical and thermal energy limits inherently are at levels incapable of causing ignition.

D. Cable: Multi-conductor, insulated, with outer sheath containing either building wire or instrumentation wire.

E. Instrumentation Cable:
1. Multiple conductor, insulated, twisted or untwisted, with outer sheath.
2. Instrumentation cable is typically either TSP (twisted-shielded pair) or TST (twisted-shielded triad), and is used for the transmission of low current or low voltage signals.

F. Ground Fault Circuit Interrupter (GFCI): A type of device (e.g., circuit breaker or receptacle) which detects an abnormal current flow to ground and opens the circuit preventing a hazardous situation.

G. Programmable Logic Controller (PLC): A specialized industrial computer using programmed, custom instructions to provide automated monitoring and control functions by interfacing software control strategies to input/output devices.

H. Remote Terminal Unit (RTU): An industrial data collection device designed for location at a remote site, that communicates data to a host system by using telemetry such as radio, dial-up telephone, or leased lines.

I. Input/Output (I/O): Hardware for the moving of control signals into and/or out of a PLC or RTU.

J. Supervisory Control and Data Acquisition (SCADA): Used in process control applications, where programmable logic controllers (PLCs) perform control functions but are monitored and supervised by computer workstations.

K. Highway Addressable Remote Transducer (HART): An open, master-slave protocol for bus addressable field instruments.

L. Digital Signal Cable: Used for the transmission of digital communication signals between computers, PLCs, RTUs, etc.

M. Uninterruptible Power Supply (UPS): A backup power unit that provides continuous power when the normal power supply is interrupted.

N. Loop Calibrator: Portable testing and measurement tool capable of accurately generating and measuring 4-20ma DC analog signals.

1.4 SUBMITTALS

A. Shop Drawings:
1. See Section 01340 for requirements for the mechanics and administration of the submittal process.
2. Prepared with computer aided design (CAD) software.
3. Printed on 11 by 17 IN sheets.
4. Drawings shall include a title block containing the following:
   a. Plant or facility name where panel(s) are to be installed.
   b. Drawing title.
   c. Drawing number.
   d. Revision list with revision number and date
   e. Drawing date.
   f. Drawing scale.
   g. Manufacturer name, address, and telephone number.
5. Cover sheet for each drawing set shall indicate the following:
   a. Plant or facility name.
   b. Project name.
   c. Submittal description.
   d. Revision number.

e. Issue date.

6. Table of contents sheet(s) shall indicate the following for each drawing in the set:
   a. Drawing number.
   b. Drawing title.
   c. Sheet number.
7. Legend and abbreviation sheet shall indicate the following:
   a. Description of symbols and abbreviations used.
   b. Panel construction notes including enclosure NEMA rating, finish type and color, wire type, wire color strategy, conductor sizes, and wire labeling strategy.
   c. Confirmation that the panel(s) are to be affixed with a UL 508A label prior to shipment from the factory.
8. Bill of Material for each panel shall include the following component information:
   a. Instrument tag number.
   b. Quantity.
   c. Functional name or description.
   d. Manufacturer.
   e. Complete model number.
   f. Size or rating.
9. Panel exterior layout drawings to scale and shall indicate the following:
   a. Panel materials of construction, dimensions, and total assembled weight.
   b. Panel access openings.
   c. Conduit access locations.
   d. Front panel device layout.
   e. Nameplate schedule:
      1) Nameplate location.
      2) Legend which indicates text, letter height and color, and background color.
   f. Alarm annunciator window engraving schedule.
   g. Layouts of graphic panels or mosaic displays.
10. Panel interior layout drawings shall be drawn to scale and shall indicate the following:
   a. Sub-panel or mounting pan dimensions.
   b. Interior device layouts.
   c. PLC/RTU general arrangement layouts.
   d. Wire-way locations, purpose, and dimensions.
   e. Terminal strip designations.
   f. Location of external wiring and/or piping connections.
   g. Location of lighting fixtures, switches and receptacles.
11. Wiring diagrams shall consist of the following:
   a. Panel power distribution diagrams.
   b. Control and instrumentation wiring diagrams.
   c. PLC/RTU I/O information:
      1) Model number of I/O module.
      2) Description of I/O module type and function.
      3) Rack and slot number.
      4) Terminal number on module.
      5) Point or channel number.
      6) Programmed point addresses.
      7) Signal function and type.
   d. Wiring diagrams shall identify each wire as it is to be labeled.

B. Manufacturer catalog cut sheets for enclosure, finish, panel devices, control auxiliaries, and accessories.

C. Electrical load calculations for each panel:
   1. Total connected load.
   2. Peak electrical demand for each panel.

D. Climate control calculations for each panel.

1. Verify that sufficient dissipation and/or generation of heat is provided to maintain interior panel temperatures within the rated operating temperatures of panel components.

E. Operation and Maintenance Manuals:
   1. See Specification Section 01340 for requirements for:
      a. The mechanics and administration of the submittal process.
      b. The content of Operation and Maintenance Manuals.

F. Informational Submittals:
   1. Record Drawings:
      a. Updated panel drawings delivered with the panel(s) from the Contractor's factory.
      b. Drawings shall be enclosed in transparent plastic and firmly secured within each panel.

PART 2 - PRODUCTS

2.1 ACCEPTABLE MANUFACTURERS

A. Subject to compliance with the Contract Documents, the following manufacturers are acceptable:
   1. Enclosures:
      a. Hoffman Engineering Co.
      b. Rittal.
      c. Hammond Manufacturing.
   2. Panel heaters:
      a. Hoffman Enclosures, Inc.
      b. Rittal.
      c. Hammond Manufacturing.
   3. Heat exchangers and air conditioners:
      a. Hoffman Enclosures, Inc.
      b. Rittal.
      c. Hammond Manufacturing.
   4. Cooling fans and exhaust packages:
      a. Hoffman Enclosures, Inc.
      b. Rittal.
   5. Internal corrosion inhibitors:
      a. Hoffman Enclosures, Inc.; Model A-HCI.
      b. Northern Technologies International Corporation (NTIC); Model Zerust VC.
      c. Cortec Corporation; Model VpCl Emitting Systems.

B. Submit request for substitution in accordance with Specification Section 01640.

2.2 ACCESSORIES

A. Panel Nameplates and Identification:
   1. See Section 10400.

2.3 FABRICATION

A. General:
   1. Fabricate panels with instrument arrangements and dimensions identified in the Contract Documents.
   2. Control panel(s) shall be NEMA 4X rated.
   3. Devices installed in panel openings shall have a NEMA 4X rating.
      a. Devices that cannot be obtained with an adequate NEMA rating shall be installed behind a transparent viewing window.
      b. The window shall maintain the required NEMA rating of the enclosure.
   4. Panel(s) shall be completely assembled at the Contractor's factory.

a. No fabrication other than correction of minor defects or minor transit damage shall be performed on panels at the jobsite.

5. Painting:
   a. Panels fabricated from steel shall have their internal and external surfaces prepared, cleaned, primed, and painted.
      1) Mechanically abrade all surfaces to remove rust, scale, and surface imperfections.
      2) Provide final surface treatment with 120 grit abrasives or finer, followed by spot putty to fill all voids.
      3) Utilize solvent or chemical methods to clean panel surfaces.
      4) Apply surface conversion of zinc phosphate prior to painting to improve paint adhesion and to increase corrosion resistance.
      5) Electrostatically apply polyester urethane powder coating to all inside and outside surfaces.
      6) Bake powder coating at high temperatures to bond coating to enclosure surface.
         a) Panel interior shall be white with semi-gloss finish.
         b) Panel exterior shall be ANSI #61 gray with flat finish.
   b. Panels fabricated from stainless steel, aluminum, or fiberglass shall not be painted.
6. Finish opening edges of panel cutouts to smooth and true surface conditions.
   a. Panels fabricated from steel shall have the opening edges finished with the panel exterior paint.
7. Panel shall meet all requirements of UL 508A.
   a. If more than one (1) disconnect switch is required to disconnect all power within a panel or enclosure, provide a cautionary marking with the word "CAUTION" and the following or equivalent, "Risk of Electric Shock-More than one (1) disconnect switch required to de-energize the equipment before servicing."
8. Provide control panel in accordance with NFPA 70, Article 409.
   a. In the event of any conflict between NFPA 70, Article 409 and UL 508A, the more stringent requirement shall apply.

B. Wall Mounted Panels:
   1. Seams continuously welded and ground smooth.
   2. Rolled lip around all sides of enclosure door opening.
   3. Gasketed dust tight.
   4. Three-point latching mechanism operated by oil tight key-locking handle.
   5. Key doors alike.
   6. Continuous heavy GA hinge pin on doors.
      a. Hinges rated for 1.5 times door plus instrument weight.
   7. Front full opening door.
   8. Brackets for wall mounting.

C. Internal Panel Wiring:
   1. Panel wire duct shall be installed between each row of components, and adjacent to each terminal strip.
      a. Route wiring within the panel in wire-duct neatly tied and bundled with tie wraps.
      b. Follow wire-duct manufacturer's recommended fill limits.
      c. Wire-duct shall have removable snap-on covers and perforated walls for easy wire entrance.
      d. Wire-duct shall be constructed of nonmetallic materials with rating in excess of the maximum voltage carried therein.
   2. Wiring shall be installed such that if wires are removed from one (1) device, source of power will not be disrupted to other devices.
   3. Splicing and tapping of wires permitted only at terminal blocks.
   4. Wire bunches to doors shall be secured at each end so that bending or twisting will be around longitudinal axis of wire.
      a. Protect bend area with sleeve.
   5. Arrange wiring neatly, cut to proper length, with surplus wire removed.
      a. Arrange wiring with sufficient clearance.

b. Provide abrasion protection for wire bundles that pass through openings or across edges of sheet metal.

6. AC circuits shall be routed separate from analog signal cables and digital signal cables.
   a. Separate by at least 6 IN, except at unavoidable crossover points and at device terminations.
7. Provide at least 6 IN of separation between intrinsically safe devices and circuits and non-intrinsically safe devices and circuits.
8. Wiring to pilot devices or rotary switches shall be individually bundled and installed with a "flexible loop" of sufficient length to permit the component to be removed from panel for maintenance without removing terminations.
9. Conductors for AC and DC circuits shall be type MTW stranded copper listed for operation with 600 V at 90 DegC.
   a. Conductor size shall be as required for load and 16 AWG minimum.
   b. Internal panel wiring color code:
      1) AC circuits:
         a) Power wiring: Black.
         b) Control interconnections: Yellow.
         c) Neutral: White.
         d) Ground: Green.
      2) Low voltage DC circuits:
         a) Power wiring: Blue.
         b) Control interconnections: Violet.
      3) Foreign voltage circuits: Pink.
      4) Annunciator circuits: Red.
      5) Intrinsically safe circuits: Orange.
10. Analog signal cables shall be of 600 V insulation, stranded copper, twisted-shielded pairs.
    a. Conductor size: 18 AWG minimum.
    b. Terminate shield drain conductors to ground only at one (1) end of the cable.
11. High precision 250 ohm resistors with 0.25 percent accuracy shall be used where 4-20 mA DC analog signals are converted to 1-5 Vdc signals.
    a. Resistors located at terminal strips.
    b. Resistors terminated using individual terminal blocks and with no other conductors.
    c. Resistor leads shall be un-insulated and of sufficient length to allow test or calibration equipment (e.g., HART communicator, loop calibrator) to be properly attached to the circuit with clamped test leads.
12. Analog signals for devices in separate enclosures shall not be wired in series.
    a. Loop isolators shall be used where analog signals are transmitted between control enclosures.
13. Wire and cable identification:
    a. Wire and cables numbered and tagged at each termination.
    b. Wire tags:
       1) Slip-on, PVC wire sleeves with legible, machine-printed markings.
       2) Adhesive, snap-on, or adhesive type labels are not acceptable.
    c. Markings as identified in the Shop Drawings.

D. Grounding Requirements:
   1. Equipment grounding conductors shall be separated from incoming power conductors at the point of entry.
   2. Minimize grounding conductor length within the enclosure by locating the ground reference point as close as practical to the incoming power point of entry.
   3. Bond electrical racks, chassis and machine elements to a central ground bus.
      a. Nonconductive materials, such as paint, shall be removed from the area where the equipment contacts the enclosure.
   4. Bond the enclosure to the ground bus.
      a. It is imperative that good electrical connections are made at the point of contact between the ground bus and enclosure.

5. Panel-mounted devices shall be bonded to the panel enclosure or the panel grounding system by means of locknuts or pressure mounting methods.
6. Sub-panels and doors shall be bonded to ground.

E. Termination Requirements:
1. Wiring to circuits external to the panel connected to interposing terminal blocks.
2. Terminal blocks rigidly mounted on DIN rail mounting channels.
3. Terminal strips located to provide adequate space for entrance and termination of the field conductors.
4. One (1) side of each strip of terminal blocks reserved exclusively for the termination of field conductors.
5. Terminal block markings:
   a. Marking shall be the same as associated wire marking.
   b. Legible, machine-printed markings.
   c. Markings as identified in the shop drawings.
6. Terminal block mechanical characteristics, and electrical characteristics shall be in accordance with NEMA ICS 4.
7. Terminal blocks with continuous marking strips.
   a. Each terminal block shall be identified with machine printed labels.
8. Terminals shall facilitate wire sizes as follows:
   a. 120 Vac applications: Conductor size 12 AWG minimum.
   b. Other: Conductor size 14 AWG minimum.
9. Analog signal cable shield drain conductors shall be individually terminated.
10. Install minimum of 20 percent spare terminals.
11. Bladed, knife switch, isolating type terminal blocks where control voltages enter or leave the panel.
12. Fused terminal blocks shall be used in the following circuits:
   a. Control voltage is used to energize a solenoid valve.
   b. DC power is connected to 2-wire, loop-powered instruments.
13. Fused terminal blocks shall be provided with blown fuse indicators.
14. When control circuits require more than one (1) field conductor connected to a single wiring point, a sufficient number of terminal points shall be connected internally to allow termination of only one (1) field conductor per terminal block.
15. DIN rail mounting channels shall be installed along full length of the terminal strip areas to facilitate future expansion.
16. Connections to devices with screw type terminals shall be made using spade-tongue, insulated, compression terminators.

F. Component Mounting and Placement:
1. Components shall be installed per manufacturer instructions.
2. Control relays and other control auxiliaries shall be mounted on DIN rail mounting channels where practical.
3. Front panel devices shall be mounted within a range of 40 to 70 IN above the finished floor, unless otherwise shown in the Contract Documents.
4. PLC installation:
   a. Located such that the LED indicators and switches are readily visible with the panel door open.
   b. Located such that repair and/or replacement of component can be accomplished without the need to remove wire terminations or other installed components.
5. Locate power supplies with sufficient spacing for circulation of air.
6. Where components such as magnetic starters, contactors, relays, and other electromagnetic devices are installed within the same enclosure as the PLC system components, provide a barrier of at least 6 IN of separation between the “power area containing the electromagnetic devices” and the “control area”.
7. Components mounted in the panel interior shall be fastened to an interior sub-panel using machine screws.
   a. Fastening devices shall not project through the outer surface of the panel enclosure.

8. Excess mounting space of at least 20 percent for component types listed below to facilitate future expansion:
   a. Fuse holders.
   b. Circuit breakers.
   c. Control relays.
   d. Time delay relays.
   e. Intrinsically safe barriers and relays.
9. Components installed on sub-panels shall be provides with a minimum spacing between component and wire duct of 1 IN.
   a. Minimum of 2 IN separation between terminal strips and wire ducts.
10. Pneumatic tubes and appurtenances:
   a. Connect panel air piping and tubing penetrations with bulkhead fittings.
   b. Pneumatic control tubing shall be 1/4 IN OD.
      1) Tubing material: Either soft annealed ASTM B75 copper or flame-resistant polyethylene.
   c. Main headers within panels shall be minimum 1 IN.
   d. Compression-type pressure fittings.
   e. Equip panel instrument leads with ball type isolation valve.
   f. Route tubing neatly and mount securely.
   g. Do not route tubing in front of or in wire ducting.
   h. Code terminal plates.
   i. Pneumatic devices shall be served by a dual function filter regulator.

G. Power Distribution:
   1. Main incoming power circuits shall be protected with a thermal magnetic circuit breaker.
      a. Limit load to maximum of 80 percent of circuit breaker rating.
   2. PLC power supply module shall be individually fused so that it may be individually de-energized for maintenance.
   3. Each control panel with PLC components shall be furnished with power protection in the form of a double conversion UPS.
   4. Equip each panel with necessary power supplies with ratings required for installed equipment and with minimum 25 percent spare capacity.
   5. Constant voltage transformers, balancing potentiometers, and rectifiers as necessary for specific instrument requirements.

H. Internal Panel Lighting and Service Receptacles:
   a. One (1) duplex electrical GFCI receptacle. Provide a label on the receptable which states “For Laptop Use Only”.
   b. Continuous fluorescent lighting strip with manual switches

I. Environmental Controls:
   1. Outdoor panels:
      a. Thermostat controlled fan driven heaters to maintain temperature approximately 10 DegF above ambient for condensation prevention inside the panels.
      b. Heater Components mounted in an anodized aluminum housing.
      c. Heater shall be designed for sub-panel mounting.
      d. Heater shall be powered from 120VAC and protected with a dedicated circuit breaker.
      e. Thermostat controlled closed-loop air conditioners to maintain temperature inside each enclosure below the maximum operating temperature rating of the components inside the panel. Air-conditioner capacity shall be minimum 4000 BTU. Air conditioner shall be powered from 120VAC and protected with a dedicated circuit breaker.
      f. Internal corrosion inhibitors:
         1) Contains chemical which vaporizes and condenses on surfaces in the enclosure.
         2) Inhibitor shall be applied in accordance with manufacturer instructions for the enclosure volume.
         3) Inhibitor shall be applied in the panel(s) prior to shipment from the Contractor’s factory.

2.4 MAINTENANCE MATERIALS

A. Spares:
   1. One (1) quart of exterior finish touch-up paint.
   2. One (1) complete set of replacement corrosion inhibitors in sealed packages for each panel.

PART 3 - EXECUTION

3.1 FACTORY ACCEPTANCE TEST (FAT)

A. Scope: Inspect and test entire panel assembly to verify readiness for shipment.

B. Location: Contractor's factory.

C. Factory Acceptance Test (FAT):
   1. FAT shall be fully documented and signed by the Contractor's factory supervisor.
   2. The panel shop shall fully test the control panel for correct wiring.
      a. Each I/O point shall be checked by measuring or connecting circuits at the field terminal blocks.
   3. Burn-in test: Panel(s) shall be fully energized for a minimum period of 48 HRS prior to commencement of the FAT.
   4. Testing equipment (such as digital multi-meters, analog loop calibrators, and laptop computers with PLC programming software) shall be used as required for testing.
   5. The following functions shall be tested as a minimum:
      a. Demonstrate functions of the panel(s) required by the Contract Documents.
      b. Correctness of wiring from all panel field terminals to all I/O points and to all panel components.
      c. Simulate and test each discrete signal at the field terminal strips.
      d. Simulate and test each analog signal using loop calibrators.
      e. Correct operation of all digital communication devices.
      f. Demonstrate online and offline diagnostic tests and procedures.
      g. The Contractor shall notify the Engineer in writing a minimum of 15 calendar days prior to the Factory Tests.
      h. Engineer and/or Owner shall have the option to witness the factory acceptance test (FAT).
   6. Make following documentation available to the Engineer at test site during the tests:
      a. Contract Documents.
      b. Factory Demonstration Testing procedures.
      c. List of equipment to be testing including make, model, and serial number.
      d. Shop Drawing submittal data for equipment being tested.
   7. Deficiencies shall be corrected prior to shipment from the Contractor's factory.

3.2 INSTALLATION

A. Control panel will be rack mounted.

B. Anchor panels in a manner to prevent the enclosure from racking, which may cause the access doors to become misaligned.

C. Obtain approved panel layouts prior to installation of conduits.

D. Install products in accordance with manufacturer's instructions.

3.3 SCHEDULE

A. Schedule:

TAG NUMBER	LOCATION	TYPE	MATERIAL

PLC Control Panel	MOUNTED ON RACK AT THE PUMP STATION	NEMA 4X	316 STAINLESS STEEL

END OF SECTION

SECTION 15060
PIPE AND PIPE FITTINGS: BASIC REQUIREMENTS

PART 1 - GENERAL

1.1 SUMMARY

A. Section Includes:
   1. Piping systems.

B. Related Specification Sections include but are not necessarily limited to:
   1. Division 0 - Bidding Requirements, Contract Forms, and Conditions of the Contract.
   2. Division 1 - General Requirements.
   3. Section 02221 - Trenching, Backfilling, and Compacting for Utilities.

1.2 QUALITY ASSURANCE

A. Referenced Standards:
   1. American Association of State Highway and Transportation Officials (AASHTO):
      a. M252, Standard Specification for Corrugated Polyethylene Drainage Tubing.
      b. M294, Interim Specification for Corrugated Polyethylene Pipe 12 to 24 Inch Diameter.
   2. American Iron and Steel Institute (AISI).
   3. American Society of Mechanical Engineers (ASME):
      a. B16.3, Malleable Iron Threaded Fittings.
      b. B16.5, Pipe Flanges and Flanged Fittings.
   4. ASTM International (ASTM):
      a. A536, Standard Specification for Ductile Iron Castings.
      b. C14, Standard Specification for Concrete Sewer, Storm Drain, and Culvert Pipe.
      c. C76, Standard Specification for Reinforced Concrete Culvert, Storm Drain, and Sewer Pipe.
      d. C443, Standard Specification for Joints for Concrete Pipe and Manholes, Using Rubber Gaskets.
      e. D4101, Standard Specification for Polypropylene Plastic Injection and Extrusion Materials.
   5. American Water Works Association (AWWA):
      a. B300, Standard for Hypochlorites.
      b. C606, Standard for Grooved and Shouldered Joints.
   6. American Water Works Association/American National Standards Institute (AWWA/ANSI):
      a. C110/A21.10, Standard for Ductile-Iron and Gray-Iron Fittings.
      b. C115/A21.15, Standard for Flanged Ductile-Iron Pipe with Ductile-Iron or Gray-Iron Threaded Flanges.
      c. C151/A21.51, Standard for Ductile-Iron Pipe, Centrifugally Cast, for Water.
      d. C153/A21.53, Standard for Ductile-Iron Compact Fittings for Water Service.

B. Coordinate flange dimensions and drillings between piping, valves, and equipment.

1.3 SYSTEM DESCRIPTION

A. Piping Systems Organization and Definition:
   1. Piping services are grouped into designated systems according to the physical properties of the fluid conveyed, system pressure, piping size and system materials of construction.

1.4 SUBMITTALS

A. Shop Drawings:

1. See Specification Section 01340 for requirements for the mechanics and administration of the submittal process.
2. Product technical data including:
   a. Acknowledgement that products submitted meet requirements of standards referenced.
   b. Copies of manufacturer's written directions regarding material handling, delivery, storage and installation.
   c. Separate schedule sheet for each piping system scheduled in this Specification Section showing compliance of all system components.
      1) Attach technical product data on gaskets, pipe, fittings, and other components.

1.5 DELIVERY, STORAGE, AND HANDLING

A. Protect pipe coating during handling using methods recommended by manufacturer.
   1. Use of bare cables, chains, hooks, metal bars or narrow skids in contact with coated pipe is not permitted.

B. Prevent damage to pipe during transit.
   1. Repair abrasions, scars, and blemishes.
   2. If repair of satisfactory quality cannot be achieved, replace damaged material immediately.

PART 2 - PRODUCTS

2.1 ACCEPTABLE MANUFACTURERS

A. Subject to compliance with the Contract Documents, the following manufacturers are acceptable:
   1. Dielectric flange kit:
      a. PSI.
      b. Maloney.
      c. Central Plastics.
      d. or approved Equal
   2. Pipe saddles (for gage installation):
      a. Dresser Style 91 (steel and ductile iron systems).
      b. Dresser Style 194 (nonmetallic systems).

B. Submit request for substitution in accordance with Specification Section 01640.

2.2 PIPING SPECIFICATION SCHEDULES

A. Piping system materials, fittings and appurtenances are subject to requirements of specific piping specification schedules located at the end of PART 3 of this Specification Section.

2.3 COMPONENTS AND ACCESSORIES

A. Insulating Components:
   1. Dielectric flange kits:
      a. Flat faced.
      b. 1/8 IN thick dielectric gasket, phenolic, non-asbestos.
      c. Suitable for 175 psi, 210 DegF.
      d. 1/32 IN wall thickness bolt sleeves.
      e. 1/8 IN thick phenolic insulating washers.

B. Reducers:
   1. Furnish appropriate size reducers and reducing fittings to mate pipe to equipment connections.
   2. Connection size requirements may change from those shown on Drawings depending on equipment furnished.

C. Protective Coating and Lining:
   1. Include pipe, fittings, and appurtenances where coatings, linings, paint, tests and other items are specified.

2. Field paint pipe in accordance with with Manufacturer’s recommendations.

D. Sacrificial Anode Cathodic Protection:
1. 3 LB magnesium sacrificial anodes, prepackaged in a cloth bag containing 75 percent hydrated gypsum, 20 percent bentonite and 5 percent anhydrous sodium sulphate.
2. TW 600 V or an HMWPE insulated copper lead attached to the anode.

PART 3 - EXECUTION

3.1 EXTERIOR BURIED PIPING INSTALLATION

A. Install expansion devices as necessary to allow expansion and contraction movement.

B. Laying Pipe In Trench:
1. Excavate and backfill trench in accordance with Specification Section 02221.
2. Clean each pipe length thoroughly and inspect for compliance to specifications.
3. Grade trench bottom and excavate for pipe bell, as necessary, and lay pipe on trench bottom.
4. Install gasket or joint material according to manufacturer's directions after joints have been thoroughly cleaned and examined.
5. Except for first two (2) joints, before making final connections of joints, install two (2) full sections of pipe with earth tamped along side of pipe or final with bedding material placed.
6. Lay pipe in only suitable weather with good trench conditions.
   a. Never lay pipe in water except where approved by Engineer.
7. Seal open end of line with watertight plug if pipe laying stopped.
8. Remove water in trench before removal of plug.

C. Anchorage and Blocking:
1. Provide reaction blocking, anchors, joint harnesses, or other acceptable means for preventing movement of piping caused by forces in or on buried piping bends.
2. Place concrete blocking so that it extends from fitting into solid undisturbed earth wall.
   a. Concrete blocks shall not cover pipe joints.

D. Install insulating components where dissimilar metals are joined together.

3.2 EXPOSED EXTERIOR PIPING INSTALLATION

A. Install piping in vertical and horizontal alignment as shown on Drawings.

B. Pipe Support:
1. Use methods of piping support as shown on Drawings. Size pipe supports with consideration to specific gravity of liquid being piped.

C. Install expansion devices as necessary to allow expansion/contraction movement.

D. Provide full face gaskets on all systems.

E. Anchorage and Blocking:
1. Block, anchor, or harness exposed piping subjected to forces in which joints are installed to prevent separation of joints and transmission of stress into equipment or structural components not designed to resist those stresses.

F. Equipment Pipe Connections:
1. Equipment - General:
   a. Exercise care in bolting flanged joints so that there is no restraint on the opposite end of pipe or fitting which would prevent uniform gasket pressure at connection or would cause unnecessary stresses to be transmitted to equipment flanges.
   b. Tighten flange bolts at uniform rate which will result in uniform gasket compression over entire area of joint.
      1) Provide tightening torque in accordance with manufacturer's recommendations.
   c. Support and match flange faces to uniform contact over their entire face area prior to installation of any bolt between the piping flange and equipment connecting flange.

d. Permit piping connected to equipment to freely move in directions parallel to longitudinal centerline when and while bolts in connection flange are tightened.
e. Align, level, and wedge equipment into place during fitting and alignment of connecting piping.
f. To provide maximum flexibility and ease of alignment, assemble connecting piping with gaskets in place and minimum of four (4) bolts per joint installed and tightened.
   1) Test alignment by loosening flange bolts to see if there is any change in relationship of piping flange with equipment connecting flange.
   2) Realign as necessary, install flange bolts and make equipment connection.

G. Provide insulating components where dissimilar metals are joined together.

3.3 CATHODIC PROTECTION

A. Isolate, dielectrically, all piping from all other metals including reinforcing bars in concrete slabs, other pipe lines, and miscellaneous metal.

B. Make all connections from wire or cable by Thermit Cadwelding accomplished by operators experienced in this process.

C. Install all cables with a loop and overhead knot around each pipe and slack equal to at least 50 percent of the straight line length.

D. After cadwelding, coat all exposed metallic surfaces with hot applied tape.

3.4 FIELD QUALITY CONTROL

A. Pipe Testing - General:
   1. Test piping systems as follows:
      a. Test exposed piping systems upon completion of system.
   2. Utilize pressures, media and pressure test durations as specified in the Contract Documents for the specific pipe material.
   3. Isolate equipment which may be damaged by the specified pressure test conditions.
   4. Perform pressure test using calibrated pressure gages and calibrated volumetric measuring equipment to determine leakage rates.
      a. Select each gage so that the specified test pressure falls within the upper half of the gage's range.
      b. Notify the Engineer 24 HRS prior to each test.
   5. Completely assemble and test new piping systems prior to connection to existing pipe systems.
   6. Acknowledge satisfactory performance of tests and inspections in writing to Engineer prior to final acceptance.
   7. Bear the cost of all testing and inspecting, locating and remedying of leaks and any necessary retesting and re-examination.

B. Pressure Testing:
   1. Testing medium: Unless otherwise specified in the Contract Documents, utilize the following testing schedule:

      a. Liquid systems:

PIPE LINE SIZE (DIA)	GRAVITY OR PUMPED	SPECIFIED TEST PRESSURE	TESTING MEDIUM
Up to and including 42 IN	Gravity	25 psig	Water
All sizes	Pumped	150 psig	Water

2. Allowable leakage rates:
   a. All exposed piping systems, all pressure piping systems and all buried, piping systems which are hydrostatically pressure tested shall have zero leakage at the specified test pressure throughout the duration of the test.
3. Hydrostatic pressure testing methodology:
   a. General:
      1) All joints, including welds, are to be left exposed for examination during the test.
      2) Provide additional temporary supports for piping systems designed for vapor or gas to support the weight of the test water.
      3) Provide temporary restraints for expansion joints for additional pressure load under test.
      4) Isolate equipment in piping system with rated pressure lower than pipe test pressure.
      5) Do not paint or insulate exposed piping until successful performance of pressure test.

C. Dielectric Testing Methods and Criteria:
   1. Provide electrical check between metallic non-ferrous pipe or appurtenances and ferrous elements of construction to assure discontinuity has been maintained.
   2. Wherever electrical contact is demonstrated by such test, locate the point or points of continuity and correct the condition.

3.5 CLEANING, DISINFECTION AND PURGING

A. Cleaning:
   1. Clean interior of piping systems thoroughly before installing.
   2. Maintain pipe in clean condition during installation.
   3. Before jointing piping, thoroughly clean and wipe joint contact surfaces and then properly dress and make joint.
   4. Immediately prior to pressure testing, clean and remove grease, metal cuttings, dirt, or other foreign materials which may have entered the system.

3.6 LOCATION OF BURIED OBSTACLES

A. Furnish exact location and description of buried utilities encountered and thrust block placement.

B. Reference items to definitive reference point locations such as found property corners, entrances to buildings, existing structure lines and related fixed structures.

C. Include such information as location, elevation, coverage, supports and additional pertinent information.

D. Incorporate information on Recorded Drawings.

E. Steel Pipe
   1. General:
      a. Test requirements:
         1) Test medium: Water.
         2) Pressure: 150 psig.
         3) Duration: 2 HRS.
      b. Gaskets:
         1) Flanged joints (steel): AWWA C207.
   2. System components:
      a. Pipe size – all sizes:
         1) Exposed service:
            a) Material: Steel, fabricated pipe.
            b) Reference: AWWA C200.
            c) Lining: Cement.
            d) Coating: Paint.
            e) Fittings: AWWA C208.

f) Joints: Butt-welded with rigid AWWA C207 flanges at equipment, valves, and structure penetrations.

2) Buried service:

a) Material: Steel, fabricated pipe.

b) Reference: AWWA C200.

c) Lining: Cement.

d) Coating: Paint.

e) Fittings: AWWA C208.

f) Joints: Butt welded.

F. HDPE Pipe

1. General:

a. Piping symbol and service:

b. Test requirements:

1) Test medium: Water

2) Pressure: 25 psig

3) Duration: 6 HRS

c. Gaskets:

1) Flanged joints: Neoprene

2. System components:

a. Buried:

1) All pipe sizes:

a) Material: HPDE, DR 17.

b) Reference: ASTM D3350, ASTM D1248, ASTM S2655, ASTM D3261 and ASTM F714.

c) Lining: None.

d) Coating: None.

e) Fittings: Polyethyline with pressure rating same as pipe, ASTM D2513. Flanged steel meeting ASME B16.5.

f) Joints: Thermal butt fusion with flanged connections where shown on Drawings

g) Transition to ductile iron pipe:

(1) Restrained mechanical coupling with insert stiffeners per HDPE pipe manufacturer's recommendations.

END OF SECTION

SECTION 15061
PIPE: STEEL

PART 1 - GENERAL

1.1 SUMMARY

1. Section Includes: Steel pipe, fittings, and appurtenances.

A. Related Sections include but are not necessarily limited to:
1. Bidding Requirements, Contract Forms, and Conditions of the Contract.
2. General Provisions.
3. Supplementary General Provisions.
4. Section 02221 – Trenching, Backfilling and Compaction for Utilities.
5. Section 15060 - Pipe and Pipe Fittings: Basic Requirements.

1.2 QUALITY ASSURANCE

A. Referenced Standards:
1. American National Standards Institute (ANSI):
   a. B1.1, Unified Inch Screw Threads (UN and UNR Thread Form).
   b. B31.3, Chemical Plant and Petroleum Refinery Piping.
   c. B31.9, Building Services Piping.
2. American Society of Mechanical Engineers (ASME).
3. ASTM International (ASTM):
   a. A234, Standard Specification for Pipe Fittings of Wrought Carbon Steel and Alloy Steel for Moderate and Elevated Temperatures.
   b. A283, Low and Intermediate Tensile Strength Carbon Steel Plates.
   c. B695, Standard Specification for Coatings of Zinc Mechanically Deposited on Iron and Steel.
4. American Water Works Association (AWWA):
   a. C200, Steel Water Pipe 6 IN and Larger.
   b. C203, Coat Tar Protective Coatings and Linings for Steel water Pipeline - Enamel and Tape - Hot Applied.
   c. C206, Field Welding of Steel Water Pipe.
   d. C207, Steel Pipe Flanges for Waterworks Service, Sizes 4 IN through 144 IN.
   e. C208, Dimensions for Fabricated Steel Water Pipe Fittings.
   f. Manual M11, Steel Pipe - A Guide for Design and Installation.
5. Military Specifications:
   a. QQ-P-416F, Plating, Cadmium Electro Deposited.

B. Qualifications:
1. Use only certified welders meeting procedures and performance outlined in Section 9 of the ASME, Section 3.3.3 of AWWA C200 and other codes and requirements per local building and utility requirements.
2. Shop application of lining and coating materials including preparation of surfaces, priming, and lining and coating of pipe to be performed by pipe supplier or an established and recognized coating specialist selected by pipe manufacturer and acceptable to Engineer.
3. Repairs of any damage to lining or coating occurring during shipment or any other time, and field lining and coating of ends where linings or coatings have been held back for welded field joints, shall be done by a coating and lining specialist approved by manufacturer for product application.

1.3 SUBMITTALS

A. Shop Drawings:

1. See Section 15060. Information shall include but is not limited to:
    a. Piping layout.
    b. Thickness of pipe wall, lining and coating.
    c. Details of standard pipe, joints, specials and fittings.
    d. Type of joint and joint restraint.
2. Factory test reports.
3. Coating manufacturer's qualifications.
4. Welders certificates.
5. Design calculations.

PART 2 - PRODUCTS

2.1 ACCEPTABLE MANUFACTURERS

A. Subject to compliance with the Contract Documents, the following manufacturers are acceptable:
    1. Steel Pipe Manufacturers
        a. Northwest Pipe Company.
        b. U.S. Pipe
        c. American Spiral Weld Pipe Company.
        d. Or approved equal.

B. Submit requests for substitution in accordance with Section 01640.

2.2 MATERIALS

A. All materials used in steel piping systems defined in Section 15060 shall meet or exceed pressure test requirements specified for each respective system.

B. Steel Pipe shall conform to AWWA C200. Steel plate used in the manufacture and fabrication of steel pipe shall meet the requirements of AWWA C200. All longitudinal and girth seams, whether straight or spiral shall be butt-welded using an approved electric-fusion-weld process.

C. Fittings:
    1. ANSI B16.9 conforming to ASTM A234.
    2. Only the use of full radius butt-welded elbows is allowed.

D. Flanges:
    1. AWWA C207, Class D.
    2. Flange material: ASTM A283, Grade C or D, ASTM A181 Grade 1.
    3. Flange finish: Flat faced.

E. Nuts and Bolts:
    1. Buried: Cadmium-plated meeting Military Specification QQ-P-416F, Type 1, Class 2.
    2. Exposed: Mechanical galvanized ASTM B695, Class 40.
    3. Heads and dimensions per ANSI B1.1.
    4. Threaded per ANSI B1.1.
    5. Project ends 1/4 to 1/2 IN beyond nuts.

F. Gaskets: See individual piping systems in Section 15060.

2.3 PIPE FABRICATION

A. Provide piping for use in this Project with minimum wall thicknesses as follows:
    1. 8 IN DIA pipe: 0.188 IN
    2. 16 IN DIA pipe: 0.250 IN
    3. 24 IN DIA pipe: 0.250 IN
    4. 30 IN DIA pipe: 0.250 IN
    5. Sizes are nominal ID.
    6. Wall thicknesses indicated are for standard weight pipe.

B. Design piping for empty and partially full conditions and for full condition with a maximum of 25 psi operating pressure, proposed cover and embedment conditions shown on the Drawings, H-20 live load and a soil weight of 120 LB/CY.
   1. Provide piping designed in accordance with AWWA M11 and this Specification Section.
      a. The maximum E prime factor shall be in accordance with AWWA M11, Chapter 6.
      b. Use a deflection lag factor for design of 1.0.
         1) Refer to the Drawings and Section 02221 for backfill and embedment requirements.
      c. Limit maximum deflection of the pipe under all conditions to a maximum of 2 percent of the pipe diameter.
      d. Limit design stress to a maximum of 50 percent of minimum yield stress of the material used.
   2. Pipe shall be furnished in maximum practical laying lengths with shorter lengths and closure pieces provided as required by Drawings and as required for field erection. The pipe fabricator shall prepare a pipe laying schedule showing the location of each piece by mark number.

C. Taper cement mortar linings as required.

D. Protective Coatings and Linings: See Section 15060.

2.4 SOURCE QUALITY CONTROL

A. Inspections:
   1. All pipe shall be subject to inspection at the place of manufacture in accordance with the provisions of AWWA C200 and AWWA coating and lining standard as supplemented by the requirements herein.

B. Welding Requirements:
   1. All welders and welding procedures used to fabricate pipe shall be qualified under the provision of AWS B2.1 or ASME Section IX.

2.5 MARKINGS

A. The Contractor shall legibly mark all pipes and specials in accordance with the laying schedule and marking diagram. Each pipe shall be numbered in sequence and said number shall appear on the laying schedule and marking diagram in its proper location for installation.

2.6 HANDLING STORAGE AND SHIPPING

A. Handle, storage, and ship coated pipe in a manner that will prevent damage to the coating.
   1. Handle with wide belt slings or rubber padded forklifts.
   2. Use of chains, cables, or other equipment likely to cause damage to the pipe or coating is not allowed.

B. Support at proper intervals when lifted, so that excessive deflection does not take place and crack the coating and lining.

C. Ship pipe from the manufacturer with stays in each pipe to prevent out-of-roundness and any deflection greater than 2 percent of the pipe diameter during shipping and initial installation.
   1. Store on padded skids.

D. Transport pipe from the coating plant to the point of delivery on padded bunks with nylon tie-down straps or padded banding to adequately protect pipe.

PART 3 - EXECUTION

3.1 INSTALLATION

A. Install products in accordance with manufacturer's instructions.

B. Joining Methods - Flanges:
   1. Facing method:
      a. Insert slip-on flange on pipe.
      b. Assure maximum tolerances for flange faces from normal with respect to axis of pipe is 0.005 IN per foot of flange diameter.
      c. Test flanges after welding to pipe for true to face condition and reface, if necessary, to bring to specified tolerance.
   2. Joining method:
      a. Leave 1/8 to 3/8 IN of flange bolts projecting beyond face of nut after tightening.
      b. Coordinate dimensions and drillings of flanges with flanges for valves, pumps, equipment and other interconnecting piping systems.
      c. When bolting flange joints, exercise extreme care to assure that there is no restraint on opposite end of pipe or fitting which would prevent uniform gasket compression or cause unnecessary stress, bending or torsional strains being applied to cast flanges or flanged fittings.
         1) Allow one flange free movement in any direction while bolts are being tightened.
      d. Do not assemble adjoining flexible coupled, mechanical coupled or welded joints until flanged joints in piping system have been tightened.
      e. Gradually tighten flange bolts uniformly to permit even gasket compression.
      f. Do not overstress bolts to compensate for poor installation.

C. Joining Method - Welded Joints:
   1. Perform welding in accordance with AWWA C206 and this Section.
   2. For flange attachment perform in accordance with AWWA C207.
   3. Have each welding operator affix an assigned symbol to all his welds.
      a. Mark each longitudinal joint at the extent of each operator's welding.
      b. Mark each circumferential joint, nozzle, or other weld into places 180 degrees apart.
   4. Welding for all process piping shall conform with ANSI B31.3.
      a. Welding of utility piping 125 psi and less shall be welded per ANSI B31.9.
   5. Provide fittings manufactured for welded applications.

D. Field apply corrosion protection shrink sleeves at welded joints.

E. Support exposed piping in accordance with Section 15060 and Contract Drawings.

F. Install buried piping per Section 15060.

3.2 FIELD QUALITY CONTROL

A. Test piping systems in accordance with Section 15060.

END OF SECTION

SECTION 15067
PIPE - HDPE

PART 1 - GENERAL

1.1 SUMMARY

A. Section Includes: Polyethylene pipe and fittings for water supply line.

B. Related Sections include but are not necessarily limited to:
   1. Section 01342 – Submittals.
   2. Section 02221 – Trenching, Backfilling, and Compaction for Utilities.

1.2 QUALITY ASSURANCE

A. Referenced Standards:
   1. ASTM International (ASTM):
      a. D256, Standard Test Method for IZOD Impact Strength.
      b. D638, Specifications for Tensile Properties of Plastics.
      c. D696, Standard Test Method for Determining Thermal Expansion Coefficient.
      d. D746, Standard Test Method for Determining Brittleness Temperature.
      e. D790, Standard Test Methods for Flexural Properties of Unreinforced and Reinforced Plastics and Electrical Insulating Materials.
      f. D1238, Standard Test Method for Melt Flow Rates.
      g. D1505, Standard Test Method for Density of Plastics.
      h. D1525, Standard Test Method for Vicat Softening Temperature of Plastics.
      i. D1693, Standard Test Method for Environmental Stress Cracking.
      j. D2240, Standard Test Method for Shore Hardness.
      k. D2837, Standard Test Method for Hydrostatic Design Basis.
      l. D3035, Standard Specification for Polyethylene (PE) Plastic Pipe (DR-PR) Based on Controlled Outside Diameter
      m. D3350, Specifications for Polyethylene Plastic Pipe and Fittings Materials.
      n. F714, Standard Specification for Polyethylene (PE) Plastic Pipe (SDR-PR) Based on Outside Diameter
      o. F1473, Standard Test Method for Notch Tensile Test to Measure the Resistance to Slow Crack Growth of Polyethylene Pipes and Resins
   2. Gel Permeation Chromatography (GPC).
   3. International Organization for Standardization (ISO):
      a. 9001, Quality Management Systems - Requirements.
   4. Plastics Pipe Institutes (PPI).

1.3 SUBMITTALS

A. Shop Drawings:
   1. Installer certification.
   2. Field quality control documents.

1.4 DEFINITIONS

A. SDR: Standard Dimension Ratio.

B. ESCR: Environmental Stress Crack Resistance.

C. HDPE: High Density Polyethylene.

D. EHMW: Extra High Molecular Weight.

PART 2 - PRODUCTS

2.1 ACCEPTABLE MANUFACTURERS

A. Subject to compliance with the Contract Documents, the following manufacturers of HDPE pipe are acceptable for pressure pipe applications:
   1. ISCO Industries.
   2. CP Chem Performance Pipe.
   3. Rinker Materials.

B. The piping system is designed around PE 4710 (PE 3408) high-density polyethylene for pressure pipe applications.
   1. The following table defines pipe size, design pressure and minimum wall thickness.

NOMINAL PIPE SIZE	MIN. WALL THICKNESS	AVERAGE I.D.	WEIGHT	PIPE DIMENSION RATIO (DR)	PRESSURE RATING
42 IN	2.47 IN	36.76 IN	134.16 LBS/FT	17.0	125 PS1

2.2 PE 3408 PIPELINE

A. General:
   1. Provide PE 4710 piping with fittings and appurtenances as shown on the Drawings.
   2. Furnish materials in accordance with the following nominal physical properties:

PROPERTY	TEST METHOD (1)	NOMINAL VALUE
Material Designation	PPI/ASTM	PE 4710
Cell Classification	D3350	445474 C
Density, Natural or Gray	D1505	0.947 gm/cc
Density, Black	D1505	0.955 gm/cc
Melt Index (190 DegC/2.16 kg)	D1238	<0.15 gm/10 min
Tensile Strength @ Yield	D638	3,500-4,000 psi
Flexural Modulus, 2% Secant	D790	136,000 psi
Environmental Stress Crack Resistance (ESCR)		
F_0, Condition C	D1693	>5,000 HRS
PENT	F1473	>500 HRS
PPI Hydrostatic Design Basis (HDB):	D2837	1,600 psi @ 73.4 DegF

(1) Test procedures are ASTM unless otherwise specified. (PPI = Plastics Pipe Institutes and GPC - Gel Permeation Chromatography.)

B. Polyethylene Pipe and Fittings Requirements:
   1. Pipe furnished under this Specification shall be manufactured from compounds in compliance with Article 2.2 A, above.
      a. The dimensional and performance characteristics shall conform to the requirements of ASTM F714.
      b. Each lot of material shall be tested for melt index, density and percent carbon.

c. Upon request, the manufacturer shall furnish test data.

2. Polyethylene fabricated fittings shall be manufactured from polyethylene pipe, sheet stock or molded fittings meeting the material requirements of this Specification.
3. Pipe shall be pressure rated using the HDB from Article 2.2A. and shall be determined in accordance with the following formula:

$$P = \frac{2 \text{ X } S}{DR - 1} \text{ X } DF$$

Where

DR	=	Dimension Ratio = D/t
P	=	Internal pressure, psi
S	=	Long term hydrostatic strength, psi (1,600)
D	=	Actual outside diameter, IN
t	=	Minimum wall thickness, inches
DF	=	Design factor, dimensionless (0.5 for water @ 73.4 DegF)

4. Polyethylene fittings, including custom fabrications, shall have the same internal pressure rating as the mating pipe.
   a. At the point of fusion, the wall thickness and outside diameter of the fitting shall be in accordance with ASTM F714 or ASTM D3035 for the same pipe size.
5. The manufacturer's quality system shall be certified to be in accordance with ISO 9001:2000.

C. Joining Requirements:
1. Heat fusion:
   a. Pipe and fittings shall be joined by one of the following types of thermal fusion per the manufacturer's recommended procedures:
      1) Butt fusion, saddle fusion or socket fusion.
   b. The manufacturer shall provide fusion training by authorized personnel or an authorized representative.
      1) The Contractor shall be responsible for ensuring that personnel have received proper training per the manufacturer's recommended procedure.
   c. Butt fusions performed between pipe ends or pipe ends and fitting outlets shall be within the following allowable wall mismatches:
      1) 1 DR difference for diameters through 18 IN.
      2) No difference for diameters above 18 IN.

D. Other Methods of Joining:
1. Polyethylene pipe and fittings may be joined together or to other materials through the use of electrofusion fittings, flange adapters with back-up rings, mechanical couplings designed for connecting polyethylene pipe and fittings to itself or to another material, or MJ adapters.
   a. The manufacturer of the joining device shall be consulted for proper installation procedures.

E. Marking of Pipe System:
1. Pipe shall be permanently marked in accordance with all applicable standards per this Specification.
   a. Marking shall be heat stamped indent print and shall remain legible under normal handling and installation practices.
2. Fittings shall be marked on the body or hub.
   a. Marking shall be in accordance with the applicable standard depending upon the fitting type.
   b. Mechanical fittings shall be marked with size, body material designation code, pressure rating and the manufacturer's name or trademark.

F. Workmanship of Pipe Materials:

1. Pipe and fittings shall be homogenous throughout, and free of visible cracks, holes, foreign inclusions, blisters, dents or other injurious defects.
    a. The pipe and fittings shall be as uniform as commercially practicable in color, opacity, density and other physical properties.

G. Testing of Pipe System:
1. The Contractor shall be responsible for field setup and performance of the fusion equipment and the fusion procedure used.
    a. Upon request, the Contractor shall verify the fusion quality by making and testing per the manufacturer's recommended qualification procedure.
    b. The Contractor shall be responsible for the necessary adjustments to the setup, equipment, operation and fusion procedures.
    c. Fusions that fail the qualification procedures shall be remade.
    d. Other methods of pneumatic testing are not recommended.

PART 3 - EXECUTION

3.1 INSTALLATION

A. See ASTM D2774-12

B. General:
1. Install as shown on the Drawings.
2. Cap all open pipe ends at the end of the workday.
3. Install pipeline in accordance with Section 02221, 15060 and the Drawings.

C. Joining Procedures:
1. HDPE pipe joints shall be butt fused on the surface prior to installation in the trench.
2. Fusion joiner must be qualified by manufacturer.
3. Fusion equipment must be approved by manufacturer and operated by qualified operators.
4. Inspect all fusion joints for damage, dirt, moisture or any abnormalities.
5. Perform all joint fusion in strict accordance with manufacturer's procedures.

END OF SECTION

SECTION 15116
FABRICATED STAINLESS STEEL SLIDE GATES

PART 1 - GENERAL

1.1 SUMMARY

A. Section Includes:
   1. Fabricated Stainless Steel Slide Gates.

B. Related Specification Sections include but are not necessarily limited to:
   1. Division 0 - Bidding Requirements, Contract Forms, and Conditions of the Contract.
   2. Division 1 - General Requirements.

C. Gate Schedule:
   1. The following table is a schedule of the fabricated slide gates.

GATE EQUIPMENT ID#	SIZE WxH (INCH)	DESIGN HEAD, (FEET) [a] SEATING	UNSEATING	OPENING DIRECTION [b]	TYPE OF CLOSURE [c]	TYPE OF LIFT MECHANISM [d]	RISING OR NON-RISING STEM [e]	THIMBLE REQUIRED [f]
N/A	36x36	16	16	Up Op	FB/FM	Hdwl	R	YES

Abbreviations:
[a] Design Head: Measured from surface of water to centerline of gate, in feet.
[b] Opening Direction: Dn Op = Downward Opening; Up Op = Upward Opening.
[c] Type of Closure: W = Weir Service; FB = Flush Bottom (Embedded); FM = Face Mounted.
[d] Type of Lift Mechanism: Ped = Pedestal; Elec = Electric; Hdwl = Handwheel; Hyd = Hydraulic, CH = Crank Handle, SQN = Square Nut.
[e] Rising or Nonrising Stem: R = Rising; NR = Nonrising.
[f] Thimble Required: Wall Thimble is required = YES; Wall Thimble is not required = No.

1.2 QUALITY ASSURANCE

A. Referenced Standards:
   1. American Water Works Association (AWWA):
      a. C561, Fabricated Stainless Steel Slide Gates.

1.3 SUBMITTALS

A. Shop Drawings:
   1. See Specification Section 01340 for requirements for the mechanics and administration of the submittal process.
   2. Product technical data including:
      a. Acknowledgment that products submitted meet the requirements of standards referenced.
      b. Certified drawings and material specifications for all components.
      c. Test records.

B. Operation and Maintenance Manuals:
   1. See Specification Section 01340 for requirements for:
      a. The mechanics and administration of the submittal process.
      b. The content of Operation and Maintenance Manuals.

C. Affidavit of Compliance: See AWWA C561.

PART 2 - PRODUCTS

2.1 ACCEPTABLE MANUFACTURERS

A. Subject to compliance with the Contract Documents, the following manufacturers are acceptable:
   1. RW Gate Company
   2. Whipps.
   3. Rodney Hunt / Fontaine
   4. Hydro-Gate.
   5. Golden Harvest.

2.2 EQUIPMENT – SLIDE GATES

A. General: Provide gates, stems, lifts and other appurtenances of size, type, material and construction shown on the Contract Drawings and as specified herein.

B. Gates: Meet all requirements of AWWA C561 as modified per this Specification Section.

C. Materials:
   1. Materials subject to dezincification or dealuminization prohibited.
   2. "L" grades for all welded components.
   3. Thimble, frame, guides, slide, yoke and stem guides:
      a. Stainless steel, Type 304 and Type 304L.
   4. Gear housing:
      a. Cast iron, steel or ductile iron.
   5. Actuator pedestal:
      a. Stainless steel, Type 304 or Type 316.
      b. Tenzaloy aluminum
   6. Rising stem thrust nuts:
      a. Stainless steel, Type 304 or Type 316.
   7. Stem couplings:
      a. Stainless steel, Type 304 or Type 316.
   8. Stem guide bushings:
      a. Cast or extruded UV stabilized UHMW-PE.
   9. Stems:
      a. Stainless steel, Type 304, Type 316, or Type 303.
   10. Seals:
      a. UV stabilized UHMW-PE.
   11. Anchor bolts and fasteners: Stainless steel, Type 304 or Type 316.
   12. Flush-bottom sill retainer: Stainless steel, Type 304 or Type 316.
   13. Wedges and Pressure Pads: UV stabilized UHMW-PE.

D. Fabrication: One-piece frames.
   1. One-piece frame: Self-contained {Conventional pedestal mounted}.
   2. Flush bottom seals: Easily replaceable without disassembly of the gate.
   3. Side and top seals of gate: Replaceable without removing gate or without dewatering.

2.3 GATE OPERATORS AND LIFTS

A. General: Provide lifts in accordance with AWWA C561 or as modified in this Specification Section.

B. Rising Stem: Provide clear butyrate plastic stem cover with Mylar open-close indicator.

C. Manual Operators:
   1. Equip the lift mechanism with a pedestal, torque tube, or baseplate, machined and drilled for mounting the lift housing and ready for bolting to the operating floor, top wall mounting bracket, or gate yoke, as shown on Drawings or specified.
   2. Centerline of crank or handwheel: Approximately 36 IN above operating floor.

2.4 FABRICATION

A. Specified in AWWA C561.

B. Welded Stainless Steel: Passivated after fabrication.

2.5 SOURCE QUALITY CONTROL

PART 3 - EXECUTION

3.1 INSTALLATION

A. Install products in accordance with manufacturer's instructions.

B. For identification and tagging, and for warning or caution signs, comply with Specification Section 10400.

3.2 FIELD QUALITY CONTROL

A. Employ and pay for services of equipment manufacturer's field service representative(s) to:
   1. Inspect equipment covered by this Specification Section.
   2. Supervise adjustments and installation checks.
   3. Provide test equipment, tools, and instruments necessary to accomplish equipment testing.
   4. Conduct initial start-up of equipment, perform operational checks, and supervise acceptance testing.
   5. Provide, through Contractor, a written statement that manufacturer's equipment has been installed properly, started up and is ready for operation by Owner's personnel.
   6. Instruct Owner's personnel on operation and maintenance of furnished equipment.
   7. Field Leakage Test for Stainless Steel Slide Gates: Test gate under design unseating head and adjust to maximum leakage specified.

END OF SECTION

SECTION 16010
ELECTRICAL: BASIC REQUIREMENTS

PART 1 - GENERAL

1.1 SUMMARY

A. Section Includes:
   1. Basic requirements for electrical systems.

B. Related Specification Sections include but are not necessarily limited to:
   1. Section 11060 – Pumping Equipment.
   2. Division 16 - Electrical.
   3. Section 16120 - Wire and Cable - 600 Volt and Below.
   4. Section 16130 - Raceways and Boxes.

1.2 QUALITY ASSURANCE

A. Referenced Standards:
   1. Aluminum Association (AA).
   2. American Iron and Steel Institute (AISI).
   3. ASTM International (ASTM):
      a. A123/A123M, Standard Specification for Zinc (Hot-Dip Galvanized) Coatings on Iron and Steel Products.
      b. A153/A153M, Standard Specification for Zinc Coating (Hot-Dip) on Iron and Steel Hardware.
   4. ETL Testing Laboratories (ETL).
   5. Institute of Electrical and Electronics Engineers, Inc. (IEEE):
      a. C2, National Electrical Safety Code (NESC).
   6. National Electrical Manufacturers Association (NEMA):
      a. 250, Enclosures for Electrical Equipment (1000 Volts Maximum).
      b. ICS 6, Industrial Control and Systems Enclosures.
   7. National Fire Protection Association (NFPA):
      a. 70, National Electrical Code (NEC).
   8. Underwriters Laboratories, Inc. (UL).
      a. 94, Standard for Tests for Flammability of Plastic Materials for Parts in Devices and Appliances.

B. Where UL test procedures have been established for the product type, use UL or ETL approved electrical equipment and provide with the UL or ETL label.

1.3 DEFINITIONS

A. For the purposes of providing materials and installing electrical work the following definitions shall be used.
   1. Outdoor area: Exterior locations where the equipment is normally exposed to the weather and including below grade structures, such as vaults, manholes, handholes and in-ground pump stations.
   2. Shop fabricated: Manufactured or assembled equipment for which a UL test procedure has not been established.

1.4 SUBMITTALS

A. Shop Drawings:
   1. See Specification Section 01340 for requirements for the mechanics and administration of submittal process.
   2. General requirements:

a. Provide manufacturer's technical information on products to be used, including product descriptive bulletin.
b. Include data sheets that include manufacturer's name and product model number.
   1) Clearly identify all optional accessories.
c. Acknowledgement that products are UL or ETL listed or are constructed utilizing UL or ETL recognized components.
d. Manufacturer's delivery, storage, handling and installation instructions.
e. Product installation details.
f. See individual specification sections for any additional requirements.

B. Operation and Maintenance Manuals:
   1. See Specification Section 01340 for requirements for:
      a. The mechanics and administration of the submittal process.
      b. The content process of Operation and Maintenance Manuals.

C. When a Specification Section includes products specified in another Specification Section, each Specification Section shall have the required Shop Drawing transmittal form per Specification Section 01340 and all Specification Sections shall be submitted simultaneously.

1.5 DELIVERY, STORAGE, AND HANDLING

A. Protect nameplates on electrical equipment to prevent defacing.

1.6 AREA DESIGNATIONS

A. Designation of an area will determine the NEMA rating of the electrical equipment enclosures, types of conduits and installation methods to be used in that area.
   1. Outdoor areas:
      a. Wet.
      b. Also, corrosive and/or hazardous when specifically designated on the Drawings or in the Specifications.

PART 2 - PRODUCTS

2.1 ACCEPTABLE MANUFACTURERS

A. Subject to compliance with the Contract Documents, refer to specific Division 16 Specification Sections and specific material paragraphs below for acceptable manufacturers.

B. Submit request for substitution in accordance with Specification Section 01640.

C. Provide all components of a similar type by one (1) manufacturer.

2.2 MATERIALS

A. Electrical Equipment Support Pedestals and/or Racks:
   1. Approved manufacturers:
      a. Modular strut:
         1) Unistrut Building Systems.
         2) B-Line.
         3) Globe Strut.
   2. Material requirements:
      a. Modular strut:
         1) Galvanized steel.
      b. Mounting hardware:
         1) Galvanized steel.

B. Field touch-up of galvanized surfaces.
   1. Zinc-rich primer.
      a. One (1) coat, 3.0 mils, ZRC by ZRC Products.

PART 3 - EXECUTION

3.1 INSTALLATION

A. Install and wire all equipment and perform all tests necessary to assure conformance to the Drawings and Specification Sections and ensure that equipment is ready and safe for energization.

B. Install equipment in accordance with the requirements of:
   1. NFPA 70.
   2. IEEE C2.
   3. The manufacturer's instructions.

C. In general, conduit routing is not shown on the Drawings.
   1. The Contractor is responsible for routing all conduits including those shown on one-line and control block diagrams and home runs shown on floor plans.
   2. Conduit routings and stub-up locations that are shown are approximate; exact routing to be as required for equipment furnished and field conditions.

D. When complete branch circuiting is not shown on the Drawings:
   1. A homerun indicating panelboard name and circuit number will be shown and the circuit number will be shown adjacent to the additional devices (e.g., light fixture and receptacles) on the same circuit.
   2. The Contractor is to furnish and install all conduit and conductors required for proper operation of the circuit.
   3. The indicated home run conduit and conductor size shall be used for the entire branch circuit.
   4. See Specification Section 16120 for combining multiple branch circuits in a common conduit.

E. Do not use equipment that exceed dimensions or reduce clearances indicated on the Drawings or as required by the NFPA 70.

F. Install equipment plumb, square and true with construction features and securely fastened.

G. Install electrical equipment, including pull and junction boxes, minimum of 6 IN from process, gas, air and water piping and equipment.

H. Install equipment so it is readily accessible for operation and maintenance, is not blocked or concealed and does not interfere with normal operation and maintenance requirements of other equipment.

I. Device Mounting Schedule:
   1. Unless indicated otherwise on the Drawings, mounting heights are as indicated below:
      a. Light switch (to center): 48 IN.
      b. Receptacle: 36 IN.
      c. Safety switch (to center of operating handle): 54 IN.
      d. Separately mounted motor starter (to center of operating handle): 54 IN.
      e. Pushbutton or selector switch control station (to center): 48 IN.
      f. Panelboard (to top): 72 IN.

J. Avoid interference of electrical equipment operation and maintenance with structural members, building features and equipment of other trades.
   1. When it is necessary to adjust the intended location of electrical equipment, unless specifically dimensioned or detailed, the Contractor may make adjustments in equipment locations in accordance with the following without obtaining the Engineer's approval:
      a. 1 FT at grade, floor and roof level in any direction in the horizontal plane.

K. Provide electrical equipment support system per the following area designations:
   1. Wet areas:

a. Galvanized system consisting of galvanized steel channels and fittings, nuts and hardware.
b. Field touch-up cut ends and scratches of galvanized components with the specified primer during the installation, before rust appears.

L. Provide all necessary anchoring devices and supports rated for the equipment load based on dimensions and weights verified from approved submittals, or as recommended by the manufacturer.
1. Do not cut, or weld to, building structural members.
2. Do not mount safety switches or other equipment to equipment enclosures, unless enclosure mounting surface is properly braced to accept mounting of external equipment.

M. Provide corrosion resistant spacers to maintain 1/4 IN separation between metallic equipment and/or metallic equipment supports and mounting surface in wet areas, on below grade walls and on walls of liquid containment or processing areas such as Basins, Clarifiers, Digesters, Reservoirs, etc.

N. Do not place equipment fabricated from aluminum in direct contact with earth or concrete.

O. Screen or seal all openings into equipment mounted outdoors to prevent the entrance of rodents and insects.

3.2 FIELD QUALITY CONTROL

A. Verify exact rough-in location and dimensions for connection to electrified equipment, provided by others.

B. Replace equipment and systems found inoperative or defective and re-test.

C. Cleaning:
1. Thoroughly wide down the interior and exterior of all equipment.

D. The protective coating integrity of support structures and equipment enclosures shall be maintained.
1. Repair galvanized components utilizing a zinc rich paint.
2. Repair painted components utilizing touch up paint provided by or approved by the manufacturer.
3. Repair surfaces which will be inaccessible after installation prior to installation.
4. See Specification Section 16130 for requirements for conduits and associated accessories.

E. Replace nameplates damaged during installation.

END OF SECTION

SECTION 16060
GROUNDING

PART 1 - GENERAL

1.1 SUMMARY

A. Section Includes:
   1. Material and installation requirements for grounding system(s).

B. Related Specification Sections include but are not necessarily limited to:
   1. Division 0 - Bidding Requirements, Contract Forms, and Conditions of the Contract.
   2. Division 200 - Project Requirements.
   3. Section 16010 - Electrical: Basic Requirements.
   4. Section 16120 - Wire and Cable - 600 Volt and Below.
   5. Section 16130 - Raceways and Boxes.

1.2 QUALITY ASSURANCE

A. Referenced Standards:
   1. ASTM International (ASTM):
      a. B8, Standard Specification for Concentric-Lay-Stranded Copper Conductors, Hard, Medium-Hard, or Soft.
   2. Institute of Electrical and Electronics Engineers, Inc. (IEEE):
      a. 837, Standard for Qualifying Permanent Connections Used in Substation Grounding.
   3. National Fire Protection Association (NFPA):
      a. 70, National Electrical Code (NEC).
         1) Article 250, Grounding and Bonding.
   4. Underwriters Laboratories, Inc. (UL):
      a. 467, Grounding and Bonding Equipment.

B. Assure ground continuity is continuous throughout the entire Project.

1.3 SUBMITTALS

A. Shop Drawings:
   1. See Specification Section 01340 for requirements for the mechanics and administration of the submittal process.
   2. Product technical data.
      a. Provide submittal data for all products specified in PART 2 of this Specification Section except:
         1) Grounding clamps, terminals and connectors.
         2) Exothermic welding system.
      b. See Specification Section 16010 for additional requirements.

PART 2 - PRODUCTS

2.1 ACCEPTABLE MANUFACTURERS

A. Subject to compliance with the Contract Documents, the following manufacturers are acceptable:
   1. Ground rods and bars and grounding clamps, connectors and terminals:
      a. Burndy.
      b. Harger Lightning Protection.
      c. Heary Brothers.
      d. Joslyn.

e. Robbins Lightning Protection.
f. Thomas & Betts (Blackburn).
g. Thompson.

2. Exothermic weld connections:
   a. Erico Products Inc., Cadweld.
   b. Harger Lightning Protection.
   c. Thermoweld.

2.2 COMPONENTS

A. Wire and Cable:
   1. Bare conductors: Soft drawn stranded copper meeting ASTM B8.
   2. Insulated conductors: Color coded green, per Specification Section 16120.

B. Conduit: As specified in Specification Section 16130.

C. Ground Rods:
   1. 3/4 IN x 20 FT.
   2. Copperclad:
      a. Heavy uniform coating of electrolytic copper molecularly bonded to a rigid steel core.
      b. Corrosion resistant bond between the copper and steel.
      c. Hard drawn for a scar-resistant surface.

D. Grounding Clamps, Connectors and Terminals:
   1. Mechanical type:
      a. Standards: UL 467.
      b. High copper alloy content.
   2. Compression type suitable for direct burial in earth or concrete:
      a. Standards: UL 467, IEEE 837.
      b. High copper alloy content.
      c. Non-reversible.

E. Exothermic Weld Connections:
   1. Copper oxide reduction by aluminum process.
   2. Molds properly sized for each application.

PART 3 - EXECUTION

3.1 INSTALLATION

A. General:
   1. Install products in accordance with manufacturer's instructions.
   2. Size grounding conductors and bonding jumpers in accordance with NFPA 70, Article 250, except where larger sizes are indicated on the Drawings.
   3. Remove paint, rust, or other nonconducting material from contact surfaces before making ground connections.
   4. Do not splice grounding conductors except at ground rods.
   5. Install ground rods and grounding conductors in undisturbed, firm soil.
      a. Provide excavation required for installation of ground rods and ground conductors.
      b. Use driving studs or other suitable means to prevent damage to threaded ends of sectional rods.
      c. Unless otherwise specified, connect conductors to ground rods with compressor type connectors or exothermic weld.
      d. Provide sufficient slack in grounding conductor to prevent conductor breakage during backfill or due to ground movement.
      e. Backfill excavation completely, thoroughly tamping to provide good contact between backfill materials and ground rods and conductors.

6. Do not use exothermic welding if it will damage the structure the grounding conductor is being welded to.

B. Grounding Electrode System:
   1. Provide a grounding electrode system in accordance with NFPA 70, Article 250 and as indicated on the Drawings.
   2. Grounding conductor terminations:
      a. Ground bars in electrical equipment, use compression type terminal and bolt it to the ground bar.
      b. Piping systems use mechanical type connections.
      c. Building steel, below grade and encased in concrete, use compression type connector or exothermic weld.
      d. At all above grade terminations, the conductors shall be labeled per Specification Section 10400.
   3. Ground ring grounding system:
      a. Ground ring consists of ground rods and a grounding conductor looped around the electrical equipment pad.
      b. Placed 2 FT-6 IN below grade.
      c. Provide a minimum of two (2) ground rods placed at the corners of the electrical equipment pad.
      d. Grounding conductor: Bare conductor, size as indicated on the Drawings.

C. Supplemental Grounding Electrode:
   1. Provide the following grounding in addition to the equipment ground conductor supplied with the feeder conductors whether or not shown on the Drawings.
   2. Equipment support rack and pedestals mounted outdoors:
      a. Connect metallic structure to a ground rod.
      b. Grounding conductor: #6 AWG minimum.

D. Low Voltage Transformer Separately Derived Grounding System:
   1. Ground separately mounted step-down transformers XO terminal to the following:
      a. Ground ring using mechanical type terminal bolted to the steel, compression type connection or exothermic weld.

E. Raceway Bonding/Grounding:
   1. All metallic conduit shall be installed so that it is electrically continuous.
   2. All conduits to contain a grounding conductor with insulation identical to the phase conductors, unless otherwise indicated on the Drawings.
   3. NFPA 70 required grounding bushings shall be of the insulating type.
   4. Provide double locknuts at all panels.
   5. Bond all conduit, at entrance and exit of equipment, to the equipment ground bus or lug.
   6. Provide bonding jumpers if conduits are installed in concentric knockouts.
   7. Make all metallic raceway fittings and grounding clamps tight to ensure equipment grounding system will operate continuously at ground potential to provide low impedance current path for proper operation of overcurrent devices during possible ground fault conditions.

F. Equipment Grounding:
   1. All utilization equipment shall be grounded with an equipment ground conductor.

G. Manhole and Handhole Grounding:
   1. Provide a ground rod and ground bar, when indicated or as needed, in each manhole and handhole with exposed metal parts.
      a. Expose a minimum of 4 IN of the rod above the floor for field connections to the rod.
   2. Connect all exposed metal parts (e.g., conduits and cable racks) to the ground rod.

3.2 FIELD QUALITY CONTROL

A. Leave grounding system uncovered until observed by Owner.

B. Provide a continuity test on the components of the grounding electrode system.

END OF SECTION

SECTION 16120

WIRE AND CABLE: 600 VOLT AND BELOW

PART 1 - GENERAL

1.1 SUMMARY

A. Section Includes:
   1. Material and installation requirements for:
      a. Building wire and power cable.
      b. Control cable.
      c. Instrumentation cable.
      d. Wire connectors.
      e. Insulating tape.
      f. Pulling lubricant.

B. Related Specification Sections include but are not necessarily limited to:
   1. Division 00 - Bidding Requirements, Contract Forms, and Conditions of the Contract.
   2. Division 01 - General Requirements.
   3. Section 16010 - Electrical: Basic Requirements.

1.2 QUALITY ASSURANCE

A. Referenced Standards:
   1. Institute of Electrical and Electronics Engineers, Inc. (IEEE):
      a. 1202, Standard for Flame-Propagation Testing of Wire and Cable.
   2. Insulated Cable Engineers Association (ICEA):
      a. S-58-679, Standard for Control Cable Conductor Identification.
   3. National Electrical Manufacturers Association (NEMA):
      a. ICS 4, Industrial Control and Systems: Terminal Blocks.
   4. National Electrical Manufacturers Association/Insulated Cable Engineers Association (NEMA/ICEA):
      a. WC 57/S-73-532, Standard for Control Cables.
      b. WC 70/S-95-658, Non-Shielded Power Cables Rated 2000 Volts or Less for the Distribution of Electrical Energy.
   5. National Fire Protection Association (NFPA):
      a. 70, National Electrical Code (NEC).
   6. Telecommunications Industry Association/Electronic Industries Alliance/American National Standards Institute (TIA/EIA/ANSI):
      a. 568, Commercial Building Telecommunications Cabling Standard.
   7. Underwriters Laboratories, Inc. (UL):
      a. 44, Standard for Safety Thermoset-Insulated Wires and Cables.
      b. 83, Standard for Safety Thermoplastic-Insulated Wires and Cables.
      c. 467, Standard for Safety Grounding and Bonding Equipment.
      d. 486A, Standard for Safety Wire Connectors and Soldering Lugs for use with Copper Conductors.
      e. 486C, Standard for Safety Splicing Wire Connections.
      f. 510, Standard for Safety Polyvinyl Chloride, Polyethylene and Rubber Insulating Tape.
      g. 1581, Standard for Safety Reference Standard for Electrical Wires, Cables, and Flexible Cords.

1.3 DEFINITIONS

A. Cable: Multi-conductor, insulated, with outer sheath containing either building wire or instrumentation wire.

B. Instrumentation Cable:
   1. Multiple conductor, insulated, twisted or untwisted, with outer sheath.
   2. The following are specific types of instrumentation cables:
      a. Analog signal cable:
         1) Used for the transmission of low current (e.g., 4-20mA DC) or low voltage (e.g., 0-10 Vdc) signals, using No. 16 AWG and smaller conductors.
         2) Commonly used types are defined in the following:
            a) TSP: Twisted shielded pair.
            b) TST: Twisted shielded triad.
      b. Digital signal cable: Used for the transmission of digital signals between computers, PLC's, RTU's, etc.

C. Control Cable: Multi-conductor, insulated, with outer sheath containing building wires, No. 14, No. 12 or No. 10 AWG.

D. Building Wire: Single conductor, insulated, with or without outer jacket depending upon type.

1.4 SUBMITTALS

A. Shop Drawings:
   1. See Specification Section 01340 for requirements for the mechanics and administration of the submittal process.
   2. Product technical data:
      a. Provide submittal data for all products specified in PART 2 of this Specification Section except:
         1) Wire connectors.
         2) Insulating tape.
         3) Cable lubricant.
      b. See Specification Section 16010 for additional requirements.

1.5 DELIVERY, STORAGE, AND HANDLING

A. See Specification Section 16010.

PART 2 - PRODUCTS

2.1 ACCEPTABLE MANUFACTURERS

A. Subject to compliance with the Contract Documents, the following manufacturers are acceptable:
   1. Wire and control cable:
      a. Aetna Insulated Wire.
      b. Alphawire.
      c. Cerrowire.
      d. Encore Wire Corporation.
      e. General Cable.
      f. Okonite Company.
      g. Southwire Company.
   2. Instrumentation cable:
      a. Analog cable:
         1) Alphawire.
         2) Belden Inc.
         3) General Cable.
   3. Wire connectors:
      a. Burndy Corporation.
      b. Buchanan.
      c. Ideal.
      d. Ilsco.

e. 3M Co.
f. Teledyne Penn Union.
g. Thomas and Betts.
h. Phoenix Contact.

4. Insulating and color coding tape:
   a. 3M Co.
   b. Plymouth Bishop Tapes.
   c. Red Seal Electric Co.

B. Submit request for substitution in accordance with Specification Section 01640.

2.2 MANUFACTURED UNITS

A. Building Wire:
1. Conductor shall be copper with 600 V rated insulation.
2. Conductors shall be stranded, except for conductors used in lighting and receptacle circuits which may be stranded or solid.
3. Surface mark with manufacturer's name or trademark, conductor size, insulation type and UL label.
4. Conform to NEMA/ICEA WC 70/S-95-658 and UL 83 for type THHN/THWN and THHN/THWN-2 insulation.
5. Conform to NEMA/ICEA WC 70/S-95-658 and UL 44 for type XHHW-2 insulation.

B. Control Cable:
1. Conductor shall be copper with 600 V rated insulation.
2. Surface mark with manufacturer's name or trademark, conductor size, insulation type and UL label.
3. Conform to NEMA/ICEA WC 57/S-73-532 and UL 83 and UL 1277 for type THHN/THWN insulation with an overall PVC jacket.
4. Conform to NEMA/ICEA WC 57/S-73-532 and UL 44 and UL 1277 for type XHHW-2 insulation with an overall PVC jacket.
5. Number of conductors as required, provided with or without bare ground conductor of the same AWG size.
   a. When a bare ground conductor is not provided, an additional insulated conductor shall be provided and used as the ground conductor (e.g., 6/c No. 14 w/g and 7/c No. 14 are equal).
6. Individual conductor color coding:
   a. ICEA S-58-679, Method 1, Table E-2.
   b. See PART 3 of this Specification Section for additional requirements.
7. Conform to NFPA 70 Type TC and IEEE 1202, CSA FT-4 or NFPA 262.

C. Electrical Equipment Control Wire:
1. Conductor shall be copper with 600 V rated insulation.
2. Conductors shall be stranded.
3. Surface mark with manufacturer's name or trademark, conductor size, insulation type and UL label.
4. Conform to UL 44 for Type SIS insulation.
5. Conform to UL 83 for Type MTW insulation.

D. Instrumentation Cable:
1. Surface mark with manufacturer's name or trademark, conductor size, insulation type and UL label.
2. Analog cable:
   a. Tinned copper conductors.
   b. 300 V or 600 V PVC insulation with PVC jacket.
   c. Twisted with 100 percent foil shield coverage with drain wire.
   d. Six (6) twists per foot minimum.
   e. Individual conductor color coding: ICEA S-58-679, Method 1, Table E-2.
   f. Conform to UL 2250, UL 1581 and NFPA 70 Type ITC.

3. Digital cable:
    a. As recommended by equipment (e.g., PLC, RTU) manufacturer.
    b. Horizontal voice and data cable:
        1) Category 6 per TIA/EIA/ANSI 568.
        2) Cable shall be label-verified.
        3) Cable jacket shall be factory marked at regular intervals indicating verifying organization and performance level.
        4) Conductors: No. 24 AWG solid untinned copper.
        5) Rated CMP per NFPA 70.
    c. Conform to NFPA 262 and NFPA 70 Type ITC.

E. Wire Connectors:
1. Twist/screw on type:
    a. Insulated pressure or spring type solderless connector.
    b. 600 V rated.
    c. Ground conductors: Conform to UL 486C and/or UL 467 when required by local codes.
    d. Phase and neutral conductors: Conform to UL 486C.
2. Compression and mechanical screw type:
    a. 600 V rated.
    b. Ground conductors: Conform to UL 467.
    c. Phase and neutral conductors: Conform to UL 486A.
3. Terminal block type:
    a. High density, screw-post barrier-type with white center marker strip.
    b. 600 V and ampere rating as required, for power circuits.
    c. 600 V, 20 ampere rated for control circuits.
    d. 300 V, 15 ampere rated for instrumentation circuits.
    e. Conform to NEMA ICS 4 and UL 486A.

F. Insulating and Color Coding Tape:
1. Pressure sensitive vinyl.
2. Premium grade.
3. Heat, cold, moisture, and sunlight resistant.
4. Thickness, depending on use conditions: 7, 8.5, or 10 mil.
5. For cold weather or outdoor location, tape must also be all-weather.
6. Color:
    a. Insulating tape: Black.
    b. Color coding tape: Fade-resistant color as specified herein.
7. Comply with UL 510.

G. Pulling Lubricant: Cable manufacturer's standard containing no petroleum or other products which will deteriorate insulation.

PART 3 - EXECUTION

3.1 INSTALLATION

The Drawings are based on copper conductors, if aluminum is used, the conductor shall be resized to meet the required conductor ampacities.Permitted Usage of Insulation Types:
1. Type XHHW-2:
    a. Building wire and power cable No. 6 AWG and larger.
    b. Building wire and control cable in conduit below grade.
2. Type THHN/THWN and THHN/THWN-2:
    a. Building wire and power and control cable No. 8 AWG and smaller.
3. Type SIS and MTW:
    a. For the wiring of control equipment within control panels and field wiring of control equipment within switchgear, switchboards, motor control centers.

B. Conductor Size Limitations:
   1. Feeder and branch power conductors shall not be smaller than No. 12 AWG unless otherwise indicated on the Drawings.
   2. Control conductors shall not be smaller than No. 14 AWG unless otherwise indicated on the Drawings.
   3. Instrumentation conductors shall not be smaller than No. 18 AWG unless otherwise indicated on the Drawings.

C. Color Code All Wiring as Follows:
   1. Building wire:

	240 V, 208 V, 240/120 V, 208/120 V	**480 V, 480/277 V**
Phase 1	Black	Brown
Phase 2	Red *	Orange
Phase 3	Blue	Yellow
Neutral	White	White or Gray
Ground	Green	Green

* Orange when it is a high leg of a 120/240 V Delta system.

   a. Conductors No. 6 AWG and smaller: Insulated phase, neutral and ground conductors shall be identified by a continuous colored outer finish along its entire length.
   b. Conductors larger than No. 6 AWG:
      1) Insulated phase and neutral conductors shall be identified by one (1) of the following methods:
         a) Continuous colored outer finish along its entire length.
         b) 3 IN of colored tape applied at the termination.
      2) Insulated grounding conductor shall be identified by one (1) of the following methods:
         a) Continuous green outer finish along its entire length.
         b) Stripping the insulation from the entire exposed length.
         c) Using green tape to cover the entire exposed length.
      3) The color coding shall be applied at all accessible locations, including but not limited to: Junction and pull boxes, wireways, manholes and handholes.
   2. Control cables ICEA S-58-679, Method 1, Table E-2:
      a. When a bare ground is not provided, one (1) of the colored insulated conductors shall be re-identified by stripping the insulation from the entire exposed length or using green tape to cover the entire exposed length.
      b. When used in power applications the colored insulated conductors used as phase and neutral conductors may have to be re-identified with 3 IN of colored tape, per the Table herein, applied at the terminations.

D. Install all wiring in raceway.

E. Feeder, branch, control and instrumentation circuits shall not be combined in a raceway, cable tray, junction or pull box, except as permitted in the following:
   1. Where specifically indicated on the Drawings.
   2. Where field conditions dictate and written permission is obtained from the Engineer.
   3. Control circuits shall be isolated from feeder and branch power and instrumentation circuits but combining of control circuits is permitted.
      a. The combinations shall comply with the following:
         1) 12 Vdc, 24 Vdc and 48 Vdc may be combined.
         2) 125 Vdc shall be isolated from all other AC and DC circuits.
         3) AC control circuits shall be isolated from all DC circuits.
   4. Instrumentation circuits shall be isolated from feeder and branch power and control circuits but combining of instrumentation circuits is permitted.
      a. The combinations shall comply with the following:

1) Analog signal circuits may be combined.
2) Digital signal circuits may be combined but isolated from analog signal circuits.

5. Multiple branch circuits for lighting, receptacle and other 120 Vac circuits are allowed to be combined into a common raceway.
   a. Contractor is responsible for making the required adjustments in conductor and raceway size, in accordance with all requirements of the NFPA 70, including but not limited to:
      1) Up sizing conductor size for required ampacity de-ratings for the number of current carrying conductors in the raceway.
      2) The neutral conductors may not be shared.
      3) Up sizing raceway size for the size and quantity of conductors.

F. Ground the drain wire of shielded instrumentation cables at one (1) end only.
   1. The preferred grounding location is at the load (e.g., control panel), not at the source (e.g., field mounted instrument).

G. Splices and terminations for the following circuit types shall be made in the indicated enclosure type using the indicated method.
   1. Feeder and branch power circuits:
      a. Device outlet boxes:
         1) Twist/screw on type connectors.
      b. Junction and pull boxes and wireways:
         1) Twist/screw on type connectors for use on No. 8 and smaller wire.
         2) Compression, mechanical screw or terminal block or terminal strip type connectors for use on No. 6 AWG and larger wire.
      c. Motor terminal boxes:
         1) Twist/screw on type connectors for use on No. 10 AWG and smaller wire.
         2) Insulated mechanical screw type connectors for use on No. 8 AWG and larger wire.
      d. Manholes or handholes:
         1) Twist/screw on type connectors pre-filled with epoxy for use on No. 8 AWG and smaller wire.
         2) Watertight compression or mechanical screw type connectors for use on No. 6 AWG and larger wire.
   2. Control circuits:
      a. Junction and pull boxes: Terminal block type connector.
      b. Manholes or handholes: Twist/screw on type connectors pre-filled with epoxy.
      c. Control panels and motor control centers: Terminal block or strips provided within the equipment or field installed within the equipment by the Contractor.
   3. Instrumentation circuits can be spliced where field conditions dictate and written permission is obtained from the Engineer.
      a. Maintain electrical continuity of the shield when splicing twisted shielded conductors.
      b. Junction and pull boxes: Terminal block type connector.
      c. Control panels and motor control centers: Terminal block or strip provided within the equipment or field installed within the equipment by the Contractor.
   4. Non-insulated compression and mechanical screw type connectors shall be insulated with tape or hot or cold shrink type insulation to the insulation level of the conductors.

H. Insulating Tape Usage:
   1. For insulating connections of No. 8 AWG wire and smaller: 7 mil vinyl tape.
   2. For insulating splices and taps of No. 6 AWG wire or larger: 10 mil vinyl tape.
   3. For insulating connections made in cold weather or in outdoor locations: 8.5 mil, all weather vinyl tape.

I. Color Coding Tape Usage: For color coding of conductors.

END OF SECTION

SECTION 16130
RACEWAYS AND BOXES

PART 1 - GENERAL

1.1 SUMMARY

A. Section Includes:
   1. Material and installation requirements for:
      a. Conduits.
      b. Conduit fittings.
      c. Conduit supports.
      d. Wireways.
      e. Outlet boxes.
      f. Pull and junction boxes.

B. Related Specification Sections include but are not necessarily limited to:
   1. Division 00 - Bidding Requirements, Contract Forms, and Conditions of the Contract.
   2. Division 01 - General Requirements.
   3. Section 16010 - Electrical: Basic Requirements.
   4. Section 16120 - Wire and Cable - 600 Volt and Below.
   5. Section 16135 - Electrical: Exterior Underground.

1.2 QUALITY ASSURANCE

A. Referenced Standards:
   1. American Iron and Steel Institute (AISI).
   2. ASTM International (ASTM):
      a. A123/A123M, Standard Specification for Zinc (Hot-Dip Galvanized) Coatings on Iron and Steel Products.
      b. A153/A153M, Standard Specification for Zinc Coating (Hot-Dip) on Iron and Steel Hardware.
      c. D2564, Standard Specification for Solvent Cements for Poly (Vinyl Chloride) (PVC) Plastic Piping Systems.
   3. National Electrical Manufacturers Association (NEMA):
      a. 250, Enclosures for Electrical Equipment (1000 Volts Maximum).
      b. RN 1, Polyvinyl Chloride (PVC) Externally Coated Galvanized Rigid Steel Conduit and Intermediate Metal Conduit (IMC).
      c. TC 2, Electrical Polyvinyl Chloride (PVC) Tubing and Conduit.
      d. TC 3, Polyvinyl Chloride (PVC) Fittings for Use with Rigid PVC Conduit and Tubing.
      e. TC 6&8, Polyvinyl Chloride (PVC) Plastic Utilities Duct for Underground Installations.
   4. National Electrical Manufacturers Association/American National Standards Institute (NEMA/ANSI):
      a. C80.1, Electric Rigid Steel Conduit (ERSC).
      b. OS 1, Sheet-Steel Outlet Boxes, Device Boxes, Covers, and Box Supports.
   5. National Fire Protection Association (NFPA):
      a. 70, National Electrical Code (NEC).
   6. Underwriters Laboratories, Inc. (UL):
      a. 1, Standard for Flexible Metal Conduit.
      b. 6, Standard for Electrical Rigid Metal Conduit - Steel.
      c. 50, Enclosures for Electrical Equipment, Non-Environmental Considerations.
      d. 360, Standard for Liquid-Tight Flexible Steel Conduit.
      e. 467, Grounding and Bonding Equipment.
      f. 514A, Metallic Outlet Boxes.
      g. 514B, Conduit, Tubing, and Cable Fittings.

h. 651, Standard for Schedule 40 and 80 Rigid PVC Conduit and Fittings.
i. 651A, Type EB and A Rigid PVC Conduit and HDPE Conduit.
j. 870, Standard for Wireways, Auxiliary Gutters, and Associated Fittings.
k. 886, Standard for Outlet Boxes and Fittings for Use in Hazardous (Classified) Locations.

1.3 SUBMITTALS

A. Shop Drawings:
1. See Specification Section 01340 for requirements for the mechanics and administration of the submittal process.
2. Product technical data:
   a. Provide submittal data for all products specified in PART 2 of this Specification Section except:
      1) Conduit fittings.
      2) Support systems.
   b. See Specification Section 16010 for additional requirements.
3. Fabrication and/or layout drawings:
   a. Identify dimensional size of pull and junction boxes to be used.

1.4 DELIVERY, STORAGE, AND HANDLING

A. See Specification Section 16010.

PART 2 - PRODUCTS

2.1 ACCEPTABLE MANUFACTURERS

A. Subject to compliance with the Contract Documents, the following manufacturers are acceptable:
1. Rigid metallic conduits:
   a. Allied Tube and Conduit Corporation.
   b. Triangle PWC Inc.
   c. Western Tube and Conduit Corporation.
   d. Wheatland Tube Company.
   e. LTV Steel Company.
2. Rigid nonmetallic conduit:
   a. Carlon.
   b. Cantex.
   c. Osburn Associates.
3. Flexible conduit:
   a. AFC Cable Systems.
   b. Anamet, Inc.
   c. Electri-Flex.
   d. Flexible Metal Hose Company.
   e. International Metal Hose Company.
   f. Triangle PWC Inc.
   g. LTV Steel Company.
4. Wireway:
   a. Hoffman Engineering Company.
   b. Wiegmann.
   c. Square D.
5. Conduit fittings and accessories:
   a. Appleton.
   b. Carlon.
   c. Cantex.
   d. Crouse-Hinds.

e. Killark.
f. Osburn Associates.
g. OZ Gedney Company.
h. RACO.
i. Steel City.
j. Thomas and Betts.

6. Support systems:
   a. Unistrut Building Systems.
   b. B-Line Systems Inc.
   c. Kindorf.
   d. Minerallac Fastening Systems.
   e. Caddy.
7. Outlet, pull and junction boxes:
   a. Appleton Electric Co.
   b. Crouse-Hinds.
   c. Killark.
   d. O-Z/Gedney.
   e. Steel City.
   f. Raco.
   g. Bell.
   h. Hoffman Engineering Co.
   i. Wiegmann.
   j. B-Line Circle AW.
   k. Adalet.
   l. Rittal.

B. Submit request for substitution in accordance with Specification Section 01640.

2.2 RIGID METALLIC CONDUITS

A. Rigid Galvanized Steel Conduit (RGS):
1. Mild steel with continuous welded seam.
2. Metallic zinc applied by hot-dip galvanizing or electro-galvanizing.
3. Threads galvanized after cutting.
4. Internal coating: Baked lacquer, varnish or enamel for a smooth surface.
5. Standards: NEMA/ANSI C80.1, UL 6.

2.3 RIGID NONMETALLIC CONDUIT

A. Schedules 40 (PVC-40) and 80 (PVC-80):
1. Polyvinyl-chloride (PVC) plastic compound which includes inert modifiers to improve weatherability and heat distribution.
2. Rated for direct sunlight exposure.
3. Fire retardant and low smoke emission.
4. Shall be suitable for use with 90 DegC wire and shall be marked "maximum 90 DegC".
5. Standards: NEMA TC 2, UL 651.

2.4 FLEXIBLE CONDUIT

A. Flexible Galvanized Steel Conduit (FLEX):
1. Formed of continuous, spiral wound, hot-dip galvanized steel strip with successive convolutions securely interlocked.
2. Standard: UL 1.

B. PVC-Coated Flexible Galvanized Steel (liquid-tight) Conduit (FLEX-LT):
1. Core formed of continuous, spiral wound, hot-dip galvanized steel strip with successive convolutions securely interlocked.
2. Extruded PVC outer jacket positively locked to the steel core.
3. Liquid and vaportight.

4. Standard: UL 360.

2.5 WIREWAY

A. General:
1. Suitable for lay-in conductors.
2. Designed for continuous grounding.
3. Covers:
   a. Hinged or removable in accessible areas.
   b. Non-removable when passing through partitions.
4. Finish: Rust inhibiting primer and manufacturers standard paint inside and out except for stainless steel type.
5. Standards: UL 870, NEMA 250.

B. Raintight (NEMA 3R) Wiring Trough:
1. 14 or 16 GA galvanized steel without knockouts.
2. Cover: Non-gasketed and held in place by captive screws.

C. Watertight (NEMA 4X rated) Wireway:
1. 14 GA Type 304 or 316 stainless steel bodies and covers without knockouts and 10 GA stainless steel flanges.
2. Cover: Fully gasketed and held in place with captive clamp type latches.
3. Flanges: Fully gasketed and bolted.

2.6 CONDUIT FITTINGS AND ACCESSORIES

A. Fittings for Use with RGS:
1. Locknuts:
   a. Threaded steel or malleable iron.
   b. Gasketed or non-gasketed.
   c. Grounding or non-grounding type.
2. Bushings:
   a. Threaded, insulated metallic.
   b. Grounding or non-grounding type.
3. Hubs: Threaded, insulated and gasketed metallic for raintight connection.
4. Couplings:
   a. Threaded straight type: Same material and finish as the conduit with which they are used on.
   b. Threadless type: Gland compression or self-threading type, concrete tight.
5. Unions: Threaded galvanized steel or zinc plated malleable iron.
6. Conduit bodies (ells and tees):
   a. Body: Zinc plated cast iron or cast copper free aluminum with threaded hubs.
   b. Standard and mogul size.
   c. Cover:
      1) Clip-on type with stainless steel screws.
      2) Gasketed or non-gasketed galvanized steel, zinc plated cast iron or cast copper free aluminum.
7. Conduit bodies (round):
   a. Body: Zinc plated cast iron or cast copper free aluminum with threaded hubs.
   b. Cover: Threaded screw on type, gasketed, galvanized steel, zinc plated cast iron or cast copper free aluminum.
8. Sealing fittings:
   a. Body: Zinc plated cast iron or cast copper free aluminum with threaded hubs.
   b. Standard and mogul size.
   c. With or without drain and breather.
   d. Fiber and sealing compound: UL listed for use with the sealing fitting.
9. Service entrance head:
   a. Malleable iron, galvanized steel or copper free aluminum.

b. Insulated knockout cover for use with a variety of sizes and number of conductors.

10. Expansion/deflection couplings:
    a. 3/4 IN nominal straight-line conduit movement in either direction.
    b. 30-degree nominal deflection from the normal in all directions.
    c. Metallic hubs, neoprene outer jacket and stainless steel jacket clamps.
    d. Internally or externally grounded.
    e. Watertight, raintight and concrete tight.
11. Standards: UL 467, UL 514B, UL 886.

B. Fittings for Use with PVC-RGS:
1. The same material and construction as those fittings listed under paragraph "Fittings for Use with RGS" and coated as defined under paragraph "PVC Coated Rigid Steel Conduit (PVC-RGS)."

C. Fittings for Use with FLEX:
1. Connector:
    a. Zinc plated malleable iron.
    b. Squeeze or clamp-type.
2. Standard: UL 514B.

D. Fittings for Use with FLEX-LT:
1. Connector:
    a. Straight or angle type.
    b. Metal construction, insulated and gasketed.
    c. Composed of locknut, grounding ferrule and gland compression nut.
    d. Liquid tight.
2. Standards: UL 467, UL 514B.

E. Fittings for Use with Rigid Nonmetallic PVC Conduit:
1. Coupling, adapters and conduit bodies:
    a. Same material, thickness, and construction as the conduits with which they are used.
    b. Homogeneous plastic free from visible cracks, holes or foreign inclusions.
    c. Bore smooth and free of blisters, nicks or other imperfections which could damage the conductor.
2. Solvent cement for welding fittings shall be supplied by the same manufacturer as the conduit and fittings.
3. Standards: ASTM D2564, NEMA TC 3, UL 651, UL 514B.

F. Weather and Corrosion Protection Tape:
1. PVC based tape, 10 mils thick.
2. Protection against moisture, acids, alkalis, salts and sewage and suitable for direct bury.
3. Used with appropriate pipe primer.

2.7 ALL RACEWAY AND FITTINGS

A. Mark Products:
1. Identify the nominal trade size on the product.
2. Stamp with the name or trademark of the manufacturer.

2.8 OUTLET BOXES

A. Cast Outlet Boxes:
1. Zinc plated cast iron or die-cast copper free aluminum with manufacturers standard finish.
2. Threaded hubs and grounding screw.
3. Styles:
    a. "FS" or "FD".
    b. "Bell".
    c. Single or multiple gang and tandem.
    d. "EDS" or "EFS" for hazardous locations.
4. Accessories: 40 mil PVC exterior coating and 2 mil urethane interior coating.

5. Standards: UL 514A, UL 886.

2.9 PULL AND JUNCTION BOXES

A. NEMA 4X Rated (metallic):
   1. Body and cover: 14 GA Type 304 or 316 stainless steel.
   2. Seams continuously welded and ground smooth.
   3. No knockouts.
   4. External mounting flanges.
   5. Hinged door and stainless steel screws and clamps.
   6. Door with oil-resistant gasket.

B. NEMA 3R Rated:
   1. Body and cover: 14 GA minimum, steel finished with rust inhibiting primer and manufacturers standard paint inside and out.
   2. Drip shield top and seam-free sides, front and back.
   3. With or without concentric knockouts on bottom.
   4. Slip-on removable cover fastened on bottom edge with screws or continuous hinged cover fastened with screws.

C. Miscellaneous Accessories:
   1. Rigid handles for covers larger than 9 SF or heavier than 25 LBS.
   2. Split covers when heavier than 25 LBS.
   3. Weldnuts for mounting optional panels and terminal kits.
   4. Terminal blocks: Screw-post barrier-type, rated 600 volt and 20 ampere minimum.

D. Standards: NEMA 250, UL 50.

2.10 SUPPORT SYSTEMS

A. Multi-conduit Surface or Trapeze Type Support and Pull or Junction Box Supports:
   1. Material requirements.
      a. Galvanized steel: ASTM A123/A123M or ASTM A153/A153M.

B. Single Conduit and Outlet Box Support Fasteners:
   1. Material requirements:
      a. Zinc plated steel.
      b. Stainless steel.
      c. Malleable iron.
      d. PVC coat malleable iron or steel: 20 mil PVC coating.
      e. Steel protected with zinc phosphate and oil finish.

PART 3 - EXECUTION

3.1 RACEWAY INSTALLATION - GENERAL

A. Shall be in accordance with the requirements of:
   1. NFPA 70.
   2. Manufacturer instructions.

B. Size of Raceways:
   1. Raceway sizes are shown on the Drawings, if not shown on the Drawings, then size in accordance with NFPA 70.
   2. Unless specifically indicated otherwise, the minimum raceway size shall be:
      a. Conduit: 3/4 IN.
      b. Wireway: 2-1/2 IN x 2-1/2 IN.

C. Field Bending and Cutting of Conduits:
   1. Utilize tools and equipment recommended by the manufacturer of the conduit, designed for the purpose and the conduit material to make all field bends and cuts.

2. Do not reduce the internal diameter of the conduit when making conduit bends.
3. Prepare tools and equipment to prevent damage to the PVC coating.
4. Degrease threads after threading and apply a zinc rich paint.
5. Debur interior and exterior after cutting.

D. Male threads of conduit systems shall be coated with an electrically conductive anti-seize compound.

E. The protective coating integrity of conduits, fittings, outlet, pull and junction boxes and accessories shall be maintained.
1. Repair galvanized components utilizing a zinc rich paint.
2. Repair painted components utilizing touch up paint provided by or approved by the manufacturer.
3. Repair surfaces which will be inaccessible after installation prior to installation.

F. Remove moisture and debris from conduit before wire is pulled into place.
1. Pull mandrel with diameter nominally 1/4 IN smaller than the interior of the conduit, to remove obstructions.
2. Swab conduit by pulling a clean, tight-fitting rag through the conduit.
3. Tightly plug ends of conduit with tapered wood plugs or plastic inserts until wire is pulled.

G. Only nylon or polyethylene rope shall be used to pull wire and cable in conduit systems.

3.2 RACEWAY ROUTING

A. Raceways shall be routed in the field unless otherwise indicated.
1. Conduit and fittings shall be installed, as required, for a complete system that has a neat appearance and is in compliance with all applicable codes.
2. Run in straight lines parallel to or at right angles to building lines.
3. Do not route conduits:
   a. Through areas of high ambient temperature or radiant heat.
   b. In suspended concrete slabs.
4. Conduit shall not interfere with, or prevent access to, piping, valves, ductwork, or other equipment for operation, maintenance and repair.
5. Provide pull boxes or conduit bodies as needed so that there is a maximum of 360 degrees of bends in the conduit run or in long straight runs to limit pulling tensions.

B. Maintain minimum spacing between parallel conduit and piping runs in accordance with the following when the runs are greater than 30 FT:
1. Between instrumentation and telecommunication: 1 IN.
2. Between instrumentation and 125 V, 48 V and 24 Vdc, 2 IN.
3. Between instrumentation and 600 V and less AC power or control: 6 IN.
4. Between instrumentation and greater than 600 Vac power: 12 IN.
5. Between 125 V, 48 V and 24 Vdc and 600 V and less AC power or control: 2 IN.
6. Between 125 V, 48 V and 24 Vdc and greater than 600 Vac power: 2 IN.
7. Between 600 V and less AC and greater than 600 Vac: 2 IN.
8. Between water pipes: 6 IN.

C. Conduits shall be installed to eliminate moisture pockets.
1. Where water cannot drain to openings, provide drain fittings in the low spots of the conduit run.

D. Conduit shall not be routed on the exterior of structures except as specifically indicated on the Drawings.

3.3 RACEWAY APPLICATIONS

A. Permitted Raceway Types Per Wire or Cable Types:
1. Power wire or cables: All raceway types.
2. Control wire or cables: All raceway types.
3. Instrumentation cables: Metallic raceway except nonmetallic may be used underground.

B. Permitted Raceway Types Per Area Designations:
   1. Wet areas:
      a. RGS.

C. Permitted Raceway Types Per Routing Locations:
   1. Embedded in poured concrete walls and floors:
      a. PVC-40.
   2. Beneath floor slab-on-grade:
      a. PVC-40.
   3. Direct buried conduits and ductbanks:
      a. PVC-80.
      b. 90 degree elbows for transitions to above grade:
         1) RGS wrapped with factory applied weather and corrosion protection tape.
      c. Long sweeping bends greater than 15 degrees:
         1) RGS wrapped with factory applied weather and corrosion protection tape.

D. FLEX-LT conduits shall be install as the final conduit connection to light fixtures, dry type transformers, motors, electrically operated valves, instrumentation primary elements, and other electrical equipment that is liable to vibrate.
   1. The maximum length shall not exceed:
      a. 3 FT to light fixtures.
      b. 3 FT to motors.
      c. 2 FT to all other equipment.

E. NEMA 3R Wiring Trough:
   1. Surface mounted in exterior locations.

F. Underground Conduit: See Specification Section 16135.

3.4 CONDUIT FITTINGS AND ACCESSORIES

A. Conduit Seals:
   1. Installed in conduit systems located in hazardous areas as required by the NFPA 70.

B. Rigid nonmetallic conduit and fittings shall be joined utilizing solvent cement.
   1. Immediately after installation of conduit and fitting, the fitting or conduit shall be rotated 1/4 turn to provide uniform contact.

C. Threaded connections shall be made wrench-tight.

D. Conduit joints shall be watertight:
   1. Where subjected to possible submersion.
   2. In areas classified as wet.
   3. Underground.

E. Terminate Conduits:
   1. In metallic outlet boxes:
      a. RGS:
         1) Conduit hub and locknut.
         2) Insulated bushing and two (2) locknuts.
         3) Use grounding type locknut or bushing when required by NFPA 70.
   2. In NEMA 4 and NEMA 4X rated enclosures:
      a. Watertight, insulated and gasketed hub and locknut.
   3. When stubbed up through the floor into floor mount equipment:
      a. With an insulated grounding bushing on metallic conduits.
      b. With end bells on nonmetallic conduits.

3.5 CONDUIT SUPPORT

A. Permitted multi-conduit surface or trapeze type support system per area designations and conduit types:

1. Dry or wet areas:
    a. Galvanized system consisting of: Galvanized steel channels and fittings, nuts and hardware and conduit clamps.
    b. Aluminum system consisting of: Aluminum channels, fittings and condit clamps with stainless steel nuts and hardware.
2. Conduit type shall be compatible with the support system material.
    a. Galvanized steel system may be used with RGS.

B. Permitted single conduit support fasteners per area designations and conduit types:
1. Dry or wet areas:
    a. Material: Zinc plated steel, stainless steel and malleable iron.
    b. Types of fasteners: Straps, hangers with bolts, clamps with bolts and bolt on beam clamps.
2. Conduit type shall be compatible with the support fastener material.
    a. Zinc plated steel, steel protected with zinc phosphate and oil finish and malleable iron fasteners may be used with RGS.
    b. Stainless steel system may be used with RGS.
    c. Nonmetallic fasteners may be used with PVC-40, PVC-80 and fiberglass.

C. Conduit Support General Requirements:
1. Maximum spacing between conduit supports per NFPA 70.
2. Do not support conduit from process, gas, air or water piping; or from other conduits.
3. Provide hangers and brackets to limit the maximum uniform load on a single support to 25 LBS or to the maximum uniform load recommended by the manufacturer if the support is rated less than 25 LBS.
    a. Do not exceed maximum concentrated load recommended by the manufacturer on any support.
    b. Conduit hangers:
        1) Continuous threaded rods combined with struts or conduit clamps: Do not use perforated strap hangers and iron bailing wire.
    c. Do not use suspended ceiling support systems to support raceways.
    d. Hangers in metal roof decks:
        1) Utilize fender washers.
        2) Not extend above top of ribs.
        3) Not interfere with vapor barrier, insulation, or roofing.
4. Conduit support system fasteners:
    a. Use sleeve-type expansion anchors as fasteners in masonry wall construction.
    b. Do not use concrete nails and powder-driven fasteners.

3.6 OUTLET, PULL AND JUNCTION BOX INSTALLATION

A. General:
1. Install products in accordance with manufacturer's instructions.
2. See Specification Section 16010 and the Drawings for area classifications.
3. Fill unused punched-out, tapped, or threaded hub openings with insert plugs.
4. Size boxes to accommodate quantity of conductors enclosed and quantity of conduits connected to the box.

B. Outlet Boxes:
1. Permitted uses of cast outlet boxes:
    a. Housing of wiring devices surface mounted in non-architecturally finished dry, wet, corrosive, highly corrosive and hazardous areas.
    b. Pull and junction box surface mounted in non-architecturally finished dry, wet, corrosive and highly corrosive areas.
2. Mount device outlet boxes where indicated on the Drawings and at heights as scheduled in Specification Section 16010.
3. Set device outlet boxes plumb and vertical to the floor.

C. Pull and Junction Boxes:

1. Install pull or junction boxes in conduit runs where indicated or required to facilitate pulling of wires or making connections.
   a. Make covers of boxes accessible.
2. Permitted uses of NEMA 4X metallic enclosure:
   a. Pull or junction box surface mounted in areas designated as wet and/or corrosive.

END OF SECTION

SECTION 16135
ELECTRICAL: EXTERIOR UNDERGROUND

PART 1 - GENERAL

1.1 SUMMARY

A. Section Includes:
   1. Material and installation requirements for:
      a. Handhole.
      b. Underground conduits and ductbanks.

B. Related Specification Sections include but are not necessarily limited to:
   1. Division 00 - Bidding Requirements, Contract Forms, and Conditions of the Contract.
   2. Division 01 - General Requirements.
   3. Section 02221 - Trenching, Backfilling and Compacting for Utilities.
   4. Division 03 - Concrete.
   5. Section 16060 - Grounding.
   6. Section 16130 - Raceways and Boxes.

1.2 QUALITY ASSURANCE

A. Referenced Standards:
   1. American Association of State Highway and Transportation Officials (AASHTO):
      a. HB, Standard Specifications for Highway Bridges.
   2. ASTM International (ASTM):
      a. A536, Standard Specification for Ductile Iron Castings.
   3. National Fire Protection Association (NFPA):
      a. 70, National Electrical Code (NEC).
   4. Society of Cable Telecommunications Engineers (SCTE):
      a. 77, Specification for Underground Enclosure Integrity.

1.3 DEFINITIONS

A. Direct-buried conduit(s):
   1. Individual (single) underground conduit.
   2. Multiple underground conduits, arranged in one or more planes, in a common trench.

1.4 SUBMITTALS

A. Shop Drawings:
   1. See Specification Section 01340 for requirements for the mechanics and administration of the submittal process.
   2. Product technical data:
      a. Provide submittal data for all products specified in PART 2 of this Specification Section.

PART 2 - PRODUCTS

2.1 ACCEPTABLE MANUFACTURERS

A. Subject to compliance with the Contract Documents, the following manufacturers are acceptable:
   1. Prefabricated composite handholes:
      a. Quazite Composolite.
      b. Armorcast Products Company.

c. Synertech.
2. Handhole and ductbank accessories:
a. Neenah.
b. Unistrut.
c. Condux International, Inc.
d. Underground Devices, Inc.

B. Submit request for substitution in accordance with Specification Section 01640.

2.2 HANDHOLES

A. Prefabricated Composite Material Handholes:
1. Handhole body and cover: Fiberglass reinforced polymer concrete conforming to all test provisions of SCTE 77.
2. Minimum load ratings: SCTE 77 Tier 15.
3. Solid bottom.
4. Stackable design as required for specified depth.
5. Cover:
a. Engraved legend of "ELECTRIC".
b. Non-gasketed bolt down with stainless steel penta head bolts.
c. Lay-in non-bolt down, when cover is over 100 LBS.
d. One or multiple sections so the maximum weight of a section is 125 LBS.
6. Cover lifting hook: 24 IN minimum in length.

2.3 UNDERGROUND CONDUIT AND ACCESSORIES

A. Conduit: See Specification Section 16130.

B. Duct Spacers/Supports:
1. High density polyethylene or high impact polystyrene.
2. Interlocking.
3. Provide 2 IN minimum spacing between conduits.
4. Accessories, as required:
a. Hold down bars.
b. Ductbank strapping.

PART 3 - EXECUTION

3.1 GENERAL

A. Drawings indicate the intended location of manholes and handholes and routing of ductbanks and direct buried conduit.
1. Field conditions may affect actual routing.

B. Handhole Locations:
1. Approximately where shown on the Drawings.
2. As required for pulling distances.
3. As required to keep pulling tensions under allowable cable tensions.
4. As required for number of bends in ductbank routing.
5. Shall not be installed in a swale or ditch.
6. Determine the exact locations after careful consideration has been given to the location of other utilities, grading, and paving.
7. Locations are to be approved by the Engineer prior to excavation and placement or construction of handholes.

C. Install products in accordance with manufacturer's instructions.

D. Install handholes in conduit runs where indicated or as required to facilitate pulling of wires or making connections.

E. Comply with Specification Section 02221 for trenching, backfilling and compacting.

3.2 HANDHOLES

A. Prefabricated Composite Material Handholes:
   1. For use in areas subjected to occasional non-deliberate vehicular traffic.
   2. Place handhole on a foundation of compacted 1/4 to 1/2 IN crushed rock or gravel a minimum of 8 IN thick and 6 IN larger than handholes footprint on all sides.
   3. Provide concrete encasement ring around handhole per manufacturers installation instructions (minimum of 10 IN wide x 12 IN deep).
   4. Install so that the surrounding grade is 1 IN lower than the top of the handhole.
   5. Size: As required for the number and size of conduits.
   6. Provide cable rails and pulling eyes as needed.

3.3 UNDERGROUND CONDUITS

A. General Installation Requirements:
   1. Ductbank types per location:
      a. Direct-buried conduit(s).
   2. Ductbanks shall be sloped a minimum of 4 IN per 100 FT.
      a. Low points shall be at handholes.
   3. During construction and after conduit installation is complete, plug the ends of all conduits.
   4. Provide conduit supports and spacers.
      a. Place supports and spacers for rigid nonmetallic conduit on maximum centers as indicated for the following trade sizes:
         1) 1 IN and less: 3 FT.
         2) 1-1/4 to 3 IN: 5 FT.
         3) 3-1/2 to 6 IN: 7 FT.
      b. Securely anchor conduits to supports and spacers to prevent movement during placement of concrete or soil.
   5. Stagger conduit joints at intervals of 6 IN vertically.
   6. Make conduit joints watertight and in accordance with manufacturer's recommendations.
   7. Accomplish changes in direction of runs exceeding a total of 15 degrees by long sweep bends having a minimum radius of 25 FT.
      a. Sweep bends may be made up of one or more curved or straight sections or combinations thereof.
   8. Furnish manufactured bends at end of runs.
      a. Minimum radius of 18 IN for conduits less than 3 IN trade size and 36 IN for conduits 3 IN trade size and larger.
   9. Field cuts requiring tapers shall be made with the proper tools and shall match factory tapers.
   10. After the conduit run has been completed:
      a. Prove joint integrity and test for out-of-round duct by pulling a test mandrel through each conduit.
         1) Test mandrel:
            a) Length: Not less than 12 IN
            b) Diameter: Approximately 1/4 IN less than the inside diameter of the conduit.
      b. Clean the conduit by pulling a heavy duty wire brush mandrel followed by a rubber duct swab through each conduit.
   11. Transition from rigid nonmetallic conduit to rigid metallic conduit, per Specification Section 16130, prior to entering a structure or going above ground.
      a. Except rigid nonmetallic conduit may be extended directly to manholes, handholes, pad mounted transformer boxes and other exterior pad mounted electrical equipment where the conduit is concealed within the enclosure.
      b. Terminate rigid PVC conduits with end bells.
      c. Terminate steel conduits with insulated bushings.

12. Place warning tape in trench directly over ductbanks, direct-buried conduit, and direct-buried wire and cable in accordance with Specification Section 10400.
13. Placement of conduits stubbing into handholes and manholes shall be located to allow for proper bending radiuses of the cables.

B. Direct-Buried Conduit(s):
   1. Install so that the top of the uppermost conduit, at any point:
      a. Is not less than 30 IN below grade.
      b. Is below pavement sub-grading.
   2. Provide a uniform minimum clearance of 2 IN between conduits or as required in Specification Section 16130 for different cabling types.
      a. Maintain the separation of multiple planes of conduits by one of the following methods:
         1) Install multilevel conduits with the use of conduit supports and separators to maintain the required separations, and backfill with flowable fill (100 PSI) or concrete per Specification Section 02221.
         2) Install the multilevel conduits one level at a time.
            a) Each level is backfilled with the appropriate amount of soil and compaction, per Specification Section 02221, to maintain the required separations.

END OF SECTION

SECTION 16410
SAFETY SWITCHES

PART 1 - GENERAL

1.1 SUMMARY

A. Section Includes:
   1. Safety switches.

B. Related Specification Sections include but are not necessarily limited to:
   1. Division 00 - Bidding Requirements, Contract Forms, and Conditions of the Contract.
   2. Division 01 - General Requirements.
   3. Section 16010 - Electrical: Basic Requirements.
   4. Section 16490 - Overcurrent and Short Circuit Protective Devices.

1.2 QUALITY ASSURANCE

A. Referenced Standards:
   1. National Electrical Manufacturers Association (NEMA):
      a. 250, Enclosures for Electrical Equipment (1000 Volts Maximum).
      b. KS 1, Enclosed and Miscellaneous Distribution Equipment Switches (600 Volts Maximum).
   2. Underwriters Laboratories, Inc. (UL):
      a. 98, Enclosed and Dead-Front Switches.

1.3 SUBMITTALS

A. Shop Drawings:
   1. See Specification Section 01340 for requirements for the mechanics and administration of the submittal process.
   2. Product technical data:
      a. Provide submittal data for all products specified in PART 2 of this Specification Section.
      b. Provide a table that associates safety switch model number with connected equipment tag number.
      c. See Specification Section 16010 for additional requirements.

B. Operation and Maintenance Manuals:
   1. See Specification Section 01342 for requirements for:
      a. The mechanics and administration of the submittal process.
      b. The content of Operation and Maintenance Manuals.

PART 2 - PRODUCTS

2.1 ACCEPTABLE MANUFACTURERS

A. Subject to compliance with the Contract Documents, the following safety switch manufacturers are acceptable:
   1. Eaton.
   2. General Electric Company.
   3. Square D Company.
   4. Siemens.

B. Submit request for substitution in accordance with Specification Section 01640.

2.2 SAFETY SWITCHES

A. General:
   1. Non-fusible or fusible as indicated on the Drawings.
   2. Suitable for service entrance when required.
   3. NEMA Type HD heavy-duty construction.
   4. Switch blades will be fully visible in the OFF position with the enclosure door open.
   5. Quick-make/quick-break operating mechanism.
   6. Deionizating arc chutes.
   7. Manufacture double-break rotary action shaft and switchblade as one (1) common component.
   8. Clear line shields to prevent accidental contact with line terminals.
   9. Operating handle (except NEMA 7 and NEMA 9 rated enclosures):
      a. Red and easily recognizable.
      b. Padlockable in the OFF position
      c. Interlocked to prevent door from opening when the switch is in the ON position with a defeater mechanism.

B. Ratings:
   1. Horsepower rated of connected motor.
   2. Voltage and amperage: As indicated on the Drawings.
   3. Short circuit withstand:
      a. Non-fused: 10,000A.
      b. Fused: 200,000A.

C. Accessories, when indicated in PART 3 of this Specification Section or on the Drawings:
   1. Neutral kits.
   2. Ground lug kits.
   3. Auxiliary contact kits with 1 N.O. and 1 N.C. contact.

D. Enclosures:
   1. NEMA 3R rated:
      a. Body and cover: Sheet steel finished with rust inhibiting primer and manufacturers standard paint inside and out.
      b. With or without knockouts, hinged and lockable door.
   2. NEMA 4X rated (metallic):
      a. Body and cover: Type 304 or 316 stainless steel.
      b. No knockouts, external mounting flanges, hinged and gasketed door.

E. Overcurrent and short circuit protective devices:
   1. Fuses.
   2. See Specification Section 16490 for overcurrent and short circuit protective device requirements.

F. Standards: NEMA KS 1, UL 98.

PART 3 - EXECUTION

3.1 INSTALLATION

A. Install as indicated and in accordance with manufacturer's instructions and recommendations.

END OF SECTION

SECTION 16441
PANELBOARDS

PART 1 - GENERAL

1.1 SUMMARY

A. Section Includes:
   1. Lighting and appliance panelboards.

B. Related Specification Sections include but are not necessarily limited to:
   1. Division 0 - Bidding Requirements, Contract Forms, and Conditions of the Contract.
   2. Division 01 - General Requirements.
   3. Section 16010 - Electrical: Basic Requirements.
   4. Section 16490 - Overcurrent and Short Circuit Protective Devices.
   5. Section 16491 - Low Voltage Surge Protective Devices (SPD).

1.2 QUALITY ASSURANCE

A. Referenced Standards:
   1. National Electrical Manufacturers Association (NEMA):
      a. 250, Enclosures for Electrical Equipment (1000 Volts Maximum).
      b. PB 1, Panelboards.
   2. National Fire Protection Association (NFPA):
      a. 70, National Electrical Code (NEC).
   3. Underwriters Laboratories, Inc. (UL):
      a. 50, Enclosures for Electrical Equipment, Non-Environmental Considerations.
      b. 67, Standard for Panelboards.

1.3 SUBMITTALS

A. Shop Drawings:
   1. See Specification Section 01340 for requirements for the mechanics and administration of the submittal process.
   2. Product technical data.
      a. Provide submittal data for all products specified in PART 2 of this Specification Section.
      b. See Specification Section 16010 for additional requirements.
   3. Fabrication and/or layout drawings:
      a. Panelboard layout with alphanumeric designation, branch circuit breakers size and type, as indicated in the panelboard schedules.

B. Operation and Maintenance Manuals:
   1. See Specification Section 01340 for requirements for:
      a. The mechanics and administration of the submittal process.
      b. The content of Operation and Maintenance Manuals.
   2. Panelboard schedules with as-built conditions.

PART 2 - PRODUCTS

2.1 ACCEPTABLE MANUFACTURERS

A. Subject to compliance with the Contract Documents, the following manufacturers are acceptable:
   1. Eaton.

2. General Electric Company.
3. Square D Company.
4. Siemens.

B. Submit request for substitution in accordance with Specification Section 01640.

2.2 MANUFACTURED UNITS

A. Standards: NEMA PB 1, NFPA 70, UL 50, UL 67.

B. Ratings:
1. Current, voltage, number of phases, number of wires as indicated on the Drawings.
2. Panelboards rated 240 Vac or less: 22,000 amp minimum short circuit rating or as indicated in the schedule.
3. Panelboards rated 480 Vac: 14,000 amp minimum short circuit rating or as indicated in the schedule.
4. Service Entrance Equipment rated.

C. Construction:
1. Interiors factory assembled and designed such that switching and protective devices can be replaced without disturbing adjacent units and without removing the main bus connectors.
2. Multi-section panelboards: Feed-through or sub-feed lugs.
3. Main lugs: Solderless type approved for copper and aluminum wire.

D. Bus Bars:
1. Main bus bars:
   a. Copper sized to limit temperature rise to a maximum of 65 DegC above an ambient of 40 DegC.
   b. Drilled and tapped and arranged for sequence phasing of the branch circuit devices.
2. Ground bus and isolated ground bus, when indicated on the Drawings: Solderless mechanical type connectors.
3. Neutral bus bars: Insulated 100 percent rated and with solderless mechanical type connectors.

E. Enclosure:
1. Boxes: Code gage galvanized steel, furnish without knockouts.
2. Trim assembly: Code gage steel finished with rust inhibited primer and manufacturers standard paint inside and out.
3. Lighting and appliance panelboard:
   a. Trims supplied with hinged door over all circuit breaker handles.
   b. Trims for surface mounted panelboards, same size as box.
   c. Trims for flush mounted panelboards, overlap the box by 3/4 IN on all sides.
   d. Doors lockable with corrosion resistant chrome-plated combination lock and catch, all locks keyed alike.
   e. Nominal 20 IN wide and 5-3/4 IN deep with gutter space in accordance with NFPA 70.
   f. Clear plastic cover for directory card mounted on the inside of each door.
   g. NEMA 4X rated: Door gasketed.

F. Overcurrent and Short Circuit Protective Devices:
1. Main overcurrent protective device:
   a. Molded case circuit breaker.
2. Branch overcurrent protective devices:
   a. Mounted molded case circuit breaker.
3. See Section 16490 for overcurrent and short circuit protective device requirements.
4. Factory installed.

PART 3 - EXECUTION

3.1 INSTALLATION

A. Install as indicated on the Drawings, in accordance with the NFPA 70, and in accordance with manufacturer's instructions.

B. Support panelboard enclosures from wall studs or modular channels support structure, per Specification Section 16010.

C. Provide NEMA 4X rated enclosure as indicated on the Drawings.

D. Provide each panelboard with a typed directory:
   1. Identify all circuit locations in each panelboard with the load type and location served.
   2. Mechanical equipment shall be identified by Owner-furnished designation if different than designation indicated on the Drawings.
   3. Room names and numbers shall be final building room names and numbers as identified by the Owner if different than designation indicated on the Drawings.

END OF SECTION

SECTION 16442
MOTOR CONTROL EQUIPMENT

PART 1 - GENERAL

1.1 SUMMARY

A. Section Includes:
   1. Separately mounted motor starters (including those supplied with equipment).

B. Related Specification Sections include but are not necessarily limited to:
   1. Division 00 - Bidding Requirements, Contract Forms, and Conditions of the Contract.
   2. Division 01 - General Requirements.
   3. Section 16010 - Electrical: Basic Requirements.
   4. Section 16441 - Panelboards.
   5. Section 16490 - Overcurrent and Short Circuit Protective Devices.
   6. Section 16491 - Low Voltage Surge Protective Devices (SPD).

1.2 QUALITY ASSURANCE

A. Referenced Standards:
   1. International Electrotechnical Commission (IEC).
   2. National Electrical Manufacturers Association (NEMA):
      a. 250, Enclosures for Electrical Equipment (1000 Volt Maximum).
      b. ICS 2, Controllers, Contactors and Overload Relays Rated 600 V.
      c. ICS 3, Medium-Voltage Controllers Rated 2001 to 7200 V AC.
   3. Underwriters Laboratories, Inc. (UL):
      a. 508, Standard for Industrial Control Equipment.

B. Miscellaneous:
   1. Verify motor horsepower loads, other equipment loads, and controls from approved shop drawings and notify Engineer of any discrepancies.
   2. Verify the required instrumentation and control wiring for a complete system and notify Engineer of any discrepancies.

1.3 SUBMITTALS

A. Shop Drawings:
   1. See Specification Section 01340 for requirements for the mechanics and administration of the submittal process.
   2. Product technical data:
      a. Provide submittal data for all products specified in PART 2 of this Specification Section.
      b. See Specification Section 16010 for additional requirements.
   3. Fabrication and/or layout drawings:
      a. Separately mounted combination starters:
         1) Unit ladder logic wiring for each unit depicting electrical wiring and identification of terminals where field devices or remote control signals are to be terminated as indicated on the Drawings and/or loop descriptions.

B. Operation and Maintenance Manuals:
   1. See Specification Section 01340 for requirements for:
      a. The mechanics and administration of the submittal process.
      b. The content of Operation and Maintenance Manuals.
      c. Fabrication and/or layout drawings updated with as-built conditions.

C. Provide a Table that includes the following data for all motors controlled by a separately mounted starter:
   1. Equipment tag number.
   2. Starter type and size.
   3. Motor nameplate HP.
   4. Motor nameplate FLA.
   5. Motor nameplate RPM.
   6. Motor nameplate safety factor.
   7. Overload heater type and model number.
   8. Overload heater settings/size.
   9. MCP or CB type/model number.
   10. MCP or CB setting/size.

D. Informational Submittals:

E. See Specification Section 01340 for requirements for the mechanics and administration of the submittal process.

PART 2 - PRODUCTS

2.1 ACCEPTABLE MANUFACTURERS

A. Subject to compliance with the Contract Documents, the following manufacturers are acceptable:
   1. Allen-Bradley.
   2. Eaton.
   3. General Electric Company.
   4. Square D Company.
   5. Siemens.

B. Submit request for substitution in accordance with Specification Section 01640.

2.2 SEPARATELY MOUNTED COMBINATION STARTERS

A. Standards:
   1. NEMA 250, NEMA ICS 2.
   2. UL 508.

B. Enclosure:
   1. NEMA 4X rated:
      a. Body and cover: Type 304 or 316 stainless steel.
      b. No knockouts, external mounting flanges, hinged and gasketed door.

C. Operating Handle:
   1. With the door closed the handle mechanism allows complete ON/OFF control of the unit disconnect and clear indication of the disconnect status.
   2. Circuit breaker and MCP operators includes a separate TRIPPED position.
   3. Mechanical interlock to prevent the opening of the door when the disconnect is in the ON position with a defeater mechanism for use by authorized personnel.
   4. Mechanical interlock to prevent the placement of the disconnect in the ON position with the door open with a defeater mechanism for use by authorized personnel.
   5. Padlockable in the OFF position.

D. External mounted overload relay pushbutton.

E. Control Devices:
   1. Provide control devices as indicated on the Drawings.
   2. The following devices are the minimum required unless otherwise indicated on the Drawings:

a. Three-position switch (HAND-OFF-AUTO).
b. Red ON indicator light.
c. Green OFF indicator light.

3. Devices will be accessible with the door closed.

F. Control Power Transformer:
1. 120V secondary.
2. Fused on primary and secondary side.
3. Sized for 140 percent of required load.

G. Fault Current Withstand Rating: Equal to the rating of the electrical gear from which it is fed.

H. Motor Starters: See requirements within this Specification Section.

I. Disconnect Switch, Overcurrent and Short Circuit Protective Devices:
1. Motor circuit protector.
2. See Specification Section 16490 for overcurrent and short circuit protective device requirements.
3. Factory installed.

2.3 MOTOR STARTERS

A. Standards:
1. NEMA ICS 2.
2. UL 508.

B. Full Voltage Non-Reversing (FVNR) Magnetic Starters:
1. NEMA full size rated contactor.
a. NEMA half sizes and IEC contactors are not permitted.
2. Double-break silver alloy contacts.
3. Overload relays:
a. Ambient compensated, bimetallic type with interchangeable heaters, 24 percent adjustability, single phase sensitivity, an isolated arm contact and manual reset.
4. Interlock and auxiliary contacts, wired to terminal blocks:
a. Holding circuit contact, normally open.
b. Overload alarm contact, normally open.
c. Normally open auxiliary contact, for remote run status.
d. Additional field replaceable auxiliary contacts as required per the Sequence of Operation.
e. Three (3) additional normally open spare field replaceable auxiliary contacts.

PART 3 - EXECUTION

3.1 INSTALLATION

A. Install as indicated on the Drawings and in accordance with manufacturer's recommendations and instructions.

B. Mounting height for surface mounted equipment: See Specification Section 16010.

C. Overload Heaters:
1. Size for actual motor full load current of the connected motor.
2. For motors with power factor correction capacitors, size to compensate for the capacitors effect on load current.

D. Combination and Manual Starter Enclosures:
1. Permitted uses of NEMA 4X enclosure:
a. Surface mounted in areas designated as wet and/or corrosive.

E. FIELD QUALITY CONTROL

1. Reduced Voltage Soft Starters:
    a. Manufacturer shall provide a factory authorized technician to confirm proper installation and programming of the starter.

END OF SECTION

SECTION 16490
OVERCURRENT AND SHORT CIRCUIT PROTECTIVE DEVICES

PART 1 - GENERAL

1.1 SUMMARY

A. Section Includes:
   1. Low voltage circuit breakers.

B. Related Specification Sections include but are not necessarily limited to:
   1. Division 00 - Bidding Requirements, Contract Forms, and Conditions of the Contract.
   2. Division 01 - General Requirements.
   3. Section 16010 - Electrical: Basic Requirements.

1.2 QUALITY ASSURANCE

A. Referenced Standards:
   1. Institute of Electrical and Electronics Engineers, Inc. (IEEE):
      a. C37.13, Standard for Low-Voltage AC Power Circuit Breakers Used in Enclosures.
      b. C37.16, Low-Voltage Power Circuit Breakers and AC Power Circuit Protectors - Preferred Ratings, Related Requirements, and Application Recommendations.
      c. C37.17, Trip Devices for AC and General Purpose DC Low Voltage Power Circuit Breakers.
   2. National Electrical Manufacturers Association (NEMA):
      a. AB 1, Molded-Case Circuit Breakers, Molded Case Switches, and Circuit-Breaker Enclosures. (Equivalent to UL 489)
   3. National Fire Protection Association (NFPA):
      a. 70, National Electrical Code (NEC).
   4. Underwriters Laboratories, Inc. (UL):
      a. 489, Standard for Safety Molded-Case Circuit Breakers, Molded-Case Switches, and Circuit-Breaker Enclosures.
      b. 943, Standard for Safety for Ground-Fault Circuit-Interrupters.
      c. 1066, Standard for Low-Voltage AC and DC Power Circuit Breakers Used in Enclosures.

1.3 SUBMITTALS

A. Shop Drawings:
   1. See Specification Section 01340 for requirements for the mechanics and administration of the submittal process.
   2. Product technical data including:
      a. Provide submittal data for all products specified in PART 2 of this Specification Section.
      b. See Specification Section 16010 for additional requirements.

B. Operation and Maintenance Manuals:
   1. See Specification Section 01340 for requirements for:
      a. The mechanics and administration of the submittal process.
      b. The content of Operation and Maintenance Manuals.

C. Informational Submittals:
   1. See Specification Section 211 for requirements for the mechanics and administration of the submittal process.
   2. Reports:
      a. As-left condition of all circuit breakers that have adjustable settings.

PART 2 - PRODUCTS

2.1 ACCEPTABLE MANUFACTURERS

A. Subject to compliance with the Contract Documents, the following manufacturers are acceptable:
   1. Circuit breakers:
      a. Eaton.
      b. General Electric Company.
      c. Square D Company.
      d. Siemens.
   2. Fuses:
      a. Bussmann, Inc.
      b. Littelfuse, Inc.
      c. Mersen

B. Submit request for substitution in accordance with Specification Section 01640.

2.2 CIRCUIT BREAKERS

A. Molded Case Type:
   1. General:
      a. Standards: NEMA AB 1, UL 489.
      b. Unit construction.
      c. Over-center, toggle handle operated.
      d. Quick-make, quick-break, independent of toggle handle operation.
      e. Manual and automatic operation.
      f. All poles open and close simultaneously.
      g. Three (3) position handle: On, off and tripped.
      h. Molded-in ON and OFF markings on breaker cover.
      i. One-, two- or three-pole as indicated on the Drawings.
      j. Current and interrupting ratings as indicated on the Drawings.
      k. Bolt on type.
   2. Thermal magnetic type:
      a. Inverse time overload and instantaneous short circuit protection by means of a thermal magnetic element.
      b. Frame size 150 amp and below:
         1) Non-interchangeable, non-adjustable thermal magnetic trip units.
   3. Motor circuit protector:
      a. Adjustable instantaneous short circuit protection by means of a magnetic or solid state trip element.
      b. Sized for the connected motor.

2.3 FUSES

A. UL Class L fuses:
   1. Standard: UL 248-1 and UL 248-10.
   2. Dual-element time-delay and current limiting type.
   3. Ratings: 600 V, 601-6000 amps and 200,000 RMS AIC symmetrical.

B. UL Class J fuses:
   1. Standard: UL 248-1 and UL 248-8.
   2. Dual-element time-delay and current limiting rejection type.
   3. Ratings: 600 V, 0-600 amps and 200,000 RMS AIC symmetrical.

C. UL Class RK-1 fuses:
   1. Standard: UL 248-1 and UL 248-12.
   2. Single-element fast-acting and current limiting rejection type.
   3. Dual-element time-delay and current limiting rejection type.

4. Ratings: 250 and 600 V, 1/10-600 amps and 200,000 RMS AIC symmetrical.

D. UL Class RK-5 fuses:
1. Standard: UL 248-1 and UL 248-12.
2. Dual-element time-delay and current limiting rejection type.
3. Ratings: 250 and 600 V, 1/10-600 amps and 200,000 RMS AIC symmetrical.

PART 3 - EXECUTION

3.1 INSTALLATION

A. Current and interrupting ratings as indicated on the Drawings.

B. Series rated systems not acceptable.

C. Devices shall be ambient temperature compensated.

D. Circuit Breakers:
1. Molded case circuit breakers shall incorporate the following, unless indicated otherwise on the Drawings:
   a. Frame sizes 400 amp and less with trip setting less than 400A shall be thermal magnetic type.
   b. Motor circuit protectors sized for the connected motor.

E. Fuses:
1. UL Class L: Use for main and feeder devices over 600 amps.
2. UL Class J: Use for feeder devices 600 amps and smaller.
3. UL Class RK-1 (fast acting): Use where indicated.
4. UL Class RK-1 (dual element): Use for motor feeder and branch circuit devices.
5. UL Class RK-5: Use for motor feeder and branch circuit devices.

3.2 FIELD QUALITY CONTROL

A. Adjustable Circuit Breakers:
1. Adjust motor circuit protectors per the motor nameplate and NFPA 70 requirements.

END OF SECTION

SECTION 16491
LOW VOLTAGE SURGE PROTECTION DEVICES (SPD)

PART 1 - GENERAL

1.1 SUMMARY

A. Section Includes:
   1. Type 2 SPD - High exposure locations (switchgear, switchboard, panelboard or motor control center), externally mounted.

B. Related Sections include but are not necessarily limited to:
   1. Division 00 - Bidding Requirements, Contract Forms, and Conditions of the Contract.
   2. Division 01 - General Requirements.

1.2 QUALITY ASSURANCE

A. Referenced Standards:
   1. Institute of Electrical and Electronics Engineers, Inc. (IEEE):
      a. C62.41, Recommended Practice for Surge Voltages in Low-Voltage AC Power Circuits.
      b. C62.41.1, Guide on the Surge Environment in Low-Voltage (1000V and Less) AC Power Circuits.
      c. C62.41.2, Recommended Practice on Characterization of Surges in Low-Voltage (1000 V and Less) AC Power Circuits.
      d. C62.45, Recommended Practice on Surge Testing For Equipment Connected to Low-Voltage (1000V and Less) AC Power Circuits.
   2. National Electrical Manufacturers Association (NEMA):
      a. 250, Enclosures for Electrical Equipment (1000 Volts Maximum).
      b. LS 1, Low Voltage Surge Protective Devices.
   3. National Fire Protection Association (NFPA):
      a. 70, National Electrical Code (NEC).
   4. Underwriters Laboratories, Inc. (UL):
      a. 1283, Standard for Electromagnetic Interference Filters.
      b. 1449, Standard for Safety Transient Voltage Surge Suppressors.

B. Qualifications:
   1. Provide devices from a manufacturer who has been regularly engaged in the development, design, testing, listing and manufacturing of SPDs of the types and ratings required for a period of 10 years or more and whose products have been in satisfactory use in similar service.
      a. Upon request, suppliers or manufacturers shall provide a list of not less than three (3) customer references showing satisfactory operation.

1.3 DEFINITIONS

A. Clamping Voltage:
   1. The applied surge shall be induced at the 90 degree phase angle of the applied system frequency voltage.
   2. The voltage measured at the end of the 6 IN output leads of the SPD and from the zero voltage reference to the peak of the surge.

B. Let-Through Voltage:
   1. The applied surge shall be induced at the 90 degree phase angle of the applied system frequency voltage.
   2. The voltage measured at the end of the 6 IN output leads of the SPD and from the system peak voltage to the peak of the surge.

C. Maximum Continuous Operating Voltage (MCOV): The maximum steady state voltage at which the SPD device can operate and meet its specification within its rated temperature.

D. Maximum Surge Current:
   1. The maximum 8 x 20 microsecond surge current pulse the SPD device is capable of surviving on a single-impulse basis without suffering either performance degradation or more than 10 percent deviation of clamping voltage at a specified surge current.
   2. Listed by mode, since number and type of components in any SPD may very by mode.

E. Protection Modes: This parameter identifies the modes for which the SPD has directly connected protection elements, i.e., line-to-neutral (L-N), line-to-line (L-L), line-to-ground (L-G), neutral-to-ground (N-G).

F. Surge Current per Phase:
   1. The per phase rating is the total surge current capacity connected to a given phase conductor.
      a. For example, a wye system surge current per phase would equal L-N plus L-G; a delta system surge current per phase would equal L-L plus L-G.
      b. The N-G mode is not included in the per phase calculation.

G. System Peak Voltage: The electrical equipment supply voltage sine wave peak (i.e., for a 480/277 V system the L-L peak voltage is 679V and the L-N peak voltage is 392 V).

1.4 SUBMITTALS

A. Shop Drawings:
   1. See Specification Section 01340 for requirements for the mechanics and administration of the submittal process.
   2. Product technical data including:
      a. Manufacturer's qualifications.
      b. Standard catalog cut sheet.
      c. Electrical and mechanical drawing showing unit dimensions, weights, mounting provisions, connection details and layout diagram of the unit.
      d. Testing procedures and testing equipment data.
      e. Create a Product Data Sheet for each different model number of SPD provided (i.e., Model XYZ with disconnect and Model XYZ without disconnect, each require a Product Data Sheet).
         1) Data in the Product Data Sheet heading:
            a) SPD Type Number per PART 2 of the Specification.
            b) Manufacturer’s Name.
            c) Product model number.
         2) Data in the Product Data Sheet body:
            a) Column one: Specified value/feature of every paragraph of PART 2 of the Specification.
            b) Column two: Manufacturer’s certified value confirming the product meets the specified value/feature.
            c) Name of the nationally recognized testing laboratory that preformed the tests.
            d) Warranty information.
         3) Data in the Product Data Sheet closing:
            a) Signature of the manufacturer’s official (printed and signed).
            b) Title of the official.
         4) Date of signature.

B. Operation and Maintenance Manuals:
   1. See Specification Section 01342 for requirements for:
      a. The mechanics and administration of submittal process.
      b. The content of the Operation and Maintenance Manuals.
   2. Warranty.

1.5 WARRANTY

A. Minimum of a five (5) year Warranty from date of shipment against failure when installed in compliance with applicable national/local electrical codes and the manufacturer's installation, operation and maintenance instructions.

PART 2 - PRODUCTS

2.1 ACCEPTABLE MANUFACTURERS

A. Subject to compliance with the Contract Documents, the following manufacturers are acceptable:
   1. Eaton – Clipper.
   2. Current Technology.
   3. Innovative Technology.

2.2 GENERAL

A. Standards: IEEE C62.41.1, IEEE C62.41.2, IEEE C62.45, NEMA LS 1, MIL-STD 220B, UL 1283, UL 1449.

2.3 TYPE 2 SPD

A. Product:
   1. Refer to Drawings for manufacturer basis of design.
   2. Externally mounted next to panelboard.
   3. Hybrid solid-state high performance suppression system.
      a. Do not use suppression system with gas tubes, spark gaps or other components which might short or crowbar the line resulting in interruption of normal power flow to connected loads.
   4. Do not connect multiple SPD modules in series to achieve the specified performance.
   5. Designed for parallel connection.
   6. Enclosure:
      a. Metallic NEMA 4X (metalic) for exterior locations.
   7. Field connection:
      a. Preinstalled lead conductors: Size per manufacturer, length as required with a maximum of 5 FT.
   8. Device Monitor:
      a. Long-life, solid state, externally visible indicators and Form C dry contact(s) that monitor the on-line status of each mode of the units suppression filter system or power loss in any of the phase.
      b. A fuse status only monitor system is not acceptable.
   9. Accessories: Unit mounted disconnect switch.

B. Operating Voltage: Nominal unit operating voltage and configuration as indicated on the Drawings.

C. Modes of Protection: All modes.
   1. Three phase (delta): L-L, L-G or Three phase (wye): L-N, L-L, L-G and N-G. Confirm with electric utility.
   2. Single phase (2 pole): L-L, L-N, L-G and N-G.

D. Maximum Continuous Operating Voltage: Less than 130 percent of system peak voltage.

E. Operating Frequency: 45 to 65 Hz.

F. Short Circuit Rating: Equal to or greater than rating of equipment SPD is connected to.

G. Maximum Surge Current: 240,000 A per phase, 120,000 A per mode minimum.

H. Minimum Repetitive Surge Current Capacity: 4000 IEEE C High waveform impulses with no degradation of more than 10 percent deviation of the clamping voltage.

I. SPD Protection:
   1. Integral unit level and/or component level overcurrent fuses and sustained overvoltage thermal cutout device.
   2. An IEEE C High waveforms shall not cause the fuse to open and render the SPD inoperable.

PART 3 - EXECUTION

3.1 INSTALLATION

A. Install products in accordance with manufacturer's instructions.

B. Type 2 SPD:
   1. Mounting options:
      a. On wall or support structure adjacent to the equipment to be protected with leads routed through conduit.
      b. Nipple connection directly to the equipment to be protected.
   2. Install leads as short and straight as possible.
   3. Maximum lead length: 5 FT.
   4. Minimum lead size:
      a. Type 2 SPD: #2 stranded AWG.
   5. When conduit connection is used, provide a minimum of four (4) twists per foot in the lead conductors and install in NFPA 70 sized conduit.
   6. Connect leads to the equipment to be protected by one (1) of the following means:
      a. Through a circuit breaker or molded case switch mounted in the equipment.
         1) Use manufacturer recommended circuit breaker size.
      b. Directly to the protected equipment bus, when SPD has integral disconnect switch.
      c. To the load side of field mounted equipment’s local disconnect switch.
         1) Provide taps or lugs as required to provide a UL and NFPA 70 compliant connection.

END OF SECTION

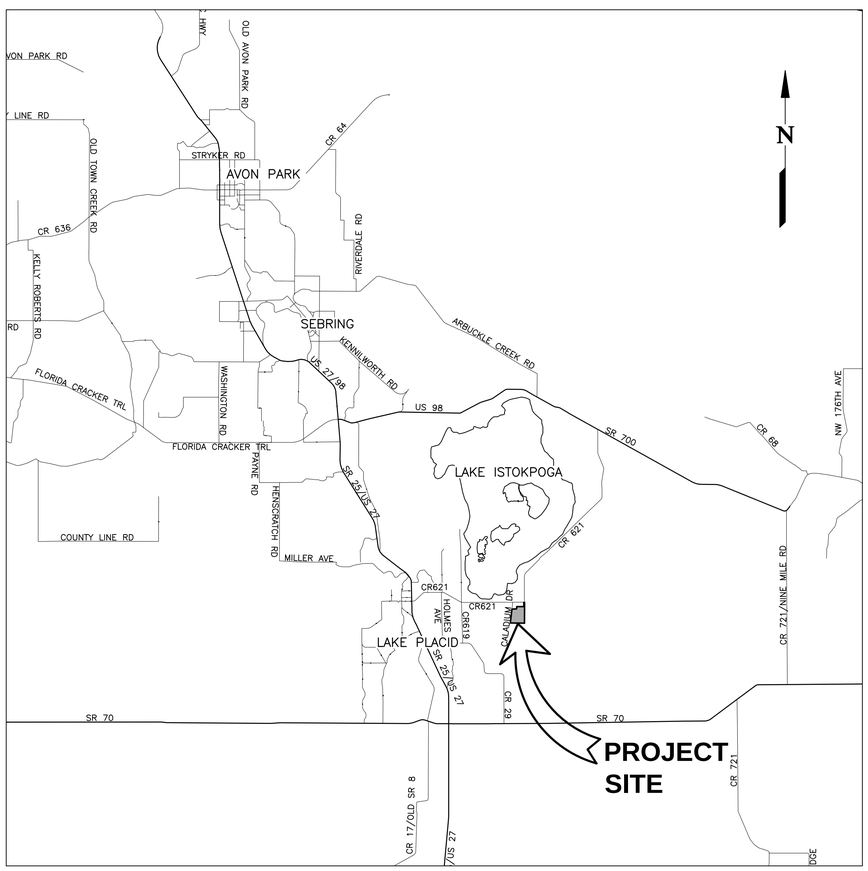

LOCATION MAP

SCALE: 1"=20,000'

Contract Drawings For

Istokpoga Marsh Watershed Improvement District

Above Ground Impoundment and Ancillary Facilities

General/Geotechnical/Civil/ Electrical

Project No.
000000000266294

Highlands County, Florida

Final Design Submittal
April 2016

INDEX OF DRAWINGS

GENERAL

00G000	TITLE SHEET
00G001	PROJECT SYMBOLS, LEGENDS, AND ABBREVIATIONS

GEOTECHNICAL

01B001	GEOTECHNICAL NOTES AND LOGS (1 OF 3)
01B002	GEOTECHNICAL NOTES AND LOGS (2 OF 3)
01B003	GEOTECHNICAL NOTES AND LOGS (3 OF 3)

CIVIL

01C001	CIVIL SITE NOTES
01C101	OVERALL SITE PLAN
01C102	IMPACTED SOILS PLAN
01C103	DEMOLITION PLAN
01C104	BORROW PLAN
01C110	SITE GEOMETRY PLAN
01C111	EMBANKMENT PLAN (1 OF 7)
01C112	EMBANKMENT PLAN (2 OF 7)
01C113	EMBANKMENT PLAN (3 OF 7)
01C114	EMBANKMENT PLAN (4 OF 7)
01C115	EMBANKMENT PLAN (5 OF 7)
01C116	EMBANKMENT PLAN (6 OF 7)
01C117	EMBANKMENT PLAN (7 OF 7)
01C118	OPTIONAL TRAINING BERM PLAN
01C201	ACCESS ROAD IMPROVEMENTS PLAN
01C202	ACCESS ROAD SECTIONS AND IMPROVEMENT DETAILS
01C301	EMBANKMENT TYPICAL SECTIONS (1 OF 3)
01C302	EMBANKMENT TYPICAL SECTIONS (2 OF 3)
01C303	EMBANKMENT TYPICAL SECTIONS (3 OF 3)
01C401	MAIN PUMP STATION SITE PLAN
01C402	MAIN PUMP STATION SITE DETAILS (1 OF 2)
01C403	MAIN PUMP STATION SITE DETAILS (2 OF 2)
01C404	SEEPAGE PUMP SITE PLAN
01C405	SEEPAGE PUMP SITE SECTIONS
01C406	SEEPAGE PUMP SITE DETAILS
01C407	PRIMARY DISCHARGE STRUCTURE SITE DETAILS
01C408	OVERFLOW SPILLWAY SITE PLAN AND SECTION
01C501	PIPE SUPPORT AND BOLLARD DETAIL
01C502	SLIDE GATE DETAIL
01C503	RIPRAP, SHELLROCK, DITCH/CANAL FILL AND FLOAT SWITCH DETAILS
01C504	EROSION CONTROL DETAILS

ELECTRICAL

02E001	ELECTRICAL LEGEND
02E100	ELECTRICAL SITE PLAN
02E101	ELECTRICAL SITE PLAN - MAIN PUMP STATION
02E102	ELECTRICAL SITE PLAN - SEEPAGE PUMP STATION SITE
02E110	ELECTRICAL ONE-LINE DIAGRAM - SEEPAGE PUMP STATION
02E111	ELECTRICAL ONE-LINE DIAGRAM - MAIN PUMP STATION
02E112	ELECTRICAL DETAILS - SEEPAGE PUMP STATION
02E113	ELECTRICAL DETAILS - MAIN PUMP STATION

PRELIMINARY
NOT FOR
CONSTRUCTION

MATERIALS IN PLAN/SECTION

- ASPHALT (EXISTING – PLAN)
- SHELLROCK
- CONCRETE
- GRATING (PLAN)
- GROUT (SECTION)
- RIPRAP (PLAN AND/OR SECTION)
- ACBM
- ACBM
- SOD (SECTION)

GENERAL SYMBOLOGY

ARROW INDICATES DIRECTION OF TRUE NORTH

N

PLAN

1/4" = 1'–0"

PLAN TITLE

SECTION LETTER

FLAG INDICATES DIRECTION OF SECTION CUT

X
XXX

SHEET WHERE SECTION IS LOCATED

SECTION CUT MARKER

SECTION LETTER

SECTION

3/8" = 1'–0"

SHEET WHERE SECTION VIEW IS CUT *

USED WHEN THERE ARE MULTIPLE SHEET REFERENCES

X
XXX
XXX

SECTION TITLE

DETAIL NUMBER

#
XXX

SHEET WHERE DETAIL IS LOCATED *

DETAIL MARKER

FOR REFERENCING DETAILS INCLUDED IN DRAWING SET.

XXXXXXXXX

DETAIL MARKER

FOR REFERENCING DETAILS BOUND IN SPECIFICATIONS OR SEPARATE VOLUME.

DETAIL NUMBER

DETAIL

3" = 1'–0"

SHEET WHERE DETAIL WAS CALLED OUT *

USED WHEN THERE ARE MULTIPLE SHEET REFERENCES

#
XXX
XXX

ELEVATION IDENTIFICATION NUMBER

ELEVATION

3" = 1'–0"

SHEET WHERE POINT OF VIEW MARKER CAN BE FOUND *

X
XXX

ELEVATION TITLE

* EXCEPTIONS WHERE THE SHEET NUMBER IS REPLACED BY A DASH (–).

1) FOR COMMON DETAILS, SECTIONS, ELEVATIONS OR DETAILS THAT ARE CUT OR CALLED OUT ON MULTIPLE SHEETS.
2) SECTIONS, ELEVATIONS OR DETAILS THAT ARE LOCATED ON THE SAME SHEET THEY ARE CUT OR CALLED OUT ON.

CIVIL LEGEND

- EMBANKMENT SLOPE (CUT)
- EMBANKMENT SLOPE (FILL)
- H:V — EMBANKMENT SLOPE RIGHT ARROW RIGHT
- H:V — EMBANKMENT SLOPE LEFT ARROW LEFT
- WATER LEVEL IN SECTION/PROFILE
- P — PUMP
- PIPELINE
- LARGE PIPELINE
- UTILITY BENEATH STRUCTURE
- CENTERLINE
- PROPERTY LINE / ROW
- EASEMENT
- LIMITS OF CONSTRUCTION
- EXISTING CONTOUR (MINOR)
- 25 — EXISTING CONTOUR W/ELEVATION (MAJOR)
- EXISTING FENCE
- EXISTING VEGETATION/BRUSH LINE
- FENCE – CHAIN LINK
- NEW CONTOUR (MINOR)
- 25 — NEW CONTOUR (MAJOR)
- SF — SF — SILT FENCE
- TOE OF SLOPE
- TOP OF SLOPE
- B–1 — AUGER BORING
- TP–1 — TEST PIT
- EXISTING POWER POLE
- OHE — EXSITING OVERHEAD ELECTRIC
- EXISTING GUY WIRE
- PIPE (SECTION)

ABBREVIATIONS

ACBM	ARTICULATED CONCETE BLOCK MATTRESS
ACI	AMERICAN CONCRETE INSTITUTE
ALUM	ALUMINUM
℄	BASELINE
℄	CENTERLINE
CLR	CLEAR, CLEARANCE
CMP	CORRIGATED METAL PIPE
CONST.	CONSTRUCTION
CONT	CONTINUOUS
DEG	DEGREE
DI	DUCTILE IRON
DIA	DIAMETER
EA	EACH
EF	EACH FACE
EL	ELEVATION
EW	EACH WAY
EXIST	EXISTING
FT	FEET
GPM	GALLONS PER MINUTE
H	HORIZONTAL
HDPE	HEAVY DUTY POLYETYLENE
HORIZ	HORIZONTAL
IMWID	ISTOKPOGA MARSH WATERSHED IMPROVEMENT DISTRICT
IN	INCH
LBS	POUNDS
LT	LEFT
MAX	MAXIMUM
MIN	MINIMUM
NAD	NORTH AMERICAN DATUM
NAVD	NORTH AMERICAN VERTICAL DATUM
NO.	NUMBER
NTS	NOT TO SCALE
OD	OVERALL DIAMETER
OZ	OUNCE
PC	POINT OF CURVATURE
PCC	POINT OF COMPOUND CURVATURE
PI	POINT OF INTERSECTION
PL	PLATE
POB	POINT OF BEGINNING
POE	POINT OF ENDING
PRC	POINT OF REVERSE CURVATURE
PSI	POUNDS PER SQUARE INCH
PT	POINT OF TANGENCY
PVC	POLYVINYL CHLORIDE
REINF	REINFORCED
RT	RIGHT
SPEC	SPECIFICATION
SS	STAINLESS STEEL
SST	STAINLESS STEEL
STA	STATION
STD	STANDARD
TBM	TEMPORARY BENCHMARK
THK	THICK
TYP	TYPICAL
V	VERTICAL
VERT	VERTICAL
W/	WITH

GENERAL NOTES

1. THIS IS A STANDARD CIVIL SYMBOLOGY SHEET. ALL SYMBOLS ARE NOT NECESSARILY USED ON THIS PROJECT.

2. SCREENING OR SHADING OF WORK IS USED TO INDICATE EXISTING COMPONENTS OR TO DE–EMPHASIZE PROPOSED IMPROVEMENTS TO HIGHLIGHT SELECTED TRADE WORK. REFER TO CONTEXT OF EACH SHEET FOR USAGE.

ISSUE	DATE	DESCRIPTION
3	4/1/2016	FINAL DESIGN SUBMITTAL
2	1/8/2016	INTERMEDIATE DESIGN SUBMITTAL
1	10/20/2015	PRELIMINARY DESIGN SUBMITTAL

PROJECT MANAGER	RICHARD LEBLANC, P.E.
DESIGNED BY	R. LEBLANC
DRAWN BY	D. DIXON
CHECKED BY	M. REDINGTON
PROJECT NUMBER	000000000266294

PRELIMINARY NOT FOR CONSTRUCTION

ISTOKPOGA MARSH WATERSHED IMPROVEMENT DISTRICT HIGHLANDS COUNTY, FLORIDA

GENERAL

PROJECT SYMBOLS, LEGENDS, AND ABBREVIATIONS

FILENAME 00G001.dwg

SCALE NONE

SHEET 00G001

BORING NO: E-1
ELEVATION: N/A
NORTHING: N569269.6
EASTING: E1074592.7

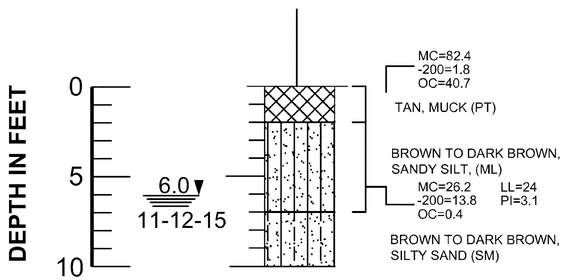

B.T. @ 10'

E-2
N/A
N569266.6
E1073229.5

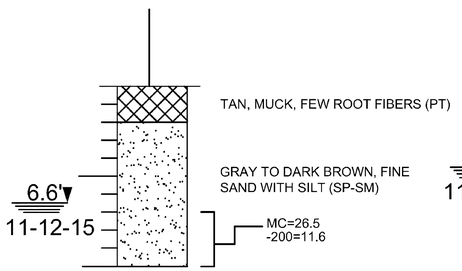

B.T. @ 10'

S-1
N/A
N569266.6
E1073229.5

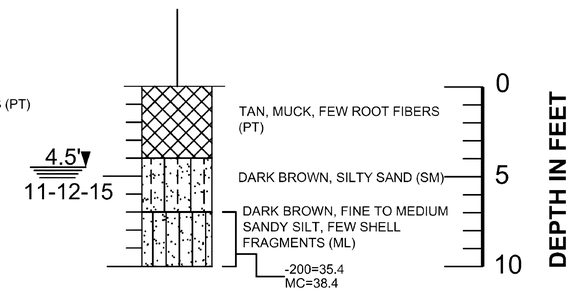

B.T. @ 10'

BORING NO: W-1
ELEVATION: N/A
NORTHING: N569269.6
EASTING: E1074592.7

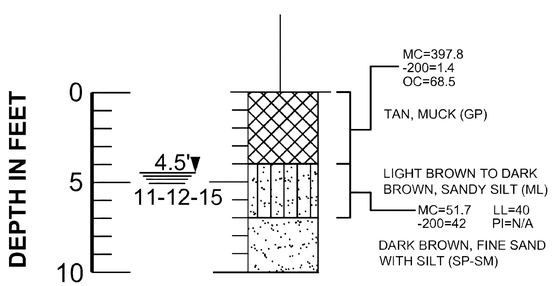

B.T. @ 10'

W-2
N/A
N569266.6
E1073229.5

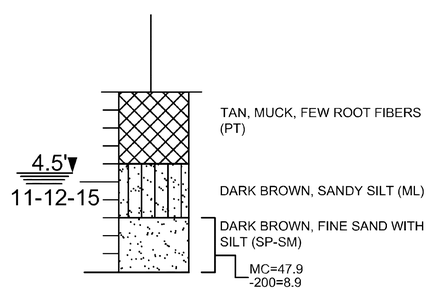

B.T. @ 10'

W-3
N/A
N569266.6
E1073229.5

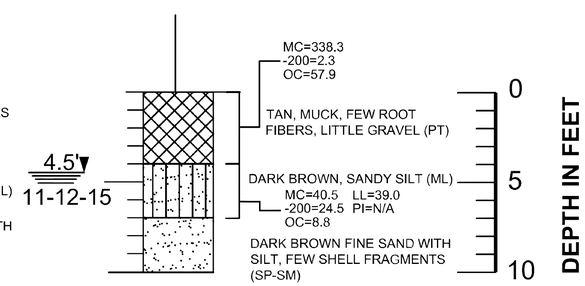

B.T. @ 10'

NOTES

(1) BORINGS WERE DRILLED ON NOVEMBER 12, 2015 USING A CENTRAL MINING EQUIPMENT MODEL 45 (CME 45) AUTOMATIC HAMMER DRILL RIG.

(2) STRATA BOUNDARIES ARE APPROXIMATE AND REPRESENT SOIL STRATA AT EACH TEST HOLE LOCATION ONLY. SOIL TRANSITIONS MAY BE MORE GRADUAL THAN IMPLIED.

(3) GROUNDWATER LEVELS SHOWN ON THE SUBSURFACE PROFILES REPRESENT GROUNDWATER SURFACES ON THE DATES SHOWN. GROUNDWATER LEVEL FLUCTUATIONS SHOULD BE ANTICIPATED THROUGHOUT THE YEAR.

(4) BORING LATITUDE & LONGITUDE WERE MEASURED USING A HAND-HELD GPS, AND CONVERTED TO NORTHING AND EASTING.

(5) AFTER COMPLETION OF DRILLING BOREHOLES WERE BACK FILLED WITH SOIL CUTTINGS AND GROUT.

(6) REFER TO DRAWING 01C101 FOR APPROXIMATE LOCATION OF BORINGS RELATIVE TO PROJECT FEATURES.

STANDARD PENETRATION TEST DATA

SPOON INSIDE DIA.	1.375 INCH
SPOON OUTSIDE DIA.	2.0 INCHES
AVG. HAMMER DROP	30 INCHES
HAMMER WEIGHT	140 POUNDS

GRANULAR MATERIALS

RELATIVE DENSITY	AUTOMATIC HAMMER SPT N-VALUE BLOWS/FOOT
VERY LOOSE	LESS THAN 3
LOOSE	3 - 8
MEDIUM	8 - 24
DENSE	24 - 40
VERY DENSE	GREATER THAN 40

SILTS AND CLAYS

CONSISTENCY	AUTOMATIC HAMMER SPT N-VALUE BLOWS/FOOT
VERY SOFT	LESS THAN 1
SOFT	1 - 3
FIRM	3 - 6
STIFF	6 - 12
VERY STIFF	12 - 24
HARD	GREATER THAN 24

LEGEND

PEAT

SAND

SANDY SILT

SILTY SAND

6.0' ▼ 11-12-15	GROUNDWATER DEPTH IN FEET NAVD 88 AND DRILLING DATE
N	STANDARD PENETRATION RESISTANCE- BLOWS PER FOOT USING AUTOMATIC HAMMER
SP-SM	UNIFIED SOIL CLASSIFICATION SYSTEM GROUP SYMBOL (ASTM D 2488)
B-1	STANDARD PENETRATION TEST (SPT) BORING AND NUMBER
MC	MOISTURE CONTENT (%)
OC	ORGANIC CONTENT (%)
LL	LIQUID LIMIT (%)
PI	PLASTICITY INDEX (%)
-200	AMOUNT PASSING US STANDARD # 200 SIEVE
B.T. @ 10'	BORING TERMINATED AT 10 FEET BELOW THE EXISTING GROUND SURFACE

ISSUE	DATE	DESCRIPTION
3	4/1/2016	FINAL DESIGN SUBMITTAL
2	1/8/2016	INTERMEDIATE DESIGN SUBMITTAL
1	10/20/2015	PRELIMINARY DESIGN SUBMITTAL

PROJECT MANAGER	RICHARD LEBLANC, P.E.
DESIGNED BY	R. LEBLANC
DRAWN BY	D. DIXON
CHECKED BY	M. REDINGTON
PROJECT NUMBER	000000000266294

PRELIMINARY NOT FOR CONSTRUCTION

ISTOKPOGA MARSH WATERSHED IMPROVEMENT DISTRICT
HIGHLANDS COUNTY, FLORIDA

GEOTECHNICAL

GEOTECHNICAL NOTES AND LOGS (1 OF 3)

FILENAME 01B001.dwg
SCALE NONE
SHEET 01B001

BORING NO: B-1
ELEVATION: N/A
NORTHING: N563867.6
EASTING: E1071544.9

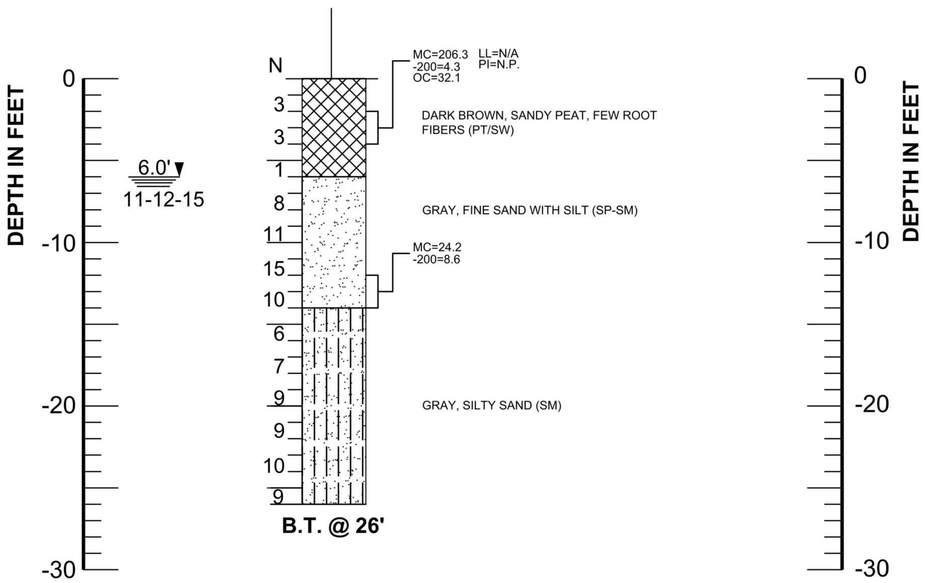

NOTES

(1) BORINGS WERE DRILLED ON NOVEMBER 12, 2015 USING A CENTRAL MINING EQUIPMENT MODEL 45 (CME 45) AUTOMATIC HAMMER DRILL RIG.

(2) STRATA BOUNDARIES ARE APPROXIMATE AND REPRESENT SOIL STRATA AT EACH TEST HOLE LOCATION ONLY. SOIL TRANSITIONS MAY BE MORE GRADUAL THAN IMPLIED.

(3) GROUNDWATER LEVELS SHOWN ON THE SUBSURFACE PROFILES REPRESENT GROUNDWATER SURFACES ON THE DATES SHOWN. GROUNDWATER LEVEL FLUCTUATIONS SHOULD BE ANTICIPATED THROUGHOUT THE YEAR.

(4) BORING LATITUDE & LONGITUDE WERE MEASURED USING A HAND-HELD GPS, AND CONVERTED TO NORTHING AND EASTING.

(5) AFTER COMPLETION OF DRILLING BOREHOLES WERE BACK FILLED WITH SOIL CUTTINGS AND GROUT.

(6) REFER TO DRAWING 01C101 FOR APPROXIMATE LOCATION OF BORING RELATIVE TO PROJECT FEATURES.

STANDARD PENETRATION TEST DATA

SPOON INSIDE DIA.	1.375 INCH
SPOON OUTSIDE DIA.	2.0 INCHES
AVG. HAMMER DROP	30 INCHES
HAMMER WEIGHT	140 POUNDS

GRANULAR MATERIALS

RELATIVE DENSITY	AUTOMATIC HAMMER SPT N-VALUE BLOWS/FOOT
VERY LOOSE	LESS THAN 3
LOOSE	3 - 8
MEDIUM	8 - 24
DENSE	24 - 40
VERY DENSE	GREATER THAN 40

SILTS AND CLAYS

CONSISTENCY	AUTOMATIC HAMMER SPT N-VALUE BLOWS/FOOT
VERY SOFT	LESS THAN 1
SOFT	1 - 3
FIRM	3 - 6
STIFF	6 - 12
VERY STIFF	12 - 24
HARD	GREATER THAN 24

LEGEND

PEAT/MUCK

PEAT/MUCK WITH GRAVEL

SAND

SILTY SAND

6.0' ▼ 11-12-15	GROUNDWATER DEPTH IN FEET NAVD 88 AND DRILLING DATE
N	STANDARD PENETRATION RESISTANCE- BLOWS PER FOOT USING AUTOMATIC HAMMER
SP-SM	UNIFIED SOIL CLASSIFICATION SYSTEM GROUP SYMBOL (ASTM D 2488)
B-1	STANDARD PENETRATION TEST (SPT) BORING AND NUMBER
MC	MOISTURE CONTENT (%)
OC	ORGANIC CONTENT (%)
LL	LIQUID LIMIT (%)
PI	PLASTICITY INDEX (%)
-200	AMOUNT PASSING US STANDARD # 200 SIEVE
B.T. @ 10'	BORING TERMINATED AT 10 FEET BELOW THE EXISTING GROUND SURFACE

ISSUE	DATE	DESCRIPTION
3	4/1/2016	FINAL DESIGN SUBMITTAL
2	1/8/2016	INTERMEDIATE DESIGN SUBMITTAL
1	10/20/2015	PRELIMINARY DESIGN SUBMITTAL

PROJECT MANAGER	RICHARD LEBLANC, P.E.
DESIGNED BY	R. LEBLANC
DRAWN BY	D. DIXON
CHECKED BY	M. REDINGTON
PROJECT NUMBER	000000000266294

PRELIMINARY NOT FOR CONSTRUCTION

ISTOKPOGA MARSH WATERSHED IMPROVEMENT DISTRICT
HIGHLANDS COUNTY, FLORIDA

GEOTECHNICAL

GEOTECHNICAL NOTES AND LOGS
(2 OF 3)

FILENAME 01B002.dwg
SCALE NONE
SHEET 01B002

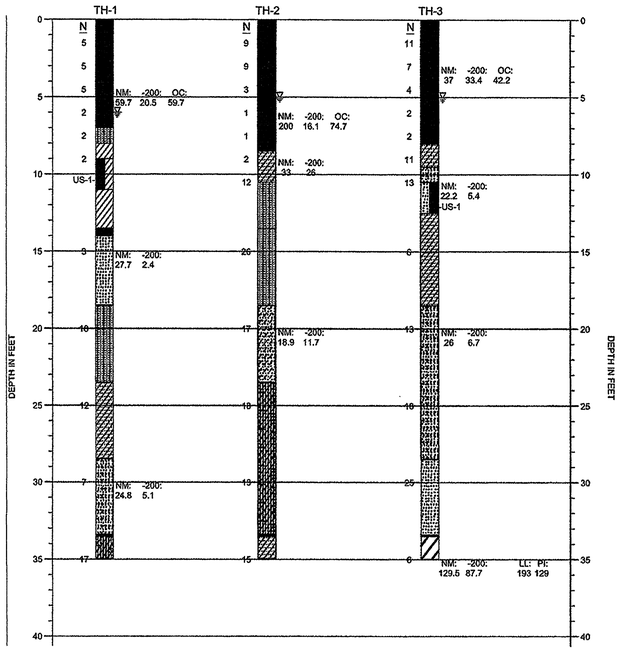

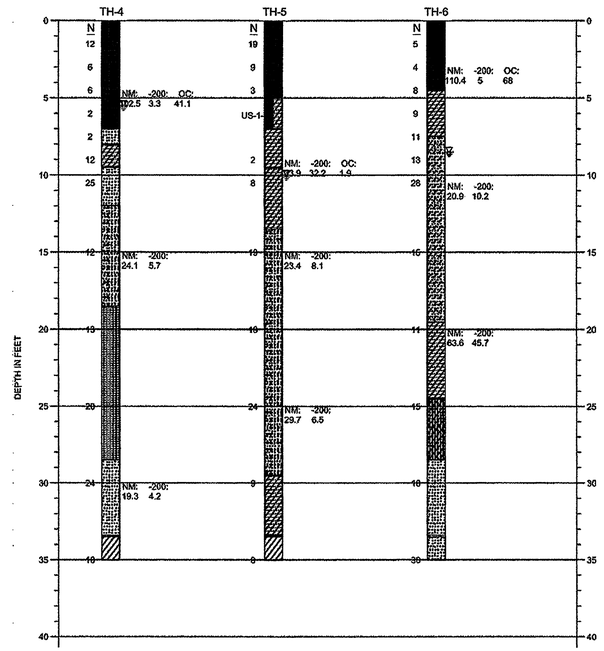

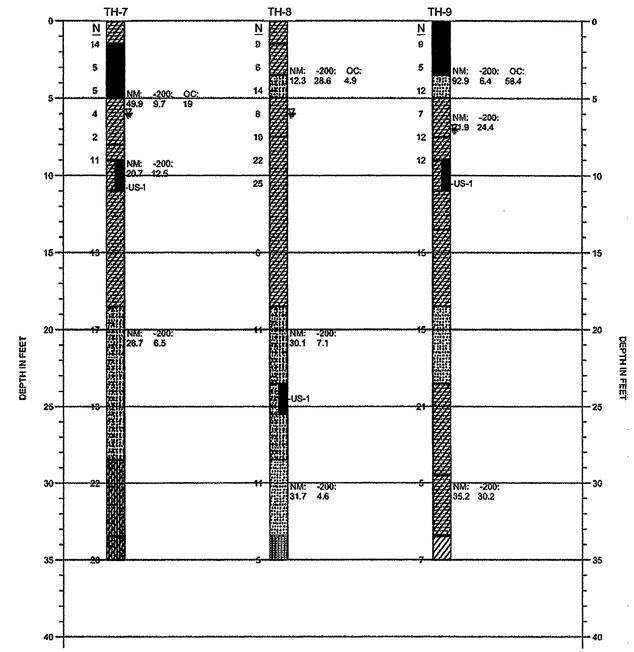

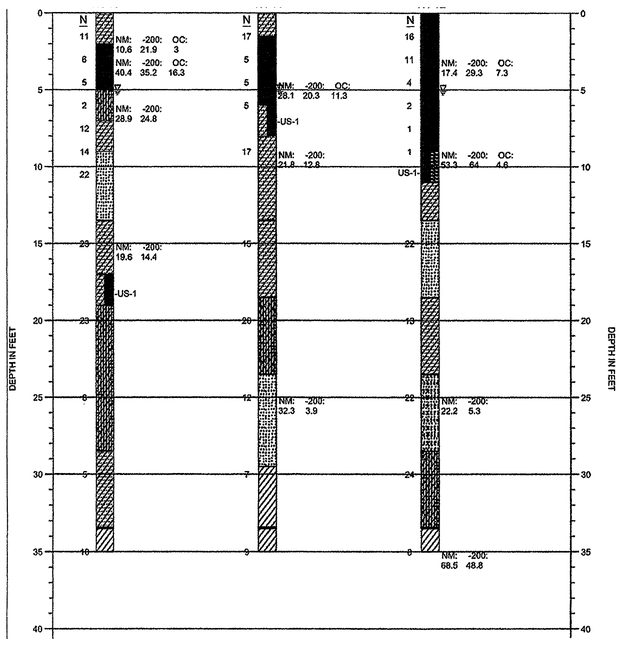

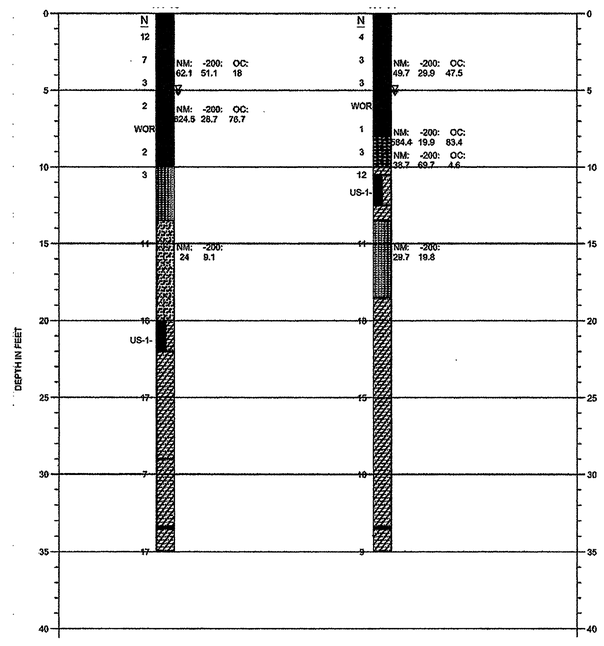

Soil Descriptions and Patterns for Boring Logs (Project No.: 12-51-9030)

SOIL DESCRIPTION	USCS	SYMBOL
SAND W/SILT	SP-SM	
SAND W/CLAY	SP-SC	
CLAYEY SAND	SC	
SILTY SAND	SM	
SILTY CLAYEY SAND	SC-SM	
SAND/ SAND TAILING	SP	
PEAT		
ELASTIC SILT	MH	
SANDY CLAY	CL	
FAT CLAY	CH	
ORGANIC CLAY	OH	

ENGINEERING CLASSIFICATION

COHESIONLESS

DESCRIPTION	BLOW COUNT "N"
VERY LOOSE	0 TO 4
LOOSE	4 TO 10
MEDIUM DENSE	10 TO 30
DENSE	30 TO 50
VERY DENSE	ABOVE 50

COHESIVE

DESCRIPTION	UNCONFINED COMPRESSIVE STRENGTH (TSF)	BLOW COUNT "N"
VERY SOFT	BELOW 0.25	0 TO 2
SOFT	0.25 TO 0.50	2 TO 4
MEDIUM STIFF	0.50 TO 1.0	4 TO 8
STIFF	1 TO 2	8 TO 15
VERY STIFF	2 TO 4	15 TO 30
HARD	ABOVE 4	ABOVE 30

WHILE THE BORINGS ARE REPRESENTATIVE OF SUBSURFACE CONDITIONS AT THEIR RESPECTIVE LOCATIONS AND FOR THEIR RESPECTIVE VERTICAL REACHES, LOCAL VARIATIONS CHARACTERISTIC OF THE SUBSURFACE MATERIALS OF THE REGION ARE ANTICIPATED AND MAY BE ENCOUNTERED. THE BORING LOGS AND RELATED INFORMATION ARE BASED ON THE DRILLERS LOGS AND VISUAL EXAMINATION OF SELECTED SAMPLES IN THE LABORATORY. THE DELINEATION BETWEEN SOIL TYPES SHOWN ON THE LOGS IS APPROXIMATE AND THE DESCRIPTION REPRESENTS OUR INTERPRETATION OF SUBSURFACE CONDITIONS AT THE DESIGNATED BORING LOCATIONS ON THE PARTICULAR DATE DRILLED.

GROUNDWATER ELEVATIONS SHOWN ON THE BORING LOGS REPRESENT GROUNDWATER SURFACES ENCOUNTERED ON THE DATES SHOWN. FLUCTUATIONS IN WATER TABLE LEVELS SHOULD BE ANTICIPATED THROUGHOUT THE YEAR. ABSENCE OF WATER DATA ON CERTAIN BORINGS IMPLIES THAT NO GROUNDWATER DATA IS AVAILABLE. MAY DOES NOT NECESSARILY MEAN THAT GROUNDWATER WILL NOT BE ENCOUNTERED AT THOSE LOCATIONS OR WITHIN THE VERTICAL REACHES OF THESE BORINGS IN THE FUTURE.

Miscellaneous Symbols

GROUND WATER TABLE ON DATE INDICATED — GWT

BORING CONTINUATION

UNDISTURBED SAMPLE — US-1-

W.O.R. - PENETRATED UNDER STATIC WEIGHT OF DRILLING TOOLS & RODS

LEGEND:

TH-1	STANDARD PENETRATION TEST BORING (ASTM D-1586)
N	STANDARD PENETRATION RESISTANCE
NM	NATURAL MOISTURE CONTENT IN PERCENT
-200	PERCENT OF SAMPLE PASSING THROUGH THE US NO. 200 SIEVE
OC	ORGANIC CONTENT

NOTES:

1. BORINGS WERE DRILLED FROM FEBRUARY 27, 2012 TO MARCH 2, 2012 BY ARDAMAN AND ASSOCIATES, INC.
2. STRATA BOUNDARIES ARE APPROXIMATE AND REPRESENT SOIL STRATA AT EACH TEST HOLE LOCATION ONLY. SOIL TRANSITIONS MAY BE MORE GRADUAL THAN IMPLIED.
3. GROUNDWATER LEVELS SHOWN ON THE SUBSURFACE PROFILES REPRESENT GROUNDWATER SURFACES ON THE DATES BORED. GROUNDWATER LEVEL FLUCTUATIONS SHOULD BE ANTICIPATED THROUGHOUT THE YEAR.
4. BORING NORTHING AND EASTINGS BY ARDAMAN AND ASSOCIATES, INC. REPORT OF HYDROGEOLOGIC & GEOTECHNICAL STUDY FOR ISTOKPOGA MARSH WATERSHED IMPROVEMENT DISTRICT DATED MAY 1, 2012.
5. REFER TO DRAWING 01C101 FOR APPROXIMATE LOCATION OF BORINGS RELATIVE TO PROJECT FEATURES.

ISSUE	DATE	DESCRIPTION
3	4/1/2016	FINAL DESIGN SUBMITTAL
2	1/8/2016	INTERMEDIATE DESIGN SUBMITTAL
1	10/20/2015	PRELIMINARY DESIGN SUBMITTAL

PROJECT MANAGER	RICHARD LEBLANC, P.E.
DESIGNED BY	R. LEBLANC
DRAWN BY	D. DIXON
CHECKED BY	M. REDINGTON
PROJECT NUMBER	000000000266294

PRELIMINARY NOT FOR CONSTRUCTION

ISTOKPOGA MARSH WATERSHED IMPROVEMENT DISTRICT HIGHLANDS COUNTY, FLORIDA

GEOTECHNICAL

GEOTECHNICAL NOTES AND LOGS (3 OF 3)

FILENAME 01B003.dwg

SCALE NONE

SHEET 01B003

GENERAL NOTES

SURVEY:

1. TOPOGRAPHIC SURVEY PROVIDED BY CHASTAIN-SKILLMAN, ENGINEERS/ ARCHITECTS/SURVEYORS/SCIENTISTS DATED 2/29/2012.

2. ELEVATIONS AND DISTANCES ARE SHOWN IN FEET.

3. HORIZONTAL DATUM IS NORTH AMERICAN DATUM 1983 (NAD83), FLORIDA STATE PLANE, WEST ZONE.

4. ELEVATIONS REFER TO THE NORTH AMERICAN VERTICAL DATUM 1988 (NAVD88).

5. EXISTING SITE TOPOGRAPHY FOR SELECTED AREAS IS INCLUDED ON THE DRAWINGS. CONTRACTOR MAY OBTAIN THE ELECTRONIC TOPOGRAPHIC CADD FILES FOR THE PROJECT SITE FROM THE COUNTY.

6. ALL BOUNDARY CORNERS AND MONUMENTS WITHIN THE CONSTRUCTION AREA NEED TO BE FLAGGED AND POSTED AS DO NOT DISTURB. IF A CORNER MONUMENT OR MONUMENT IS IN DANGER OF BEING DESTROYED AND HAS NOT BEING PROPERLY REFERENCED, THE CONTRACTOR SHALL NOTIFY THE COUNTY WITHOUT DELAY. THE CONTRACTOR IS RESPONSIBLE FOR REPLACING ANY DAMAGED MONUMENTATION TO ITS CORRECT AND FORMER LOCATION WITH THE SAME DEGREE OR ACCURACY AS IT WAS SET AND IN ACCORDANCE WITH SPECIFICATION SECTION 01050, FIELD ENGINEERING.

7. EXISTING CONTOURS AND LIDAR POINT DATA SHOWN ON THE DRAWINGS WERE SPACED SUCH THAT CANALS AND DITCHES WITHIN THE PROJECT/IMPOUNDMENT AREA ARE NOT DEPICTED.

8. REFER TO DRAWING 01C110 FOR PLAN VIEW OF THE LOCATION OF THE SURVEY CONTROL POINTS DEPICTED IN THE TABLE.

9. THE CONTRACTOR SHALL CHECK AND VERIFY, BY A FLORIDA REGISTERED LAND SURVEYOR, THE CONTROL POINT INFORMATION AS SHOWN ON THIS DRAWING. THE CONTRACTOR SHALL SUBMIT A LETTER FROM A FLORIDA REGISTERED LAND SURVEYOR WITH A SURVEY REPORT AND FIELD NOTES ACKNOWLEDGING EITHER THE CONTRACTOR'S ACCEPTANCE OF THE CORRECTNESS OF THE CONTROL POINT INFORMATION SHOWN ON THIS DRAWING OR PROVIDE DETAILS OF THE CONTROL POINT INFORMATION THE CONTRACTOR WILL UTILIZE, TO THE COUNTY FOR REVIEW AND APPROVAL PRIOR TO THE START OF CONSTRUCTION.

10. THE CONTRACTOR SHALL EXPAND INTO SECONDARY CONTROL BY ADDING SURVEY CONTROL NEEDED FOR THE PROJECT. PROVIDE DESCRIPTION OF SECONDARY CONTROL TO THE COUNTY PRIOR TO THE START OF CONSTRUCTION. THE DESCRIPTION SHALL INCLUDE COORDINATES AND ELEVATIONS OF ALL SECONDARY CONTROL POINTS.

11. ALL LEVELING SHALL BE COMPLETED UNDER THE SUPERVISION OF A FLORIDA REGISTERED LAND SURVEYOR. LEVEL RUNS SHALL MEET OR EXCEED THE NATIONAL GEODETIC SURVEY STANDARD FOR THIRD ORDER LEVELING (12MM. SQ. RT. K).

12. THE CONTRACTOR SHALL MAINTAIN DETAILED SURVEY RECORDS INCLUDING A DESCRIPTION OF THE WORK PERFORMED ON EACH SHIFT, THE METHODS UTILIZED, AND THE CONTROL POINTS USED. THE RECORD SHALL BE ADEQUATE TO ALLOW THE SURVEY TO BE REPRODUCED AND PROVIDE TO THE COUNTY UPON REQUEST.

13. REFER TO SPECIFICATION SECTION 01050, FIELD ENGINEERING, FOR REFERENCE POINTS AND SURVEYING STANDARDS AND FOR INFORMATION ON RE-ESTABLISHING CONTROL, POINTS REMOVED OR DAMAGED DURING CONSTRUCTION ACTIVITIES.

14. THE CONTRACTOR SHALL PERFORM ALL SURVEYS UTILIZING THE SAME HORIZONTAL AND VERTICAL DATUM THESE DRAWINGS USE.

GENERAL:

1. THE INTENT OF THESE NOTES IS TO SUPPLEMENT THE SPECIFICATIONS PREPARED FOR THE PROJECT. IN THE EVENT OF A CONFLICT OR THE NEED FOR CLARIFICATION, THE CONTRACTOR SHALL CONTACT THE COUNTY PRIOR TO COMMENCEMENT OF WORK.

2. THE CONTRACTOR IS SOLELY RESPONSIBLE FOR SITE SAFETY ASSOCIATED WITH THE WORK UNDER THIS PROJECT AND FOR COMPLIANCE WITH ALL FEDERAL, STATE, AND LOCAL HEALTH AND SAFETY LAWS, CODES, REGULATIONS, AND ORDINANCES INCLUDING BUT NOT LIMITED TO THOSE CURRENTLY MANDATED BY THE OCCUPATIONAL SAFETY AND HEALTH ADMINISTRATION (OSHA).

3. SCALE DATA SHALL NOT BE MEASURED FROM THE DRAWINGS.

UTILITY:

1. PURSUANT TO FLORIDA STATUTE 553.81, THE CONTRACTOR SHALL SCHEDULE UTILITY LOCATIONS WITHIN SUNSHINE STATE ONE CALL OF FLORIDA NOT LESS THAN 48 HOURS, OR, MORE THAN 5 WORKING DAYS PRIOR TO START OF WORK. PHONE NUMBER 1-800-432-4770.

2. LOCATIONS OF EXISTING UTILITIES SHOWN ON THESE DRAWINGS WERE COMPILED BASED ON THE BEST INFORMATION AVAILABLE AND ARE APPROXIMATE. THESE LOCATIONS ARE NOT INTENDED TO BE EXACT OR COMPLETE. CONTRACTOR IS RESPONSIBLE FOR LOCATING AND IDENTIFYING ALL EXISTING UTILITIES, BOTH ABOVEGROUND AND UNDERGROUND PRIOR TO COMMENCEMENT OF CONSTRUCTION ACTIVITIES. NO SEPARATE PAYMENT WILL BE MADE FOR FIELD VERIFICATION. ADJUSTMENTS TO LAYOUT SHOWN SHALL BE SUBJECT TO COUNTY APPROVAL.

3. CONTRACTOR SHALL REPAIR, AT HIS OWN EXPENSE, ANY DAMAGE CAUSED BY CONSTRUCTION RELATED ACTIVITIES TO EXISTING UTILITY SERVICE LINES.

4. IN THE EVENT OF DAMAGE TO EXISTING UTILITIES, CONTRACTOR SHALL STOP WORK IMMEDIATELY, TAKE NECESSARY PRECAUTIONS TO PREVENT INJURY OR FURTHER DAMAGE, AND NOTIFY PROPER AUTHORITIES. CONTRACTOR SHALL BE RESPONSIBLE FOR RESTORING/REPAIRING ALL EXISTING STRUCTURES, CONDUITS, OR OTHER UTILITIES DAMAGED BY CONTRACTOR'S OPERATIONS AT NO COST TO COUNTY.

5. UTILITIES AND STRUCTURES NOT SHOWN ON THE DRAWINGS TO BE REMOVED AND REPLACED OR RELOCATED SHALL BE PROTECTED IN PLACE, AND UTILITY SERVICE SHALL BE MAINTAINED WHERE TEMPORARY CONFLICTS OCCUR BETWEEN EXISTING UTILITIES AND THE NEW CONSTRUCTION. THE CONTRACTOR SHALL PROTECT IN PLACE OR RELOCATE THE UTILITIES AND MAINTAIN SERVICE TO THE SATISFACTION OF THE UTILITY COMPANY OR OWNER. NO SEPARATE PAYMENT WILL BE MADE TO THE CONTRACTOR FOR PROTECTING OR RELOCATING THE UTILITIES AND FOR MAINTAINING SERVICE TO THE SATISFACTION OF THE UTILITY COMPANY OR OWNER.

6. ALL UTILITIES INTERFERING WITH CONSTRUCTION SHALL BE REMOVED, RELOCATED OR ADJUSTED UNDER THIS CONTRACT UNLESS THE DRAWINGS AND SPECIFICATIONS INDICATE OTHERWISE. THE CONTRACTOR SHALL ARRANGE HIS SCHEDULE TO ALLOW UTILITIES OWNERS TIME FOR THE NECESSARY RELOCATION AND ADJUSTMENT OF UTILITIES AND RELATED STRUCTURES. NO SEPARATE PAYMENT WILL BE MADE TO THE CONTRACTOR FOR PROTECTING OR RELOCATING THE UTILITIES AND FOR MAINTAINING SERVICE TO THE SATISFACTION OF THE UTILITY OWNER.

7. CONTRACTOR SHALL BE RESPONSIBLE FOR OBTAINING WHATEVER UTILITY SERVICES ARE REQUIRED TO SUPPORT THE EFFORTS SPECIFIED IN THESE DRAWINGS AND SPECIFICATIONS FOR THE TERM OF THE CONTRACT. THE CONTRACTOR SHALL PAY ALL COSTS ASSOCIATED WITH THESE UTILITY SERVICES INCLUDING DEPOSITS, CONNECTION AND DISCONNECTION CHARGES. THE CONTRACTOR SHALL BE RESPONSIBLE FOR ANY PERMITS REQUIRED TO OBTAIN UTILITY SERVICES. REFER TO SPECIFICATIONS SECTION 01510, TEMPORARY UTILITIES AND FACILITIES.

8. POWER FACILITIES WILL BE PROVIDED AT THE ENTRANCE TO THE PROJECT SITE IN LOCATIONS AS SHOWN ON THE DRAWINGS BY DUKE ENERGY. CONTRACTOR SHALL COORDINATE WITH DUKE ENERGY FOR THE CONSTRUCTION OF PROJECT PERMANENT POWER AT CONNECTIONS.

GRADING:

1. SPECIFIC STATIONING AND ALIGNMENT DATA AS SHOWN ON THE DRAWINGS SHALL BE USED FOR CONSTRUCTION.

2. ALL ELEVATIONS ARE FINAL ELEVATIONS AFTER CONSTRUCTION AND SETTLEMENT.

PERMITS:

1. CONTRACTOR SHALL BE RESPONSIBLE FOR THE NECESSARY PERMITS FOR CONSTRUCTION INCLUDING BUT NOT LIMITED TO SPECIFICATION SECTIONS 00500, CONSTRUCTION CONTRACT AND 02270, SOIL EROSION AND SEDIMENT CONTROL. CONTRACTOR SHALL COMPLY WITH ALL CONDITIONS OF OWNER-OBTAINED PERMITS.

2. ALL WORK PERFORMED SHALL COMPLY WITH APPLICABLE REGULATIONS AND ORDINANCES OF THE VARIOUS GOVERNMENT AGENCIES HAVING JURISDICTION OVER THE WORK PERFORMED. THE CONTRACTOR SHALL BE RESPONSIBLE FOR ANY COST INCLUDING PENALTIES/FINES LEVIED FOR WORK THAT IS NOT PERFORMED IN ACCORDANCE WITH PERMIT CONDITIONS.

DUST CONTROL:

1. THE CONTRACTOR SHALL CONTROL VISIBLE DUST EMISSIONS FROM HIS ACTIVITIES IN ACCORDANCE WITH THE APPROVED DUST CONTROL PLAN. REFER TO SPECIFICATIONS SECTION 01560, ENVIRONMENTAL PROTECTION AND SPECIAL CONDITIONS.

DEWATERING:

1. THE CONTRACTOR SHALL PROVIDE A DEWATERING PLAN NECESSARY TO SUCCESSFULLY COMPLETE EXCAVATION, PLACEMENT OF FILL, COMPACTION, AND CONSTRUCTION OF ALL PROJECT FEATURES. THIS PLAN SHALL BE SUBMITTED TO THE COUNTY IN CONFORMANCE WITH SPECIFICATION SECTIONS 01340 SUBMITTALS AND 02200 EARTHWORK. THIS DEWATERING PLAN SUBMITTAL IS IN ADDITION TO ANY RELATED PERMITTING REQUIREMENTS.

2. THE LENGTH, DURATION AND DESIGN OF THE CONTRACTOR'S DEWATERING SYSTEM SHALL NOT IMPACT ADJACENT PROPERTIES AND WETLANDS.

3. DISCHARGE OF GROUNDWATER SHALL BE IN CONFORMANCE WITH ALL FEDERAL, STATE, AND LOCAL PERMITTING REQUIREMENTS.

MAINTENANCE:

1. ALL GRASSED AREAS WITHIN THE PROJECT LIMITS SHALL BE MOWED AND MAINTAINED IN ACCORDANCE WITH THE SPECIFICATIONS FOR THE TERM OF THE CONTRACT.

2. ALL STRUCTURES AND PROJECT FEATURES, SHALL BE MAINTAINED BY THE CONTRACTOR THROUGH FINAL COMPLETION.

3. MAINTAIN TEMPORARY AND PERMANENT DRAINAGE STRUCTURES AND EROSION CONTROL BMP'S IN ACCORDANCE WITH THESE DRAWINGS AND SPECIFICATIONS.

4. PRIOR TO MOBILIZATION THE CONTRACTOR SHALL PROVIDE FOR COUNTY'S REVIEW AN ACCESS ROAD SURVEY AND VIDEO RECORDINGS OF PRE-CONSTRUCTION CONDITIONS OF THE ROADS TO BE USED BY THE CONTRACTOR. THE CONTRACTOR SHALL MAINTAIN THOSE ROADS IN PRE-CONSTRUCTIUON OR BETTER CONDITION AT ALL TIMES DURING THE TERM OF THE CONTRACT UNLESS THESE ROADS ARE OTHERWISE IMPROVED BY THE CONTRACTOR. EQUALLY, THE CONTRACTOR SHALL PROVIDE AN ACCESS ROAD SURVEY AND VIDEO RECORDINGS BEFORE PROJECT COMPLETION. THE ACCESS ROAD SURVEYS ARE FOR THE PURPOSE OF VERIFYING THAT THE ROADS USED BY THE CONTRACTOR ARE ALWAYS MAINTAINED AND RETURNED TO THE COUNTY IN THE SAME OR BETTER CONDITION THAT IT WAS PRIOR TO THIS CONTRACT. REFER TO SPECIFICATION SECTION 01510 FOR ACCESS ROADS SURVEY REQUIREMENTS.

DEMOLITION NOTES:

1. ALL EXISTING MAN-MADE ITEMS INTERFERING WITH CONSTRUCTION OR INDICATED ON THE DRAWINGS FOR DEMOLITION ARE TO BE REMOVED BY THE CONTRACTOR AND DISPOSED OF IN ACCORDANCE WITH CONTRACT DRAWINGS AND SPECIFICATIONS AND APPLICABLE FEDERAL, STATE AND LOCAL LAWS AND REGULATIONS. IT IS THE RESPONSIBILITY OF THE CONTRACTOR TO IDENTIFY ALL EXISTING CONDITIONS. REFER TO SPECIFICATION SECTION 02072, DEMOLITION. THE CONTRACTOR IS REQUIRED TO SUBMIT A DEMOLITION PLAN PER SPECIFICATION SECTION 01340, SUBMITTALS TO THE COUNTY FOR ACCEPTANCE.

2. REMOVAL OF THE MAN-MADE ITEMS INCLUDES, BUT NOT LIMITED TO, IRRIGATION PIPING AND ASSOCIATED EQUIPMENT, IRRIGATION FACILITIES, ABOVE GROUND PIPING AND RISERS, UNDERGROUND PIPING, CONCRETE SLABS, FENCES, GATES, CULVERTS, ABANDONED EQUIPMENT, DEBRIS, AND APPURTENANCES.

3. ALL STRUCTURES ENCOUNTERED ABOVE AND BELOW GRADE DURING DEMOLITION SHALL BE REMOVED FROM THE SITE BY THE CONTRACTOR UNLESS OTHERWISE NOTED ON THE DRAWINGS AND IN THE SPECIFICATIONS. REMOVALS OF ANY UTILITY SHALL BE COORDINATED WITH THAT UTILITY PRIOR TO REMOVAL. ALL DEMOLITION MATERIALS SHALL BE PROPERLY REMOVED FROM THE SITE, UNLESS OTHERWISE SPECIFIED.

4. ANY PLANNED OR PROPOSED ALTERATIONS OR ADDITIONS TO THE DEMOLITION PLAN MUST BE REVIEWED AND APPROVED, IN WRITING, BY THE COUNTY PRIOR TO IMPLEMENTATION.

ISSUE	DATE	DESCRIPTION
3	4/1/2016	FINAL DESIGN SUBMITTAL
2	1/8/2016	INTERMEDIATE DESIGN SUBMITTAL
1	10/20/2015	PRELIMINARY DESIGN SUBMITTAL

PROJECT MANAGER	RICHARD LEBLANC, P.E.
DESIGNED BY	R. LEBLANC
DRAWN BY	D. DIXON
CHECKED BY	M. REDINGTON
PROJECT NUMBER	000000000266294

PRELIMINARY NOT FOR CONSTRUCTION

ISTOKPOGA MARSH WATERSHED IMPROVEMENT DISTRICT HIGHLANDS COUNTY, FLORIDA

CIVIL

CIVIL SITE NOTES

FILENAME 01C001.dwg

SCALE NONE

SHEET 01C001

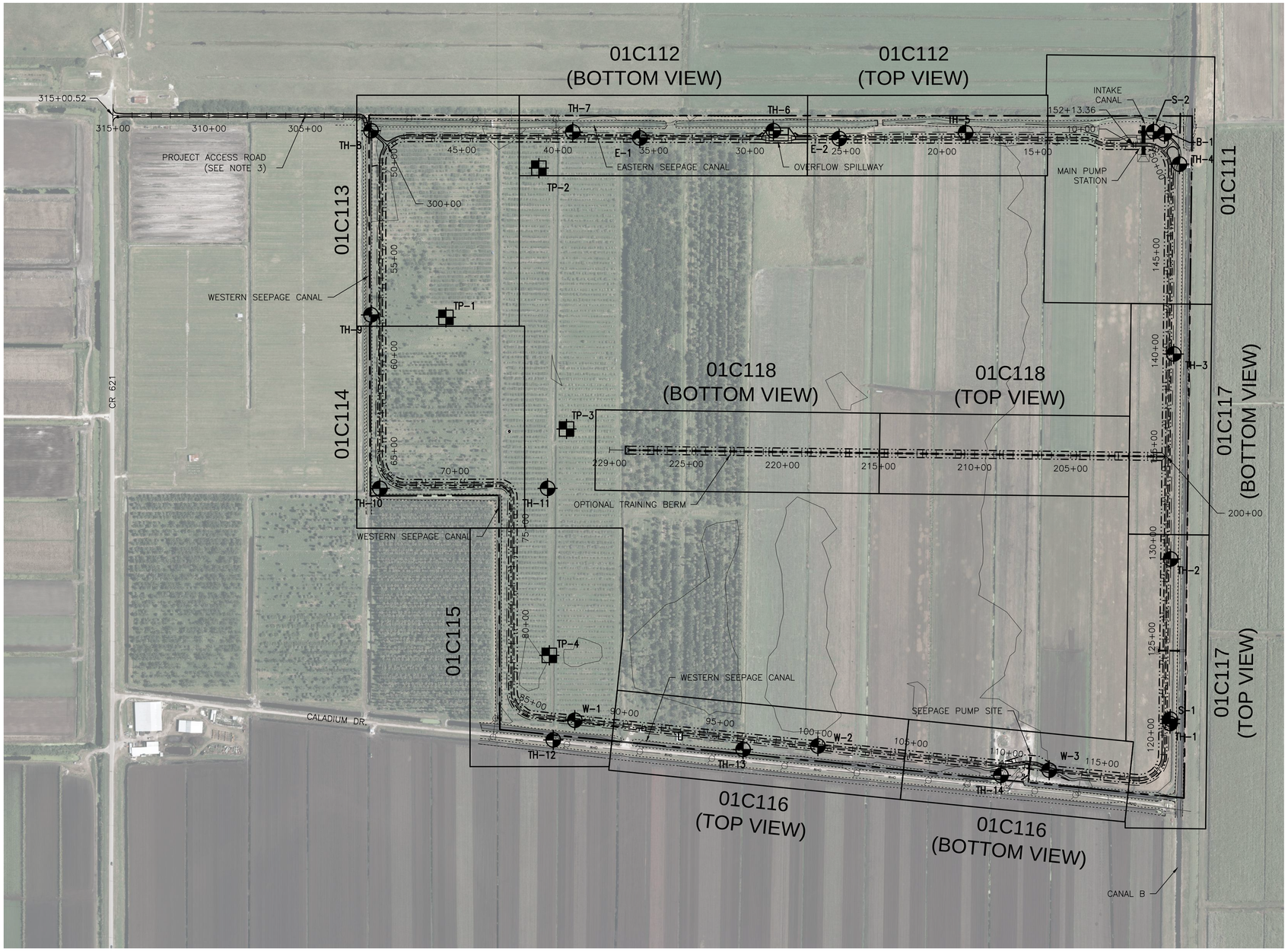

NOTES:

1. DRAWING TEXT FOR PLAN AND PROFILE DRAWING IS ORIENTED WITH THE IMPOUNDMENT PLAN VIEW. IMPOUNDMENT INTERIOR IS ALWAYS AT THE TOP OF THE PLAN AND PROFILE DRAWING.
2. SITE FEATURES SHOWN OUTSIDE CONSTRUCTION LIMITS ARE FOR GENERAL PURPOSES ONLY.
3. REFER TO SHEET 01C201 FOR PROJECT ACCESS ROAD IMPROVEMENTS PLAN.
4. REFER TO SHEETS 01B001 THROUGH 01B003 FOR GEOTECHNICAL BORING AND TEST PIT INFORMATION.

1"=300' 0 300' 600' 1200'

ISSUE	DATE	DESCRIPTION
3	4/1/2016	FINAL DESIGN SUBMITTAL
2	1/8/2016	INTERMEDIATE DESIGN SUBMITTAL
1	10/20/2015	PRELIMINARY DESIGN SUBMITTAL

PROJECT MANAGER	RICHARD LEBLANC, P.E.
DESIGNED BY	R. LEBLANC
DRAWN BY	D. DIXON
CHECKED BY	M. REDINGTON
PROJECT NUMBER	000000000266294

PRELIMINARY NOT FOR CONSTRUCTION

ISTOKPOGA MARSH WATERSHED IMPROVEMENT DISTRICT
HIGHLANDS COUNTY, FLORIDA

CIVIL

OVERALL SITE PLAN

FILENAME	01C101.dwg
SCALE	1"=300'
SHEET	01C101

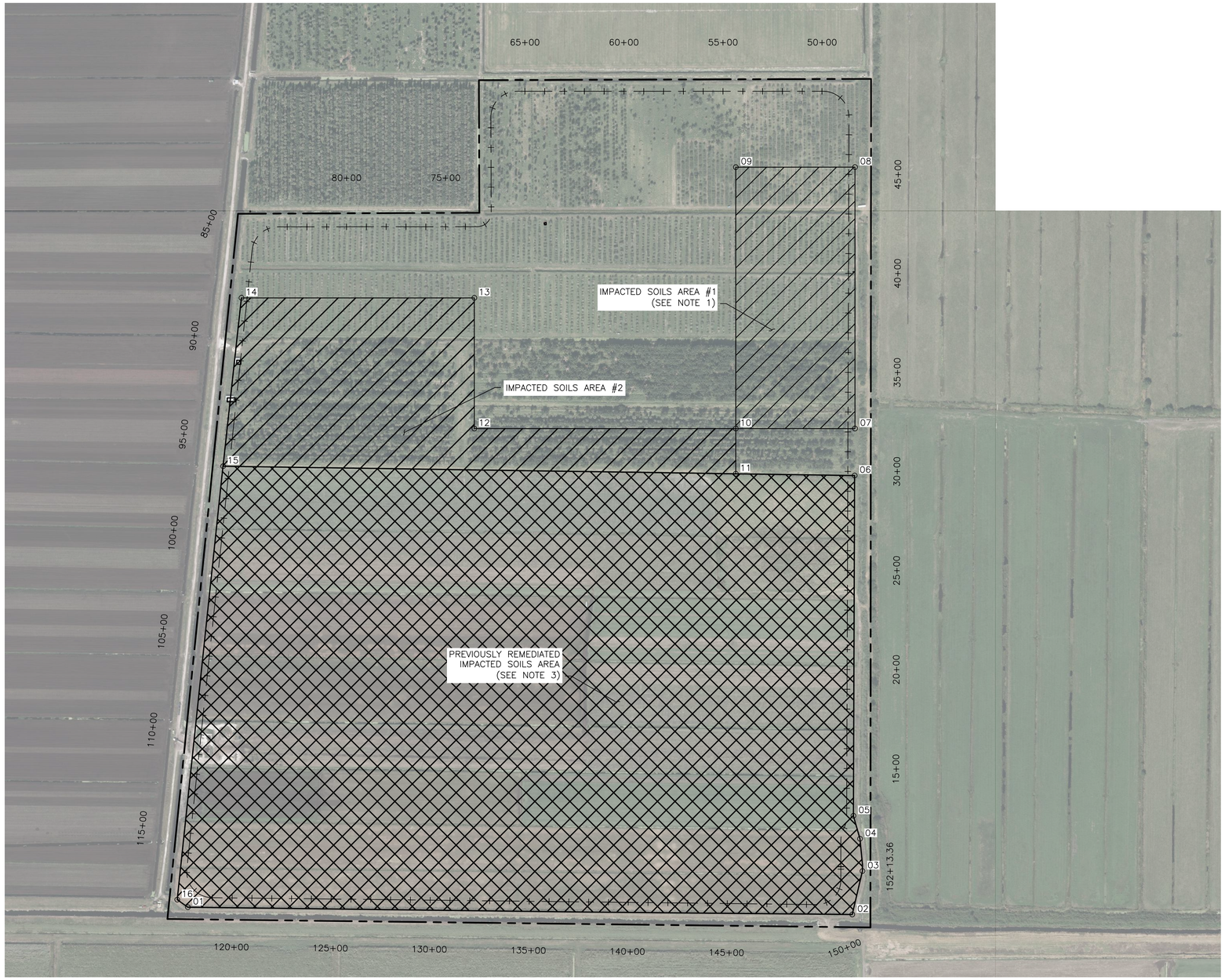

NOTES:

1. IMPACTED SOIL AREA #1 (DEFINED BY POINTS 07, 08, 09 AND 10) SHALL BE CLEARED, GRUBBED AND SAMPLED PER SPECIFICATION SECTION 02205 PRIOR TO ANY REMEDIATION ACTIVITIES.
2. THE POINT DATA SHOWN HERE IS FOR THIS SHEET ONLY.
3. EARTHWORK WITHIN THE PREVIOUSLY REMEDIATED IMPACTED SOILS AREA SHALL BE AVOIDED WITH THE EXCEPTION OF EARTHWORK REQUIRED FOR EMBANKMENT AND PUMP STATION CONSTRUCTION. FOR EXCAVATION WORK WITHIN THIS AREA, THE CONTRACTOR SHALL REMEDIATE THE TOP 30 INCHES OF SOIL PER SPECIFICATION SECTION 02205.

N

POINT DATA

POINT NO.	NORTHING	EASTING
01	1071483.86	565922.00
02	1071446.86	569276.26
03	1071666.19	569327.98
04	1071829.09	569315.43
05	1071945.21	569282.40
06	1073663.62	569288.04
07	1073900.60	569290.13
08	1075220.60	569290.13
09	1075220.46	568688.24
10	1073900.46	568688.24
11	1073672.45	568688.24
12	1073900.46	567368.24
13	1074560.46	567368.24
14	1074560.46	566192.21
15	1073710.56	566099.63
16	1071521.54	565868.48

LEGEND

IMPACTED SOILS AREA

PREVIOUSLY REMEDIATED IMPACTED SOILS AREA

1"=300' 0 300' 600' 1200'

ISSUE	DATE	DESCRIPTION
3	4/1/2016	FINAL DESIGN SUBMITTAL
2	1/8/2016	INTERMEDIATE DESIGN SUBMITTAL
1	10/20/2015	PRELIMINARY DESIGN SUBMITTAL

PROJECT MANAGER	RICHARD LEBLANC, P.E.
DESIGNED BY	R. LEBLANC
DRAWN BY	T. BURTON
CHECKED BY	M. REDINGTON
PROJECT NUMBER	000000000266294

PRELIMINARY NOT FOR CONSTRUCTION

ISTOKPOGA MARSH WATERSHED IMPROVEMENT DISTRICT
HIGHLANDS COUNTY, FLORIDA

CIVIL

IMPACTED SOILS PLAN

FILENAME 01C102.dwg
SCALE 1"=300'
SHEET 01C102

N

NOTES:

1. IF CONTRACTOR REMOVES TREES FROM OPTIONAL TREE REMOVAL AREA #1, TREES FROM OPTIONAL TREE REMOVAL AREA #2 MUST BE REMOVED.
2. TREES MAY BE REMOVED FROM OPTIONAL TREE AREA #2 WITHOUT REMOVING TREES FROM OPTIONAL TREE AREA #1.
3. EXISTING CULVERTS FROM THE PROJECT SITE TO THE SEEPAGE CANALS AND CANAL B SHALL BE REMOVED. SEE EMBANKMENT PLAN SHEETS 01C111 THROUGH 01C117 FOR EXISTING CULVERT LOCATIONS.
4. OPTIONAL TREE REMOVAL AREAS #1 AND #2 ARE BOUNDED BY THE IMPACTED SOILS AREA POINTS SHOWN ON SHEET 01C102.
5. EXISTING CANALS ADJACENT TO THE IMPOUNDMENT EMBANKMENT (WESTERN SEEPAGE CANAL, EASTERN SEEPAGE CANAL, AND CANAL B) SHALL BE CLEARED, REPAIRED AND MAINTAINED PER SPECIFICATION 02110.

LEGEND

- OPTIONAL TREE REMOVAL AREA
- TREE REMOVAL AREA
- STRUCTURE REMOVAL AREA

1"=300' 0 300' 600' 1200'

ISSUE	DATE	DESCRIPTION
3	4/1/2016	FINAL DESIGN SUBMITTAL
2	1/8/2016	INTERMEDIATE DESIGN SUBMITTAL
1	10/20/2015	PRELIMINARY DESIGN SUBMITTAL

PROJECT MANAGER	RICHARD LEBLANC, P.E.
DESIGNED BY	R. LEBLANC
DRAWN BY	T. BURTON
CHECKED BY	M. REDINGTON
PROJECT NUMBER	000000000266294

PRELIMINARY NOT FOR CONSTRUCTION

ISTOKPOGA MARSH WATERSHED IMPROVEMENT DISTRICT HIGHLANDS COUNTY, FLORIDA

CIVIL

DEMOLITION PLAN

FILENAME	01C103.dwg
SCALE	1"=300'
SHEET	01C103

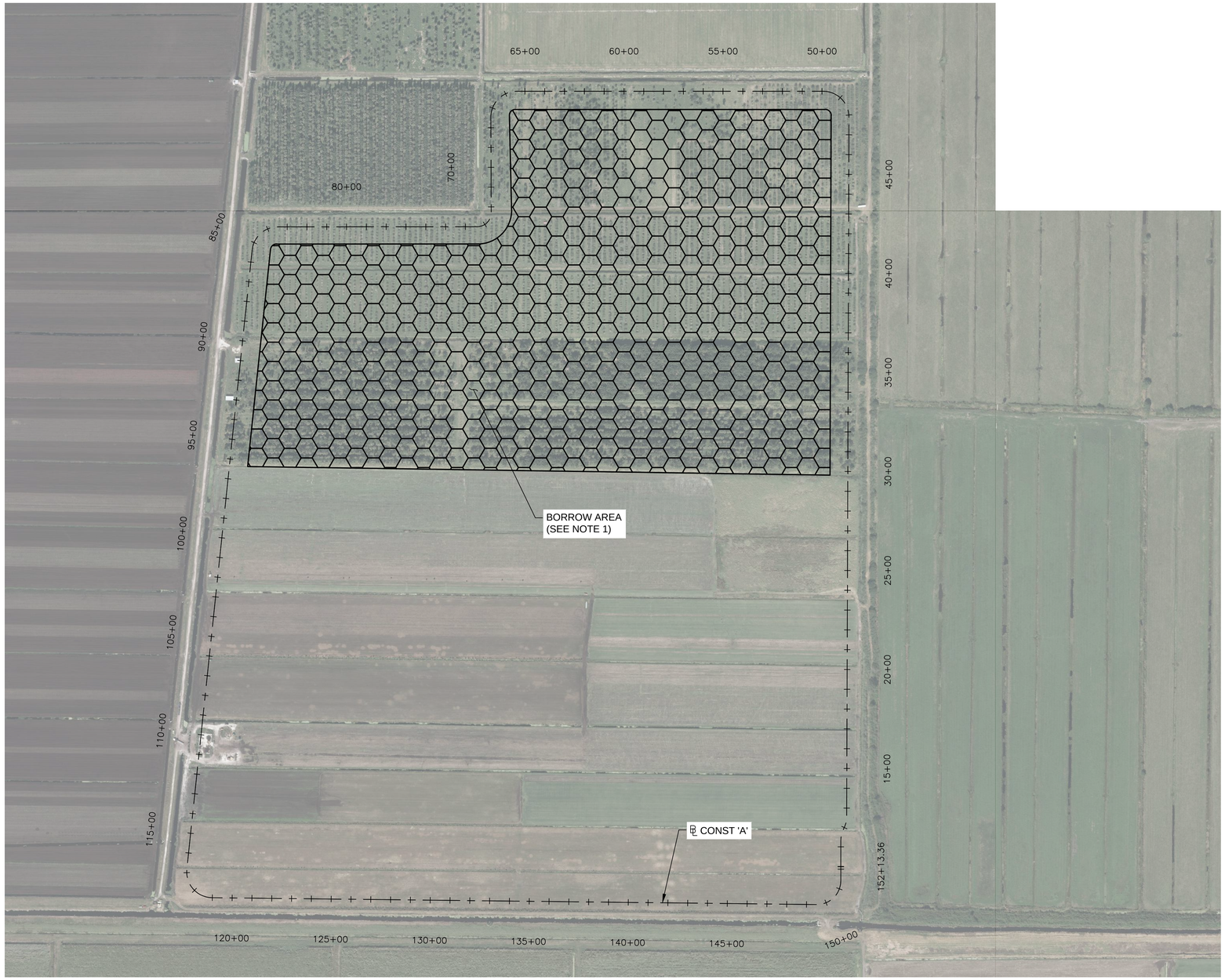

NOTES:

1. BORROW AREA SHALL BE NORTH OF THE PREVIOUSLY REMEDIATED IMPACTED SOILS AREA SHOWN ON SHEET 01C102.
2. BORROW BELOW EL 30.0' SHALL NOT BE WITHIN 150 FT OF THE LIMIT OF EXCAVATION FOR EMBANKMENT CONSTRUCTION.

N

LEGEND

BORROW AREA

1"=300' 0 300' 600' 1200'

ISSUE	DATE	DESCRIPTION
3	4/1/2016	FINAL DESIGN SUBMITTAL
2	1/8/2016	INTERMEDIATE DESIGN SUBMITTAL
1	10/20/2015	PRELIMINARY DESIGN SUBMITTAL

PROJECT MANAGER	RICHARD LEBLANC, P.E.
DESIGNED BY	R. LEBLANC
DRAWN BY	T. BURTON
CHECKED BY	M. REDINGTON
PROJECT NUMBER	000000000266294

PRELIMINARY NOT FOR CONSTRUCTION

ISTOKPOGA MARSH WATERSHED IMPROVEMENT DISTRICT
HIGHLANDS COUNTY, FLORIDA

CIVIL

BORROW PLAN

FILENAME 01C104.dwg
SCALE 1"=300'

SHEET 01C104

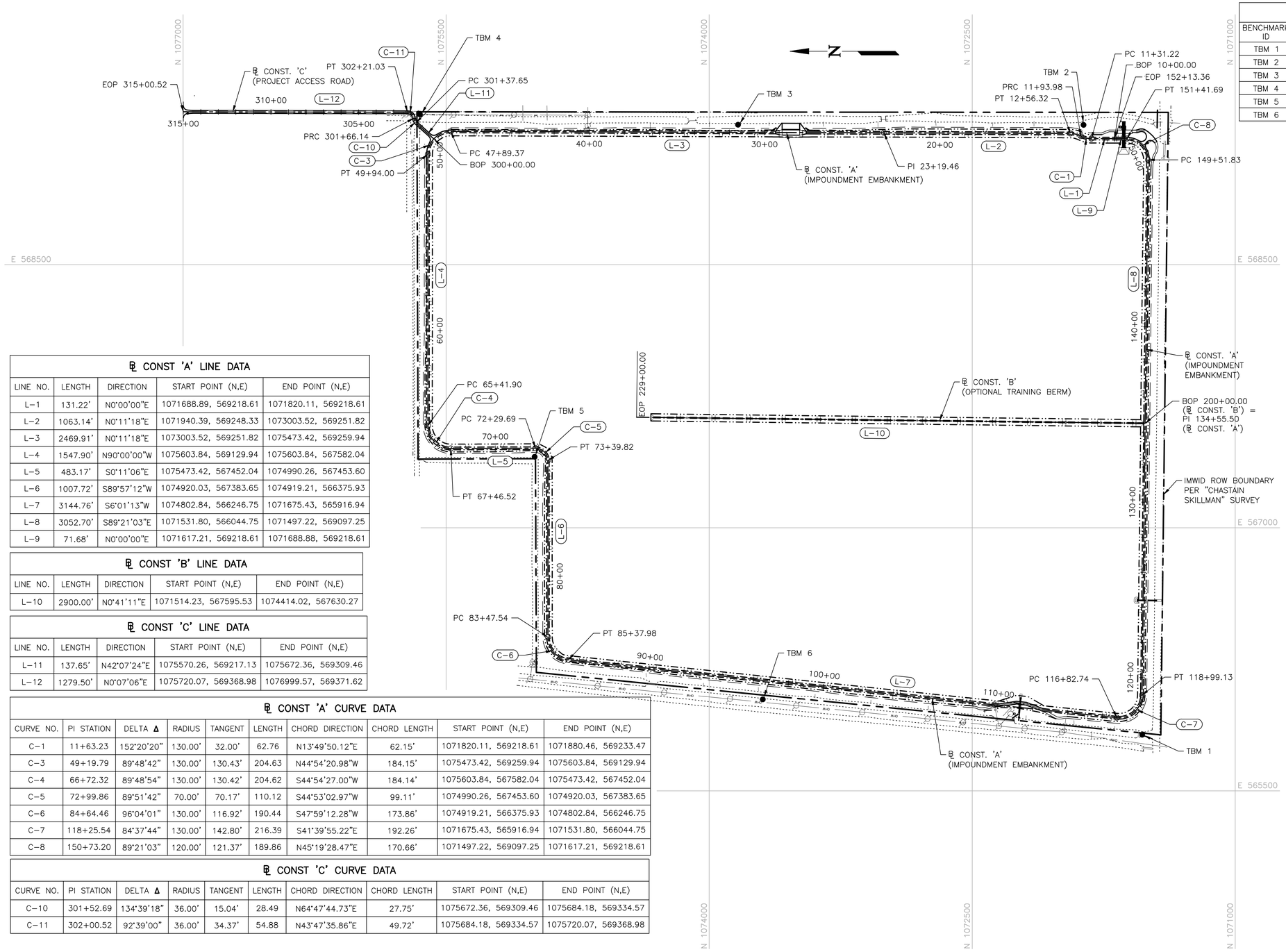

TEMPORARY BENCHMARKS

BENCHMARK ID	NORTHING	EASTING	ELEVATION	DESCRIPTION
TBM 1	1071530.85	565819.62	31.83'	IRON ROD AND CAP "CSI TRAV PT"
TBM 2	1071865.02	569296.68	29.83'	IRON ROD AND CAP "CSI TRAV PT"
TBM 3	1073835.56	569297.68	34.30	IRON ROD AND CAP "CSI TRAV PT"
TBM 4	1075649.43	569356.29	36.80	IRON ROD AND CAP "CSI TRAV PT"
TBM 5	1074995.43	567404.47	33.74	IRON ROD AND CAP "CSI TRAV PT"
TBM 6	1073694.17	566021.49	32.85	IRON ROD AND CAP "CSI TRAV PT"

℄ CONST 'A' LINE DATA

LINE NO.	LENGTH	DIRECTION	START POINT (N,E)	END POINT (N,E)
L-1	131.22'	N0°00'00"E	1071688.89, 569218.61	1071820.11, 569218.61
L-2	1063.14'	N0°11'18"E	1071940.39, 569248.33	1073003.52, 569251.82
L-3	2469.91'	N0°11'18"E	1073003.52, 569251.82	1075473.42, 569259.94
L-4	1547.90'	N90°00'00"W	1075603.84, 569129.94	1075603.84, 567582.04
L-5	483.17'	S0°11'06"E	1075473.42, 567452.04	1074990.26, 567453.60
L-6	1007.72'	S89°57'12"W	1074920.03, 567383.65	1074919.21, 566375.93
L-7	3144.76'	S6°01'13"W	1074802.84, 566246.75	1071675.43, 565916.94
L-8	3052.70'	S89°21'03"E	1071531.80, 566044.75	1071497.22, 569097.25
L-9	71.68'	N0°00'00"E	1071617.21, 569218.61	1071688.88, 569218.61

℄ CONST 'B' LINE DATA

LINE NO.	LENGTH	DIRECTION	START POINT (N,E)	END POINT (N,E)
L-10	2900.00'	N0°41'11"E	1071514.23, 567595.53	1074414.02, 567630.27

℄ CONST 'C' LINE DATA

LINE NO.	LENGTH	DIRECTION	START POINT (N,E)	END POINT (N,E)
L-11	137.65'	N42°07'24"E	1075570.26, 569217.13	1075672.36, 569309.46
L-12	1279.50'	N0°07'06"E	1075720.07, 569368.98	1076999.57, 569371.62

℄ CONST 'A' CURVE DATA

CURVE NO.	PI STATION	DELTA Δ	RADIUS	TANGENT	LENGTH	CHORD DIRECTION	CHORD LENGTH	START POINT (N,E)	END POINT (N,E)
C-1	11+63.23	152°20'20"	130.00'	32.00'	62.76	N13°49'50.12"E	62.15'	1071820.11, 569218.61	1071880.46, 569233.47
C-3	49+19.79	89°48'42"	130.00'	130.43'	204.63	N44°54'20.98"W	184.15'	1075473.42, 569259.94	1075603.84, 569129.94
C-4	66+72.32	89°48'54"	130.00'	130.42'	204.62	S44°54'27.00"W	184.14'	1075603.84, 567582.04	1075473.42, 567452.04
C-5	72+99.86	89°51'42"	70.00'	70.17'	110.12	S44°53'02.97"W	99.11'	1074990.26, 567453.60	1074920.03, 567383.65
C-6	84+64.46	96°04'01"	130.00'	116.92'	190.44	S47°59'12.28"W	173.86'	1074919.21, 566375.93	1074802.84, 566246.75
C-7	118+25.54	84°37'44"	130.00'	142.80'	216.39	S41°39'55.22"E	192.26'	1071675.43, 565916.94	1071531.80, 566044.75
C-8	150+73.20	89°21'03"	120.00'	121.37'	189.86	N45°19'28.47"E	170.66'	1071497.22, 569097.25	1071617.21, 569218.61

℄ CONST 'C' CURVE DATA

CURVE NO.	PI STATION	DELTA Δ	RADIUS	TANGENT	LENGTH	CHORD DIRECTION	CHORD LENGTH	START POINT (N,E)	END POINT (N,E)
C-10	301+52.69	134°39'18"	36.00'	15.04'	28.49	N64°47'44.73"E	27.75'	1075672.36, 569309.46	1075684.18, 569334.57
C-11	302+00.52	92°39'00"	36.00'	34.37'	54.88	N43°47'35.86"E	49.72'	1075684.18, 569334.57	1075720.07, 569368.98

1"=300' 0 300' 600' 1200'

COUNTY OF HIGHLANDS STATE OF FLORIDA 1921

HDR

ISSUE	DATE	DESCRIPTION
3	4/1/2016	FINAL DESIGN SUBMITTAL
2	1/8/2016	INTERMEDIATE DESIGN SUBMITTAL
1	10/20/2015	PRELIMINARY DESIGN SUBMITTAL

PROJECT MANAGER	RICHARD LEBLANC, P.E.
DESIGNED BY	R. LEBLANC
DRAWN BY	D. DIXON
CHECKED BY	M. REDINGTON
PROJECT NUMBER	000000000266294

PRELIMINARY NOT FOR CONSTRUCTION

ISTOKPOGA MARSH WATERSHED IMPROVEMENT DISTRICT HIGHLANDS COUNTY, FLORIDA

CIVIL

SITE GEOMETRY PLAN

FILENAME 01C110.dwg

SCALE 1"=300'

SHEET 01C110

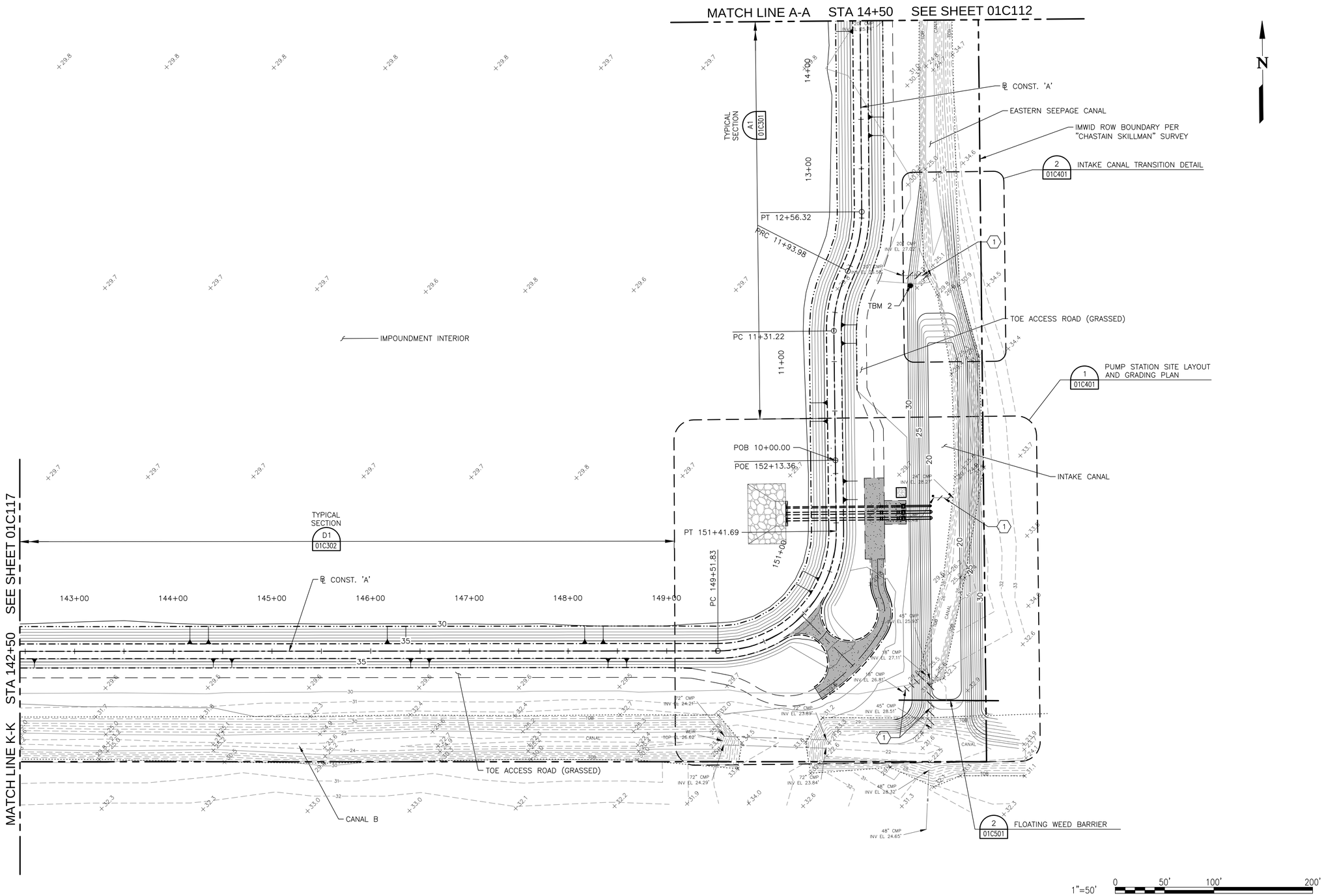

KEY NOTES: (FOR THIS SHEET ONLY)

1. EXISTING PIPES FROM THE PROJECT SITE TO THE SEEPAGE CANAL, INTAKE CANAL, DISCHARGE CANAL AND CANAL B SHALL BE COMPLETELY REMOVED AND BACKFILLED TO THE LINES AND GRADES SHOWN ON THESE DRAWINGS.

NOTES:

1. EXISTING DITCHES AND CANALS WITHIN THE INTERIOR OF THE IMPOUNDMENT SHALL BE FILLED PER DETAIL 8 ON SHEET 01C503 FROM A MINIMUM OF 50 FT FROM THE UPSTREAM EMBANKMENT TOE TO THE TOP OF BANK OF THE ADJACENT SEEPAGE CANAL, INTAKE CANAL, AND CANAL B.

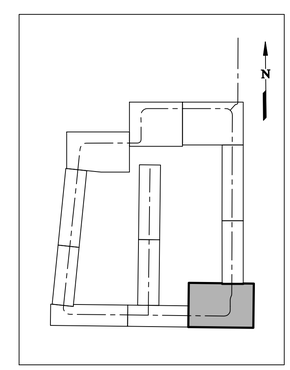

KEY PLAN

ISSUE	DATE	DESCRIPTION
3	4/1/2016	FINAL DESIGN SUBMITTAL
2	1/8/2016	INTERMEDIATE DESIGN SUBMITTAL
1	10/20/2015	PRELIMINARY DESIGN SUBMITTAL

PROJECT MANAGER	RICHARD LEBLANC, P.E.
DESIGNED BY	R. LEBLANC
DRAWN BY	D. DIXON
CHECKED BY	M. REDINGTON
PROJECT NUMBER	000000000266294

PRELIMINARY NOT FOR CONSTRUCTION

ISTOKPOGA MARSH WATERSHED IMPROVEMENT DISTRICT HIGHLANDS COUNTY, FLORIDA

CIVIL

EMBANKMENT PLAN (1 OF 7)

FILENAME	01C111.dwg
SCALE	1" = 50'
SHEET	01C111

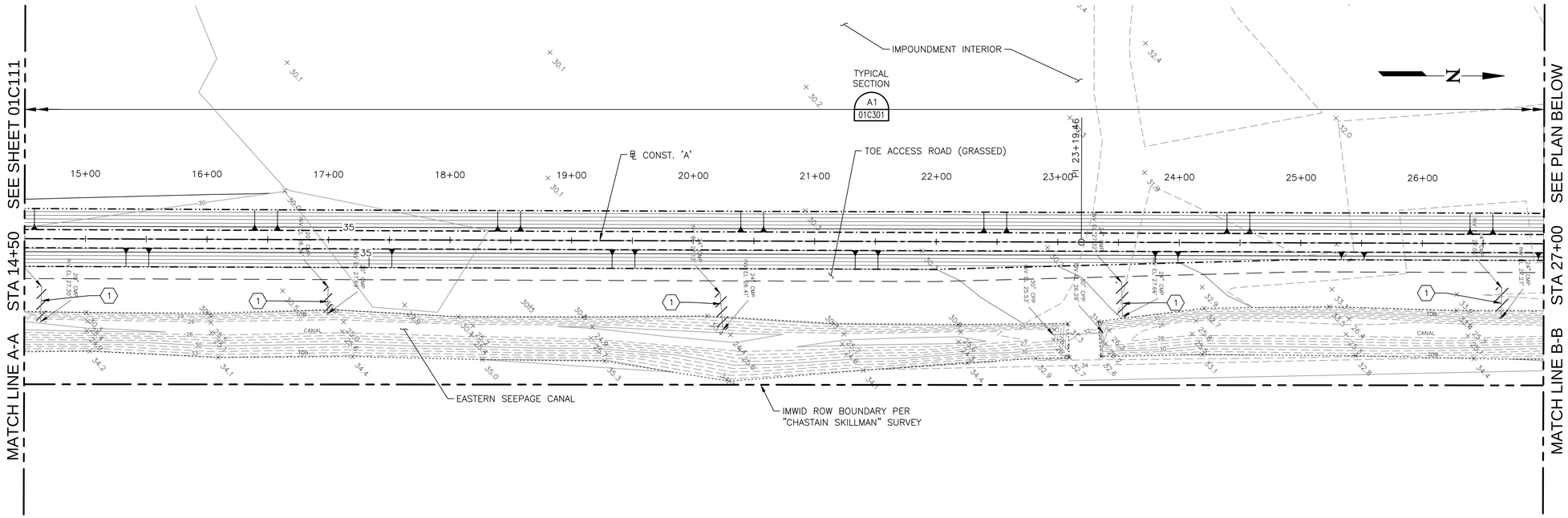

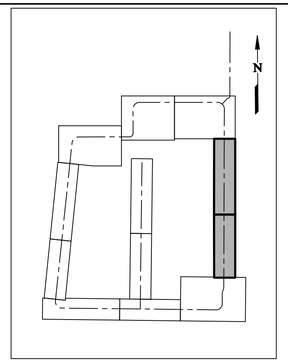

KEY PLAN

KEY NOTES: (FOR THIS SHEET ONLY)

1. EXISTING PIPES FROM THE PROJECT SITE TO THE SEEPAGE CANAL, INTAKE CANAL, DISCHARGE CANAL AND CANAL B SHALL BE COMPLETELY REMOVED AND BACKFILLED TO THE LINES AND GRADES SHOWN ON THESE DRAWINGS.
2. EXISTING PUMP SHALL BE DEMOLISHED PER THE SPECIFICATIONS.

NOTES:

1. EXISTING DITCHES AND CANALS WITHIN THE INTERIOR OF THE IMPOUNDMENT SHALL BE FILLED PER DETAIL 8 ON SHEET 01C503 50 FT FROM THE UPSTREAM EMBANKMENT TOE TO THE TOP OF BANKS OF THE ADJACENT SEEPAGE CANALS, INTAKE CANAL AND CANAL B.

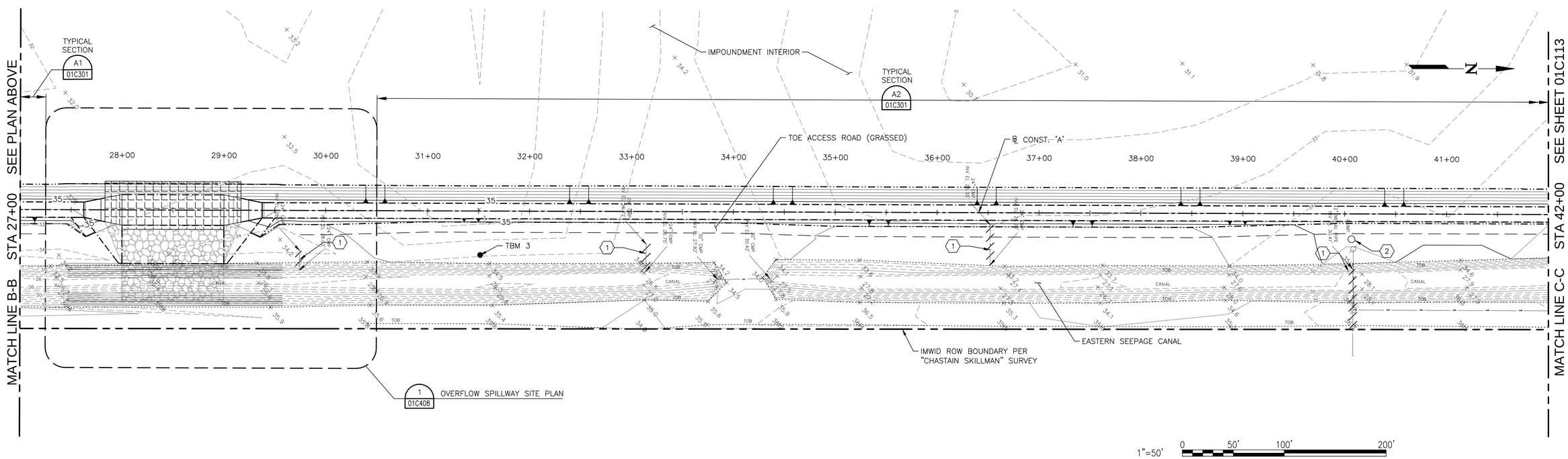

ISSUE	DATE	DESCRIPTION
3	4/1/2016	FINAL DESIGN SUBMITTAL
2	1/8/2016	INTERMEDIATE DESIGN SUBMITTAL
1	10/20/2015	PRELIMINARY DESIGN SUBMITTAL

PROJECT MANAGER	RICHARD LEBLANC, P.E.
DESIGNED BY	R. LEBLANC
DRAWN BY	D. DIXON
CHECKED BY	M. REDINGTON
PROJECT NUMBER	000000000266294

PRELIMINARY NOT FOR CONSTRUCTION

ISTOKPOGA MARSH WATERSHED IMPROVEMENT DISTRICT HIGHLANDS COUNTY, FLORIDA

CIVIL

EMBANKMENT PLAN (2 OF 7)

FILENAME	01C112.dwg	SHEET	01C112
SCALE	1" = 50'		

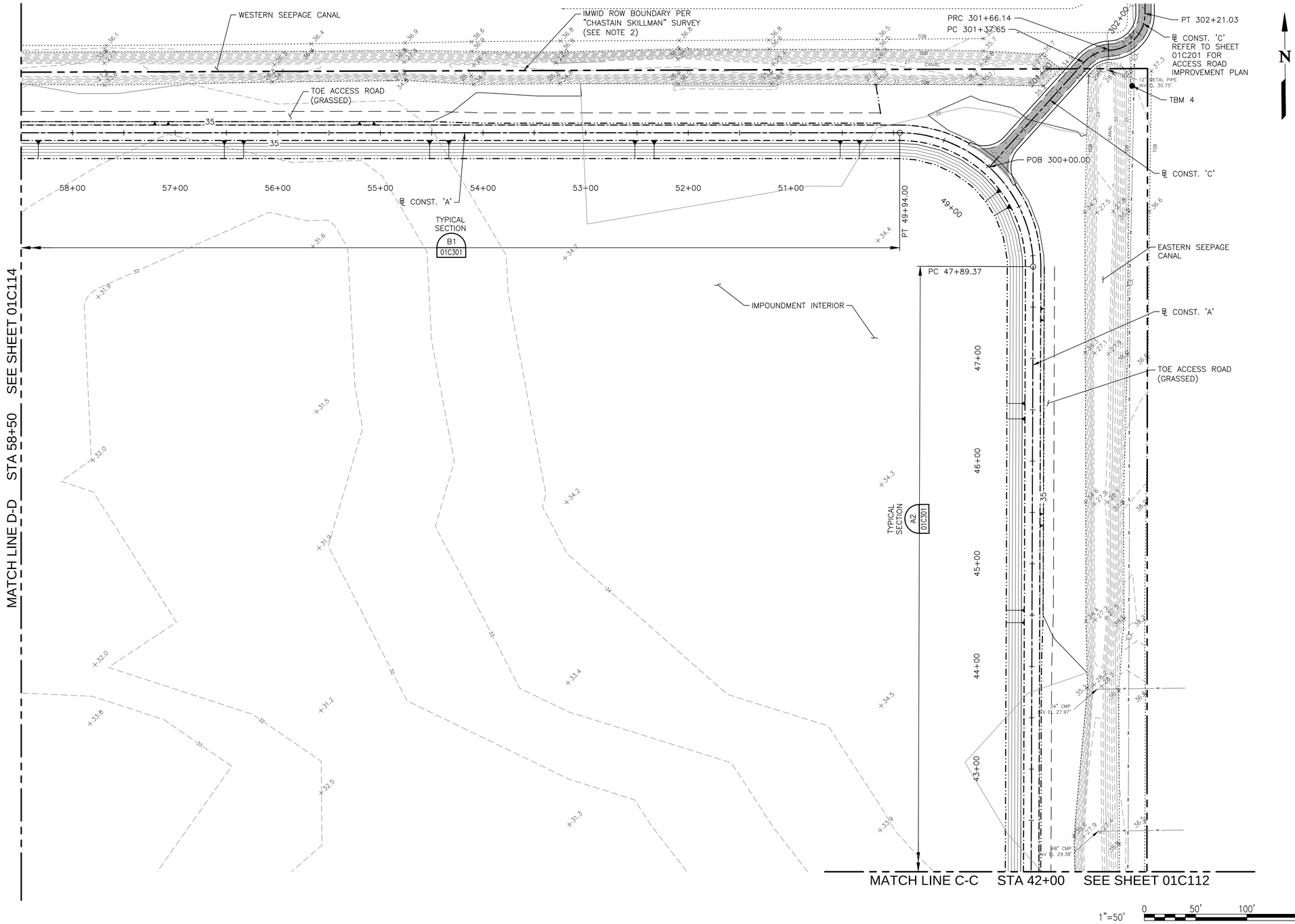

NOTES:

1. EXISTING DITCHES AND CANALS WITHIN THE INTERIOR OF THE IMPOUNDMENT SHALL BE FILLED PER DETAIL 8 ON SHEET 01C503 50 FT FROM THE UPSTREAM EMBANKMENT TOE TO THE TOP OF BANKS OF THE ADJACENT SEEPAGE CANALS, INTAKE CANAL AND CANAL B.
2. IMWID ROW BOUNDARIES LOCATED WITHIN CANALS PERMIT THE CONTRACTOR TO WORK WITHIN THE ENTIRE CANAL, BEYOND THE ROW LIMITS, TO THE TOP OF BANK OPPOSITE OF THE IMPOUNDMENT BASELINE.

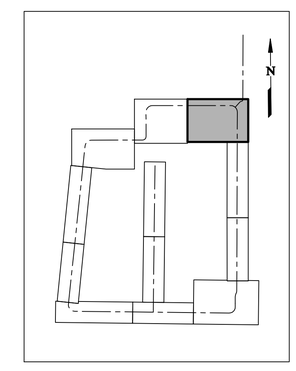

KEY PLAN

1"=50' 0 50' 100' 200'

ISSUE	DATE	DESCRIPTION
3	4/1/2016	FINAL DESIGN SUBMITTAL
2	1/8/2016	INTERMEDIATE DESIGN SUBMITTAL
1	10/20/2015	PRELIMINARY DESIGN SUBMITTAL

PROJECT MANAGER	RICHARD LEBLANC, P.E.
DESIGNED BY	R. LEBLANC
DRAWN BY	D. DIXON
CHECKED BY	M. REDINGTON
PROJECT NUMBER	000000000266294

PRELIMINARY NOT FOR CONSTRUCTION

ISTOKPOGA MARSH WATERSHED IMPROVEMENT DISTRICT HIGHLANDS COUNTY, FLORIDA

CIVIL

EMBANKMENT PLAN (3 OF 7)

FILENAME	01C113.dwg	SHEET
SCALE	1" = 50'	01C113

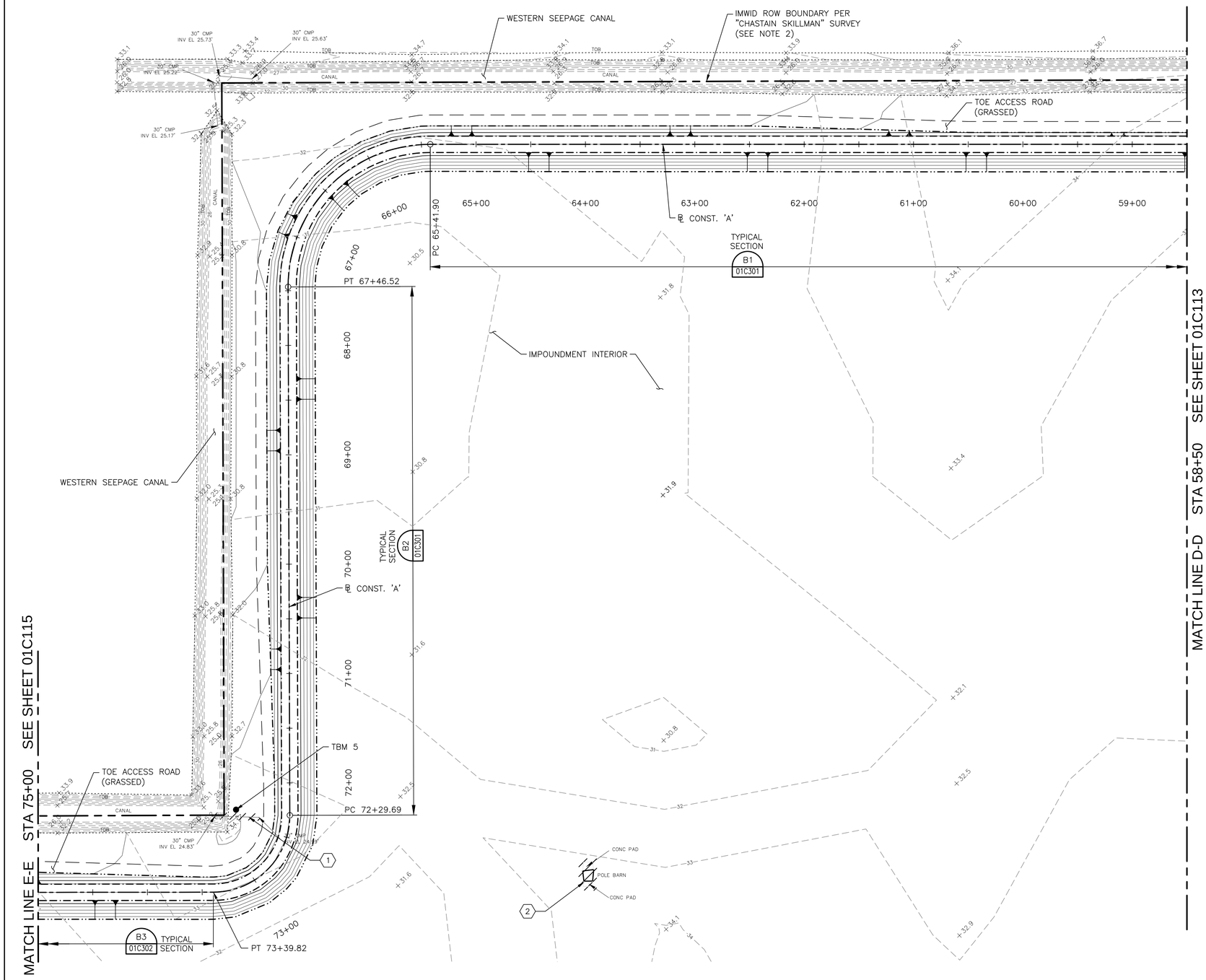

KEY NOTES: (FOR THIS SHEET ONLY)

1. EXISTING PIPES FROM THE PROJECT SITE TO THE SEEPAGE CANAL, INTAKE CANAL, DISCHARGE CANAL AND CANAL B SHALL BE COMPLETELY REMOVED AND BACKFILLED TO THE LINES AND GRADES SHOWN ON THESE DRAWINGS.
2. EXISTING POLE BARN SHALL BE DEMOLISHED IN ACCORDANCE WITH THE SPECIFICATIONS. CONCRETE PAD MAY REMAIN.

NOTES:

1. EXISTING DITCHES AND CANALS WITHIN THE INTERIOR OF THE IMPOUNDMENT SHALL BE FILLED PER DETAIL 8 ON SHEET 01C503 50 FT FROM THE UPSTREAM EMBANKMENT TOE TO THE TOP OF BANKS OF THE ADJACENT SEEPAGE CANALS, INTAKE CANAL AND CANAL B.
2. IMWID ROW BOUNDARIES LOCATED WITHIN CANALS PERMIT THE CONTRACTOR TO PERFORM WORK WITHIN THE ENTIRE CANAL, BEYOND THE ROW LIMITS, TO THE TOP OF BANK OPPOSITE OF THE IMPOUNDMENT BASELINE.

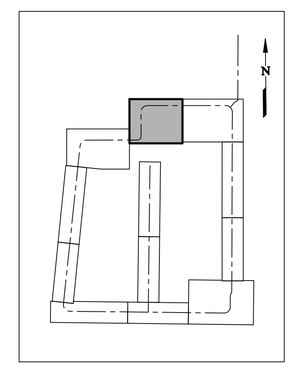

KEY PLAN

ISSUE	DATE	DESCRIPTION
3	4/1/2016	FINAL DESIGN SUBMITTAL
2	1/8/2016	INTERMEDIATE DESIGN SUBMITTAL
1	10/20/2015	PRELIMINARY DESIGN SUBMITTAL

PROJECT MANAGER	RICHARD LEBLANC, P.E.
DESIGNED BY	R. LEBLANC
DRAWN BY	D. DIXON
CHECKED BY	M. REDINGTON
PROJECT NUMBER	000000000266294

PRELIMINARY NOT FOR CONSTRUCTION

ISTOKPOGA MARSH WATERSHED IMPROVEMENT DISTRICT HIGHLANDS COUNTY, FLORIDA

CIVIL

EMBANKMENT PLAN (4 OF 7)

FILENAME	01C114.dwg	SHEET	01C114
SCALE	1" = 50'		

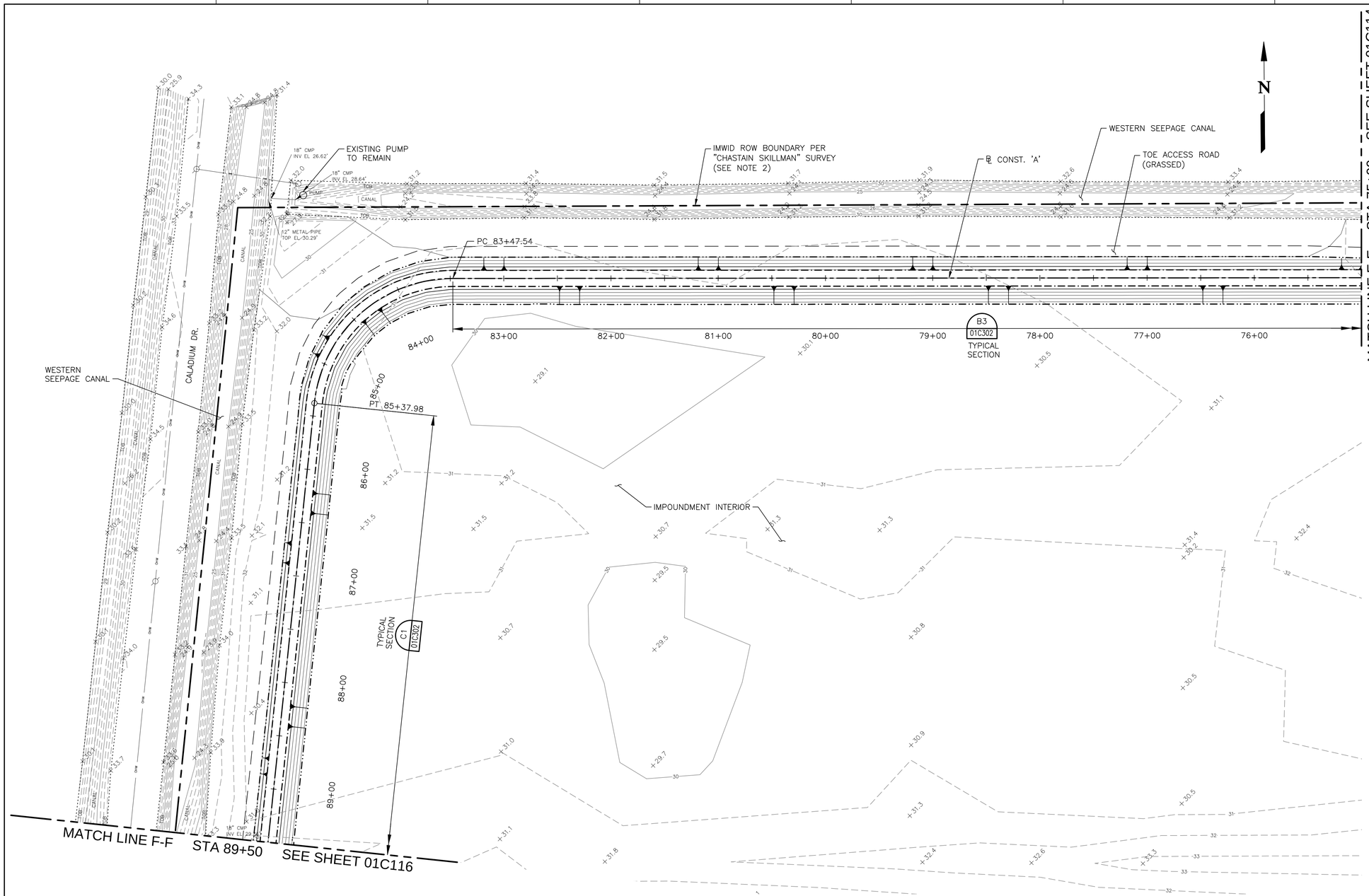

NOTES:

1. EXISTING DITCHES AND CANALS WITHIN THE INTERIOR OF THE IMPOUNDMENT SHALL BE FILLED PER DETAIL 8 ON SHEET 01C503 50 FT FROM THE UPSTREAM EMBANKMENT TOE TO THE TOP OF BANKS OF THE ADJACENT SEEPAGE CANALS, INTAKE CANAL AND CANAL B.
2. IMWID ROW BOUNDARIES LOCATED WITHIN CANALS PERMIT THE CONTRACTOR TO PERFORM WORK WITHIN THE ENTIRE CANAL, BEYOND THE ROW LIMITS, TO THE TOP OF BANK OPPOSITE OF THE IMPOUNDMENT BASELINE.

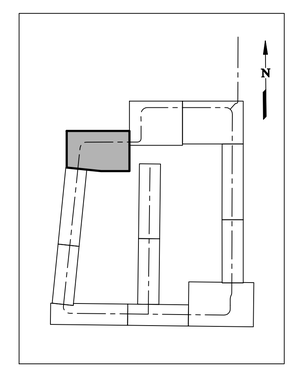

KEY PLAN

1"=50' 0 50' 100' 200'

ISSUE	DATE	DESCRIPTION
3	4/1/2016	FINAL DESIGN SUBMITTAL
2	1/8/2016	INTERMEDIATE DESIGN SUBMITTAL
1	10/20/2015	PRELIMINARY DESIGN SUBMITTAL

PROJECT MANAGER	RICHARD LEBLANC, P.E.
DESIGNED BY	R. LEBLANC
DRAWN BY	D. DIXON
CHECKED BY	M. REDINGTON
PROJECT NUMBER	000000000266294

PRELIMINARY NOT FOR CONSTRUCTION

ISTOKPOGA MARSH WATERSHED IMPROVEMENT DISTRICT HIGHLANDS COUNTY, FLORIDA

CIVIL

EMBANKMENT PLAN (5 OF 7)

FILENAME	01C115.dwg	SHEET
SCALE	1" = 50'	01C115

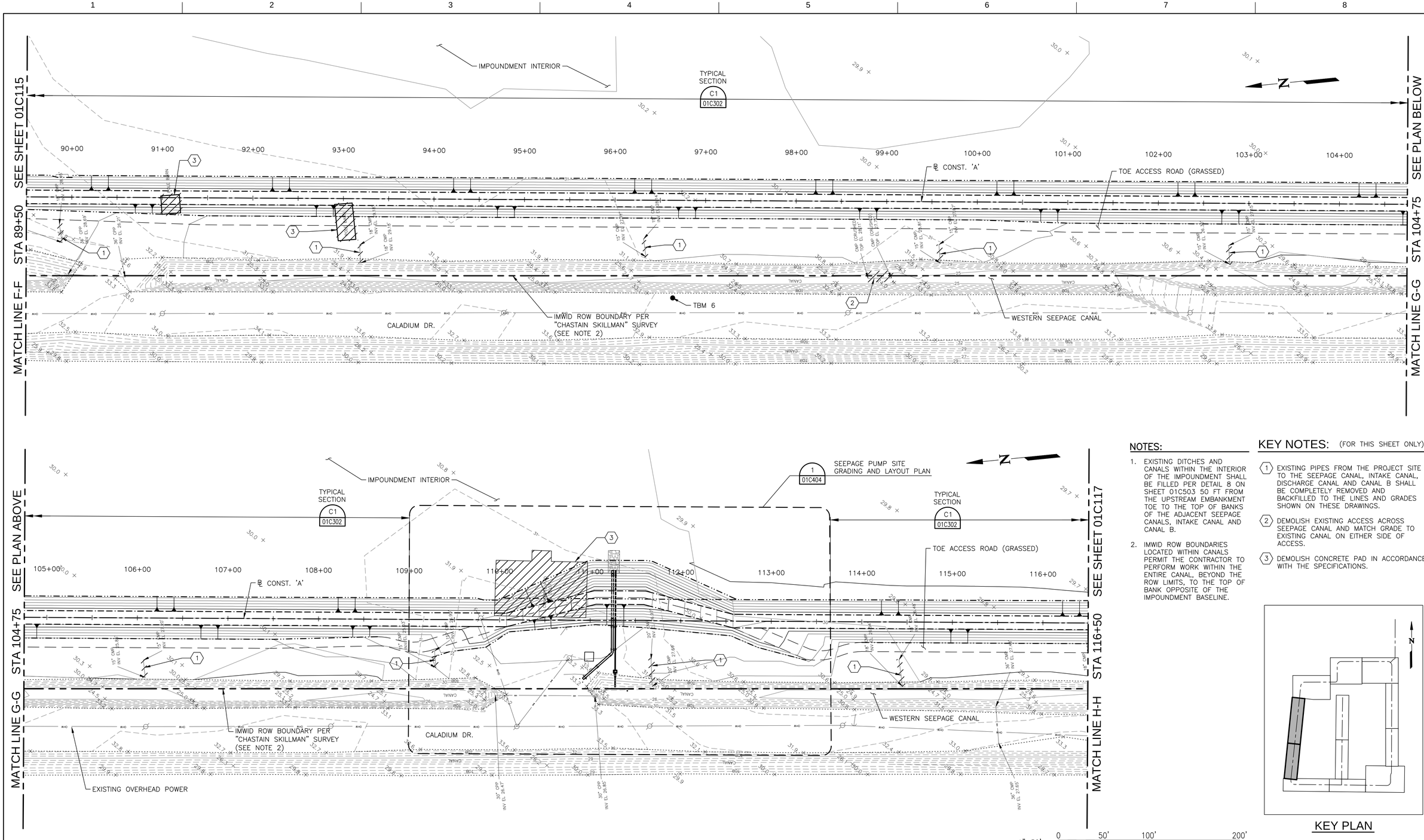

NOTES:

1. EXISTING DITCHES AND CANALS WITHIN THE INTERIOR OF THE IMPOUNDMENT SHALL BE FILLED PER DETAIL B ON SHEET 01C503 50 FT FROM THE UPSTREAM EMBANKMENT TOE TO THE TOP OF BANKS OF THE ADJACENT SEEPAGE CANALS, INTAKE CANAL AND CANAL B.
2. IMWID ROW BOUNDARIES LOCATED WITHIN CANALS PERMIT THE CONTRACTOR TO PERFORM WORK WITHIN THE ENTIRE CANAL, BEYOND THE ROW LIMITS, TO THE TOP OF BANK OPPOSITE OF THE IMPOUNDMENT BASELINE.

KEY NOTES: (FOR THIS SHEET ONLY)

1. EXISTING PIPES FROM THE PROJECT SITE TO THE SEEPAGE CANAL, INTAKE CANAL, DISCHARGE CANAL AND CANAL B SHALL BE COMPLETELY REMOVED AND BACKFILLED TO THE LINES AND GRADES SHOWN ON THESE DRAWINGS.
2. DEMOLISH EXISTING ACCESS ACROSS SEEPAGE CANAL AND MATCH GRADE TO EXISTING CANAL ON EITHER SIDE OF ACCESS.
3. DEMOLISH CONCRETE PAD IN ACCORDANCE WITH THE SPECIFICATIONS.

KEY PLAN

ISSUE	DATE	DESCRIPTION
3	4/1/2016	FINAL DESIGN SUBMITTAL
2	1/8/2016	INTERMEDIATE DESIGN SUBMITTAL
1	10/20/2015	PRELIMINARY DESIGN SUBMITTAL

PROJECT MANAGER	RICHARD LEBLANC, P.E.
DESIGNED BY	R. LEBLANC
DRAWN BY	D. DIXON
CHECKED BY	M. REDINGTON
PROJECT NUMBER	000000000266294

PRELIMINARY NOT FOR CONSTRUCTION

ISTOKPOGA MARSH WATERSHED IMPROVEMENT DISTRICT
HIGHLANDS COUNTY, FLORIDA

CIVIL

EMBANKMENT PLAN (6 OF 7)

FILENAME 01C116.dwg

SCALE 1" = 50'

SHEET 01C116

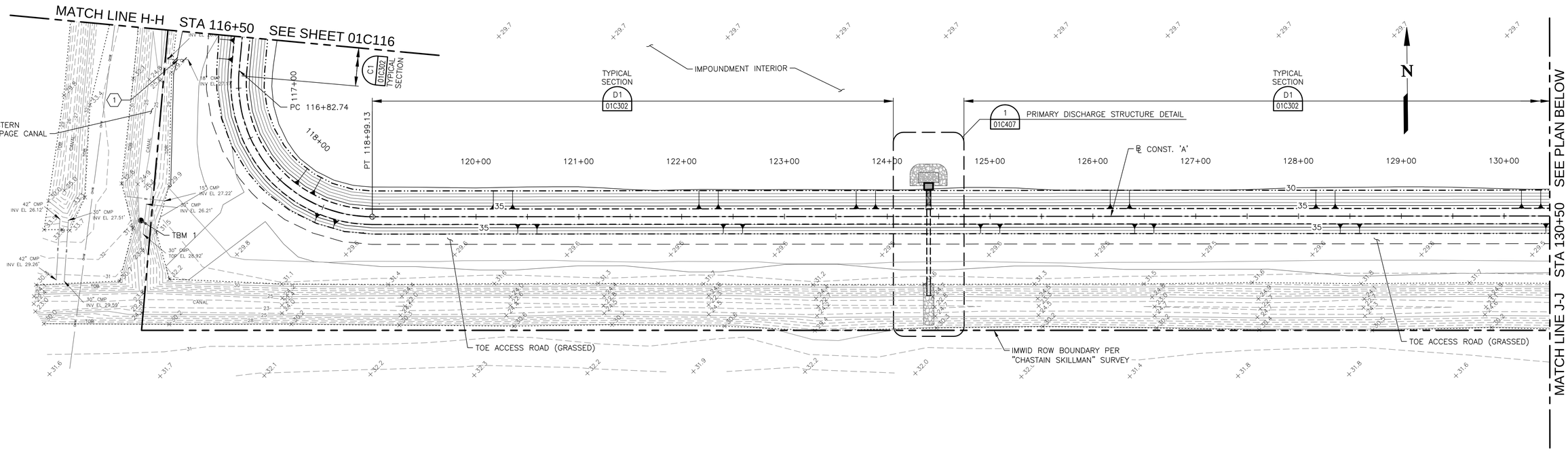

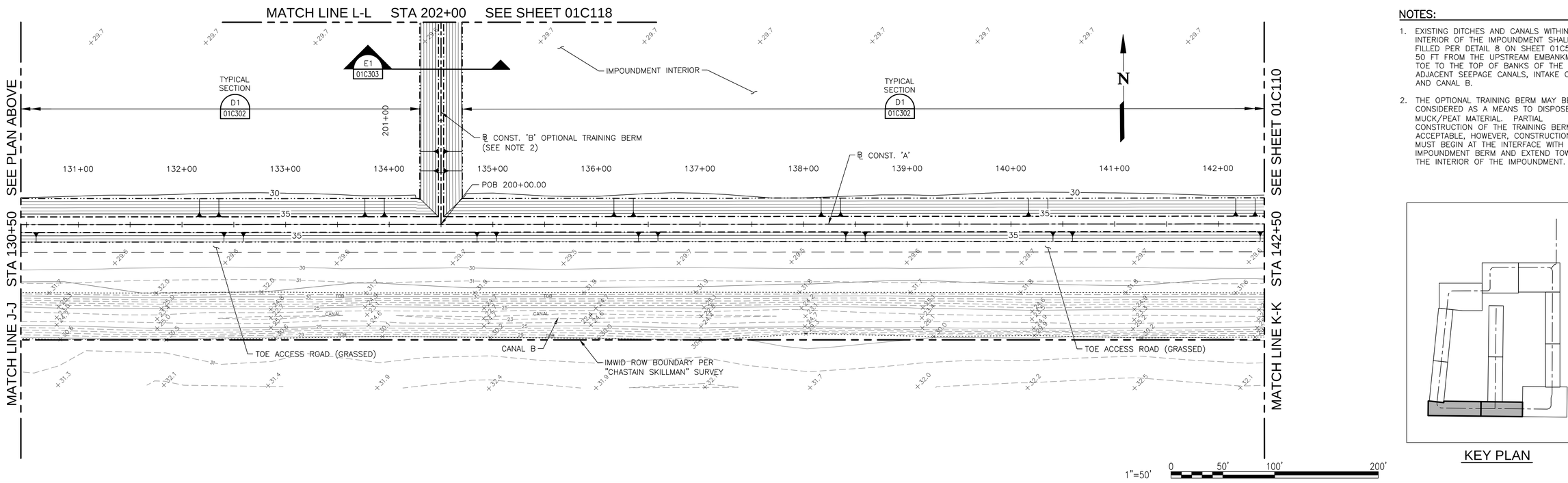

NOTES:

1. EXISTING DITCHES AND CANALS WITHIN THE INTERIOR OF THE IMPOUNDMENT SHALL BE FILLED PER DETAIL 8 ON SHEET 01C503 50 FT FROM THE UPSTREAM EMBANKMENT TOE TO THE TOP OF BANKS OF THE ADJACENT SEEPAGE CANALS, INTAKE CANAL AND CANAL B.
2. THE OPTIONAL TRAINING BERM MAY BE CONSIDERED AS A MEANS TO DISPOSE OF MUCK/PEAT MATERIAL. PARTIAL CONSTRUCTION OF THE TRAINING BERM IS ACCEPTABLE, HOWEVER, CONSTRUCTION MUST BEGIN AT THE INTERFACE WITH THE IMPOUNDMENT BERM AND EXTEND TOWARD THE INTERIOR OF THE IMPOUNDMENT.

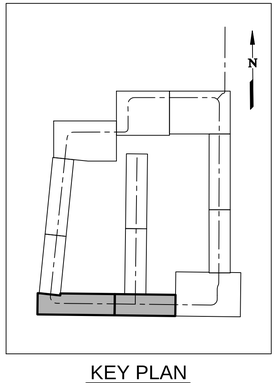

KEY PLAN

ISSUE	DATE	DESCRIPTION
3	4/1/2016	FINAL DESIGN SUBMITTAL
2	1/8/2016	INTERMEDIATE DESIGN SUBMITTAL
1	10/20/2015	PRELIMINARY DESIGN SUBMITTAL

PROJECT MANAGER	RICHARD LEBLANC, P.E.
DESIGNED BY	R. LEBLANC
DRAWN BY	D. DIXON
CHECKED BY	M. REDINGTON
PROJECT NUMBER	000000000266294

PRELIMINARY NOT FOR CONSTRUCTION

ISTOKPOGA MARSH WATERSHED IMPROVEMENT DISTRICT HIGHLANDS COUNTY, FLORIDA

CIVIL

EMBANKMENT PLAN (7 OF 7)

FILENAME	01C117.dwg	SHEET	01C117
SCALE	1" = 50'		

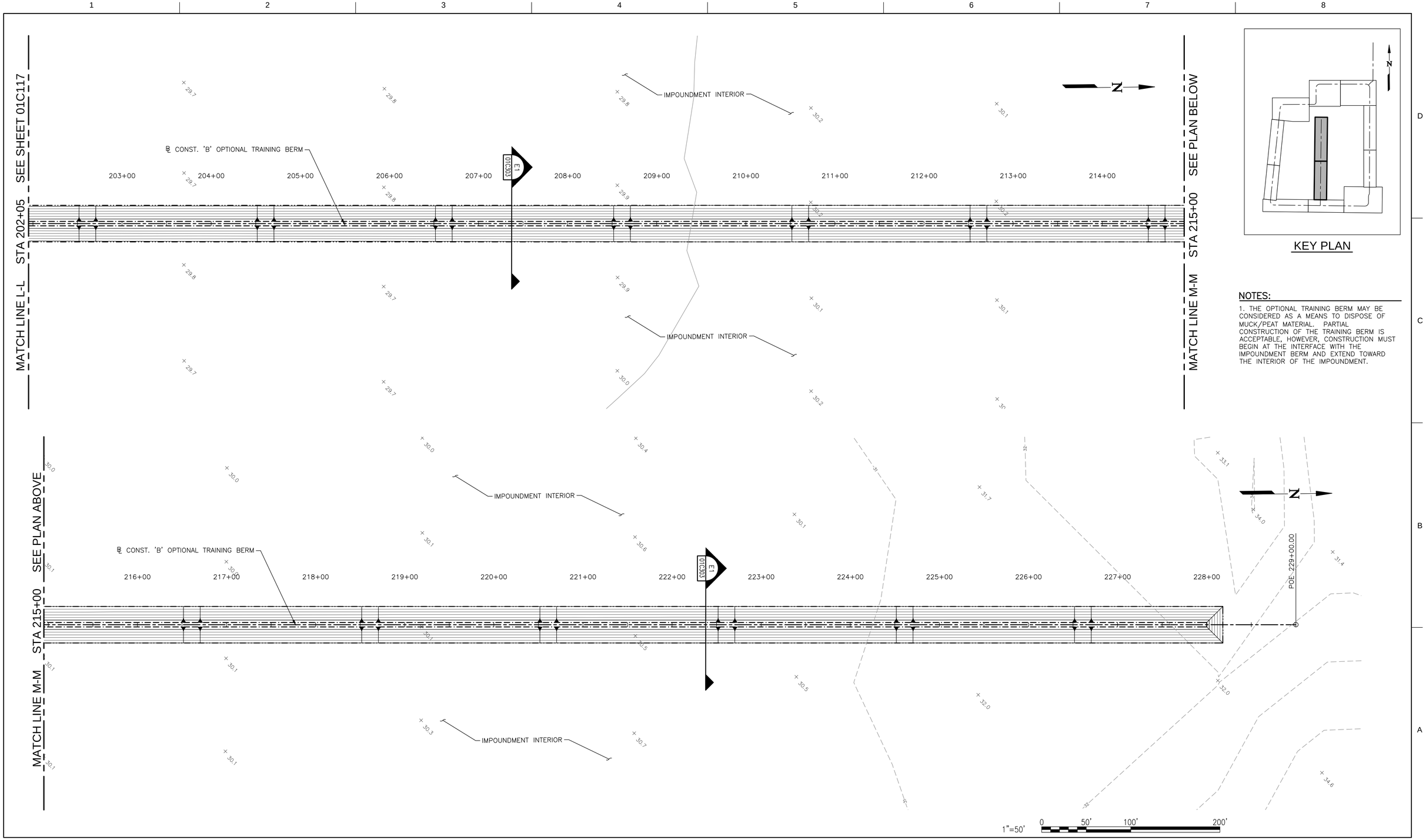

KEY PLAN

NOTES:

1. THE OPTIONAL TRAINING BERM MAY BE CONSIDERED AS A MEANS TO DISPOSE OF MUCK/PEAT MATERIAL. PARTIAL CONSTRUCTION OF THE TRAINING BERM IS ACCEPTABLE, HOWEVER, CONSTRUCTION MUST BEGIN AT THE INTERFACE WITH THE IMPOUNDMENT BERM AND EXTEND TOWARD THE INTERIOR OF THE IMPOUNDMENT.

ISSUE	DATE	DESCRIPTION
3	4/1/2016	FINAL DESIGN SUBMITTAL
2	1/8/2016	INTERMEDIATE DESIGN SUBMITTAL
1	10/20/2015	PRELIMINARY DESIGN SUBMITTAL

PROJECT MANAGER	RICHARD LEBLANC, P.E.
DESIGNED BY	R. LEBLANC
DRAWN BY	D. DIXON
CHECKED BY	M. REDINGTON
PROJECT NUMBER	000000000266294

PRELIMINARY NOT FOR CONSTRUCTION

ISTOKPOGA MARSH WATERSHED IMPROVEMENT DISTRICT HIGHLANDS COUNTY, FLORIDA

CIVIL

OPTIONAL TRAINING BERM PLAN

FILENAME	01C118.dwg	SHEET	01C118
SCALE	1" = 50'		

NOTES:

1. PROJECT ACCESS ROAD SHALL BE IMPROVED BY REGRADING AND SMOOTHING ELEVATION CHANGES FROM CR621 TO THE IMPOUNDMENT BERM.
2. SEE SHEET 01C202 FOR TYPICAL PROJECT ACCESS ROAD SECTIONS AND IMPROVEMENT DETAILS.

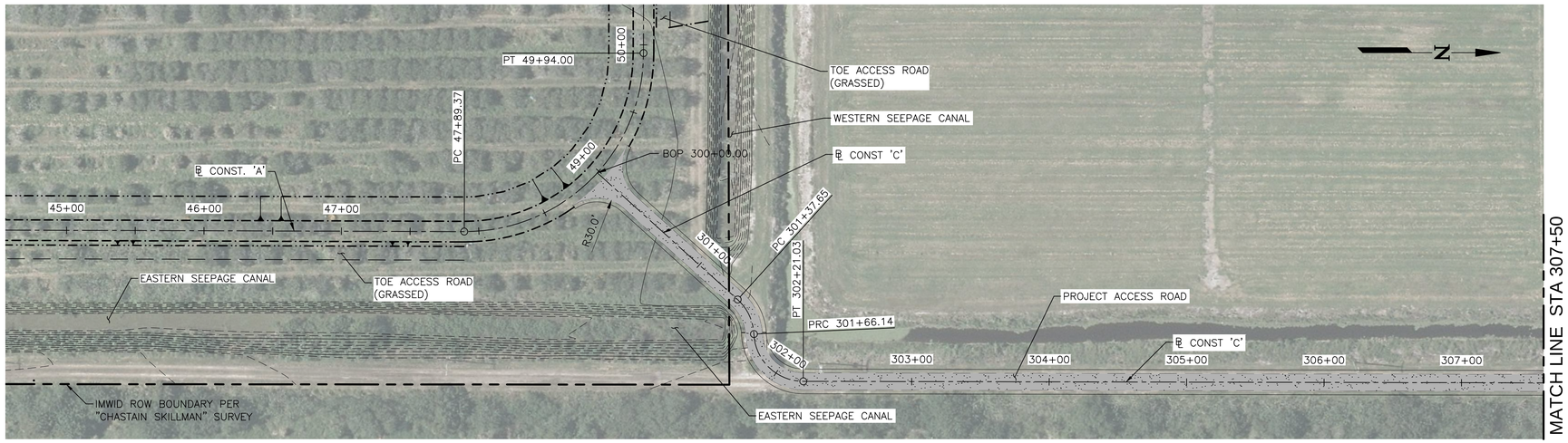

ACCESS ROAD PLAN VIEW

SCALE: 1"=50'

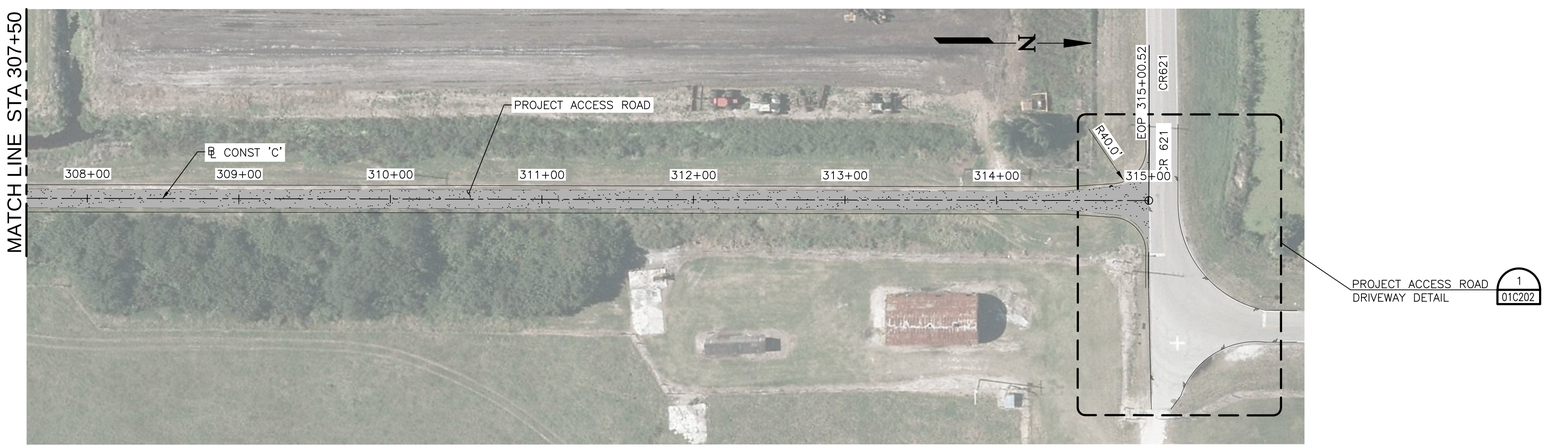

ACCESS ROAD PLAN VIEW

SCALE: 1"=50'

1"=50' 0 50' 100' 200'

			PROJECT MANAGER	RICHARD LEBLANC, P.E.
			DESIGNED BY	R. LEBLANC
			DRAWN BY	T. BURTON
			CHECKED BY	M. REDINGTON
3	4/1/2016	FINAL DESIGN SUBMITTAL		
2	1/8/2016	INTERMEDIATE DESIGN SUBMITTAL		
1	10/20/2015	PRELIMINARY DESIGN SUBMITTAL		
ISSUE	DATE	DESCRIPTION	PROJECT NUMBER	000000000266294

PRELIMINARY NOT FOR CONSTRUCTION

ISTOKPOGA MARSH WATERSHED IMPROVEMENT DISTRICT HIGHLANDS COUNTY, FLORIDA

CIVIL

ACCESS ROAD IMPROVEMENTS PLAN

FILENAME 01C201.dwg

SCALE 1" = 50'

SHEET 01C201

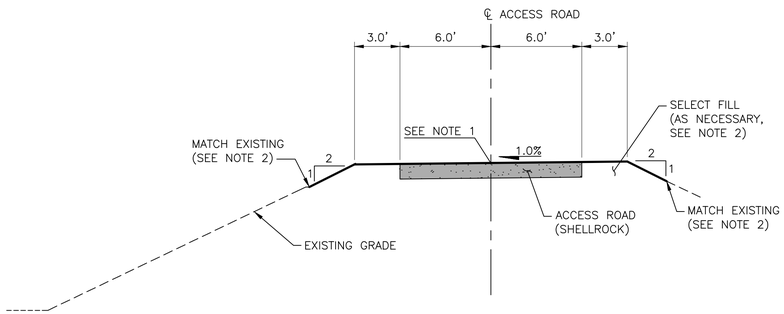

ACCESS ROAD TYPICAL SECTION (LOOKING NORTH)

SCALE: 1"=5'

2 / 01C201

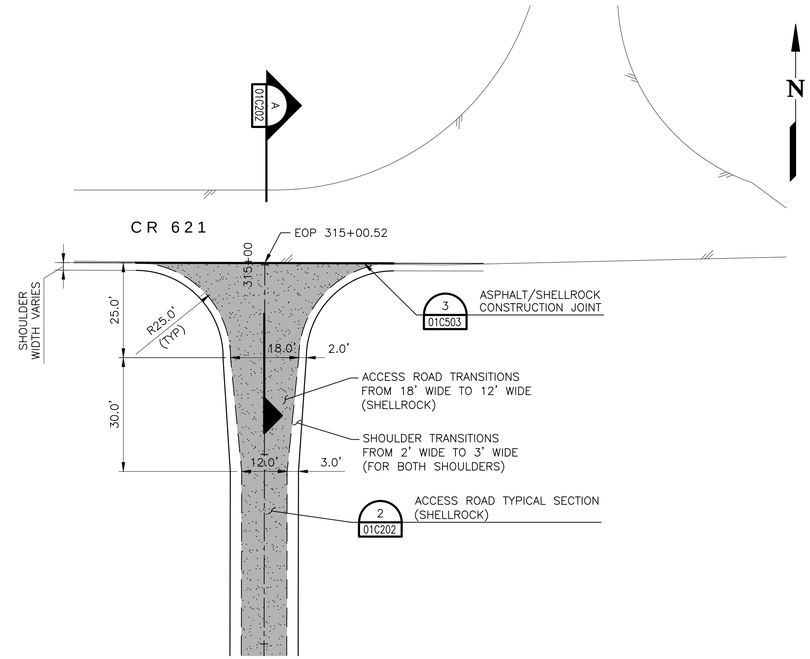

PROJECT ACCESS ROAD DRIVEWAY DETAIL

SCALE: 1"=20'

1 / 01C201

NOTES:

1. PROJECT ACCESS ROAD CENTERLINE ELEVATION SHALL MATCH THE EXISTING CENTERLINE ELEVATION WITH A TOLERANCE OF ±0.5 FEET.
2. FOR ADJUSTMENTS OF THE CENTERLINE ABOVE THE EXISTING GRADE, SELECT FILL SHALL BE USED AS BACKFILL AND THE BACKFILLED SIDE SLOPES SHALL BE NO STEEPER THAN 2H:1V TO MATCH EXISTING.

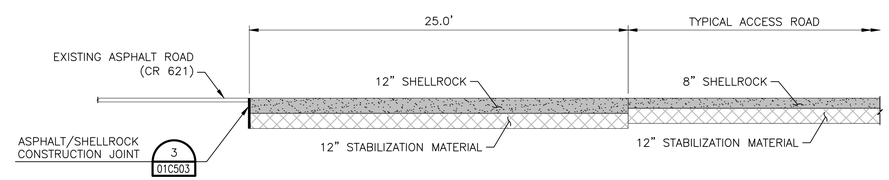

CROSS SECTION AT DRIVEWAY TRANSITION

SCALE: 1" = 5'

A / 01C201

1"=5' 0 5' 10' 20'

1"=20' 0 20' 40' 80'

ISSUE	DATE	DESCRIPTION
3	4/1/2016	FINAL DESIGN SUBMITTAL
2	1/8/2016	INTERMEDIATE DESIGN SUBMITTAL
1	10/20/2015	PRELIMINARY DESIGN SUBMITTAL

PROJECT MANAGER	RICHARD LEBLANC, P.E.
DESIGNED BY	R. LEBLANC
DRAWN BY	T. BURTON
CHECKED BY	M. REDINGTON
PROJECT NUMBER	000000000266294

PRELIMINARY NOT FOR CONSTRUCTION

ISTOKPOGA MARSH WATERSHED IMPROVEMENT DISTRICT HIGHLANDS COUNTY, FLORIDA

CIVIL

ACCESS ROAD SECTIONS AND IMPROVEMENT DETAILS

FILENAME 01C202.dwg

SCALE 1" = 50' / 1" = 5'

SHEET 01C202

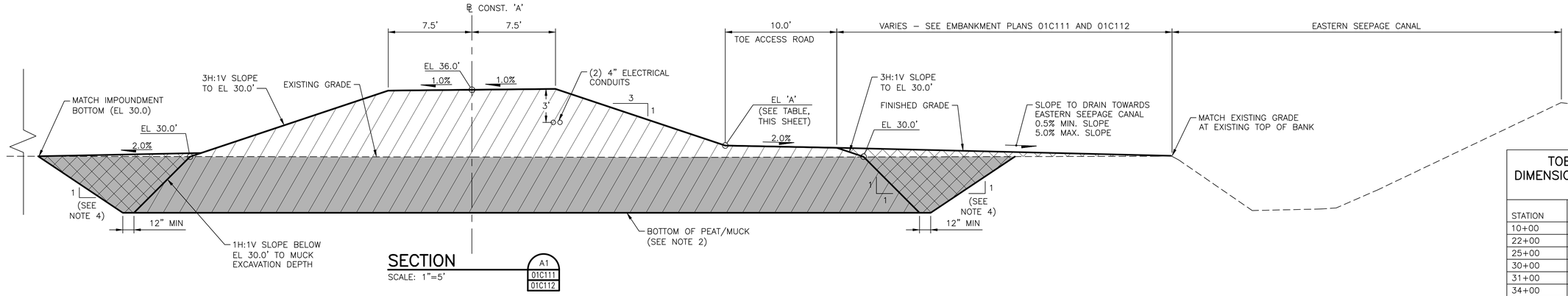

SECTION A1 / 01C111 / 01C112

SCALE: 1"=5'

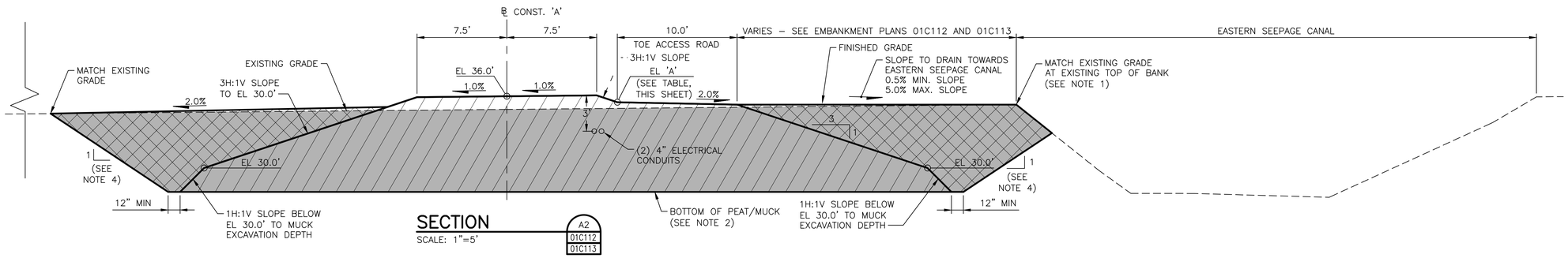

SECTION A2 / 01C112 / 01C113

SCALE: 1"=5'

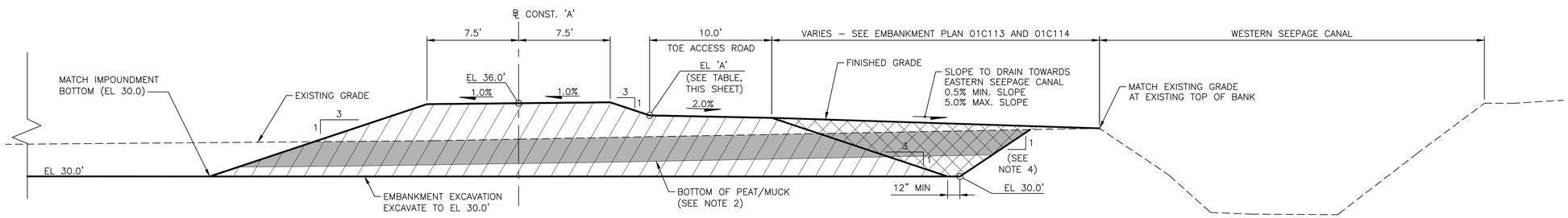

SECTION B1 / 01C113 / 01C114

SCALE: 1"=5'

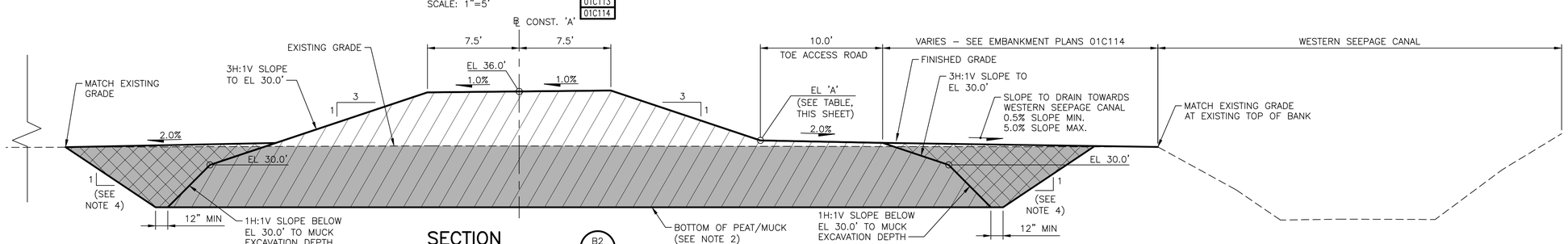

SECTION B2 / 01C114

SCALE: 1"=5'

LEGEND (FOR THIS SHEET ONLY)

- MUCK REMOVAL
- MUCK BACKFILL
- SELECT FILL

TOE ACCESS ROAD DIMENSIONS AND ELEVATIONS TABLE

STATION	EL 'A'	GRADE IN (*)	GRADE OUT (*)
10+00	31.0'	---	0.00%
22+00	31.0'	0.00%	1.00%
25+00	34.0'	1.00%	0.00%
30+00	34.0'	0.00%	1.00%
31+00	35.0'	1.00%	0.00%
34+00	35.0'	0.00%	−1.00%
35+00	34.0'	−1.00%	0.00%
38+50	34.0'	0.00%	1.00%
40+00	35.5'	1.00%	0.00%
44+00	35.5'	0.00%	−1.00%
44+50	35.0'	−1.00%	0.00%
49+50	35.0'	0.00%	1.00%
50+00	35.5'	1.00%	0.00%
54+00	35.5'	0.00%	−1.00%
54+50	35.0'	−1.00%	0.00%
60+50	35.0'	0.00%	−1.00%
62+50	33.0'	−1.00%	0.00%
66+50	33.0'	0.00%	−1.00%
67+50	32.0'	−1.00%	0.00%
70+00	32.0'	0.00%	1.00%
72+00	34.0'	1.00%	0.00%
73+50	34.0'	0.00%	−1.00%
75+50	32.0'	−1.00%	0.00%
83+50	32.0'	0.00%	1.00%
85+50	34.0'	1.00%	0.00%
89+50	34.0'	0.00%	−1.00%
91+50	32.0'	−1.00%	0.00%
100+00	32.0'	0.00%	−1.00%
101+00	31.0'	1.00%	0.00%
107+50	31.0'	0.00%	1.00%
110+00	33.5'	1.00%	0.00%
111+00	33.5'	0.00%	−1.00%
113+50	31.0'	−1.00%	0.00%
116+50	31.0'	0.00%	1.00%
118+50	33.0'	1.00%	0.00%
149+00	33.0'	0.00%	−1.00%
151+00	31.0'	−1.00%	0.00%
152+13.36	31.0'	0.00%	---

(*) – DENOTES LONGITUDINAL GRADE OF TOE ACCESS ROAD ALONG ℄ CONST. 'A'

NOTES (FOR THIS SHEET ONLY)

1. IF THE EXISTING SEEPAGE CANAL TOP OF BANK IS EXCAVATED AS PART OF THE EMBANKMENT CONSTRCUTION, THE TOP OF BANK SHALL BE RESTORED TO PROVIDE EQUIVALENT OF THE MINIMUM CROSS SECTION AREA OF THE EXISTING SEEPAGE CANAL AT LEAST 50 FEET UPSTREAM AND DOWNSTREAM OF THE EXCAVATED TOP OF BANK.
2. BOTTOM OF PEAT/MUCK SOIL LAYER ELEVATION VARIES THROUGHOUT THE PROJECT SITE. EMBANKMENT FOUNDATION SHALL CONFORM TO AND BE PREPARED IN CONFORMANCE WITH THE SPECIFICATIONS.
3. EMBANKMENT FOUNDATION SHALL BE NO HIGHER THAN EL 30.0'.
4. EXCAVATION SLOPE SHALL BE NO STEEPER THAN 0.5H:1V. SLOPE SHALL REMAIN STABLE DURING THE FOUNDATION PREPARATION AND EMBANKMENT FILL PROCESS.

1"=5' 0 5' 10' 20'

ISSUE	DATE	DESCRIPTION
3	4/1/2016	FINAL DESIGN SUBMITTAL
2	1/8/2016	INTERMEDIATE DESIGN SUBMITTAL
1	10/20/2015	PRELIMINARY DESIGN SUBMITTAL

PROJECT MANAGER	RICHARD LEBLANC, P.E.
DESIGNED BY	R. LEBLANC
DRAWN BY	D. DIXON
CHECKED BY	M. REDINGTON
PROJECT NUMBER	000000000266294

PRELIMINARY NOT FOR CONSTRUCTION

ISTOKPOGA MARSH WATERSHED IMPROVEMENT DISTRICT HIGHLANDS COUNTY, FLORIDA

CIVIL

EMBANKMENT TYPICAL SECTIONS (1 OF 3)

FILENAME 01C301.dwg

SCALE 1"=5'

SHEET 01C301

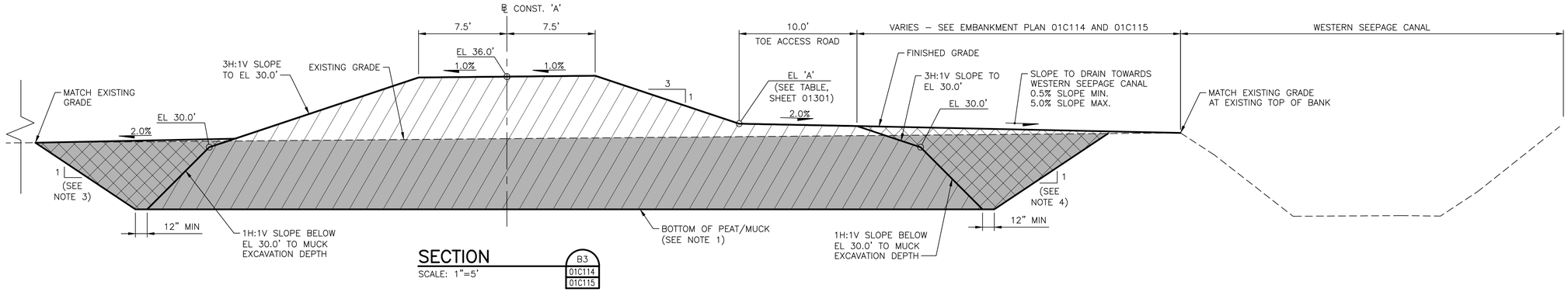

SECTION

SCALE: 1"=5'

B3 | 01C114 | 01C115

LEGEND (FOR THIS SHEET ONLY)

- MUCK REMOVAL
- MUCK BACKFILL
- SELECT FILL

NOTES (FOR THIS SHEET ONLY)

1. BOTTOM OF PEAT/MUCK SOIL LAYER ELEVATION VARIES THROUGHOUT THE PROJECT SITE. EMBANKMENT FOUNDATION SHALL CONFORM TO AND BE PREPARED IN CONFORMANCE WITH THE SPECIFICATIONS.
2. IF THE EXISTING SEEPAGE CANAL TOP OF BANK IS EXCAVATED AS PART OF THE EMBANKMENT CONSTRCUTION, THE TOP OF BANK SHALL BE RESTORED TO PROVIDE EQUIVALENT OF THE MINIMUM CROSS SECTION AREA OF THE EXISTING SEEPAGE CANAL AT LEAST 50 FEET UPSTREAM AND DOWNSTREAM OF THE EXCAVATED TOP OF BANK.
3. EXCAVATION SLOPE SHALL BE NO STEEPER THAN 0.5H:1V. SLOPE SHALL REMAIN STABLE DURING THE FOUNDATION PREPARATION AND EMBANKMENT FILL PROCESS.

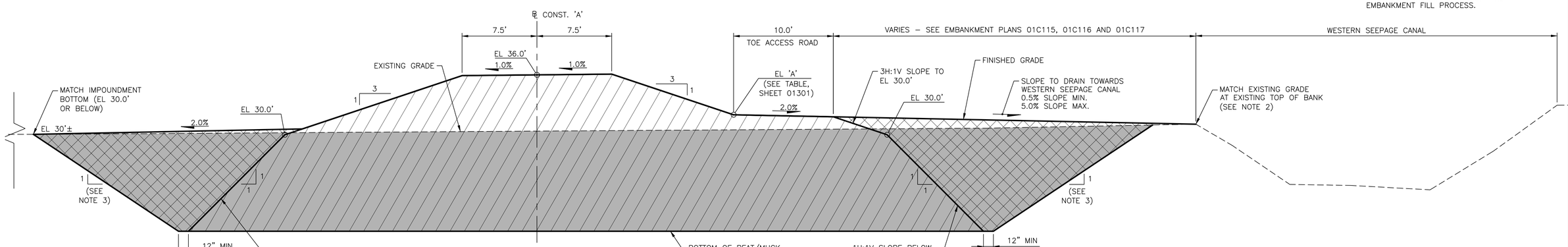

SECTION

SCALE: 1"=5'

C1 | 01C117 | 01C115 | 01C116

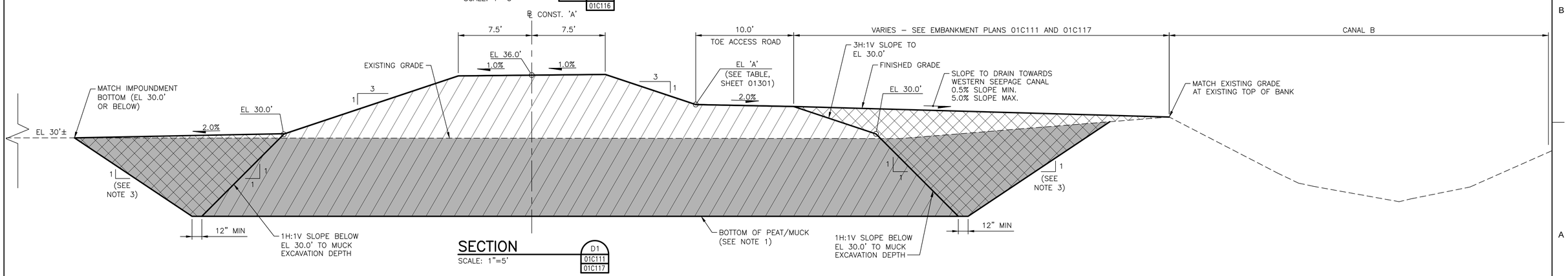

SECTION

SCALE: 1"=5'

D1 | 01C111 | 01C117

1"=5' 0 5' 10' 20'

ISSUE	DATE	DESCRIPTION
3	4/1/2016	FINAL DESIGN SUBMITTAL
2	1/8/2016	INTERMEDIATE DESIGN SUBMITTAL
1	10/20/2015	PRELIMINARY DESIGN SUBMITTAL

PROJECT MANAGER	RICHARD LEBLANC, P.E.
DESIGNED BY	R. LEBLANC
DRAWN BY	D. DIXON
CHECKED BY	M. REDINGTON
PROJECT NUMBER	000000000266294

PRELIMINARY NOT FOR CONSTRUCTION

ISTOKPOGA MARSH WATERSHED IMPROVEMENT DISTRICT HIGHLANDS COUNTY, FLORIDA

CIVIL

EMBANKMENT TYPICAL SECTIONS (2 OF 3)

FILENAME 01C302.dwg

SCALE 1"=5'

SHEET 01C302

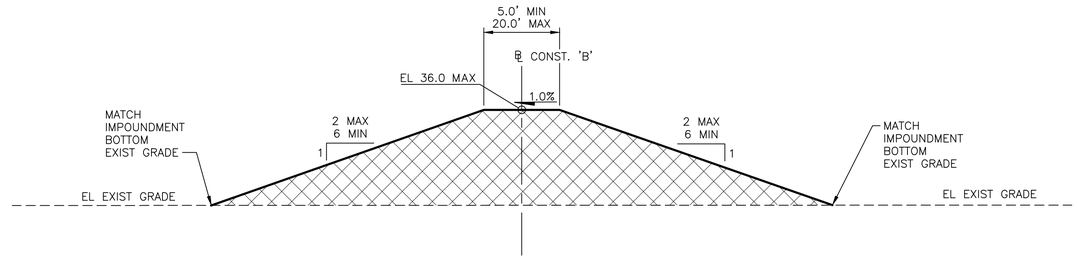

SECTION

SCALE: 1"=5'

E1 | 01C117 | 01C118

LEGEND (FOR THIS SHEET ONLY)

- MUCK REMOVAL
- MUCK FILL
- SELECT FILL
- SHELLROCK

NOTES (FOR THIS SHEET ONLY)

1. OPTIONAL TRAINING BERM MAY BE CONSTRUCTED AS A MEANS TO DISPOSE OF MUCK/PEAT MATERIAL ON SITE.
2. OPTIONAL MUCK MAY BE PLACED WITH LITTLE TO NO COMPACTION REQUIRED TO CONSTRUCT THE TRAINING BERM.

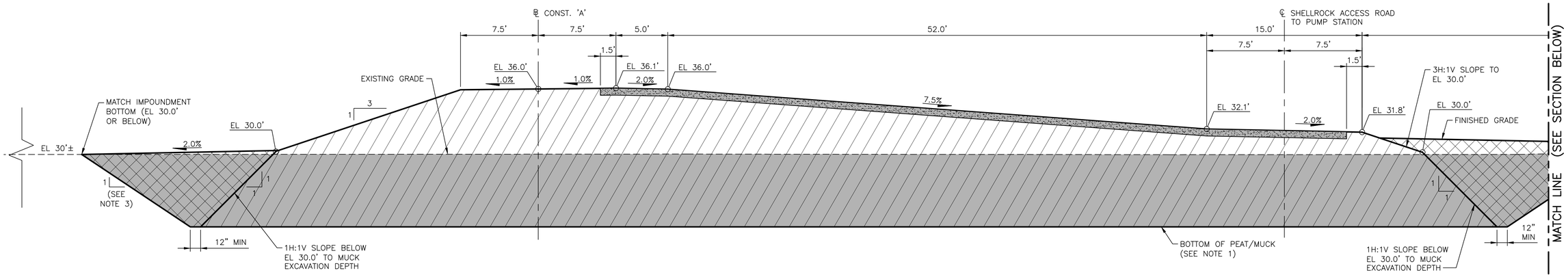

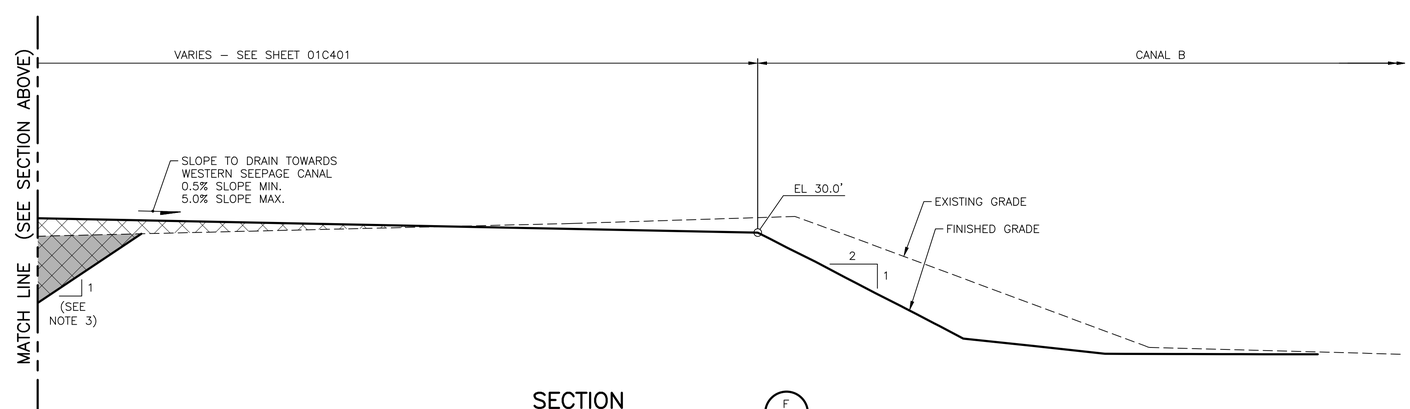

SECTION

SCALE: 1"=5'

F | 01C401

1"=5' 0 5' 10' 20'

ISSUE	DATE	DESCRIPTION
3	4/1/2016	FINAL DESIGN SUBMITTAL
2	1/8/2016	INTERMEDIATE DESIGN SUBMITTAL
1	10/20/2015	PRELIMINARY DESIGN SUBMITTAL

PROJECT MANAGER	RICHARD LEBLANC, P.E.
DESIGNED BY	R. LEBLANC
DRAWN BY	D. DIXON
CHECKED BY	M. REDINGTON
PROJECT NUMBER	000000000266294

PRELIMINARY NOT FOR CONSTRUCTION

ISTOKPOGA MARSH WATERSHED IMPROVEMENT DISTRICT
HIGHLANDS COUNTY, FLORIDA

CIVIL

EMBANKMENT TYPICAL SECTIONS (3 OF 3)

FILENAME 01C303.dwg
SCALE 1"=5'
SHEET 01C303

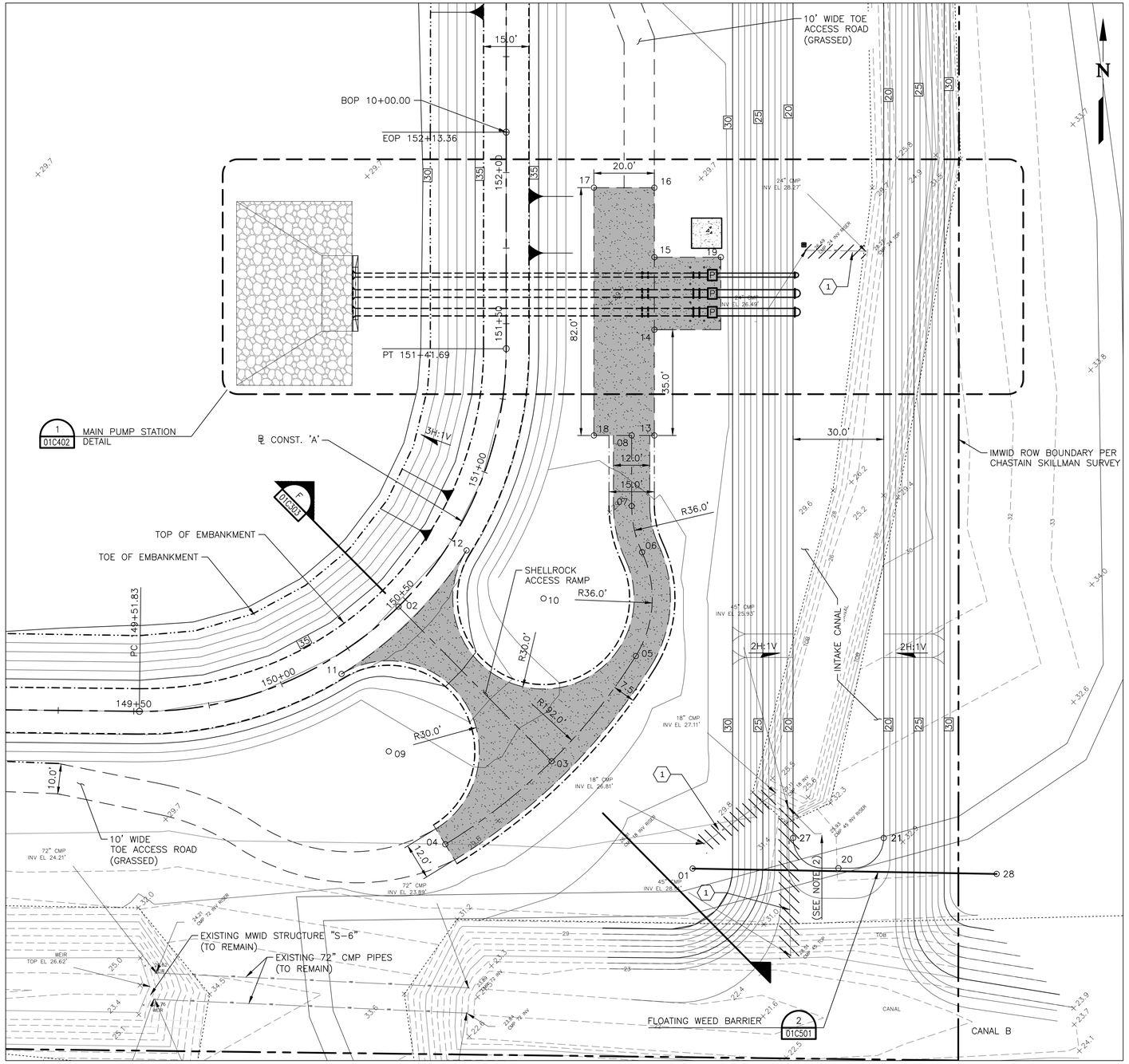

PUMP STATION SITE LAYOUT AND GRADING PLAN

SCALE: 1"=20'

1"=20' 0 10' 20' 40' 80'

POINT DATA

POINT	ELEV	STATION	OFFSET	LINE	DESCRIPTION
01	30.2	150+50.70	130.2' RT	℄ CONST 'A'	FLOATING WEED BARRIER
02	36.0	150+46.76	0.0'	℄ CONST 'A'	PI – SHELLROCK ACCESS RAMP
03	32.9	150+46.76	72.0' RT	℄ CONST 'A'	PI – SHELLROCK ACCESS RAMP
04	32.6	150+18.81	72.0' RT	℄ CONST 'A'	RADIUS PC – END OF SHELLROCK
05	32.7	150+74.70	72.0' RT	℄ CONST 'A'	RADIUS PCC – ℄ ACCESS SHELLROCK
06	32.3	150+95.17	58.1' RT	℄ CONST 'A'	RADIUS PRC – ℄ ACCESS SHELLROCK
07	32.1	151+04.27	49.7' RT	℄ CONST 'A'	RADIUS PT – ℄ ACCESS SHELLROCK
08	31.8	151+20.57	44.0' RT	℄ CONST 'A'	PI – EDGE OF ℄ SHELLROCK ACCESS
09	32.9	150+18.83	36.0' RT	℄ CONST 'A'	RADIUS CENTER POINT
10	32.3	150+74.70	36.0' RT	℄ CONST 'A'	RADIUS CENTER POINT
11	36.1	150+18.81	6.0' RT	℄ CONST 'A'	RADIUS PC – EDGE OF SHELLROCK
12	36.1	150+74.70	6.0' RT	℄ CONST 'A'	RADIUS PC – EDGE OF SHELLROCK
13	31.7	151+21.49	51.4' RT	℄ CONST 'A'	CORNER OF SHELLROCK PUMP STATION AREA
14	31.7	151+47.97	49.0' RT	℄ CONST 'A'	CORNER EDGE OF SHELLROCK
15	31.7	151+71.97	49.0' RT	℄ CONST 'A'	CORNER EDGE OF SHELLROCK
16	31.7	151+94.97	49.0' RT	℄ CONST 'A'	CORNER OF SHELLROCK PUMP STATION AREA
17	31.9	151+94.97	29.0' RT	℄ CONST 'A'	CORNER OF SHELLROCK PUMP STATION AREA
18	31.9	151+18.84	31.7' RT	℄ CONST 'A'	CORNER OF SHELLROCK PUMP STATION AREA
19	31.5	151+71.97	71.0' RT	℄ CONST 'A'	CORNER OF SHELLROCK
20	20.0	150+64.63	167.0' RT	℄ CONST 'A'	BOTTOM OF INTAKE CANAL
21	20.0	150+71.58	173.6' RT	℄ CONST 'A'	BOTTOM OF INTAKE CANAL
22	20.0	11+00.43	124.9' RT	℄ CONST 'A'	BOTTOM OF INTAKE CANAL
23	20.0	11+16.41	120.7' RT	℄ CONST 'A'	RADIUS PC – BOTTOM OF INTAKE CANAL
24	20.0	11+17.90	118.8' RT	℄ CONST 'A'	RADIUS PT – BOTTOM OF INTAKE CANAL
25	20.0	11+17.90	96.9' RT	℄ CONST 'A'	RADUIS PC – BOTTOM OF INTAKE CANAL
26	20.0	11+15.90	94.9' RT	℄ CONST 'A'	RADIUS PT – BOTTOM OF INTAKE CANAL
27	20.0	150+64.20	149.0' RT	℄ CONST 'A'	BOTTOM OF INTAKE CANAL
28	32.0	150+75.45	211.4' RT	℄ CONST 'A'	FLOATING WEED BARRIER

KEY NOTES: (FOR THIS SHEET ONLY)

1. EXISTING PIPES FROM THE PROJECT SITE TO THE SEEPAGE CANAL, INTAKE CANAL, DISCHARGE CANAL AND CANAL B SHALL BE COMPLETELY REMOVED AND BACKFILLED TO THE LINES AND GRADES SHOWN ON THESE DRAWINGS.

NOTES

1. POINT DATA TABLE IS FOR THIS SHEET ONLY
2. TRANSITION BOTTOM OF EXISTING CANALS TO BOTTOM OF INTAKE CANAL AT A MAXIMUM SLOPE OF 20%.

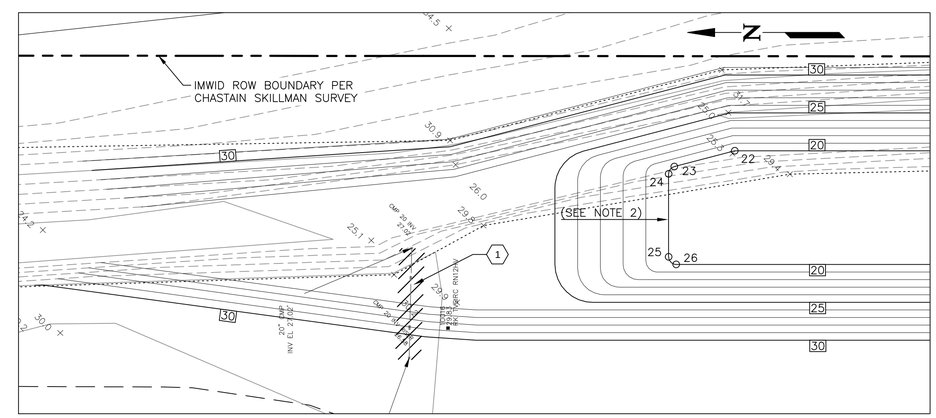

INTAKE CANAL TRANSITION DETAIL

SCALE: 1"=20'

ISSUE	DATE	DESCRIPTION
3	4/1/2016	FINAL DESIGN SUBMITTAL
2	1/8/2016	INTERMEDIATE DESIGN SUBMITTAL
1	10/20/2015	PRELIMINARY DESIGN SUBMITTAL

PROJECT MANAGER	RICHARD LEBLANC, P.E.
DESIGNED BY	R. LEBLANC
DRAWN BY	D. DIXON
CHECKED BY	M. REDINGTON
PROJECT NUMBER	000000000266294

PRELIMINARY NOT FOR CONSTRUCTION

ISTOKPOGA MARSH WATERSHED IMPROVEMENT DISTRICT HIGHLANDS COUNTY, FLORIDA

CIVIL

MAIN PUMP STATION SITE PLAN

FILENAME 01C401.dwg

SCALE 1" = 50'

SHEET 01C401

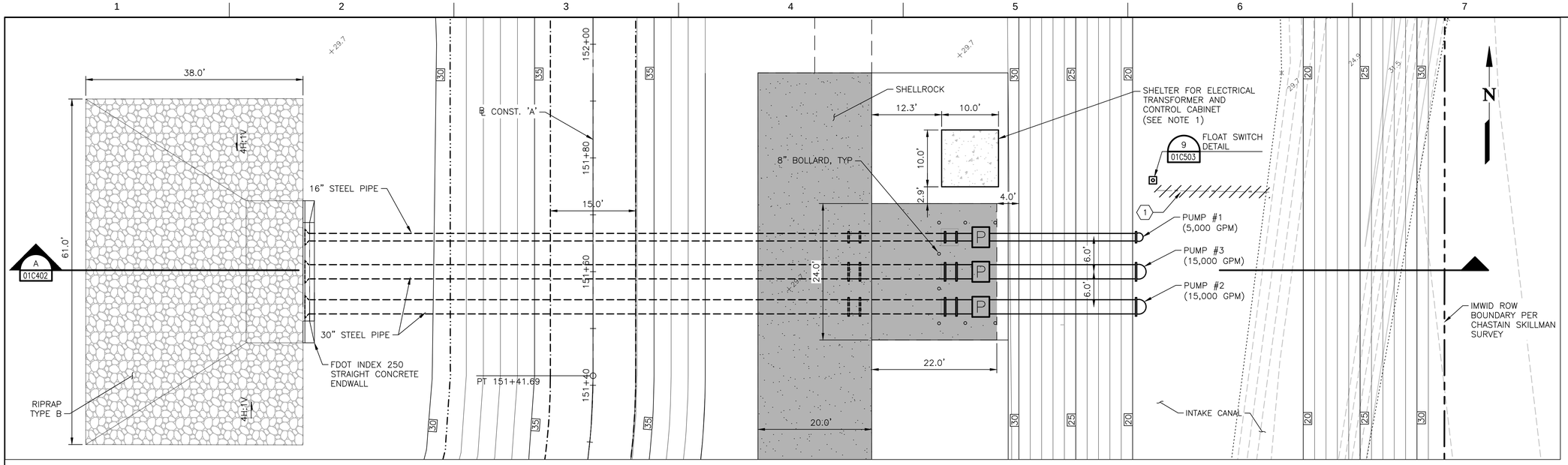

MAIN PUMP STATION DETAIL

SCALE: 1"=10'

1
01C401

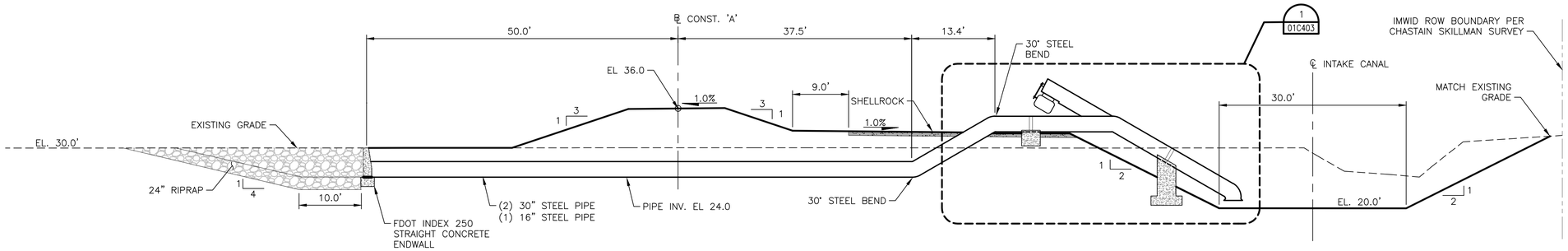

MAIN PUMP STATION SITE SECTION

SCALE: 1"=10'

A
01C402

KEY NOTES: (FOR THIS SHEET ONLY)

1. EXISTING PIPES FROM THE PROJECT SITE TO THE SEEPAGE CANAL, INTAKE CANAL, DISCHARGE CANAL AND CANAL B SHALL BE COMPLETELY REMOVED AND BACKFILLED TO THE LINES AND GRADES SHOWN ON THESE DRAWINGS.

NOTES:

1. SHELTER SHALL BE PRE-ENGINEERED OPEN CANOPY STRUCTURE CONFORMING TO SPECIFICATIONS SECTION 13300. CONCRETE SLAB SHALL BE CONSTRUCTED TO ACCOMMODATE THE SHELTER.

1"=10' 0 5' 10' 20' 40'

ISSUE	DATE	DESCRIPTION
3	4/1/2016	FINAL DESIGN SUBMITTAL
2	1/8/2016	INTERMEDIATE DESIGN SUBMITTAL
1	10/20/2015	PRELIMINARY DESIGN SUBMITTAL

PROJECT MANAGER	RICHARD LEBLANC, P.E.
DESIGNED BY	R. LEBLANC
DRAWN BY	T. BURTON
CHECKED BY	M. REDINGTON
PROJECT NUMBER	000000000266294

PRELIMINARY NOT FOR CONSTRUCTION

ISTOKPOGA MARSH WATERSHED IMPROVEMENT DISTRICT HIGHLANDS COUNTY, FLORIDA

CIVIL

MAIN PUMP STATION SITE DETAILS (1 OF 2)

FILENAME 01C402.dwg

SCALE 1" = 10'

SHEET 01C402

NOTES:

1. ENVELOPE OF SELECT FILL SHALL EXTEND TO THE FINISHED GRADE SLOPE SUPPORTING PUMP AND ASSOCIATED PIPE.
2. BOTTOM OF PEAT/MUCK SOIL LAYER ELEVATION VARIES THROUGHOUT THE PROJECT SITE. EMBANKMENT FOUNDATION SHALL CONFORM TO AND BE PREPARED IN CONFORMANCE WITH THE SPECIFICATION.
3. PUMP MOTOR SHALL BE ATTACHED TO THE SUPPORT COLUMN SUCH THAT THE ENTIRE MOTOR CAN BE ACCESSED FROM THE TOP OF BANK.
4. CONTRACTOR SHALL FURNISH AND INSTALL MANUFACTURER RECOMMENDED TRASH GUARD OR STRAINER AROUND INTAKE BELL TO PREVENT TRASH AND DEBRIS FROM ENTERING INTAKE PIPE AND DAMAGING IMPELLER.

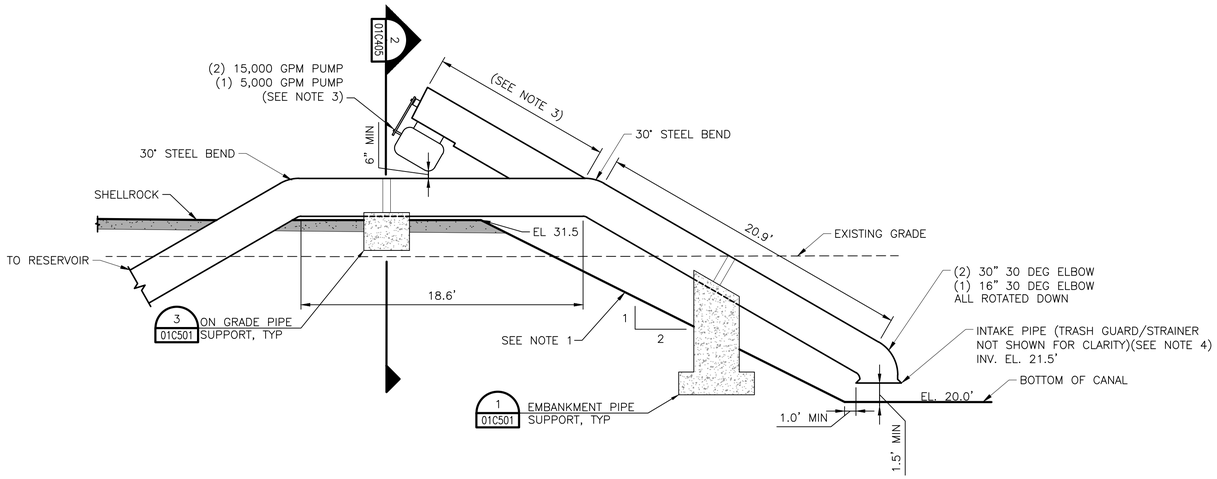

PUMP STATION INTAKE PIPING DETAIL

SCALE: 1"=5'

1 / 01C402

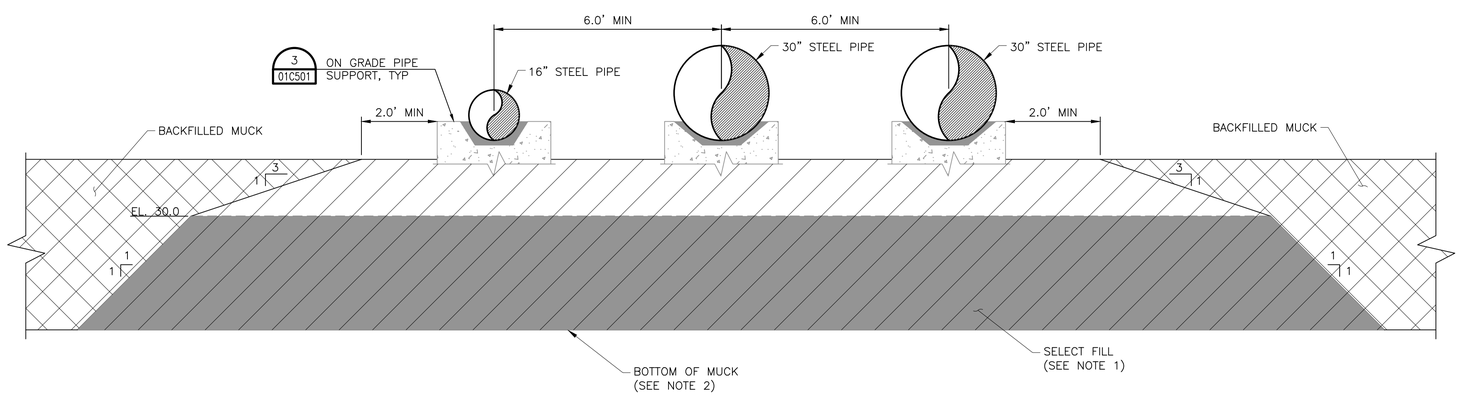

PUMP STATION INTAKE DETAIL

SCALE: 1"=2'

2 / 01C403

LEGEND (FOR THIS SHEET ONLY)

- MUCK REMOVAL
- MUCK BACKFILL
- SELECT FILL

1"=2' 0 2' 4' 8'

1"=5' 0 5' 10' 20'

ISSUE	DATE	DESCRIPTION
3	4/1/2016	FINAL DESIGN SUBMITTAL
2	1/8/2016	INTERMEDIATE DESIGN SUBMITTAL
1	10/20/2015	PRELIMINARY DESIGN SUBMITTAL

PROJECT MANAGER	RICHARD LEBLANC, P.E.
DESIGNED BY	R. LEBLANC
DRAWN BY	T. BURTON
CHECKED BY	M. REDINGTON
PROJECT NUMBER	000000000266294

PRELIMINARY NOT FOR CONSTRUCTION

ISTOKPOGA MARSH WATERSHED IMPROVEMENT DISTRICT
HIGHLANDS COUNTY, FLORIDA

CIVIL

MAIN PUMP STATION SITE DETAILS (2 OF 2)

FILENAME	01C403.dwg	SHEET	01C403
SCALE	1" = 5'		

POINT DATA					
POINT	ELEV	STATION	LINE	OFFSET	DESCRIPTION
01	33.5	113+38.82	℄ CONST. 'A'	41.9' RT	BOTTOM OF RAMP
02	33.6	113+42.41	℄ CONST. 'A'	30.4' RT	BOTTOM OF RAMP
03	36.1	112+88.50	℄ CONST. 'A'	7.5' RT	TOP OF RAMP
04	33.0	112+55.20	℄ CONST. 'A'	16.2' RT	TOP OF RAMP
05	36.0	112+58.71	℄ CONST. 'A'	0.0'	BOTTOM OF SEEPAGE AREA BERM
06	41.5	111+60.14	℄ CONST. 'A'	25.3' LT	TOP OF SEEPAGE AREA BERM
07	33.0	111+59.20	℄ CONST. 'A'	7.7' RT	TOE OF SEEPAGE AREA BERM
08	41.5	111+05.38	℄ CONST. 'A'	25.3' LT	TOP OF SEEPAGE AREA BERM
09	34.0	111+06.07	℄ CONST. 'A'	4.7' RT	TOE OF SEEPAGE AREA BERM
10	34.0	110+10.46	℄ CONST. 'A'	13.2' RT	TOP OF RAMP
11	36.0	110+06.81	℄ CONST. 'A'	0.0'	BOTTOM OF SEEPAGE AREA BERM
12	36.1	109+68.11	℄ CONST. 'A'	7.5' RT	TOP OF RAMP
13	32.4	109+21.91	℄ CONST. 'A'	34.8' RT	BOTTOM OF RAMP
14	32.6	109+18.28	℄ CONST. 'A'	23.3' RT	BOTTOM OF RAMP
15	32.9	111+04.03	℄ CONST. 'A'	45.0' RT	CORNER OF ELECTRICAL CONTROL PAD
16	33.2	110+94.17	℄ CONST. 'A'	35.0' RT	CORNER OF ELECTRICAL CONTROL PAD
17	27.5	111+27.59	℄ CONST. 'A'	73.4' RT	END OF PIPE AT SEEPAGE CANAL
18	34.0	111+23.60	℄ CONST. 'A'	55.3' LT	END OF PIPE AT RESEVOIR

NOTES:

1. SHELTER SHALL BE PRE-ENGINEERED OPEN CANOPY STRUCTURE CONFORMING TO SPECIFICATIONS SECTION 13300. CONCRETE SLAB SHALL BE CONSTRUCTED TO ACCOMMODATE THE SHELTER.

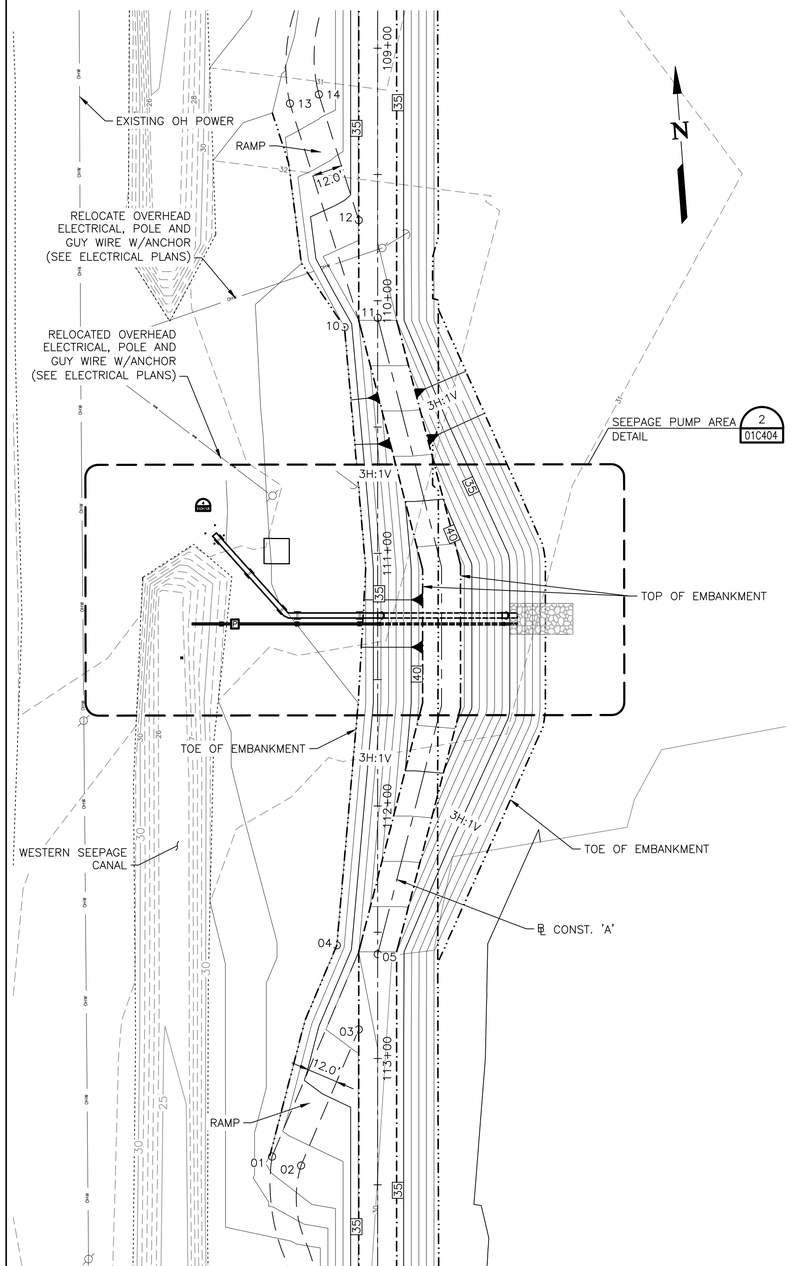

SEEPAGE PUMP GRADING AND LAYOUT PLAN

1 / 01C116

SCALE: 1"=30'

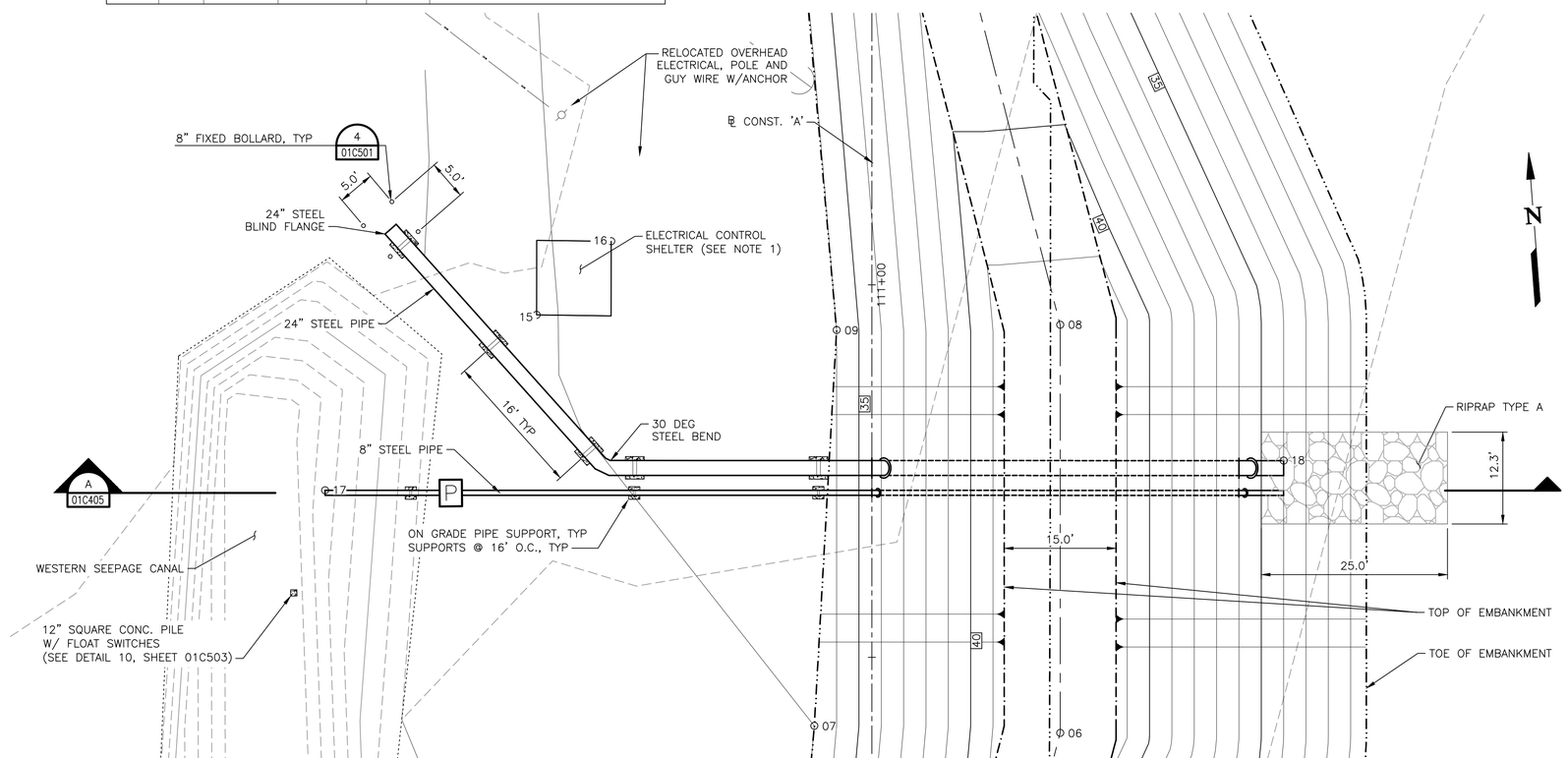

SEEPAGE PUMP AREA DETAIL

2 / 01C404

SCALE: 1"=10'

1"=10' 0 10' 20' 40'

1"=30' 0 30' 60' 120'

ISSUE	DATE	DESCRIPTION
3	4/1/2016	FINAL DESIGN SUBMITTAL
2	1/8/2016	INTERMEDIATE DESIGN SUBMITTAL
1	10/20/2015	PRELIMINARY DESIGN SUBMITTAL

PROJECT MANAGER	RICHARD LEBLANC, P.E.
DESIGNED BY	R. LEBLANC
DRAWN BY	T. BURTON
CHECKED BY	M. REDINGTON
PROJECT NUMBER	000000000266294

PRELIMINARY NOT FOR CONSTRUCTION

ISTOKPOGA MARSH WATERSHED IMPROVEMENT DISTRICT HIGHLANDS COUNTY, FLORIDA

CIVIL

SEEPAGE PUMP SITE PLAN

FILENAME 01C404.dwg

SCALE 1" = 20"

SHEET 01C404

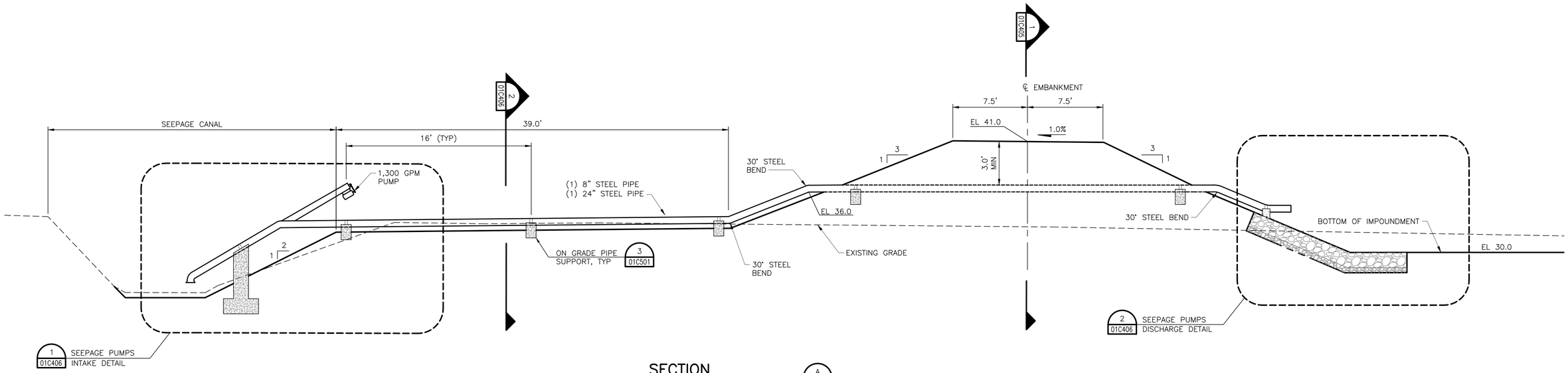

SECTION A 01C404

SCALE: 1"=5'

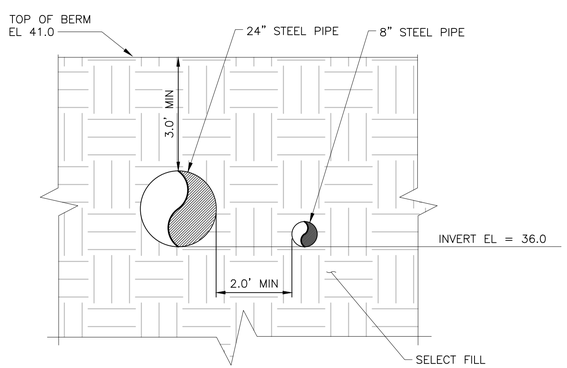

SEEPAGE PIPE EMBEDMENT DETAIL 1 01C405

SCALE: 1"=2'

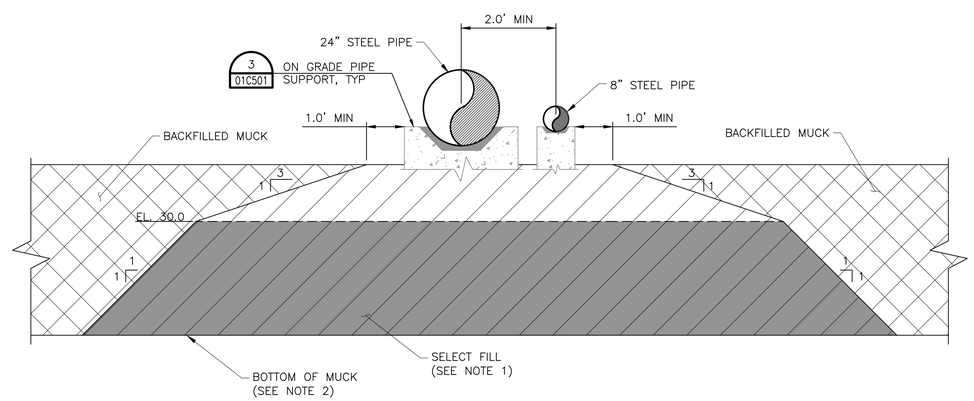

SEEPAGE PUMP EMBANKMENT DETAIL 2 01C405

SCALE: 1"=2'

NOTES:

1. ENVELOPE OF SELECT FILL SHALL EXTEND TO THE FINISHED GRADE SLOPE SUPPORTING THE SEEPAGE PUMP AND ASSOCIATED PIPE.
2. BOTTOM OF PEAT/MUCK SOIL LAYER ELEVATION VARIES THROUGHOUT THE PROJECT SITE. EMBANKMENT FOUNDATION SHALL CONFORM TO AND BE PREPARED IN CONFORMANCE WITH THE SPECIFICATIONS.

LEGEND (FOR THIS SHEET ONLY)

- MUCK REMOVAL
- MUCK BACKFILL
- SELECT FILL

1"=2' 0 2' 4' 8'

1"=5' 0 5' 10' 20'

ISSUE	DATE	DESCRIPTION
3	4/1/2016	FINAL DESIGN SUBMITTAL
2	1/8/2016	INTERMEDIATE DESIGN SUBMITTAL
1	10/20/2015	PRELIMINARY DESIGN SUBMITTAL

PROJECT MANAGER	RICHARD LEBLANC, P.E.
DESIGNED BY	R. LEBLANC
DRAWN BY	T. BURTON
CHECKED BY	M. REDINGTON
PROJECT NUMBER	000000000266294

PRELIMINARY NOT FOR CONSTRUCTION

ISTOKPOGA MARSH WATERSHED IMPROVEMENT DISTRICT
HIGHLANDS COUNTY, FLORIDA

CIVIL

SEEPAGE PUMP SITE SECTIONS

FILENAME 01C405.dwg

SCALE AS SHOWN

SHEET 01C405

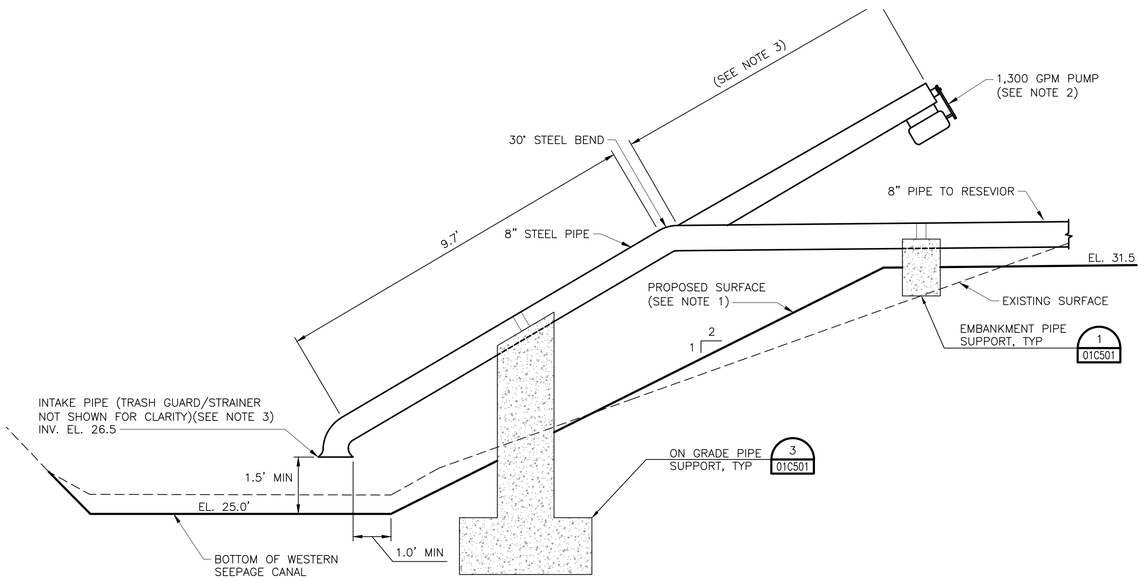

SEEPAGE PUMPS INTAKE DETAIL

SCALE: 1"=2'

1
01C405

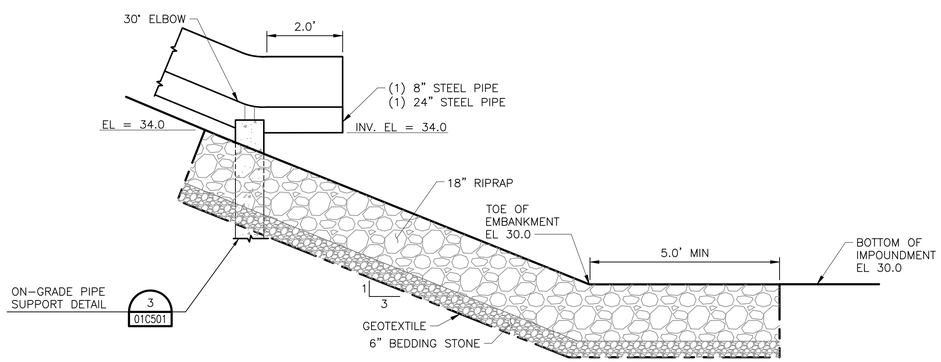

SEEPAGE PUMPS DISCHARGE DETAIL

SCALE: 1"=2'

2
01C405

NOTES:

1. ENVELOPE OF SELECT FILL SHALL EXTEND TO THE FINISHED GRADE SLOPE SUPPORTING THE SEEPAGE PUMP AND ASSOCIATED PIPE.
2. PUMP MOTOR SHALL BE ATTACHED TO THE SUPPORT COLUMN SUCH THAT THE ENTIRE MOTOR CAN BE ACCESSED FROM THE TOP OF BANK.
3. CONTRACTOR SHALL FURNISH AND INSTALL MANUFACTURER RECOMMENDED TRASH GUARD OR STRAINER AROUND INTAKE BELL TO PREVENT DEBRIS FROM ENTERING INTAKE PIPE AND DAMAGING IMPELLER.

1"=2' 0 2' 4' 8'

ISSUE	DATE	DESCRIPTION
3	4/1/2016	FINAL DESIGN SUBMITTAL
2	1/8/2016	INTERMEDIATE DESIGN SUBMITTAL
1	10/20/2015	PRELIMINARY DESIGN SUBMITTAL

PROJECT MANAGER	RICHARD LEBLANC, P.E.
DESIGNED BY	R. LEBLANC
DRAWN BY	T. BURTON
CHECKED BY	M. REDINGTON
PROJECT NUMBER	000000000266294

PRELIMINARY NOT FOR CONSTRUCTION

ISTOKPOGA MARSH WATERSHED IMPROVEMENT DISTRICT HIGHLANDS COUNTY, FLORIDA

CIVIL

SEEPAGE PUMP SITE DETAILS

FILENAME 01C406.dwg

SCALE AS SHOWN

SHEET 01C406

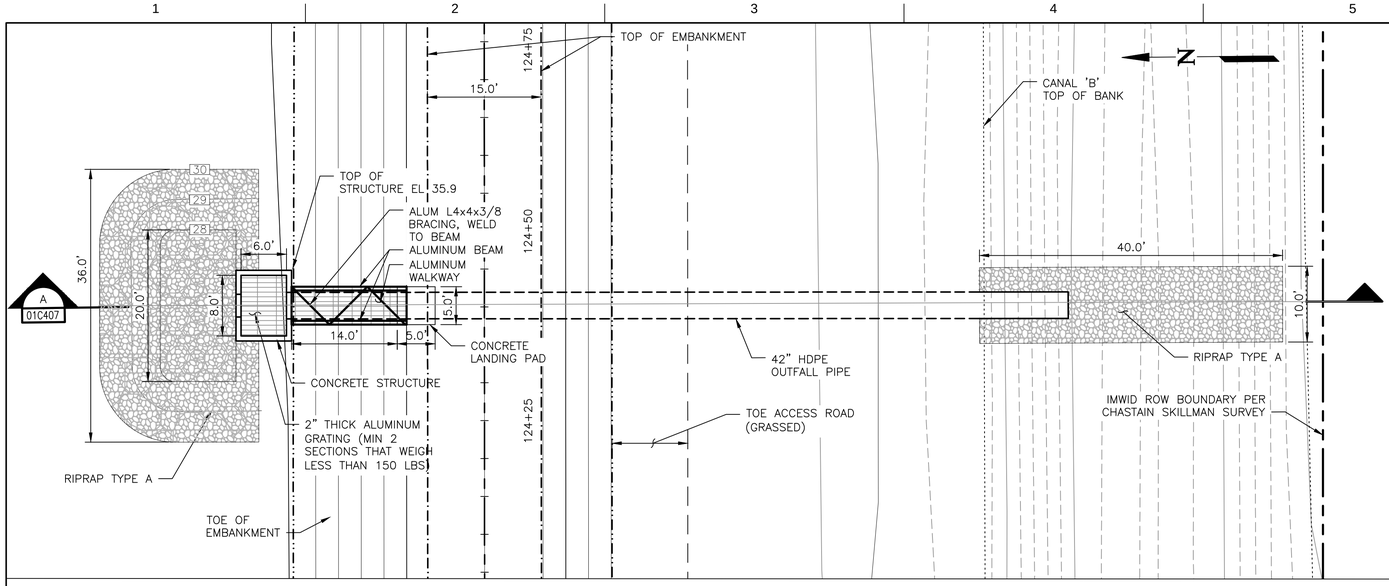

PRIMARY DISCHARGE STRUCTURE DETAIL

SCALE: 1"=10'

1 / 01C117

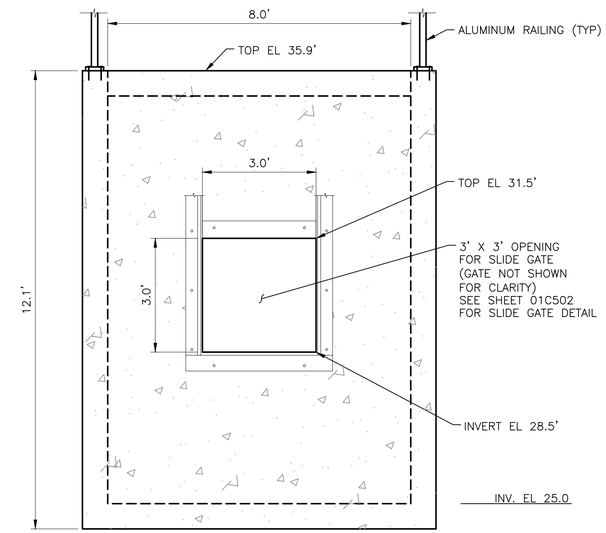

PRIMARY DISCHARGE STRUCTURE FACE

SCALE: 1" = 2'

B / 01C407

NOTES:

1. PRIOR TO PLACEMENT OF RIPRAP, GRADE BOTTOM OF CANAL IN AREA OF DISCHARGE PIPE TO FACILITATE PLACEMENT OF RIPRAP TO THE LINES AND GRADES SHOWN.
2. FOR ALUMINUM IN CONTACT WITH CONCRETE. PROVIDE DISSIMILAR METAL PROTECTION PER SPECIFICATIONS.

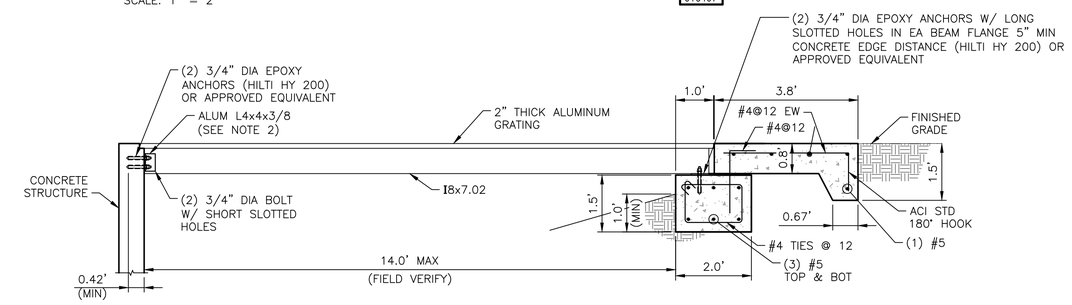

ALUMINUM WALKWAY DETAIL

SCALE: 1" = 2'

2 / 01C407

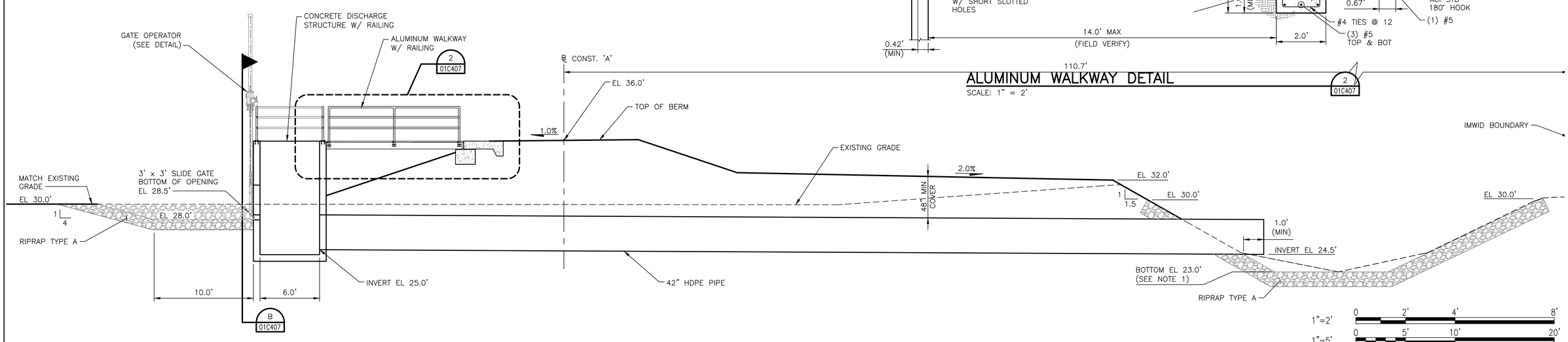

PRIMARY DISCHARGE STRUCTURE SITE SECTION

SCALE: 1"=5'

A / 01C407

1"=2' 0 2' 4' 8'
1"=5' 0 5' 10' 20'
1"=10' 0 5' 10' 20' 40'

ISSUE	DATE	DESCRIPTION
3	4/1/2016	FINAL DESIGN SUBMITTAL
2	1/8/2016	INTERMEDIATE DESIGN SUBMITTAL
1	10/20/2015	PRELIMINARY DESIGN SUBMITTAL

PROJECT MANAGER	RICHARD LEBLANC, P.E.
DESIGNED BY	R. LEBLANC
DRAWN BY	T. BURTON
CHECKED BY	M. REDINGTON
PROJECT NUMBER	000000000266294

PRELIMINARY NOT FOR CONSTRUCTION

ISTOKPOGA MARSH WATERSHED IMPROVEMENT DISTRICT
HIGHLANDS COUNTY, FLORIDA

CIVIL

PRIMARY DISCHARGE STRUCTURE SITE DETAILS

FILENAME	01C407.dwg	SHEET	01C407
SCALE	AS SHOWN		

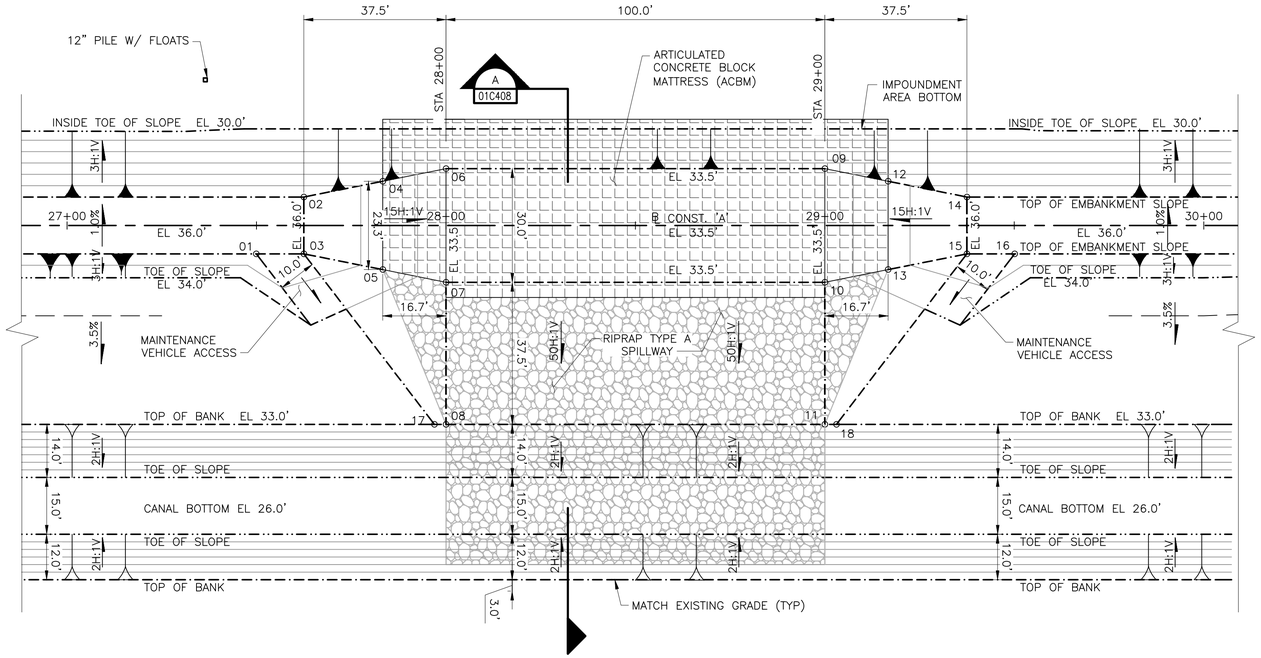

OVERFLOW SPILLWAY SITE LAYOUT AND GRADING PLAN (1 / 01C408)

SCALE: 1"=20'

POINT DATA					
POINT	ELEV	STATION	LINE	OFFSET	DESCRIPTION
01	36.1	27+49.91	℄ CONST 'A'	7.5' RT	TOP OF EMBANKMENT
02	36.0	27+62.50	℄ CONST 'A'	7.5' LT	TOP OF EMBANKMENT
03	36.0	27+62.50	℄ CONST 'A'	7.5' RT	TOP OF EMBANKMENT
04	34.6	27+83.30	℄ CONST 'A'	11.7' LT	TOP CORNER OF ACBM RAMP
05	34.6	27+83.30	℄ CONST 'A'	11.7' RT	TOP CORNER OF ACBM RAMP
06	33.5	28+00.00	℄ CONST 'A'	15.0' LT	BOTTOM OF ACBM RAMP
07	33.5	28+00.00	℄ CONST 'A'	15.0' RT	BOTTOM OF ACBM RAMP
08	33.0	28+00.00	℄ CONST 'A'	52.5' RT	TOP OF BANK
09	33.5	29+00.00	℄ CONST 'A'	15.0' LT	BOTTOM OF ACBM RAMP
10	33.5	29+00.00	℄ CONST 'A'	15.0' RT	BOTTOM OF ACBM RAMP
11	33.0	29+00.00	℄ CONST 'A'	52.5' RT	TOP OF BANK
12	34.5	29+16.70	℄ CONST 'A'	11.7' LT	TOP CORNER OF ACBM RAMP
13	34.5	29+16.70	℄ CONST 'A'	11.7' RT	TOP CORNER OF ACBM RAMP
14	36.0	29+37.50	℄ CONST 'A'	7.5' LT	TOP OF EMBANKMENT
15	36.0	29+37.50	℄ CONST 'A'	7.5' RT	TOP OF EMBANKMENT
16	36.1	29+50.09	℄ CONST 'A'	7.5' RT	TOP OF EMBANKMENT
17	33.0	27+96.94	℄ CONST 'A'	52.5' RT	TOP OF BANK
18	33.0	29+03.06	℄ CONST 'A'	52.5' RT	TOP OF BANK

NOTE: POINT DATA IS FOR THIS SHEET ONLY.

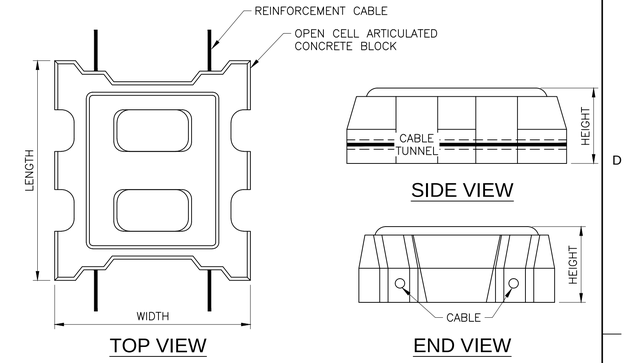

NOTE: FOR MINIMUM DIMENSIONS OF CONCRETE BLOCK, REFER TO SPECIFICATION SECTION 02777.

ARTICULATED CONCRETE BLOCK MATTRESS (ACBM) DETAIL (3 / 01C408)

SCALE: NTS

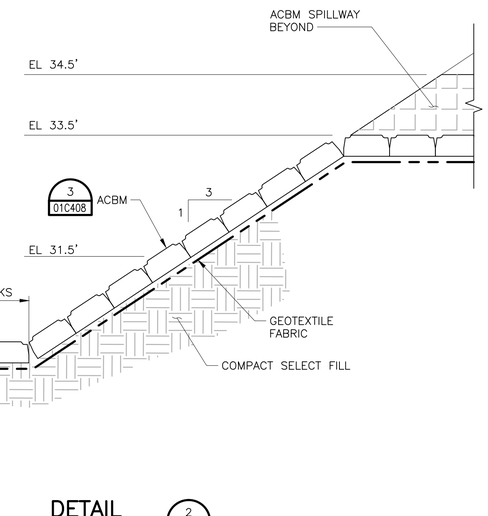

DETAIL (2 / 01C408)

SCALE: NTS

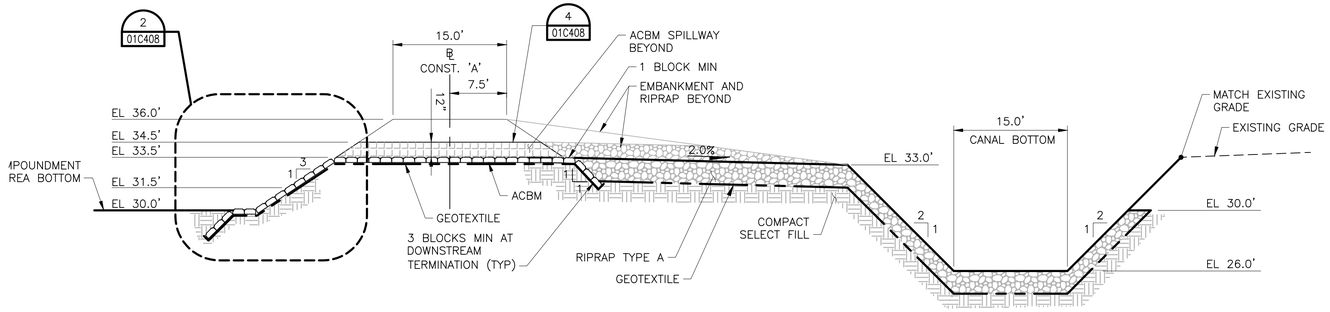

OVERFLOW SPILLWAY SITE SECTION (A / 01C408)

SCALE: HORIZ. 1"=10'
VERT. 1"=5'

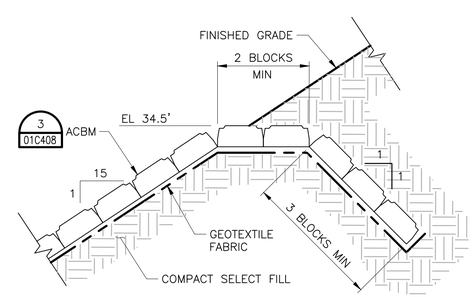

TERMINATION ALONG SLOPE DETAIL (4 / 01C408)

SCALE: NTS

1"=5' 0 5' 10' 20'
1"=10' 0 5' 10' 20' 40'
1"=20' 0 10' 20' 40' 80'

ISSUE	DATE	DESCRIPTION
3	4/1/2016	FINAL DESIGN SUBMITTAL
2	1/8/2016	INTERMEDIATE DESIGN SUBMITTAL
1	10/20/2015	PRELIMINARY DESIGN SUBMITTAL

PROJECT MANAGER	RICHARD LEBLANC, P.E.
DESIGNED BY	R. LEBLANC
DRAWN BY	D. DIXON
CHECKED BY	M. REDINGTON
PROJECT NUMBER	000000000266294

PRELIMINARY NOT FOR CONSTRUCTION

ISTOKPOGA MARSH WATERSHED IMPROVEMENT DISTRICT
HIGHLANDS COUNTY, FLORIDA

CIVIL

OVERFLOW SPILLWAY SITE PLAN AND SECTIONS

FILENAME	01C408A.dwg	SHEET
SCALE	AS SHOWN	01C408

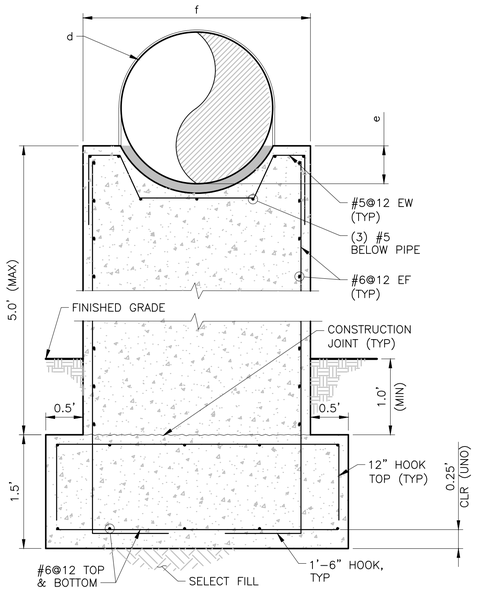

SECTION

NOT TO SCALE

A 01C501

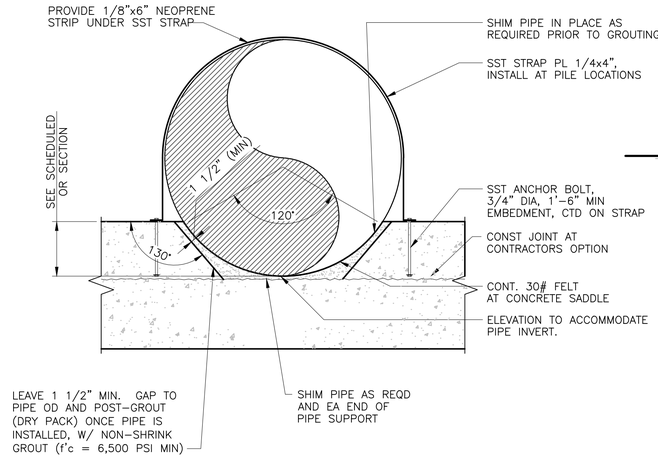

TYPICAL PIPE SADDLE DETAIL

NOT TO SCALE

B 01C501

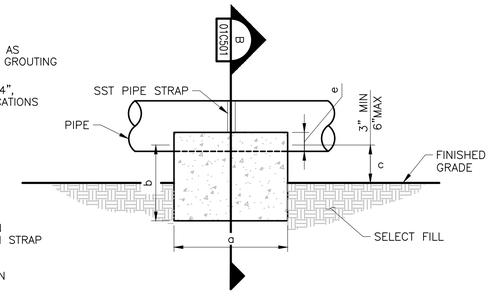

TYPICAL CONCRETE PIPE SUPPORT WITH STRAP

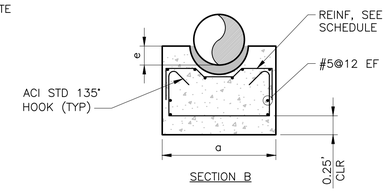

SECTION B

ON GRADE CONCRETE PIPE SUPPORT DIMENSIONS				REINFORCEMENT	
PIPE DIA.	a	b	c	TOP	BOTTOM
8"	1'-0"	1'-6"	0'-3"	#5@12 EW	#5@12 EW
16"	3'-0"	2'-6"	0'-6"	#6@12" EW	#6@12" EW
24"	3'-0"	2'-6"	0'-6"	#6@12" EW	#6@12" EW

ON GRADE PIPE SUPPORT DETAIL

NOT TO SCALE

3 01C406 01C403 01C405

FLOATING WEED BARRIER NOTES:

1. APPLICATION:
   A. WEED BARRIERS SHALL BE PLACED UPSTREAM OF THE MAIN PUMP STATION.
   B. THE BARRIER SHALL CONSIST OF A SERIES OF FLOATS CONNECTED BY A CABLE STRETCHING ACROSS THE CANAL AND SUPPORTED FROM TIMBER PILES, OR AS INDICATED ON THE DRAWINGS.
   C. PROVIDE REFLECTORS AND/OR REFLECTIVE MARKING TAPE ON ALL STRUCTURES, AS NOTED IN THE SPECIFICATIONS. COORDINATE WITH THE COUNTY FOR IMPLEMENTATION.
2. PILES:
   A. THE ANCHOR PILES SHALL BE DESIGNED AND CONSTRUCTED TO RESIST MINIMUM CHANNEL WATER VELOCITIES OF 10 FEET PER SECOND.
   B. PILE AND PILE CAP SHALL BE IN ACCORDANCE WITH SPECIFICATION SECTION 02782.
3. DRIVING PILES:
   A. NO PILES SHALL BE DRIVEN UNTIL THE EXCAVATION OR FILL IN THE AREA, WHICH THEY ARE TO OCCUPY, HAS BEEN COMPLETED TO THE REQUIRED GRADE.
   B. THE MAXIMUM PERMISSIBLE DEVIATION FOR PILES OUT OF PLUMB OR OFF BATTER SHALL BE 2 PERCENT OF THE PILE LENGTH.
   C. THE MAXIMUM PERMISSIBLE DEVIATION FROM INDICATED LOCATIONS SHALL BE 3 INCHES FOR EACH PILE.
   D. ALL PILES SHALL BE DRIVEN CONTINUOUSLY AND WITHOUT VOLUNTARY INTERRUPTION UNTIL THE REQUIRED DEPTH OF PENETRATION HAS BEEN ATTAINED WITH A TOLERANCE OF PLUS OR MINUS 1.5 FEET.
   E. AFTER DRIVING AND BACK DRIVING, IF REQUIRED, ALL PILES SHALL BE CUT OFF AT THE CUTOFF GRADE LINE AND THE SURPLUS MATERIAL SHALL BE REMOVED FROM THE SITE OF THE WORK.
   F. WATER JETS MAY BE USED IN DRIVING ONLY WHEN SPECIFICALLY AUTHORIZED.
      1. AT LEAST TWO JETS SHALL BE USED IN ALL JETTING OPERATIONS.
      2. ALL JETTED PILES SHALL BE DRIVEN FOR THE FINAL FIVE (5) FEET OF PENETRATION UNLESS OTHERWISE DIRECTED.
   G. PILES THAT ARE DAMAGED, MISLOCATED, OR OUT OF ALIGNMENT SHALL BE WITHDRAWN AND REPLACED BY NEW PILES OR SHALL BE CUT OFF AND ABANDONED AND ADDITIONAL PILES DRIVEN.
4. CABLE:
   A. ALL CABLE SHALL BE MINIMUM ½ INCH DIAMETER, STAINLESS STEEL WIRE CABLE. MINIMUM STRENGTH OF CABLE SHALL BE DESIGNED AND CONSTRUCTED TO RESIST MAXIMUM CHANNEL WATER VELOCITIES OF 6 FEET PER SECOND.
   B. THIMBLES, SHACKLE, WIRE ROPE CLAMPS, FASTENERS AND ACCESSORIES SHALL BE STAINLESS STEEL OF A TYPE AND GRADE AT LEAST EQUAL IN STRENGTH TO THE MINIMUM BREAKING STRENGTH OF THE WIRE ROPE.
   C. THE CABLE LENGTH SHALL PROVIDE ADEQUATE SLACK TO ADDRESS THE VARIATION OF WATER STAGE.
   D. CABLE CLAMPS SHALL BE SUPPLIED AS PER MANUFACTURER'S RECOMMENDATIONS.
   E. EYEBOLTS SHALL BE WELDLESS STAINLESS STEEL. CONCRETE EMBEDMENT PER MANUFACTURER'S RECOMMENDATIONS.
5. HARDWARE:
   A. FASTENERS, NUTS, WASHERS AND ALL OTHER STEEL CONNECTIONS TO PILE SHALL BE STAINLESS STEEL
6. WEED BARRIER FLOAT
   A. WEED BARRIER FLOAT SHALL BE "TUFFBOOM" MANUFACTURED BY WORTHINGTON PRODUCTS, INC. OR APPROVED EQUAL.
   B SHALL MEET REQUIREMENTS OF SECTION 02782.
   C DEFLECTOR SPACE PLATE SHALL BE INSTALLED BETWEEN TUFFBOOM FLOATS PER MANUFACTURER'S RECOMMENDATIONS.

EMBANKMENT CONCRETE PIPE SUPPORT DIMENSIONS			
d (PIPE DIA.)	e	f	c
8"	0.25'	1.5'	0'-3"
16"	0.50'	3.0'	0'-6"
24"	0.50'	3.0'	0'-6"

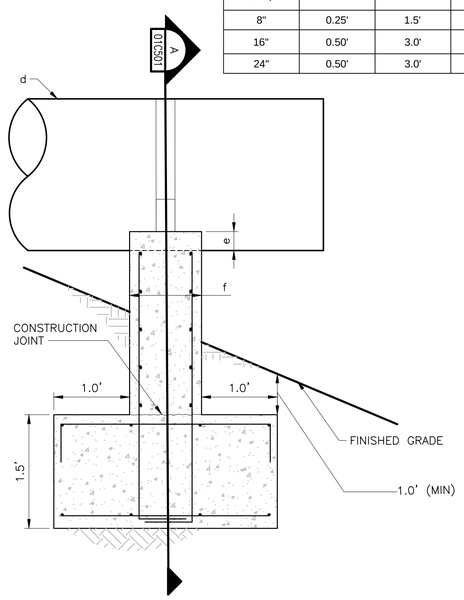

EMBANKMENT PIPE SUPPORT DETAIL

NOT TO SCALE

1 01C403 01C406

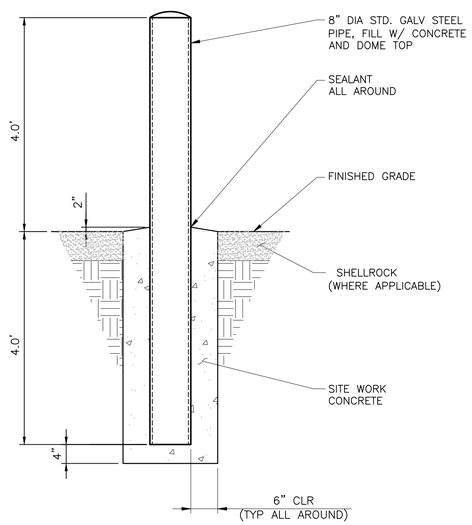

FIXED BOLLARD DETAIL

NOT TO SCALE

4 01C404

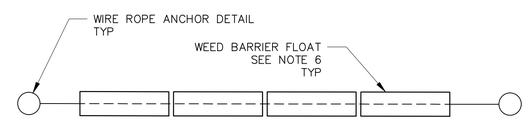

PLAN

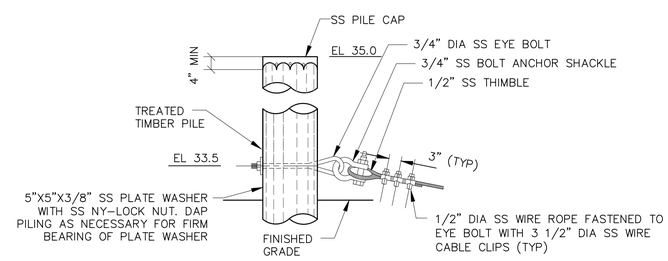

WIRE ROPE ANCHOR DETAIL

FLOATING WEED BARRIER DETAIL

NOT TO SCALE

2 01C111

COUNTY OF HIGHLANDS STATE OF FLORIDA 1921

HDR

ISSUE	DATE	DESCRIPTION
3	4/1/2016	FINAL DESIGN SUBMITTAL
2	1/8/2016	INTERMEDIATE DESIGN SUBMITTAL
1	10/20/2015	PRELIMINARY DESIGN SUBMITTAL

PROJECT MANAGER	RICHARD LEBLANC, P.E.
DESIGNED BY	R. LEBLANC
DRAWN BY	T. BURTON
CHECKED BY	M. REDINGTON
PROJECT NUMBER	000000000266294

PRELIMINARY NOT FOR CONSTRUCTION

ISTOKPOGA MARSH WATERSHED IMPROVEMENT DISTRICT HIGHLANDS COUNTY, FLORIDA

CIVIL

PIPE SUPPORTS AND BOLLARD DETAIL

FILENAME 01C501.dwg

SCALE AS SHOWN

SHEET 01C501

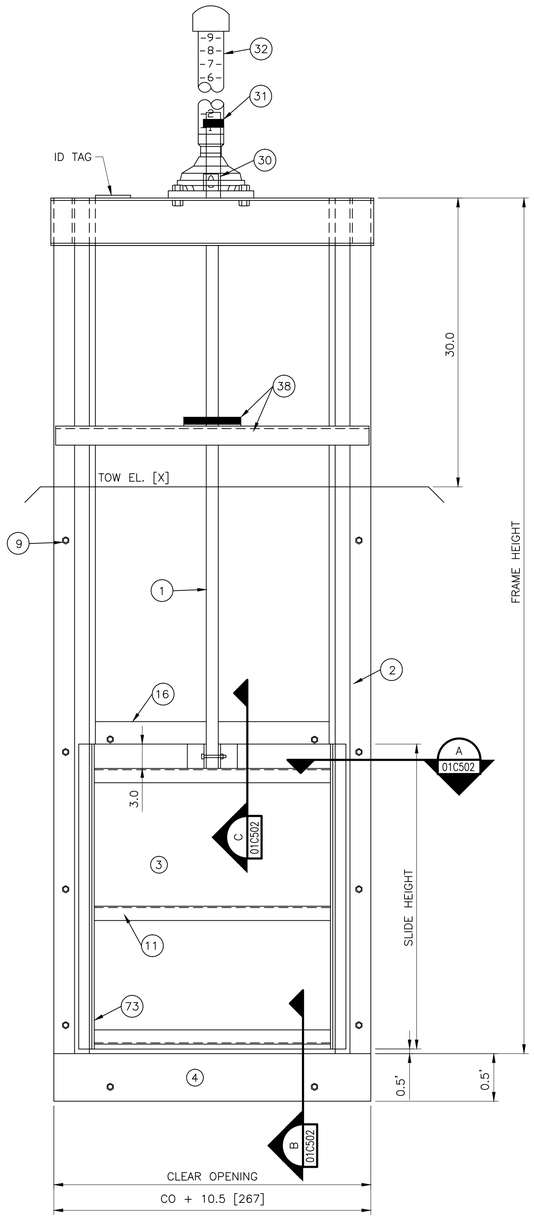

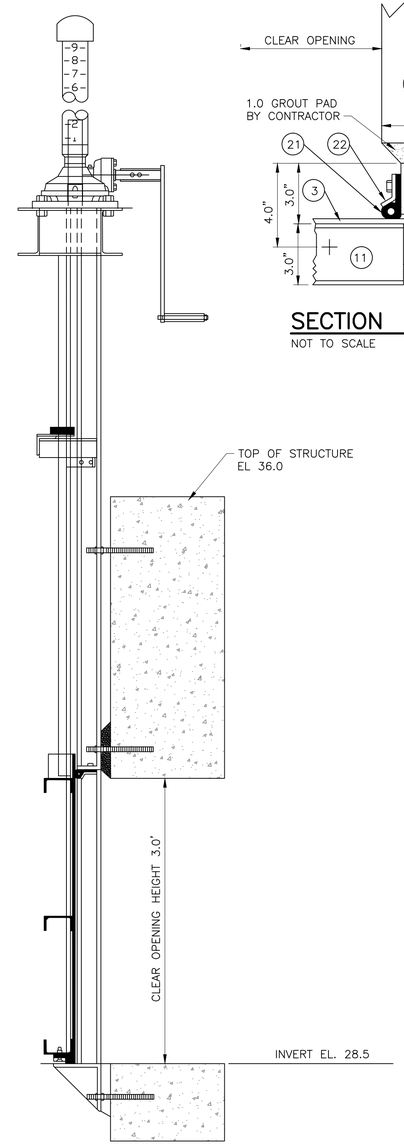

FIELD COAT ALUMINUM IN CONTACT WITH CONCRETE WITH BITUMASTIC 50, MIN. 15 MILS DRY OR EQUAL

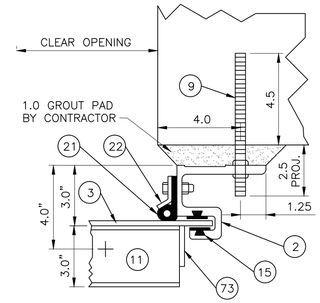

SECTION A 01C502
NOT TO SCALE

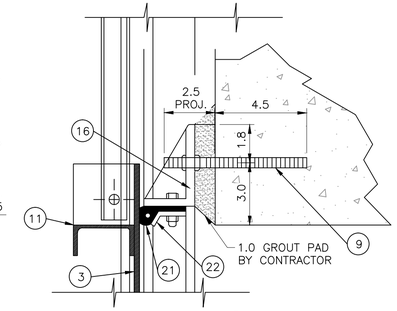

SECTION C 01C502
NOT TO SCALE

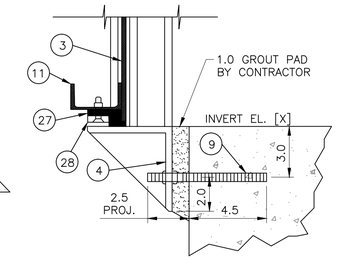

SECTION B 01C502
NOT TO SCALE

1	STEM	STEM
2	GUIDE RAIL	EXTRUDED ALUMINUM, 5 LB. PER FT. UNI FLANGE
3	GATE HEAD	ALUMINUM PLATE
4	INVERT ANGLE	ALUMINUM ANGLE
6	YOKE	ALUMINUM CHANNEL
*9	ANCHOR BLT	S-STL ANCHOR ROD, W/2 NUTS
11	STIFFENER	ALUMINUM CHANNEL
15	GUIDE BEARING BAR	UHMW POLYETHYLENE ASTM D-1248 IN DOVETAIL SLOTS PROVIDING OPERATING COEFFICIENT OF 0.125 OR LESS BETWEEN SLIDE AND GATE GUIDE
16	TOP SPIGOT RAIL	ALUMINUM ANGLE
21	P-SEAL	NEOPRENE RUBBER #7274
22	P-SEAL RTNR	S-STL FLAT BAR W/ SLOTTED HOLES
27	INVERT SEAL	NEOPRENE RUBBER #7509
28	RETAINER BAR	ALUMINUM FLAT BAR
30	OPERATOR	CAST STEEL HOUSING, BEVEL GEARS, ROLLER BEARING SUPPORTED BRONZE LIFT NUT, GREASE ZERK, OPEN DIRECTION INDICATOR, MECHANICAL SEALS, HANDCRANK
31	STOP NUTS	BRONZE ASTM B-584
32	STEM COVER	CLEAR BUTYRATE PLASTIC WITH MYLAR STRIP INDICATOR CALIBRATED IN 1/10" INCREMENTS WITH PVC END CAP
38	STEM GUIDE	ALUMINUM ANGLE, WITH UHMW STEM GUIDE BUSHING
73	VERT. STIFFENER	ALUMINUM FLAT BAR

* ANCHOR BOLTS ARE DESIGNED FOR USE WITH HILTI HIT RE500-SD ADHESIVE INJECTION SYSTEM OR EQUAL (ADHESIVE BY CONTRACTOR)

MATERIAL SPECIFICATIONS:
HARDWARE & FASTENERS - SS ASTM-F593 / F594
S-STL STEM = SS ASTM-A276
S-STL ANCHOR ROD = SS ASTM-A276
ALUMINUM SHAPES - 6061-T6
ALUMINUM FORMED & PLATE = 6061-T6
ALUMINUM EXTRUSION = 6061-T6
ALUMINUM ROUND BAR = 6063-T5
UHMWPE - ASTM-D4020
NEOPRENE RUBBER = ASTM-D2000
BRONZE = ASTM-B584

SLIDE GATE DETAIL
NOT TO SCALE
1 01C502

ISSUE	DATE	DESCRIPTION
3	4/1/2016	FINAL DESIGN SUBMITTAL
2	1/8/2016	INTERMEDIATE DESIGN SUBMITTAL
1	10/20/2015	PRELIMINARY DESIGN SUBMITTAL

PROJECT MANAGER	RICHARD LEBLANC, P.E.
DESIGNED BY	R. LEBLANC
DRAWN BY	T. BURTON
CHECKED BY	M. REDINGTON
PROJECT NUMBER	000000000266294

PRELIMINARY NOT FOR CONSTRUCTION

ISTOKPOGA MARSH WATERSHED IMPROVEMENT DISTRICT HIGHLANDS COUNTY, FLORIDA

CIVIL

SLIDE GATE DETAIL

FILENAME 01C502.dwg
SCALE 1" = 1'
SHEET 01C502

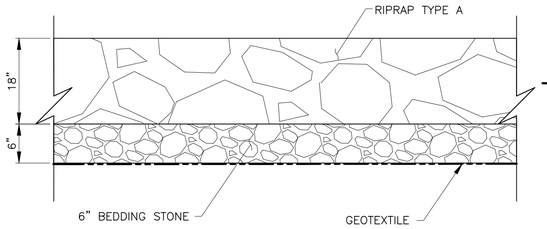

RIPRAP TYPE A DETAIL (1 / –)

NOT TO SCALE

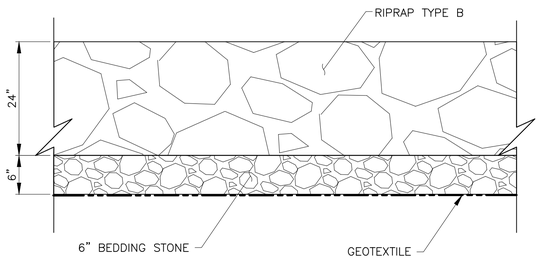

RIPRAP TYPE B DETAIL (4 / –)

NOT TO SCALE

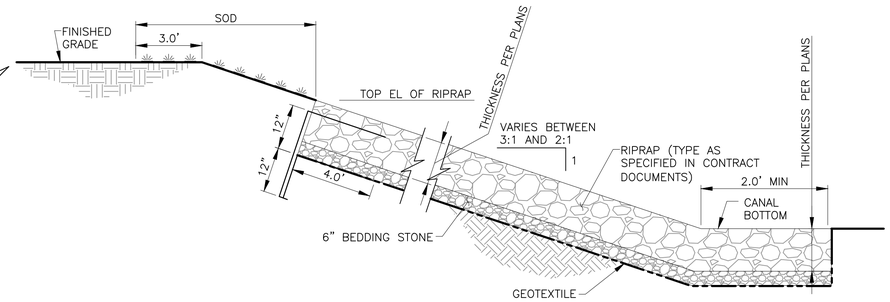

RIPRAP SLOPE PROTECTION DETAIL (2 / –)

NOT TO SCALE

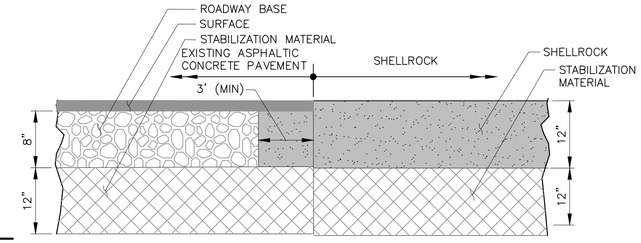

ASPHALT/SHELLROCK CONSTRUCTION JOINT (3 / 01C202)

NOT TO SCALE

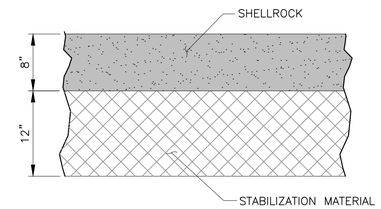

TYPICAL SHELLROCK SECTION (6 / 01C503)

NOT TO SCALE

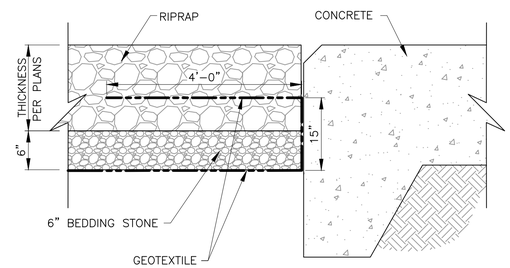

RIPRAP PROTECTION AT CONCRETE INTERFACE (5 / –)

NOT TO SCALE

NOTES:

1. TOP OF BANK ELEVATION IS SHOWN ON THE GRADING AND SECTION DRAWINGS.
2. RIPRAP SHALL BE PLACED IN CONFORMANCE WITH SPECIFICATIONS SECTION 02271.
3. SHELLROCK BASE COURSE AND STABILIZATION MATERIAL SHALL BE PLACED IN CONFORMANCE WITH SPECIFICATIONS SECTION 02233.
4. REFER TO SPECIFICATION SECTION 02271 FOR RIPRAP TYPES AND GRADATIONS.
5. ALL SELECT FILL SHALL BE PLACED AND COMPACTED IN ACCORDANCE WITH SPECIFICATION SECTION 02200.
6. PLACE AND COMPACT PIPE BACKFILL, SECTION 02221. BEDDING IN CONFORMANCE WITH SECTION 02200 EARTHWORK.
7. TOE ELEVATION VARIES. CONTRACTOR SHALL MATCH TOE OF EMBANKMENT ELEVATIONS UPSTREAM AND DOWNSTREAM OF EMBANKMENT INTERSECTION WITH EXISTING DITCHES AND CANALS.

FLOAT SWITCH PILE AND PIPE ELEVATIONS			
	MAIN PUMPSTATION	SEEPAGE PUMPSTATION	OVERFLOW SPILLWAY
A	25.5	26	32.5
B	32.0	32.0	36.0
C	31.5	31.5	35.5

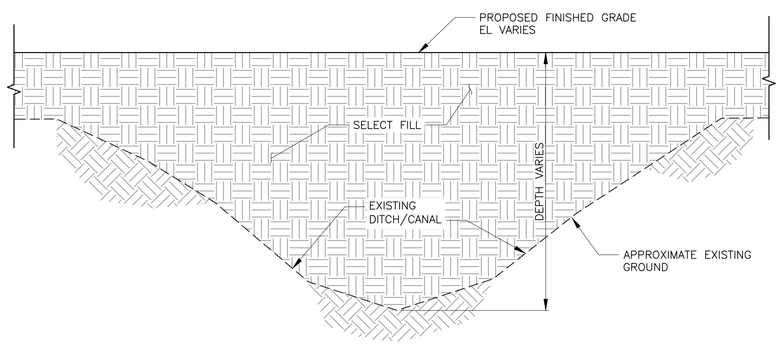

SECTION (B / 01C503)

NOT TO SCALE

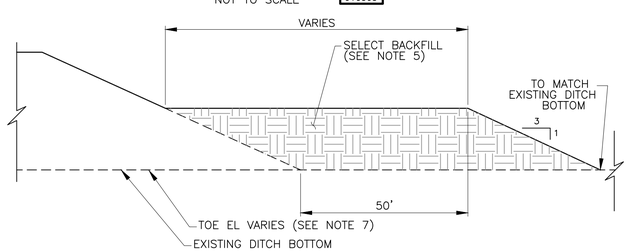

SECTION (A / 01C503)

NOT TO SCALE

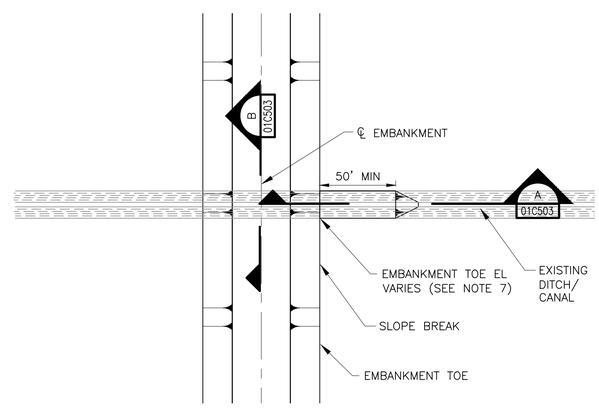

EMBANKMENT INTERSECTING EXISTING DITCH/CANAL DETAIL (7 / –)

NOT TO SCALE

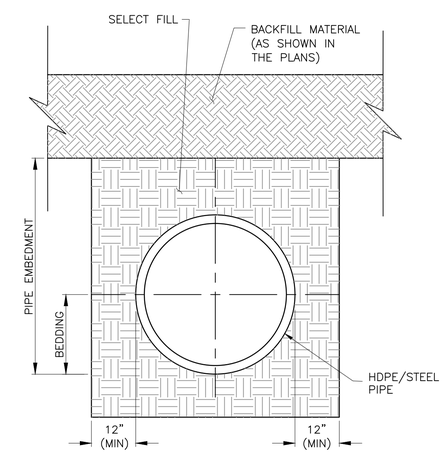

PIPE EMBEDMENT DETAIL (8 / –)

NOT TO SCALE

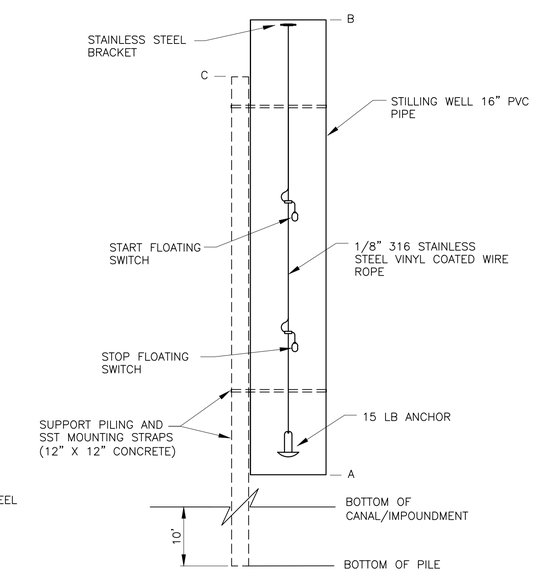

FLOAT SWITCH DETAIL (9 / 01C402)

NOT TO SCALE

ISSUE	DATE	DESCRIPTION
3	4/1/2016	FINAL DESIGN SUBMITTAL
2	1/8/2016	INTERMEDIATE DESIGN SUBMITTAL
1	10/20/2015	PRELIMINARY DESIGN SUBMITTAL

PROJECT MANAGER	RICHARD LEBLANC, P.E.
DESIGNED BY	R. LEBLANC
DRAWN BY	T. BURTON
CHECKED BY	M. REDINGTON
PROJECT NUMBER	000000000266294

PRELIMINARY NOT FOR CONSTRUCTION

ISTOKPOGA MARSH WATERSHED IMPROVEMENT DISTRICT HIGHLANDS COUNTY, FLORIDA

CIVIL

RIPRAP, SHELLROCK, DITCH/CANAL FILL AND FLOAT SWITCH DETAILS

FILENAME 01C503.dwg

SCALE AS SHOWN

SHEET 01C503

GENERAL EROSION & SEDIMENT CONTROL NOTES

1. THE CONTRACTOR SHALL PREPARE AND OBTAIN APPROVAL OF AN EROSION AND SEDIMENT CONTROL PLAN IN ACCORDANCE WITH SPECIFICATION SECTION 02270, AND THESE PLANS.

2. ALL PRACTICABLE AND NECESSARY EFFORTS SHALL BE MADE DURING CONSTRUCTION TO CONTROL AND PREVENT EROSION AND TRANSPORT OF SEDIMENT MATERIAL TO DRAINAGE DITCHES AND CANALS. THE CONTRACTOR SHALL BE RESPONSIBLE FOR ALL RESTORATION EFFORTS THAT MAY BE REQUIRED.

3. PROVIDE ALL DISTURBED AREAS WITHIN THE LIMITS OF THE WORK WITH TEMPORARY SOIL EROSION CONTROL AND SEDIMENT CONTROL. UTILIZE EARTH DAMS & PONDS, GRADE TO DRAIN SWALES, SETTLING BASINS, SILT FENCES, HAY BALE FILTERS, ETC. SOD SHALL BE PLACED IN AREAS WHICH MAY REQUIRE IMMEDIATE EROSION PROTECTION TO ENSURE WATER QUALITY STANDARDS ARE MAINTAINED. TREAT ALL SOIL SURFACES IN ACCORDANCE WITH THESE PLANS AND SPECIFICATIONS AFTER GRADING.

4. ALL SOIL EROSION AND SEDIMENT CONTROL PRACTICES SHALL BE INSTALLED PRIOR TO ANY MAJOR SOIL DISTURBANCE AND MAINTAINED THROUGH PROJECT COMPLETION.

5. CONSTRUCTION OPERATIONS SHALL BE CARRIED OUT IN SUCH A MANNER THAT EROSION AND AIR AND WATER POLLUTION WILL BE MINIMIZED. FEDERAL, STATE, AND LOCAL LAWS SHALL BE COMPLIED WITH AT ALL TIMES.

6. MINIMIZE THE AMOUNT OF BARE SOIL EXPOSED AT ONE TIME AND INSTALL SOIL EROSION CONTROL FENCES AS SHOWN AND IN SUCH A MANNER AS TO CAPTURE AND FILTER SURFACE WATER DURING CONSTRUCTION.

7. REPLACE OR TREAT UNSUITABLE SOILS BEFORE REVEGETATING DISTURBED AREAS. SEE PROJECT SPECIFICATIONS FOR SOIL REQUIREMENTS.

8. ALL NEW EROSION AND SILT CONTROL METHODS AND LOCATIONS INDICATED ON THESE DRAWINGS ARE FOR STARTUP AND GENERAL REFERENCE AND SHALL BE ADJUSTED, AS REQUIRED, TO SUIT THE PROCESS OF THE CONSTRUCTION.

9. ALL DISTURBED AREAS WITHIN THE LIMITS OF CONSTRUCTION SHALL RECEIVE VEGETATIVE TREATMENT AFTER FINAL GRADING IN ACCORDANCE WITH THESE PLANS AND SPECIFICATIONS. ALL AREAS OF TEMPORARY CONSTRUCTION ARE TO BE SEEDED AND MULCHED IN ACCORDANCE WITH SPECIFICATION SECTION 02485 AND 02920.

10. THE INSTALLATION OF TEMPORARY EROSION CONTROL BARRIERS SHALL BE COORDINATED WITH THE CONSTRUCTION OF THE PERMANENT EROSION CONTROL FEATURES TO THE EXTENT NECESSARY TO ASSURE ECONOMICAL, EFFECTIVE AND CONTINUOUS CONTROL OF EROSION AND WATER POLLUTION THROUGHOUT THE CONSTRUCTION PHASE.

11. THE TYPE OF EROSION CONTROL BARRIERS USED SHALL BE GOVERNED BY THE NATURE OF THE CONSTRUCTION OPERATION AND SOIL TYPE THAT WILL BE EXPOSED. SILTY AND CLAYEY MATERIAL USUALLY REQUIRES SOLID SEDIMENT BARRIERS TO PREVENT TURBID WATER DISCHARGE, WHILE SANDY MATERIAL MAY NEED ONLY SILT SCREENS OR HAY BALES TO PREVENT EROSION. FLOATING TURBIDITY CURTAINS SHOULD BE USED IN OPEN WATER SITUATIONS. DIVERSION DITCHES OR SWALES MAY BE REQUIRED TO PREVENT TURBID STORMWATER RUNOFF FROM BEING DISCHARGED TO WETLAND OR OTHER WATER BODIES. IT MAY BE NECESSARY TO EMPLOY A COMBINATION OF BARRIERS, DITCHES, AND OTHER EROSION/TURBIDITY CONTROL MEASURES IF CONDITIONS WARRANT.

12. WHERE PUMPS ARE TO BE USED TO PUMP TURBID WATERS FROM THE CONSTRUCTION AREA, THE WATER SHALL BE TREATED TO REDUCE TURBIDITY TO STATE WATER QUALITY STANDARDS PRIOR TO DISCHARGE INTO CANALS.

13. THE CONTRACTOR SHALL PROVIDE ROUTINE MAINTENANCE OF PERMANENT AND TEMPORARY EROSION CONTROL FEATURES UNTIL THE PROJECT IS COMPLETE AND ALL BARE SOIL IS STABILIZED. SILT ACCUMULATIONS GREATER THAN ONE-HALF THE DEPTH OF THE SILTATION CONTROL BARRIER SHALL BE IMMEDIATELY REMOVED AND PLACED IN AREAS APPROVED BY THE DISTRICT. THE CONTRACTOR SHALL REMOVE SILT FROM SITE IF NOT REUSABLE.

14. WATER REMAINING IN THE EXCAVATIONS AFTER CONSTRUCTION MUST BE KEPT CONFINED WITHIN THE EXCAVATIONS PRIOR TO DISCHARGE (IF APPLICABLE) UNTIL THE TURBIDITY LEVEL OF THE WATER RETURNS TO BACKGROUND LEVELS BASED ON VISUAL INSPECTION.

15. THE CONTRACTOR SHALL PROVIDE SILTATION REDUCTION DEVICES FOR THE DISCHARGE FROM THE DEWATERING PROCESS SO THAT DIRECT DISCHARGE DOES NOT OCCUR.

16. DURING THE CONSTRUCTION OF DRAINAGE STRUCTURES, AND OTHER STRUCTURES REQUIRING EXCAVATION, THE CONTRACTOR SHALL PLACE STRAW BALES AROUND SUCH STRUCTURES TO PREVENT EROSION AND THE MIGRATION OF SEDIMENT TO POINTS OUTSIDE THE CONSTRUCTION AREA.

17. PRIOR TO AND DURING CONSTRUCTION, THE CONTRACTOR SHALL PLACE STRAW BALES AT THE UPSTREAM END OF ALL PIPES UNTIL INLETS ARE COMPLETED.

18. THE CONTRACTOR SHALL SEED OR SOD SWALES PER SPECIFICATION SECTION 02930, IMMEDIATELY AFTER CONSTRUCTION IS COMPLETED.

19. THE CONTRACTOR SHALL CHECK ALL EROSION AND SILTATION CONTROL DEVICES AFTER EACH RAINFALL AND REPAIR OR REPLACE THEM AS REQUIRED AT CONTRACTOR'S EXPENSE.

20. DURING THE LAYOUT OF SEDIMENT CONTROLS, FIELD ADJUSTMENTS SHALL BE MADE AS REQUIRED, SUBJECT TO ENGINEER APPROVAL, TO ACCOMMODATE ACTUAL FIELD CONDITIONS.

21. INSTALL SILT FENCE AT THE TOE OF ALL EMBANKMENT SLOPES AND/OR LIMITS OF CONSTRUCTION, WHICH HAVE NOT BEEN STABILIZED WITH PERMANENT VEGETATION.

22. THE CONTRACTOR SHALL PROVIDE DUST CONTROL AND PROTECT ADJACENT ROADS FROM ACCUMULATION OF SOIL.

23. THE CONTRACTOR SHALL COVER THE CONTRACTOR STAGING AREA WITH SHELLROCK AND GRADE TO PROVIDE POSITIVE DRAINAGE.

24. THE REQUIREMENTS LISTED ABOVE SHALL BE CONSIDERED MINIMUM REQUIREMENTS, AND THE CONTRACTOR SHALL USE WHATEVER METHODS HE OR THE DISTRICT DEEMS NECESSARY TO PREVENT EROSION AND SILTATION AS MAY BE REQUIRED FOR THE PROJECT.

25. UNLESS OTHERWISE NOTED IN THESE PLANS AND/OR CONTRACT DOCUMENTS, EROSION AND SEDIMENTATION CONTROL MEASURES SHALL BE IN ACCORDANCE WITH FDOT STANDARD SPECIFICATIONS.

26. FOR ANY GROUNDWATER DISCHARGED ON OR OFF-SITE DURING CONSTRUCTION, THE CONTRACTOR SHALL OBTAIN AND CONFORM TO THE REQUIREMENTS OF THE NECESSARY PERMIT(S) FROM THE FLORIDA DEPARTMENT OF ENVIRONMENTAL PROTECTION (FDEP).

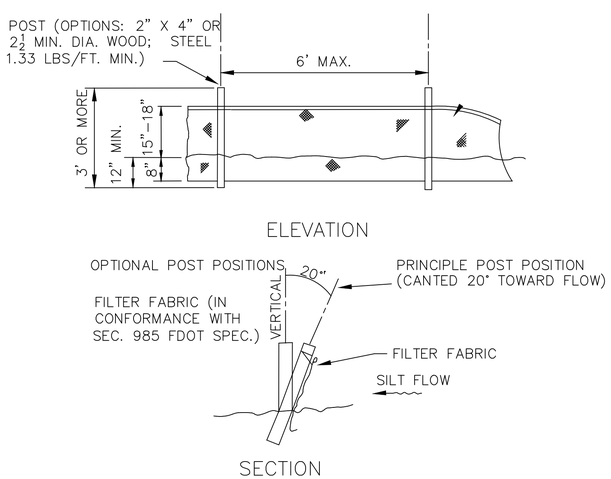

SILT FENCE TYPICAL DETAIL (1 / 01C504)
NOT TO SCALE

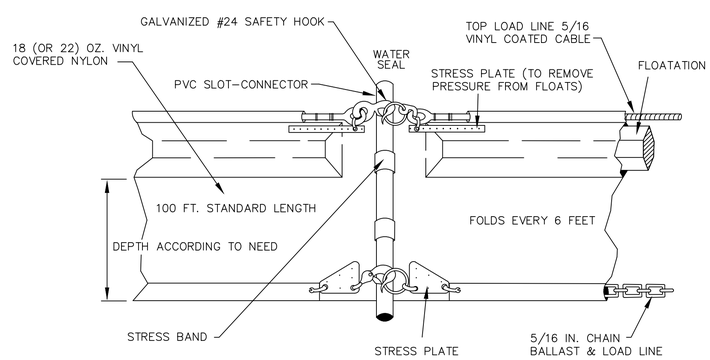

TURBIDITY BARRIER DETAIL (2 / 01C504)
NOT TO SCALE

ISSUE	DATE	DESCRIPTION
3	4/1/2016	FINAL DESIGN SUBMITTAL
2	1/8/2016	INTERMEDIATE DESIGN SUBMITTAL
1	10/20/2015	PRELIMINARY DESIGN SUBMITTAL

PROJECT MANAGER	RICHARD LEBLANC, P.E.
DESIGNED BY	R. LEBLANC
DRAWN BY	T. BURTON
CHECKED BY	M. REDINGTON
PROJECT NUMBER	000000000266294

PRELIMINARY NOT FOR CONSTRUCTION

ISTOKPOGA MARSH WATERSHED IMPROVEMENT DISTRICT HIGHLANDS COUNTY, FLORIDA

CIVIL

EROSION CONTROL DETAILS

FILENAME 01C504.dwg
SCALE AS SHOWN
SHEET 01C504

LOW VOLTAGE CIRCUIT BREAKER (CB). RATINGS AND NO. OF POLES AS SHOWN. WHEN SPECIFIC TYPE IS REQUIRED, X INDICATES TYPE.

TYPES:
MCCB – MOLDED CASE
ICCB – INSULATED CASE
LVP – LOW VOLTAGE POWER
MCP – MOTOR CIRCUIT PROTECTOR (RATING PER CONNECTED LOAD)

SEPARATELY MOUNTED CIRCUIT BREAKER, SEE ELECTRICAL ONE LINE DIAGRAM OR SCHEDULE FOR DESCRIPTION

GROUND FAULT PROTECTION

MEDIUM VOLTAGE CIRCUIT BREAKER

FUSE, SIZE AND NUMBER OF FUSES AS NOTED

FUSED CUTOUT, CURRENT RATING, FUSE SIZE AND NUMBER OF POLES AS NOTED

FUSIBLE SWITCH, CURRENT RATING, FUSE SIZE AND QUANTITY AS NOTED

NON–FUSED SWITCH, CURRENT RATING AND NUMBER OF POLES AS NOTED

DISCONNECT OR DRAWOUT CONNECTION

MAGNETIC MOTOR STARTER AND SEPARATELY MOUNTED COMBINATION MAGNETIC MOTOR STARTER.

MOTOR CONTROLLER AND SEPARATELY MOUNTED MOTOR CONTROLLER WITH SHORT CIRCUIT PROTECTION AND DISCONNECT.

MOTOR STARTER AND CONTROLLER SUBSCRIPTS:

A – MAGNETIC STARTER NEMA SIZE

B – STARTER TYPE
NONE – FULL VOLTAGE NON–REVERSING (FVNR)
FVR – FULL VOLTAGE REVERSING
2S – TWO SPEED
RVAT – REDUCED VOLTAGE AUTO TRANSFORMER

C – CONTROL DIAGRAM OR CONTROLS SCHEDULE NUMBER (IF REQUIRED)

D – CONTROLLER TYPE
VFD – VARIABLE FREQUENCY DRIVE
SS – SOLID STATE

SEPARATELY MOUNTED COMBINATION MOTOR STARTER OR CONTROLLER, SEE ELECTRICAL ONE LINE DIAGRAM OR SCHEDULE FOR DESCRIPTION

THERMAL OVERLOAD ELEMENT

THERMAL OVERLOAD RELAY CONTACT

DISCONNECT OR SAFETY SWITCH, 30A, NON–FUSED UNLESS OTHERWISE NOTED

MOTOR WITH DESIGN HORSEPOWER (WHEN INDICATED)

GENERATOR

TRANSFER SWITCH, CURRENT RATING AND NUMBER OF POLES AS NOTED.

ATS – AUTOMATIC
MTS – MANUAL

TRANSFORMER

3 PHASE, 3 WIRE DELTA CONNECTION

3 PHASE, 4 WIRE GROUNDED WYE CONNECTION

SWITCHBOARD OR PANELBOARD. NAME, VOLTAGE, PHASE, NUMBER OF WIRES WHEN INDICATED.

NON–MOTOR LOAD WITH DESIGN KVA, KW OR AMPS

CONTROL POWER TRANSFORMER (CPT)

START/STOP OUTPUT FROM PLC SYSTEM

VOLTAGE TRANSFORMER (VT OR PT)

CURRENT TRANSFORMER (CT)

UTILITY WATT–HOUR METER PER UTILITY REQUIREMENTS

DIGITAL METERING PACKAGE

RUN TIME METER

GROUND

LIGHTNING ARRESTER

LOW VOLTAGE SURGE PROTECTIVE DEVICE

ELECTRICAL CONNECTION

NO ELECTRICAL CONNECTION

SOLENOID VALVE

CONTROL/RELAY COIL, X INDICATES TYPE, Y INDICATES LOOP NO. WHEN USED

TYPES:
CR – CONTROL RELAY
DP – DEFINITE PURPOSE RELAY
LC – LIGHTING CONTACTOR
M – MOTOR STARTER
PC – PHOTO CELL
TC – TIME CLOCK
TR – TIMING RELAY

NORMALLY OPEN CONTACT (N.O.)

NORMALLY CLOSED CONTACT (N.C.)

MOTOR STARTER SIZE 1.

NORMALLY OPEN TIME DELAY RELAY CONTACT, WITH TIME DELAY ON CLOSING AFTER COIL IS ENERGIZED

NORMALLY CLOSED TIME DELAY RELAY CONTACT, WITH TIME DELAY ON OPENING AFTER COIL IS ENERGIZED

NORMALLY OPEN TIME DELAY RELAY CONTACT, WITH TIME DELAY ON OPENING AFTER COIL IS DE–ENERGIZED

NORMALLY CLOSED TIME DELAY RELAY CONTACT, WITH TIME DELAY ON CLOSING AFTER COIL IS DE–ENERGIZED

NORMALLY OPEN TEMPERATURE SWITCH, CLOSE ON RISING TEMPERATURE

NORMALLY CLOSED TEMPERATURE SWITCH, OPEN ON RISING TEMPERATURE

NORMALLY OPEN FLOW SWITCH, CLOSE ON INCREASING FLOW

NORMALLY CLOSED FLOW SWITCH, OPEN ON INCREASING FLOW

NORMALLY OPEN LEVEL SWITCH, CLOSE ON RISING LEVEL

NORMALLY CLOSED LEVEL SWITCH, OPEN ON RISING LEVEL

NORMALLY OPEN PRESSURE SWITCH, CLOSE ON INCREASING PRESSURE

NORMALLY CLOSED PRESSURE SWITCH, OPEN ON INCREASING PRESSURE

NORMALLY OPEN LIMIT SWITCH, CLOSE ON REACHING LIMIT

NORMALLY CLOSED LIMIT SWITCH, OPEN ON REACHING LIMIT

FIELD WIRING EXTERNAL TO CONTROL PANEL

INTERLOCK, X INDICATES TYPE

TYPES:
E – ELECTRICAL
M – MECHANICAL
K – KEY

3 POSITION SELECTOR SWITCH, MAINTAINED CONTACTS, UNLESS OTHERWISE NOTED, 2 POSITION SIMILAR

NORMALLY OPEN PUSHBUTTON, MOMENTARY CONTACT UNLESS OTHERWISE NOTED

NORMALLY CLOSED PUSHBUTTON, MOMENTARY CONTACT UNLESS OTHERWISE NOTED

INDICATING LIGHT, X INDICATES LENS COLOR

PUSH TO TEST INDICATING LIGHT, X INDICATES LENS COLOR

LENS COLORS:
R – RED
G – GREEN
B – BLUE
Y – YELLOW
W – WHITE
A – AMBER

TRANSFORMER

CONTROL STATION / CONTROL CKT

SELECTOR SWITCH

PUSHBUTTON

INSTRUMENTATION/CONTROL DEVICE

CONTROL PANEL INTEGRAL OR PROVIDED WITH ASSOCIATED EQUIPMENT

CONTROL PANEL WITH DISCONNECT SWITCH INTEGRAL OR PROVIDED WITH ASSOCIATED EQUIPMENT

JUNCTION OR PULL BOX

PANELBOARD (250V TO 600V)

PANELBOARD (LESS THAN 250V)

ELECTRICAL EQUIPMENT ENCLOSURE: SWITCHBOARD, MOTOR CONTROL CENTER, CONTROL PANEL OR OTHER EQUIPMENT AS INDICATED

PHOTOCELL

CEILING/PENDANT MOUNTED LUMINAIRE – HID, COMPACT FLUORESCENT OR INCANDESCENT

WALL MOUNTED LUMINAIRE – HID, COMPACT FLUORESCENT OR INCANDESCENT

CEILING/PENDANT MOUNTED FLUORESCENT FIXTURE

WALL MOUNTED FLUORESCENT FIXTURE

CEILING/PENDANT MOUNTED FLUORESCENT FIXTURE NORMAL/EMERGENCY

WALL MOUNTED FLUORESCENT FIXTURE NORMAL/EMERGENCY

CEILING/PENDANT MOUNTED LUMINAIRE – COMPACT FLUORESCENT OR LED (NORMAL/EMERGENCY)

WALL MOUNTED LUMINAIRE – COMPACT FLUORESCENT OR LED (NORMAL/EMERGENCY)

EMERGENCY LIGHT FIXTURE, 2 ATTACHED HEADS AS SHOWN

EMERGENCY LIGHT, REMOTE MOUNTED HEAD

DOUBLE FACED CEILING OR WALL MOUNTED EXIT LIGHT, DIRECTIONAL ARROWS (IF REQUIRED) AS INDICATED ON PLANS

SINGLE FACED CEILING OR WALL MOUNTED EXIT LIGHT, DIRECTIONAL ARROWS (IF REQUIRED) AS INDICATED ON PLANS

AREA OR ROADWAY LIGHT – POLE MOUNTED

LIGHTING FIXTURE SUBSCRIPTS:

X – INDICATES FIXTURE TYPE PER LIGHTING FIXTURE SCHEDULE
Y – INDICATES CIRCUIT NUMBER FROM PANELBOARD
z – INDICATES CONTROLLING SWITCH (IF REQUIRED)

TOGGLE SWITCH

SUBSCRIPTS:
X – INDICATES TYPE
NONE NONE – SINGLE POLE
3 – THREE–WAY
4 – FOUR–WAY
HP – TOGGLE SWITCH, HORSEPOWER RATED
K – KEY SWITCH
TE – MANUAL MOTOR STARTER WITH THERMAL ELEMENT
P – PILOT LIGHT
L – LIGHTED HANDLE
M – MOTOR RATED (PROVIDE ON ALL 1Ø MOTORS)
Y – INDICATES CONTROLLING SWITCH (IF REQUIRED)

CABLE TRAY

SPECIAL PURPOSE RECEPTACLE AS DEFINED ON PLANS

PLUG–IN RECEPTACLE STRIP, QUANTITY AND SPACING OF RECEPTACLES AS NOTED OR SPECIFIED

TELECOMMUNICATIONS OUTLET JUNCTION BOX

QUAD–DUPLEX RECEPTACLE, TWO NEMA 5–20R UNDER COMMON COVER PLATE.

DUPLEX RECEPTACLE, NEMA 5–20R

SIMPLEX RECEPTACLE, NEMA 5–20R

SUBSCRIPTS:
X – INDICATES TYPE
GFCI – GROUND FAULT CIRCUIT INTERRUPTER
AC – ABOVE CONTROLLER
BC – BELOW CONTROLLER
Y – INDICATES CIRCUIT NUMBER FROM PANELBOARD

CONDUIT TURNING UP

CONDUIT TURNING DOWN

HOME RUN TO PANEL, 2 #12, 1 #12G IN 3/4"C UNLESS OTHERWISE NOTED

CIRCUIT RUN BETWEEN DEVICES EXPOSED IN NON–ARCHITECTURALLY FINISHED AREAS, CONCEALED IN ARCHITECTURALLY FINISHED AREAS. CONDUIT AND CONDUCTOR SIZES SHALL BE THE SAME AS THE HOMERUN FOR THE CIRCUIT

CONDUIT RUN BETWEEN DEVICES CONCEALED IN NON–ARCHITECTURALLY FINISHED AREAS OR UNDER FLOOR SLAB. CONDUIT AND CONDUCTOR SIZES SHALL BE THE SAME AS THE HOMERUN FOR THE CIRCUIT.

CIRCUIT HASH MARKS (WHEN INDICATED), LONG, SHORT, SINGLE DOT AND DOUBLE DOT REPRESENT PHASE, NEUTRAL, EQUIPMENT GROUND AND ISOLATED EQUIPMENT GROUND RESPECTIVELY. #12 IN 3/4" CONDUIT UNLESS OTHERWISE INDICATED

CIRCUIT CONTINUATION

CONDUIT STUBBED OUT AND CAPPED

CONDUIT TAG OR CIRCUIT NUMBER – WIRE AND CONDUIT SIZE AS SPECIFIED IN CIRCUIT SCHEDULE ON THE SHEETS

EXISTING POWER POLE

EXISTING OVERHEAD ELECTRIC LINE

EXISTING GUY WIRE

ABBREVIATIONS:

A	AMP
AF	AMP FRAME, AMP FUSE
AFF	ABOVE FINISH FLOOR
AIC	AMPS INTERRUPTING CAPACITY
ALUM	ALUMINUM
AWG	AMERICAN WIRE GAGE
C	CONDUIT
CAB	CABINET
CPT	CONTROL POTENTIAL TRANSFORMER
DB	DUCT BANK, DECIBEL
DC	DIRECT CURRENT
DIA	DIAMETER
DMP	DIGITAL METERING PACKAGE
DO	DOOR OPERATOR
E	EAST, ELECTRICAL (DWG DISCIPLINE)
EF	EXHAUST FAN
ELEC	ELECTRICAL
EMH	ELECTRICAL MANHOLE
ENCL	ENCLOSURE
EQUIP	EQUIPMENT
EXST	EXISTING
GFCI	GROUND FAULT CIRCUIT INTERRUPTER
GND	GROUND
JB	JUNCTION BOX
LTG	LIGHTING
LTNG	LIGHTNING
MH	MANHOLE, METAL HALIDE, MOUNTING HIGH
MV	MEDIUM VOLTAGE
N	NORTH, NEUTRAL
NC	NORMALLY CLOSED
NO	NORMALLY OPEN
P	POWER
PF	POWER FACTOR
PFCC	POWER FACTOR CAPACITOR CORRECTION
PH	PHASE
PT	POTENCIAL TRANSFORMER
PVC	POLYVINYL CHLORIDE
R/R	RATE OF RISE
R	RACEWAY
RGS	RIGID GALVANIZED STEEL
RGS–PVC	PVC COATED RGS
RPM	RESERVOIR PUMP MOTOR
RVSS	REDUCED VOLTAGE SOFT START
S	SIGNAL (ANALOG COMMUNICATION)
TVSS	TRANSIENT VOLTAGE SURGE PROTECTION
UG	UNDERGROUND
V	VOLT
VA	VOLT AMPERE
VAR	VOLT AMPERES REACTIVE
W	WATT, WEST, WIRE,
WP	WATERPROOF

GENERAL NOTES:

1. THIS IS A STANDARD ELECTRICAL SYMBOLS SHEET. ALL SYMBOLS MAY NOT BE USED ON THIS PROJECT.
2. SCREENING OR SHADING OF WORK IS USED TO INDICATE EXISTING COMPONENTS OR TO DE–EMPHASIZE PROPOSED IMPROVEMENTS TO HIGHLIGHT SELECTED TRADE WORK. REFER TO CONTEXT OF EACH SHEET FOR USAGE.
3. REFER TO ONE–LINES, CONTROL SCHEMATICS, P&IDs, DETAILS, OTHER DISCIPLINE SHEETS AND SPECIFICATIONS FOR OTHER INFORMATION AND REQUIREMENTS. COORDINATE INSTALLATION THOROUGHLY WITH ALL OTHER DICSIPLINES/TRADES.
4. A LICENSED ELECTRICIAN MUST PERFORM THE ELECTRICAL INSTALLATION IN COMPLIANCE WITH THE NEC AND CONTRACT DOCUMENTS. A LOCKOUT/TAGOUT PROGRAM MUST BE IMPLEMENTED AT ALL TIMES FOR THE DURATION OF THE PROJECT.

ISSUE	DATE	DESCRIPTION
3	4/1/2016	FINAL DESIGN SUBMITTAL
2	1/8/2016	INTERMEDIATE DESIGN SUBMITTAL
1	10/20/2015	PRELIMINARY DESIGN SUBMITTAL

PROJECT MANAGER	RICHARD LEBLANC, P.E.
DESIGNED BY	
DRAWN BY	
CHECKED BY	
PROJECT NUMBER	000000000266294

PRELIMINARY NOT FOR CONSTRUCTION

ISTOKPOGA MARSH WATERSHED IMPROVEMENT DISTRICT
HIGHLANDS COUNTY, FLORIDA

ELECTRICAL

ELECTRICAL LEGEND

FILENAME	02E001.dwg	SHEET	02E001
SCALE	NONE		

OVERALL ELECTRICAL SITE PLAN

SCALE: 1"=300'

1 / 02E100

1"=20' 0 10' 20' 40' 80'

1"=300' 0 300' 600' 1200'

3 PHASE METER LOCATION

SCALE: 1"=20'

2 / 02E100

NOTES

1. 3 PHASE POWER WILL BE CONSTRUCTED ALONG THE PROJECT ACCESS ROAD BY DUKE ENERGY PRIOR TO START OF PROJECT CONSTRUCTION.

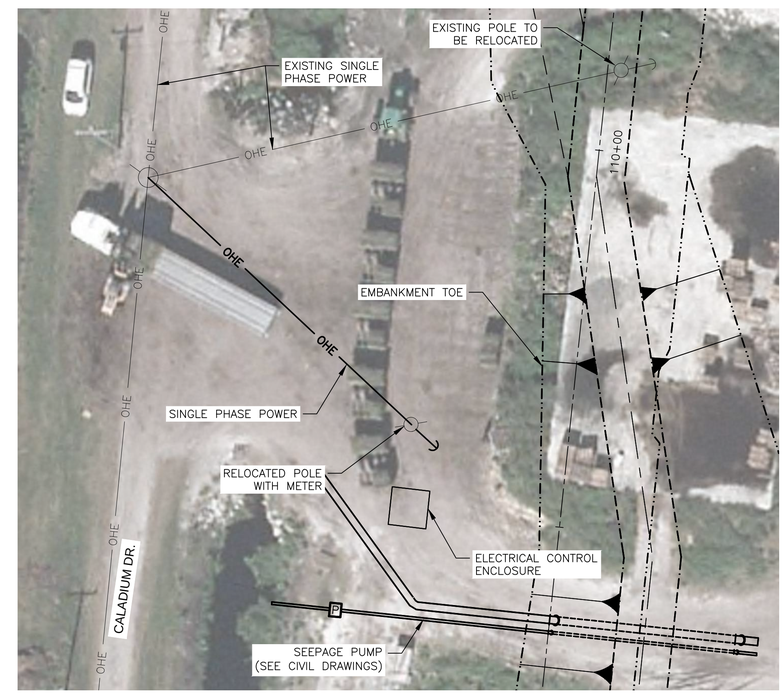

SEEPAGE PUMP LOCATION

SCALE: 1"=20'

3 / 02E100

ISSUE	DATE	DESCRIPTION
3	4/1/2016	FINAL DESIGN SUBMITTAL
2	1/8/2016	INTERMEDIATE DESIGN SUBMITTAL
1	10/20/2015	PRELIMINARY DESIGN SUBMITTAL

PROJECT MANAGER	RICHARD LEBLANC, P.E.
DESIGNED BY	
DRAWN BY	
CHECKED BY	
PROJECT NUMBER	000000000266294

PRELIMINARY NOT FOR CONSTRUCTION

ISTOKPOGA MARSH WATERSHED IMPROVEMENT DISTRICT HIGHLANDS COUNTY, FLORIDA

ELECTRICAL

ELECTRICAL SITE PLAN

FILENAME	02E100.dwg	SHEET	02E100
SCALE	AS SHOWN		

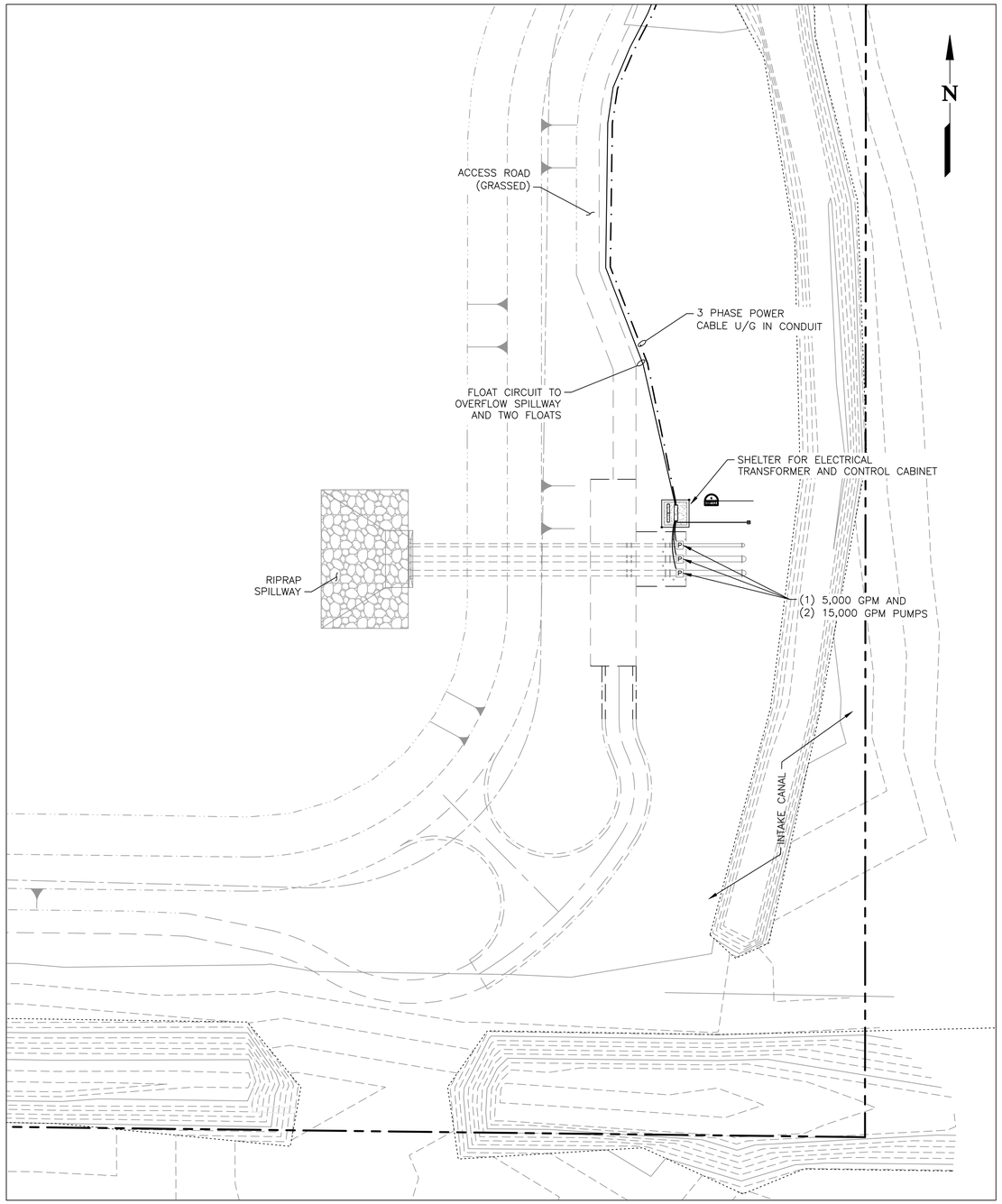

PUMP STATION SITE LAYOUT PLAN (1 / 02E101)

SCALE: 1"=30'

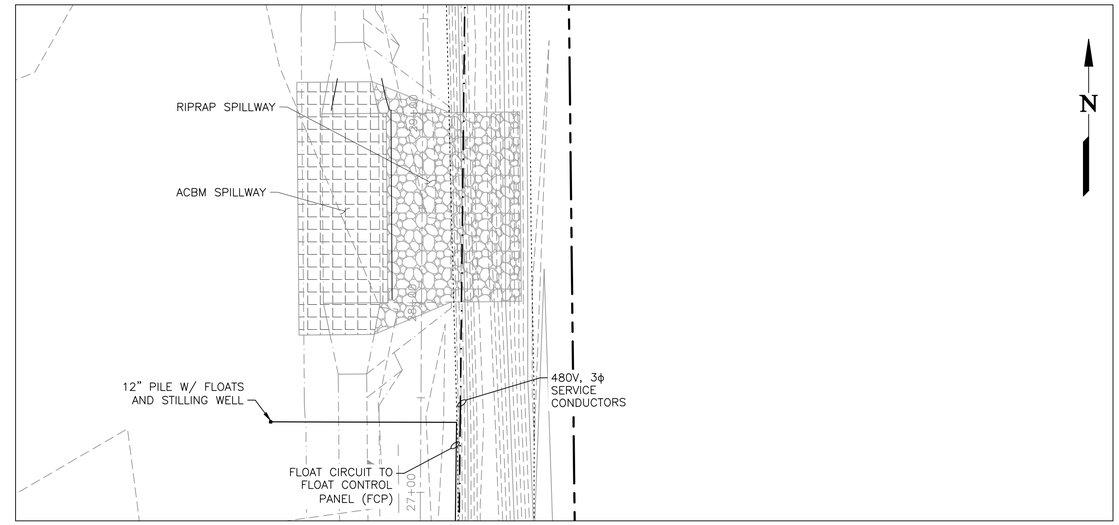

OVERFLOW SPILLWAY ELECTRICAL DETAIL PLAN (2 / 02E101)

SCALE: 1"=40'

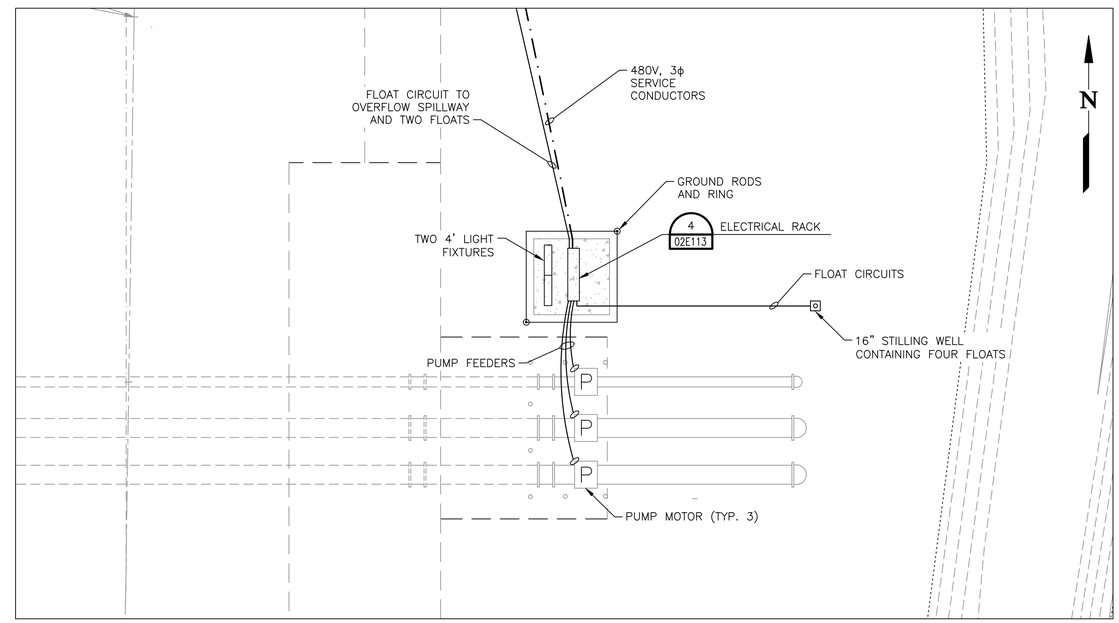

PUMP STATION ELECTRICAL DETAIL PLAN (3 / 02E101)

SCALE: 1"=10'

1"=10' 0 10' 20' 40'

1"=30' 0 30' 60' 120'

1"=40' 0 40' 80' 160'

ISSUE	DATE	DESCRIPTION
3	4/1/2016	FINAL DESIGN SUBMITTAL
2	1/8/2016	INTERMEDIATE DESIGN SUBMITTAL
1	10/20/2015	PRELIMINARY DESIGN SUBMITTAL

PROJECT MANAGER	RICHARD LEBLANC, P.E.
DESIGNED BY	
DRAWN BY	
CHECKED BY	
PROJECT NUMBER	000000000266294

PRELIMINARY NOT FOR CONSTRUCTION

ISTOKPOGA MARSH WATERSHED IMPROVEMENT DISTRICT
HIGHLANDS COUNTY, FLORIDA

ELECTRICAL

ELECTRICAL SITE PLAN
MAIN PUMP STATION

FILENAME	02E101.dwg	SHEET
SCALE	AS SHOWN	02E101

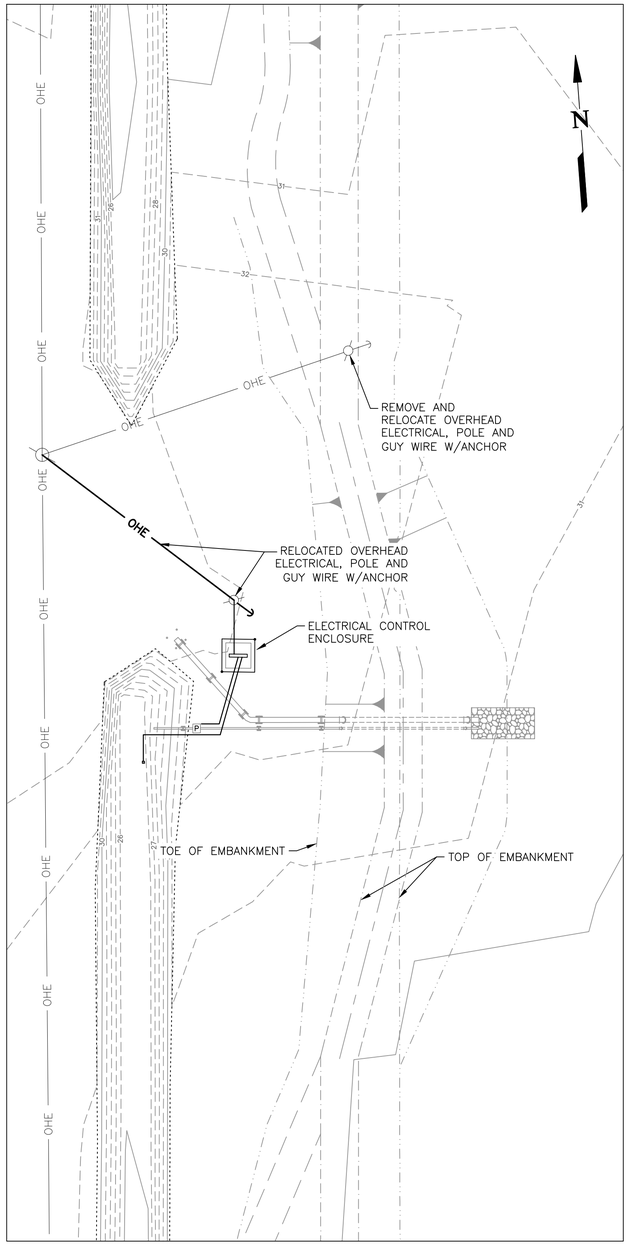

SEEPAGE PUMP SITE LAYOUT PLAN

SCALE: 1"=30'

1 / 02E102

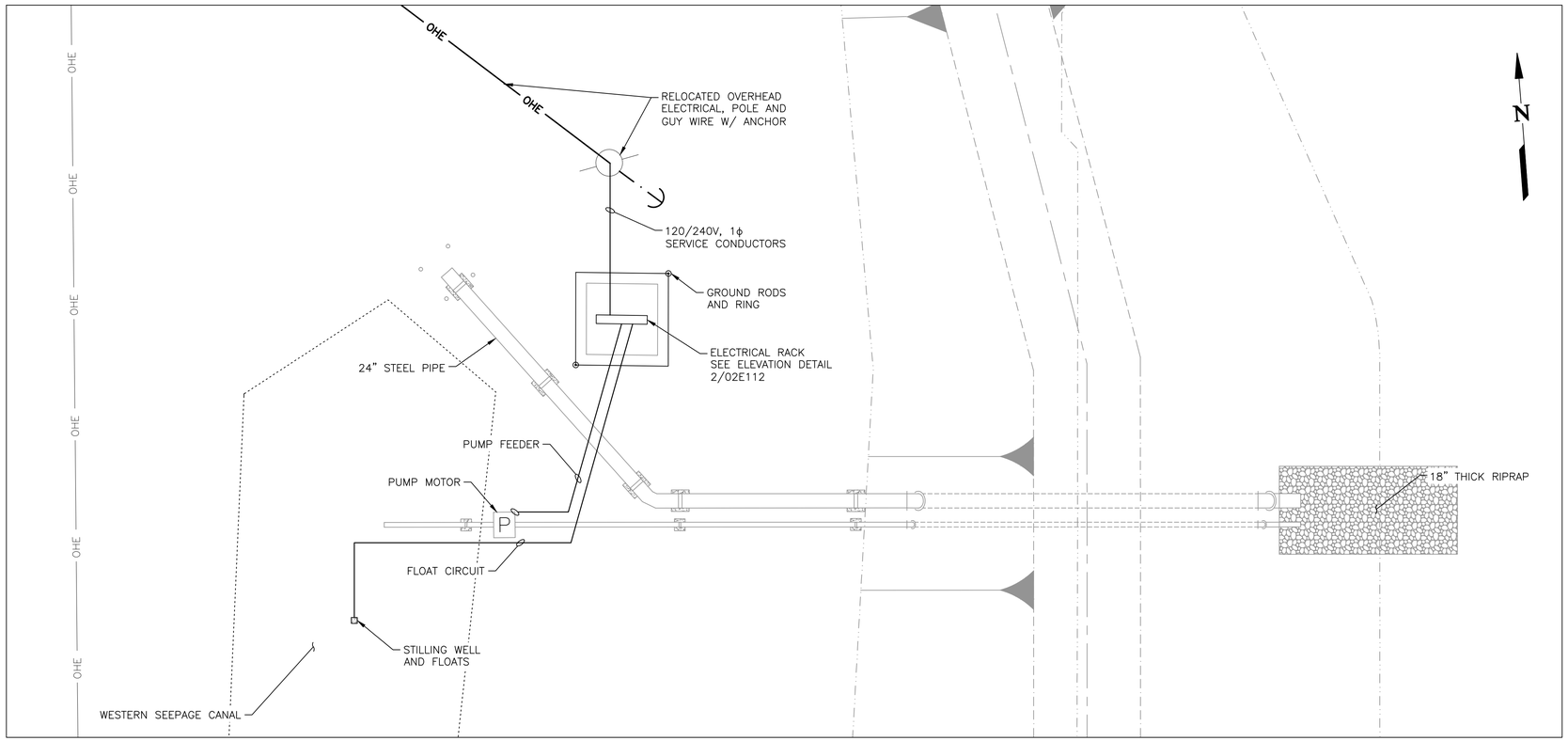

SEEPAGE PUMP ELECTRICAL DETAIL PLAN

SCALE: 1"=10'

2 / 02E102

1"=10' 0 10' 20' 40'

1"=20' 0 20' 40' 80'

ISSUE	DATE	DESCRIPTION
3	4/1/2016	FINAL DESIGN SUBMITTAL
2	1/8/2016	INTERMEDIATE DESIGN SUBMITTAL
1	10/20/2015	PRELIMINARY DESIGN SUBMITTAL

PROJECT MANAGER	RICHARD LEBLANC, P.E.
DESIGNED BY	
DRAWN BY	
CHECKED BY	
PROJECT NUMBER	000000000266294

PRELIMINARY NOT FOR CONSTRUCTION

ISTOKPOGA MARSH WATERSHED IMPROVEMENT DISTRICT
HIGHLANDS COUNTY, FLORIDA

ELECTRICAL

ELECTRICAL SITE PLAN
SEEPAGE PUMP STATION

FILENAME	02E102.dwg	SHEET	02E102
SCALE	AS SHOWN		

LOAD ANALYSIS			
LOAD	HP	FLA	COMMENTS
PUMP P4	7.5	40	
25% LGST MOTOR		10	
TOTAL		50	

PUMP SCHEDULE AND CONTROL ELEVATIONS				
PUMP	GPM	HP	ON ELEV.	OFF ELEV.
P4	1,300	7.5	28.5	28.0

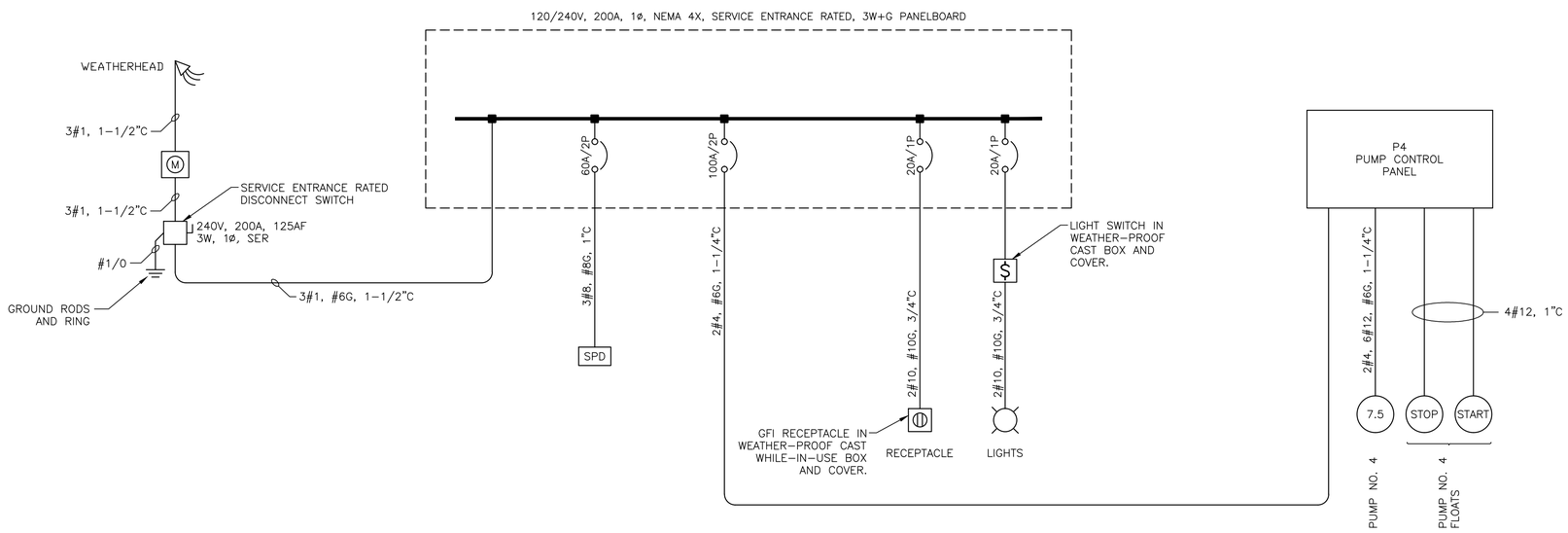

GENERAL NOTES:

1. COORDINATE INSTALLATION OF THE ELECTRIC SERVICE AND METERING WITH THE UTILITY (DUKE ENERGY). SIZE AND CONSTRUCT ELECTRIC SERVICE IN CONFORMANCE WITH THE UTILITIES REQUIREMENTS.
2. INSTALL THE ELECTRICAL EQUIPMENT WITHIN THE ELECTRICAL CONTROL ENCLOSURE (MODULAR SHELTER). COORDINATE THE ELECTRIC INSTALLATION WITH THE MODULAR SHELTER PROVIDER.
3. LIGHTING FIXTURES AT THE ELECTRICAL CONTROL ENCLOSURE (MODULAR SHELTER) ARE PROVIDED BY THE MODULAR SHELTER PROVIDER. THE LIGHTING FIXTURES ARE WIRED BY THE ELECTRICAL CONTRACTOR.
4. EXTEND BARE #6 FROM THE GROUND RING TO EACH PUMP/MOTOR FRAME AND THE WATER PIPE.
5. CONDUIT SHALL BE DIRECT BURIED WHEREVER POSSIBLE, RISING ABOVE GRADE AT THE POINTS OF CONNECTION TO EQUIPMENT.

ONE-LINE DIAGRAM

NOT TO SCALE

1
02E110

ISSUE	DATE	DESCRIPTION
3	4/1/2016	FINAL DESIGN SUBMITTAL
2	1/8/2016	INTERMEDIATE DESIGN SUBMITTAL
1	10/20/2015	PRELIMINARY DESIGN SUBMITTAL

PROJECT MANAGER	RICHARD LEBLANC, P.E.
DESIGNED BY	
DRAWN BY	
CHECKED BY	
PROJECT NUMBER	000000000266294

PRELIMINARY NOT FOR CONSTRUCTION

ISTOKPOGA MARSH WATERSHED IMPROVEMENT DISTRICT HIGHLANDS COUNTY, FLORIDA

ELECTRICAL

ELECTRICAL ONE-LINE SEEPAGE PUMP STATION

FILENAME	02E110.dwg	SHEET	02E110
SCALE	NOT TO SCALE		

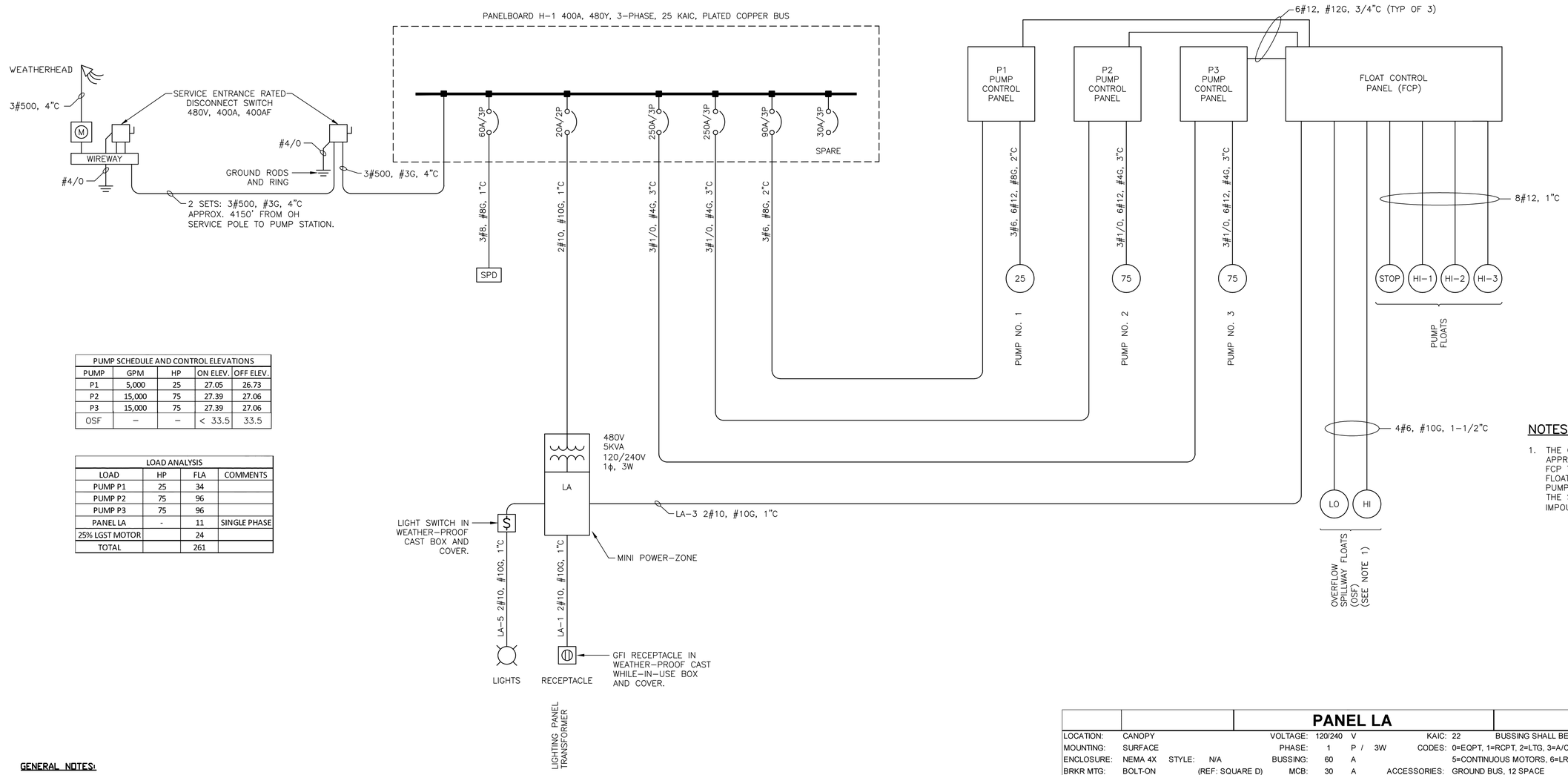

PUMP SCHEDULE AND CONTROL ELEVATIONS				
PUMP	GPM	HP	ON ELEV.	OFF ELEV.
P1	5,000	25	27.05	26.73
P2	15,000	75	27.39	27.06
P3	15,000	75	27.39	27.06
OSF	–	–	< 33.5	33.5

LOAD ANALYSIS			
LOAD	HP	FLA	COMMENTS
PUMP P1	25	34	
PUMP P2	75	96	
PUMP P3	75	96	
PANEL LA	-	11	SINGLE PHASE
25% LGST MOTOR		24	
TOTAL		261	

NOTES:

1. THE OVERFLOW SPILLWAY FLOATS ARE APPROXIMATELY 1,920 FEET FROM THE FCP TO THE OVERFLOW SPILLWAY. THESE FLOATS SHALL ALLOW OPERATION OF THE PUMPS AT THE MAIN PUMP STATION UNTIL THE SURFACE WATER LEVEL IN THE IMPOUNDMENT REACHES EL 33.5'.

GENERAL NOTES:

1. COORDINATE INSTALLATION OF THE ELECTRIC SERVICE AND METERING WITH THE UTILITY (DUKE ENERGY). SIZE AND CONSTRUCT ELECTRIC SERVICE IN CONFORMANCE WITH THE UTILITIES REQUIREMENTS.
2. INSTALL THE ELECTRICAL EQUIPMENT WITHIN THE ELECTRICAL CONTROL ENCLOSURE (MODULAR SHELTER). COORDINATE THE ELECTRIC INSTALLATION WITH THE MODULAR SHELTER PROVIDER.
3. LIGHTING FIXTURES AT THE ELECTRICAL CONTROL ENCLOSURE (MODULAR SHELTER) ARE PROVIDED BY THE MODULAR SHELTER PROVIDER. THE LIGHTING FIXTURES ARE WIRED BY THE ELECTRICAL CONTRACTOR.
4. EXTEND BARE #6 FROM THE GROUND RING TO EACH PUMP/MOTOR FRAME AND THE WATER PIPE.
5. CONDUIT SHALL BE DIRECT BURIED WHEREVER POSSIBLE, RISING ABOVE GRADE AT THE POINTS OF CONNECTION TO EQUIPMENT.

ONE-LINE DIAGRAM

NOT TO SCALE

1 / 2E111

PANEL LA

LOCATION:	CANOPY	VOLTAGE:	120/240 V		KAIC:	22	BUSSING SHALL BE FULLY RATED
MOUNTING:	SURFACE	PHASE:	1 P / 3W		CODES:	0=EQPT, 1=RCPT, 2=LTG, 3=A/C, 4=HEAT	
ENCLOSURE:	NEMA 4X STYLE: N/A	BUSSING:	60 A			5=CONTINUOUS MOTORS, 6=LRGST MOTOR, 7=PANEL	
BRKR MTG:	BOLT-ON (REF: SQUARE D)	MCB:	30 A		ACCESSORIES:	GROUND BUS, 12 SPACE	
BREAKERS:	75 DEGREE TERMINALS	MLO:	A				

CODE	BRKR	CIRCUIT USE	CKT	LOAD	A	B	C	LOAD	CKT	CIRCUIT USE	BRKR	CODE
1	20/1	RECEPTACLE	1	180	X				2	SPARE	20/1	
0	20/1	FLOAT CONTROL PANEL	3	500		X			4	SPARE	20/1	
2	20/1	LIGHTS	5	148			X		6	SPARE	20/1	
	20/1	SPARE	7	1,800	X				8	SPARE	20/1	
	20/1	SPARE	9	300		X			10	SPARE	20/1	
0	20/1	FCP	11	300			X		12	SPARE	20/1	

	EQPT VA	RCPT VA	LTG VA	AC/HEAT VA		MOTORS				LRG MTR		CONN VA	PANEL VA	PHASE AMP		
PHASE A	1800	180	0	0		0				0		1980	1980	17		
PHASE B	800	0	0	0		0				0		800	800	7		
PHASE C	300	0	148	0		0				0		448	485	4		
TOTAL	2900	180	148	0		0				0		3228	3265			

PANEL DEMAND KVA:	3.27	PANEL DEMAND AMPACITY:	14 AMPS
RESERVE KVA:	0.65	RESERVE AMPACITY:	2 AMPS
DESIGN KVA:	3.92	DESIGN AMPACITY:	16 AMPS

ISSUE	DATE	DESCRIPTION
3	4/1/2016	FINAL DESIGN SUBMITTAL
2	1/8/2016	INTERMEDIATE DESIGN SUBMITTAL
1	10/20/2015	PRELIMINARY DESIGN SUBMITTAL

PROJECT MANAGER	RICHARD LEBLANC, P.E.
DESIGNED BY	
DRAWN BY	
CHECKED BY	
PROJECT NUMBER	000000000266294

PRELIMINARY NOT FOR CONSTRUCTION

ISTOKPOGA MARSH WATERSHED IMPROVEMENT DISTRICT
HIGHLANDS COUNTY, FLORIDA

ELECTRICAL

ELECTRICAL ONE-LINE - MAIN PUMP STATION

FILENAME: 02E111.dwg
SCALE: NOT TO SCALE
SHEET: 02E111

GENERAL NOTES:

1. COORDINATE INSTALLATION OF THE ELECTRIC SERVICE AND METERING WITH THE UTILITY (DUKE ENERGY). SIZE AND CONSTRUCT ELECTRIC SERVICE IN CONFORMANCE WITH THE UTILITIES REQUIREMENTS.
2. INSTALL THE ELECTRICAL EQUIPMENT WITHIN THE ELECTRICAL CONTROL ENCLOSURE (MODULAR SHELTER). COORDINATE THE ELECTRIC INSTALLATION WITH THE MODULAR SHELTER PROVIDER.
3. LIGHTING FIXTURES AT THE ELECTRICAL CONTROL ENCLOSURE (MODULAR SHELTER) ARE PROVIDED BY THE MODULAR SHELTER PROVIDER. THE LIGHTING FIXTURES ARE WIRED BY THE ELECTRICAL CONTRACTOR.
4. EXTEND BARE #6 FROM THE GROUND RING TO EACH PUMP/MOTOR FRAME AND THE WATER PIPE.
5. CONDUIT SHALL BE DIRECT BURIED WHEREVER POSSIBLE, RISING ABOVE GRADE AT THE POINTS OF CONNECTION TO EQUIPMENT.

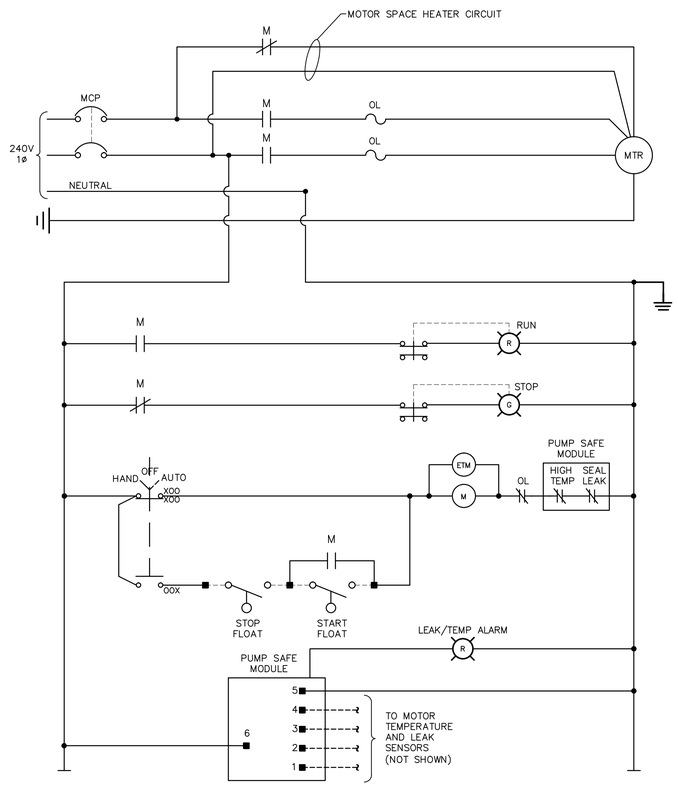

TYPICAL MOTOR STARTER WIRING DIAGRAM (1 / 02E112)

NOT TO SCALE

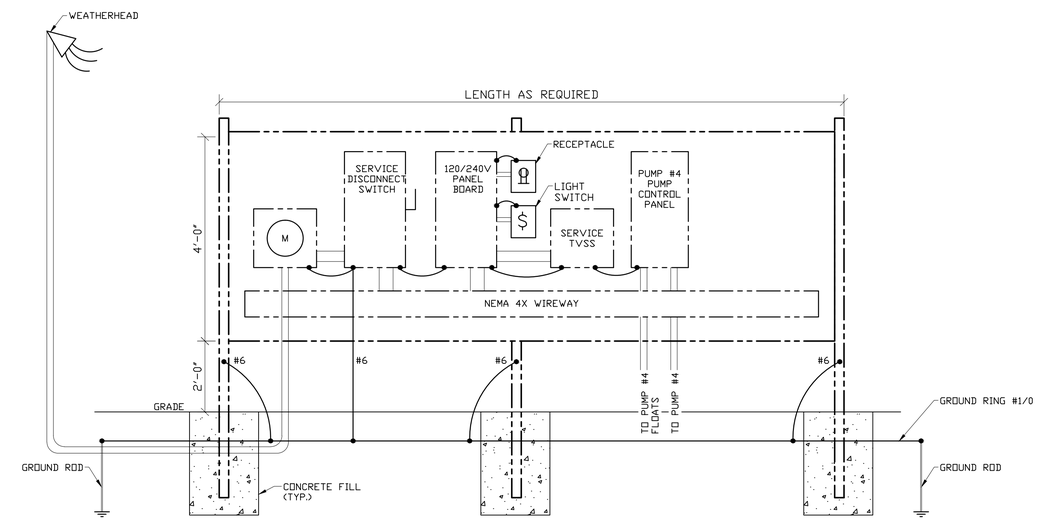

TYPICAL MOTOR EQUIPMENT MOUNTING BOARD (2 / 02E112)

NOT TO SCALE

ISSUE	DATE	DESCRIPTION
3	4/1/2016	FINAL DESIGN SUBMITTAL
2	1/8/2016	INTERMEDIATE DESIGN SUBMITTAL
1	10/20/2015	PRELIMINARY DESIGN SUBMITTAL

PROJECT MANAGER	RICHARD LEBLANC, P.E.
DESIGNED BY	
DRAWN BY	
CHECKED BY	
PROJECT NUMBER	000000000266294

PRELIMINARY NOT FOR CONSTRUCTION

ISTOKPOGA MARSH WATERSHED IMPROVEMENT DISTRICT HIGHLANDS COUNTY, FLORIDA

ELECTRICAL

ELECTRICAL DETAILS
SEEPAGE PUMP STATION

FILENAME: 02E112.dwg
SCALE: NOT TO SCALE
SHEET: 02E112

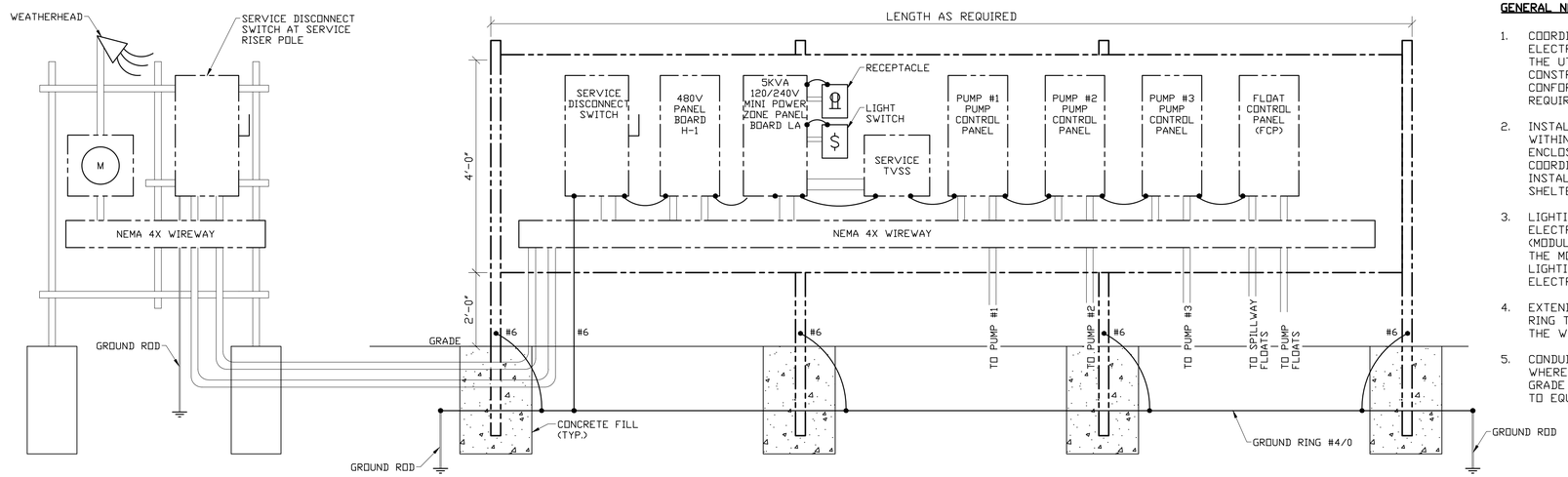

TYPICAL MOTOR EQUIPMENT MOUNTING BOARD

NOT TO SCALE

4 / 02E113

GENERAL NOTES:

1. COORDINATE INSTALLATION OF THE ELECTRIC SERVICE AND METERING WITH THE UTILITY (DUKE ENERGY). SIZE AND CONSTRUCT ELECTRIC SERVICE IN CONFORMANCE WITH THE UTILITIES REQUIREMENTS.
2. INSTALL THE ELECTRICAL EQUIPMENT WITHIN THE ELECTRICAL CONTROL ENCLOSURE (MODULAR SHELTER). COORDINATE THE ELECTRIC INSTALLATION WITH THE MODULAR SHELTER PROVIDER.
3. LIGHTING FIXTURES AT THE ELECTRICAL CONTROL ENCLOSURE (MODULAR SHELTER) ARE PROVIDED BY THE MODULAR SHELTER PROVIDER. THE LIGHTING FIXTURES ARE WIRED BY THE ELECTRICAL CONTRACTOR.
4. EXTEND BARE #6 FROM THE GROUND RING TO EACH PUMP/MOTOR FRAME AND THE WATER PIPE.
5. CONDUIT SHALL BE DIRECT BURIED WHEREVER POSSIBLE, RISING ABOVE GRADE AT THE POINTS OF CONNECTION TO EQUIPMENT.

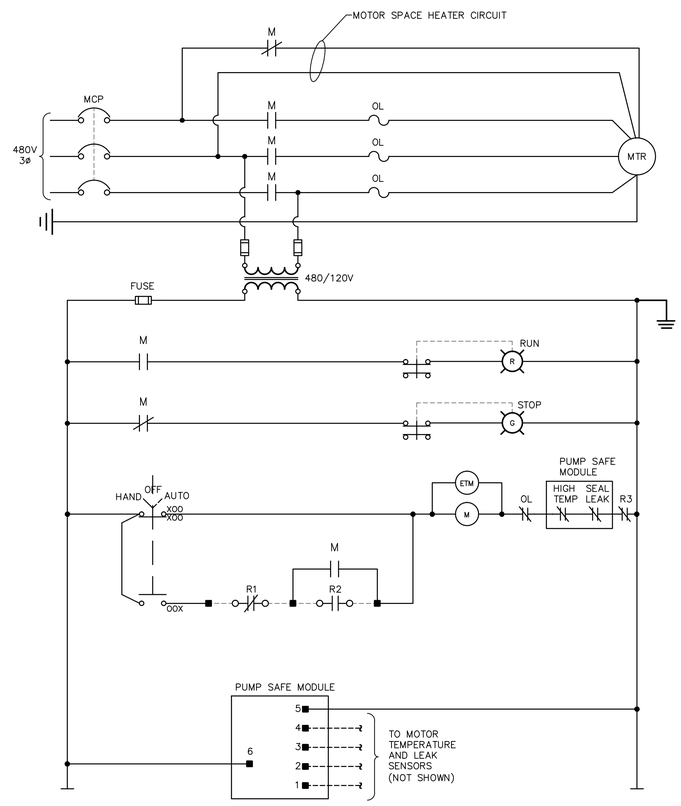

MOTOR STARTER WIRING DIAGRAM (TYP. FOR P1)

NOT TO SCALE

1 / 02E113

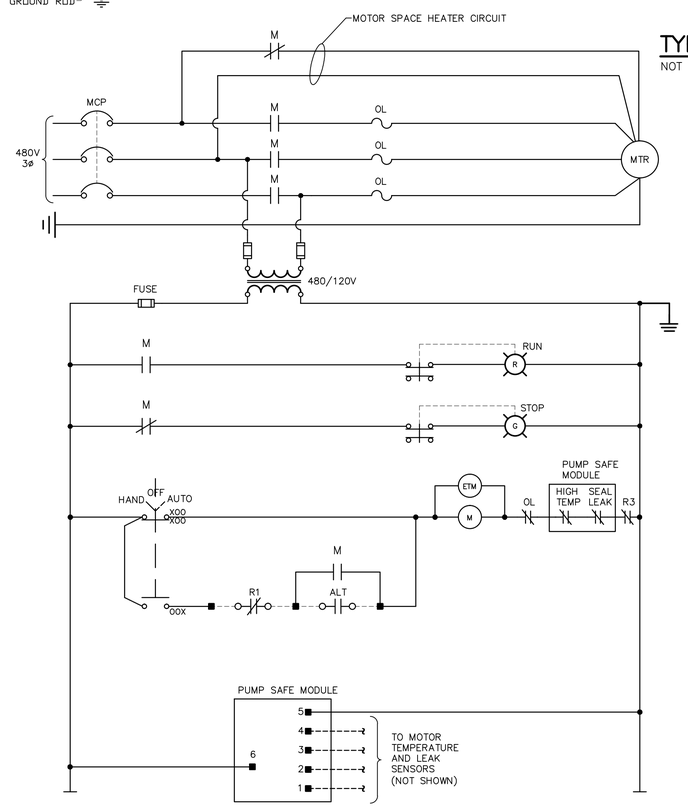

MOTOR STARTER WIRING DIAGRAM (TYP. FOR P2 AND P3)

NOT TO SCALE

2 / 02E113

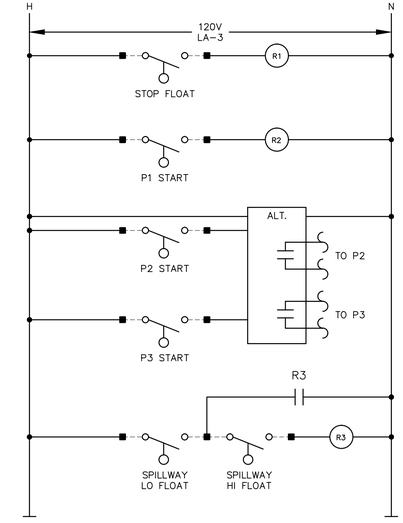

FLOAT CONTROL PANEL WIRING DIAGRAM

NOT TO SCALE

3 / 02E113

ISSUE	DATE	DESCRIPTION
3	4/1/2016	FINAL DESIGN SUBMITTAL
2	1/8/2016	INTERMEDIATE DESIGN SUBMITTAL
1	10/20/2015	PRELIMINARY DESIGN SUBMITTAL

PROJECT MANAGER	RICHARD LEBLANC, P.E.
DESIGNED BY	
DRAWN BY	
CHECKED BY	
PROJECT NUMBER	000000000266294

PRELIMINARY NOT FOR CONSTRUCTION

ISTOKPOGA MARSH WATERSHED IMPROVEMENT DISTRICT HIGHLANDS COUNTY, FLORIDA

ELECTRICAL

ELECTRICAL DETAILS
MAIN PUMP STATION

FILENAME 02E113.dwg
SCALE NOT TO SCALE
SHEET 02E113