CITY OF GOODLETTSVILLE

2018 SEWER REHABILITATION AND IMPROVEMENTS

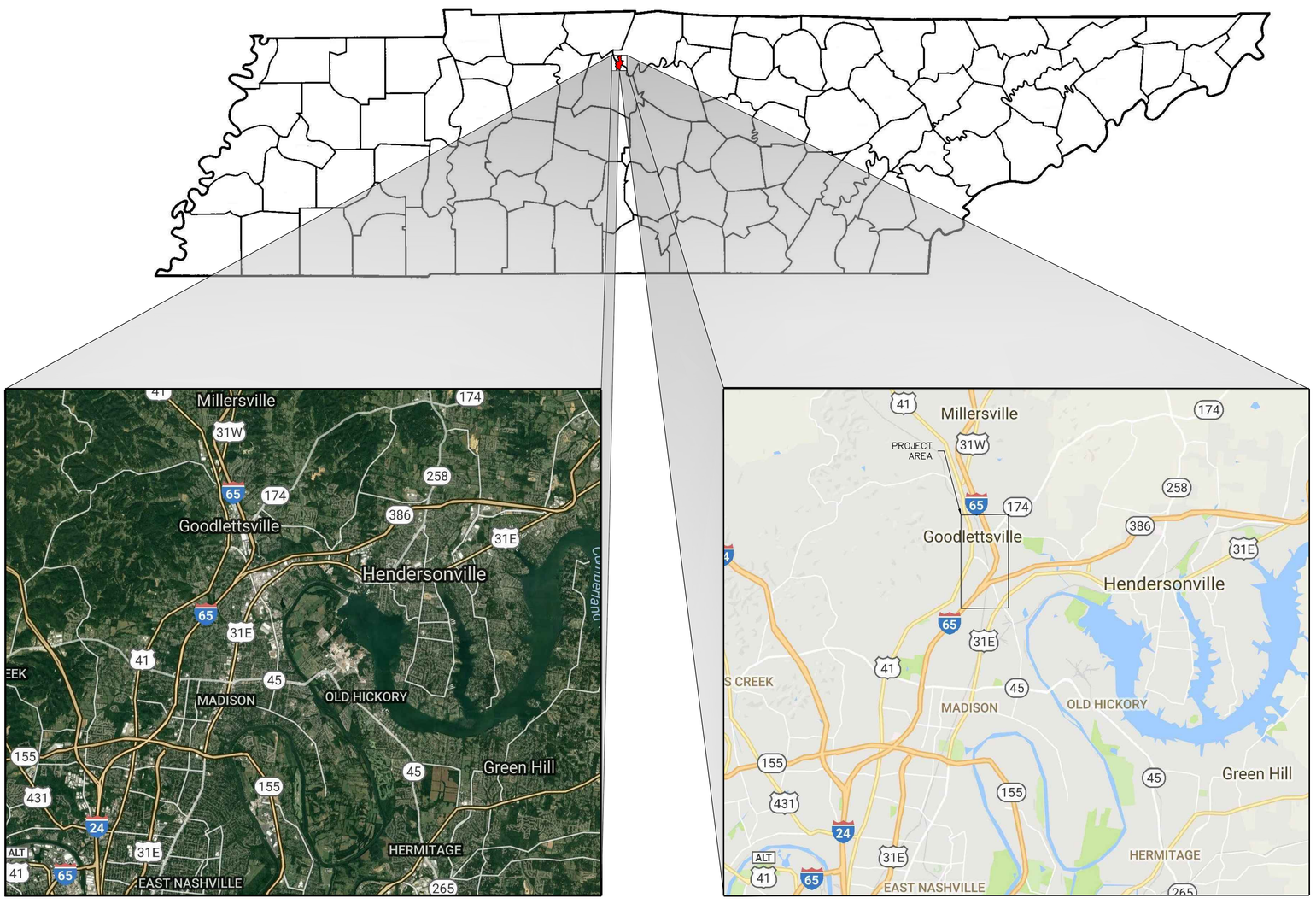

AERIAL MAP — NOT TO SCALE

GOODLETTSVILLE, TENNESSEE

VICINITY MAP — NOT TO SCALE

GOODLETTSVILLE, TENNESSEE

DRAWING INDEX

SIGNATURE

JEFF McCORMICK, DIRECTOR OF PUBLIC WORKS — DATE 2-20-18

TRESTLES
ONE VANTAGE WAY, SUITE C-130 NASHVILLE, TN 37228 615.823.4008

CITY OF GOODLETTSVILLE
2018 SEWER REHABILITATION AND IMPROVEMENTS
IFB - 08/07/18

ABBREVIATIONS

ABV	above
AD	area drain
ADJ	adjustable
AFF	above finish floor
ALT	alternate
APPROX	approximate
ARCH	architect
BET	between
BGS	below grade surface
BLDG	building
BLW	below
BO	bottom of
BOT	bottom
CLG	ceiling
CLR	clear
CONC	concrete
CONT	continuous
CTR	center
DBL	double
DET	detail
DIA	diameter
DIM	dimension
DN	down
DR	door
DS	down spout
DWG	drawing
E	east
EA	each
ELECT	electric(al)
ELEV	elevation
EMER	emergency
ENCL	enclosure
EQ	equal
ETR	existing to remain
EXST	existing
EQUIP	equipment
FA	fire alarm
FD	floor drain
FH	fire hydrant
FIN	finish
FLR	floor
FT	foot or feet
FO	face of
GAL	gallon
GALV	galvanized
GND	ground
HC	handicapped
HDWR	hardware
HT	height
HORIZ	horizontal
HR	hour
ID	inner diameter
INSUL	insulation
INT	interior
KILO	kilogram
LB(S)	pounds
LDG	landing
LF	linear foot
LT	light
MAX	maximum
MECH	mechanical
MEMB	membrane
MFR	manufacturer
MIN	minimum
MISC	miscellaneous
MTD	mounted
N	north
NIC	not in contract
NO	number
NOM	nominal
NTS	not to scale
OA	overall
OC	on center
OD	outside diameter
OFF	office
OPG	opening
OPP	opposite
PNT	point
PR	pair
PTD	painted
R	riser
RAD	radius
RD	roof drain
REF	reference
REINF	reinforced
REQ	required
RM	room
RO	rough opening
S	south
SC	Service Connection
SCHED	scheduled
SEAL	sealant
SECT	section
SF	square foot
SHT	sheet
SIM	similar
SPEC	specification
SQ	square
SS	sanitary sewer
STD	standard
STOR	storage
STRUCT	structural
SUSP	suspended
SYM	symmetrical
TEL	telephone
THK	thick
THR	threshold
TO	top of
TYP	typical
UC	undercut
UNFIN	unfinished
UON	unless otherwise noted
UTIL	utility
VERT	vertical
VIF	verify in field
W	west
WT	weight
W/	with
W/O	without
WP	waterproof

DRAWING CONVENTIONS

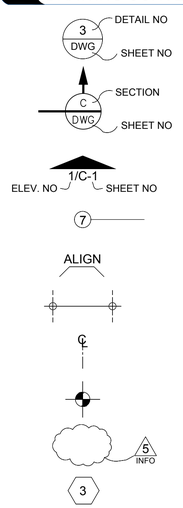

DETAIL REFERENCE MARK

SECTION REFERENCE MARK

ELEVATION

EQUIPMENT

ALIGN

DIMENSION TO CENTERLINE

CENTERLINE

BENCHMARK

REVISION

SHEET SPECIFIC NOTE

GRADING AND EXCAVATION

1 WHEN SPECIFIC GRADING REQUIREMENTS ARE NOT SHOWN ON THE DRAWINGS, THE CONTRACTOR SHALL GRADE ALL AREAS WITHIN THE LIMITS OF CONSTRUCTION, OR OTHERWISE DISTURBED BY CONSTRUCTION.
2 THE CONTRACTOR SHALL PERFORM ALL NECESSARY STRIPPING OF EXISTING TOPSOIL ON THE JOBSITE.
3 ON THE PROJECT, NEWLY GRADED, EARTH AREAS NOT TO BE PAVED, RIP-RAPPED, OR STABILIZED, SHALL BE SEEDED IN ACCORDANCE WITH THE SPECIFICATIONS. PRIOR TO SEEDING, A FOUR INCH LAYER OF TOPSOIL SHALL BE PLACED ON THESE AREAS IN ACCORDANCE WITH SAID SPECIFICATIONS.
4 THE CONTRACTOR IS TO DISPOSE OF, AT HIS OWN EXPENSE, ALL UNSUITABLE AND/OR SURPLUS, EXCAVATED MATERIAL.
5 EXCAVATION ADJACENT TO EXISTING PAVEMENT SHALL BE MADE TO A NEAT LINE.
6 ALL TREES THAT ARE CUT OR KNOCKED DOWN WITHIN THE LIMITS OF CONSTRUCTION ARE TO BE REMOVED AND DISPOSED OF OFF-SITE AT THE CONTRACTOR'S EXPENSE. BURNING IS NOT PERMITTED, EXCEPT AS PROVIDED IN THE SPECIFICATIONS.
7 BACKFILLING, COMPACTING, GRADING, AND SITE-CLEANUP SHALL OCCUR DAILY AS PIPE INSTALLATION PROGRESSES.

EROSION / SEDIMENT CONTROL

1 ALL LOCAL, STATE, AND FEDERAL EROSION CONTROL REQUIREMENTS SHALL BE FOLLOWED DURING CONSTRUCTION. THE CONTRACTOR SHALL TAKE ALL NECESSARY MEASURES TO CONTROL EROSION AND WATER POLLUTION THROUGH THE CONSTRUCTION PERIOD. ALL TEMPORARY EROSION CONTROL MEASURES SHALL BE IN PLACE BEFORE EARTH MOVING OPERATIONS BEGIN. CLEARING AND GRUBBING SHALL BE HELD TO A MINIMUM WIDTH NECESSARY TO ACCOMMODATE CONSTRUCTION SLOPES. EMBANKMENTS AND EXCAVATED AREAS SHALL BE PROMPTLY STABILIZED TO MINIMIZE EROSION. BALED STRAW EROSION CHECKS AND SILT FENCE SHALL BE USED ALONG THE TOE OF FILL SLOPES, IN DITCHES, AND IN OTHER AREAS WHERE EROSION IS A PROBLEM AND SILT-LADEN RUNOFF MAY ENTER A STREAM OR ADJACENT PROPERTY.
2 ANY STOCKPILED SOIL OR FILL MATERIAL SHALL BE LOCATED AND TREATED IN A MANNER TO PREVENT SILT ENTERING STREAMS. NO EXCAVATED MATERIAL SHALL BE DISCHARGED INTO DITCHES. THE CONTRACTOR SHALL DISPOSE OF ALL EXCAVATED MATERIAL IN A LOCATION, APPROVED BY THE ENGINEER, ABOVE THE NORMAL HIGH WATER ELEVATION.
3 THE CONTRACTOR IS RESPONSIBLE FOR ADHERING TO ALL EROSION CONTROL PROVISIONS AS SET FORTH IN THE EROSION & SEDIMENT CONTROL HANDBOOK AVAILABLE FROM THE TENNESSEE DEPARTMENT OF ENVIRONMENT AND CONSERVATION.
4 THE CONTRACTOR SHALL MAINTAIN THE EROSION CONTROL MEASURES THROUGHOUT THE LENGTH OF THE CONTRACT AS REQUIRED.
5 THE CONTRACTOR SHALL PROVIDE TEMPORARY EROSION AND WATER CONTROL MEASURES (SUCH AS BERMS, SEDIMENT BASINS, SLOPE DRAINS, HAY BALES, AND SILT FENCES) AS DIRECTED BY THE ENGINEER.
6 NO EARTH OR OTHER ERODIBLE MATERIAL SHALL BE USED TO DIVERT STREAM FLOW OR TO CONSTRUCT COFFERDAMS. CLEAN CUT ROCK WITH FINES MAY BE USED, OR, IN THE CASE OF COFFERDAMS, STEEL SHEETING OR SAND BAGS IS PERMISSIBLE. WATER OR SEDIMENT ISOLATED BY COFFERDAMS SHALL BE PUMPED INTO SEDIMENT BASINS ON THE BANK OF THE STREAM.

UTILITIES

1 LOCATIONS OF UTILITIES, PUBLIC AND/OR PRIVATE, ARE APPROXIMATE ONLY, AND THE EXACT LOCATIONS SHALL BE DETERMINED IN THE FIELD. IT IS POSSIBLE THAT SOME EXISTING FACILITIES ARE NOT SHOWN ON THESE DRAWINGS. THE CONTRACTOR SHALL BE RESPONSIBLE FOR HAVING ALL UNDERGROUND UTILITY FACILITIES LOCATED AND MARKED PRIOR TO THE BEGINNING OF CONSTRUCTION.
2 THE CONTRACTOR SHALL NOTIFY ALL AFFECTED UTILITY OWNERS PRIOR TO INTERRUPTING ANY ELECTRICAL, COMMUNICATIONS, GAS, WATER, OR SEWER SERVICES. THE CONTRACTOR SHALL ALSO NOTIFY AFFECTED UTILITY CUSTOMERS AT LEAST 24 HOURS BEFORE INTERRUPTING THE CUSTOMERS' SERVICE. WHERE INDIVIDUAL SERVICES ARE TO BE DISCONTINUED FOR MORE THAN 4 HOURS, THE CONTRACTOR SHALL MAKE ARRANGEMENTS FOR PROVIDING TEMPORARY SERVICE SATISFACTORY TO THE AFFECTED CUSTOMER. THE REPAIR OR REPLACEMENT OF UTILITY COMPONENTS SHALL CONFORM TO ALL APPLICABLE REQUIREMENTS OF THE UTILITY OWNER. NO SEPARATE PAYMENT SHALL BE MADE FOR THESE ACTIVITIES, AND COMPENSATION, THEREFORE, SHALL BE INCLUDED IN THE CONTRACT PRICES FOR OTHER ITEMS.
3 THE CONTRACTOR SHALL PROVIDE ALL NECESSARY PROTECTIVE MEASURES TO SAFEGUARD EXISTING UTILITIES FROM DAMAGE DURING CONSTRUCTION OF THIS PROJECT. SHOULD SPECIAL EQUIPMENT BE REQUIRED TO WORK OVER AND AROUND THE UTILITIES, THE CONTRACTOR SHALL BE REQUIRED TO FURNISH SUCH EQUIPMENT. THE COST OF PROTECTING UTILITIES FROM DAMAGE AND FOR FURNISHING SPECIAL EQUIPMENT SHALL BE INCLUDED IN THE PRICE BID FOR OTHER ITEMS OF CONSTRUCTION.
4 ANY EXISTING STORM DRAINAGE PIPING DAMAGED DURING CONSTRUCTION SHALL BE REPAIRED AS RAPIDLY AS POSSIBLE AND THEN BE INSPECTED BY ITS RESPECTIVE OWNER. THE ENGINEER SHALL DETERMINE IF DAMAGE IS THE RESULT OF THE CONTRACTOR'S NEGLIGENCE OR OF AN UNAVOIDABLE CAUSE.
5 IF ANY SANITARY SEWER IS DAMAGED DURING CONSTRUCTION, THE CONTRACTOR SHALL IMMEDIATELY NOTIFY THE UTILITY'S OWNER. REPAIR OF THE SEWER SHALL THEN BE ACCORDING TO THE OWNER'S INSTRUCTIONS. THE ENGINEER SHALL DETERMINE IF DAMAGE IS THE RESULT OF THE CONTRACTOR'S NEGLIGENCE OR OF AN UNAVOIDABLE CAUSE.
6 TOPS OF ALL MANHOLES SHALL BE RAISED TO BE AT LEAST FLUSH WITH OR ABOVE NEW FINISHED GRADES AND BE VISIBLE.
7 MANHOLES RAISED 12 INCHES OR LESS SHALL BE DONE BY THE USE OF CONCRETE RINGS OR "DOUGHNUTS". MANHOLES RAISED GREATER THAN 12 INCHES SHALL REQUIRE THE REMOVAL OF THE CONE SECTION AND PLACEMENT OF THE APPROPRIATE SIZE MANHOLE RISER. THE CONE SECTION SHALL THEN BE REINSTALLED OR REPLACED DEPENDING ON CONDITION.

EASEMENTS

1 ALL EASEMENTS REQUIRED FOR COMPLETION OF THE PROJECT HAVE BEEN OBTAINED BY THE OWNER.
2 THE LIMITS OF CONSTRUCTION ARE RESTRICTED TO THE BOUNDARIES OF THE PERMANENT AND TEMPORARY EASEMENT AREAS. ACCESS TO SPECIFIC AREAS OF WORK DURING THE PROJECT SHALL OCCUR WITHIN THESE BOUNDARIES.

MISCELLANEOUS

1 THE ENGINEER SHALL HAVE THE AUTHORITY TO DESIGNATE AND/OR LIMIT AREAS OF CONSTRUCTION.
2 THE OWNER MAKES NO REPRESENTATIONS ABOUT SUBSURFACE CONDITIONS THAT MAY BE ENCOUNTERED WITHIN THE LIMITS OF THE PROJECT. THE CONTRACTOR SHOULD SATISFY HIMSELF BY ON-SITE INSPECTIONS, CORE DRILLINGS, OR OTHER METHODS, OF THE SUBSURFACE CONDITIONS THAT MAY BE ENCOUNTERED. THE RISK OF ENCOUNTERING AND CORRECTING UNFAVORABLE SUBSURFACE CONDITIONS SHALL BE BORNE SOLELY BY THE CONTRACTOR.
3 IT SHALL BE THE RESPONSIBILITY OF THE CONTRACTOR TO PROVIDE ALL FIELD LAYOUTS.
4 ALL SALVAGEABLE MATERIAL FROM EXISTING PIPING AND STRUCTURES SHALL REMAIN PROPERTY OF THE OWNER. SAID MATERIAL SHALL BE CLEANED AND THEN DELIVERED TO THE OWNER AT A LOCATION DESIGNATED BY THE ENGINEER.
5 ALL UNSUITABLE MATERIAL, AS DETERMINED BY THE ENGINEER OR THROUGH TESTING, IS TO BE REMOVED AND REPLACED WITH SUITABLE MATERIAL.
6 THE CONTRACTOR IS RESPONSIBLE FOR REPAIRING AT HIS OWN EXPENSE ANY AND ALL DAMAGE THAT MAY OCCUR OUTSIDE THE LIMITS OF THIS PROJECT AS A RESULT OF CONSTRUCTION.
7 THE CONTRACTOR SHALL BE RESPONSIBLE FOR THE PAYMENT FOR TESTING. THE CONTRACTOR SHALL BE RESPONSIBLE FOR COORDINATING AND ORDERING APPROPRIATE TESTS AS REQUIRED.
8 THE CONTRACTOR SHALL PROVIDE RECORD DRAWINGS OF THE PROJECT WITHIN THIRTY (30) DAYS AFTER SUBSTANTIAL COMPLETION OF THE WORK. ("SUBSTANTIAL COMPLETION" SHALL BE DEFINED BY THE SPECIFICATIONS). THE OWNER RESERVES THE RIGHT TO WITHHOLD RETAINAGE UNTIL RECEIVING A COMPLETE SET OF SAID RECORD DRAWINGS.
9 SHOULD THERE BE A CONFLICT BETWEEN THESE GENERAL NOTES, CONTRACT DRAWINGS, AND/OR SPECIFICATIONS, THE MOST RESTRICTIVE INTERPRETATION IN FAVOR OF THE OWNER SHALL PREVAIL. THE CONTRACTOR SHALL BE RESPONSIBLE FOR OBTAINING ANY CLARIFICATION OR INTERPRETATION OF GENERAL NOTES, CONTRACT DRAWINGS, AND/OR SPECIFICATIONS, IN ADVANCE AND IN WRITING, FROM THE ENGINEER.

PROJECT SPECIFIC NOTES

1 ALL WORK SHALL BE CONFINED WITHIN THE LIMITS OF THE EXISTING PROPERTY AND/OR ANY CONSTRUCTION EASEMENTS.
2 CONTRACTOR TO VERIFY ELEVATIONS OF EXISTING SEWERS AND PROPOSED SEWER CONNECTION POINTS PRIOR TO ORDERING MATERIALS.
3 ALL NEW MANHOLES SHALL INCLUDE WATERTIGHT FRAME AND COVER AS SPECIFICALLY NOTED OR SPECIFIED.
4 MANHOLE CONCRETE SHALL INCORPORATE XYPEX C1000R ADMIX ACCORDING TO MANUFACTURER'S RECOMMENDATION.
5 CONTRACTOR TO VERIFY LOCATIONS OF ALL EXISTING UTILITIES.
6 SOD SURFACE RESTORATION IS TO BE USED WITH OWNER DIRECTION AND APPROVAL ONLY.
7 WHERE WORK SHALL OCCUR IN YARDS AND EASEMENTS NEAR RESIDENCES, ON SURFACES THAT ARE NOT IMPROVED, THE CONTRACTOR SHALL REDUCE IMPACTS TO THESE AREAS. EXCAVATED MATERIAL SHALL BE STOCKPILED ON PLYWOOD SHEETS TO MINIMIZE DISTURBANCE TO ADJACENT AREAS.
8 GRAVEL SHALL BE STOCKPILED IN A CENTRAL LOCATION AND BROUGHT ONLY AS NEEDED. DUMP TRUCKS SHALL NOT BE USED TO BRING CONSTRUCTION MATERIALS OR TO REMOVE EXCESS EXCAVATED MATERIALS FROM THESE AREAS. CONSTRUCTION EQUIPMENT (I.E. FRONT-END LOADERS, BACKHOES, SKID-STEERS, ETC.) WILL BE USED WITHIN THE EASEMENTS TO TRANSPORT CONSTRUCTION MATERIALS.
9 PLYWOOD SHALL BE USED TO PROTECT CONSTRUCTION EQUIPMENT PATHWAYS IN LOCATIONS THAT ARE NOT IMPROVED.
10 CLEANUP AND SURFACE STABILIZATION SHALL OCCUR AS WORK PROGRESSES AND PROPERTIES SHALL NOT BE LEFT DISTURBED FOR AN EXTENDED PERIOD OF TIME.
11 STOCKPILES OF EXCAVATED MATERIAL SHALL NOT BE LEFT ALONG RIGHTS-OF-WAY OR IN RESIDENTIAL AREAS AND SHALL BE STORED IN A CENTRAL LOCATION IN A SAFE MANNER.
12 CONCRETE SHALL HAVE THE FOLLOWING PROPERTIES:

CONCRETE CLASS	CONC. WEIGHT (PCF)	28 DAY STRENGTH (PSI)	MAXIMUM W/C RATIO	CEMENT TYPE	MAXIMUM PERCENT FLY ASH	MAX. AGG. SIZE	AIR CONTENT
A	NWC 140-150	4,000	0.45	I OR II	25%	1"	6% +/- 1 ½%
B	NWC 140-150	3,000	0.50	I OR II	25%	1"	6% +/- 1 ½%

LEGEND

EXISTING GAS LINE	G	EXISTING FORCE MAIN	FM	BLUE LINE STREAM		BUILDING HATCH	
PROPOSED GAS LINE	G	PROPOSED FORCE MAIN	FM	CENTER LINE OF ROAD		CONCRETE HATCH	
ABANDONED GAS LINE	ABAN G	ABANDONED FORCE MAIN	ABAN FM	FENCE	x	ASPHALT HATCH	
EXISTING WATER LINE	W	ELECTRIC	OH	SILT FENCE	SF	GRAVEL HATCH	
PROPOSED WATER LINE	W	STORM SEWER	ST	VEGETATION		EARTH HATCH	
ABANDONED WATER LINE	ABAN W	MAJOR CONTOUR		UTILITY POLE	∅	FLOODWAY	
EXISTING SANITARY SEWER	SS	MINOR CONTOUR		GAS VALVE		100 YEAR FLOOD PLAIN	
PREVIOUSLY REHABILITATED SANITARY SEWER	SS	PROPERTY LINE		WATER VALVE		MANHOLE	S
ABANDONED SANITARY SEWER	ABAN SS	RIGHT-OF-WAY		FIRE HYDRANT		AIR RELEASE VALVE	A

TRESTLES LLC
ONE VANTAGE WAY, SUITE C-130
NASHVILLE, TENNESSEE 37228
TRESTLESLLC.COM

ENGINEER SEAL
J. DUDLEY FOX
REGISTERED ENGINEER
AGRICULTURE
COMMERCE
No. 19971
STATE OF TENNESSEE

PROJECT
CITY OF GOODLETTSVILLE
2018 SEWER REHABILITATION AND IMPROVEMENTS 3100-002

LOGO
GOODLETTSVILLE TENNESSEE

DRAWN BY	BJP
APPROVED BY	JDF

DATE	ISSUE
02/20/18	APPROVAL
03/28/18	APPROVAL
08/07/18	BIDDING

TITLE
GENERAL NOTES

DRAWING NO.
G2.0

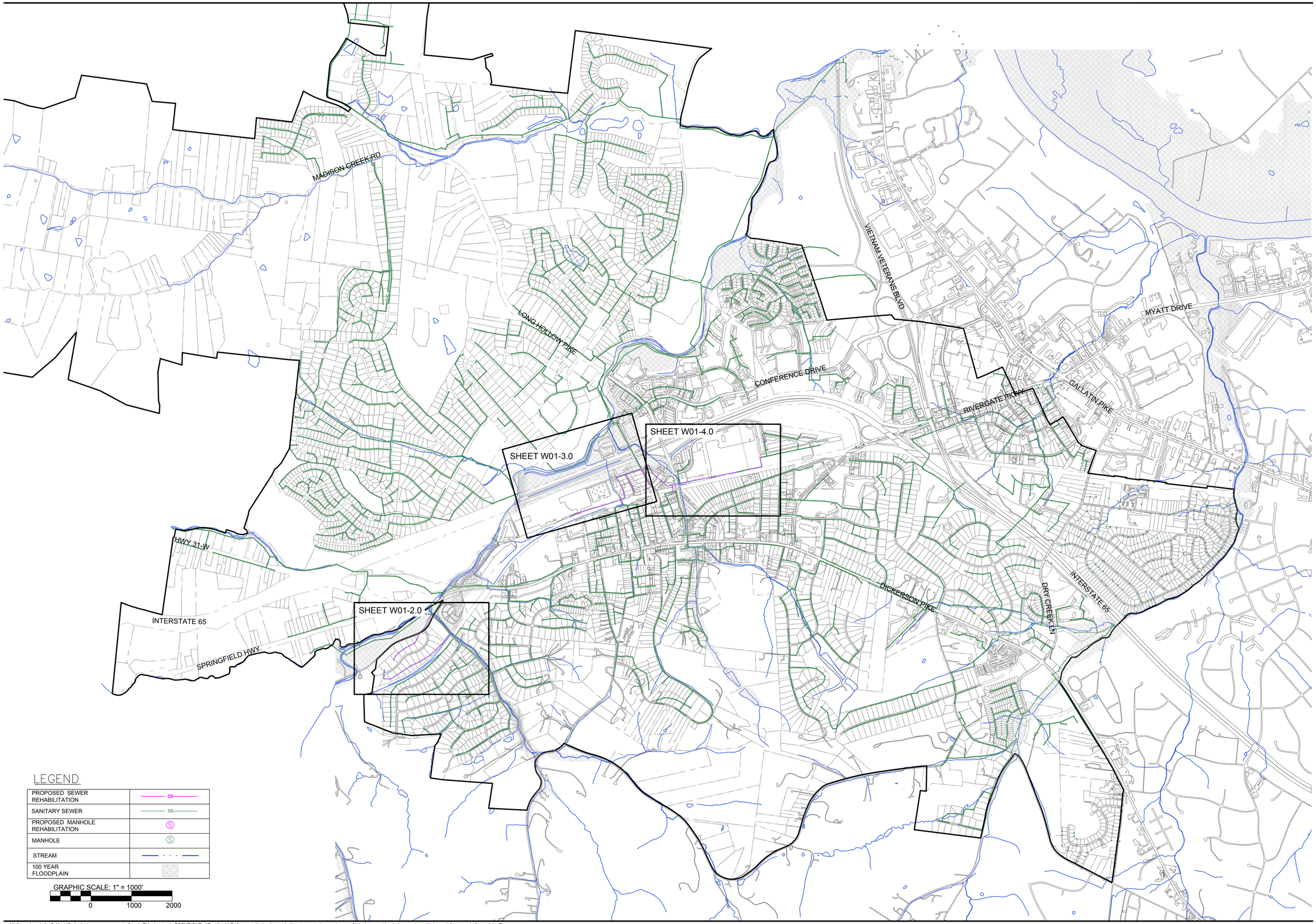

LEGEND

PROPOSED SEWER REHABILITATION	SS
SANITARY SEWER	SS
PROPOSED MANHOLE REHABILITATION	S
MANHOLE	S
STREAM	
100 YEAR FLOODPLAIN	

GRAPHIC SCALE: 1" = 1000'

0 1000 2000

TRESTLES
ONE VANTAGE WAY, SUITE C-130
NASHVILLE, TENNESSEE 37228
TRESTLESLLC.COM

ENGINEER SEAL

J. DUDNEY FOX
REGISTERED ENGINEER
AGRICULTURE
COMMERCE
No. 109
STATE OF TENNESSEE

PROJECT

CITY OF GOODLETTSVILLE

2018 SEWER REHABILITATION AND IMPROVEMENTS
3100-002

LOGO

GOODLETTSVILLE

NORTH

DRAWN BY: BJP

APPROVED BY: JDF

DATE	ISSUE
02/20/18	APPROVAL
03/28/18	APPROVAL
08/07/18	BIDDING

TITLE

OVERALL PLAN - SEWER SYSTEM

DRAWING NO.

C1.0

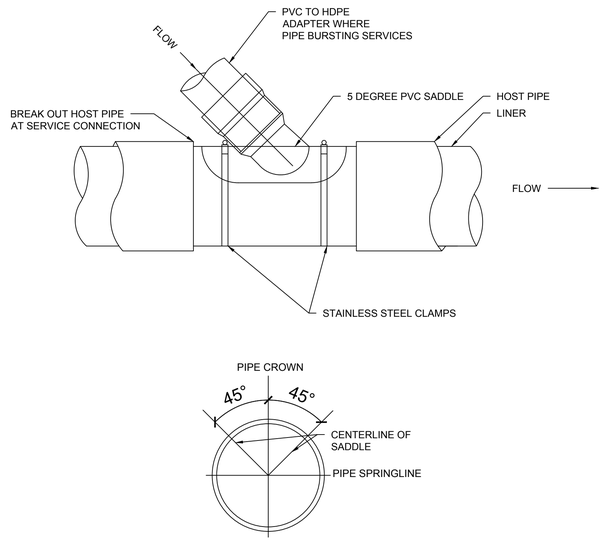

PIPE BURSTING OR CIPP LATERAL MAIN CONNECTION DETAIL

NTS

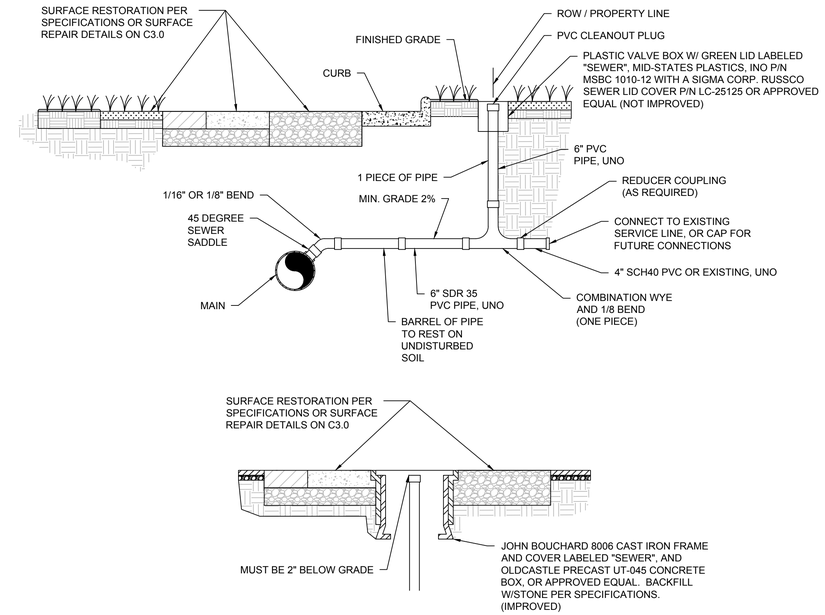

TYPICAL SEWER SERVICE LATERAL LINE AND CLEANOUT DETAIL

NTS

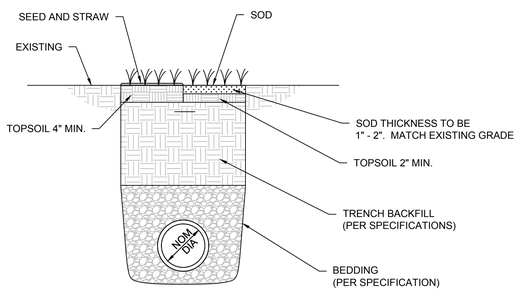

SEED AND STRAW / SODDING / NOT IMPROVED SURFACE REPAIR DETAIL

NTS

NOTES:

1. TOPSOIL SHALL MEET REQUIREMENTS OF SPECIFICATION SECTION 32 9219 - SEEDING.
2. SOURCES OF TOPSOIL SHALL BE APPROVED BY THE ENGINEER PRIOR TO DISTURBANCE.
3. TEMPORARY AND PERMANENT SEEDING SHALL FOLLOW REQUIREMENTS OF SPECIFICATION SECTION - 32 9219 SEEDING.
4. FOLLOWING SEEDBED PREPARATION, FERTILIZER SHALL BE APPLIED TO ALL AREAS TO BE SEEDED AS TO ACHIEVE THE APPLICATION RATES SHOWN IN THE SEEDING REQUIREMENTS TABLE.
5. MAINTAIN THE PROPER MOISTURE CONTENT OF THE SOIL TO ENSURE ADEQUATE PLANT GROWTH UNTIL A SATISFACTORY STAND IS OBTAINED. IF REQUIRED, WATERING SHALL BE PERFORMED TO MAINTAIN PROPER MOISTURE CONTENT.
6. SOD SURFACE RESTORATION IS TO BE USED WITH OWNER DIRECTION AND APPROVAL ONLY.

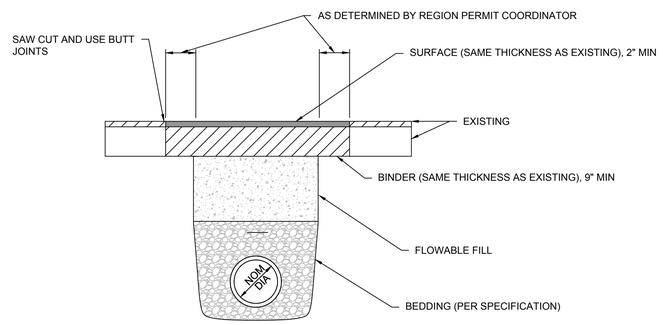

TDOT ROADWAY PAVEMENT REPAIR / IMPROVED SURFACE REPAIR DETAIL

NTS

NOTES:

1. ALL UTILITY WORK SHALL BE IN ACCORDANCE WITH THE "STATE RULES AND REGULATIONS FOR ACCOMMODATING UTILITIES WITH HIGHWAY RIGHTS OF WAY".
2. FLOWABLE FILL TO BE USED WHEN SPECIFICALLY REQUIRED BY TDOT, ENGINEER APPROVAL REQUIRED. FLOWABLE FILL TO BE USED AT ALL TRAVEL LANES.
3. TRENCH BOXES WILL BE USED AS REQUIRED.

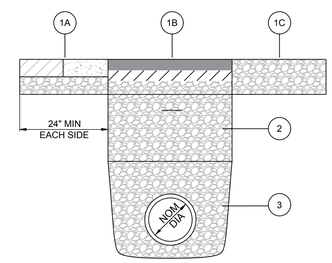

PAVEMENT REPAIR / IMPROVED SURFACE REPAIR DETAIL

NTS

1A DRIVEWAYS AND PARKING LOTS
COMPACTED MINERAL AGGREGATE BASE. THE THICKNESS SHALL BE THE GREATER OF 8" OR THE EXISTING DEPTH OF BASE MATERIAL. THE MINERAL AGGREGATE SHALL BE COMPACTED 303-01, TYPE A, GRADING D ("33-P"), PER TDOT. SPECIFICATIONS. ASPHALTIC CONCRETE SURFACE COURSE SHALL BE MINIMUM 2" THICK, GRADING C, SECTION 307 SSRBC. PORTLAND CEMENT CONCRETE SURFACE COARSE SHALL BE MINIMUM 4" THICK, CLASS B.

1B CITY STREETS
COMPALTED MINERAL AGGREGATE BASE, 8" MINIMUM. A PRIME COAT SHALL BE APPLIED PRIOR TO 9" ASPHALTIC CONCRETE BINDER (307B MODIFIED), AND A TACK COAT APPLIED PRIOR TO 2" ASPHALTIC CONCRETE SURFACE (411E).

1C GRAVEL TRAFFIC AREAS
COMPACTED MINERAL AGGREGATE BASE. THE THICKNESS SHALL BE THE GREATER OF 6" OR THE EXISTING DEPTH OF BASE MATERIAL. THE MINERAL AGGREGATE SHALL BE COMPACTED 303-01, TYPE A, GRADING D ("33-P"), PER TDOT SPECIFICATIONS.

2 BACKFILL PER SPECIFICATIONS

3 BEDDING PER SPECIFICATIONS

GENERAL REQUIREMENTS

1. ALL STREET CUTS MUST BE REPAIRED IMMEDIATELY AFTER BACKFILLING AND ACCORDING TO THIS STANDARD.
2. A ROAD CUT PERMIT AND AN APPROVED TRAFFIC CONTROL PLAN ARE REQUIRED FOR ALL CUTS IN STREETS.
3. WHERE LONGITUDINAL CUTS ARE MADE THE OWNER RESERVES THE RIGHT TO REQUIRE ADDITIONAL RESURFACING BEYOND THE LIMITS OF THE REPAIR TO ENSURE THE PROPER RIDING REQUIREMENTS AND THE STABILITY OF THE PAVEMENT.
4. FOLLOWING TEMPORARY PAVEMENT REPAIRS, A MINIMUM OF 48 HOURS SHALL TRANSPIRE PRIOR TO COMPLETING PERMANENT PAVEMENT REPAIRS.
5. BARRICADES OR METAL PLATES SHALL BE PLACED AROUND ALL HOLES WIDER THAN 4 INCHES UNTIL CONCRETE CAN WITHSTAND TRAFFIC.
6. IMPROVED SURFACE RESTORATION INCLUDES ALL AREAS AND SURFACES EXCEPT AREAS TO RECEIVE FINAL GRADING AND SEEDING. IMPROVED SURFACES INCLUDES BUT NOT LIMITED TO STREETS, DRIVEWAYS, PARKING LOTS, SIDEWALKS, CURB AND GUTTER, AND GRAVEL TRAFFIC AREAS.
7. IMPROVED SURFACES SHALL BE CUT TO NEAT AND STRAIGHT LINES TO MINIMIZE THE WIDTH OF SURFACE REPLACEMENT AND TO PREVENT CRACKS OR DAMAGE IN THE SURROUNDING SURFACE.

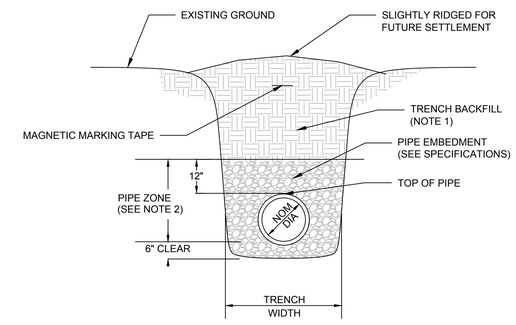

GRAVITY SEWER TRENCH DETAIL

NTS

NOTES:

1. SEE PROJECT SPECIFICATIONS FOR BACKFILL REQUIREMENTS.
2. "PIPE ZONE" EXTENDS TO 12" ABOVE TOP OF PIPE AND IS AREA IN WHICH SPECIAL CARE IS TO BE GIVEN TO PLACEMENT AND COMPACTION TO PROTECT PIPE DURING AND AFTER LAYING.
3. TRENCH WIDTH AT TOP OF PIPE SHALL BE NOMINAL PIPE DIAMETER PLUS 24" UNLESS PERMITTED OTHERWISE BY ENGINEER.
4. TRENCH SHALL BE EXCAVATED TO GIVE PIPE FULL AND CONTINUOUS SUPPORT. ALL ROCK TO BE REMOVED WITHIN 6" OF PIPE - BED TO PIPE GRADE WITH CRUSHED STONE BEDDING.
5. PIPE TO BE CONTINUOUSLY SUPPORTED ALONG LENGTH OF PIPE BARREL EXCEPT AT BELL. BELL HOLES ARE REQUIRED SUCH THAT NO BEARING LOAD IS TAKEN BY THE BELL.

TRESTLES
ONE VANTAGE WAY, SUITE C-130
NASHVILLE, TENNESSEE 37228
TRESTLESLLC.COM

ENGINEER
DUDNEY FOX
REGISTERED ENGINEER
AGRICULTURE
NUMBER 109 90
STATE OF TENNESSEE

PROJECT
CITY OF GOODLETTSVILLE
2018 SEWER REHABILITATION AND IMPROVEMENTS
3100-002

LOGO
GOODLETTSVILLE TENNESSEE

DRAWN BY	BJP
APPROVED BY	JDF

DATE	ISSUE
02/20/18	APPROVAL
03/28/18	APPROVAL
08/07/18	BIDDING

TITLE
SECTIONS AND DETAILS

DRAWING NO.
C2.0

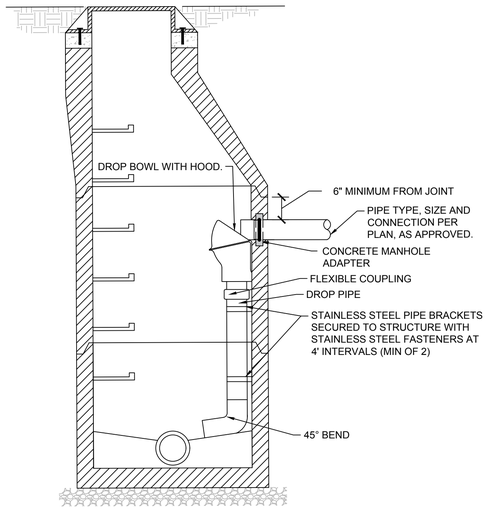

INTERIOR MANHOLE DROP DETAIL

NTS

NOTES:

1. DROP BOWL WITH HOOD AS MANUFACTURED BY RELINER-DURAN INC. OR APPROVED EQUAL.
2. DROP BOWL TO BE SIZED PER MANUFACTURERS RECOMMENDATIONS (INFORMATION AVAILABLE @ RELINER.COM) OR AS REQUIRED BY ENGINEER.
3. PIPE AND FITTING FOR DROP ASSEMBLY SHALL BE: DUCTILE IRON ANSI A21.50-1, AWWA C150-1, AWWA C-900 OR PVC ASTM 3034 SDR 35.
4. STAINLESS STEEL ADJUSTABLE PIPE BRACKETS AS MANUFACTURED BY RELINER-DURAN INC. OR APPROVED EQUAL.
5. NO MORE THAN ONE DROP BOWL PER MANHOLE WITHOUT WRITTEN APPROVAL BY ENGINEER.
6. WRITTEN APPROVAL BY ENGINEER IS REQUIRED FOR DROP BOWL INSTALLATION ON PIPELINES WITH A SLOPE OF 5% OR GREATER.

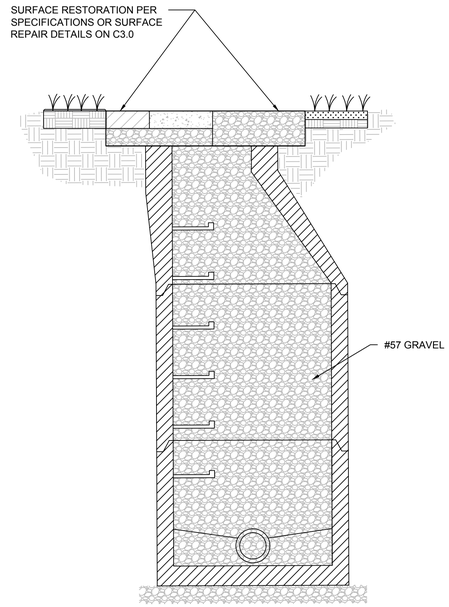

MANHOLE ABANDONMENT DETAIL

NTS

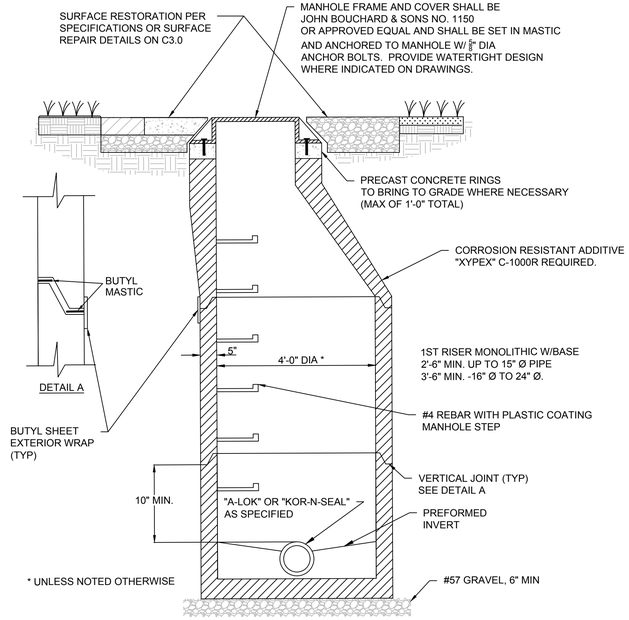

MANHOLE REPLACEMENT - REPAIR METHOD 1 DETAIL

NTS

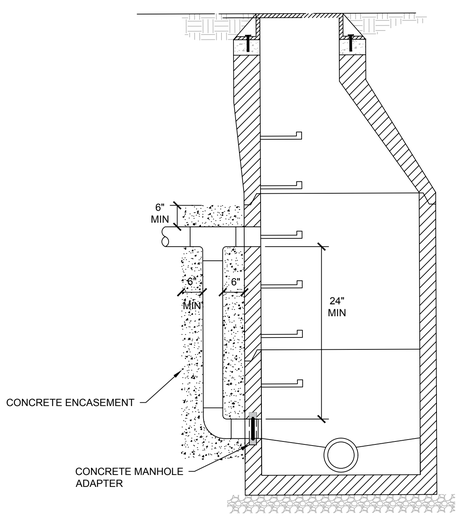

EXTERIOR MANHOLE DROP DETAIL

NTS

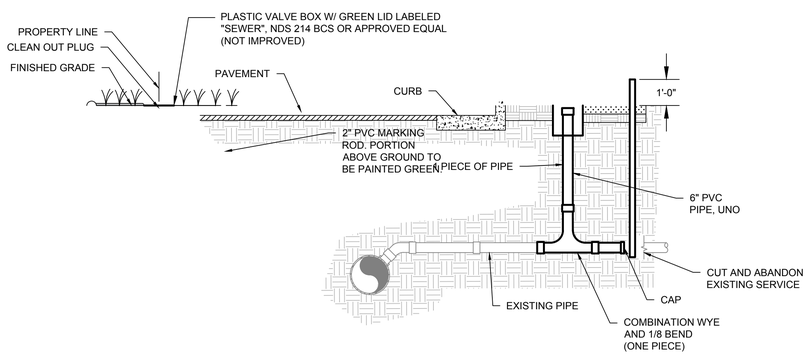

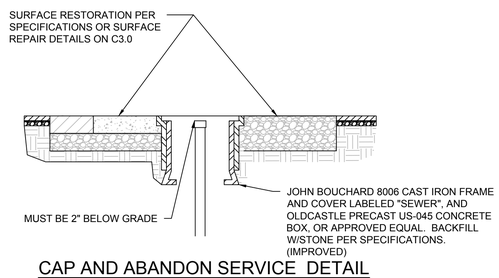

CAP AND ABANDON SERVICE DETAIL

NTS

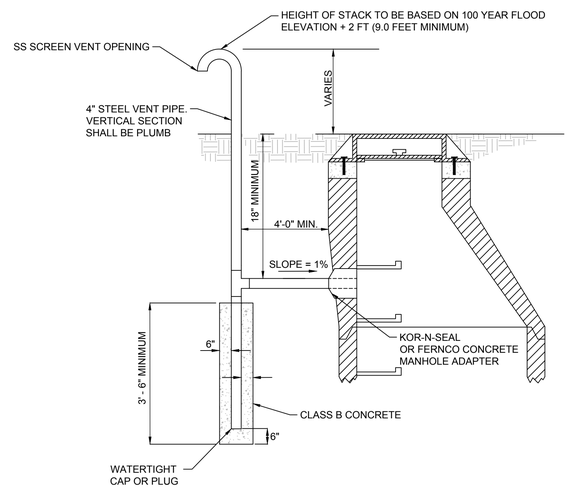

MANHOLE VENT PIPE ASSEMBLY DETAIL

NTS

NOTES:

1. VENT PIPE SHALL BE LOCATED OUT OF A TRAVEL WAY, IN BACK OF A CURB OR SIDEWALK, UNO.
2. PIPE SURFACE PREPARATION SHALL FOLLOW SSPC-SP10 NEAR-WHITE BLAST CLEANING.
3. PIPE SURFACE FINISH SHALL BE ONE COAT OF TNEMEC 435 PERMA-GLAZE AT 30.0 - 40.0 MILS D.F.T.

TRESTLES
ONE VANTAGE WAY, SUITE C-130
NASHVILLE, TENNESSEE 37228
TRESTLESLLC.COM

ENGINEER SEAL: LUDNEY FOX REGISTERED ENGINEER AGRICULTURE NO. 109700 AMERICA STATE OF TENNESSEE

PROJECT
CITY OF GOODLETTSVILLE
2018 SEWER REHABILITATION AND IMPROVEMENTS
3100-002

LOGO: GOODLETTSVILLE TENNESSEE

DRAWN BY	APPROVED BY
BJP	JDF

DATE	ISSUE
02/20/18	APPROVAL
03/28/18	APPROVAL
08/07/18	BIDDING

TITLE: SECTIONS AND DETAILS

DRAWING NO. C3.0

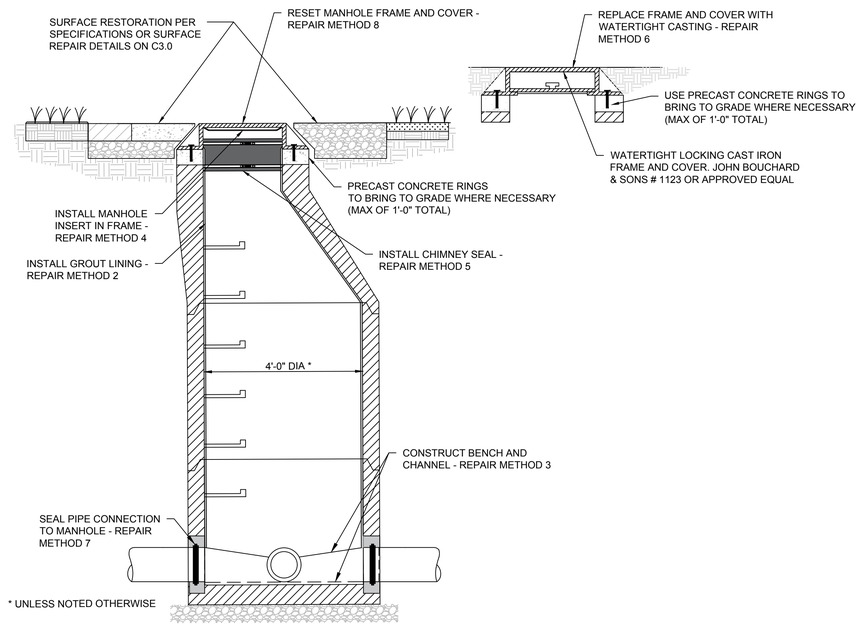

MANHOLE REHABILITATION DETAIL
NTS

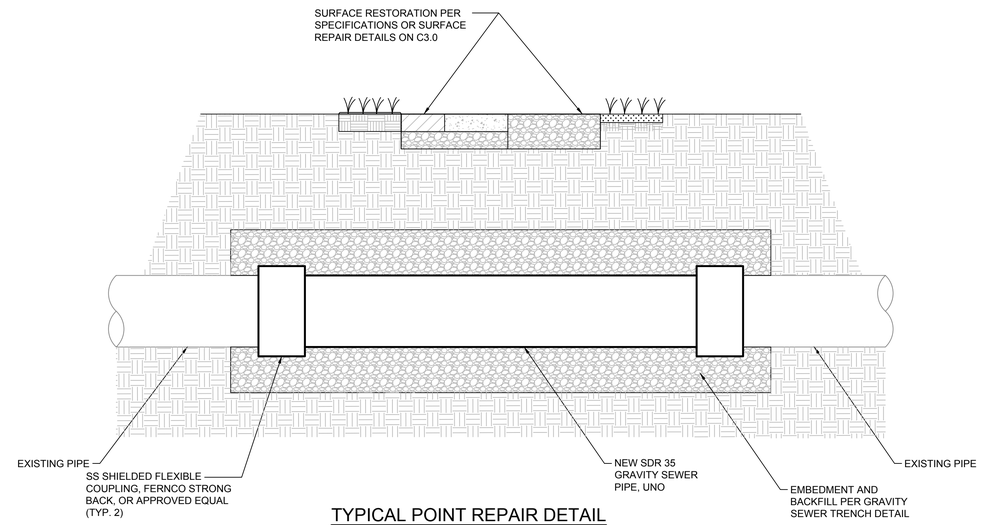

TYPICAL POINT REPAIR DETAIL
NTS

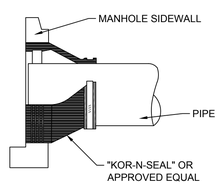

MANHOLE CONNECTION DETAIL
FOR CONNECTIONS IN NEW MANHOLES
NTS

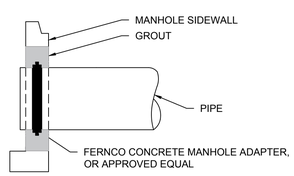

MANHOLE CONNECTION DETAIL
FOR NEW CONNECTIONS IN EXISTING MANHOLES
NTS

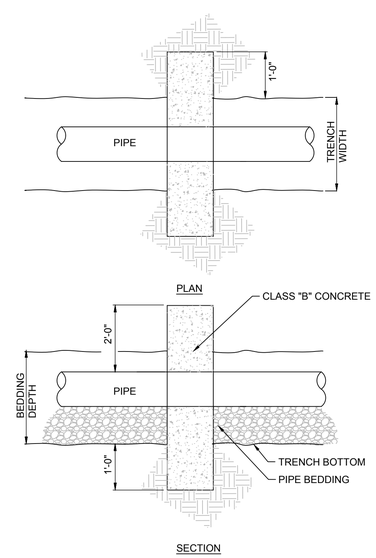

TYPICAL CONCRETE WATER STOP (CWS)
NTS

TRESTLES
ONE VANTAGE WAY, SUITE C-130
NASHVILLE, TENNESSEE 37228
TRESTLESLLC.COM

ENGINEER
DUDLEY FOX
REGISTERED ENGINEER
AGRICULTURE
NO. 109 ENGINEER
STATE OF TENNESSEE

PROJECT
CITY OF GOODLETTSVILLE
2018 SEWER REHABILITATION AND IMPROVEMENTS
3100-002

LOGO
GOODLETTSVILLE TENNESSEE

DRAWN BY
BJP
APPROVED BY
JDF

DATE	ISSUE
02/20/18	APPROVAL
03/28/18	APPROVAL
08/07/18	BIDDING

TITLE
SECTIONS AND DETAILS

DRAWING NO.
C4.0

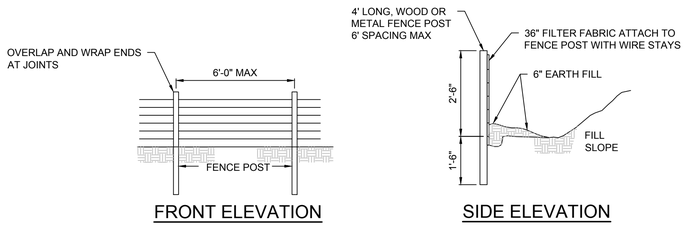

TYPICAL SILT FENCE DETAIL
NTS

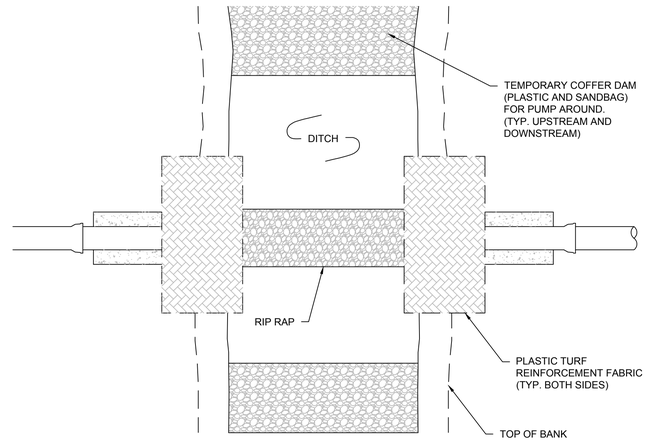

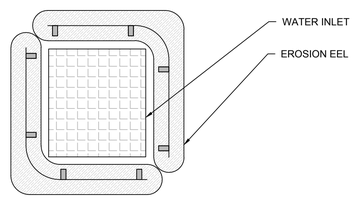

EROSION EEL DETAIL
NTS

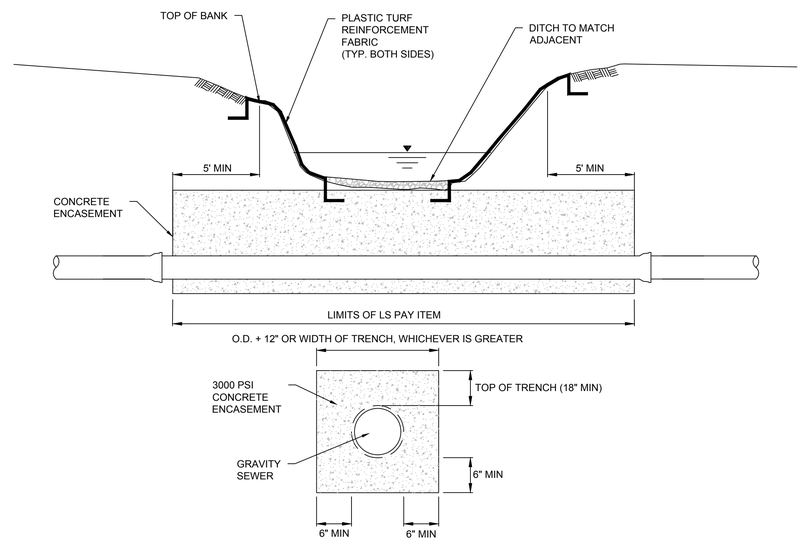

TYPICAL ARAP CREEK CROSSING AND CONCRETE ENCASEMENT DETAIL
NTS

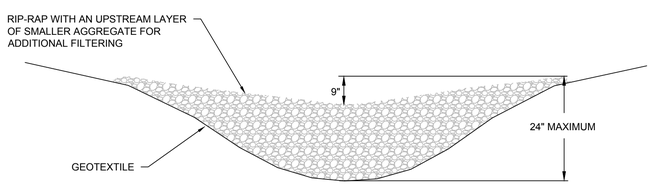

CHECK DAM DETAIL
NTS

TRESTLES
ONE VANTAGE WAY, SUITE C-130
NASHVILLE, TENNESSEE 37228
TRESTLESLLC.COM

ENGINEER
DUDNEY FOX REGISTERED ENGINEER NO. 109190 STATE OF TENNESSEE

PROJECT
CITY OF GOODLETTSVILLE
2018 SEWER REHABILITATION AND IMPROVEMENTS
3100-002

LOGO
GOODLETTSVILLE TENNESSEE

DRAWN BY	BJP
APPROVED BY	JDF

DATE	ISSUE
02/20/18	APPROVAL
03/28/18	APPROVAL
08/07/18	BIDDING

TITLE
ECP DETAILS

DRAWING NO.
C5.0

SEWER CONSTRUCTION INFORMATION

MANHOLE ID	EXISTING PIPE			PROPOSED PIPE	
	EXISTING PIPE SIZE	EXISTING PIPE MATERIAL	EXISTING SPECIAL	PROPOSED PIPE SIZE	CONSTRUCTION METHOD
9A61 - 9A62	8"	VCP	NONE	8"	PIPE BURSTING
9A60 - 9A61	8"	VCP	NONE	8"	PIPE BURSTING
9A59 - 9A60	8"	VCP	NONE	8"	PIPE BURSTING
9A58 - 9A59	8"	VCP	NONE	8"	PIPE BURSTING
9C57 - 9A58	8"	VCP	NONE	8"	PIPE BURSTING
9D56 - 9C57	8"	VCP	NONE	8"	PIPE BURSTING
9D55 - 9D56	8"	VCP	NONE	8"	PIPE BURSTING
9D54 - 9D55	8"	VCP	NONE	8"	PIPE BURSTING
9D15 - 9D54	8"	VCP	NONE	8"	PIPE BURSTING
9B70 - 9B71	8"	VCP	NONE	8"	PIPE BURSTING
9B69 - 9B70	8"	VCP	NONE	8"	PIPE BURSTING
9B68 - 9B69	8"	VCP	NONE	8"	PIPE BURSTING
9B67 - 9B68	8"	VCP	NONE	8"	PIPE BURSTING
9D66 - 9B67	8"	VCP	NONE	8"	PIPE BURSTING
9D65 - 9D66	8"	VCP	NONE	8"	PIPE BURSTING
9D64 - 9D65	8"	VCP	NONE	8"	PIPE BURSTING
9D63 - 9D64	8"	VCP	NONE	8"	PIPE BURSTING
9D13 - 9D63	8"	VCP	NONE	8"	PIPE BURSTING
20A72 - 20A73	15"	VCP	NONE	Upsize to 16"	PIPE BURSTING
20C71 - 20A72	15"	VCP	NONE	Upsize to 16"	PIPE BURSTING
20C70 - 20C71	15"	VCP	NONE	Upsize to 16"	PIPE BURSTING
20C69 - 20C70	15"	VCP	NONE	Upsize to 16"	PIPE BURSTING
20C68 - 20C69	15"	VCP	NONE	Upsize to 16"	PIPE BURSTING
20C68 - 20C80	8"	CI	NONE	8"	PIPE BURSTING
20C67 - 20C68	15"	VCP	NONE	Upsize to 16"	PIPE BURSTING
20C66 - 20C67	15"	VCP	NONE	Upsize to 16"	PIPE BURSTING
20C65 - 20C66	15"	VCP	NONE	Upsize to 16"	PIPE BURSTING
20C64 - 20C65	15"	VCP	NONE	Upsize to 16"	PIPE BURSTING
20C78 - 20C79	8"	VCP	NONE	8"	PIPE BURSTING
20C64 - 20C78	8"	VCP	NONE	8"	PIPE BURSTING
20C63 - 20C64	15"	VCP	NONE	Upsize to 16"	PIPE BURSTING
20C62 - 20C63	15"	VCP	NONE	Upsize to 16"	PIPE BURSTING
20C76 - 20C77	8"	VCP	NONE	8"	PIPE BURSTING
20C62 - 20C76	8"	VCP	NONE	8"	PIPE BURSTING
20C62 - 20C74	15"	VCP	NONE	Upsize to 16"	PIPE BURSTING
20C75 - 21A1	15"	VCP	NONE	Upsize to 16"	PIPE BURSTING
21A1 - 21A2	15"	VCP	NONE	Upsize to 16"	PIPE BURSTING
21A2 - 21A3	15"	VCP	NONE	Upsize to 16"	PIPE BURSTING
21A3 - 21A32	15"	CI	NONE	Upsize to 16"	PIPE BURSTING
21A3 - 21A4	12"	CI	NONE	12"	PIPE BURSTING
21A4 - 21A5	12"	CI	NONE	12"	PIPE BURSTING
21A5 - 21A6	12"	VCP	NONE	12"	PIPE BURSTING
21A6 - 21A7	12"	VCP	NONE	12"	PIPE BURSTING
21A7 - 21A8	12"	VCP	NONE	12"	PIPE BURSTING
21A8 - 21A9	12"	VCP	NONE	12"	PIPE BURSTING
21A9 - 21A10	12"	VCP	NONE	12"	PIPE BURSTING
21C11 - 21C12	10"	VCP	NONE	10"	PIPE BURSTING
21C12 - 21C13	10"	VCP	NONE	10"	PIPE BURSTING
21C13 - 21C14	10"	VCP	NONE	10"	PIPE BURSTING
21C14 - 21C15	10"	VCP	NONE	10"	PIPE BURSTING
21C24 - 21C25	8"	VCP	NONE	8"	PIPE BURSTING

NOTE: EXISTING MATERIAL IN SLIP LINED SEGMENTS BASED ON EXISTING PIPE MATERIAL OF AREA. CONTRACTOR TO CONFIRM EXISTING PIPE MATERIALS. PIPE SIZES BASED ON CITY GIS DATA, MANHOLE INSPECTION REPORTS, AND ENGINEER OBSERVATIONS. CONTRACTOR TO CONFIRM PIPE SIZES. CONTRACTOR TO VERIFY AND MAINTAIN EXISTING INVERT ELEVATIONS UNLESS NOTED OTHERWISE.

MANHOLE REHABILITATION INFORMATION

MANHOLE ID	REHABILITATION REPAIR METHOD(S)	REPAIR METHOD(S)
9A62	FRAME INSERT	4
9A61	CEMENTITIOUS LINER, FRAME INSERT	2,4
9A60	FRAME INSERT	4
9A59	FRAME INSERT	4
9A58	FRAME INSERT	4
9C57	FRAME INSERT	4
9D56	REPLACE W/ WATERTIGHT CASTING	6
9D55	REPLACE W/ WATERTIGHT CASTING	6
9D54	FRAME INSERT	4
9D15	FRAME INSERT, CHIMNEY SEAL	4,5
9B71	FRAME INSERT, CHIMNEY SEAL	4,5
9B70	FRAME INSERT	4
9B69	FRAME INSERT	4
9B68	FRAME INSERT	4
9B67	FRAME INSERT	4
9D66	REPLACE W/ WATERTIGHT CASTING	6
9D65	FRAME INSERT	4
9D64	FRAME INSERT	4
9D63	REPLACE W/ WATERTIGHT CASTING	6
9D13	NONE	NONE
20A73	REPLACE W/ WATERTIGHT CASTING	6
20A72	REPLACE W/ WATERTIGHT CASTING	6
20C71	REPLACE W/ WATERTIGHT CASTING	6
20C70	REPLACE W/ WATERTIGHT CASTING	6
20C69	FRAME INSERT	4
20C80	RESET FRAME AND COVER	8
20C68	FRAME INSERT	4
20C67	FRAME INSERT	4
20C66	REPLACE W/ WATERTIGHT CASTING	6
20C65	NONE	NONE
20C79	NONE	NONE
20C78	NONE	NONE
20C64	NONE	NONE
20C63	NONE	NONE
20C77	RESET FRAME AND COVER	8
20C76	NONE	NONE
20C62	NONE	NONE
20C74	FRAME INSERT	4
20C75	FRAME INSERT	4
21A1	REPLACE W/ WATERTIGHT CASTING	6
21A2	REPLACE W/ WATERTIGHT CASTING	6
21A32	REPLACE W/ WATERTIGHT CASTING	6
21A3	REPLACE W/ WATERTIGHT CASTING	6
21A4	FRAME INSERT	4
21A5	FRAME INSERT	4

MANHOLE ID	REHABILITATION REPAIR METHOD(S)	REPAIR METHOD(S)
21A6	REPLACE W/ WATERTIGHT CASTING	6
21A7	REPLACE W/ WATERTIGHT CASTING	6
21A8	REPLACE W/ WATERTIGHT CASTING	6
21A9	REPLACE W/ WATERTIGHT CASTING	6
21A10	REPLACE W/ WATERTIGHT CASTING	6
21C11	REPLACE W/ WATERTIGHT CASTING	6
21C12	REPLACE W/ WATERTIGHT CASTING	6
21C13	FRAME INSERT	4
21C14	REPLACE W/ WATERTIGHT CASTING	6
21C15	REPLACE W/ WATERTIGHT CASTING	6
21C24	REPLACE W/ WATERTIGHT CASTING	6
21C25	REPLACE W/ WATERTIGHT CASTING	6

1 - MANHOLE REPLACEMENT, 2 - CEMENTITIOUS LINER, 3 - CONSTRUCT BENCH AND CHANNEL, 4 - FRAME INSERT, 5 - CHIMNEY SEAL, 6 REPLACE W/ WATERTIGHT CASTING, 7 - SEAL PIPE CONNECTION, 8 - RESET FRAME AND COVER, 9 - ABANDON PIPE CONNECTION

TRESTLES LLC
ONE VANTAGE WAY, SUITE C-130
NASHVILLE, TENNESSEE 37228
TRESTLESLLC.COM

ENGINEER
J. DUDNEY FOX
REGISTERED ENGINEER
No. 109
AGRICULTURE
NOVEMBER 6, 2018
STATE OF TENNESSEE

PROJECT
CITY OF GOODLETTSVILLE
2018 SEWER REHABILITATION AND IMPROVEMENTS
3100-002

LOGO
GOODLETTSVILLE TENNESSEE

DRAWN BY BJP
APPROVED BY JDF

DATE	ISSUE
02/20/18	APPROVAL
03/28/18	APPROVAL
08/07/18	BIDDING

TITLE
MANHOLE & PIPE REHAB TABLES

DRAWING NO.
WO1-1.0

NOTE: ALL PIPE SIZES 8" UNLESS OTHERWISE SHOWN

LEGEND

PROPOSED SEWER REHABILITATION	SS
SANITARY SEWER	SS
PROPOSED MANHOLE REHABILITATION	S
MANHOLE	S
STREAM	
100 YEAR FLOODPLAIN	

GRAPHIC SCALE: 1" =100'

0 100 200

TRESTLES
ONE VANTAGE WAY, SUITE C-130
NASHVILLE, TENNESSEE 37228
TRESTLESLLC.COM

ENGINEER

J. DUDNEY FOX
REGISTERED ENGINEER
No. 109
AGRICULTURE
NUMBER
No. 109
STATE OF TENNESSEE

PROJECT

CITY OF GOODLETTSVILLE

2018 SEWER REHABILITATION AND IMPROVEMENTS 3100-002

LOGO

GOODLETTSVILLE TENNESSEE

NORTH

DRAWN BY: BJP

APPROVED BY: JDF

DATE	ISSUE
02/20/18	APPROVAL
03/28/18	APPROVAL
08/07/18	BIDDING

TITLE: ENLARGEMENT 1 WO #1

DRAWING NO. WO1-2.0

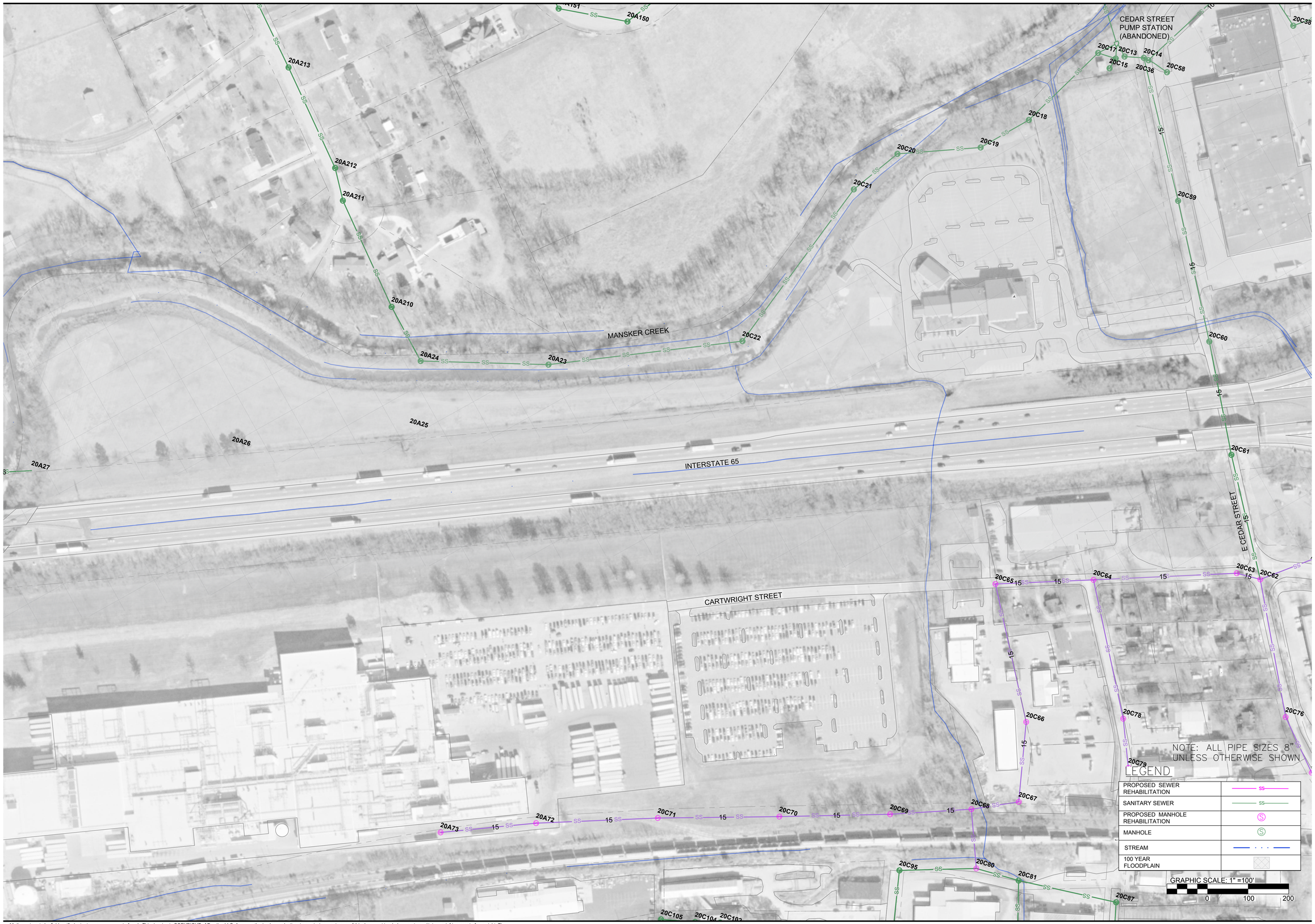

TRESTLES LLC
ONE VANTAGE WAY, SUITE C-130
NASHVILLE, TENNESSEE 37228
TRESTLESLLC.COM

ENGINEER'S SEAL

J. RUDNEY FOX
REGISTERED ENGINEER
AGRICULTURE
NUMBER
109
STATE OF TENNESSEE

PROJECT

CITY OF GOODLETTSVILLE

2018 SEWER REHABILITATION AND IMPROVEMENTS 3100-002

LOGO

GOODLETTSVILLE TENNESSEE

NORTH

DRAWN BY: BJP

APPROVED BY: JDF

DATE	ISSUE
02/20/18	APPROVAL
03/28/18	APPROVAL
08/07/18	BIDDING

TITLE: ENLARGEMENT 3 WO #1

DRAWING NO.: WO1-3.0

TRESTLES
ONE VANTAGE WAY, SUITE C-130
NASHVILLE, TENNESSEE 37228
TRESTLESLLC.COM

ENGINEER'S SEAL

RUDNEY BOX
REGISTERED ENGINEER
AGRICULTURE
NO. 109 NUMBER
STATE OF TENNESSEE

PROJECT

CITY OF GOODLETTSVILLE

2018 SEWER REHABILITATION AND IMPROVEMENTS 3100-002

LOGO

GOODLETTSVILLE TENNESSEE

NORTH

DRAWN BY: BJP

APPROVED BY: JDF

DATE	ISSUE
02/20/18	APPROVAL
03/28/18	APPROVAL
08/07/18	BIDDING

TITLE

ENLARGEMENT 4
WO #1

DRAWING NO.

WO1-4.0