PROJECT ID	SHEET NO.	TOTAL SHEETS
_	1	

PROPOSED PLANS FOR

GEORGETOWN COUNTY
EAST ANDREWS DRAINAGE IMPROVEMENTS
EDA PROJECT NUMBER: 04-79-07486

LOCATION MAP
N.T.S.

Design Reference for these plans is the:

2021

SCDOT Roadway Design Manual

Hydraulic Design Reference for these plans is the:

2009

Edition of SCDOT's "Requirements for Hydraulic Design Studies"

NPDES PERMIT INFORMATION

Disturbed Area = 0.40 Acre(s)

Project Area = 2.40 Acre(s)

Approximate Location of Roadway is

Begin
Latitude 33° 27' 19.54" N
Longitude 79° 32' 50.16" W

End
Latitude 33° 26' 50.16" N
Longitude 79° 32' 39.51" W

Hydraulic and NPDES Design provided by:

DAVIS & FLOYD, INC.

UTILITY CONTACT INFORMATION

Owner	Contact	Phone #	Email
Frontier Communications (formerly Verizon)	E.A. Benton	843-455-5396 (C)	everett.benton@ftr.com
Dominion Energy Gas - SCG94	David Ethridge	843-833-2460	david.ethridge@dominionenergy.com
Duke Energy Progress (Formerly Progress Energy	Jerry Harrington	843-319-4952	jerry.harrington@duke-energy.com
Horry Telephone (HTC)	Frankie Moore	843-369-8198	frankie.moore@htcinc.net
Santee Cooper	Chris Mahoney	843-761-8000 ext. 5918	chris.mahoney@santeecooper.com
Santee Electric Co-Op	Rob Higbe	843-355-0533	rhigbe@Santee.org
Segra Communications - SGRAZ01	John Pearson	843-270-5573	jd@eganbrothersinc.com
Town of Andrews	Jawana McCray	843-485-1288	JMcCray@townofandrews.sc.gov
Georgetown County Water and Sewer	Richard Poston	843-907-1521	richardp@gcwsd.com
Charter Spectrum	Stephen Susak		stephen.susak@charter.com
Farmers Telephone Cooperative	Mark Brown	843-372-1535	brownm@ftc.org

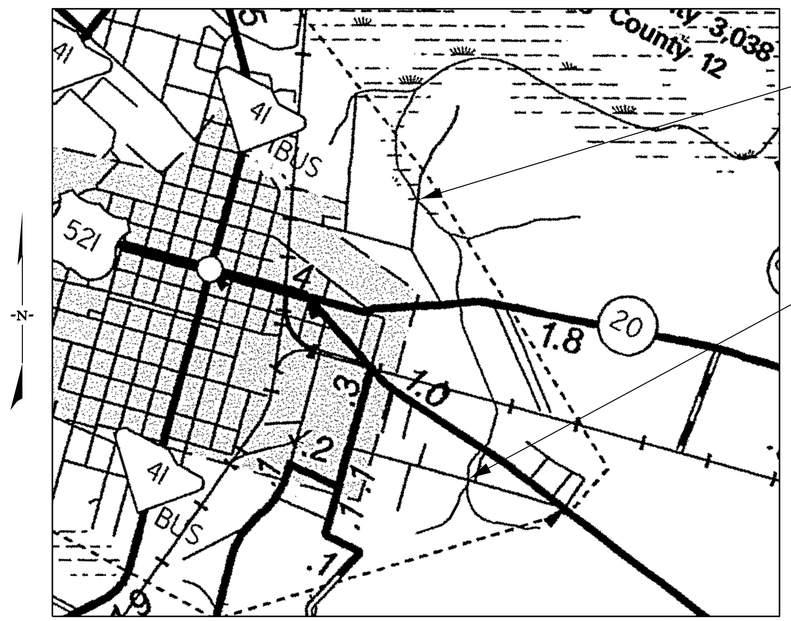

LAYOUT
(NOT TO SCALE)

GEORGETOWN COUNTY MAP

SCDOT REVIEW	RIGHT-OF-WAY INITIAL	RIGHT-OF-WAY DATE	CONSTRUCTION INITIAL	CONSTRUCTION DATE
PRECONSTRUCTION SUPPORT - ROAD				
PRECONSTRUCTION SUPPORT - STRUCTURES				
RPG - DESIGN MANAGER				
RPG - PROGRAM MANAGER				

THE INITIALS ABOVE DO NOT RELIEVE THE ENGINEER OF RECORD OF THE RESPONSIBILITY TO DESIGN THIS PROJECT IN ACCORDANCE WITH ALL APPLICABLE CRITERIA.

ENVIRONMENTAL PERMIT INFORMATION

USACE PERMIT	X YES	NO		
NEPA DOCUMENT	YES	X NO		
401 CERTIFICATION	X YES	NO		
OCRM CAP	YES	X NO		
NAVIGABLE WATERS	SC	USCG	USACE	X N/A

For Right Of Way Acquisition:

Consultant Engineer of Record — Date

County Representative — Date

REFERENCE THE FOLLOWING FOR RAILWAY STANDARDS:

CSX: DESIGN & CONSTRUCTION STANDARD SPECIFICATIONS

CSX: STANDARD SPECIFICATIONS FOR THE DESIGN & CONSTRUCTION OF PRIVATE SIDETRACKS

3 DAYS BEFORE DIGGING IN SOUTH CAROLINA

CALL 811

SOUTH CAROLINA 811 (SC811)
WWW.SC811.COM
ALL UTILITIES MAY NOT BE A MEMBER OF SC811

RAILROAD INVOLVEMENT?
(YES) / NO

	LESTER CREEK		TOTAL	
NET LENGTH OF ROADWAY	0.000	MILES	0.000	MILES
NET LENGTH OF BRIDGES	0.000	MILES	0.000	MILES
NET LENGTH OF PROJECT	1.250	MILES	1.250	MILES
LENGTH OF EXCEPTIONS	0.000	MILES	0.000	MILES
GROSS LENGTH OF PROJECT	1.250	MILES	1.250	MILES

NOTE: EXCEPT AS MAY OTHERWISE BE SPECIFIED ON THE PLANS OR IN THE SPECIAL PROVISIONS, ALL MATERIALS AND WORKMANSHIP ON THIS PROJECT SHALL CONFORM TO THE SOUTH CAROLINA DEPARTMENT OF TRANSPORTATION STANDARD SPECIFICATIONS FOR HIGHWAY CONSTRUCTION (2007 EDITION) AND THE STANDARD DRAWINGS FOR ROAD CONSTRUCTION IN EFFECT AT THE TIME OF LETTING.

CONSULTING ENGINEERING FIRM

SOUTH CAROLINA — DAVIS & FLOYD INC. ENGINEERING NO. C00538 — CERTIFICATE OF AUTHORIZATION NO.

ENGINEER OF RECORD

SOUTH CAROLINA — REGISTERED PROFESSIONAL ENGINEER — No. 19075 — MICHAEL VANDIVER NORTON

Digitally signed by Michael V. Norton
Date: 2023.05.15 12:12:39 -04'00'

FOR CONSTRUCTION — DATE

SCALE: 1500.000 ft / in.
PEN TABLE: East Andrews-SCDOT Levels 2015 B&W Plan-PDF.tbl
PLOT DRIVER: PDF.pltcfg
FILE: G:\JobsOdd\31969-00\Production\Transportation\f_dgn\Const plpr\East Andrews SHEET 1.dgn
5/11/2023

FED. ROAD DIV.NO.	STATE	COUNTY	PROJECT ID	ROUTE NO.	SHEET NO.	TOTAL SHEETS
3	S.C.	GEORGETOWN			IL1	

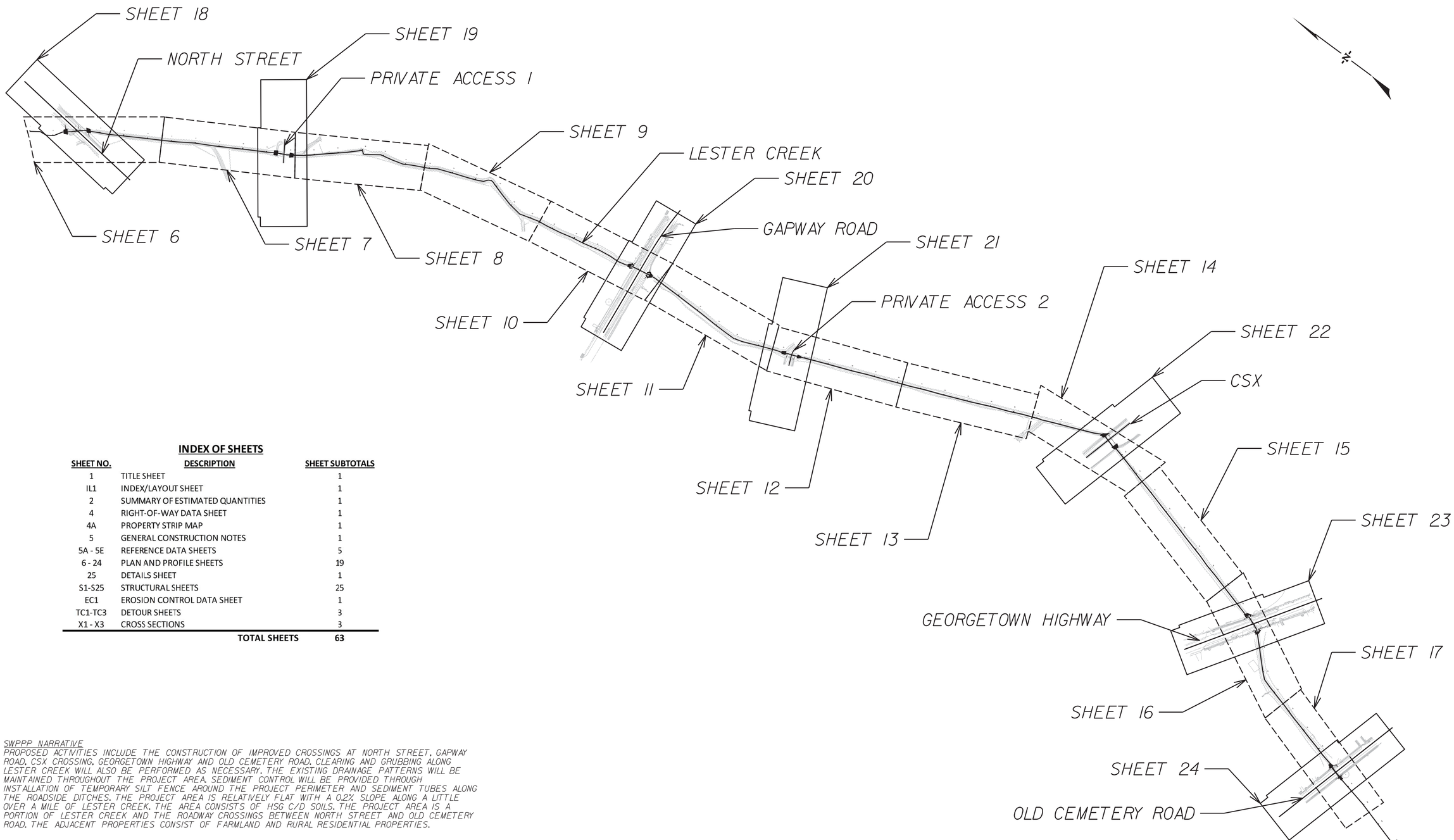

INDEX OF SHEETS

SHEET NO.	DESCRIPTION	SHEET SUBTOTALS
1	TITLE SHEET	1
IL1	INDEX/LAYOUT SHEET	1
2	SUMMARY OF ESTIMATED QUANTITIES	1
4	RIGHT-OF-WAY DATA SHEET	1
4A	PROPERTY STRIP MAP	1
5	GENERAL CONSTRUCTION NOTES	1
5A - 5E	REFERENCE DATA SHEETS	5
6 - 24	PLAN AND PROFILE SHEETS	19
25	DETAILS SHEET	1
S1-S25	STRUCTURAL SHEETS	25
EC1	EROSION CONTROL DATA SHEET	1
TC1-TC3	DETOUR SHEETS	3
X1 - X3	CROSS SECTIONS	3
	TOTAL SHEETS	**63**

SWPPP NARRATIVE

PROPOSED ACTIVITIES INCLUDE THE CONSTRUCTION OF IMPROVED CROSSINGS AT NORTH STREET, GAPWAY ROAD, CSX CROSSING, GEORGETOWN HIGHWAY AND OLD CEMETERY ROAD. CLEARING AND GRUBBING ALONG LESTER CREEK WILL ALSO BE PERFORMED AS NECESSARY. THE EXISTING DRAINAGE PATTERNS WILL BE MAINTAINED THROUGHOUT THE PROJECT AREA. SEDIMENT CONTROL WILL BE PROVIDED THROUGH INSTALLATION OF TEMPORARY SILT FENCE AROUND THE PROJECT PERIMETER AND SEDIMENT TUBES ALONG THE ROADSIDE DITCHES. THE PROJECT AREA IS RELATIVELY FLAT WITH A 0.2% SLOPE ALONG A LITTLE OVER A MILE OF LESTER CREEK. THE AREA CONSISTS OF HSG C/D SOILS. THE PROJECT AREA IS A PORTION OF LESTER CREEK AND THE ROADWAY CROSSINGS BETWEEN NORTH STREET AND OLD CEMETERY ROAD. THE ADJACENT PROPERTIES CONSIST OF FARMLAND AND RURAL RESIDENTIAL PROPERTIES.

0 200 400 600 800

SOUTH CAROLINA DAVIS & FLOYD, INC. No. C00538 CERTIFICATE OF AUTHORIZATION

SOUTH CAROLINA REGISTERED PROFESSIONAL ENGINEER No. 19075 MICHAEL VANDIVER NORTON 05/15/2023

1940 ALGONQUIN ROAD, SUITE 301
CHARLESTON, SC 29405
(843) 554-8602

DAVIS & FLOYD
SINCE 1954

REV. NO.	BY	DATE	DESCRIPTION OF REVISION
5			
4			
3			
2			
1			

DESIGNED BY ____ DRAWN BY ____ CHECKED BY ____

SOUTH CAROLINA
DEPARTMENT OF TRANSPORTATION

INDEX AND LAYOUT SHEET
EAST ANDREWS DRAINAGE IMPROVEMENTS

SCALE 1"= 200' PLOT SIZE = 22" x 34"

SCALE: 200.000 ft / in.
PEN TABLE: East Andrews-SCDOT Levels 2015 B&W Plan-PDF.tbl
PLOT DRIVER: PDF.pltcfg
FILE: G:\JobsOdd\31969-00\Production\Transportation\f_dgn\Const plpr\East Andrews SHEET IL.dgn
5/4/2023

FED. ROAD DIV.NO.	STATE	COUNTY	PROJECT ID	ROUTE NO.	SHEET NO.	TOTAL SHEETS
3	S.C.	GEORGETOWN			2	

ITEM NO.	PAY ITEM	QUANTITY	PAY UNIT
1031000	MOBILIZATION	NEC	LS
1050800	CONSTRUCTION STAKES, LINES & GRADES	1.000	EA
1071000	TRAFFIC CONTROL	1.000	LS
1071401	CSX RAILROAD INSURANCE AND FLAGGING	1.000	LS
1090200	AS-BUILT CONSTRUCTION PLANS	1.000	LS
2023000	REMOVAL & DISPOSAL OF EXISTING PAVEMENT	115.000	SY
2031000	UNCLASSIFIED EXCAVATION	210.000	CY
2033000	BORROW EXCAVATION	376.000	CY
2036000	GEOTEXTILE FOR SEPARATION OF SUBGRADE&SJBBASE/BASE CR	910.000	SY
2041000	STRUCTURE EXCAVATION FOR CULVERTS	868.000	CY
3050104	GRADED AGGREGATE BASE COURSE (4" UNIFORM)	100.000	SY
3050106	GRADED AGGREGATE BASE COURSE (6" UNIFORM)	469.000	SY
4010005	PRIME COAT	31.050	GAL
4013200	MILLING EXISTING ASPHALT PAVEMENT 2.0"	779.000	SY
4030320	HOT MIX ASPHALT SURFACE COURSE TYPE B	83.000	TON
5021011	FULL DEPTH CONCRETE PAVEMENT PATCH - 8"	115.000	SY
6020005	PERMANENT CONSTRUCTION SIGNS (GROUND MOUNTED)	584.000	SF
6062000	CONSTRUCTION ZONE ELECTRIC CHANGEABLE MESSAGE SIGN (TRAILER-MOUNTED)	2.000	EA
6250010	4" WHITE SOLID LINES (PVT. EDGE LINES)-FAST DRY PAINT	730.000	LF
6250110	4"YELLOW SOLID LINE(PVT.EDGE&NO PASSING ZONE)-FAST DRY PAINT	730.000	LF
6271010	4" WHITE SOLID LINES (PVT. EDGE LINES) THERMO.- 90 MIL.	730.000	LF
6271074	4" YELLOW SOLID LINES(PVT.EDGE LINES) THERMO-90 MIL.	730.000	LF
6301100	PERMANENT YELLOW PAVEMENT MARKERS BI-D/R.- 4"X4"	18.000	EA
7011402	CONC. FOR STRUCTURES - CLASS 4000(CULVERT)	74.200	CY
7031100	REINF. STEEL FOR STRUCTURES (ROADWAY)	12595.000	LB
7120195	CONSTRUCTION CASING - 66" DIAMETER	50.000	LF
7141114	24" RC PIPE CUL.-CLASS III	246.000	LF
7141146	29"X 45" HORIZONTAL ELLIPTICAL(HE) RC PIPE CUL.-CLASS HE-III	100.000	LF
7141891	48" REINFORCED CONCRETE PIPE (CLASS V SPECIAL)TRENCHLESS	50.000	LF
8011450	AGGREGATE UNDERDRAIN (AGGR.NO. 57)	555.000	TON
8041020	RIP-RAP (CLASS B)	410.000	TON
8042800	GEOTEXTILE FABRIC FOR EROSION CONTROL UNDER RIPRAP (CLASS 2)	524.000	SY
8100100	PERMANENT COVER	0.363	ACRE
8151102	TURF REINFORCEMENT MATTING (TRM) TYPE 2	0.239	MSY
8151112	TEMPORARY EROSION CONTROL BLANKET (CLASS B)	4.153	MSY
S000001	CLEARING DITCHES	5750.000	LF
S000002	6" STEEL NATURAL GAS VERTICAL OFFSET (N. ROW OF GAPWAY RD)	1.000	LS
S000003	2" STEEL (ASSUMED) NATURAL GAS VERTICAL OFFSET (N. ROW OF US521)	1.000	LS
S000004	16" DIP SEWER FORCE MAIN VERTICAL OFFSET (N. ROW OF GAPWAY RD)	1.000	LS
S000005	12" PVC GRAVITY SEWER MAIN REPLACEMENT WITH C900 PVC (N. ROW OF GAPWAY RD)	1.000	LS
S000006	12" PVC GRAVITY SEWER HORIZONTAL OFFSET (S. ROW OF GAPWAY RD)	1.000	LS
S000007	8" PVC (ASSUMED) GRAVITY SEWER HORIZONTAL OFFSET (N. ROW OF OLD CEMETARY RD)	1.000	LS
S000008	8" PVC (ASSUMED) GRAVITY SEWER HORIZONTAL OFFSET (S. ROW OF OLD CEMETARY RD)	1.000	LS
S000009	8" PVC (ASSUMED) GRAVITY SEWER HORIZONTAL OFFSET (S. ROW OF US521)	1.000	LS
S000010	UGT RELOCATION COORDINATION (S. ROW OF OLD CEMETARY RD)	1.000	LS
S000011	10" DIP (ASSUMED) DOMESTIC WATERVERTICAL OFFSET (N. ROW OF GAPWAY RD)	1.000	LS
S000012	10" DIP (ASSUMED) DOMESTIC WATER VERTICAL OFFSET (N. ROW OF US521)	1.000	LS
S000013	UTILITY COORDINATION	1.000	LS
S000014	5'X4' PRECAST DOUBLE BOX CULVERT	48.000	LF
S000015	7'X6' PRECAST BOX CULVERT	56.000	LF
S000016	6'X3' PRECAST DOUBLE CULVERT	100.000	LF
S000017	6'X3' PRECAST DOUBLE HEADWALLS/WINGWALLS	4.000	EA
S000018	7'x3' PRECAST CULVERT	36.000	LF
S000019	7'x3' PRECAST CULVERT HEADWALLS/WINGWALLS	2.000	EA
S000020	5' CLEARING ADJACENT TO DITCH BANK	7410.000	LF
S000021	REMOVAL & DISPOSAL OF DELETERIOUS ITEMS	5.000	TON

SCALE: 20.000 ft / in.
PEN TABLE: East Andrews-SCDOT Levels 2015 B&W Plan-PDF.tbl
PLOT DRIVER: PDF.pltcfg
FILE: G:\JobsOdd\31969-00\Production\Transportation\f_dgn\Const plpr\East Andrews SHEET 2.dgn
5/4/2023

SOUTH CAROLINA DAVIS & FLOYD, INC. No. C00538 CERTIFICATE OF AUTHORIZATION

SOUTH CAROLINA REGISTERED PROFESSIONAL ENGINEER No. 19075 MICHAEL IVAN IVER NORTON 05/15/2023

1940 ALGONQUIN ROAD, SUITE 301
CHARLESTON, SC 29405
(843) 554-8602

DAVIS & FLOYD
SINCE 1954

REV. NO.	BY	DATE	DESCRIPTION OF REVISION
5			
4			
3			
2			
1			

DES. BY_____ DRAWN BY _____ REVIEWED BY_____ CHECKED BY _____

SOUTH CAROLINA
DEPARTMENT OF TRANSPORTATION

SUMMARY OF ESTIMATED QUANTITIES SHEET
EAST ANDREWS DRAINAGE IMPROVEMENTS

N.T.S. PLOT SIZE = 22" x 34"

FED. ROAD DIV.NO.	STATE	COUNTY	PROJECT ID	ROUTE NO.	SHEET NO.	TOTAL SHEETS
3	S.C.	GEORGETOWN			4	

TRACT NO.	PROPERTY OWNER	TAX MAP REFERENCE	TOTAL TRACT ACRES	OBTAIN				REMAINDER LEFT ACRES [A]	REMAINDER RIGHT ACRES [A]	DATE ACQUIRED	TYPE OF INSTRUMENT	PERMISSION (YES)					REMARKS
				OUTFALL DITCH	LEFT	RIGHT	TOTAL					CONSTRUCTION	SLOPE	DRAINAGE STRUCTURE	EROSION CONTROL	ENTRANCE CONSTRUCTION	
1	MORRIS JOHN M	02-0414-013-06-00	11.75		1157 SF (0.03 AC)		1157 SF (0.03 AC)	11.72				YES					CONSTRUCTION PERMISSION = 1,166 SF
2	MCKENZIE CLARK RABON	02-0414-013-04-00	1.83														
3	FREEMAN TIMOTHY CLINTON	02-0414-013-02-00	1.25														
4	POSTON WALTER ALLEN JR	02-0414-015-16-00	2.65			952 SF (0.02 AC)	952 SF (0.02 AC)		2.63			YES					CONSTRUCTION PERMISSION = 8,460 SF
5	POSTON W A JR	02-0414-015-02-00	1.00									YES					CONSTRUCTION PERMISSION = 1,625 SF
6	POSTON JAMES RICHARD	02-0414-015-15-00	3.32									YES					CONSTRUCTION PERMISSION = 6,102 SF
7	POSTON JAMES R II	02-0414-015-14-00	2.68									YES					CONSTRUCTION PERMISSION = 4,814 SF
8	POSTON JAMES RICHARD	02-0414-015-13-00	2.59									YES					CONSTRUCTION PERMISSION = 4,005 SF
9	POSTON JAMES R	02-0414-015-08-00	4.78									YES					CONSTRUCTION PERMISSION = 26 SF
10	WOODARD KIM COOK	02-0414-016-01-01	13.78									YES					CONSTRUCTION PERMISSION = 23,213 SF
11	WEYERHAEUSER COMPANY	02-0414-018-00-00	112.12									YES					CONSTRUCTION PERMISSION = 12,532 SF
12	COOK FRANCIS KEVIN	02-0414-016-01-00	6.51		472 SF (0.01 AC)		472 SF (0.01 AC)	6.50				YES					CONSTRUCTION PERMISSION = 8,151 SF
13	GREEN ROYCE ALTON III	02-0126-003-00-00	51.73			1212 SF (0.03 AC)	1212 SF (0.03 AC)		51.70			YES					CONSTRUCTION PERMISSION = 205,246 SF
14	MARTIN FREDDIE	02-0128-020-00-00	9.13		211 SF (0.00 AC)		211 SF (0.00 AC)	9.13				YES					CONSTRUCTION PERMISSION = 53,014 SF
15	BODIFORD CHARLIE H JR	02-0128-021-00-00	4.73		608 SF (0.01 AC)		608 SF (0.01 AC)	4.72				YES					CONSTRUCTION PERMISSION = 12,147 SF
16	BONE DAPHNEY T	01-0103-003-00-00	2.86			328 SF (0.01 AC)	328 SF (0.01 AC)		2.85			YES					CONSTRUCTION PERMISSION = 9,062 SF
17	WINSTON MCKENZIE RENTALS LLC	01-0103-005-06-00	0.38			365 SF (0.01 AC)	365 SF (0.01 AC)		0.37			YES					CONSTRUCTION PERMISSION = 2,026 SF
17A	WINSTON MCKENZIE RENTALS LLC	01-0103-005-06-01	0.27									YES					CONSTRUCTION PERMISSION = 827 SF
18	LAMBERT ERVIN WAYNE SR TRUSTEE	01-0103-005-07-00	0.44									YES					CONSTRUCTION PERMISSION = 983 SF
19	LONG GLENDA J	01-0103-005-08-00	0.30									YES					CONSTRUCTION PERMISSION = 802 SF
20	CROSBY ANGEL NACOLE	01-0103-005-01-01	0.53		739 SF (0.02 AC)		739 SF (0.02 AC)	0.51				YES					CONSTRUCTION PERMISSION = 4,339 SF
21	SMITH ASHLEY L	01-0103-005-00-00	0.36		348 SF (0.01 AC)		348 SF (0.01 AC)	0.35				YES					CONSTRUCTION PERMISSION = 876 SF
22	MARSH ARTHUR J B ET AL	01-0402-009-01-01	1.89														
23	113 CALHOUN LLC	01-0402-010-00-00	44.42			923 SF (0.02 AC)	923 SF (0.02 AC)		44.40			YES					CONSTRUCTION PERMISSION = 3,883 SF
24	POSTON JAMES RICHARD	02-0414-014-06-00	1.60									YES					CONSTRUCTION PERMISSION = 393 SF
25	HURELL MINNIE ANNA	02-0414-017-00-00	1.25		532 SF (0.01 AC)		532 SF (0.01 AC)	1.24				YES					CONSTRUCTION PERMISSION = 2,180 SF
26	BODIFORD CHARLIE H JR	02-0128-021-01-01	0.55														
27	BRUORTON PAMELA TISDALE ET AL	01-0103-005-05-00	0.69														

DATE	TRACT NO.	REMARKS

R/W NOTE:
THE DEPARTMENT WILL UTILIZE THE PRESENT RIGHT OF WAY AS SHOWN BELOW EXCEPT AS OTHERWISE SHOWN ON PLANS.

ROAD / ROUTE #	FILE #	R/W WIDTH	YEAR ACQ'D.

NOTES:
A. SHOW REMAINDER IN SQUARE FEET WHEN LESS THAN 0.25 ACRE.

SOUTH CAROLINA DAVIS & FLOYD, INC. No. C00538 CERTIFICATE OF AUTHORIZATION

SOUTH CAROLINA REGISTERED PROFESSIONAL ENGINEER No. 19075 MICHAEL VANDIVER NORTON 05/15/2023

1940 ALGONQUIN ROAD, SUITE 301
CHARLESTON, SC 29405
(843) 554-8602

DAVIS & FLOYD
SINCE 1954

REV. NO.	BY	DATE	DESCRIPTION OF REVISION
5			
4			
3			
2			
1			

DESIGNED BY _____ DRAWN BY _____ CHECKED BY _____

SOUTH CAROLINA
DEPARTMENT OF TRANSPORTATION

RIGHT OF WAY DATA SHEET
EAST ANDREWS DRAINAGE IMPROVEMENTS

SCALE: NTS PLOT SIZE = 22" x 34"

SCALE: 200.000 ft / in
PEN TABLE: East Andrews-SCDOT Levels 2015 B&W Plan-PDF.tbl
PLOT DRIVER: PDF.pltcfg
FILE: G:\JobsOdd\31969-00\Production\Transportation\f_dgn\Const plpr\East Andrews SHEET 4 RWDS.dgn
5/4/2023

FED. ROAD DIV.NO.	STATE	COUNTY	PROJECT ID	ROUTE NO.	SHEET NO.	TOTAL SHEETS
3	S.C.	GEORGETOWN	-		4A	

0 250 500 750 1,000

SCALE: 250.000 ft / in.
PEN TABLE: East Andrews-SCDOT Levels 2015 B&W Plan-PDF.tbl
PLOT DRIVER: PDF.pltcfg
FILE: G:\JobSOdd\31969-00\Production\Transportation\f_dgn\Const plpr\East Andrews SHEET 4A PROP STRIP MAP.dgn
5/4/2023

DAVIS & FLOYD, INC. No. C00538 — SOUTH CAROLINA CERTIFICATE OF AUTHORIZATION

REGISTERED PROFESSIONAL ENGINEER — SOUTH CAROLINA No. 19075 — MICHAEL VANDIVER HORTON — 05/15/2023

DAVIS & FLOYD
SINCE 1954
1940 ALGONQUIN ROAD, SUITE 301
CHARLESTON, SC 29405
(843) 554-8602

REV. NO.	BY	DATE	DESCRIPTION OF REVISION
5			
4			
3			
2			
1			

DES. BY _____ DRAWN BY _____ REVIEWED BY _____ CHECKED BY _____

SOUTH CAROLINA
DEPARTMENT OF TRANSPORTATION

PROPERTY STRIP MAP SHEET
EAST ANDREWS DRAINAGE IMPROVEMENTS

SCALE 1" = 250' PLOT SIZE = 22" x 34"

ITEM NO.	PAY ITEM	QUANTITY	PAY UNIT	USE DESCRIPTION
1031000	MOBILIZATION	NEC	LS	PER CONTRACT DCCUMENTS
1050800	CONSTRUCTION STAKES, LINES & GRADES	1.000	EA	PER CONTRACT DCCUMENTS
1071000	TRAFFIC CONTROL	1.000	LS	PER CONTRACT DCCUMENTS
1071401	CSX RAILROAD INSURANCE AND FLAGGING	1.000	LS	PER CSX REQUIREMENTS
1090200	AS-BUILT CONSTRUCTION PLANS	1.000	LS	PER CONTRACT DCCUMENTS
2031000	UNCLASSIFIED EXCAVATION	134.000	CY	WHERE DIRECTED BY ENGINEER
2033000	BORROW EXCAVATION	188.000	CY	WHERE DIRECTED BY ENGINEER
8100100	PERMANENT COVER	0.400	ACRE	WHERE DIRECTED BY ENGINEER
8151112	TEMPORARY EROSION CONTROL BLANKET (CLASS B)	4.200	MSY	WHERE DIRECTED BY ENGINEER
S000002	6" STEEL NATURAL GAS VERTICAL OFFSET (N. ROW OF GAPWAY RD)	1.000	LS	AS NECESSARY
S000003	2" STEEL (ASSUMED) NATURAL GAS VERTICAL OFFSET (N. ROW OF US521)	1.000	LS	AS NECESSARY
S000004	16" DIP SEWER FORCE MAIN VERTICAL OFFSET (N. ROW OF GAPWAY RD)	1.000	LS	AS NECESSARY
S000005	12" PVC GRAVITY SEWER MAIN REPLACEMENT WITH C900 PVC (N. ROW OF GAPWAY RD)	1.000	LS	AS NECESSARY
S000006	12" PVC GRAVITY SEWER HORIZONTAL OFFSET (S. ROW OF GAPWAY RD)	1.000	LS	AS NECESSARY
S000007	8" PVC (ASSUMED) GRAVITY SEWER HORIZONTAL OFFSET (N. ROW OF OLD CEMETARY RD)	1.000	LS	AS NECESSARY
S000008	8" PVC (ASSUMED) GRAVITY SEWER HORIZONTAL OFFSET (S. ROW OF OLD CEMETARY RD)	1.000	LS	AS NECESSARY
S000009	8" PVC (ASSUMED) GRAVITY SEWER HORIZONTAL OFFSET (S. ROW OF US521)	1.000	LS	AS NECESSARY
S000010	UGT RELOCATION COORDINATION (S. ROW OF OLD CEMETARY RD)	1.000	LS	AS NECESSARY
S000011	10" DIP (ASSUMED) DOMESTIC WATERVERTICAL OFFSET (N. ROW OF GAPWAY RD)	1.000	LS	AS NECESSARY
S000012	10" DIP (ASSUMED) DOMESTIC WATER VERTICAL OFFSET (N. ROW OF US521)	1.000	LS	AS NECESSARY
S000013	UTILITY COORDINATION	1.000	LS	AS NECESSARY
S000021	REMOVAL & DISPOSAL OF DELETERIOUS ITEMS	5.000	TON	AS NECESSARY

SCDHEC STANDARD NOTES:

1. IF NECESSARY, SLOPES, WHICH EXCEED EIGHT (8) VERTICAL FEET SHOULD BE STABILIZED WITH SYNTHETIC OR VEGETATIVE MATS, IN ADDITION TO HYDROSEEDING. IT MAY BE NECESSARY TO INSTALL TEMPORARY SLOPE DRAINS DURING CONSTRUCTION. TEMPORARY BERMS MAY BE NEEDED UNTIL THE SLOPE IS BROUGHT TO GRADE.

2. STABILIZATION MEASURES SHALL BE INITIATED AS SOON AS PRACTICABLE IN PORTIONS OF THE SITE WHERE CONSTRUCTION ACTIVITIES HAVE TEMPORARILY OR PERMANENTLY CEASED, BUT IN NO CASE MORE THAN FOURTEEN (14) DAYS AFTER WORK HAS CEASED, EXCEPT AS STATED BELOW.
- WHERE STABILIZATION BY THE 14TH DAY IS PRECLUDED BY SNOW COVER OR FROZEN GROUND CONDITIONS, STABILIZATION MEASURES MUST BE INITIATED AS SOON AS PRACTICABLE.
- WHERE CONSTRUCTION ACTIVITY ON A PORTION OF THE SITE IS TEMPORARILY CEASED, AND EARTH DISTURBING ACTIVITIES WILL BE RESUMED WITHIN 14 DAYS, TEMPORARY STABILIZATION MEASURES DO NOT HAVE TO BE INITIATED ON THAT PORTION OF THE SITE.

3. ALL SEDIMENT AND EROSION CONTROL DEVICES SHALL BE INSPECTED ONCE EVERY CALENDAR WEEK. IF PERIODIC INSPECTION OR OTHER INFORMATION INDICATES THAT A BMP HAS BEEN INAPPROPRIATELY OR INCORRECTLY INSTALLED, THE PERMITTEE MUST ADDRESS THE NECESSARY REPLACEMENT OR MODIFICATION REQUIRED TO CORRECT THE BMP WITHIN 48 HOURS OF IDENTIFICATION.

4. PROVIDE SILT FENCE AND/OR OTHER CONTROL DEVICES, AS MAY BE REQUIRED, TO CONTROL SOIL EROSION DURING DRAINAGE CONSTRUCTION. ALL DISTURBED AREAS SHALL BE CLEANED, GRADED, AND STABILIZED WITH GRASSING IMMEDIATELY AFTER THE STORM DRAINAGE INSTALLATION. IF WATER IS ENCOUNTERED WHILE TRENCHING, THE WATER SHOULD BE FILTERED TO REMOVE SEDIMENT BEFORE BEING PUMPED BACK INTO ANY WATERS OF THE STATE.

5. ALL EROSION CONTROL DEVICES SHALL BE PROPERLY MAINTAINED DURING ALL PHASES OF CONSTRUCTION UNTIL THE COMPLETION OF ALL CONSTRUCTION ACTIVITIES AND ALL DISTURBED AREAS HAVE BEEN STABILIZED. ADDITIONAL CONTROL DEVICES MAY BE REQUIRED DURING CONSTRUCTION IN ORDER TO CONTROL EROSION AND/OR OFFSITE SEDIMENTATION. ALL TEMPORARY CONTROL DEVICES SHALL BE REMOVED ONCE CONSTRUCTION IS COMPLETE AND THE SITE IS STABILIZED.

6. THE CONTRACTOR MUST TAKE NECESSARY ACTION TO MINIMIZE THE TRACKING OF MUD ONTO PAVED ROADWAY(S) FROM CONSTRUCTION AREAS AND THE GENERATION OF DUST. THE CONTRACTOR SHALL DAILY REMOVE MUD/SOIL FROM PAVEMENT, AS MAY BE REQUIRED.

7. RESIDENTIAL SUBDIVISIONS REQUIRE EROSION CONTROL FEATURES FOR INFRASTRUCTURE AS WELL AS FOR INDIVIDUAL LOT CONSTRUCTION. INDIVIDUAL PROPERTY OWNERS SHALL FOLLOW THESE PLANS DURING CONSTRUCTION OR OBTAIN APPROVAL OF AN INDIVIDUAL PLAN IN ACCORDANCE WITH S.C. REG. 72-300 ET SEQ. AND SCR100000.

8. TEMPORARY DIVERSION BERMS AND/OR DITCHES WILL BE PROVIDED AS NEEDED DURING CONSTRUCTION TO PROTECT WORK AREAS FROM UPSLOPE RUNOFF AND/OR TO DIVERT SEDIMENT-LADEN WATER TO APPROPRIATE TRAPS OR STABLE OUTLETS.

9. ALL WATERS OF THE STATE (WOS), INCLUDING WETLANDS, ARE TO BE FLAGGED OR OTHERWISE CLEARLY MARKED IN THE FIELD. A DOUBLE ROW OF SILT FENCE IS TO BE INSTALLED IN ALL AREAS WHERE A 50-FOOT BUFFER CAN'T BE MAINTAINED BETWEEN THE DISTURBED AREA AND ALL WOS. A 10-FOOT BUFFER SHOULD BE MAINTAINED BETWEEN THE LAST ROW OF SILT FENCE AND ALL WOS.

10. LITTER, CONSTRUCTION DEBRIS, OILS, FUELS, AND BUILDING PRODUCTS WITH SIGNIFICANT POTENTIAL FOR IMPACT (SUCH AS STOCKPILES OF FRESHLY TREATED LUMBER) AND CONSTRUCTION CHEMICALS THAT COULD BE EXPOSED TO STORMWATER MUST BE PREVENTED FROM BECOMING A POLLUTANT SOURCE IN STORMWATER DISCHARGES.

11. A COPY OF THE SWPPP, INSPECTIONS RECORDS, AND RAINFALL DATA MUST BE RETAINED AT THE CONSTRUCTION SITE OR A NEARBY LOCATION EASILY ACCESSIBLE DURING NORMAL BUSINESS HOURS, FROM THE DATE OF COMMENCEMENT OF CONSTRUCTION ACTIVITIES TO THE DATE THAT FINAL STABILIZATION IS REACHED.

12. INITIATE STABILIZATION MEASURES ON ANY EXPOSED STEEP SLOPE (3H:1V OR GREATER) WHERE LAND-DISTURBING ACTIVITIES HAVE PERMANENTLY OR TEMPORARILY CEASED, AND WILL NOT RESUME FOR A PERIOD OF 7 CALENDAR DAYS.

13. MINIMIZE SOIL COMPACTION AND, UNLESS INFEASIBLE, PRESERVE TOPSOIL.

14. MINIMIZE THE DISCHARGE OF POLLUTANTS FROM EQUIPMENT AND VEHICLE WASHING, WHEEL WASH WATER, AND OTHER WASH WATERS. WASH WATERS MUST BE TREATED IN A SEDIMENT BASIN OR ALTERNATIVE CONTROL THAT PROVIDES EQUIVALENT OR BETTER TREATMENT PRIOR TO DISCHARGE.

15. MINIMIZE THE DISCHARGE OF POLLUTANTS FROM DEWATERING OF TRENCHES AND EXCAVATED AREAS. THESE DISCHARGES ARE TO BE ROUTED THROUGH APPROPRIATE BMPS (SEDIMENT BASIN, FILTER BAG, ETC.).

16. THE FOLLOWING DISCHARGES FROM SITES ARE PROHIBITED:
- WASTEWATER FROM WASHOUT OF CONCRETE, UNLESS MANAGED BY AN APPROPRIATE CONTROL;
- WASTEWATER FROM WASHOUT AND CLEANOUT OF STUCCO, PAINT, FORM RELEASE OILS, CURING COMPOUNDS AND OTHER CONSTRUCTION MATERIALS;
- FUELS, OILS, OR OTHER POLLUTANTS USED IN VEHICLE AND EQUIPMENT OPERATION AND MAINTENANCE; AND
- SOAPS OR SOLVENTS USED IN VEHICLE AND EQUIPMENT WASHING.

17. AFTER CONSTRUCTION ACTIVITIES BEGIN, INSPECTIONS MUST BE CONDUCTED AT A MINIMUM OF AT LEAST ONCE EVERY CALENDAR WEEK AND MUST BE CONDUCTED UNTIL FINAL STABILIZATION IS REACHED ON ALL AREAS OF THE CONSTRUCTION SITE.

18. IF EXISTING BMPS NEED TO BE MODIFIED OR IF ADDITIONAL BMPS ARE NECESSARY TO COMPLY WITH THE REQUIREMENTS OF THIS PERMIT AND/OR SC'S WATER QUALITY STANDARDS, IMPLEMENTATION MUST BE COMPLETED BEFORE THE NEXT STORM EVENT WHENEVER PRACTICABLE. IF IMPLEMENTATION BEFORE THE NEXT STORM EVENT IS IMPRACTICABLE, THE SITUATION MUST BE DOCUMENTED IN THE SWPPP AND ALTERNATIVE BMPS MUST BE IMPLEMENTED AS SOON AS REASONABLY POSSIBLE.

19. A PRE-CONSTRUCTION CONFERENCE MUST BE HELD FOR EACH CONSTRUCTION SITE WITH AN APPROVED ON-SITE SWPPP PRIOR TO THE IMPLEMENTATION OF CONSTRUCTION ACTIVITIES.

SCDOT STANDARD NOTES:

1. THERE CAN BE NO WORK PERFORMED IN THE SCDOT R/W BEFORE AN ENCROACHMENT PERMIT HAS BEEN ISSUED AND A PRECONSTRUCTION MEETING HAS BEEN HELD. THE PROPERTY OWNER AND CONTRACTOR MUST SCHEDULE AND ATTEND THE PRECONSTRUCTION MEETING.

2. ANY WORK PERFORMED BEFORE THE PRECONSTRUCTION MEETING WILL HAVE TAKEN PLACE WITHOUT SCDOT KNOWLEDGE, OVERSIGHT, AND CONSENT AND SHALL BE SUBJECT TO REMOVAL BY THE APPLICANT AND/OR AT THE APPLICANT'S EXPENSE.

3. ANY REVISIONS TO THIS APPROVED PLAN SET MUST HAVE PRIOR, WRITTEN APPROVAL FROM SCDOT OR ARE SUBJECT TO REMOVAL AT THE APPLICANT'S EXPENSE.

4. THE CONSTRUCTION ENTRANCE MUST BE ESTABLISHED AT THE LOCATION DESIGNATED IN THIS PLAN SET AND ACCORDING TO SCDOT TYPICAL 815-505-00. NO ADDITIONAL ENTRANCES OR LOCATIONS OTHER THAN SHOWN IN THIS PLAN SET ARE ALLOWED WITHOUT WRITTEN NOTICE FROM SCDOT. APPROVED CONSTRUCTION ENTRANCE SHALL BE INSTALLED PROPERLY AND SHALL BE MAINTAINED AT ALL TIMES. KEEP ROADWAY PROTECTED AND SWEPT OFF AT ALL TIMES. ANY ADDITIONAL, EXISTING DRIVEWAYS OR CONSTRUCTION ENTRANCES, IF ANY, SHALL BE REMOVED FROM SCDOT RIGHT OF WAY AT NO EXPENSE TO SCDOT.

5. NO DEWATERING ACTIVITIES SHALL BE PERFORMED WITHIN SCDOT R/W OR BRING FORTH WATER TO THE SCDOT RIGHT OF WAY BY DIRECT OR INDIRECT METHODS.

6. POST DEVELOPMENT STORMWATER FLOWS TO THE SCDOT R/W CANNOT EXCEED PREDEVELOPMENT FLOW RATES AT ANY TIME FOR ANY REASON.

7. THE APPLICANT IS SOLELY RESPONSIBLE FOR REPAIRS OF ANY AND ALL DAMAGE TO THE TRAVEL WAY DUE TO ANY WORK ALONG THE FRONTAGE OF THIS SITE, AT NO EXPENSE TO SCDOT AND ALL REPAIRS MUST MEET CURRENT SCDOT STANDARDS.

8. ANY DAMAGE TO THE TRAVEL LANE WILL REQUIRE A FULL DEPTH ASPHALT PATCH AND TOTAL ROADWAY (ALL ADJACENT TRAVEL LANES) ASPHALT OVERLAY. PATCHES LARGER THAN A FEW SQUARE FEET OR EXTENDING PAST 1 FOOT INTO THE TRAVEL LANE SHALL REQUIRE AN OVERLAY OF THE ENTIRE WIDTH OF THE EXISTING TRAVEL WAY FOR 50 FEET BEYOND EACH SIDE OF THE FULL DEPTH PATCH. ALL OF THIS WORK WILL BE SOLELY AT THE EXPENSE OF THE APPLICANT AND MUST MEET CURRENT SCDOT STANDARDS.

9. BEFORE INSTALLATION OF ANY NEW DRIVEWAY, THE EXISTING TRAVEL EDGE MUST BE SAW CUT TO PROVIDE A STRAIGHT AND UNIFORM EDGE ALONG THE MOUTH OF THE PROPOSED DRIVEWAY. CARE MUST BE TAKEN TO NOT TO DAMAGE THE EDGE ONCE CUT. ANY DAMAGE TO THE TRAVEL LANE MUST BE REPAIRED AT THE APPLICANT'S EXPENSE.

10. PAVEMENT SECTION IN THE SCDOT R/W SHALL BE, AT A MINIMUM:
   a. 6 INCHES OF COMPACTED GABC
   b. 4 INCHES OF COMPACTED TYPE B BINDER COURSE HOT MIX ASPHALT
   c. 2 INCHES OF COMPACTED TYPE B SURFACE COURSE HOT MIX ASPHALT

   SEE SCDOT STANDARD SPECIFICATIONS FOR HIGHWAY CONSTRUCTION FOR SURFACE COURSE HOT MIX ASPHALT INSTALLATION TIME AND TEMPERATURE RESTRICTIONS AND THERMO PLASTIC TIME AND TEMPERATURE RESTRICTIONS.

   OR

   d. 8 INCHES OF COMPACTED GABC
   e. 4 INCHES OF 4,000 PSI CONCRETE

   NO REINFORCEMENT WIRE, REBAR, OR METAL OF ANY KIND IS PERMITTED

11. DRIVEWAY LANES SHALL BE A MINIMUM OF 12 FEET IN WIDTH MEASURED FROM EDGE TO EDGE OF ASPHALT.

12. DRIVEWAY RADII SHALL BE 30 FEET. (UNLESS NOTED OTHERWISE ON THE SCDOT APPROVED PLANS.)

13. PAVEMENT MARKINGS SHALL BE THERMOPLASTIC WITH REFLECTIVE BEADS PER SECTION 627 OF THE SCDOT STANDARD SPECIFICATIONS:

a. ALL WHITE MARKINGS SHALL BE 125 MIL MINIMUM THICKNESS
b. ALL YELLOW MARKINGS SHALL BE 90 MIL MINIMUM THICKNESS

PROJECT CONTACTS		
	NAME	TELEPHONE
Project Manager	Darren Rolston	843-833-1181
Design Engineer	Mike Horton	843-554-8602

14. ALL PERMANENT SIGNAGE SHALL BE INSTALLED ON BREAKAWAY POSTS PER SCDOT STANDARD DRAWING 651-110-00 AND SHALL HAVE A 7 VERTICAL FOOT CLEARANCE FROM THE GROUND TO THE BOTTOM OF THE SIGN.

15. DRIVEWAYS SHALL BE CONSTRUCTED TO HAVE A MINIMUM OF A 2 FOOT GRASSED SHOULDER ON EACH SIDE OF THE DRIVEWAY THROAT.

16. DITCH SLOPES SHALL BE NO STEEPER THAN 3H:1V.

17. ALL DRIVEWAY CULVERTS SHALL BE INSTALLED AND SEALED ACCORDING TO SCDOT TYPICAL 714-205-01 DETAIL 4 AND 5 WITH AN AASHTO M 315 RUBBER GASKET SEAL, ON PROPER GRADE TO ALLOW FOR POSITIVE STORM WATER FLOW WITHIN THE PIPE AND TO/FROM ADJACENT PIPES/CROSS LINES.

18. ALL CULVERTS INSIDE OF THE SCDOT R/W ARE TO BE INSTALLED WITH BEVELED ENDS PER SCDOT STANDARD DRAWING 719-610-00 AND SEALED PER SCDOT STANDARD DRAWING 714-205-01 AND CANNOT BE COVERED UNTIL AFTER AN INSPECTION BY THE SCDOT INSPECTOR ASSIGNED TO THE PROJECT AT THE REQUIRED SCDOT PRECONSTRUCTION MEETING.

19. LANE CLOSURES ARE REQUIRED FOR ALL WORK WITHIN ONE FOOT OF THE TRAVEL WAY. SEE SCDOT LOCAL MAINTENANCE WORK RESTRICTIONS FOR ADDITIONAL INFORMATION.

20. SHOULDER CLOSURES ARE REQUIRED FOR ALL WORK IN THE SCDOT R/W BEYOND ONE FOOT FROM THE TRAVEL WAY.

21. IT IS THE RESPONSIBILITY OF THE CONTRACTOR TO SCHEDULE ALL REQUIRED INSPECTIONS IN ADVANCE. IF WORK REQUIRING INSPECTION IS PERFORMED WITHOUT PRIOR NOTICE BEING GIVEN TO SCDOT, THAT INSTALLATION SHALL BE SUBJECT TO REMOVAL AT THE APPLICANT'S EXPENSE. SEVERAL MEANS OF CONTACT WILL BE GIVEN AT THE PRECONSTRUCTION MEETING. FAILURE TO OBTAIN CONTACT IS NOT AN APPROVAL TO PROCEED WITH ANY WORK.

22. NO VEGETATION INSTALLED ON PRIVATE PROPERTY SHALL BLOCK THE SCDOT SIGHT TRIANGLES OR SIGHT DISTANCES FOR MOTORISTS INGRESS OR EGRESSING FROM APPROVED DRIVEWAYS AND OR ROADWAY INTERSECTIONS. THE PROPERTY OWNER SHALL BE RESPONSIBLE FOR KEEPING OFFSITE LANDSCAPINGS PROPERLY MAINTAINED TO IMPROVE ALL SIGHT DISTANCES. THE PROPERTY OWNER SHALL ALSO BE RESPONSIBLE FOR THE REPAIR OF ANY DAMAGES TO SIDEWALK, DRIVEWAY OR ROADWAY, UTILITY, DRAINAGE OR OTHER STRUCTURES DAMAGED DUE TO THE INSTALLATION OR EXISTENCE OF OFFSITE LANDSCAPING.

23. THE DEPARTMENT SHALL NOT BE RESPONSIBLE FOR DAMAGE TO ANY UTILITY STRUCTURES LOCATED WITHIN THE RIGHT-OF-WAY AS A RESULT OF ROUTINE HIGHWAY MAINTENANCE OPERATIONS. THESE STRUCTURES INCLUDE BUT ARE NOT LIMITED TO ARV, METERS, VALVES, MANHOLES, ALL TYPE OF PEDESTALS AND UTILITY LINES (OVERHEAD AND/OR UNDERGROUND). THE APPLICANT SHOULD USE MECHANICAL MOWERS TO CUT AROUND THESE TYPE STRUCTURES TO INCREASE VISIBILITY FOR HIGHWAY MAINTENANCE WORKERS.

24. APPLICANT IS RESPONSIBLE FOR THE INSTALLATION AND SECURING OF ANY VALVE OR MANHOLE RISERS AS NEEDED.

25.THE DEPARTMENT SHALL BE HELD HARMLESS FROM AND AGAINST ANY AND ALL CLAIMS, DAMAGES AND LOSSES ASSOCIATED WITH WORK AS APPROVED UNDER THIS PERMIT APPLICATION. ANY SUCH DAMAGE CLAIMS RECEIVED BY THE DEPARTMENT SHALL BE THE RESPONSIBILITY OF THE APPLICANT TO PROCESS ACCORDINGLY. THE HOLD HARMLESS AGREEMENT SHALL BE FOR THE LIFE OF THE FACILITY, STRUCTURE(S) OR ENCROACHMENT AS IT REMAINS WITHIN PUBLIC RIGHT-OF-WAY.

26.APPLICANT IS RESPONSIBLE FOR THE REPAIR OF ANY TRAFFIC SIGNAL LOOPS/WIRES/HEAD/CABINETS IF DAMAGED DUE TO THIS INSTALLATION. ALL WORK SHALL BE APPROVED UNDER THE DIRECTION OF THE SCDOT DISTRICT SIGNAL SHOP AND PERFORMED BY A SCDOT APPROVED SIGNAL CONTRACTOR, AT NO EXPENSE TO THE DEPARTMENT.

27. IF REQUIRED UNDER THE APPROVED SCDOT ENCROACHMENT PERMIT, A THIRD PARTY TESTER SHALL BE REQUIRED AT THE APPLICANT'S EXPENSE TO PERFORM COMPACTION ANALYSIS AND WITNESS A PASSING PROOF ROLL ON ALL SUB-GRADE, BASE, AND ASPHALT. ONE THIRD PARTY INSPECTOR SHALL TAKE DENSITY READINGS AT RANDOM STATION NUMBERS. A SECOND (2ND) THIRD PARTY INSPECTOR/TESTER SHALL BE AT THE ASPHALT PLANT TESTING THE ASPHALT AT THE TIME THAT SURFACE ASPHALT IS BEING PRODUCED AND PUT DOWN ON THE JOB. ONE CORE SAMPLE (LOCATIONS TO BE DETERMINED) SHALL BE TAKEN AND WEIGHED BY THE THIRD PARTY INSPECTOR. ALL RESULTS TO BE SUBMITTED IN WRITING TO SCDOT FOR REVIEW THE FOLLOWING DAY. WINTER WORK RESTRICTIONS AND HOLIDAY WORK RESTRICTIONS MUST BE ADHERED TO. SEE PERMIT FOR MORE DETAILS.

28. AN INSPECTION DATE SHALL BE SET UP IN ADVANCE FOR WHICH THE INSPECTOR WILL COME OUT AND INSPECT THE SIDEWALK FORMS BEFORE POURING CONCRETE. DO NOT LEAVE MORE THAN A 2" DROP OFF UNATTENDED. NO MORE THAN A 2" DROP OFF OR A 3:1 DITCH SLOPE IS PERMITTED ANYWHERE WITHIN THE RIGHT OF WAY DUE TO THE CONSTRUCTION ASSOCIATED WITH THIS SIDEWALK. THE INSTALLATION OF SIDEWALK SHALL BE FLUSH WITH SHOULDER OR HAVE A DRAINAGE INLET BUILT UNDERNEATH TO ALLOW FOR PROPER STORM WATER FLOW. NO WATER SHALL POND IN SHOULDER, ROADWAY, DRIVEWAYS, OR RIGHT OF WAY DUE TO THIS INSTALLATION.

29. ADA MATS (RAISED DETECTABLE WARNING PADS) SHALL BE INSTALLED AS WET INSETS AND AT ROADWAY INTERSECTIONS ONLY.

30. NO VALVES OR OTHER APPURTENANCES IN ROADWAY ASPHALT, WITHIN 5 FEET OF EDGE OF PAVEMENT, OR WITHIN DITCH LINE OR SWALE LINE. APPLICANT SHALL INSTALL 8-16 FEET OF NEW, UNDAMAGED RCP ON PROPER GRADE, FACING THE PROPER DIRECTION, MATCHING THE DIAMETER OF DRIVEWAY AND/OR CROSS LINE UPSTREAM, BUT NOT EXCEEDING THE PIPE DIAMETER DOWNSTREAM, IF THE ABOVE CANNOT BE AVOIDED. INSTALL RIP RAP AROUND ANY EXPOSED PIPES, COVER AND SOD TO MEET SCDOT MINIMUM STANDARDS. CALL SCDOT ENCROACHMENT OFFICE FOR INSPECTION OF PIPE BEFORE COVERING.

31. PROPOSED UTILITY INSTALLATION LOCATED IN SHOULDER AREA SHALL HAVE A MINIMUM COVER OF 42" ACCORDING TO FIGURE 6 OF APPENDIX B. ANY EXPOSED ROOTS TO BE REMOVED OR TRIMMED FLUSH WITH SHOULDER/DITCH.

FED. ROAD DIV.NO.	STATE	COUNTY	PROJECT ID	ROUTE NO.	SHEET NO.	TOTAL SHEETS
3	S.C.	GEORGETOWN			5	

DRAINAGE NOTES:

ALL EXISTING DRAINAGE PIPING NOT SPECIFIED TO BE REPLACED AS A PART OF THIS PROJECT WHICH IS DAMAGED, DESTROYED, OR DISPLACED BY THE CONTRACTOR DURING CONSTRUCTION SHALL BE REPLACED IN LIKE SIZE WITH CLASS III WALL B RCP OR CLASS III WALL BE RCEP IF THE DAMAGED PIPE IS ELLIPTICAL.ALL REINFORCED CONCRETE PIPE (RCP) SHALL MEET ASTM C76 SPECIFICATIONS. ALL JOINTS SHALL SHALL HAVE GASKETS MEETING ASTM C443 SPECIFICATIONS, AND ALL JOINTS SHALL BE WRAPPED WITH FILTER FABRIC, MINIMUM 24" IN WIDTH, UNLESS NOTED OTHERWISE.ALL CONNECTIONS BETWEEN STORMWATER PIPELINES AND NEW DRAINAGE STRUCTURES OR BOX CULVERTS, SHALL BE MADE WITH A BOOT MEETING ASTM C923. BOOTS SHALL PROVIDE A WATER-TIGHT SEAL BETWEEN THE PIPE AND THE STRUCTURE OR BOX CULVERT.AS REQUIRED, GRAVITY STORM SEWER SHALL BE CONSTRUCTED IN ACCORDANCE WITH SCDOT SPECIFICATIONS AND REQUIREMENTS. THE GRADE OF THE GRAVITY STORM SEWER SHALL BE MAINTAINED AT A CONSTANT SLOPE BETWEEN THE GIVEN INVERT ELEVATIONS SHOWN ON THE PLAN/PROFILE AS APPLICABLE.

UTILITY NOTES:

CONTRACTOR IS TO CONTACT UTILITY OWNERS PRIOR TO CONSTRUCTION.

COST OF UTILITY LINES IS TO BE FULLY INCLUSIVE, ACCOUNTING FOR CONNECTIONS, FITTINGS, ETC.

GEORGETOWN COUNTY NOTES:

WITHIN 30 DAYS OF CONSTRUCTION COMPLETION AND FINAL STABILIZATION, PROVIDE GEORGETOWN COUNTY WITH THE COMPLETED CLOSEOUT APPLICATION, SITE AS-BUILTS, AS-BUILT CERTIFICATION FORM, AND SCDHEC NOT.

AS-BUILT NOTES:

DRAINAGE DITCHES AND SWALES WITH CROSS SECTION ELEVATIONS AT MAXIMUM 100-FOOT INTERVALS.

PROVIDE AN AUTOCAD DIGITAL DWG AND PDF FILE OF THE AS-BUILT DRAWING ON SC STATE PLANE COORDINATE SYSTEM NAD 83 DATUM.

PROVIDE A COPY OF THE SCDOT RELEASE LETTER WHERE ENCROACHMENT PERMIT(S) WERE ISSUED.

ADDITIONAL INFORMATION MAY BE NECESSARY AS DEEMED APPROPRIATE BY GEORGETOWN COUNTY STORMWATER MANAGER.

UPON COMPLETION OF THE WORK, A FINAL INSPECTION WILL BE CONDUCTED BY THE DEPARTMENT TO DETERMINE IF THE COMPLETED WORK HAS BEEN CONSTRUCTED IN ACCORDANCE WITH THE STORMWATER PLAN.

NOTE: AS-BUILT SURVEY AND/OR ANALYSIS MUST BE SUBMITTED AND ACCEPTED BY THE DEPARTMENT BEFORE NOTICE OF TERMINATION (NOT) IS SUBMITTED.

CLEARING NOTES:

CONTRACTOR IS TO CONTACT THE COUNTY PRIOR TO CHANNEL CLEARING/CLEANING.

ALL DEBRIS FROM CLEARING WITHIN CHANNEL AND OUTSIDE OF BANKS SHALL BE MULCHED IN-PLACE, ALONG, AND OUTSIDE OF CHANNEL, OR REMOVED AND DISPOSED OF OFF-SITE IN AN APPROVED MANNER. ALL COSTS ASSOCIATED WITH MULCHING IN-PLACE OR HAULING AND DISPOSAL SHALL BE INCLUDED IN PRICE OF CLEARING.

NO GRUBBING IS TO BE PERFORMED.

CULVERT STAGING NOTES:

CONTRACTOR TO SUBMIT MAINTENANCE OF TRAFFIC CONTROL AND CONSTRUCTION STAGING PLANS TO THE COUNTY FOR REVIEW AND APPROVAL TO INSTALL BOX CULVERT FOR NORTH STREET CROSSING.

EDA NOTES:

IF ARCHAEOLOGICAL MATERIALS ARE ENCOUNTERED DURING CONSTRUCTION, THE PROCEDURES CODIFIED AT 36 CFR 800.13(b) WILL APPLY AND THE SC DEPARTMENT OF ARCHIVES AND HISTORY AND THE EDA SHALL BE CONTACTED IMMEDIATELY. ARCHAEOLOGICAL MATERIALS CONSIST OF ANY ITEMS, FIFTY YEARS OLD OR OLDER, WHICH WERE MADE OR USED BY MAN. THESE ITEMS INCLUDE, BUT ARE NOT LIMITED TO, STONE PROJECTILE POINTS (ARROWHEADS), CERAMIC SHERDS, BRICKS, WORKED WOOD, BONE AND STONE, METAL AND GLASS OBJECTS, AND HUMAN SKELETAL MATERIALS.

NO EXCAVATED MATERIAL SHALL BE PLACED WITHIN AREAS OF MAPPED 100-YEAR OR 500-YEAR FLOODPLAIN.

SCDOT GENERAL CONSTRUCTION NOTES:

THE DEPUTY SECRETARY FOR ENGINEERING MUST SPECIFICALLY AUTHORIZE CHANGES INVOLVING INCREASED COST OF THE PROJECT OR CHANGES IN ALIGNMENT. THE DISTRICT ENGINEERING ADMINISTRATOR IS PERMITTED UNDER THE DIRECTION OF THE DEPUTY SECRETARY FOR ENGINEERING TO AUTHORIZE MINOR ALTERATIONS NOT IN CONFLICT WITH THE STANDS PRACTICES OF THE DEPARTMENT. FORWARD INFORMATION ON ANY PROPOSED CHANGES IN ALIGNMENT TO THE COLUMBIA OFFICE AS SOON AS POSSIBLE.

SEE INDIVIDUAL CURVES ON REFERENCE DATA SHEET FOR SUPERELEVATION RATE AND DESIGN SPEED, AS APPLICABLE.

THE FOLLOWING QUANTITIES ARE NOT SHOWN IN DETAIL ON THE PLANS BUT ARE INCLUDED IN THE SUMMARY OF ESTIMATED QUANTITIES AND MAY BE ADJUSTED DURING CONSTRUCTION AS DIRECTED BY THE ENGINEER.

SOUTH CAROLINA DAVIS & FLOYD, INC. No. C00538 CERTIFICATE OF AUTHORIZATION

SOUTH CAROLINA REGISTERED PROFESSIONAL ENGINEER No. 19075 MICHAEL VANDIVER NORTON 05/15/2023

1940 ALGONQUIN ROAD, SUITE 301
CHARLESTON, SC 29418
(843) 554-8602

DAVIS & FLOYD
SINCE 1954

REV. NO.	BY	DATE	DESCRIPTION OF REVISION
5			
4			
3			
2			
1			

DES. BY_____ DRAWN BY _____ REVIEWED BY_____CHECKED BY _____

SOUTH CAROLINA
DEPARTMENT OF TRANSPORTATION

GENERAL CONSTRUCTION NOTES
EAST ANDREWS DRAINAGE IMPROVEMENTS

N.T.S. PLOT SIZE = 22" x 34"

SCALE: 20.000 ft / in.
PEN TABLE: East Andrews-SCDOT Levels 2015 B&W Plan-PDF.tbl
PLOT DRIVER: PDF.pltcfg
FILE: G:\JobSOdd\31969-00\Production\Transportation\f_dgn\Const plpr\East Andrews SHEET 5.dgn
5/4/2023

FED. ROAD DIV.NO.	STATE	COUNTY	PROJECT ID	ROUTE NO.	SHEET NO.	TOTAL SHEETS
3	S.C.	GEORGETOWN	..		5A	

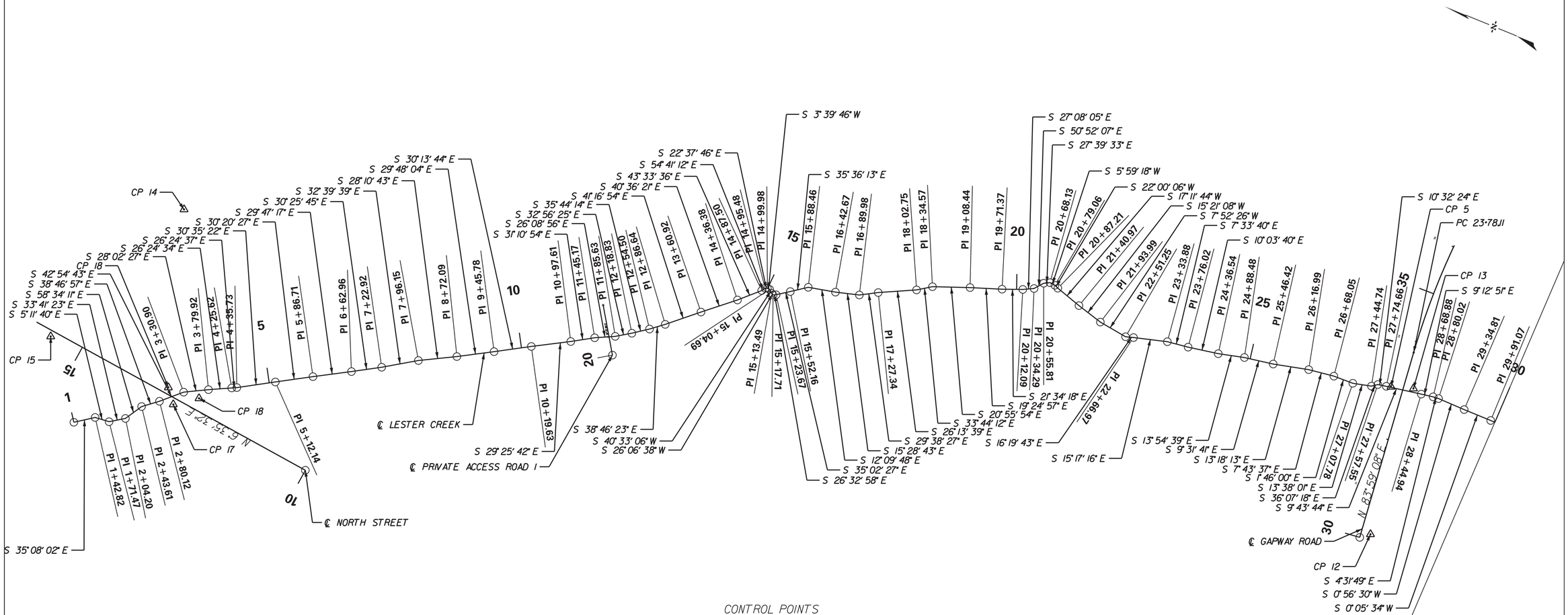

CONTROL POINTS

Point ID	North	East	Elevation
CP5	591092.9258	2443940.7177	23.55
CP12	591020.5021	2443657.2542	26.00
CP13	591050.9160	2443954.0570	24.46
CP14	593417.7223	2443364.3581	20.59
CP15	593565.3741	2443034.3648	16.95
CP16	593313.6788	2443029.1632	14.58
CP17	593292.0914	2443001.9819	14.84
CP18	593249.8710	2443032.2736	14.61

ALL CONTROL POINTS ARE NAIL AND SHINER UNLESS OTHERWISE NOTED
VERTICAL - NORTH AMERICAN VERTICAL DATUM - 1988 (NAVD 88)
HORIZONTAL - NORTH AMERICAN DATUM - 1983 (NAD 83)
COORDINATES - SOUTH CAROLINA STATE PLANE COORDINATE SYSTEM
ALL DISTANCES AS SHOWN ON PLANS ARE GRID DISTANCES
COMBINED SCALE FACTOR 0.99983926

0 100 200 300 400

DAVIS & FLOYD, INC. No. C00538 — SOUTH CAROLINA CERTIFICATE OF AUTHORIZATION

SOUTH CAROLINA REGISTERED PROFESSIONAL ENGINEER No. 19075 MICHAEL VANDIVER NORTON 05/15/2023

DAVIS & FLOYD
SINCE 1954
1940 ALGONQUIN ROAD, SUITE 301
CHARLESTON, SC 29405
(843) 554-8602

REV. NO.	BY	DATE	DESCRIPTION OF REVISION
5			
4			
3			
2			
1			

DES. BY _____ DRAWN BY _____ REVIEWED BY _____ CHECKED BY _____

SOUTH CAROLINA
DEPARTMENT OF TRANSPORTATION

REFERENCE DATA SHEET
EAST ANDREWS DRAINAGE IMPROVEMENTS

SCALE 1"= 100' PLOT SIZE = 22" x 34"

SCALE: 100.000 ft / in.
PEN TABLE: East Andrews-SCDOT Levels 2015 B&W Plan-PDF.tbl
PLOT DRIVER: PDF.pltcfg
FILE: G:\JobsOdd\31969-00\Production\Transportation\f_dgn\Const plpr\East Andrews SHEET 5A.dgn
5/4/2023

FED. ROAD DIV.NO.	STATE	COUNTY	PROJECT ID	ROUTE NO.	SHEET NO.	TOTAL SHEETS
3	S.C.	GEORGETOWN	..		5B	

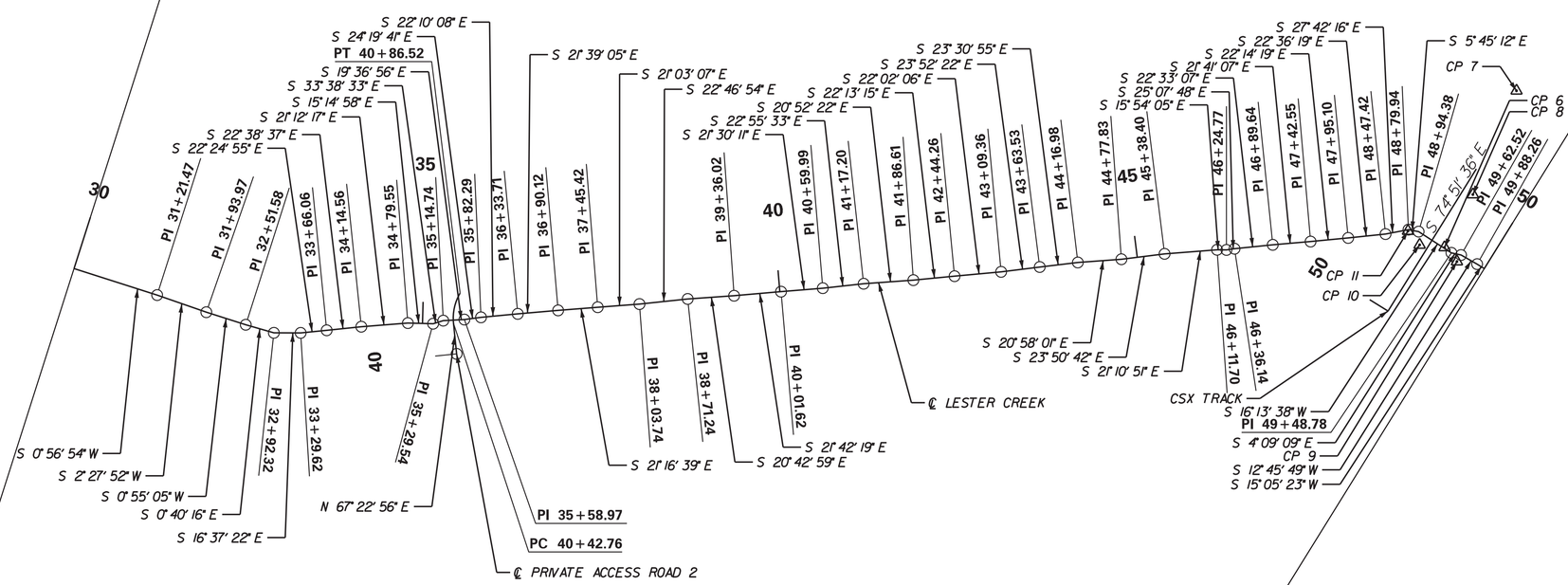

CONTROL POINTS

Point ID	North	East	Elevation
CP6	589058.7597	2444531.0055	26.57
CP7	589025.5932	2444768.7588	25.86
CP8	589042.1729	2444612.9053	25.97
CP9	589036.5786	2444517.1247	21.05
CP10	589093.0126	2444524.4362	26.27
CP11	589114.1244	2444538.1419	17.98

ALL CONTROL POINTS ARE NAIL AND SHINER UNLESS OTHERWISE NOTED
VERTICAL - NORTH AMERICAN VERTICAL DATUM - 1988 (NAVD 88)
HORIZONTAL - NORTH AMERICAN DATUM - 1983 (NAD 83)
COORDINATES - SOUTH CAROLINA STATE PLANE COORDINATE SYSTEM
ALL DISTANCES AS SHOWN ON PLANS ARE GRID DISTANCES
COMBINED SCALE FACTOR 0.99983926

0 100 200 300 400

SOUTH CAROLINA DAVIS & FLOYD, INC. No. C00538 CERTIFICATE OF AUTHORIZATION

SOUTH CAROLINA REGISTERED PROFESSIONAL ENGINEER No. 19075 MICHAEL VANDIVER NORTON 05/15/2023

1940 ALGONQUIN ROAD, SUITE 301
CHARLESTON, SC 29405
(843) 554-8602

DAVIS & FLOYD
SINCE 1954

REV. NO.	BY	DATE	DESCRIPTION OF REVISION
5			
4			
3			
2			
1			

DES. BY _____ DRAWN BY _____ REVIEWED BY _____ CHECKED BY _____

SOUTH CAROLINA
DEPARTMENT OF TRANSPORTATION

REFERENCE DATA SHEET
EAST ANDREWS DRAINAGE IMPROVEMENTS

SCALE 1"= 100' PLOT SIZE = 22" x 34"

SCALE: 100.000 ft / in.
PEN TABLE: East Andrews-SCDOT Levels 2015 B&W Plan-PDF.tbl
PLOT DRIVER: PDF.pltcfg
FILE: G:\JobsOdd\31969-00\Production\Transportation\f_dgn\Const plpr\East Andrews SHEET 5B.dgn
5/4/2023

FED. ROAD DIV.NO.	STATE	COUNTY	PROJECT ID	ROUTE NO.	SHEET NO.	TOTAL SHEETS
3	S.C.	GEORGETOWN	..		5C	

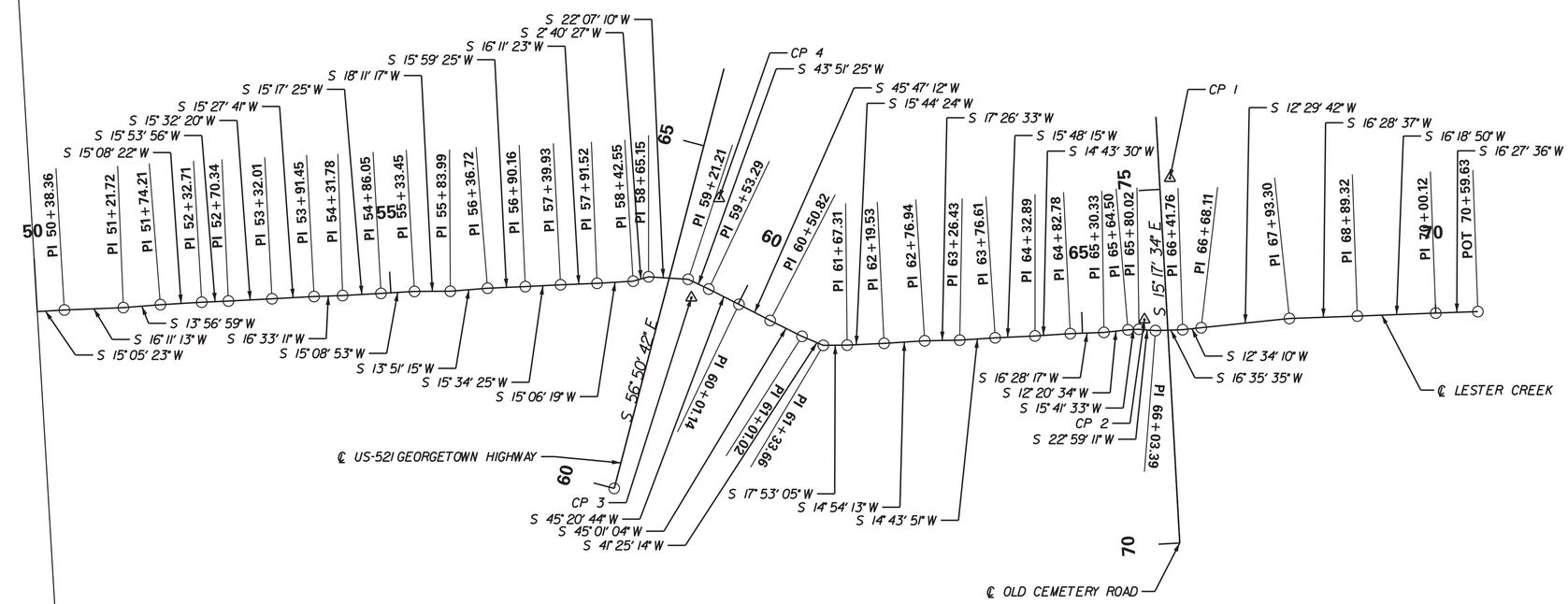

CONTROL POINTS

Point ID	North	East	Elevation
CP1	587421.0065	2444190.0280	26.61
CP2	587518.3975	2444012.1223	25.02
CP3	588115.2448	2444244.2996	25.10
CP4	588033.6979	2444364.9861	25.41

ALL CONTROL POINTS ARE NAIL AND SHINER UNLESS OTHERWISE NOTED
VERTICAL - NORTH AMERICAN VERTICAL DATUM - 1988 (NAVD 88)
HORIZONTAL - NORTH AMERICAN DATUM - 1983 (NAD 83)
COORDINATES - SOUTH CAROLINA STATE PLANE COORDINATE SYSTEM
ALL DISTANCES AS SHOWN ON PLANS ARE GRID DISTANCES
COMBINED SCALE FACTOR 0.99983926

0 100 200 300 400

SCALE: 100.000 ft / in.
PEN TABLE: East Andrews-SCDOT Levels 2015 B&W Plan-PDF.tbl
PLOT DRIVER: PDF.pltcfg
FILE: G:\Jobs0dd\31969-00\Production\Transportation\f_dgn\Const plpr\East Andrews SHEET 5C.dgn
5/4/2023

SOUTH CAROLINA DAVIS & FLOYD, INC. No. C00538 CERTIFICATE OF AUTHORIZATION

SOUTH CAROLINA REGISTERED PROFESSIONAL ENGINEER No. 19075 MICHAEL VANDIVER WORTON 05/15/2023

1940 ALGONQUIN ROAD, SUITE 301
CHARLESTON, SC 29405
(843) 554-8602

DAVIS & FLOYD
SINCE 1954

REV. NO.	BY	DATE	DESCRIPTION OF REVISION
5			
4			
3			
2			
1			

DES. BY _____ DRAWN BY _____ REVIEWED BY _____ CHECKED BY _____

SOUTH CAROLINA
DEPARTMENT OF TRANSPORTATION

REFERENCE DATA SHEET
EAST ANDREWS DRAINAGE IMPROVEMENTS

SCALE 1"= 100' PLOT SIZE = 22" x 34"

FED. ROAD DIV.NO.	STATE	COUNTY	PROJECT ID	ROUTE NO.	SHEET NO.	TOTAL SHEETS
3	S.C.	GEORGETOWN	_		5D	

Beginning chain LESTER__CREEK description
==========

Point LC0001 N 593,484.0597 E 2,442,867.0838 Sta 1+00.00

Course from LC0001 to LC0002 S 49° 11' 06.07" E Dist 37.6991

End Region 1

Equation: Sta 1+37.70 (BK) = Sta 1+00.00 (AH) ----------

Begin Region 2

Point LC0002 N 593,459.4189 E 2,442,895.6154 Sta 1+00.00

Course from LC0002 to LC0003 S 35° 08' 02.33" E Dist 42.8170

Point LC0003 N 593,424.4028 E 2,442,920.2562 Sta 1+42.82

Course from LC0003 to LC0004 S 5° 11' 40.37" E Dist 28.6492

Point LC0004 N 593,395.8712 E 2,442,922.8500 Sta 1+71.47

Course from LC0004 to LC0005 S 33° 41' 23.10" E Dist 32.7318

Point LC0005 N 593,368.6366 E 2,442,941.0062 Sta 2+04.20

Course from LC0005 to LC0006 S 58° 34' 11.10" E Dist 39.4116

Point LC0006 N 593,348.0850 E 2,442,974.6352 Sta 2+43.61

Course from LC0006 to LC0007 S 38° 46' 57.31" E Dist 36.5117

Point LC0007 N 593,319.6230 E 2,442,997.5049 Sta 2+80.12

Course from LC0007 to LC0008 S 42° 54' 43.19" E Dist 50.7795

Point LC0008 N 593,282.4321 E 2,443,032.0794 Sta 3+30.90

Course from LC0008 to LC0009 S 28° 02' 27.25" E Dist 49.0149

Point LC0009 N 593,239.1709 E 2,443,055.1214 Sta 3+79.92

Course from LC0009 to LC0010 S 26° 24' 34.03" E Dist 45.7078

Point LC0010 N 593,198.2333 E 2,443,075.4514 Sta 4+25.62

Course from LC0010 to LC0011 S 26° 24' 37.30" E Dist 10.1081

Point LC0011 N 593,189.1801 E 2,443,079.9475 Sta 4+35.73

Point LC0012 N 593,189.1801 E 2,443,079.9475 Sta 4+35.73

Course from LC0012 to LC0013 S 30° 35' 22.16" E Dist 76.4121

Point LC0013 N 593,123.4019 E 2,443,118.8323 Sta 5+12.14

Course from LC0013 to LC0014 S 30° 20' 26.87" E Dist 74.5677

Point LC0014 N 593,059.0472 E 2,443,156.4997 Sta 5+86.71

Course from LC0014 to LC0015 S 29° 47' 17.45" E Dist 76.2499

Point LC0015 N 592,992.8724 E 2,443,194.3802 Sta 6+62.96

Course from LC0015 to LC0016 S 30° 25' 44.92" E Dist 59.9588

Point LC0016 N 592,941.1726 E 2,443,224.7477 Sta 7+22.92

Course from LC0016 to LC0017 S 32° 39' 38.81" E Dist 73.2320

Point LC0017 N 592,879.5200 E 2,443,264.2684 Sta 7+96.15

Course from LC0017 to LC0018 S 28° 10' 43.29" E Dist 75.9420

Point LC0018 N 592,812.5787 E 2,443,300.1299 Sta 8+72.09

Course from LC0018 to LC0019 S 29° 48' 03.98" E Dist 73.6896

Point LC0019 N 592,748.6342 E 2,443,336.7530 Sta 9+45.78

Course from LC0019 to LC0020 S 30° 13' 43.51" E Dist 73.8508

Point LC0020 N 592,684.8255 E 2,443,373.9334 Sta 10+19.63

Course from LC0020 to LC0021 S 29° 25' 42.25" E Dist 77.9759

Point LC0021 N 592,616.9108 E 2,443,412.2457 Sta 10+97.61

Course from LC0021 to LC0022 S 31° 10' 54.38" E Dist 47.5554

Point LC0022 N 592,576.2257 E 2,443,436.8678 Sta 11+45.17

Course from LC0022 to LC0023 S 26° 08' 56.03" E Dist 40.4625

Point LC0023 N 592,539.9045 E 2,443,454.6998 Sta 11+85.63

Point LC0024 N 592,512.0400 E 2,443,472.7539 Sta 12+18.83

Course from LC0024 to LC0025 S 35° 44' 14.44" E Dist 35.6675

Point LC0025 N 592,483.0886 E 2,443,493.5863 Sta 12+54.50

Course from LC0025 to LC0026 S 38° 46' 23.06" E Dist 32.1400

Point LC0026 N 592,458.0312 E 2,443,513.7136 Sta 12+86.64

Course from LC0026 to LC0027 S 41° 16' 54.04" E Dist 74.2782

Point LC0027 N 592,402.2129 E 2,443,562.7195 Sta 13+60.92

Course from LC0027 to LC0028 S 40° 36' 20.61" E Dist 75.4656

Point LC0028 N 592,344.9190 E 2,443,611.8363 Sta 14+36.38

Course from LC0028 to LC0029 S 43° 33' 35.84" E Dist 51.1137

Point LC0029 N 592,307.8793 E 2,443,647.0594 Sta 14+87.50

Course from LC0029 to LC0030 S 54° 41' 12.43" E Dist 7.9829

Point LC0030 N 592,303.2648 E 2,443,653.5735 Sta 14+95.48

Course from LC0030 to LC0031 S 22° 37' 46.24" E Dist 4.4979

Point LC0031 N 592,299.1132 E 2,443,655.3041 Sta 14+99.98

Course from LC0031 to LC0032 S 3° 39' 46.41" W Dist 4.7144

Point LC0032 N 592,294.4085 E 2,443,655.0030 Sta 15+04.69

Course from LC0032 to LC0033 S 40° 33' 06.22" W Dist 8.8029

Point LC0033 N 592,287.7198 E 2,443,649.2799 Sta 15+13.49

Course from LC0033 to LC0034 S 26° 06' 38.22" W Dist 4.2178

Point LC0034 N 592,283.9324 E 2,443,647.4236 Sta 15+17.71

Course from LC0034 to LC0035 S 26° 32' 58.36" E Dist 5.9631

Point LC0035 N 592,278.5981 E 2,443,650.0889 Sta 15+23.67

Course from LC0035 to LC0036 S 35° 02' 27.23" E Dist 28.4822

Point LC0036 N 592,255.2785 E 2,443,666.4423 Sta 15+52.16

Course from LC0036 to LC0037 S 35° 36' 12.90" E Dist 36.3067

Point LC0037 N 592,225.7589 E 2,443,687.5791 Sta 15+88.46

Course from LC0037 to LC0038 S 12° 09' 47.87" E Dist 54.2097

Point LC0038 N 592,172.7661 E 2,443,699.0010 Sta 16+42.67

Course from LC0038 to LC0039 S 15° 28' 42.84" E Dist 47.3026

Point LC0039 N 592,127.1791 E 2,443,711.6250 Sta 16+89.98

Course from LC0039 to LC0040 S 29° 38' 27.27" E Dist 37.3604

Point LC0040 N 592,094.7077 E 2,443,730.1020 Sta 17+27.34

Course from LC0040 to LC0041 S 26° 13' 39.08" E Dist 75.4174

Point LC0041 N 592,027.0548 E 2,443,763.4318 Sta 18+02.75

Course from LC0041 to LC0042 S 33° 44' 12.37" E Dist 31.8155

Point LC0042 N 592,000.5971 E 2,443,781.1014 Sta 18+34.57

Course from LC0042 to LC0043 S 20° 55' 54.35" E Dist 73.8707

Point LC0043 N 591,931.6014 E 2,443,807.4921 Sta 19+08.44

Course from LC0043 to LC0044 S 19° 24' 57.28" E Dist 62.9337

Point LC0044 N 591,872.2467 E 2,443,828.4127 Sta 19+71.37

Course from LC0044 to LC0045 S 21° 34' 17.89" E Dist 40.7142

Point LC0045 N 591,834.3842 E 2,443,843.3819 Sta 20+12.09

Course from LC0045 to LC0046 S 27° 08' 04.67" E Dist 22.1985

Point LC0046 N 591,814.6289 E 2,443,853.5062 Sta 20+34.29

Course from LC0046 to LC0047 S 50° 52' 07.46" E Dist 21.5269

Point LC0047 N 591,801.0433 E 2,443,870.2047 Sta 20+55.81

Course from LC0047 to LC0048 S 27° 39' 33.26" E Dist 12.3166

Point LC0048 N 591,790.1342 E 2,443,875.9222 Sta 20+68.13

Course from LC0048 to LC0049 S 5° 59' 18.24" W Dist 10.9343

Point LC0049 N 591,779.2595 E 2,443,874.7815 Sta 20+79.06

Course from LC0049 to LC0050 S 22° 00' 05.70" W Dist 8.1436

Point LC0050 N 591,771.7090 E 2,443,871.7306 Sta 20+87.21

Course from LC0050 to LC0051 S 17° 11' 44.27" W Dist 53.7634

Point LC0051 N 591,720.3488 E 2,443,855.8363 Sta 21+40.97

Course from LC0051 to LC0052 S 15° 21' 07.80" W Dist 53.0199

Point LC0052 N 591,669.2208 E 2,443,841.7992 Sta 21+93.99

Course from LC0052 to LC0053 S 7° 52' 25.89" W Dist 57.2573

Point LC0053 N 591,612.5033 E 2,443,833.9554 Sta 22+51.25

Course from LC0053 to LC0054 S 16° 19' 43.26" E Dist 15.7234

Point LC0054 N 591,597.4140 E 2,443,838.3760 Sta 22+66.97

Course from LC0054 to LC0055 S 15° 17' 16.33" E Dist 66.9049

Point LC0055 N 591,532.8766 E 2,443,856.0167 Sta 23+33.88

Course from LC0055 to LC0056 S 7° 33' 40.48" E Dist 42.1394

Point LC0056 N 591,491.1037 E 2,443,861.5617 Sta 23+76.02

Course from LC0056 to LC0057 S 10° 03' 40.13" E Dist 60.5203

Point LC0057 N 591,431.5141 E 2,443,872.1345 Sta 24+36.54

Course from LC0057 to LC0058 S 13° 54' 39.26" E Dist 51.9434

Point LC0058 N 591,381.0942 E 2,443,884.6224 Sta 24+88.48

Course from LC0058 to LC0059 S 9° 31' 41.12" E Dist 57.9381

Point LC0059 N 591,323.9554 E 2,443,894.2129 Sta 25+46.42

Course from LC0059 to LC0060 S 13° 18' 12.63" E Dist 70.5730

Point LC0060 N 591,255.2762 E 2,443,910.4524 Sta 26+16.99

Course from LC0060 to LC0061 S 7° 43' 37.49" E Dist 51.0618

Point LC0061 N 591,204.6781 E 2,443,917.3179 Sta 26+68.05

Course from LC0061 to LC0062 S 1° 45' 59.51" E Dist 39.7295

Point LC0062 N 591,164.9675 E 2,443,918.5427 Sta 27+07.78

Course from LC0062 to LC0063 S 13° 38' 01.07" E Dist 36.9614

Point LC0063 N 591,129.0476 E 2,443,927.2549 Sta 27+44.74

Course from LC0063 to LC0064 S 36° 07' 17.70" E Dist 12.8067

Point LC0064 N 591,118.7028 E 2,443,934.8045 Sta 27+57.55

Course from LC0064 to LC0065 S 10° 32' 24.14" E Dist 17.1142

Point LC0065 N 591,101.8773 E 2,443,937.9350 Sta 27+74.66

Course from LC0065 to LC0066 S 9° 43' 44.14" E Dist 70.2794

Point LC0066 N 591,032.6086 E 2,443,949.8114 Sta 28+44.94

Course from LC0066 to LC0067 S 9° 12' 50.71" E Dist 23.9398

Point LC0067 N 591,008.9777 E 2,443,953.6447 Sta 28+68.88

Course from LC0067 to LC0068 S 4° 31' 49.16" E Dist 11.1401

Point LC0068 N 590,997.8724 E 2,443,954.5246 Sta 28+80.02

Course from LC0068 to LC0069 S 0° 56' 29.55" W Dist 54.7863

Point LC0069 N 590,943.0935 E 2,443,953.6243 Sta 29+34.81

Course from LC0069 to LC0070 S 0° 05' 34.40" W Dist 56.2579

Point LC0070 N 590,886.8356 E 2,443,953.5331 Sta 29+91.07

Course from LC0070 to LC0072 S 0° 56' 54.27" W Dist 130.4043

Point LC0072 N 590,756.4491 E 2,443,951.3747 Sta 31+21.47

Course from LC0072 to LC0073 S 2° 27' 52.02" W Dist 72.4998

Point LC0073 N 590,684.0164 E 2,443,948.2572 Sta 31+93.97

Course from LC0073 to LC0074 S 0° 55' 05.48" W Dist 57.6127

Point LC0074 N 590,626.4111 E 2,443,947.3340 Sta 32+51.58

Course from LC0074 to LC0075 S 0° 40' 15.72" E Dist 40.7321

Point LC0075 N 590,585.6818 E 2,443,947.8110 Sta 32+92.32

Course from LC0075 to LC0076 S 16° 37' 22.04" E Dist 37.3030

Point LC0076 N 590,549.9377 E 2,443,958.4823 Sta 33+29.62

Course from LC0076 to LC0077 S 22° 24' 55.06" E Dist 36.4378

Point LC0077 N 590,516.2530 E 2,443,972.3766 Sta 33+66.06

Course from LC0077 to LC0078 S 22° 38' 37.06" E Dist 48.4979

Point LC0078 N 590,471.4934 E 2,443,991.0482 Sta 34+14.56

Course from LC0078 to LC0079 S 21° 12' 17.34" E Dist 64.9940

Point LC0079 N 590,410.8999 E 2,444,014.5568 Sta 34+79.55

Course from LC0079 to LC0080 S 15° 14' 57.85" E Dist 35.1895

Point LC0080 N 590,376.9495 E 2,444,023.8123 Sta 35+14.74

Course from LC0080 to LC0081 S 33° 38' 33.08" E Dist 14.8032

Point LC0081 N 590,364.6257 E 2,444,032.0135 Sta 35+29.54

Course from LC0081 to LC0082 S 19° 36' 56.39" E Dist 29.4241

Point LC0082 N 590,336.9091 E 2,444,041.8914 Sta 35+58.97

Course from LC0082 to LC0083 S 24° 19' 41.16" E Dist 23.3248

Point LC0083 N 590,315.6555 E 2,444,051.5003 Sta 35+82.29

Course from LC0083 to LC0084 S 22° 10' 07.92" E Dist 51.4214

Point LC0084 N 590,268.0354 E 2,444,070.9035 Sta 36+33.71

Course from LC0084 to LC0085 S 21° 39' 04.82" E Dist 56.4058

Point LC0085 N 590,215.6093 E 2,444,091.7149 Sta 36+90.12

Course from LC0085 to LC0086 S 21° 16' 38.63" E Dist 55.3039

Point LC0086 N 590,164.0751 E 2,444,111.7838 Sta 37+45.42

Course from LC0086 to LC0087 S 21° 03' 07.45" E Dist 58.3145

Point LC0087 N 590,109.6529 E 2,444,132.7313 Sta 38+03.74

Course from LC0087 to LC0088 S 22° 46' 54.13" E Dist 67.5026

Point LC0088 N 590,047.4163 E 2,444,158.8698 Sta 38+71.24

Course from LC0088 to LC0089 S 20° 42' 59.11" E Dist 64.7797

Point LC0089 N 589,986.8251 E 2,444,181.7851 Sta 39+36.02

Course from LC0089 to LC0090 S 21° 42' 18.75" E Dist 65.6042

Point LC0090 N 589,925.8724 E 2,444,206.0476 Sta 40+01.62

Course from LC0090 to LC0091 S 21° 30' 11.44" E Dist 58.3708

Point LC0091 N 589,871.5643 E 2,444,227.4436 Sta 40+59.99

Course from LC0091 to LC0092 S 22° 55' 32.98" E Dist 57.2089

Point LC0092 N 589,818.8743 E 2,444,249.7287 Sta 41+17.20

Course from LC0092 to LC0093 S 20° 52' 22.00" E Dist 69.4080

Point LC0093 N 589,754.0213 E 2,444,274.4583 Sta 41+86.61

Course from LC0093 to LC0094 S 22° 13' 14.96" E Dist 57.6524

Point LC0094 N 589,700.6506 E 2,444,296.2612 Sta 42+44.26

Course from LC0094 to LC0095 S 22° 02' 06.49" E Dist 65.1008

Point LC0095 N 589,640.3051 E 2,444,320.6854 Sta 43+09.36

Course from LC0095 to LC0096 S 23° 52' 21.74" E Dist 54.1659

Point LC0096 N 589,590.7733 E 2,444,342.6066 Sta 43+63.53

Course from LC0096 to LC0097 S 23° 30' 55.47" E Dist 53.4454

SCALE: 100.000 ft / in.
PEN TABLE: East Andrews-SCDOT Levels 2015 B&W Plan-PDF.tbl
PLOT DRIVER: PDF.pltcfg
FILE: G:\JobsOdd\31969-00\Production\Transportation\f_dgn\Const plpr\East Andrews SHEET 5D.dgn
5/4/2023

0 100 200 300 400

SOUTH CAROLINA DAVIS & FLOYD, INC. No. C00538 CERTIFICATE OF AUTHORIZATION

SOUTH CAROLINA REGISTERED PROFESSIONAL ENGINEER No. 19075 MICHAEL VANDIVER PORTON 05/15/2023

DAVIS & FLOYD
SINCE 1954

1940 ALGONQUIN ROAD, SUITE 301
CHARLESTON, SC 29405
(843) 554-8602

REV. NO.	BY	DATE	DESCRIPTION OF REVISION
5			
4			
3			
2			
1			

DES. BY _____ DRAWN BY _____ REVIEWED BY _____ CHECKED BY _____

SOUTH CAROLINA
DEPARTMENT OF TRANSPORTATION

REFERENCE DATA SHEET
EAST ANDREWS DRAINAGE IMPROVEMENTS

SCALE 1"= 100' PLOT SIZE = 22" x 34"

FED. ROAD DIV.NO.	STATE	COUNTY	PROJECT ID	ROUTE NO.	SHEET NO.	TOTAL SHEETS
3	S.C.	GEORGETOWN	-		5E	

LESTER__CREEK description continued
==========

Point LC0097 N 589,541.7664 E 2,444,363.9311 Sta 44+16.98

Course from LC0097 to LC0098 S 20° 58' 01.21" E Dist 60.8499

Point LC0098 N 589,484.9455 E 2,444,385.7051 Sta 44+77.83

Course from LC0098 to LC0099 S 23° 50' 41.64" E Dist 60.5750

Point LC0099 N 589,429.5410 E 2,444,410.1932 Sta 45+38.40

Course from LC0099 to LC0100 S 21° 10' 50.91" E Dist 73.3020

Point LC0100 N 589,361.1909 E 2,444,436.6781 Sta 46+11.70

Course from LC0100 to LC0101 S 15° 54' 04.83" E Dist 13.0703

Point LC0101 N 589,348.6207 E 2,444,440.2592 Sta 46+24.77

Course from LC0101 to LC0102 S 25° 07' 47.66" E Dist 11.3651

Point LC0102 N 589,338.3314 E 2,444,445.0856 Sta 46+36.14

Course from LC0102 to LC0103 S 22° 33' 06.74" E Dist 53.5062

Point LC0103 N 589,288.9167 E 2,444,465.6063 Sta 46+89.64

Course from LC0103 to LC0104 S 21° 41' 06.80" E Dist 52.9071

Point LC0104 N 589,239.7539 E 2,444,485.1558 Sta 47+42.55

Course from LC0104 to LC0105 S 22° 14' 19.00" E Dist 52.5521

Point LC0105 N 589,191.1109 E 2,444,505.0449 Sta 47+95.10

Course from LC0105 to LC0106 S 22° 36' 19.38" E Dist 52.3201

Point LC0106 N 589,142.8104 E 2,444,525.1558 Sta 48+47.42

Course from LC0106 to LC0107 S 27° 42' 16.30" E Dist 32.5154

Point LC0107 N 589,114.0226 E 2,444,540.2726 Sta 48+79.94

Course from LC0107 to LC0108 S 5° 45' 11.52" E Dist 14.4432

Point LC0108 N 589,099.6522 E 2,444,541.7205 Sta 48+94.38

Course from LC0108 to LC0109 S 16° 13' 37.72" W Dist 54.4008

Point LC0109 N 589,047.4186 E 2,444,526.5184 Sta 49+48.78

Course from LC0109 to LC0110 S 4° 09' 09.26" E Dist 13.7418

Point LC0110 N 589,033.7129 E 2,444,527.5135 Sta 49+62.52

Course from LC0110 to LC0111 S 12° 45' 49.23" W Dist 25.7397

Point LC0111 N 589,008.6093 E 2,444,521.8268 Sta 49+88.26

Course from LC0111 to LC0112 S 15° 05' 22.57" W Dist 50.0930

Point LC0112 N 588,960.2434 E 2,444,508.7861 Sta 50+38.36

Course from LC0112 to LC0113 S 16° 11' 12.67" W Dist 83.3583

Point LC0113 N 588,880.1896 E 2,444,485.5482 Sta 51+21.72

Course from LC0113 to LC0114 S 13° 56' 58.74" W Dist 52.4920

Point LC0114 N 588,829.2457 E 2,444,472.8940 Sta 51+74.21

Course from LC0114 to LC0115 S 15° 08' 22.47" W Dist 58.5026

Point LC0115 N 588,772.7736 E 2,444,457.6148 Sta 52+32.71

Course from LC0115 to LC0116 S 15° 53' 56.43" W Dist 37.6274

Point LC0116 N 588,736.5856 E 2,444,447.3071 Sta 52+70.34

Course from LC0116 to LC0117 S 15° 32' 19.78" W Dist 61.6681

Point LC0117 N 588,677.1716 E 2,444,430.7867 Sta 53+32.01

Course from LC0117 to LC0118 S 15° 27' 41.20" W Dist 59.4426

Point LC0118 N 588,619.8802 E 2,444,414.9400 Sta 53+91.45

Course from LC0118 to LC0119 S 16° 33' 10.89" W Dist 40.3278

Point LC0119 N 588,581.2238 E 2,444,403.4505 Sta 54+31.78

Course from LC0119 to LC0120 S 15° 17' 25.16" W Dist 54.2780

Point LC0120 N 588,528.8671 E 2,444,389.1368 Sta 54+86.05

Course from LC0120 to LC0121 S 15° 08' 52.71" W Dist 47.3934

Point LC0121 N 588,483.1204 E 2,444,376.7523 Sta 55+33.45

Course from LC0121 to LC0122 S 18° 11' 17.06" W Dist 50.5406

Point LC0122 N 588,435.1050 E 2,444,360.9767 Sta 55+83.99

Course from LC0122 to LC0123 S 13° 51' 14.97" W Dist 52.7316

Point LC0123 N 588,383.9075 E 2,444,348.3501 Sta 56+36.72

Course from LC0123 to LC0124 S 15° 59' 25.02" W Dist 53.4380

Point LC0124 N 588,332.5371 E 2,444,333.6293 Sta 56+90.16

Course from LC0124 to LC0125 S 15° 34' 24.96" W Dist 49.7742

Point LC0125 N 588,284.5902 E 2,444,320.2661 Sta 57+39.93

Course from LC0125 to LC0126 S 16° 11' 22.73" W Dist 51.5888

Point LC0126 N 588,235.0472 E 2,444,305.8822 Sta 57+91.52

Course from LC0126 to LC0127 S 15° 06' 19.48" W Dist 51.0326

Point LC0127 N 588,185.7779 E 2,444,292.5833 Sta 58+42.55

Course from LC0127 to LC0128 S 2° 40' 26.53" W Dist 22.5948

Point LC0128 N 588,163.2077 E 2,444,291.5292 Sta 58+65.15

Course from LC0128 to LC0129 S 22° 07' 09.87" W Dist 56.0597

Point LC0129 N 588,111.2740 E 2,444,270.4206 Sta 59+21.21

Course from LC0129 to LC0130 S 43° 51' 24.77" W Dist 32.0835

Point LC0130 N 588,088.1394 E 2,444,248.1913 Sta 59+53.29

Course from LC0130 to LC0131 S 45° 20' 44.04" W Dist 47.8503

Point LC0131 N 588,054.5089 E 2,444,214.1526 Sta 60+01.14

Course from LC0131 to LC0132 S 45° 47' 12.12" W Dist 49.6757

Point LC0132 N 588,019.8684 E 2,444,178.5476 Sta 60+50.82

Course from LC0132 to LC0133 S 45° 01' 03.86" W Dist 50.2076

Point LC0133 N 587,984.3773 E 2,444,143.0344 Sta 61+01.02

Course from LC0133 to LC0134 S 41° 25' 14.31" W Dist 32.6372

Point LC0134 N 587,959.9035 E 2,444,121.4423 Sta 61+33.66

Course from LC0134 to LC0135 S 17° 53' 05.41" W Dist 33.6497

Point LC0135 N 587,927.8799 E 2,444,111.1083 Sta 61+67.31

Course from LC0135 to LC0136 S 15° 44' 24.47" W Dist 52.2165

Point LC0136 N 587,877.6214 E 2,444,096.9432 Sta 62+19.53

Course from LC0136 to LC0137 S 14° 54' 13.49" W Dist 57.4130

Point LC0137 N 587,822.1398 E 2,444,082.1768 Sta 62+76.94

Course from LC0137 to LC0138 S 17° 26' 32.81" W Dist 49.4861

Point LC0138 N 587,774.9291 E 2,444,067.3435 Sta 63+26.43

Course from LC0138 to LC0139 S 14° 43' 50.77" W Dist 50.1795

Point LC0139 N 587,726.3990 E 2,444,054.5840 Sta 63+76.61

Course from LC0139 to LC0140 S 15° 48' 15.07" W Dist 56.2831

Point LC0140 N 587,672.2434 E 2,444,039.2552 Sta 64+32.89

Course from LC0140 to LC0141 S 14° 43' 30.41" W Dist 49.8899

Point LC0141 N 587,623.9921 E 2,444,026.5741 Sta 64+82.78

Course from LC0141 to LC0142 S 16° 28' 16.53" W Dist 47.5508

Point LC0142 N 587,578.3927 E 2,444,013.0919 Sta 65+30.33

Course from LC0142 to LC0143 S 12° 20' 34.38" W Dist 34.1711

Point LC0143 N 587,545.0115 E 2,444,005.7874 Sta 65+64.50

Course from LC0143 to LC0144 S 15° 41' 33.36" W Dist 15.5153

Point LC0144 N 587,530.0745 E 2,444,001.5909 Sta 65+80.02

Course from LC0144 to LC0145 S 22° 59' 10.66" W Dist 23.3693

Point LC0145 N 587,508.5607 E 2,443,992.4649 Sta 66+03.39

Course from LC0145 to LC0146 S 16° 35' 35.02" W Dist 38.3732

Point LC0146 N 587,471.7854 E 2,443,981.5066 Sta 66+41.76

Course from LC0146 to LC0147 S 12° 34' 10.49" W Dist 26.3537

Point LC0147 N 587,446.0633 E 2,443,975.7713 Sta 66+68.11

Course from LC0147 to LC0148 S 12° 29' 41.83" W Dist 125.1823

Point LC0148 N 587,323.8459 E 2,443,948.6877 Sta 67+93.30

Course from LC0148 to LC0149 S 16° 28' 36.82" W Dist 96.0222

Point LC0149 N 587,231.7670 E 2,443,921.4530 Sta 68+89.32

Course from LC0149 to LC0150 S 16° 18' 50.07" W Dist 110.8061

Point LC0150 N 587,125.4223 E 2,443,890.3277 Sta 70+00.12

Course from LC0150 to LC0151 S 16° 27' 36.25" W Dist 59.5016

Point LC0151 N 587,068.3592 E 2,443,873.4680 Sta 70+59.63

==========
Ending chain LESTER__CREEK description

Beginning chain NORTH description
==========

Point 1 N 593,003.1194 E 2,442,980.7089 Sta 10+00.00

Course from 1 to 2 N 6° 35' 31.75" E Dist 602.4992

Point 2 N 593,601.6353 E 2,443,049.8765 Sta 16+02.50

==========
Ending chain NORTH description

Beginning chain PRIVATE__1 description
==========

Point PVT100 N 592,531.0180 E 2,443,418.5515 Sta 20+00.00

Course from PVT100 to PVT101 N 57° 13' 24.48" E Dist 99.7814

Point PVT101 N 592,585.0360 E 2,443,502.4465 Sta 20+99.78

==========
Ending chain PRIVATE__1 description

Beginning chain CSX description
==========

Point CSX001 N 589,108.6868 E 2,444,423.5482 Sta 50+00.00

Course from CSX001 to CSX002 S 74° 51' 35.52" E Dist 233.0056

Point CSX002 N 589,047.8303 E 2,444,648.4661 Sta 52+33.01

==========
Ending chain CSX description

Beginning chain GT__HWY description
==========

Point GTH001 N 588,303.9376 E 2,444,023.6014 Sta 60+00.00

Course from GTH001 to GTH002 S 56° 50' 42.00" E Dist 612.4990

Point GTH002 N 587,968.9584 E 2,444,536.3819 Sta 66+12.50

==========
Ending chain GT__HWY description

Beginning chain OLD__CEMETERY description
==========

Point OC001 N 587,571.1823 E 2,443,697.2161 Sta 70+00.00

Course from OC001 to OC002 S 74° 42' 25.74" E Dist 602.4990

Point OC002 N 587,412.2716 E 2,444,278.3808 Sta 76+02.50

==========
Ending chain OLD__CEMETERY description

Beginning chain PRIVATE__2 description
==========

Point PVT200 N 590,333.5161 E 2,443,993.0435 Sta 40+00.00

Course from PVT200 to PC PRIVATE__21 N 67° 22' 55.54" E Dist 42.7590

Curve Data

Curve PRIVATE__21
P.I. Station 40+65.41 N 590,358.6724 E 2,444,053.4244
Delta = 36° 33' 30.13" (RT)
Degree = 83° 32' 50.13"
Tangent = 22.6527
Length = 43.7577
Radius = 68.5789
External = 3.6444
Long Chord = 43.0192
Mid. Ord. = 3.4605
P.C. Station 40+42.76 N 590,349.9605 E 2,444,032.5139
P.T. Station 40+86.52 N 590,353.2150 E 2,444,075.4099
C.C. N 590,286.6560 E 2,444,058.8883
Back = N 67° 22' 55.54" E
Ahead = S 76° 03' 34.33" E
Chord Bear = N 85° 39' 40.61" E

==========
Ending chain PRIVATE__2 description

Beginning chain GAPWAY description
==========

Point GAP001 N 591,037.6846 E 2,443,643.6437 Sta 30+00.00

Course from GAP001 to PC GAPWAY1 N 83° 59' 08.30" E Dist 378.1074

Curve Data

Curve GAPWAY1
P.I. Station 34+91.03 N 591,089.1338 E 2,444,131.9730
Delta = 9° 00' 44.66" (RT)
Degree = 3° 59' 55.30"
Tangent = 112.9248
Length = 225.3837
Radius = 1,432.8620
External = 4.4429
Long Chord = 225.1514
Mid. Ord. = 4.4292
P.C. Station 33+78.11 N 591,077.3018 E 2,444,019.6698
P.T. Station 36+03.49 N 591,083.2277 E 2,444,244.7433
C.C. N 589,652.3268 E 2,444,169.8019
Back = N 83° 59' 08.30" E
Ahead = S 87° 00' 07.04" E
Chord Bear = N 88° 29' 30.63" E

Curve Data

Curve GAPWAY2
P.I. Station 37+16.42 N 591,089.1338 E 2,444,131.9730
Delta = 9° 00' 44.66" (LT)
Degree = 3° 59' 55.30"
Tangent = 112.9248
Length = 225.3837
Radius = 1,432.8620
External = 4.4429
Long Chord = 225.1514
Mid. Ord. = 4.4292
P.C. Station 36+03.49 N 591,083.2277 E 2,444,244.7433
P.T. Station 38+28.87 N 591,077.3018 E 2,444,019.6698
C.C. N 589,652.3268 E 2,444,169.8019
Back = N 87° 00' 07.04" W
Ahead = S 83° 59' 08.30" W
Chord Bear = S 88° 29' 30.63" W

Course from PT GAPWAY2 to GAP002 S 83° 59' 08.30" W Dist 378.1074

Point GAP002 N 591,037.6846 E 2,443,643.6437 Sta 42+06.98

Course from GAP002 to GAP003 N 6° 00' 51.70" W Dist 6.0000

Point GAP003 N 591,043.6516 E 2,443,643.0150 Sta 42+12.98

==========
Ending chain GAPWAY description

SCALE: 100.000 ft / in.
PEN TABLE: East Andrews-SCDOT Levels 2015 B&W Plan-PDF.tbl
PLOT DRIVER: PDF.pltcfg
FILE: G:\JobsOdd\31969-00\Production\Transportation\f_dgn\Const plpr\East Andrews SHEET 5E.dgn
5/4/2023

0 100 200 300 400

SOUTH CAROLINA DAVIS & FLOYD, INC. No. C00538 CERTIFICATE OF AUTHORIZATION

SOUTH CAROLINA REGISTERED PROFESSIONAL ENGINEER No. 19075 MICHAEL VANDIVER NORTON 05/15/2023

DAVIS & FLOYD
SINCE 1954

1940 ALGONQUIN ROAD, SUITE 301
CHARLESTON, SC 29405
(843) 554-8602

REV. NO.	BY	DATE	DESCRIPTION OF REVISION
5			
4			
3			
2			
1			

DES. BY _____ DRAWN BY _____ REVIEWED BY _____ CHECKED BY _____

SOUTH CAROLINA
DEPARTMENT OF TRANSPORTATION

REFERENCE DATA SHEET
EAST ANDREWS DRAINAGE IMPROVEMENTS

SCALE 1"= 100' PLOT SIZE = 22" x 34"

FED. ROAD DIV.NO.	STATE	COUNTY	PROJECT ID	ROUTE NO.	SHEET NO.	TOTAL SHEETS
3	S.C.	GEORGETOWN	-		6	

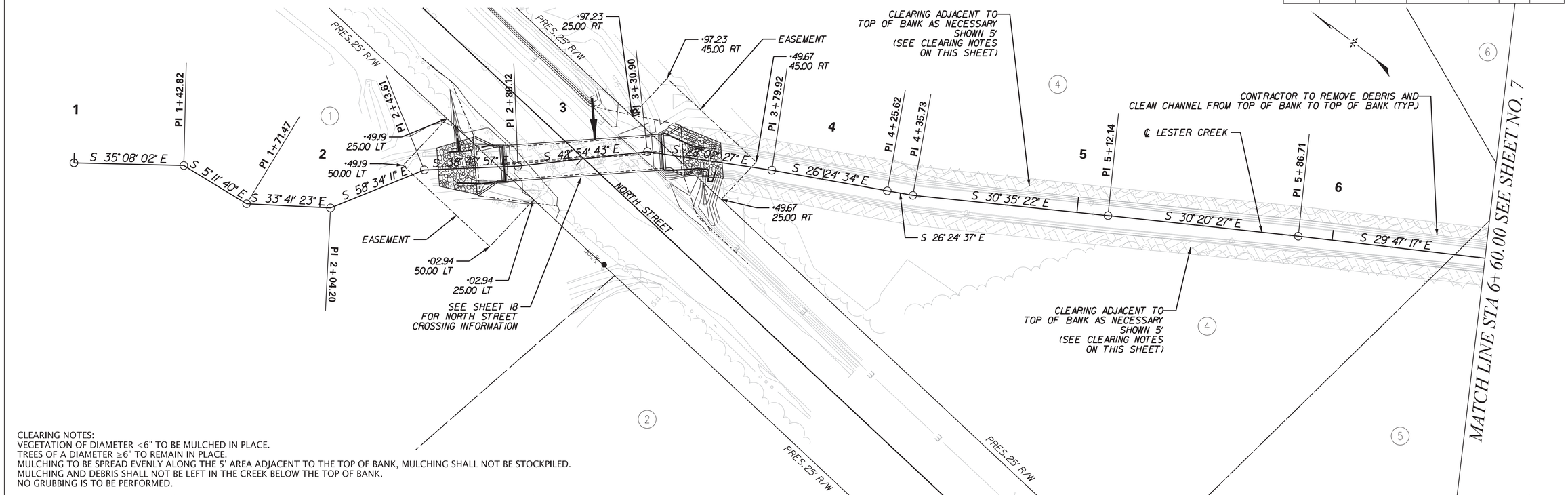

CLEARING NOTES:
VEGETATION OF DIAMETER <6" TO BE MULCHED IN PLACE.
TREES OF A DIAMETER ≥6" TO REMAIN IN PLACE.
MULCHING TO BE SPREAD EVENLY ALONG THE 5' AREA ADJACENT TO THE TOP OF BANK, MULCHING SHALL NOT BE STOCKPILED.
MULCHING AND DEBRIS SHALL NOT BE LEFT IN THE CREEK BELOW THE TOP OF BANK.
NO GRUBBING IS TO BE PERFORMED.

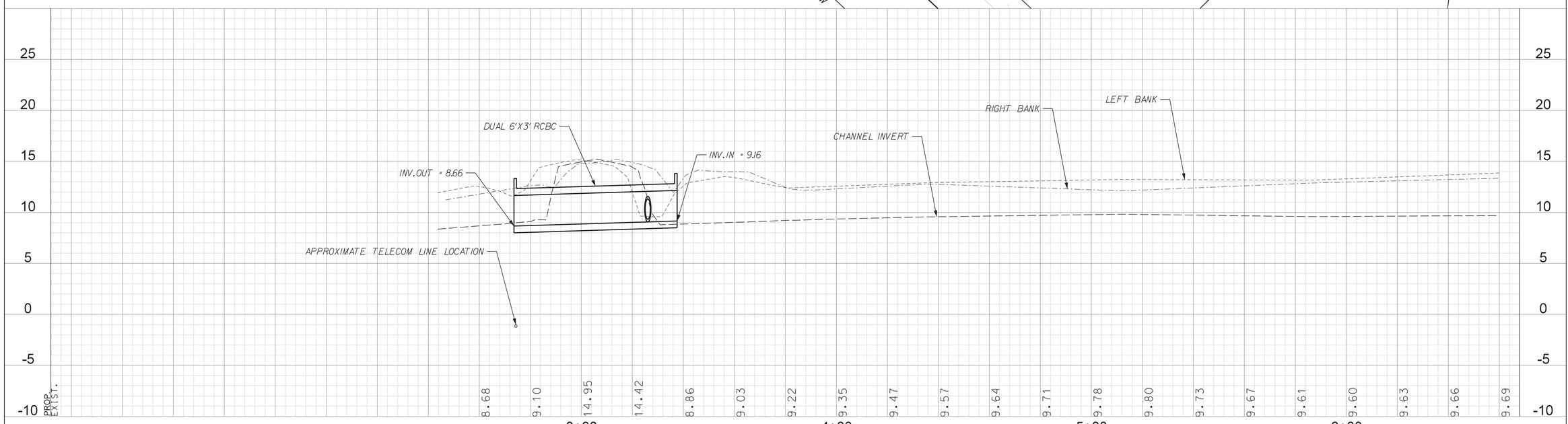

0 20 40 60 80

SCALE: 20.000 ft / in.
PEN TABLE: East Andrews-SCDOT Levels 2015 B&W Plan-PDF.tbl
PLOT DRIVER: PDF.pltcfg
FILE: G:\JobsOdd\31969-00\Production\Transportation\f_dgn\Const plpr\East Andrews SHEET 6.dgn
5/4/2023

SOUTH CAROLINA DAVIS & FLOYD, INC. No. C00538 CERTIFICATE OF AUTHORIZATION

SOUTH CAROLINA REGISTERED PROFESSIONAL ENGINEER No. 19075 MICHAEL VANDIVER HORTON 05/15/2023

DAVIS & FLOYD
SINCE 1954

1940 ALGONQUIN ROAD, SUITE 301
CHARLESTON, SC 29405
(843) 554-8602

REV. NO.	BY	DATE	DESCRIPTION OF REVISION
5			
4			
3			
2			
1			

DES. BY _____ DRAWN BY _____ REVIEWED BY _____ CHECKED BY _____

SOUTH CAROLINA
DEPARTMENT OF TRANSPORTATION

PLAN AND PROFILE SHEET
EAST ANDREWS DRAINAGE IMPROVEMENTS

SCALE 1"= 20' PLOT SIZE = 22" x 34"

FED. ROAD DIV.NO.	STATE	COUNTY	PROJECT ID	ROUTE NO.	SHEET NO.	TOTAL SHEETS
3	S.C.	GEORGETOWN	-		7	

CLEARING NOTES:
VEGETATION OF DIAMETER <6" TO BE MULCHED IN PLACE.
TREES OF A DIAMETER ≥6" TO REMAIN IN PLACE.
MULCHING TO BE SPREAD EVENLY ALONG THE 5' AREA ADJACENT TO THE TOP OF BANK, MULCHING SHALL NOT BE STOCKPILED.
MULCHING AND DEBRIS SHALL NOT BE LEFT IN THE CREEK BELOW THE TOP OF BANK.
NO GRUBBING IS TO BE PERFORMED.

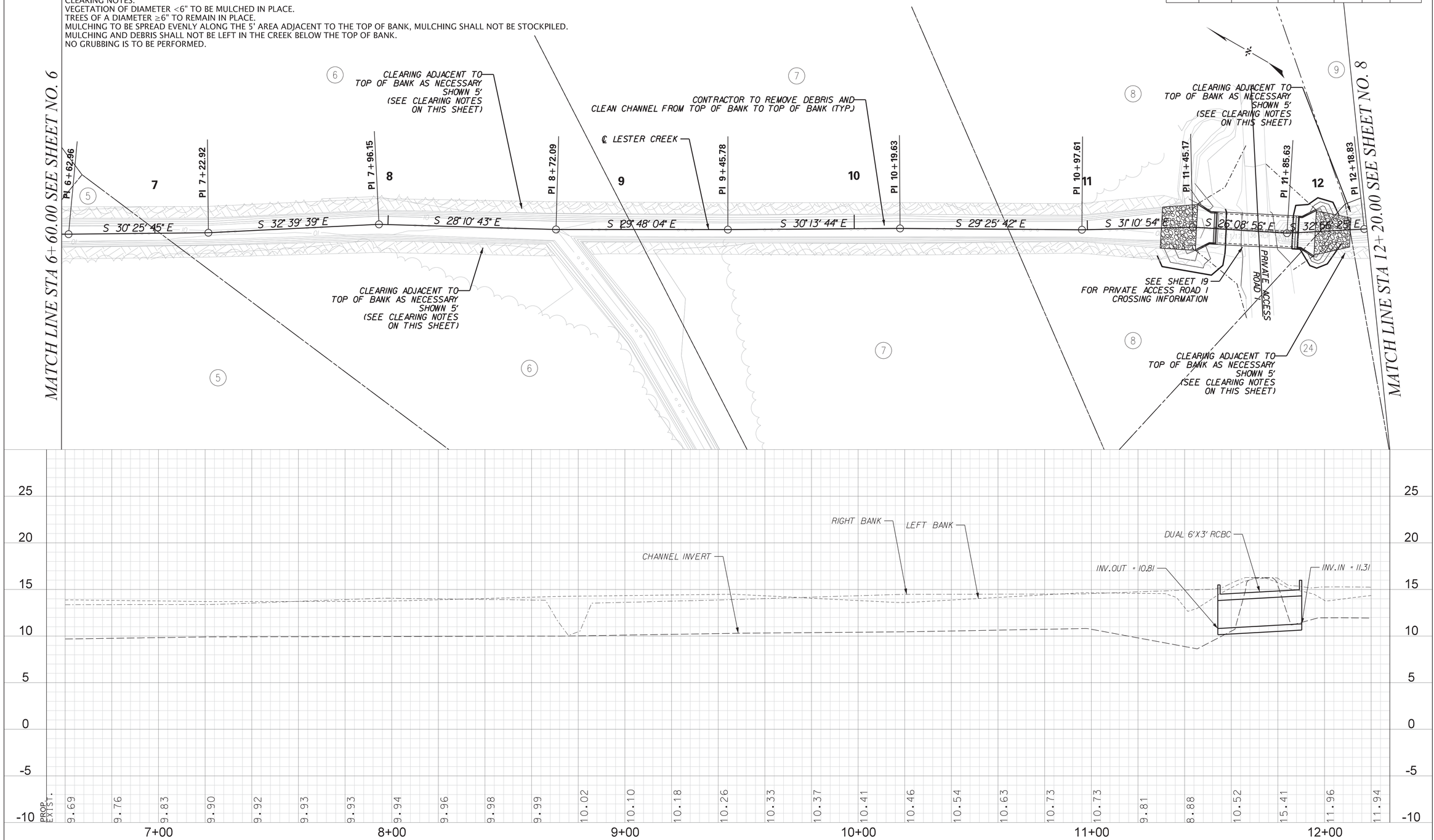

SCALE: 20.000 ft / in.
PEN TABLE: East Andrews-SCDOT Levels 2015 B&W Plan-PDF.tbl
PLOT DRIVER: PDF.pltcfg
FILE: G:\JobsOdd\31969-00\Production\Transportation\f_dgn\Const plpr\East Andrews SHEET 7.dgn
5/4/2023

0 20 40 60 80

SOUTH CAROLINA DAVIS & FLOYD, INC. No. C00538 CERTIFICATE OF AUTHORIZATION

SOUTH CAROLINA REGISTERED PROFESSIONAL ENGINEER No. 19075 MICHAEL VANDIVER HORTON 05/15/2023

1940 ALGONQUIN ROAD, SUITE 301
CHARLESTON, SC 29405
(843) 554-8602

DAVIS & FLOYD
SINCE 1954

REV. NO.	BY	DATE	DESCRIPTION OF REVISION
5			
4			
3			
2			
1			

DES. BY _____ DRAWN BY _____ REVIEWED BY _____ CHECKED BY _____

SOUTH CAROLINA
DEPARTMENT OF TRANSPORTATION

PLAN AND PROFILE SHEET
EAST ANDREWS DRAINAGE IMPROVEMENTS

SCALE 1"= 20' PLOT SIZE = 22" x 34"

FED. ROAD DIV.NO.	STATE	COUNTY	PROJECT ID	ROUTE NO.	SHEET NO.	TOTAL SHEETS
3	S.C.	GEORGETOWN	-		8	

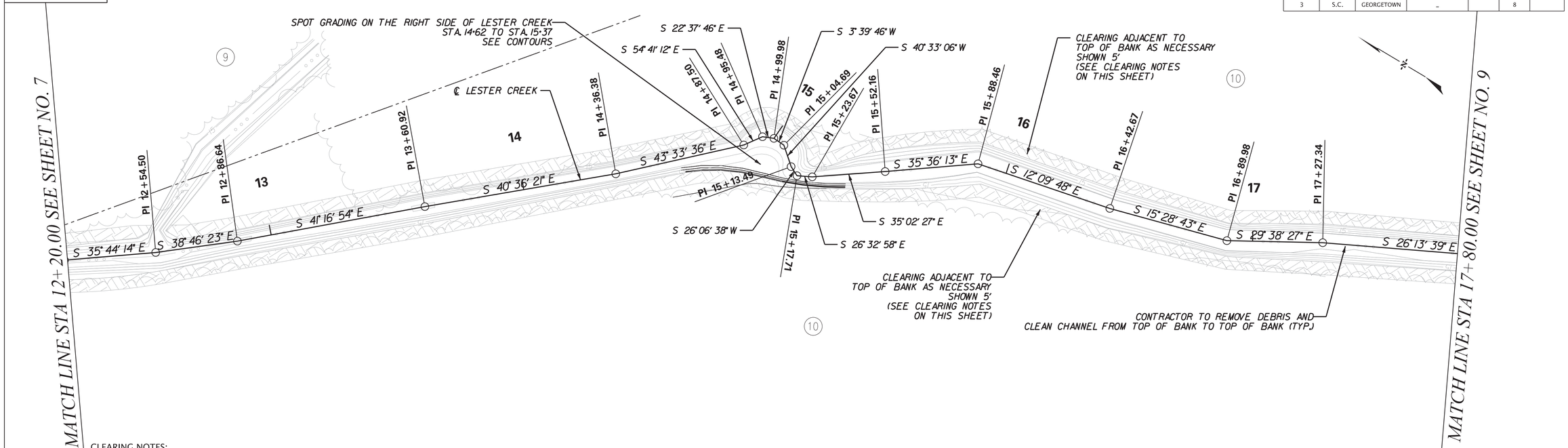

CLEARING NOTES:
VEGETATION OF DIAMETER <6" TO BE MULCHED IN PLACE.
TREES OF A DIAMETER ≥6" TO REMAIN IN PLACE.
MULCHING TO BE SPREAD EVENLY ALONG THE 5' AREA ADJACENT TO THE TOP OF BANK, MULCHING SHALL NOT BE STOCKPILED.
MULCHING AND DEBRIS SHALL NOT BE LEFT IN THE CREEK BELOW THE TOP OF BANK.
NO GRUBBING IS TO BE PERFORMED.

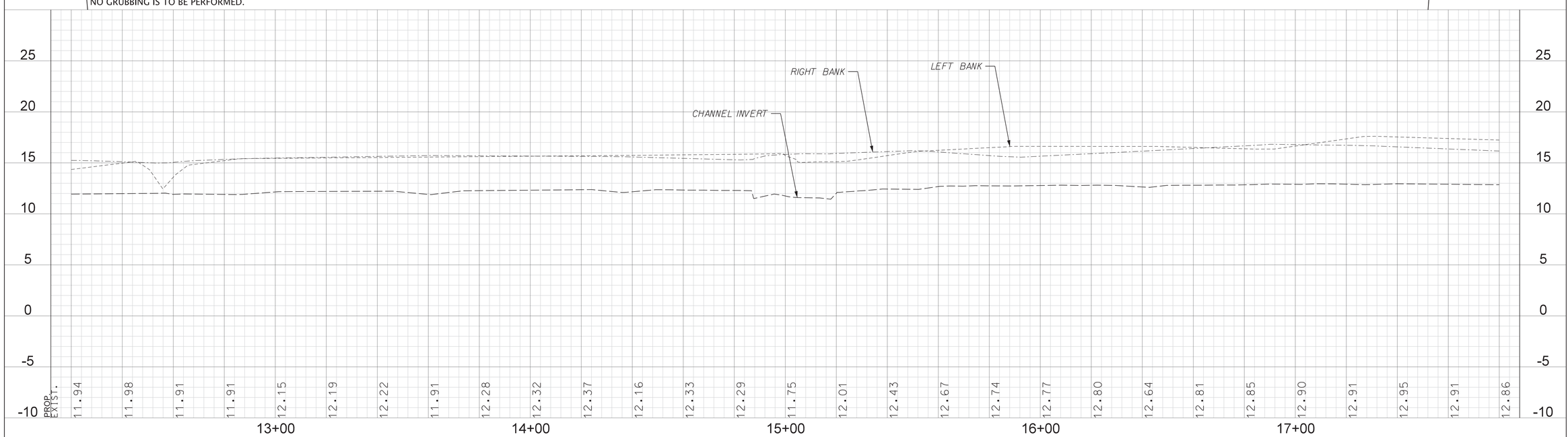

SCALE: 20.000 ft / in.
PEN TABLE: East Andrews-SCDOT Levels 2015 B&W Plan-PDF.tbl
PLOT DRIVER: PDF.pltcfg
FILE: G:\JobsOdd\31969-00\Production\Transportation\f_dgn\Const plpr\East Andrews SHEET 8.dgn
5/4/2023

0 20 40 60 80

SOUTH CAROLINA
DAVIS & FLOYD, INC.
No. C00538
CERTIFICATE OF AUTHORIZATION

SOUTH CAROLINA
REGISTERED PROFESSIONAL ENGINEER
No. 19075
MICHAEL VANDIVER HORTON
05/15/2023

DAVIS & FLOYD
SINCE 1954

1940 ALGONQUIN ROAD, SUITE 301
CHARLESTON, SC 29405
(843) 554-8602

REV. NO.	BY	DATE	DESCRIPTION OF REVISION
5			
4			
3			
2			
1			

DES. BY _____ DRAWN BY _____ REVIEWED BY _____ CHECKED BY _____

SOUTH CAROLINA
DEPARTMENT OF TRANSPORTATION

PLAN AND PROFILE SHEET
EAST ANDREWS DRAINAGE IMPROVEMENTS

SCALE 1"= 20' PLOT SIZE = 22" x 34"

FED. ROAD DIV.NO.	STATE	COUNTY	PROJECT ID	ROUTE NO.	SHEET NO.	TOTAL SHEETS
3	S.C.	GEORGETOWN	-		9	

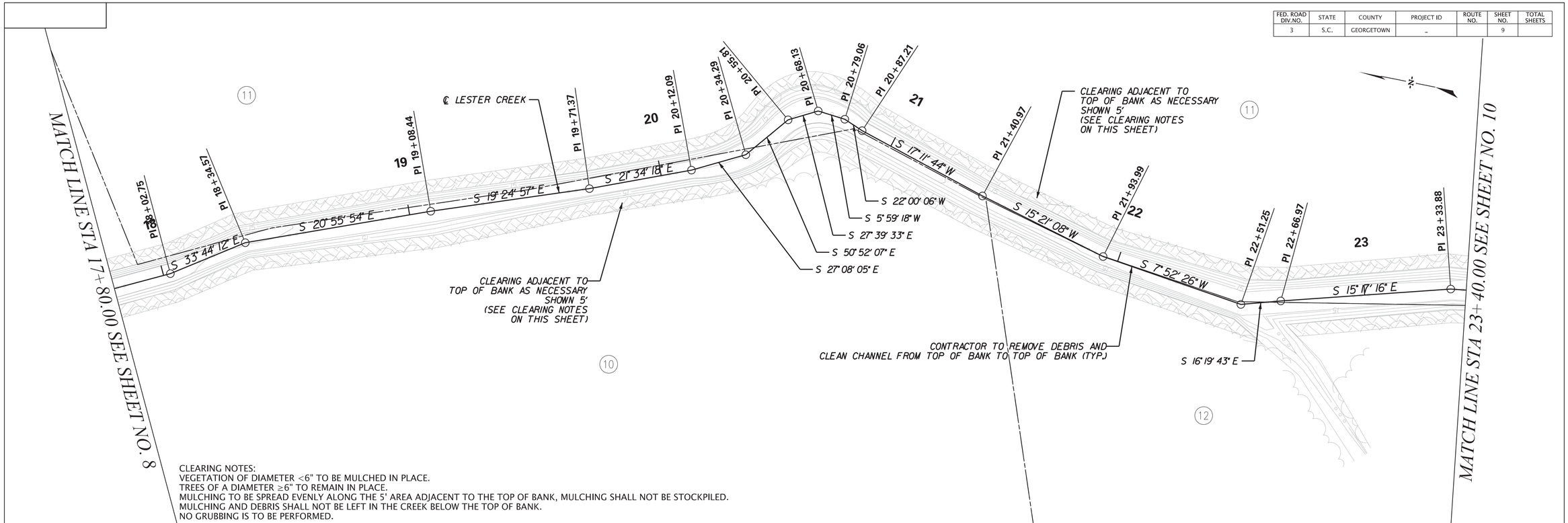

CLEARING NOTES:
VEGETATION OF DIAMETER <6" TO BE MULCHED IN PLACE.
TREES OF A DIAMETER ≥6" TO REMAIN IN PLACE.
MULCHING TO BE SPREAD EVENLY ALONG THE 5' AREA ADJACENT TO THE TOP OF BANK, MULCHING SHALL NOT BE STOCKPILED.
MULCHING AND DEBRIS SHALL NOT BE LEFT IN THE CREEK BELOW THE TOP OF BANK.
NO GRUBBING IS TO BE PERFORMED.

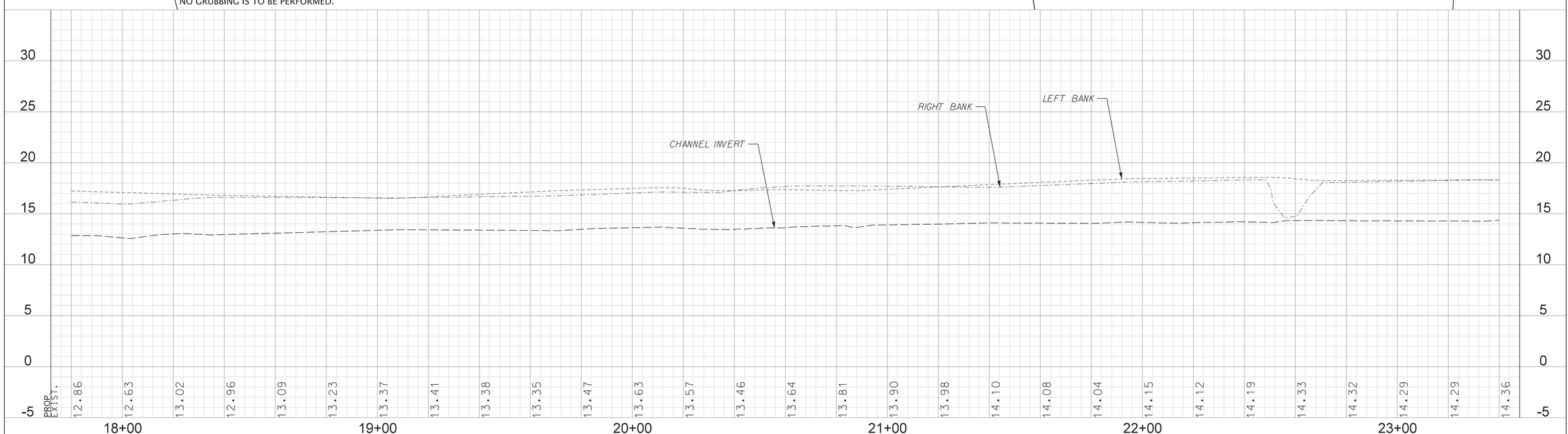

20.000 ft / in.
East Andrews-SCDOT Levels 2015 B&W Plan-PDF.tbl
PDF.pltcfg
G:\JobsOdd\31969-00\Production\Transportation\f_dgn\Const plpr\East Andrews SHEET 9.dgn

SCALE:
PEN TABLE:
PLOT DRIVER:
FILE:
5/4/2023

0 20 40 60 80

SOUTH CAROLINA
DAVIS & FLOYD, INC.
No. C00538
CERTIFICATE OF AUTHORIZATION

SOUTH CAROLINA
REGISTERED PROFESSIONAL ENGINEER
No. 19075
MICHAEL VANDIVER NORTON
05/15/2023

1940 ALGONQUIN ROAD, SUITE 301
CHARLESTON, SC 29405
(843) 554-8602

DAVIS & FLOYD
SINCE 1954

REV. NO.	BY	DATE	DESCRIPTION OF REVISION
5			
4			
3			
2			
1			

DES. BY _____ DRAWN BY _____ REVIEWED BY _____ CHECKED BY _____

SOUTH CAROLINA
DEPARTMENT OF TRANSPORTATION

PLAN AND PROFILE SHEET
EAST ANDREWS DRAINAGE IMPROVEMENTS

SCALE 1"= 20' PLOT SIZE = 22" x 34"

FED. ROAD DIV.NO.	STATE	COUNTY	PROJECT ID	ROUTE NO.	SHEET NO.	TOTAL SHEETS
3	S.C.	GEORGETOWN	-		10	

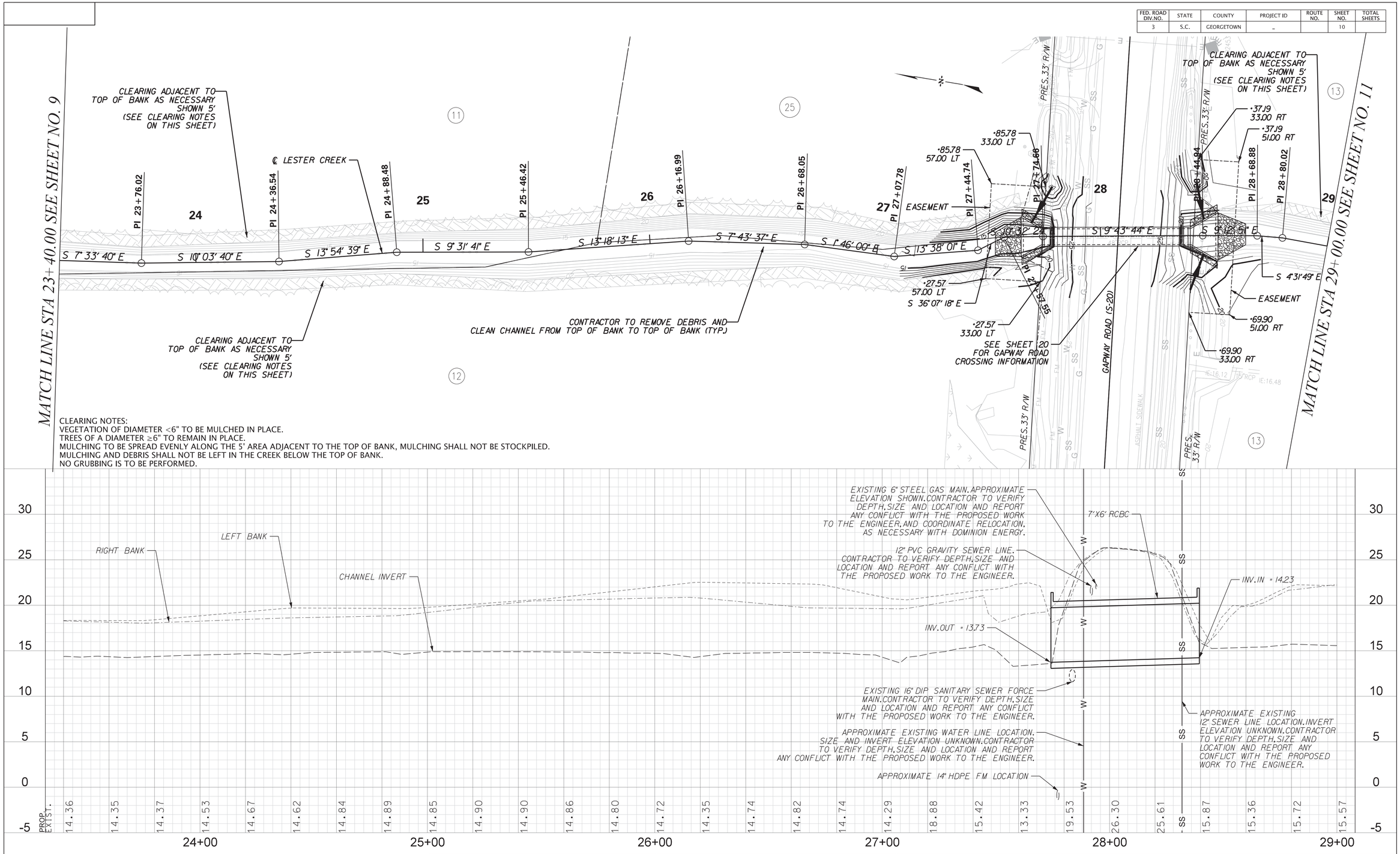

CLEARING NOTES:
VEGETATION OF DIAMETER <6" TO BE MULCHED IN PLACE.
TREES OF A DIAMETER ≥6" TO REMAIN IN PLACE.
MULCHING TO BE SPREAD EVENLY ALONG THE 5' AREA ADJACENT TO THE TOP OF BANK, MULCHING SHALL NOT BE STOCKPILED.
MULCHING AND DEBRIS SHALL NOT BE LEFT IN THE CREEK BELOW THE TOP OF BANK.
NO GRUBBING IS TO BE PERFORMED.

SCALE: 20.000 ft / in.
PEN TABLE: East Andrews-SCDOT Levels 2015 B&W Plan-PDF.tbl
PLOT DRIVER: PDF.pltcfg
FILE: G:\JobsOdd\31969-00\Production\Transportation\f_dgn\Const plpr\East Andrews SHEET 10.dgn
5/4/2023

0 20 40 60 80

SOUTH CAROLINA DAVIS & FLOYD, INC. No. C00538 CERTIFICATE OF AUTHORIZATION

REGISTERED PROFESSIONAL ENGINEER SOUTH CAROLINA No. 19075 MICHAEL VANDIVER NORTON 05/15/2023

1940 ALGONQUIN ROAD, SUITE 301
CHARLESTON, SC 29405
(843) 554-8602

DAVIS & FLOYD
SINCE 1954

REV. NO.	BY	DATE	DESCRIPTION OF REVISION
5			
4			
3			
2			
1			

DES. BY _____ DRAWN BY _____ REVIEWED BY _____ CHECKED BY _____

SOUTH CAROLINA
DEPARTMENT OF TRANSPORTATION

PLAN AND PROFILE SHEET
EAST ANDREWS DRAINAGE IMPROVEMENTS

SCALE 1"= 20' PLOT SIZE = 22" x 34"

FED. ROAD DIV.NO.	STATE	COUNTY	PROJECT ID	ROUTE NO.	SHEET NO.	TOTAL SHEETS
3	S.C.	GEORGETOWN	-		11	

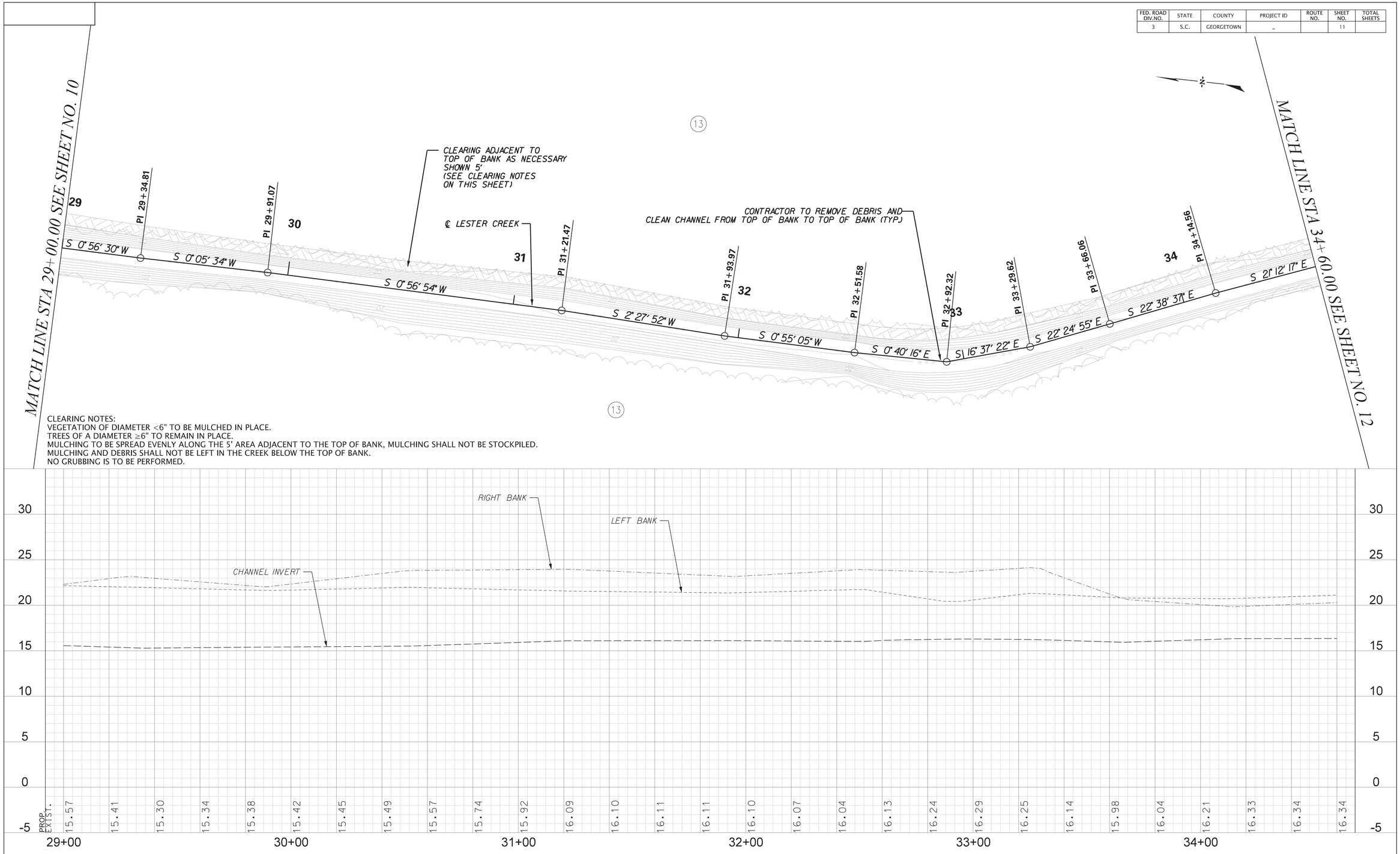

CLEARING NOTES:
VEGETATION OF DIAMETER <6" TO BE MULCHED IN PLACE.
TREES OF A DIAMETER ≥6" TO REMAIN IN PLACE.
MULCHING TO BE SPREAD EVENLY ALONG THE 5' AREA ADJACENT TO THE TOP OF BANK, MULCHING SHALL NOT BE STOCKPILED.
MULCHING AND DEBRIS SHALL NOT BE LEFT IN THE CREEK BELOW THE TOP OF BANK.
NO GRUBBING IS TO BE PERFORMED.

SCALE: 20.000 ft / in.
PEN TABLE: East Andrews-SCDOT Levels 2015 B&W Plan-PDF.tbl
PLOT DRIVER: PDF.pltcfg
FILE: G:\JobsOdd\31969-00\Production\Transportation\f_dgn\Const plpr\East Andrews SHEET 11.dgn
5/4/2023

0 20 40 60 80

SOUTH CAROLINA DAVIS & FLOYD, INC. No. C00538 CERTIFICATE OF AUTHORIZATION

SOUTH CAROLINA REGISTERED PROFESSIONAL ENGINEER No. 19075 MICHAEL VANDIVER NORTON 05/15/2023

1940 ALGONQUIN ROAD, SUITE 301
CHARLESTON, SC 29405
(843) 554-8602

DAVIS & FLOYD
SINCE 1954

REV. NO.	BY	DATE	DESCRIPTION OF REVISION
5			
4			
3			
2			
1			

DES. BY _____ DRAWN BY _____ REVIEWED BY _____ CHECKED BY _____

SOUTH CAROLINA
DEPARTMENT OF TRANSPORTATION

PLAN AND PROFILE SHEET
EAST ANDREWS DRAINAGE IMPROVEMENTS

SCALE 1"= 20' PLOT SIZE = 22" x 34"

FED. ROAD DIV.NO.	STATE	COUNTY	PROJECT ID	ROUTE NO.	SHEET NO.	TOTAL SHEETS
3	S.C.	GEORGETOWN	-		12	

MATCH LINE STA 34+60.00 SEE SHEET NO. 11

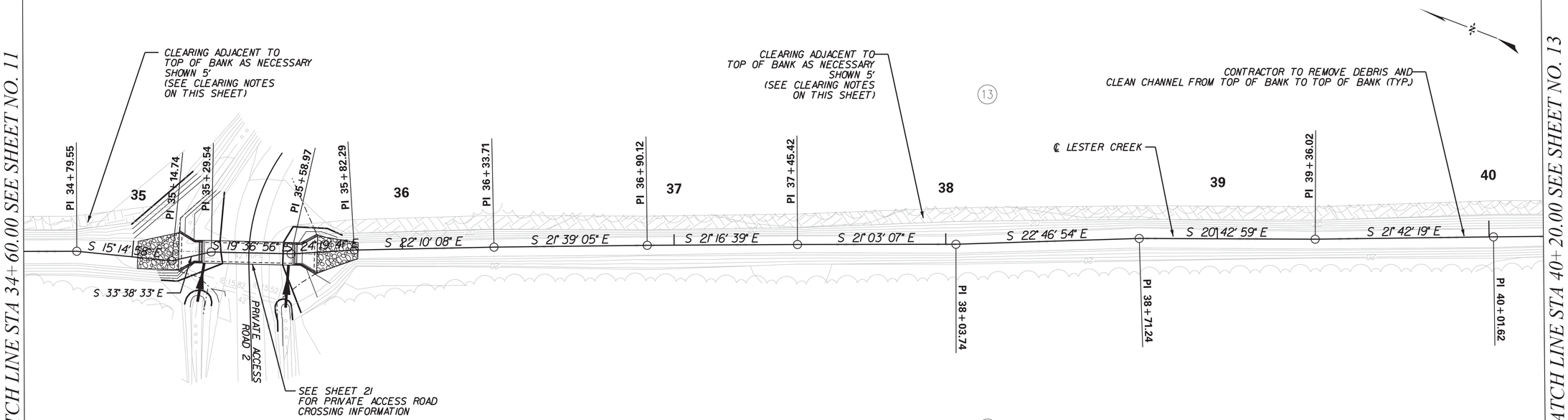

MATCH LINE STA 40+20.00 SEE SHEET NO. 13

CLEARING NOTES:
VEGETATION OF DIAMETER <6" TO BE MULCHED IN PLACE.
TREES OF A DIAMETER ≥6" TO REMAIN IN PLACE.
MULCHING TO BE SPREAD EVENLY ALONG THE 5' AREA ADJACENT TO THE TOP OF BANK, MULCHING SHALL NOT BE STOCKPILED.
MULCHING AND DEBRIS SHALL NOT BE LEFT IN THE CREEK BELOW THE TOP OF BANK.
NO GRUBBING IS TO BE PERFORMED.

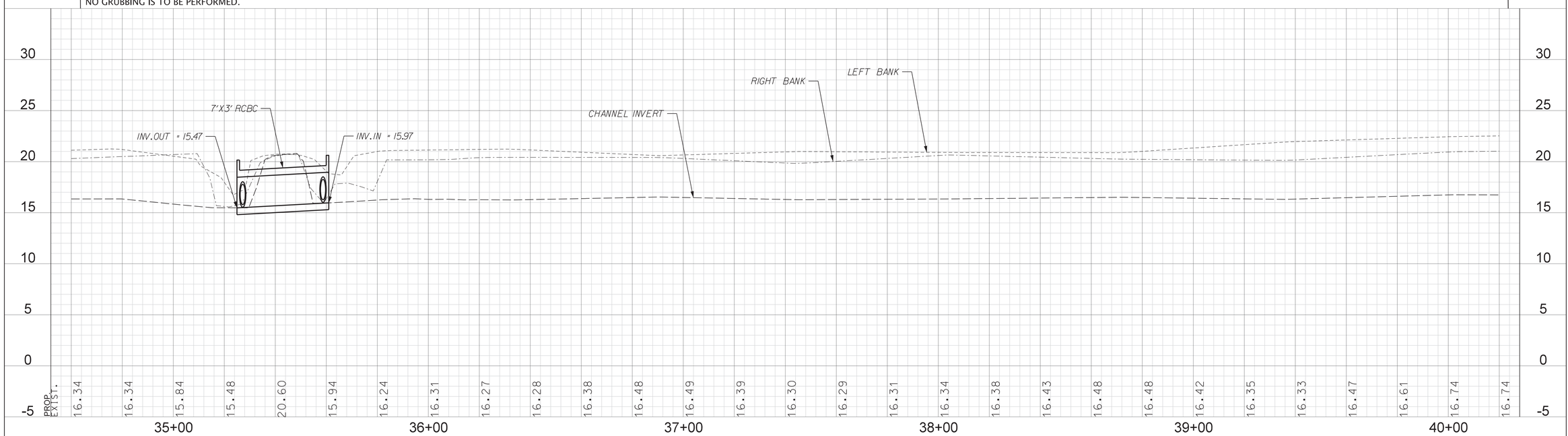

0 20 40 60 80

SCALE: 20.000 ft / in.
PEN TABLE: East Andrews-SCDOT Levels 2015 B&W Plan-PDF.tbl
PLOT DRIVER: PDF.pltcfg
FILE: G:\JobsOdd\31969-00\Production\Transportation\f_dgn\Const plpr\East Andrews SHEET 12.dgn
5/4/2023

SOUTH CAROLINA DAVIS & FLOYD, INC. No. C00538 CERTIFICATE OF AUTHORIZATION

SOUTH CAROLINA REGISTERED PROFESSIONAL ENGINEER No. 19075 MICHELL VANDIVER NORTON 05/15/2023

DAVIS & FLOYD
SINCE 1954

1940 ALGONQUIN ROAD, SUITE 301
CHARLESTON, SC 29405
(843) 554-8602

REV. NO.	BY	DATE	DESCRIPTION OF REVISION
5			
4			
3			
2			
1			

DES. BY _____ DRAWN BY _____ REVIEWED BY _____ CHECKED BY _____

SOUTH CAROLINA
DEPARTMENT OF TRANSPORTATION

PLAN AND PROFILE SHEET
EAST ANDREWS DRAINAGE IMPROVEMENTS

SCALE 1"= 20' PLOT SIZE = 22" x 34"

FED. ROAD DIV.NO.	STATE	COUNTY	PROJECT ID	ROUTE NO.	SHEET NO.	TOTAL SHEETS
3	S.C.	GEORGETOWN	-		13	

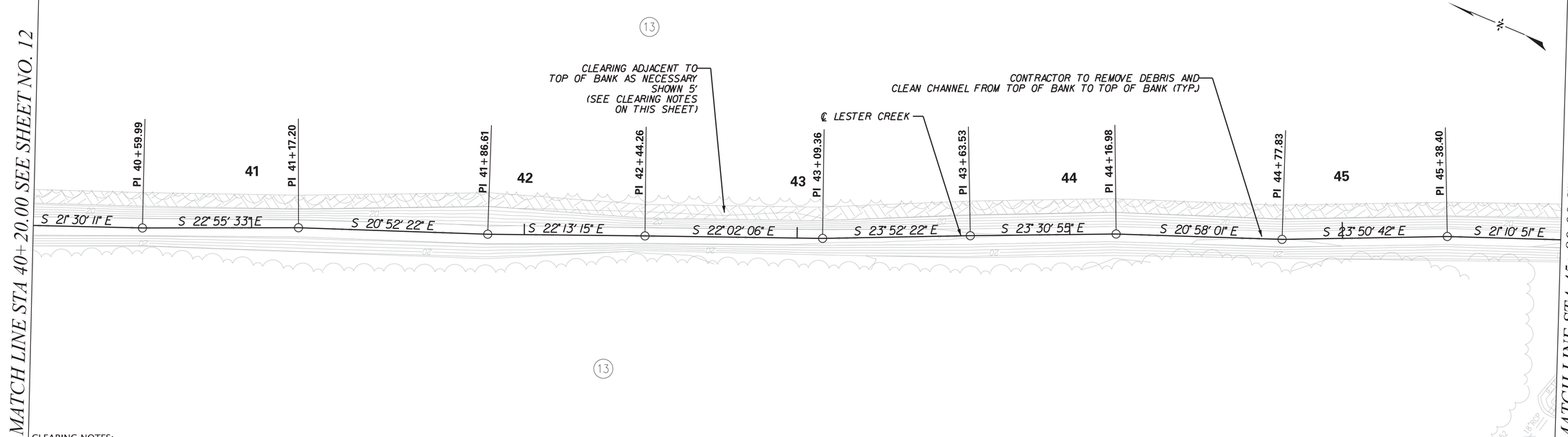

CLEARING NOTES:
VEGETATION OF DIAMETER <6" TO BE MULCHED IN PLACE.
TREES OF A DIAMETER ≥6" TO REMAIN IN PLACE.
MULCHING TO BE SPREAD EVENLY ALONG THE 5' AREA ADJACENT TO THE TOP OF BANK, MULCHING SHALL NOT BE STOCKPILED.
MULCHING AND DEBRIS SHALL NOT BE LEFT IN THE CREEK BELOW THE TOP OF BANK.
NO GRUBBING IS TO BE PERFORMED.

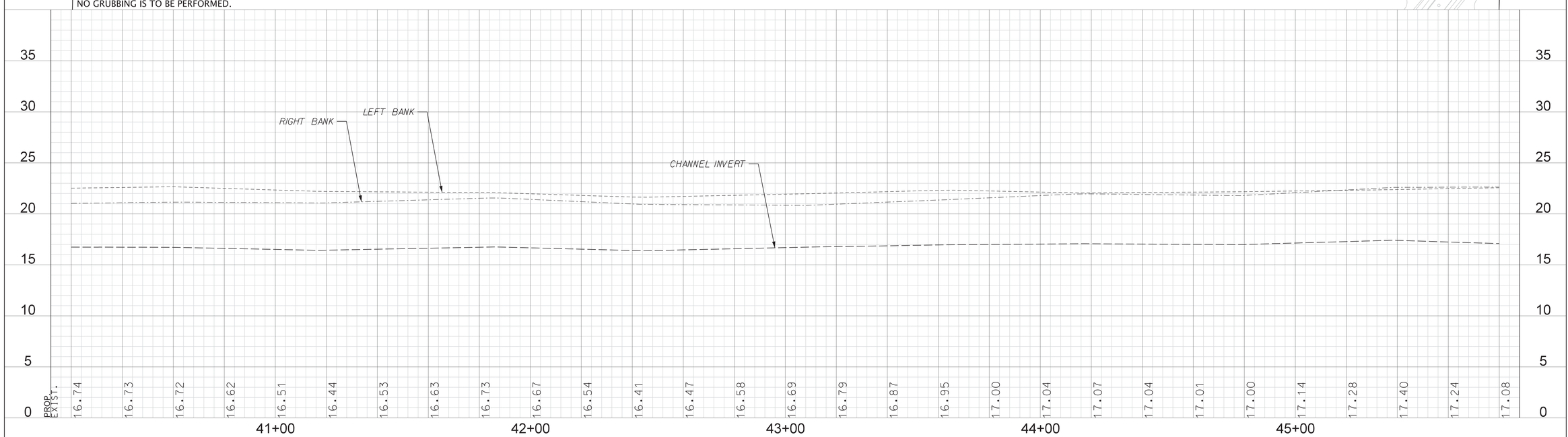

SCALE: 20.000 ft / in.
PEN TABLE: East Andrews-SCDOT Levels 2015 B&W Plan-PDF.tbl
PLOT DRIVER: PDF.pltcfg
FILE: G:\JobsOdd\31969-00\Production\Transportation\f_dgn\Const plpr\East Andrews SHEET 13.dgn
5/4/2023

0 20 40 60 80

SOUTH CAROLINA DAVIS & FLOYD, INC. No. C00538 CERTIFICATE OF AUTHORIZATION

SOUTH CAROLINA REGISTERED PROFESSIONAL ENGINEER No. 19075 MICHAEL VANDIVER HORTON 05/15/2023

1940 ALGONQUIN ROAD, SUITE 301
CHARLESTON, SC 29405
(843) 554-8602

DAVIS & FLOYD
SINCE 1954

REV. NO.	BY	DATE	DESCRIPTION OF REVISION
5			
4			
3			
2			
1			

DES. BY _____ DRAWN BY _____ REVIEWED BY _____ CHECKED BY _____

SOUTH CAROLINA
DEPARTMENT OF TRANSPORTATION

PLAN AND PROFILE SHEET
EAST ANDREWS DRAINAGE IMPROVEMENTS

SCALE 1"= 20' PLOT SIZE = 22" x 34"

FED. ROAD DIV.NO.	STATE	COUNTY	PROJECT ID	ROUTE NO.	SHEET NO.	TOTAL SHEETS
3	S.C.	GEORGETOWN	-		14	

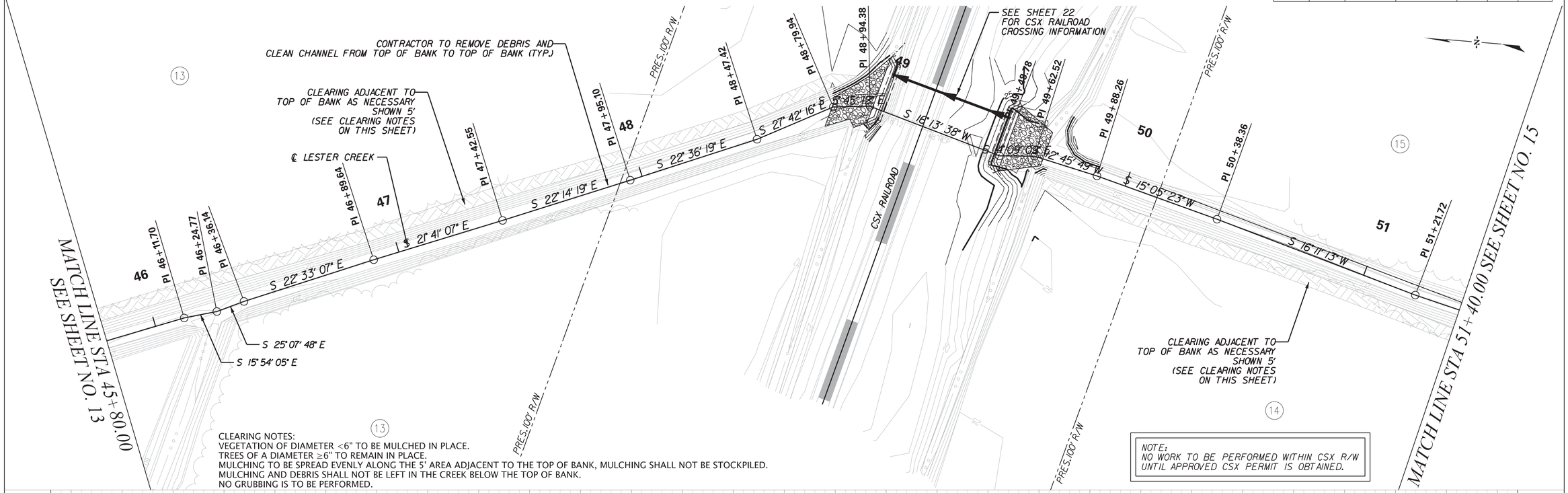

CLEARING NOTES:
VEGETATION OF DIAMETER <6" TO BE MULCHED IN PLACE.
TREES OF A DIAMETER ≥6" TO REMAIN IN PLACE.
MULCHING TO BE SPREAD EVENLY ALONG THE 5' AREA ADJACENT TO THE TOP OF BANK, MULCHING SHALL NOT BE STOCKPILED.
MULCHING AND DEBRIS SHALL NOT BE LEFT IN THE CREEK BELOW THE TOP OF BANK.
NO GRUBBING IS TO BE PERFORMED.

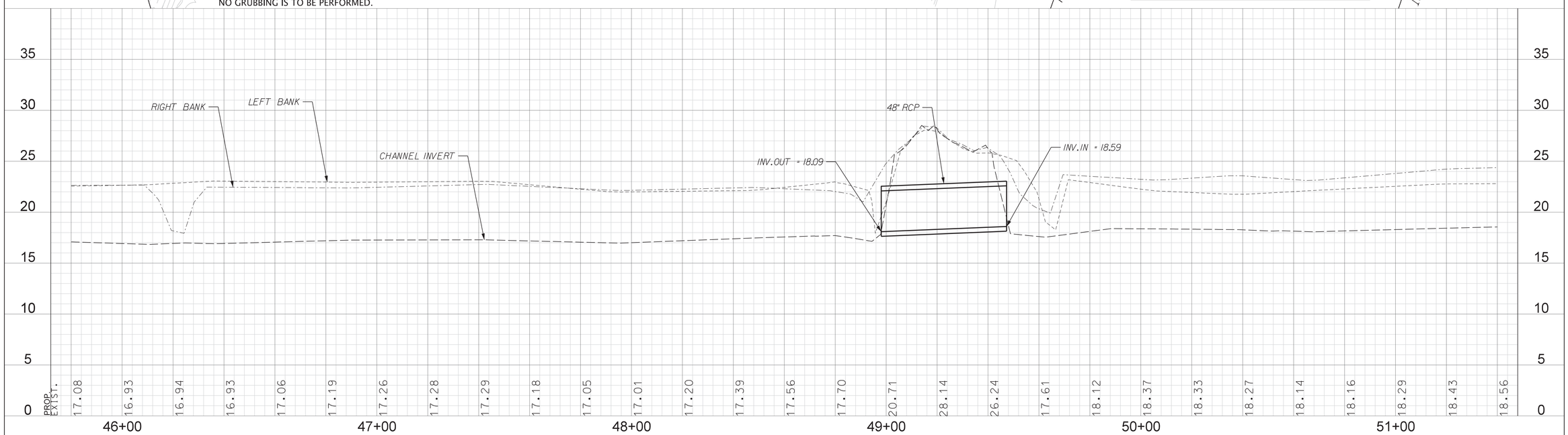

0 20 40 60 80

SCALE: 20.000 ft / in.
PEN TABLE: East Andrews-SCDOT Levels 2015 B&W Plan-PDF.tbl
PLOT DRIVER: PDF.pltcfg
FILE: G:\JobsOdd\31969-00\Production\Transportation\f_dgn\Const plpr\East Andrews SHEET 14.dgn
5/4/2023

SOUTH CAROLINA DAVIS & FLOYD, INC. No. C00538 CERTIFICATE OF AUTHORIZATION

SOUTH CAROLINA REGISTERED PROFESSIONAL ENGINEER MICHAEL VANDIVER HORTON No. 19075 05/15/2023

1940 ALGONQUIN ROAD, SUITE 301
CHARLESTON, SC 29405
(843) 554-8602

DAVIS & FLOYD
SINCE 1954

REV. NO.	BY	DATE	DESCRIPTION OF REVISION
5			
4			
3			
2			
1			

DES. BY _____ DRAWN BY _____ REVIEWED BY _____ CHECKED BY _____

SOUTH CAROLINA DEPARTMENT OF TRANSPORTATION

PLAN AND PROFILE SHEET
EAST ANDREWS DRAINAGE IMPROVEMENTS

SCALE 1"= 20' PLOT SIZE = 22" x 34"

FED. ROAD DIV.NO.	STATE	COUNTY	PROJECT ID	ROUTE NO.	SHEET NO.	TOTAL SHEETS
3	S.C.	GEORGETOWN	-		15	

MATCH LINE STA 51+40.00 SEE SHEET NO. 14

MATCH LINE STA 57+00.00 SEE SHEET NO. 16

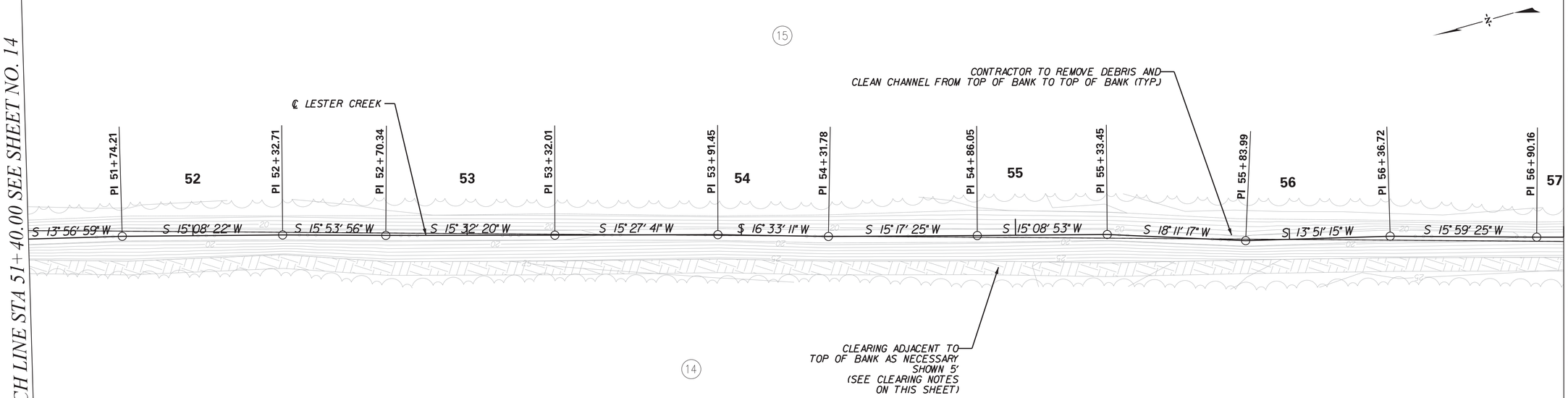

CLEARING NOTES:
VEGETATION OF DIAMETER <6" TO BE MULCHED IN PLACE.
TREES OF A DIAMETER ≥6" TO REMAIN IN PLACE.
MULCHING TO BE SPREAD EVENLY ALONG THE 5' AREA ADJACENT TO THE TOP OF BANK, MULCHING SHALL NOT BE STOCKPILED.
MULCHING AND DEBRIS SHALL NOT BE LEFT IN THE CREEK BELOW THE TOP OF BANK.
NO GRUBBING IS TO BE PERFORMED.

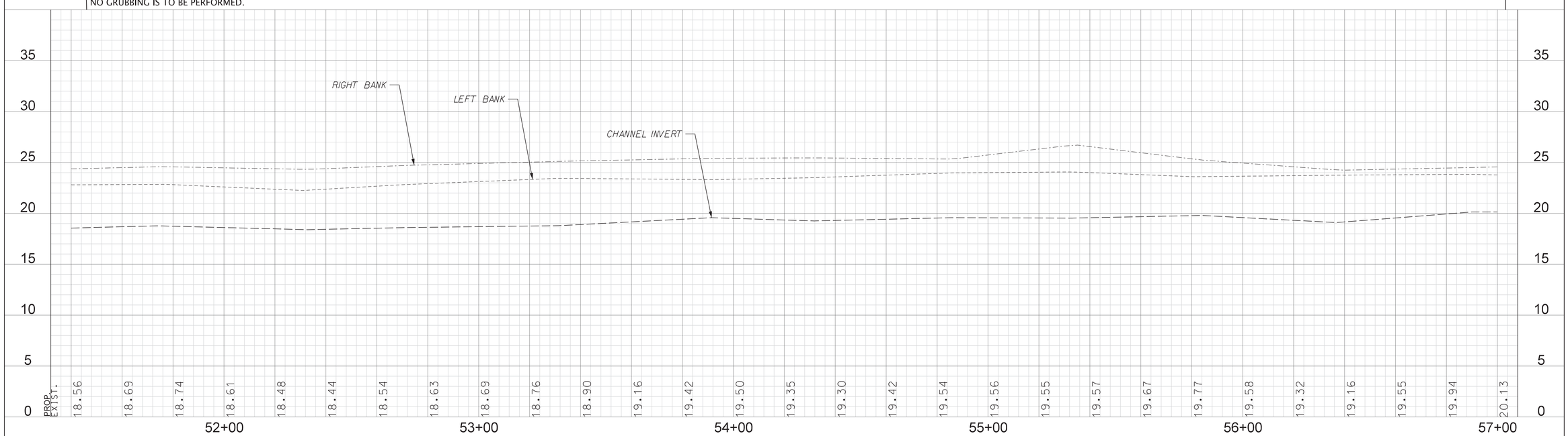

20.000 ft / in.
East Andrews-SCDOT Levels 2015 B&W Plan-PDF.tbl
PDF.pltcfg
G:\JobsOdd\31969-00\Production\Transportation\f_dgn\Const plpr\East Andrews SHEET 15.dgn

SCALE:
PEN TABLE:
PLOT DRIVER:
FILE:
5/4/2023

0 20 40 60 80

SOUTH CAROLINA
DAVIS & FLOYD, INC.
No. C00538
CERTIFICATE OF AUTHORIZATION

SOUTH CAROLINA
REGISTERED PROFESSIONAL ENGINEER
No. 19075
MICHAEL VANDIVER NORTON
05/15/2023

1940 ALGONQUIN ROAD, SUITE 301
CHARLESTON, SC 29405
(843) 554-8602

DAVIS & FLOYD
SINCE 1954

REV. NO.	BY	DATE	DESCRIPTION OF REVISION
5			
4			
3			
2			
1			

DES. BY _____ DRAWN BY _____ REVIEWED BY _____ CHECKED BY _____

SOUTH CAROLINA
DEPARTMENT OF TRANSPORTATION

PLAN AND PROFILE SHEET
EAST ANDREWS DRAINAGE IMPROVEMENTS

SCALE 1"= 20' PLOT SIZE = 22" x 34"

FED. ROAD DIV.NO.	STATE	COUNTY	PROJECT ID	ROUTE NO.	SHEET NO.	TOTAL SHEETS
3	S.C.	GEORGETOWN	-		16	

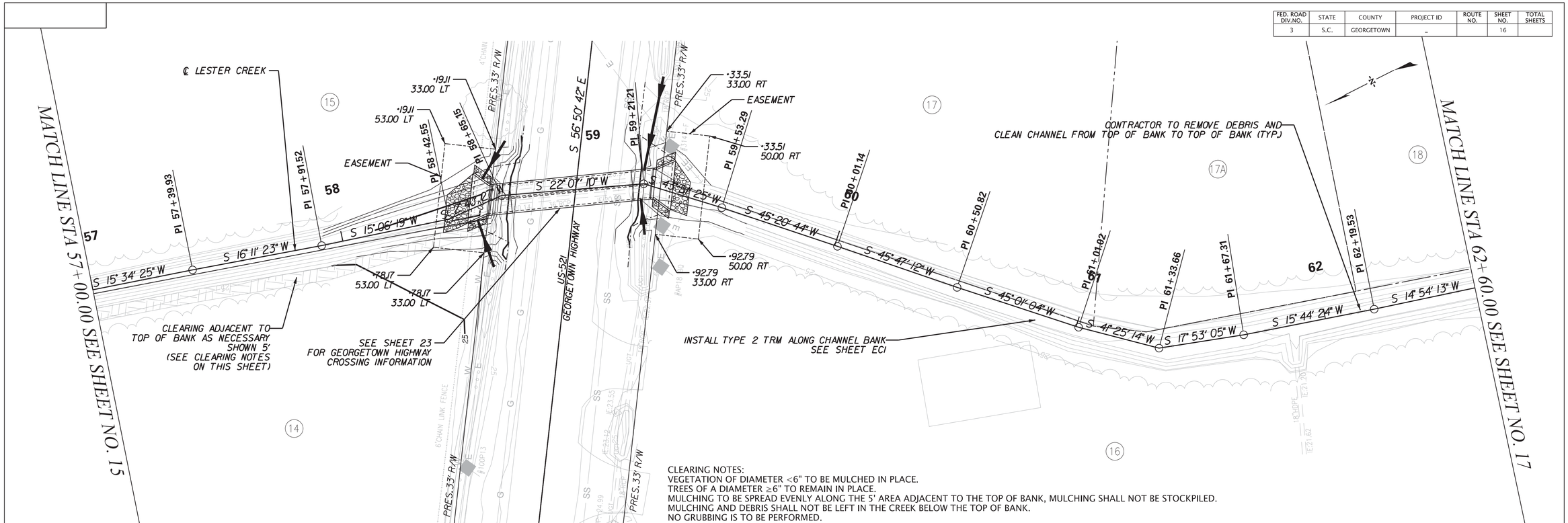

CLEARING NOTES:
VEGETATION OF DIAMETER <6" TO BE MULCHED IN PLACE.
TREES OF A DIAMETER ≥6" TO REMAIN IN PLACE.
MULCHING TO BE SPREAD EVENLY ALONG THE 5' AREA ADJACENT TO THE TOP OF BANK, MULCHING SHALL NOT BE STOCKPILED.
MULCHING AND DEBRIS SHALL NOT BE LEFT IN THE CREEK BELOW THE TOP OF BANK.
NO GRUBBING IS TO BE PERFORMED.

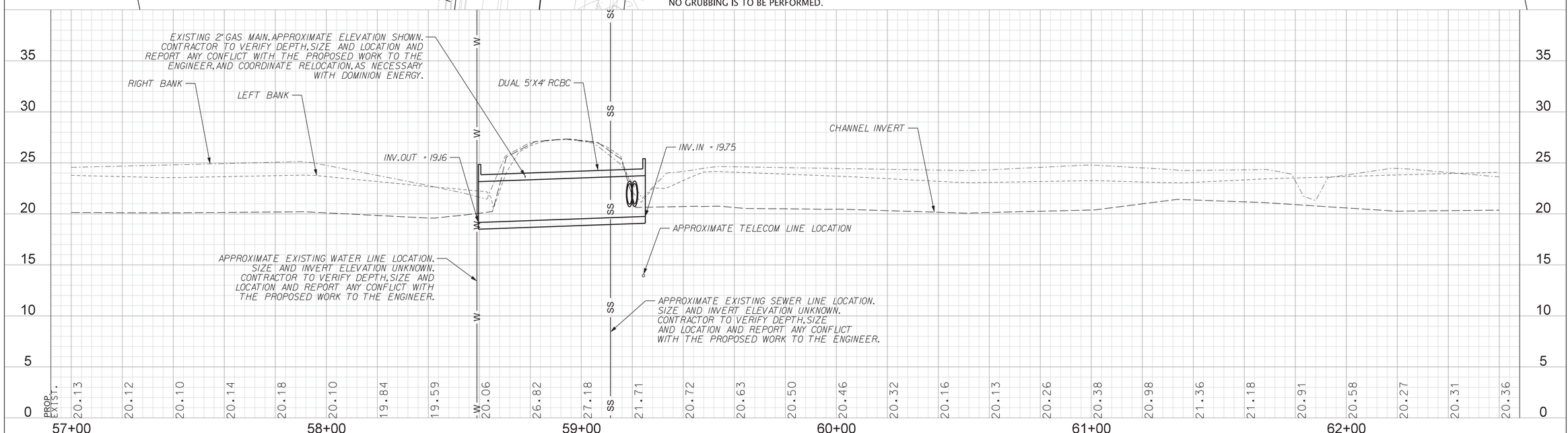

SCALE: 20.000 ft / in.
PEN TABLE: East Andrews-SCDOT Levels 2015 B&W Plan-PDF.tbl
PLOT DRIVER: PDF.pltcfg
FILE: G:\JobsOdd\31969-00\Production\Transportation\f_dgn\Const plpr\East Andrews SHEET 16.dgn
5/4/2023

0 20 40 60 80

DAVIS & FLOYD, INC. No. C00538 — SOUTH CAROLINA CERTIFICATE OF AUTHORIZATION

REGISTERED PROFESSIONAL ENGINEER — SOUTH CAROLINA — No. 19075 — MICHAEL VANDIVER NORTON — 05/15/2023

1940 ALGONQUIN ROAD, SUITE 301
CHARLESTON, SC 29405
(843) 554-8602

DAVIS & FLOYD
SINCE 1954

REV. NO.	BY	DATE	DESCRIPTION OF REVISION
5			
4			
3			
2			
1			

DES. BY _____ DRAWN BY _____ REVIEWED BY _____ CHECKED BY _____

SOUTH CAROLINA
DEPARTMENT OF TRANSPORTATION

PLAN AND PROFILE SHEET
EAST ANDREWS DRAINAGE IMPROVEMENTS

SCALE 1" = 20' PLOT SIZE = 22" x 34"

FED. ROAD DIV.NO.	STATE	COUNTY	PROJECT ID	ROUTE NO.	SHEET NO.	TOTAL SHEETS
3	S.C.	GEORGETOWN	-		17	

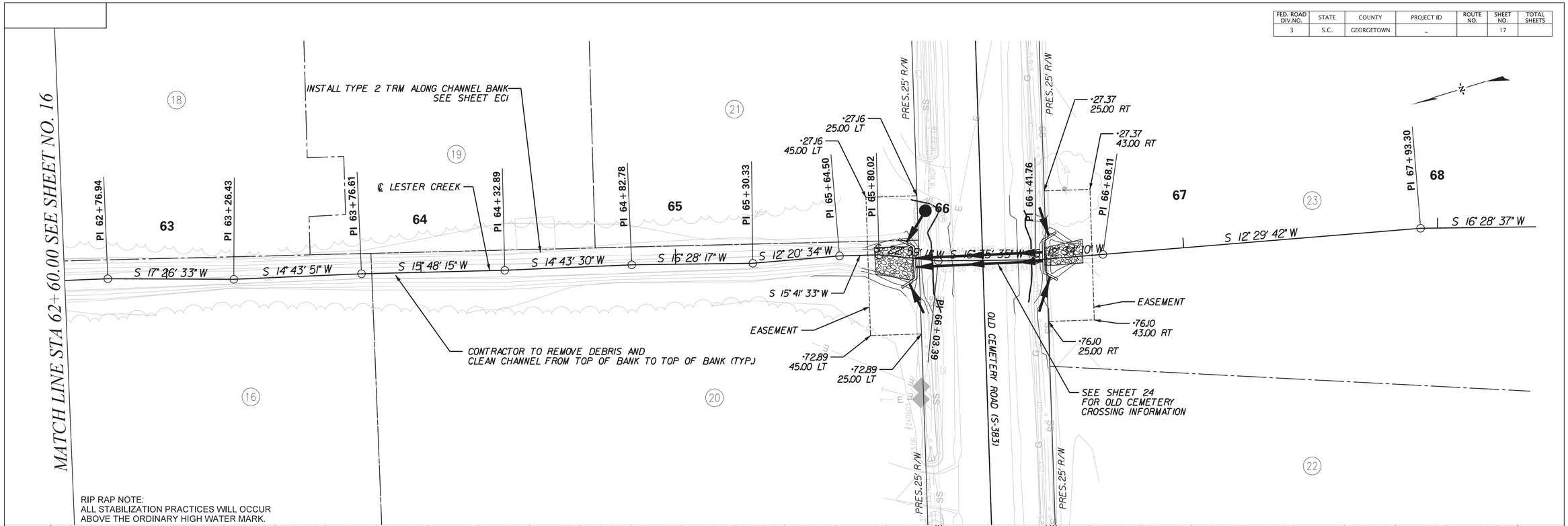

20.000 ft / in.
East Andrews-SCDOT Levels 2015 B&W Plan-PDF.tbl
PDF.pltcfg
G:\JobsOdd\31969-00\Production\Transportation\f_dgn\Const plpr\East Andrews SHEET 17.dgn

SCALE:
PEN TABLE:
PLOT DRIVER:
FILE:
5/4/2023

0 20 40 60 80

DAVIS & FLOYD, INC. No. C005.38 — SOUTH CAROLINA CERTIFICATE OF AUTHORIZATION

REGISTERED PROFESSIONAL ENGINEER — SOUTH CAROLINA — No. 19075 — MICHEL VANDIVER HORTON — 05/15/2023

1940 ALGONQUIN ROAD, SUITE 301
CHARLESTON, SC 29405
(843) 554-8602

DAVIS & FLOYD
SINCE 1954

REV. NO.	BY	DATE	DESCRIPTION OF REVISION
5			
4			
3			
2			
1			

DES. BY _____ DRAWN BY _____ REVIEWED BY _____ CHECKED BY _____

SOUTH CAROLINA
DEPARTMENT OF TRANSPORTATION

PLAN AND PROFILE SHEET
EAST ANDREWS DRAINAGE IMPROVEMENTS

SCALE 1" = 20' PLOT SIZE = 22" x 34"

FED. ROAD DIV.NO.	STATE	COUNTY	PROJECT ID	ROUTE NO.	SHEET NO.	TOTAL SHEETS
3	S.C.	GEORGETOWN	-		18	

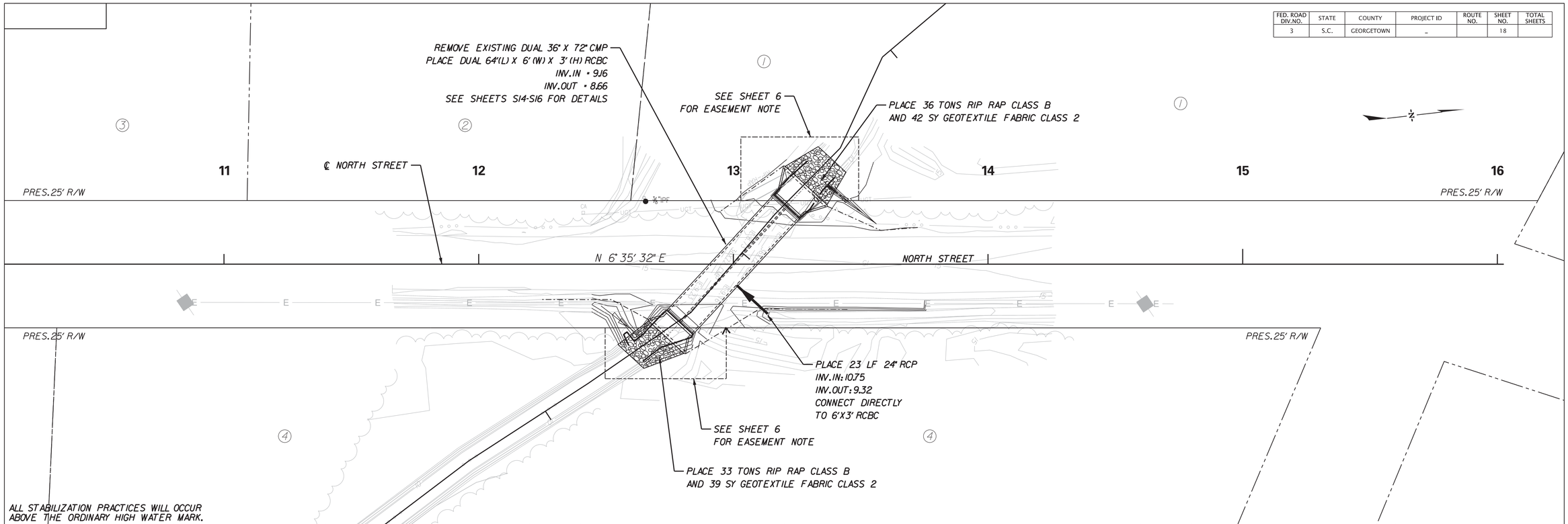

20.000 ft / in.
East Andrews-SCDOT Levels 2015 B&W Plan-PDF.tbl
PDF.pltcfg
G:\JobsOdd\31969-00\Production\Transportation\f_dgn\Const plpr\East Andrews SHEET 18.dgn

SCALE:
PEN TABLE:
PLOT DRIVER:
FILE:
5/4/2023

0 20 40 60 80

SOUTH CAROLINA
DAVIS & FLOYD, INC.
No. C00538
CERTIFICATE OF AUTHORIZATION

SOUTH CAROLINA
REGISTERED PROFESSIONAL ENGINEER
No. 19075
MICHELL VANDIVER NORTON
05/15/2023

1940 ALGONQUIN ROAD, SUITE 301
CHARLESTON, SC 29405
(843) 554-8602

DAVIS & FLOYD
SINCE 1954

REV. NO.	BY	DATE	DESCRIPTION OF REVISION
5			
4			
3			
2			
1			

DES. BY _____ DRAWN BY _____ REVIEWED BY _____ CHECKED BY _____

SOUTH CAROLINA
DEPARTMENT OF TRANSPORTATION

PLAN AND PROFILE SHEET
EAST ANDREWS DRAINAGE IMPROVEMENTS

SCALE 1" = 20' PLOT SIZE = 22" x 34"

FED. ROAD DIV.NO.	STATE	COUNTY	PROJECT ID	ROUTE NO.	SHEET NO.	TOTAL SHEETS
3	S.C.	GEORGETOWN	-		19	

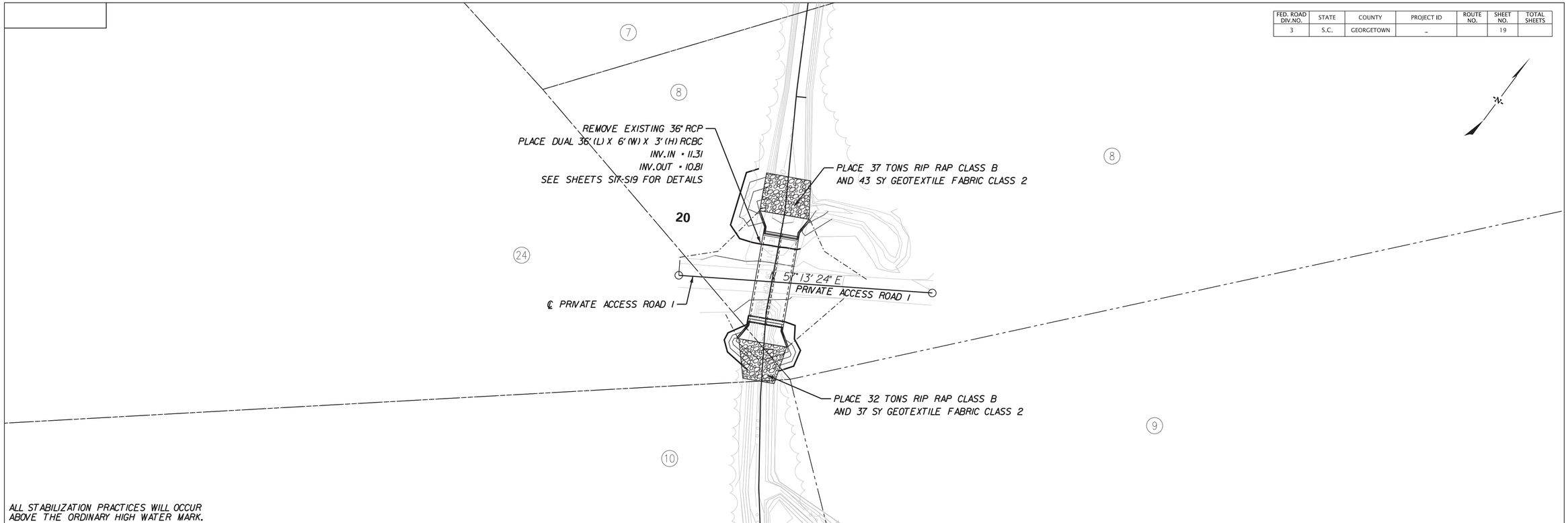

ALL STABILIZATION PRACTICES WILL OCCUR ABOVE THE ORDINARY HIGH WATER MARK.

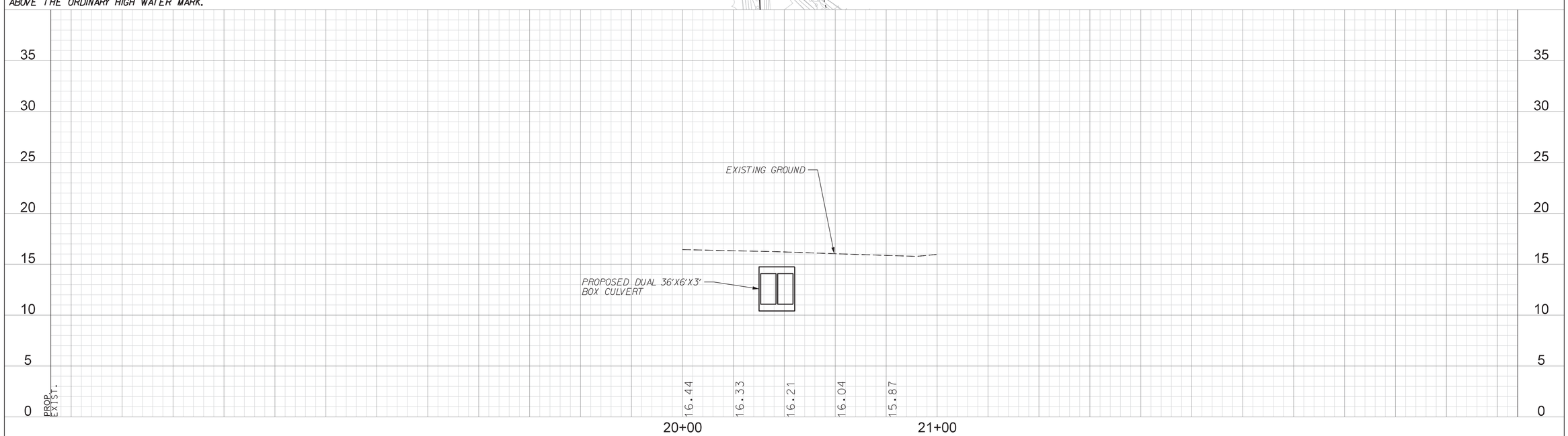

SCALE: 20.000 ft / in.
PEN TABLE: East Andrews-SCDOT Levels 2015 B&W Plan-PDF.tbl
PLOT DRIVER: PDF.pltcfg
FILE: G:\JobsOdd\31969-00\Production\Transportation\f_dgn\Const plpr\East Andrews SHEET 19.dgn
5/4/2023

0 20 40 60 80

SOUTH CAROLINA DAVIS & FLOYD, INC. No. C00538 CERTIFICATE OF AUTHORIZATION

SOUTH CAROLINA REGISTERED PROFESSIONAL ENGINEER No. 19075 MICHAEL VANDIVER HORTON 05/15/2023

1940 ALGONQUIN ROAD, SUITE 301
CHARLESTON, SC 29405
(843) 554-8602

DAVIS & FLOYD
SINCE 1954

REV. NO.	BY	DATE	DESCRIPTION OF REVISION
5			
4			
3			
2			
1			

DES. BY _____ DRAWN BY _____ REVIEWED BY _____ CHECKED BY _____

SOUTH CAROLINA
DEPARTMENT OF TRANSPORTATION

PLAN AND PROFILE SHEET
EAST ANDREWS DRAINAGE IMPROVEMENTS

SCALE 1" = 20' PLOT SIZE = 22" x 34"

FED. ROAD DIV.NO.	STATE	COUNTY	PROJECT ID	ROUTE NO.	SHEET NO.	TOTAL SHEETS
3	S.C.	GEORGETOWN	-		20	

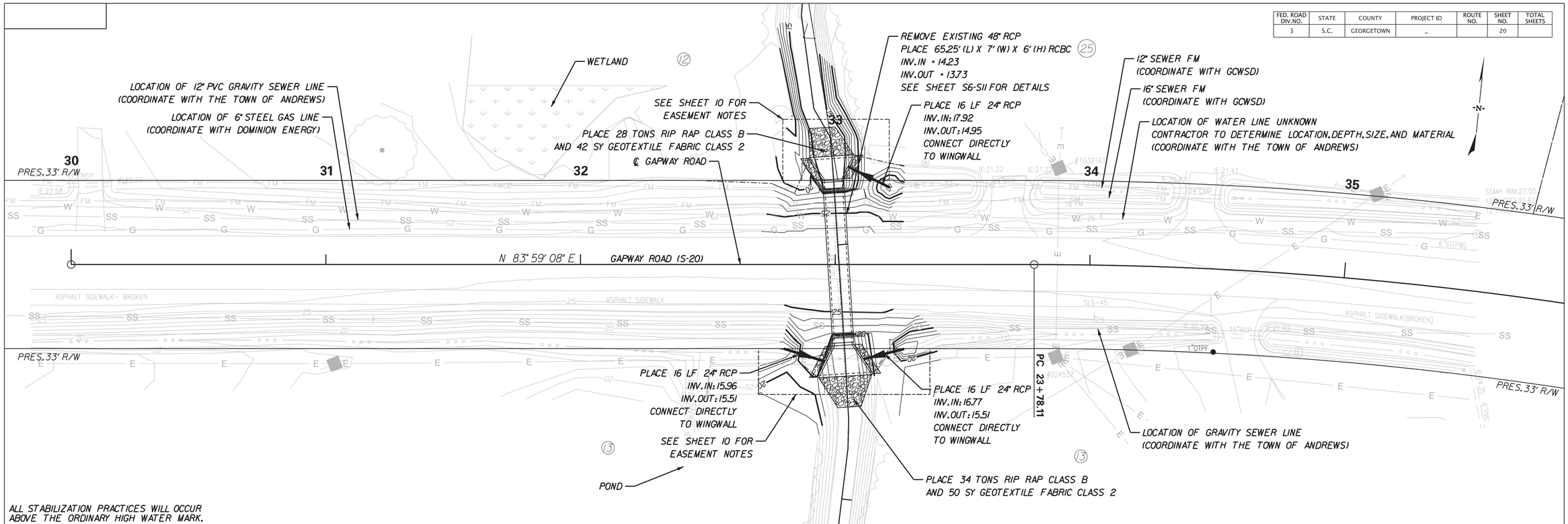

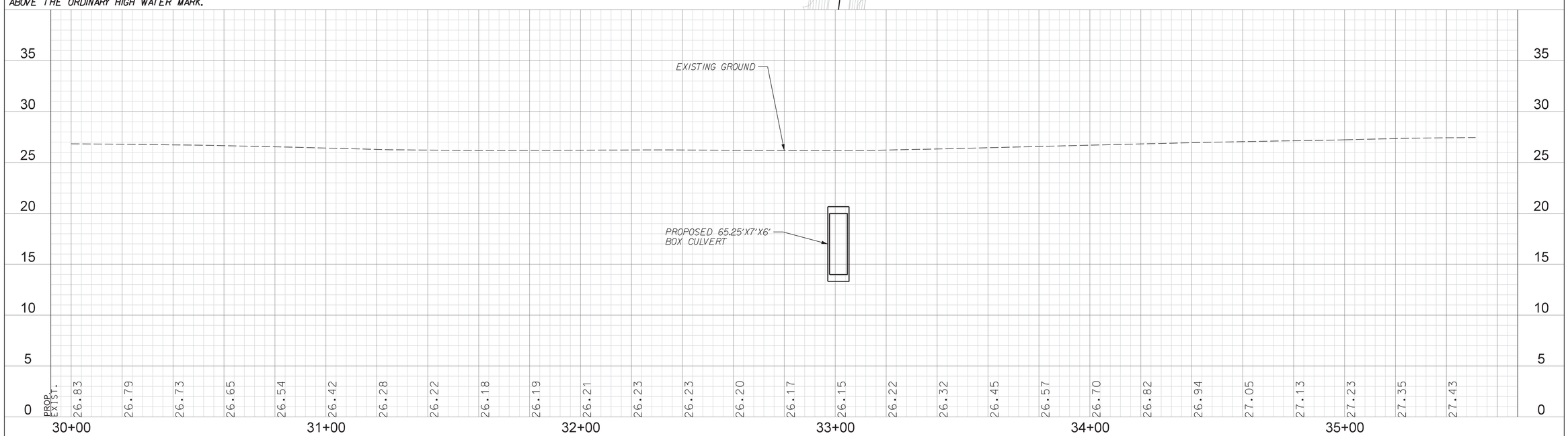

20.000 ft / in.
East Andrews-SCDOT Levels 2015 B&W Plan-PDF.tbl
PDF.pltcfg
G:\JobsOdd\31969-00\Production\Transportation\f_dgn\Const plpr\East Andrews SHEET 20.dgn

SCALE:
PEN TABLE:
PLOT DRIVER:
FILE:
5/4/2023

0 20 40 60 80

SOUTH CAROLINA DAVIS & FLOYD, INC. No. C00538 CERTIFICATE OF AUTHORIZATION

SOUTH CAROLINA REGISTERED PROFESSIONAL ENGINEER No. 19075 MICHAEL VANDIVER NORTON 05/15/2023

DAVIS & FLOYD
SINCE 1954

1940 ALGONQUIN ROAD, SUITE 301
CHARLESTON, SC 29405
(843) 554-8602

REV. NO.	BY	DATE	DESCRIPTION OF REVISION
5			
4			
3			
2			
1			

DES. BY _____ DRAWN BY _____ REVIEWED BY _____ CHECKED BY _____

SOUTH CAROLINA
DEPARTMENT OF TRANSPORTATION

PLAN AND PROFILE SHEET
EAST ANDREWS DRAINAGE IMPROVEMENTS

SCALE 1" = 20' PLOT SIZE = 22" x 34"

FED. ROAD DIV.NO.	STATE	COUNTY	PROJECT ID	ROUTE NO.	SHEET NO.	TOTAL SHEETS
3	S.C.	GEORGETOWN	_		21	

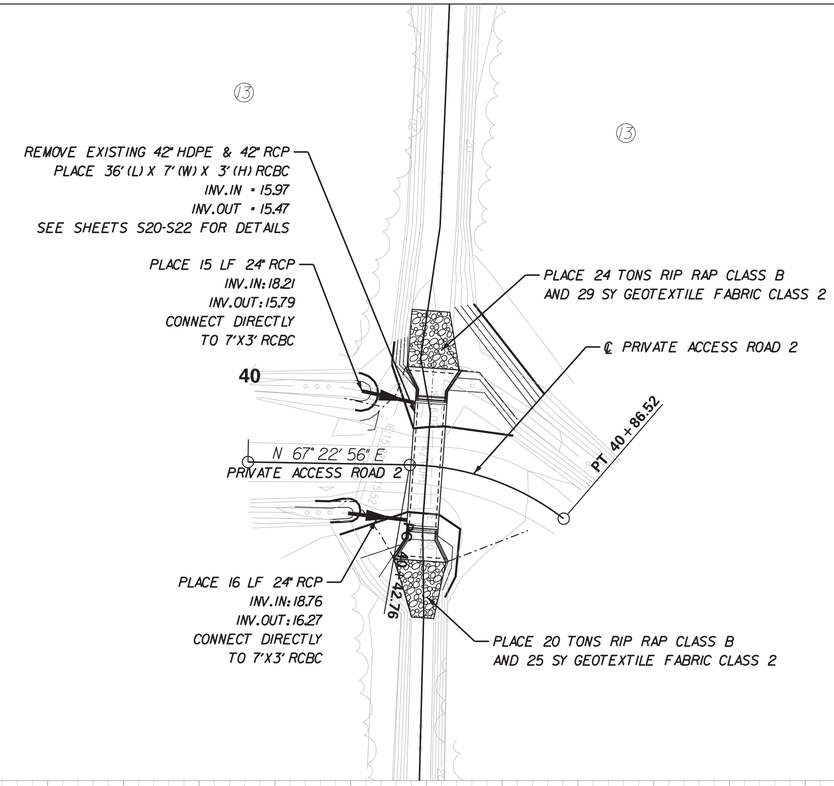

ALL STABILIZATION PRACTICES WILL OCCUR
ABOVE THE ORDINARY HIGH WATER MARK.

20.000 ft / in.
East Andrews-SCDOT Levels 2015 B&W Plan-PDF.tbl
PDF.pltcfg
G:\JobsOdd\31969-00\Production\Transportation\f_dgn\Const plpr\East Andrews SHEET 21.dgn

SCALE:
PEN TABLE:
PLOT DRIVER:
FILE:
5/4/2023

0 20 40 60 80

SOUTH CAROLINA
DAVIS & FLOYD, INC.
No. C00538
CERTIFICATE OF AUTHORIZATION

SOUTH CAROLINA
REGISTERED PROFESSIONAL ENGINEER
No. 19075
MICHAEL VANDIVER NORTON
05/15/2023

1940 ALGONQUIN ROAD, SUITE 301
CHARLESTON, SC 29405
(843) 554-8602

DAVIS & FLOYD
SINCE 1954

REV. NO.	BY	DATE	DESCRIPTION OF REVISION
5			
4			
3			
2			
1			

DES. BY _____ DRAWN BY _____ REVIEWED BY _____ CHECKED BY _____

SOUTH CAROLINA
DEPARTMENT OF TRANSPORTATION

PLAN AND PROFILE SHEET
EAST ANDREWS DRAINAGE IMPROVEMENTS

SCALE 1" = 20' PLOT SIZE = 22" x 34"

FED. ROAD DIV.NO.	STATE	COUNTY	PROJECT ID	ROUTE NO.	SHEET NO.	TOTAL SHEETS
3	S.C.	GEORGETOWN	-		22	

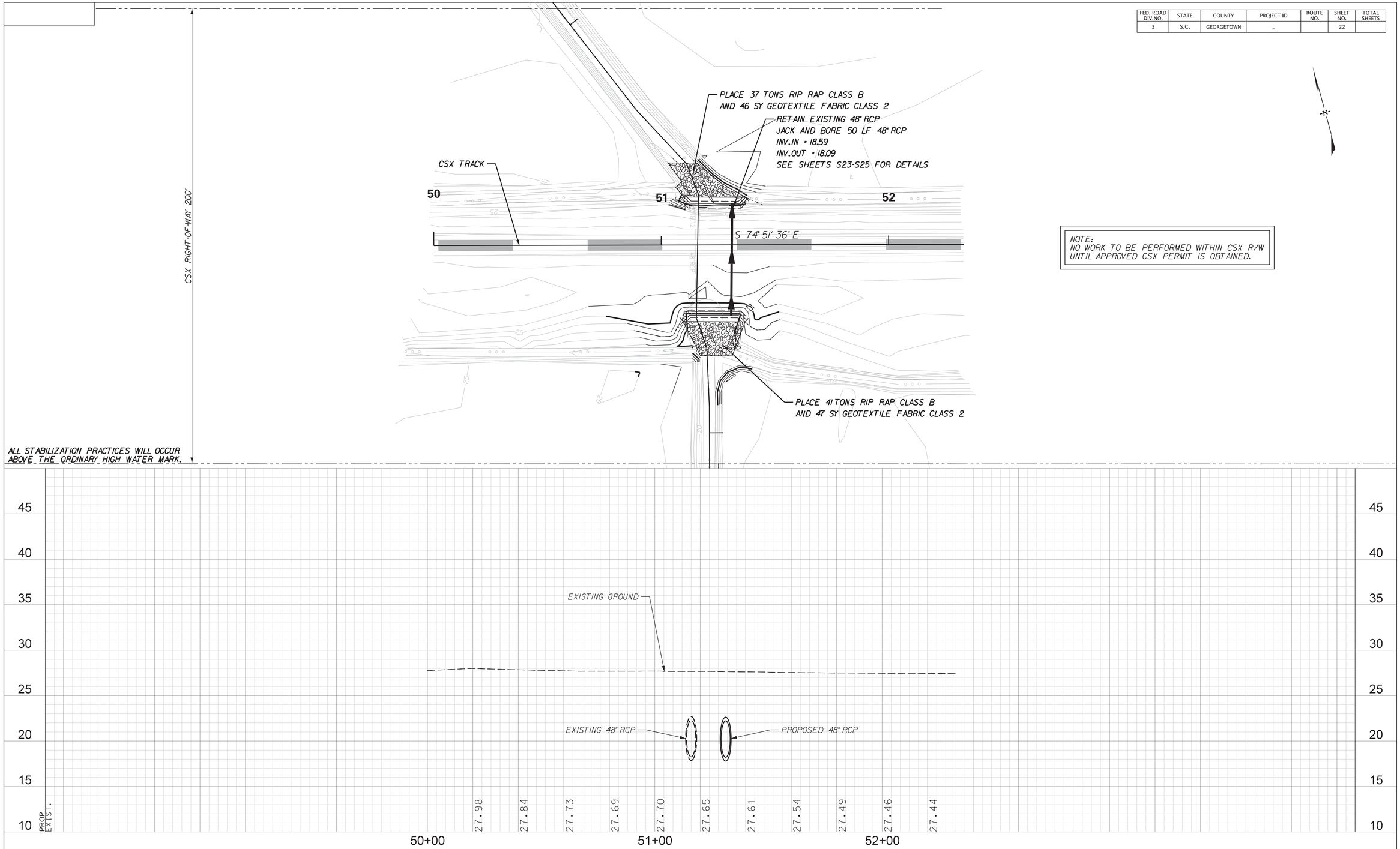

NOTE:
NO WORK TO BE PERFORMED WITHIN CSX R/W
UNTIL APPROVED CSX PERMIT IS OBTAINED.

ALL STABILIZATION PRACTICES WILL OCCUR ABOVE THE ORDINARY HIGH WATER MARK.

SCALE: 20.000 ft / in.
PEN TABLE: East Andrews-SCDOT Levels 2015 B&W Plan-PDF.tbl
PLOT DRIVER: PDF.pltcfg
FILE: G:\JobsOdd\31969-00\Production\Transportation\f_dgn\Const plpr\East Andrews SHEET 22.dgn
5/4/2023

0 20 40 60 80

SOUTH CAROLINA DAVIS & FLOYD, INC. No. C00538 CERTIFICATE OF AUTHORIZATION

SOUTH CAROLINA REGISTERED PROFESSIONAL ENGINEER No. 19075 MICHAEL VANDIVER HORTON 05/15/2023

1940 ALGONQUIN ROAD, SUITE 301
CHARLESTON, SC 29405
(843) 554-8602

DAVIS & FLOYD
SINCE 1954

REV. NO.	BY	DATE	DESCRIPTION OF REVISION
5			
4			
3			
2			
1			

DES. BY _____ DRAWN BY _____ REVIEWED BY _____ CHECKED BY _____

SOUTH CAROLINA
DEPARTMENT OF TRANSPORTATION

PLAN AND PROFILE SHEET
EAST ANDREWS DRAINAGE IMPROVEMENTS

SCALE 1" = 20' PLOT SIZE = 22" x 34"

FED. ROAD DIV.NO.	STATE	COUNTY	PROJECT ID	ROUTE NO.	SHEET NO.	TOTAL SHEETS
3	S.C.	GEORGETOWN	-		23	

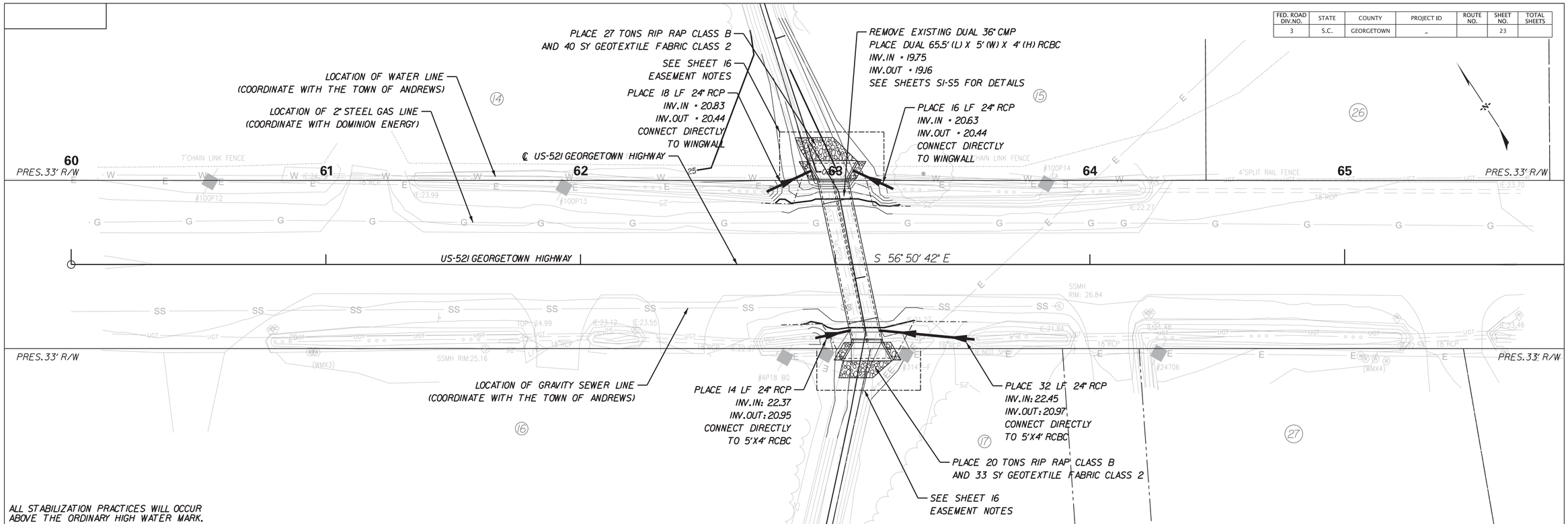

SCALE: 20.000 ft / in.
PEN TABLE: East Andrews-SCDOT Levels 2015 B&W Plan-PDF.tbl
PLOT DRIVER: PDF.pltcfg
FILE: G:\JobsOdd\31969-00\Production\Transportation\f_dgn\Const plpr\East Andrews SHEET 23.dgn
5/4/2023

0 20 40 60 80

SOUTH CAROLINA DAVIS & FLOYD, INC. No. C00538 CERTIFICATE OF AUTHORIZATION

SOUTH CAROLINA REGISTERED PROFESSIONAL ENGINEER No. 19075 MICHAEL VANDIVER HORTON 05/15/2023

1940 ALGONQUIN ROAD, SUITE 301
CHARLESTON, SC 29405
(843) 554-8602

DAVIS & FLOYD
SINCE 1954

REV. NO.	BY	DATE	DESCRIPTION OF REVISION
5			
4			
3			
2			
1			

DES. BY _____ DRAWN BY _____ REVIEWED BY _____ CHECKED BY _____

SOUTH CAROLINA
DEPARTMENT OF TRANSPORTATION

PLAN AND PROFILE SHEET
EAST ANDREWS DRAINAGE IMPROVEMENTS

SCALE 1" = 20' PLOT SIZE = 22" x 34"

FED. ROAD DIV.NO.	STATE	COUNTY	PROJECT ID	ROUTE NO.	SHEET NO.	TOTAL SHEETS
3	S.C.	GEORGETOWN	-		24	

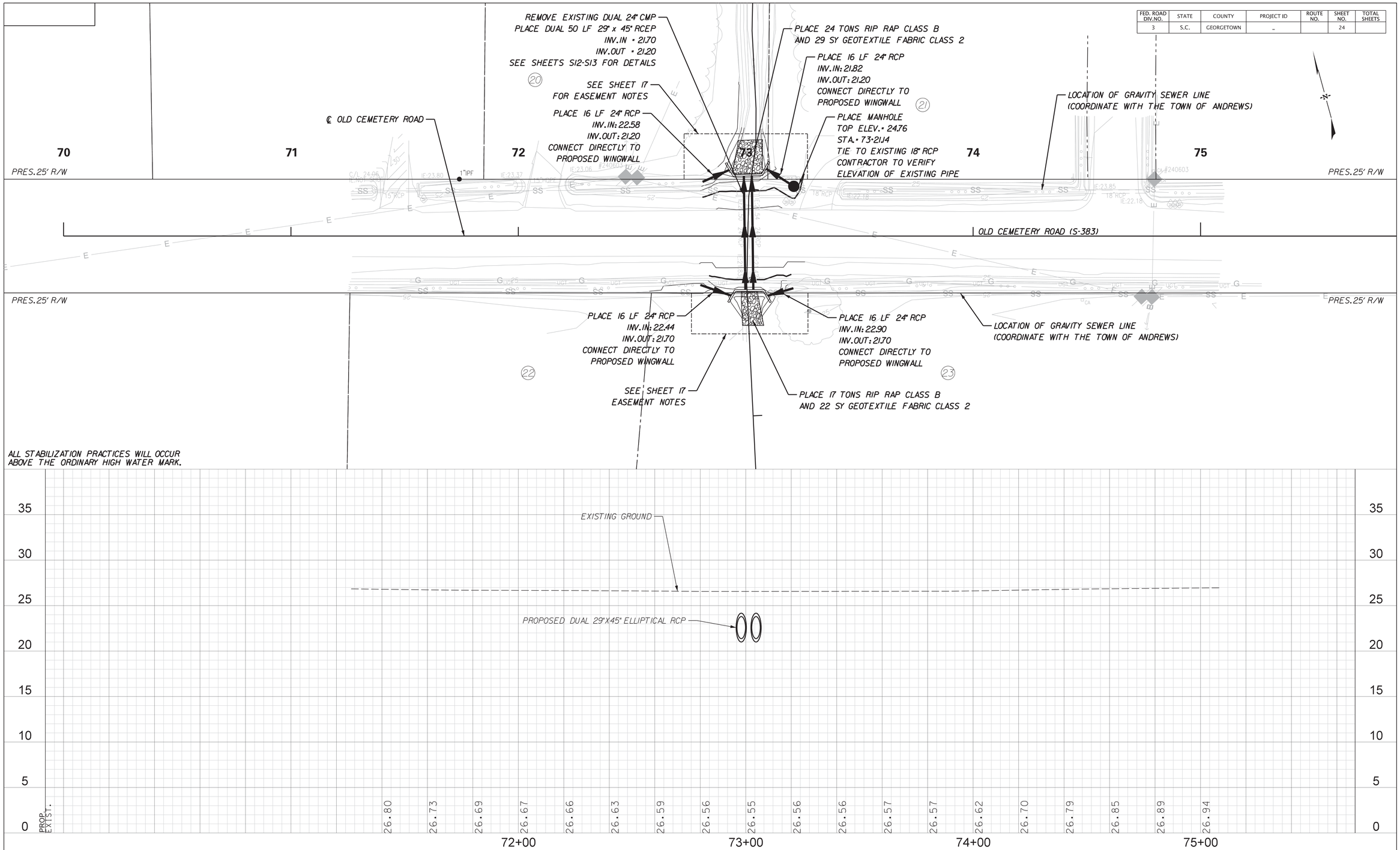

SCALE: 20.000 ft / in.
PEN TABLE: East Andrews-SCDOT Levels 2015 B&W Plan-PDF.tbl
PLOT DRIVER: PDF.pltcfg
FILE: G:\JobsOdd\31969-00\Production\Transportation\f_dgn\Const plpr\East Andrews SHEET 24.dgn
5/4/2023

0 20 40 60 80

SOUTH CAROLINA
DAVIS & FLOYD, INC.
No. C00538
CERTIFICATE OF AUTHORIZATION

SOUTH CAROLINA
REGISTERED PROFESSIONAL ENGINEER
No. 19075
MICHEL VANDIVER NORTON
05/15/2023

DAVIS & FLOYD
SINCE 1954

1940 ALGONQUIN ROAD, SUITE 301
CHARLESTON, SC 29405
(843) 554-8602

REV. NO.	BY	DATE	DESCRIPTION OF REVISION
5			
4			
3			
2			
1			

DES. BY _____ DRAWN BY _____ REVIEWED BY _____ CHECKED BY _____

SOUTH CAROLINA
DEPARTMENT OF TRANSPORTATION

PLAN AND PROFILE SHEET
EAST ANDREWS DRAINAGE IMPROVEMENTS

SCALE 1" = 20' PLOT SIZE = 22" x 34"

FED. ROAD DIV.NO.	STATE	COUNTY	PROJECT ID	ROUTE NO.	SHEET NO.	TOTAL SHEETS
3	S.C.	GEORGETOWN			25	

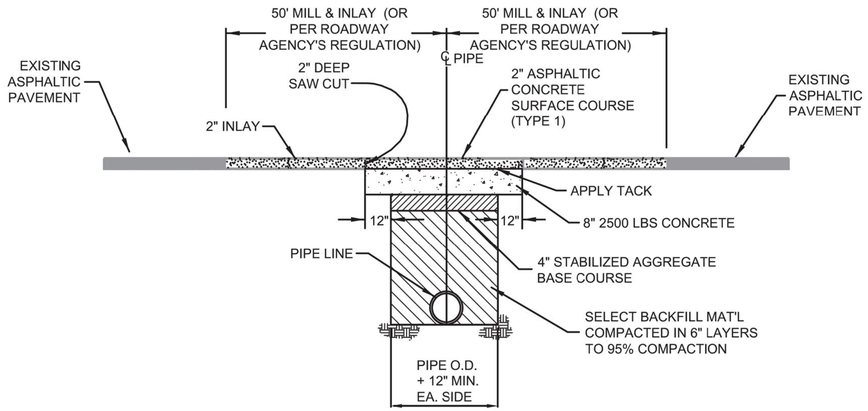

NOTES:

1. PAVEMENT CUT TO EXTEND 12" BEYOND EDGES OF TRENCH AS SHOWN. PAVEMENT SHALL BE CUT TO TRUE LINE AND REMOVED BEFORE TRENCH IS CUT. ALL PAVEMENT REPAIRS TO BE IN ACCORDANCE WITH ROAD AGENCY SPECS.

2. IF PAVEMENT CUT IS ON A HIGH VOLUME MAIN ROAD NEAR A PAVED INTERSECTION, AND THE EDGE OF THE INTERSECTING ROAD IS ONLY A FEW FEET BEYOND THE NORMAL 50' (ONE SIDE DIMENSION) INLAY, THE INLAY IS TO BE EXTENDED TO THE EDGE OF THE INTERSECTING ROAD.

OPEN CUT REPAIR FOR HIGH VOLUME ASPHALT PAVEMENT

SCDOT STD DWGS:
RIPRAP DETAILS 804–205–00, 804–310–00
BOX CULVERT DETAILS 722–105–01, 722–105–02, 722–305–00
HEAD WALL DETAILS 719–605–00
MANHOLE DETAILS 719–505–01, 719–505–03, 719–505–04
PERMANENT CONSTRUCTION SIGNING 605–010–01, 605–010–02
LANE & SHOULDER CLOSURES SECTION 610

SEE SC–M–714–1 FOR TRENCHLESS PIPE INSTALLATION (JACK & BORE)

PERMANENT CONSTRUCTION SIGNS			
ROAD	SCHEME	ASSEMBLIES	QUANTITY (SF)
NORTH STREET	E	2	48
PRIVATE CROSSING 1	E	2	48
GAPWAY	C	2	152
GEORGETOWN HIGHWAY	C	2	184
OLD CEMETERY ROAD	C	2	152

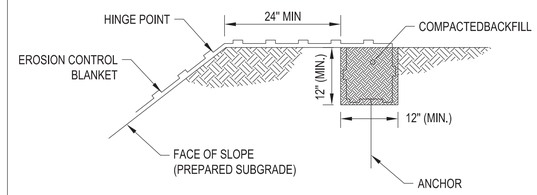

KEY TRENCH AT TOP OF SLOPE DETAIL

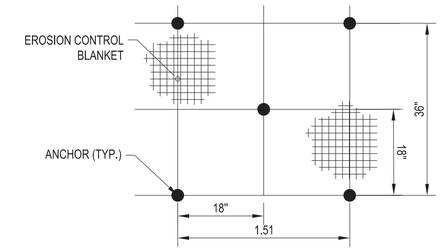

ANCHOR PATTERN

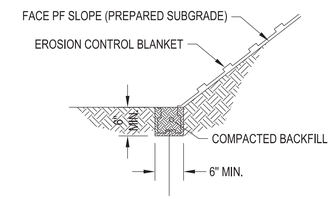

KEY TRENCH AT BOTTOM OF SLOPE DETAIL

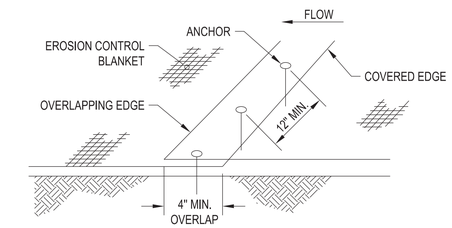

EROSION CONTROL BLANKET OVERLAP JOINT

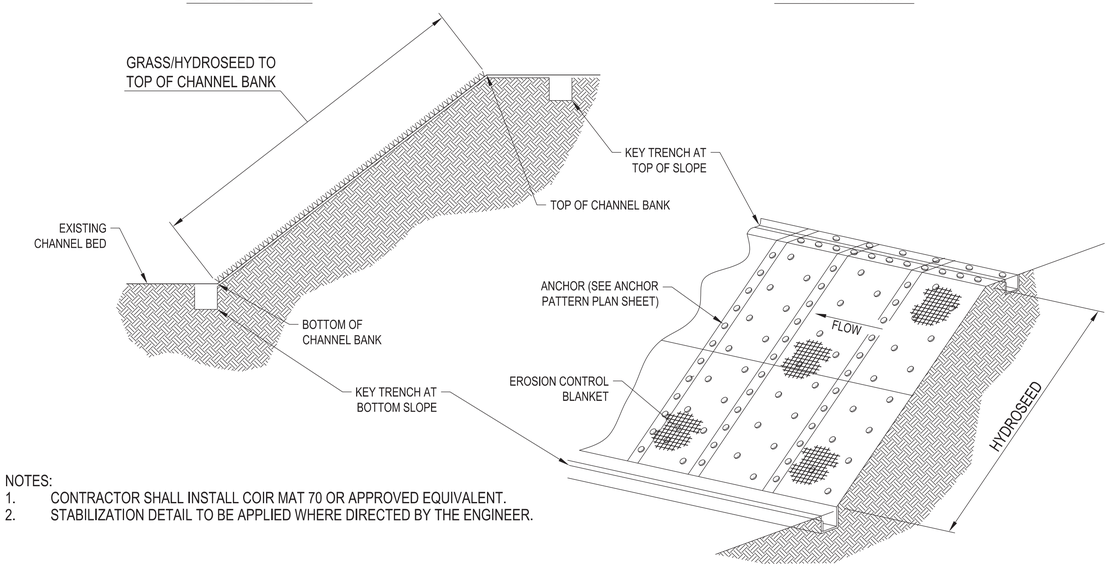

NOTES:

1. CONTRACTOR SHALL INSTALL COIR MAT 70 OR APPROVED EQUIVALENT.
2. STABILIZATION DETAIL TO BE APPLIED WHERE DIRECTED BY THE ENGINEER.

CHANNEL STABILIZATION

SCALE: NTS

SOUTH CAROLINA DAVIS & FLOYD, INC. No. C00538 CERTIFICATE OF AUTHORIZATION

SOUTH CAROLINA REGISTERED PROFESSIONAL ENGINEER No. 19075 MICHAEL VANDIVER NORTON 05/15/2023

1940 ALGONQUIN ROAD, SUITE 301
CHARLESTON, SC 29405
(843) 554-8602

DAVIS & FLOYD
SINCE 1954

REV. NO.	BY	DATE	DESCRIPTION OF REVISION
5			
4			
3			
2			
1			

DES. BY _____ DRAWN BY _____ REVIEWED BY _____ CHECKED BY _____

SOUTH CAROLINA DEPARTMENT OF TRANSPORTATION

DETAIL SHEET
EAST ANDREWS DRAINAGE IMPROVEMENTS

N.T.S. PLOT SIZE = 22" x 34"

SCALE: 20.000 ft / in.
PEN TABLE: East Andrews-SCDOT Levels 2015 B&W Plan-PDF.tbl
PLOT DRIVER: PDF.pltcfg
FILE: G:\Jobs0d\31969-00\Production\Transportation\f_dgn\Const plpr\East Andrews SHEET 25-details.dgn
5/4/2023

FED. ROAD DIV.NO.	STATE	COUNTY	PROJECT ID	ROUTE NO.	SHEET NO.	TOTAL SHEETS
3	S.C.	GEORGETOWN		US 521	S1	

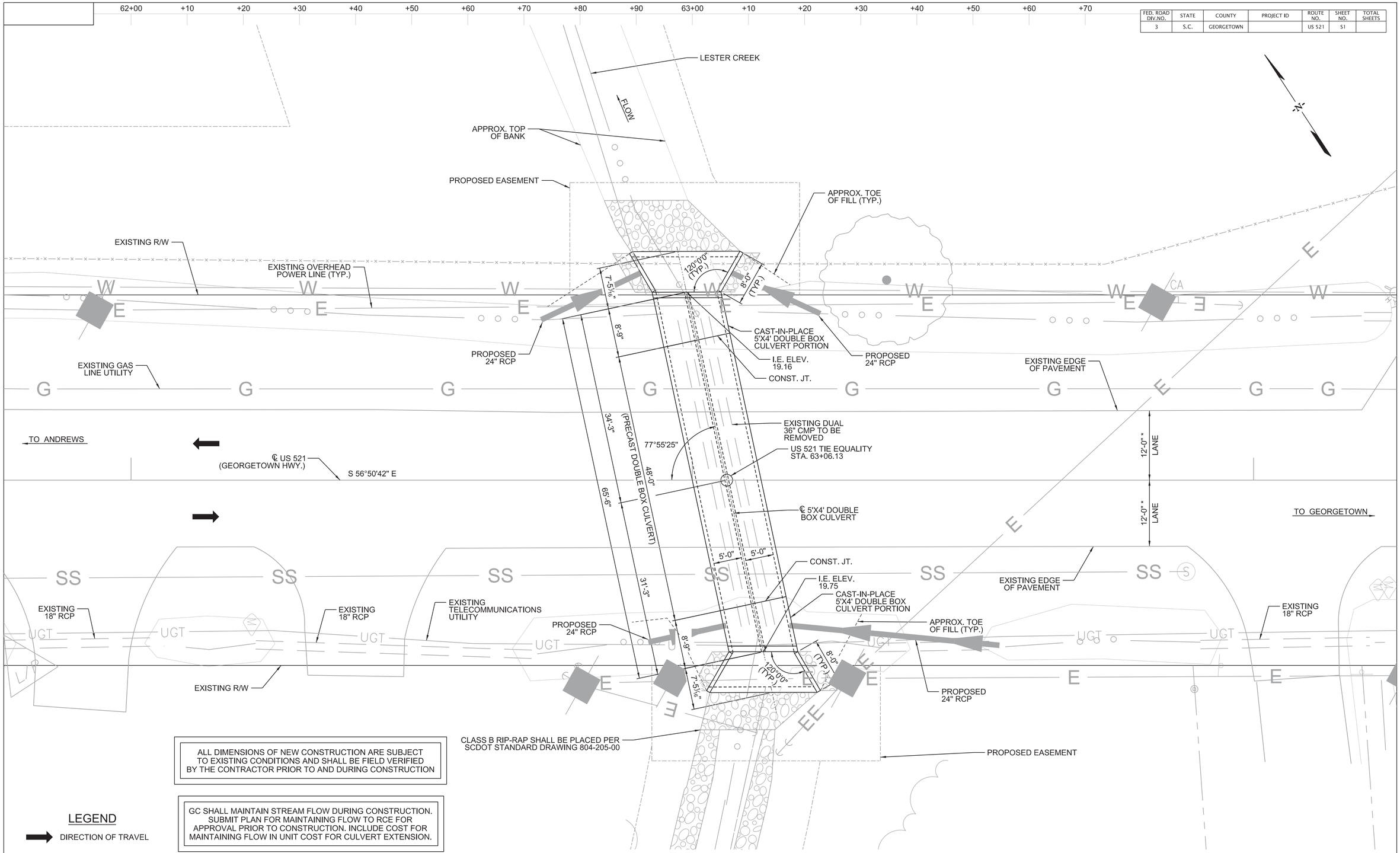

ALL DIMENSIONS OF NEW CONSTRUCTION ARE SUBJECT TO EXISTING CONDITIONS AND SHALL BE FIELD VERIFIED BY THE CONTRACTOR PRIOR TO AND DURING CONSTRUCTION

GC SHALL MAINTAIN STREAM FLOW DURING CONSTRUCTION. SUBMIT PLAN FOR MAINTAINING FLOW TO RCE FOR APPROVAL PRIOR TO CONSTRUCTION. INCLUDE COST FOR MAINTAINING FLOW IN UNIT COST FOR CULVERT EXTENSION.

LEGEND

DIRECTION OF TRAVEL

NOTES:

ALL EXISTING UTILITIES IN CONFLICT WITH CULVERT TO BE RELOCATED PRIOR TO CONSTRUCTION.

* APPROXIMATE

PLAN

SOUTH CAROLINA DAVIS & FLOYD, INC. No. C00538 CERTIFICATE OF AUTHORIZATION

SOUTH CAROLINA PROFESSIONAL ENGINEER No. 32080 ROBERT G. STEVENSON 3/9/23

3229 W. MONTAGUE AVE, CHARLESTON, SC 29418 (843) 554-8602

DAVIS & FLOYD

SINCE 1954

REV. NO.	BY	DATE	DESCRIPTION OF REVISION
5			
4			
3			
2			
1			

DES. BY DLH DRAWN BY JEB REVIEWED BY DLH CHECKED BY RGS

SOUTH CAROLINA DEPARTMENT OF TRANSPORTATION

US 521 (GEORGETOWN HWY.) STA. 63+06.13
5'X4' DOUBLE BARREL PRECAST CULVERT PLAN, 3.5'-2.0' DESIGN FILL HEIGHT, 4:1 FILL SLOPES

PLOT SIZE = 22" x 34"

SCALE: 8:0.0000 '-" / in.
PEN TABLE: G:\Resource\Standards\Bentley\Vertical\Plotting\DO_NOTHING_BRIDGES.tbl
PLOT DRIVER: \\CHS-FS1\Data\Resource\Standards\Bentley\Vertical\Plotting\BRIDGES.pdf MS i.pltcfg
FILE: G:\JobsOdd\31969-00\Production\Structural\Drawings\Culvert Drawings\GT Highway\031969-00_US 521 GT Highway_BR_S01_5X4 Double Culvert PLAN.dgn
3/8/2023

FED. ROAD DIV.NO.	STATE	COUNTY	PROJECT ID	ROUTE NO.	SHEET NO.	TOTAL SHEETS
3	S.C.	GEORGETOWN		US 521	S2	

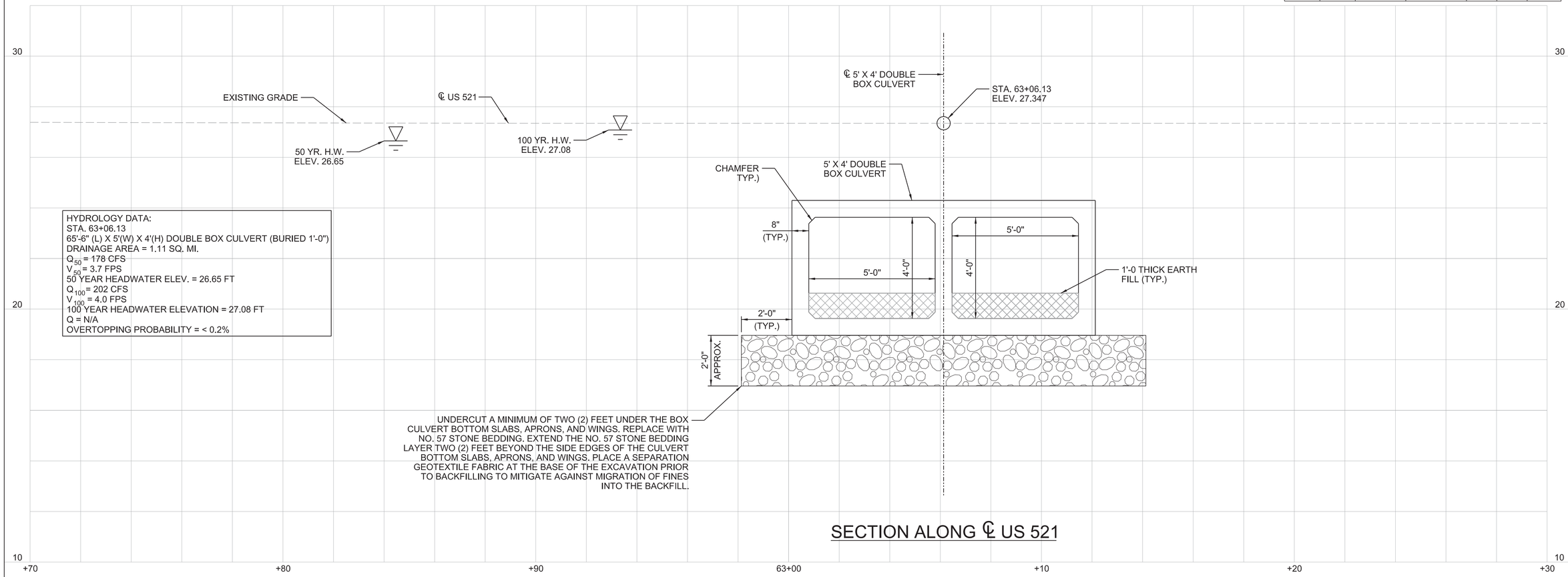

HYDROLOGY DATA:
STA. 63+06.13
65'-6" (L) X 5'(W) X 4'(H) DOUBLE BOX CULVERT (BURIED 1'-0")
DRAINAGE AREA = 1.11 SQ. MI.
Q_{50} = 178 CFS
V_{50} = 3.7 FPS
50 YEAR HEADWATER ELEV. = 26.65 FT
Q_{100} = 202 CFS
V_{100} = 4.0 FPS
100 YEAR HEADWATER ELEVATION = 27.08 FT
Q = N/A
OVERTOPPING PROBABILITY = < 0.2%

SECTION ALONG ℄ US 521

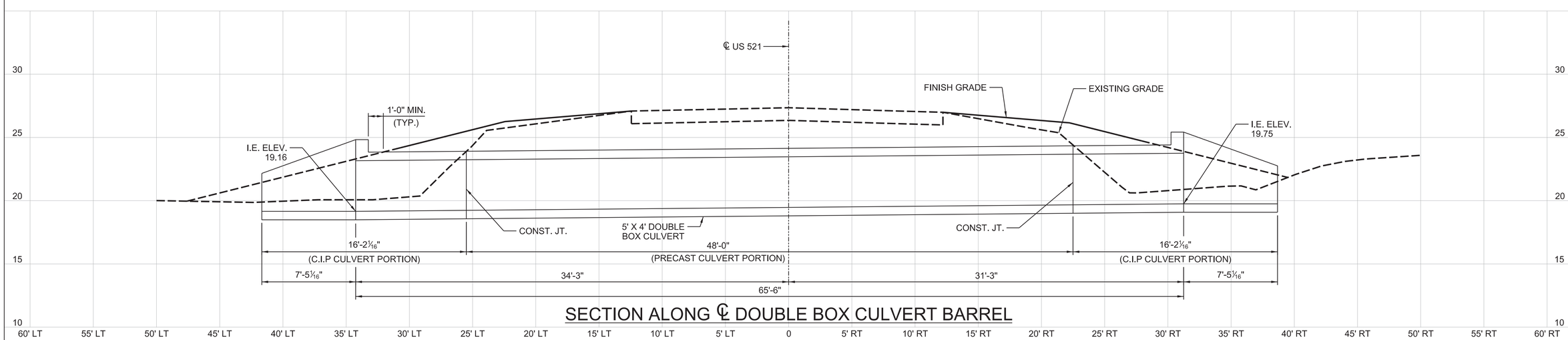

SECTION ALONG ℄ DOUBLE BOX CULVERT BARREL

SCALE: 2.0000 ft / in.
PEN TABLE: G:\Resource\Standards\Bentley\Vertical\Plotting\DO_NOTHING_BRIDGES.tbl
PLOT DRIVER: \\CHS-FS1\Data\Resource\Standards\Bentley\Vertical\Plotting\BRIDGES.pdf MS i.pltcfg
FILE: G:\JobsOdd\31969-00\Production\Structural\Drawings\Culvert Drawings\GT Highway\031969-00_US 521 GT Highway_BR_S02_5X4 Double Culvert SECTION.dgn
3/8/2023

SOUTH CAROLINA DAVIS & FLOYD, INC. No. C00538 CERTIFICATE OF AUTHORIZATION

SOUTH CAROLINA PROFESSIONAL ENGINEER No. 32080 ROBERT G. STEVENSON, JR. 3/9/23

3229 W. MONTAGUE AVE.
CHARLESTON, SC 29418
(843) 554-8602

DAVIS & FLOYD
SINCE 1954

REV. NO.	BY	DATE	DESCRIPTION OF REVISION
5			
4			
3			
2			
1			

DES. BY DLH DRAWN BY JEB REVIEWED BY DLH CHECKED BY RGS

SOUTH CAROLINA
DEPARTMENT OF TRANSPORTATION

US 521 (GEORGETOWN HWY.) STA. 63+06.13
5'X4' DOUBLE BARREL PRECAST CULVERT
SECTION, 3.5'–2.0' DESIGN FILL HEIGHT,
4:1 FILL SLOPES

PLOT SIZE = 22" x 34"

FED. ROAD DIV.NO.	STATE	COUNTY	PROJECT ID	ROUTE NO.	SHEET NO.	TOTAL SHEETS
3	S.C.	GEORGETOWN		US 521	S3	

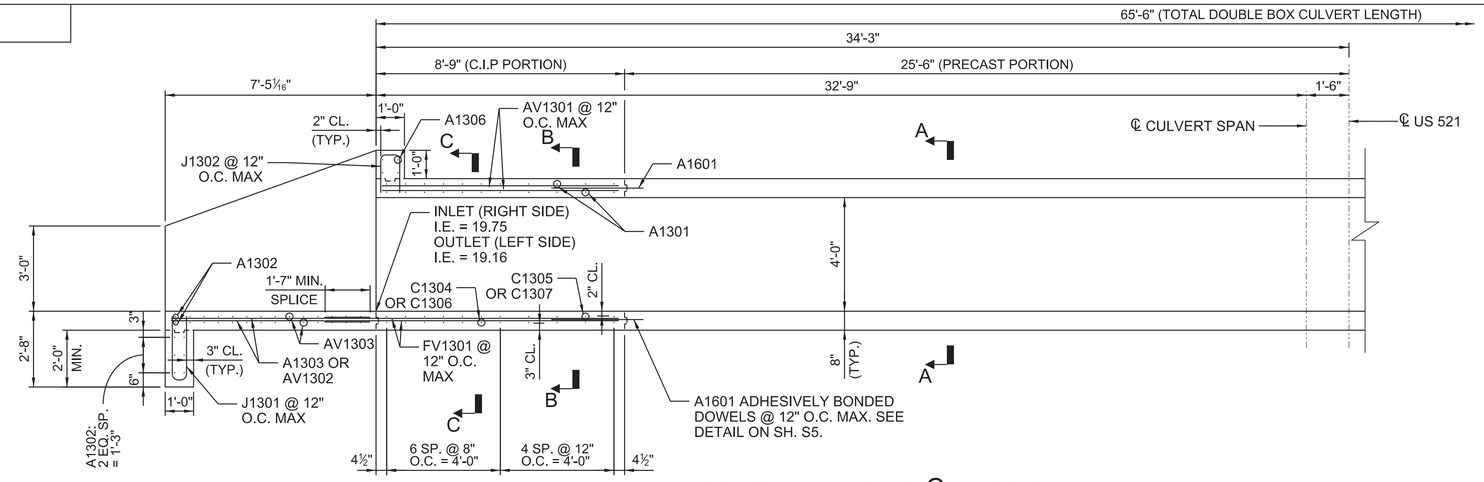

SECTION ALONG ℄ BARREL

(SHOWING LEFT SIDE PORTION OF DOUBLE BOX CULVERT, RIGHT SIDE SIMILAR)

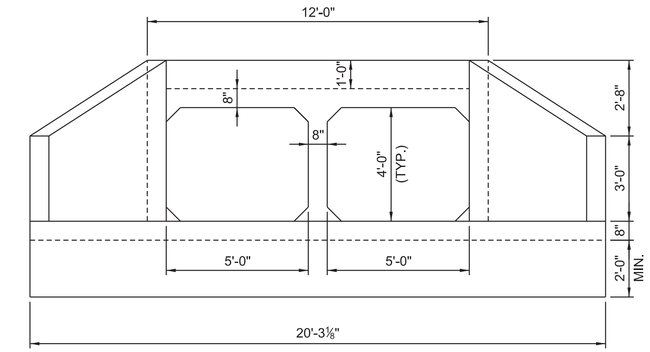

END ELEVATION

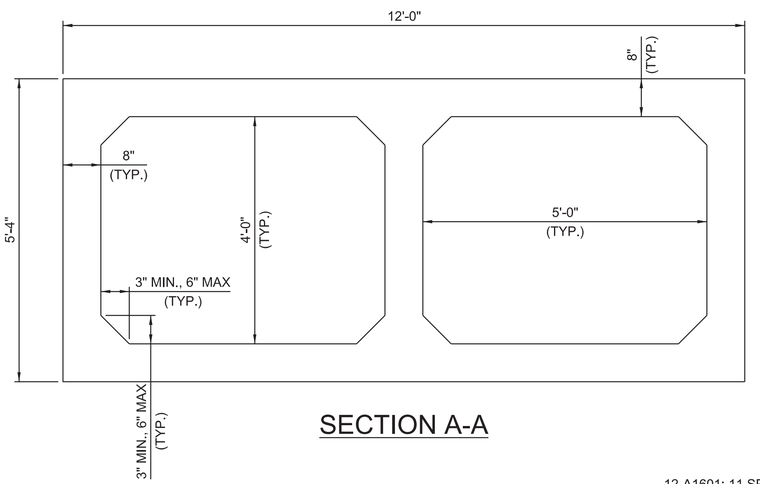

SECTION A-A

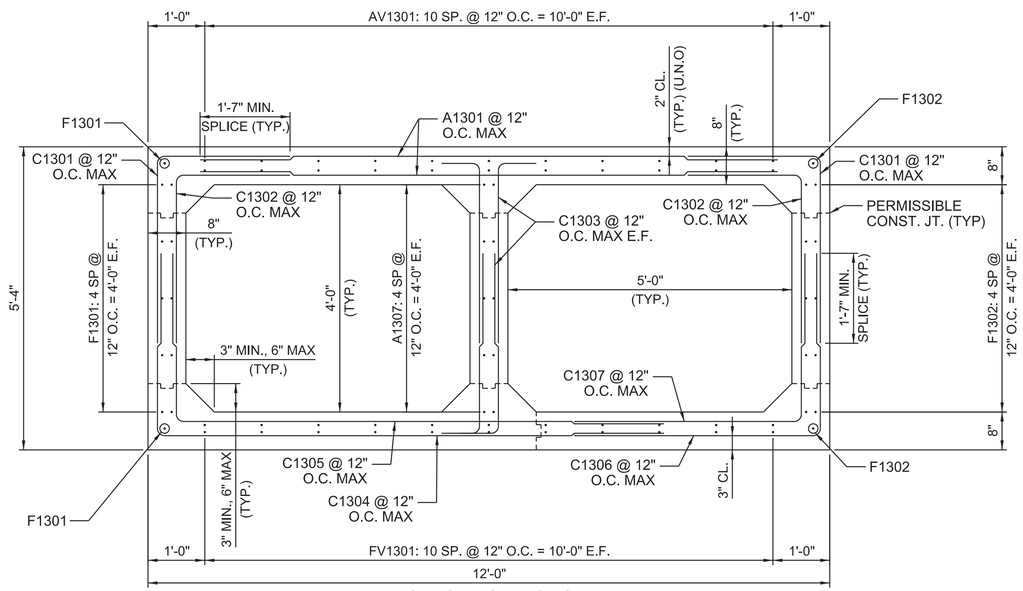

SECTION C-C

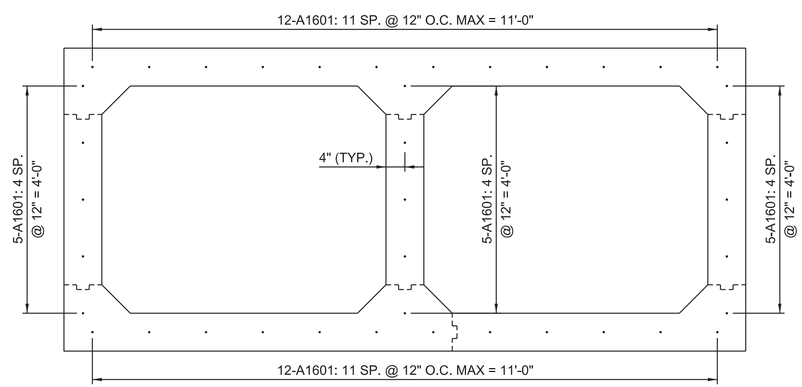

SECTION B-B

(SHOWING A1601 DOWELS)
(ADDITIONAL REINF. NOT SHOWN FOR CLARITY)

SOUTH CAROLINA DAVIS & FLOYD, INC. No. C00538 CERTIFICATE OF AUTHORIZATION

SOUTH CAROLINA PROFESSIONAL ENGINEER No. 32080 3/9/23 ROBERT G. STEVENSON, JR.

3229 W. MONTAGUE AVE. CHARLESTON, SC 29418 (843) 554-8602

DAVIS & FLOYD

SINCE 1954

REV. NO.	BY	DATE	DESCRIPTION OF REVISION
5			
4			
3			
2			
1			

DES. BY DLH DRAWN BY JEB REVIEWED BY DLH CHECKED BY RGS

SOUTH CAROLINA
DEPARTMENT OF TRANSPORTATION

US 521 (GEORGETOWN HWY.) STA. 63+06.13
5'X4' DOUBLE BARREL PRECAST CULVERT
DETAILS (SHEET 1 OF 3), 3.5'–2.0'
DESIGN FILL HEIGHT, 4:1 FILL SLOPES

PLOT SIZE = 22" x 34"

SCALE: 2:8.0000 ':' / in.
PEN TABLE: G:\Resource\Standards\Bentley\Vertical\Plotting\DO_NOTHING_BRIDGES.tbl
PLOT DRIVER: \\CHS-FS1\Data\Resource\Standards\Bentley\Vertical\Plotting\BRIDGES.pdf MS i.pltcfg
FILE: G:\JobsOdd\31969-00\Production\Structural\Drawings\Culvert Drawings\GT Highway\031969-00_US 521 GT Highway_BR_S03_5X4 Double Culvert DETAILS (Sh 1 of 3).dgn
3/8/2023

FED. ROAD DIV.NO.	STATE	COUNTY	PROJECT ID	ROUTE NO.	SHEET NO.	TOTAL SHEETS
3	S.C.	GEORGETOWN		US 521	S4	

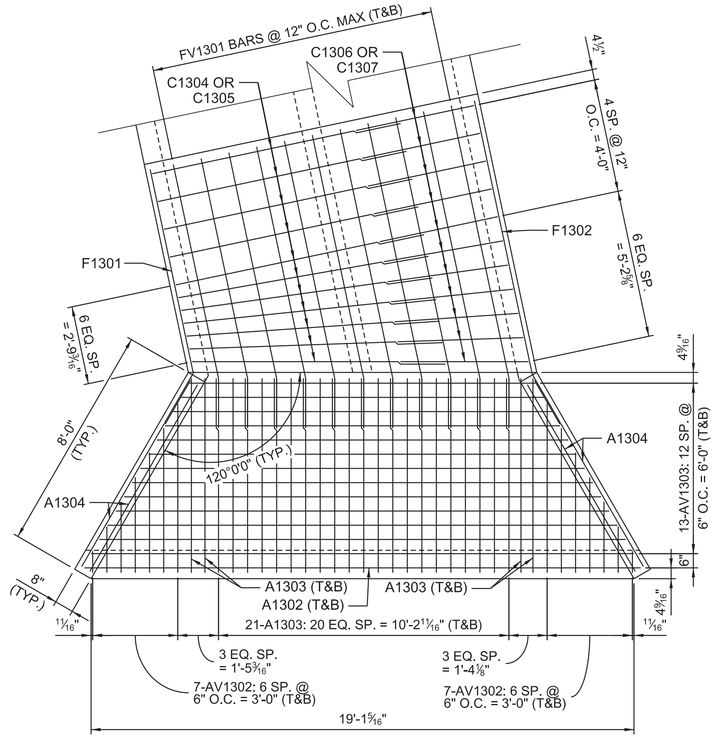

BOTTOM SLAB/APRON SLAB PLAN

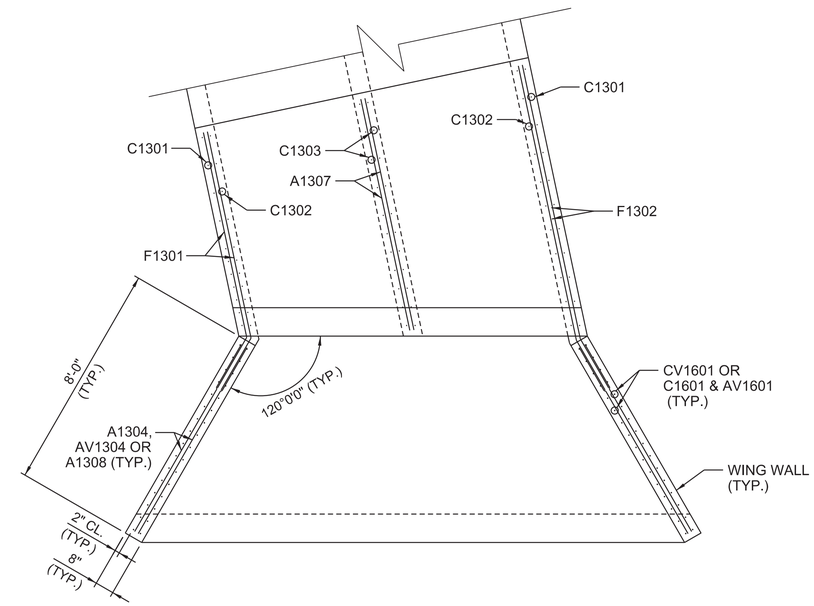

WALL PLAN

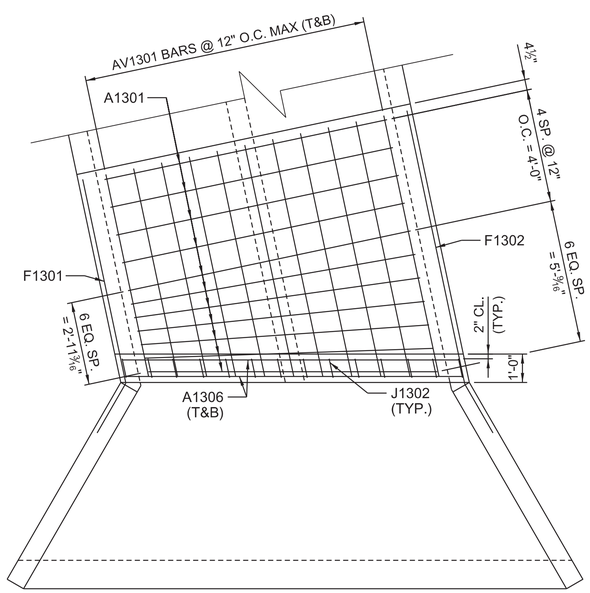

TOP SLAB PLAN

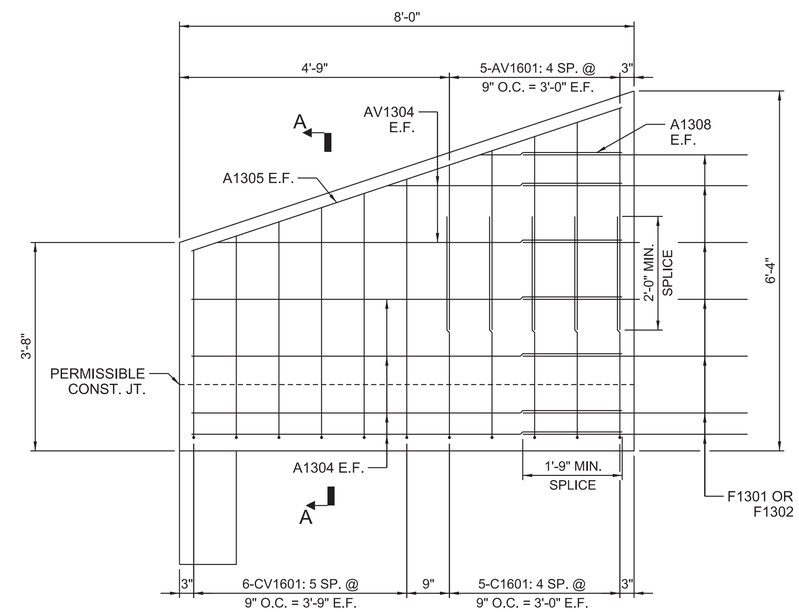

WING WALL ELEVATION

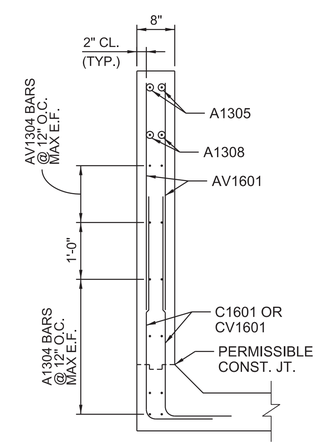

SECTION A-A

SCALE: 2:8.0000 '-" / in.
PEN TABLE: G:\Resource\Standards\Bentley\Vertical\Plotting\DO_NOTHING_BRIDGES.tbl
PLOT DRIVER: \\CHS-FS1\Data\Resource\Standards\Bentley\Vertical\Plotting\BRIDGES.pdf MS i.pltcfg
FILE: G:\JobsOdd\31969-00\Production\Structural\Drawings\CT Highway\031969-00_US 521 CT Highway_BR_S04_5X4 Double Culvert DETAILS (Sh 2 of 3).dgn
3/8/2023

SOUTH CAROLINA DAVIS & FLOYD, INC. No. C00538 CERTIFICATE OF AUTHORIZATION

SOUTH CAROLINA PROFESSIONAL ENGINEER No. 32080 ROBERT G. STEVENSON, JR. 3/9/23

3229 W. MONTAGUE AVE. CHARLESTON, SC 29418 (843) 554-8602

DAVIS & FLOYD
SINCE 1954

REV. NO.	BY	DATE	DESCRIPTION OF REVISION
5			
4			
3			
2			
1			

DES. BY DLH DRAWN BY JEB REVIEWED BY DLH CHECKED BY RGS

SOUTH CAROLINA
DEPARTMENT OF TRANSPORTATION

US 521 (GEORGETOWN HWY.) STA. 63+06.13
5'X4' DOUBLE BARREL PRECAST CULVERT
DETAILS (SHEET 2 OF 3), 3.5'-2.0'
DESIGN FILL HEIGHT, 4:1 FILL SLOPES

PLOT SIZE = 22" x 34"

FED. ROAD DIV.NO.	STATE	COUNTY	PROJECT ID	ROUTE NO.	SHEET NO.	TOTAL SHEETS
3	S.C.	GEORGETOWN		US 521	S5	

1.0 NOTES:

1.1 REFER TO SCDOT STANDARD DRAWINGS 722-105-01, 722-105-02, & 722-305-00 FOR ADDITIONAL NOTES & DETAILS

1.2 BAR DIMENSIONS SHOWN ARE OUT-TO-OUT AND STANDARD C.R.S.I. BENDING DETAILS SHALL APPLY, EXCEPT AS NOTED.

2.0 PAY ITEM 2041000 IS STRUCTURE EXCAVATION FOR CULVERTS:

2.1 INCLUDE THE COST OF ANY SOIL EXCAVATION AND REPLACEMENT OF UNSUITABLE SOIL COST IN THE UNIT BID PRICE FOR STRUCTURE EXCAVATION FOR CULVERT.

2.2 SOIL EXCAVATION IS TO INCLUDE THE REMOVAL OF ALL VEGETATION, TOPSOIL, AND ANY OTHER SOFT OR UNSUITABLE MATERIALS FROM AREAS WITHIN 2 FEET OF THE CULVERT AND 2 FEET BEYOND THE TOE OF STRUCTURAL FILLS. IT IS EXPECTED THAT APPROXIMATELY 2 FEET OF UNDERCUTTING WILL BE REQUIRED TO COMPLETELY REMOVE THE SOFT SOILS BELOW THE CULVERT. THE SOFT SOILS ARE TO BE REPLACED WITH NO. 57 STONE.

2.3 THE FINAL FOOTING ELEVATION IS TO BE EVALUATED BY A GEOTECHNICAL ENGINEER TO DOCUMENT THAT THE BEARING SOILS ARE CAPABLE OF SUPPORTING THE RECOMMENDED NET ALLOWABLE BEARING PRESSURE AND ARE SUITABLE FOR FOUNDATION CONSTRUCTION. THESE EVALUATIONS SHOULD INCLUDE VISUAL OBSERVATIONS, HAND ROD PROBING, AND DYNAMIC CONE PENETROMETER TESTING, OR OTHER APPROVED METHODS. AT INTERVALS NOT TO EXCEED 25 FEET.

2.4 INCLUDE THE COST OF DEWATERING COST IN THE UNIT BID PRICE FOR STRUCTURE EXCAVATION FOR CULVERT.

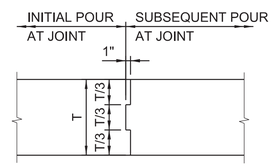

CONST. JT. DETAIL

BEFORE MAKING SUBSEQUENT POUR, WAIT EITHER A MINIMUM OF 96 HOURS AFTER PLACEMENT OF THE INITIAL POUR OR UNTIL THE INITIAL POUR CONCRETE HAS ATTAINED A MINIMUM OF 75% OF THE SPECIFIED 28-DAY COMPRESSIVE STRENGTH AS VERIFIED BY TESTING EXTRA CYLINDERS.

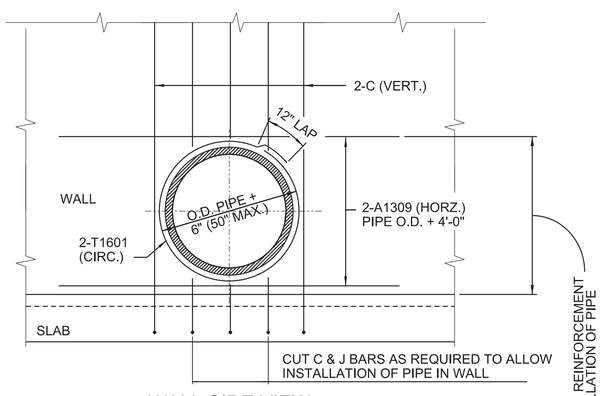

WALL SIDE VIEW

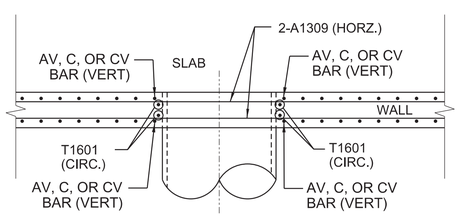

WALL CROSS SECTION

WALL PIPE PENETRATION DETAIL

FOR PIPES NOT SHOWN ON CIP CULVERTS AND PRECAST CULVERTS, THE RCE IS TO SET LOCATION OF THOSE PIPES IN THE FIELD.

ALL PIPES ARE TO BE PLACED AND WRAPPED IN TWO LAYERS OF TAR PAPER BEFORE THE SURROUNDING CONCRETE IS POURED.

VERTICAL C BARS AND J BARS ARE TO MATCH MAIN C BARS AND J BARS IN WALL IN CIP CULVERTS.

REINFORCEMENT SHOWN ON CULVERT DETAILS SHALL BE CUT TO A MAXIMUM OF 3" CLEAR OF OPENING.

**T1601 BAR DIMENSIONS ARE DETAILED ASSUMING PIPE IS 24" DIA. RCP WITH 3" WALL THICKNESS. MODIFY HOOP DIAMETER IF OD OF PIPE IS DIFFERENT THAN DETAILED.

REINFORCING STEEL SCHEDULE

LOCATION	MARK	NO. REQ'D	DIMENSION "a"	"b"	"c"	"d"	"e"	"f"	"g"	LENGTH
CULVERT BARREL	A1301	44	10'-2"	-	-	-	-	-	-	10'-2"
APRON SLAB/CUT OFF WALL	A1302	16	19'-7"	-	-	-	-	-	-	19'-7"
APRON SLAB	A1303	100	6'-10⅛"	-	-	-	-	-	-	6'-11"
WING WALL	A1304	32	7'-7"	-	-	-	-	-	-	7'-7"
WING WALL	A1305	8	7'-11 15/16"	-	-	-	-	-	-	8'-0"
HEADWALL	A1306	8	11'-10"	-	-	-	-	-	-	11'-10"
CULVERT BARREL	A1307	20	8'-4"	-	-	-	-	-	-	8'-4"
WING WALL	A1308	4	2'-6⅛"	-	-	-	-	-	-	2'-7"
PIPE PENETRATION	A1309	16	6'-6"	-	-	-	-	-	-	6'-6"
CULVERT BARREL	A1601	78	3'-3"	-	-	-	-	-	-	3'-3"
CULVERT BARREL	AV1301	44	8'-3 15/16"	7'-3¼"	9'-4⅝"	2 9/16"	-	-	-	8'-4"
APRON SLAB	AV1302	56	3'-4 5/16"	9 3/16"	5'-11½"	10⅜"	-	-	-	3'-5"
APRON SLAB	AV1303	52	15'-7 11/16"	12'-2⅛"	19'-1¼"	3 7/16"	-	-	-	15'-8"
WING WALL	AV1304	16	5'-7⅝"	4'-1⅝"	7'-1⅝"	3'-0"	-	-	-	5'-8"
WING WALL	AV1601	40	3'-4⅞"	2'-10⅞"	3'-10⅞"	3"	-	-	-	3'-5"
CULVERT BARREL	C1301	44	3'-3½"	2'-6"	-	-	-	-	-	5'-10"
CULVERT BARREL	C1302	44	2'-11½"	2'-2"	-	-	-	-	-	5'-2"
CULVERT BARREL	C1303	88	3'-2"	8"	-	-	-	-	-	3'-10"
CULVERT BARREL	C1304	22	8'-11"	3'-2½"	-	-	-	-	-	12'-2"
CULVERT BARREL	C1305	22	8'-7"	2'-11½"	-	-	-	-	-	11'-7"
CULVERT BARREL	C1306	22	4'-7"	3'-2½"	-	-	-	-	-	7'-10"
CULVERT BARREL	C1307	22	4'-3"	2'-11½"	-	-	-	-	-	7'-3"
WING WALL	C1601	40	3'-6"	1'-0"	-	-	-	-	-	4'-6"
WING WALL	CV1601	48	3'-11⅜"	3'-3⅞"	4'-6⅞"	3"	1'-0"	-	-	5'-0"
CULVERT BARREL	F1301	24	7'-4¾"	2'-1"	1'-6 9/16"	1'-4 11/16"	-	-	-	9'-6"
CULVERT BARREL	F1302	24	9'-10⅜"	2'-0"	1'-10 13/16"	7 7/16"	-	-	-	11'-11"
CULVERT BARREL	FV1301	44	8'-9"	7'-8⅜"	9'-9¾"	2 9/16"	1'-9"	1'-8 9/16"	4⅜"	10'-6"
CUT OFF WALL	J1301	42	6"	2'-3"	-	-	-	-	-	5'-0"
HEADWALL	J1302	28	8 3/16"	1'-4"	-	-	-	-	-	3'-5"
PIPE PENETRATION**	T1601	8	3'-0"	1'-0"	-	-	-	-	-	10'-6"

QUANTITIES

ITEM	UNIT	QTY.
CONC. FOR STRUCTURES CLASS 4000 (CULVERT)	CY	29.1
REINFORCING STEEL FOR STRUCTURES (ROADWAY)	LB	5,312
5'X4' PRECAST DOUBLE BOX CULVERT	LF	48
STRUCTURE EXCAVATION FOR CULVERTS	CY	252.0
GEOTEXTILE FOR SEPERATION OF SUBGRADE/BASE COURSE MATERIAL	SY	210
AGGREGATE UNDERDRAIN (AGGREGATE NO. 57)	TON	130
RIP-RAP (CLASS B)	TON	47
GEOTEXTILE FOR EROSION CONTROL UNDER RIP-RAP (CLASS B) TYPE D	SY	73

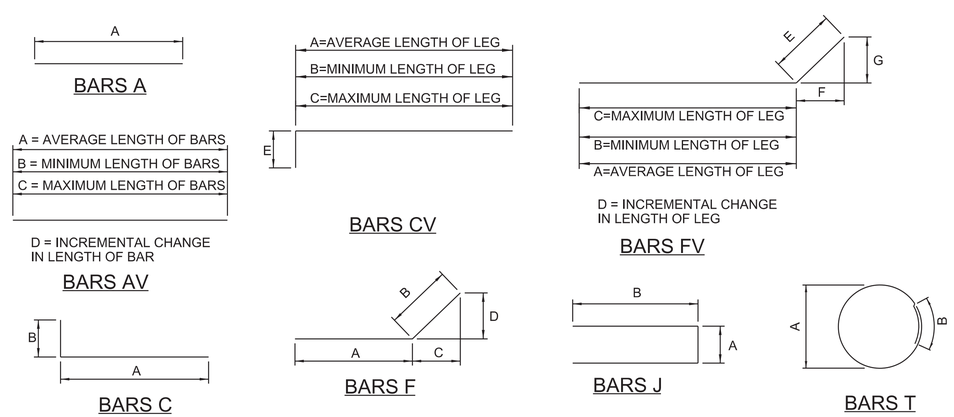

REINFORCEMENT BENDING DETAILS

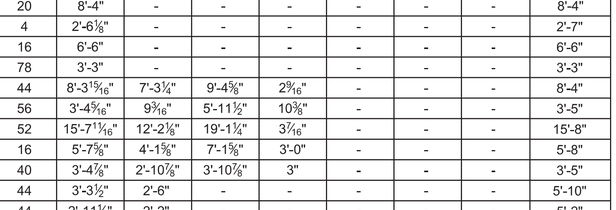

ADHESIVELY BONDED DOWEL DETAIL

CLEAN CONTACT SURFACE OF OLD CONCRETE. ENSURE THAT THE SURFACE IS FREE OF LAITANCE AND ROUGHEN THE SURFACE TO AN AMPLITUDE OF ¼".

PROVIDE AND INSTALL ANCHORAGES IN ACCORDANCE WITH THE REQUIREMENTS OF THE SUPPLEMENTAL SPECIFICATION FOR ADHESIVELY BONDED ANCHORS AND DOWELS. USE AN ADHESIVE BONDING SYSTEM THAT HAS A MINIMUM BOND STRENGTH OF 1.5 KSI. FIELD TESTING OF THE ANCHORAGES IS NOT REQUIRED.

INCLUDE ALL COSTS OF ADHESIVELY BONDED DOWELS IN THE CONTRACT UNIT PRICE BID FOR REINFORCING STEEL. INCLUDE ALL COSTS OF CLEANING AND ROUGHENING THE EXISTING CONCRETE SURFACE IN THE CONTRACT UNIT PRICE BID FOR CLASS 4000 CONCRETE.

SOUTH CAROLINA DAVIS & FLOYD, INC. No. C00538 CERTIFICATE OF AUTHORIZATION

SOUTH CAROLINA PROFESSIONAL ENGINEER No. 32080 ROBERT G. STEVENSON, JR. 4/27/23

3229 W. MONTAGUE AVE.
CHARLESTON, SC 29418
(843) 554-8602

DAVIS & FLOYD
SINCE 1954

REV. NO.	BY	DATE	DESCRIPTION OF REVISION
5			
4			
3			
2			
1			

DES. BY DLH DRAWN BY JEB REVIEWED BY DLH CHECKED BY RGS

SOUTH CAROLINA
DEPARTMENT OF TRANSPORTATION

US 521 (GEORGETOWN HWY.) STA. 63+06.13
5'X4' DOUBLE BARREL PRECAST CULVERT
DETAILS (SHEET 2 OF 3), 3.5'-2.0'
DESIGN FILL HEIGHT, 4:1 FILL SLOPES

PLOT SIZE = 22" x 34"

SCALE: 2:8.0000 ':" / in.
PEN TABLE: G:\Resource\Standards\Bentley\Vertical\Plotting\DO_NOTHING_BRIDGES.tbl
PLOT DRIVER: \\CHS-FS1\Data\Resource\Standards\Bentley\Vertical\Plotting\BRIDGES.pdf MS i.pltcfg
FILE: G:\JobsOdd\31969-00\Production\Structural\Drawings\Culvert Drawings\GT Highway\031969-00_US 521 GT Highway_BR_S05_5X4 Double Culvert DETAILS (Sh 3 of 3).dgn
4/27/2023

FED. ROAD DIV.NO.	STATE	COUNTY	PROJECT ID	ROUTE NO.	SHEET NO.	TOTAL SHEETS
3	S.C.	GEORGETOWN		S-20	56	

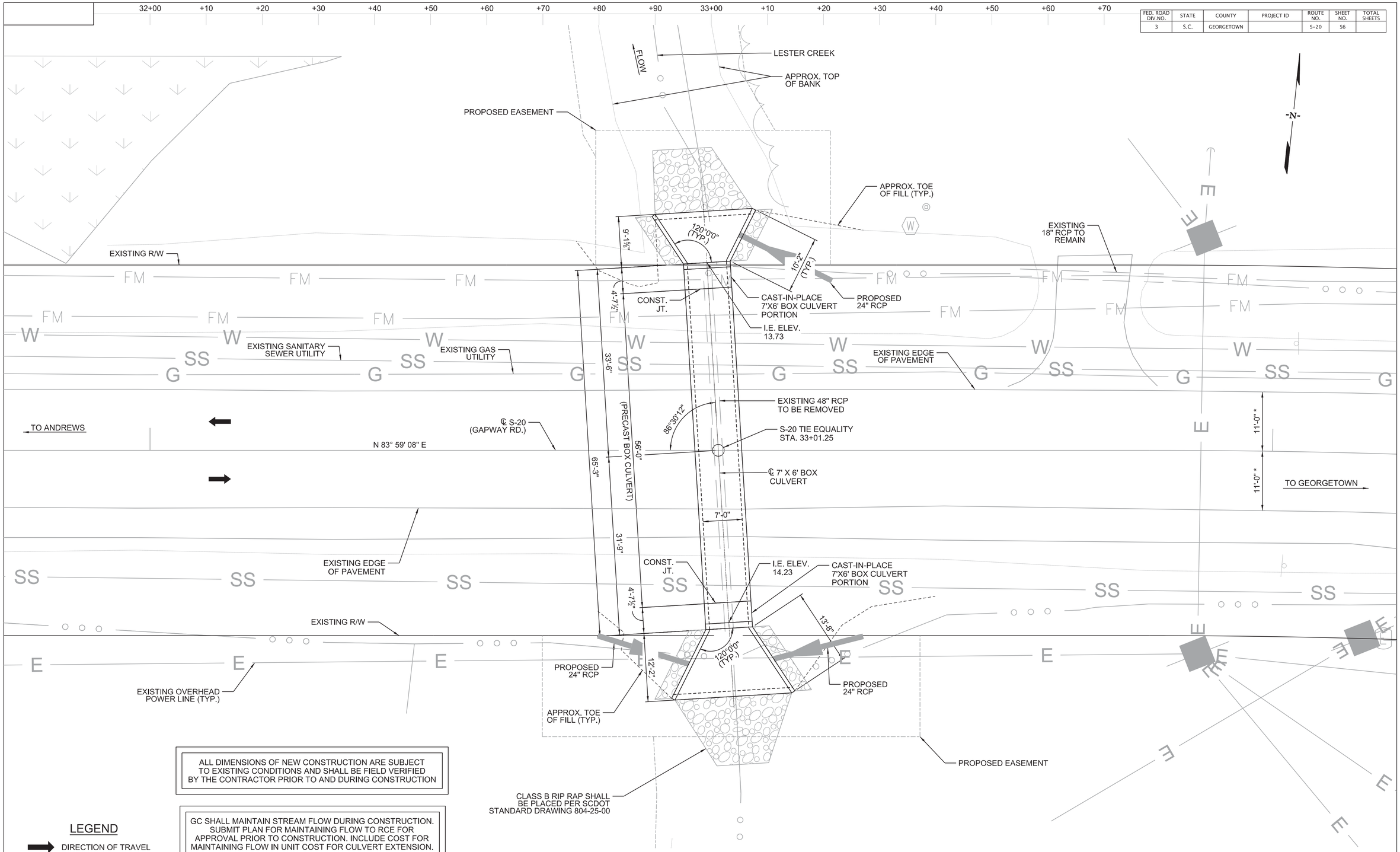

ALL DIMENSIONS OF NEW CONSTRUCTION ARE SUBJECT TO EXISTING CONDITIONS AND SHALL BE FIELD VERIFIED BY THE CONTRACTOR PRIOR TO AND DURING CONSTRUCTION

GC SHALL MAINTAIN STREAM FLOW DURING CONSTRUCTION. SUBMIT PLAN FOR MAINTAINING FLOW TO RCE FOR APPROVAL PRIOR TO CONSTRUCTION. INCLUDE COST FOR MAINTAINING FLOW IN UNIT COST FOR CULVERT EXTENSION.

LEGEND

➡ DIRECTION OF TRAVEL

NOTES:

ALL EXISTING UTILITIES IN CONFLICT WITH CULVERT TO BE RELOCATED PRIOR TO CONSTRUCTION.

* APPROXIMATE

PLAN

SOUTH CAROLINA DAVIS & FLOYD, INC. No. C00538 CERTIFICATE OF AUTHORIZATION

SOUTH CAROLINA PROFESSIONAL ENGINEER No. 32080 RICHARD G. STEVENSON JR. 3/9/23

3229 W. MONTAGUE AVE.
CHARLESTON, SC 29418
(843) 554-8602

DAVIS & FLOYD
SINCE 1954

REV. NO.	BY	DATE	DESCRIPTION OF REVISION
5			
4			
3			
2			
1			

DES. BY DLH DRAWN BY JEB REVIEWED BY DLH CHECKED BY RGS

SOUTH CAROLINA DEPARTMENT OF TRANSPORTATION

S-20 (GAPWAY RD.) STA. 33+01.25 7'X6' PRECAST CULVERT PLAN, 6.0'-4.5' DESIGN FILL HEIGHT, 2:1 FILL SLOPES

PLOT SIZE = 22" x 34"

SCALE: 8.0000 ft / in.
PEN TABLE: G:\Resource\Standards\Bentley\Vertical\Plotting\DO_NOTHING_BRIDGES.tbl
PLOT DRIVER: \\CHS-FS1\Data\Resource\Standards\Bentley\Vertical\Plotting\BRIDGES.pdf MS i.pltcfg
FILE: G:\JobsOdd\031969-00\Production\Structural\Drawings\Culvert Drawings\Gapway Road\031969-00_Gapway Road_BR_S06_7X6 Culvert PLAN.dgn
3/8/2023

FED. ROAD DIV.NO.	STATE	COUNTY	PROJECT ID	ROUTE NO.	SHEET NO.	TOTAL SHEETS
3	S.C.	GEORGETOWN		S-20	S7	

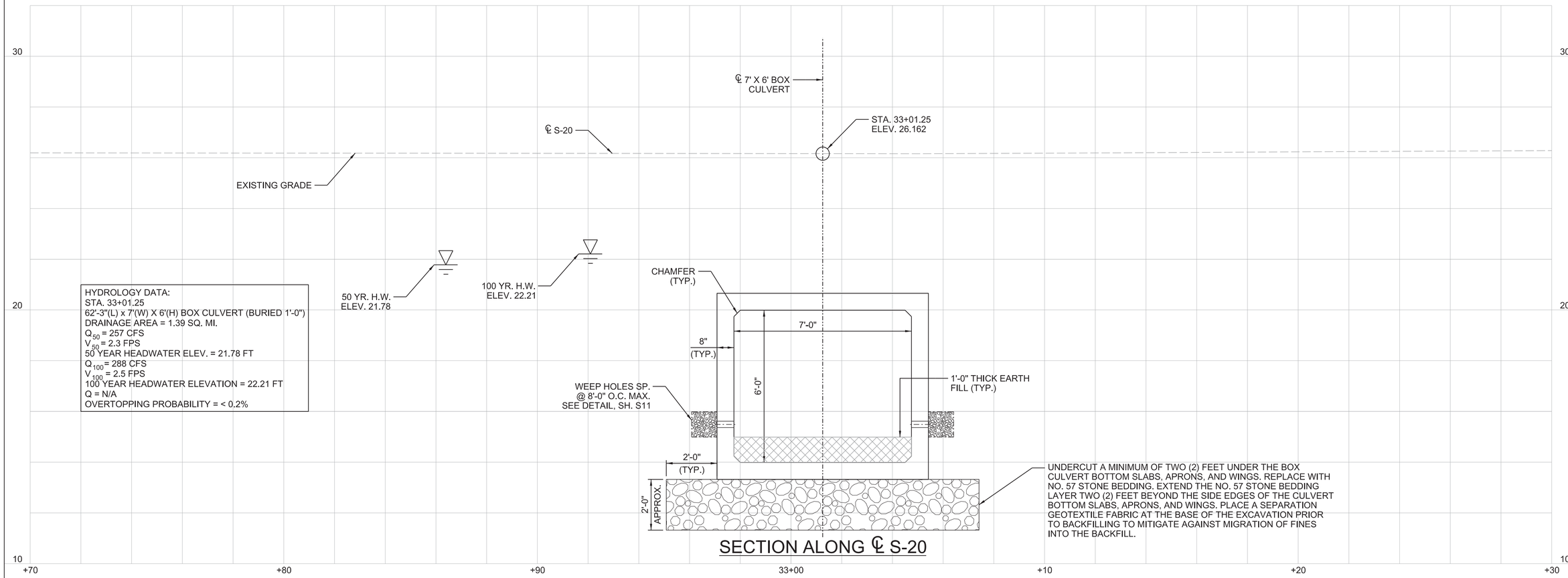

HYDROLOGY DATA:
STA. 33+01.25
62'-3"(L) x 7'(W) X 6'(H) BOX CULVERT (BURIED 1'-0")
DRAINAGE AREA = 1.39 SQ. MI.
Q_{50} = 257 CFS
V_{50} = 2.3 FPS
50 YEAR HEADWATER ELEV. = 21.78 FT
Q_{100} = 288 CFS
V_{100} = 2.5 FPS
100 YEAR HEADWATER ELEVATION = 22.21 FT
Q = N/A
OVERTOPPING PROBABILITY = < 0.2%

SECTION ALONG ℄ S-20

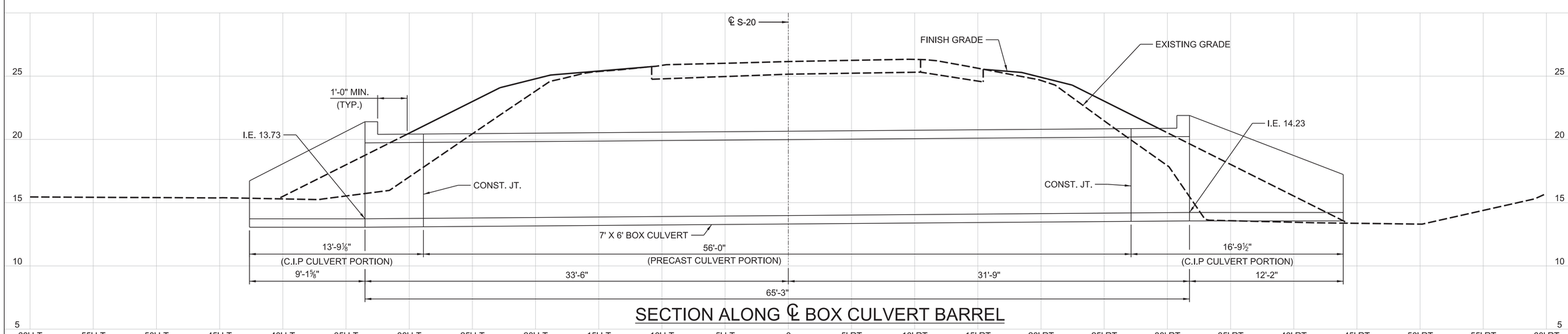

SECTION ALONG ℄ BOX CULVERT BARREL

SCALE: 2.0000 ft / in.
PEN TABLE: G:\Resource\Standards\Bentley\Vertical\Plotting\DO_NOTHING_BRIDGES.tbl
PLOT DRIVER: \\CHS-FS1\Data\Resource\Standards\Bentley\Vertical\Plotting\BRIDGES.pdf MS i.pltcfg
FILE: G:\JobsOdd\31969-00\Production\Structural\Drawings\Culvert Drawings\Gapway Road\031969-00_Gapway Road_BR_S07_7X6 Culvert SECTION.dgn
3/8/2023

SOUTH CAROLINA DAVIS & FLOYD, INC. No. C00538 CERTIFICATE OF AUTHORIZATION

SOUTH CAROLINA PROFESSIONAL ENGINEER No. 32080 3/9/23 ROBERT G. STEVENSON, JR.

3229 W. MONTAGUE AVE.
CHARLESTON, SC 29418
(843) 554-8602

DAVIS & FLOYD
SINCE 1954

REV. NO.	BY	DATE	DESCRIPTION OF REVISION
5			
4			
3			
2			
1			

DES. BY DLH DRAWN BY JEB REVIEWED BY DLH CHECKED BY RGS

SOUTH CAROLINA
DEPARTMENT OF TRANSPORTATION

S-20 (GAPWAY RD.) STA. 33+01.25 7'X6' PRECAST CULVERT SECTION, 6.0'-4.5' DESIGN FILL HEIGHT, 2:1 FILL SLOPES

PLOT SIZE = 22" x 34"

FED. ROAD DIV.NO.	STATE	COUNTY	PROJECT ID	ROUTE NO.	SHEET NO.	TOTAL SHEETS
3	S.C.	GEORGETOWN		S-20	S8	

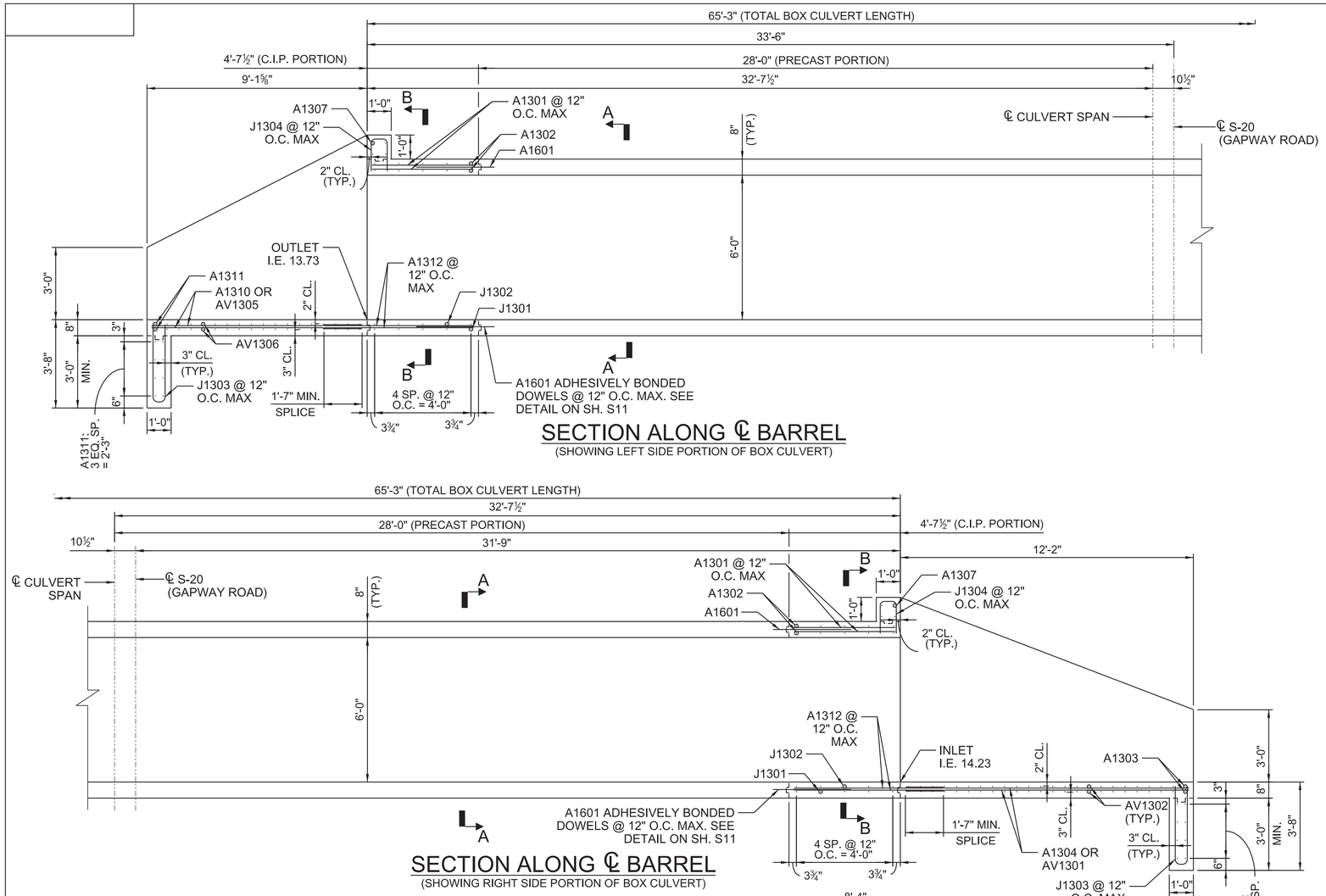

SECTION ALONG ℄ BARREL

(SHOWING LEFT SIDE PORTION OF BOX CULVERT)

SECTION ALONG ℄ BARREL

(SHOWING RIGHT SIDE PORTION OF BOX CULVERT)

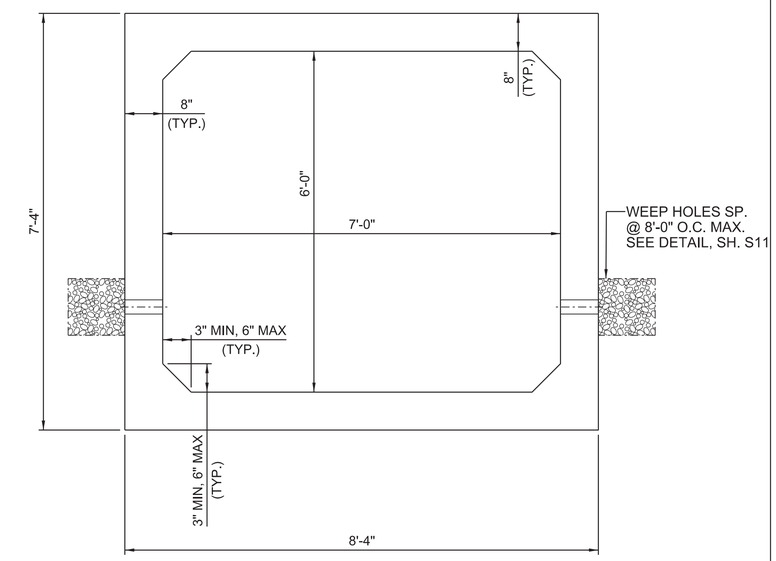

SECTION A-A

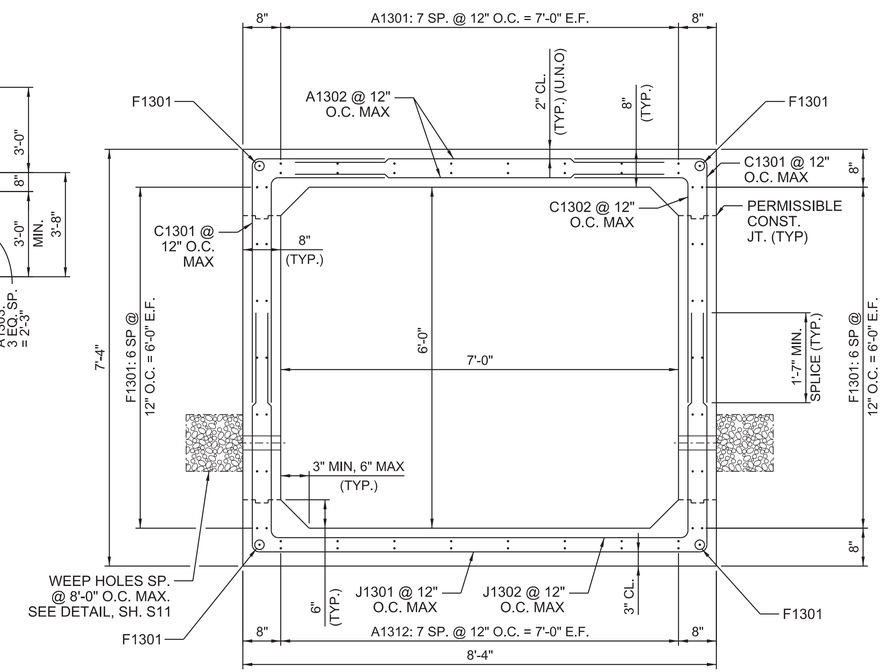

SECTION B-B

(SEE SH. S9 FOR A1601 BARS)

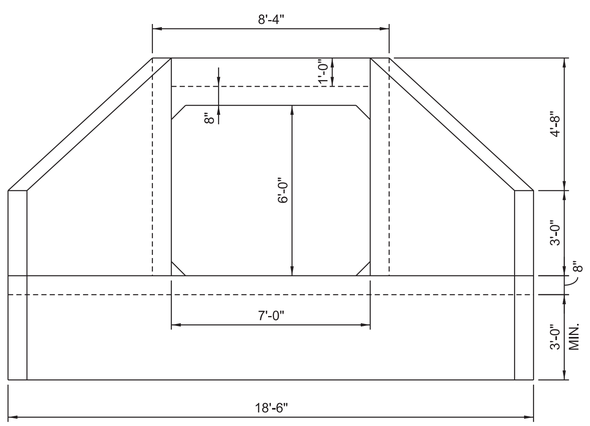

OUTLET END ELEVATION

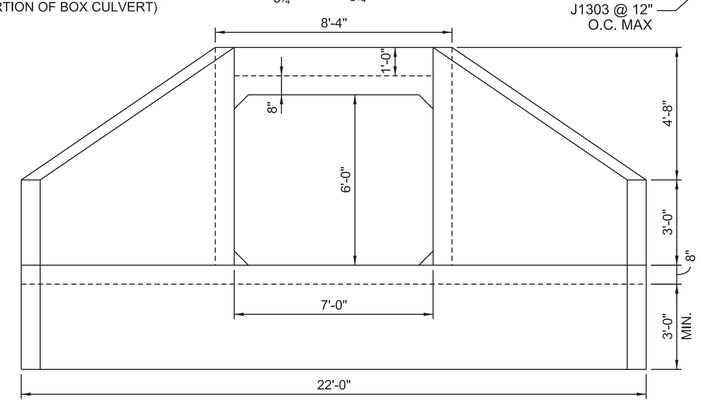

INLET END ELEVATION

SCALE: 2:8.0000 '-" / in.
PEN TABLE: G:\Resource\Standards\Bentley\Vertical\Plotting\DO_NOTHING_BRIDGES.tbl
PLOT DRIVER: \\CHS-FS1\Data\Resource\Standards\Bentley\Vertical\Plotting\BRIDGES.pdf MS i.pltcfg
FILE: G:\JobsOdd\31969-00\Production\Structural\Drawings\Culvert Drawings\Gapway Road\031969-00_Gapway Road_BR_S08_7X6 Culvert DETAILS (Sh 1 of 4).dgn
3/8/2023

SOUTH CAROLINA DAVIS & FLOYD, INC. No. C00538 CERTIFICATE OF AUTHORIZATION

SOUTH CAROLINA PROFESSIONAL ENGINEER No. 32080 3/9/23 ROBERT G. STEVENSON, JR.

3229 W. MONTAGUE AVE. CHARLESTON, SC 29418 (843) 554-8602

DAVIS & FLOYD

SINCE 1954

REV. NO.	BY	DATE	DESCRIPTION OF REVISION
5			
4			
3			
2			
1			

DES. BY DLH DRAWN BY JEB REVIEWED BY DLH CHECKED BY RGS

SOUTH CAROLINA DEPARTMENT OF TRANSPORTATION

S-20 (GAPWAY RD.) STA. 33+01.25 7'X6' PRECAST CULVERT DETAILS (SHEET 1 OF 4), 6.0'-4.5' DESIGN FILL HEIGHT, 2:1 FILL SLOPES

PLOT SIZE = 22" x 34"

FED. ROAD DIV.NO.	STATE	COUNTY	PROJECT ID	ROUTE NO.	SHEET NO.	TOTAL SHEETS
3	S.C.	GEORGETOWN		S-20	S9	

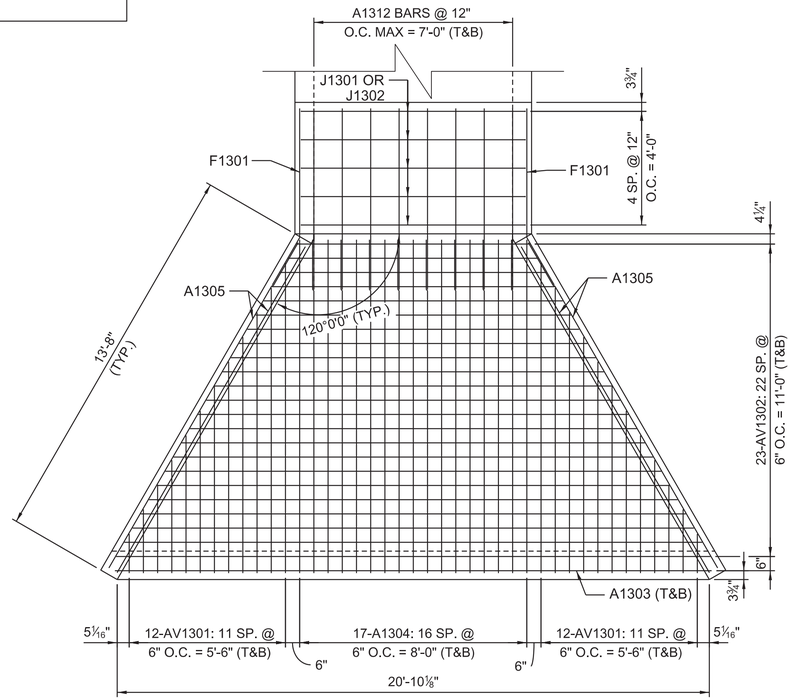

INLET END BOTTOM/APRON SLAB PLAN

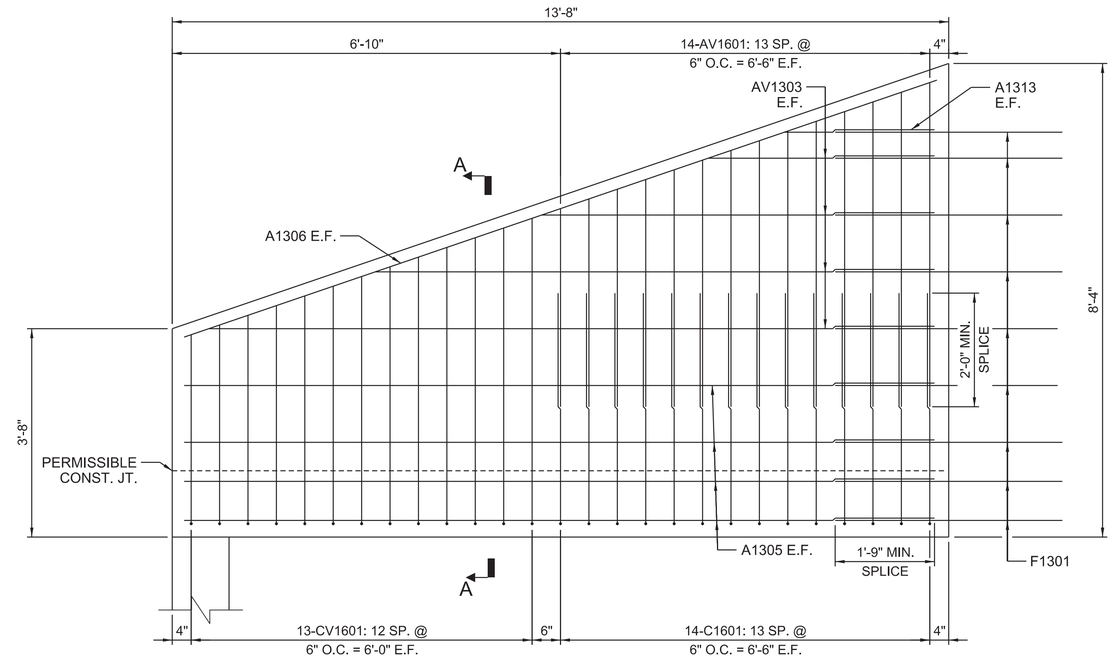

INLET END WING WALL ELEVATION

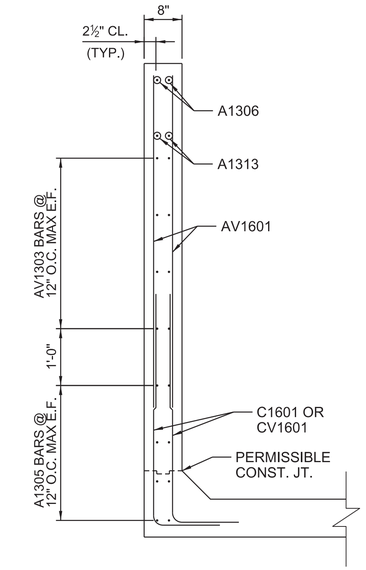

WING WALL SECTION A-A

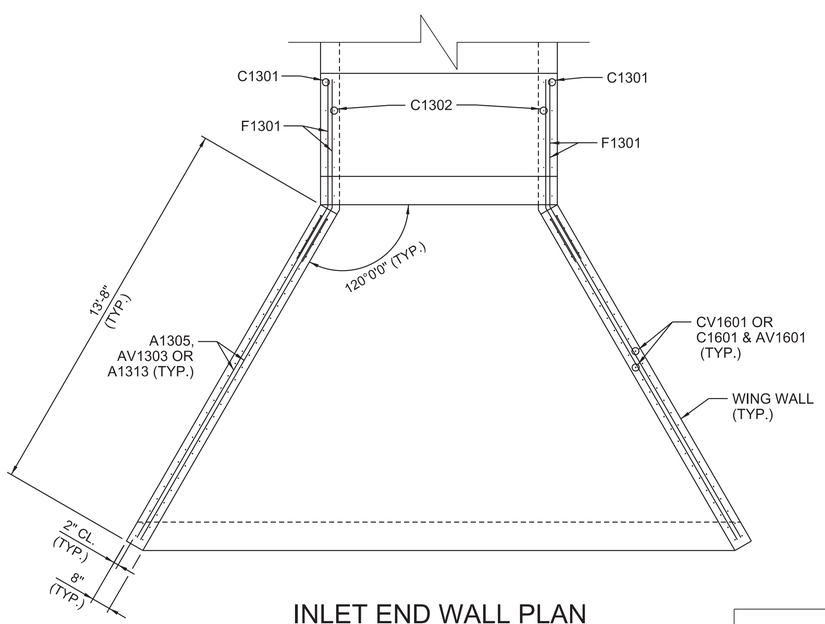

INLET END WALL PLAN

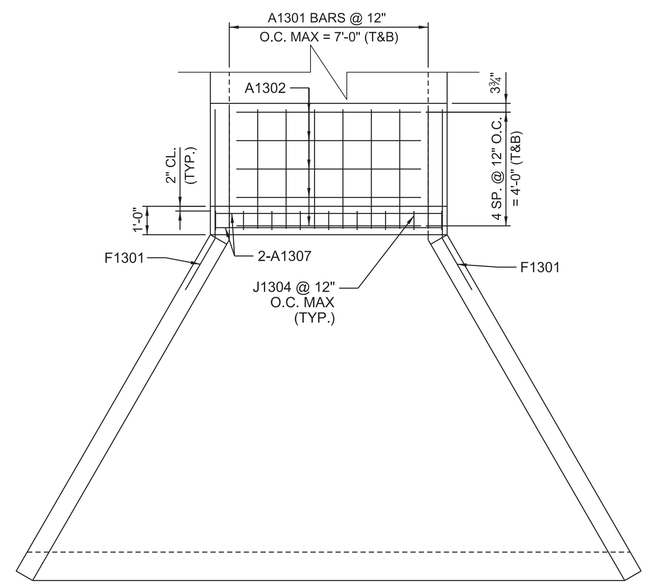

INLET END TOP SLAB PLAN

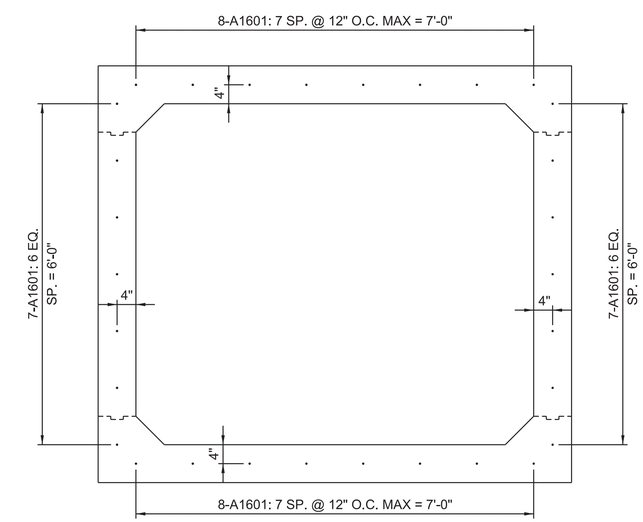

SECTION B-B

(SHOWING A1601 DOWELS)
(ADDITIONAL REINF. NOT SHOWN FOR CLARITY)

SCALE: 2:8.0000 '.'" / in.
PEN TABLE: G:\Resource\Standards\Bentley\Vertical\Plotting\DO_NOTHING_BRIDGES.tbl
PLOT DRIVER: \\CHS-FS1\Data\Resource\Standards\Bentley\Vertical\Plotting\BRIDGES.pdf MS i.pltcfg
FILE: G:\JobsOdd\31969-00\Production\Structural\Drawings\Culvert Drawings\Gapway Road\031969-00_Gapway Road_BR_S09_7X6 Culvert DETAILS (Sh 2 of 4).dgn
3/8/2023

SOUTH CAROLINA
DAVIS & FLOYD, INC.
No. C00538
CERTIFICATE OF AUTHORIZATION

SOUTH CAROLINA
PROFESSIONAL ENGINEER
No. 32080
3/9/23
ROBERT G. STEVENSON, JR.

3229 W. MONTAGUE AVE,
CHARLESTON, SC 29418
(843) 554-8602

DAVIS & FLOYD

SINCE 1954

REV. NO.	BY	DATE	DESCRIPTION OF REVISION
5			
4			
3			
2			
1			

DES. BY DLH DRAWN BY JEB REVIEWED BY DLH CHECKED BY RGS

SOUTH CAROLINA
DEPARTMENT OF TRANSPORTATION

S-20 (GAPWAY RD.) STA. 33+01.25 7'X6'
PRECAST CULVERT DETAILS (SHEET 2 OF 4),
6.0'-4.5' DESIGN FILL HEIGHT, 2:1 FILL SLOPES

PLOT SIZE = 22" x 34"

FED. ROAD DIV.NO.	STATE	COUNTY	PROJECT ID	ROUTE NO.	SHEET NO.	TOTAL SHEETS
3	S.C.	GEORGETOWN		S-20	S10	

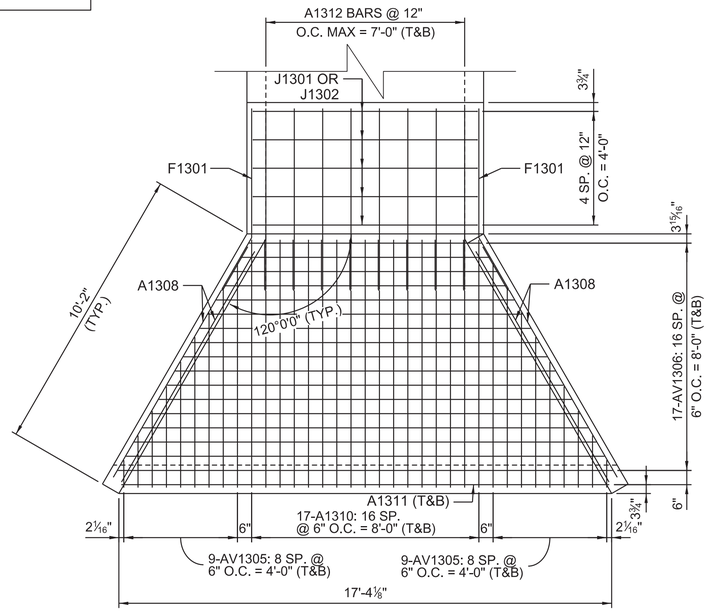

OUTLET END BOTTOM/APRON SLAB PLAN

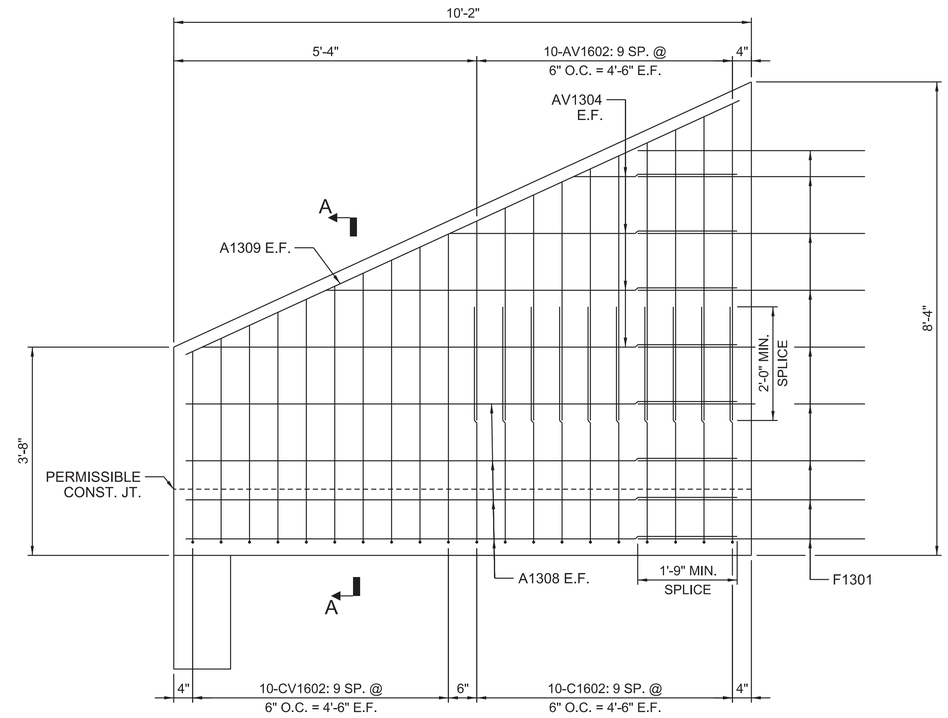

OUTLET END WING WALL ELEVATION

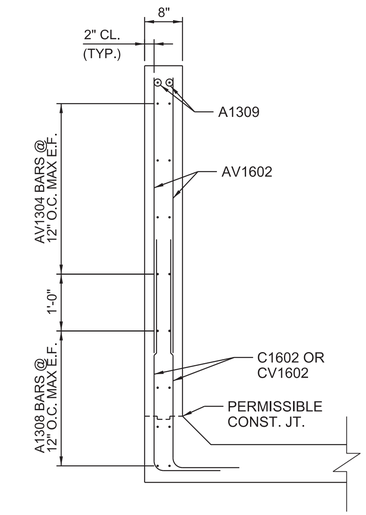

SECTION A-A

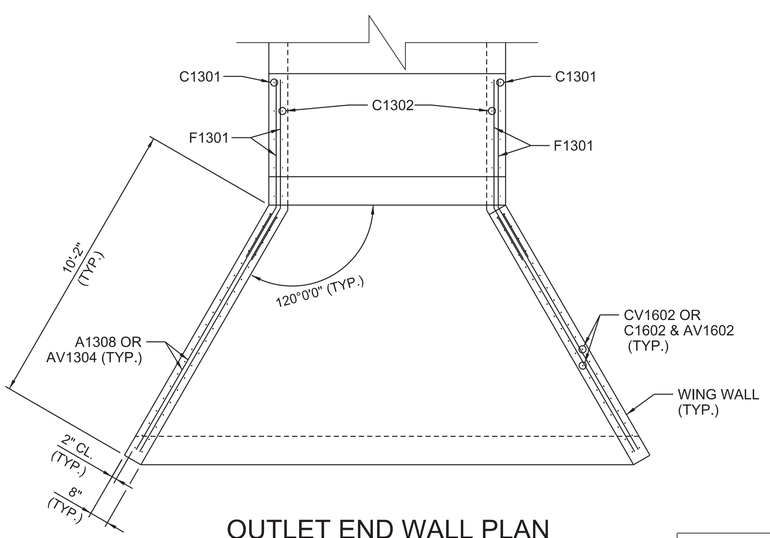

OUTLET END WALL PLAN

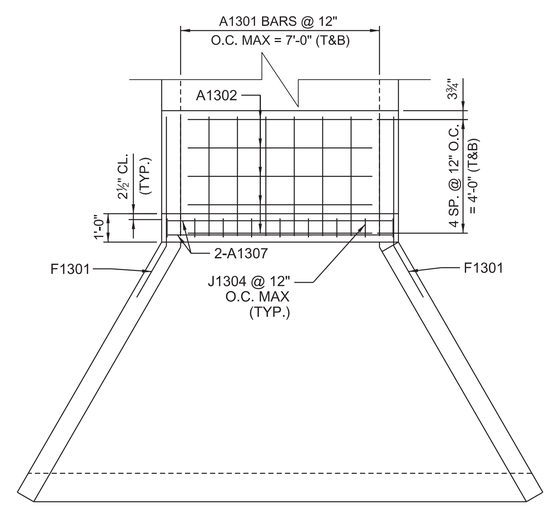

OUTLET END TOP SLAB PLAN

SCALE: 2:8.0000 ':" / in.
PEN TABLE: G:\Resource\Standards\Bentley\Vertical\Plotting\DO_NOTHING_BRIDGES.tbl
PLOT DRIVER: \\CHS-FS1\Data\Resource\Standards\Bentley\Vertical\Plotting\BRIDGES.pdf MS i.pltcfg
FILE: G:\JobsOdd\31969-00\Production\Structural\Drawings\Culvert Drawings\Gapway Road\031969-00_Gapway Road_BR_S10_7X6 Culvert DETAILS (Sh 3 of 4).dgn
3/8/2023

SOUTH CAROLINA DAVIS & FLOYD, INC. No. C00538 CERTIFICATE OF AUTHORIZATION

SOUTH CAROLINA PROFESSIONAL ENGINEER No. 32080 ROBERT G. STEVENSON, JR. 3/9/23

3229 W. MONTAGUE AVE.
CHARLESTON, SC 29418
(843) 554-8602

DAVIS & FLOYD
SINCE 1954

REV. NO.	BY	DATE	DESCRIPTION OF REVISION
5			
4			
3			
2			
1			

DES. BY DLH DRAWN BY JEB REVIEWED BY DLH CHECKED BY RGS

SOUTH CAROLINA
DEPARTMENT OF TRANSPORTATION

S-20 (GAPWAY RD.) STA. 33+01.25 7'X6'
PRECAST CULVERT DETAILS (SHEET 3 OF 4),
6.0'-4.5' DESIGN FILL HEIGHT, 2:1 FILL SLOPES

PLOT SIZE = 22" x 34"

FED. ROAD DIV.NO.	STATE	COUNTY	PROJECT ID	ROUTE NO.	SHEET NO.	TOTAL SHEETS
3	S.C.	GEORGETOWN		S-20	S11	

1.0 NOTES:

1.1 REFER TO SCDOT STANDARD DRAWINGS 722-105-01, 722-105-02, & 722-305-00 FOR ADDITIONAL NOTES & DETAILS

1.2 BAR DIMENSIONS SHOWN ARE OUT-TO-OUT AND STANDARD C.R.S.I. BENDING DETAILS SHALL APPLY, EXCEPT AS NOTED.

2.0 PAY ITEM 2041000 IS STRUCTURE EXCAVATION FOR CULVERTS:

2.1 INCLUDE THE COST OF ANY SOIL EXCAVATION AND REPLACEMENT OF UNSUITABLE SOIL COST IN THE UNIT BID PRICE FOR STRUCTURE EXCAVATION FOR CULVERT.

2.2 SOIL EXCAVATION IS TO INCLUDE THE REMOVAL OF ALL VEGETATION, TOPSOIL, AND ANY OTHER SOFT OR UNSUITABLE MATERIALS FROM AREAS WITHIN 2 FEET OF THE CULVERT AND 2 FEET BEYOND THE TOE OF STRUCTURAL FILLS. IT IS EXPECTED THAT APPROXIMATELY 2 FEET OF UNDERCUTTING WILL BE REQUIRED TO COMPLETELY REMOVE THE SOFT SOILS BELOW THE CULVERT. THE SOFT SOILS ARE TO BE REPLACED WITH NO. 57 STONE.

2.3 THE FINAL FOOTING ELEVATION IS TO BE EVALUATED BY A GEOTECHNICAL ENGINEER TO DOCUMENT THAT THE BEARING SOILS ARE CAPABLE OF SUPPORTING THE RECOMMENDED NET ALLOWABLE BEARING PRESSURE AND ARE SUITABLE FOR FOUNDATION CONSTRUCTION. THESE EVALUATIONS SHOULD INCLUDE VISUAL OBSERVATIONS, HAND ROD PROBING, AND DYNAMIC CONE PENETROMETER TESTING, OR OTHER APPROVED METHODS. AT INTERVALS NOT TO EXCEED 25 FEET.

2.4 INCLUDE THE COST OF DEWATERING COST IN THE UNIT BID PRICE FOR STRUCTURE EXCAVATION FOR CULVERT.

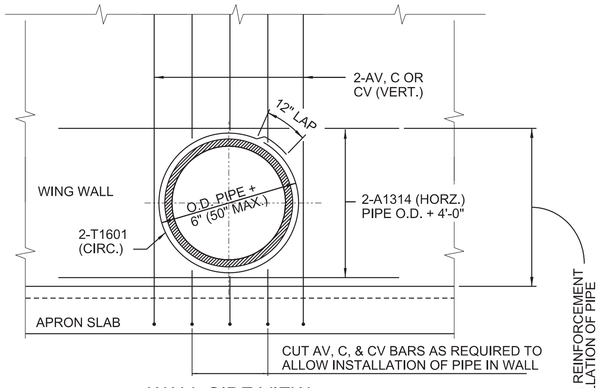

WALL SIDE VIEW

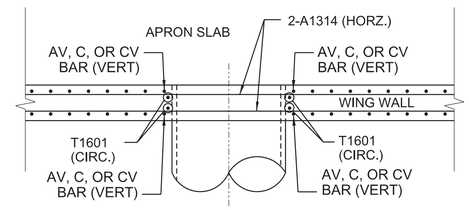

WALL CROSS SECTION

WALL PIPE PENETRATION DETAIL

FOR PIPES NOT SHOWN, ON CIP CULVERTS AND EXTENSIONS THE RCE IS TO SET LOCATION OF THOSE PIPES IN THE FIELD.

ALL PIPES ARE TO BE PLACED AND WRAPPED IN TWO LAYERS OF TAR PAPER BEFORE THE SURROUNDING CONCRETE IS POURED.

VERTICAL AV, C, AND CV BARS ARE TO MATCH MAIN AV, C, AND CV BARS IN WALL IN CIP WING WALLS.

REINFORCEMENT SHOWN ON CULVERT DETAILS SHALL BE CUT TO A MAXIMUM OF 3" CLEAR OF OPENING.

**T1601 BAR DIMENSIONS ARE DETAILED ASSUMING PIPE IS 24" DIA. RCP WITH 3" WALL THICKNESS. MODIFY HOOP DIAMETER IF OD OF PIPE IS DIFFERENT THAN DETAILED.

REINFORCING STEEL SCHEDULE

LOCATION	MARK	NO. REQ'D	DIMENSION "a"	"b"	"c"	"d"	"e"	LENGTH
CULVERT BARREL	A1301	32	4'-2½"	-	-	-	-	4'-3"
CULVERT BARREL	A1302	20	6'-6"	-	-	-	-	6'-6"
APRON SLAB/CUTOFF WALL	A1303	10	21'-0"	-	-	-	-	21'-0"
APRON SLAB	A1304	34	11'-8¾"	-	-	-	-	11'-9"
WING WALL	A1305	16	13'-3"	-	-	-	-	13'-3"
WING WALL	A1306	4	13'-8½"	-	-	-	-	13'-9"
HEADWALL	A1307	8	7'-11"	-	-	-	-	7'-11"
WING WALL	A1308	16	9'-9"	-	-	-	-	9'-9"
WING WALL	A1309	4	10'-4⅜"	-	-	-	-	10'-5"
APRON SLAB	A1310	34	8'-8⅝"	-	-	-	-	8'-9"
APRON SLAB/CUTOFF WALL	A1311	10	17'-2"	-	-	-	-	17'-2"
CULVERT BARREL	A1312	32	6'-5"	-	-	-	-	6'-5"
WING WALL	A1313	2	2'-7¾"	-	-	-	-	2'-8"
PIPE PENETRATION	A1314	12	6'-6"	-	-	-	-	6'-6"
CULVERT BARREL	A1601	60	3'-3"	-	-	-	-	3'-3"
APRON SLAB	AV1301	48	6'-1 11/16"	1'-4 9/16"	10'-10⅞"	10⅜"	-	6'-2"
APRON SLAB	AV1302	46	14'-6 13/16"	8'-2 9/16"	20'-11"	3 7/16"	-	14'-7"
WING WALL	AV1303	16	8'-4½"	3'-11 13/16"	12'-9¼"	2'-11⅛"	-	8'-5"
WING WALL	AV1304	16	6'-1¾"	2'-10 9/16"	9'-5"	2'-2⅛"	-	6'-2"
APRON SLAB	AV1305	36	4'-5⅛"	11 9/16"	7'-10 11/16"	10⅜"	-	4'-6"
APRON SLAB	AV1306	34	12'-9 9/16"	8'-2⅛"	17'-5"	3 7/16"	-	12'-10"
WING WALL	AV1601	56	4'-7⅛"	3'-5⅞"	5'-8½"	2"	-	4'-8"
WING WALL	AV1602	40	4'-6½"	3'-6⅛"	5'-6⅞"	2¾"	-	4'-7"
CULVERT BARREL	C1301	20	4'-3½"	2'-4"	-	-	-	6'-8"
CULVERT BARREL	C1302	20	3'-11½"	2'-0"	-	-	-	6'-0"
WING WALL	C1601	56	4'-1"	1'-0"	-	-	-	5'-1"
WING WALL	C1602	40	4'-2"	1'-0"	-	-	-	5'-2"
WING WALL	CV1601	52	4'-4½"	3'-4¼"	5'-4¾"	2"	1'-0"	5'-5"
WING WALL	CV1602	40	4'-5"	3'-4 9/16"	5'-5⅜"	2¾"	1'-0"	5'-5"
CULVERT BARREL	F1301	64	4'-5 13/16"	2'-0"	1'-8 13/16"	1'-0"	-	6'-6"
CULVERT BARREL	J1301	10	8'-0"	4'-2½"	-	-	-	16'-5"
CULVERT BARREL	J1302	10	7'-4"	3'-11½"	-	-	-	15'-3"
CUT OFF WALL	J1303	44	6"	3'-3"	-	-	-	7'-0"
HEADWALL	J1304	18	8"	1'-4"	-	-	-	3'-4"
PIPE PENETRATION**	T1601	6	3'-0"	1'-0"	-	-	-	10'-6"

QUANTITIES

ITEM	UNIT	QTY.
CONC. FOR STRUCTURES CLASS 4000 (CULVERT)	CY	25.8
REINFORCING STEEL FOR STRUCTURES (ROADWAY)	LB	5,315
7'X6' PRECAST BOX CULVERT	LF	56.0
STRUCTURE EXCAVATION FOR CULVERTS	CY	306.0
GEOTEXTILE FOR SEPERATION OF SUBGRADE/BASE COURSE MATERIAL	SY	198
AGGREGATE UNDERDRAIN (AGGREGATE NO. 57)	TON	117
RIP-RAP (CLASS B)	TON	62
GEOTEXTILE FOR EROSION CONTROL UNDER RIP-RAP (CLASS B) TYPE D	SY	92

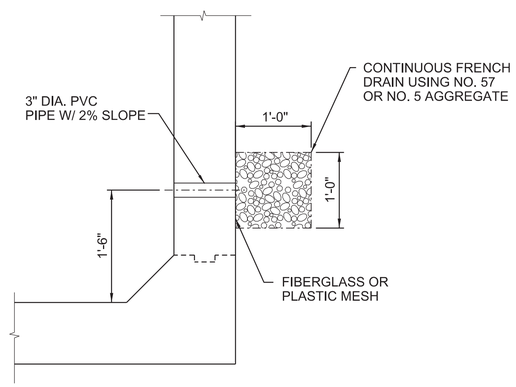

WEEP HOLE DETAIL

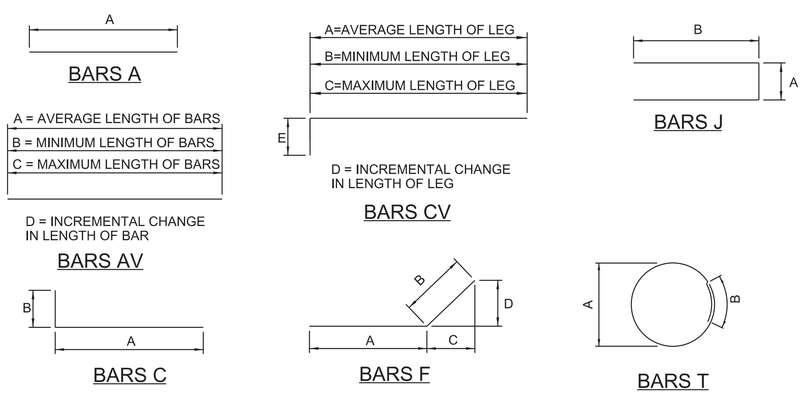

REINFORCEMENT BENDING DETAILS

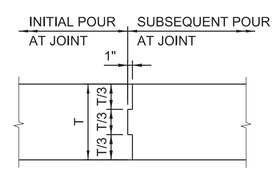

CONST. JT. DETAIL

BEFORE MAKING SUBSEQUENT POUR, WAIT EITHER A MINIMUM OF 96 HOURS AFTER PLACEMENT OF THE INITIAL POUR OR UNTIL THE INITIAL POUR CONCRETE HAS ATTAINED A MINIMUM OF 75% OF THE SPECIFIED 28-DAY COMPRESSIVE STRENGTH AS VERIFIED BY TESTING EXTRA CYLINDERS.

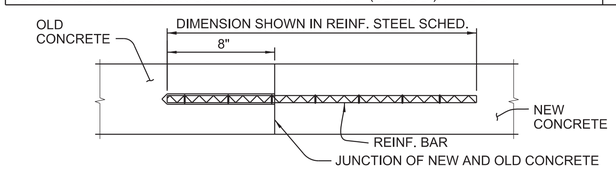

ADHESIVELY BONDED DOWEL DETAIL

CLEAN CONTACT SURFACE OF OLD CONCRETE. ENSURE THAT THE SURFACE IS FREE OF LAITANCE AND ROUGHEN THE SURFACE TO AN AMPLITUDE OF ¼".

PROVIDE AND INSTALL ANCHORAGES IN ACCORDANCE WITH THE REQUIREMENTS OF THE SUPPLEMENTAL SPECIFICATION FOR ADHESIVELY BONDED ANCHORS AND DOWELS. USE AN ADHESIVE BONDING SYSTEM THAT HAS A MINIMUM BOND STRENGTH OF 1.5 KSI. FIELD TESTING OF THE ANCHORAGES IS NOT REQUIRED.

INCLUDE ALL COSTS OF ADHESIVELY BONDED DOWELS IN THE CONTRACT UNIT PRICE BID FOR REINFORCING STEEL. INCLUDE ALL COSTS OF CLEANING AND ROUGHENING THE EXISTING CONCRETE SURFACE IN THE CONTRACT UNIT PRICE BID FOR CLASS 4000 CONCRETE.

DAVIS & FLOYD, INC. No. C00538 — SOUTH CAROLINA CERTIFICATE OF AUTHORIZATION

SOUTH CAROLINA PROFESSIONAL ENGINEER No. 32080 — ROBERT G. STEVENSON, JR. 4/27/23

3229 W. MONTAGUE AVE. CHARLESTON, SC 29418 (843) 554-8602

DAVIS & FLOYD

SINCE 1954

REV. NO.	BY	DATE	DESCRIPTION OF REVISION
5			
4			
3			
2			
1			

DES. BY DLH DRAWN BY JEB REVIEWED BY DLH CHECKED BY RGS

SOUTH CAROLINA DEPARTMENT OF TRANSPORTATION

S-20 (GAPWAY RD.) STA. 33+01.25 7'X6' PRECAST CULVERT DETAILS (SHEET 4 OF 4), 6.0'-4.5' DESIGN FILL HEIGHT, 2:1 FILL SLOPES

PLOT SIZE = 22" x 34"

SCALE: 2:8.0000 '-" / in.
PEN TABLE: G:\Resource\Standards\Bentley\Vertical\Plotting\DO_NOTHING_BRIDGES.tbl
PLOT DRIVER: \\CHS-FS1\Data\Resource\Standards\Bentley\Vertical\Plotting\BRIDGES.pdf MS i.pltcfg
FILE: G:\JobsOdd\31969-00\Production\Structural\Drawings\Culvert Drawings\Gapway Road\031969-00_Gapway Road_BR_S11_7X6 Culvert DETAILS (Sh 4 of 4).dgn
4/27/2023

FED. ROAD DIV.NO.	STATE	COUNTY	PROJECT ID	ROUTE NO.	SHEET NO.	TOTAL SHEETS
3	S.C.	GEORGETOWN		S-383	S12	

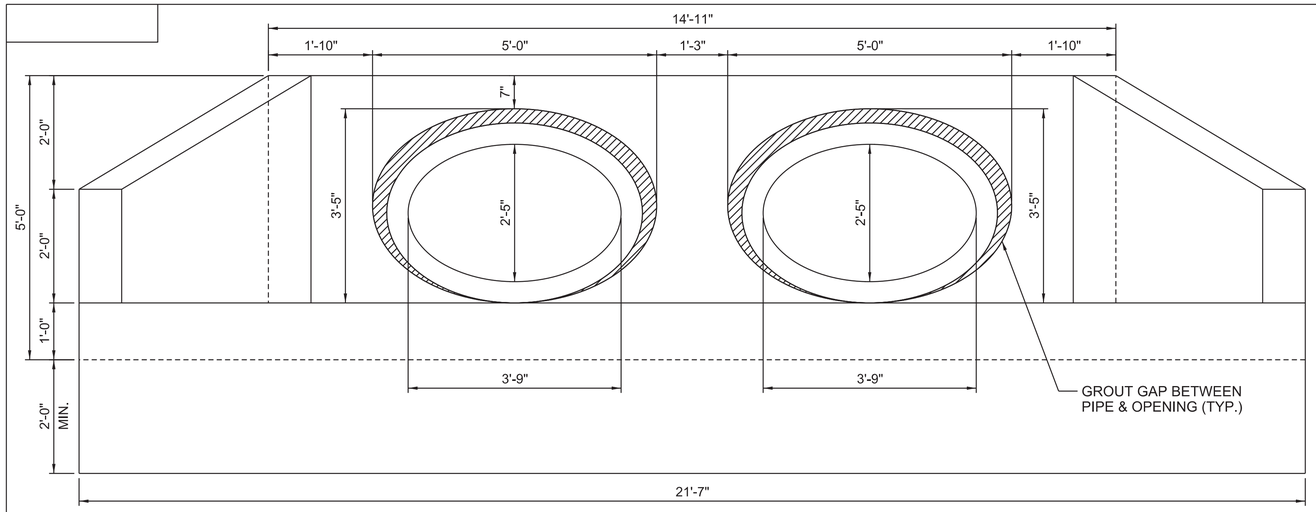

FRONT ELEVATION

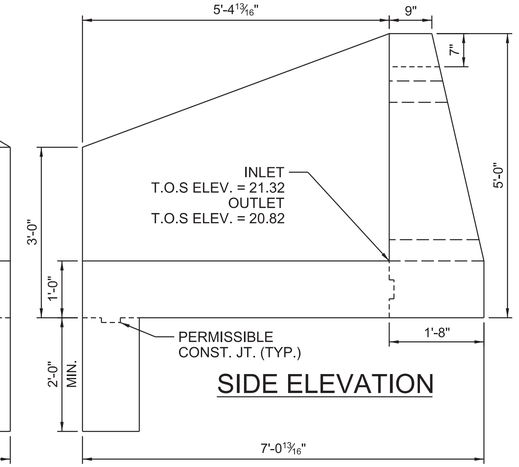

SIDE ELEVATION

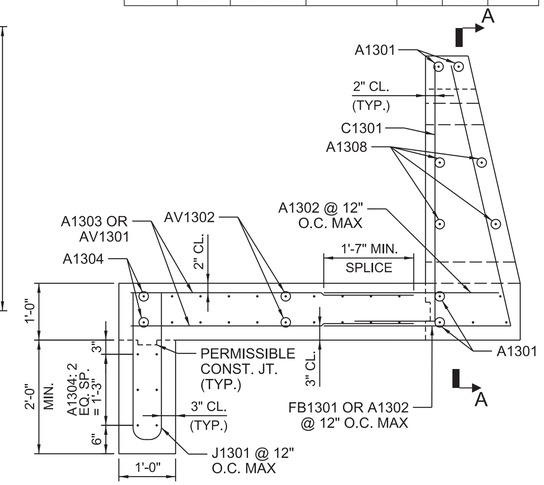

SECTION THRU HEADWALL

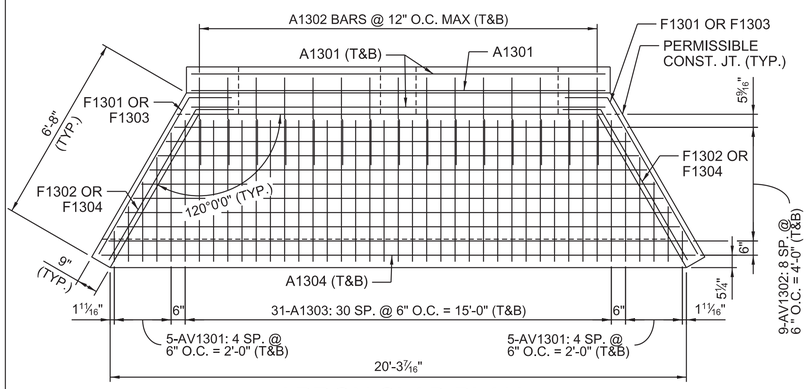

APRON SLAB PLAN

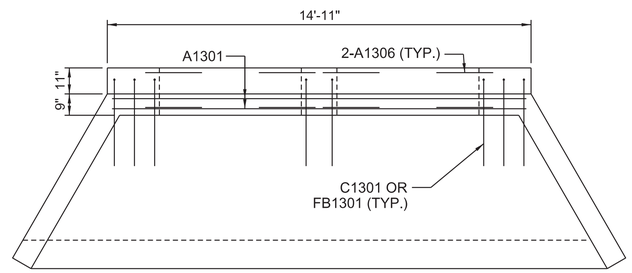

HEADWALL PLAN

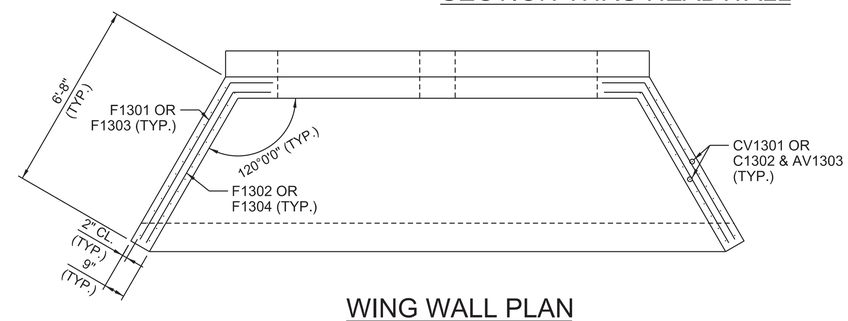

WING WALL PLAN

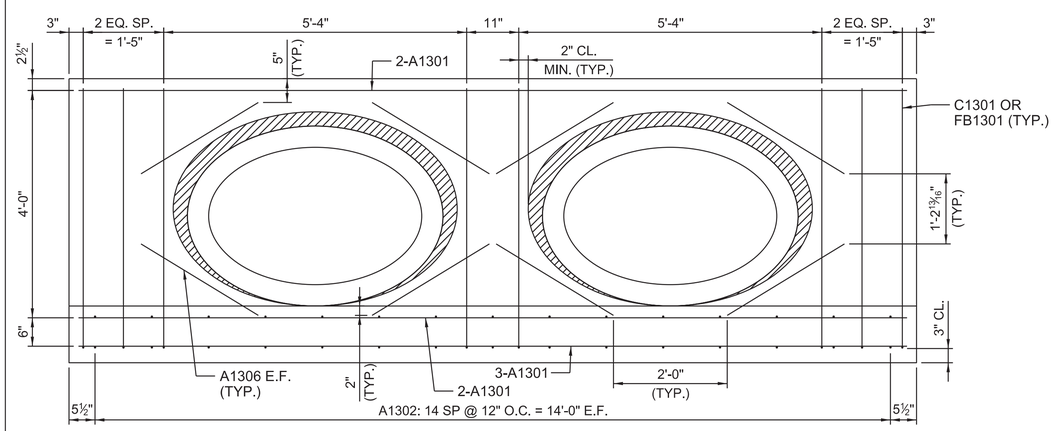

SECTION A-A

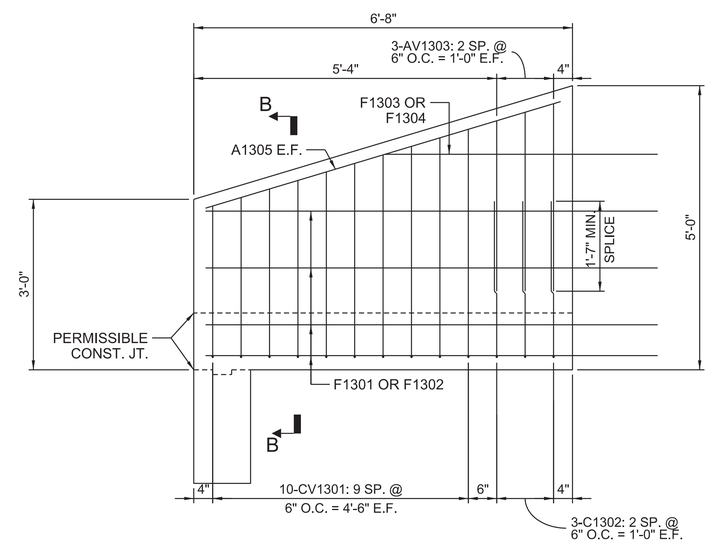

WING WALL ELEVATION

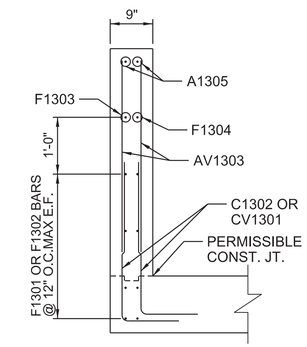

SECTION B-B

SCALE: 2:8.0000 '-" / in.
PEN TABLE: G:\Resource\Standards\Bentley\Vertical\Plotting\DO_NOTHING_BRIDGES.tbl
PLOT DRIVER: \\CHS-FS1\Data\Resource\Standards\Bentley\Vertical\Plotting\BRIDGES.pdf MS i.pltcfg
FILE: G:\JobsOdd\31969-00\Production\Structural\Drawings\Culvert Drawings\Old Cemetery Road\031969-00_Old Cemetery Road_BR_S12_Dual RCEP DETAILS (Sh 1 of 2).dgn
3/8/2023

SOUTH CAROLINA DAVIS & FLOYD, INC. No. C00538 CERTIFICATE OF AUTHORIZATION

SOUTH CAROLINA PROFESSIONAL ENGINEER No. 32080 3/9/23 ROBERT G. STEVENSON, JR.

3229 W. MONTAGUE AVE.
CHARLESTON, SC 29418
(843) 554-8602

DAVIS & FLOYD
SINCE 1954

REV. NO.	BY	DATE	DESCRIPTION OF REVISION
5			
4			
3			
2			
1			

DES. BY DLH DRAWN BY JEB REVIEWED BY DLH CHECKED BY RGS

SOUTH CAROLINA
DEPARTMENT OF TRANSPORTATION

S-383 (OLD CEMETERY RD.) STA. 73+01.28
29"X45" DUAL R/C ELLIPTICAL PIPE HEADWALL
DETAILS (SHEET 1 OF 2), 3.0'-1.5' DESIGN
FILL HEIGHT, 4:1 FILL SLOPES

PLOT SIZE = 22" x 34"

FED. ROAD DIV.NO.	STATE	COUNTY	PROJECT ID	ROUTE NO.	SHEET NO.	TOTAL SHEETS
3	S.C.	GEORGETOWN		S-383	S13	

1.0 NOTES:

1.1 ALL WORKMANSHIP & MATERIAL SHALL CONFORM WITH THE LATEST EDITION OF THE SCDOT STANDARD SPECIFICATIONS FOR HIGHWAY CONSTRUCTION, PLANS AND SPECIAL PROVISIONS.

1.2 ALL DIMENSIONS ARE SUBJECT TO EXISTING FIELD CONDITIONS AND SHALL BE VERIFIED BY THE CONTRACTOR.

1.3 THE CONTRACTOR IS TO USE DUE CARE IN PROTECTION OF ALL UTILITIES IN PLACE AND SERVICE SHALL NOT BE INTERRUPTED. UTILITIES IN CONFLICT WITH STRUCTURE ARE TO BE RELOCATED PRIOR TO CONSTRUCTION.

1.4 POSITIONS LT.(LEFT), RT.(RIGHT), I.F.(INSIDE FACE), AND O.F.(OUTSIDE FACE), WHERE REFERRED TO IN THE CULVERT PLANS, ARE RELATIVE TO THE DIRECTION OF STATIONING.

1.5 MINIMUM COVER OF REINFORCING STEEL SHALL BE 2½" FROM THE SURFACE OF CONCRETE, UNLESS OTHERWISE NOTED.

1.6 CHAMFER ALL EXPOSED EDGES ¾". CONSTRUCTION JOINTS ARE TO BE AS SHOWN IN THE PLANS OR AS APPROVED BY THE ENGINEER (NOTE THAT REINFORCING BARS SHALL EXTEND THROUGH CONSTRUCTION JOINTS).

1.7 CONTRACTOR SHALL CONSTRUCT ¾" MINIMUM FILLETS AT ALL JUNCTIONS OF SLAB AND WALL.

1.8 FOR BUILT IN PLACE CONSTRUCTION OF THE CONCRETE HEADWALL, CLASS 4000 CONCRETE SHALL BE USED. FOR PRECAST CONSTRUCTION, A MINIMUM OF CLASS 4000P CONCRETE MEETING THE REQUIREMENTS OF SECTION 701 OF THE SCDOT STANDARD SPECIFICATIONS FOR HIGHWAY CONSTRUCTION (LATEST EDITION).

1.9 REINFORCING STEEL SHALL BE ASTM A-706, LOW-ALLOY STEEL DEFORMED BARS FOR CONCRETE REINFORCEMENT, GRADE 60.

1.10 GROUT SHALL BE TYPE M MORTAR MATERIAL IN ACCORDANCE WITH SECTION 718 OF THE SCDOT STANDARD SPECIFICATIONS FOR HIGHWAY CONSTRUCTION (LATEST EDITION).

1.11 CONCRETE CUT-OFF WALLS SHALL BE CAST TO A DEPTH SUFFICIENT TO REST ON HARD AND OR COMPACTED MATERIAL. THE MINIMUM DEPTH BELOW BOTTOM SLABS AND FOOTING SHALL BE THE GREATER OF 2'-0" OR THE DEPTH OF SOIL EXCAVATION, AND MAY BE INCREASED AT THE DISCRETION OF THE SUPERVISING ENGINEER OR DESIGNER.

1.12 CONTRACTOR SHALL CUT AND OR BEND ANY REINFORCING BARS AS NECESSARY TO CARRY OUT WORK AS CALLED FOR ON THE STRUCTURE SHEETS.

1.13 STEEL MANUFACTURING PROCESSES MUST OCCUR IN THE UNITED STATES.

1.14 BAR DIMENSIONS SHOWN ARE OUT-TO-OUT AND STANDARD C.R.S.I. BENDING DETAILS SHALL APPLY, EXCEPT AS NOTED.

2.0 PRECAST NOTES:

2.1 THE USE OF PRECAST UNITS WILL NOT RELIEVE THE CONTRACTOR OF THE RESPONSIBILITY OF OBTAINING SATISFACTORY INSTALLATIONS.

2.2 LIFT HOLES AND/OR DEVICES MAY BE PLACED AS NECESSARY. ALL LIFT HOLES SHALL BE GROUTED SHUT PRIOR TO COMPLETION OF THE INSTALLATION. ALL LIFTING METHODS MUST MEET OSHA REGULATIONS.

2.3 THE CONTRACTOR SHALL USE MANUFACTURERS LISTED ON QUALIFIED PRODUCT LIST 14.

2.4 PRECAST ITEMS MODIFIED FROM THIS DRAWING MAY BE UTILIZED. HOWEVER, CONTRACTOR SHALL SUBMIT DESIGN DRAWINGS AND CALCULATIONS TO THE ENGINEER OF RECORD FOR REVIEW.

2.5 BED SHALL BE PREPARED AND COMPACTED FOR THE CONCRETE HEADWALL AS REQUIRED BY SCDOT STANDARD SPECIFICATIONS FOR PRECAST ITEMS. ELEVATION OF BEDDING MATERIAL SHALL BE APPROPRIATE TO ACCOMMODATE ELEVATION OF PIPE.

2.6 PLACE AND LEVEL PRECAST HEADWALL.

2.7 PIPES SHALL BE GROUTED IN PLACE.

2.8 PIPES AND HEADWALL SHALL BE BACKFILLED AND COMPACTED AS REQUIRED BY SCDOT STANDARD SPECIFICATIONS.

2.9 BRICK AND MORTAR SHALL BE USED TO ADJUST ELEVATIONS OF THROAT WALLS AS REQUIRED TO MEET ELEVATION AND CROSS SLOPES.

2.10 ANY LOCATION WHERE THE ABOVE REQUIREMENTS CANNOT BE MET SHALL BE COMPLETED USING CAST IN PLACE MATERIALS MEETING THE REQUIREMENTS OF THIS DRAWING. ANY ADDITIONAL MATERIALS OR COSTS ASSOCIATED WITH THE USE OF PRECAST SHALL BE PAID FOR BY THE CONTRACTOR AND MAY NOT BE CHARGED TO COUNTY.

3.0 REFERENCED SPECIFICATIONS:
LATEST EDITION OF THE SCDOT STANDARD SPECIFICATIONS FOR HIGHWAY CONSTRUCTION
8TH EDITION OF THE AASHTO LRFD BRIDGE DESIGN SPECIFICATIONS WITH INTERIM REVISIONS.

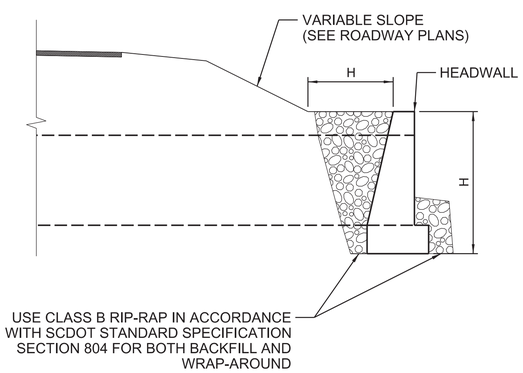

INSTALLATION DETAIL

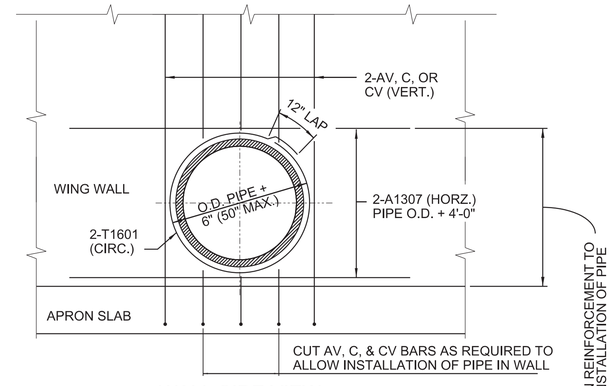

WALL SIDE VIEW

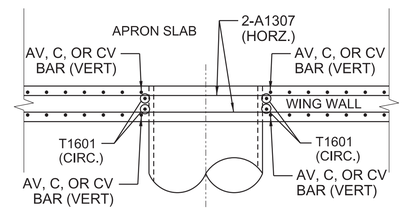

WALL CROSS SECTION

WALL PIPE PENETRATION DETAIL

FOR PIPES NOT SHOWN, ON CIP CULVERTS AND EXTENSIONS THE ENGINEER IS TO SET LOCATION OF THOSE PIPES IN THE FIELD.

ALL PIPES ARE TO BE PLACED AND WRAPPED IN TWO LAYERS OF TAR PAPER BEFORE THE SURROUNDING CONCRETE IS POURED.

VERTICAL AV, C, AND CV BARS ARE TO MATCH MAIN AV, C, AND CV BARS IN WALL IN CIP WING WALLS.

MAIN REINFORCEMENT SHOWN ON CULVERT DETAILS SHALL BE CUT TO A MAXIMUM OF 3" CLEAR OF OPENING.

**T1601 BAR DIMENSIONS ARE DETAILED ASSUMING PIPE IS 24" DIA. RCP WITH 3" WALL THICKNESS. MODIFY HOOP DIAMETER IF OD OF PIPE IS DIFFERENT THAN DETAILED.

REINFORCING STEEL SCHEDULE
(FOR ONE HEADWALL)

LOCATION	MARK	NO. REQ'D	DIMENSION "a"	"b"	"c"	"d"	"e"	LENGTH
HEADWALL	A1301	7	14'-7"	-	-	-	-	14'-7"
HEADWALL	A1302	28	3'-1"	-	-	-	-	3'-1"
APRON SLAB	A1303	62	4'-11¾"	-	-	-	-	5'-0"
APRON SLAB/CUT OFF WALL	A1304	8	20'-11"	-	-	-	-	20'-11"
WING WALL	A1305	4	6'-6¼"	-	-	-	-	6'-7"
HEADWALL	A1306	16	2'-5"	-	-	-	-	2'-5"
PIPE PENETRATION	A1307	8	6'-6"	-	-	-	-	6'-6"
APRON SLAB	AV1301	20	2'-9¾"	1'-0 15/16"	4'-6½"	10⅜"	-	2'-10"
APRON SLAB	AV1302	18	18'-1⅛"	15'-9 7/16"	20'-4⅞"	3 7/16"	-	18'-2"
WING WALL	AV1303	12	3'-1 13/16"	3'-0"	3'-3⅝"	1 13/16"	-	3'-2"
HEADWALL	C1301	8	4'-7"	1'-5"	-	-	-	6'-0"
WING WALL	C1302	12	2'-9"	1'-0"	-	-	-	3'-9"
WING WALL	CV1301	40	3'-4 3/16"	2'-8 1/16"	4'-0 5/16"	1 13/16"	1'-0"	4'-5"
WING WALL	F1301	8	6'-4¼"	1'-6"	9"	1'-3 9/16"	-	7'-11"
WING WALL	F1302	8	6'-1⅜"	1'-4"	8"	1'-1⅞"	-	7'-6"
WING WALL	F1303	2	3'-2½"	1'-6"	9"	1'-3 9/16"	-	4'-9"
WING WALL	F1304	2	2'-11 9/16"	1'-4"	8"	1'-1⅞"	-	4'-4"
HEADWALL	FB1301	8	4'-8 7/16"	3'-3½"	10 3/16"	3'-2½"	-	8'-0"
CUT OFF WALL	J1301	23	6"	2'-6½"	-	-	-	5'-7"
PIPE PENETRATION**	T1601	4	3'-0"	1'-0"	-	-	-	10'-6"

QUANTITIES
(FOR ONE HEADWALL)

ITEM	UNIT	QTY.
CONC. FOR STRUCTURES CLASS 4000 (CULVERT)	CY	8.6
REINFORCING STEEL FOR STRUCTURES (ROADWAY)	LB	1,252

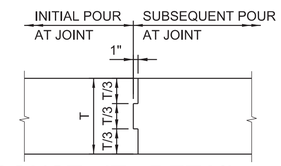

CONST. JT. DETAIL

BEFORE MAKING SUBSEQUENT POUR, WAIT EITHER A MINIMUM OF 96 HOURS AFTER PLACEMENT OF THE INITIAL POUR OR UNTIL THE INITIAL POUR CONCRETE HAS ATTAINED A MINIMUM OF 75% OF THE SPECIFIED 28-DAY COMPRESSIVE STRENGTH AS VERIFIED BY TESTING EXTRA CYLINDERS.

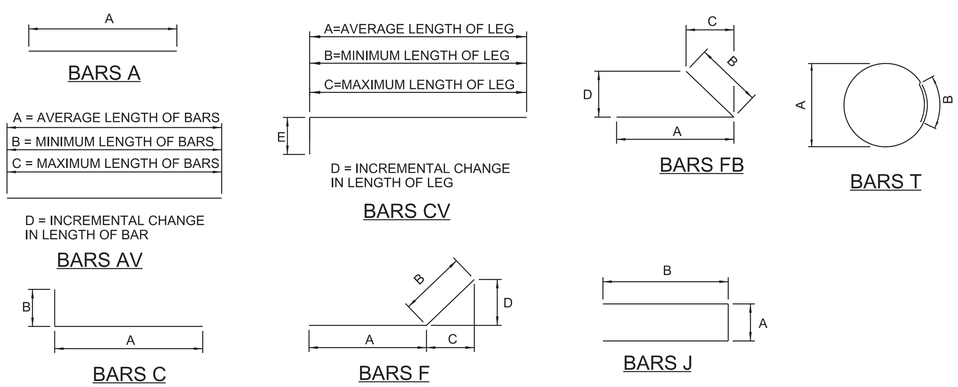

REINFORCEMENT BENDING DETAILS

SOUTH CAROLINA DAVIS & FLOYD, INC. No. C00538 CERTIFICATE OF AUTHORIZATION

SOUTH CAROLINA PROFESSIONAL ENGINEER No. 32080 3/9/23 ROBERT G. STEVENSON, JR.

3229 W. MONTAGUE AVE.
CHARLESTON, SC 29418
(843) 554-8602

DAVIS & FLOYD
SINCE 1954

REV. NO.	BY	DATE	DESCRIPTION OF REVISION
5			
4			
3			
2			
1			

DES. BY DLH DRAWN BY JEB REVIEWED BY DLH CHECKED BY RGS

SOUTH CAROLINA
DEPARTMENT OF TRANSPORTATION

S-383 (OLD CEMETERY RD.) STA. 73+01.28
29"X45" DUAL R/C ELLIPTICAL PIPE HEADWALL
DETAILS (SHEET 2 OF 2), 3.0'-1.5' DESIGN
FILL HEIGHT, 4:1 FILL SLOPES

PLOT SIZE = 22" x 34"

SCALE: 2:8.0000 '-" / in.
PEN TABLE: G:\Resource\Standards\Bentley\Vertical\Plotting\DO_NOTHING_BRIDGES.tbl
PLOT DRIVER: \\CHS-FS1\Data\Resource\Standards\Bentley\Vertical\Plotting\BRIDGES.pdf MS i.pltcfg
FILE: G:\JobsOdd\31969-00\Production\Structural\Drawings\Culvert Drawings\Old Cemetery Road\031969-00_Old Cemetery Road_BR_S13_Dual RCEP DETAILS (Sh 2 of 2).dgn
3/8/2023

FED. ROAD DIV.NO.	STATE	COUNTY	PROJECT ID	ROUTE NO.	SHEET NO.	TOTAL SHEETS
3	S.C.	GEORGETOWN		NORTH STREET	S14	

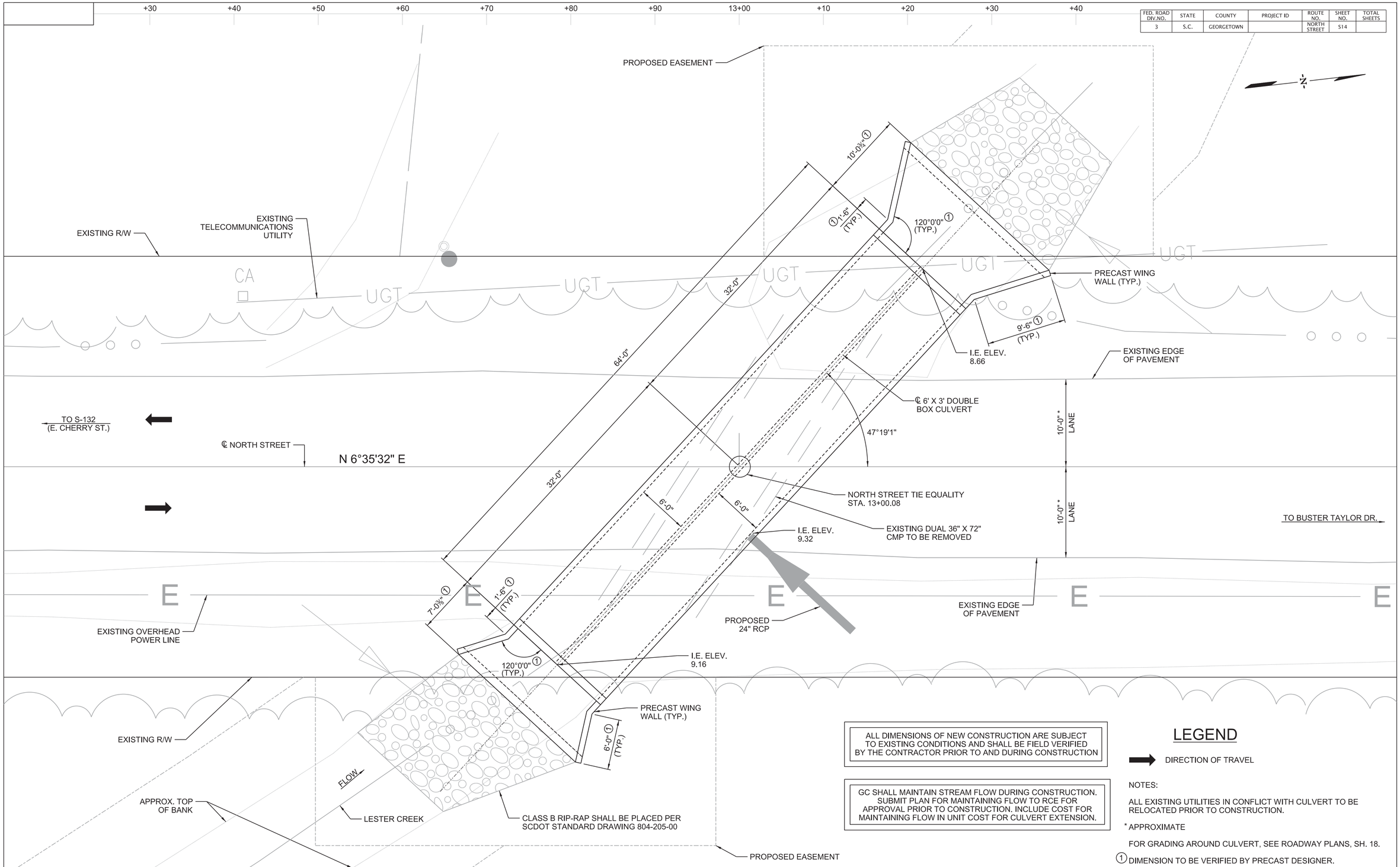

ALL DIMENSIONS OF NEW CONSTRUCTION ARE SUBJECT TO EXISTING CONDITIONS AND SHALL BE FIELD VERIFIED BY THE CONTRACTOR PRIOR TO AND DURING CONSTRUCTION

GC SHALL MAINTAIN STREAM FLOW DURING CONSTRUCTION. SUBMIT PLAN FOR MAINTAINING FLOW TO RCE FOR APPROVAL PRIOR TO CONSTRUCTION. INCLUDE COST FOR MAINTAINING FLOW IN UNIT COST FOR CULVERT EXTENSION.

LEGEND

➡ DIRECTION OF TRAVEL

NOTES:

ALL EXISTING UTILITIES IN CONFLICT WITH CULVERT TO BE RELOCATED PRIOR TO CONSTRUCTION.

* APPROXIMATE

FOR GRADING AROUND CULVERT, SEE ROADWAY PLANS, SH. 18.

① DIMENSION TO BE VERIFIED BY PRECAST DESIGNER.

SCALE: 5:4.0000 ':" / in.
PEN TABLE: G:\Resource\Standards\Bentley\Vertical\Plotting\DO_NOTHING_BRIDGES.tbl
PLOT DRIVER: \\CHS-FS1\Data\Resource\Standards\Bentley\Vertical\Plotting\BRIDGES.pdf MS i.pltcfg
FILE: G:\JobsOdd\31969-00\Production\Structural\Drawings\Culvert Drawings\North Street\031969-00_North Street_BR_S14_6X3 Double Culvert PLAN.dgn
3/8/2023

SOUTH CAROLINA DAVIS & FLOYD, INC. No. C00538 CERTIFICATE OF AUTHORIZATION

SOUTH CAROLINA PROFESSIONAL ENGINEER No. 32080 ROBERT G. STEVENSON, JR. 3/9/23

3229 W. MONTAGUE AVE.
CHARLESTON, SC 29418
(843) 554-8602

DAVIS & FLOYD
SINCE 1954

REV. NO.	BY	DATE	DESCRIPTION OF REVISION
5			
4			
3			
2			
1			

DES. BY DLH DRAWN BY JEB REVIEWED BY DLH CHECKED BY RGS

SOUTH CAROLINA DEPARTMENT OF TRANSPORTATION

NORTH STREET STA. 13+00.08 6'X3' DOUBLE BARREL PRECAST CULVERT PLAN, 3.0'-1.5' DESIGN FILL HEIGHT, 4:1 FILL SLOPES

PLOT SIZE = 22" x 34"

FED. ROAD DIV.NO.	STATE	COUNTY	PROJECT ID	ROUTE NO.	SHEET NO.	TOTAL SHEETS
3	S.C.	GEORGETOWN		NORTH STREET	S15	

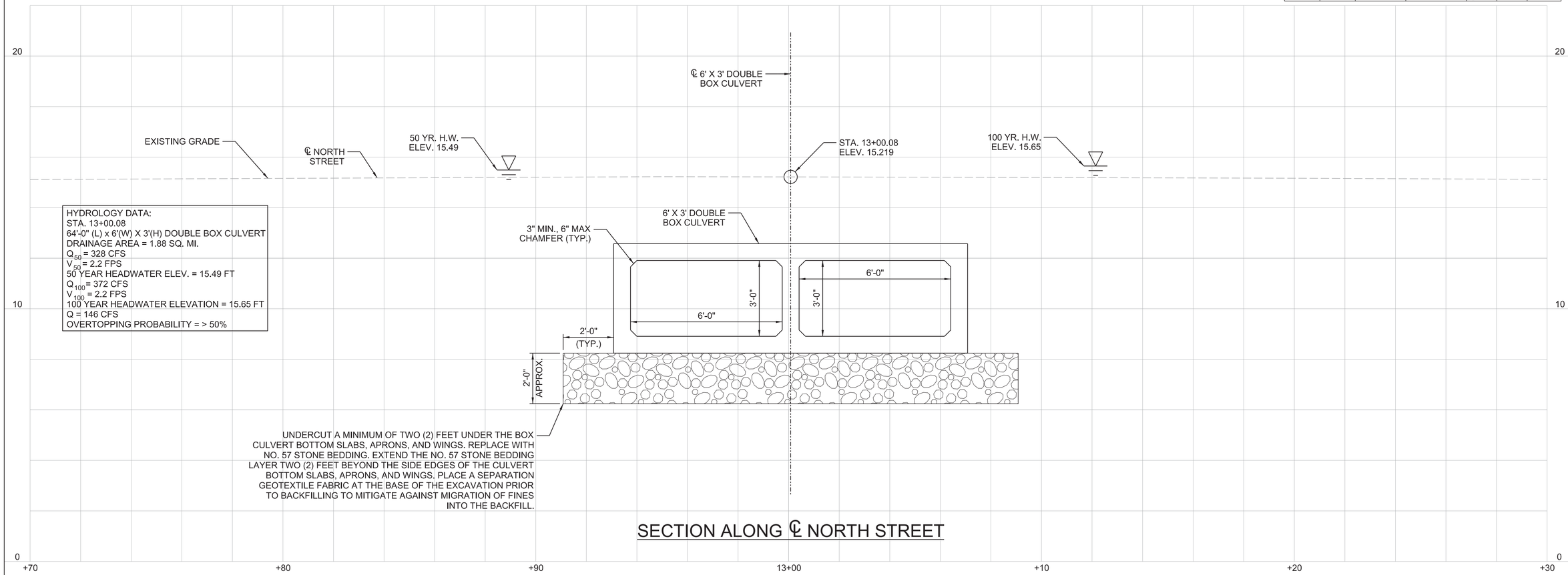

SECTION ALONG ℄ NORTH STREET

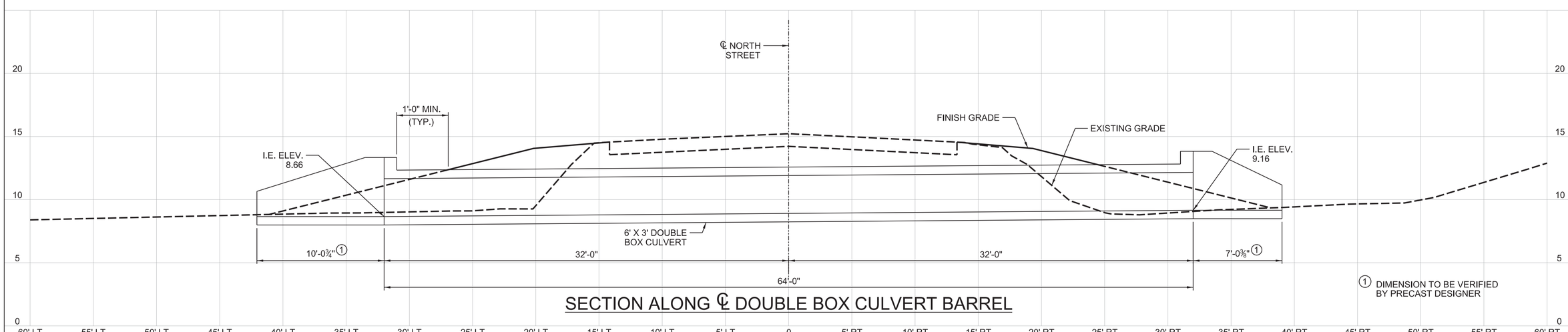

SECTION ALONG ℄ DOUBLE BOX CULVERT BARREL

① DIMENSION TO BE VERIFIED BY PRECAST DESIGNER

DAVIS & FLOYD, INC. SOUTH CAROLINA No. C00538 CERTIFICATE OF AUTHORIZATION

SOUTH CAROLINA PROFESSIONAL ENGINEER No. 32080 ROBERT G. STEVENSON, JR. 3/9/23

3229 W. MONTAGUE AVE. CHARLESTON, SC 29418 (843) 554-8602

DAVIS & FLOYD

SINCE 1954

REV. NO.	BY	DATE	DESCRIPTION OF REVISION
5			
4			
3			
2			
1			

DES. BY DLH DRAWN BY JEB REVIEWED BY DLH CHECKED BY RGS

SOUTH CAROLINA DEPARTMENT OF TRANSPORTATION

NORTH STREET STA. 13+00.08 6'X3' DOUBLE BARREL PRECAST CULVERT SECTION, 3.0'-1.5' DESIGN FILL HEIGHT, 4:1 FILL SLOPES

PLOT SIZE = 22" x 34"

SCALE: 2.0000 ft / in.
PEN TABLE: G:\Resource\Standards\Bentley\Vertical\Plotting\DO_NOTHING_BRIDGES.tbl
PLOT DRIVER: \\CHS-FS1\Data\Resource\Standards\Bentley\Vertical\Plotting\BRIDGES.pdf MS i.pltcfg
FILE: G:\JobsOdd\31969-00\Production\Structural\Drawings\Culvert Drawings\North Street\031969-00_North Street_BR_S15_6X3 Double Culvert SECTION.dgn
3/8/2023

FED. ROAD DIV.NO.	STATE	COUNTY	PROJECT ID	ROUTE NO.	SHEET NO.	TOTAL SHEETS
3	S.C.	GEORGETOWN		NORTH STREET	S16	

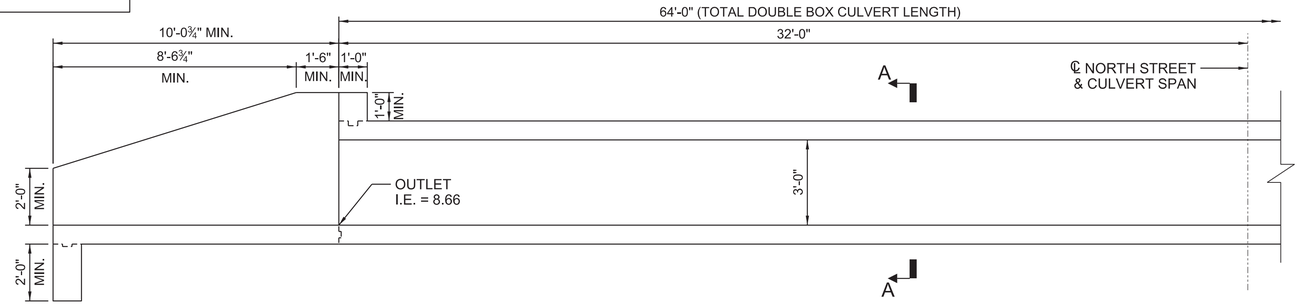

SECTION ALONG ℄ BARREL
(SHOWING LEFT SIDE PORTION OF DOUBLE BOX CULVERT)

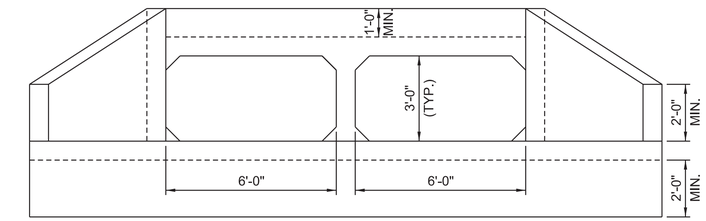

END ELEVATION

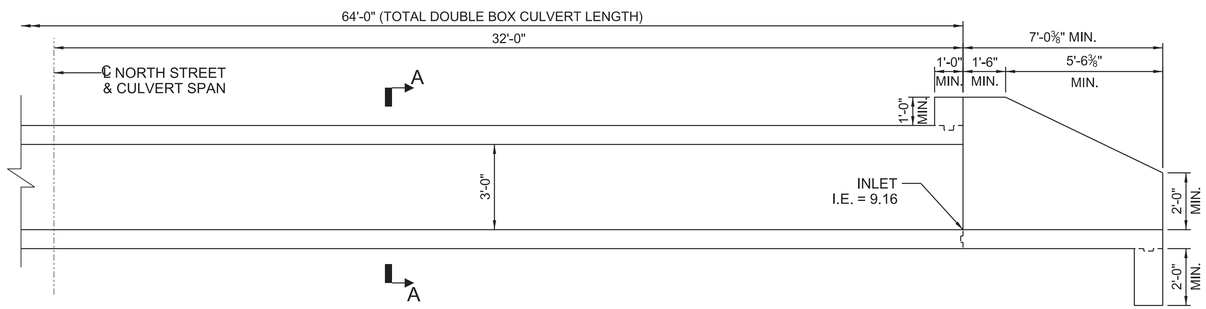

SECTION ALONG ℄ BARREL
(SHOWING RIGHT SIDE PORTION OF DOUBLE BOX CULVERT)

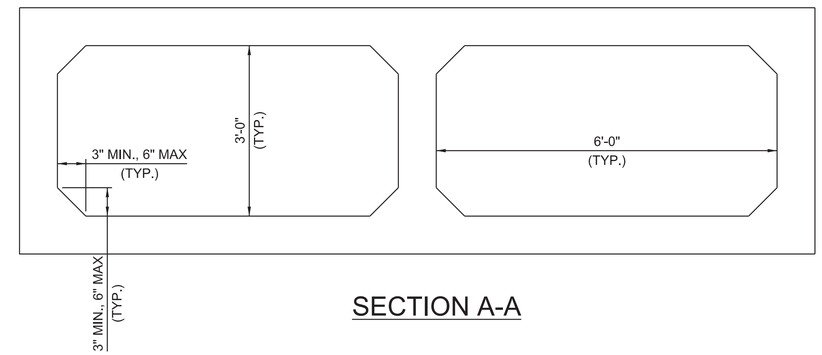

SECTION A-A

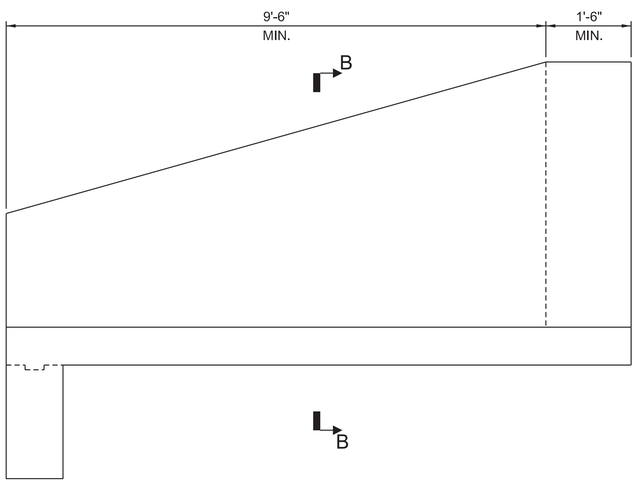

OUTLET WING WALL ELEVATION

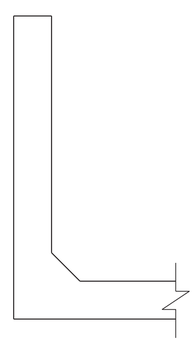

SECTION B-B

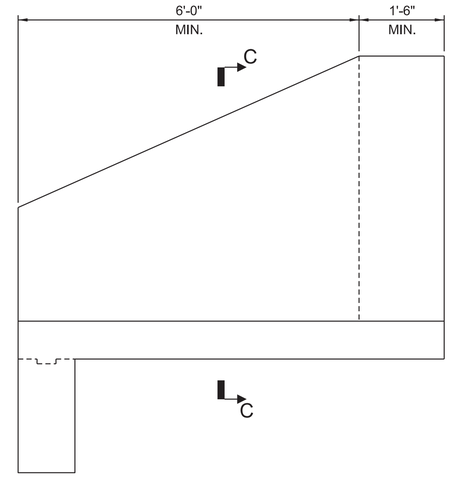

INLET WING WALL ELEVATION

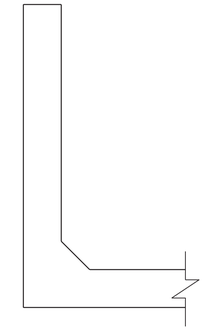

SECTION C-C

NOTE:

REFER TO SCDOT STANDARD DRAWING 722-105-01, 722-105-02, & 722-305-00 FOR ADDITIONAL NOTES & DETAILS.

ALL PRECAST CULVERT AND WING WALL DIMENSIONS TO BE VERIFIED BY PRECAST DESIGNER.

QUANTITIES

ITEM	UNIT	QTY.
6'X3' PRECAST DOUBLE BOX CULVERT	LF	64.0
6'X3' PRECAST DOUBLE BOX CULVERT HEADWALL/WINGWALLS	EA	2
STRUCTURE EXCAVATION FOR CULVERTS	CY	173
GEOTEXTILE FOR SEPERATION OF SUBGRADE/BASE COURSE MATERIAL	SY	231
AGGREGATE UNDERDRAIN (AGGREGATE NO. 57)	TON	146
RIP-RAP (CLASS B)	TON	69
GEOTEXTILE FOR EROSION CONTROL UNDER RIP-RAP (CLASS B) TYPE D	SY	81

SOUTH CAROLINA DAVIS & FLOYD, INC. No. C00538 CERTIFICATE OF AUTHORIZATION

SOUTH CAROLINA PROFESSIONAL ENGINEER No. 32080 4/27/23 ROBERT G. STEVENSON, JR.

3229 W. MONTAGUE AVE.
CHARLESTON, SC 29418
(843) 554-8602

DAVIS & FLOYD
SINCE 1954

REV. NO.	BY	DATE	DESCRIPTION OF REVISION
5			
4			
3			
2			
1			

DES. BY DLH DRAWN BY JEB REVIEWED BY DLH CHECKED BY RGS

SOUTH CAROLINA
DEPARTMENT OF TRANSPORTATION

NORTH STREET STA. 13+00.08 6'X3' DOUBLE BARREL PRECAST CULVERT DETAILS, 3.0'-1.5' DESIGN FILL HEIGHT, 4:1 FILL SLOPES

PLOT SIZE = 22" x 34"

SCALE: 2:8.0000 '-" / in.
PEN TABLE: G:\Resource\Standards\Bentley\Vertical\Plotting\DO_NOTHING_BRIDGES.tbl
PLOT DRIVER: \\CHS-FS1\Data\Resource\Standards\Bentley\Vertical\Plotting\BRIDGES.pdf MS i.pltcfg
FILE: G:\JobsOdd\31969-00\Production\Structural\Drawings\Culvert Drawings\North Street\031969-00_North Street_BR_S16_6X3 Double Culvert DETAILS.dgn
4/27/2023

FED. ROAD DIV.NO.	STATE	COUNTY	PROJECT ID	ROUTE NO.	SHEET NO.	TOTAL SHEETS
3	S.C.	GEORGETOWN			S17	

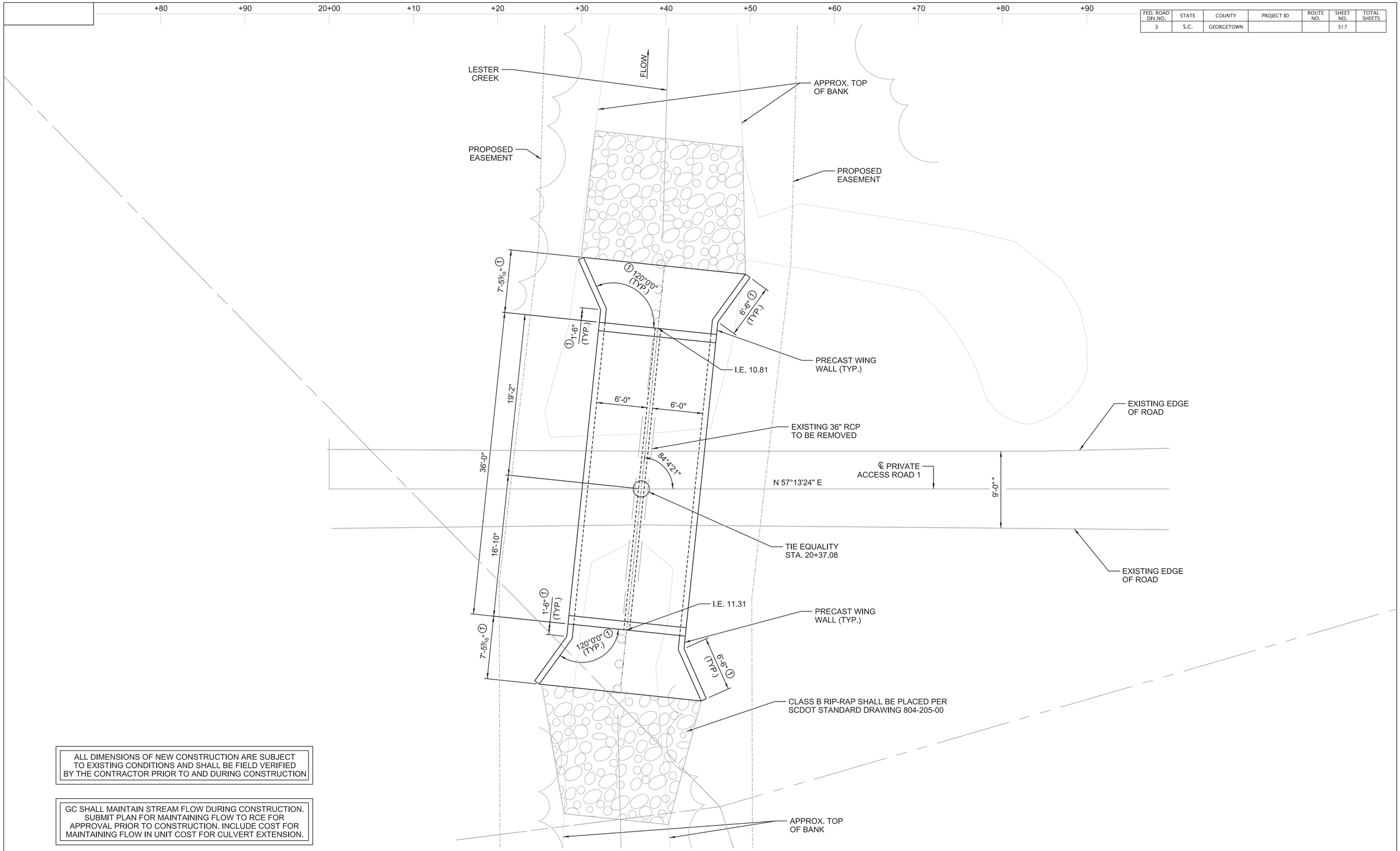

PLAN

ALL DIMENSIONS OF NEW CONSTRUCTION ARE SUBJECT TO EXISTING CONDITIONS AND SHALL BE FIELD VERIFIED BY THE CONTRACTOR PRIOR TO AND DURING CONSTRUCTION

GC SHALL MAINTAIN STREAM FLOW DURING CONSTRUCTION. SUBMIT PLAN FOR MAINTAINING FLOW TO RCE FOR APPROVAL PRIOR TO CONSTRUCTION. INCLUDE COST FOR MAINTAINING FLOW IN UNIT COST FOR CULVERT EXTENSION.

NOTES:

ALL EXISTING UTILITIES IN CONFLICT WITH CULVERT TO BE RELOCATED PRIOR TO CONSTRUCTION.

* APPROXIMATE

FOR GRADING AROUND CULVERT, SEE ROADWAY PLANS, SH. 19.

① DIMENSION TO BE VERIFIED BY PRECAST DESIGNER.

SOUTH CAROLINA DAVIS & FLOYD, INC. No. C00538 CERTIFICATE OF AUTHORIZATION

SOUTH CAROLINA PROFESSIONAL ENGINEER No. 32080 ROBERT G. STEVENSON, JR. 3/9/23

3229 W. MONTAGUE AVE, CHARLESTON, SC 29418 (843) 554-8602

DAVIS & FLOYD

SINCE 1954

REV. NO.	BY	DATE	DESCRIPTION OF REVISION
5			
4			
3			
2			
1			

DES. BY DLH DRAWN BY JEB REVIEWED BY DLH CHECKED BY RGS

SOUTH CAROLINA DEPARTMENT OF TRANSPORTATION

PRIVATE ACCESS ROAD 1 STA. 20+37.08
6'X3' DOUBLE BARREL PRECAST CULVERT
PLAN, 2.0'-1.0' DESIGN FILL HEIGHT,
4:1 FILL SLOPES

PLOT SIZE = 22" x 34"

SCALE: 5.3333 ft / in.
PEN TABLE: G:\Resource\Standards\Bentley\Vertical\Plotting\DO_NOTHING_BRIDGES.tbl
PLOT DRIVER: \\CHS-FS1\Data\Resource\Standards\Bentley\Vertical\Plotting\BRIDGES.pdf MS i.pltcfg
FILE: G:\JobsOdd\31969-00\Production\Structural\Drawings\Culvert Drawings\Private Access Road 1\031969-00_Private Access Road 1_BR_S17_6X3 Double Box Culvert PLAN.dgn
3/8/2023

FED. ROAD DIV.NO.	STATE	COUNTY	PROJECT ID	ROUTE NO.	SHEET NO.	TOTAL SHEETS
3	S.C.	GEORGETOWN			S18	

HYDROLOGY DATA:
STA. 20+37.08
36'-0"(L) x 6'(W) x 3'(H) BOX CULVERT
DRAINAGE AREA = 1.26 SQ. MI.
Q_{50} = 146 CFS
V_{50} = 1.2 FPS
50 YEAR HEADWATER ELEV. = 22.49 FT
Q_{100} = 152 CFS
V_{100} = 1.2 FPS
100 YEAR HEADWATER ELEVATION = 22.73 FT
Q = 147 CFS
OVERTOPPING PROBABILITY = > 50%

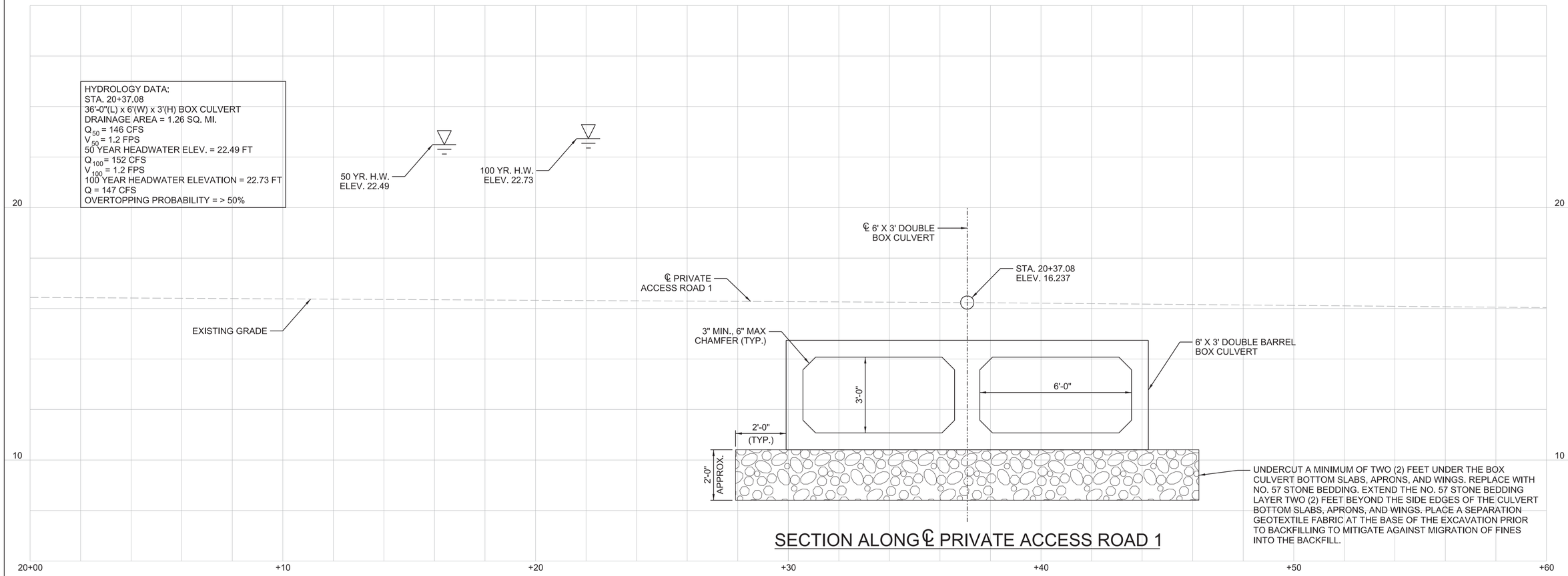

UNDERCUT A MINIMUM OF TWO (2) FEET UNDER THE BOX CULVERT BOTTOM SLABS, APRONS, AND WINGS. REPLACE WITH NO. 57 STONE BEDDING. EXTEND THE NO. 57 STONE BEDDING LAYER TWO (2) FEET BEYOND THE SIDE EDGES OF THE CULVERT BOTTOM SLABS, APRONS, AND WINGS. PLACE A SEPARATION GEOTEXTILE FABRIC AT THE BASE OF THE EXCAVATION PRIOR TO BACKFILLING TO MITIGATE AGAINST MIGRATION OF FINES INTO THE BACKFILL.

SECTION ALONG ℄ PRIVATE ACCESS ROAD 1

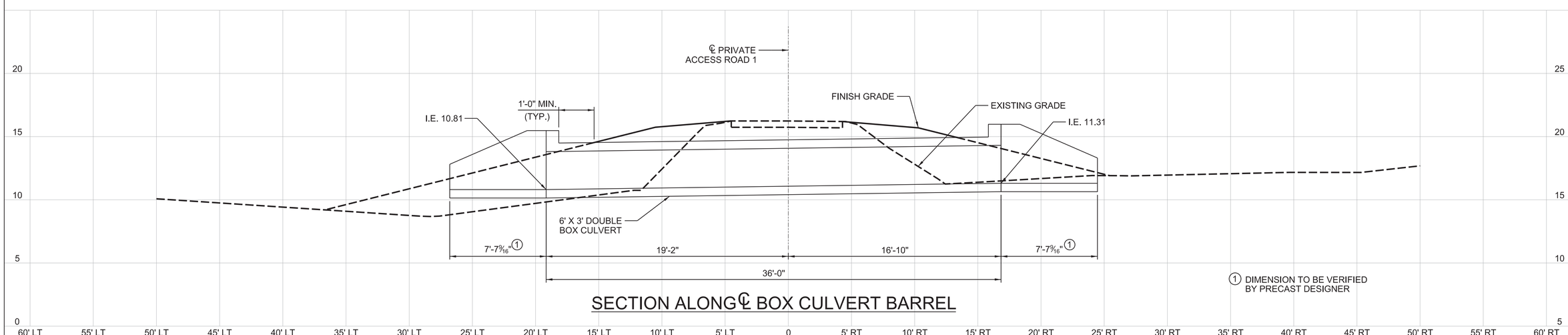

(1) DIMENSION TO BE VERIFIED BY PRECAST DESIGNER

SECTION ALONG ℄ BOX CULVERT BARREL

SCALE: 2.0000 ft / in.
PEN TABLE: G:\Resource\Standards\Bentley\Vertical\Plotting\DO_NOTHING_BRIDGES.tbl
PLOT DRIVER: \\CHS-FS1\Data\Resource\Standards\Bentley\Vertical\Plotting\BRIDGES.pdf MS i.pltcfg
FILE: G:\JobsOdd\31969-00\Production\Structural\Drawings\Culvert Drawings\Private Access Road 1\031969-00_Private Access Road 1_BR_S18_6X3 Double Box Culvert SECTION.dgn
3/8/2023

SOUTH CAROLINA DAVIS & FLOYD, INC. No. C00538 CERTIFICATE OF AUTHORIZATION

SOUTH CAROLINA PROFESSIONAL ENGINEER No. 32080 ROBERT G. STEVENSON, JR. 3/9/23

3229 W. MONTAGUE AVE.
CHARLESTON, SC 29418
(843) 554-8602

DAVIS & FLOYD
SINCE 1954

REV. NO.	BY	DATE	DESCRIPTION OF REVISION
5			
4			
3			
2			
1			

DES. BY DLH DRAWN BY JEB REVIEWED BY DLH CHECKED BY RGS

SOUTH CAROLINA
DEPARTMENT OF TRANSPORTATION

PRIVATE ACCESS ROAD 1 STA. 20+37.08
6'X3' DOUBLE BARREL PRECAST CULVERT
SECTION, 2.0'-1.0' DESIGN FILL HEIGHT,
4:1 FILL SLOPES

PLOT SIZE = 22" x 34"

FED. ROAD DIV.NO.	STATE	COUNTY	PROJECT ID	ROUTE NO.	SHEET NO.	TOTAL SHEETS
3	S.C.	GEORGETOWN			S19	

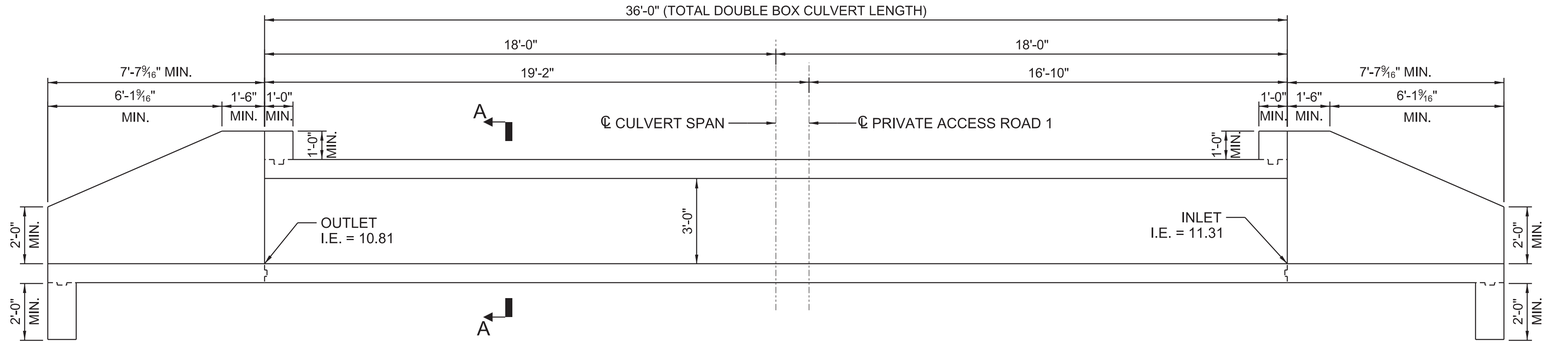

SECTION ALONG ℄ BARREL

(LOOKING UPSTATION)

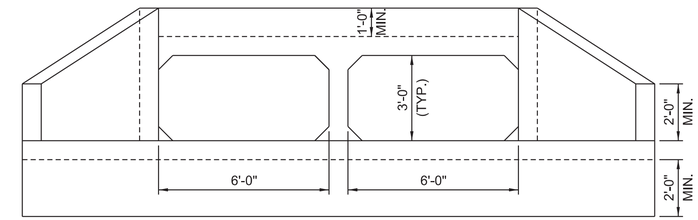

END ELEVATION

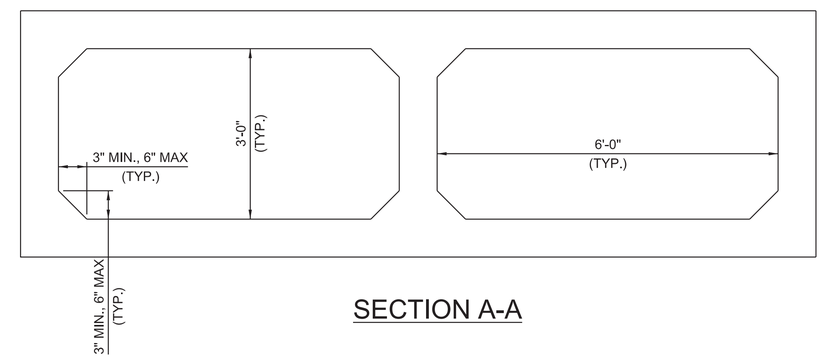

SECTION A-A

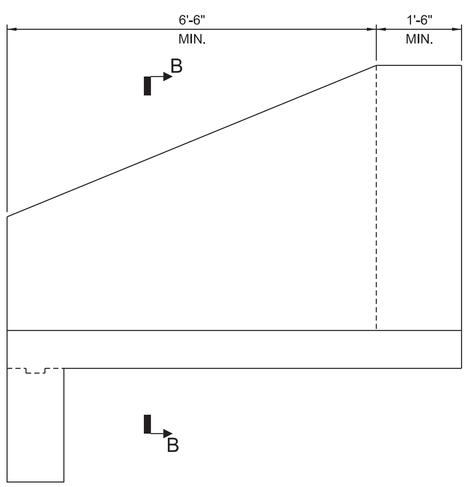

WING WALL ELEVATION

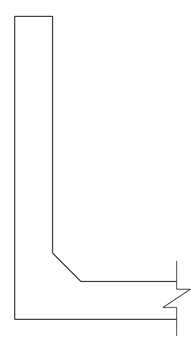

SECTION B-B

NOTE:

REFER TO SCDOT STANDARD DRAWING 722-105-01, 722-105-02, & 722-305-00 FOR ADDITIONAL NOTES & DETAILS.

ALL PRECAST CULVERT AND WING WALL DIMENSIONS TO BE VERIFIED BY PRECAST DESIGNER.

QUANTITIES

ITEM	UNIT	QTY.
6'X3' PRECAST DOUBLE BOX CULVERT	LF	36.0
6'X3' PRECAST DOUBLE BOX CULVERT HEADWALL/WINGWALLS	EA	2
STRUCTURE EXCAVATION FOR CULVERTS	CY	78
GEOTEXTILE FOR SEPERATION OF SUBGRADE/BASE COURSE MATERIAL	SY	154
AGGREGATE UNDERDRAIN (AGGREGATE NO. 57)	TON	95
RIP-RAP (CLASS B)	TON	69
GEOTEXTILE FOR EROSION CONTROL UNDER RIP-RAP (CLASS B) TYPE D	SY	80

SOUTH CAROLINA DAVIS & FLOYD, INC. No. C00538 CERTIFICATE OF AUTHORIZATION

SOUTH CAROLINA PROFESSIONAL ENGINEER No. 32080 RICHARD G. STEVENSON, JR. 4/27/23

3229 W. MONTAGUE AVE.
CHARLESTON, SC 29418
(843) 554-8602

DAVIS & FLOYD
SINCE 1954

REV. NO.	BY	DATE	DESCRIPTION OF REVISION
5			
4			
3			
2			
1			

DES. BY DLH DRAWN BY JEB REVIEWED BY DLH CHECKED BY RGS

SOUTH CAROLINA
DEPARTMENT OF TRANSPORTATION

PRIVATE ACCESS ROAD 1 STA. 20+37.08
6'X3' DOUBLE BARREL PRECAST CULVERT
DETAILS, 2.0'-1.0' DESIGN FILL HEIGHT,
4:1 FILL SLOPES

PLOT SIZE = 22" x 34"

SCALE: 2:8.0000 '-" / in.
PEN TABLE: G:\Resource\Standards\Bentley\Vertical\Plotting\DO_NOTHING_BRIDGES.tbl
PLOT DRIVER: \\CHS-FS1\Data\Resource\Standards\Bentley\Vertical\Plotting\BRIDGES.pdf MS i.pltcfg
FILE: G:\JobsOdd\31969-00\Production\Structural\Drawings\Private Access Road 1\031969-00_Private Access Road 1_BR_S19_6X3 Double Culvert DETAILS.dgn
4/27/2023

FED. ROAD DIV.NO.	STATE	COUNTY	PROJECT ID	ROUTE NO.	SHEET NO.	TOTAL SHEETS
3	S.C.	GEORGETOWN			S20	

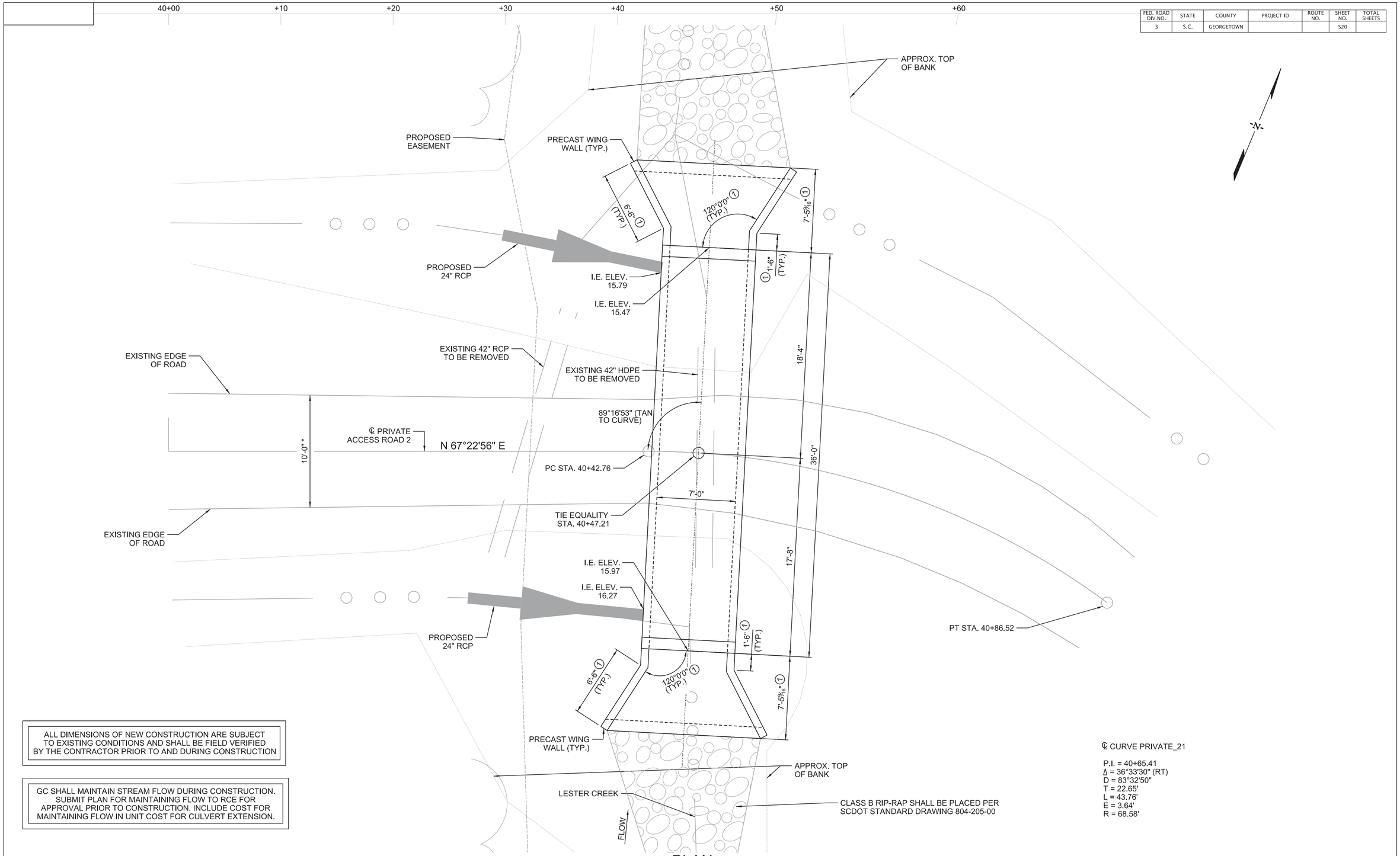

PLAN

℄ CURVE PRIVATE_21

P.I. = 40+65.41
Δ = 36°33'30" (RT)
D = 83°32'50"
T = 22.65'
L = 43.76'
E = 3.64'
R = 68.58'

ALL DIMENSIONS OF NEW CONSTRUCTION ARE SUBJECT TO EXISTING CONDITIONS AND SHALL BE FIELD VERIFIED BY THE CONTRACTOR PRIOR TO AND DURING CONSTRUCTION

GC SHALL MAINTAIN STREAM FLOW DURING CONSTRUCTION. SUBMIT PLAN FOR MAINTAINING FLOW TO RCE FOR APPROVAL PRIOR TO CONSTRUCTION. INCLUDE COST FOR MAINTAINING FLOW IN UNIT COST FOR CULVERT EXTENSION.

NOTES:

ALL EXISTING UTILITIES IN CONFLICT WITH CULVERT TO BE RELOCATED PRIOR TO CONSTRUCTION.

* APPROXIMATE

FOR GRADING AROUND CULVERT, SEE ROADWAY PLANS, SH. 21.

1 DIMENSION TO BE VERIFIED BY PRECAST DESIGNER.

SCALE: 4:0.0000 '-" / in.
PEN TABLE: G:\Resource\Standards\Bentley\Vertical\Plotting\DO_NOTHING_BRIDGES.tbl
PLOT DRIVER: \\CHS-FS1\Data\Resource\Standards\Bentley\Vertical\Plotting\BRIDGES.pdf MS i.pltcfg
FILE: G:\JobsOdd\31969-00\Production\Structural\Drawings\Culvert Drawings\Private Access Road 2\031969-00_Private Access Road 2_BR_S20_7X3 Culvert PLAN.dgn
3/8/2023

SOUTH CAROLINA DAVIS & FLOYD, INC. No. C00538 CERTIFICATE OF AUTHORIZATION

SOUTH CAROLINA PROFESSIONAL ENGINEER No. 32080 RODNEY G. STEVENSON, JR. 3/9/23

3229 W. MONTAGUE AVE.
CHARLESTON, SC 29418
(843) 554-8602

DAVIS & FLOYD
SINCE 1954

REV. NO.	BY	DATE	DESCRIPTION OF REVISION
5			
4			
3			
2			
1			

DES. BY DLH DRAWN BY JEB REVIEWED BY DLH CHECKED BY RGS

SOUTH CAROLINA
DEPARTMENT OF TRANSPORTATION

PRIVATE ACCESS ROAD 2 STA. 40+47.21
7'X3' PRECAST CULVERT SECTION, 2.0'-1.0'
DESIGN FILL HEIGHT, 4:1 FILL SLOPES

PLOT SIZE = 22" x 34"

FED. ROAD DIV.NO.	STATE	COUNTY	PROJECT ID	ROUTE NO.	SHEET NO.	TOTAL SHEETS
3	S.C.	GEORGETOWN			S21	

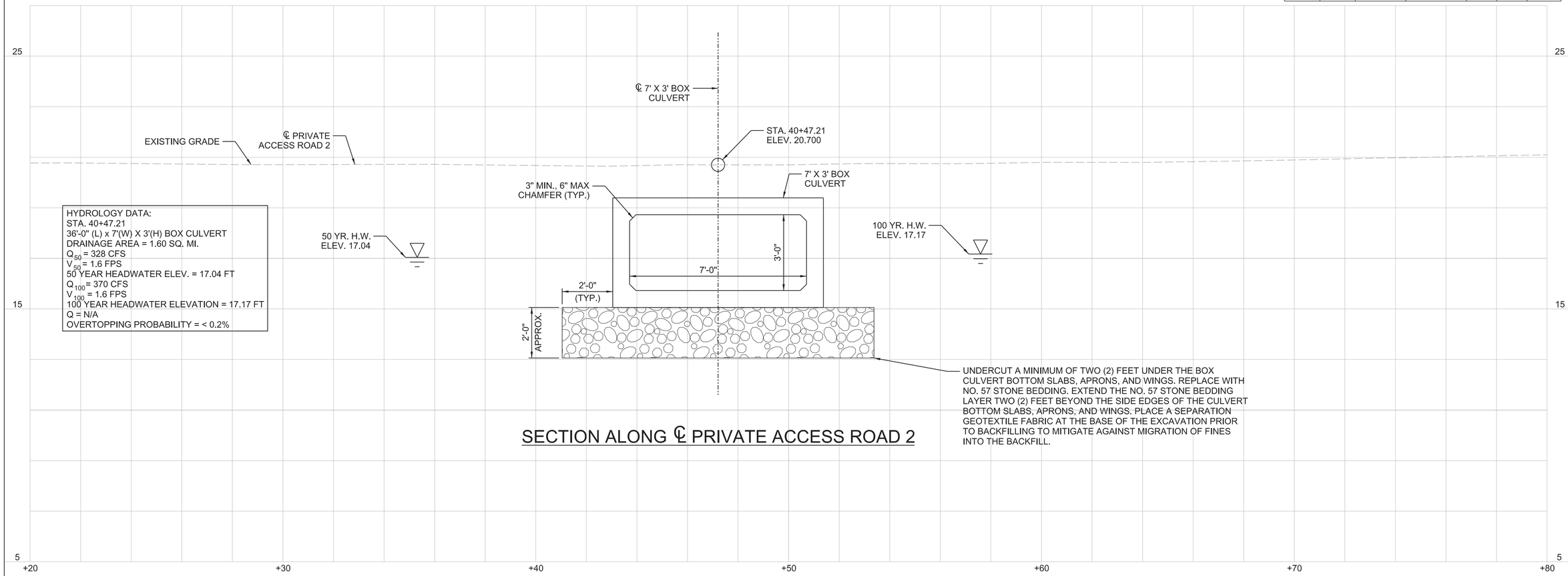

HYDROLOGY DATA:
STA. 40+47.21
36'-0" (L) x 7'(W) X 3'(H) BOX CULVERT
DRAINAGE AREA = 1.60 SQ. MI.
Q_{50} = 328 CFS
V_{50} = 1.6 FPS
50 YEAR HEADWATER ELEV. = 17.04 FT
Q_{100} = 370 CFS
V_{100} = 1.6 FPS
100 YEAR HEADWATER ELEVATION = 17.17 FT
Q = N/A
OVERTOPPING PROBABILITY = < 0.2%

SECTION ALONG ℄ PRIVATE ACCESS ROAD 2

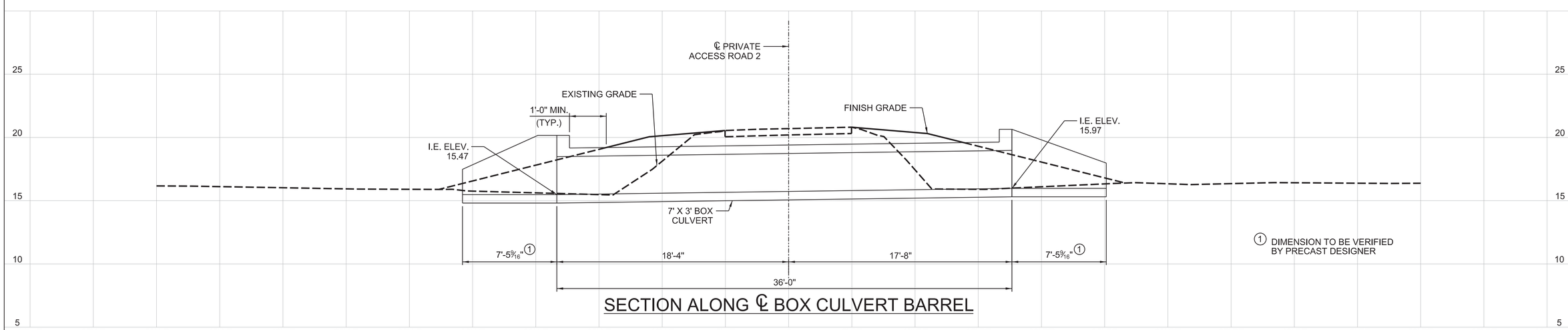

SECTION ALONG ℄ BOX CULVERT BARREL

SCALE: 2.0000 ft / in.
PEN TABLE: G:\Resource\Standards\Bentley\Vertical\Plotting\DO_NOTHING_BRIDGES.tbl
PLOT DRIVER: \\CHS-FS1\Data\Resource\Standards\Bentley\Vertical\Plotting\BRIDGES.pdf MS i.pltcfg
FILE: G:\JobsOdd\31969-00\Production\Structural\Drawings\Culvert Drawings\Private Access Road 2\031969-00_Private Access Road 2_BR_S21_7X3 Culvert SECTION.dgn
3/8/2023

SOUTH CAROLINA DAVIS & FLOYD, INC. No. C00538 CERTIFICATE OF AUTHORIZATION

SOUTH CAROLINA PROFESSIONAL ENGINEER No. 32080 ROBERT G. STEVENSON, JR. 3/9/23

3229 W. MONTAGUE AVE.
CHARLESTON, SC 29418
(843) 554-8602

DAVIS & FLOYD
SINCE 1954

REV. NO.	BY	DATE	DESCRIPTION OF REVISION
5			
4			
3			
2			
1			

DES. BY DLH DRAWN BY JEB REVIEWED BY DLH CHECKED BY RGS

SOUTH CAROLINA
DEPARTMENT OF TRANSPORTATION

PRIVATE ACCESS ROAD 2 STA. 40+47.21
7'X3' PRECAST CULVERT SECTION, 2.0'-1.0'
DESIGN FILL HEIGHT, 4:1 FILL SLOPES

PLOT SIZE = 22" x 34"

FED. ROAD DIV.NO.	STATE	COUNTY	PROJECT ID	ROUTE NO.	SHEET NO.	TOTAL SHEETS
3	S.C.	GEORGETOWN			S22	

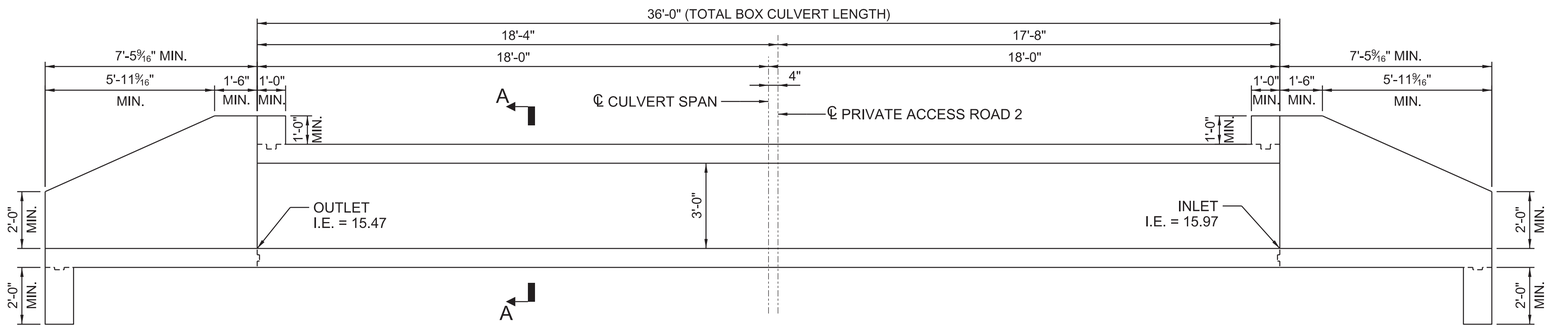

SECTION ALONG ℄ BARREL

(LOOKING UPSTATION)

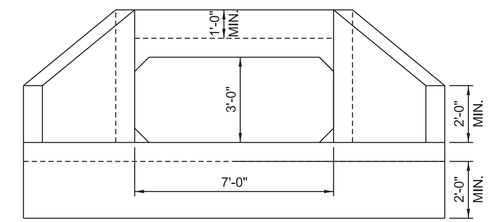

END ELEVATION

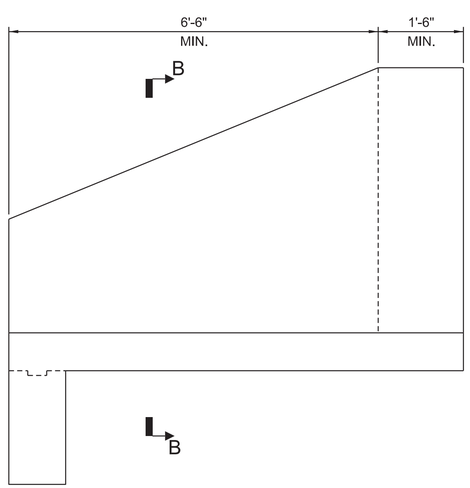

WING WALL ELEVATION

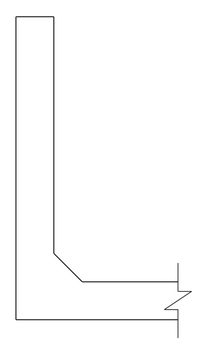

SECTION B-B

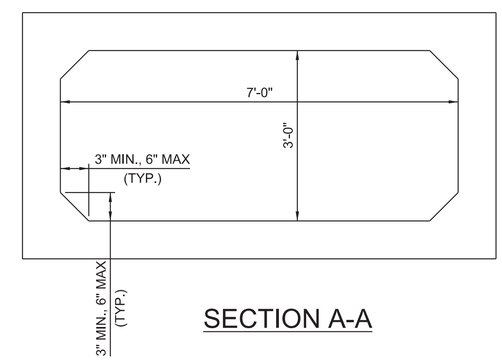

SECTION A-A

NOTE:

REFER TO SCDOT STANDARD DRAWING 722-105-01, 722-105-02, & 722-305-00 FOR ADDITIONAL NOTES & DETAILS.

ALL PRECAST CULVERT AND WING WALL DIMENSIONS TO BE VERIFIED BY PRECAST DESIGNER.

QUANTITIES

ITEM	UNIT	QTY.
7'X3' PRECAST BOX CULVERT	LF	36.0
7'X3' PRECAST BOX CULVERT HEADWALL/WINGWALLS	EA	2
STRUCTURE EXCAVATION FOR CULVERTS	CY	59
GEOTEXTILE FOR SEPERATION OF SUBGRADE/BASE COURSE MATERIAL	SY	117
AGGREGATE UNDERDRAIN (AGGREGATE NO. 57)	TON	67
RIP-RAP (CLASS B)	TON	44
GEOTEXTILE FOR EROSION CONTROL UNDER RIP-RAP (CLASS B) TYPE D	SY	54

SOUTH CAROLINA DAVIS & FLOYD, INC. No. C00538 CERTIFICATE OF AUTHORIZATION

SOUTH CAROLINA PROFESSIONAL ENGINEER No. 32080 4/27/23 ROBERT G. STEVENSON, JR.

3229 W. MONTAGUE AVE.
CHARLESTON, SC 29418
(843) 554-8602

DAVIS & FLOYD
SINCE 1954

REV. NO.	BY	DATE	DESCRIPTION OF REVISION
5			
4			
3			
2			
1			

DES. BY DLH DRAWN BY JEB REVIEWED BY DLH CHECKED BY RGS

SOUTH CAROLINA
DEPARTMENT OF TRANSPORTATION

PRIVATE ACCESS ROAD 2 STA. 40+47.21
7'X3' PRECAST CULVERT DETAILS, 2.0'-1.0'
DESIGN FILL HEIGHT, 4:1 FILL SLOPES

PLOT SIZE = 22" x 34"

SCALE: 2:8.0000 ':" / in.
PEN TABLE: G:\Resource\Standards\Bentley\Vertical\Plotting\DO_NOTHING_BRIDGES.tbl
PLOT DRIVER: \\CHS-FS1\Data\Resource\Standards\Bentley\Vertical\Plotting\BRIDGES.pdf MS i.pltcfg
FILE: G:\JobsOdd\31969-00\Production\Structural\Drawings\Culvert Drawings\Private Access Road 2\031969-00_Private Access Road 2_BR_S22_7X3 Culvert DETAILS.dgn
4/27/2023

FED. ROAD DIV.NO.	STATE	COUNTY	PROJECT ID	ROUTE NO.	SHEET NO.	TOTAL SHEETS
3	S.C.	GEORGETOWN			S23	

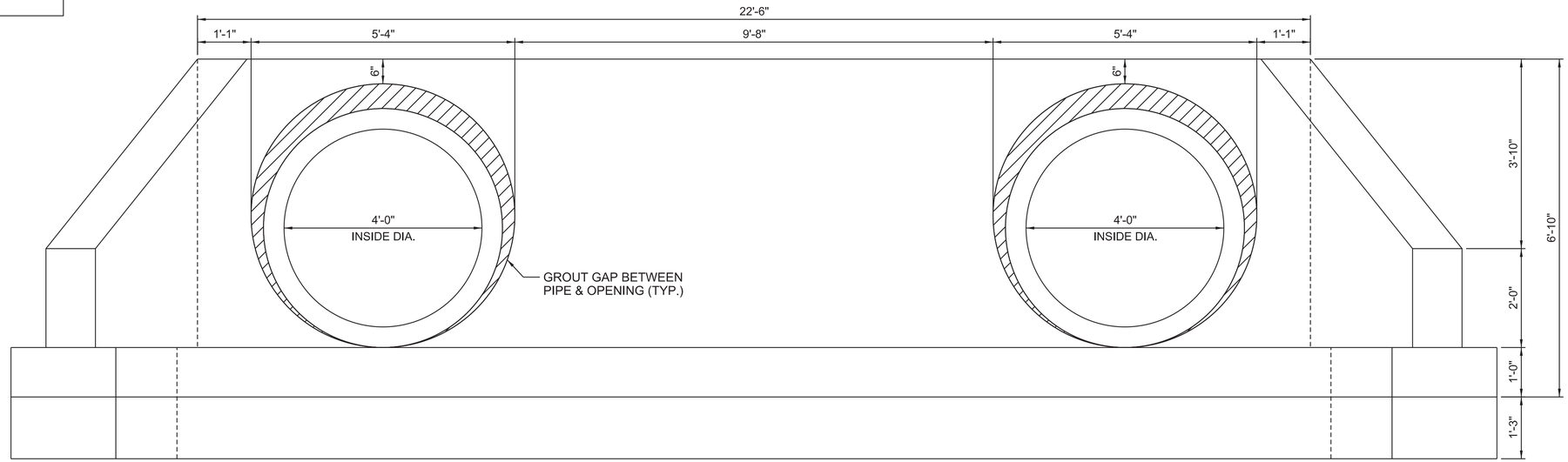

FRONT ELEVATION

(REINF. NOT SHOWN FOR CLARITY)

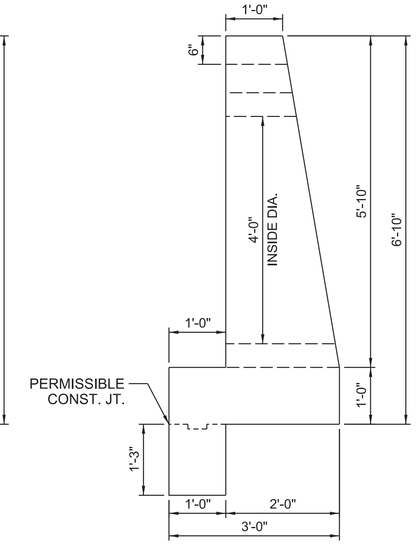

SIDE ELEVATION

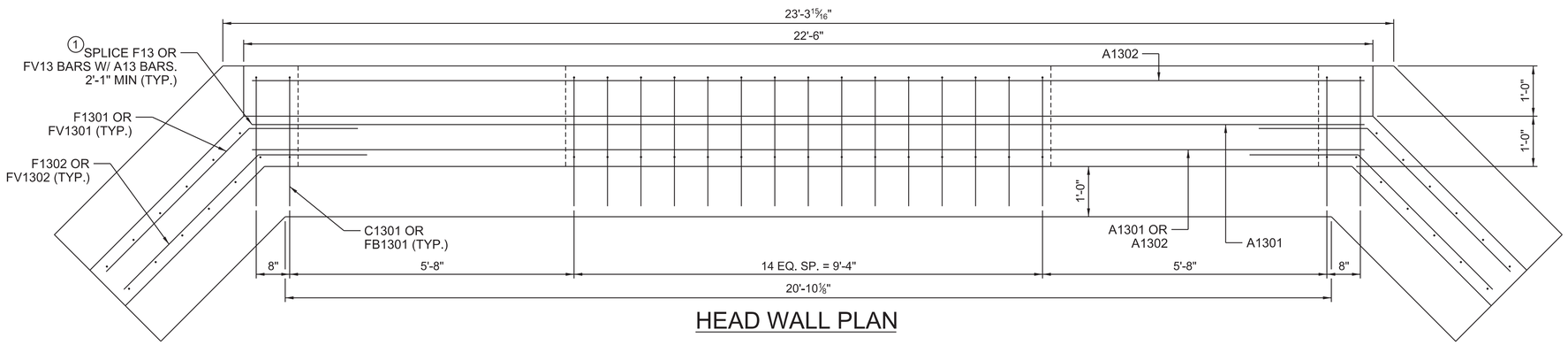

HEAD WALL PLAN

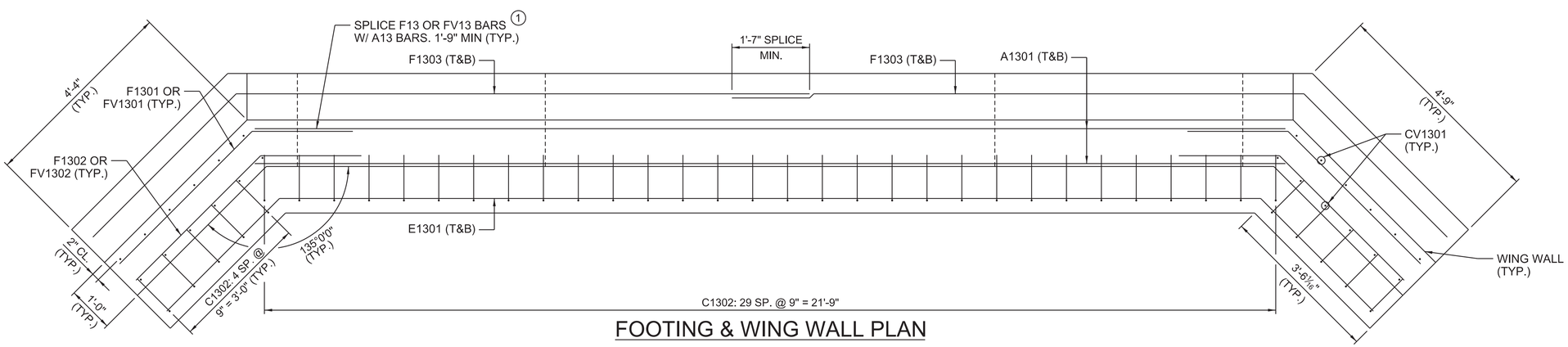

FOOTING & WING WALL PLAN

1 FIELD CUT F13 OR FV13 BARS AS NECESSARY TO MAINTAIN 2" CLEARANCE FROM PIPE OPENING.

SCALE: 2:8.0000 ':" / in.
PEN TABLE: G:\Resource\Standards\Bentley\Vertical\Plotting\DO_NOTHING_BRIDGES.tbl
PLOT DRIVER: \\CHS-FS1\Data\Resource\Standards\Bentley\Vertical\Plotting\BRIDGES.pdf MS i.pltcfg
FILE: G:\JobsOdd\31969-00\Production\Structural\Drawings\Culvert Drawings\CSX\031969-00_CSX_BR_S23_48 RCP DETAILS (Sh 1 of 3).dgn
3/8/2023

SOUTH CAROLINA
DAVIS & FLOYD, INC.
No. C00538
CERTIFICATE OF AUTHORIZATION

SOUTH CAROLINA
PROFESSIONAL ENGINEER
No. 32080
3/9/23
ROBERT G. STEVENSON, JR.

3229 W. MONTAGUE AVE.
CHARLESTON, SC 29418
(843) 554-8602

DAVIS & FLOYD

SINCE 1954

REV. NO.	BY	DATE	DESCRIPTION OF REVISION
5			
4			
3			
2			
1			

DES. BY DLH DRAWN BY JEB REVIEWED BY DLH CHECKED BY RGS

SOUTH CAROLINA
DEPARTMENT OF TRANSPORTATION

CSX RAILROAD STA. 51+12.50 DUAL 48" R/C
PIPE HEADWALL DETAILS (SHEET 1 OF 3),
5.5'-1.0' DESIGN FILL HEIGHT, 2:1 FILL SLOPES

PLOT SIZE = 22" x 34"

FED. ROAD DIV.NO.	STATE	COUNTY	PROJECT ID	ROUTE NO.	SHEET NO.	TOTAL SHEETS
3	S.C.	GEORGETOWN			S24	

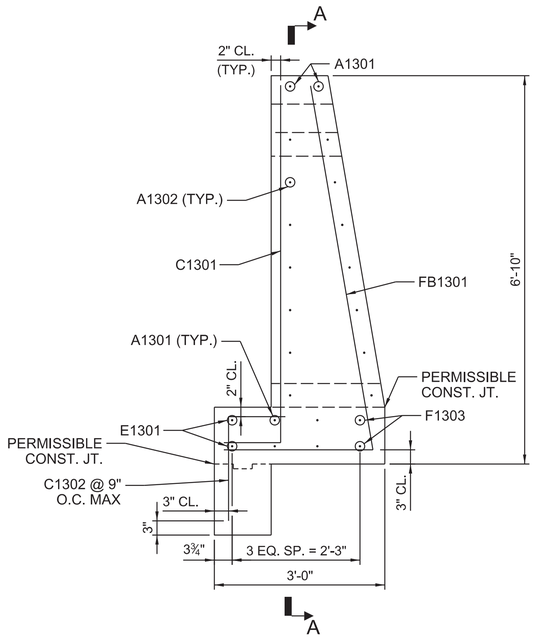

SECTION THRU HEADWALL

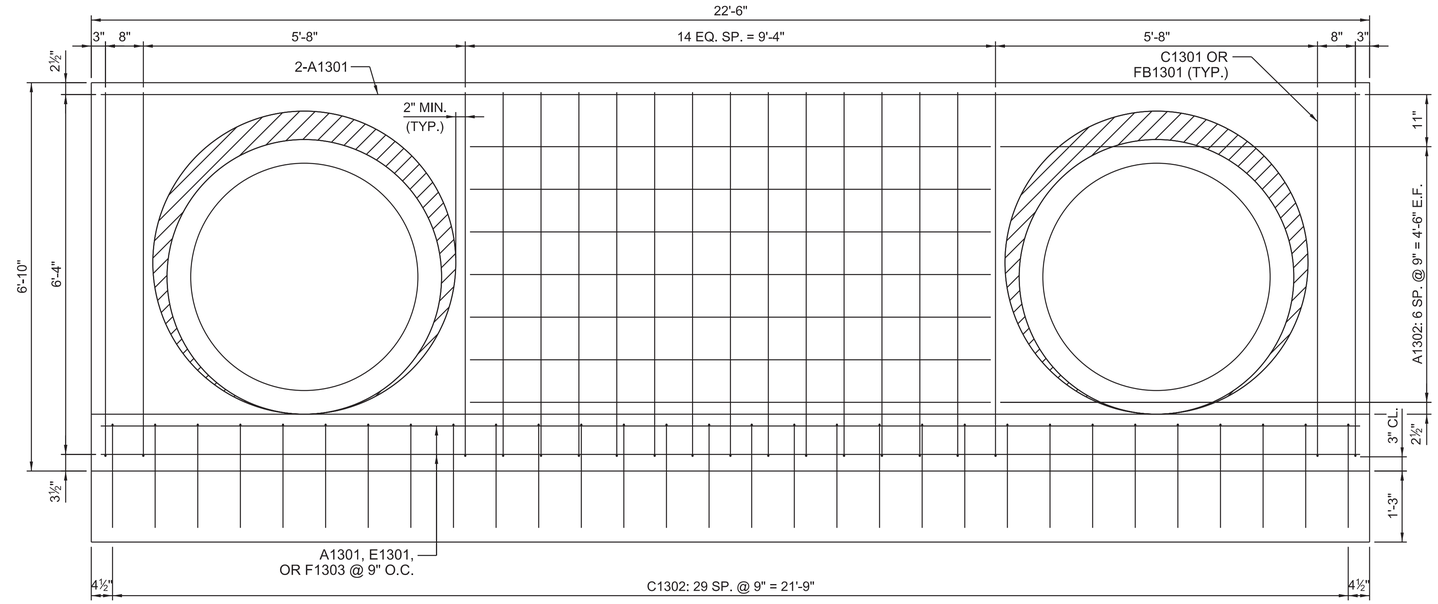

SECTION A-A

(WING WALLS NOT SHOWN FOR CLARITY)

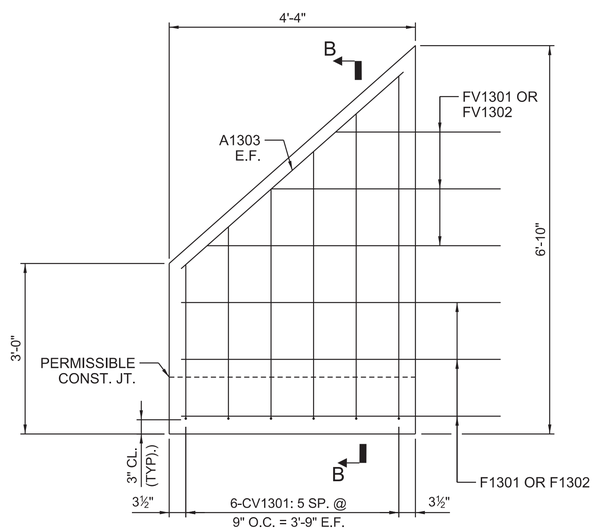

WING WALL ELEVATION

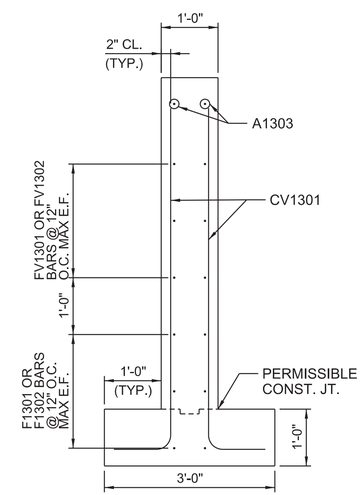

SECTION B-B

SCALE: 2:8.0000 '-" / in.
PEN TABLE: G:\Resource\Standards\Bentley\Vertical\Plotting\DO_NOTHING_BRIDGES.tbl
PLOT DRIVER: \\CHS-FS1\Data\Resource\Standards\Bentley\Vertical\Plotting\BRIDGES.pdf MS i.pltcfg
FILE: G:\JobsOdd\31969-00\Production\Structural\Drawings\Culvert Drawings\CSX\031969-00_CSX_BR_S24_48 RCP DETAILS (Sh 2 of 3).dgn
3/8/2023

SOUTH CAROLINA
DAVIS & FLOYD, INC.
No. C00538
CERTIFICATE OF AUTHORIZATION

SOUTH CAROLINA
PROFESSIONAL ENGINEER
No. 32080
3/9/23
ROBERT G. STEVENSON, JR.

3229 W. MONTAGUE AVE.
CHARLESTON, SC 29418
(843) 554-8602

DAVIS & FLOYD
SINCE 1954

REV. NO.	BY	DATE	DESCRIPTION OF REVISION
5			
4			
3			
2			
1			

DES. BY DLH DRAWN BY JEB REVIEWED BY DLH CHECKED BY RGS

SOUTH CAROLINA
DEPARTMENT OF TRANSPORTATION

CSX RAILROAD STA. 51+12.50 DUAL 48" R/C
PIPE HEADWALL DETAILS (SHEET 2 OF 3),
5.5'-1.0' DESIGN FILL HEIGHT, 2:1 FILL SLOPES

PLOT SIZE = 22" x 34"

FED. ROAD DIV.NO.	STATE	COUNTY	PROJECT ID	ROUTE NO.	SHEET NO.	TOTAL SHEETS
3	S.C.	GEORGETOWN			S25	

1.0 NOTES:

1.1 ALL WORKMANSHIP & MATERIAL SHALL CONFORM WITH THE LATEST EDITION OF THE SCDOT STANDARD SPECIFICATIONS FOR HIGHWAY CONSTRUCTION, PLANS AND SPECIAL PROVISIONS.

1.2 ALL DIMENSIONS ARE SUBJECT TO EXISTING FIELD CONDITIONS AND SHALL BE VERIFIED BY THE CONTRACTOR.

1.3 THE CONTRACTOR IS TO USE DUE CARE IN PROTECTION OF ALL UTILITIES IN PLACE AND SERVICE SHALL NOT BE INTERRUPTED. UTILITIES IN CONFLICT WITH STRUCTURE ARE TO BE RELOCATED PRIOR TO CONSTRUCTION.

1.4 POSITIONS LT.(LEFT), RT.(RIGHT), I.F.(INSIDE FACE), AND O.F.(OUTSIDE FACE), WHERE REFERRED TO IN THE CULVERT PLANS, ARE RELATIVE TO THE DIRECTION OF STATIONING.

1.5 MINIMUM COVER OF REINFORCING STEEL SHALL BE 21#2" FROM THE SURFACE OF CONCRETE, UNLESS OTHERWISE NOTED.

1.6 CHAMFER ALL EXPOSED EDGES 3#4". CONSTRUCTION JOINTS ARE TO BE AS SHOWN IN THE PLANS OR AS APPROVED BY THE ENGINEER (NOTE THAT REINFORCING BARS SHALL EXTEND THROUGH CONSTRUCTION JOINTS).

1.7 CONTRACTOR SHALL CONSTRUCT 3#4" MINIMUM FILLETS AT ALL JUNCTIONS OF SLAB AND WALL.

1.8 FOR BUILT IN PLACE CONSTRUCTION OF THE CONCRETE HEADWALL, CLASS 4000 CONCRETE SHALL BE USED. FOR PRECAST CONSTRUCTION, A MINIMUM OF CLASS 4000P CONCRETE MEETING THE REQUIREMENTS OF SECTION 701 OF THE SCDOT STANDARD SPECIFICATIONS FOR HIGHWAY CONSTRUCTION (LATEST EDITION).

1.9 REINFORCING STEEL SHALL BE ASTM A-706, LOW-ALLOY STEEL DEFORMED BARS FOR CONCRETE REINFORCEMENT, GRADE 60.

1.10 GROUT SHALL BE TYPE M MORTAR MATERIAL IN ACCORDANCE WITH SECTION 718 OF THE SCDOT STANDARD SPECIFICATIONS FOR HIGHWAY CONSTRUCTION (LATEST EDITION).

1.11 CONCRETE CUT-OFF WALLS SHALL BE CAST TO A DEPTH SUFFICIENT TO REST ON HARD AND OR COMPACTED MATERIAL. THE MINIMUM DEPTH BELOW BOTTOM SLABS AND FOOTING SHALL BE THE GREATER OF 2'-0" OR THE DEPTH OF SOIL EXCAVATION, AND MAY BE INCREASED AT THE DISCRETION OF THE SUPERVISING ENGINEER OR DESIGNER.

1.12 CONTRACTOR SHALL CUT AND OR BEND ANY REINFORCING BARS AS NECESSARY TO CARRY OUT WORK AS CALLED FOR ON THE STRUCTURE SHEETS.

1.13 STEEL MANUFACTURING PROCESSES MUST OCCUR IN THE UNITED STATES.

1.14 BAR DIMENSIONS SHOWN ARE OUT-TO-OUT AND STANDARD C.R.S.I. BENDING DETAILS SHALL APPLY, EXCEPT AS NOTED.

2.0 PRECAST NOTES:

2.1 THE USE OF PRECAST UNITS WILL NOT RELIEVE THE CONTRACTOR OF THE RESPONSIBILITY OF OBTAINING SATISFACTORY INSTALLATIONS.

2.2 LIFT HOLES AND/OR DEVICES MAY BE PLACED AS NECESSARY. ALL LIFT HOLES SHALL BE GROUTED SHUT PRIOR TO COMPLETION OF THE INSTALLATION. ALL LIFTING METHODS MUST MEET OSHA REGULATIONS.

2.3 THE CONTRACTOR SHALL USE MANUFACTURERS LISTED ON QUALIFIED PRODUCT LIST 14.

2.4 PRECAST ITEMS MODIFIED FROM THIS DRAWING MAY BE UTILIZED. HOWEVER, CONTRACTOR SHALL SUBMIT DESIGN DRAWINGS AND CALCULATIONS TO THE ENGINEER OF RECORD FOR REVIEW.

2.5 BED SHALL BE PREPARED AND COMPACTED FOR THE CONCRETE HEADWALL AS REQUIRED BY SCDOT STANDARD SPECIFICATIONS FOR PRECAST ITEMS. ELEVATION OF BEDDING MATERIAL SHALL BE APPROPRIATE TO ACCOMMODATE ELEVATION OF PIPE.

2.6 PLACE AND LEVEL PRECAST HEADWALL.

2.7 PIPES SHALL BE GROUTED IN PLACE.

2.8 PIPES AND HEADWALL SHALL BE BACKFILLED AND COMPACTED AS REQUIRED BY SCDOT STANDARD SPECIFICATIONS.

2.9 BRICK AND MORTAR SHALL BE USED TO ADJUST ELEVATIONS OF THROAT WALLS AS REQUIRED TO MEET ELEVATION AND CROSS SLOPES.

2.10 ANY LOCATION WHERE THE ABOVE REQUIREMENTS CANNOT BE MET SHALL BE COMPLETED USING CAST IN PLACE MATERIALS MEETING THE REQUIREMENTS OF THIS DRAWING. ANY ADDITIONAL MATERIALS OR COSTS ASSOCIATED WITH THE USE OF PRECAST SHALL BE PAID FOR BY THE CONTRACTOR AND MAY NOT BE CHARGED TO COUNTY.

3.0 REFERENCED SPECIFICATIONS:
LATEST EDITION OF THE SCDOT STANDARD SPECIFICATIONS FOR HIGHWAY CONSTRUCTION
8TH EDITION OF THE AASHTO LRFD BRIDGE DESIGN SPECIFICATIONS WITH INTERIM REVISIONS.

REINFORCING STEEL SCHEDULE
(FOR ONE HEADWALL)

LOCATION	MARK	NO. REQ'D	DIMENSION "a"	"b"	"c"	"d"	"e"	"f"	"g"	LENGTH
HEADWALL	A1301	6	22'-2"	-	-	-	-	-	-	22'-2"
HEADWALL	A1302	14	9'-4"	-	-	-	-	-	-	9'-4"
WING WALL	A1303	4	5'-2¾"	-	-	-	-	-	-	5'-3"
HEADWALL	C1301	19	6'-3½"	1'-0"	-	-	-	-	-	7'-4"
HEADWALL/KEY	C1302	40	1'-10"	1'-0"	-	-	-	-	-	2'-10"
WING WALL	CV1301	24	3'-5 3/16"	1'-9¼"	5'-1 1/16"	7 15/16"	1'-0"	-	-	4'-6"
HEADWALL	E1301	2	21'-1¼"	3'-5⅛"	2'-5"	-	-	-	-	28'-0"
WING WALL	F1301	6	4'-0¼"	2'-2"	1⅜"	8⅞"	-	-	-	6'-3"
WING WALL	F1302	6	3'-9⅜"	2'-2"	1 7/16"	6⅞"	-	-	-	6'-0"
HEADWALL	F1303	4	12'-4"	4'-4 5/16"	3'-1"	3'-1"	-	-	-	16'-9"
WING WALL	FB1301	19	6'-6"	2'-7½"	4⅞"	2'-7⅛"	-	-	-	9'-2"
WING WALL	FV1301	6	2'-6 1/16"	1'-4 9/16"	3'-7⅝"	1'-1 9/16"	2'-2"	1⅜"	8⅞"	4'-9"
WING WALL	FV1302	6	2'-3 3/16"	1'-1⅝"	3'-4 11/16"	1'-1 9/16"	2'-2"	1 7/16"	6⅞"	4'-6"

QUANTITIES
(FOR ONE HEADWALL)

ITEM	UNIT	QTY.
CONC. FOR STRUCTURES CLASS 4000 (CULVERT)	CY	10.7
REINFORCING STEEL FOR STRUCTURES (ROADWAY)	LB	716

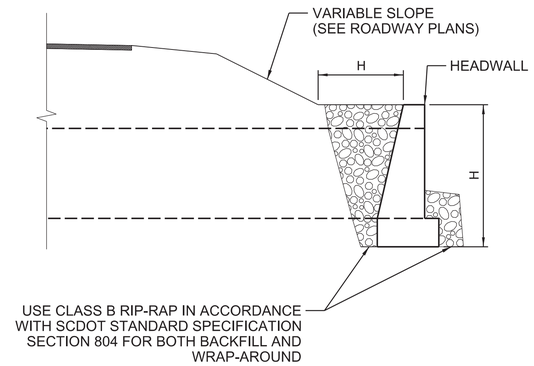

INSTALLATION DETAIL

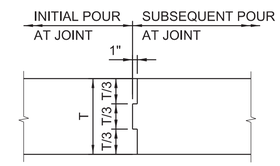

CONST. JT. DETAIL

BEFORE MAKING SUBSEQUENT POUR, WAIT EITHER A MINIMUM OF 96 HOURS AFTER PLACEMENT OF THE INITIAL POUR OR UNTIL THE INITIAL POUR CONCRETE HAS ATTAINED A MINIMUM OF 75% OF THE SPECIFIED 28-DAY COMPRESSIVE STRENGTH AS VERIFIED BY TESTING EXTRA CYLINDERS.

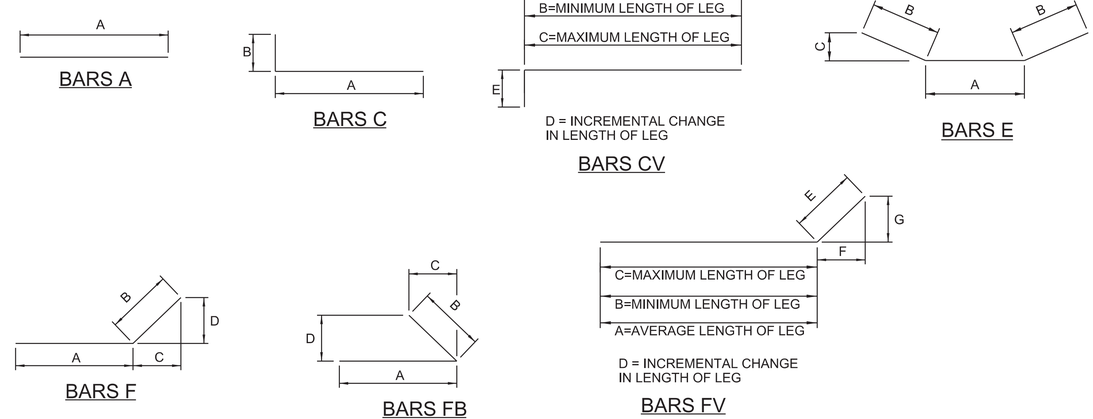

REINFORCEMENT BENDING DETAILS

DAVIS & FLOYD, INC. No. C00538 — SOUTH CAROLINA CERTIFICATE OF AUTHORIZATION

SOUTH CAROLINA PROFESSIONAL ENGINEER No. 32080 ROBERT G. STEVENSON, JR. 3/9/23

3229 W. MONTAGUE AVE.
CHARLESTON, SC 29418
(843) 554-8602

DAVIS & FLOYD
SINCE 1954

REV. NO.	BY	DATE	DESCRIPTION OF REVISION
5			
4			
3			
2			
1			

DES. BY DLH DRAWN BY JEB REVIEWED BY DLH CHECKED BY RGS

SOUTH CAROLINA
DEPARTMENT OF TRANSPORTATION

CSX RAILROAD STA. 51+12.50 DUAL 48" R/C PIPE HEADWALL DETAILS (SHEET 3 OF 3), 5.5'-1.0' DESIGN FILL HEIGHT, 2:1 FILL SLOPES

PLOT SIZE = 22" x 34"

SCALE: 2:8.0000 ':" / in.
PEN TABLE: G:\Resource\Standards\Bentley\Vertical\Plotting\DO_NOTHING_BRIDGES.tbl
PLOT DRIVER: \\CHS-FS1\Data\Resource\Standards\Bentley\Vertical\Plotting\BRIDGES.pdf MS i.pltcfg
FILE: G:\JobsOdd\31969-00\Production\Structural\Drawings\Culvert Drawings\CSX\031969-00_CSX_BR_S25_48 RCP DETAILS (Sh 3 of 3).dgn
3/8/2023

FED. ROAD DIV.NO.	STATE	COUNTY	PROJECT ID	ROUTE NO.	SHEET NO.	TOTAL SHEETS
3	S.C.	GEORGETOWN			EC1	

RECEIVING WATERS

ROAD / ROUTE	OUTFALL DITCH STATION	SIDE	NAME OF RECEIVING WATERS	NAME OF ULTIMATE RECEIVING WATERS

SOIL TYPES

ROAD / ROUTE	STATION TO STATION		SOIL PARTICLE SIZE (COARSE / FINE)	ZONE

TEMPORARY EROSION CONTROL BLANKET

ROAD / ROUTE	STATION TO STATION		SIDE	DEPTH OF BLANKET (FT)	DITCH BOTTOM WIDTH (FT)	SLOPES x : 1 FRONT	SLOPES x : 1 BACK	MSY
	02+44	02+74		4	13	2	2.0	0.103
	03+37	03+67		4	13	2	2.0	0.103
	11+27	11+57		4	13	2	2.0	0.103
	11+87	12+17		4	13	2	2.0	0.103
	27+44	27+74		4	7	2	2.0	0.083
	28+37	28+67		4	7	2	2.0	0.083
	34+98	35+28		4	7	2	2.0	0.083
	35+58	35+88		4	7	2	2.0	0.083
	48+64	48+94		4	7	2	2.0	0.083
	49+52	49+82		4	6	2	2.0	0.080
	58+32	58+62		4	11	2	2.0	0.096
	59+24	59+54		4	11	2	2.0	0.096
	65+64	65+94		4	10	2	2.0	0.093
	66+44	66+74		4	10	2	2.0	0.093
							TOTAL	1.285

TURF REINFORCED MATTING (TRM)

ROAD / ROUTE	STATION TO STATION		SIDE	DEPTH OF MAT (FT)	SLOPES (x : 1) FRONT	SLOPES (x : 1) BACK	DITCH BOTTOM WIDTH (FT)	TYPE	TYPE 1 (MSY)	TYPE 2 (MSY)	TYPE 3 (MSY)
LESTER CREEK	60+60	61+10	C	3	1	1	7	2		0.086	
LESTER CREEK	64+20	64+70	C	5	2.5	1.5	5	2		0.153	
								TOTALS		0.239	

SEDIMENT TUBES IN DITCHES

ROAD / ROUTE	STATION TO STATION		SIDE	AVERAGE LENGTH	SPACING (FT)	TOTAL	COMMENTS
	02+53	02+53	L	10	1	10	
	02+69	02+69	C	15	1	15	
	03+12	03+12	L	10	1	10	
	03+57	03+57	R	10	1	10	
	11+52	11+52	C	15	1	15	
	27+92	27+92	C	15	1	15	
	27+79	27+79	L	10	1	10	
	28+39	28+39	R	10	1	10	
	28+42	28+42	L	10	1	10	
	35+21	35+21	R	10	1	10	
	35+23	35+23	C	15	1	15	
	35+57	35+57	R	10	1	10	
	48+89	48+89	C	15	1	15	
	58+51	58+51	R	10	1	10	
	58+56	58+56	C	15	1	15	
	58+68	58+68	L	10	1	10	
	59+21	59+21	L	10	1	10	
	59+27	59+27	R	10	1	10	
	65+89	65+89	C	15	1	15	
	65+98	65+98	L	10	1	10	
	65+98	65+98	R	10	1	10	
	66+43	66+43	L	10	1	10	
	66+43	66+43	R	10	1	10	
					TOTAL	265	

SEDIMENT DAM

NO	ROAD / ROUTE	STATION	SIDE	DRAINED OR NOT DRAINED	LENGTH OF SILT BASIN	WIDTH OF SILT BASIN	DAM HEIGHT	SIDE SLOPE OF SILT BASIN	SPILLWAY BOTTOM WIDTH	DAM BOTTOM WIDTH	RIP RAP CLASS	TOTAL STORAGE VOLUME	SEDIMENT STORAGE HEIGHT	OUTFALL CHANNEL WIDTH	OUTFALL CHANNEL DEPTH	OUTFALL CHANNEL LENGTH

SCALE: 20.000 ft / in.
PEN TABLE: East Andrews-SCDOT Levels 2015 B&W Plan-PDF.tbl
PLOT DRIVER: PDF.pltcfg
FILE: G:\JobSOdd\31969-00\Production\Transportation\f_dgn\Const plpr\East Andrews SHEET EC1.dgn
5/4/2023

SOUTH CAROLINA DAVIS & FLOYD, INC. No. C00538 CERTIFICATE OF AUTHORIZATION

SOUTH CAROLINA REGISTERED PROFESSIONAL ENGINEER No. 19075 MICHAEL VANDIVER NORTON 05/15/2023

1940 ALGONQUIN ROAD, SUITE 301
CHARLESTON, SC 29405
(843) 554-8602

DAVIS & FLOYD
SINCE 1954

REV. NO.	BY	DATE	DESCRIPTION OF REVISION
5			
4			
3			
2			
1			

DES. BY _____ DRAWN BY _____ REVIEWED BY _____ CHECKED BY _____

SOUTH CAROLINA
DEPARTMENT OF TRANSPORTATION

EROSION CONTROL DATA SHEET

EAST ANDREWS DRAINAGE IMPROVEMENTS

N.T.S. PLOT SIZE = 22" x 34"

FED. ROAD DIV. NO.	STATE	COUNTY	PROJECT ID NO.	ROUTE NO.	SHEET NO.	TOTAL SHEETS
3	S.C.	GEORGETOWN			X1	

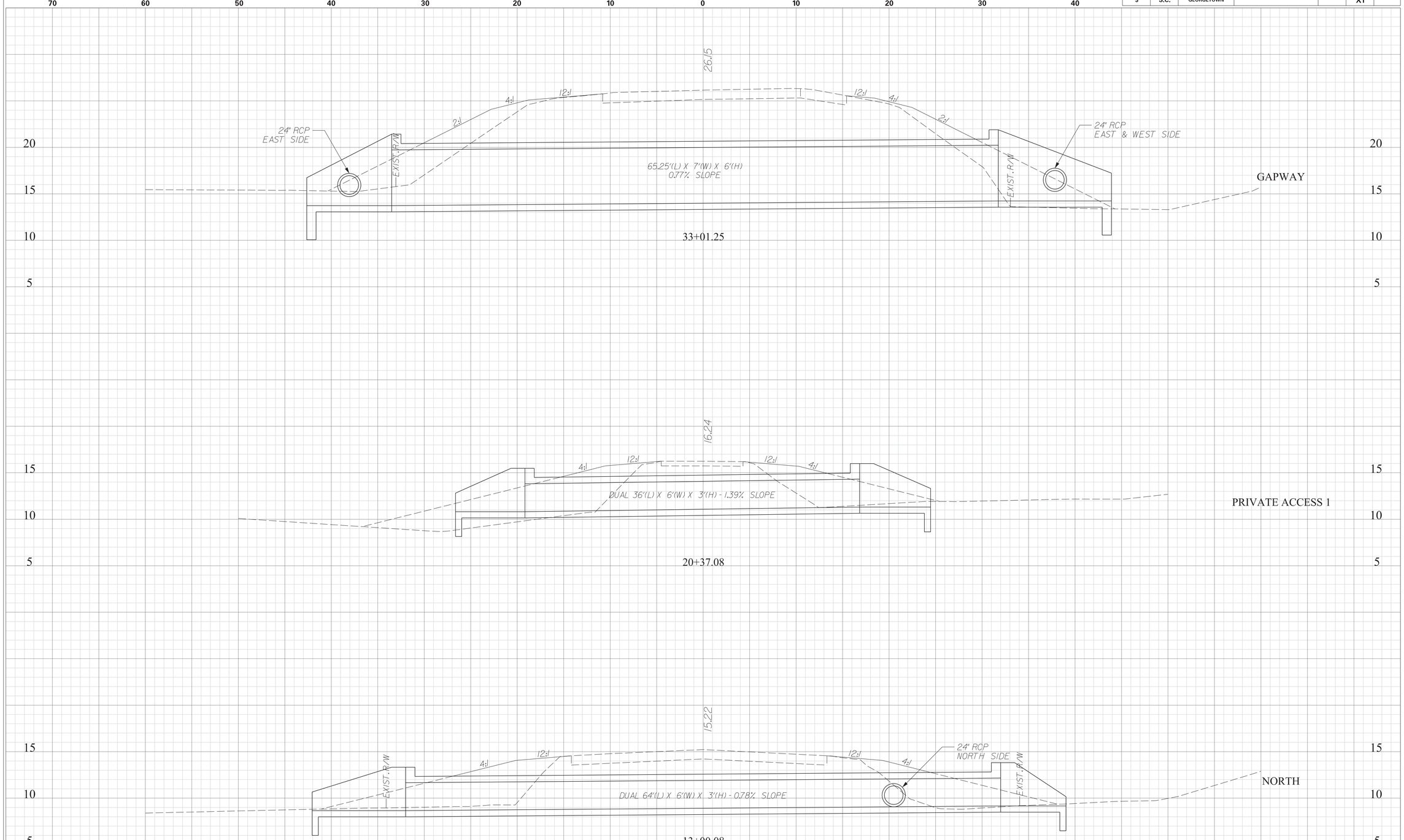

REV. NO.	BY	DATE	DESCRIPTION OF REVISION
4			
3			
2			
1			

DGN. DATE
R/W DATE
CHK. DATE

SOUTH CAROLINA
DAVIS & FLOYD, INC.
No. C00538
CERTIFICATE OF AUTHORIZATION

SOUTH CAROLINA REGISTERED PROFESSIONAL ENGINEER
No. 19075
MICHAEL VANDIVER HORTON
05/15/2023

EAST ANDREWS

DRAINAGE IMPROVEMENTS

NORTH STREET

PRIVATE ACCESS 1

GAPWAY ROAD

SCALE: 1"=5' HOR. 1"=5' VERT.

SCALE: 5.000 ft / in.
PEN TABLE: G:\JobsOdd\31969-00\Production\Transportation\Print Organizer\pentable\SCDOT Levels 2015 X Sections.tbl
PLOT DRIVER: G:\Resource\Standards\Bentley\Transportation\DF STANDARDS\MSfiles\plotting\PDF.pltcfg
FILE: G:\JobsOdd\31969-00\Production\Transportation\XSC\Crossings XS Sheets.dgn
5/4/2023

FED. ROAD DIV. NO.	STATE	COUNTY	PROJECT ID NO.	ROUTE NO.	SHEET NO.	TOTAL SHEETS
3	S.C.	GEORGETOWN			X2	

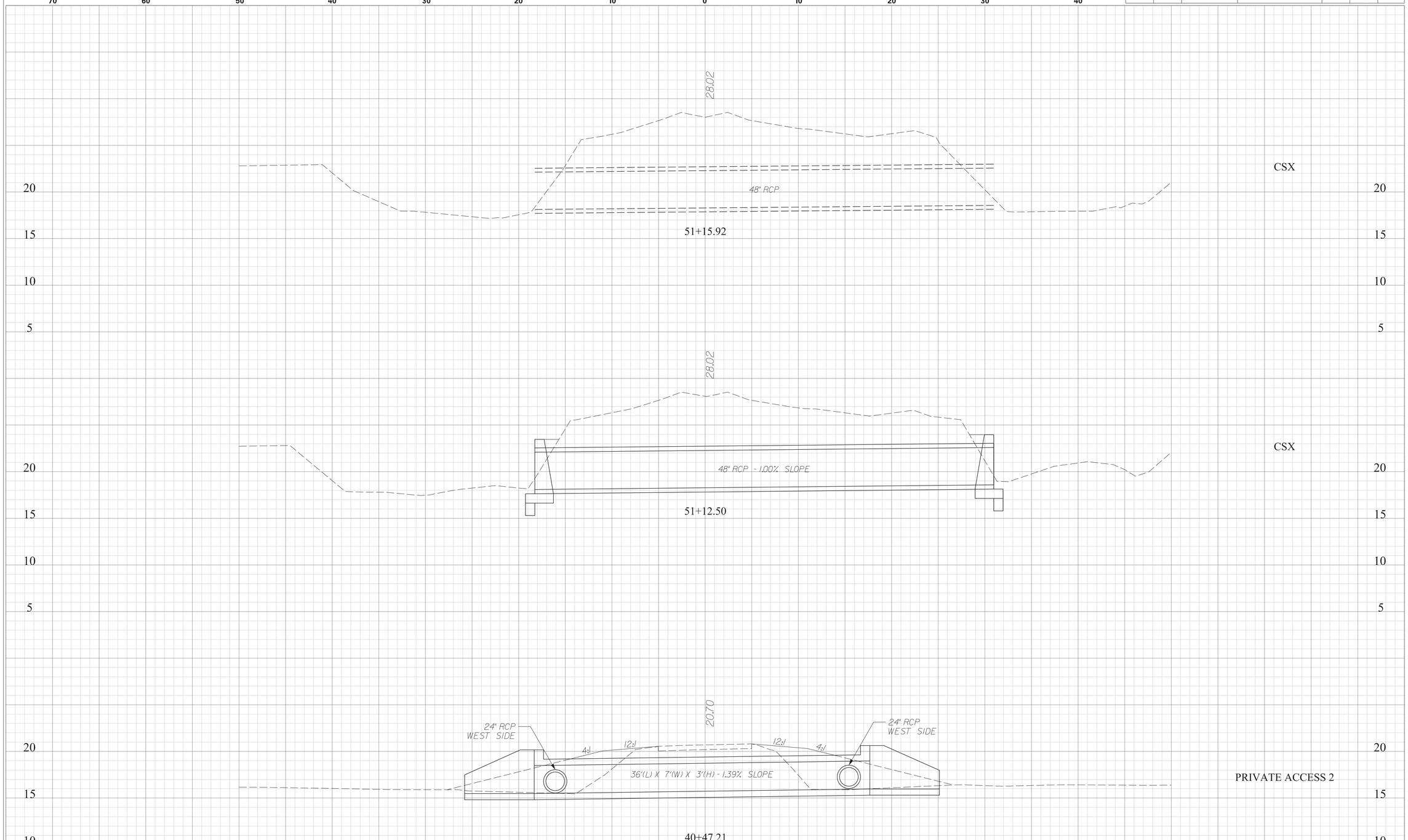

REV. NO.	BY	DATE	DESCRIPTION OF REVISION
4			
3			
2			
1			

DGN. _____ DATE _____
R/W _____ DATE _____
CHK. _____ DATE _____

SOUTH CAROLINA
DAVIS & FLOYD, INC.
No. C005.38
CERTIFICATE OF AUTHORIZATION

SOUTH CAROLINA
REGISTERED PROFESSIONAL ENGINEER
No. 19075
MITCHELL VANDIVER HORTON
05/15/2023

EAST ANDREWS

DRAINAGE IMPROVEMENTS

PRIVATE ACCESS 2

&

CSX

SCALE: 1"=5' HOR. 1"=5' VERT.

SCALE: 5.000 ft / in.
PEN TABLE: G:\JobsOdd\31969-00\Production\Transportation\Print Organizer\pentable\SCDOT Levels 2015 X Sections.tbl
PLOT DRIVER: G:\Resource\Standards\Bentley\Transportation\DF STANDARDS\MSfiles\plotting\PDF.pltcfg
FILE: G:\JobsOdd\31969-00\Production\Transportation\XSC\Crossings XS Sheets.dgn
5/4/2023

FED. ROAD DIV. NO.	STATE	COUNTY	PROJECT ID NO.	ROUTE NO.	SHEET NO.	TOTAL SHEETS
3	S.C.	GEORGETOWN			X3	

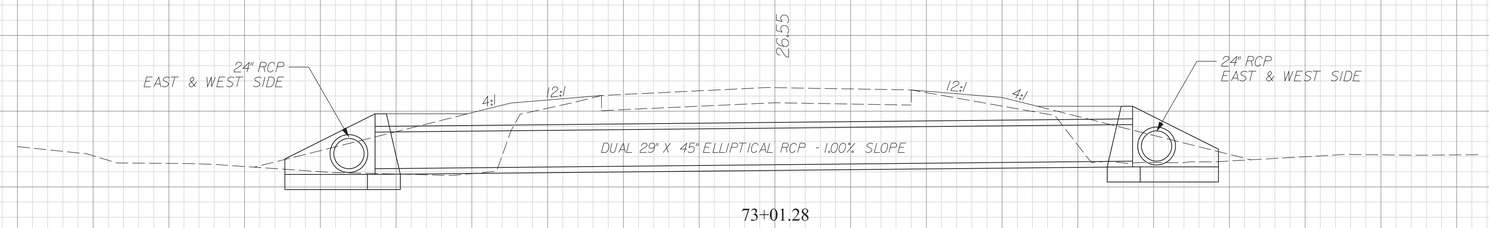

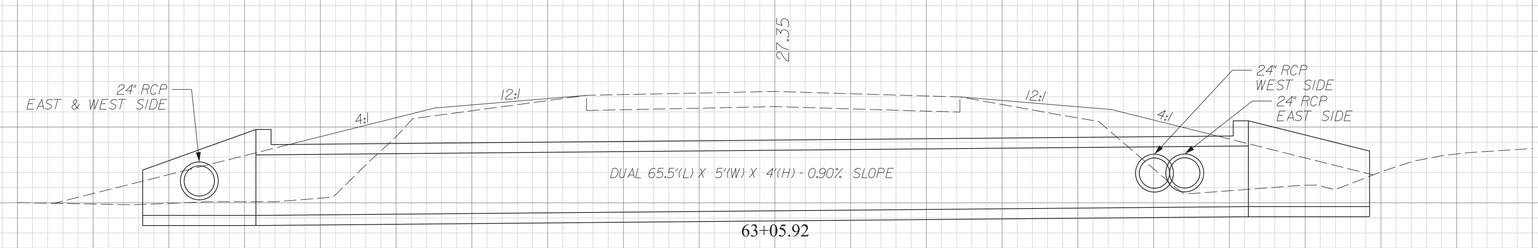

REV. NO.	BY	DATE	DESCRIPTION OF REVISION
4			
3			
2			
1			

DGN. _____ DATE _____
R/W _____ DATE _____
CHK. _____ DATE _____

SOUTH CAROLINA
DAVIS & FLOYD, INC.
No. C005.38
CERTIFICATE OF AUTHORIZATION

SOUTH CAROLINA
REGISTERED PROFESSIONAL ENGINEER
No. 19075
MICHAEL VANDIVER HORTON
05/15/2023

EAST ANDREWS

DRAINAGE IMPROVEMENTS

GEORGETOWN HIGHWAY

&

OLD CEMETERY

SCALE: 1"=5' HOR. 1"=5' VERT.

SCALE: 5.000 ft / in.
PEN TABLE: G:\JobsOdd\31969-00\Production\Transportation\Print Organizer\pentable\SCDOT Levels 2015 X Sections.tbl
PLOT DRIVER: G:\Resource\Standards\Bentley\Transportation\DF STANDARDS\MSfiles\plotting\PDF.pltcfg
FILE: G:\JobsOdd\31969-00\Production\Transportation\XSC\Crossings XS Sheets.dgn
5/4/2023

FED. ROAD DIV.NO.	STATE	COUNTY	PROJECT ID	ROUTE NO.	SHEET NO.	TOTAL SHEETS
3	S.C.	GEORGETOWN	-		TC1	

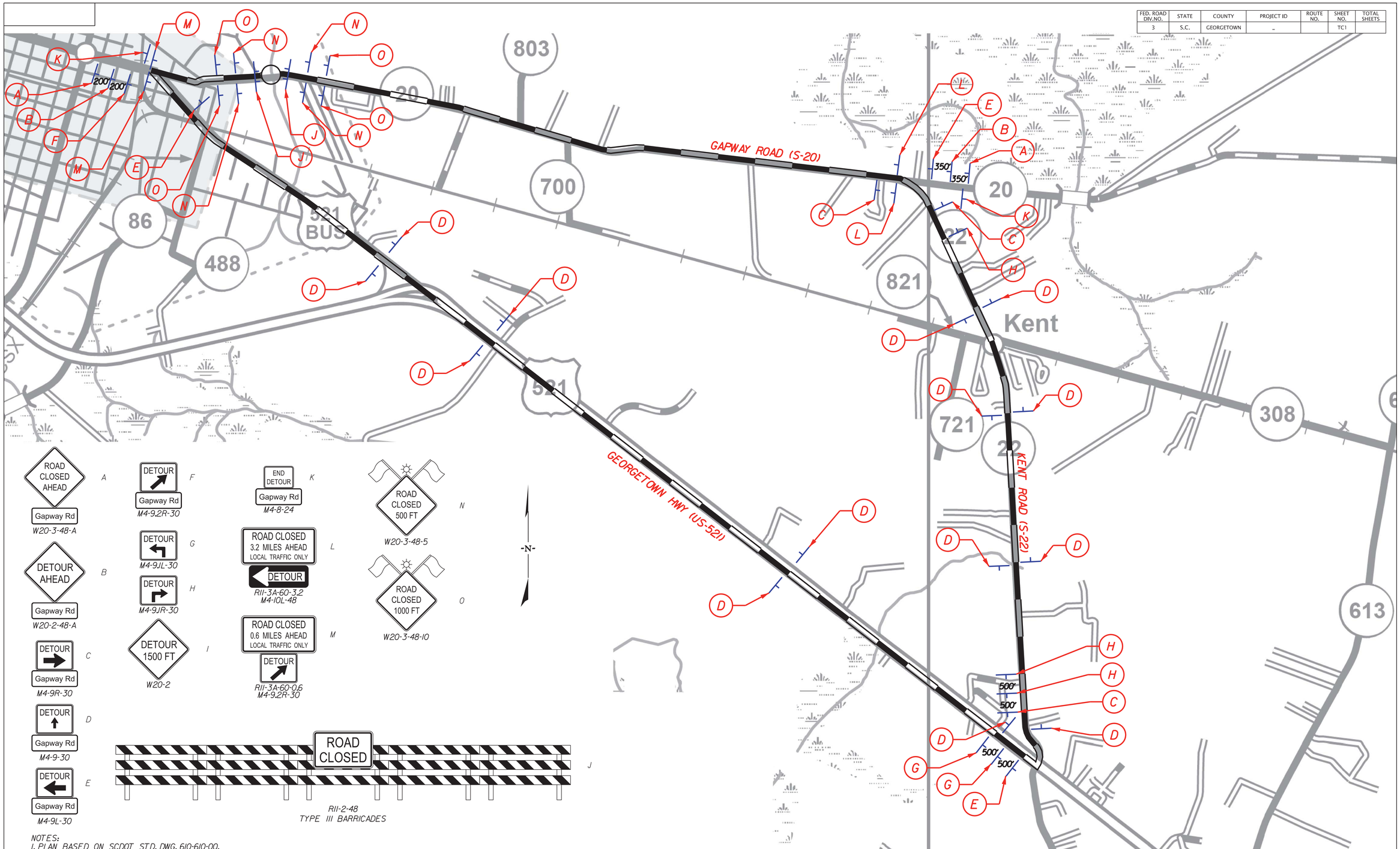

NOTES:
1. PLAN BASED ON SCDOT STD. DWG. 610-610-00.
2. CHANGEABLE MESSAGE BOARD STATING THE DATE RANGE OF THE DETOUR SHALL BE IN PLACE NEAR THE ROAD CLOSURE 10 DAYS PRIOR TO WORK.
3. ONLY ONE DETOUR MAY BE ACTIVE AT ANY GIVEN TIME.
4. AN EXPLANATION OF THE DETOUR SHOULD BE PROVIDED BY PUBLIC NOTICE TO THE LOCAL NEWS MEDIA APPROXIMATELY ONE WEEK IN ADVANCE OF THE DATE THE CHANGE IS TO BE IMPLEMENTED.

SCALE: 1200.000 ft / in.
PEN TABLE: TC Detour.tbl
PLOT DRIVER: PDF.pltcfg
FILE: G:\JobsOdd\31969-00\Production\Transportation\f_dgn\Const plpr\East Andrews SHEET TC1.dgn
5/4/2023

SOUTH CAROLINA DAVIS & FLOYD, INC. No. C00538 CERTIFICATE OF AUTHORIZATION

SOUTH CAROLINA LICENSED PROFESSIONAL ENGINEER No. 36581 5/4/2023 JOSEPH J. GARRISON

DAVIS & FLOYD
SINCE 1954

1940 ALGONQUIN ROAD, SUITE 301
CHARLESTON, SC 29405
(843) 554-8602

REV. NO.	BY	DATE	DESCRIPTION OF REVISION
5			
4			
3			
2			
1			

DES. BY _____ DRAWN BY _____ REVIEWED BY _____ CHECKED BY _____

SOUTH CAROLINA
DEPARTMENT OF TRANSPORTATION

TRAFFIC CONTROL SHEET
EAST ANDREWS DRAINAGE IMPROVEMENTS

SCALE 1"= 1200' PLOT SIZE = 22" x 34"

FED. ROAD DIV.NO.	STATE	COUNTY	PROJECT ID	ROUTE NO.	SHEET NO.	TOTAL SHEETS
3	S.C.	GEORGETOWN	-		TC2	

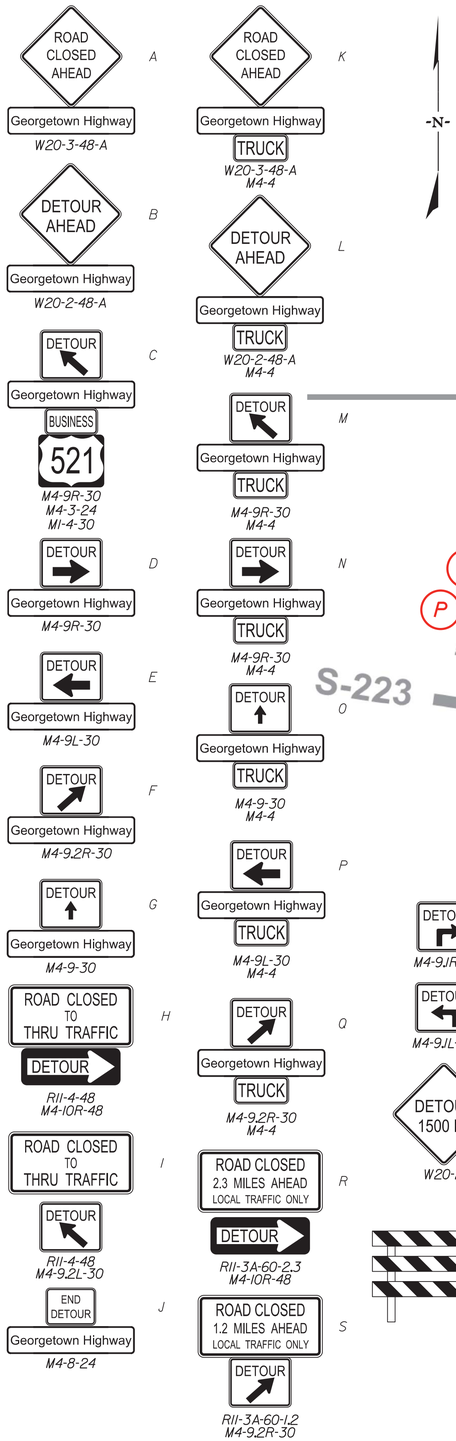

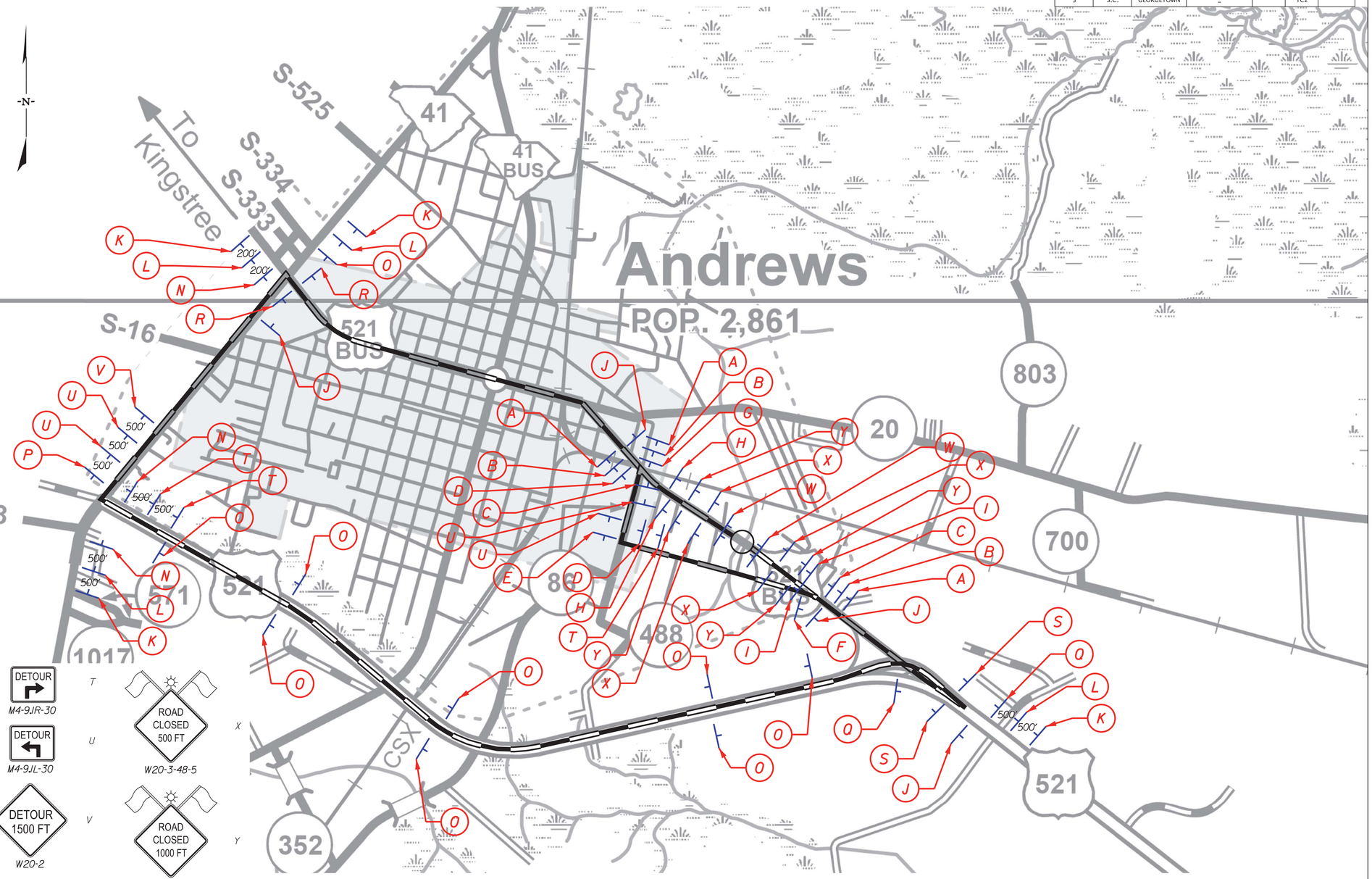

NOTES:
1. PLAN BASED ON SCDOT STD. DWG. 610-610-00.
2. CHANGEABLE MESSAGE BOARD STATING THE DATE RANGE OF THE DETOUR SHALL BE IN PLACE NEAR THE ROAD CLOSURE 10 DAYS PRIOR TO WORK.
3. ONLY ONE DETOUR MAY BE ACTIVE AT ANY GIVEN TIME.
4. AN EXPLANATION OF THE DETOUR SHOULD BE PROVIDED BY PUBLIC NOTICE TO THE LOCAL NEWS MEDIA APPROXIMATELY ONE WEEK IN ADVANCE OF THE DATE THE CHANGE IS TO BE IMPLEMENTED.

0 1200 2400 3600 4800

SCALE: 1,200.000 ft / in.
PEN TABLE: TC Detour.tbl
PLOT DRIVER: PDF-pltcfg
FILE: G:\Jobs0dd\31969-00\Production\Transportation\f_dgn\Const plpr\East Andrews SHEET TC2.dgn
5/4/2023

SOUTH CAROLINA DAVIS & FLOYD, INC. No. C00538 CERTIFICATE OF AUTHORIZATION

SOUTH CAROLINA LICENSED PROFESSIONAL ENGINEER No. 36581 5/4/2023 JOSEPH J. GARRISON

DAVIS & FLOYD
SINCE 1954

1940 ALGONQUIN ROAD, SUITE 301
CHARLESTON, SC 29405
(843) 554-8602

REV. NO.	BY	DATE	DESCRIPTION OF REVISION
5			
4			
3			
2			
1			

DES. BY _____ DRAWN BY _____ REVIEWED BY _____ CHECKED BY _____

SOUTH CAROLINA
DEPARTMENT OF TRANSPORTATION

TRAFFIC CONTROL SHEET
EAST ANDREWS DRAINAGE IMPROVEMENTS

SCALE 1"= 1200' PLOT SIZE = 22" x 34"

FED. ROAD DIV.NO.	STATE	COUNTY	PROJECT ID	ROUTE NO.	SHEET NO.	TOTAL SHEETS
3	S.C.	GEORGETOWN	-		TC3	

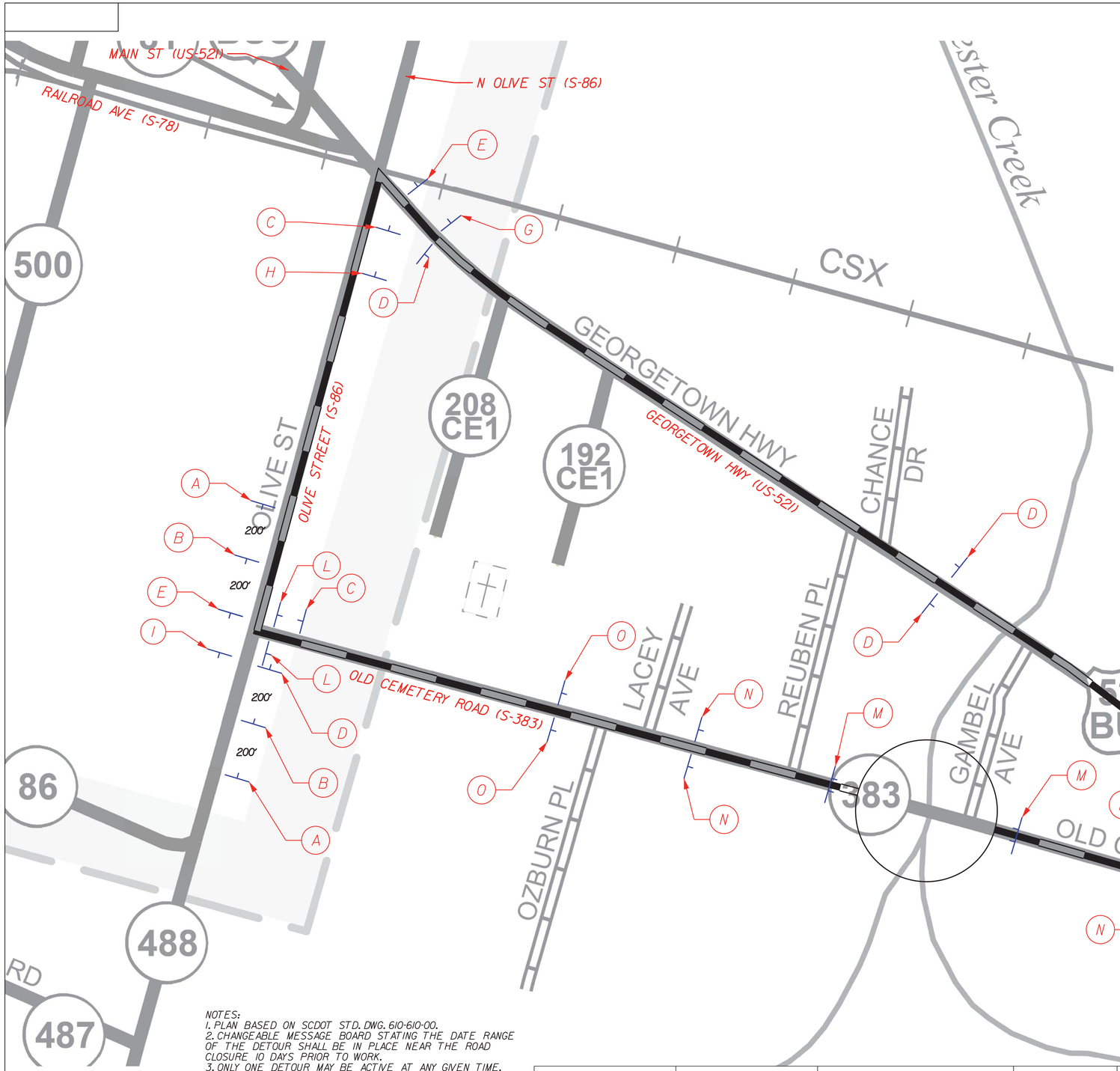

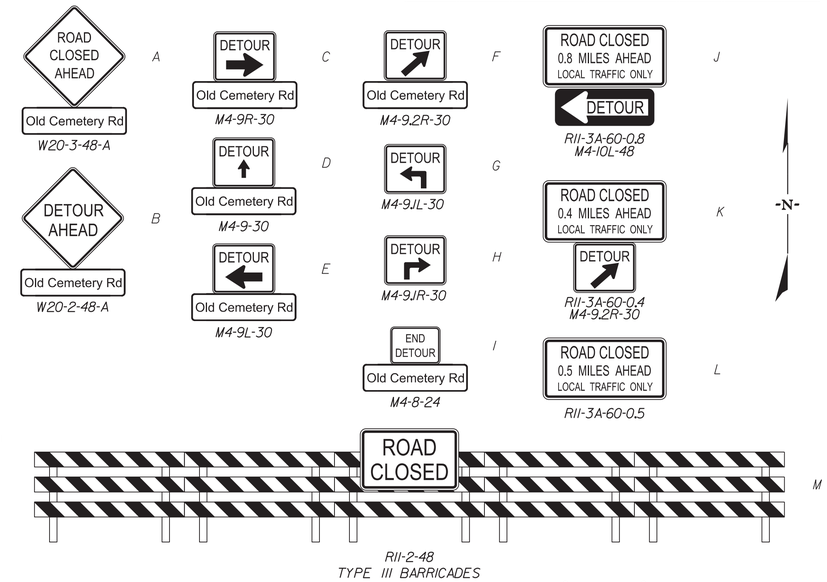

NOTES:
1. PLAN BASED ON SCDOT STD. DWG. 610-610-00.
2. CHANGEABLE MESSAGE BOARD STATING THE DATE RANGE OF THE DETOUR SHALL BE IN PLACE NEAR THE ROAD CLOSURE 10 DAYS PRIOR TO WORK.
3. ONLY ONE DETOUR MAY BE ACTIVE AT ANY GIVEN TIME.
4. AN EXPLANATION OF THE DETOUR SHOULD BE PROVIDED BY PUBLIC NOTICE TO THE LOCAL NEWS MEDIA APPROXIMATELY ONE WEEK IN ADVANCE OF THE DATE THE CHANGE IS TO BE IMPLEMENTED.

SCALE: 200.000 ft / in.
PEN TABLE: TC Detour.tbl
PLOT DRIVER: PDF.pltcfg
FILE: G:\JobSOdd\31969-00\Production\Transportation\f_dgn\Const plpr\East Andrews SHEET TC3.dgn
5/4/2023

SOUTH CAROLINA DAVIS & FLOYD, INC. No. C00538 CERTIFICATE OF AUTHORIZATION

SOUTH CAROLINA LICENSED PROFESSIONAL ENGINEER No. 36581 5/4/2023 JOSEPH J. CARRICO

DAVIS & FLOYD
SINCE 1954
1940 ALGONQUIN ROAD, SUITE 301
CHARLESTON, SC 29405
(843) 554-8602

REV. NO.	BY	DATE	DESCRIPTION OF REVISION
5			
4			
3			
2			
1			

DES. BY_____ DRAWN BY _____ REVIEWED BY_____ CHECKED BY _____

SOUTH CAROLINA
DEPARTMENT OF TRANSPORTATION

TRAFFIC CONTROL SHEET
EAST ANDREWS DRAINAGE IMPROVEMENTS

SCALE 1"= 200' PLOT SIZE = 22" x 34"